ENGINE

ON-VEHICLE INSPECTION

1. **INSPECT ENGINE COOLANT (See page CO-2)**
2. **INSPECT ENGINE OIL (See page LU-2)**
3. **INSPECT BATTERY (See page CH-4)**
4. **INSPECT AIR CLEANER FILTER ELEMENT SUB-ASSEMBLY**
5. **INSPECT SPARK PLUG (See page IG-5)**
6. **INSPECT DRIVE BELT**
   (a) Visually check the driver belt for excessive wear, frayed cords, etc. If any defect is found, replace the drive belt.
   HINT:
   Cracks on the rib side of a drive belt are considered acceptable. If the drive belt has chunks missing from the ribs, it should be replaced.

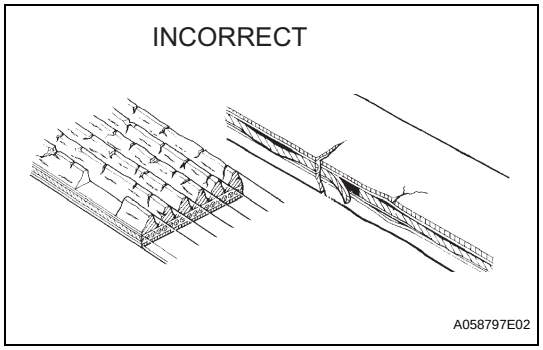

7. **INSPECT IGNITION TIMING**
   NOTICE:
   - **Turn all electrical systems OFF.**
   - **Operate the inspection when the cooling fan motor is turned OFF.**

   (a) Warm up the engine.

   (b) When using the intelligent tester.
   (1) Connect the intelligent tester to the DLC3.
   (2) Select the following menu items: DIAGNOSIS / ENHANCED OBD II / DATA LIST / IGN ADVANCE.
   (3) Inspect the ignition timing during idling.
   Ignition timing:
   7 to 24°CA BTDC during idling
   (Transmission in neutral position)
   (4) Check that the ignition timing advances immediately when the engine speed is increased.

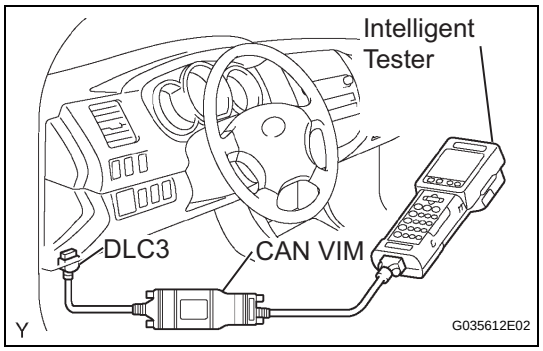

   (c) When not using intelligent tester.
   (1) Using SST, connect the terminals 13 (TC) and 4 (CG) of the DLC3.
   SST 09843-18040
   NOTICE:
   Be sure not to connect the terminals wrongly. It causes breakage of the engine.
   (2) Remove the air cleaner.

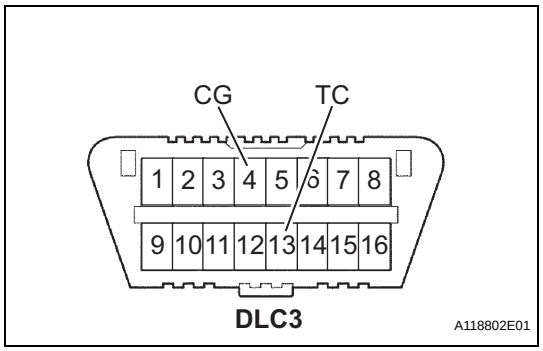

EM

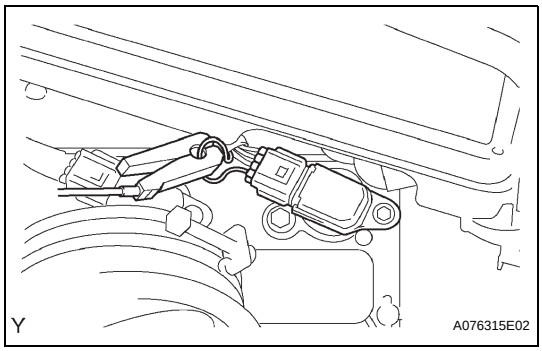

(3) Pull out the wire harness as shown in the illustration.
(4) Connect the tester probe of a timing light to the wire of the ignition coil connector for No. 1 cylinder.
NOTICE:
- **Use a timing light that detects the first signal.**
- **After checking, be sure to wrap the wire harness with tape.**

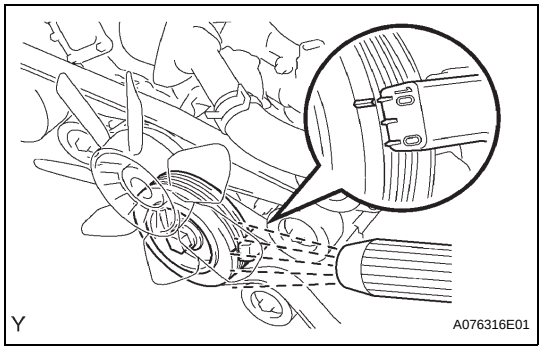

(5) Inspect the ignition timing during idling.
Ignition timing:
8 to 12°CA BTDC during idling (Transmission in neutral position)
(6) Remove the SST from the DLC3.
(7) Inspect the ignition timing during idling.
Ignition timing:
7 to 24°CA BTDC during idling (Transmission in neutral position)
(8) Install the air cleaner.

8. INSPECT ENGINE IDLING SPEED
NOTICE:
- **Turn all the electrical systems OFF.**
- **Operate the inspection when the cooling fan motor is turned OFF.**

(a) Warm up the engine.

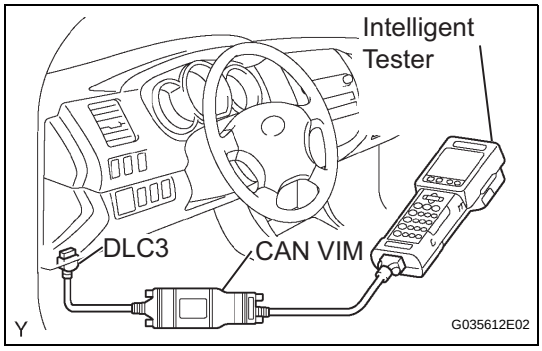

(b) When using the intelligent tester:
(1) Connect the intelligent tester to the DLC3.
(2) Select the following menu items: DIAGNOSIS / ENHANCED OBD II / DATA LIST / ENGINE SPD.
(3) Inspect the engine idling speed.
Idling speed:
650 to 750 rpm (Transmission in neutral position)

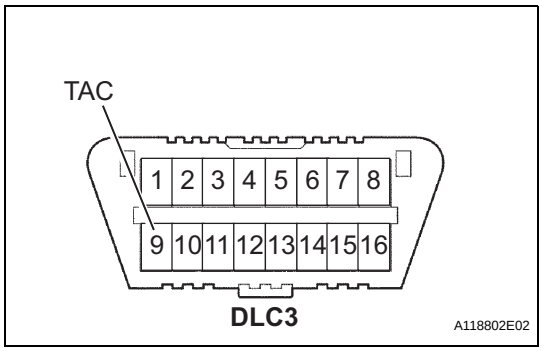

(c) When not using the intelligent tester:
(1) Using SST, connect the terminal 8 (TAC) of the DLC3.
SST 09843-18030
(2) Race the engine speed at 2,500 rpm for approximately 90 seconds.
(3) Inspect the engine idling speed.
Idling speed:
650 to 750 rpm (Transmission in neutral position)

9. INSPECT COMPRESSION
(a) Warm up and stop the engine.
(b) Remove the circuit opening relay.
(c) Remove the V-bank cover.
(d) Remove the air cleaner assembly.

EM

(e) Remove the ignition coils.
(f) Remove the spark plugs.

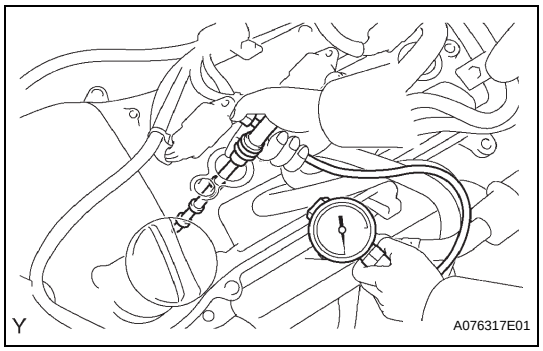

(g) Inspect the cylinder compression pressure.
(1) Insert a compression gage into the spark plug hole.
SST 09992-00500
(2) Fully open the throttle.
(3) While cranking the engine, measure the compression pressure.
Compression pressure:
1,300 kPa (13.3 kgf/cm^2, 189 psi)
Minimum pressure:
1,000 kPa (10.2 kgf/cm^2, 145 psi)
Difference between each cylinder:
100 kPa (1.0 kgf/cm^2, 15 psi)
NOTICE:
- **Use a fully-charged battery so the engine speed can be increased to 250 rpm or more.**
- **Inspect the other cylinders in the same way.**
- **Measure the compression in as short a time as possible.**

(4) If the cylinder compression is low, pour a small amount of engine oil into the cylinder through the spark plug hole and repeat steps (1) through (3) for cylinders with low compression.
- If adding oil increases the compression, the piston rings and/or cylinder bore may be worn or damaged.
- If pressure stays low, a valve may be stuck or seated improperly, or there may be leakage from the gasket.

10. INSPECT CO/HC
(a) Start the engine.
(b) Run the engine at 2,500 rpm for approximately 180 seconds.
(c) Insert the CO/HC meter testing probe at least 40 cm (1.3 ft) into the tailpipe during idling.
(d) Immediately check the CO/HC concentration during idling and/or at 2,500 rpm.
HINT:
- Complete the measurement within 3 minutes.
- When carrying out the 2 modes (idling and 2,500 rpm) test, the measurement orders are prescribed by the applicable local regulations.

(e) If the CO/HC concentration does not comply with regulations, troubleshoot in the order given below.
(1) Check the heated oxygen sensor operation.

CO	HC	Problems	Causes
Normal	High	Rough idling	1. Faulty ignition: – Incorrect timing – Fouled, shorted or improperly gapped plugs 2. Incorrect valve clearance 3. Leaky intake and exhaust valves 4. Leaky cylinders
Low	High	Rough idling (Fluctuating HC reading)	1. Vacuum leaks: – PCV hoses – Intake manifold – Throttle body – IAC valve – Brake booster line 2. Lean mixture causing misfire
High	High	Rough idling (Black smoke from exhaust)	1. Restricted air filter 2. Plugged PCV valve 3. Faulty EFI systems: – Faulty pressure regulator – Faulty engine coolant temperature sensor – Faulty mass air flow meter – Faulty ECM – Faulty injectors – Faulty throttle position sensor

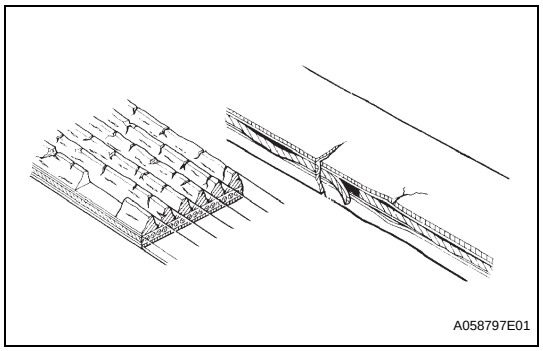

DRIVE BELT

ON-VEHICLE INSPECTION

1. INSPECT DRIVE BELT

(a) Visually check the drive belt for excessive wear frayed cords, etc. If any defect is found, replace the drive belt

HINT:

Cracks on the rib side of a drive belt are considered acceptable.

If the drive belt has chunks missing from the ribs, it should be replaced.

REMOVAL

1. REMOVE NO.1 ENGINE UNDER COVER SUB-ASSEMBLY (for Pre Runner and 4WD Type)

(a) Remove the 4 bolts, then remove the under cover No. 1.

2. REMOVE FAN AND GENERATOR V BELT

(a) While releasing the belt tension by turning the belt tensioner counterclockwise, remove the V-ribbed belt from the belt tensioner.

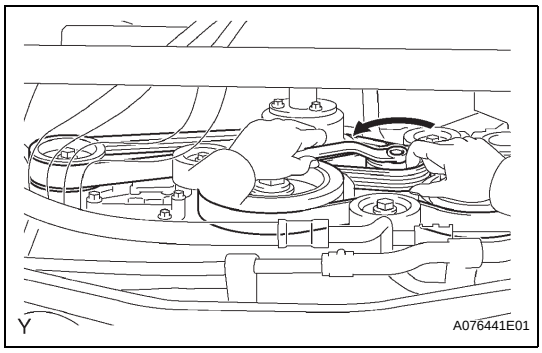

INSTALLATION

1. INSPECT V-RIBBED BELT TENSIONER ASSEMBLY

(a) Check that nothing gets caught in the tensioner by turning it clockwise and counterclockwise.
If a malfunction exists, replace the tensioner.

2. INSTALL FAN AND GENERATOR V BELT

(a) While turning the belt tensioner counterclockwise, align with its holes, and then insert a bar of 6 mm (0.24 in.) into the holes to fix the belt tensioner.

(b) Install the V-ribbed belt.

(c) While turning the belt tensioner counterclockwise, remove the bar.

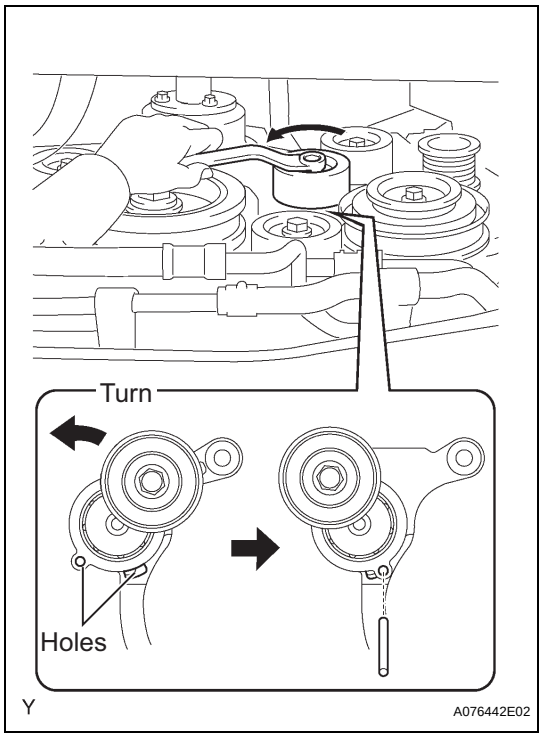

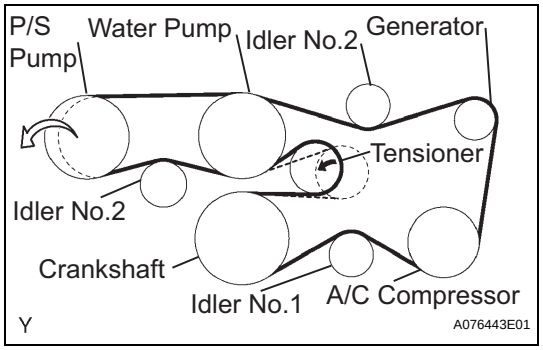

(d) If it is hard to install the V-ribbed belt, perform the following procedure.

(1) Put the V-ribbed belt on all parts except the P/S pump, as shown in the illustration.

(2) While releasing the belt tension by turning the belt tensioner counterclockwise, put the V-ribbed belt on the P/S pump.

3. INSTALL NO.1 ENGINE UNDER COVER SUB-ASSEMBLY (for Pre Runner and 4WD Type)

(a) Install the engine under cover with the 4 bolts.
Torque: 29 N*m (296 kgf*cm, 21 ft.*lbf)

EM

VALVE CLEARANCE

ADJUSTMENT

1. **DISCONNECT CABLE FROM NEGATIVE BATTERY TERMINAL**
2. **DRAIN ENGINE COOLANT (See page CO-3)**
3. **REMOVE V-BANK COVER (See page ES-414)**
4. **REMOVE AIR CLEANER ASSEMBLY (See page ES-415)**
5. **REMOVE INTAKE AIR SURGE TANK (See page EM-57)**
6. **REMOVE IGNITION COIL ASSEMBLY (See page IG-7)**
7. **REMOVE CYLINDER HEAD COVER SUB-ASSEMBLY (See page EM-59)**
8. **REMOVE CYLINDER HEAD COVER SUB-ASSEMBLY LH (See page EM-59)**
9. **SET NO.1 CYLINDER TO TDC/COMPRESSION**
   (a) Turn the crankshaft pulley until its groove and the timing mark "0" of the timing chain cover are aligned.

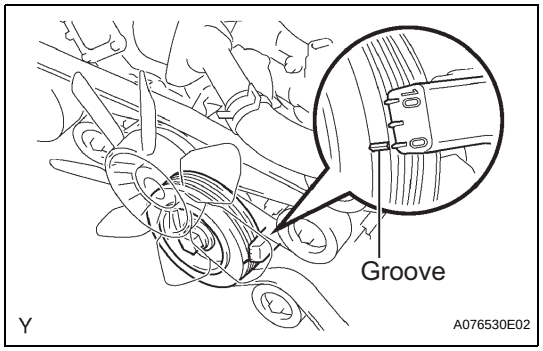

   (b) Check that the timing marks of the camshaft timing gears are aligned with the timing marks of the bearing cap as shown in the illustration.
   If not, turn the crankshaft 1 complete revolution (360°) and align the timing marks above.

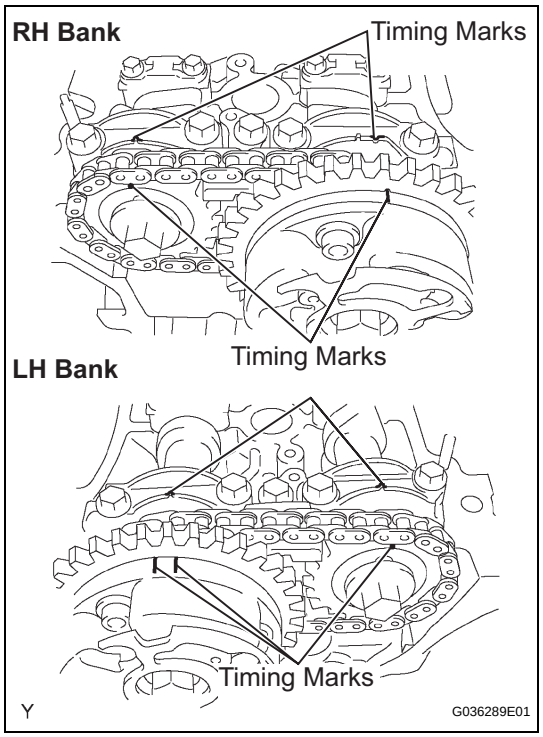

EM

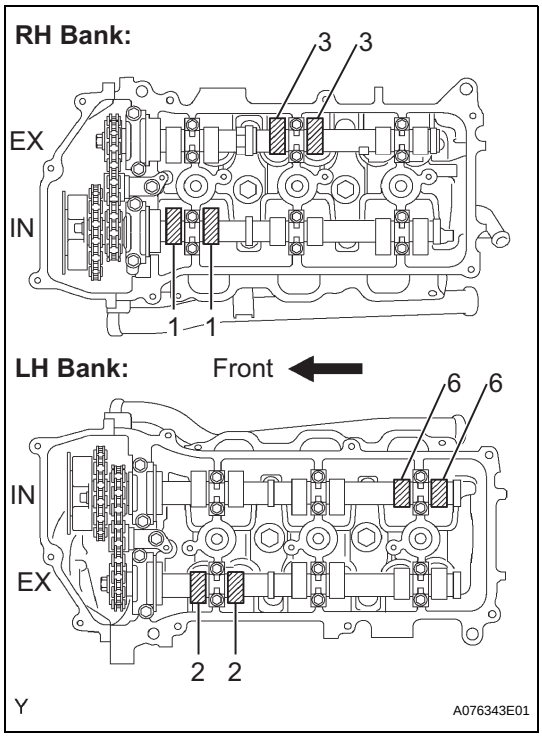

10. INSPECT VALVE CLEARANCE

(a) Check the valves indicated in the illustration.

(1) Using a feeler gauge, measure the clearance between the valve lifter and camshaft.

Valve clearance (Cold):

Intake 0.15 to 0.25 mm (0.006 to 0.010 in.)
Exhaust 0.29 to 0.39 mm (0.011 to 0.015 in.)

(2) Record any out-of-specification valve clearance measurements. They will be used later to determine the required replacement valve lifter.

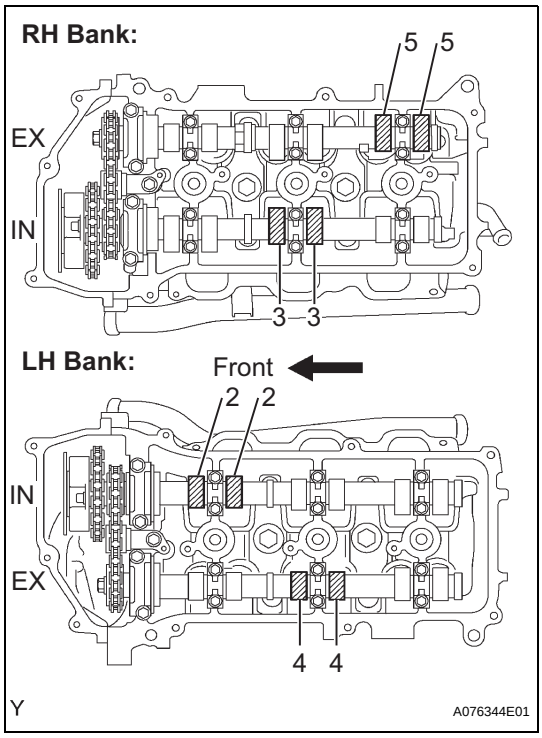

(b) Turn the crankshaft 240° clockwise, and check the valves indicated in the illustration.

(1) Using a feeler gauge, measure the clearance between the valve lifter and camshaft.

Valve clearance (Cold):

Intake 0.15 to 0.25 mm (0.006 to 0.010 in.)
Exhaust 0.29 to 0.39 mm (0.011 to 0.015 in.)

(2) Record any out-of-specification valve clearance measurements. They will be used later to determine the required replacement valve lifter.

EM

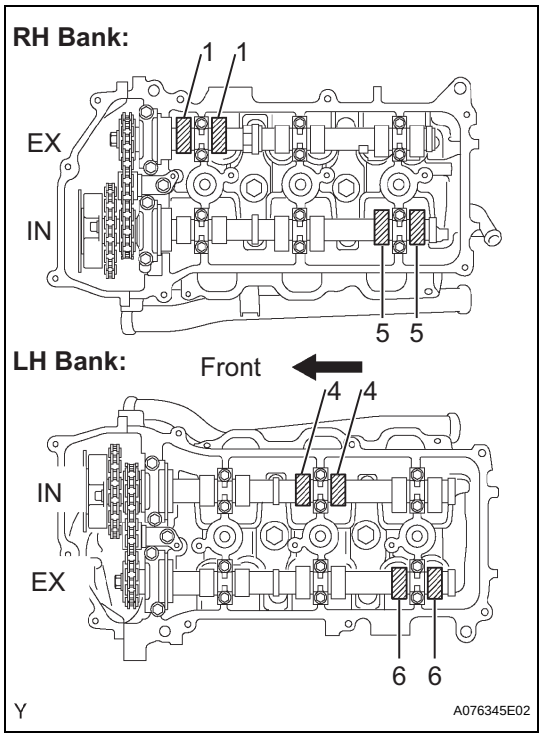

(c) Turn the crankshaft 240° clockwise, and check the valves indicated in the illustration.

(1) Using a feeler gauge, measure the clearance between the valve lifter and camshaft.

(2) Valve clearance (Cold):
Intake 0.15 to 0.25 mm (0.006 to 0.010 in.)
Exhaust 0.29 to 0.39 mm (0.011 to 0.015 in.)

Record any out-of-specification valve clearance measurements. They will be used later to determine the required replacement valve lifter.

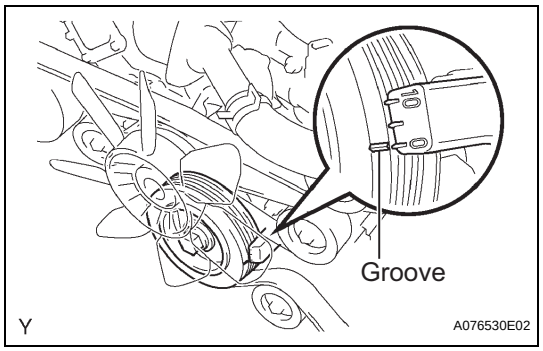

11. ADJUST VALVE CLEARANCE

(a) Set No. 1 cylinder to TDC/compression.

(1) Turn the crankshaft pulley until its groove and the timing mark "0" of the timing chain cover are aligned.

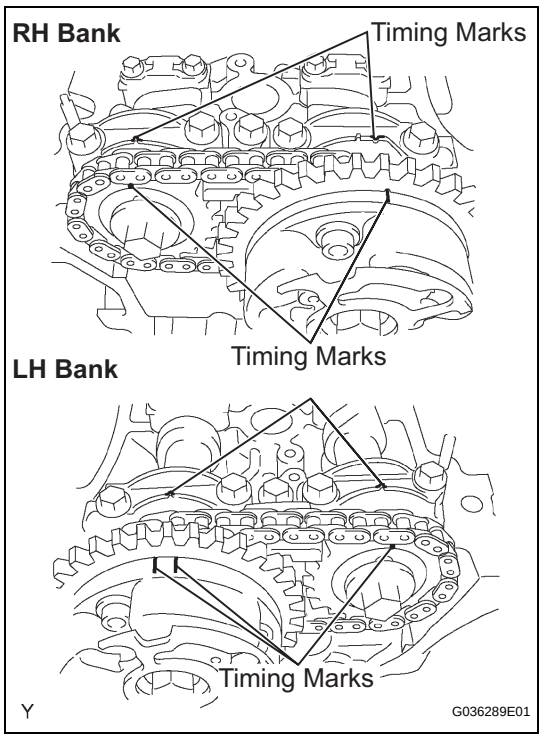

(2) Check that the timing marks of the camshaft timing gears are aligned with the timing marks of the bearing cap as shown in the illustration. If not, turn the crankshaft 1 complete revolution (360°) and align the timing marks as above.

EM

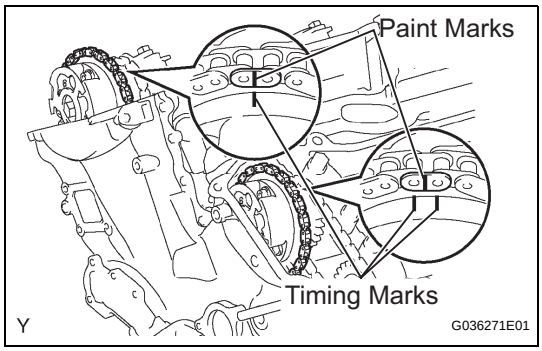

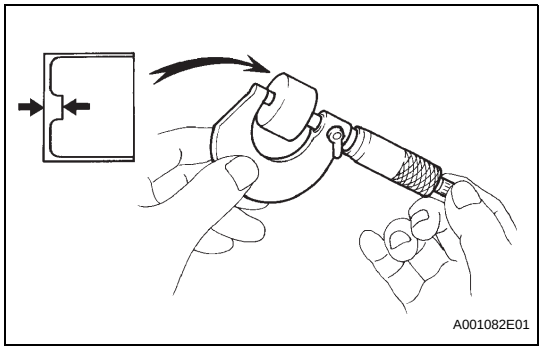

(3) Place paint marks on the No. 1 chain links corresponding to the timing marks of the camshaft timing gears.

(b) Remove the chain tensioner assembly No. 1.

(c) Remove the No. 2 camshaft.

(d) Remove the chain tensioner assembly No. 2.

(e) Remove the camshaft.

(f) Remove the No. 4 camshaft sub-assembly.

(g) Remove the chain tensioner assembly No. 3.

(h) Remove the No. 3 camshaft sub-assembly.

(i) Remove the valve lifters.

(j) Determine the replacement valve lifter size according to the following formulas and charts:

(1) Using a micrometer, measure the thickness of the removed lifter.

(2) Calculate the thickness of a new lifter so that the valve clearance comes within the specified value.

T:
Thickness of removed lifter
A:
Measured valve clearance
N:
Thickness of new lifter
Intake:
N = T + (A - 0.20 mm (0.008 in.))
Exhaust:
N = T + (A - 0.30 mm (0.012 in.))

(3) Select a new lifter with a thickness as close as possible to the calculated value.

HINT:
Lifters are available in 35 sizes in increments of 0.020 mm (0.0008 in.), from 5.060 mm (0.1992 in.) to 5.740 mm (0.2260 in.).

	5.060 (0.1992)	5.080 (0.2000)	5.100 (0.2008)	5.120 (0.2016)	5.140 (0.2024)	5.160 (0.2031)	5.180 (0.2039)	5.200 (0.2047)	5.210 (0.2051)	5.220 (0.2055)	5.230 (0.2059)	5.240 (0.2063)	5.250 (0.2067)	5.260 (0.2071)	5.270 (0.2075)	5.280 (0.2079)	5.290 (0.2083)	5.300 (0.2087)	5.310 (0.2091)	5.320 (0.2094)	5.330 (0.2098)	5.340 (0.2102)	5.350 (0.2106)	5.360 (0.2110)	5.370 (0.2114)	5.380 (0.2118)	5.390 (0.2122)	5.400 (0.2126)	5.410 (0.2130)	5.420 (0.2134)	5.430 (0.2138)	5.440 (0.2142)	5.450 (0.2146)	5.460 (0.2150)	5.470 (0.2154)	5.480 (0.2157)	5.490 (0.2161)	5.500 (0.2165)	5.510 (0.2169)	5.520 (0.2173)	5.530 (0.2177)	5.540 (0.2181)	5.550 (0.2185)	5.560 (0.2189)	5.570 (0.2193)	5.580 (0.2197)	5.590 (0.2201)	5.600 (0.2205)	5.620 (0.2213)	5.640 (0.2220)	5.660 (0.2228)	5.680 (0.2236)	5.700 (0.2244)	5.720 (0.2252)	5.740 (0.2260)
0.000 - 0.020 (0.0000 - 0.0008)													06	08	08	10	10	12	12	14	14	16	16	18	18	20	20	22	22	24	24	26	26	28	28	30	30	32	32	34	34	36	36	38	38	40	40	42	44	46	48	50	52	54	56
0.021 - 0.040 (0.0008 - 0.0016)											06	08	08	10	10	12	12	14	14	16	16	18	18	20	20	22	22	24	24	26	26	28	28	30	30	32	32	34	34	36	36	38	38	40	40	42	42	44	46	48	50	52	54	56	58
0.041 - 0.060 (0.0016 - 0.0024)									06	08	08	10	10	12	12	14	14	16	16	18	18	20	20	22	22	24	24	26	26	28	28	30	30	32	32	34	34	36	36	38	38	40	40	42	42	44	44	46	48	50	52	54	56	58	60
0.061 - 0.080 (0.0024 - 0.0031)								08	08	10	10	12	12	14	14	16	16	18	18	20	20	22	22	24	24	26	26	28	28	30	30	32	32	34	34	36	36	38	38	40	40	42	42	44	44	46	46	48	50	52	54	56	58	60	62
0.081 - 0.100 (0.0032 - 0.0039)							08	10	10	12	12	14	14	16	16	18	18	20	20	22	22	24	24	26	26	28	28	30	30	32	32	34	34	36	36	38	38	40	40	42	42	44	44	46	46	48	48	50	52	54	56	58	60	62	64
0.101 - 0.120 (0.0040 - 0.0047)						08	10	12	12	14	14	16	16	18	18	20	20	22	22	24	24	26	26	28	28	30	30	32	32	34	34	36	36	38	38	40	40	42	42	44	44	46	46	48	48	50	50	52	54	56	58	60	62	64	66
0.121 - 0.140 (0.0048 - 0.0055)					08	10	12	14	14	16	16	18	18	20	20	22	22	24	24	26	26	28	28	30	30	32	32	34	34	36	36	38	38	40	40	42	42	44	44	46	46	48	48	50	50	52	52	54	56	58	60	62	64	66	68
0.141 - 0.149 (0.0056 - 0.0059)				06	08	10	12	14	16	16	18	18	20	20	22	22	24	24	26	26	28	28	30	30	32	32	34	34	36	36	38	38	40	40	42	42	44	44	46	46	48	48	50	50	52	52	54	54	56	58	60	62	64	66	68
0.251 - 0.270 (0.0099 - 0.0106)	12	14	16	18	20	22	24	26	28	28	30	30	32	32	34	34	36	36	38	38	40	40	42	42	44	44	46	46	48	48	50	50	52	52	54	54	56	56	58	58	60	60	62	62	64	64	66	66	68	70	72				
0.271 - 0.290 (0.0107 - 0.0114)	14	16	18	20	22	24	26	28	30	30	32	32	34	34	36	36	38	38	40	40	42	42	44	44	46	46	48	48	50	50	52	52	54	54	56	56	58	58	60	60	62	62	64	64	66	66	68	68	70	72					
0.291 - 0.310 (0.0115 - 0.0122)	16	18	20	22	24	26	28	30	32	32	34	34	36	36	38	38	40	40	42	42	44	44	46	46	48	48	50	50	52	52	54	54	56	56	58	58	60	60	62	62	64	64	66	66	68	68	70	70	72						
0.311 - 0.330 (0.0122 - 0.0130)	18	20	22	24	26	28	30	32	34	34	36	36	38	38	40	40	42	42	44	44	46	46	48	48	50	50	52	52	54	54	56	56	58	58	60	60	62	62	64	64	66	66	68	68	70	70	72	72							
0.331 - 0.350 (0.0130 - 0.0138)	20	22	24	26	28	30	32	34	36	36	38	38	40	40	42	42	44	44	46	46	48	48	50	50	52	52	54	54	56	56	58	58	60	60	62	62	64	64	66	66	68	68	70	70	72	72	74								
0.351 - 0.370 (0.0138 - 0.0146)	22	24	26	28	30	32	34	36	38	38	40	40	42	42	44	44	46	46	48	48	50	50	52	52	54	54	56	56	58	58	60	60	62	62	64	64	66	66	68	68	70	70	72	72	74										
0.371 - 0.390 (0.0146 - 0.0154)	24	26	28	30	32	34	36	38	40	40	42	42	44	44	46	46	48	48	50	50	52	52	54	54	56	56	58	58	60	60	62	62	64	64	66	66	68	68	70	70	72	72	74												
0.391 - 0.410 (0.0154 - 0.0161)	26	28	30	32	34	36	38	40	42	42	44	44	46	46	48	48	50	50	52	52	54	54	56	56	58	58	60	60	62	62	64	64	66	66	68	68	70	70	72	72	74														
0.411 - 0.430 (0.0162 - 0.0169)	28	30	32	34	36	38	40	42	44	44	46	46	48	48	50	50	52	52	54	54	56	56	58	58	60	60	62	62	64	64	66	66	68	68	70	70	72	72	74																
0.431 - 0.450 (0.0170 - 0.0177)	30	32	34	36	38	40	42	44	46	46	48	48	50	50	52	52	54	54	56	56	58	58	60	60	62	62	64	64	66	66	68	68	70	70	72	72	74																		
0.451 - 0.470 (0.0178 - 0.0185)	32	34	36	38	40	42	44	46	48	48	50	50	52	52	54	54	56	56	58	58	60	60	62	62	64	64	66	66	68	68	70	70	72	72	74																				
0.471 - 0.490 (0.0185 - 0.0193)	34	36	38	40	42	44	46	48	50	50	52	52	54	54	56	56	58	58	60	60	62	62	64	64	66	66	68	68	70	70	72	72	74																				
0.491 - 0.510 (0.0193 - 0.0201)	36	38	40	42	44	46	48	50	52	52	54	54	56	56	58	58	60	60	62	62	64	64	66	66	68	68	70	70	72	72	74																						
0.511 - 0.530 (0.0201 - 0.0209)	38	40	42	44	46	48	50	52	54	54	56	56	58	58	60	60	62	62	64	64	66	66	68	68	70	70	72	72	74																									
0.531 - 0.550 (0.0209 - 0.0217)	40	42	44	46	48	50	52	54	56	56	58	58	60	60	62	62	64	64	66	66	68	68	70	70	72	72	74																										
0.551 - 0.570 (0.0217 - 0.0224)	42	44	46	48	50	52	54	56	58	58	60	60	62	62	64	64	66	66	68	68	70	70	72	72	74																												
0.571 - 0.590 (0.0225 - 0.0232)	44	46	48	50	52	54	56	58	60	60	62	62	64	64	66	66	68	68	70	70	72	72	74																														
0.591 - 0.610 (0.0233 - 0.0240)	46	48	50	52	54	56	58	60	62	62	64	64	66	66	68	68	70	70	72	72	74																																
0.611 - 0.630 (0.0241 - 0.0248)	48	50	52	54	56	58	60	62	64	64	66	66	68	68	70	70	72	72	74																																		
0.631 - 0.650 (0.0248 - 0.0256)	50	52	54	56	58	60	62	64	66	66	68	68	70	70	72	72	74																																				
0.651 - 0.670 (0.0256 - 0.0264)	52	54	56	58	60	62	64	66	68	68	70	70	72	72	74																																						
0.671 - 0.690 (0.0264 - 0.0272)	54	56	58	60	62	64	66	68	70	70	72	72	74																																								
0.691 - 0.710 (0.0272 - 0.0280)	56	58	60	62	64	66	68	70	72	72	74																																										
0.711 - 0.730 (0.0280 - 0.0287)	58	60	62	64	66	68	70	72	74																																												
0.731 - 0.750 (0.0288 - 0.0295)	60	62	64	66	68	70	72																																														
0.751 - 0.770 (0.0296 - 0.0303)	62	64	66	68	70	72																																															
0.771 - 0.790 (0.0304 - 0.0311)	64	66	68	70	72																																																
0.791 - 0.810 (0.0311 - 0.0319)	66	68	70	72																																																		
0.811 - 0.830 (0.0319 - 0.0327)	68	70	72																																																			
0.831 - 0.850 (0.0327 - 0.0335)	70	72																																																				
0.851 - 0.870 (0.0335 - 0.0343)	72																																																					

06	5.060 (0.1992)	30	5.300 (0.2087)	54	5.540 (0.2181)
08	5.080 (0.2000)	32	5.320 (0.2094)	56	5.560 (0.2189)
10	5.100 (0.2008)	34	5.340 (0.2102)	58	5.580 (0.2197)
12	5.120 (0.2016)	36	5.360 (0.2110)	60	5.600 (0.2205)
14	5.140 (0.2024)	38	5.380 (0.2118)	62	5.620 (0.2213)
16	5.160 (0.2031)	40	5.400 (0.2126)	64	5.640 (0.2220)
18	5.180 (0.2039)	42	5.420 (0.2134)	66	5.660 (0.2228)
20	5.200 (0.2047)	44	5.440 (0.2142)	68	5.680 (0.2236)
22	5.220 (0.2055)	46	5.460 (0.2150)	70	5.700 (0.2244)
24	5.240 (0.2063)	48	5.480 (0.2157)	72	5.720 (0.2252)
26	5.260 (0.2071)	50	5.500 (0.2165)	74	5.740 (0.2260)
28	5.280 (0.2079)	52	5.520 (0.2173)		

EM

	5.060 (0.1992)	5.080 (0.2000)	5.100 (0.2008)	5.120 (0.2016)	5.140 (0.2024)	5.160 (0.2031)	5.180 (0.2039)	5.200 (0.2047)	5.210 (0.2051)	5.220 (0.2055)	5.230 (0.2059)	5.240 (0.2063)	5.250 (0.2067)	5.260 (0.2071)	5.270 (0.2075)	5.280 (0.2079)	5.290 (0.2083)	5.300 (0.2087)	5.310 (0.2091)	5.320 (0.2094)	5.330 (0.2098)	5.340 (0.2102)	5.350 (0.2106)	5.360 (0.2110)	5.370 (0.2114)	5.380 (0.2118)	5.390 (0.2122)	5.400 (0.2126)	5.410 (0.2130)	5.420 (0.2134)	5.430 (0.2138)	5.440 (0.2142)	5.450 (0.2146)	5.460 (0.2150)	5.470 (0.2154)	5.480 (0.2157)	5.490 (0.2161)	5.500 (0.2165)	5.510 (0.2169)	5.520 (0.2173)	5.530 (0.2177)	5.540 (0.2181)	5.550 (0.2185)	5.560 (0.2189)	5.570 (0.2193)	5.580 (0.2197)	5.590 (0.2201)	5.600 (0.2205)	5.620 (0.2213)	5.640 (0.2220)	5.660 (0.2228)	5.680 (0.2236)	5.700 (0.2244)	5.720 (0.2252)	5.740 (0.2260)
0.000 - 0.020 (0.0000 - 0.0008)																											06	08	08	10	10	12	12	14	14	16	16	18	18	20	20	22	22	24	24	26	26	28	30	32	34	36	38	40	42
0.021 - 0.040 (0.0008 - 0.0016)																									06	08	08	10	10	12	12	14	14	16	16	18	18	20	20	22	22	24	24	26	26	28	28	30	32	34	36	38	40	42	44
0.041 - 0.060 (0.0016 - 0.0024)																						06	08	08	10	10	12	12	14	14	16	16	18	18	20	20	22	22	24	24	26	26	28	28	30	30	32	34	36	38	40	42	44	46
0.061 - 0.080 (0.0024 - 0.0031)																					06	08	08	10	10	12	12	14	14	16	16	18	18	20	20	22	22	24	24	26	26	28	28	30	30	32	32	34	36	38	40	42	44	46	48
0.081 - 0.100 (0.0032 - 0.0039)																			06	08	08	10	10	12	12	14	14	16	16	18	18	20	20	22	22	24	24	26	26	28	28	30	30	32	32	34	34	36	38	40	42	44	46	48	50
0.101 - 0.120 (0.0040 - 0.0047)																	06	08	08	10	10	12	12	14	14	16	16	18	18	20	20	22	22	24	24	26	26	28	28	30	30	32	32	34	34	36	36	38	40	42	44	46	48	50	52
0.121 - 0.140 (0.0048 - 0.0055)															06	08	08	10	10	12	12	14	14	16	16	18	18	20	20	22	22	24	24	26	26	28	28	30	30	32	32	34	34	36	36	38	38	40	42	44	46	48	50	52	54
0.141 - 0.160 (0.0056 - 0.0063)													06	08	08	10	10	12	12	14	14	16	16	18	18	20	20	22	22	24	24	26	26	28	28	30	30	32	32	34	34	36	36	38	38	40	40	42	44	46	48	50	52	54	56
0.161 - 0.180 (0.0063 - 0.0071)											06	08	08	10	10	12	12	14	14	16	16	18	18	20	20	22	22	24	24	26	26	28	28	30	30	32	32	34	34	36	36	38	38	40	40	42	42	44	46	48	50	52	54	56	58
0.181 - 0.200 (0.0071 - 0.0079)									06	08	08	10	10	12	12	14	14	16	16	18	18	20	20	22	22	24	24	26	26	28	28	30	30	32	32	34	34	36	36	38	38	40	40	42	42	44	44	46	48	50	52	54	56	58	60
0.201 - 0.220 (0.0079 - 0.0087)								08	08	10	10	12	12	14	14	16	16	18	18	20	20	22	22	24	24	26	26	28	28	30	30	32	32	34	34	36	36	38	38	40	40	42	42	44	44	46	46	48	50	52	54	56	58	60	62
0.221 - 0.240 (0.0087 - 0.0094)							08	10	10	12	12	14	14	16	16	18	18	20	20	22	22	24	24	26	26	28	28	30	30	32	32	34	34	36	36	38	38	40	40	42	42	44	44	46	46	48	48	50	52	54	56	58	60	62	64
0.241 - 0.260 (0.0095 - 0.0102)						08	10	12	12	14	14	16	16	18	18	20	20	22	22	24	24	26	26	28	28	30	30	32	32	34	34	36	36	38	38	40	40	42	42	44	44	46	46	48	48	50	50	52	54	56	58	60	62	64	66
0.261 - 0.280 (0.0103 - 0.0110)					08	10	12	14	14	16	16	18	18	20	20	22	22	24	24	26	26	28	28	30	30	32	32	34	34	36	36	38	38	40	40	42	42	44	44	46	46	48	48	50	50	52	52	54	56	58	60	62	64	66	68
0.281 - 0.289 (0.0111 - 0.0114)				06	08	10	12	14	16	16	18	18	20	20	22	22	24	24	26	26	28	28	30	30	32	32	34	34	36	36	38	38	40	40	42	42	44	44	46	46	48	48	50	50	52	52	54	54	56	58	60	62	64	66	68
0.391 - 0.410 (0.0154 - 0.0161)	12	14	16	18	20	22	24	26	28	28	30	30	32	32	34	34	36	36	38	38	40	40	42	42	44	44	46	46	48	48	50	50	52	52	54	54	56	56	58	58	60	60	62	62	64	64	66	66	68	70	72					
0.411 - 0.430 (0.0162 - 0.0169)	14	16	18	20	22	24	26	28	30	30	32	32	34	34	36	36	38	38	40	40	42	42	44	44	46	46	48	48	50	50	52	52	54	54	56	56	58	58	60	60	62	62	64	64	66	66	68	68	70	72						
0.431 - 0.450 (0.0170 - 0.0177)	16	18	20	22	24	26	28	30	32	32	34	34	36	36	38	38	40	40	42	42	44	44	46	46	48	48	50	50	52	52	54	54	56	56	58	58	60	60	62	62	64	64	66	66	68	68	70	70	72							
0.451 - 0.470 (0.0178 - 0.0185)	18	20	22	24	26	28	30	32	34	34	36	36	38	38	40	40	42	42	44	44	46	46	48	48	50	50	52	52	54	54	56	56	58	58	60	60	62	62	64	64	66	66	68	68	70	70	72	72								
0.471 - 0.490 (0.0185 - 0.0193)	20	22	24	26	28	30	32	34	36	36	38	38	40	40	42	42	44	44	46	46	48	48	50	50	52	52	54	54	56	56	58	58	60	60	62	62	64	64	66	66	68	68	70	70	72	72	74									
0.491 - 0.510 (0.0193 - 0.0201)	22	24	26	28	30	32	34	36	38	38	40	40	42	42	44	44	46	46	48	48	50	50	52	52	54	54	56	56	58	58	60	60	62	62	64	64	66	66	68	68	70	70	72	72	74											
0.511 - 0.530 (0.0201 - 0.0209)	24	26	28	30	32	34	36	38	40	40	42	42	44	44	46	46	48	48	50	50	52	52	54	54	56	56	58	58	60	60	62	62	64	64	66	66	68	68	70	70	72	72	74													
0.531 - 0.550 (0.0209 - 0.0217)	26	28	30	32	34	36	38	40	42	42	44	44	46	46	48	48	50	50	52	52	54	54	56	56	58	58	60	60	62	62	64	64	66	66	68	68	70	70	72	72	74															
0.551 - 0.570 (0.0217 - 0.0224)	28	30	32	34	36	38	40	42	44	44	46	46	48	48	50	50	52	52	54	54	56	56	58	58	60	60	62	62	64	64	66	66	68	68	70	70	72	72	74																	
0.571 - 0.590 (0.0225 - 0.0232)	30	32	34	36	38	40	42	44	46	46	48	48	50	50	52	52	54	54	56	56	58	58	60	60	62	62	64	64	66	66	68	68	70	70	72	72	74																			
0.591 - 0.610 (0.0233 - 0.0240)	32	34	36	38	40	42	44	46	48	48	50	50	52	52	54	54	56	56	58	58	60	60	62	62	64	64	66	66	68	68	70	70	72	72	74																					
0.611 - 0.630 (0.0241 - 0.0248)	34	36	38	40	42	44	46	48	50	50	52	52	54	54	56	56	58	58	60	60	62	62	64	64	66	66	68	68	70	70	72	72	74																						
0.631 - 0.650 (0.0248 - 0.0256)	36	38	40	42	44	46	48	50	52	52	54	54	56	56	58	58	60	60	62	62	64	64	66	66	68	68	70	70	72	72	74																									
0.651 - 0.670 (0.0256 - 0.0264)	38	40	42	44	46	48	50	52	54	54	56	56	58	58	60	60	62	62	64	64	66	66	68	68	70	70	72	72	74																											
0.671 - 0.690 (0.0264 - 0.0272)	40	42	44	46	48	50	52	54	56	56	58	58	60	60	62	62	64	64	66	66	68	68	70	70	72	72	74																													
0.691 - 0.710 (0.0272 - 0.0280)	42	44	46	48	50	52	54	56	58	58	60	60	62	62	64	64	66	66	68	68	70	70	72	72	74																														
0.711 - 0.730 (0.0280 - 0.0287)	44	46	48	50	52	54	56	58	60	60	62	62	64	64	66	66	68	68	70	70	72	72	74																															
0.731 - 0.750 (0.0288 - 0.0295)	46	48	50	52	54	56	58	60	62	62	64	64	66	66	68	68	70	70	72	72	74																																	
0.751 - 0.770 (0.0296 - 0.0303)	48	50	52	54	56	58	60	62	64	64	66	66	68	68	70	70	72	72	74																																				
0.771 - 0.790 (0.0304 - 0.0311)	50	52	54	56	58	60	62	64	66	66	68	68	70	70	72	72	74																																							
0.791 - 0.810 (0.0311 - 0.0319)	52	54	56	58	60	62	64	66	68	68	70	70	72	72	74																																								
0.811 - 0.830 (0.0319 - 0.0327)	54	56	58	60	62	64	66	68	70	70	72	72	74																																									
0.831 - 0.850 (0.0327 - 0.0335)	56	58	60	62	64	66	68	70	72	72	74																																											
0.851 - 0.870 (0.0335 - 0.0343)	58	60	62	64	66	68	70	72	74																																													
0.871 - 0.890 (0.0343 - 0.0350)	60	62	64	66	68	70	72																																															
0.891 - 0.910 (0.0351 - 0.0358)	62	64	66	68	70	72																																																
0.911 - 0.930 (0.0359 - 0.0366)	64	66	68	70	72																																																	
0.931 - 0.950 (0.0367 - 0.0374)	66	68	70	72																																																			
0.951 - 0.970 (0.0374 - 0.0382)	68	70	72																																																				
0.971 - 0.990 (0.0382 - 0.0390)	70	72																																																					
0.991 - 1.010 (0.0390 - 0.0398)	72																																																						

06	5.060 (0.1992)	30	5.300 (0.2087)	54	5.540 (0.2181)
08	5.080 (0.2000)	32	5.320 (0.2094)	56	5.560 (0.2189)
10	5.100 (0.2008)	34	5.340 (0.2102)	58	5.580 (0.2197)
12	5.120 (0.2016)	36	5.360 (0.2110)	60	5.600 (0.2205)
14	5.140 (0.2024)	38	5.380 (0.2118)	62	5.620 (0.2213)
16	5.160 (0.2031)	40	5.400 (0.2126)	64	5.640 (0.2220)
18	5.180 (0.2039)	42	5.420 (0.2134)	66	5.660 (0.2228)
20	5.200 (0.2047)	44	5.440 (0.2142)	68	5.680 (0.2236)
22	5.220 (0.2055)	46	5.460 (0.2150)	70	5.700 (0.2244)
24	5.240 (0.2063)	48	5.480 (0.2157)	72	5.720 (0.2252)
26	5.260 (0.2071)	50	5.500 (0.2165)	74	5.740 (0.2260)
28	5.280 (0.2079)	52	5.520 (0.2173)		

A076342

(k) Install the No. 3 camshaft sub-assembly.
(l) Install the chain tensioner assembly No. 3.
(m) Install the No. 4 camshaft sub-assembly.
(n) Install the camshaft.
(o) Install the chain tensioner assembly No. 2.
(p) Install the No. 2 camshaft.

(q) Install the chain tensioner assembly No. 1.
(1) Check that the timing marks of the camshaft timing gears are aligned with the timing marks of the bearing cap as shown in the illustration.

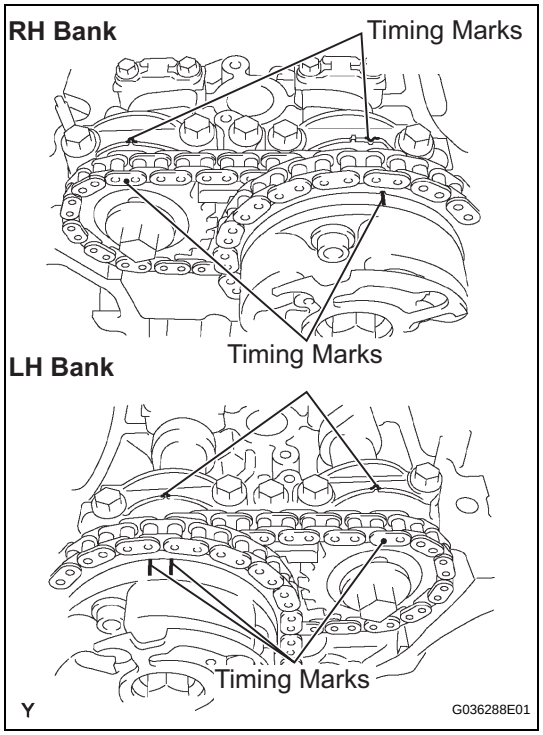

12. INSTALL CYLINDER HEAD COVER SUB-ASSEMBLY LH (See page EM-68)

13. INSTALL CYLINDER HEAD COVER SUB-ASSEMBLY (See page EM-68)

14. INSTALL IGNITION COIL ASSEMBLY
Torque: 10 N*m (102 kgf*cm, 7.4 ft.*lbf)

15. INSTALL INTAKE AIR SURGE TANK (See page EM-69)

16. INSTALL AIR CLEANER ASSEMBLY (See page ES-416)

17. ADD ENGINE COOLANT (See page CO-3)

18. CONNECT CABLE TO NEGATIVE BATTERY TERMINAL

19. CHECK FOR ENGINE COOLANT LEAKAGE (See page CO-4)

20. INSTALL V-BANK COVER
(a) Install the V-bank cover with the 2 nuts.
Torque: 7.5 N*m (76 kgf*cm, 66 in.*lbf)

21. INSPECT IGNITION TIMING (See page EM-1)

TIMING CHAIN (for 2WD)

COMPONENTS

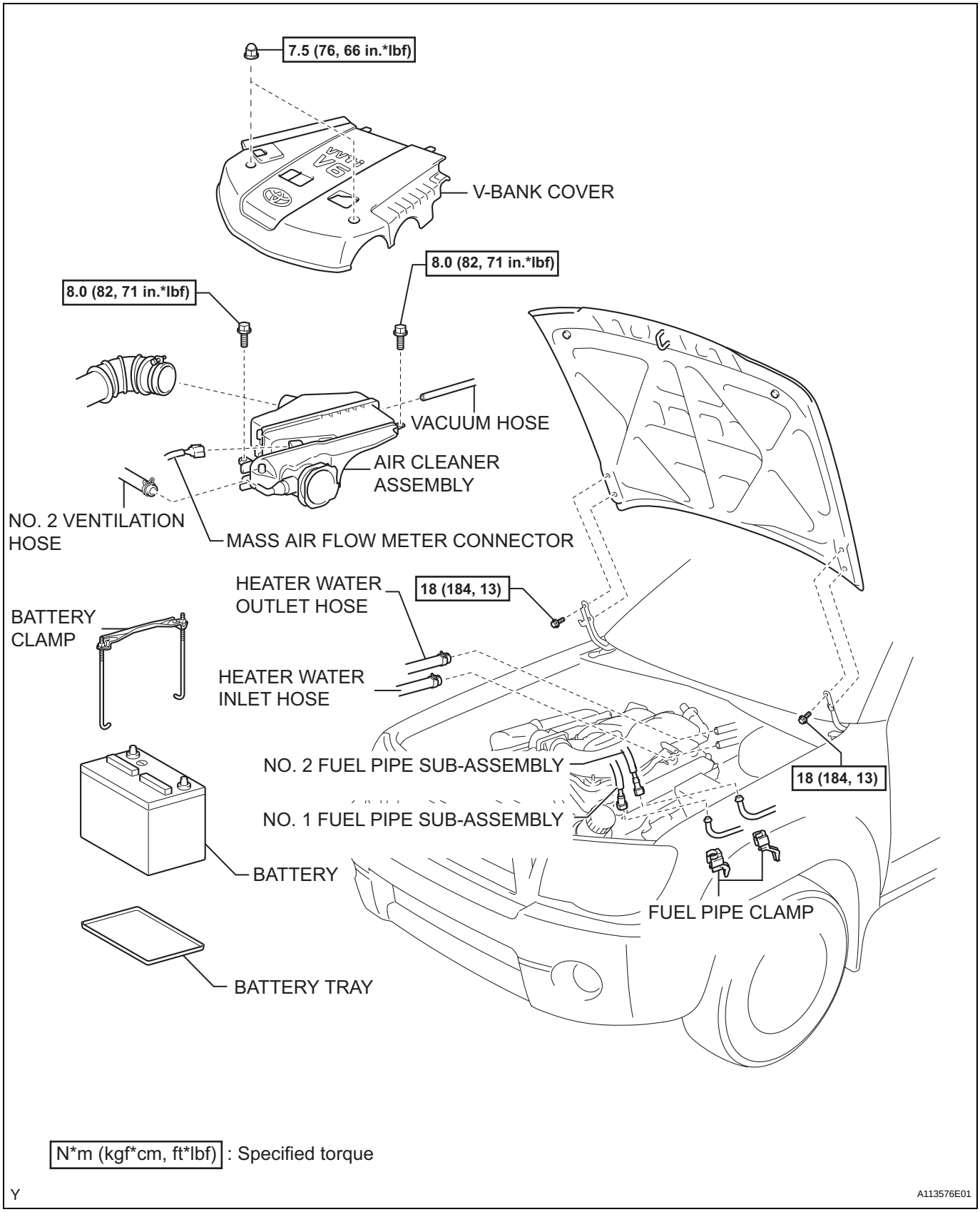

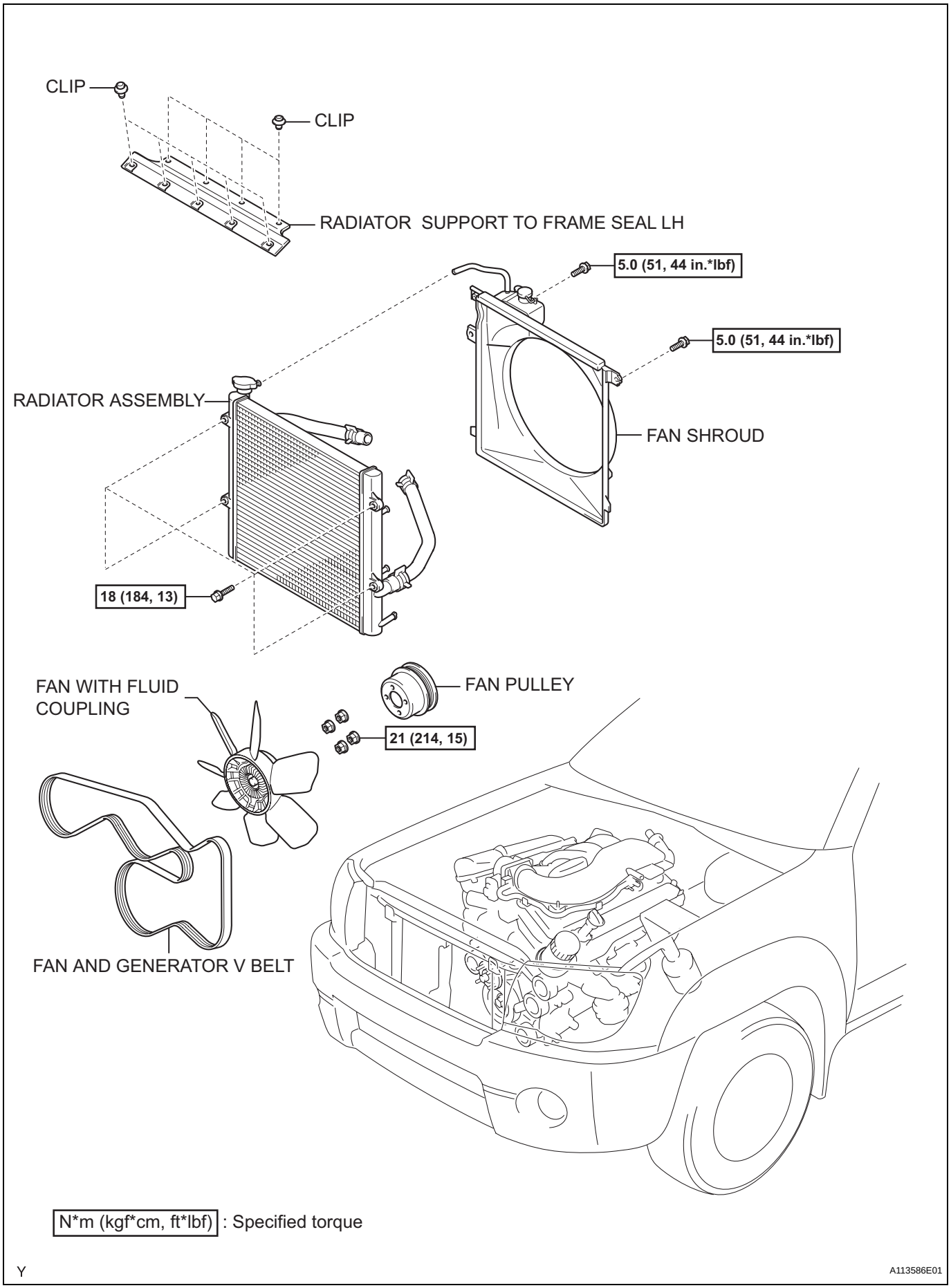
CLIP
CLIP
RADIATOR SUPPORT TO FRAME SEAL LH
5.0 (51, 44 in.*lbf)
5.0 (51, 44 in.*lbf)
RADIATOR ASSEMBLY
FAN SHROUD
18 (184, 13)
FAN WITH FLUID COUPLING
FAN PULLEY
21 (214, 15)
FAN AND GENERATOR V BELT
N*m (kgf*cm, ft*lbf) : Specified torque
Y
A113586E01

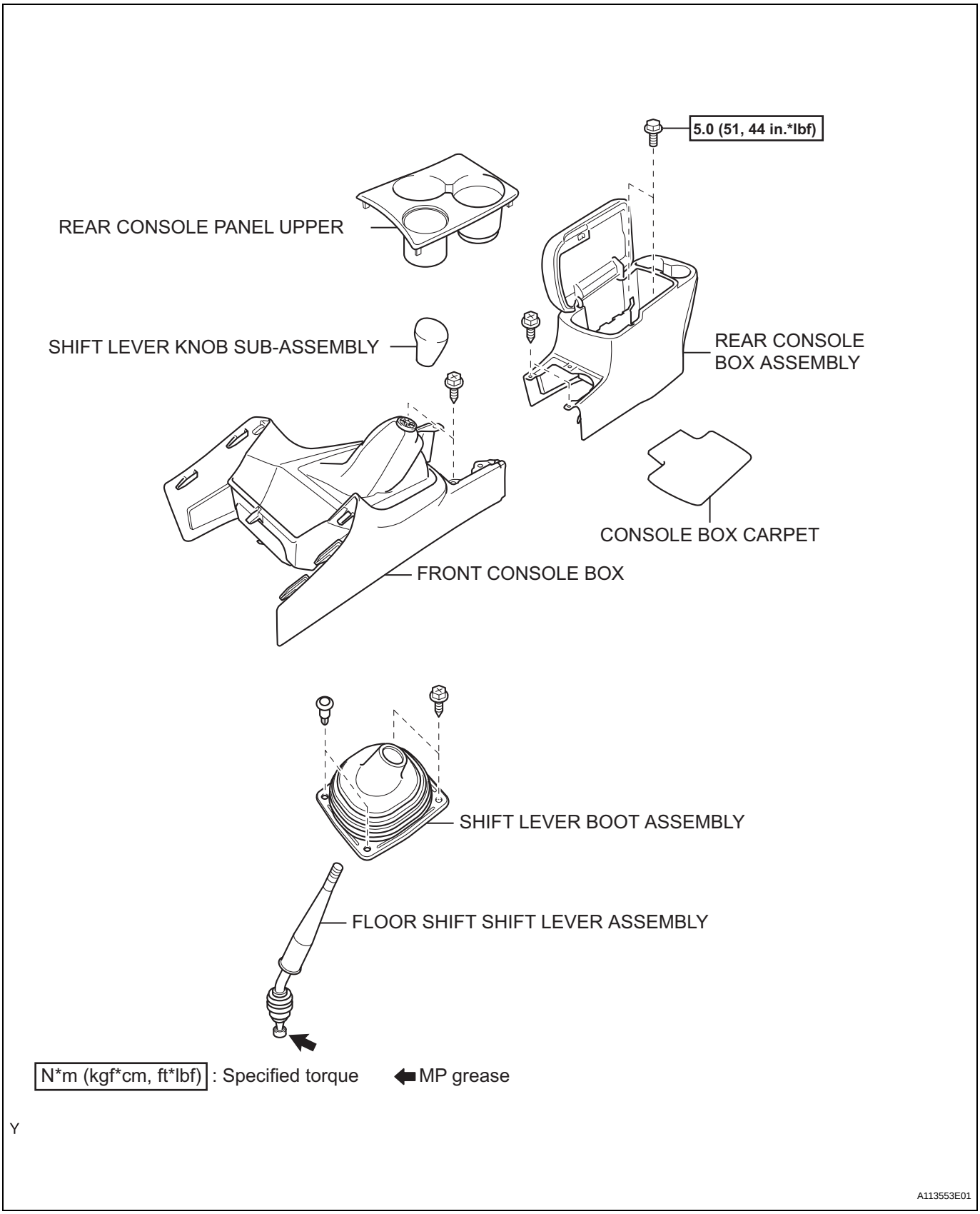
5.0 (51, 44 in.*lbf)
REAR CONSOLE PANEL UPPER
SHIFT LEVER KNOB SUB-ASSEMBLY
REAR CONSOLE BOX ASSEMBLY
CONSOLE BOX CARPET
FRONT CONSOLE BOX
SHIFT LEVER BOOT ASSEMBLY
FLOOR SHIFT SHIFT LEVER ASSEMBLY
N*m (kgf*cm, ft*lbf) : Specified torque
MP grease
A113553E01

Y

2WD AND PRE RUNNER, MANUAL TRANSMISSION:

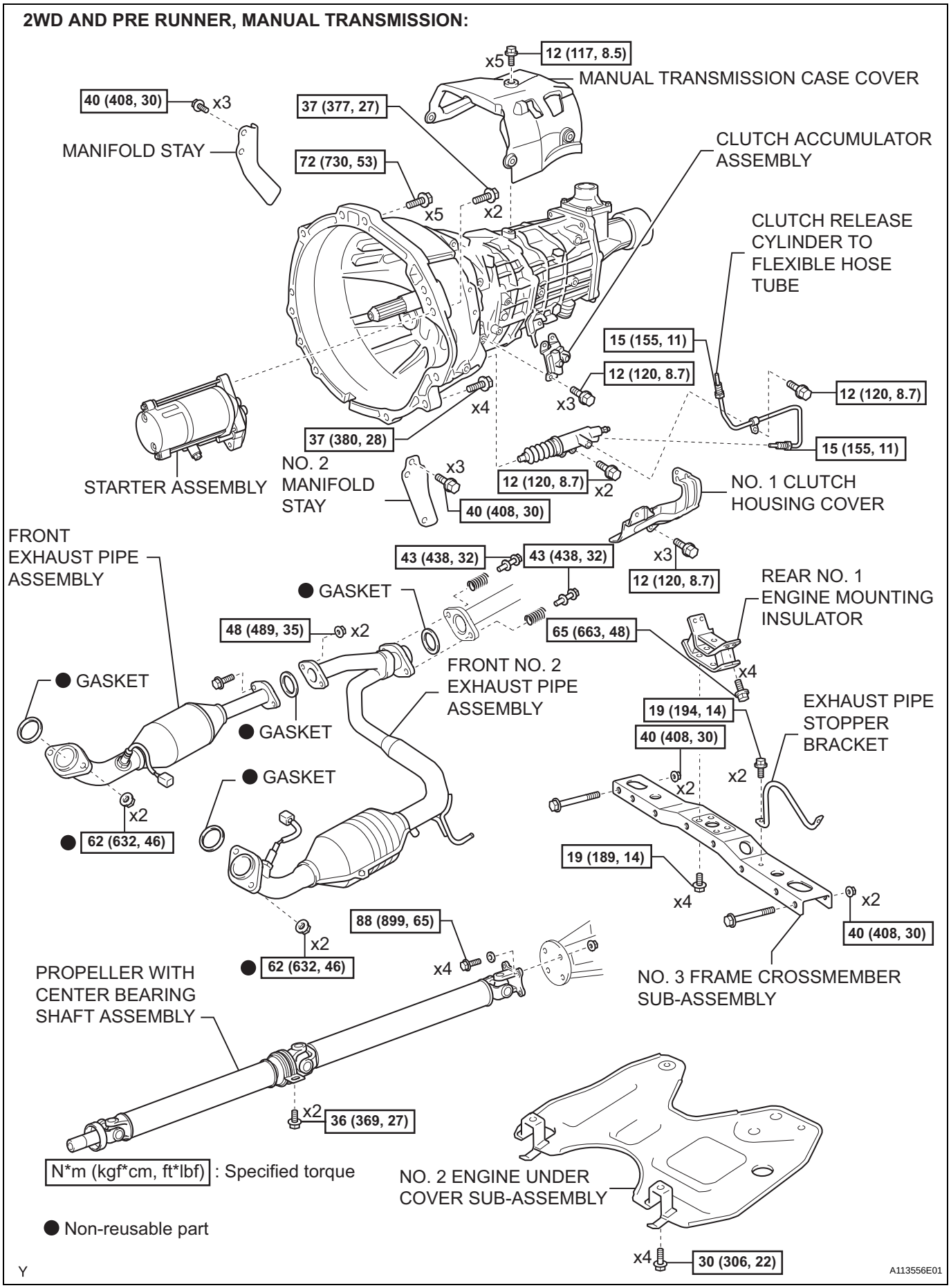

EM

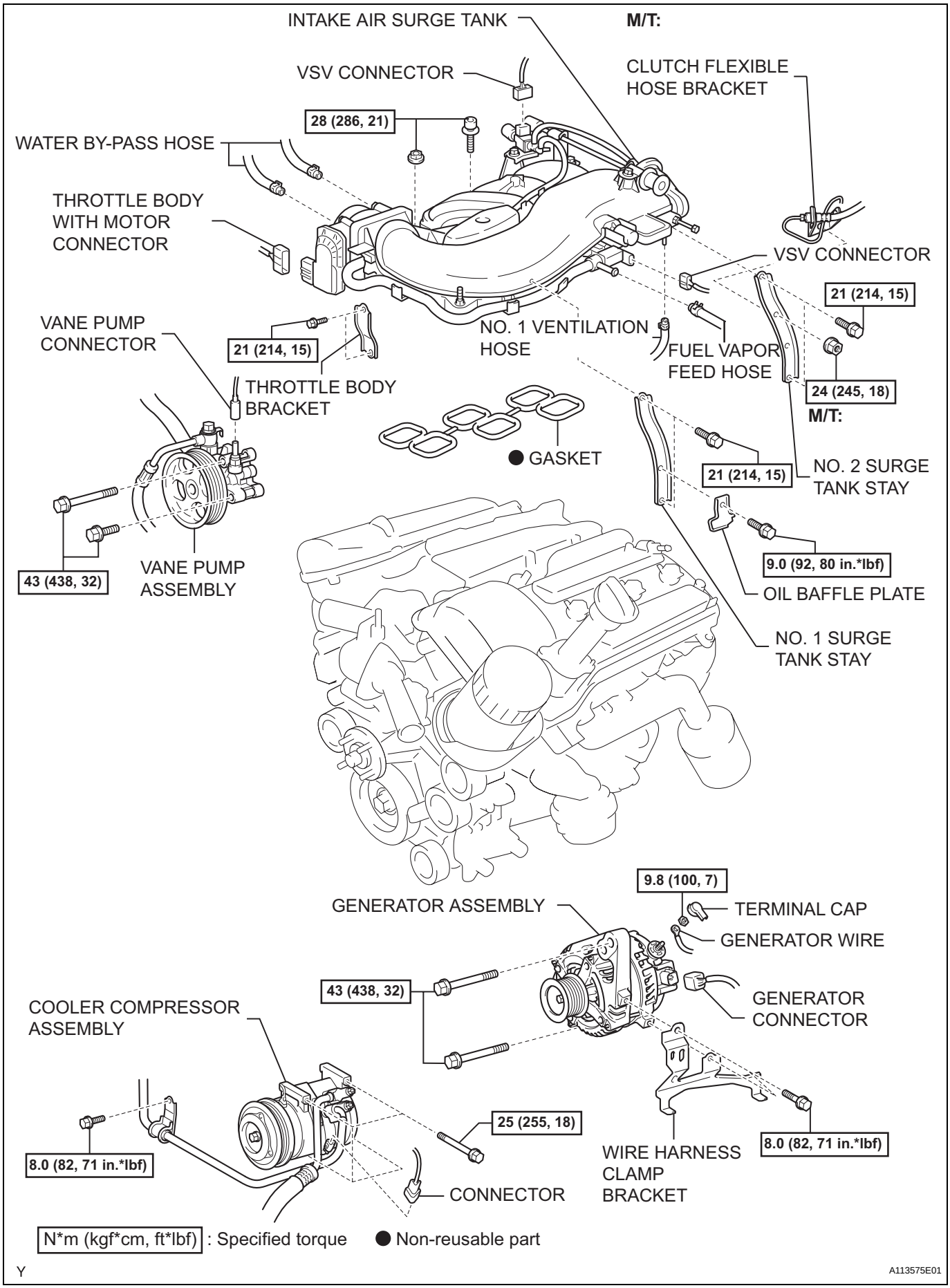
INTAKE AIR SURGE TANK
M/T:
VSV CONNECTOR
CLUTCH FLEXIBLE HOSE BRACKET
28 (286, 21)
WATER BY-PASS HOSE
THROTTLE BODY WITH MOTOR CONNECTOR
VSV CONNECTOR
21 (214, 15)
VANE PUMP CONNECTOR
21 (214, 15)
NO. 1 VENTILATION HOSE
FUEL VAPOR FEED HOSE
24 (245, 18)
M/T:
THROTTLE BODY BRACKET
GASKET
21 (214, 15)
NO. 2 SURGE TANK STAY
9.0 (92, 80 in.*lbf)
43 (438, 32)
VANE PUMP ASSEMBLY
OIL BAFFLE PLATE
NO. 1 SURGE TANK STAY
9.8 (100, 7)
GENERATOR ASSEMBLY
TERMINAL CAP
GENERATOR WIRE
43 (438, 32)
GENERATOR CONNECTOR
COOLER COMPRESSOR ASSEMBLY
25 (255, 18)
8.0 (82, 71 in.*lbf)
WIRE HARNESS CLAMP BRACKET
8.0 (82, 71 in.*lbf)
CONNECTOR
N*m (kgf*cm, ft*lbf) : Specified torque
Non-reusable part
Y
A113575E01

EM

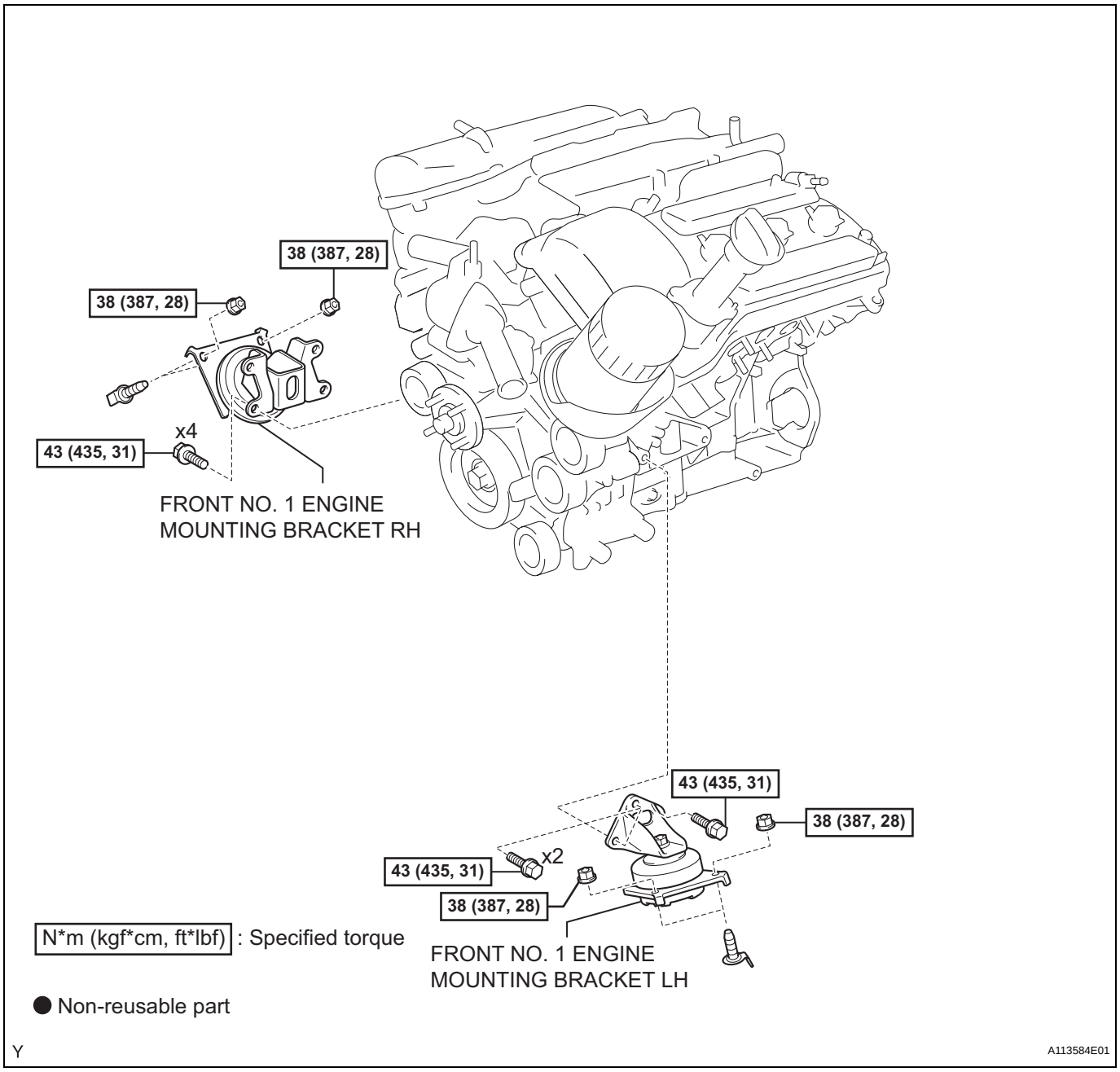
38 (387, 28)
38 (387, 28)
x4
43 (435, 31)
FRONT NO. 1 ENGINE
MOUNTING BRACKET RH
43 (435, 31)
38 (387, 28)
x2
43 (435, 31)
38 (387, 28)
FRONT NO. 1 ENGINE
MOUNTING BRACKET LH
N*m (kgf*cm, ft*lbf) : Specified torque
● Non-reusable part
Y
A113584E01

EM

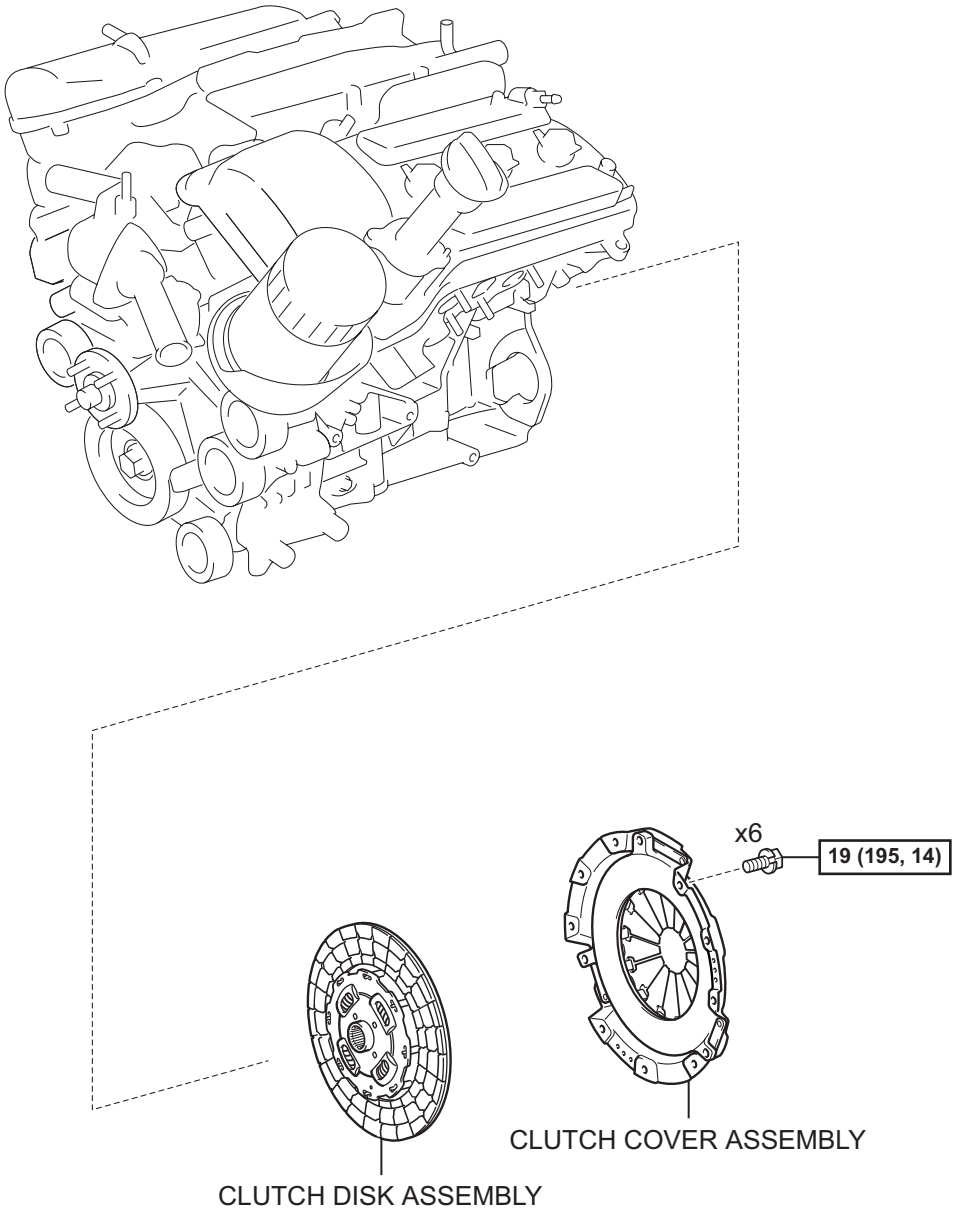

N*m (kgf*cm, ft*lbf) : Specified torque

Y

A113585E01

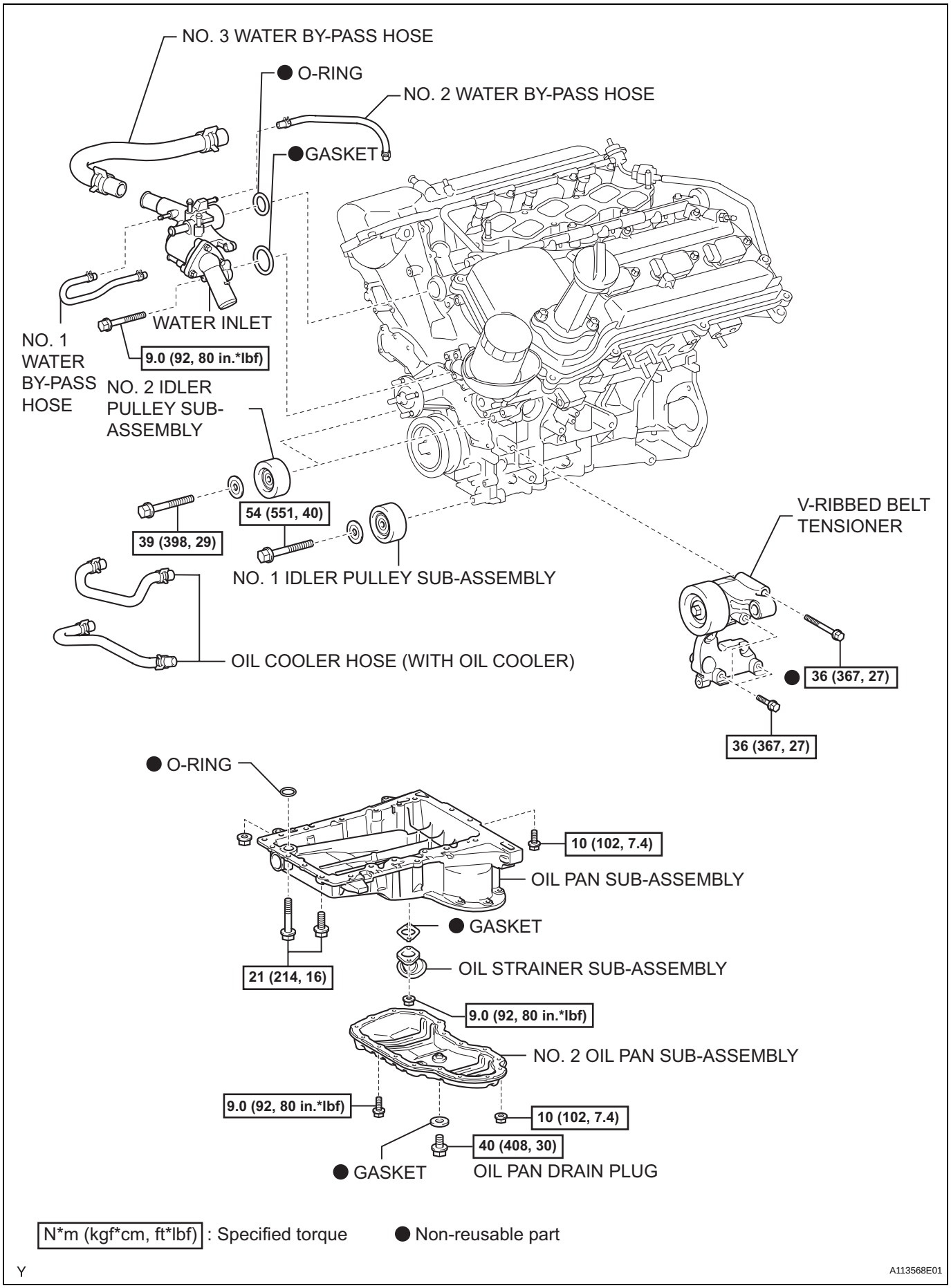
NO. 3 WATER BY-PASS HOSE
● O-RING
NO. 2 WATER BY-PASS HOSE
●GASKET
WATER INLET
NO. 1 WATER BY-PASS HOSE
9.0 (92, 80 in.*lbf)
NO. 2 IDLER PULLEY SUB-ASSEMBLY
54 (551, 40)
39 (398, 29)
NO. 1 IDLER PULLEY SUB-ASSEMBLY
V-RIBBED BELT TENSIONER
OIL COOLER HOSE (WITH OIL COOLER)
● 36 (367, 27)
36 (367, 27)
● O-RING
10 (102, 7.4)
OIL PAN SUB-ASSEMBLY
● GASKET
OIL STRAINER SUB-ASSEMBLY
21 (214, 16)
9.0 (92, 80 in.*lbf)
NO. 2 OIL PAN SUB-ASSEMBLY
9.0 (92, 80 in.*lbf)
10 (102, 7.4)
40 (408, 30)
● GASKET
OIL PAN DRAIN PLUG
N*m (kgf*cm, ft*lbf) : Specified torque
● Non-reusable part
Y
A113568E01

EM

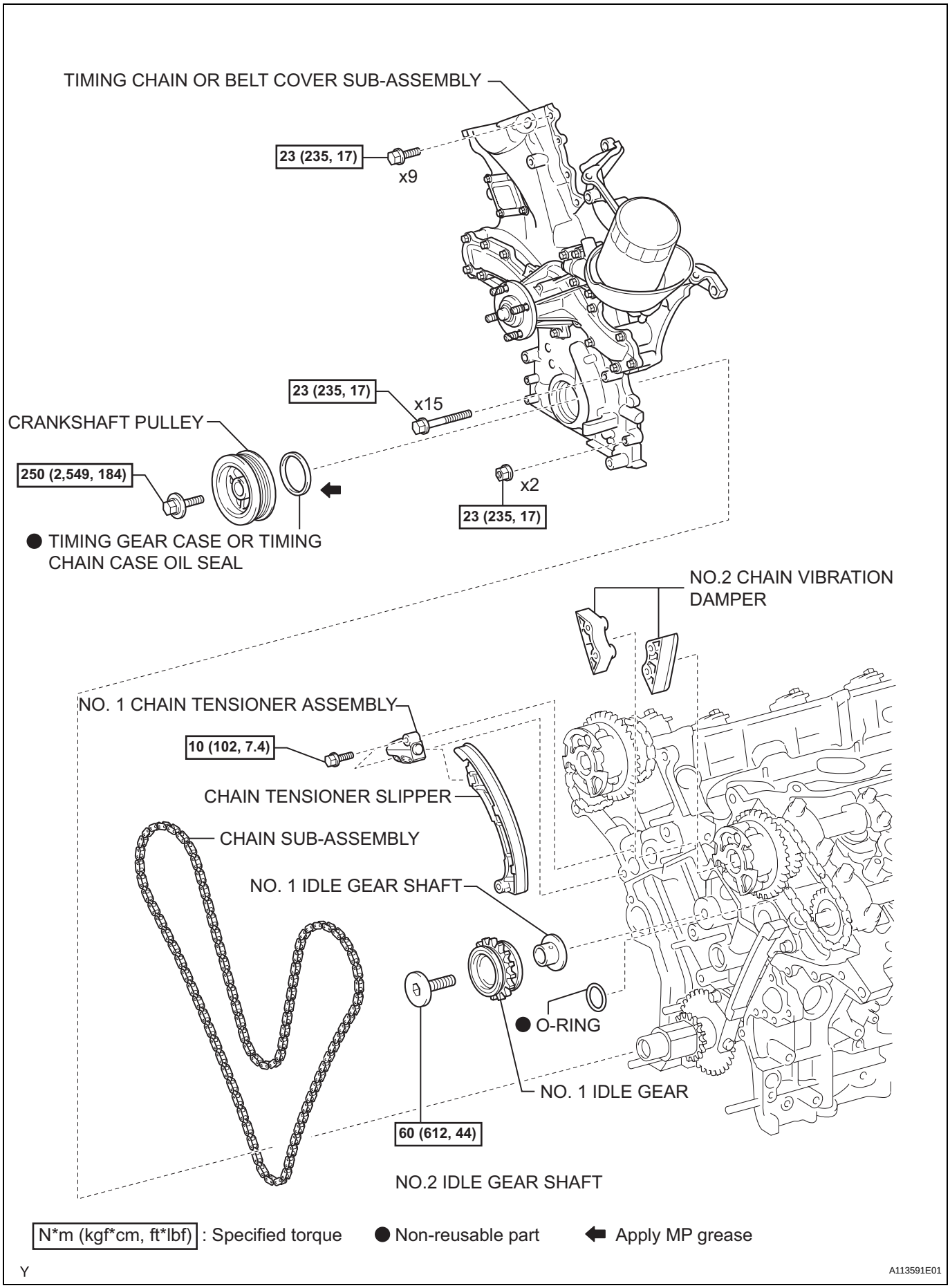
TIMING CHAIN OR BELT COVER SUB-ASSEMBLY
23 (235, 17)
x9
23 (235, 17)
x15
CRANKSHAFT PULLEY
250 (2,549, 184)
x2
23 (235, 17)
● TIMING GEAR CASE OR TIMING CHAIN CASE OIL SEAL
NO.2 CHAIN VIBRATION DAMPER
NO. 1 CHAIN TENSIONER ASSEMBLY
10 (102, 7.4)
CHAIN TENSIONER SLIPPER
CHAIN SUB-ASSEMBLY
NO. 1 IDLE GEAR SHAFT
● O-RING
NO. 1 IDLE GEAR
60 (612, 44)
NO.2 IDLE GEAR SHAFT
N*m (kgf*cm, ft*lbf) : Specified torque
● Non-reusable part
Apply MP grease
Y
A113591E01

EM

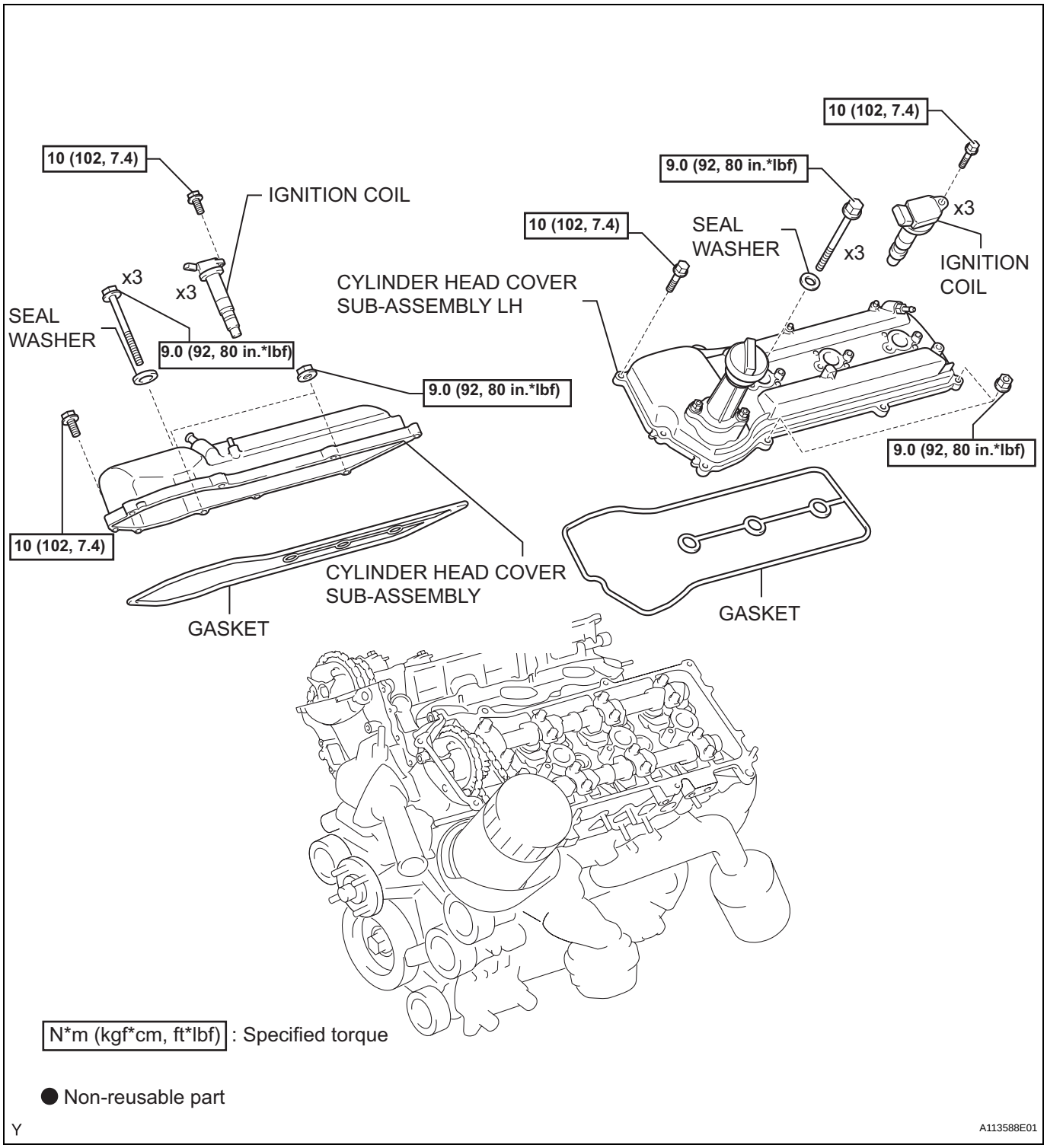
10 (102, 7.4)
IGNITION COIL
x3
x3
SEAL WASHER
9.0 (92, 80 in.*lbf)
9.0 (92, 80 in.*lbf)
10 (102, 7.4)
CYLINDER HEAD COVER SUB-ASSEMBLY
GASKET
10 (102, 7.4)
9.0 (92, 80 in.*lbf)
SEAL WASHER
x3
x3
IGNITION COIL
CYLINDER HEAD COVER SUB-ASSEMBLY LH
9.0 (92, 80 in.*lbf)
GASKET
N*m (kgf*cm, ft*lbf) : Specified torque
● Non-reusable part
Y
A113588E01

EM

EM

REMOVAL

1. **DISCHARGE FUEL SYSTEM PRESSURE**
   (See page FU-1)
2. **REMOVE BATTERY**
3. **DRAIN ENGINE COOLANT (See page CO-3)**
4. **DRAIN ENGINE OIL (See page LU-4)**
5. **REMOVE ENGINE ASSEMBLY**
   (See page EM-186)
6. **REMOVE OIL LEVEL GAGE GUIDE**
   (a) Remove the oil level gauge.
   (b) Remove the bolt and pull out the oil level gauge guide.
   (c) Remove the O-ring from the oil level gauge guide.
7. **REMOVE WATER INLET (See page CO-9)**
8. **REMOVE V-RIBBED BELT TENSIONER ASSEMBLY (See page EM-44)**
9. **REMOVE NO.2 IDLER PULLEY SUB-ASSEMBLY**
   (a) Remove the 2 bolts, then remove the idler pulley No. 2.
10. **REMOVE NO.1 IDLER PULLEY SUB-ASSEMBLY**
    (a) Remove the bolt, then remove the idler pulley No. 1.
11. **REMOVE CRANKSHAFT PULLEY (See page EM-45)**
12. **REMOVE NO.2 OIL PAN SUB-ASSEMBLY**
    (a) Remove the 15 bolts and 2 nuts.

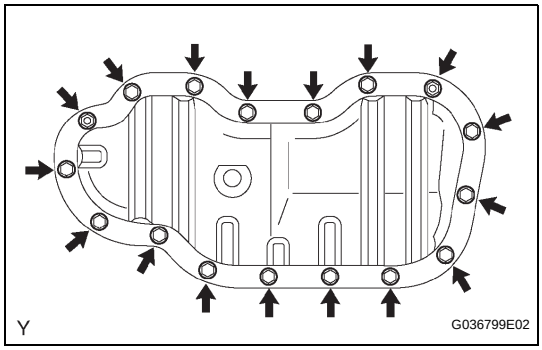

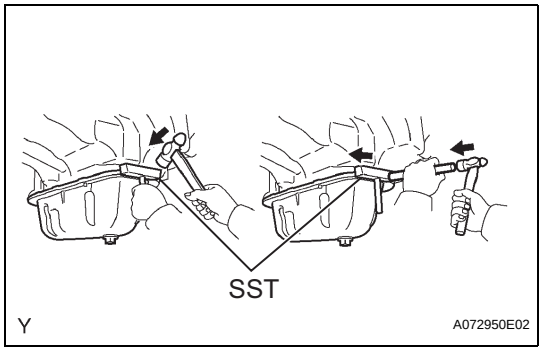

(b) Insert the blade of SST between the oil pan and oil pan No. 2, cut off applied sealer and remove the oil pan No. 2.
SST 09032-00100
NOTICE:
- **Be careful not to damage the contact surfaces of the oil pan and oil pan No. 2**

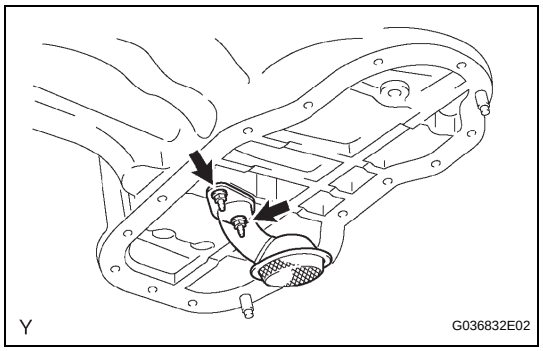

13. REMOVE OIL STRAINER SUB-ASSEMBLY

(a) Remove the 2 nuts, then remove the oil strainer and gasket.

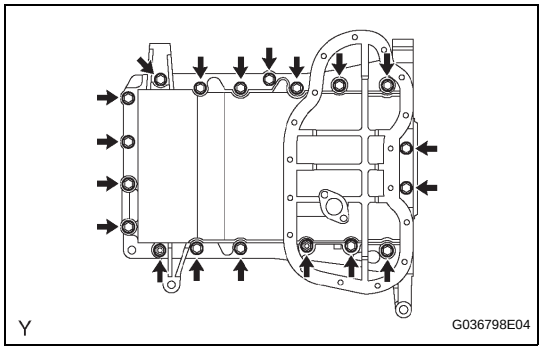

14. REMOVE OIL PAN SUB-ASSEMBLY

(a) Remove the 17 bolts and 2 nuts.

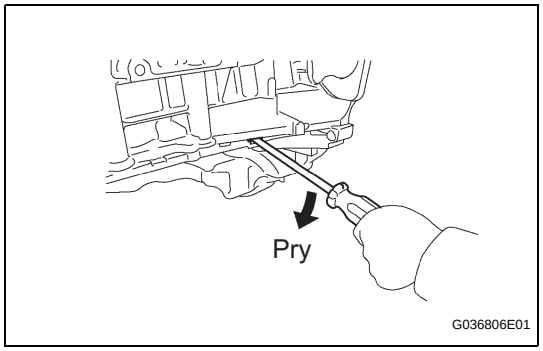

(b) Using a screwdriver, remove the oil pan by prying between the oil pan and cylinder block.
NOTICE:
Be careful not to damage the contact surfaces of the cylinder block and oil pan.

15. REMOVE INTAKE AIR SURGE TANK (See page EM-57)

16. REMOVE IGNITION COIL ASSEMBLY (See page IG-7)

17. REMOVE CYLINDER HEAD COVER SUB-ASSEMBLY (See page EM-59)

18. REMOVE CYLINDER HEAD COVER SUB-ASSEMBLY LH (See page EM-59)

19. REMOVE CAMSHAFT TIMING OIL CONTROL VALVE ASSEMBLY (See page ES-407)

20. REMOVE VVT SENSOR (See page IG-8)

21. REMOVE TIMING CHAIN OR BELT COVER SUB-ASSEMBLY (See page LU-17)

22. REMOVE TIMING GEAR CASE OR TIMING CHAIN CASE OIL SEAL (See page EM-236)

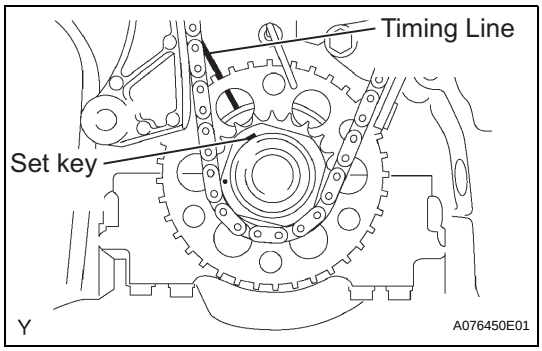

23. SET NO.1 CYLINDER TO TDC/COMPRESSION

(a) Using the crankshaft pulley set bolt, turn the crankshaft to align the crankshaft set key with the timing line of the cylinder block.

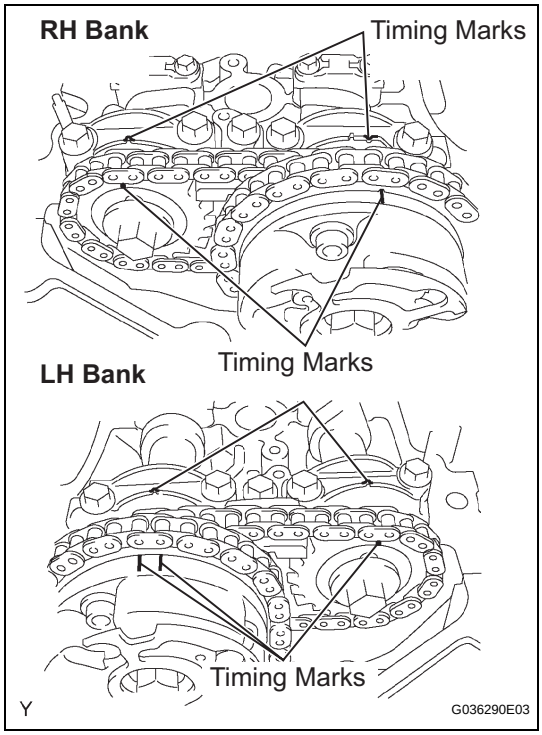

(b) Check that the timing marks of the camshaft timing gears are aligned with the timing marks of the bearing cap as shown in the illustration.
If not, turn the crankshaft 1 complete revolution (360°) and align the timing marks as above.

24. REMOVE NO.1 CHAIN TENSIONER ASSEMBLY

NOTICE:

- **Never rotate the crankshaft with the chain tensioner removed.**
- **When rotating the camshaft with the timing chain removed, rotate the crankshaft counterclockwise 40° from the TDC first.**

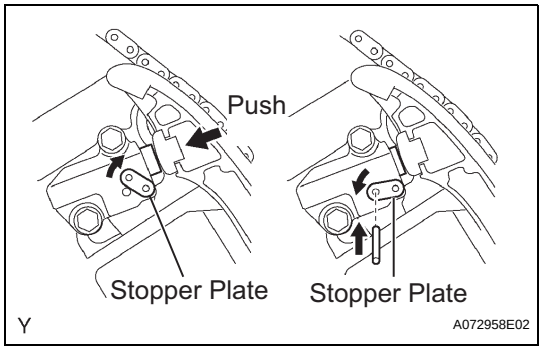

(a) While turning the stopper plate of the tensioner upward, push in the plunger of the chain tensioner as shown in the illustration.

(b) While turning the stopper plate of the tensioner down ward, insert a bar of ϕ 3.5 mm (0.138) into the holes in the stopper plate and tensioner to fix the stopper plate.

(c) Remove the 2 bolts, then remove the chain tensioner.

25. REMOVE CHAIN TENSIONER SLIPPER

26. REMOVE IDLE SPROCKET ASSEMBLY

(a) Using a 10 mm hexagon wrench, remove the idle gear shaft No. 2, idle gear No. 1 and idle gear shaft No. 1.

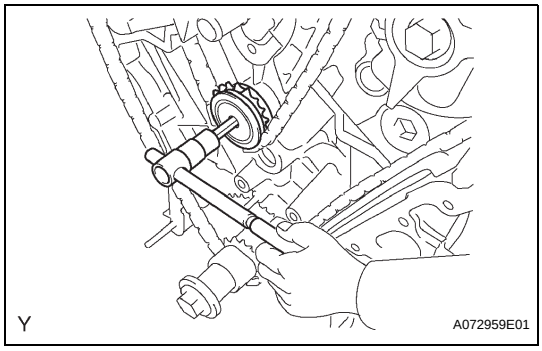

27. REMOVE NO.2 CHAIN VIBRATION DAMPER

(a) Remove the 2 chain vibration dampers No. 2.

28. REMOVE CHAIN SUB-ASSEMBLY

EM

INSTALLATION

1. INSTALL CHAIN TENSIONER SLIPPER

2. INSTALL NO.1 CHAIN TENSIONER ASSEMBLY

(a) While turning the stopper plate of the tensioner clockwise, push in the plunger of the tensioner as shown in the illustration.

(b) While turning the stopper plate of the tensioner counterclockwise, insert a bar of ϕ 35 mm (0.138 in.) into the holes in the stopper plate and tensioner to fix the stopper plate.

(c) Install the chain tensioner with the 2 bolts.
Torque: 10 N*m (102 kgf*cm, 7.4 ft.*lbf)

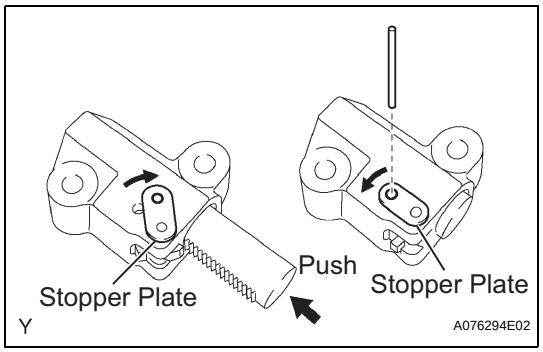

3. INSTALL CHAIN SUB-ASSEMBLY

(a) Set the No. 1 cylinder to TDC/ compression.

(1) Align the timing marks of the camshaft timing gears and bearing caps.

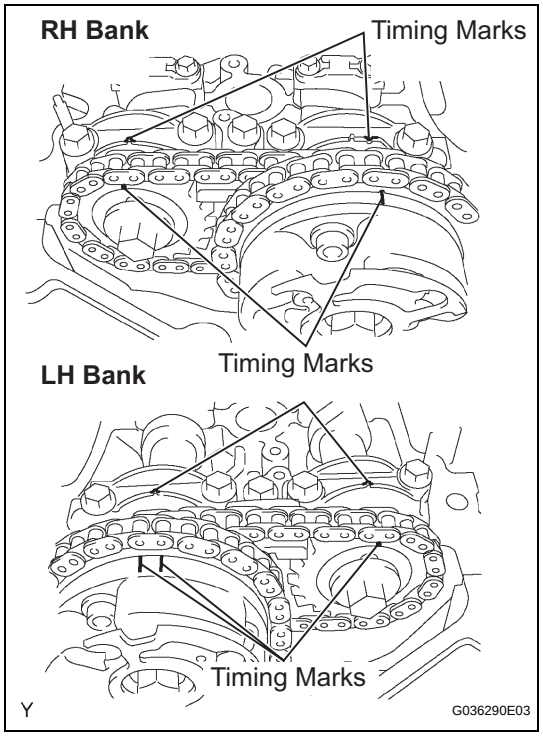

(2) Using the crankshaft pulley set bolt, turn the crankshaft to align the crankshaft set key with the timing line of the cylinder block.

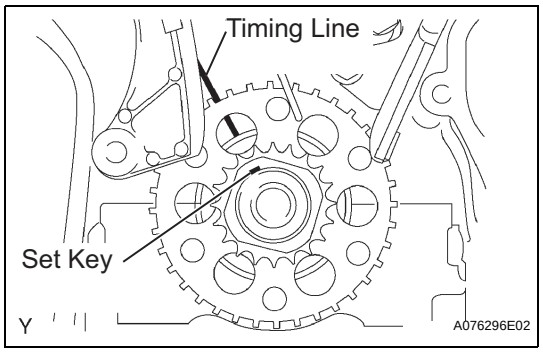

EM

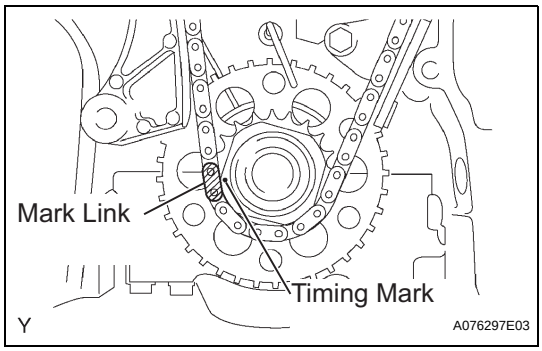

(b) Align the yellow mark link with the timing mark of the crankshaft timing link.

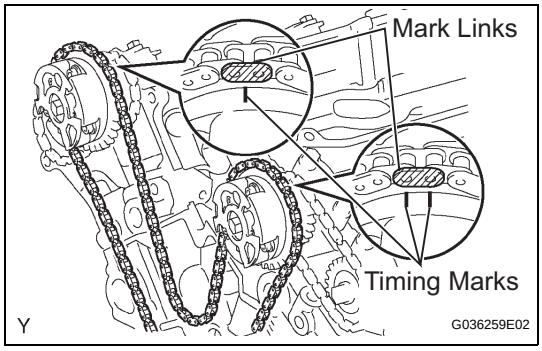

(c) Align the orange mark links with the timing marks of the camshaft timing gears, and install the chain.

4. INSTALL NO.2 CHAIN VIBRATION DAMPER

(a) Install the 2 chain vibration dampers No. 2.

5. INSTALL IDLE SPROCKET ASSEMBLY

(a) Apply a light coat of engine oil to rotating surface of the idle gear shaft No. 1.

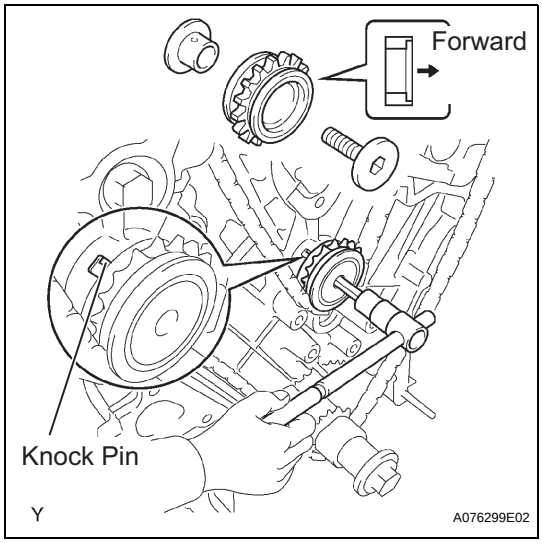

(b) Temporarily install the idle gear shaft No. 1 together with idle gear shaft No. 2 while aligning the knock pin of the idle gear shaft No. 1 with the knock pin groove of the cylinder block.
NOTICE:
Be careful of the idle gear direction.

(c) Using 10 mm hexagon wrench, tighten the idle gear shaft No. 2.
Torque: 60 N*m (612 kgf*cm, 44 ft.*lbf)

(d) Remove the bar from the chain tensioner.

6. INSTALL TIMING GEAR CASE OR TIMING CHAIN CASE OIL SEAL (See page EM-236)

7. INSTALL TIMING CHAIN OR BELT COVER SUB-ASSEMBLY (See page LU-20)

8. INSTALL VVT SENSOR (See page IG-8)

9. INSTALL CAMSHAFT TIMING OIL CONTROL VALVE ASSEMBLY (See page ES-408)

10. INSTALL CYLINDER HEAD COVER SUB-ASSEMBLY LH (See page EM-68)

11. INSTALL CYLINDER HEAD COVER SUB-ASSEMBLY (See page EM-68)

12. INSTALL IGNITION COIL ASSEMBLY (See page IG-7)

13. INSTALL INTAKE AIR SURGE TANK (See page EM-69)

14. INSTALL OIL PAN SUB-ASSEMBLY

(a) Remove any old packing (FIPG) material and be careful not to drop any oil on the contact surfaces of the cylinder block, rear oil seal retainer and oil pan.

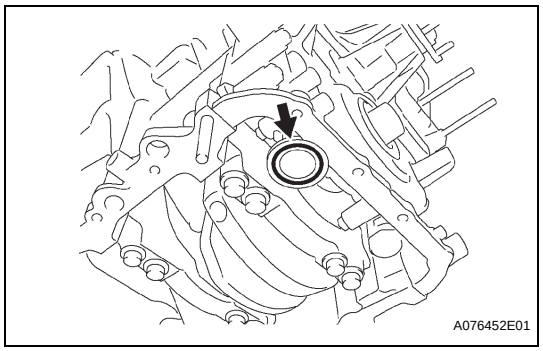

(b) Install a new O-ring onto the oil pump.

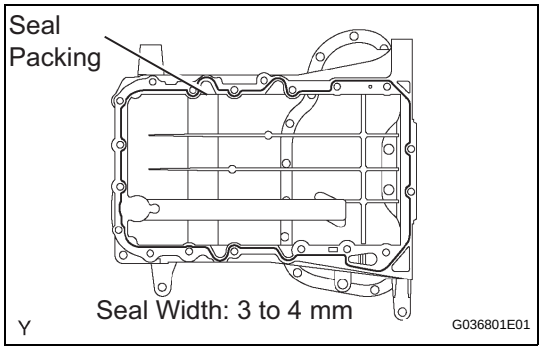

(c) Apply a continuous bead of the seal packing (diameter 3 to 4 mm (0.12 to 0.16 in.)) to the oil pan as shown in the illustration.
Seal packing:
Part No. 08826-00080 or equivalent
NOTICE:
Install the oil pan within 3 minutes of applying the seal packing. Tighten the oil pan bolts and nuts within 15 minutes of installing the oil pan. Otherwise, the seal packing must be removed and reapplied.

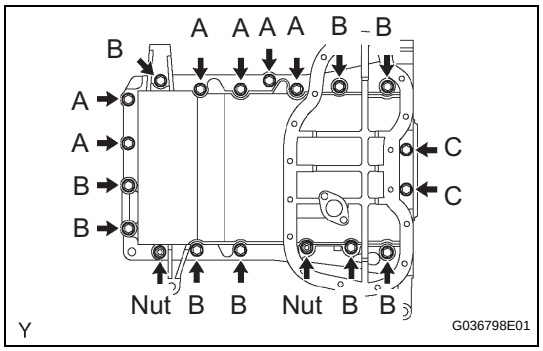

(d) Install the oil pan with the 17 bolts and 2 nuts, and tighten the bolts and nuts uniformly in several steps.
Torque: 10 N*m (102 kgf*cm, 7.4 ft.*lbf) for 10 mm (0.39 in.) head
21 N*m (214 kgf*cm, 16 ft.*lbf) for 12 mm (0.47 in.) head
HINT:
Each bolt length is as follows:

Bolt	Length
A	25 mm (0.98 in.)
B	45 mm (1.77 in.)
C	14 mm (0.55 in.)

15. INSTALL OIL STRAINER SUB-ASSEMBLY

(a) Install a new gasket and the oil strainer with the 2 nuts.
Torque: 9.0 N*m (92 kgf*cm, 80 in.*lbf)

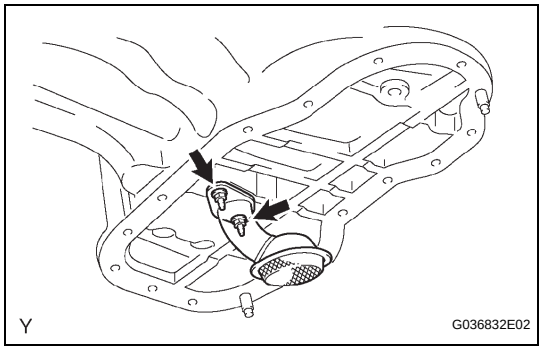

16. INSTALL NO.2 OIL PAN SUB-ASSEMBLY

(a) Remove any old packing (FIPG) material and be careful not to drop any oil on the contact surfaces of the oil pan and oil pan No. 2.

EM

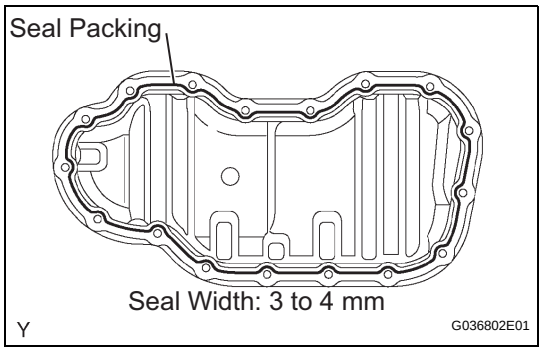

(b) Apply a continuous bead of seal packing (diameter 3 to 4 mm (0.12 to 0.16 in.)) as shown in the illustration.
Seal packing:
Part No. 08826-00080 or equivalent
NOTICE:
Install the oil pan No. 2 within 3 minutes of applying the seal packing. Tighten the oil pan No. 2 bolts and nut within 15 minutes of installing the oil pan. Otherwise, the seal packing must be removed and reapplied.

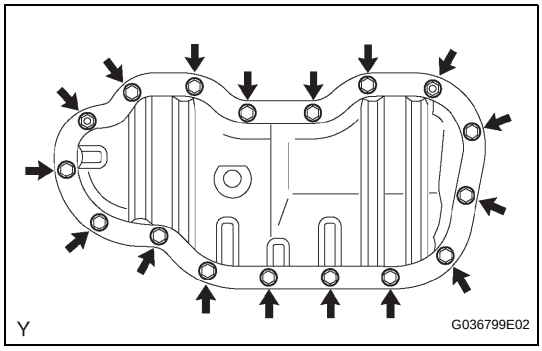

(c) Install the oil pan No. 2 with the 15 bolts and 2 nuts. Tighten the bolts and nuts uniformly in several steps.
Torque: 9.0 N*m (92 kgf*cm, 80 in.*lbf) for bolts
10 N*m (102 kgf*cm, 7.4 ft.*lbf) for nuts

EM

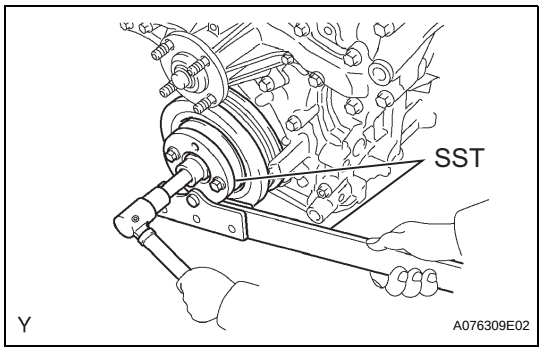

17. INSTALL CRANKSHAFT PULLEY

(a) Using SST, install the pulley set bolt.
SST 09213-54015 (91651-60855), 09330-00021
Torque: 250 N*m (2,549 kgf*cm, 184 ft.*lbf)

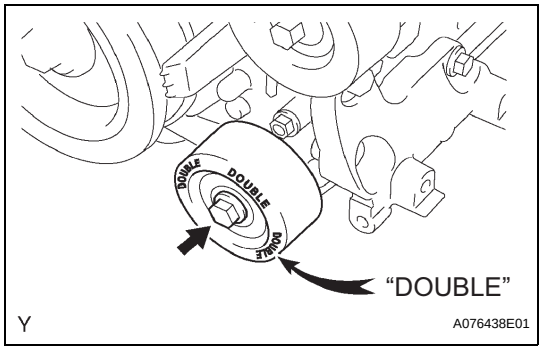

18. INSTALL NO.1 IDLER PULLEY SUB-ASSEMBLY

(a) Install the idler pulley with the bolt.
Torque: 54 N*m (551 kgf*cm, 40 ft.*lbf)
HINT:
DOUBLE is marked on the idler pulley No. 1 to distinguish it from the idler pulley No. 2.

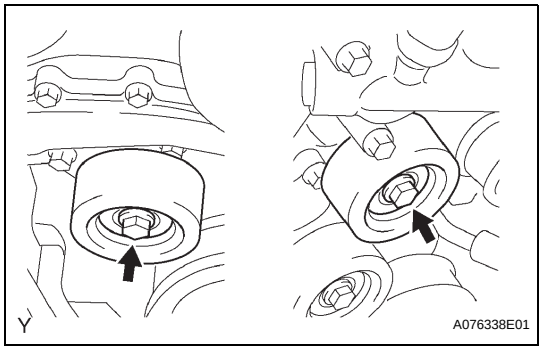

19. INSTALL NO.2 IDLER PULLEY SUB-ASSEMBLY

(a) Install the 2 idler pulleys with the 2 bolts.
Torque: 39 N*m (398 kgf*cm, 29 ft.*lbf)

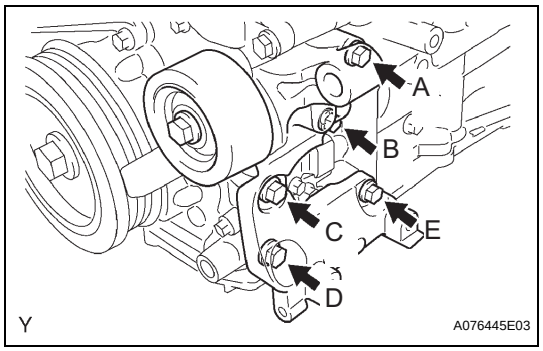

20. INSTALL V-RIBBED BELT TENSIONER ASSEMBLY
NOTICE:
A bolt in position A is not reusable.
HINT:
Each bolt length is as follows:

Position	Length
A	70 mm (2.76 in.)
B, C, D and E	33 mm (1.30 in.)

(a) Use a new bolt in position A.
(b) Finger-tighten the bolts in positions A and E and install the bracket.
(c) Tighten the bolts in positions A and E.
Torque: 36 N*m (267 kgf*cm, 27 ft.*lbf)
(d) Tighten the bolts in positions B, C and D.
Torque: 36 N*m (267 kgf*cm, 27 ft.*lbf)

21. INSTALL WATER INLET (See page CO-10)

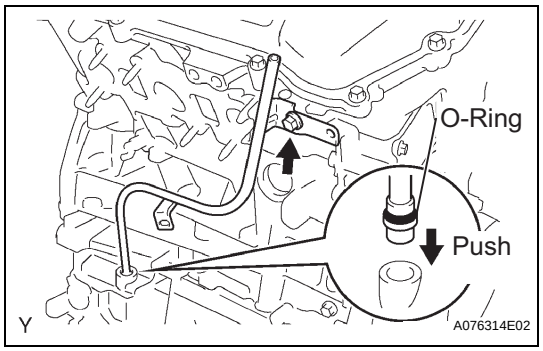

22. INSTALL OIL LEVEL GAGE GUIDE
(a) Install a new O-ring onto the oil level gauge guide.
(b) Apply a light coat of engine oil to the O-ring.
(c) Push the oil level gauge guide end into the guide hole of the oil pan.
(d) Install the oil level gauge guide with the bolt.
Torque: 9.0 N*m (92 kgf*cm, 80 in.*lbf)
(e) Install the oil level gauge guide.

23. INSTALL ENGINE ASSEMBLY
(See page EM-190)

24. INSTALL BATTERY

25. ADD ENGINE COOLANT (See page CO-3)

26. ADD ENGINE OIL (See page LU-5)

27. CHECK FOR ENGINE COOLANT LEAKAGE (See page CO-4)

28. CHECK FOR ENGINE OIL LEAKAGE

29. CHECK FOR FUEL LEAKAGE

30. CHECK FOR EXHAUST GAS LEAKAGE

31. INSPECT IGNITION TIMING (See page EM-1)

32. INSPECT ENGINE IDLING SPEED (See page EM-2)

33. INSPECT CO/HC (See page EM-3)

TIMING CHAIN (for 4WD and Pre-Runner)

COMPONENTS

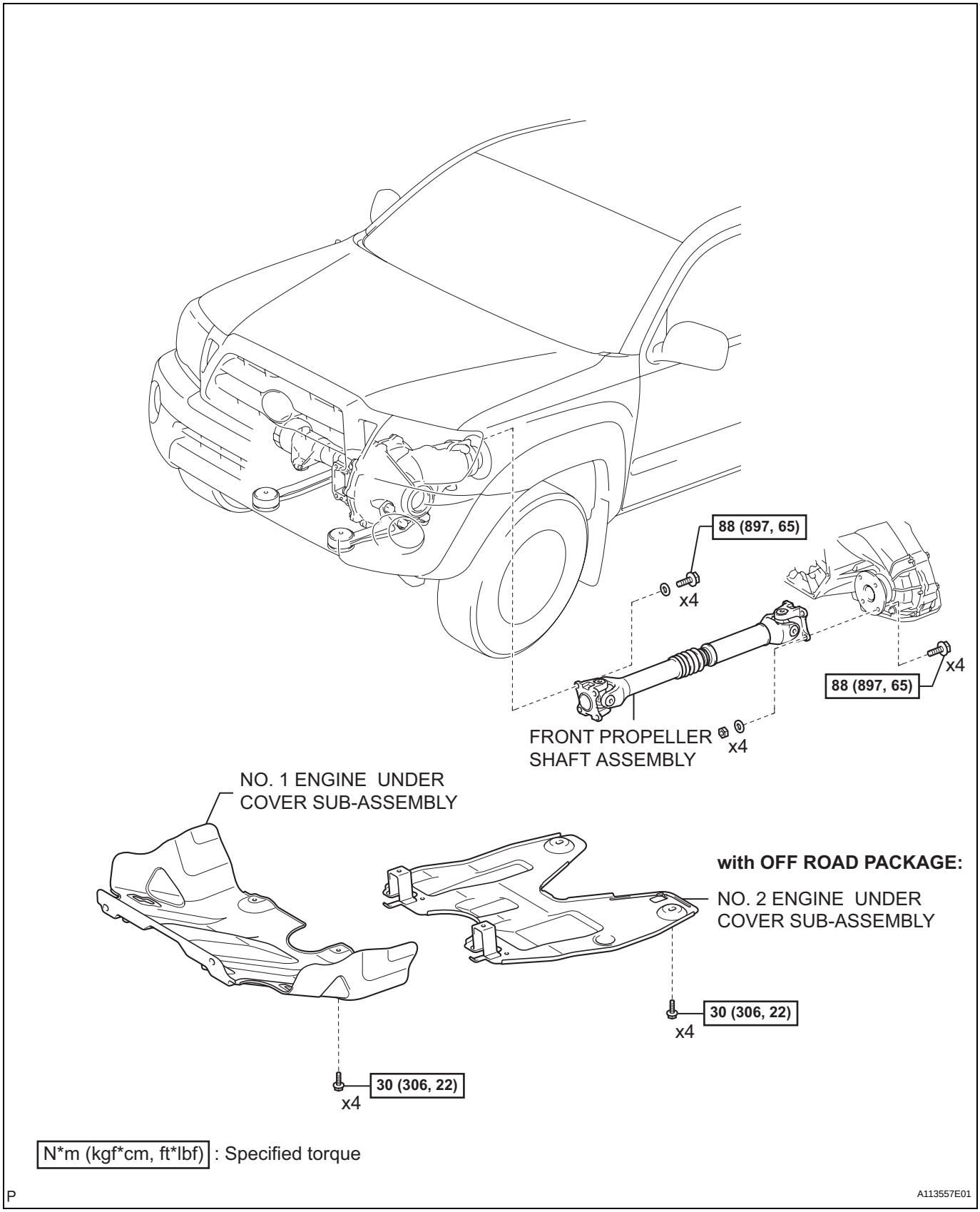

EM

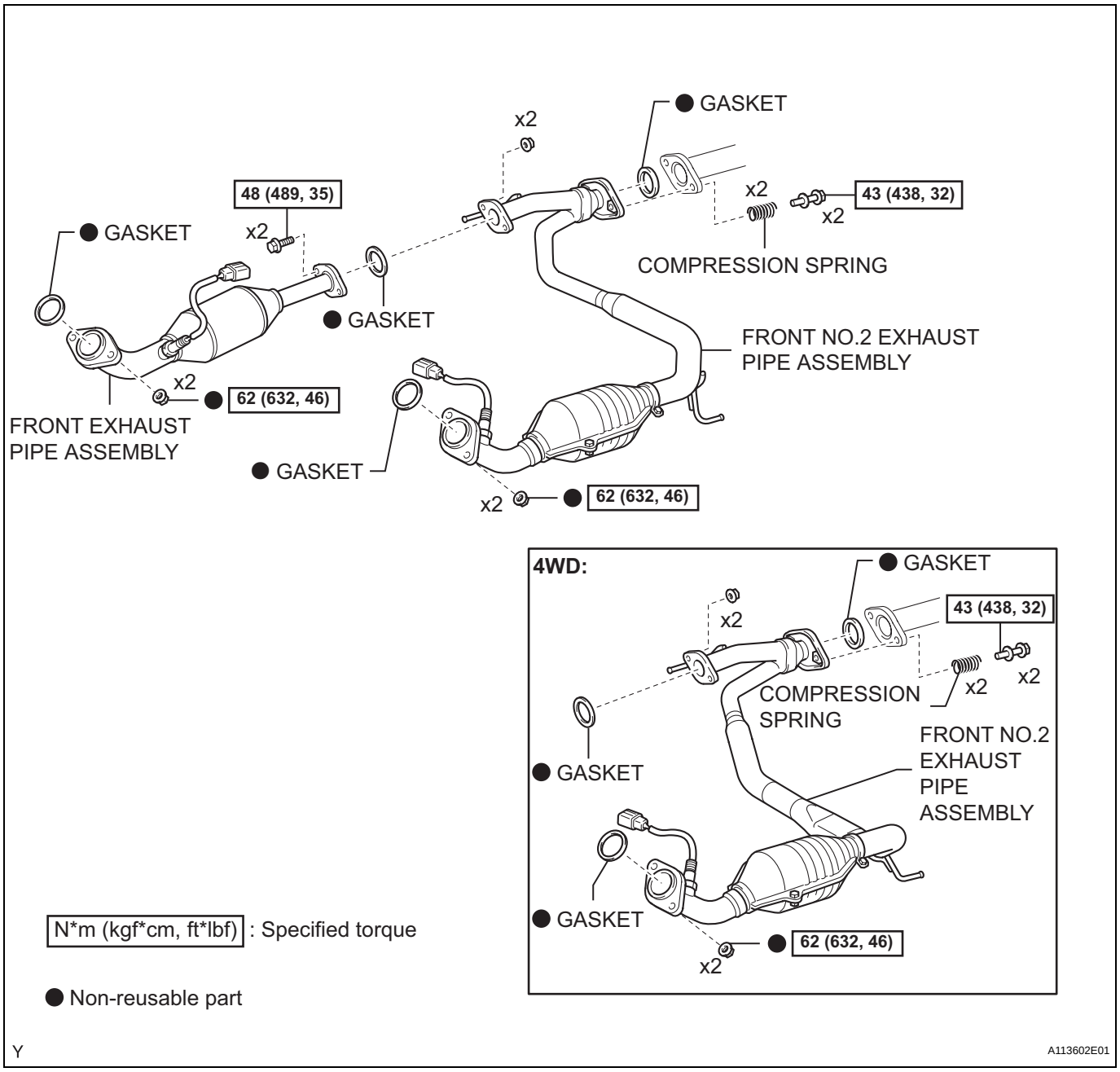
GASKET
x2
48 (489, 35)
x2
43 (438, 32)
x2
GASKET
COMPRESSION SPRING
GASKET
FRONT NO.2 EXHAUST PIPE ASSEMBLY
x2
62 (632, 46)
FRONT EXHAUST PIPE ASSEMBLY
GASKET
x2
62 (632, 46)
4WD:
GASKET
x2
43 (438, 32)
x2
x2
COMPRESSION SPRING
FRONT NO.2 EXHAUST PIPE ASSEMBLY
GASKET
GASKET
62 (632, 46)
x2
N*m (kgf*cm, ft*lbf) : Specified torque
Non-reusable part
Y
A113602E01

EM

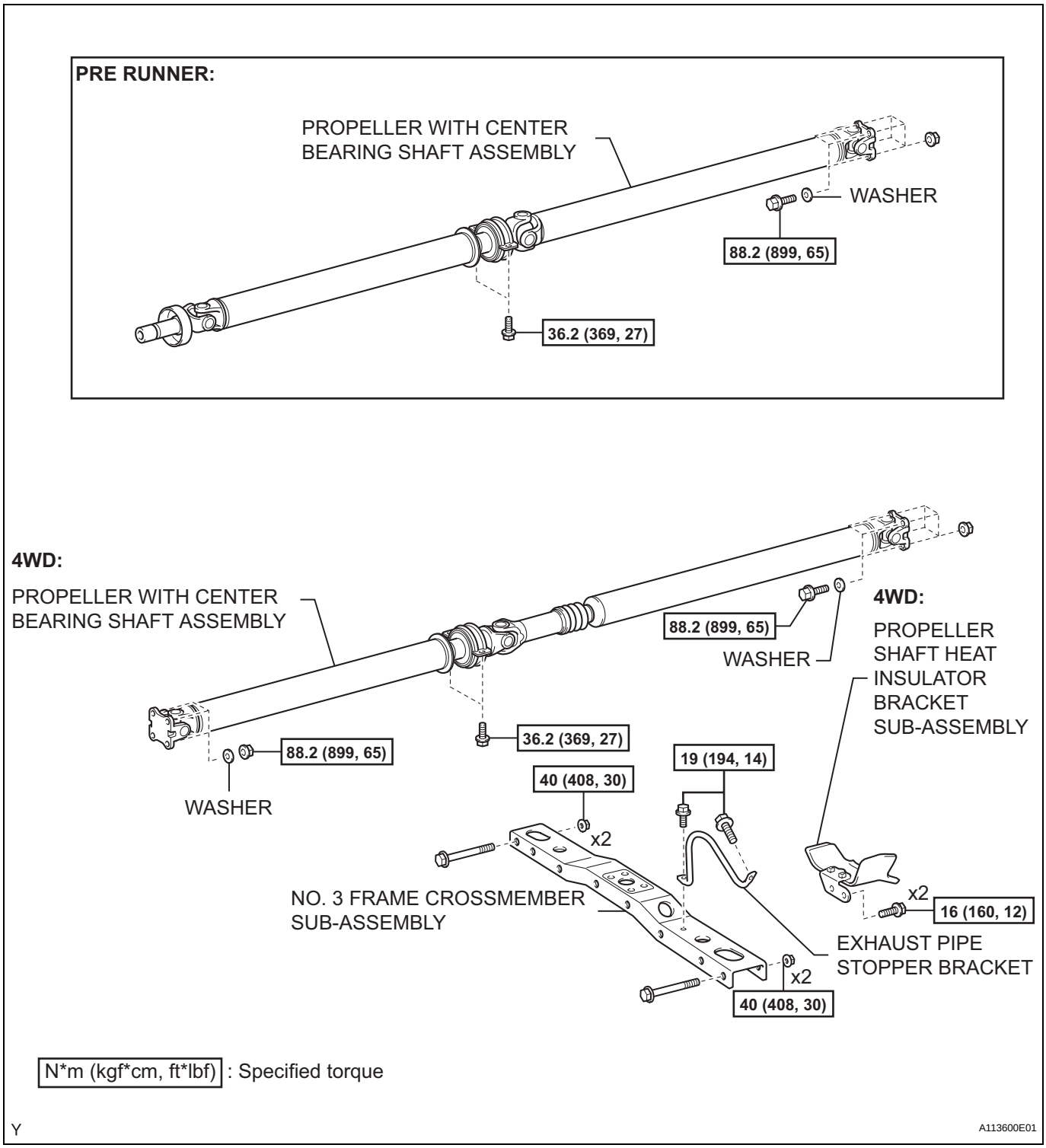
PRE RUNNER:
PROPELLER WITH CENTER BEARING SHAFT ASSEMBLY
WASHER
88.2 (899, 65)
36.2 (369, 27)
4WD:
PROPELLER WITH CENTER BEARING SHAFT ASSEMBLY
88.2 (899, 65)
WASHER
4WD:
PROPELLER SHAFT HEAT INSULATOR BRACKET SUB-ASSEMBLY
36.2 (369, 27)
88.2 (899, 65)
WASHER
19 (194, 14)
40 (408, 30)
x2
NO. 3 FRAME CROSSMEMBER SUB-ASSEMBLY
x2
16 (160, 12)
EXHAUST PIPE STOPPER BRACKET
x2
40 (408, 30)
N*m (kgf*cm, ft*lbf) : Specified torque
Y
A113600E01

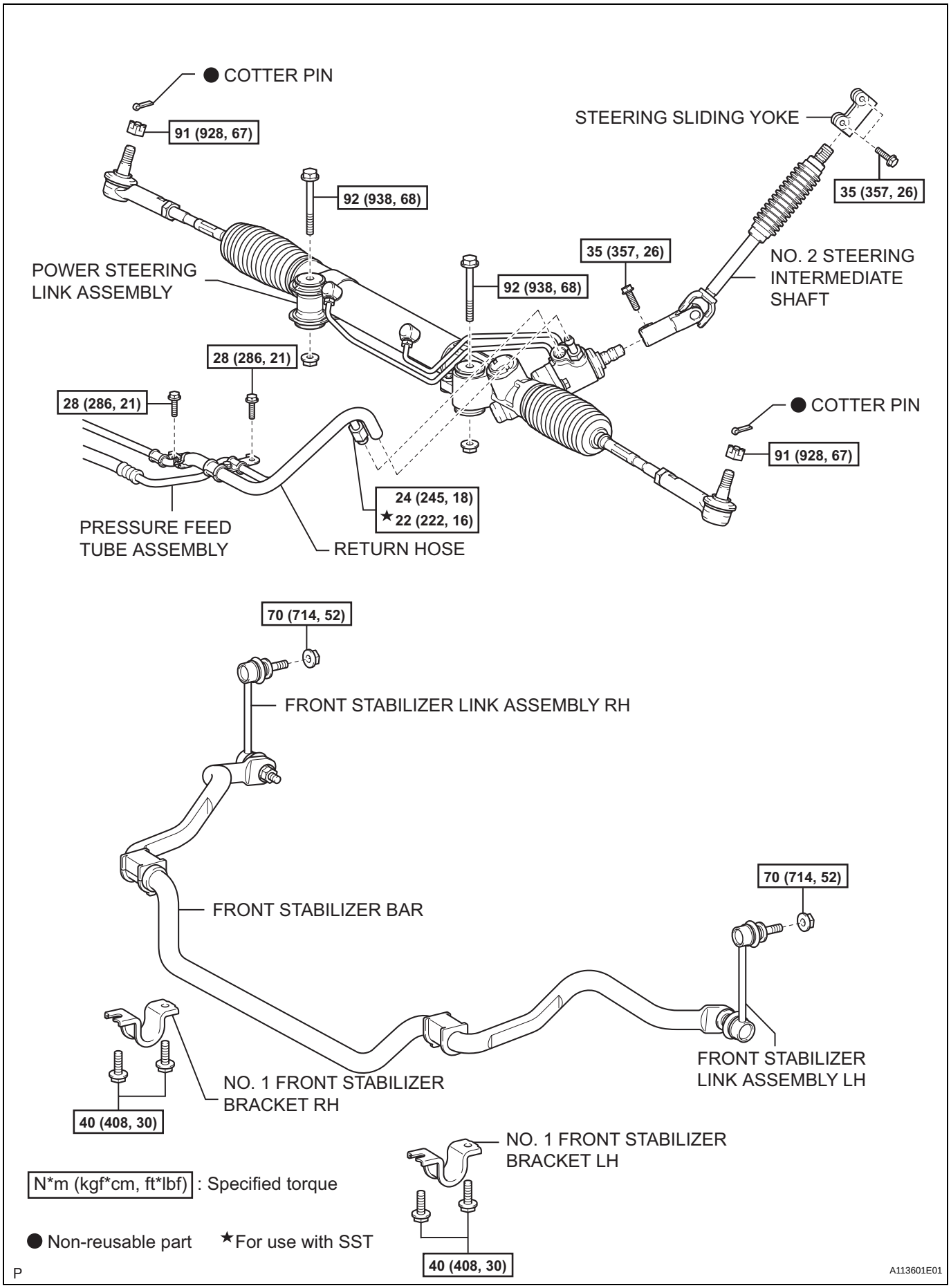
● COTTER PIN
91 (928, 67)
STEERING SLIDING YOKE
92 (938, 68)
35 (357, 26)
35 (357, 26)
POWER STEERING LINK ASSEMBLY
92 (938, 68)
NO. 2 STEERING INTERMEDIATE SHAFT
28 (286, 21)
28 (286, 21)
● COTTER PIN
91 (928, 67)
24 (245, 18)
★22 (222, 16)
PRESSURE FEED TUBE ASSEMBLY
RETURN HOSE
70 (714, 52)
FRONT STABILIZER LINK ASSEMBLY RH
70 (714, 52)
FRONT STABILIZER BAR
FRONT STABILIZER LINK ASSEMBLY LH
NO. 1 FRONT STABILIZER BRACKET RH
40 (408, 30)
NO. 1 FRONT STABILIZER BRACKET LH
N*m (kgf*cm, ft*lbf) : Specified torque
● Non-reusable part
★For use with SST
40 (408, 30)
P
A113601E01

EM

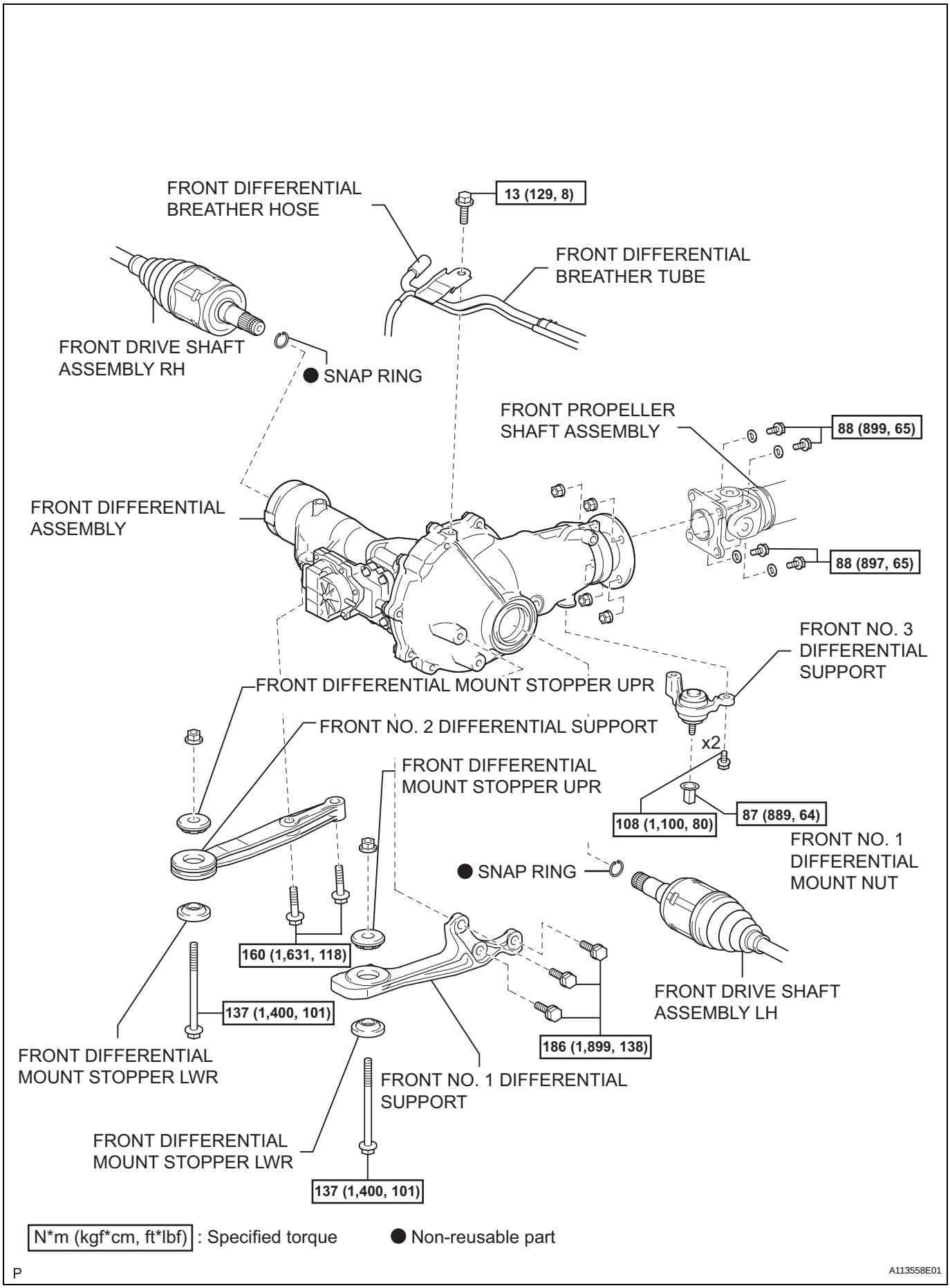
FRONT DIFFERENTIAL BREATHER HOSE
13 (129, 8)
FRONT DIFFERENTIAL BREATHER TUBE
FRONT DRIVE SHAFT ASSEMBLY RH
● SNAP RING
FRONT PROPELLER SHAFT ASSEMBLY
88 (899, 65)
FRONT DIFFERENTIAL ASSEMBLY
88 (897, 65)
FRONT NO. 3 DIFFERENTIAL SUPPORT
FRONT DIFFERENTIAL MOUNT STOPPER UPR
FRONT NO. 2 DIFFERENTIAL SUPPORT
x2
FRONT DIFFERENTIAL MOUNT STOPPER UPR
108 (1,100, 80)
87 (889, 64)
FRONT NO. 1 DIFFERENTIAL MOUNT NUT
● SNAP RING
160 (1,631, 118)
FRONT DRIVE SHAFT ASSEMBLY LH
137 (1,400, 101)
186 (1,899, 138)
FRONT DIFFERENTIAL MOUNT STOPPER LWR
FRONT NO. 1 DIFFERENTIAL SUPPORT
FRONT DIFFERENTIAL MOUNT STOPPER LWR
137 (1,400, 101)
N*m (kgf*cm, ft*lbf) : Specified torque
● Non-reusable part
P
A113558E01

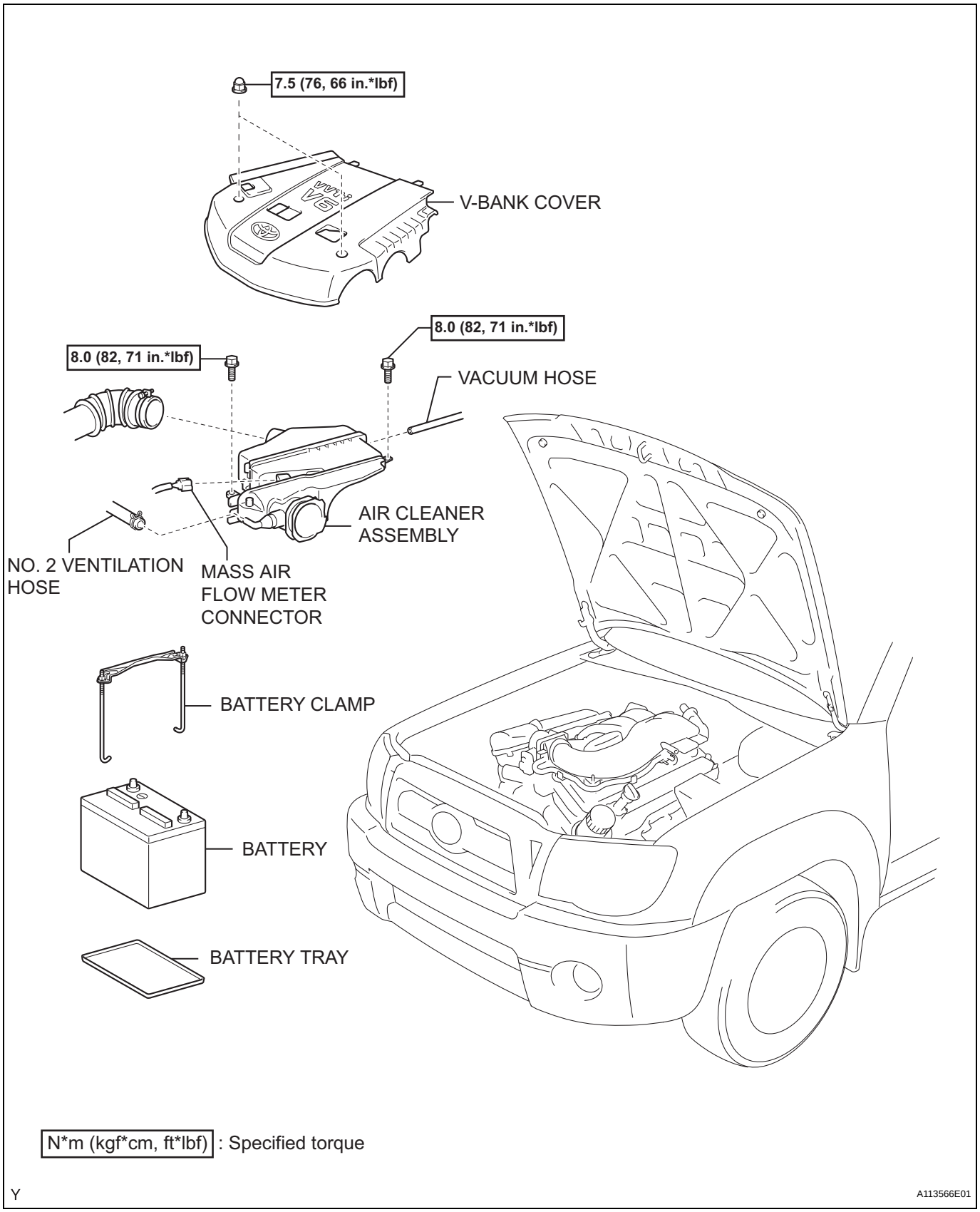
7.5 (76, 66 in.*lbf)
V-BANK COVER
8.0 (82, 71 in.*lbf)
8.0 (82, 71 in.*lbf)
VACUUM HOSE
AIR CLEANER ASSEMBLY
NO. 2 VENTILATION HOSE
MASS AIR FLOW METER CONNECTOR
BATTERY CLAMP
BATTERY
BATTERY TRAY
N*m (kgf*cm, ft*lbf) : Specified torque
Y
A113566E01

EM

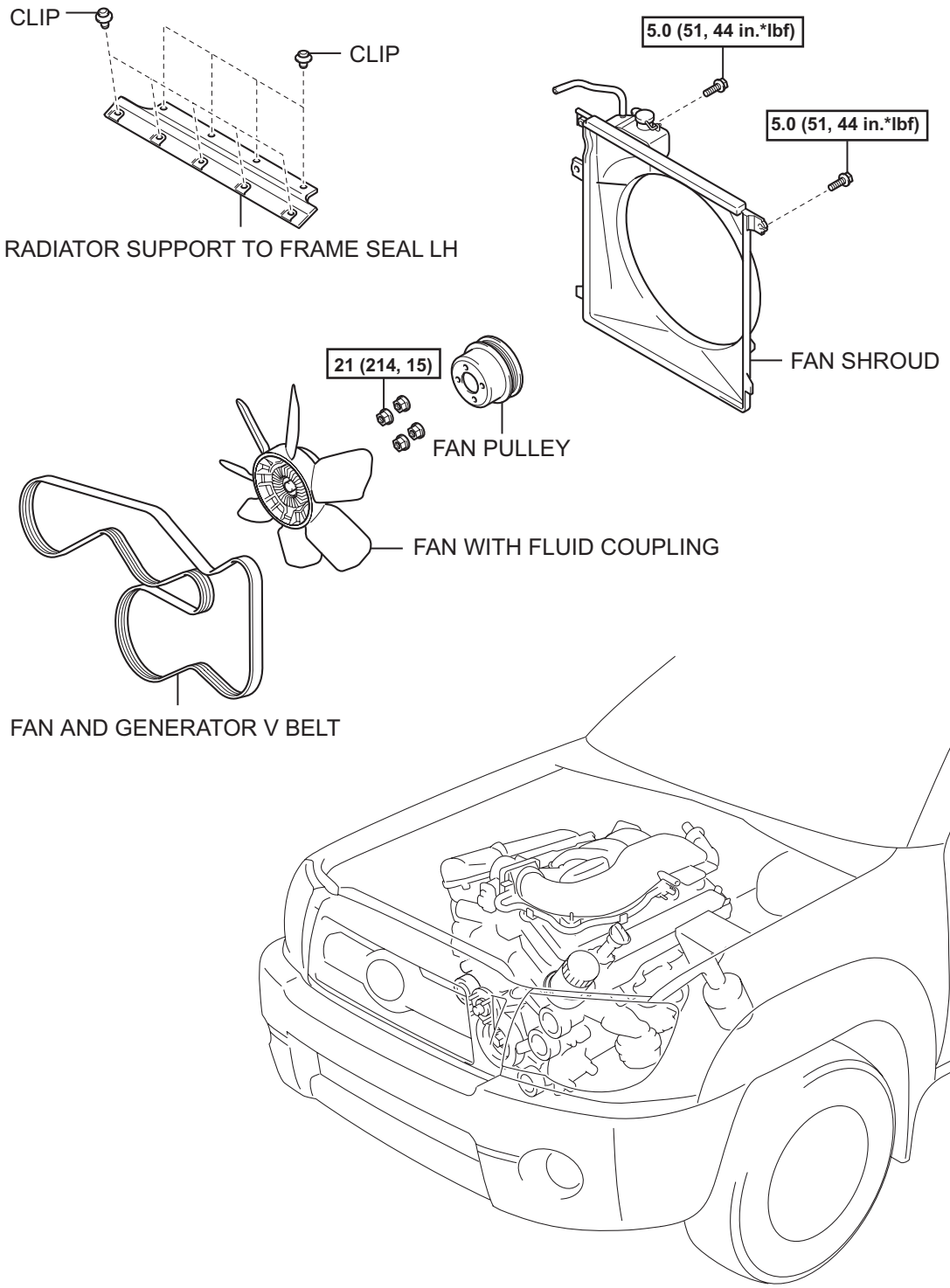

EM

N*m (kgf*cm, ft*lbf) : Specified torque

Y

A113567E01

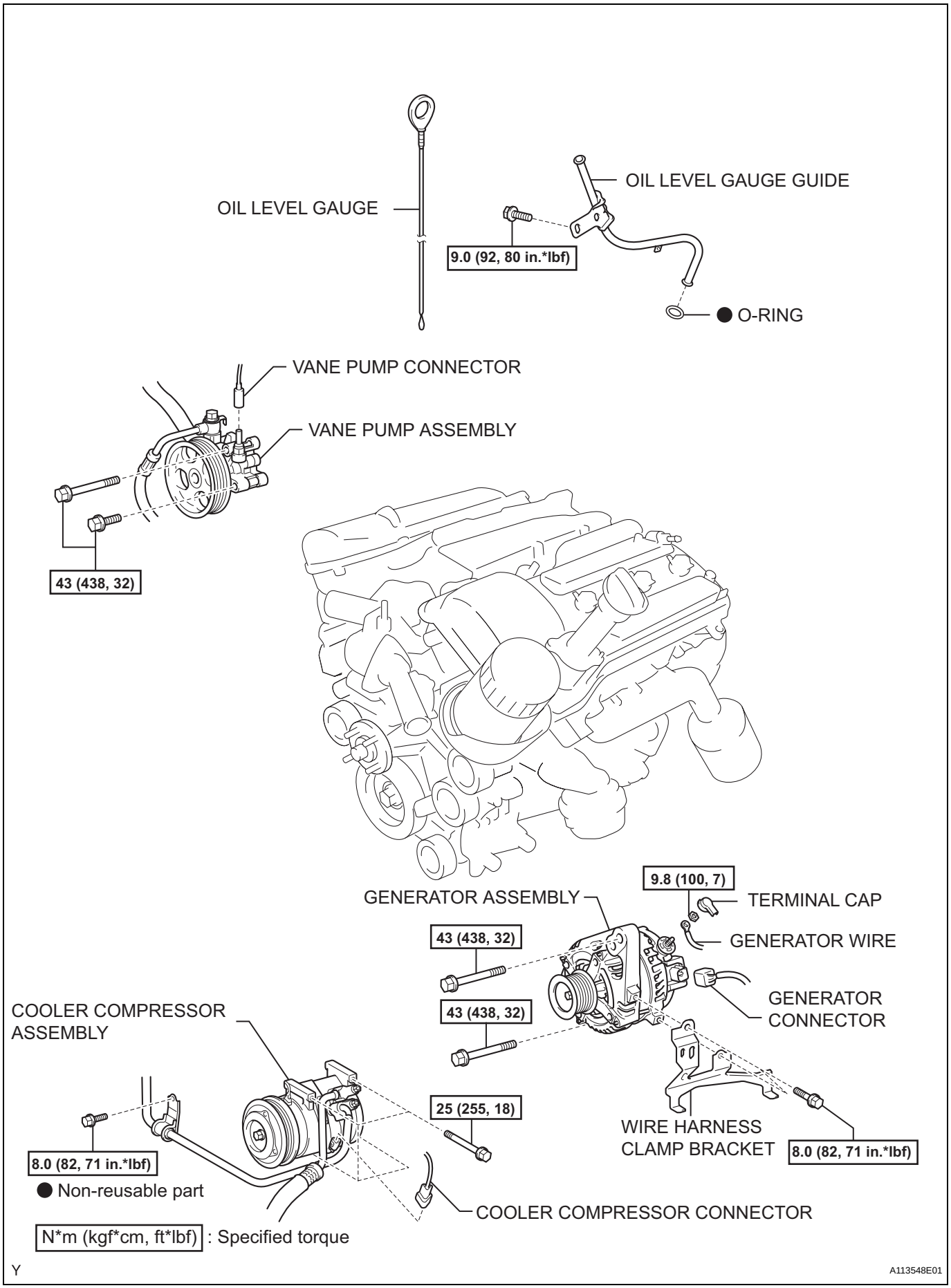
OIL LEVEL GAUGE
OIL LEVEL GAUGE GUIDE
9.0 (92, 80 in.*lbf)
● O-RING
VANE PUMP CONNECTOR
VANE PUMP ASSEMBLY
43 (438, 32)
9.8 (100, 7)
GENERATOR ASSEMBLY
TERMINAL CAP
GENERATOR WIRE
43 (438, 32)
GENERATOR CONNECTOR
COOLER COMPRESSOR ASSEMBLY
43 (438, 32)
25 (255, 18)
WIRE HARNESS CLAMP BRACKET
8.0 (82, 71 in.*lbf)
8.0 (82, 71 in.*lbf)
● Non-reusable part
COOLER COMPRESSOR CONNECTOR
N*m (kgf*cm, ft*lbf) : Specified torque
Y
A113548E01

EM

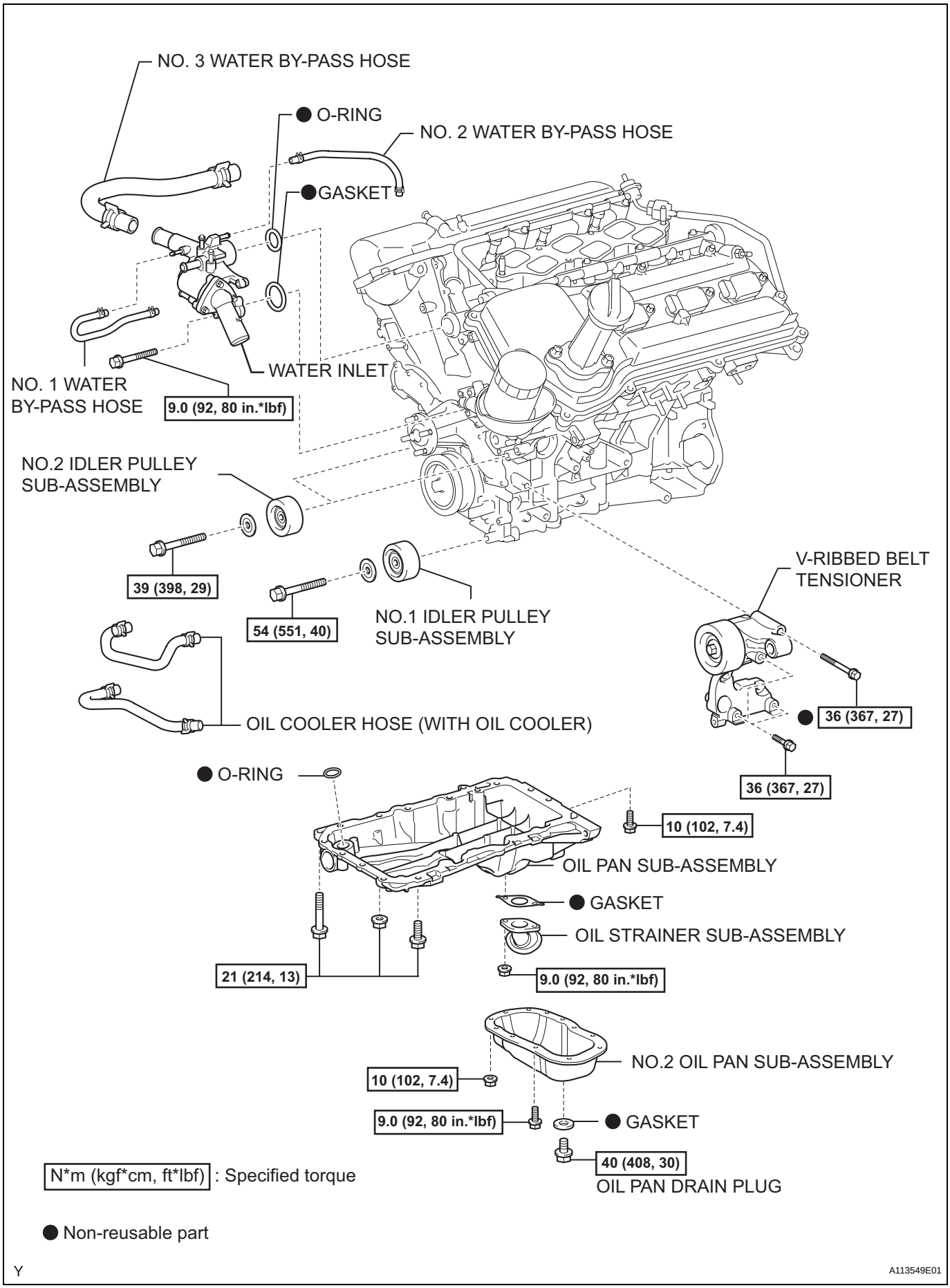
NO. 3 WATER BY-PASS HOSE
● O-RING
NO. 2 WATER BY-PASS HOSE
●GASKET
WATER INLET
NO. 1 WATER BY-PASS HOSE
9.0 (92, 80 in.*lbf)
NO.2 IDLER PULLEY SUB-ASSEMBLY
39 (398, 29)
54 (551, 40)
NO.1 IDLER PULLEY SUB-ASSEMBLY
V-RIBBED BELT TENSIONER
● 36 (367, 27)
36 (367, 27)
OIL COOLER HOSE (WITH OIL COOLER)
● O-RING
10 (102, 7.4)
OIL PAN SUB-ASSEMBLY
● GASKET
OIL STRAINER SUB-ASSEMBLY
21 (214, 13)
9.0 (92, 80 in.*lbf)
NO.2 OIL PAN SUB-ASSEMBLY
10 (102, 7.4)
9.0 (92, 80 in.*lbf)
● GASKET
40 (408, 30)
OIL PAN DRAIN PLUG
N*m (kgf*cm, ft*lbf) : Specified torque
● Non-reusable part
Y
A113549E01

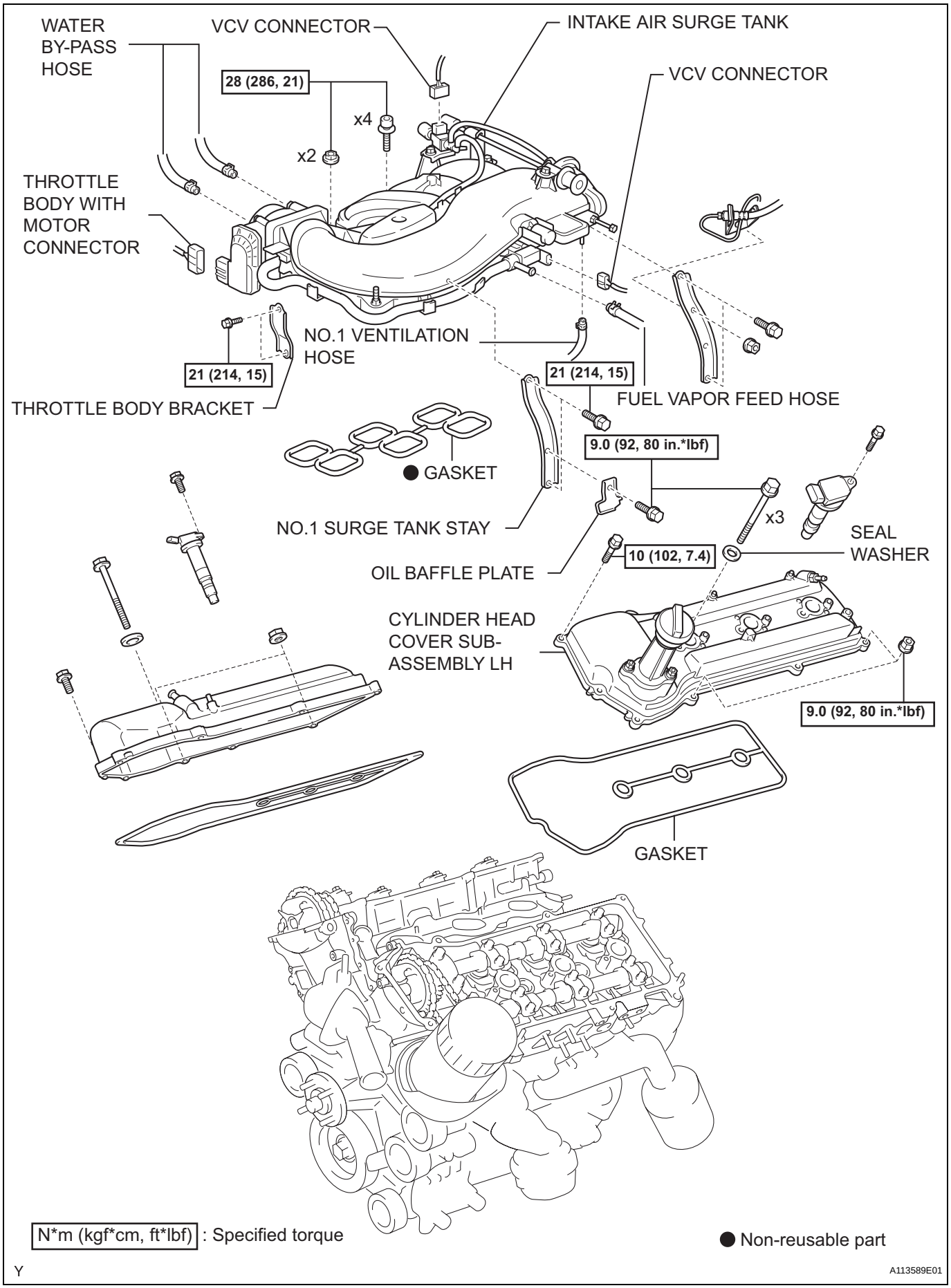
WATER BY-PASS HOSE
VCV CONNECTOR
INTAKE AIR SURGE TANK
VCV CONNECTOR
28 (286, 21)
x4
x2
THROTTLE BODY WITH MOTOR CONNECTOR
NO.1 VENTILATION HOSE
21 (214, 15)
21 (214, 15)
THROTTLE BODY BRACKET
FUEL VAPOR FEED HOSE
9.0 (92, 80 in.*lbf)
● GASKET
NO.1 SURGE TANK STAY
x3
SEAL WASHER
10 (102, 7.4)
OIL BAFFLE PLATE
CYLINDER HEAD COVER SUB-ASSEMBLY LH
9.0 (92, 80 in.*lbf)
GASKET
N*m (kgf*cm, ft*lbf) : Specified torque
● Non-reusable part
Y
A113589E01

EM

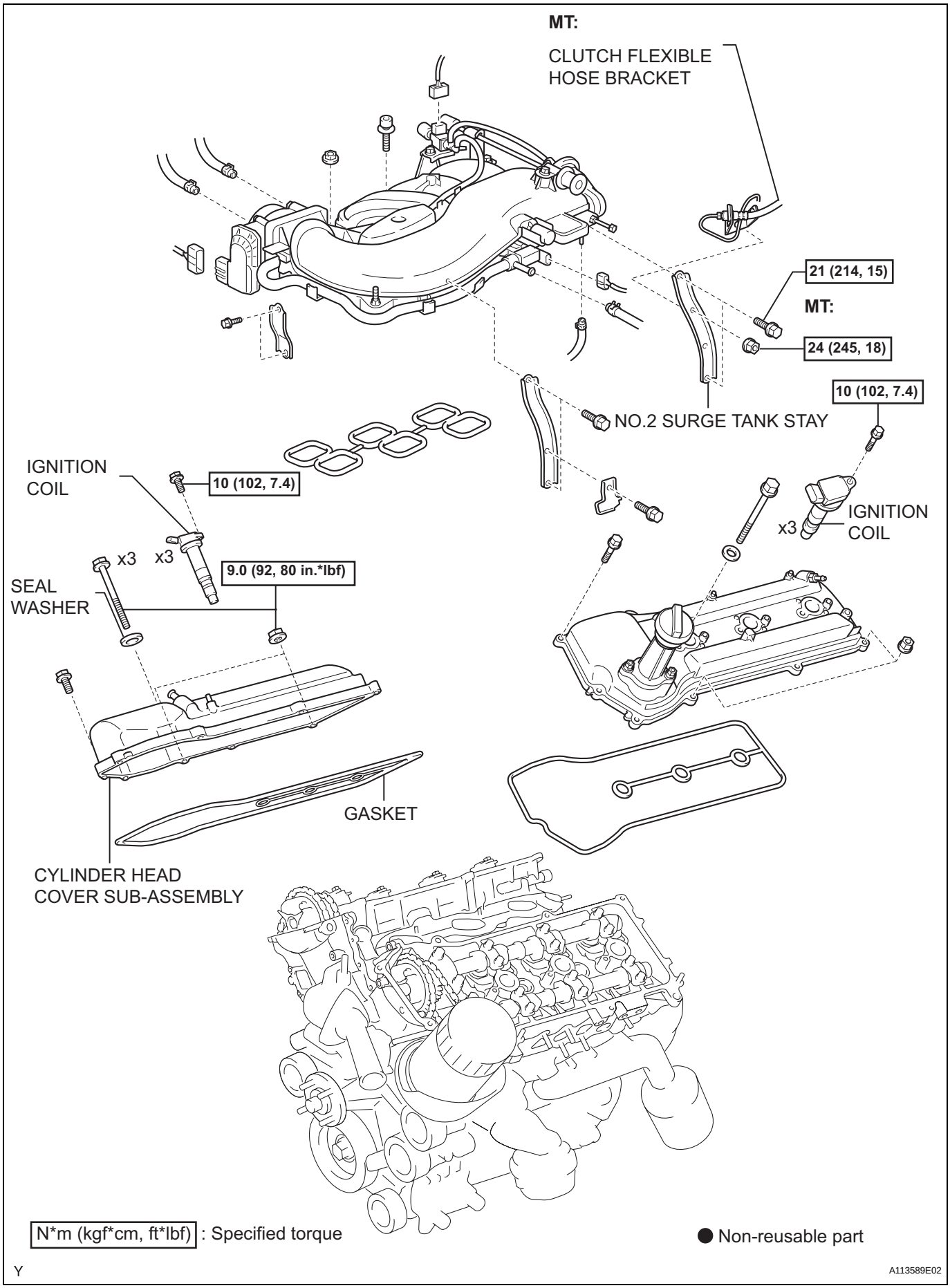
MT:
CLUTCH FLEXIBLE HOSE BRACKET
21 (214, 15)
MT:
24 (245, 18)
10 (102, 7.4)
NO.2 SURGE TANK STAY
IGNITION COIL
10 (102, 7.4)
x3
IGNITION COIL
x3
x3
9.0 (92, 80 in.*lbf)
SEAL WASHER
GASKET
CYLINDER HEAD COVER SUB-ASSEMBLY
N*m (kgf*cm, ft*lbf) : Specified torque
● Non-reusable part
Y
A113589E02

EM

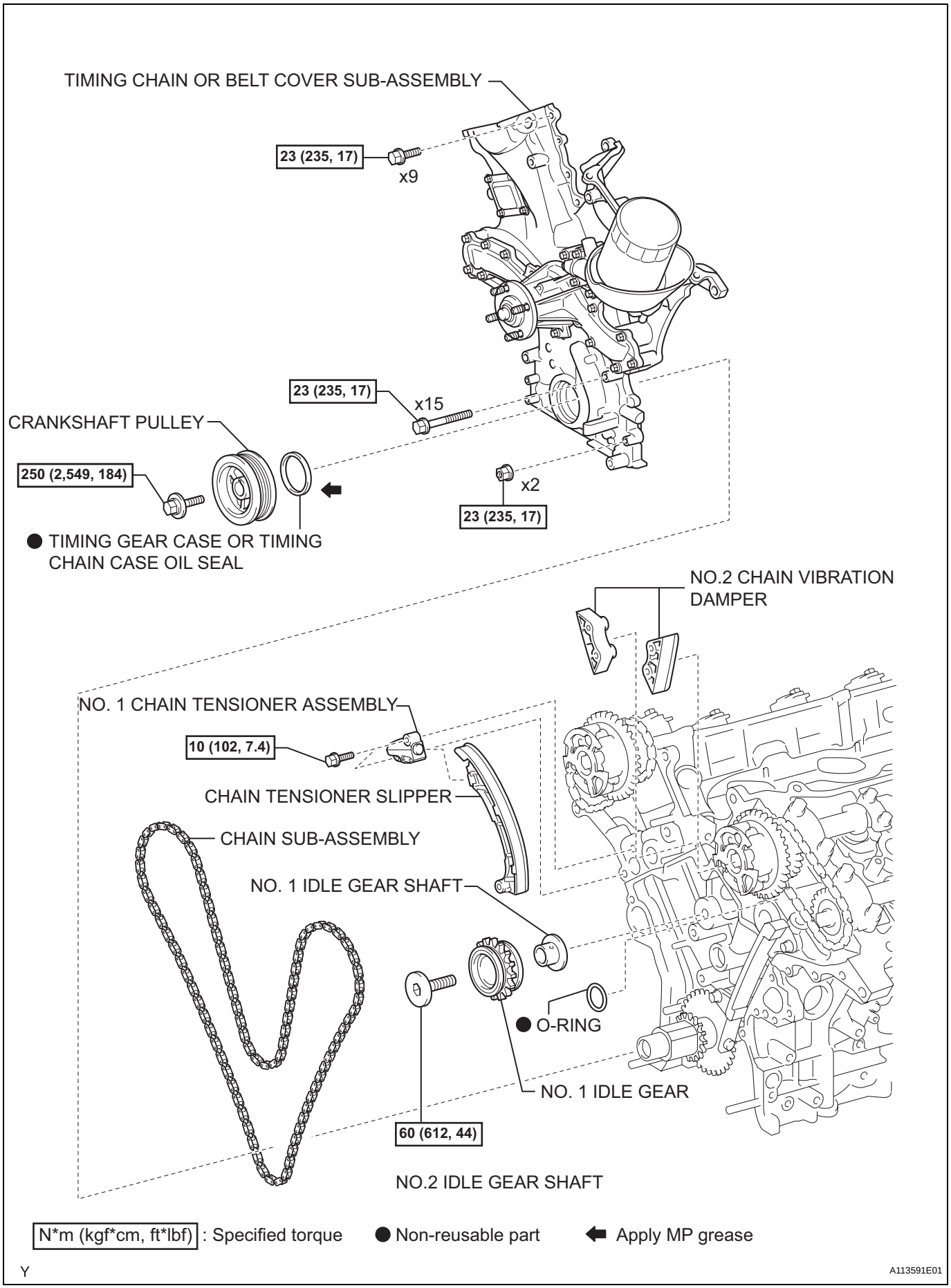
TIMING CHAIN OR BELT COVER SUB-ASSEMBLY
23 (235, 17)
x9
23 (235, 17)
x15
CRANKSHAFT PULLEY
250 (2,549, 184)
x2
23 (235, 17)
● TIMING GEAR CASE OR TIMING CHAIN CASE OIL SEAL
NO.2 CHAIN VIBRATION DAMPER
NO. 1 CHAIN TENSIONER ASSEMBLY
10 (102, 7.4)
CHAIN TENSIONER SLIPPER
CHAIN SUB-ASSEMBLY
NO. 1 IDLE GEAR SHAFT
● O-RING
NO. 1 IDLE GEAR
60 (612, 44)
NO.2 IDLE GEAR SHAFT
N*m (kgf*cm, ft*lbf) : Specified torque
● Non-reusable part
Apply MP grease
Y
A113591E01

EM

EM

REMOVAL

1. **REMOVE BATTERY**
2. **DRAIN ENGINE COOLANT (See page CO-3)**
3. **DRAIN ENGINE OIL (See page LU-5)**
4. **REMOVE POWER STEERING LINK ASSEMBLY**
   (See page PS-53)
5. **REMOVE FRONT DIFFERENTIAL CARRIER ASSEMBLY (for 4WD)**
   (See page DF-19)
6. **REMOVE V-BANK COVER (See page ES-414)**
7. **REMOVE RADIATOR SUPPORT TO FRAME SEAL LH (See page CO-15)**
8. **REMOVE FAN SHROUD (See page CO-15)**
9. **REMOVE AIR CLEANER ASSEMBLY (See page ES-415)**
10. **REMOVE OIL LEVEL GAGE GUIDE**
    (a) Remove the oil level gauge.
    (b) Remove the bolt and pull out the oil level gauge guide.
    (c) Remove the O-ring from the oil level gauge guide.
11. **REMOVE WATER INLET (See page CO-9)**
12. **SEPARATE VANE PUMP ASSEMBLY**
    (a) Disconnect the power steering pressure switch connector.
    (b) Remove the 2 bolts, then separate the vane pump.
    NOTICE:
    Do not hit the pulley with other parts when separating the vane pump.
    HINT:
    The vane pump is suspended securely.

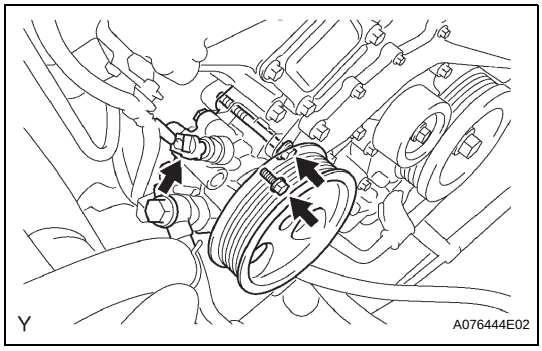

13. **REMOVE GENERATOR ASSEMBLY (See page CH-7)**
14. **SEPARATE COOLER COMPRESSOR ASSEMBLY (See page ES-409)**
15. **REMOVE V-RIBBED BELT TENSIONER ASSEMBLY**
    (a) Remove the 5 bolts, then remove the V-ribbed belt tensioner.
16. **REMOVE NO.2 IDLER PULLEY SUB-ASSEMBLY**
    (a) Remove the 2 bolts, then remove the idler pulley No. 2.
17. **REMOVE NO.1 IDLER PULLEY SUB-ASSEMBLY**
    (a) Remove the bolt, then remove the idler pulley No. 1.

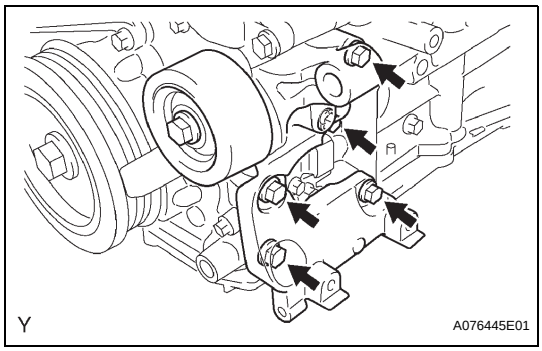

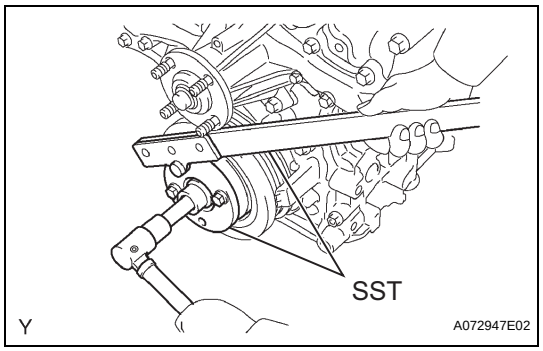

18. REMOVE CRANKSHAFT PULLEY

(a) Using SST, hold the crankshaft pulley and loosen the pulley set bolt.
SST 09213-54015 (91651-60855), 09330-00021

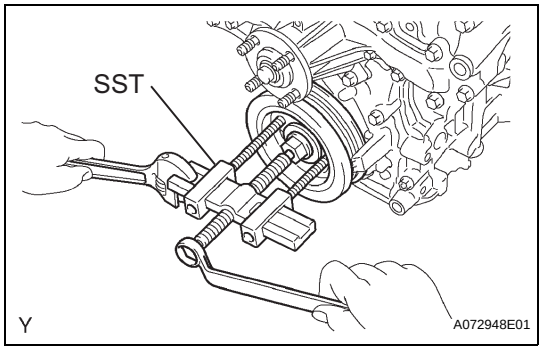

(b) Using the pulley set bolt and SST, remove the crankshaft pulley.
SST 09950-50013 (09951-05010, 09952-05010, 09953-05020, 09954-05030)

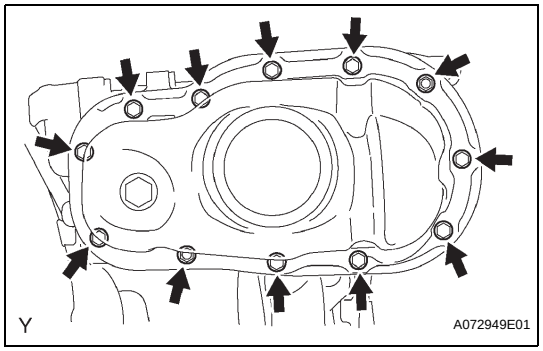

19. REMOVE NO.2 OIL PAN SUB-ASSEMBLY

(a) Remove the 10 bolts and 2 nuts.

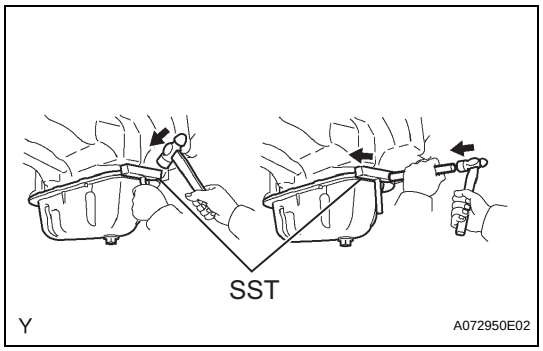

(b) Insert the blade of SST between the oil pan and oil pan No. 2, cut off applied sealer and remove the oil pan No. 2.
SST 09032-00100
NOTICE:
- **Be careful not to damage the contact surfaces of the oil pan and oil pan No. 2.**
- **Be careful not to damage the oil pan No. 2 flange.**

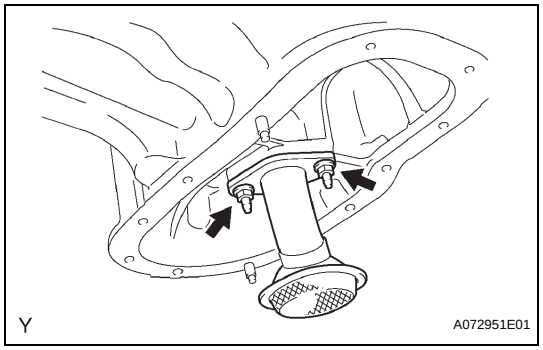

20. REMOVE OIL STRAINER SUB-ASSEMBLY

(a) Remove the 2 nuts, then remove the oil strainer and gasket.

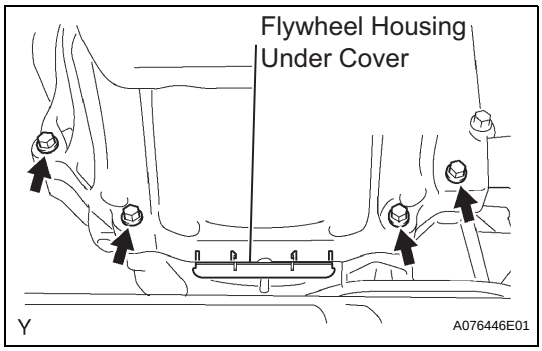

21. REMOVE OIL PAN SUB-ASSEMBLY

(a) Remove the 4 housing bolts.

(b) Remove the flywheel housing under cover.

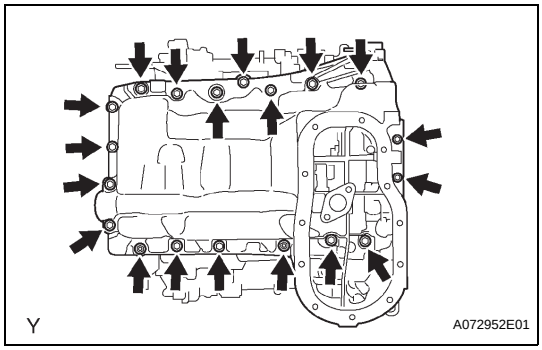

(c) Remove the 17 bolts and 2 nuts.

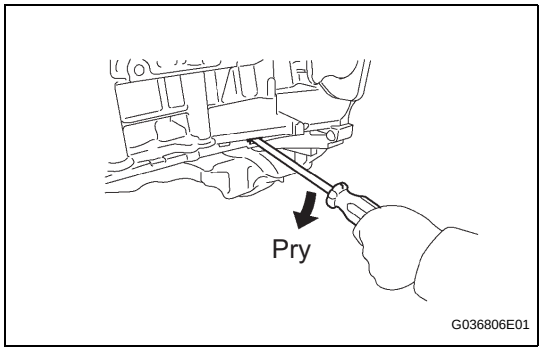

(d) Using a screwdriver, remove the oil pan by prying between the oil pan and cylinder block.
NOTICE:
Be careful not to damage the contact surfaces of the cylinder block and oil pan.

(e) Remove the O-ring from the oil pump.

22. REMOVE INTAKE AIR SURGE TANK (See page EM-57)

23. REMOVE IGNITION COIL ASSEMBLY (See page IG-7)

24. REMOVE CYLINDER HEAD COVER SUB-ASSEMBLY (See page EM-59)

25. REMOVE CYLINDER HEAD COVER SUB-ASSEMBLY LH (See page EM-59)

26. REMOVE CAMSHAFT TIMING OIL CONTROL VALVE ASSEMBLY (See page ES-407)

27. REMOVE VVT SENSOR (See page IG-8)

28. REMOVE TIMING CHAIN OR BELT COVER SUB-ASSEMBLY (See page LU-17)

29. REMOVE TIMING GEAR CASE OR TIMING CHAIN CASE OIL SEAL (See page EM-236)

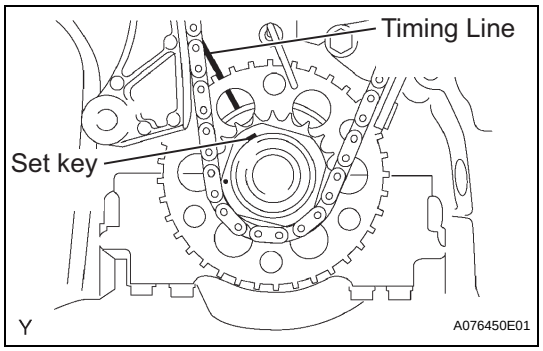

30. SET NO.1 COMPRESSION TO TDC/COMPRESSION

(a) Using the crankshaft pulley set bolt, turn the crankshaft to align the crankshaft set key with the timing line of the cylinder block.

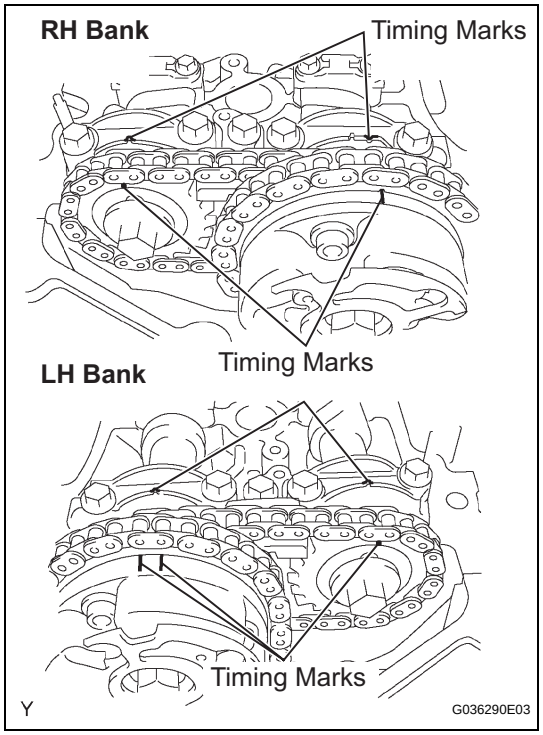

(b) Check that the timing marks of the camshaft timing gears are aligned with the timing marks of the bearing cap as shown in the illustration.
If not, turn the crankshaft 1 complete revolution (360°) and align the timing marks as above.

31. REMOVE NO.1 CHAIN TENSIONER ASSEMBLY

NOTICE:

- **Never rotate the crankshaft with the chain tensioner removed.**
- **When rotating the camshaft with the timing chain removed, rotate the crankshaft counterclockwise 40° from the TDC first.**

EM

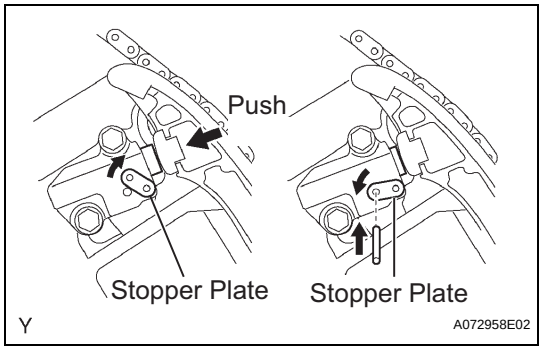

(a) While turning the stopper plate of the tensioner upward, push in the plunger of the chain tensioner as shown in the illustration.

(b) While turning the stopper plate of the tensioner down ward, insert a bar of ϕ 3.5 mm (0.138) into the holes in the stopper plate and tensioner to fix the stopper plate.

(c) Remove the 2 bolts, then remove the chain tensioner.

32. REMOVE CHAIN TENSIONER SLIPPER

33. REMOVE IDLE SPROCKET ASSEMBLY

(a) Using a 10 mm hexagon wrench, remove the idle gear shaft No. 2, idle gear No. 1 and idle gear shaft No. 1.

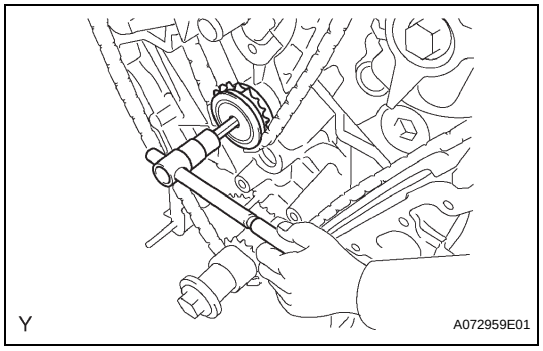

34. REMOVE NO.2 CHAIN VIBRATION DAMPER

(a) Remove the 2 chain vibration dampers No. 2.

35. REMOVE CHAIN SUB-ASSEMBLY

INSTALLATION

1. INSTALL CHAIN TENSIONER SLIPPER

2. INSTALL NO.1 CHAIN TENSIONER ASSEMBLY

(a) While turning the stopper plate of the tensioner clockwise, push in the plunger of the tensioner as shown in the illustration.

(b) While turning the stopper plate of the tensioner counterclockwise, insert a bar of ϕ 35 mm (0.138 in.) into the holes in the stopper plate and tensioner to fix the stopper plate.

(c) Install the chain tensioner with the 2 bolts.
Torque: 10 N*m (102 kgf*cm, 7.4 ft.*lbf)

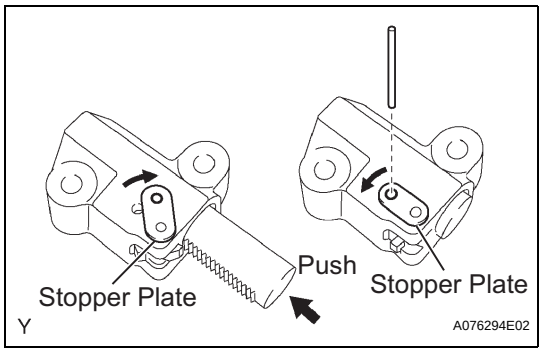

3. INSTALL CHAIN SUB-ASSEMBLY

(a) Set the No. 1 cylinder to TDC/ compression.

(1) Align the timing marks of the camshaft timing gears and bearing caps.

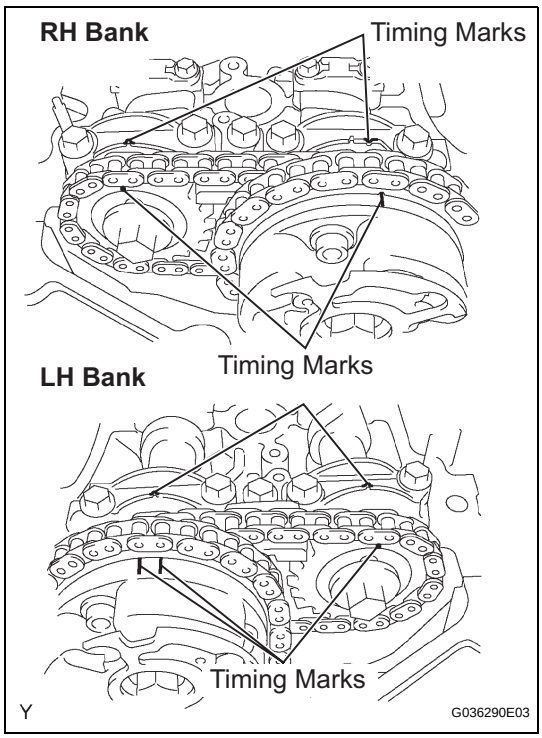

(2) Using the crankshaft pulley set bolt, turn the crankshaft to align the crankshaft set key with the timing line of the cylinder block.

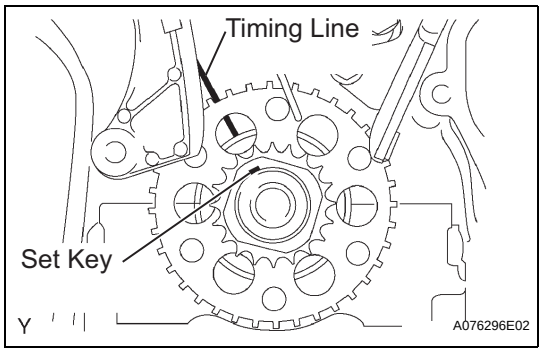

EM

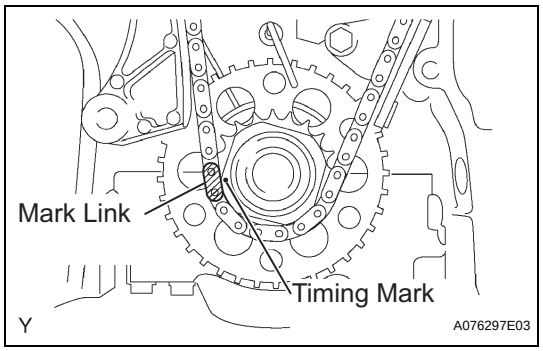

(b) Align the yellow mark link with the timing mark of the crankshaft timing link.

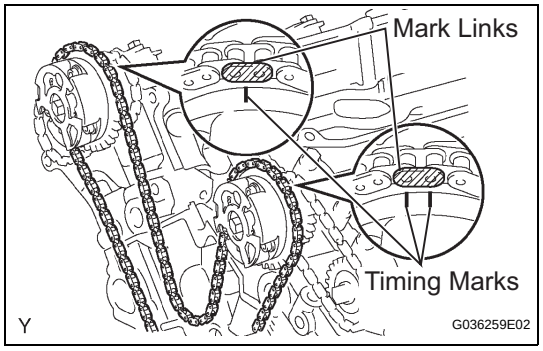

(c) Align the orange mark links with the timing marks of the camshaft timing gears, and install the chain.

4. INSTALL NO.2 CHAIN VIBRATION DAMPER

(a) Install the 2 chain vibration dampers No. 2.

5. INSTALL IDLE SPROCKET ASSEMBLY

(a) Apply a light coat of engine oil to rotating surface of the idle gear shaft No. 1.

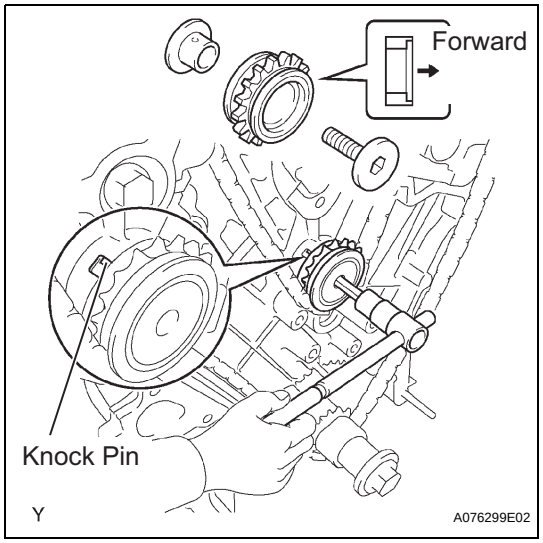

(b) Temporarily install the idle gear shaft No. 1 together with the idle gear shaft No. 2 while aligning the knock pin of the idle gear shaft No. 1 with the knock pin groove of the cylinder block.
NOTICE:
Be careful of the idle gear direction.

(c) Using 10 mm hexagon wrench, tighten the idle gear shaft No. 2.
Torque: 60 N*m (612 kgf*cm, 44 ft.*lbf)

(d) Remove the bar from the chain tensioner.

6. INSTALL TIMING GEAR CASE OR TIMING CHAIN CASE OIL SEAL (See page EM-236)

7. INSTALL TIMING CHAIN OR BELT COVER SUB-ASSEMBLY (See page LU-20)

8. INSTALL VVT SENSOR (See page IG-8)

9. INSTALL CAMSHAFT TIMING OIL CONTROL VALVE ASSEMBLY (See page ES-408)

10. INSTALL CYLINDER HEAD COVER SUB-ASSEMBLY LH (See page EM-68)

11. INSTALL CYLINDER HEAD COVER SUB-ASSEMBLY (See page EM-68)

12. INSTALL IGNITION COIL ASSEMBLY (See page IG-7)

13. INSTALL INTAKE AIR SURGE TANK (See page EM-69)

14. INSTALL OIL PAN SUB-ASSEMBLY

(a) Remove any old packing (FIPG) material and be careful not to drop any oil on the contact surfaces of the cylinder block, rear oil seal retainer and oil pan.

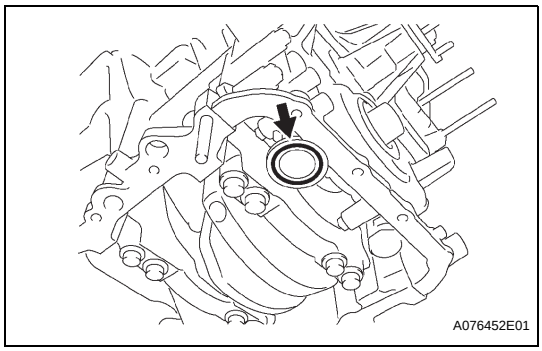

(b) Install a new O-ring onto the oil pump.

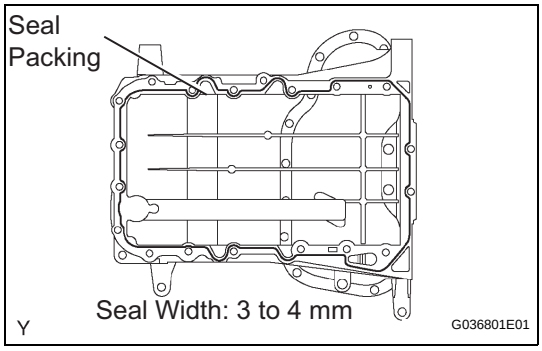

(c) Apply a continuous bead of seal packing (diameter 3 to 4 mm (0.12 to 0.16 in.)) to the oil pan as shown in the illustration.
Seal packing:
Part No. 08826-00080 or equivalent
NOTICE:
Install the oil pan within 3 minutes of applying the seal packing. Tighten the oil pan bolts and nuts within 15 minutes of installing the oil pan. Otherwise, the seal packing must be removed and reapplied.

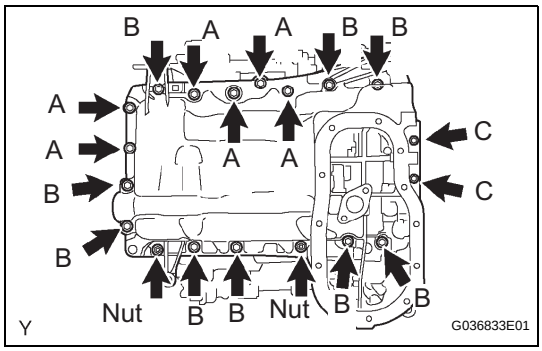

(d) Install the oil pan with the 17 bolts and 2 nuts, and tighten the bolts and nuts uniformly in several steps.
Torque: 10 N*m (102 kgf*cm, 7.4 ft.*lbf) for 10 mm (0.39 in.) head
21 N*m (214 kgf*cm, 16 ft.*lbf) for 12 mm (0.47 in.) head
HINT:
Each bolt length is as follows:

Bolt	Length
A	25 mm (0.98 in.)
B	45 mm (1.77 in.)
C	14 mm (0.55 in.)

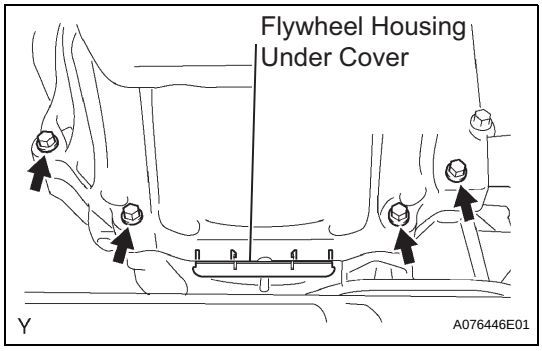

(e) Install the 4 housing bolts.
Torque: 37 N*m (377 kgf*cm, 27 ft.*lbf)
(f) Install the flywheel housing under cover.

EM

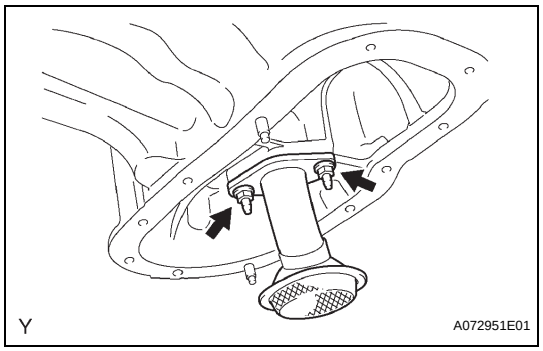

15. INSTALL OIL STRAINER SUB-ASSEMBLY

(a) Install a new gasket and the oil strainer with the 2 nuts.
Torque: 9.0 N*m (92 kgf*cm, 80 in.*lbf)

16. INSTALL NO.2 OIL PAN SUB-ASSEMBLY

(a) Remove any old packing (FIPG) material and be careful not to drop any oil on the contact surfaces of the oil pan and oil pan No. 2.

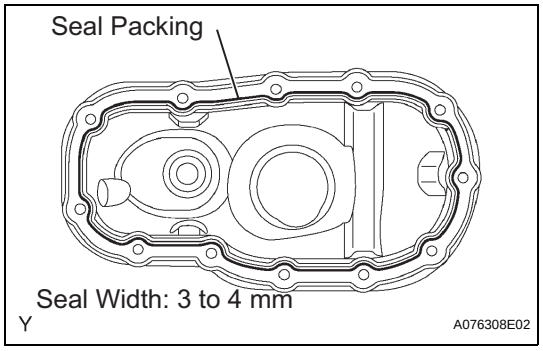

(b) Apply a continuous bead of seal packing (diameter 3 to 4 mm (0.12 to 0.16 in.)) as shown in the illustration.
Seal packing:
Part No. 08826-00080 or equivalent
NOTICE:
Install the oil pan No. 2 within 3 minutes of applying the seal packing. Tighten the oil pan No. 2 bolts and nuts within 15 minutes of installing the oil pan No. 2. Otherwise, the seal packing must be removed and reapplied.

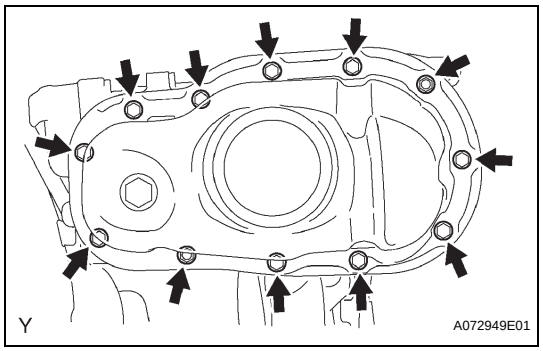

(c) Install the oil pan No. 2 with the 10 bolts and 2 nuts. Tighten the bolts and nuts uniformly in several steps.
Torque: 9.0 N*m (92 kgf*cm, 80 in.*lbf) for bolts
10 N*m (102 kgf*cm, 7.4 in.*lbf) for nut

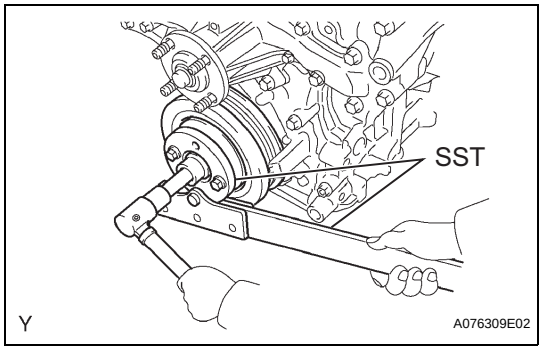

17. INSTALL CRANKSHAFT PULLEY

(a) Using SST, install the pulley set bolt.
SST 09213-54015 (91651-60855), 09330-00021
Torque: 250 N*m (2,549 kgf*cm, 184 ft.*lbf)

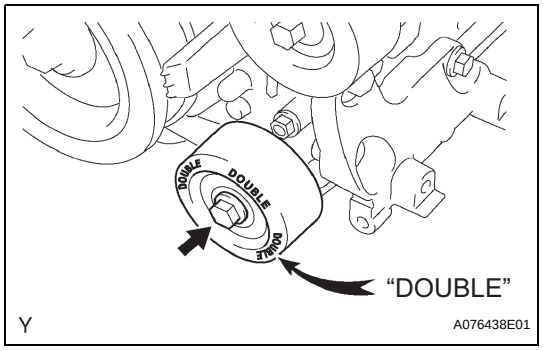

18. INSTALL NO.1 IDLER PULLEY SUB-ASSEMBLY

(a) Install the idler pulley with the bolt.
Torque: 54 N*m (551 kgf*cm, 40 ft.*lbf)
HINT:
DOUBLE is marked on the idler pulley No. 1 to distinguish it from the idler pulley No. 2.

EM

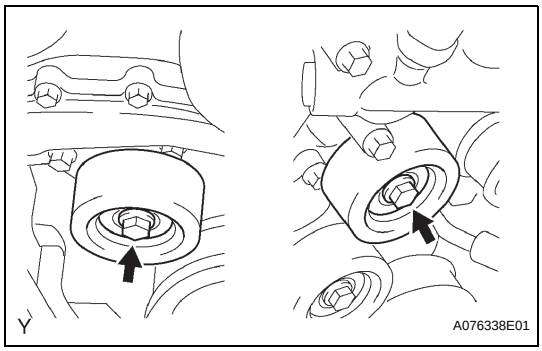

19. INSTALL NO.2 IDLER PULLEY SUB-ASSEMBLY

(a) Install the 2 idler pulleys with the 2 bolts.
Torque: 39 N*m (398 kgf*cm, 29 ft.*lbf)

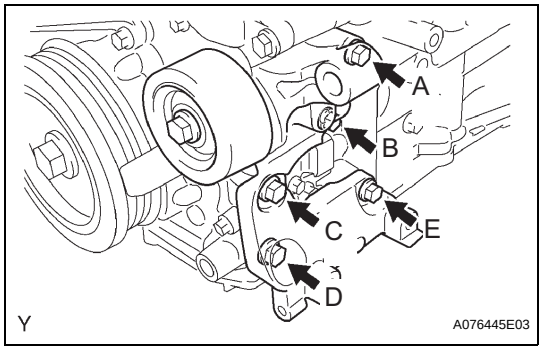

20. INSTALL V-RIBBED BELT TENSIONER ASSEMBLY
NOTICE:
A bolt in position A is not reusable.
HINT:
Each bolt length is as follows:

Position	Length
A	70 mm (2.76 in.)
B, C, D and E	33 mm (1.30 in.)

(a) Use a new bolt in position A.
(b) Finger-tighten the bolts in positions A and E and install the bracket.
(c) Tighten the bolts in positions A and E.
Torque: 36 N*m (267 kgf*cm, 27 ft.*lbf)
(d) Tighten the bolts in positions B, C and D.
Torque: 36 N*m (267 kgf*cm, 27 ft.*lbf)

21. INSTALL COOLER COMPRESSOR ASSEMBLY (See page ES-410)

22. INSTALL GENERATOR ASSEMBLY (See page CH-13)

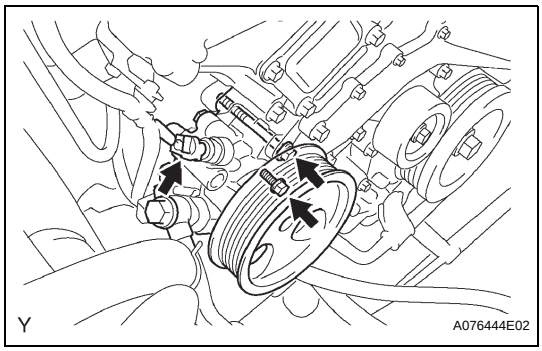

23. INSTALL VANE PUMP ASSEMBLY

(a) Install the vane pump with the 2 bolts.
(b) Connect the power steering pressure switch connector.
Torque: 43 N*m (438 kgf*cm, 32 ft.*lbf)
NOTICE:
Do not hit the pulley with other parts when installing the vane pump.
(c) Connect the power steering pressure switch connector.

24. INSTALL WATER INLET (See page CO-10)

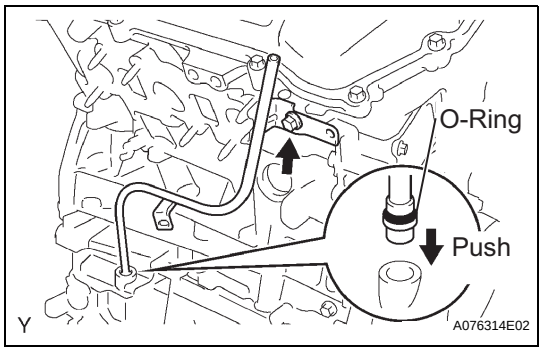

25. INSTALL OIL LEVEL GAGE GUIDE

(a) Install a new O-ring onto the oil level gauge guide.
(b) Apply a light coat of engine oil to the O-ring.
(c) Push the oil level gauge guide end into the guide hole of the oil pan.
(d) Install the oil level gauge guide with the bolt.
Torque: 9.0 N*m (92 kgf*cm, 80 in.*lbf)
(e) Install the oil level gauge guide.

26. INSTALL AIR CLEANER ASSEMBLY (See page ES-416)

27. **INSTALL FAN SHROUD (See page CO-20)**
28. **INSTALL RADIATOR SUPPORT TO FRAME SEAL LH**
29. **INSTALL FRONT DIFFERENTIAL CARRIER ASSEMBLY (for 4WD)**
    (See page DF-38)
30. **INSTALL POWER STEERING LINK ASSEMBLY**
    (See page PS-67)
31. **INSTALL BATTERY**
32. **ADD ENGINE OIL (See page LU-5)**
33. **ADD ENGINE COOLANT (See page CO-3)**
34. **ADD DIFFERENTIAL OIL (for 4WD)**
35. **INSPECT DIFFERENTIAL OIL (for 4WD) (See page DF-8)**
36. **ADD POWER STEERING FLUID**
37. **BLEED POWER STEERING FLUID (See page PS-2)**
38. **CHECK FOR ENGINE OIL LEAKAGE**
39. **CHECK FOR ENGINE COOLANT LEAKAGE (See page CO-4)**
40. **CHECK FOR POWER STEERING FLUID LEAKAGE**
41. **INSPECT AND ADJUST FRONT WHEEL ALIGNMENT**
    (See page SP-7)
42. **INSTALL V-BANK COVER (See page ES-416)**
43. **INSPECT IGNITION TIMING (See page EM-1)**

CAMSHAFT (for Bank 1)

COMPONENTS

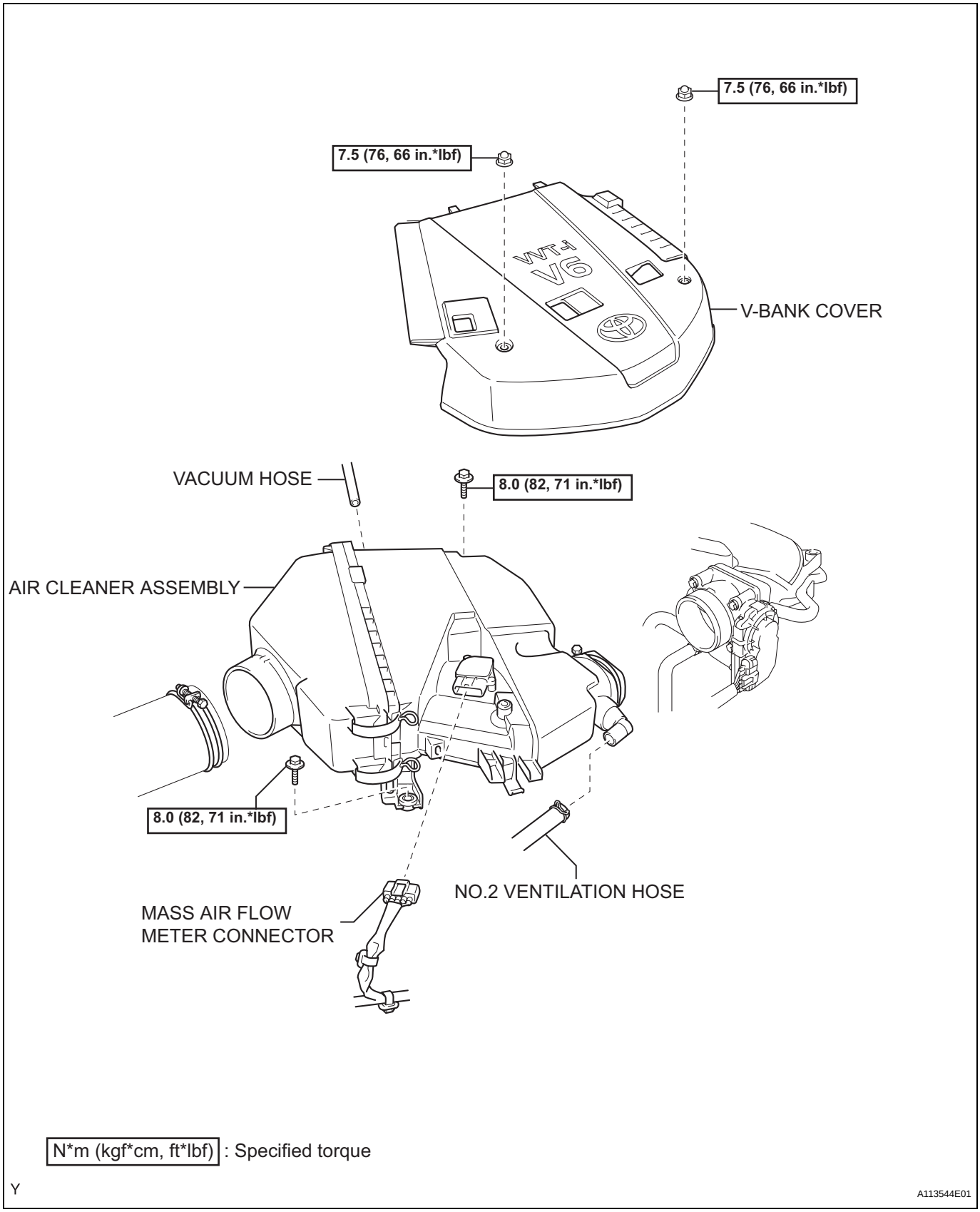

EM

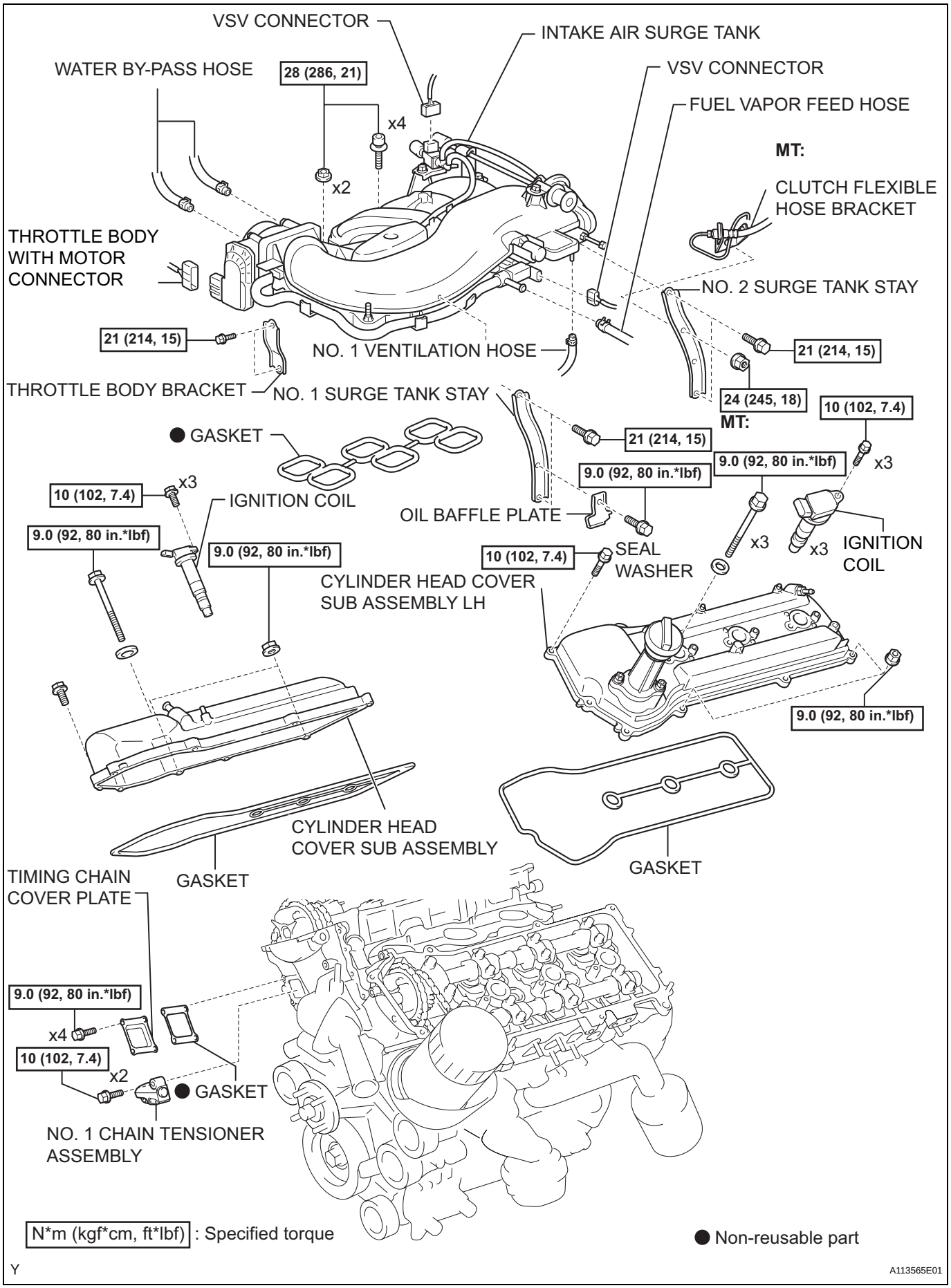
VSV CONNECTOR
INTAKE AIR SURGE TANK
WATER BY-PASS HOSE
28 (286, 21)
VSV CONNECTOR
FUEL VAPOR FEED HOSE
x4
x2
MT:
CLUTCH FLEXIBLE HOSE BRACKET
THROTTLE BODY WITH MOTOR CONNECTOR
NO. 2 SURGE TANK STAY
21 (214, 15)
NO. 1 VENTILATION HOSE
21 (214, 15)
THROTTLE BODY BRACKET
NO. 1 SURGE TANK STAY
24 (245, 18)
MT:
10 (102, 7.4)
● GASKET
21 (214, 15)
9.0 (92, 80 in.*lbf)
9.0 (92, 80 in.*lbf)
x3
10 (102, 7.4)
x3
IGNITION COIL
OIL BAFFLE PLATE
9.0 (92, 80 in.*lbf)
9.0 (92, 80 in.*lbf)
10 (102, 7.4)
SEAL WASHER
x3
x3
IGNITION COIL
CYLINDER HEAD COVER SUB ASSEMBLY LH
9.0 (92, 80 in.*lbf)
CYLINDER HEAD COVER SUB ASSEMBLY
GASKET
GASKET
TIMING CHAIN COVER PLATE
9.0 (92, 80 in.*lbf)
x4
10 (102, 7.4)
x2
● GASKET
NO. 1 CHAIN TENSIONER ASSEMBLY
N*m (kgf*cm, ft*lbf) : Specified torque
● Non-reusable part
Y
A113565E01

EM

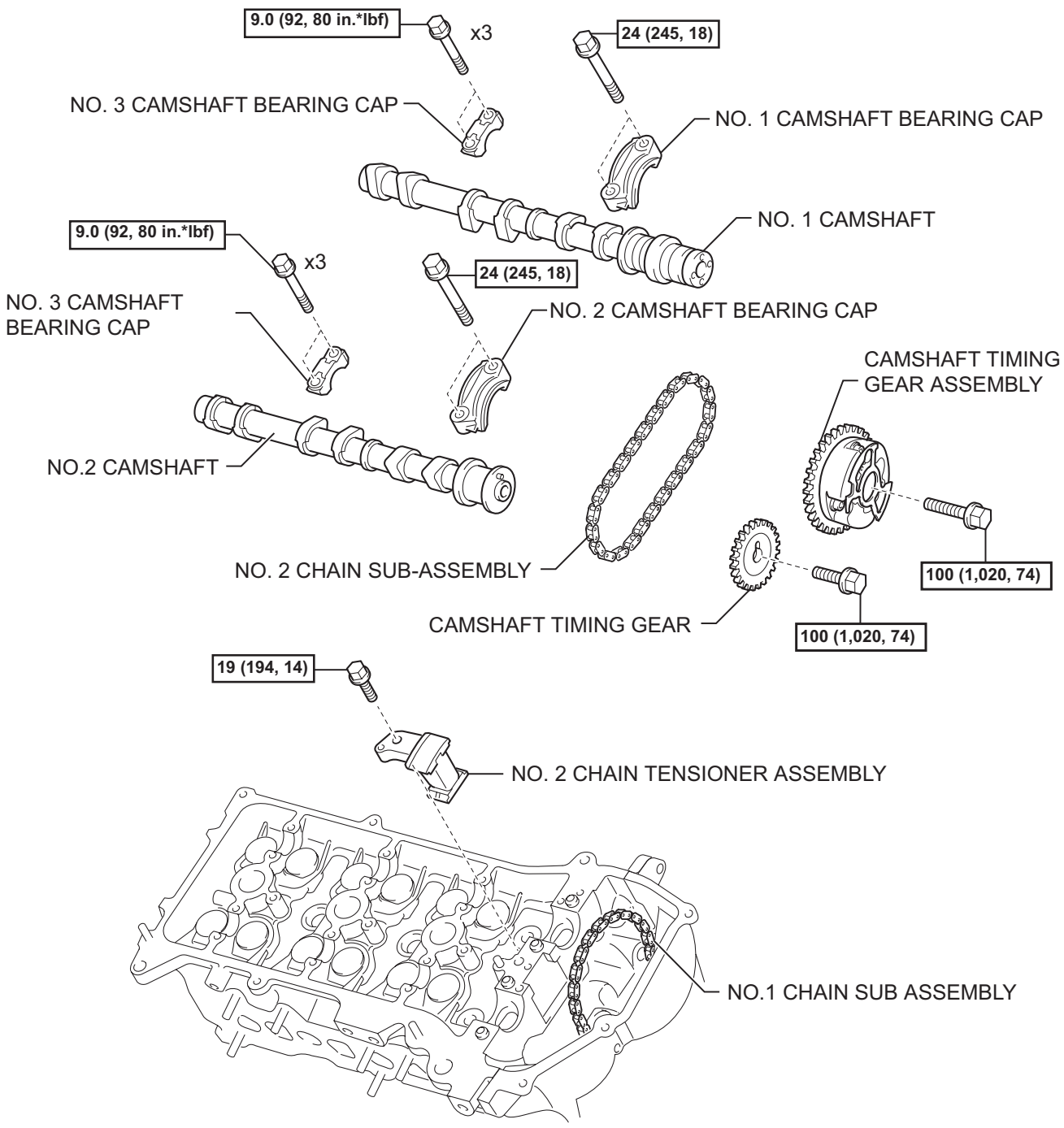

N*m (kgf*cm, ft*lbf) : Specified torque

Y

A113592E02

REMOVAL

1. **DISCONNECT CABLE FROM NEGATIVE BATTERY TERMINAL**
2. **DRAIN ENGINE COOLANT (See page CO-3)**
3. **REMOVE V-BANK COVER (See page ES-414)**
4. **REMOVE AIR CLEANER ASSEMBLY (See page ES-415)**
5. **REMOVE INTAKE AIR SURGE TANK**
   (a) Disconnect the 2 water by-pass hoses.

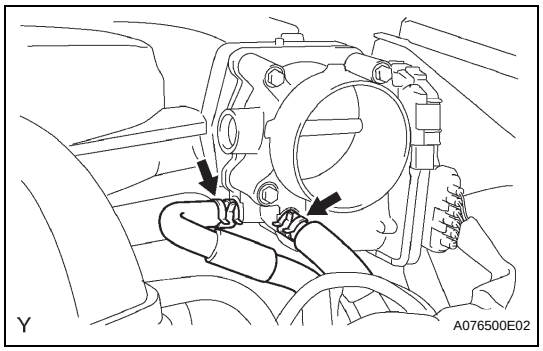

(b) Disconnect the fuel vapor feed hose.

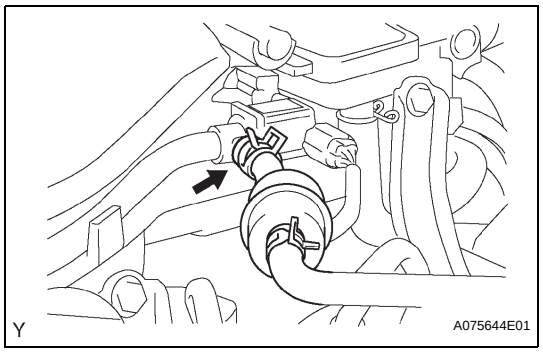

(c) Disconnect the ventilation hose.

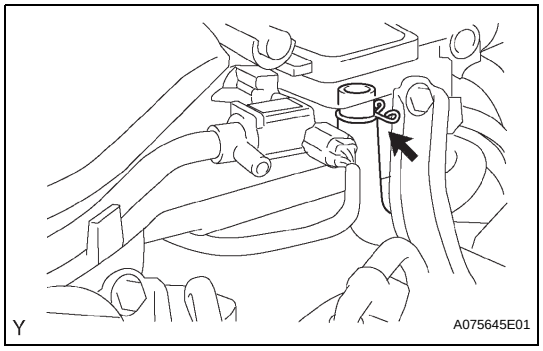

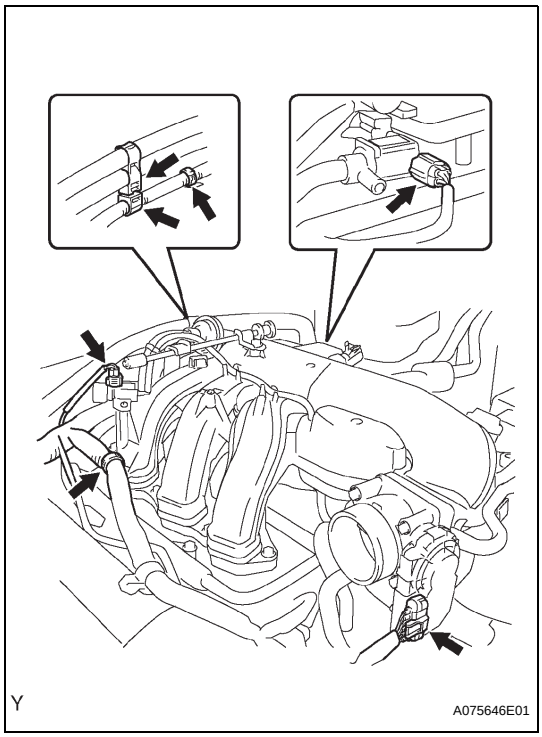

(d) Disconnect the 2 VSV connectors.
(e) Disconnect the throttle body with motor connector.
(f) Separate the 3 wire harness clamps and hose clamp.

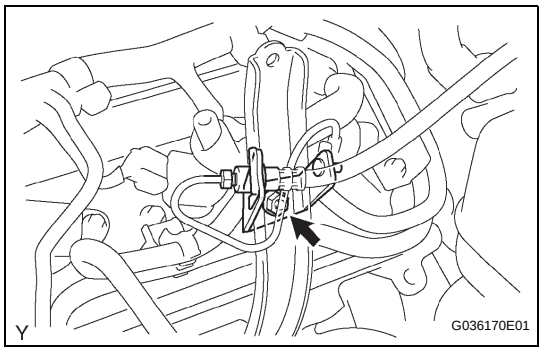

(g) Remove the nut, then separate the clutch flexible hose bracket from the surge tank stay (with Manual Transmission).

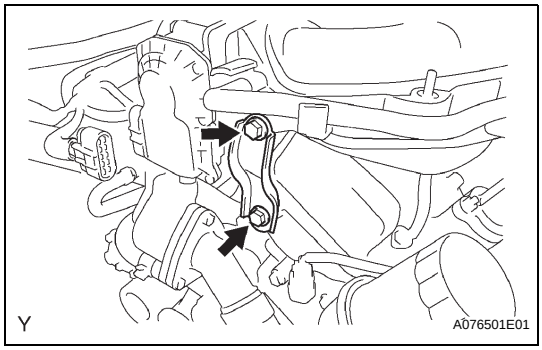

(h) Remove the 2 bolts and throttle body bracket.

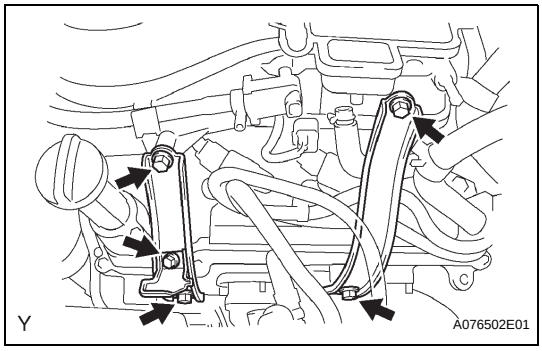

(i) Remove the bolt and oil baffle plate.
(j) Remove the 4 bolts and 2 surge tank stays.

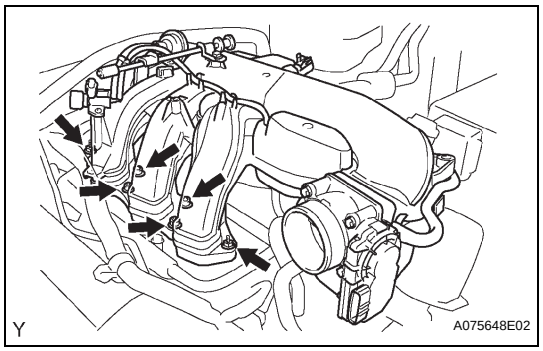

(k) Remove the 2 nuts.
(l) Using a socket hexagon wrench 8, remove the 4 bolts, intake air surge tank and gasket.

6. REMOVE IGNITION COIL ASSEMBLY

(a) Disconnect the 3 connectors.
(b) Remove the 3 bolts, then remove the 3 ignition coils.

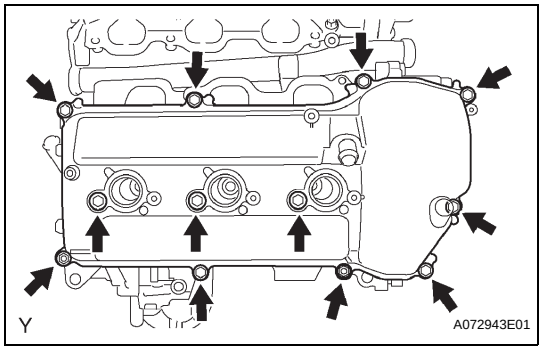

7. REMOVE CYLINDER HEAD COVER SUB-ASSEMBLY

(a) Remove the 10 bolts, 3 seal washers, 2 nuts, cylinder head cover and gasket.

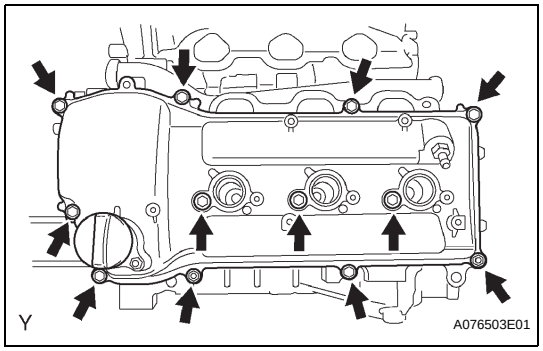

8. REMOVE CYLINDER HEAD COVER SUB-ASSEMBLY LH

(a) Remove the 10 bolts, 3 seal washers, 2 nuts, cylinder head cover and gasket.

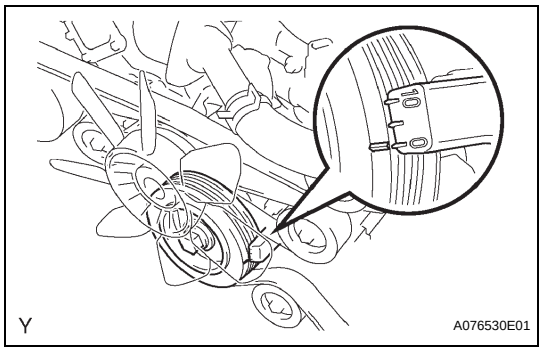

9. SET NO.1 CYLINDER TO TDC/COMPRESSION

(a) Turn the crankshaft pulley until its groove and the timing mark "0" of the timing chain cover are aligned.

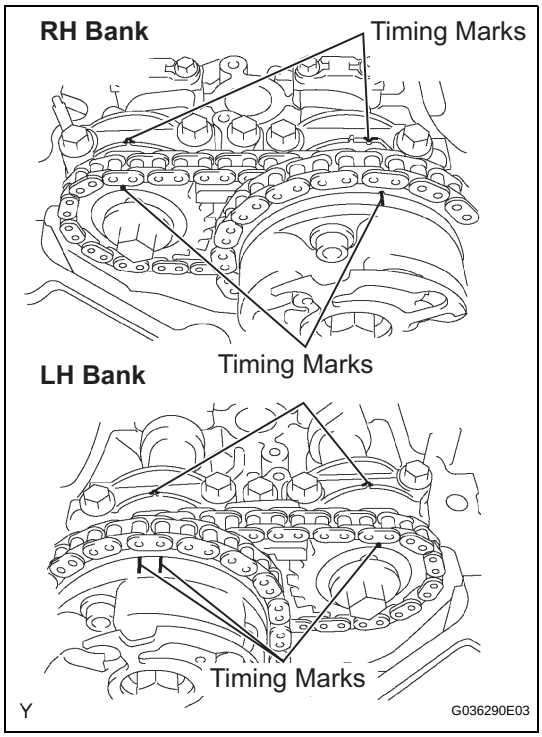

(b) Check that the timing marks of the camshaft timing gears are aligned with the timing marks of the bearing cap as shown in the illustration.
If not, turn the crankshaft 1 complete revolution (360°) and align the timing marks above.

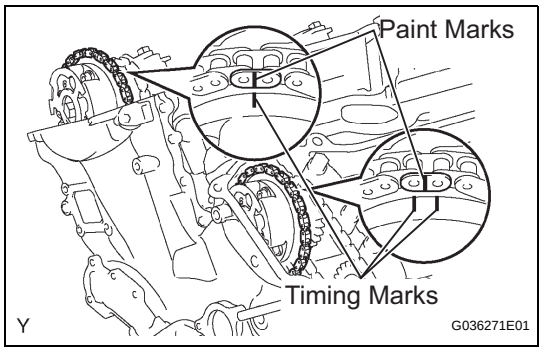

(c) Place paint marks on the No. 1 chain links corresponding to the timing marks of the camshaft timing gears.

10. REMOVE NO.1 CHAIN TENSIONER ASSEMBLY
NOTICE:
- **Never rotate the crankshaft with the chain tensioner removed.**
- **When rotating the camshaft with the timing chain removed, rotate the crankshaft counterclockwise 40° from the TDC first.**

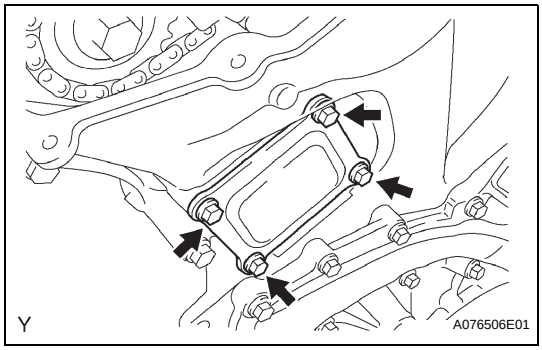

(a) Remove the 4 bolts, then remove the timing chain cover plate and gasket.

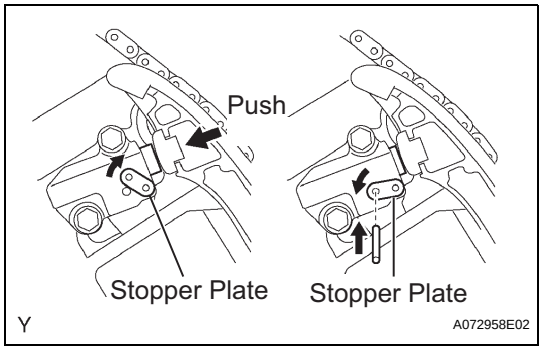

(b) While turning the stopper plate of the tensioner upward, push in the plunger of the chain tensioner as shown in the illustration.
(c) While turning the stopper plate of the tensioner downward, insert a bar of ϕ3.5 mm (0.138 in.) into the holes in the stopper plate and tensioner to fix the stopper plate.
(d) Remove the 2 bolts, then remove the chain tensioner.

EM

11. REMOVE NO.2 CAMSHAFT

NOTICE:

Keep the camshaft level while it is being removed. The camshaft thrust clearance is very small and failing to keep it level could crack or damage the cylinder head journal surface, which receives the thrust. This could subsequently lead the camshaft to seize or break. Perform the following steps to avoid such problems.

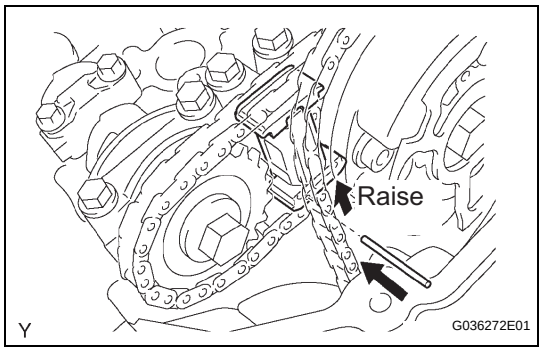

(a) While raising the chain tensioner No. 2, insert a pin of ϕ1.0 mm (0.039 in.) into the hole to fix it.

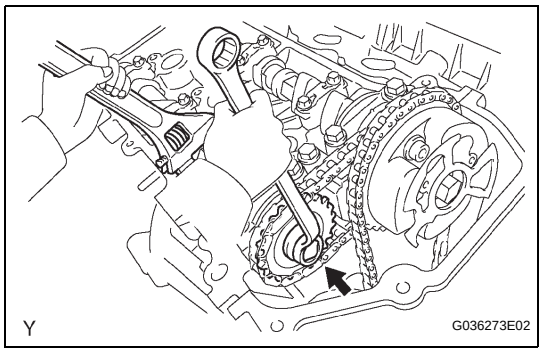

(b) Hold the hexagonal portion of the No. 2 camshaft with a wrench, and remove the camshaft timing gear set bolt.

NOTICE:

Be careful not to damage the cylinder head and valve lifter with the wrench.

(c) Separate the camshaft timing gear from the No. 2 camshaft.

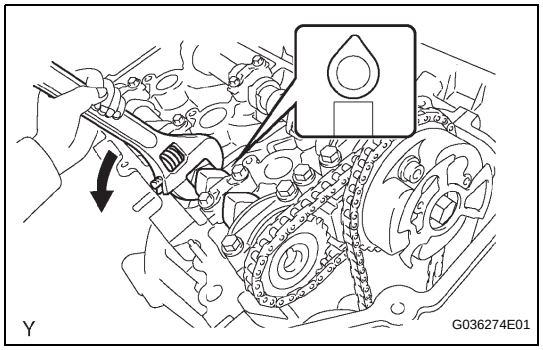

(d) 3Rotate the camshaft counterclockwise using the wrench so that the cam lobes of No. 1 cylinder face upward as shown in the illustration.

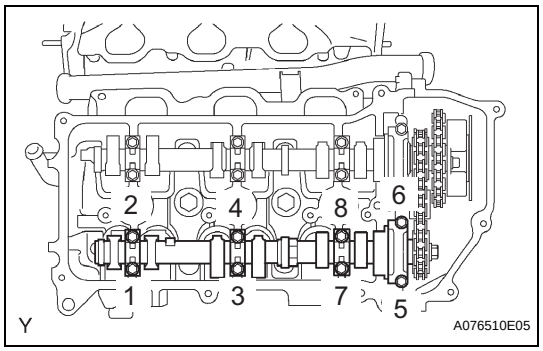

(e) Using several steps, uniformly loosen and remove the 8 bearing cap bolts in the sequence shown in the illustration.

(f) Remove the 4 bearing caps and No. 2 camshaft.

EM

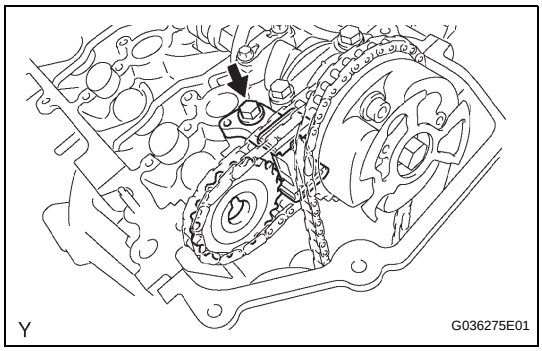

12. REMOVE NO.2 CHAIN TENSIONER ASSEMBLY

(a) Remove the chain tensioner No. 2 bolt, then remove the chain tensioner No. 2 and camshaft timing gear.

13. REMOVE CAMSHAFT

NOTICE:

Keep the camshaft level while it is being removed. The camshaft thrust clearance is very small and failing to keep it level could crack or damage the cylinder head journal surface, which receives the thrust. This could subsequently lead the camshaft to seize or break. Perform the following steps to avoid such problems.

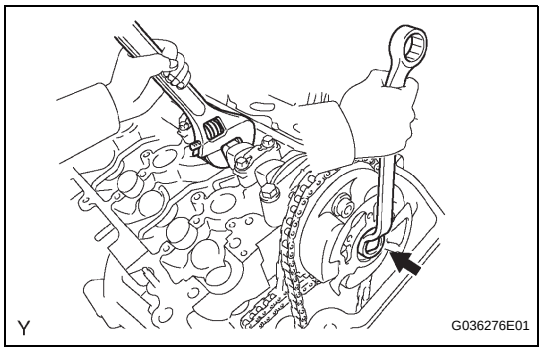

(a) Hold the hexagonal portion of the No. 1 camshaft with a wrench, and loosen the camshaft timing gear set bolt.

NOTICE:

- **Be careful not to damage the cylinder head and valve lifter with the wrench.**
- **Do not disassemble the camshaft timing gear assembly.**

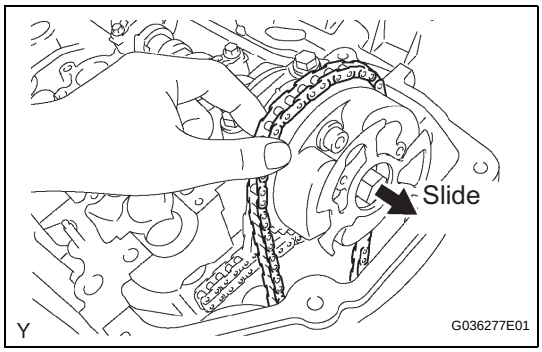

(b) Slide the camshaft timing gear and separate the No. 1 chain from the camshaft timing gear.

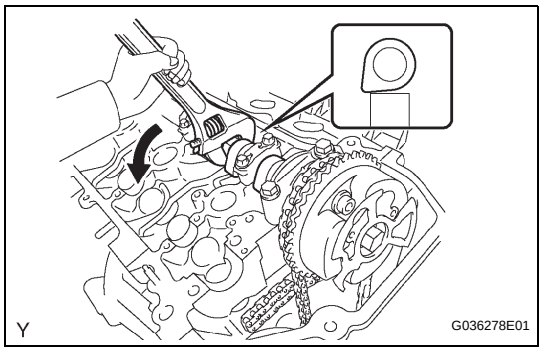

(c) Rotate the No. 1 camshaft counterclockwise using the wrench so that the cam lobes of No. 1 cylinder face downward as shown in the illustration.

EM

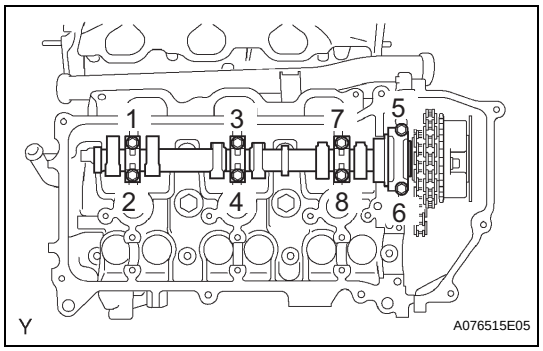

(d) Using several steps, loosen and remove the 8 bearing cap bolts in the sequence shown in the illustration.

(e) Remove the 4 bearing caps.

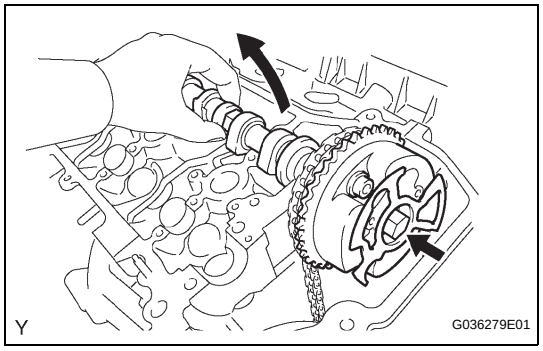

(f) Remove the camshaft timing gear set bolt with the No. 1 camshaft lifted up, then remove the No. 1 camshaft and camshaft timing gear with No. 2 chain.

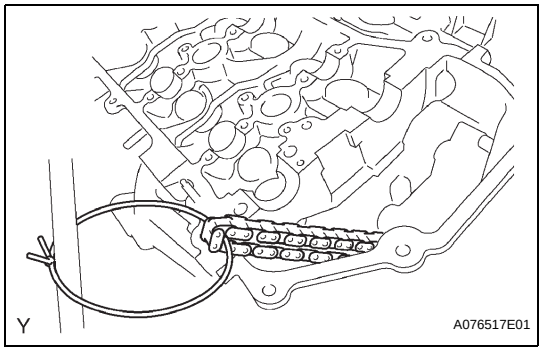

(g) Tie the No. 1 chain with a string as shown in the illustration.

NOTICE:

Be careful not to drop anything inside the timing chain cover.

EM

INSTALLATION

1. INSTALL CAMSHAFT

NOTICE:

Keep the camshaft level while it is being removed. The camshaft thrust clearance is very small and failing to keep it level could crack or damage the cylinder head journal surface, which receives the thrust. This could subsequently lead the camshaft to seize or break. Perform the following steps to avoid such problems.

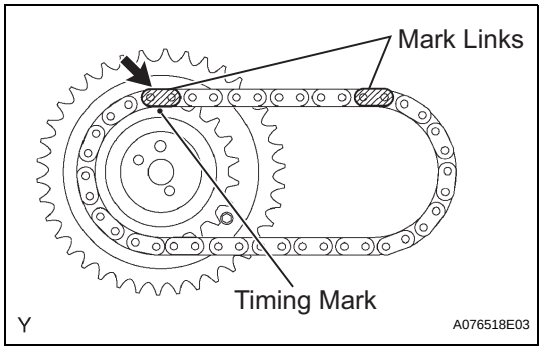

(a) Align the yellow mark link with the timing mark (1 dot mark) of the camshaft timing gear as shown in the illustration.

(b) Apply new engine oil to the thrust portion and journal of the camshafts.

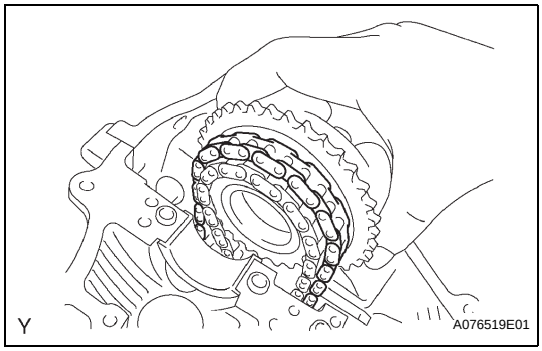

(c) Temporarily install the No. 1 chain onto the No. 2 chain of the camshaft timing gear.

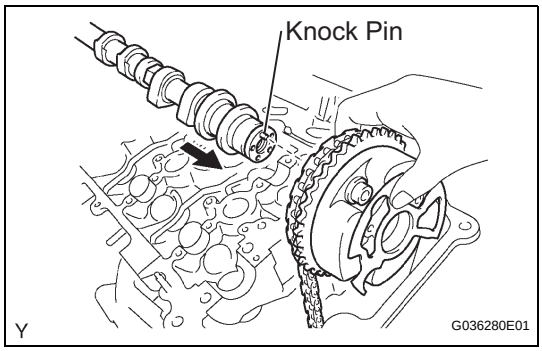

(d) Align the knock pin hole of the camshaft timing gear with the knock pin of the No. 1 camshaft, and insert the No. 1 camshaft into the camshaft timing gear.

(e) Temporarily install the camshaft timing gear set bolt.

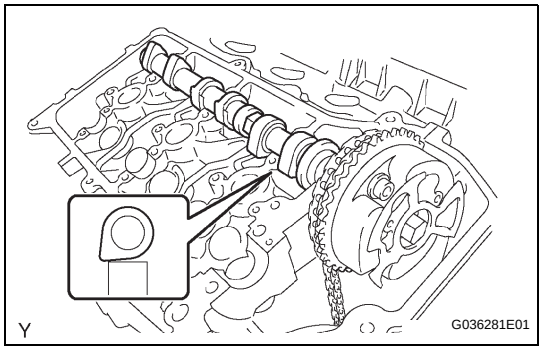

(f) Install the No. 1 camshaft onto the RH cylinder head with the cam lobes of the No. 1 cylinder facing downward as shown in the illustration.

EM

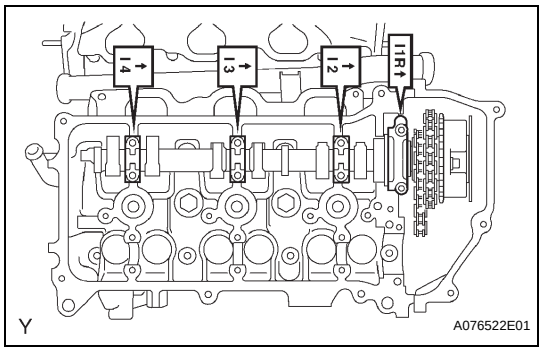

(g) Install the 4 bearing caps in the proper locations as shown.

(h) Apply a light coat of engine oil to the threads and under the heads of the bearing cap bolts.

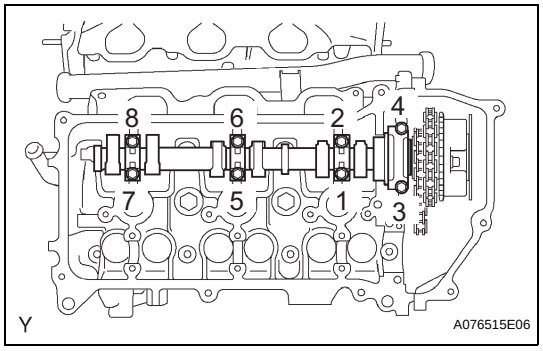

(i) Using several steps, uniformly install and tighten the 8 bearing cap bolts in the sequence shown in the illustration.
Torque: 9.0 N*m (92 kgf*cm, 80 in.*lbf) for 10 mm (0.39 in.) head
24 N*m (245 kgf*cm, 18 ft.*lbf) for 12 mm (0.47 in.) head

EM

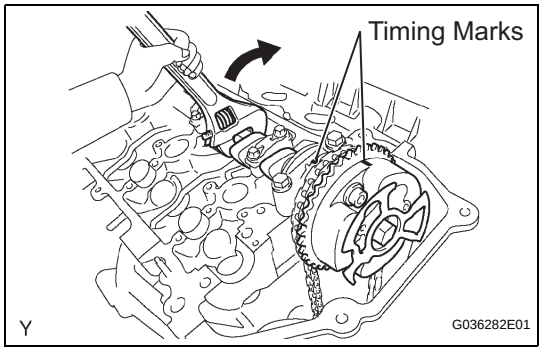

(j) Rotate the No. 1 camshaft clockwise using a wrench so that the timing mark of the camshaft timing gear is aligned with the timing mark of the camshaft bearing cap.

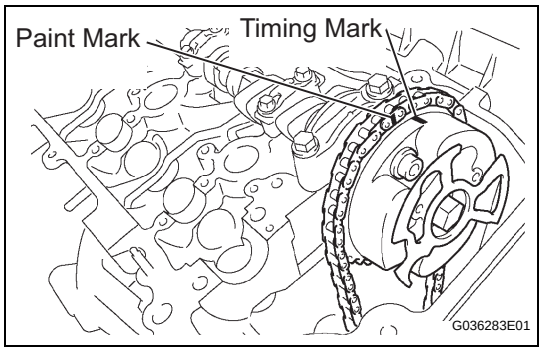

(k) Align the paint mark of the No. 1 chain with the timing mark of the camshaft timing gear.

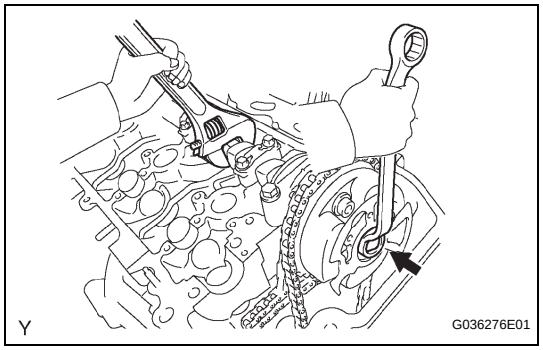

(l) Hold the hexagonal portion of the No. 1 camshaft with a wrench, and tighten the camshaft timing gear set bolt.
Torque: 100 N*m (1,020 kgf*cm, 74 ft.*lbf)

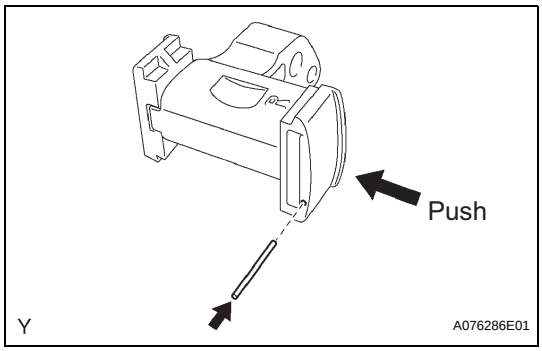

2. INSTALL NO.2 CHAIN TENSIONER ASSEMBLY

(a) While pushing in the tensioner, insert a pin of ϕ 1.0 mm (0.039 in.) into the hole to fix it.

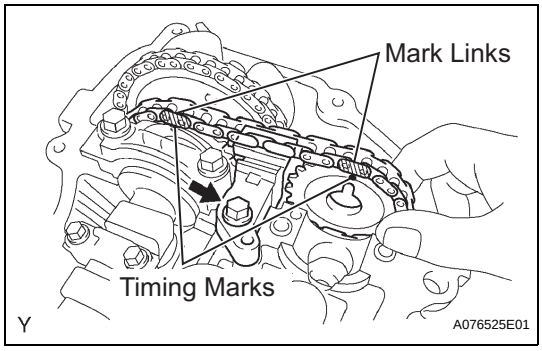

(b) Temporarily install the camshaft timing gear and chain tensioner No. 2 and align the yellow mark links with the timing marks (1 dot mark) of the camshaft timing gears.

(c) Tighten the chain tensioner No. 2 bolt.
Torque: 19 N*m (194 kgf*cm, 14 ft.*lbf)

EM

3. INSTALL NO.2 CAMSHAFT

NOTICE:

Keep the camshaft level while it is being removed. The camshaft thrust clearance is very small and failing to keep it level could crack or damage the cylinder head journal surface, which receives the thrust. This could subsequently lead the camshaft to seize or break. Perform the following steps to avoid such problems.

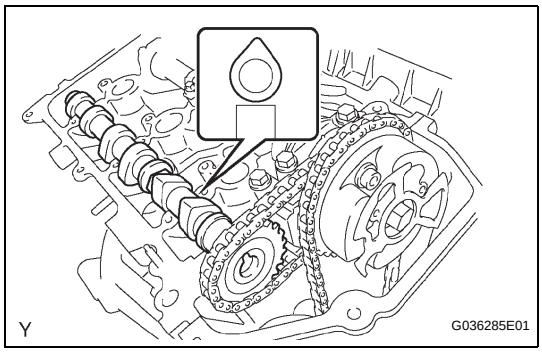

(a) Install the No. 2 camshaft onto the RH cylinder head with the cam lobes of No. 1 cylinder facing upward as shown in the illustration.

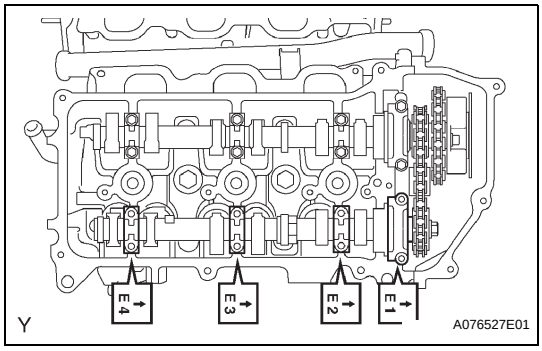

(b) Install the 4 bearing caps in the proper locations as shown.

(c) Apply a light coat of engine oil to the threads and under the heads of the bearing cap bolts.

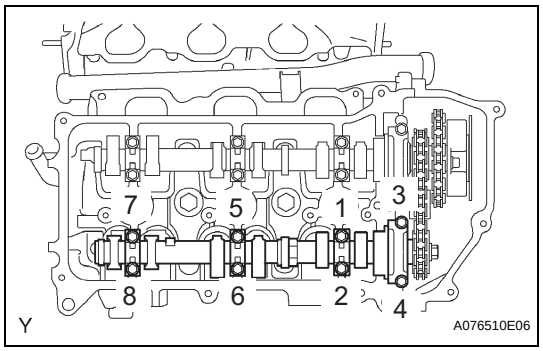

(d) Using several steps, uniformly install and tighten the 8 bearing cap bolts in the sequence shown in the illustration.
Torque: 9.0 N*m (92 kgf*cm, 80 in.*lbf) for 10 mm (0.39 in.) head
24 N*m (245 kgf*cm, 18 ft.*lbf) for 12 mm (0.47 in.) head

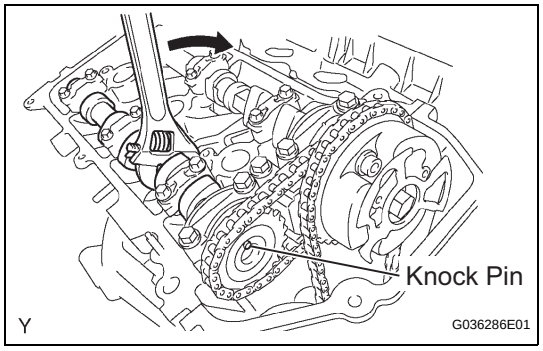

(e) Rotate the No. 2 camshaft clockwise using a wrench so that the knock pin of the No. 2 camshaft is aligned with the knock pin hole of the camshaft timing gear.

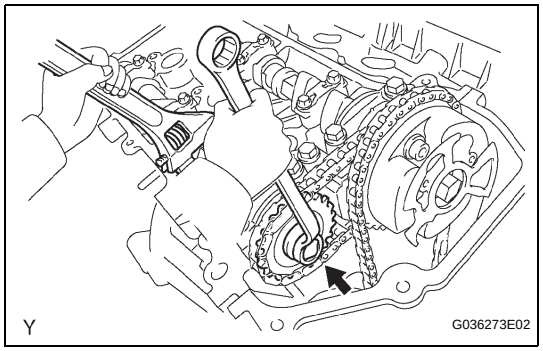

(f) Hold the hexagonal portion of the No. 2 camshaft with a wrench, and install the camshaft timing gear set bolt.
Torque: 100 N*m (1,020 kgf*cm, 74 ft.*lbf)
(g) Remove the pin from the chain tensioner No. 2.

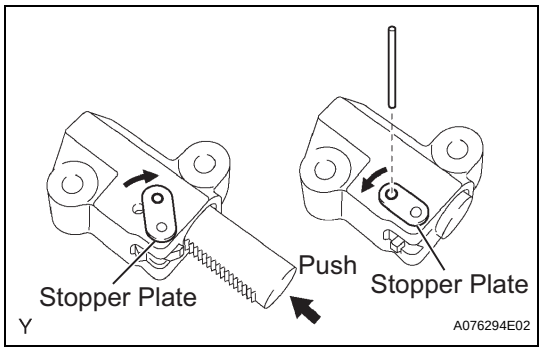

4. INSTALL NO.1 CHAIN TENSIONER ASSEMBLY

(a) While turning the stopper plate of the tensioner clockwise, push in the plunger of the tensioner as shown in the illustration.
(b) While turning the stopper plate of the tensioner counterclockwise, insert a bar of ϕ 3.5 mm (0.138 in.) into the holes in the stopper plate and tensioner to fix the stopper plate.
(c) Install the chain tensioner with the 2 bolts.
Torque: 10 N*m (102 kgf*cm, 7.4 ft.*lbf)
(d) Remove the bar from the chain tensioner.
(e) Install a new gasket and the timing chain cover plate with the 4 bolts.
Torque: 9.0 N*m (92 kgf*cm, 80 in.*lbf)

EM

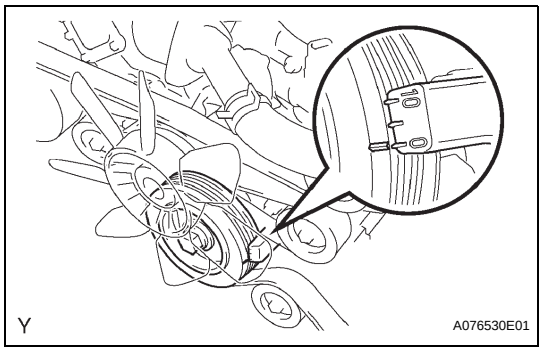

(f) Turn the crankshaft pulley 2 complete revolutions slowly until its groove and the timing mark "0" of the timing chain cover are aligned.

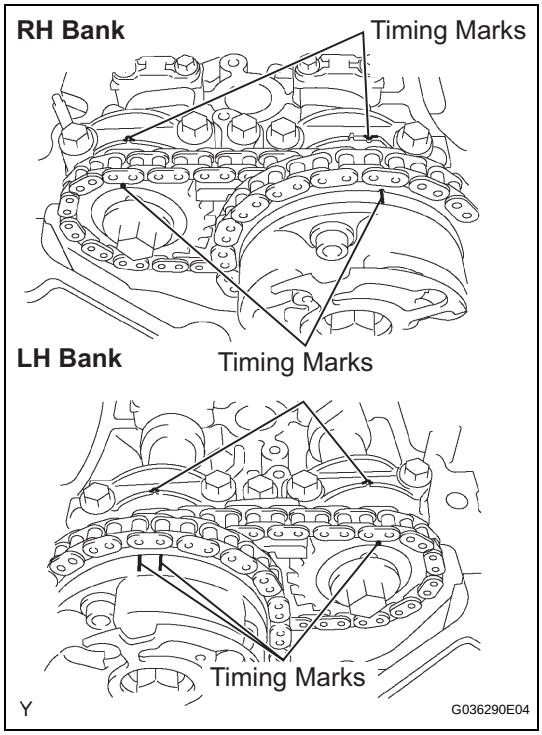

(g) Check that the timing marks of the camshaft timing gears are aligned with the timing marks of the bearing cap as shown in the illustration.

5. SET CYLINDER TO TDC/COMPRESSION (See page EM-7)

6. INSPECT VALVE CLEARANCE (See page EM-8)

7. ADJUST VALVE CLEARANCE (See page EM-9)

8. INSTALL CYLINDER HEAD COVER SUB-ASSEMBLY LH

(a) Remove any old packing (FIPG) material and be careful not to drop any oil on the contact surfaces of the cylinder head, timing chain cover and cylinder head cover.

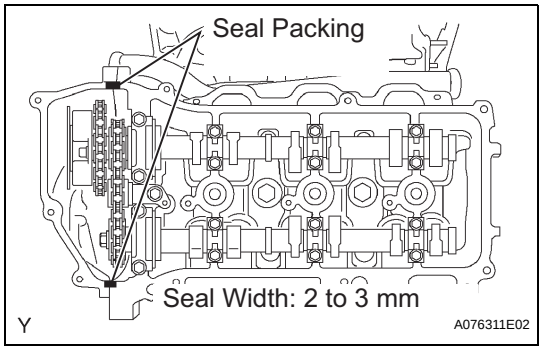

(b) Install the cylinder head cover within 3 minutes of applying seal packing. Tighten the cylinder head cover bolts and nuts within 15 minutes of installing the cylinder head cover. Otherwise, the seal packing mush be removed and reapplied.

Seal packing:
Part No. 08826-00080 or equivalent

NOTICE:
Install the cylinder head cover within 3 minutes after applying the seal packing. After installing it, cylinder head cover bolts and nuts must be tightened within 15 minutes. Otherwise the seal packing must be removed and reapplied.

(c) Install the seal washers onto the bolts.

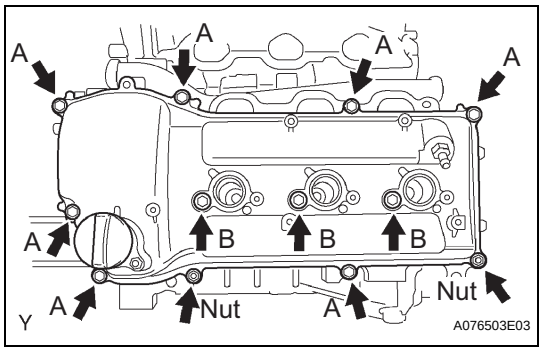

(d) Install the cylinder head cover with the 10 bolts and 2 nuts. Tighten the bolts and nuts uniformly in several steps.
Torque: 10 N*m (102 kgf*cm, 7.4 ft.*lbf) for bolt A
9.0 N*m (92 kgf*cm, 80 in.*lbf) for bolt B
9.0 N*m (92 kgf*cm, 80 in.*lbf) for nut
HINT:
Each bolt length is as follows.

Bolt	Length
A	25 mm (0.98 in.)
B	60 mm (2.36 in.)

9. INSTALL CYLINDER HEAD COVER SUB-ASSEMBLY

(a) Remove any old packing (FIPG) material and be careful not to drop any oil on the contact surfaces of the cylinder head, timing chain cover and cylinder head cover.

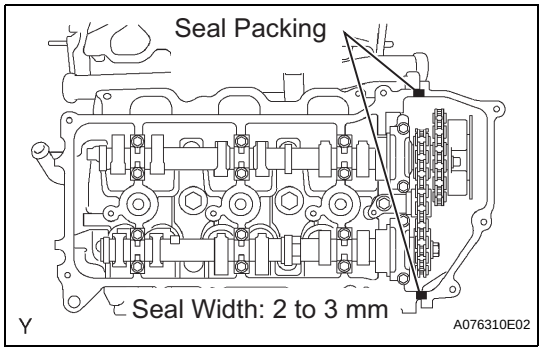

(b) Apply a continuous bead of seal packing (diameter 2 to 3 mm (0.08 to 0.12 in.)) to the cylinder head and timing chain cover as shown in the illustration.
Seal packing:
Part No. 08826-00080 or equivalent
NOTICE:
Install the cylinder head cover within 3 minutes of applying the seal packing. Tighten the cylinder head cover bolts and nuts within 15 minutes of installing the cylinder head cover. Otherwise, the seal packing must be removed and reapplied.

(c) Install the seal washers onto the bolts.

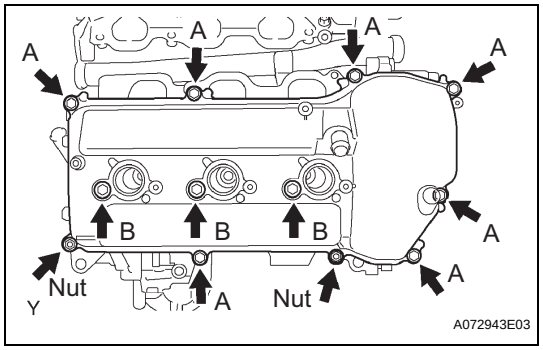

(d) Install the cylinder head cover with the 10 bolts and 2 nuts. Tighten the bolts and nuts uniformly in several steps.
Torque: 10 N*m (102 kgf*cm, 7.4 ft.*lbf) for bolt A
9.0 N*m (92 kgf*cm, 80 in.*lbf) for bolt B
9.0 N*m (92 kgf*cm, 80 in.*lbf) for nut
HINT:
Each bolt length is as follows.

Bolt	Length
A	25 mm (0.98 in.)
B	60 mm (2.36 in.)

10. INSTALL IGNITION COIL ASSEMBLY

(a) Install the 3 ignition coils with the 3 bolts.
Torque: 10 N*m (102 kgf*cm, 7.4 ft.*lbf) for bolt A

(b) Connect the 3 connectors.

11. INSTALL INTAKE AIR SURGE TANK

(a) Install a new gasket onto the intake air surge tank.

EM

(b) Using the socket hexagon wrench 8, install the intake air surge tank with the 4 bolts.
Torque: 28 N*m (286 kgf*cm, 21 ft.*lbf)
(c) Install the 2 intake air surge tank nuts.
Torque: 28 N*m (286 kgf*cm, 21 ft.*lbf)
(d) Install the 2 surge tank stays with the 4 bolts.
Torque: 21 N*m (214 kgf*cm, 15 ft.*lbf)
(e) Install the oil baffle plate with the bolt.
Torque: 9.0 N*m (92 kgf*cm, 80 in.*lbf)
(f) Install the throttle body bracket with the 2 bolts.
Torque: 21 N*m (214 kgf*cm, 15 ft.*lbf)
(g) Install the clutch flexible hose bracket with the nut (w/ Manual Transmission).
Torque: 24 N*m (245 kgf*cm, 18 ft.*lbf)
(h) Install the 3 wire harness clamps and hose clamp.
(i) Connect the throttle body w/ motor connector.
(j) Connect the 2 VSV connectors.
(k) Connect the ventilation hose.
(l) Connect the fuel vapor feed hose.
(m) Connect the 2 water by-pass hoses.

12. INSTALL AIR CLEANER ASSEMBLY (See page ES-416)

13. CONNECT CABLE TO NEGATIVE BATTERY TERMINAL
Torque: 3.9 N*m (40 kgf*cm, 35 in.*lbf)

14. ADD ENGINE COOLANT (See page CO-3)

15. CHECK FOR ENGINE COOLANT LEAKAGE (See page CO-4)

16. INSTALL V-BANK COVER
(a) Install the V-bank cover with the 2 nuts.
Torque: 7.5 N*m (76 kgf*cm, 66 in.*lbf)

17. INSPECT IGNITION TIMING (See page EM-1)

CAMSHAFT (for Bank 2)

COMPONENTS

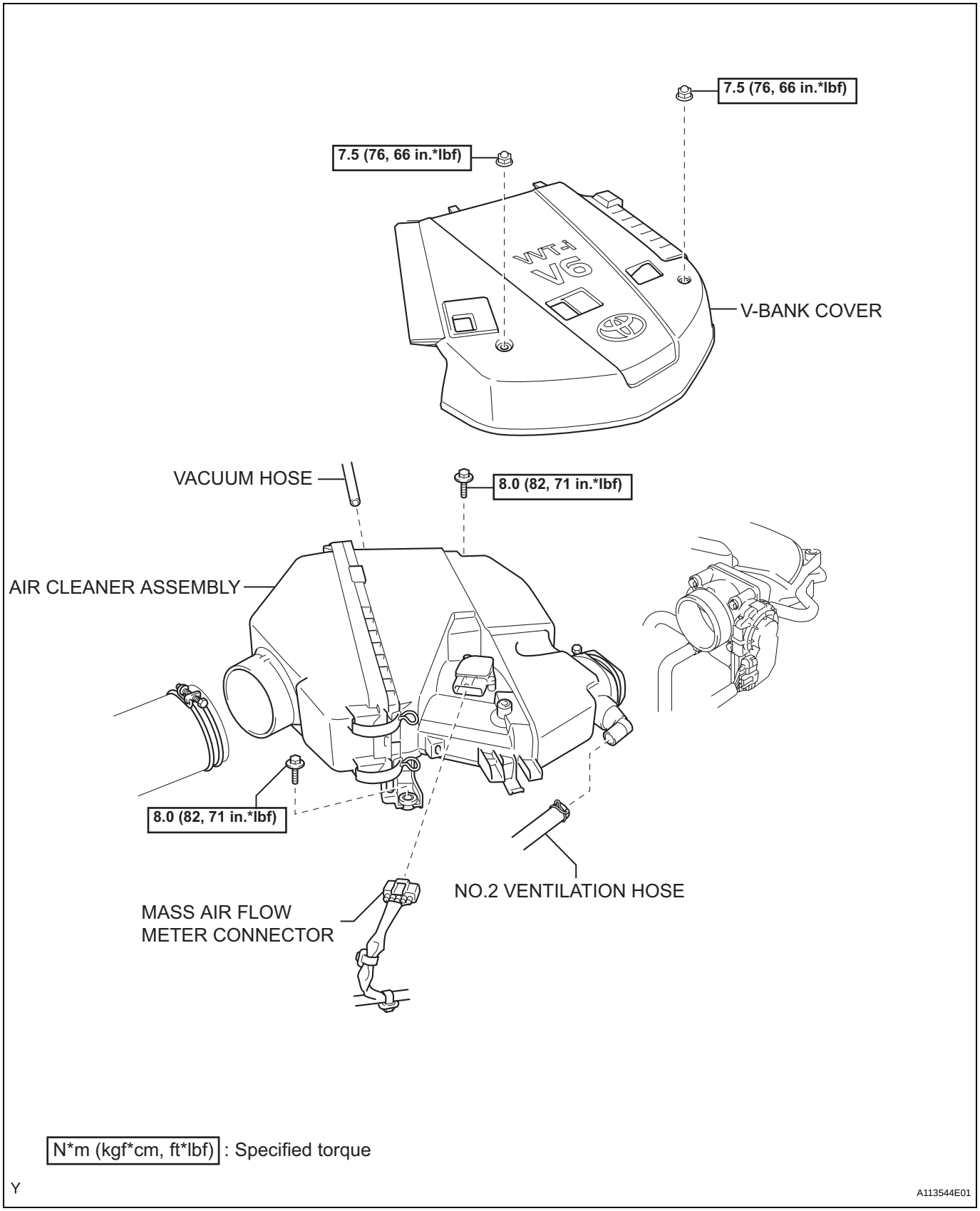

EM

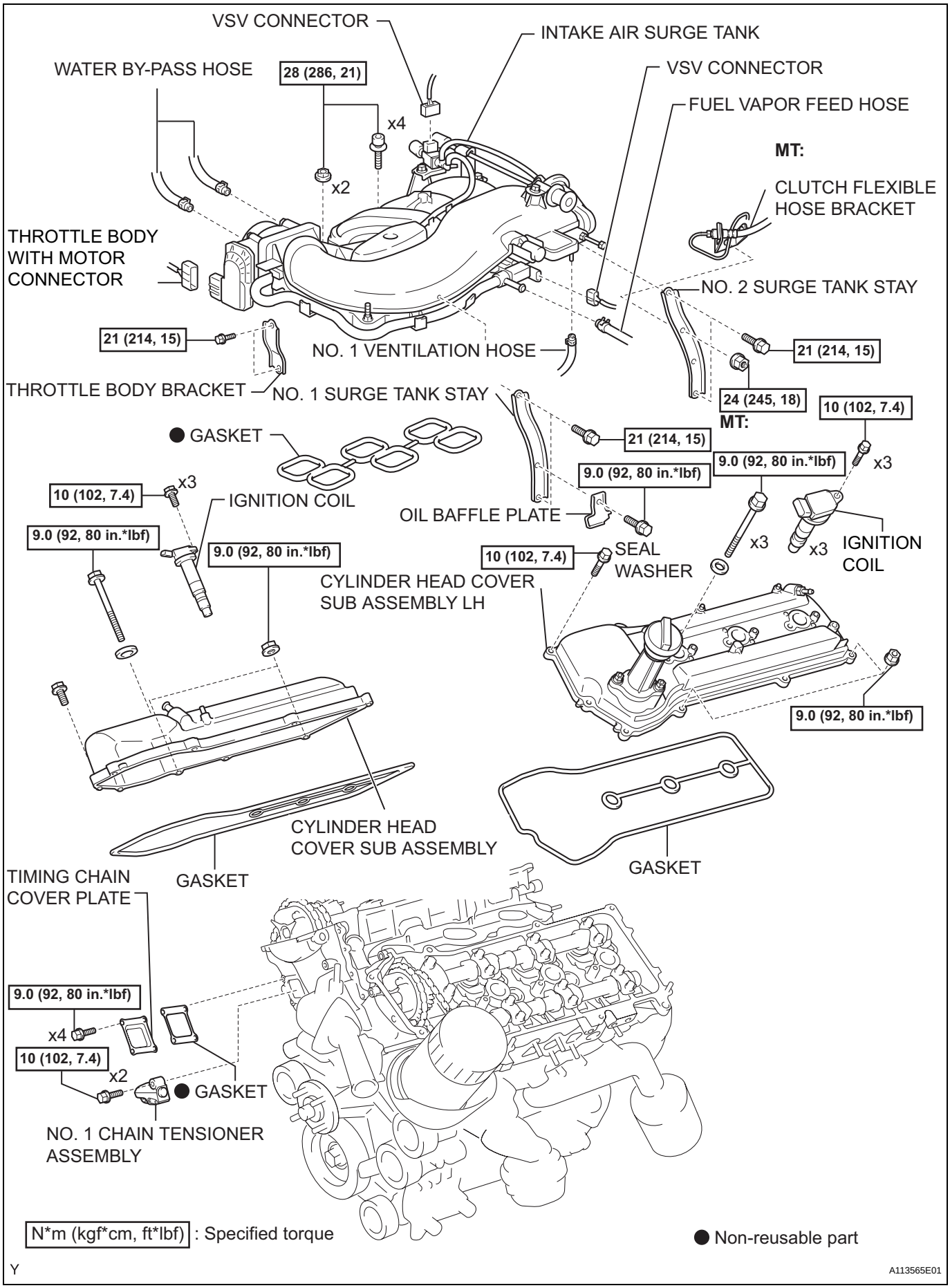
VSV CONNECTOR
INTAKE AIR SURGE TANK
WATER BY-PASS HOSE
28 (286, 21)
VSV CONNECTOR
FUEL VAPOR FEED HOSE
x4
x2
MT:
CLUTCH FLEXIBLE HOSE BRACKET
THROTTLE BODY WITH MOTOR CONNECTOR
NO. 2 SURGE TANK STAY
21 (214, 15)
NO. 1 VENTILATION HOSE
21 (214, 15)
THROTTLE BODY BRACKET
NO. 1 SURGE TANK STAY
24 (245, 18)
MT:
10 (102, 7.4)
● GASKET
21 (214, 15)
9.0 (92, 80 in.*lbf)
9.0 (92, 80 in.*lbf)
x3
10 (102, 7.4)
x3
IGNITION COIL
OIL BAFFLE PLATE
9.0 (92, 80 in.*lbf)
9.0 (92, 80 in.*lbf)
10 (102, 7.4)
SEAL WASHER
x3
x3
IGNITION COIL
CYLINDER HEAD COVER SUB ASSEMBLY LH
9.0 (92, 80 in.*lbf)
CYLINDER HEAD COVER SUB ASSEMBLY
GASKET
GASKET
TIMING CHAIN COVER PLATE
9.0 (92, 80 in.*lbf)
x4
10 (102, 7.4)
x2
● GASKET
NO. 1 CHAIN TENSIONER ASSEMBLY
N*m (kgf*cm, ft*lbf) : Specified torque
● Non-reusable part
Y
A113565E01

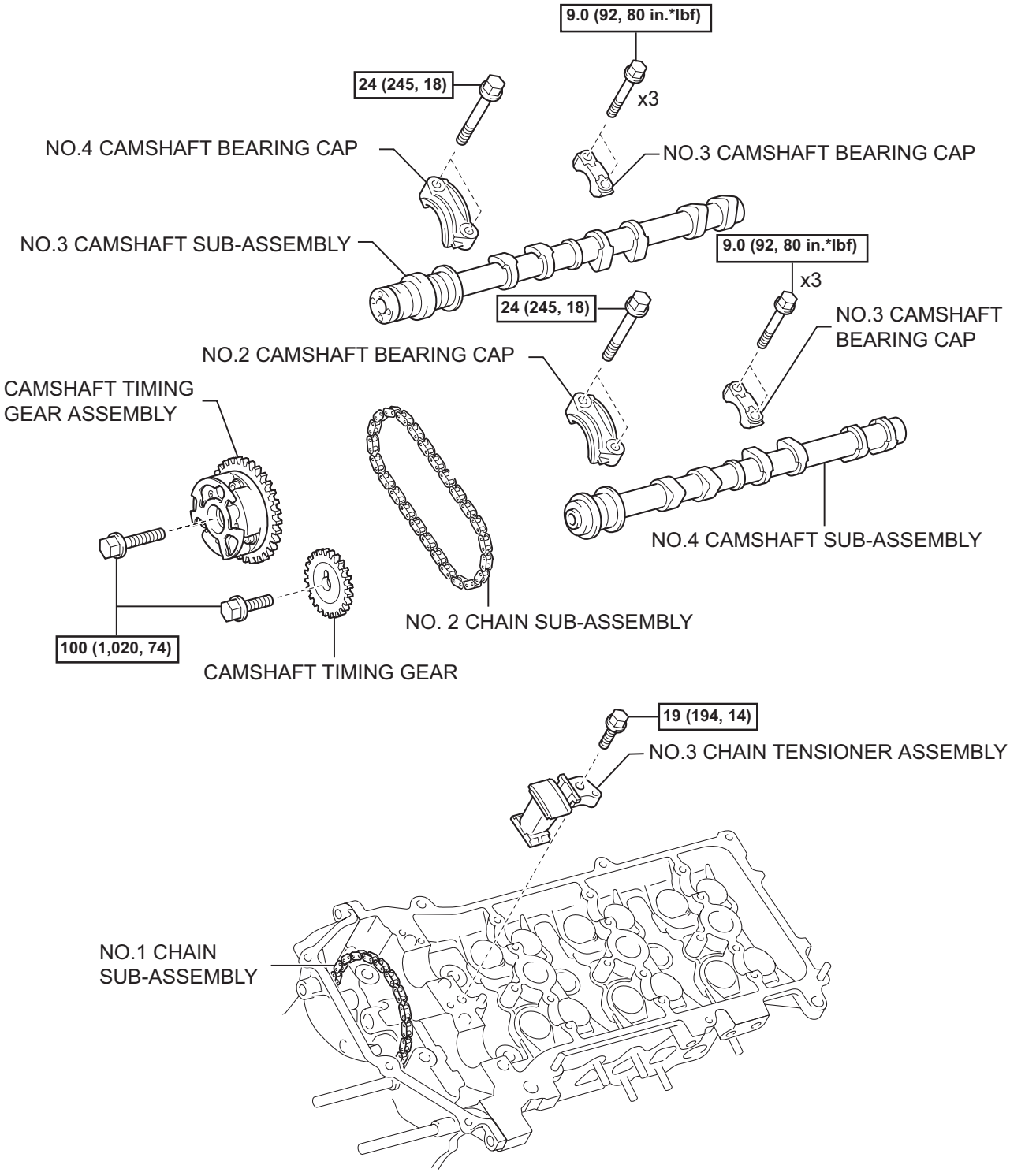

N*m (kgf*cm, ft*lbf) : Specified torque

Y

A113593E01

EM

EM

REMOVAL

1. **DISCONNECT CABLE FROM NEGATIVE BATTERY TERMINAL**
2. **DRAIN ENGINE COOLANT (See page CO-3)**
3. **REMOVE V-BANK COVER (See page ES-414)**
4. **REMOVE AIR CLEANER ASSEMBLY (See page ES-415)**
5. **REMOVE INTAKE AIR SURGE TANK (See page EM-57)**
6. **REMOVE IGNITION COIL ASSEMBLY (See page IG-7)**
7. **REMOVE CYLINDER HEAD COVER SUB-ASSEMBLY (See page EM-59)**
8. **REMOVE CYLINDER HEAD COVER SUB-ASSEMBLY LH (See page EM-59)**
9. **SET NO.1 CYLINDER TO TDC/COMPRESSION (See page EM-59)**
10. **REMOVE NO.1 CHAIN TENSIONER ASSEMBLY (See page EM-26)**
11. **REMOVE NO.4 CAMSHAFT SUB-ASSEMBLY**
    NOTICE:
    Keep the camshaft level while it is being removed. The camshaft thrust clearance is very small and failing to keep it level could crack or damage the cylinder head journal surface, which receives the thrust. This could subsequently lead the camshaft to seize or break. Perform the following steps to avoid such problems.

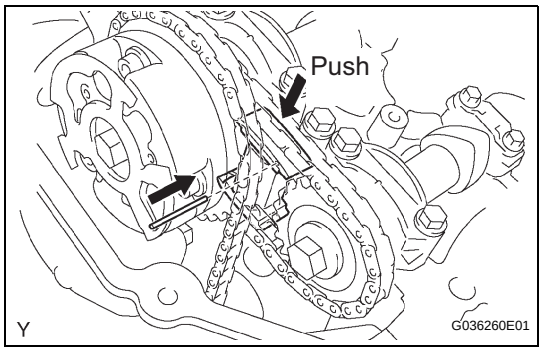

(a) While pushing down the chain tensioner No. 3, insert a pin of ϕ 1.0 mm (0.039 in.) into the hole to fix it.

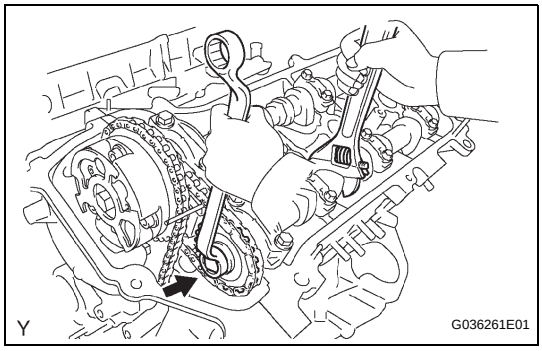

(b) Hold the hexagonal portion of the No. 4 camshaft with a wrench, and remove the camshaft timing gear set bolt.
NOTICE:
Be careful not to damage the cylinder head and valve lifter with the wrench.

(c) Separate the camshaft timing gear from the No. 4 camshaft.

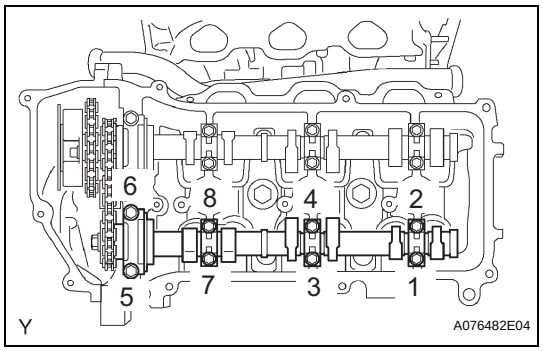

(d) Using several steps, uniformly loosen and remove the 8 bearing cap bolts in the sequence shown in the illustration.

(e) Remove the 4 bearing caps and No. 4 camshaft.

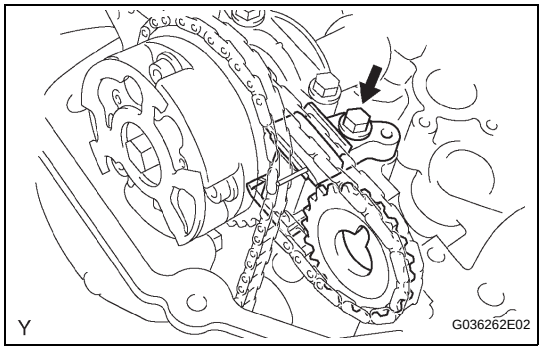

12. REMOVE NO.3 CHAIN TENSIONER ASSEMBLY

(a) Remove the chain tensioner No. 3 bolt, then remove the chain tensioner No. 3 and camshaft timing gear.

13. REMOVE NO.3 CAMSHAFT SUB-ASSEMBLY

NOTICE:

Keep the camshaft level while it is being removed. The camshaft thrust clearance is very small and failing to keep it level could crack or damage the cylinder head journal surface, which receives the thrust. This could subsequently lead the camshaft to seize or break. Perform the following steps to avoid such problems.

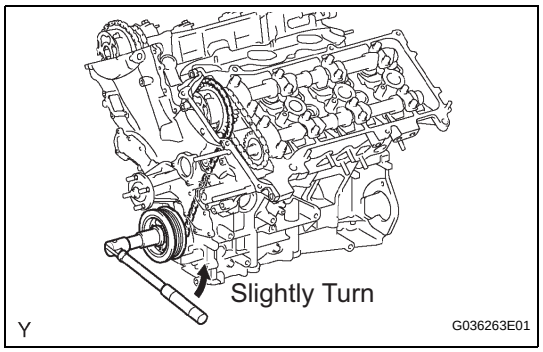

(a) Release the chain tension between the camshaft timing gear (LH bank) and crankshaft timing gear by turning the crankshaft pulley counterclockwise slightly.

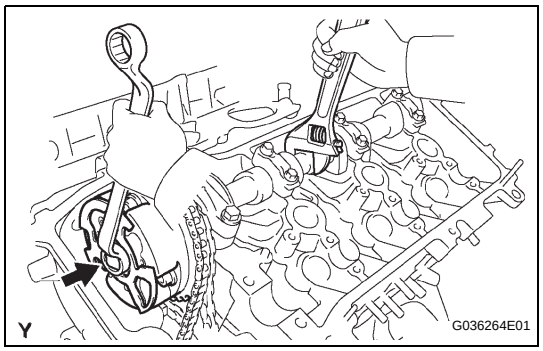

(b) Hold the hexagonal portion of the No. 3 camshaft with a wrench, then loosen the camshaft timing gear set bolt.

NOTICE:

- **Be careful not to damage the cylinder head and valve lifter with the wrench.**
- **Do not disassemble the camshaft timing gear assembly.**

EM

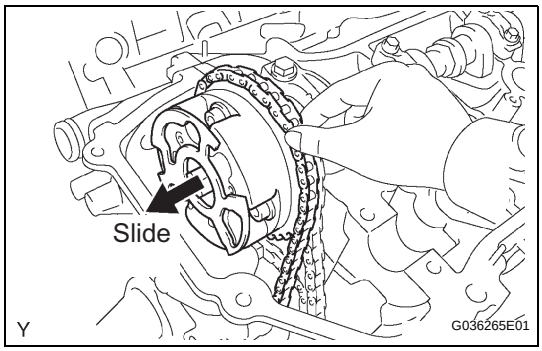

(c) Slide the camshaft timing gear and separate the No. 1 chain from the camshaft timing gear.

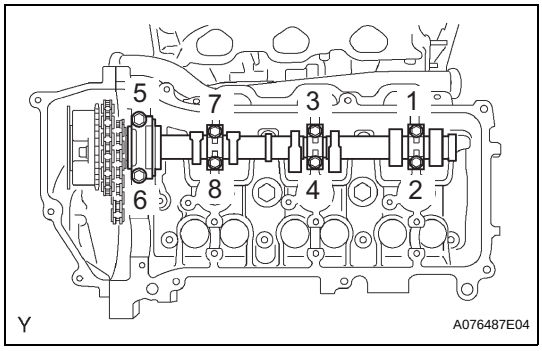

(d) Using several steps, uniformly loosen and remove the 8 bearing cap bolts in the sequence shown in the illustration.

(e) Remove the 4 bearing caps.

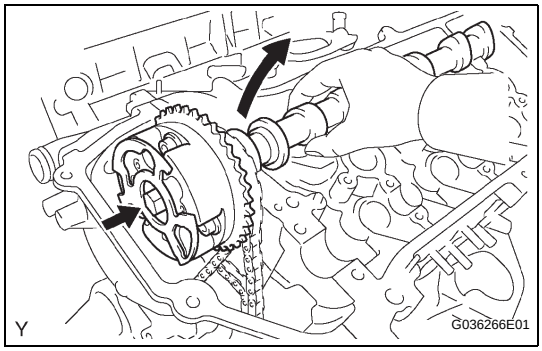

(f) Remove the camshaft timing gear set bolt with the No. 3 camshaft lifted up, then remove the No. 3 camshaft and camshaft timing gear w/ No. 2 chain.

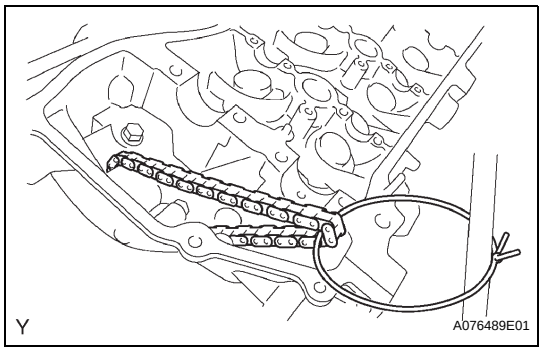

(g) Tie the No. 1 chain with a string as shown in the illustration.

NOTICE:

Be careful not to drop anything inside the timing chain cover.

EM

INSTALLATION

1. INSTALL NO.3 CAMSHAFT SUB-ASSEMBLY

NOTICE:

Keep the camshaft level while it is being removed. The camshaft thrust clearance is very small and failing to keep it level could crack or damage the cylinder head journal surface, which receives the thrust. This could subsequently lead the camshaft to seize or break. Perform the following steps to avoid such problems.

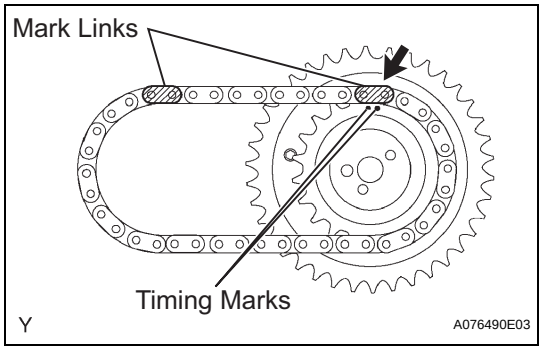

(a) Align the yellow mark link with the timing mark (2 dot marks) of the camshaft timing gear as shown in the illustration.

(b) Apply new engine oil to the thrust portion and journal of the camshafts.

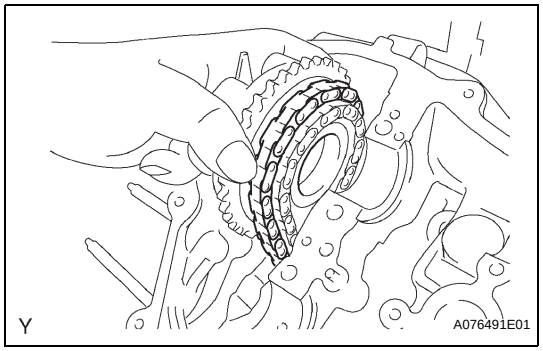

(c) Temporarily put the No. 1 chain on the No. 2 chain of the camshaft timing gear.

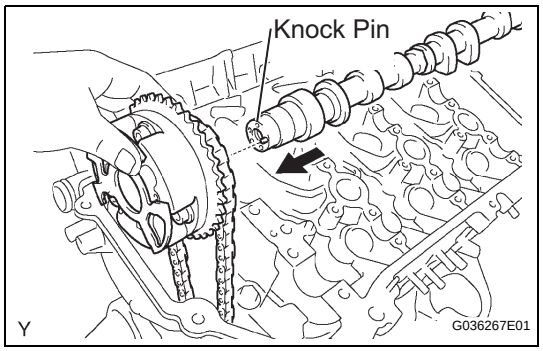

(d) Align the knock pin hole in the camshaft timing gear with the knock pin of the No. 3 camshaft, and insert the No. 3 camshaft into the camshaft timing gear.

(e) Temporarily install the camshaft timing gear set bolt.

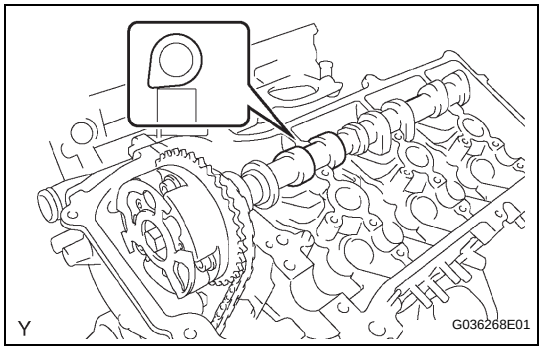

(f) Set the No. 3 camshaft onto the LH cylinder head with the cam lobes of the No. 2 cylinder facing downward as shown in the illustration.

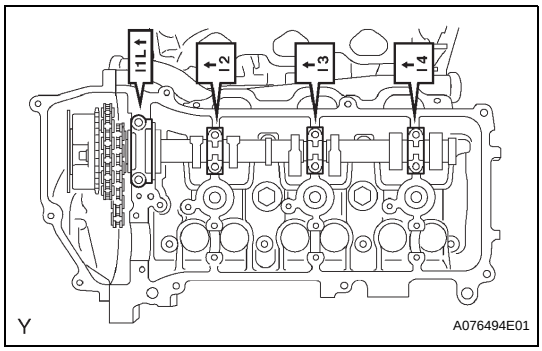

(g) Install the 4 bearing caps in the proper locations as shown.

(h) Apply a light coat of engine oil to the threads and under the heads of the bearing cap bolts.

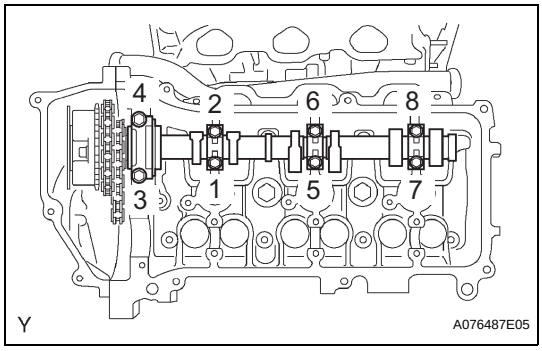

(i) Using several steps, uniformly install and tighten the 8 bearing cap bolts in the sequence shown in the illustration.
Torque: 9.0 N*m (92 kgf*cm, 80 in.*lbf) for 10 mm (0.39 in.) head
24 N*m (245 kgf*cm, 18 ft.*lbf) for 12 mm (0.47 in.) head

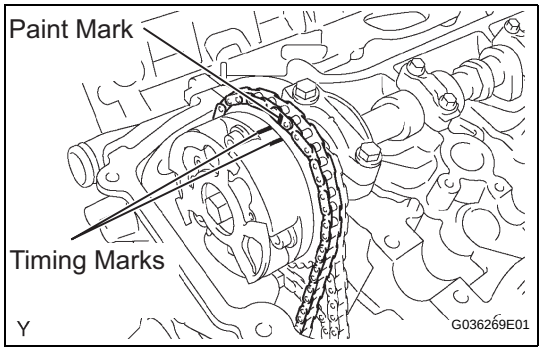

(j) Align the paint mark of the No. 1 chain with the timing marks of the camshaft timing gear.

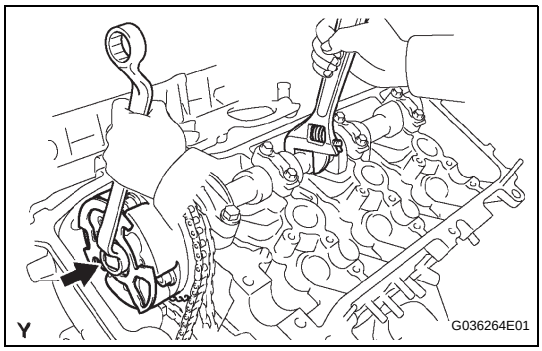

(k) Hold the hexagonal portion of the No. 3 camshaft with a wrench, and tighten the camshaft timing gear set bolt.
Torque: 100 N*m (1,020 kgf*cm, 74 ft.*lbf)

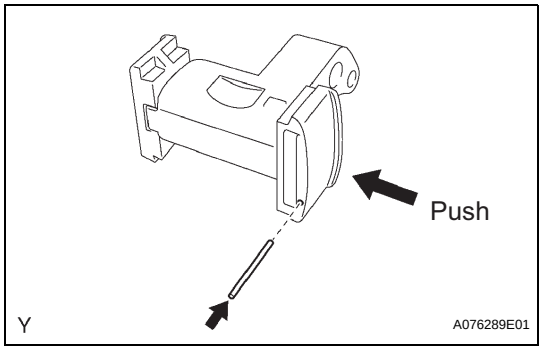

2. INSTALL NO.3 CHAIN TENSIONER ASSEMBLY

(a) While pushing in the tensioner, insert a pin of ϕ 1.0 mm (0.039 in.) into the hole to hold it.

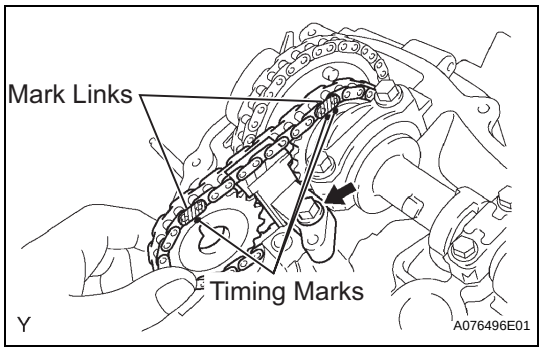

(b) Temporarily install the camshaft timing gear and chain tensioner No. 3 and align the yellow mark links with the timing marks (1 dot mark and 2 dot marks) of the camshaft timing gears.

(c) Tighten the chain tensioner No. 3 bolt.
Torque: 19 N*m (194 kgf*cm, 14 ft.*lbf)

3. INSTALL NO.4 CAMSHAFT SUB-ASSEMBLY

NOTICE:

Keep the camshaft level while it is being removed. The camshaft thrust clearance is very small and failing to keep it level could crack or damage the cylinder head journal surface, which receives the thrust. This could subsequently lead the camshaft to seize or break. Perform the following steps to avoid such problems.

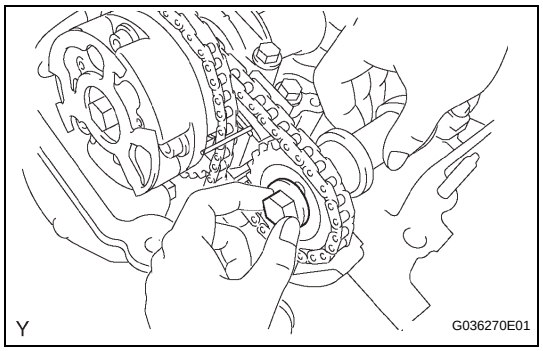

(a) Align the knock pin hole in the camshaft timing gear with the knock pin of he No. 4 camshaft, and insert the No. 4 camshaft into the camshaft timing gear.

(b) Temporarily install the camshaft timing gear set bolt.

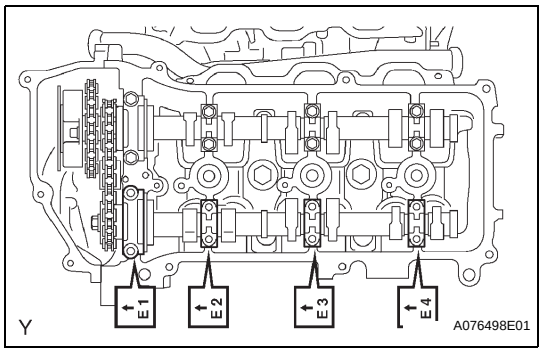

(c) Install the 4 bearing caps in the proper locations as shown.

(d) Apply a light coat of engine oil to the threads of the bearing cap bolts.

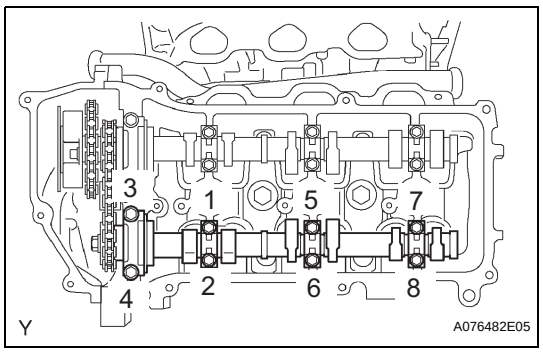

(e) Using several steps, uniformly install and tighten the 8 bearing cap bolts in the sequence shown in the illustration.
Torque: 9.0 N*m (92 kgf*cm, 80 in.*lbf) for 10 mm (0.39 in.) head
24 N*m (245 kgf*cm, 18 ft.*lbf) for 12 mm (0.47 in.) head

EM

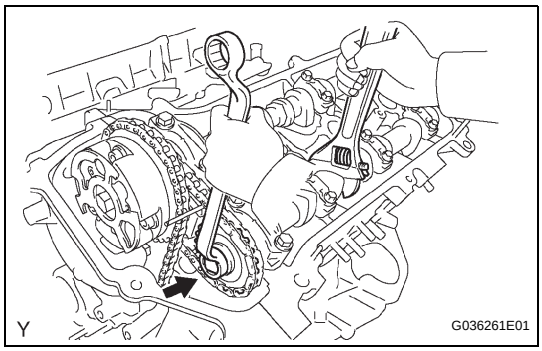

(f) Hold the hexagonal portion of the No. 4 camshaft with a wrench, and tighten the camshaft timing gear set bolt.
Torque: 100 N*m (1,020 kgf*cm, 74 ft.*lbf)

(g) Remove the pin from the chain tensioner No. 3.

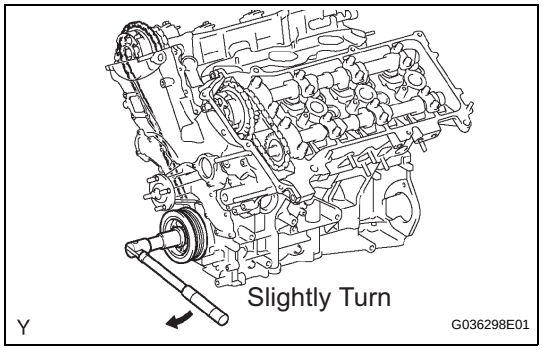

(h) Release the chain tension between the camshaft timing gear (RH bank) and crankshaft timing gear by turning the crankshaft pulley clockwise slightly.

4. INSTALL NO.1 CHAIN TENSIONER ASSEMBLY (See page EM-27)

5. SET NO.1 CYLINDER TO TDC/COMPRESSION (See page EM-25)

6. INSPECT VALVE CLEARANCE (See page EM-8)

7. ADJUST VALVE CLEARANCE (See page EM-9)

8. INSTALL CYLINDER HEAD COVER SUB-ASSEMBLY LH (See page EM-68)

9. INSTALL CYLINDER HEAD COVER SUB-ASSEMBLY (See page EM-68)

10. INSTALL IGNITION COIL ASSEMBLY
Torque: 10 N*m (102 kgf*cm, 7.4 ft.*lbf)

11. INSTALL INTAKE AIR SURGE TANK (See page EM-69)

12. INSTALL AIR CLEANER ASSEMBLY (See page ES-416)

13. CONNECT CABLE TO NEGATIVE BATTERY TERMINAL
Torque: 3.9 N*m (40 kgf*cm, 35 in.*lbf)

14. ADD ENGINE COOLANT (See page CO-3)

15. CHECK FOR ENGINE COOLANT LEAKAGE (See page CO-4)

16. INSTALL V-BANK COVER

(a) Install the V-bank cover with the 2 nuts.
Torque: 7.5 N*m (76 kgf*cm, 66 in.*lbf)

17. INSPECT IGNITION TIMING (See page EM-1)

CYLINDER HEAD (for Bank 1 2WD)

COMPONENTS

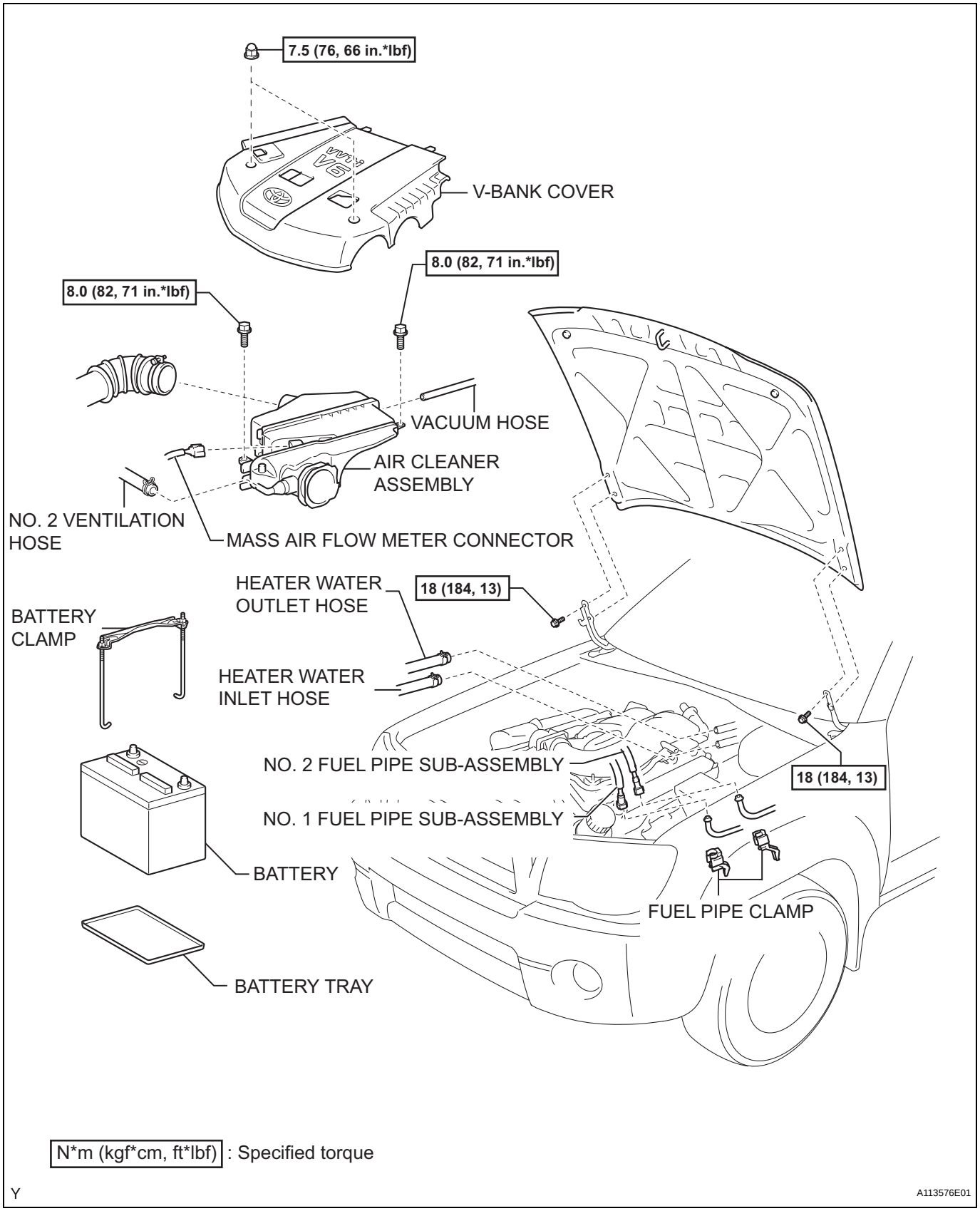

EM

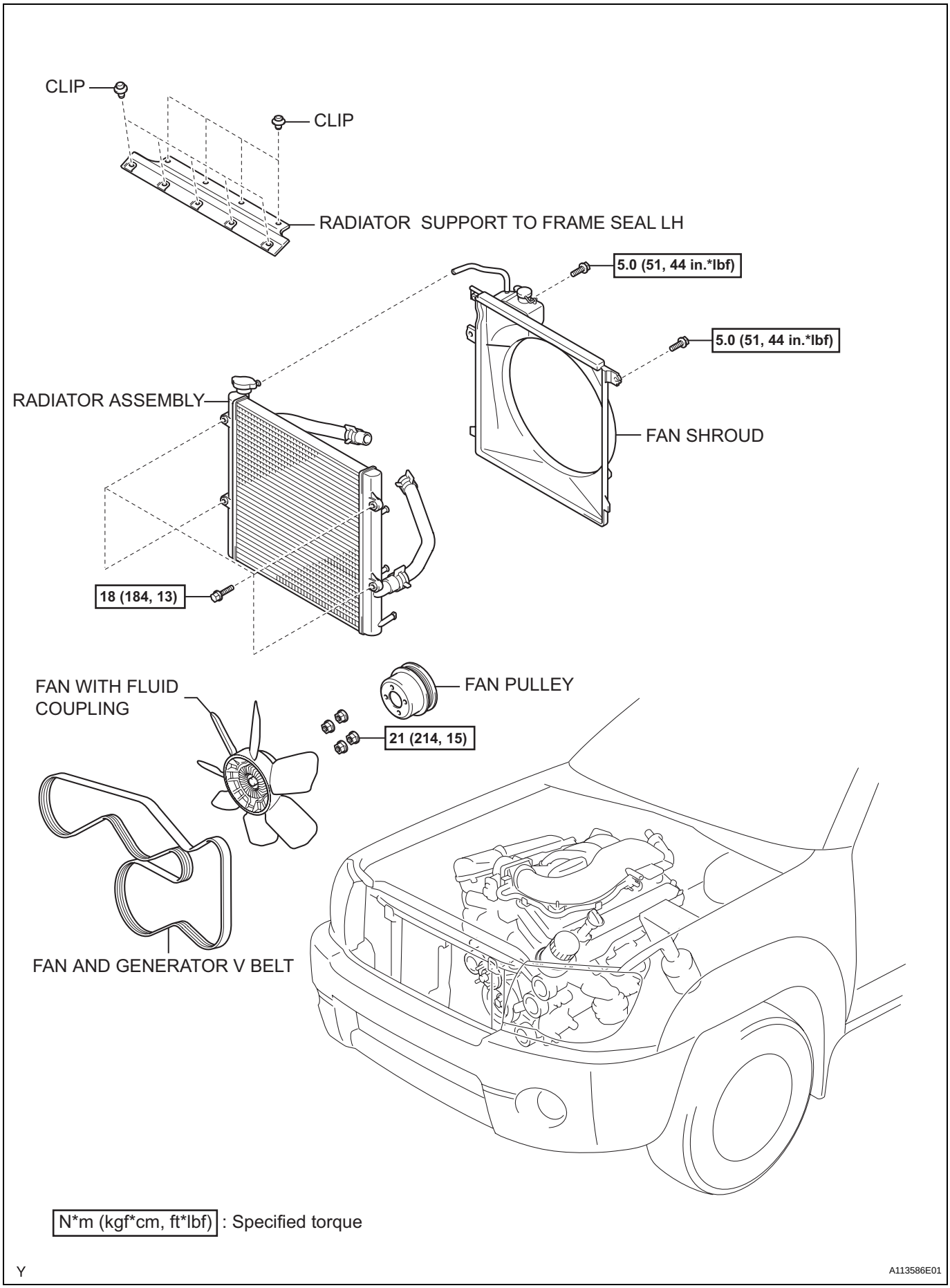
CLIP
CLIP
RADIATOR SUPPORT TO FRAME SEAL LH
5.0 (51, 44 in.*lbf)
5.0 (51, 44 in.*lbf)
RADIATOR ASSEMBLY
FAN SHROUD
18 (184, 13)
FAN WITH FLUID COUPLING
FAN PULLEY
21 (214, 15)
FAN AND GENERATOR V BELT
N*m (kgf*cm, ft*lbf) : Specified torque
Y
A113586E01

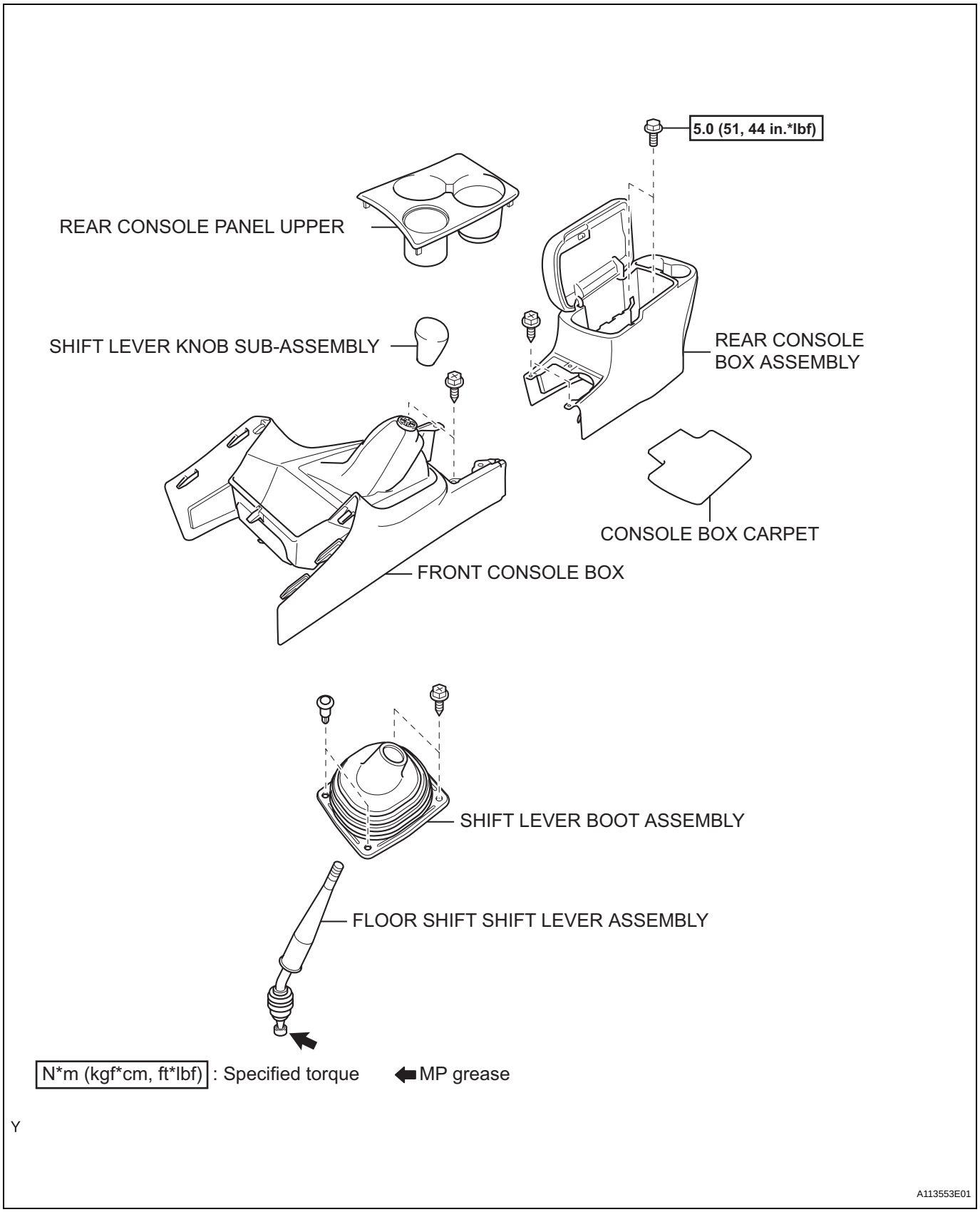
5.0 (51, 44 in.*lbf)
REAR CONSOLE PANEL UPPER
SHIFT LEVER KNOB SUB-ASSEMBLY
REAR CONSOLE BOX ASSEMBLY
CONSOLE BOX CARPET
FRONT CONSOLE BOX
SHIFT LEVER BOOT ASSEMBLY
FLOOR SHIFT SHIFT LEVER ASSEMBLY
N*m (kgf*cm, ft*lbf) : Specified torque
MP grease
Y
A113553E01

EM

2WD AND PRE RUNNER, MANUAL TRANSMISSION:

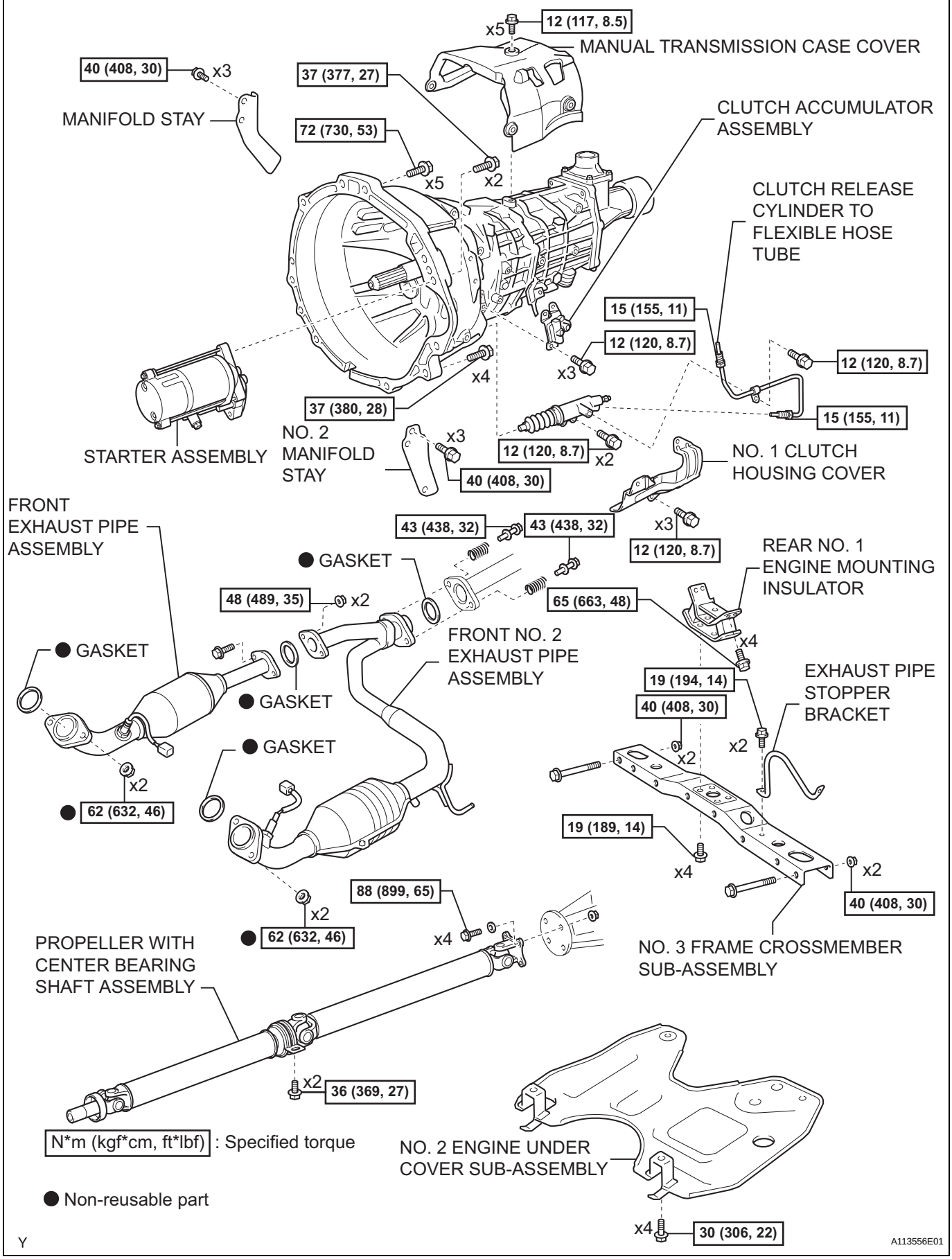

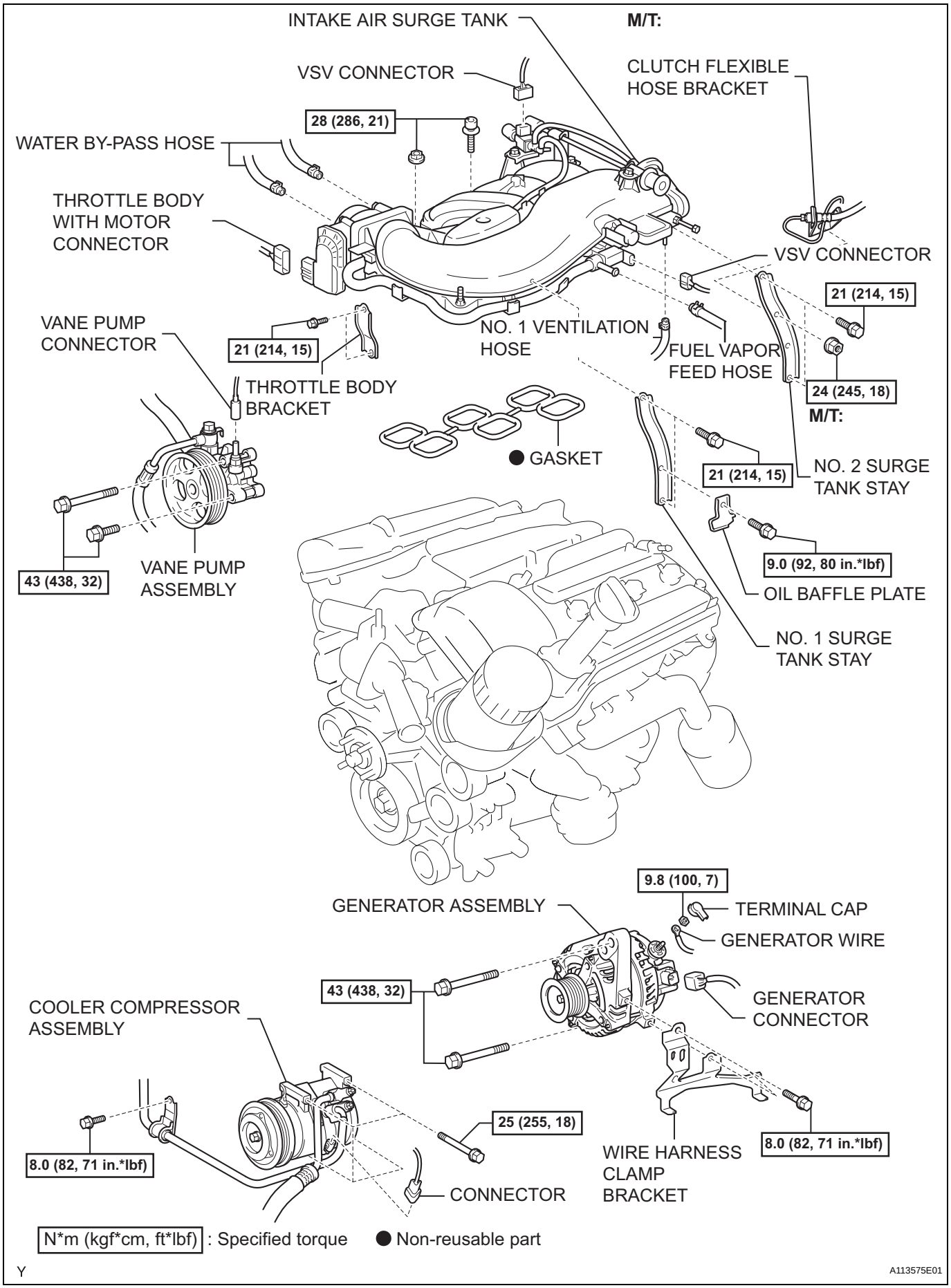
INTAKE AIR SURGE TANK
M/T:
VSV CONNECTOR
CLUTCH FLEXIBLE HOSE BRACKET
28 (286, 21)
WATER BY-PASS HOSE
THROTTLE BODY WITH MOTOR CONNECTOR
VSV CONNECTOR
21 (214, 15)
VANE PUMP CONNECTOR
21 (214, 15)
NO. 1 VENTILATION HOSE
FUEL VAPOR FEED HOSE
THROTTLE BODY BRACKET
24 (245, 18)
M/T:
GASKET
21 (214, 15)
NO. 2 SURGE TANK STAY
43 (438, 32)
VANE PUMP ASSEMBLY
9.0 (92, 80 in.*lbf)
OIL BAFFLE PLATE
NO. 1 SURGE TANK STAY
9.8 (100, 7)
GENERATOR ASSEMBLY
TERMINAL CAP
GENERATOR WIRE
43 (438, 32)
GENERATOR CONNECTOR
COOLER COMPRESSOR ASSEMBLY
25 (255, 18)
8.0 (82, 71 in.*lbf)
8.0 (82, 71 in.*lbf)
WIRE HARNESS CLAMP BRACKET
CONNECTOR
N*m (kgf*cm, ft*lbf) : Specified torque
Non-reusable part
Y
A113575E01

EM

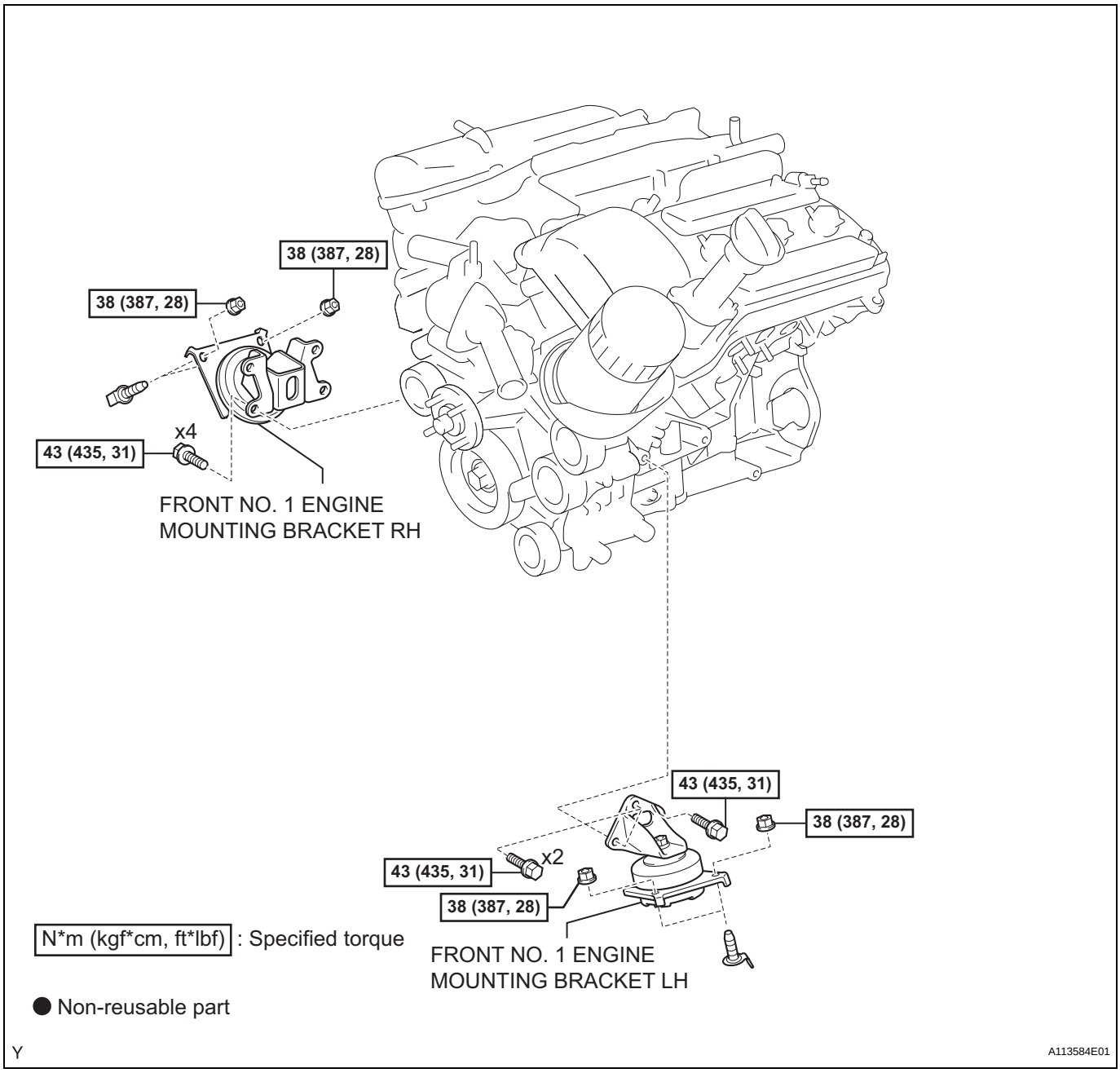
38 (387, 28)
38 (387, 28)
x4
43 (435, 31)
FRONT NO. 1 ENGINE
MOUNTING BRACKET RH
43 (435, 31)
38 (387, 28)
x2
43 (435, 31)
38 (387, 28)
FRONT NO. 1 ENGINE
MOUNTING BRACKET LH
N*m (kgf*cm, ft*lbf) : Specified torque
● Non-reusable part
Y
A113584E01

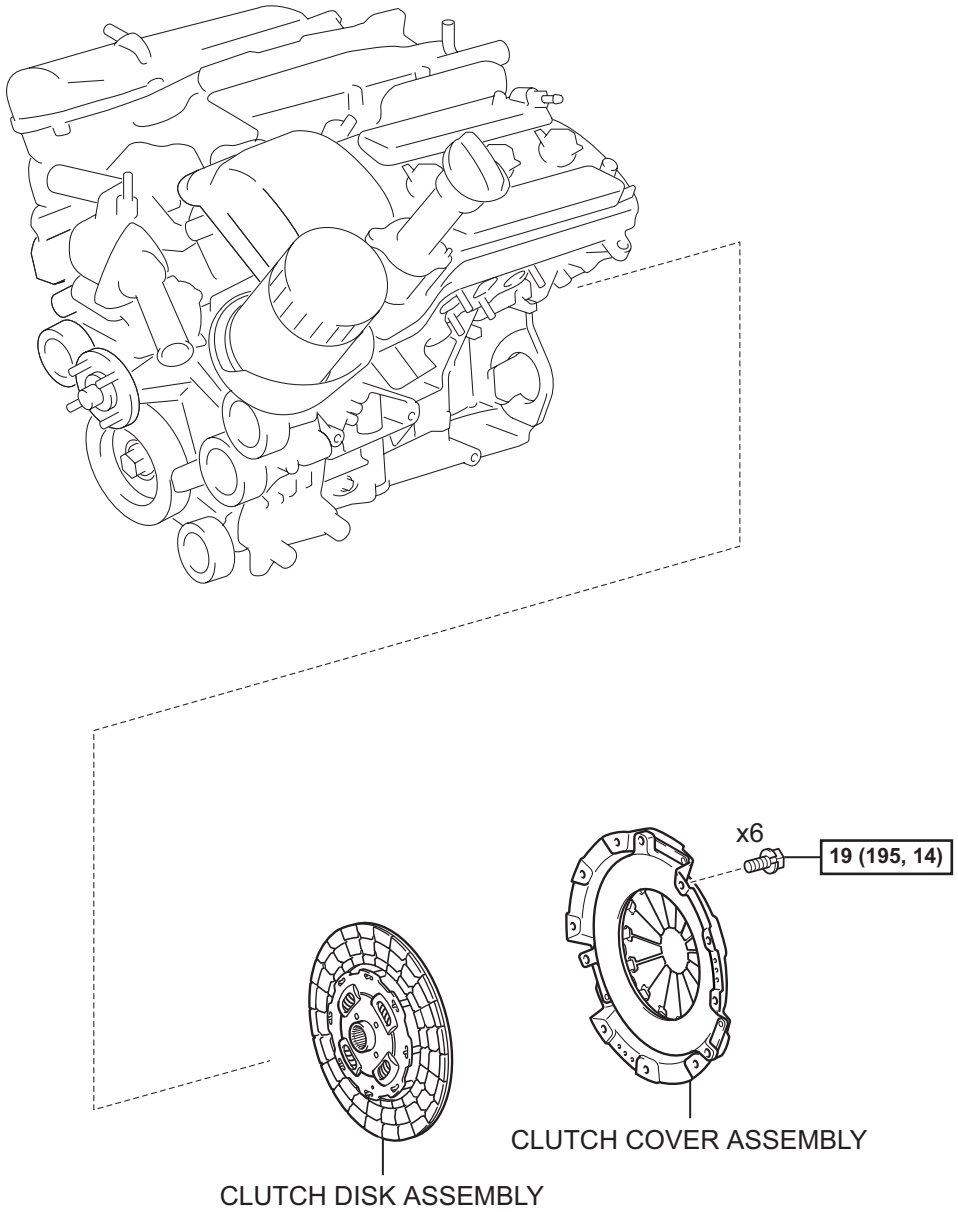

N*m (kgf*cm, ft*lbf) : Specified torque

Y

A113585E01

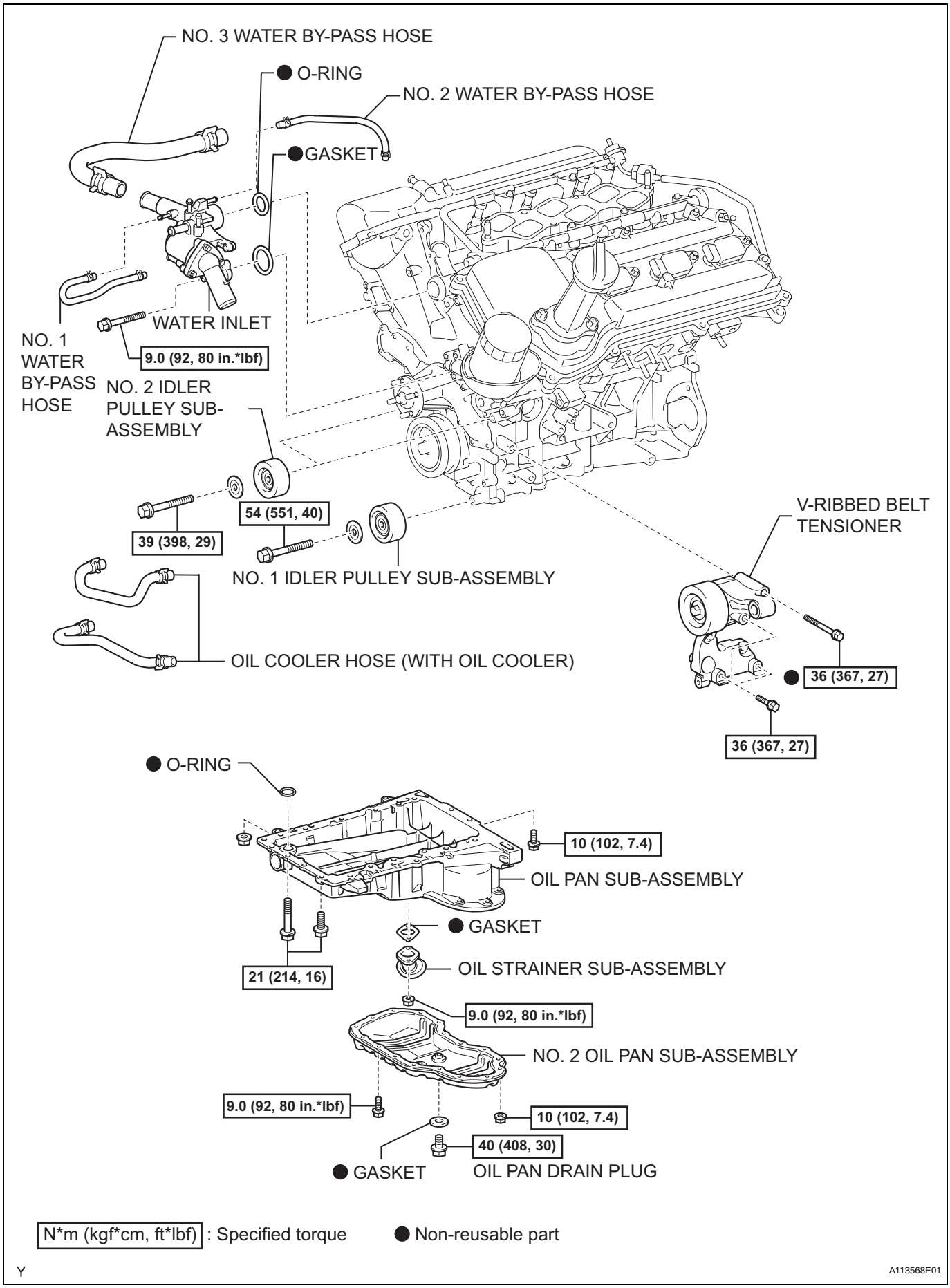
NO. 3 WATER BY-PASS HOSE
● O-RING
NO. 2 WATER BY-PASS HOSE
●GASKET
WATER INLET
NO. 1 WATER BY-PASS HOSE
9.0 (92, 80 in.*lbf)
NO. 2 IDLER PULLEY SUB-ASSEMBLY
54 (551, 40)
39 (398, 29)
NO. 1 IDLER PULLEY SUB-ASSEMBLY
V-RIBBED BELT TENSIONER
OIL COOLER HOSE (WITH OIL COOLER)
● 36 (367, 27)
36 (367, 27)
● O-RING
10 (102, 7.4)
OIL PAN SUB-ASSEMBLY
● GASKET
OIL STRAINER SUB-ASSEMBLY
21 (214, 16)
9.0 (92, 80 in.*lbf)
NO. 2 OIL PAN SUB-ASSEMBLY
9.0 (92, 80 in.*lbf)
10 (102, 7.4)
40 (408, 30)
● GASKET
OIL PAN DRAIN PLUG
N*m (kgf*cm, ft*lbf) : Specified torque
● Non-reusable part
Y
A113568E01

EM

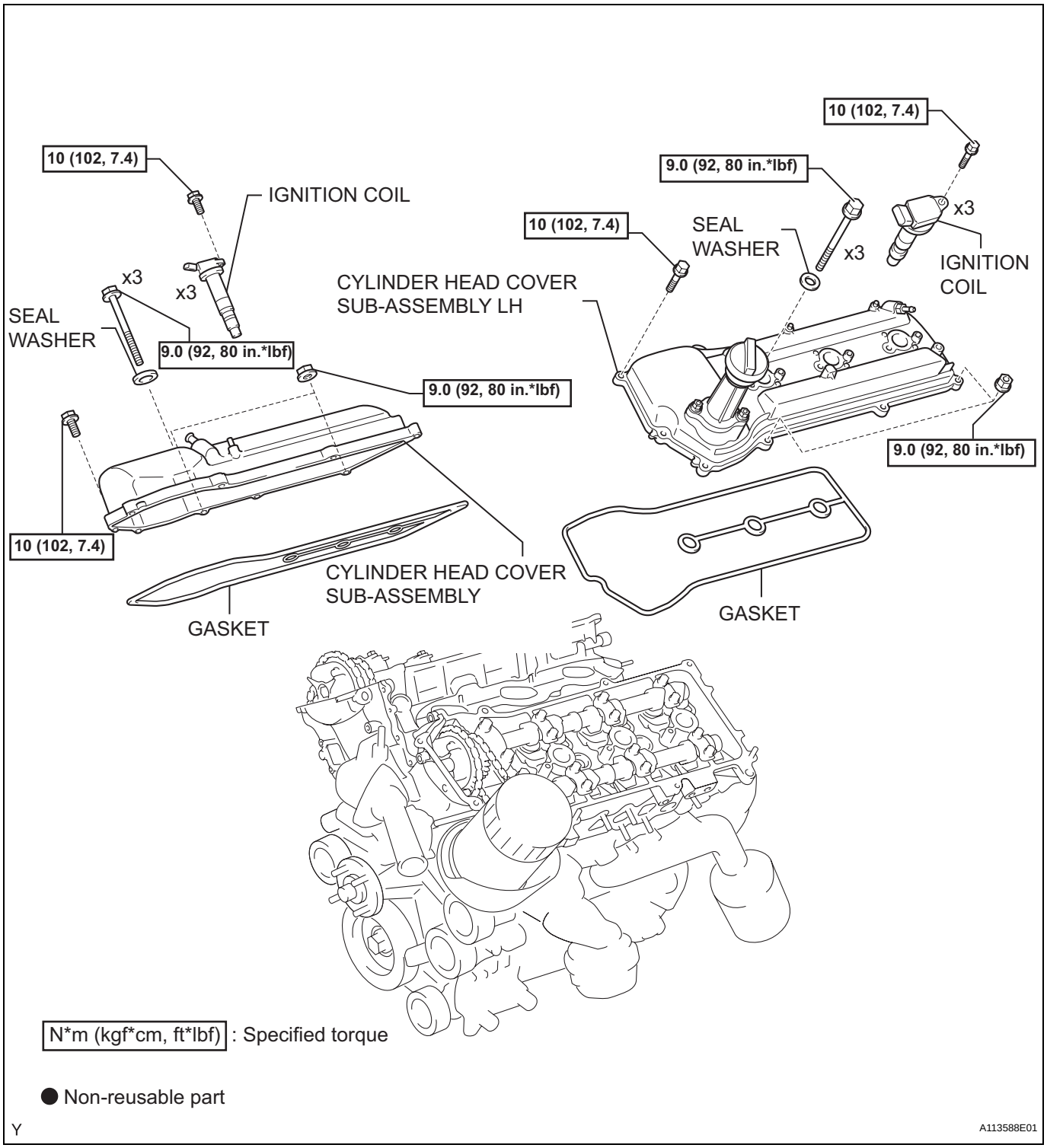
10 (102, 7.4)
IGNITION COIL
x3
x3
SEAL WASHER
9.0 (92, 80 in.*lbf)
9.0 (92, 80 in.*lbf)
10 (102, 7.4)
CYLINDER HEAD COVER SUB-ASSEMBLY
GASKET
10 (102, 7.4)
9.0 (92, 80 in.*lbf)
SEAL WASHER
x3
x3
IGNITION COIL
CYLINDER HEAD COVER SUB-ASSEMBLY LH
9.0 (92, 80 in.*lbf)
GASKET
N*m (kgf*cm, ft*lbf) : Specified torque
● Non-reusable part
Y
A113588E01

EM

EM

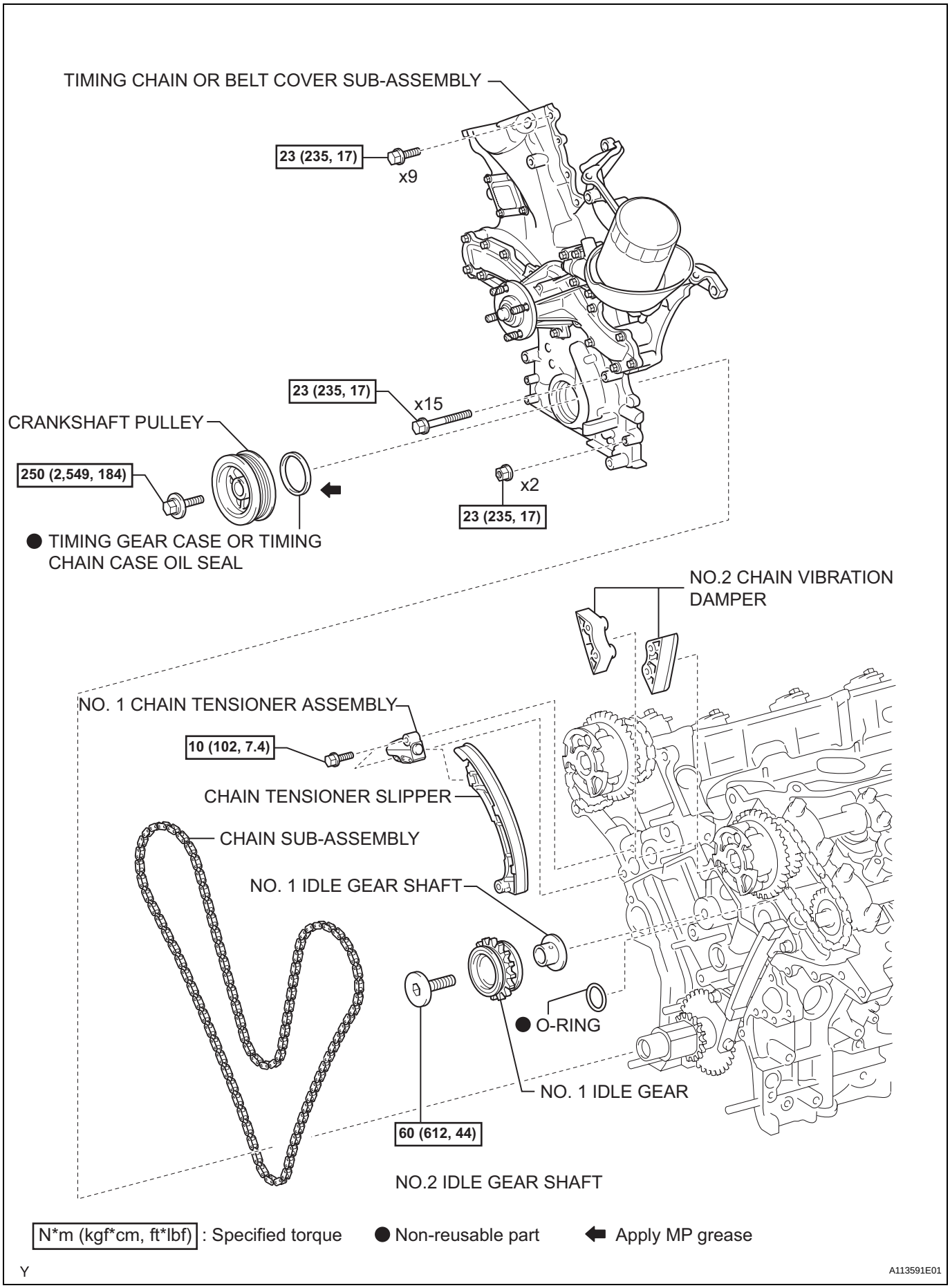
TIMING CHAIN OR BELT COVER SUB-ASSEMBLY
23 (235, 17)
x9
23 (235, 17)
x15
CRANKSHAFT PULLEY
250 (2,549, 184)
x2
23 (235, 17)
● TIMING GEAR CASE OR TIMING CHAIN CASE OIL SEAL
NO.2 CHAIN VIBRATION DAMPER
NO. 1 CHAIN TENSIONER ASSEMBLY
10 (102, 7.4)
CHAIN TENSIONER SLIPPER
CHAIN SUB-ASSEMBLY
NO. 1 IDLE GEAR SHAFT
● O-RING
NO. 1 IDLE GEAR
60 (612, 44)
NO.2 IDLE GEAR SHAFT
N*m (kgf*cm, ft*lbf) : Specified torque
● Non-reusable part
Apply MP grease
Y
A113591E01

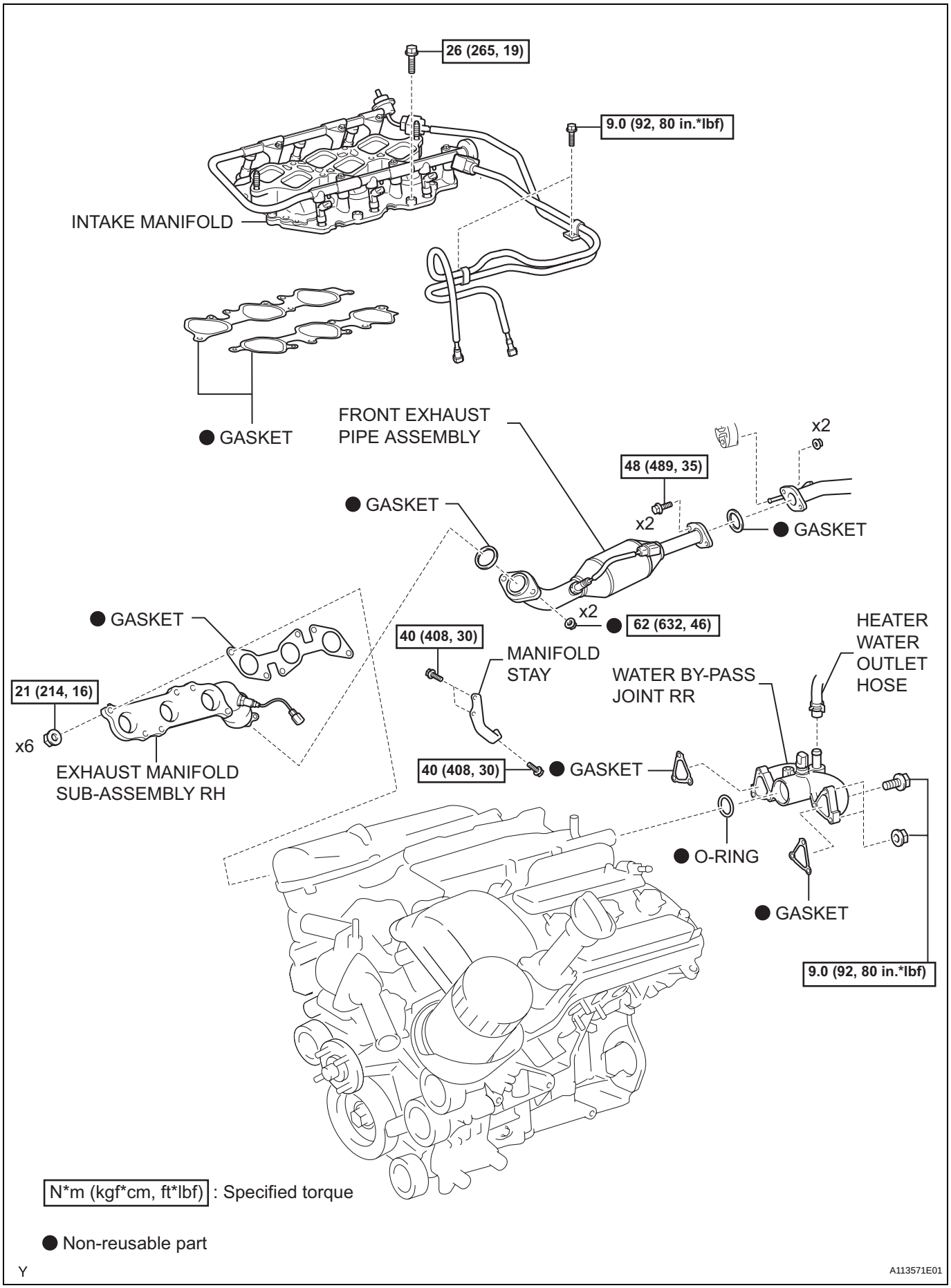
26 (265, 19)
9.0 (92, 80 in.*lbf)
INTAKE MANIFOLD
GASKET
FRONT EXHAUST PIPE ASSEMBLY
x2
48 (489, 35)
GASKET
x2
GASKET
x2
62 (632, 46)
GASKET
40 (408, 30)
MANIFOLD STAY
HEATER WATER OUTLET HOSE
WATER BY-PASS JOINT RR
21 (214, 16)
x6
EXHAUST MANIFOLD SUB-ASSEMBLY RH
40 (408, 30)
GASKET
O-RING
GASKET
9.0 (92, 80 in.*lbf)
N*m (kgf*cm, ft*lbf) : Specified torque
Non-reusable part
Y
A113571E01

EM

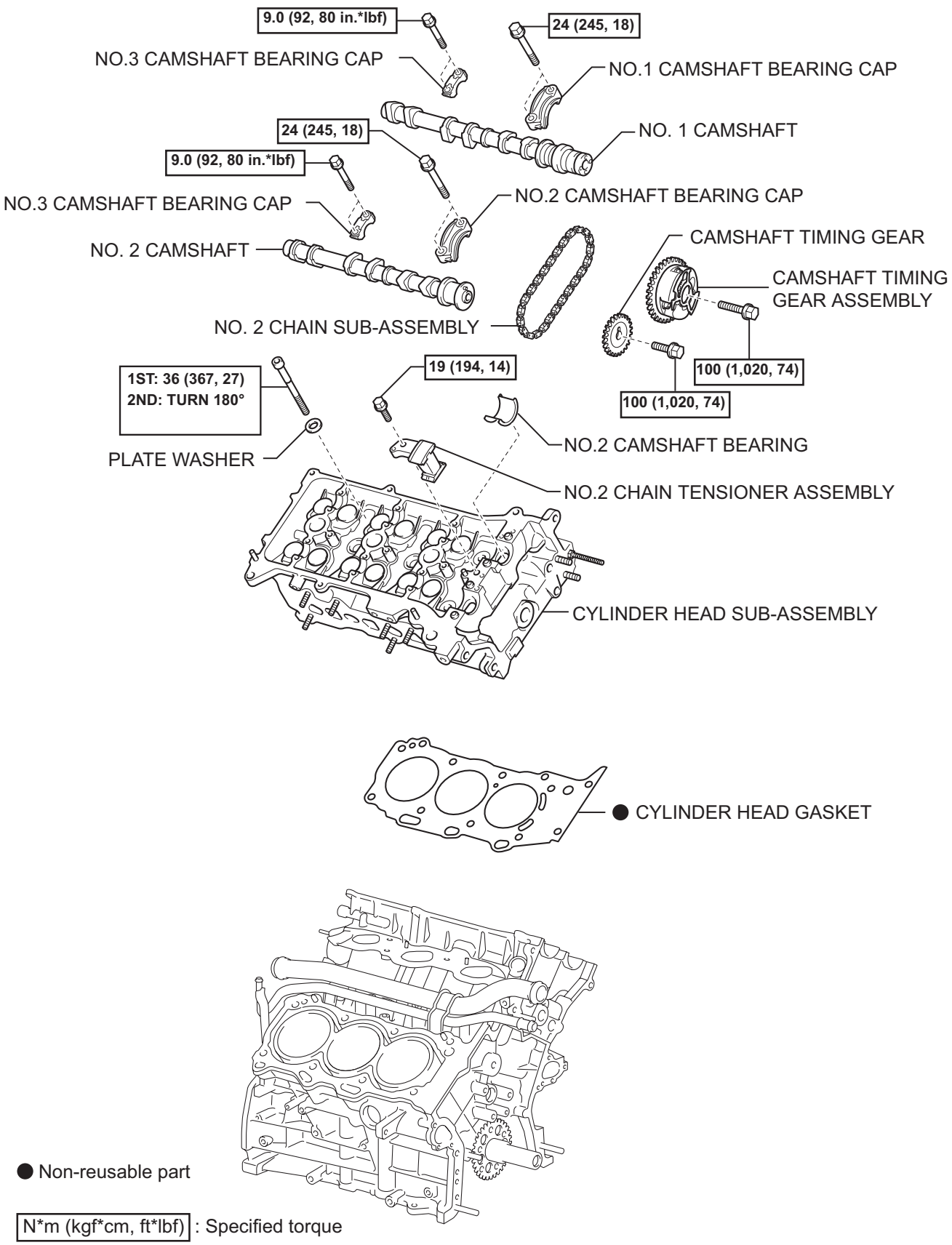
9.0 (92, 80 in.*lbf)
24 (245, 18)
NO.3 CAMSHAFT BEARING CAP
NO.1 CAMSHAFT BEARING CAP
24 (245, 18)
NO. 1 CAMSHAFT
9.0 (92, 80 in.*lbf)
NO.3 CAMSHAFT BEARING CAP
NO.2 CAMSHAFT BEARING CAP
NO. 2 CAMSHAFT
CAMSHAFT TIMING GEAR
CAMSHAFT TIMING GEAR ASSEMBLY
NO. 2 CHAIN SUB-ASSEMBLY
1ST: 36 (367, 27)
2ND: TURN 180°
19 (194, 14)
100 (1,020, 74)
100 (1,020, 74)
PLATE WASHER
NO.2 CAMSHAFT BEARING
NO.2 CHAIN TENSIONER ASSEMBLY
CYLINDER HEAD SUB-ASSEMBLY
● CYLINDER HEAD GASKET
● Non-reusable part
N*m (kgf*cm, ft*lbf) : Specified torque
Y
A113594E01

EM

REMOVAL

1. **DISCHARGE FUEL SYSTEM PRESSURE**
   (See page FU-1)
2. **REMOVE BATTERY**
3. **DRAIN ENGINE COOLANT (See page CO-3)**
4. **DRAIN ENGINE OIL (See page LU-4)**
5. **REMOVE ENGINE ASSEMBLY**
   (See page EM-186)
6. **REMOVE TIMING CHAIN OR BELT COVER SUB-ASSEMBLY**
   (See page LU-34)
7. **REMOVE CHAIN SUB-ASSEMBLY**
   (See page EM-44)
8. **REMOVE NO.1 COOL AIR INLET**
   (a) Remove the 2 bolts, then remove the cool air inlet.
9. **REMOVE FRONT EXHAUST PIPE ASSEMBLY**
   (See page EX-3)
10. **REMOVE MANIFOLD STAY**
    (a) Remove the 3 bolts, then remove the exhaust manifold stay.
11. **REMOVE EXHAUST MANIFOLD SUB-ASSEMBLY RH**
    (a) Disconnect the air fuel ratio sensor connector.
    (b) Remove the 6 nuts, then remove the exhaust manifold and gasket.
12. **DISCONNECT NO.1 FUEL PIPE SUB-ASSEMBLY (See page FU-13)**
13. **DISCONNECT NO.2 FUEL PIPE SUB-ASSEMBLY (See page FU-13)**
14. **REMOVE INTAKE MANIFOLD**
    (a) Disconnect the 6 fuel injector connectors.
    (b) Remove the 10 bolts, then remove the intake manifold and gasket.
15. **REMOVE WATER BY-PASS JOINT RR**
    (a) Disconnect the engine coolant temperature sensor connector.
    (b) Disconnect the heater hose.

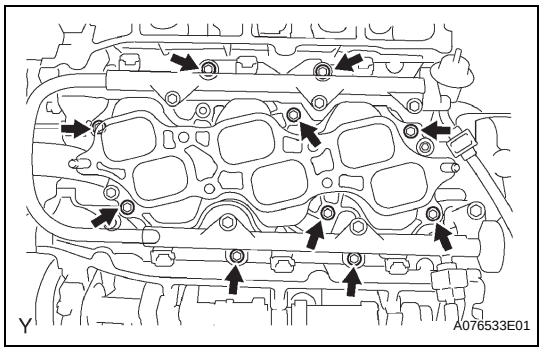

EM

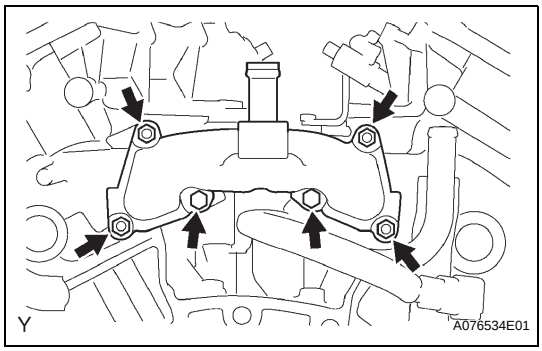

(c) Remove the 2 bolts and 4 nuts, then remove the water by-pass joint RR and 2 gaskets.
(d) Remove the O-ring from the water outlet hose.

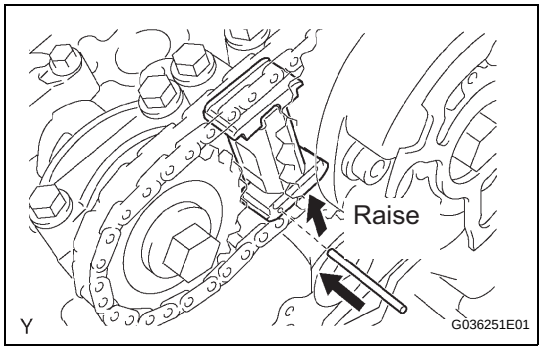

16. REMOVE CAMSHAFT TIMING GEARS AND NO.2 CHAIN (for Bank 1)

(a) While raising the chain tensioner No. 2, insert a pin of ϕ 1.0 mm (0.039 in.) into the hole to fix it.

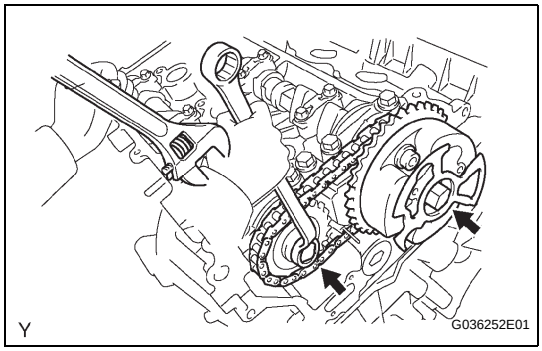

(b) Hold the hexagonal portion of the camshaft with a wrench.
NOTICE:
Be careful not to damage the cylinder head and valve lifter with the wrench.
(c) Remove the 2 bolts, then remove the camshaft timing gear, camshaft timing gear assembly and timing chain No. 2.
NOTICE:
Do not disassemble the camshaft timing gear assembly.

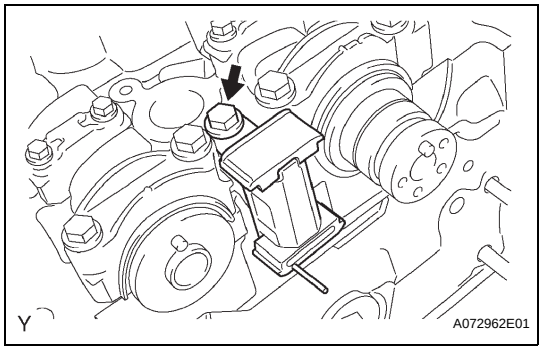

17. REMOVE NO.2 CHAIN TENSIONER ASSEMBLY

(a) Remove the bolt, then remove the chain tensioner No. 2.

18. REMOVE CAMSHAFTS
NOTICE:
Keep the camshaft level while it is being removed. The camshaft thrust clearance is very small and failing to keep it level could crack or damage the cylinder head journal surface, which receives the thrust. This could subsequently lead the camshaft to seize or break. Perform the following steps to avoid such problems.

EM

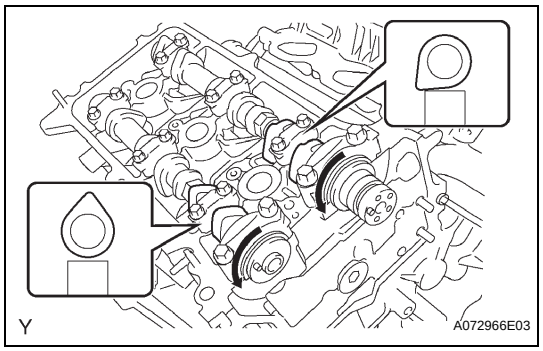

(a) Rotate the camshafts counterclockwise using a wrench so that the cam lobes of No. 1 cylinder face in the directions shown in the illustration.

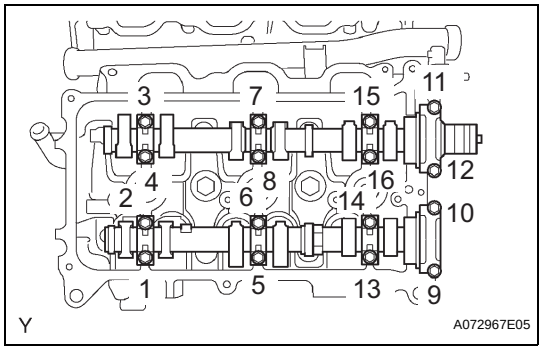

(b) Using several steps, loosen and remove the 16 bearing cap bolts uniformly in the sequence shown in the illustration.

(c) Remove the 8 bearing caps and 2 camshafts.

19. REMOVE NO.2 CAMSHAFT BEARING

20. REMOVE CYLINDER HEAD SUB-ASSEMBLY

(a) Remove the 2 bolts and separate the 2 ground cables.

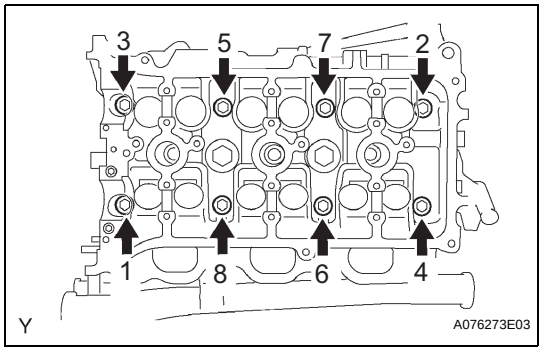

(b) Using several steps, uniformly loosen the 8 cylinder head bolts on the cylinder head with a 10 mm bi-hexagon wrench in the sequence shown in the illustration. Remove the 8 cylinder head bolts and 8 plate washers.

NOTICE:

- **Be careful not to drop the plate washers into the cylinder head.**
- **Cylinder head warpage or cracking could result from removing the bolts in the wrong order.**

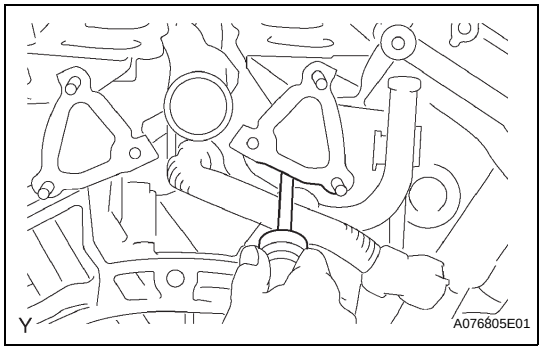

(c) Lift the cylinder head from the dowels on the cylinder block, and place the cylinder head on wooden blocks on a bench.

NOTICE:

Be careful not to drop the plate washers into the cylinder head.

If the cylinder head is difficult to remove, pry between the cylinder head and cylinder block with a screwdriver.

21. REMOVE CYLINDER HEAD GASKET

INSPECTION

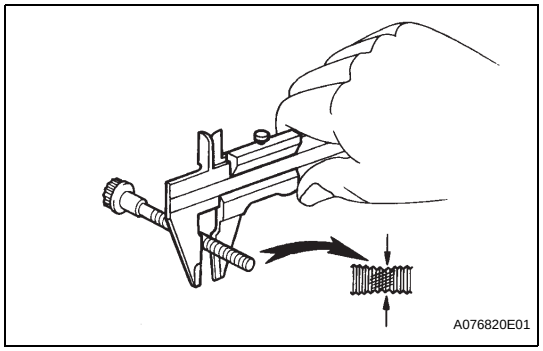

1. INSPECT CYLINDER HEAD SET BOLT

(a) Using vernier calipers, measure the outside diameter of the bolt thread.

Standard outside diameter:
10.85 to 11.00 mm (0.4272 to 0.4331 in.)

Minimum outside diameter:
10.7 mm (0.421 in.)

EM

INSTALLATION

1. INSTALL CYLINDER HEAD GASKET

(a) Remove any old packing (FIPG) material and be careful not to drop any oil on the contact surfaces of the cylinder head and cylinder block.

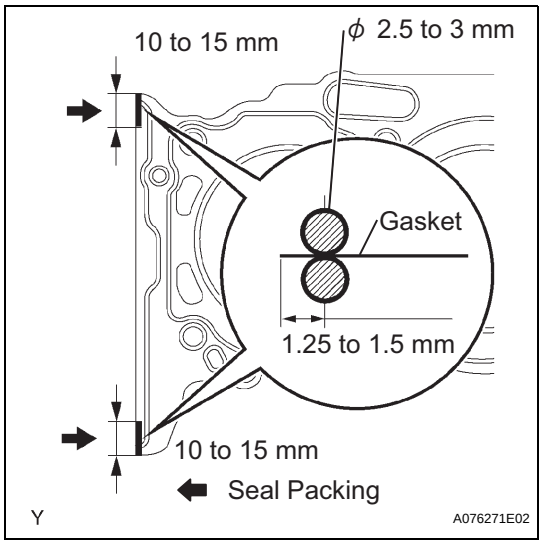

(b) Apply a continuous bead of seal packing (diameter 2.5 to 3 mm (0.098 to 0.118 in.)) to a new cylinder head gasket as shown in the illustration.
Seal packing:
Part No. 08826-00080 or equivalent
NOTICE:
Install the cylinder head within 3 minutes of applying the seal packing. Tighten the cylinder head bolts within 15 minutes of installing the cylinder head. Otherwise, the seal packing must be removed and reapplied.

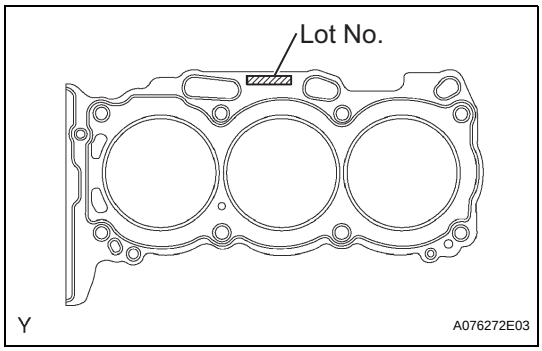

(c) Place the cylinder head gasket on the cylinder block surface with the Lot No. stamp upward.
NOTICE:
- **Be careful of the installation direction.**
- **Place the cylinder head carefully in order not to damage the gasket with the bottom part of the head.**

2. INSTALL CYLINDER HEAD SUB-ASSEMBLY

(a) Place the cylinder head on the cylinder head gasket.

(b) Install the 8 cylinder head bolts.
HINT:
- The cylinder head bolts are tightened in 2 successive steps (steps (3) and (5)).
- If any cylinder head bolts are broken or deformed, replace them.

(1) Apply a light coat of engine oil to the threads of the cylinder head bolts.

(2) Install the plate washer onto the cylinder head bolt.

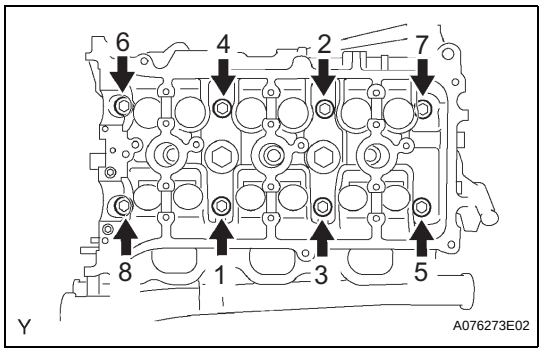

(3) Using several steps, tighten each bolt uniformly with a 10 mm bi-hexagon wrench in the sequence shown in the illustration.
Torque: 36 N*m (367 kgf*cm, 27 ft.*lbf)
If any cylinder head bolts do not meet the torque specification, replace them.
NOTICE:
Do not drop the washers into the cylinder head.

EM

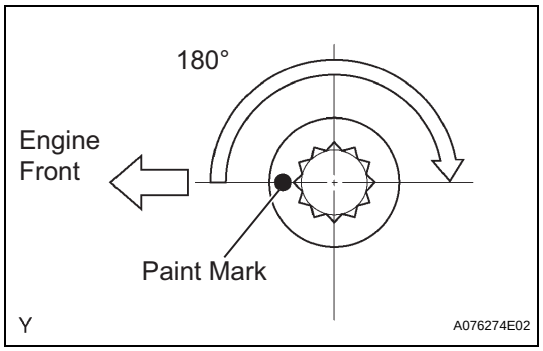

(4) Mark the front side of each cylinder head bolt with paint.
(5) Retighten the cylinder head bolts 180° as shown.
(6) Check that the painted marks are now at 180° from the engine front.

(c) Install the ground cables with the 2 bolts.
Torque: 8.0 N*m (82 kgf*cm, 71 in.*lbf)

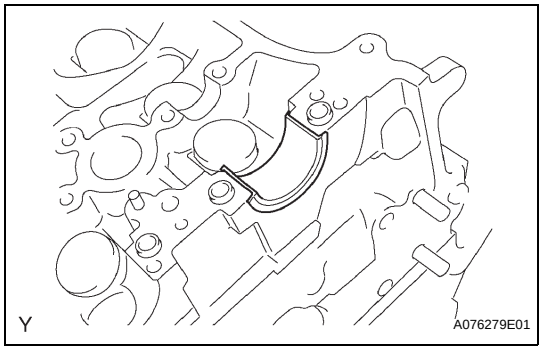

3. INSTALL NO.2 CAMSHAFT BEARING

(a) Install the camshaft bearing No. 2 onto the cylinder head.
NOTICE:
Clean the installation planes of the back side of the bearing and cylinder head and keep them free of oils and fats.

EM

4. INSTALL CAMSHAFTS

NOTICE:
Keep the camshaft level while it is being removed. The camshaft thrust clearance is very small and failing to keep it level could crack or damage the cylinder head journal surface, which receives the thrust. This could subsequently lead the camshaft to seize or break. Perform the following steps to avoid such problems.

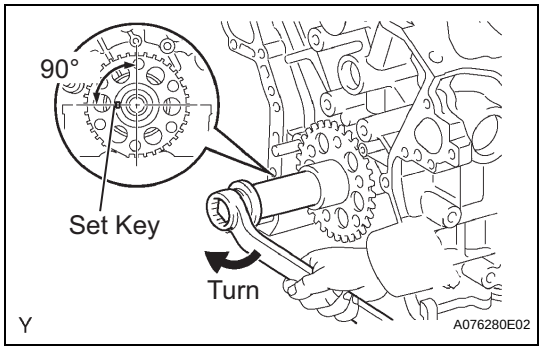

(a) Set the crankshaft position.
(1) Using the crankshaft pulley set bolt, turn the crankshaft, and set the crankshaft set key in the left horizontal position.
NOTICE:
Installing the crankshaft at the wrong angle could cause the piston head and valve head to come into contact with each other when installing the camshaft. This could cause damage, so always set the crankshaft at the correct angle.

(b) Apply new engine oil to the thrust portion and journal of the camshafts.

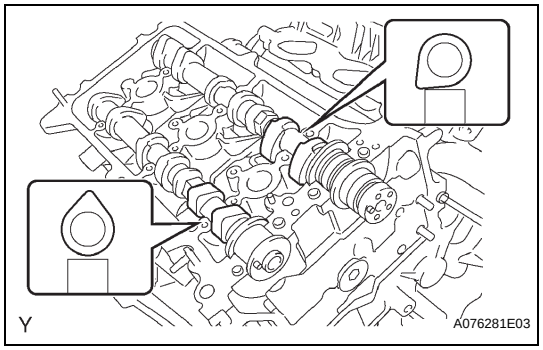

(c) Place the 2 camshafts onto the cylinder head with the cam lobes of No. 1 cylinder facing in the directions shown in the illustration.

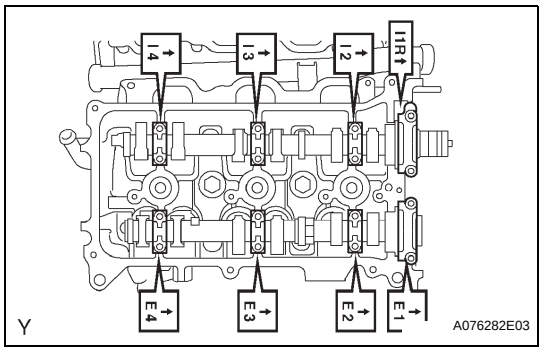

(d) Install the 8 bearing caps in the proper locations as shown.

(e) Apply a light coat of engine oil to the threads and under the heads of the bearing cap bolts.

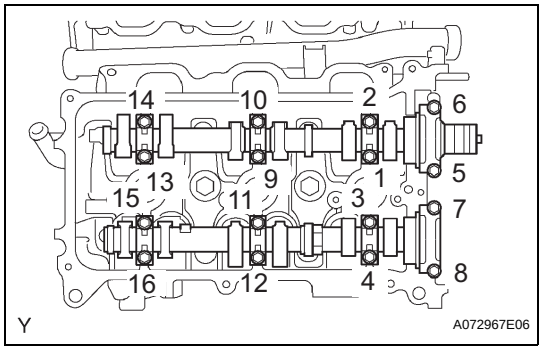

(f) Using several steps, uniformly install and tighten the 16 bearing cap bolts in the sequence shown in the illustration.
Torque: 9.0 N*m (92 kgf*cm, 80 in.*lbf) for 10 mm (0.39 in.) head
24 N*m (245 kgf*cm, 18 ft.*lbf) for 12 mm (0.47 in.) head

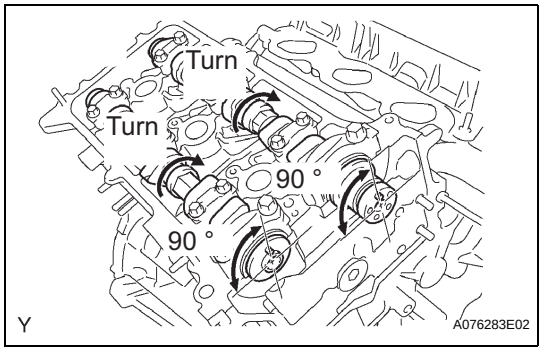

(g) Turn the camshafts clockwise until each camshaft knock pin comes to a position 90° to the cylinder head.

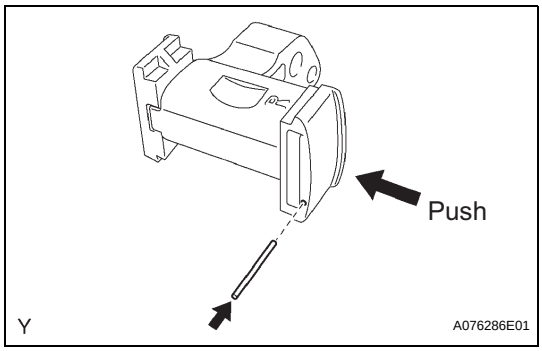

5. INSTALL NO.2 CHAIN TENSIONER ASSEMBLY

(a) While pushing in the tensioner, insert a pin of ϕ 1.0 mm (0.039 in.) into the hole to fix it.

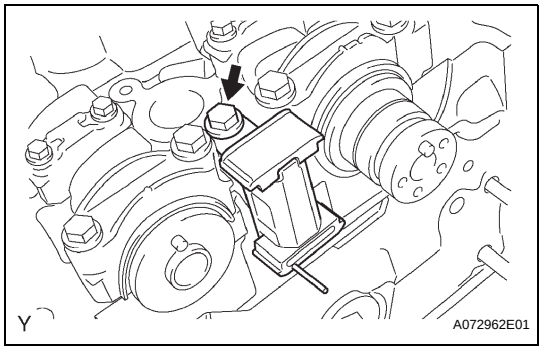

(b) Install the chain tensioner No. 2 with the bolt.
Torque: 19 N*m (194 kgf*cm, 14 ft.*lbf)

EM

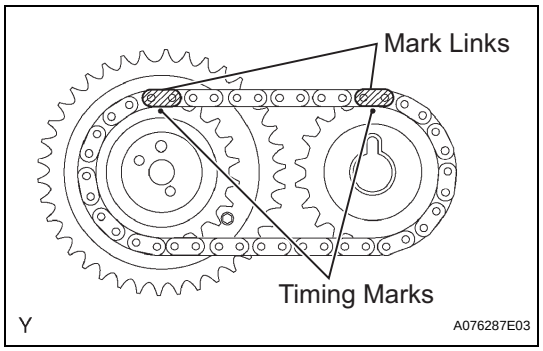

6. INSTALL CAMSHAFT TIMING GEARS AND NO.2 CHAIN (for Bank 1)

(a) Align the yellow mark links with the timing marks (1 dot mark) of camshaft timing gears as shown in the illustration.

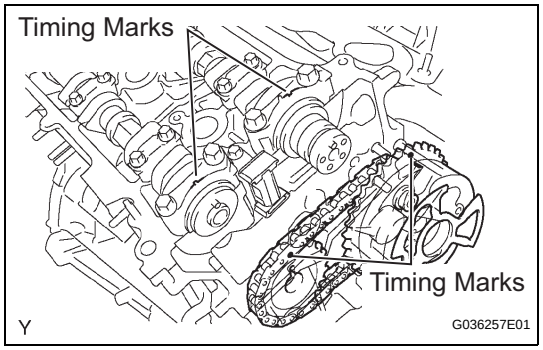

(b) Align the timing marks on the camshaft timing gears with the timing marks on the bearing caps, and install the camshaft timing gears with the chain onto the RH camshafts.

(c) Temporarily install the 2 camshaft timing gear bolts.
NOTICE:
Do not push camshaft timing gear assembly onto the camshaft forcibly when installing it.

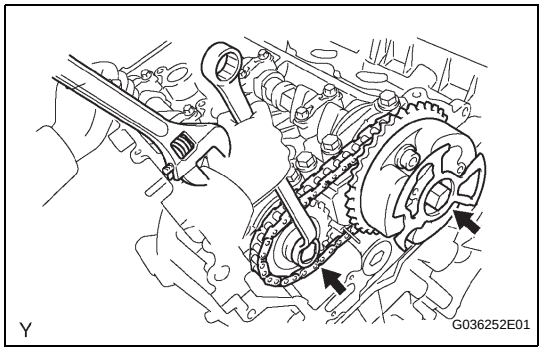

(d) Hold the hexagonal portion of the camshaft with a wrench, and tighten the 2 bolts.
Torque: 100 N*m (1,020 kgf*cm, 74 ft.*lbf)

(e) Remove the pin from the tensioner No. 2.

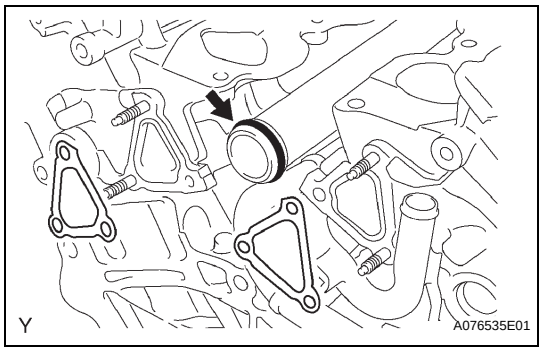

7. INSTALL WATER BY-PASS JOINT RR

(a) Install a new O-ring onto the water outlet pipe.

(b) Apply soapy water to the O-ring.

(c) Install 2 new gaskets and water by-pass joint rear with the 2 bolts and 4 nuts.
Torque: 9.0 N*m (92 kgf*cm, 80 in.*lbf)

(d) Connect the heater hose.

(e) Connect the engine coolant temperature sensor connector.

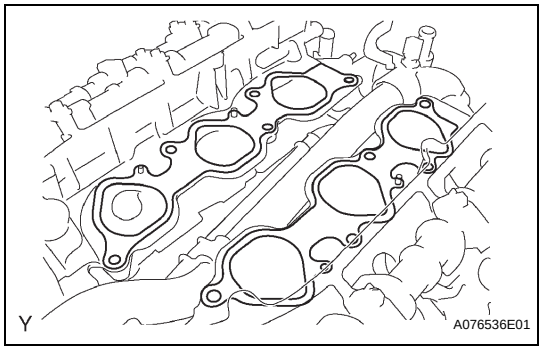

8. INSTALL INTAKE MANIFOLD

(a) Set a new gasket on each cylinder head.
NOTICE:
- **Align the port holes of the gasket and cylinder head.**
- **Be careful of the installation direction.**

(b) Set the intake manifold on the cylinder heads.

(c) Install and tighten the 10 bolts uniformly in several steps.
Torque: 26 N*m (265 kgf*cm, 19 ft.*lbf)

(d) Connect the 6 fuel injector connectors.

EM

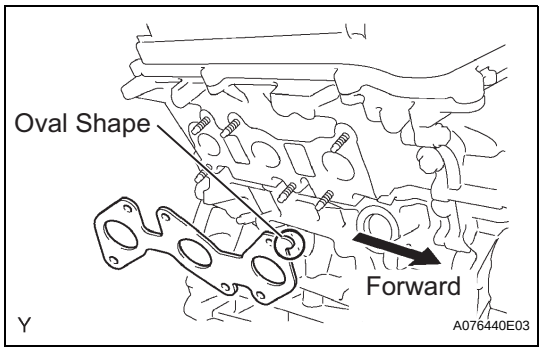

9. INSTALL EXHAUST MANIFOLD SUB-ASSEMBLY RH

(a) Set a new gasket to the RH cylinder head with the oval shape facing forward.
NOTICE:
Be careful of the installation direction.

(b) Install the exhaust manifold with the 6 nuts. Tighten the nuts uniformly in several steps.
Torque: 21 N*m (214 kgf*cm, 16 ft.*lbf)

(c) Connect the air fuel ratio sensor connector.

10. INSTALL MANIFOLD STAY

(a) Install the manifold stay with the 3 bolts.
Torque: 40 N*m (408 kgf*cm, 30 ft.*lbf)

11. INSTALL FRONT EXHAUST PIPE ASSEMBLY
(See page EX-3)

12. INSTALL NO.1 COOL AIR INLET

(a) Install the cool air inlet with the 2 bolts.
Torque: 12 N*m (122 kgf*cm, 9.0 ft.*lbf)

13. INSTALL CHAIN TENSIONER SLIPPER

14. INSTALL NO.1 CHAIN TENSIONER ASSEMBLY (See page EM-27)

15. INSTALL CHAIN SUB-ASSEMBLY
(See page EM-48)

16. INSTALL TIMING CHAIN OR BELT COVER SUB-ASSEMBLY
(See page LU-38)

17. INSTALL ENGINE ASSEMBLY
(See page EM-190)

18. INSTALL BATTERY

19. ADD ENGINE COOLANT (See page CO-3)

20. ADD ENGINE OIL (See page LU-5)

21. CHECK FOR ENGINE COOLANT LEAKAGE (See page CO-4)

22. CHECK FOR ENGINE OIL LEAKAGE

23. CHECK FOR FUEL LEAKAGE

24. CHECK FOR EXHAUST GAS LEAKAGE

25. INSPECT IGNITION TIMING (See page EM-1)

26. INSPECT ENGINE IDLING SPEED (See page EM-2)

27. INSPECT CO/HC (See page EM-3)

CYLINDER HEAD (for Bank 1 4WD and Pre-Runner)

COMPONENTS

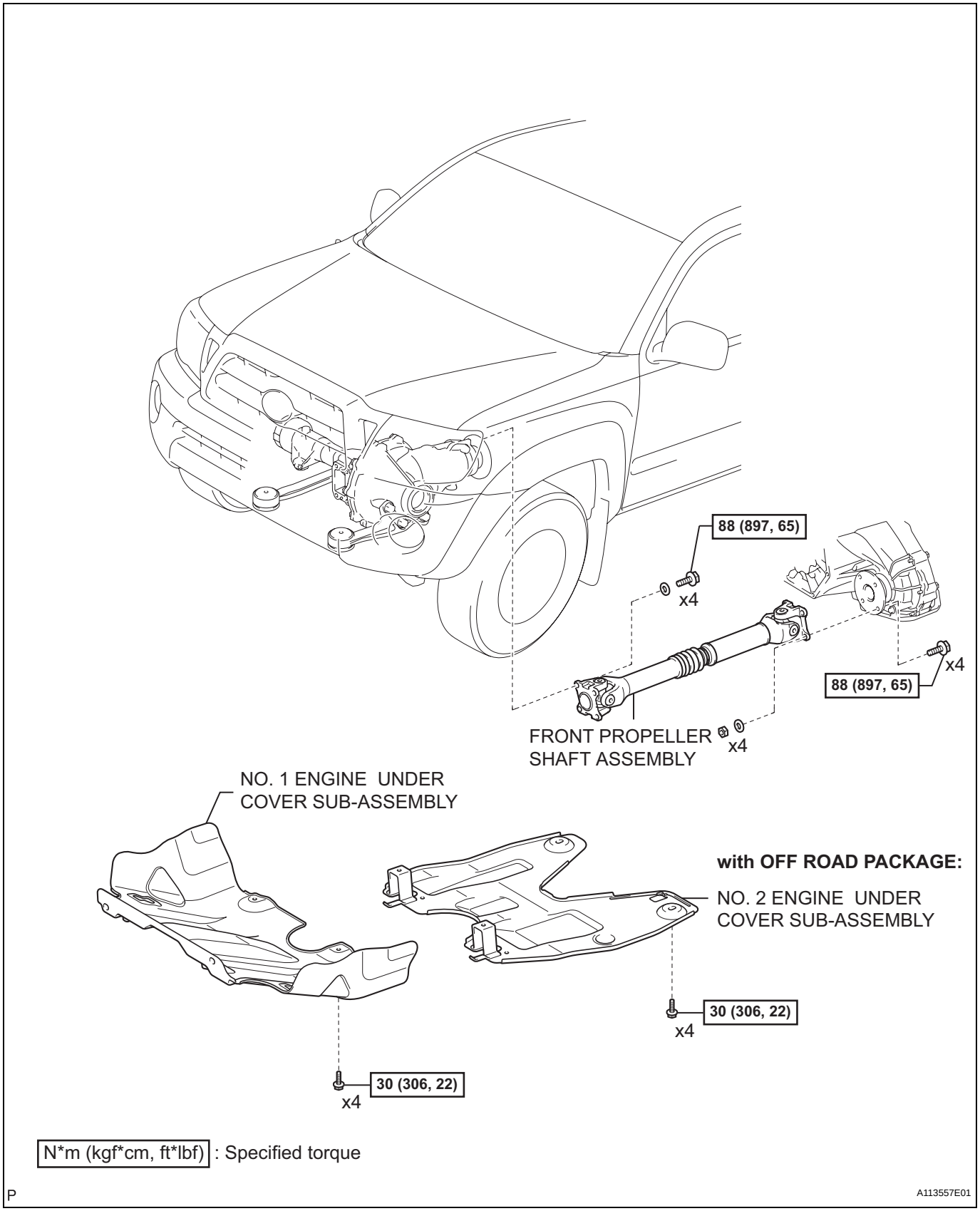

EM

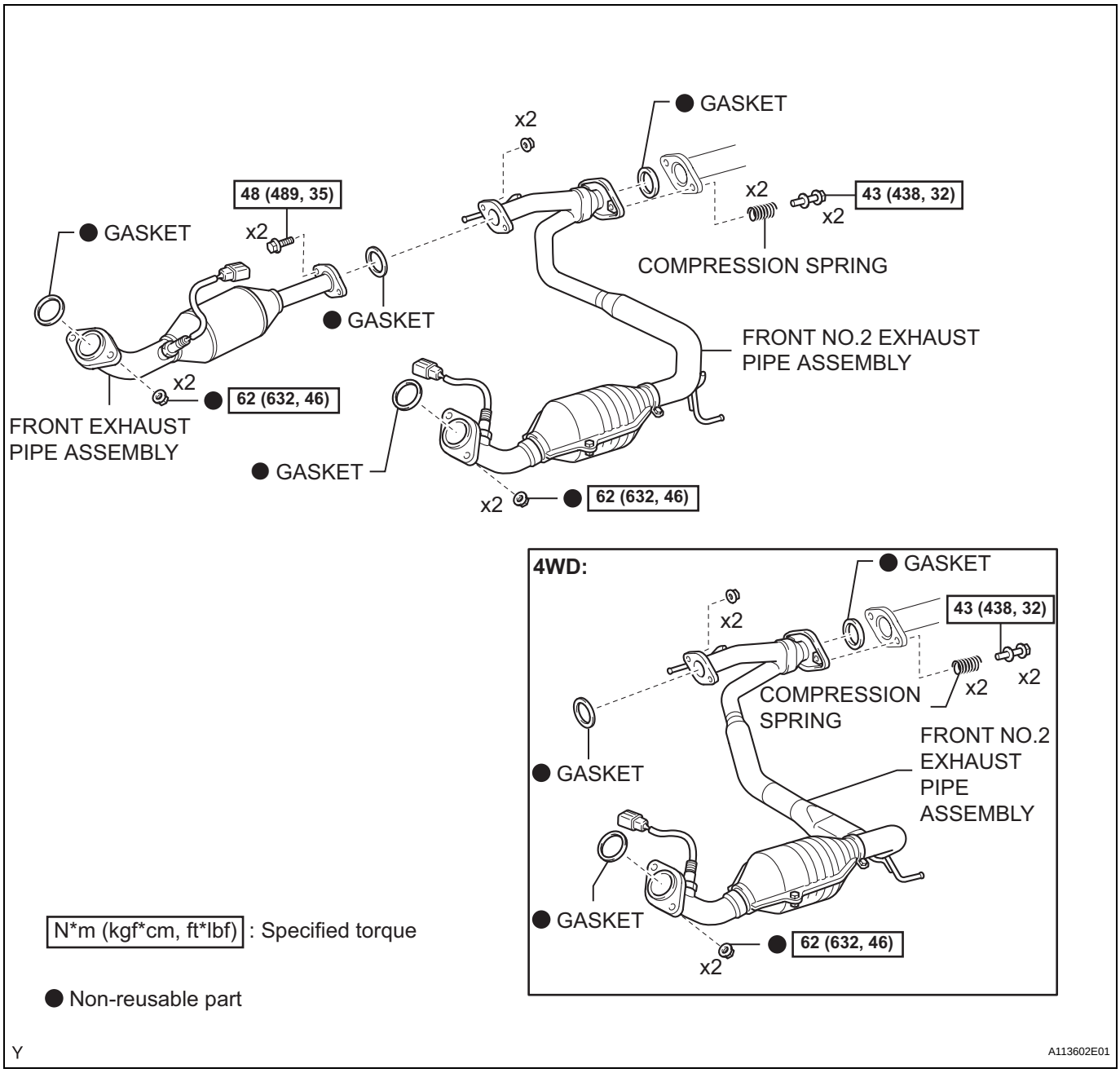
GASKET
x2
48 (489, 35)
x2
43 (438, 32)
x2
GASKET
COMPRESSION SPRING
GASKET
FRONT NO.2 EXHAUST PIPE ASSEMBLY
x2
62 (632, 46)
FRONT EXHAUST PIPE ASSEMBLY
GASKET
x2
62 (632, 46)
4WD:
GASKET
x2
43 (438, 32)
x2
x2
COMPRESSION SPRING
FRONT NO.2 EXHAUST PIPE ASSEMBLY
GASKET
GASKET
62 (632, 46)
x2
N*m (kgf*cm, ft*lbf) : Specified torque
Non-reusable part
Y
A113602E01

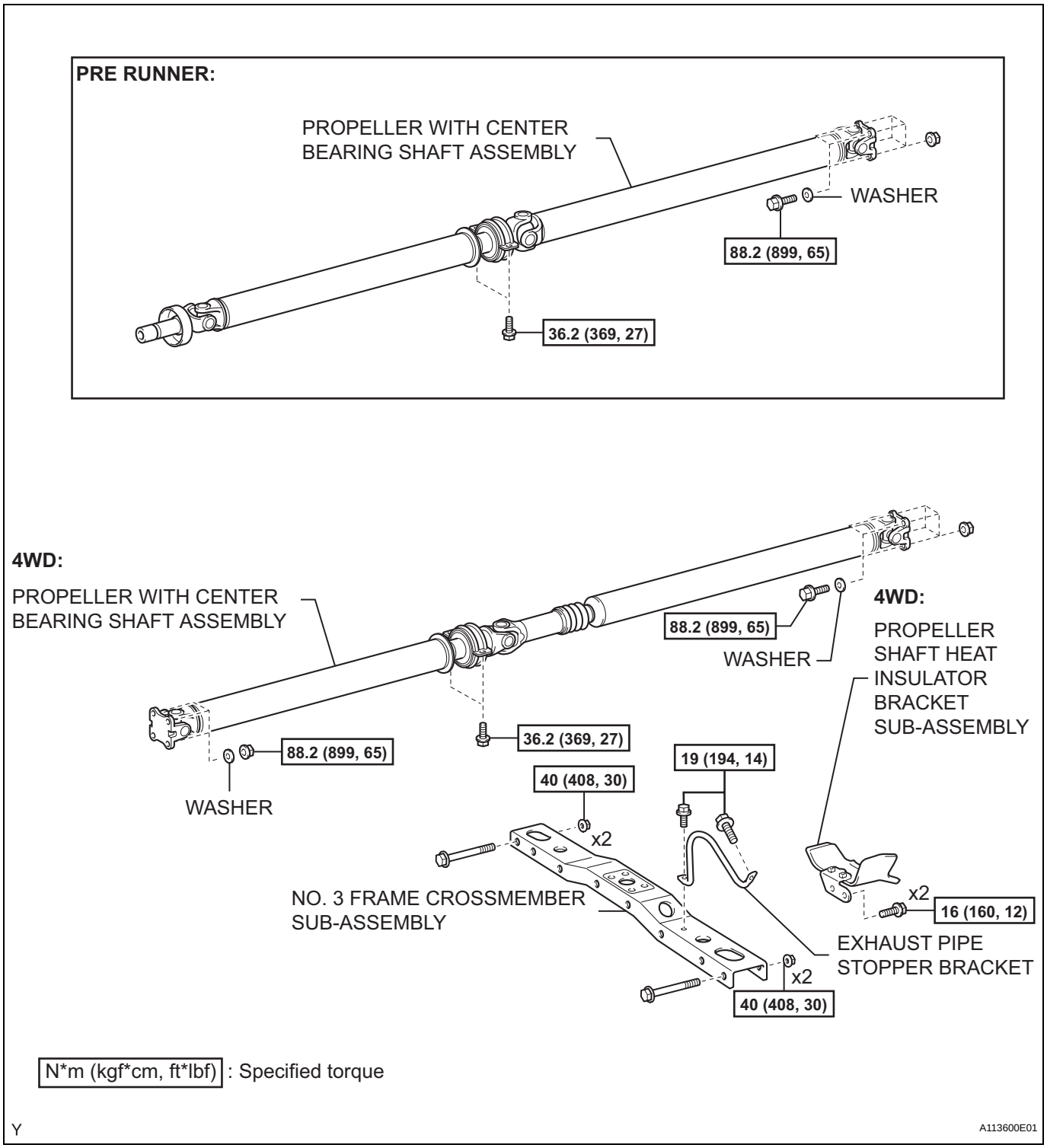
PRE RUNNER:
PROPELLER WITH CENTER BEARING SHAFT ASSEMBLY
WASHER
88.2 (899, 65)
36.2 (369, 27)
4WD:
PROPELLER WITH CENTER BEARING SHAFT ASSEMBLY
88.2 (899, 65)
WASHER
4WD:
PROPELLER SHAFT HEAT INSULATOR BRACKET SUB-ASSEMBLY
36.2 (369, 27)
88.2 (899, 65)
WASHER
19 (194, 14)
40 (408, 30)
x2
NO. 3 FRAME CROSSMEMBER SUB-ASSEMBLY
x2
16 (160, 12)
EXHAUST PIPE STOPPER BRACKET
x2
40 (408, 30)
N*m (kgf*cm, ft*lbf) : Specified torque
Y
A113600E01

EM

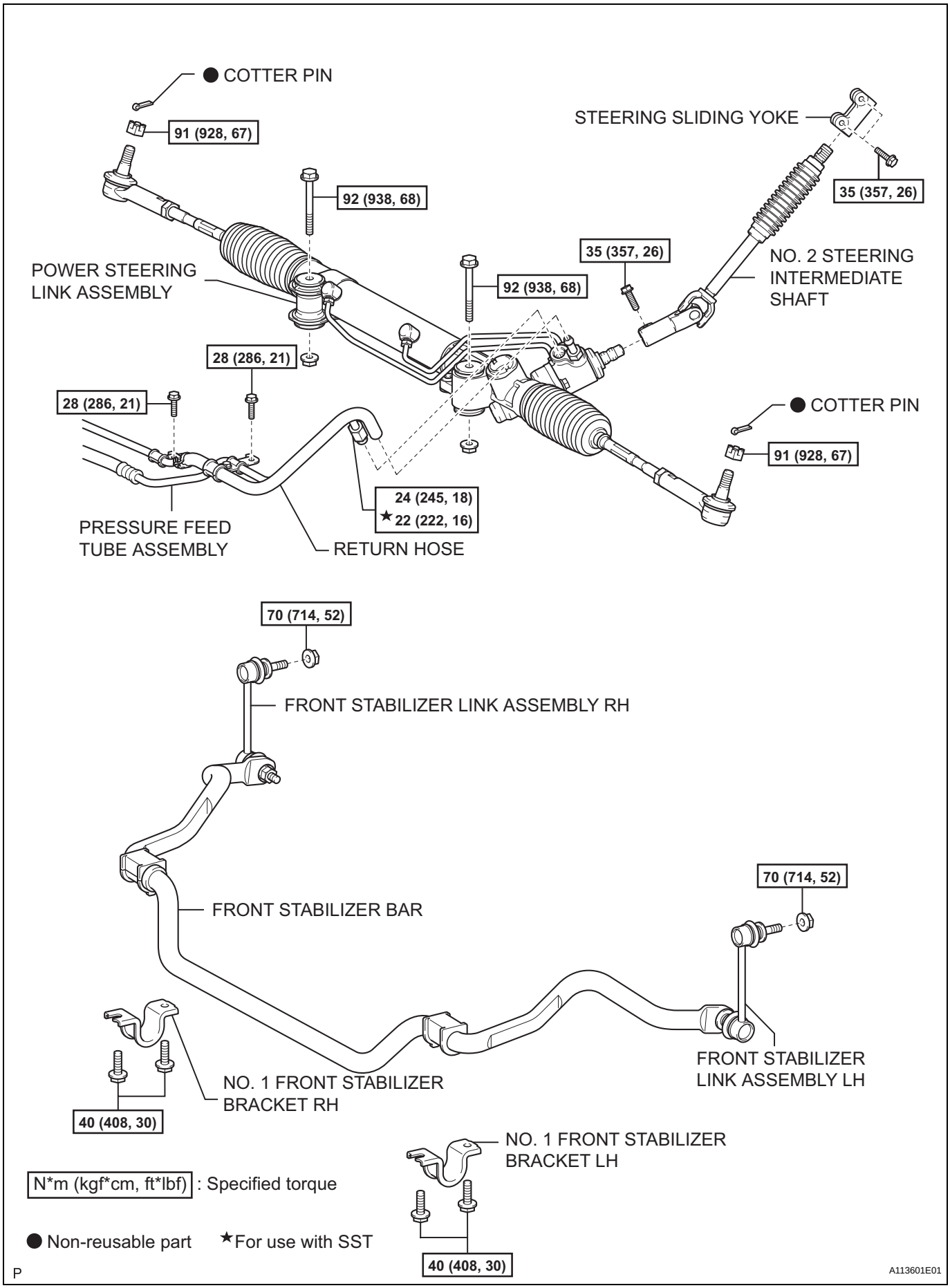
● COTTER PIN
91 (928, 67)
STEERING SLIDING YOKE
35 (357, 26)
92 (938, 68)
35 (357, 26)
NO. 2 STEERING INTERMEDIATE SHAFT
POWER STEERING LINK ASSEMBLY
92 (938, 68)
28 (286, 21)
28 (286, 21)
● COTTER PIN
91 (928, 67)
24 (245, 18)
★22 (222, 16)
PRESSURE FEED TUBE ASSEMBLY
RETURN HOSE
70 (714, 52)
FRONT STABILIZER LINK ASSEMBLY RH
70 (714, 52)
FRONT STABILIZER BAR
FRONT STABILIZER LINK ASSEMBLY LH
NO. 1 FRONT STABILIZER BRACKET RH
40 (408, 30)
NO. 1 FRONT STABILIZER BRACKET LH
N*m (kgf*cm, ft*lbf) : Specified torque
● Non-reusable part
★For use with SST
40 (408, 30)
P
A113601E01

EM

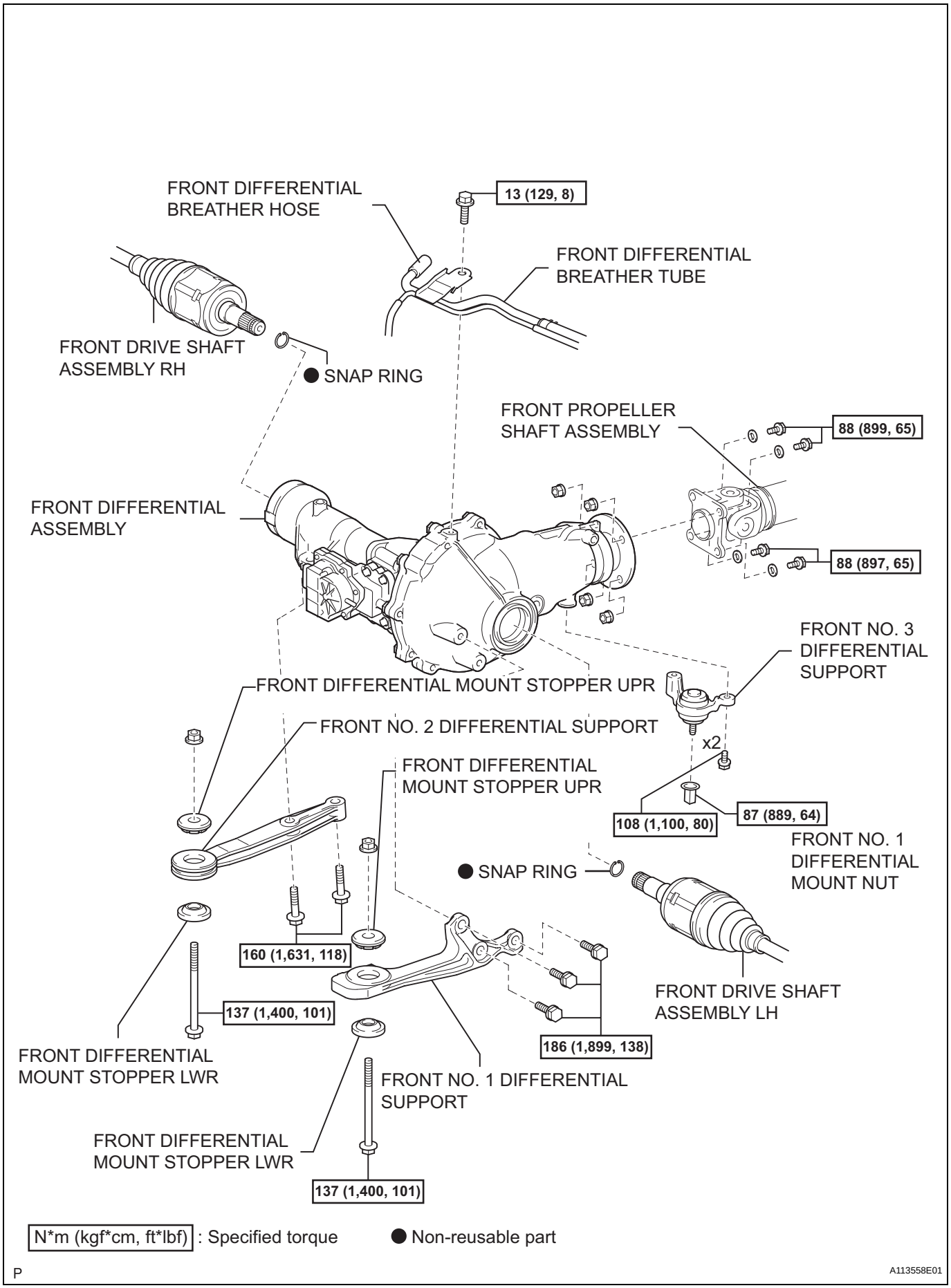
FRONT DIFFERENTIAL BREATHER HOSE
13 (129, 8)
FRONT DIFFERENTIAL BREATHER TUBE
FRONT DRIVE SHAFT ASSEMBLY RH
● SNAP RING
FRONT PROPELLER SHAFT ASSEMBLY
88 (899, 65)
FRONT DIFFERENTIAL ASSEMBLY
88 (897, 65)
FRONT NO. 3 DIFFERENTIAL SUPPORT
FRONT DIFFERENTIAL MOUNT STOPPER UPR
FRONT NO. 2 DIFFERENTIAL SUPPORT
x2
FRONT DIFFERENTIAL MOUNT STOPPER UPR
108 (1,100, 80)
87 (889, 64)
FRONT NO. 1 DIFFERENTIAL MOUNT NUT
● SNAP RING
160 (1,631, 118)
FRONT DRIVE SHAFT ASSEMBLY LH
137 (1,400, 101)
186 (1,899, 138)
FRONT DIFFERENTIAL MOUNT STOPPER LWR
FRONT NO. 1 DIFFERENTIAL SUPPORT
FRONT DIFFERENTIAL MOUNT STOPPER LWR
137 (1,400, 101)
N*m (kgf*cm, ft*lbf) : Specified torque
● Non-reusable part
P
A113558E01

EM

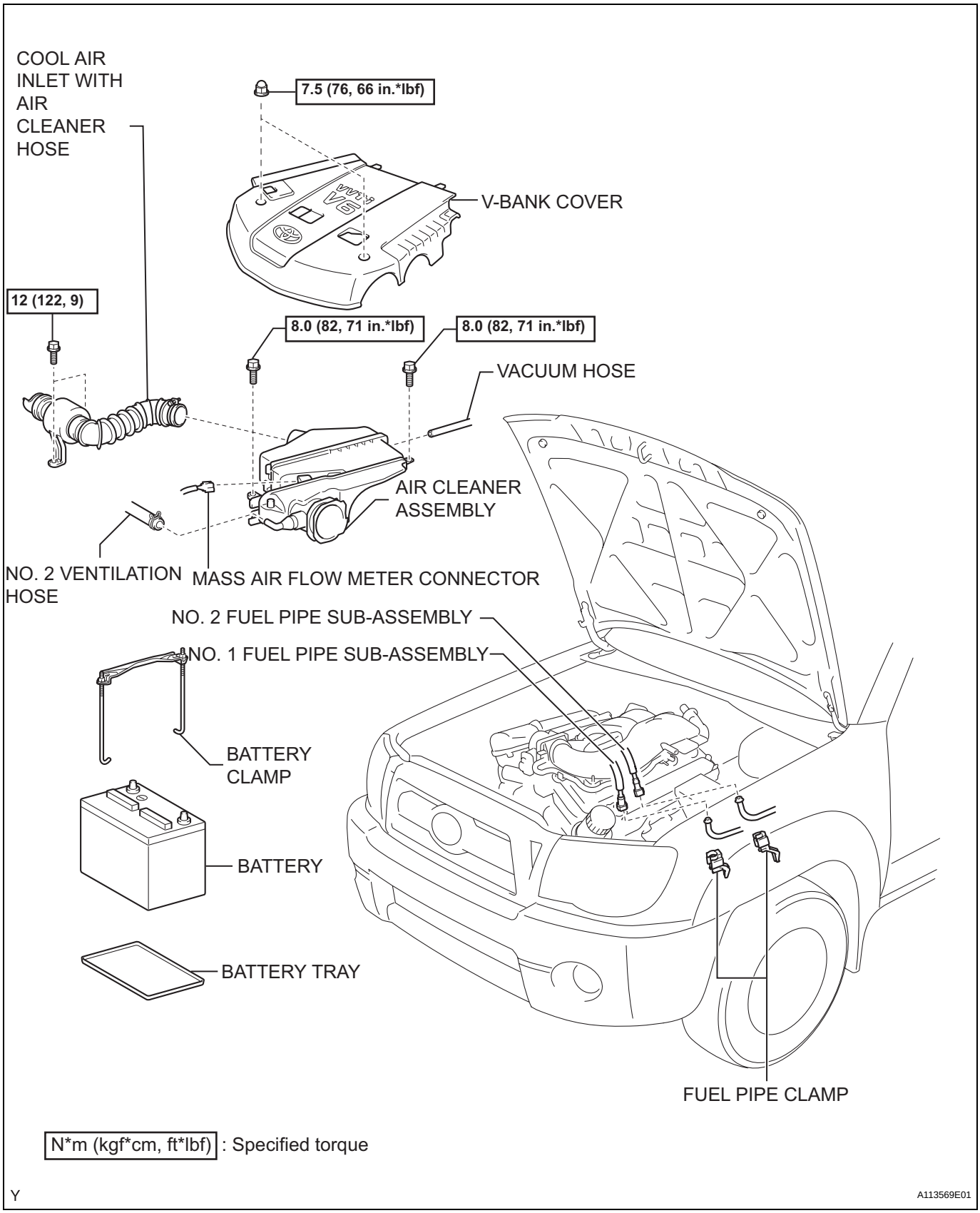
COOL AIR INLET WITH AIR CLEANER HOSE
7.5 (76, 66 in.*lbf)
V-BANK COVER
12 (122, 9)
8.0 (82, 71 in.*lbf)
8.0 (82, 71 in.*lbf)
VACUUM HOSE
AIR CLEANER ASSEMBLY
NO. 2 VENTILATION HOSE
MASS AIR FLOW METER CONNECTOR
NO. 2 FUEL PIPE SUB-ASSEMBLY
NO. 1 FUEL PIPE SUB-ASSEMBLY
BATTERY CLAMP
BATTERY
BATTERY TRAY
FUEL PIPE CLAMP
N*m (kgf*cm, ft*lbf) : Specified torque
Y
A113569E01

EM

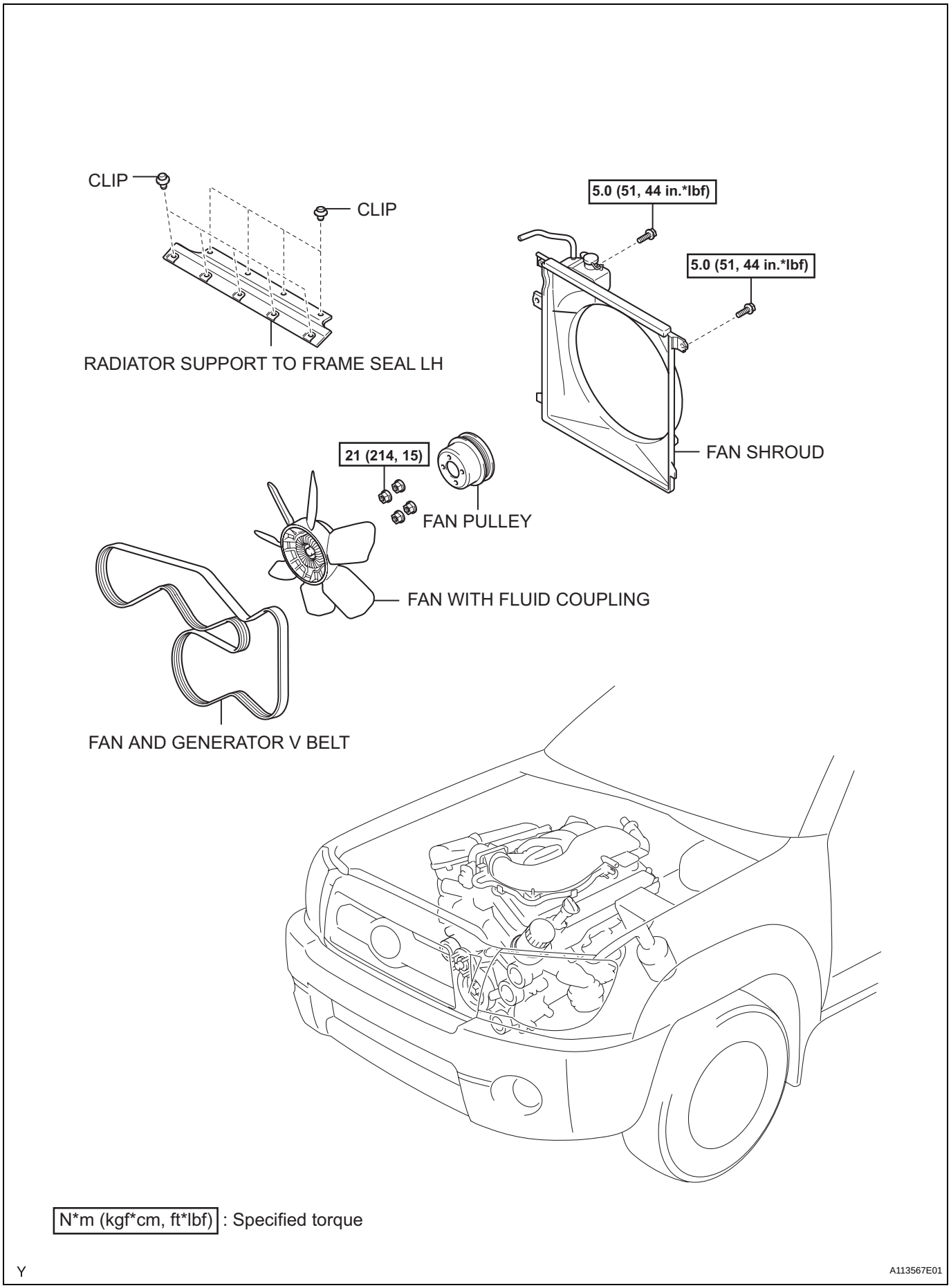
CLIP
CLIP
RADIATOR SUPPORT TO FRAME SEAL LH
5.0 (51, 44 in.*lbf)
5.0 (51, 44 in.*lbf)
FAN SHROUD
21 (214, 15)
FAN PULLEY
FAN WITH FLUID COUPLING
FAN AND GENERATOR V BELT
N*m (kgf*cm, ft*lbf) : Specified torque
Y
A113567E01

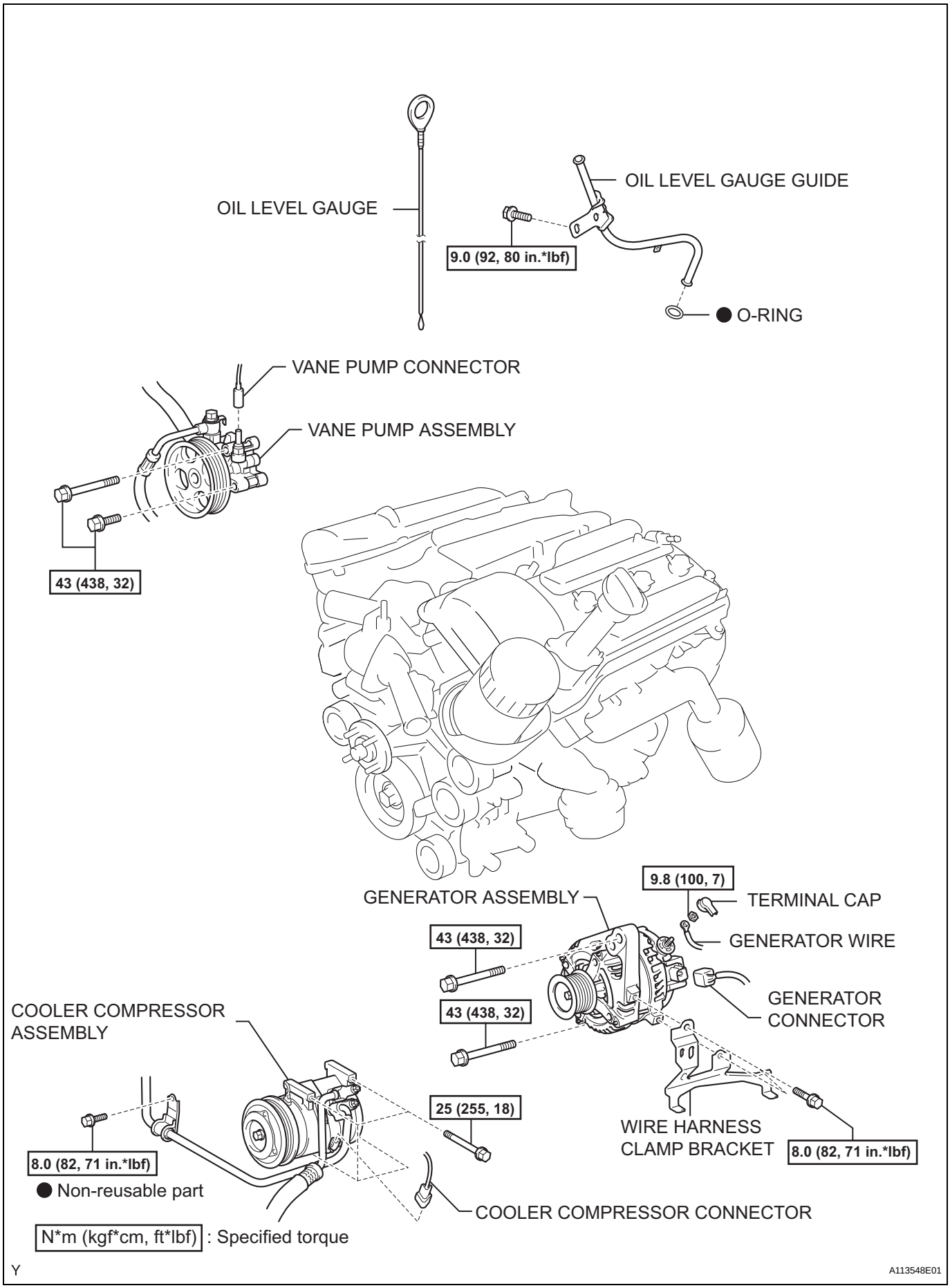
OIL LEVEL GAUGE
OIL LEVEL GAUGE GUIDE
9.0 (92, 80 in.*lbf)
● O-RING
VANE PUMP CONNECTOR
VANE PUMP ASSEMBLY
43 (438, 32)
9.8 (100, 7)
GENERATOR ASSEMBLY
TERMINAL CAP
GENERATOR WIRE
43 (438, 32)
GENERATOR CONNECTOR
COOLER COMPRESSOR ASSEMBLY
43 (438, 32)
25 (255, 18)
WIRE HARNESS CLAMP BRACKET
8.0 (82, 71 in.*lbf)
8.0 (82, 71 in.*lbf)
● Non-reusable part
COOLER COMPRESSOR CONNECTOR
N*m (kgf*cm, ft*lbf) : Specified torque
Y
A113548E01

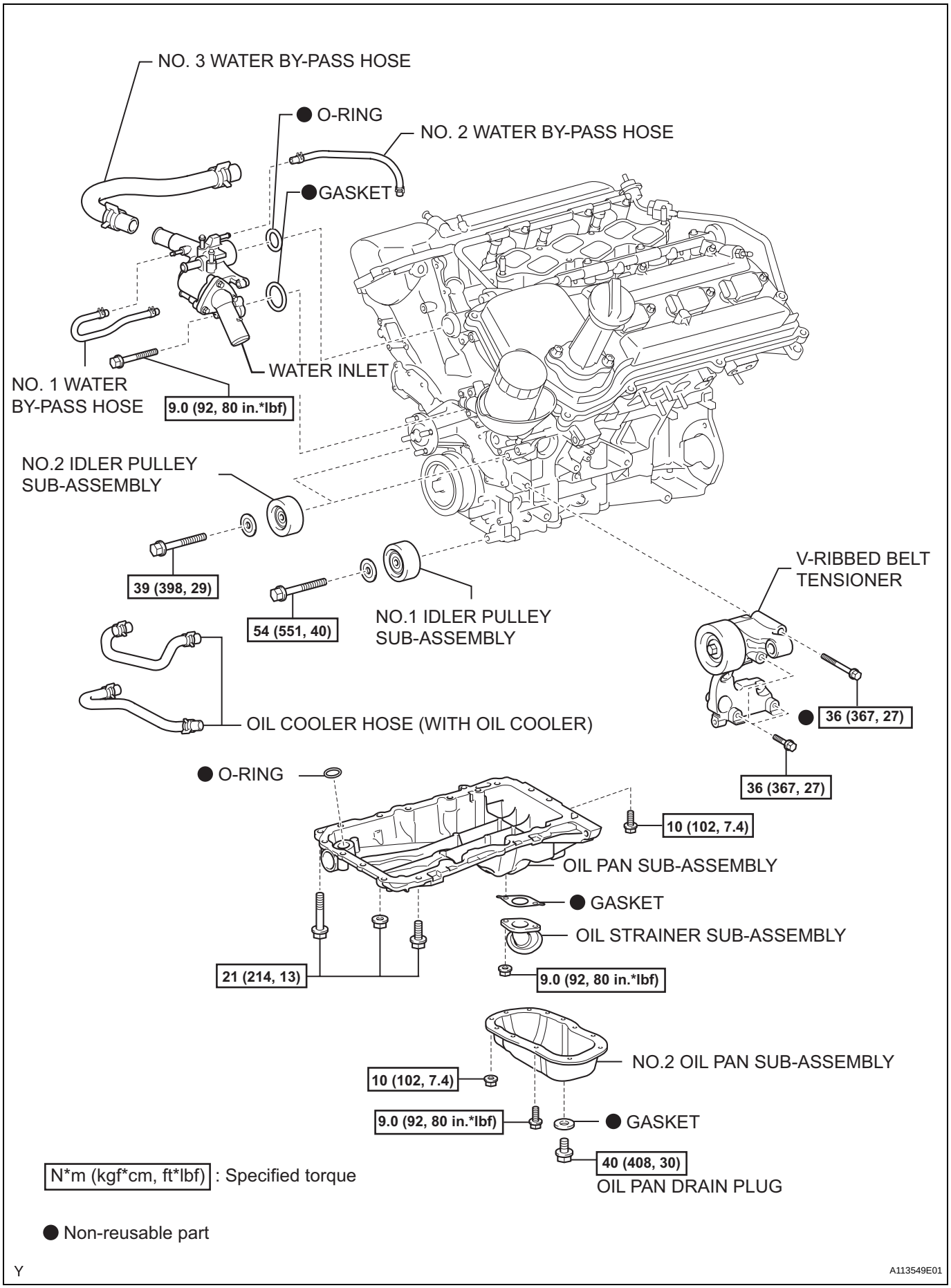
NO. 3 WATER BY-PASS HOSE
● O-RING
NO. 2 WATER BY-PASS HOSE
●GASKET
WATER INLET
NO. 1 WATER BY-PASS HOSE
9.0 (92, 80 in.*lbf)
NO.2 IDLER PULLEY SUB-ASSEMBLY
39 (398, 29)
54 (551, 40)
NO.1 IDLER PULLEY SUB-ASSEMBLY
V-RIBBED BELT TENSIONER
● 36 (367, 27)
36 (367, 27)
OIL COOLER HOSE (WITH OIL COOLER)
● O-RING
10 (102, 7.4)
OIL PAN SUB-ASSEMBLY
● GASKET
OIL STRAINER SUB-ASSEMBLY
21 (214, 13)
9.0 (92, 80 in.*lbf)
NO.2 OIL PAN SUB-ASSEMBLY
10 (102, 7.4)
9.0 (92, 80 in.*lbf)
● GASKET
40 (408, 30)
OIL PAN DRAIN PLUG
N*m (kgf*cm, ft*lbf) : Specified torque
● Non-reusable part
Y
A113549E01

EM

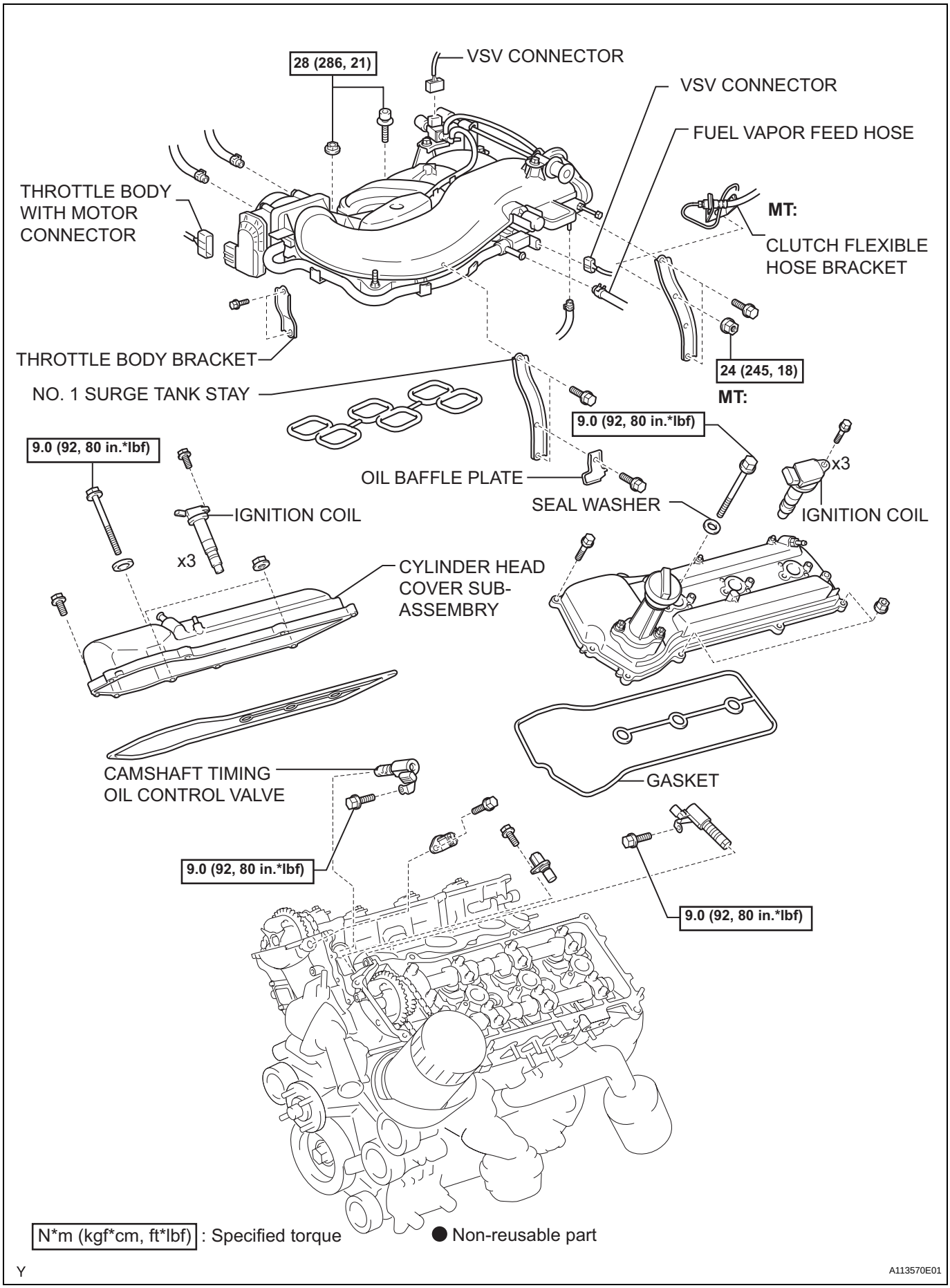
28 (286, 21)
VSV CONNECTOR
VSV CONNECTOR
FUEL VAPOR FEED HOSE
THROTTLE BODY WITH MOTOR CONNECTOR
MT:
CLUTCH FLEXIBLE HOSE BRACKET
THROTTLE BODY BRACKET
24 (245, 18)
MT:
NO. 1 SURGE TANK STAY
9.0 (92, 80 in.*lbf)
9.0 (92, 80 in.*lbf)
x3
OIL BAFFLE PLATE
SEAL WASHER
IGNITION COIL
IGNITION COIL
x3
CYLINDER HEAD COVER SUB-ASSEMBRY
CAMSHAFT TIMING OIL CONTROL VALVE
GASKET
9.0 (92, 80 in.*lbf)
9.0 (92, 80 in.*lbf)
N*m (kgf*cm, ft*lbf) : Specified torque
● Non-reusable part
Y
A113570E01

EM

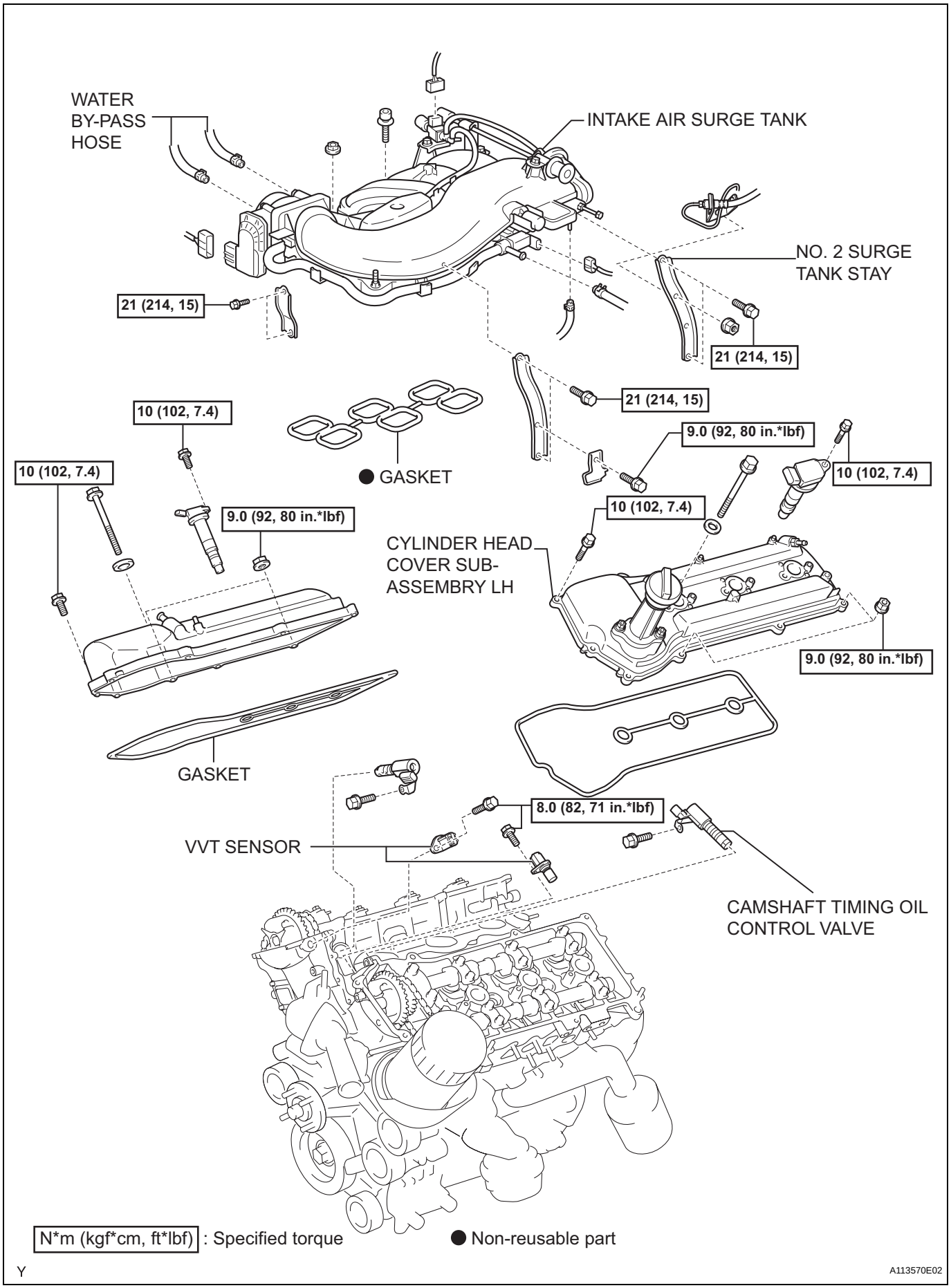
WATER BY-PASS HOSE
INTAKE AIR SURGE TANK
NO. 2 SURGE TANK STAY
21 (214, 15)
21 (214, 15)
21 (214, 15)
10 (102, 7.4)
9.0 (92, 80 in.*lbf)
10 (102, 7.4)
10 (102, 7.4)
● GASKET
9.0 (92, 80 in.*lbf)
10 (102, 7.4)
CYLINDER HEAD COVER SUB-ASSEMBRY LH
9.0 (92, 80 in.*lbf)
GASKET
8.0 (82, 71 in.*lbf)
VVT SENSOR
CAMSHAFT TIMING OIL CONTROL VALVE
N*m (kgf*cm, ft*lbf) : Specified torque
● Non-reusable part
Y
A113570E02

EM

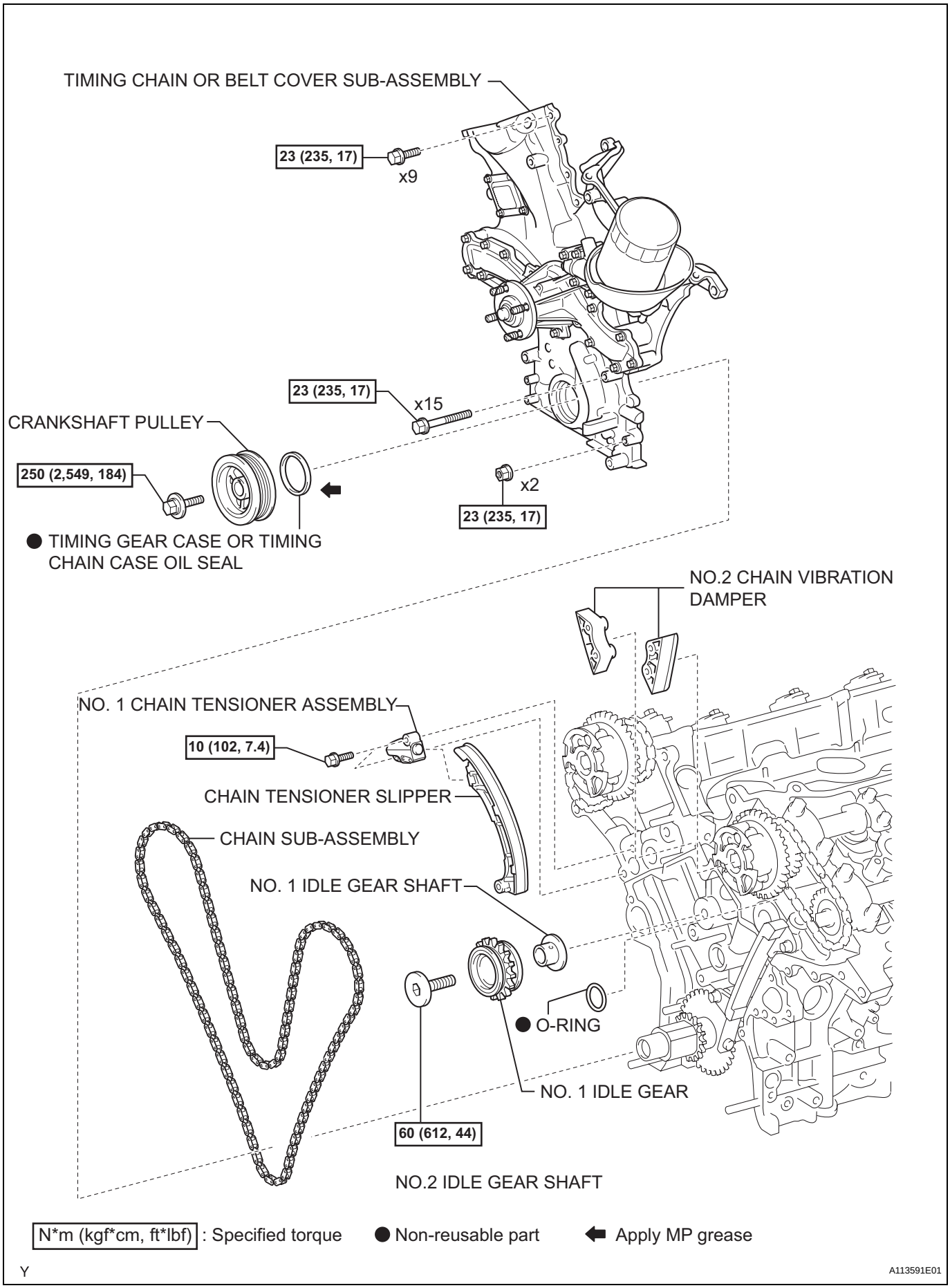

N*m (kgf*cm, ft*lbf) : Specified torque ● Non-reusable part ⬅ Apply MP grease

Y

A113591E01

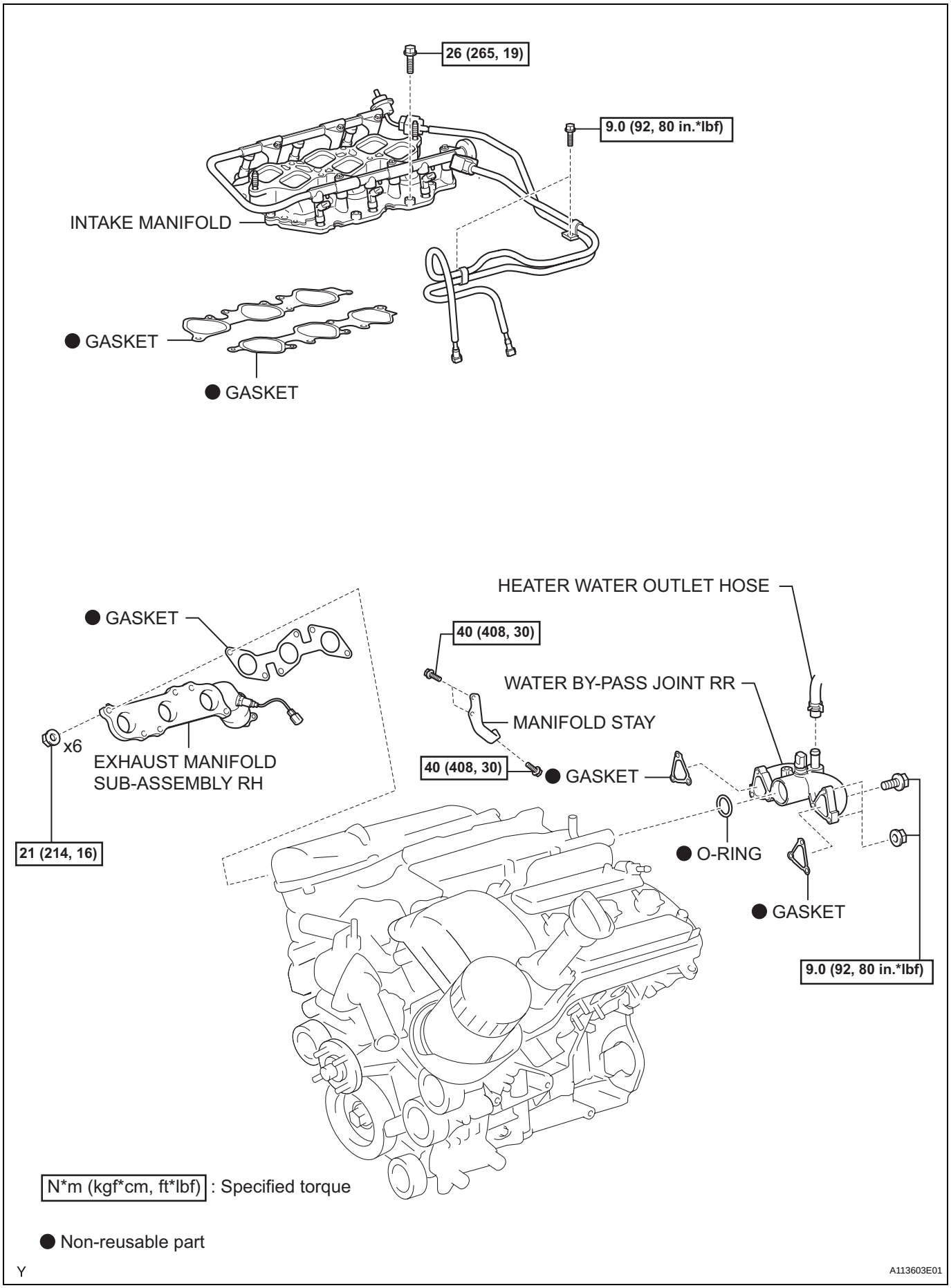
26 (265, 19)
9.0 (92, 80 in.*lbf)
INTAKE MANIFOLD
● GASKET
● GASKET
HEATER WATER OUTLET HOSE
● GASKET
40 (408, 30)
WATER BY-PASS JOINT RR
MANIFOLD STAY
x6
EXHAUST MANIFOLD
SUB-ASSEMBLY RH
40 (408, 30)
● GASKET
21 (214, 16)
● O-RING
● GASKET
9.0 (92, 80 in.*lbf)
N*m (kgf*cm, ft*lbf) : Specified torque
● Non-reusable part
Y
A113603E01

EM

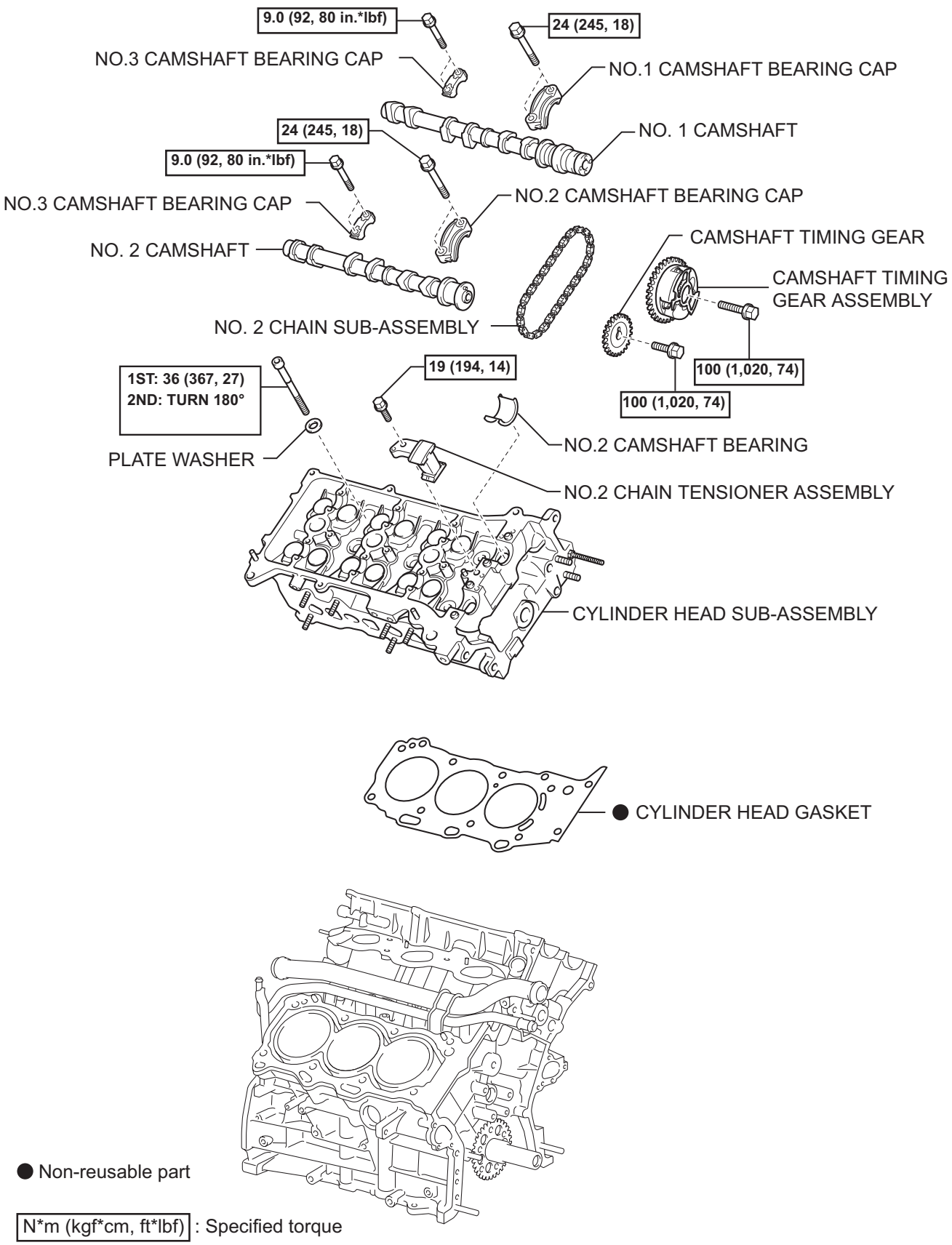
9.0 (92, 80 in.*lbf)
24 (245, 18)
NO.3 CAMSHAFT BEARING CAP
NO.1 CAMSHAFT BEARING CAP
24 (245, 18)
NO. 1 CAMSHAFT
9.0 (92, 80 in.*lbf)
NO.3 CAMSHAFT BEARING CAP
NO.2 CAMSHAFT BEARING CAP
NO. 2 CAMSHAFT
CAMSHAFT TIMING GEAR
CAMSHAFT TIMING GEAR ASSEMBLY
NO. 2 CHAIN SUB-ASSEMBLY
1ST: 36 (367, 27)
2ND: TURN 180°
19 (194, 14)
100 (1,020, 74)
100 (1,020, 74)
PLATE WASHER
NO.2 CAMSHAFT BEARING
NO.2 CHAIN TENSIONER ASSEMBLY
CYLINDER HEAD SUB-ASSEMBLY
● CYLINDER HEAD GASKET
● Non-reusable part
N*m (kgf*cm, ft*lbf) : Specified torque
Y
A113594E01

EM

REMOVAL

1. **DISCHARGE FUEL SYSTEM PRESSURE**
   (See page FU-1)
2. **REMOVE BATTERY**
3. **DRAIN ENGINE COOLANT (See page CO-3)**
4. **DRAIN ENGINE OIL (See page LU-4)**
5. **REMOVE POWER STEERING LINK ASSEMBLY**
   (See page PS-53)
6. **REMOVE FRONT DIFFERENTIAL CARRIER ASSEMBLY (for 4WD)**
   (See page DF-19)
7. **REMOVE TIMING CHAIN OR BELT COVER SUB-ASSEMBLY**
   (See page LU-34)
8. **REMOVE CHAIN SUB-ASSEMBLY**
   (See page EM-44)
9. **REMOVE NO.1 COOL AIR INLET**
   (a) Remove the 2 bolts, then remove the cool air inlet.
10. **REMOVE FRONT EXHAUST PIPE ASSEMBLY**
    (See page EX-3)
11. **REMOVE MANIFOLD STAY**
    (a) Remove the 3 bolts, then remove the exhaust manifold stay.
12. **REMOVE EXHAUST MANIFOLD SUB-ASSEMBLY**
    (a) Disconnect the air fuel ratio sensor connector.
    (b) Remove the 6 nuts, then remove the exhaust manifold and gasket.
13. **DISCONNECT NO.1 FUEL PIPE SUB-ASSEMBLY (See page FU-13)**
14. **DISCONNECT NO.2 FUEL PIPE SUB-ASSEMBLY (See page FU-13)**
15. **REMOVE INTAKE MANIFOLD**
    (a) Disconnect the 6 fuel injector connectors.
    (b) Remove the 10 bolts, then remove the intake manifold and gasket.
16. **REMOVE WATER BY-PASS JOINT RR**
    (a) Disconnect the engine coolant temperature sensor connector.
    (b) Disconnect the heater hose.

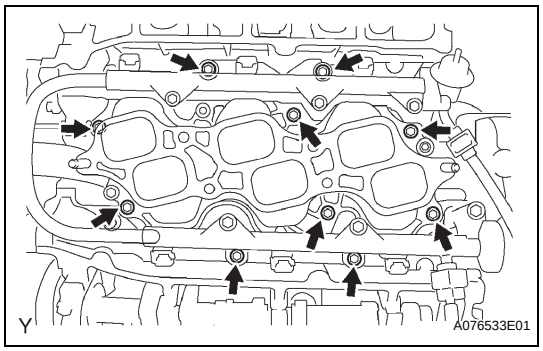

EM

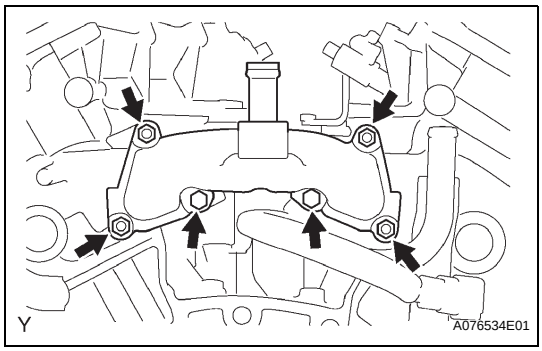

(c) Remove the 2 bolts and 4 nuts, then remove the water by-pass joint RR and 2 gaskets.
(d) Remove the O-ring from the water outlet hose.

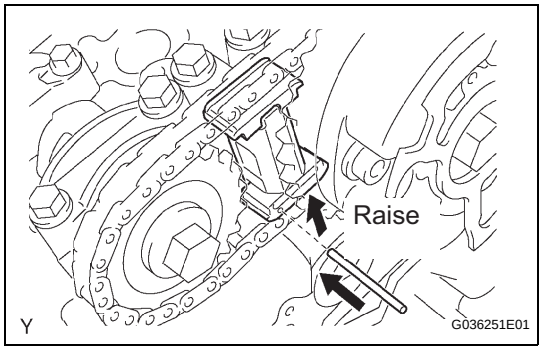

17. REMOVE CAMSHAFT TIMING GEARS AND NO.2 CHAIN (for Bank 1)

(a) While raising the chain tensioner No. 2, insert a pin of ϕ 1.0 mm (0.039 in.) into the hole to fix it.

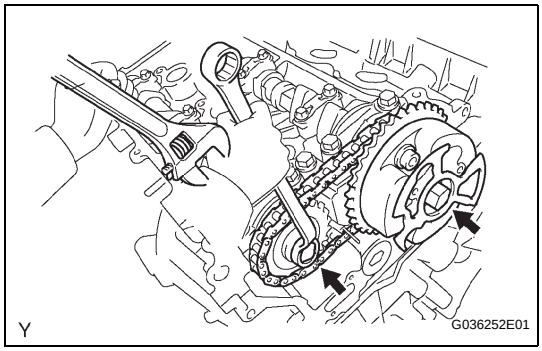

(b) Hold the hexagonal portion of the camshaft with a wrench.
NOTICE:
Be careful not to damage the cylinder head and valve lifter with the wrench.
(c) Remove the 2 bolts, then remove the camshaft timing gear, camshaft timing gear assembly and timing chain No. 2.
NOTICE:
Do not disassemble the camshaft timing gear assembly.

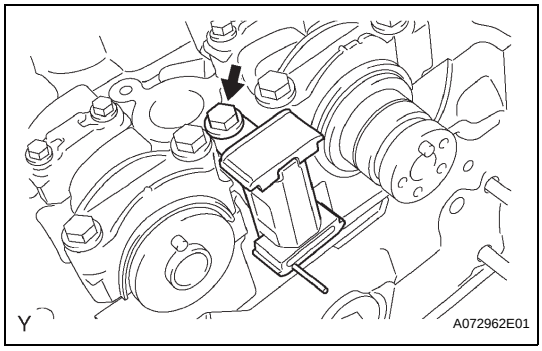

18. REMOVE NO.2 CHAIN TENSIONER ASSEMBLY

(a) Remove the bolt, then remove the chain tensioner No. 2.

19. REMOVE CAMSHAFTS
NOTICE:
Keep the camshaft level while it is being removed. The camshaft thrust clearance is very small and failing to keep it level could crack or damage the cylinder head journal surface, which receives the thrust. This could subsequently lead the camshaft to seize or break. Perform the following steps to avoid such problems.

EM

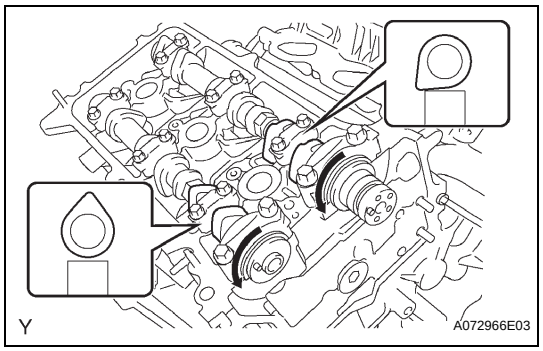

(a) Rotate the camshafts counterclockwise using a wrench so that the cam lobes of No. 1 cylinder face in the directions shown in the illustration.

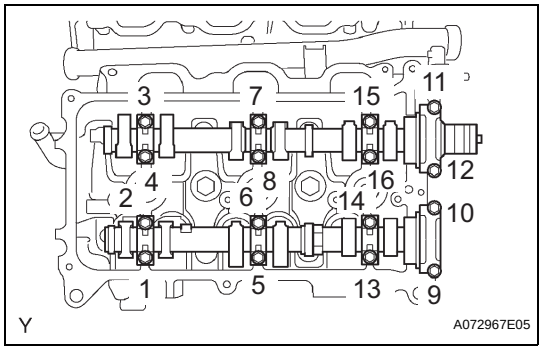

(b) Using several steps, loosen and remove the 16 bearing cap bolts uniformly in the sequence shown in the illustration.

(c) Remove the 8 bearing caps and 2 camshafts.

20. REMOVE NO.2 CAMSHAFT BEARING

21. REMOVE CYLINDER HEAD SUB-ASSEMBLY

(a) Remove the 2 bolts and separate the 2 ground cables.

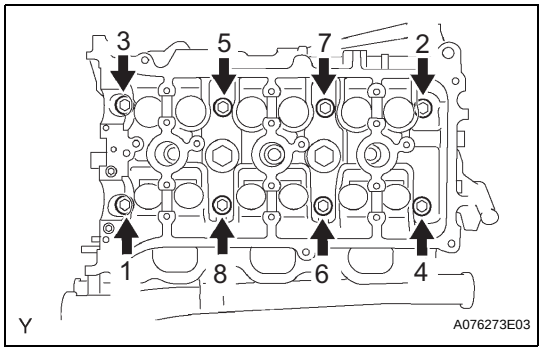

(b) Using several steps, loosen the 8 cylinder head bolts on the cylinder head uniformly with a 10 mm bi-hexagon wrench in the sequence shown in the illustration. Remove the 8 cylinder head bolts and 8 plate washers.

NOTICE:

- **Be careful not to drop the plate washers into the cylinder head.**
- **Cylinder head warpage or cracking could result from removing the bolts in the wrong order.**

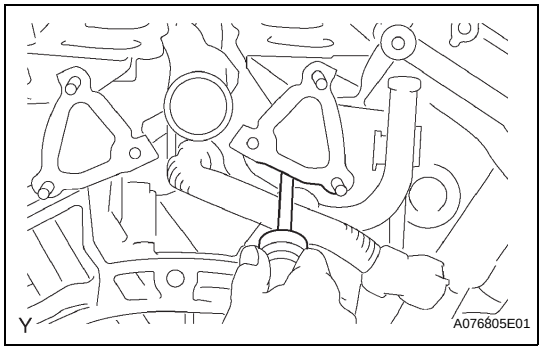

(c) Lift the cylinder head from the dowels on the cylinder block, and place the cylinder head on wooden blocks on a bench.

NOTICE:

Be careful not to drop the plate washers into the cylinder head.

If the cylinder head is difficult to lift off, pry between the cylinder head and cylinder block with a screwdriver.

22. REMOVE CYLINDER HEAD GASKET

INSPECTION

1. INSPECT CYLINDER HEAD SET BOLT

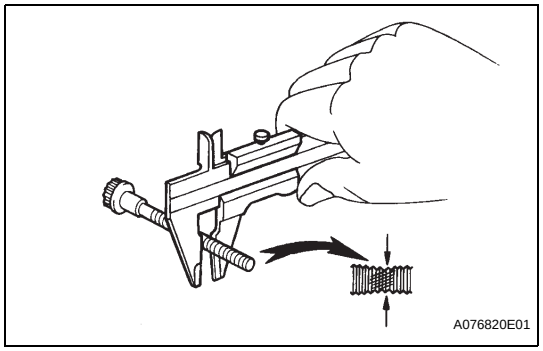

(a) Using a vernier caliper, measure the outside diameter of the bolt thread.

Standard outside diameter:
10.85 to 11.00 mm (0.4272 to 0.4331 in.)

Minimum outside diameter:
10.7 mm (0.421 in.)

EM

INSTALLATION

1. INSTALL CYLINDER HEAD GASKET

(a) Remove any old packing (FIPG) material and be careful not to drop any oil on the contact surfaces of the cylinder head and cylinder block.

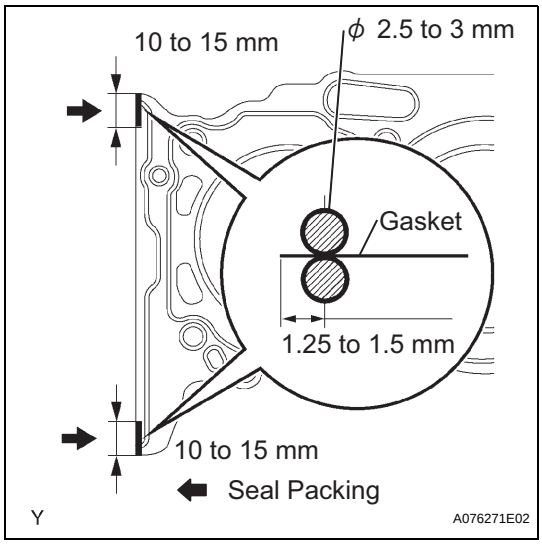

(b) Apply a continuous bead of the seal packing (diameter 2.5 to 3 mm (0.098 to 0.118 in.)) to a new cylinder head gasket as shown in the illustration.
Seal packing:
Part No. 08826-00080 or equivalent
NOTICE:
Install the cylinder head within 3 minutes of applying seal packing. Tighten the cylinder head bolts within 15 minutes of installing the cylinder head. Otherwise, the seal packing must be removed and reapplied.

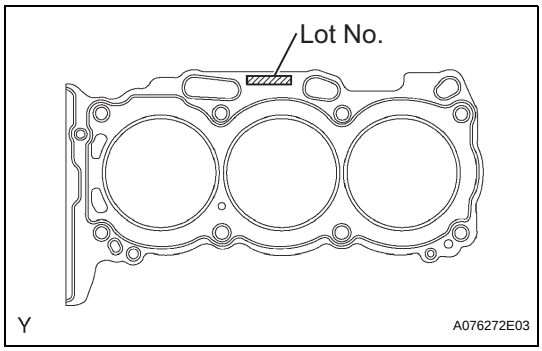

(c) Place the cylinder head gasket on the cylinder block surface with the Lot No. stamp upward.
NOTICE:
- **Be careful of the installation direction.**
- **Place the cylinder head carefully in order not to damage the gasket with the bottom part of the head.**

2. INSTALL CYLINDER HEAD SUB-ASSEMBLY

(a) Place the cylinder head on the cylinder head gasket.

(b) Install the 8 cylinder head bolts.
HINT:
- The cylinder head bolts are tightened in 2 successive steps (steps (3) and (5)).
- If any cylinder head bolts are broken or deformed, replace them.

(1) Apply a light coat of engine oil to the threads of the cylinder head bolts.

(2) Install the plate washer onto the cylinder head bolt.

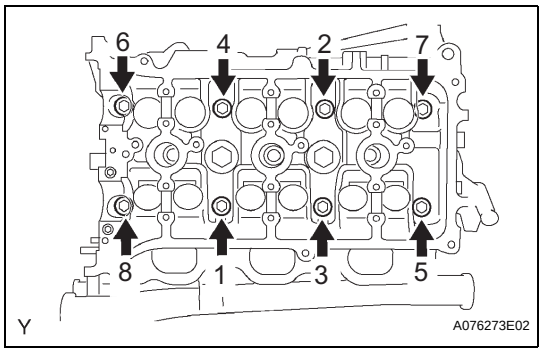

(3) Using several steps, tighten each bolt uniformly with a 10 mm bi-hexagon wrench in the sequence shown in the illustration.
Torque: 36 N*m (367 kgf*cm, 27 ft.*lbf)
If any cylinder head bolts do not meet the torque specification, replace them.
NOTICE:
Do not drop the washers into the cylinder head.

EM

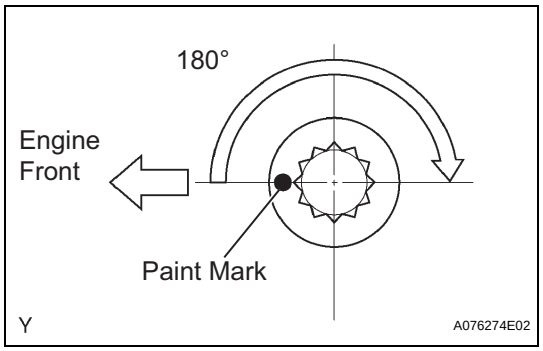

(4) Mark the front side of each cylinder head bolt with paint.
(5) Retighten the cylinder head bolts 180° as shown.
(6) Check that the painted marks are now at 180° from the engine front.

(c) Install the ground cables with the 2 bolts.
Torque: 8.0 N*m (82 kgf*cm, 71 in.*lbf)

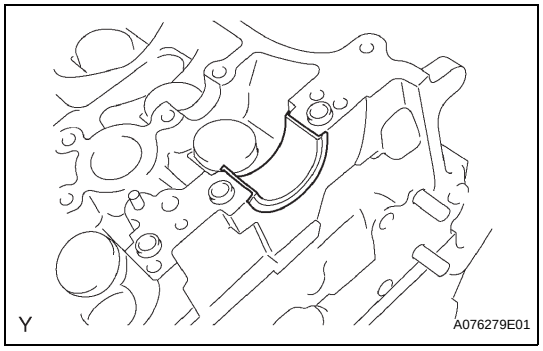

3. INSTALL NO.2 CAMSHAFT BEARING

(a) Install the camshaft bearing No. 2 onto the cylinder head.
NOTICE:
Clean the installation planes of the back side of the bearing and cylinder head and keep them free of oils and fats.

EM

4. INSTALL CAMSHAFTS

NOTICE:
Keep the camshaft level while it is being removed. The camshaft thrust clearance is very small and failing to keep it level could crack or damage the cylinder head journal surface, which receives the thrust. This could subsequently lead the camshaft to seize or break. Perform the following steps to avoid such problems.

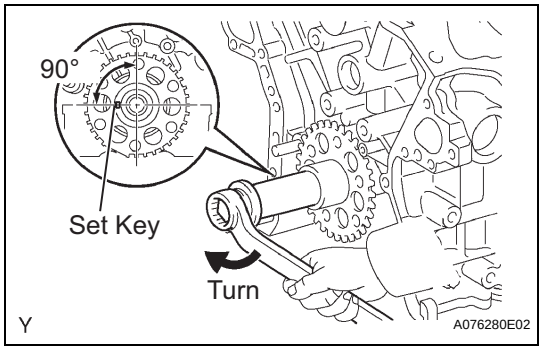

(a) Set the crankshaft position.
(1) Using the crankshaft pulley set bolt, turn the crankshaft, and set the crankshaft set key in the left horizontal position.
NOTICE:
Installing the crankshaft at the wrong angle could cause the piston head and valve head to come into contact with each other when installing the camshaft. This could cause damage, so always set the crankshaft at the correct angle.

(b) Apply new engine oil to the thrust portion and journal of the camshafts.

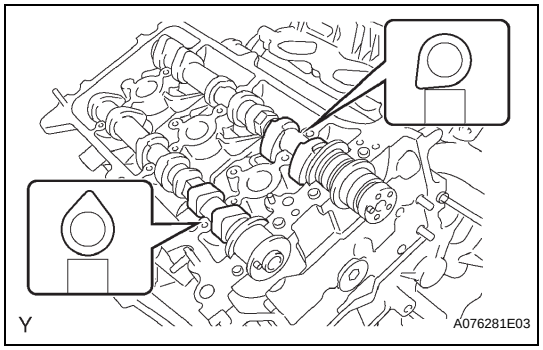

(c) Place the 2 camshafts onto the cylinder head with the cam lobes of No. 1 cylinder facing in the directions shown in the illustration.

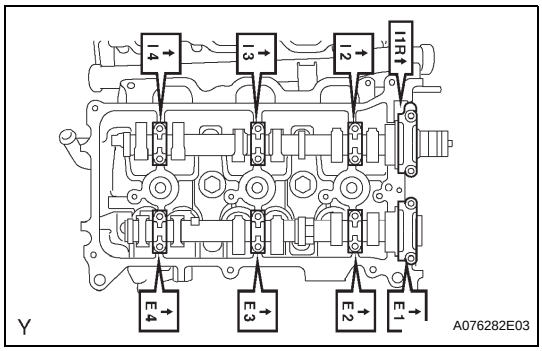

(d) Install the 8 bearing caps in the proper locations as shown.

(e) Apply a light coat of engine oil to the threads and under the heads of the bearing cap bolts.

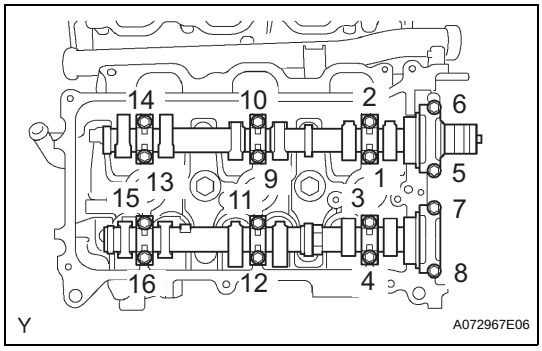

(f) Using several steps, uniformly install and tighten the 16 bearing cap bolts in the sequence shown in the illustration.
Torque: 9.0 N*m (92 kgf*cm, 80 in.*lbf) for 10 mm (0.39 in.) head
24 N*m (245 kgf*cm, 18 ft.*lbf) for 12 mm (0.47 in.) head

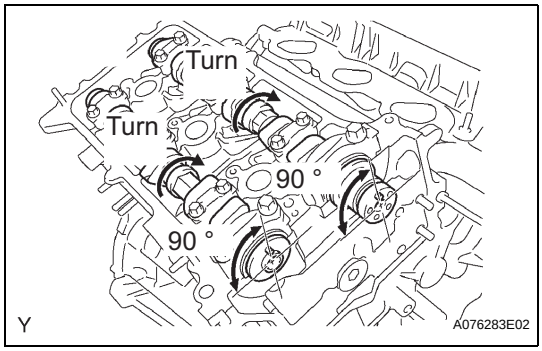

(g) Turn the camshafts clockwise until the knock pin comes to a position 90° to the cylinder head.

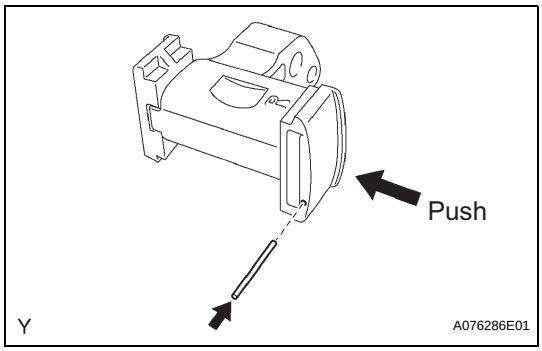

5. INSTALL NO.2 CHAIN TENSIONER ASSEMBLY

(a) While pushing in the tensioner, insert a pin of ϕ 1.0 mm (0.039 in.) into the hole to fix it.

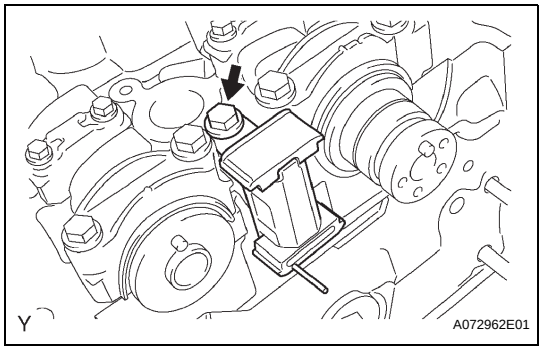

(b) Install the chain tensioner No. 2 with the bolt.
Torque: 19 N*m (194 kgf*cm, 14 ft.*lbf)

EM

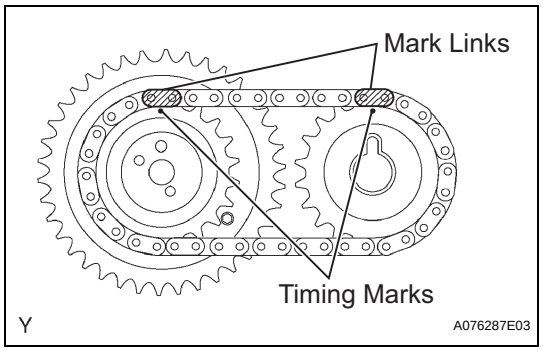

6. INSTALL CAMSHAFT TIMING GEARS AND NO.2 CHAIN (for Bank 1)

(a) Align the yellow mark links with the timing marks (1 dot mark) of camshaft timing gears as shown in the illustration.

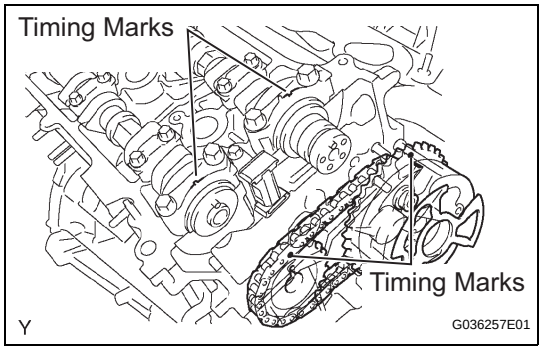

(b) Align the timing marks on the camshaft timing gears with the timing marks on the bearing caps, and install the camshaft timing gears with the chain onto the RH camshafts.

(c) Temporarily install the 2 camshaft timing gear bolts.
NOTICE:
Do not push the camshaft timing gear assembly onto the camshaft forcibly when installing it.

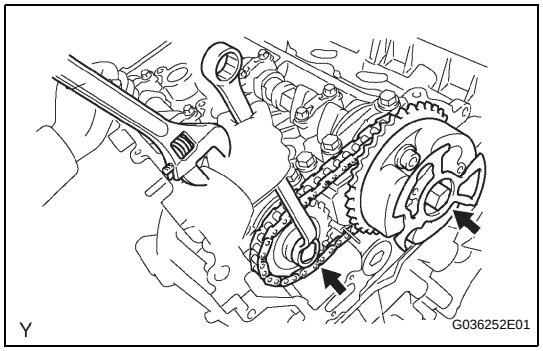

(d) Hold the hexagonal portion of the camshaft with a wrench, and tighten the 2 bolts.
Torque: 100 N*m (1,020 kgf*cm, 74 ft.*lbf)

(e) Remove the pin from the tensioner No. 2.

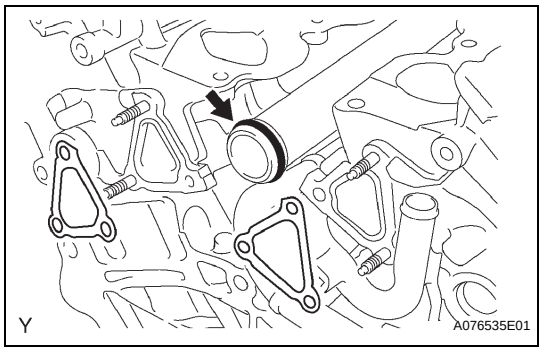

7. INSTALL WATER BY-PASS JOINT RR

(a) Install a new O-ring onto the water outlet pipe.

(b) Apply soapy water to the O-ring.

(c) Install 2 new gaskets and water by-pass joint rear with the 2 bolts and 4 nuts.
Torque: 9.0 N*m (92 kgf*cm, 80 in.*lbf)

(d) Connect the heater hose.

(e) Connect the engine coolant temperature sensor connector.

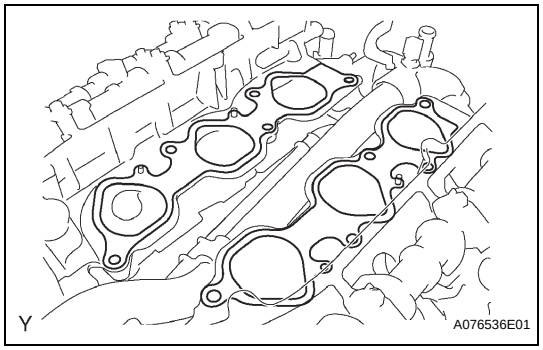

8. INSTALL INTAKE MANIFOLD

(a) Set a new gasket on each cylinder head.
NOTICE:
- **Align the port holes of the gasket and cylinder head.**
- **Be careful of the installation direction.**

(b) Set the intake manifold on the cylinder heads.

(c) Install and tighten the 10 bolts uniformly in several steps.
Torque: 26 N*m (265 kgf*cm, 19 ft.*lbf)

(d) Connect the 6 fuel injector connectors.

EM

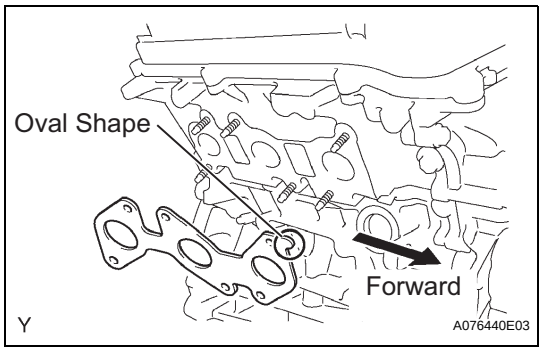

9. **CONNECT NO.2 FUEL PIPE SUB-ASSEMBLY**

10. **CONNECT NO.1 FUEL PIPE SUB-ASSEMBLY (See page FU-17)**

11. **INSTALL EXHAUST MANIFOLD SUB-ASSEMBLY RH**
    (a) Set a new gasket to the RH cylinder head with the oval shape facing forward.
    NOTICE:
    Be careful of the installation direction.
    (b) Install the exhaust manifold with the 6 nuts. Tighten the nuts uniformly in several steps.
    Torque: 21 N*m (214 kgf*cm, 16 ft.*lbf)
    (c) Connect the air fuel ratio sensor connector.

12. **INSTALL MANIFOLD STAY**
    (a) Install the manifold stay with the 3 bolts.
    Torque: 40 N*m (408 kgf*cm, 30 ft.*lbf)

13. **INSTALL FRONT EXHAUST PIPE ASSEMBLY**
    (See page EX-3)

14. **INSTALL NO.1 COOL AIR INLET**
    (a) Install the cool air inlet with the 2 bolts.
    Torque: 12 N*m (122 kgf*cm, 9.0 ft.*lbf)

15. **INSTALL CHAIN TENSIONER SLIPPER**

16. **INSTALL NO.1 CHAIN TENSIONER ASSEMBLY (See page EM-27)**

17. **INSTALL CHAIN SUB-ASSEMBLY**
    (See page EM-48)

18. **INSTALL TIMING CHIAN OR BELT COVER SUB-ASSEMBLY**
    LU-38

19. **INSTALL FRONT DIFFERENTIAL CARRIER ASSEMBLY (for 4WD)**
    (See page DF-38)

20. **INSTALL POWER STEERING LINK ASSEMBLY**
    (See page PS-67)

21. **INSTALL BATTERY**

22. **ADD ENGINE OIL (See page LU-5)**

23. **ADD ENGINE COOLANT (See page CO-3)**

24. **ADD DIFFERENTIAL OIL (for 4WD)**

25. **INSPECT DIFFERENTIAL OIL (for 4WD) (See page DF-8)**

26. **ADD POWER STEERING FLUID**

27. **BLEED POWER STEERING FLUID (See page PS-2)**

28. **CHECK FOR ENGINE OIL LEAKAGE**

29. **CHECK FOR ENGINE COOLANT LEAKAGE (See page CO-4)**

30. **CHECK FOR FUEL LEAKAGE**

31. **CHECK FOR EXHAUST GAS LEAKAGE**
32. **CHECK FOR POWER STEERING FLUID LEAKAGE**
33. **INSPECT AND ADJUST FRONT WHEEL ALIGNMENT** (See page SP-7)
34. **INSPECT IGNITION TIMING (See page EM-1)**
35. **INSPECT ENGINE IDLING SPEED (See page EM-2)**
36. **INSPECT CO/HC (See page EM-3)**
37. **REMOVE COMPRESSION (See page EM-2)**

CYLINDER HEAD (for Bank 2 2WD)

COMPONENTS

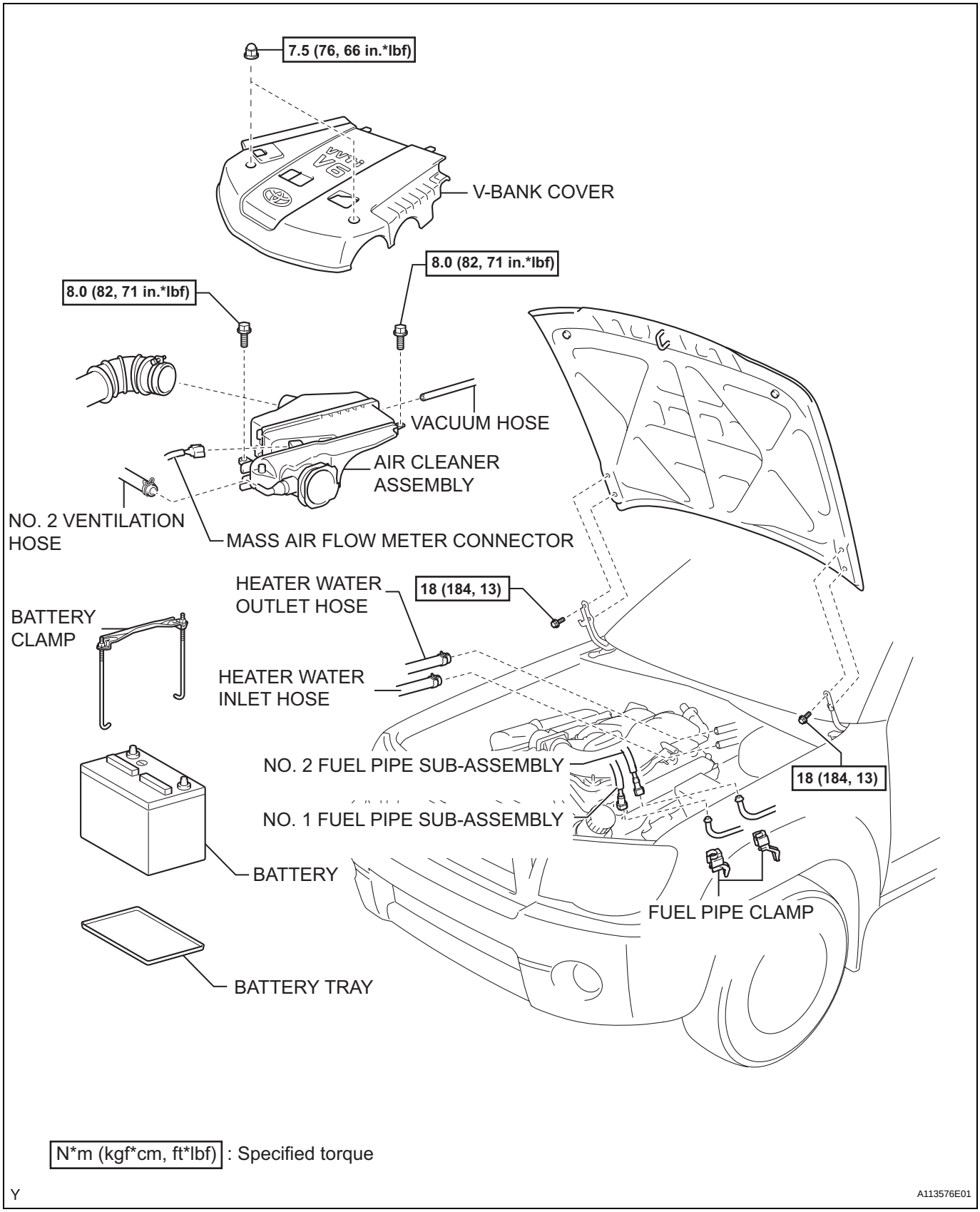

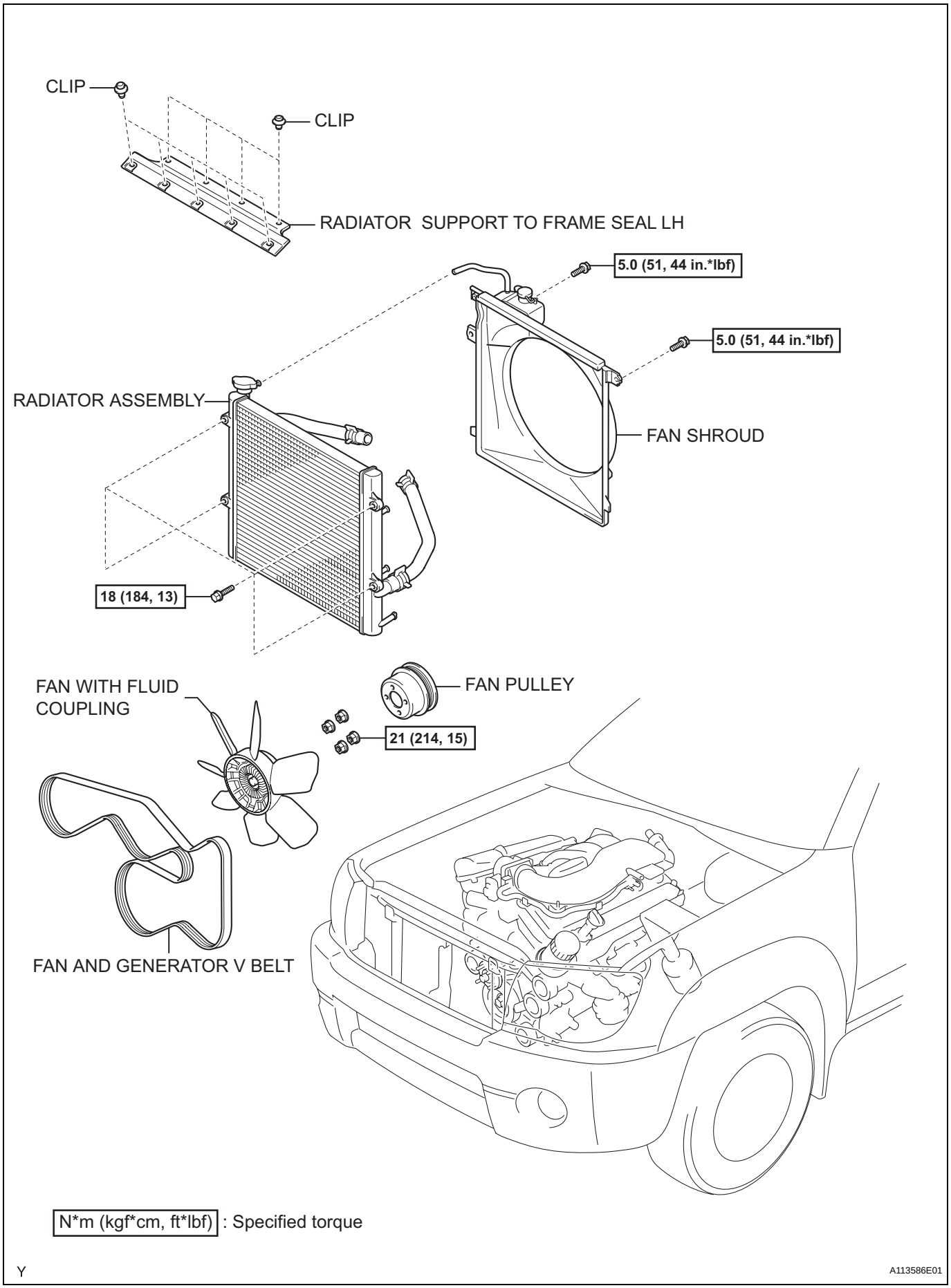
CLIP
CLIP
RADIATOR SUPPORT TO FRAME SEAL LH
5.0 (51, 44 in.*lbf)
5.0 (51, 44 in.*lbf)
RADIATOR ASSEMBLY
FAN SHROUD
18 (184, 13)
FAN WITH FLUID COUPLING
FAN PULLEY
21 (214, 15)
FAN AND GENERATOR V BELT
N*m (kgf*cm, ft*lbf) : Specified torque
Y
A113586E01

EM

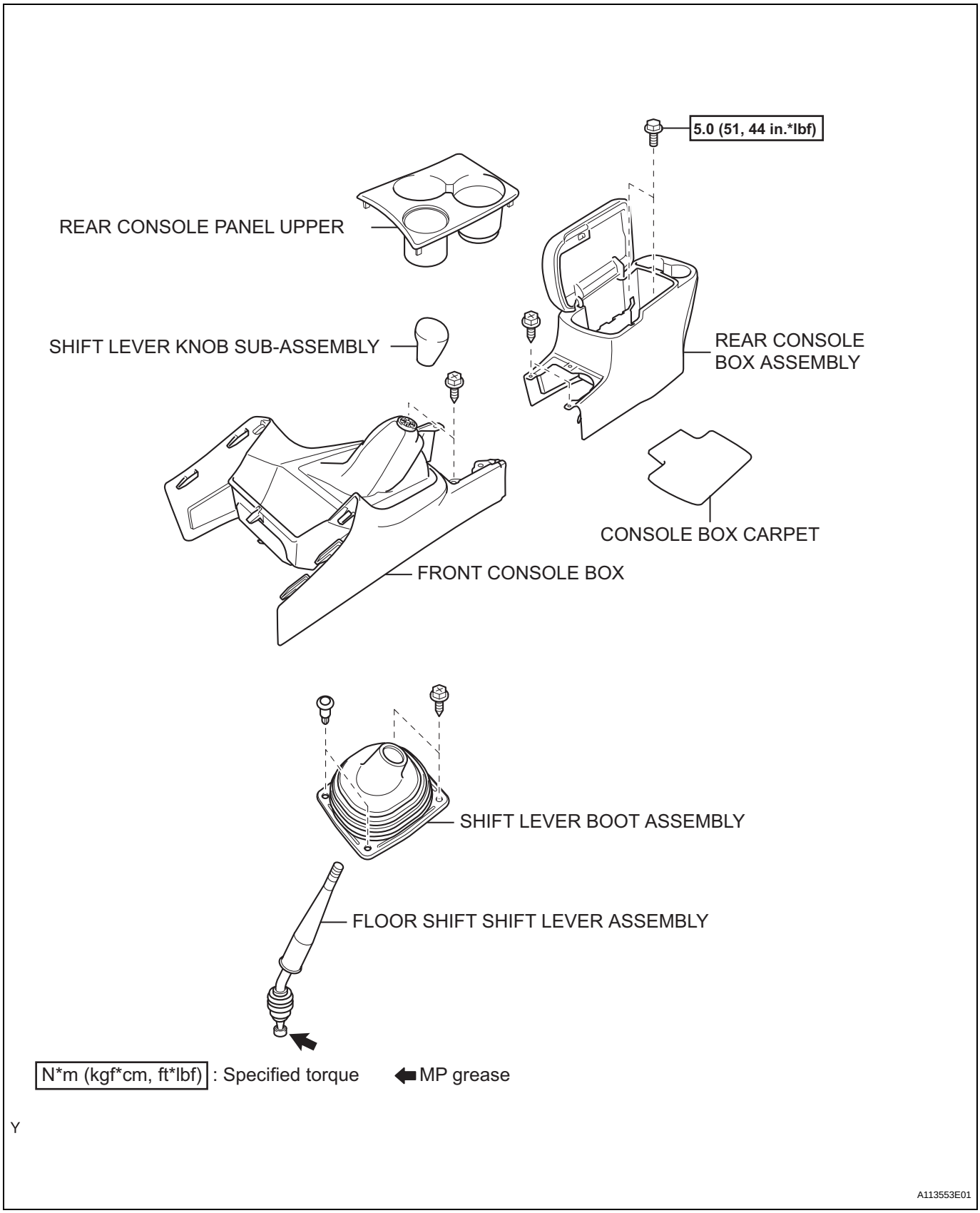
5.0 (51, 44 in.*lbf)
REAR CONSOLE PANEL UPPER
SHIFT LEVER KNOB SUB-ASSEMBLY
REAR CONSOLE BOX ASSEMBLY
CONSOLE BOX CARPET
FRONT CONSOLE BOX
SHIFT LEVER BOOT ASSEMBLY
FLOOR SHIFT SHIFT LEVER ASSEMBLY
N*m (kgf*cm, ft*lbf) : Specified torque
MP grease
A113553E01

EM

Y

2WD AND PRE RUNNER, MANUAL TRANSMISSION:

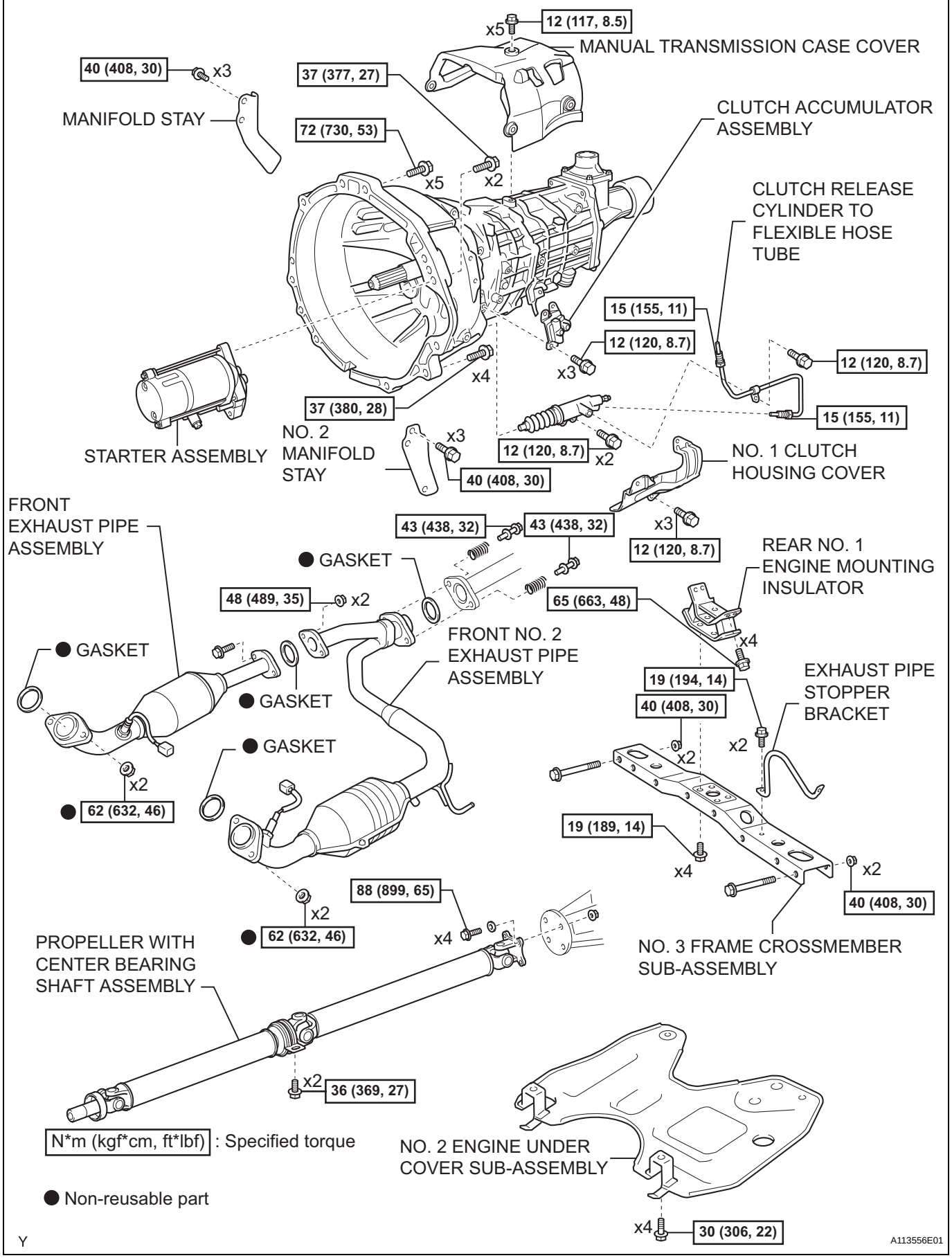

EM

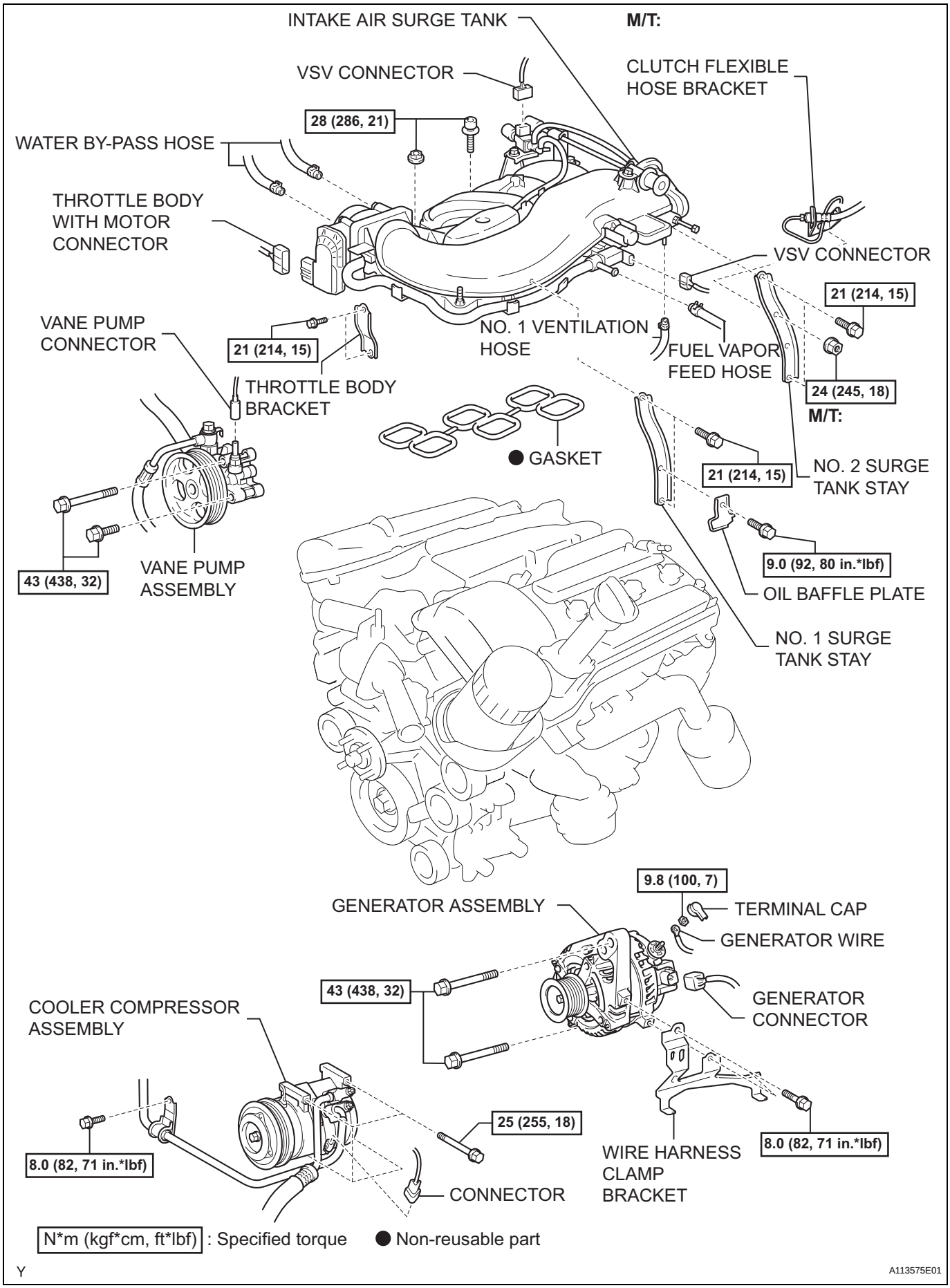
INTAKE AIR SURGE TANK
M/T:
VSV CONNECTOR
CLUTCH FLEXIBLE HOSE BRACKET
28 (286, 21)
WATER BY-PASS HOSE
THROTTLE BODY WITH MOTOR CONNECTOR
VSV CONNECTOR
21 (214, 15)
VANE PUMP CONNECTOR
21 (214, 15)
NO. 1 VENTILATION HOSE
FUEL VAPOR FEED HOSE
24 (245, 18)
M/T:
THROTTLE BODY BRACKET
GASKET
21 (214, 15)
NO. 2 SURGE TANK STAY
9.0 (92, 80 in.*lbf)
43 (438, 32)
VANE PUMP ASSEMBLY
OIL BAFFLE PLATE
NO. 1 SURGE TANK STAY
9.8 (100, 7)
GENERATOR ASSEMBLY
TERMINAL CAP
GENERATOR WIRE
43 (438, 32)
GENERATOR CONNECTOR
COOLER COMPRESSOR ASSEMBLY
25 (255, 18)
8.0 (82, 71 in.*lbf)
WIRE HARNESS CLAMP BRACKET
8.0 (82, 71 in.*lbf)
CONNECTOR
N*m (kgf*cm, ft*lbf) : Specified torque
Non-reusable part
Y
A113575E01

EM

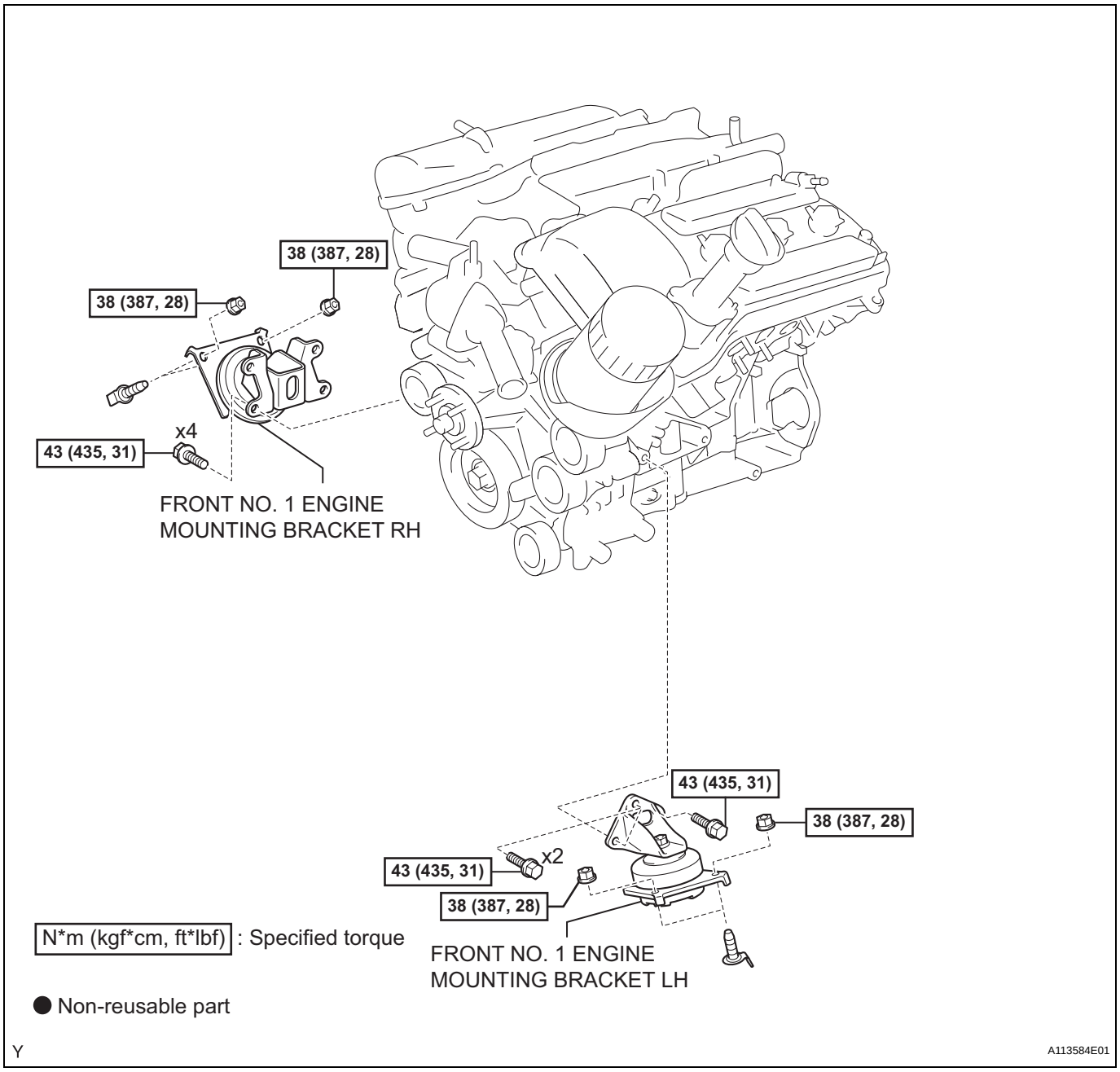
38 (387, 28)
38 (387, 28)
x4
43 (435, 31)
FRONT NO. 1 ENGINE
MOUNTING BRACKET RH
43 (435, 31)
38 (387, 28)
x2
43 (435, 31)
38 (387, 28)
FRONT NO. 1 ENGINE
MOUNTING BRACKET LH
N*m (kgf*cm, ft*lbf) : Specified torque
● Non-reusable part
Y
A113584E01

EM

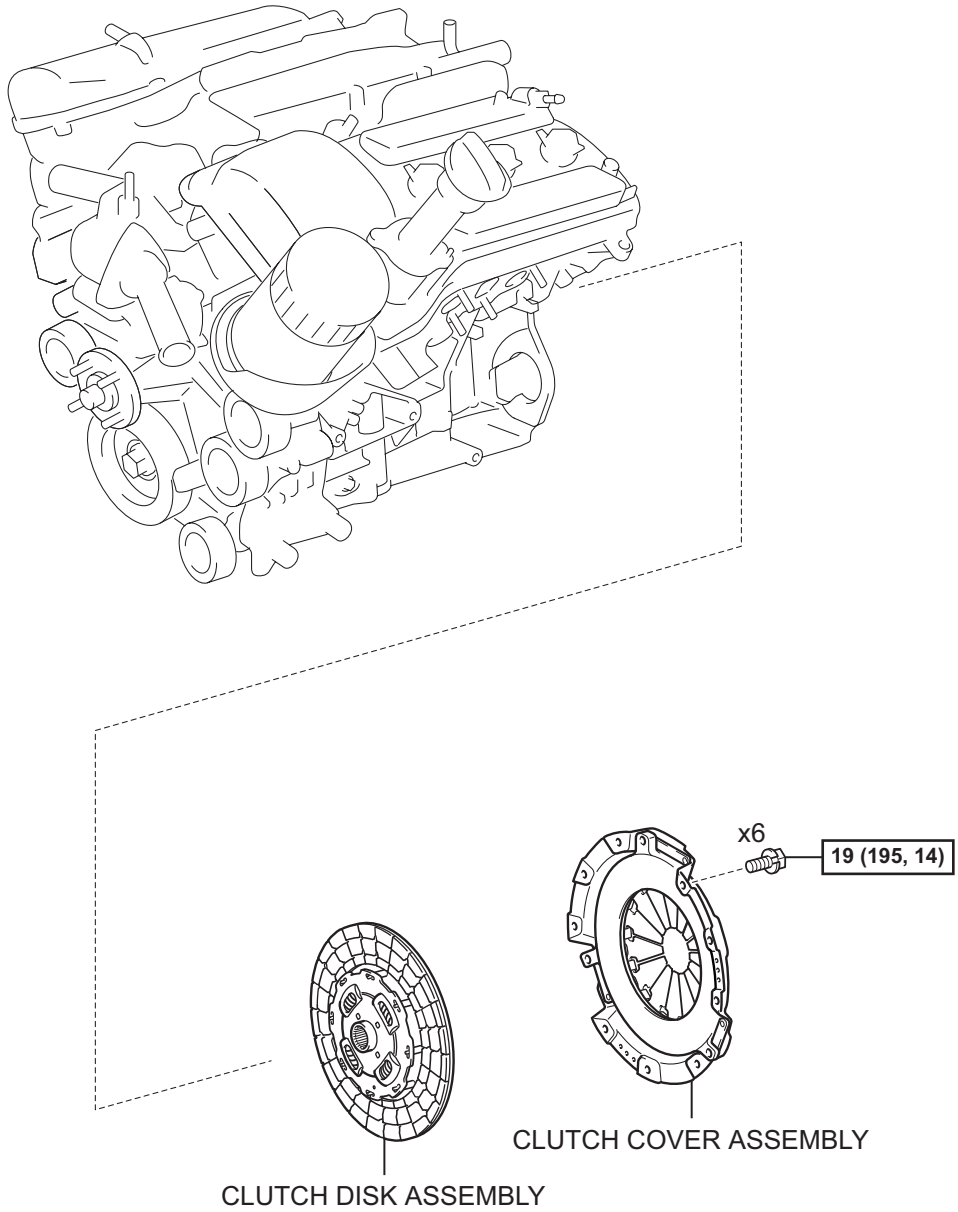

N*m (kgf*cm, ft*lbf) : Specified torque

Y

A113585E01

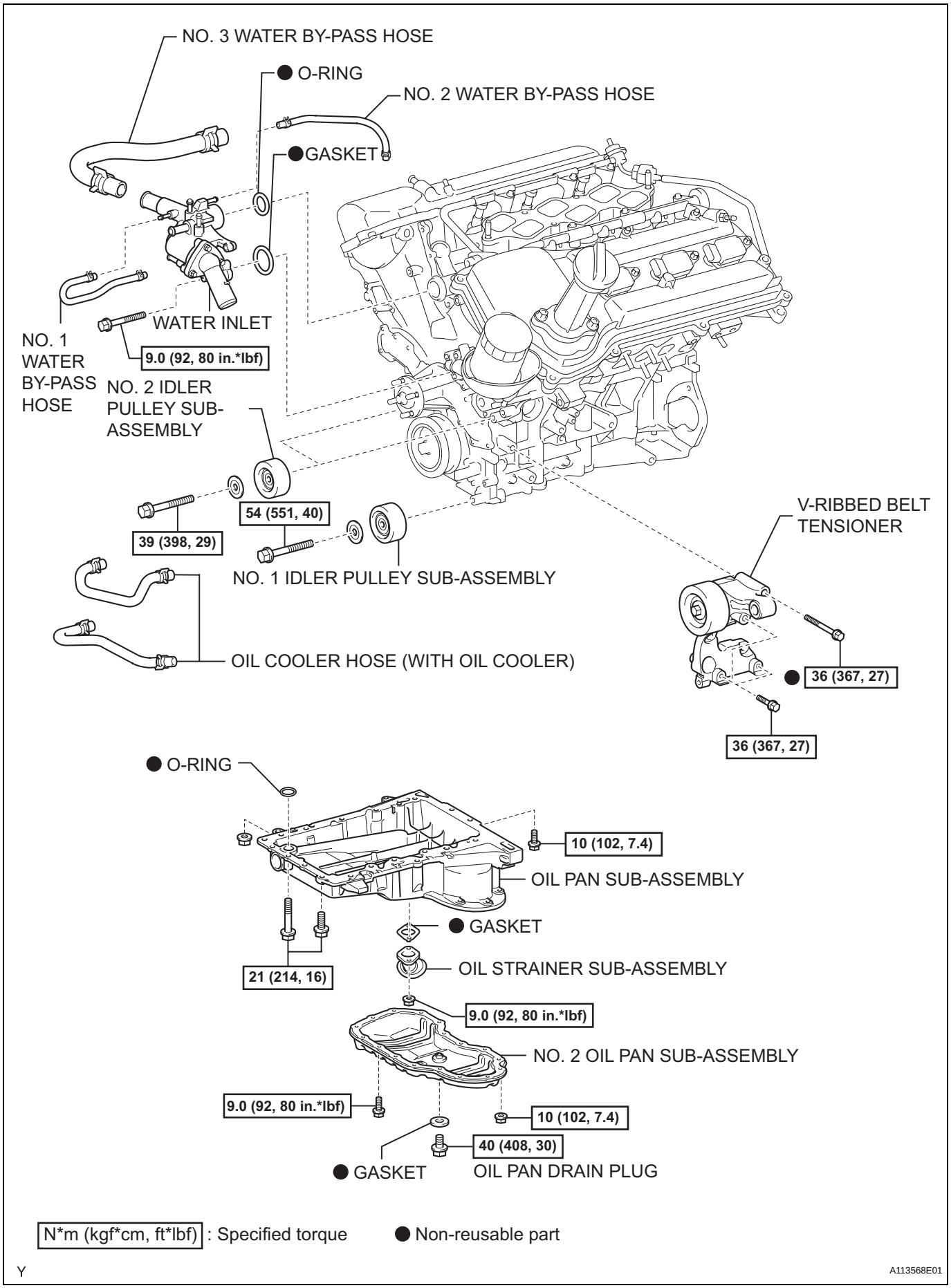
NO. 3 WATER BY-PASS HOSE
● O-RING
NO. 2 WATER BY-PASS HOSE
●GASKET
WATER INLET
NO. 1 WATER BY-PASS HOSE
9.0 (92, 80 in.*lbf)
NO. 2 IDLER PULLEY SUB-ASSEMBLY
39 (398, 29)
54 (551, 40)
NO. 1 IDLER PULLEY SUB-ASSEMBLY
V-RIBBED BELT TENSIONER
OIL COOLER HOSE (WITH OIL COOLER)
● 36 (367, 27)
36 (367, 27)
● O-RING
10 (102, 7.4)
OIL PAN SUB-ASSEMBLY
● GASKET
OIL STRAINER SUB-ASSEMBLY
21 (214, 16)
9.0 (92, 80 in.*lbf)
NO. 2 OIL PAN SUB-ASSEMBLY
9.0 (92, 80 in.*lbf)
10 (102, 7.4)
40 (408, 30)
● GASKET
OIL PAN DRAIN PLUG
N*m (kgf*cm, ft*lbf) : Specified torque
● Non-reusable part
Y
A113568E01

EM

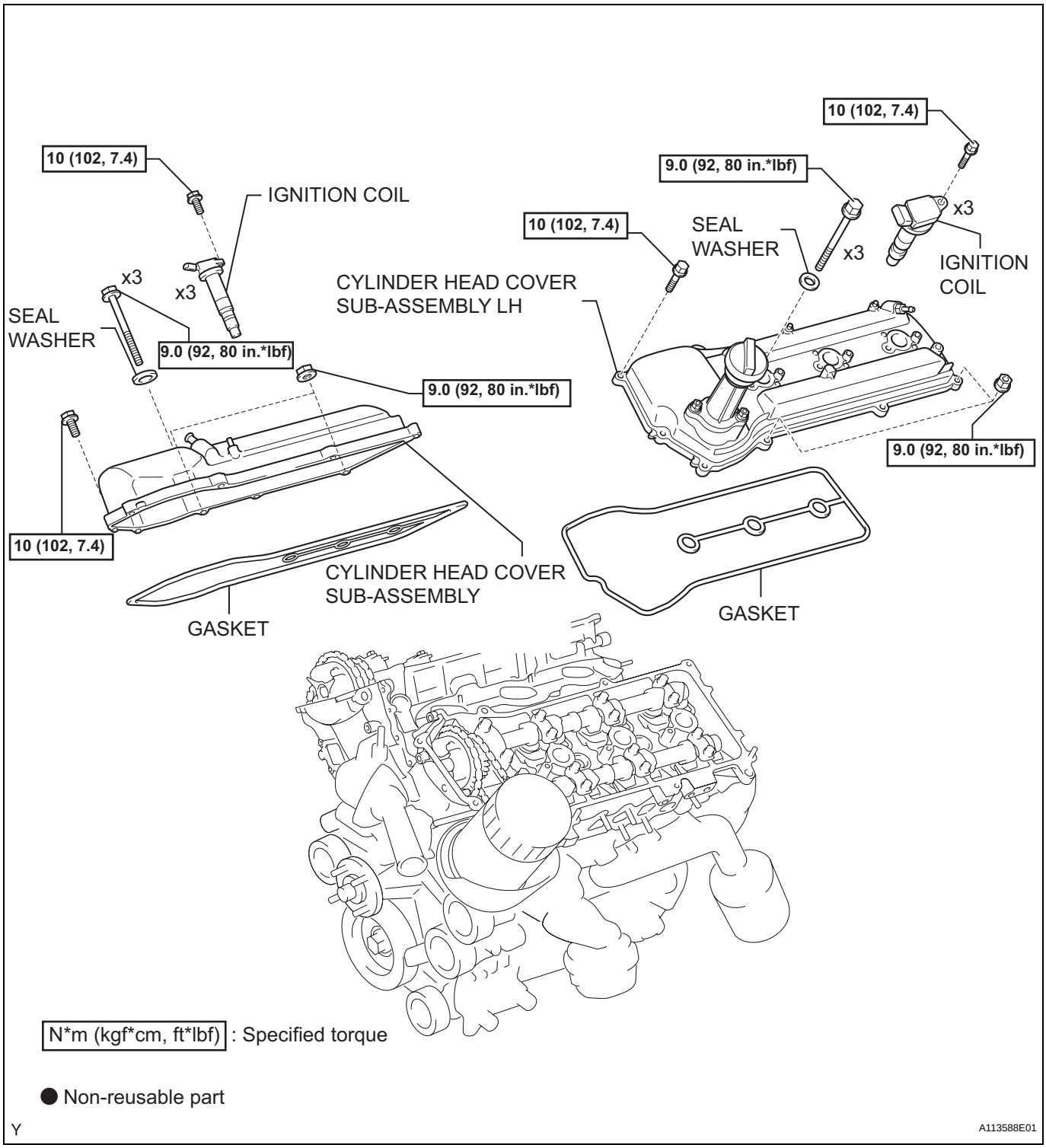
10 (102, 7.4)
IGNITION COIL
x3
x3
SEAL WASHER
9.0 (92, 80 in.*lbf)
9.0 (92, 80 in.*lbf)
10 (102, 7.4)
CYLINDER HEAD COVER SUB-ASSEMBLY
GASKET
10 (102, 7.4)
9.0 (92, 80 in.*lbf)
10 (102, 7.4)
SEAL WASHER
x3
x3
IGNITION COIL
CYLINDER HEAD COVER SUB-ASSEMBLY LH
9.0 (92, 80 in.*lbf)
GASKET
N*m (kgf*cm, ft*lbf) : Specified torque
● Non-reusable part
Y
A113588E01

EM

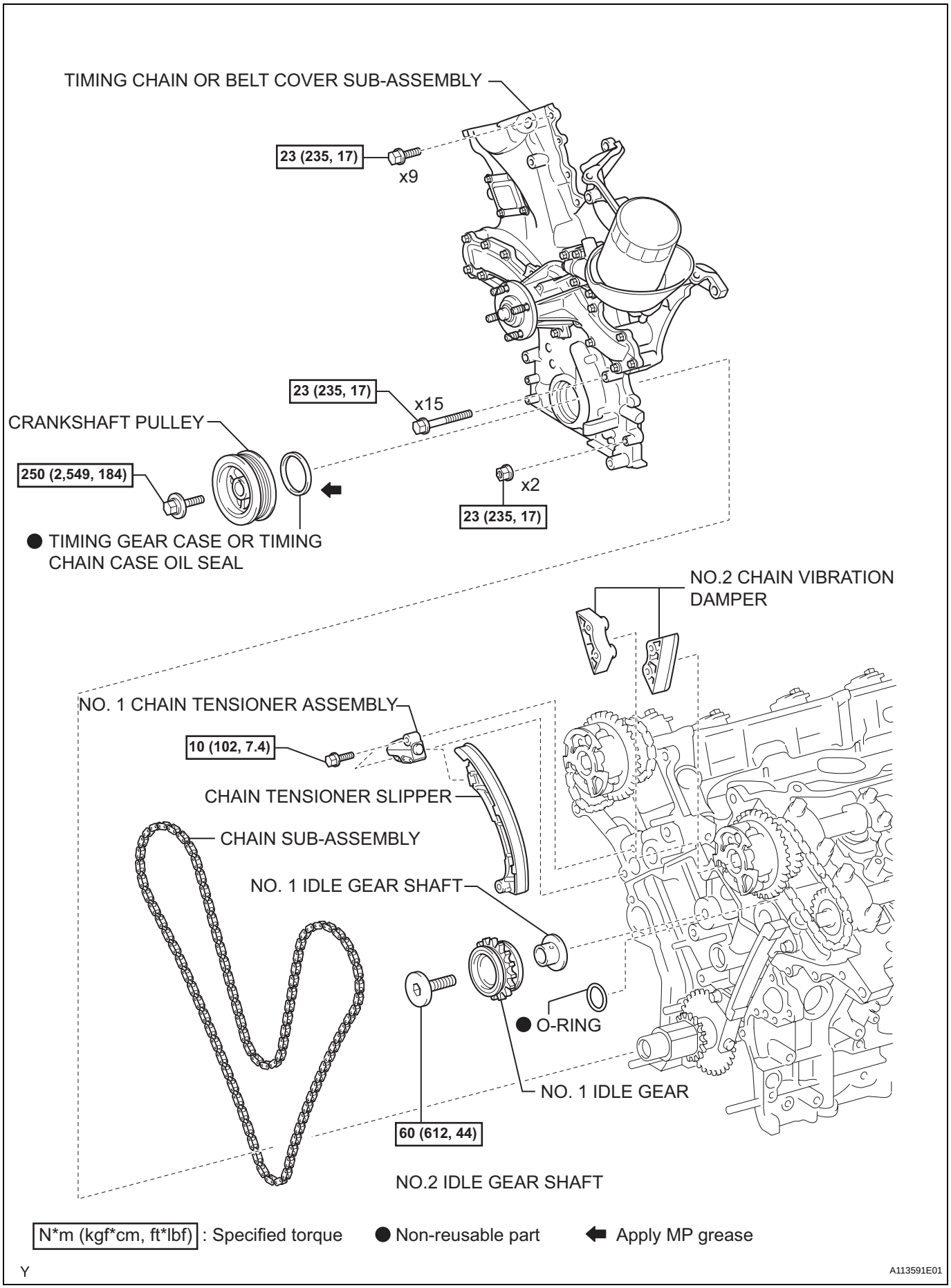
TIMING CHAIN OR BELT COVER SUB-ASSEMBLY
23 (235, 17)
x9
23 (235, 17)
x15
CRANKSHAFT PULLEY
250 (2,549, 184)
x2
23 (235, 17)
● TIMING GEAR CASE OR TIMING CHAIN CASE OIL SEAL
NO.2 CHAIN VIBRATION DAMPER
NO. 1 CHAIN TENSIONER ASSEMBLY
10 (102, 7.4)
CHAIN TENSIONER SLIPPER
CHAIN SUB-ASSEMBLY
NO. 1 IDLE GEAR SHAFT
● O-RING
NO. 1 IDLE GEAR
60 (612, 44)
NO.2 IDLE GEAR SHAFT
N*m (kgf*cm, ft*lbf) : Specified torque
● Non-reusable part
Apply MP grease
Y
A113591E01

EM

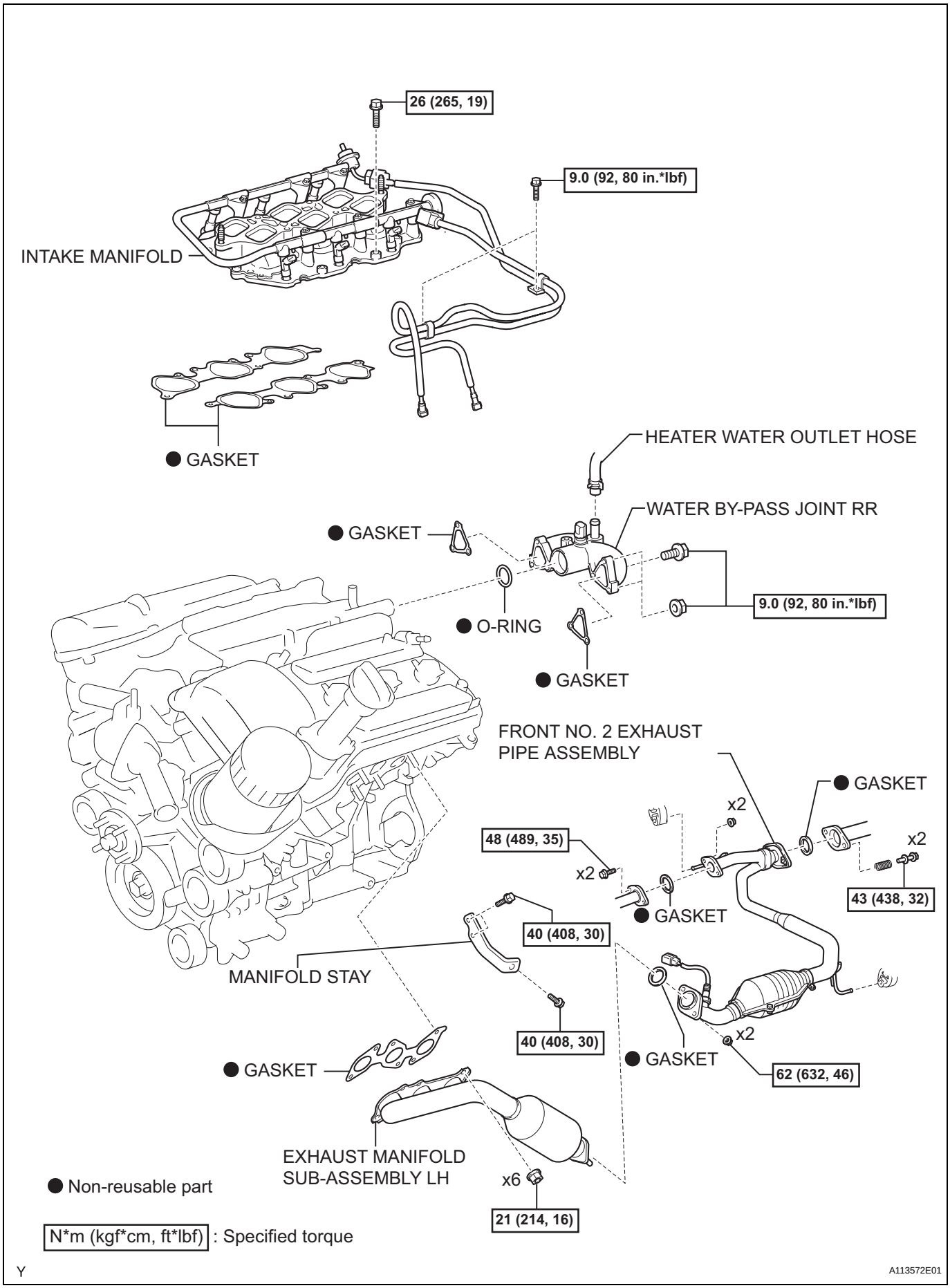
26 (265, 19)
9.0 (92, 80 in.*lbf)
INTAKE MANIFOLD
GASKET
HEATER WATER OUTLET HOSE
WATER BY-PASS JOINT RR
GASKET
9.0 (92, 80 in.*lbf)
O-RING
GASKET
FRONT NO. 2 EXHAUST PIPE ASSEMBLY
GASKET
x2
48 (489, 35)
x2
x2
43 (438, 32)
GASKET
40 (408, 30)
MANIFOLD STAY
40 (408, 30)
x2
GASKET
GASKET
62 (632, 46)
EXHAUST MANIFOLD SUB-ASSEMBLY LH
x6
21 (214, 16)
Non-reusable part
N*m (kgf*cm, ft*lbf) : Specified torque
Y
A113572E01

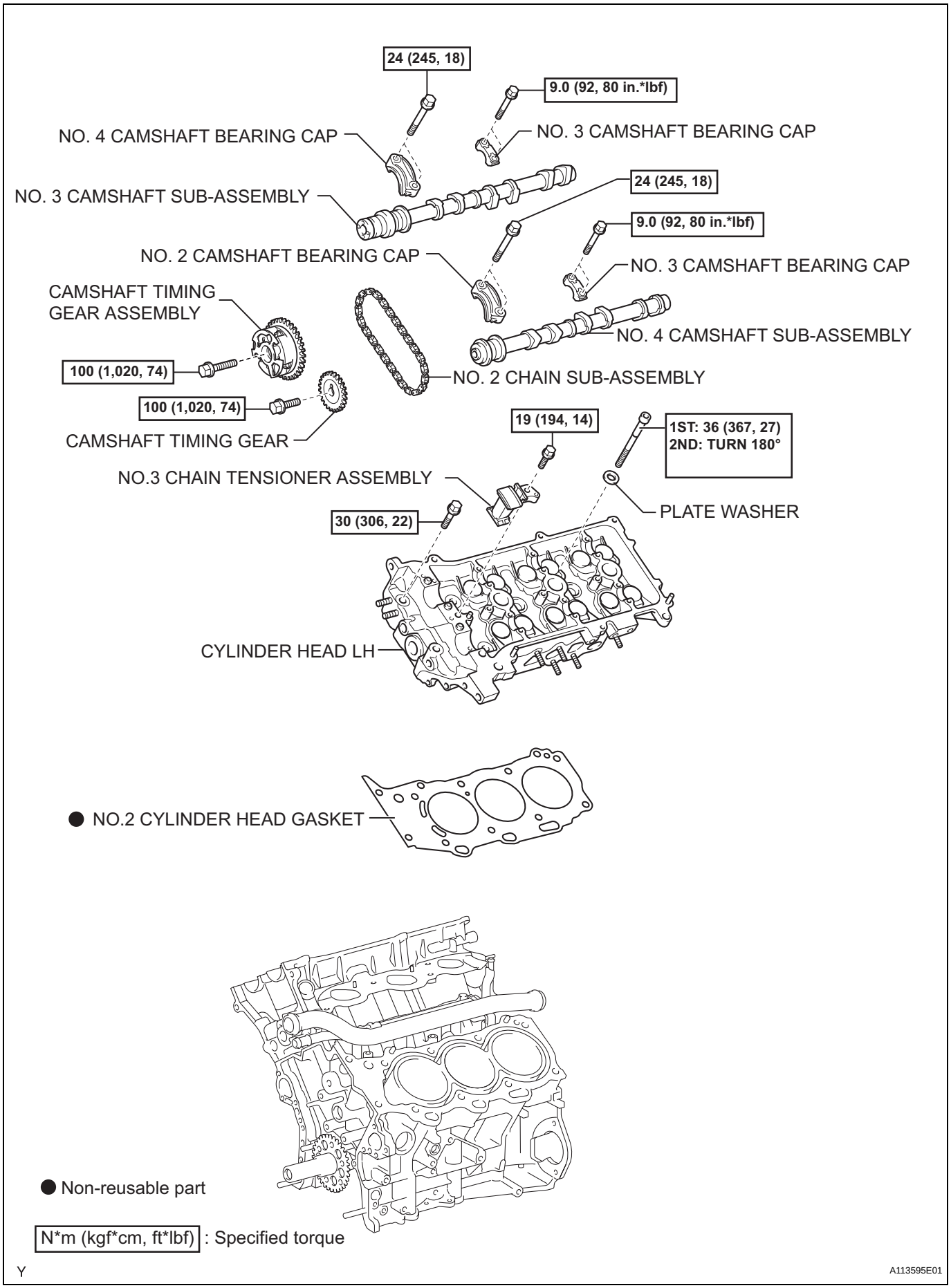
24 (245, 18)
9.0 (92, 80 in.*lbf)
NO. 4 CAMSHAFT BEARING CAP
NO. 3 CAMSHAFT BEARING CAP
NO. 3 CAMSHAFT SUB-ASSEMBLY
24 (245, 18)
9.0 (92, 80 in.*lbf)
NO. 2 CAMSHAFT BEARING CAP
NO. 3 CAMSHAFT BEARING CAP
CAMSHAFT TIMING GEAR ASSEMBLY
NO. 4 CAMSHAFT SUB-ASSEMBLY
100 (1,020, 74)
NO. 2 CHAIN SUB-ASSEMBLY
100 (1,020, 74)
19 (194, 14)
1ST: 36 (367, 27)
2ND: TURN 180°
CAMSHAFT TIMING GEAR
NO.3 CHAIN TENSIONER ASSEMBLY
PLATE WASHER
30 (306, 22)
CYLINDER HEAD LH
● NO.2 CYLINDER HEAD GASKET
● Non-reusable part
N*m (kgf*cm, ft*lbf) : Specified torque
Y
A113595E01

EM

EM

REMOVAL

1. **DISCHARGE FUEL SYSTEM PRESSURE**
   (See page FU-1)
2. **DRAIN ENGINE COOLANT (See page CO-3)**
3. **DRAIN ENGINE OIL (See page LU-4)**
4. **REMOVE ENGINE ASSEMBLY**
   (See page EM-186)
5. **REMOVE TIMING CHAIN OR BELT COVER SUB-ASSEMBLY**
   (See page LU-34)
6. **REMOVE CHAIN SUB-ASSEMBLY**
   (See page EM-44)
7. **REMOVE NO.1 COOL AIR INLET**
   (a) Remove the 2 bolts, then remove the cool air inlet.
8. **REMOVE FRONT NO.2 EXHAUST PIPE ASSEMBLY**
   (See page EX-3)
9. **REMOVE MANIFOLD STAY**
   (a) Remove the 3 bolts, then remove the exhaust manifold stay.
10. **REMOVE EXHAUST MANIFOLD SUB-ASSEMBLY LH**
    (a) Disconnect the air fuel ratio sensor connector.
    (b) Remove the 6 nuts, then remove the exhaust manifold and gasket.
11. **REMOVE INTAKE MANIFOLD (See page EM-93)**
12. **REMOVE WATER BY-PASS JOINT RR (See page EM-93)**
13. **REMOVE NO.1 CHAIN VIBRATION DAMPER**
    (a) Remove the 2 bolts, then remove the chain vibration damper No. 1.
14. **REMOVE CAMSHAFT TIMING GEARS AND NO.2 CHAIN (for Bank 2)**
    (a) While pushing down the chain tensioner No. 2, insert a pin of ϕ 10. mm (0.039 in.) into the hole to fix it.

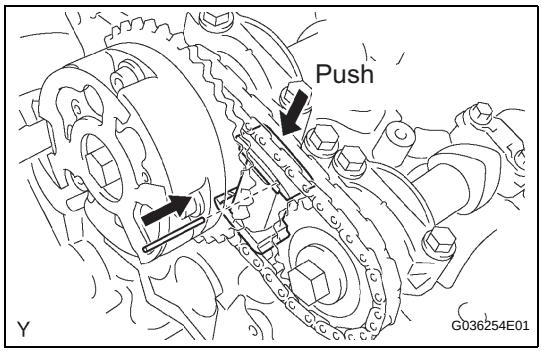

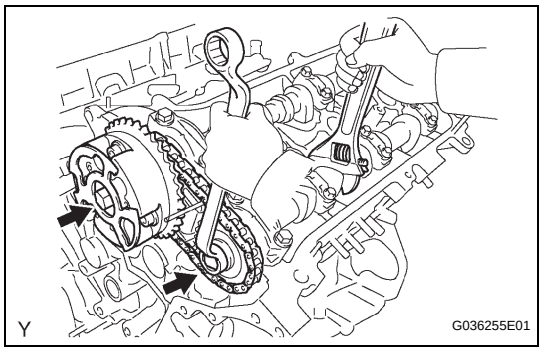

(b) Hold the hexagonal portion of the camshaft with a wrench.
NOTICE:
Be careful not to damage the cylinder head and valve lifter with the wrench.

(c) Remove the 2 bolts, then remove the camshaft timing gear, camshaft timing gear assembly and timing chain No. 2.
NOTICE:
Do not disassemble the camshaft timing gear assembly.

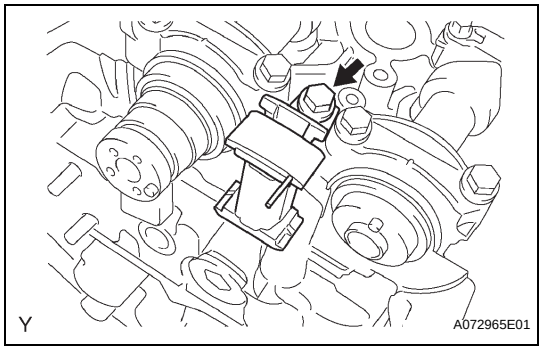

15. REMOVE NO.2 CHAIN TENSIONER ASSEMBLY

(a) Remove the bolt, then remove the chain tensioner No. 3.

16. REMOVE CAMSHAFTS

NOTICE:
Keep the camshaft level while it is being removed. The camshaft thrust clearance is very small and failing to keep it level could crack or damage the cylinder head journal surface, which receives the thrust. This could subsequently lead the camshaft to seize or break. Perform the following steps to avoid such problems.

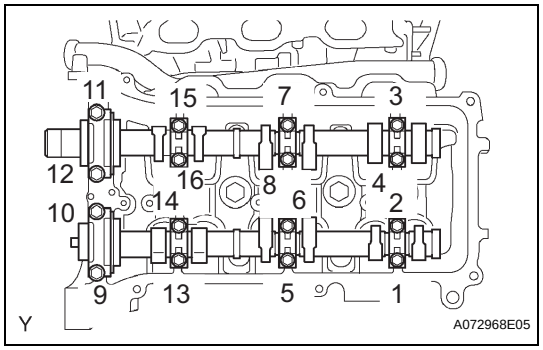

(a) Using several steps, uniformly loosen and remove the 16 bearing cap bolts in the sequence shown in the illustration.

(b) Remove the 8 bearing caps and 2 camshafts.

17. REMOVE CYLINDER HEAD LH

(a) Remove the bolt, then separate the ground cable.

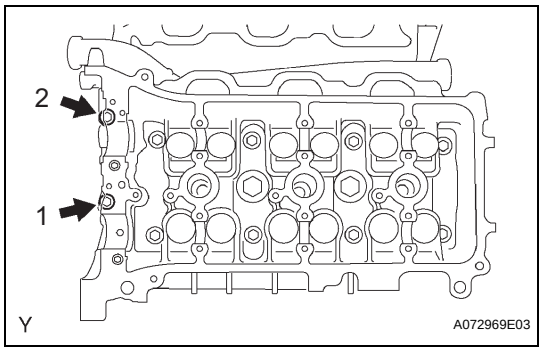

(b) Using several steps, remove the 2 cylinder head bolts on the cylinder head in the sequence shown in the illustration.

EM

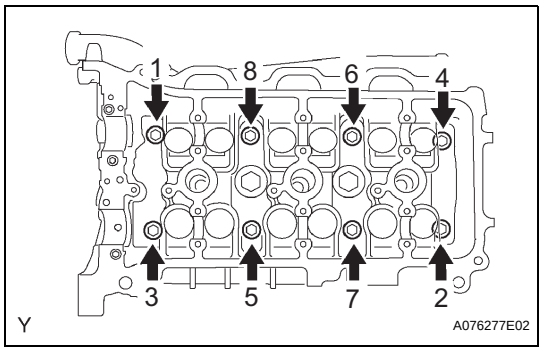

(c) Using several steps, uniformly loosen the 8 cylinder head bolts on the cylinder head with a 10 mm bi-hexagon wrench in the sequence shown in the illustration. Remove the 8 cylinder head bolts and 8 plate washers.

NOTICE:

- **Be careful not to drop the plate washers into the cylinder head.**
- **Cylinder head warpage or cracking could result form removing the bolts in the wrong order.**

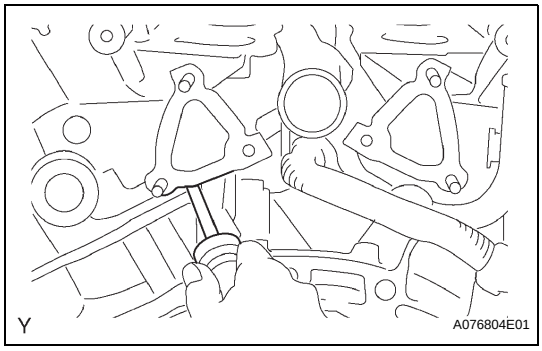

(d) Lift the cylinder head from the dowels on the cylinder block, and place the cylinder head on wooden blocks on a bench.

NOTICE:

Be careful not to drop the plate washers into the cylinder head.

If the cylinder head is difficult to remove, pry between the cylinder head and cylinder block with a screwdriver.

18. REMOVE NO.2 CYLINDER HEAD GASKET

INSPECTION

1. INSPECT CYLINDER HEAD SET BOLT

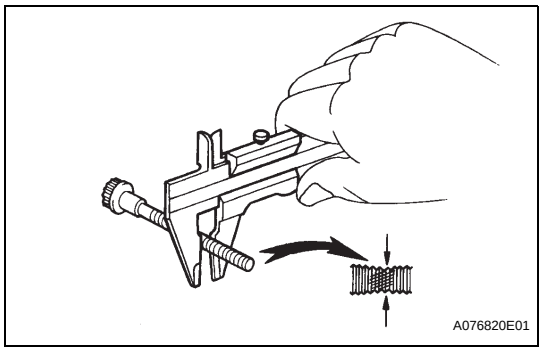

(a) Using vernier calipers, measure the outside diameter of the bolt thread.

Standard outside diameter:
10.85 to 11.00 mm (0.4272 to 0.4331 in.)

Minimum outside diameter:
10.7 mm (0.421 in.)

EM

INSTALLATION

1. INSTALL NO.2 CYLINDER HEAD GASKET

(a) Remove any old packing (FIPG) material and be careful not to drop any oil on the contact surface of the cylinder head and cylinder block.

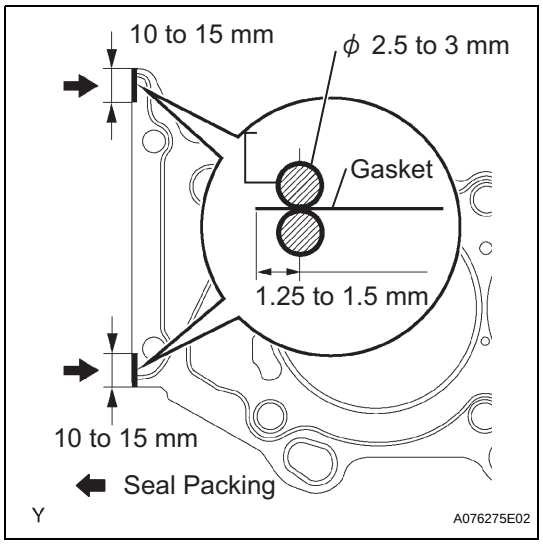

(b) Apply a continuous bead of seal packing (diameter 2.5 to 3.0 mm (0.098 to 0.118 in.)) to a new cylinder head gasket as shown in the illustration.
Seal packing:
Part No. 08826-00080 or equivalent
NOTICE:
Install the cylinder head within 3 minutes of applying the seal packing. Tighten the cylinder head bolts within 15 minutes of installing the cylinder head. Otherwise, the seal packing must be removed and reapplied.

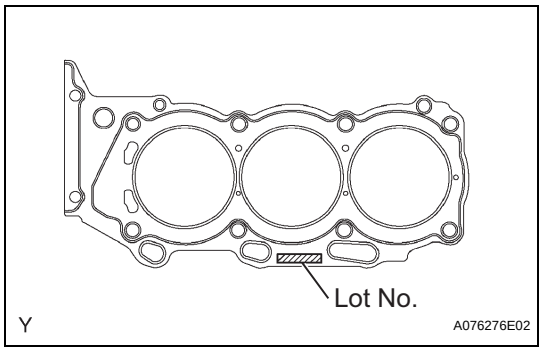

(c) Place the cylinder head gasket on the cylinder block surface with the Lot No. stamp upward.
NOTICE:
- **Be careful of the installation direction.**
- **Place the cylinder head carefully in order not to damage the gasket with the bottom part of the head.**

2. INSTALL CYLINDER HEAD LH

(a) Place the cylinder head on the cylinder head gasket.

(b) Install the 8 cylinder head bolts.
HINT:
- The cylinder head bolts are tightened in 2 successive steps (steps (3) and (5)).
- If any cylinder head bolts are broken or deformed, replace them.

(1) Apply a light coat of engine oil to the threads of the cylinder head bolts.

(2) Install the plate washer onto the cylinder head bolt.

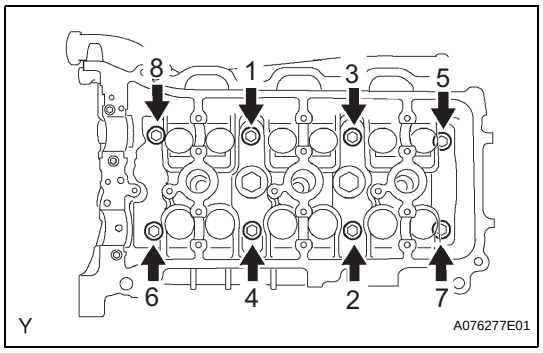

(3) Using several steps, tighten each bolt uniformly with a 10 mm bi-hexagon wrench in the sequence shown in the illustration.
Torque: 36 N*m (367 kgf*cm, 27 ft.*lbf)
If any cylinder head bolts do not meet the torque specification, replace them.
NOTICE:
Do not drop the washers into the cylinder head.

EM

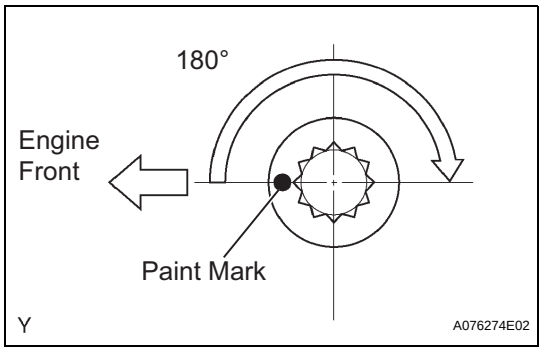

(4) Mark the front side of each cylinder head bolt with paint.
(5) Retighten the cylinder head bolts 180° as shown.
(6) Check that the painted marks are now at 180° from the engine front.

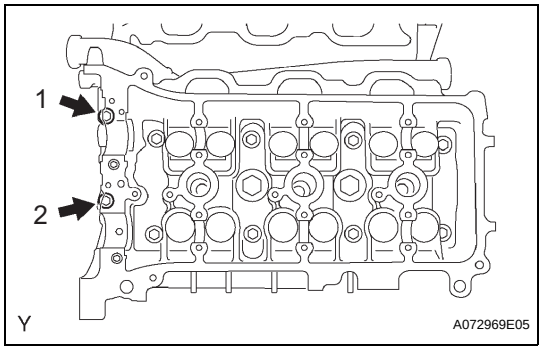

(c) Install the 2 cylinder head bolts.
(1) Apply a light coat of engine oil to the threads of the cylinder head bolts.
(2) Using several steps, uniformly install and tighten the 2 cylinder head bolts in the sequence shown in the illustration.
Torque: 30 N*m (306 kgf*cm, 22 ft.*lbf)

(d) Install the ground cables with the 2 bolts.
Torque: 8.0 N*m (82 kgf*cm, 71 in.*lbf)

3. INSTALL CAMSHAFTS

NOTICE:
Keep the camshaft level while it is being removed. The camshaft thrust clearance is very small and failing to keep it level could crack or damage the cylinder head journal surface, which receives the thrust. This could subsequently lead the camshaft to seize or break. Perform the following steps to avoid such problems.

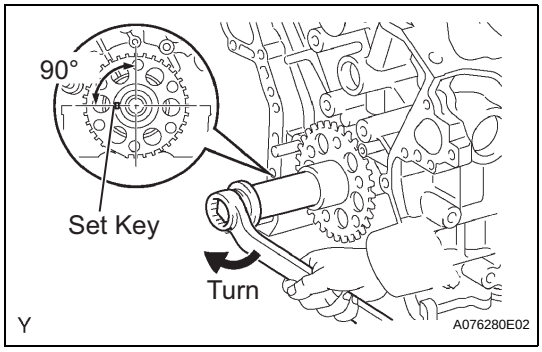

(a) Set the crankshaft position.
(1) Using the crankshaft pulley set bolt, turn the crankshaft, and set the crankshaft set key in the left horizontal position.
NOTICE:
Installing the crankshaft at the wrong angle could cause the piston head and valve head to come into contact with each other when installing the camshaft. This could cause damage, so always set the crankshaft at the correct angle.

(b) Apply new engine oil to the thrust portion and journal of the camshafts.

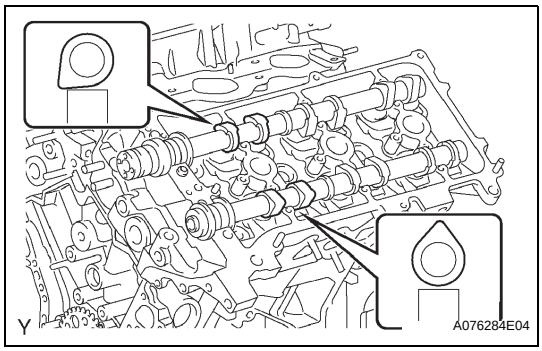

(c) Place the 2 camshafts onto the cylinder head with the cam lobes of No. 1 cylinder facing in the directions as shown in the illustration.

EM

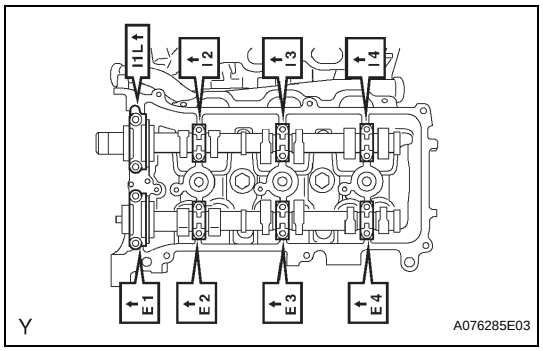

(d) Install the 8 bearing caps in the proper locations as shown.

(e) Apply a light coat of engine oil to the threads and under the heads of the bearing cap bolts.

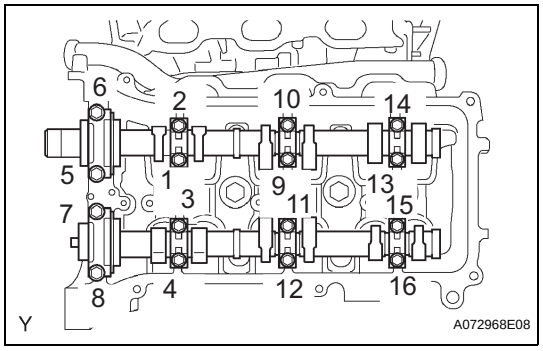

(f) Using several steps, uniformly install and tighten the 16 bearing cap bolts in the sequence shown in the illustration.
Torque: 9.0 N*m (92 kgf*cm, 80 in.*lbf) for 10 mm (0.39 in.) head
24 N*m (245 kgf*cm, 18 ft.*lbf) for 12 mm (0.47 in.) head

EM

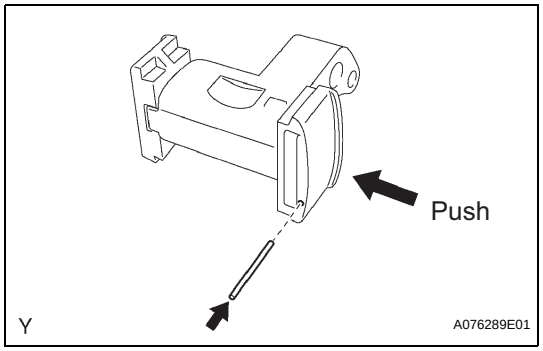

4. INSTALL NO.2 CHAIN TENSIONER ASSEMBLY

(a) While pushing in the tensioner, insert a pin of ϕ 1.0 mm (0.039 in.) into the hole to fix it.

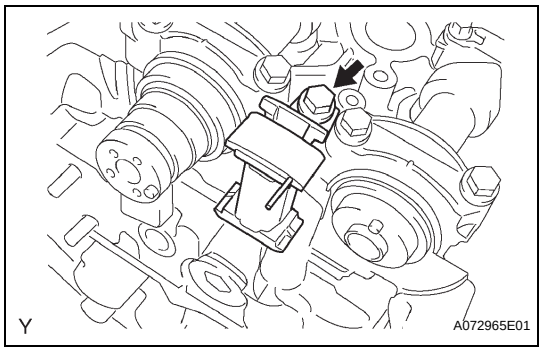

(b) Install the chain tensioner No. 2 with the bolt.
Torque: 19 N*m (194 kgf*cm, 14 ft.*lbf)

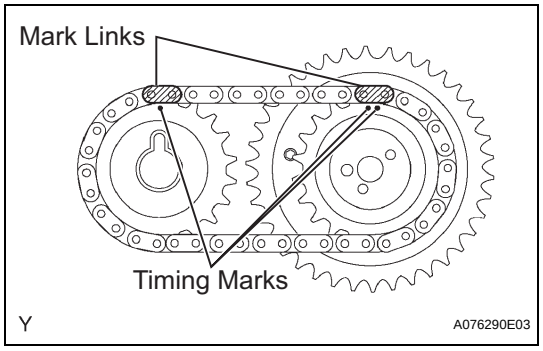

5. INSTALL CAMSHAFT TIMING GEARS AND NO.2 CHAIN (for Bank 2)

(a) Align the yellow mark links with the timing marks (1 dot mark and 2 dot marks) of camshaft timing gears as shown in the illustration.

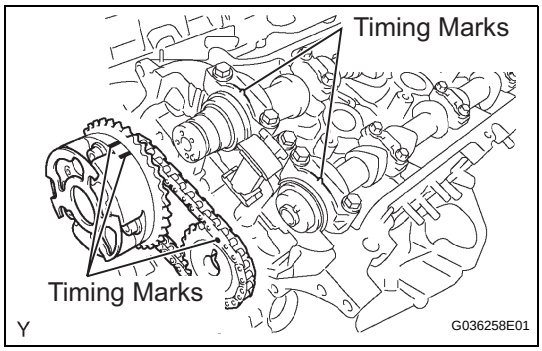

(b) Align the timing marks on the camshaft timing gears with the timing marks on the bearing caps, and install the camshaft timing gears with the chain onto the LH camshafts.

(c) Temporarily install the 2 camshaft timing gear bolts.
NOTICE:
Do not push camshaft timing gear assembly onto the camshaft forcibly when installing it.

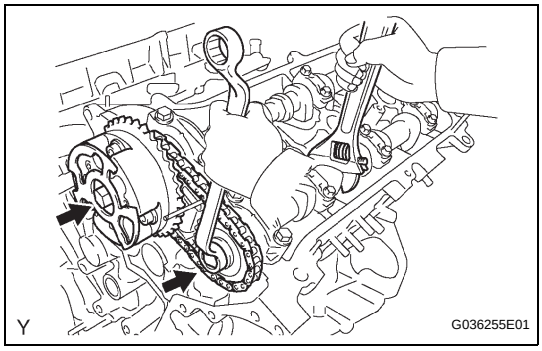

(d) Hold the hexagonal portion of the camshaft with a wrench, and tighten the 2 bolts.
Torque: 100 N*m (1,020 kgf*cm, 74 ft.*lbf)

(e) Remove the pin from the tensioner No. 2.

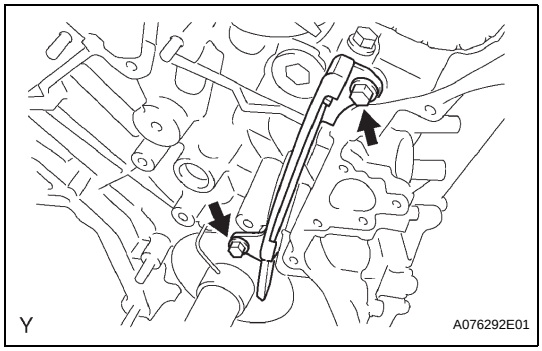

6. INSTALL NO.1 CHAIN VIBRATION DAMPER

(a) Install the chain vibration damper with the 2 bolts.
Torque: 19 N*m (194 kgf*cm, 14 ft.*lbf)

7. INSTALL WATER BY-PASS JOINT RR (See page EM-99)

8. INSTALL INTAKE MANIFOLD (See page EM-99)

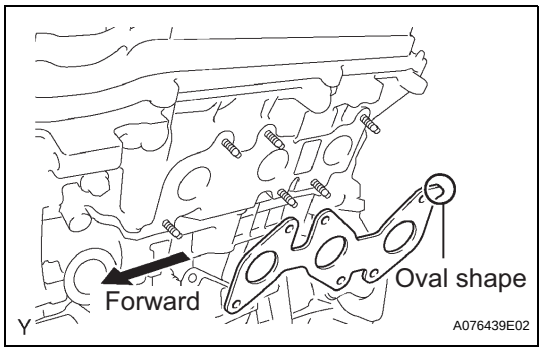

9. INSTALL EXHAUST MANIFOLD SUB-ASSEMBLY LH

(a) Set a new gasket to the LH cylinder head with the oval shape facing forward.
NOTICE:
Be careful of the installation direction.

(b) Install the exhaust manifold with the 6 nuts. Tighten the nuts uniformly in several steps.
Torque: 21 N*m (214 kgf*cm, 16 ft.*lbf)

(c) Connect the air fuel ratio sensor connector.

10. INSTALL MANIFOLD STAY

(a) Install the manifold stay with the 3 bolts.
Torque: 40 N*m (408 kgf*cm, 30 ft.*lbf)

11. INSTALL NO.2 EXHAUST FRONT PIPE ASSEMBLY
(See page EX-3)

12. INSTALL NO.1 COOL AIR INLET

(a) Install the cool air inlet with the 2 bolts.
Torque: 12 N*m (122 kgf*cm, 9.0 ft.*lbf)

13. INSTALL CHAIN TENSIONER SLIPPER

14. **INSTALL NO.1 CHAIN TENSIONER ASSEMBLY (See page EM-27)**
15. **INSTALL CHAIN SUB-ASSEMBLY**
    (See page EM-48)
16. **INSTALL TIMING CHAIN OR BELT COVER SUB-ASSEMBLY**
    (See page LU-38)
17. **INSTALL ENGINE ASSEMBLY**
    (See page EM-190)
18. **INSTALL BATTERY**
19. **ADD ENGINE COOLANT (See page CO-3)**
20. **ADD ENGINE OIL (See page LU-5)**
21. **CHECK FOR ENGINE COOLANT LEAKAGE (See page CO-4)**
22. **CHECK FOR ENGINE OIL LEAKAGE**
23. **CHECK FOR FUEL LEAKAGE**
24. **CHECK FOR EXHAUST GAS LEAKAGE**
25. **INSPECT IGNITION TIMING (See page EM-1)**
26. **INSPECT ENGINE IDLING SPEED (See page EM-2)**
27. **INSPECT CO/HC (See page EM-3)**
28. **INSPECT COMPRESSION (See page EM-2)**

CYLINDER HEAD (for Bank 2 4WD and Pre-Runner)

COMPONENTS

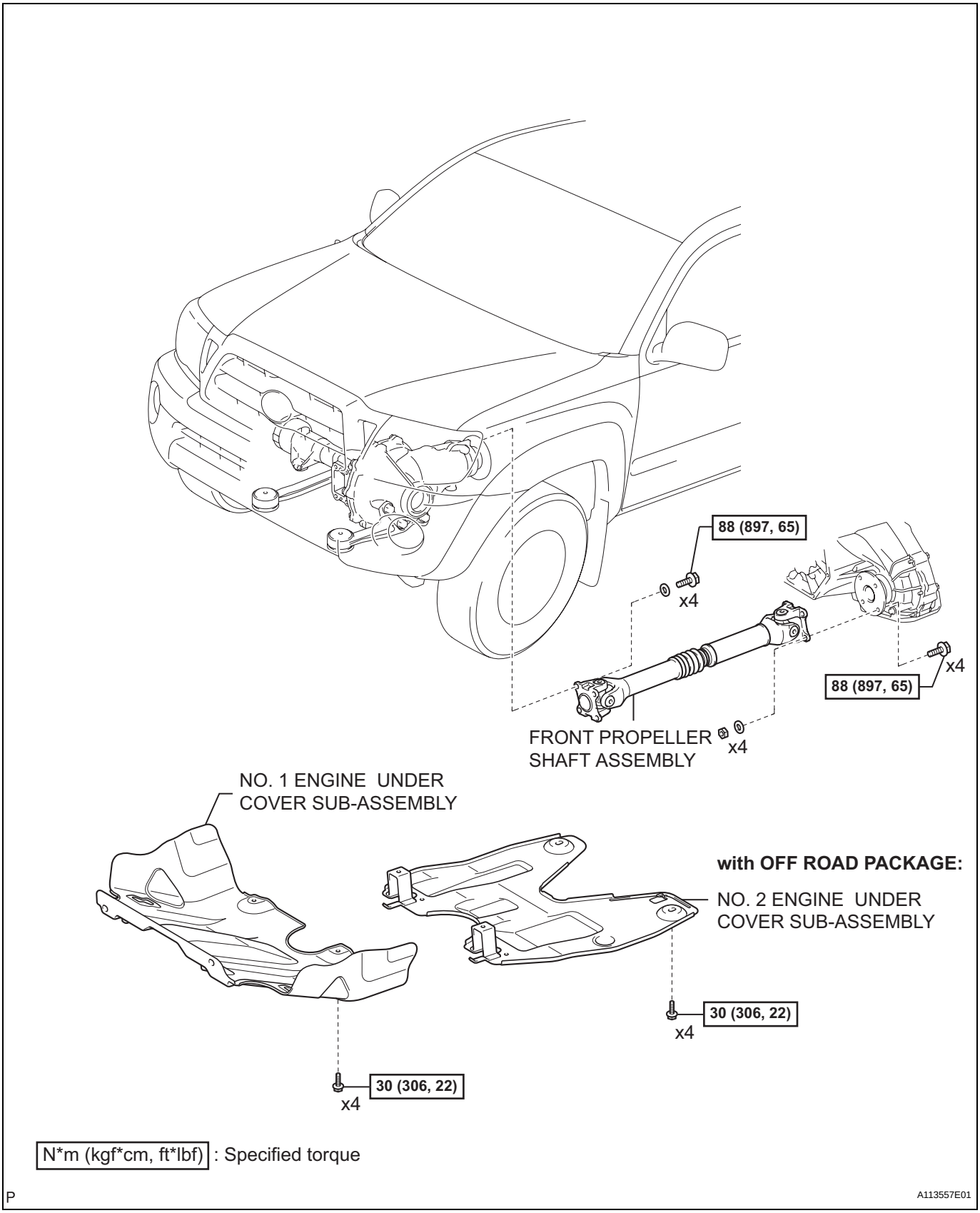

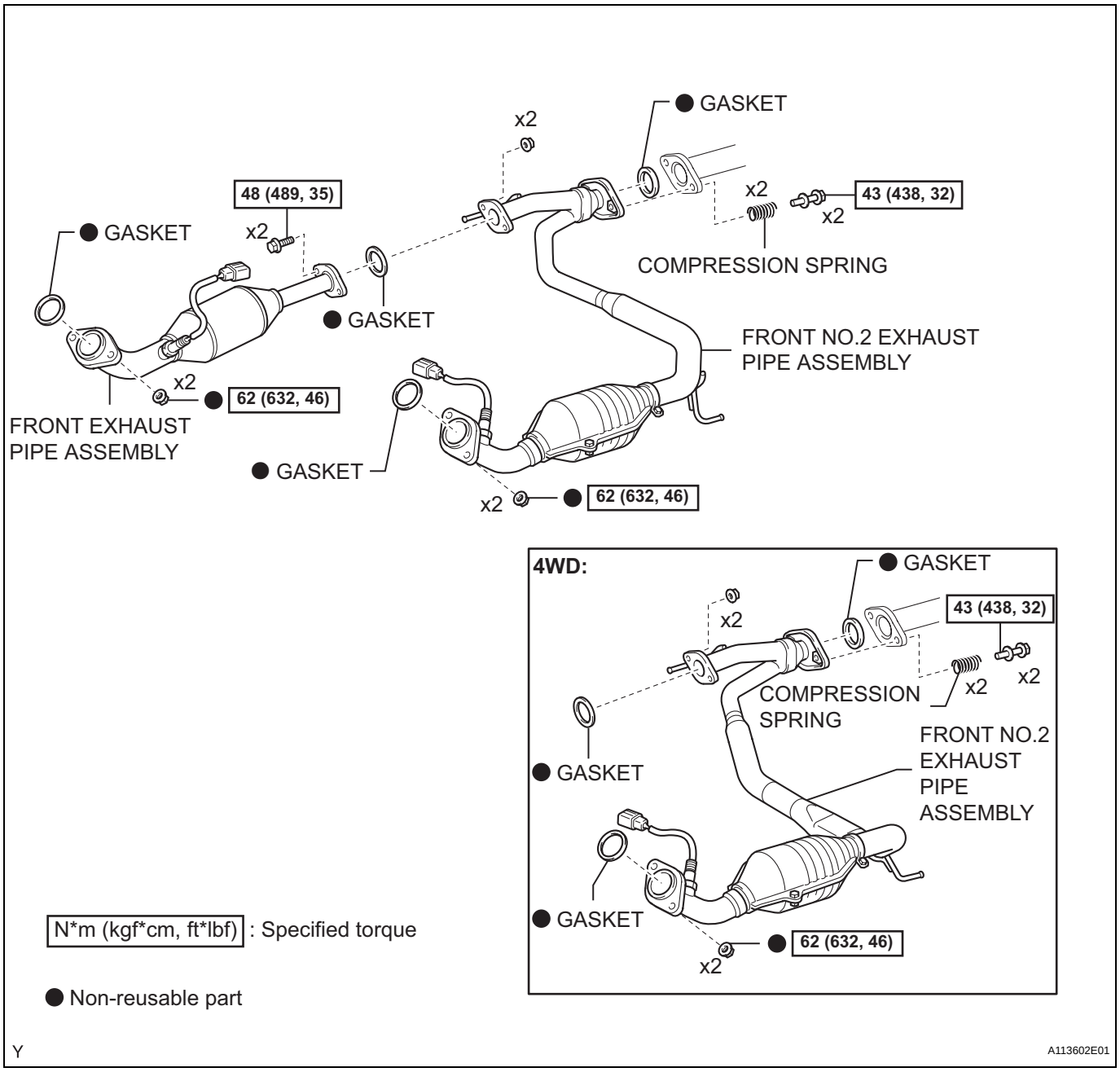
GASKET
x2
48 (489, 35)
x2
GASKET
GASKET
x2
43 (438, 32)
x2
COMPRESSION SPRING
FRONT NO.2 EXHAUST PIPE ASSEMBLY
x2
62 (632, 46)
FRONT EXHAUST PIPE ASSEMBLY
GASKET
x2
62 (632, 46)
4WD:
GASKET
x2
43 (438, 32)
x2
x2
COMPRESSION SPRING
FRONT NO.2 EXHAUST PIPE ASSEMBLY
GASKET
GASKET
62 (632, 46)
x2
N*m (kgf*cm, ft*lbf) : Specified torque
Non-reusable part
Y
A113602E01

EM

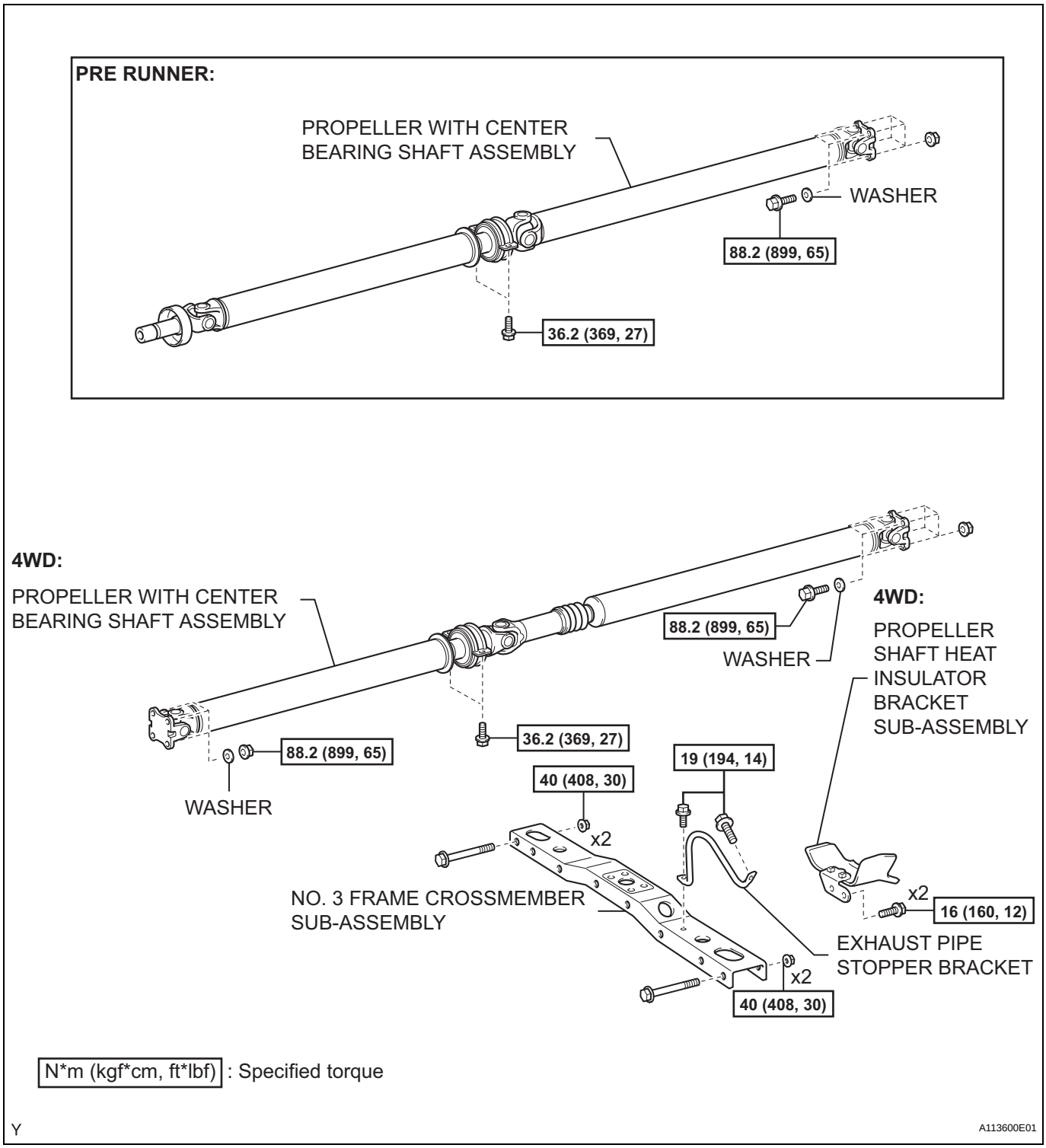
PRE RUNNER:
PROPELLER WITH CENTER BEARING SHAFT ASSEMBLY
WASHER
88.2 (899, 65)
36.2 (369, 27)
4WD:
PROPELLER WITH CENTER BEARING SHAFT ASSEMBLY
88.2 (899, 65)
WASHER
4WD:
PROPELLER SHAFT HEAT INSULATOR BRACKET SUB-ASSEMBLY
36.2 (369, 27)
88.2 (899, 65)
WASHER
19 (194, 14)
40 (408, 30)
x2
NO. 3 FRAME CROSSMEMBER SUB-ASSEMBLY
x2
16 (160, 12)
EXHAUST PIPE STOPPER BRACKET
x2
40 (408, 30)
N*m (kgf*cm, ft*lbf) : Specified torque
Y
A113600E01

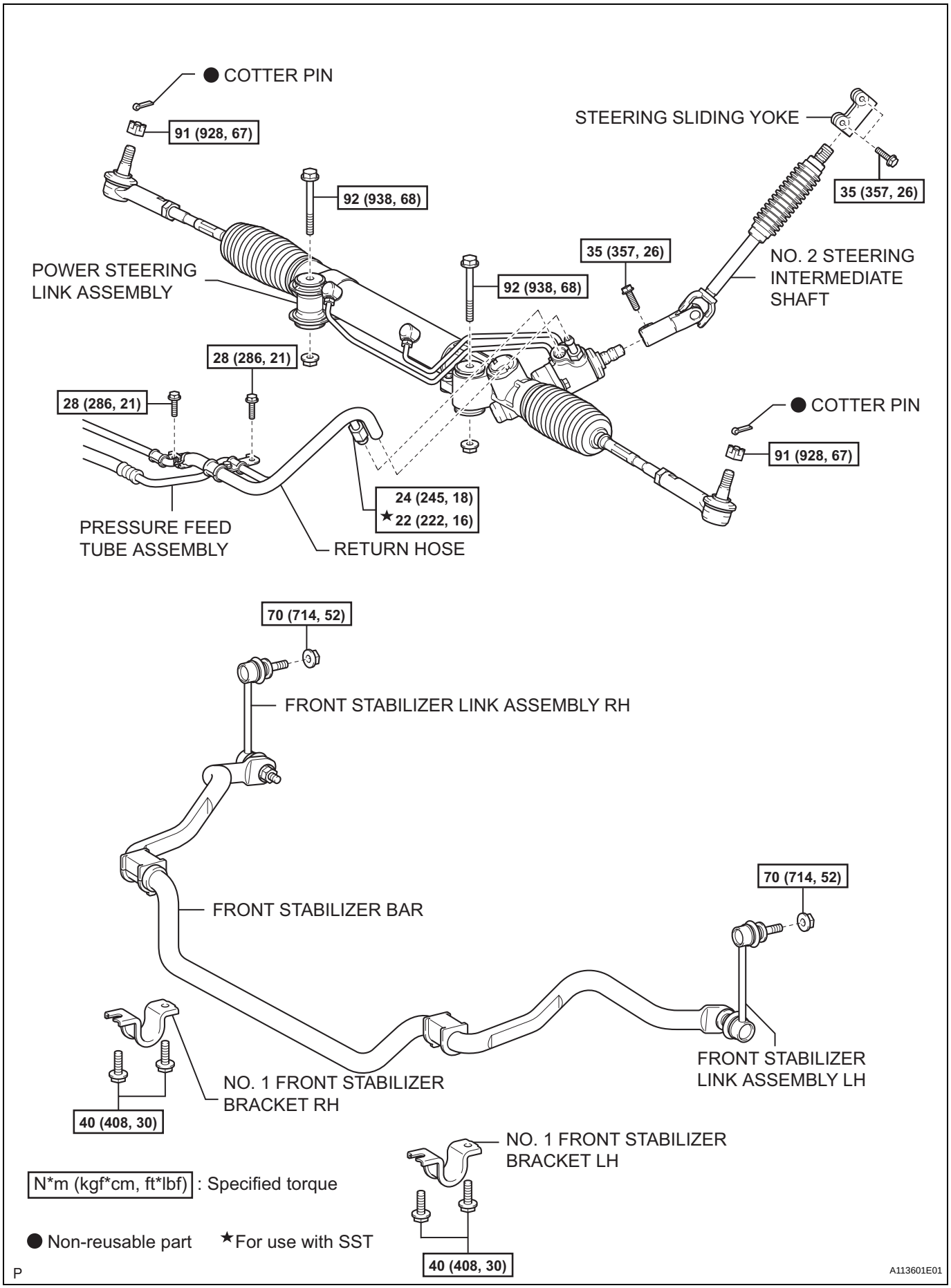
● COTTER PIN
91 (928, 67)
STEERING SLIDING YOKE
92 (938, 68)
35 (357, 26)
35 (357, 26)
POWER STEERING LINK ASSEMBLY
92 (938, 68)
NO. 2 STEERING INTERMEDIATE SHAFT
28 (286, 21)
28 (286, 21)
● COTTER PIN
91 (928, 67)
24 (245, 18)
★22 (222, 16)
PRESSURE FEED TUBE ASSEMBLY
RETURN HOSE
70 (714, 52)
FRONT STABILIZER LINK ASSEMBLY RH
70 (714, 52)
FRONT STABILIZER BAR
FRONT STABILIZER LINK ASSEMBLY LH
NO. 1 FRONT STABILIZER BRACKET RH
40 (408, 30)
NO. 1 FRONT STABILIZER BRACKET LH
N*m (kgf*cm, ft*lbf) : Specified torque
● Non-reusable part
★For use with SST
40 (408, 30)
P
A113601E01

EM

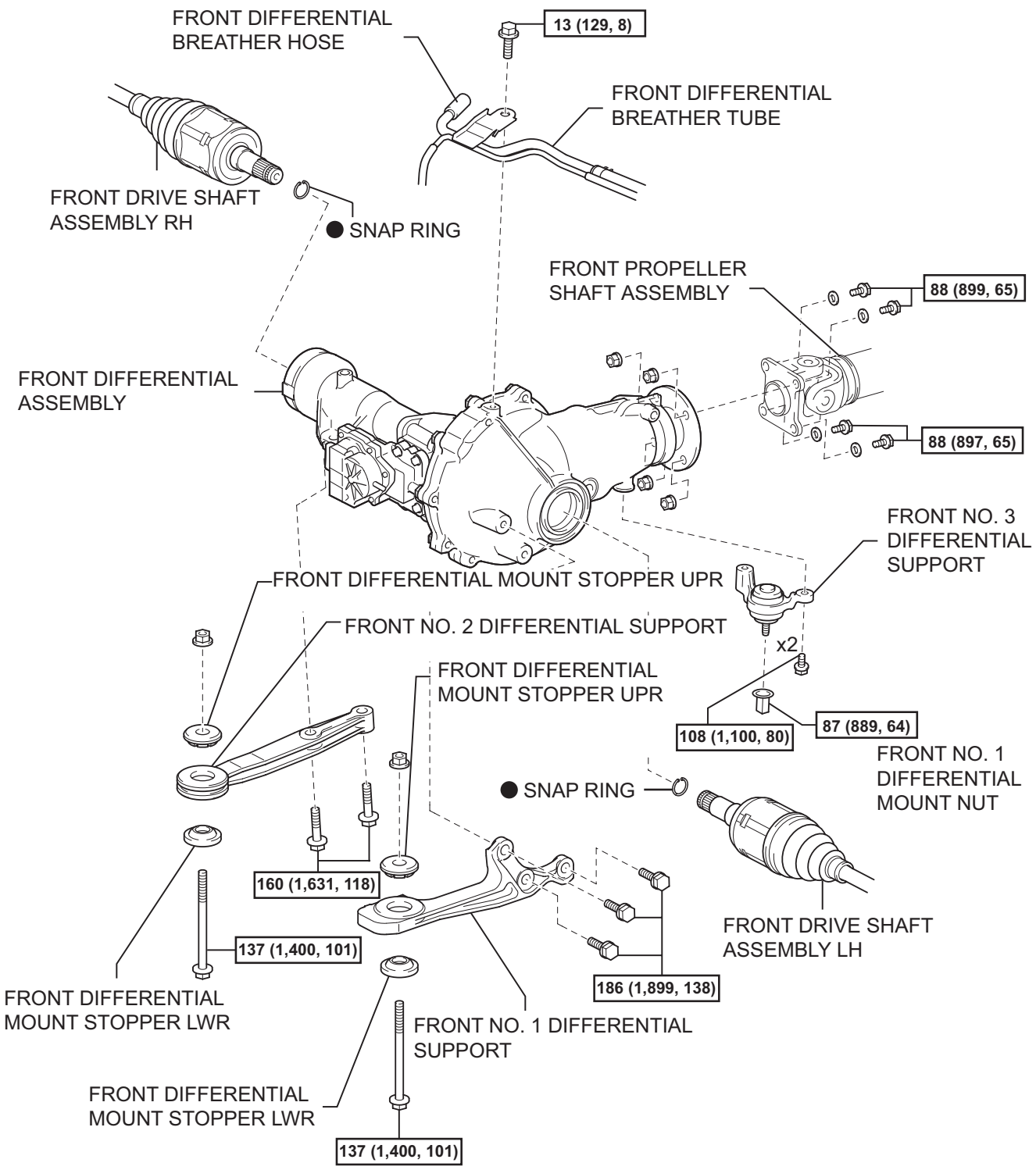

N*m (kgf*cm, ft*lbf) : Specified torque ● Non-reusable part

P

A113558E01

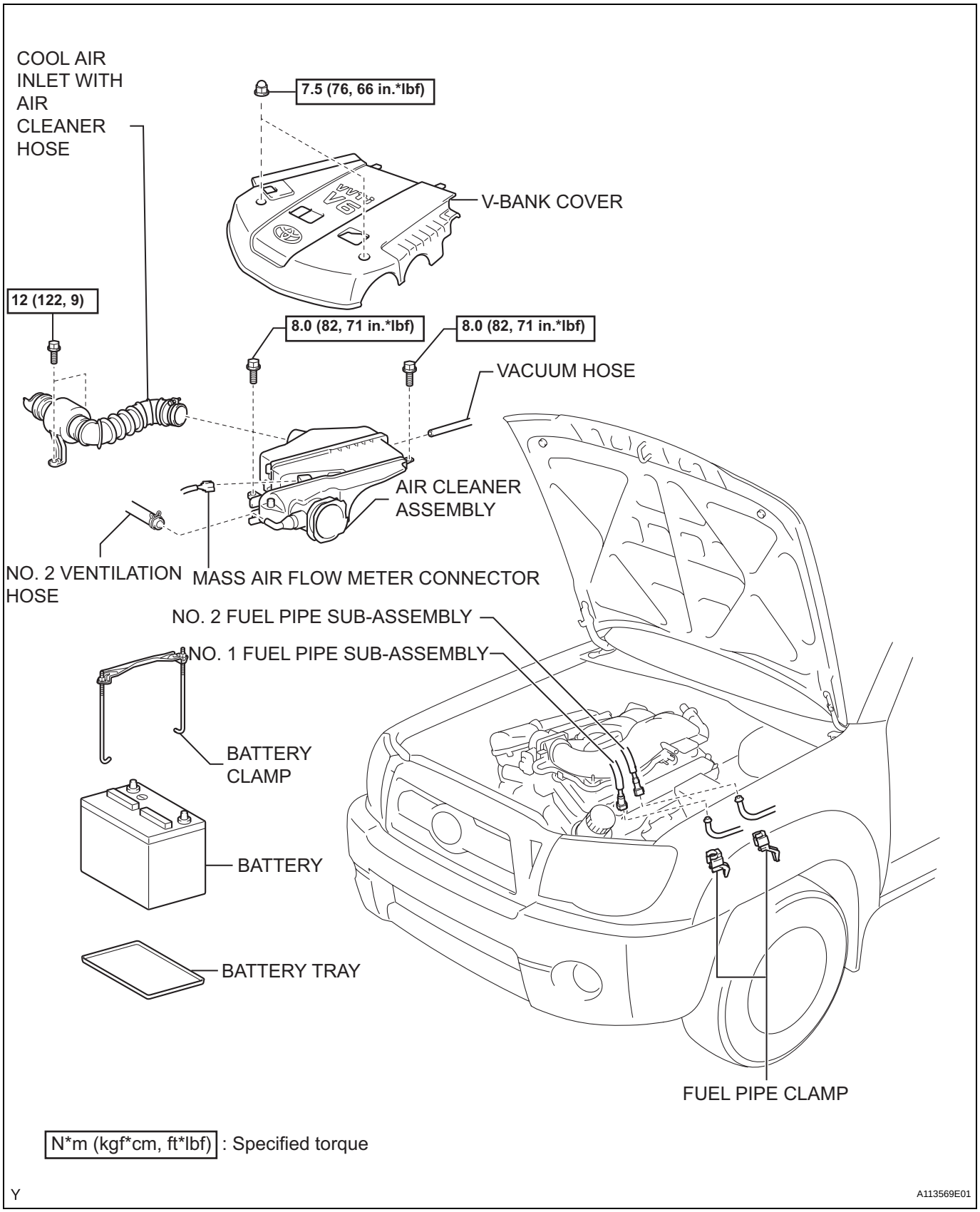
COOL AIR INLET WITH AIR CLEANER HOSE
7.5 (76, 66 in.*lbf)
V-BANK COVER
12 (122, 9)
8.0 (82, 71 in.*lbf)
8.0 (82, 71 in.*lbf)
VACUUM HOSE
AIR CLEANER ASSEMBLY
NO. 2 VENTILATION HOSE
MASS AIR FLOW METER CONNECTOR
NO. 2 FUEL PIPE SUB-ASSEMBLY
NO. 1 FUEL PIPE SUB-ASSEMBLY
BATTERY CLAMP
BATTERY
BATTERY TRAY
FUEL PIPE CLAMP
N*m (kgf*cm, ft*lbf) : Specified torque
Y
A113569E01

EM

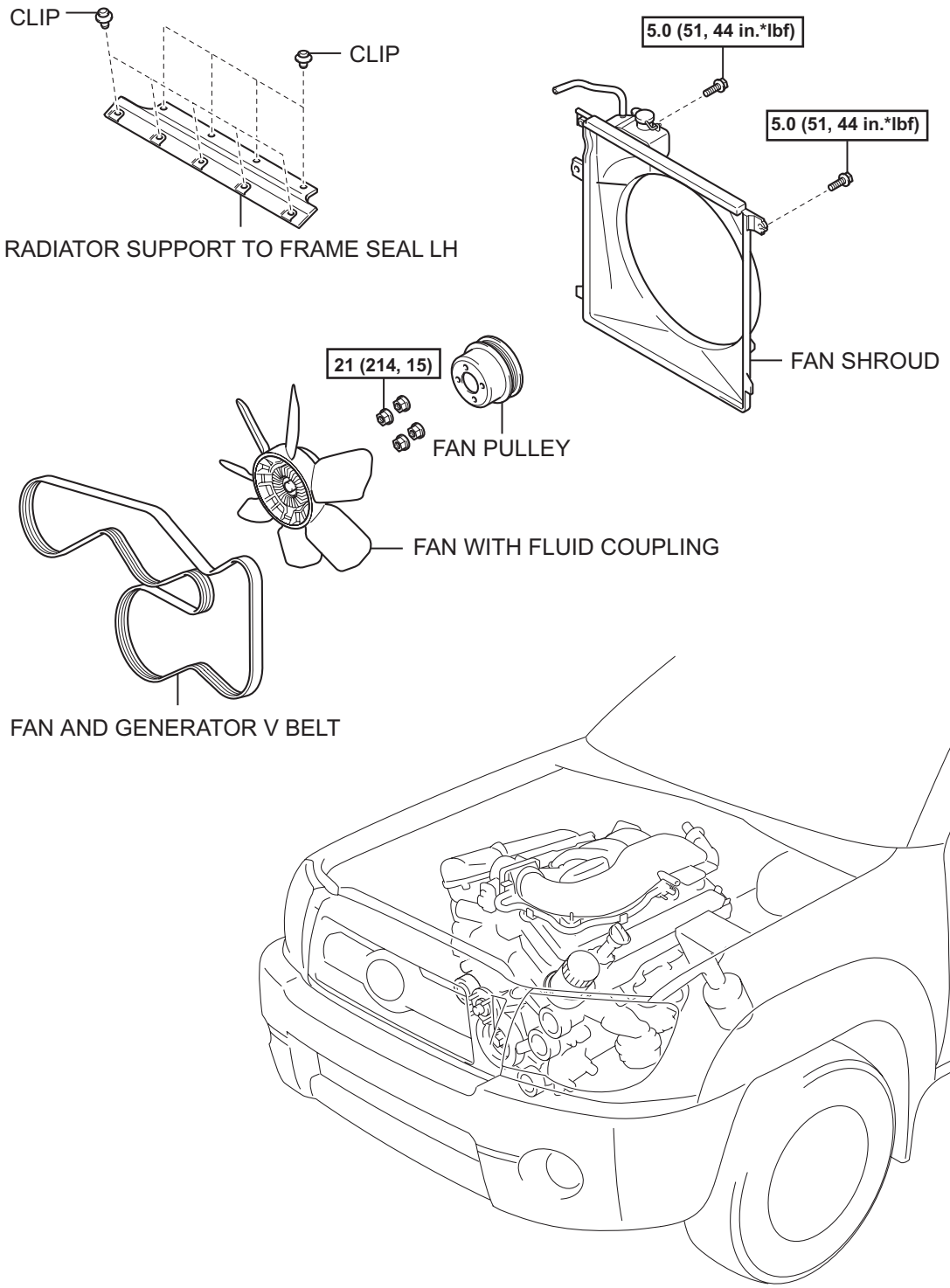

N*m (kgf*cm, ft*lbf) : Specified torque

Y

A113567E01

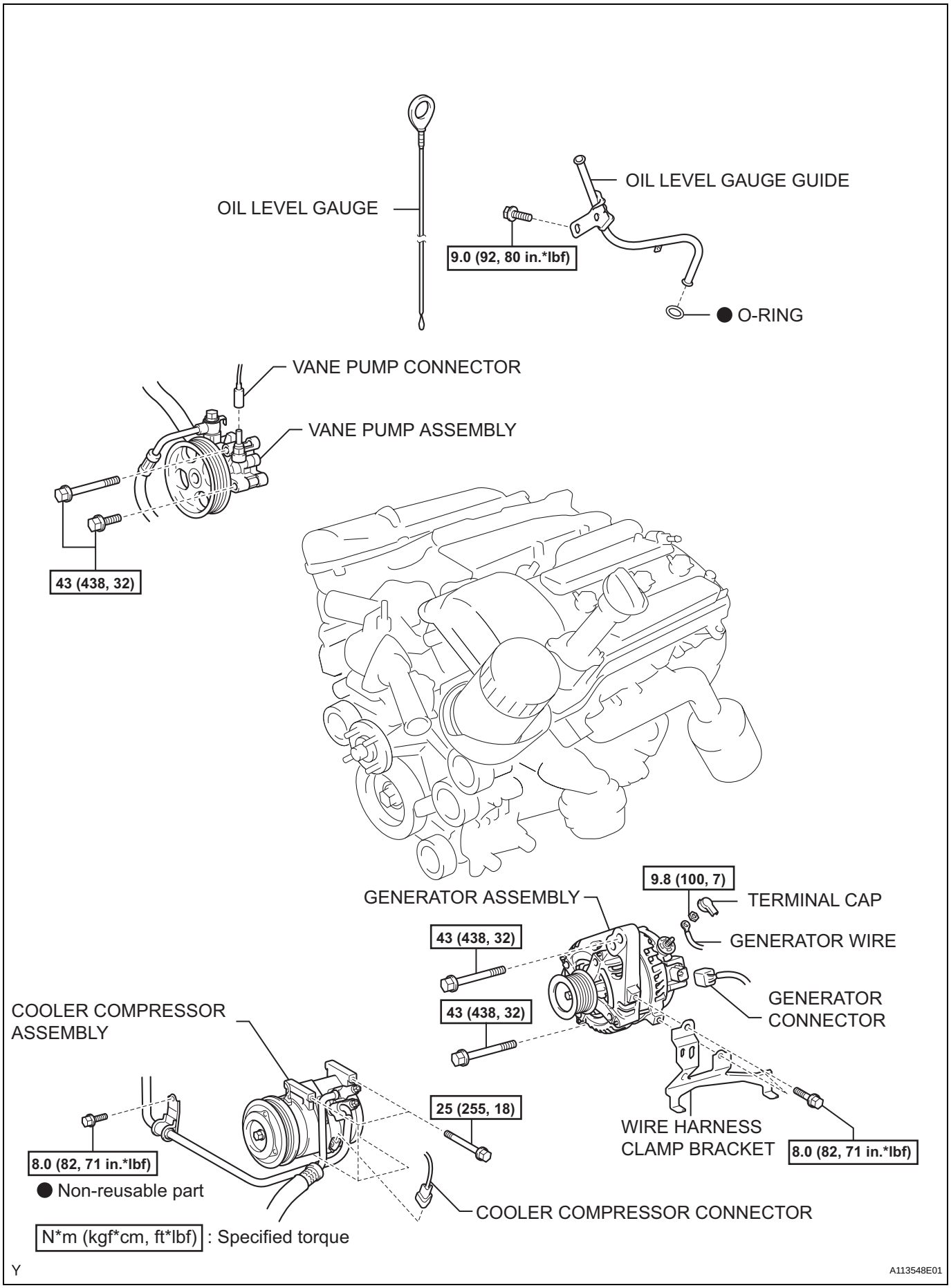
OIL LEVEL GAUGE
OIL LEVEL GAUGE GUIDE
9.0 (92, 80 in.*lbf)
● O-RING
VANE PUMP CONNECTOR
VANE PUMP ASSEMBLY
43 (438, 32)
9.8 (100, 7)
GENERATOR ASSEMBLY
TERMINAL CAP
GENERATOR WIRE
43 (438, 32)
GENERATOR CONNECTOR
COOLER COMPRESSOR ASSEMBLY
43 (438, 32)
25 (255, 18)
WIRE HARNESS CLAMP BRACKET
8.0 (82, 71 in.*lbf)
8.0 (82, 71 in.*lbf)
● Non-reusable part
COOLER COMPRESSOR CONNECTOR
N*m (kgf*cm, ft*lbf) : Specified torque
Y
A113548E01

EM

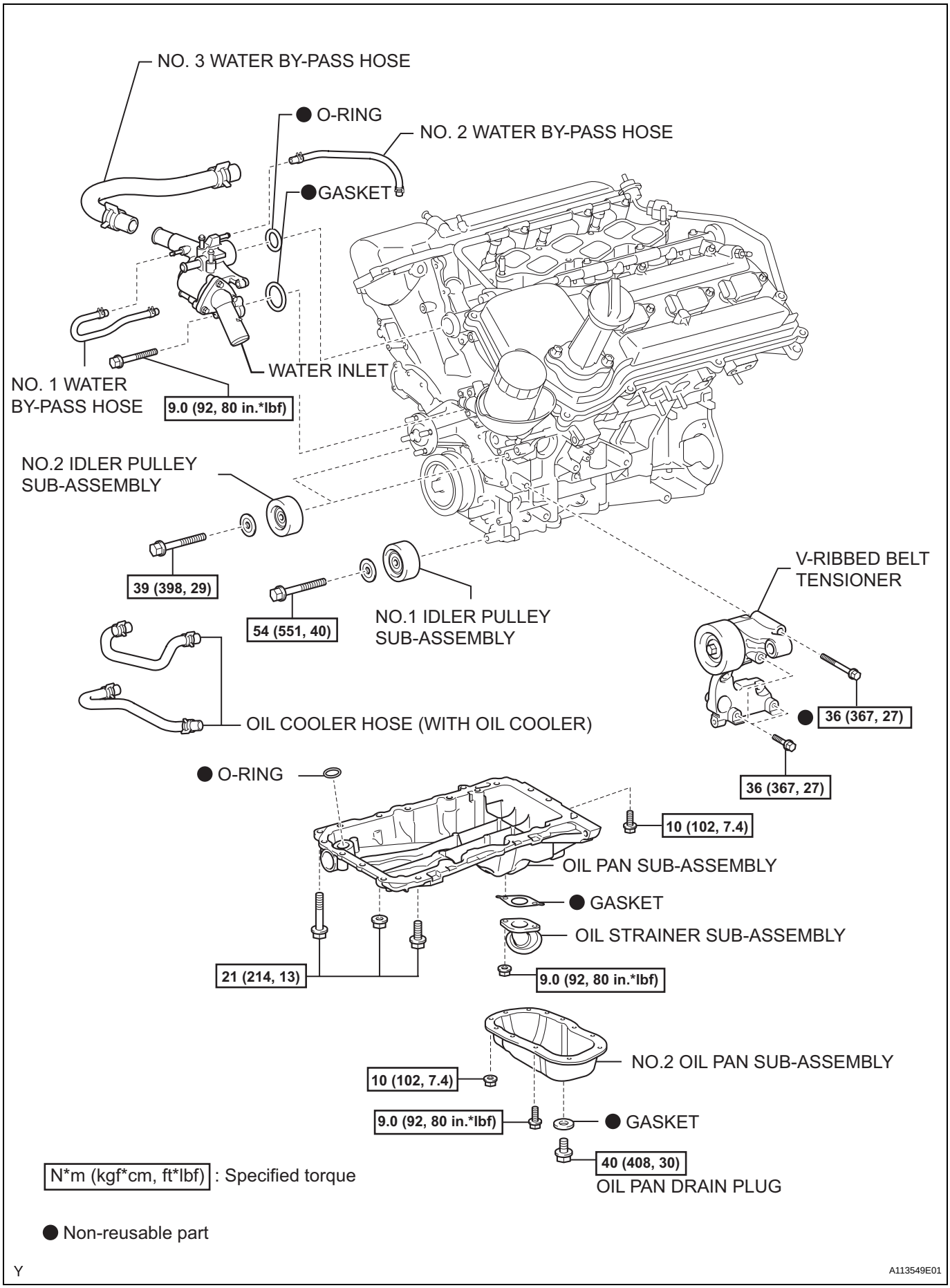
NO. 3 WATER BY-PASS HOSE
● O-RING
NO. 2 WATER BY-PASS HOSE
●GASKET
WATER INLET
NO. 1 WATER BY-PASS HOSE
9.0 (92, 80 in.*lbf)
NO.2 IDLER PULLEY SUB-ASSEMBLY
39 (398, 29)
54 (551, 40)
NO.1 IDLER PULLEY SUB-ASSEMBLY
V-RIBBED BELT TENSIONER
● 36 (367, 27)
36 (367, 27)
OIL COOLER HOSE (WITH OIL COOLER)
● O-RING
10 (102, 7.4)
OIL PAN SUB-ASSEMBLY
● GASKET
OIL STRAINER SUB-ASSEMBLY
21 (214, 13)
9.0 (92, 80 in.*lbf)
NO.2 OIL PAN SUB-ASSEMBLY
10 (102, 7.4)
9.0 (92, 80 in.*lbf)
● GASKET
40 (408, 30)
OIL PAN DRAIN PLUG
N*m (kgf*cm, ft*lbf) : Specified torque
● Non-reusable part
Y
A113549E01

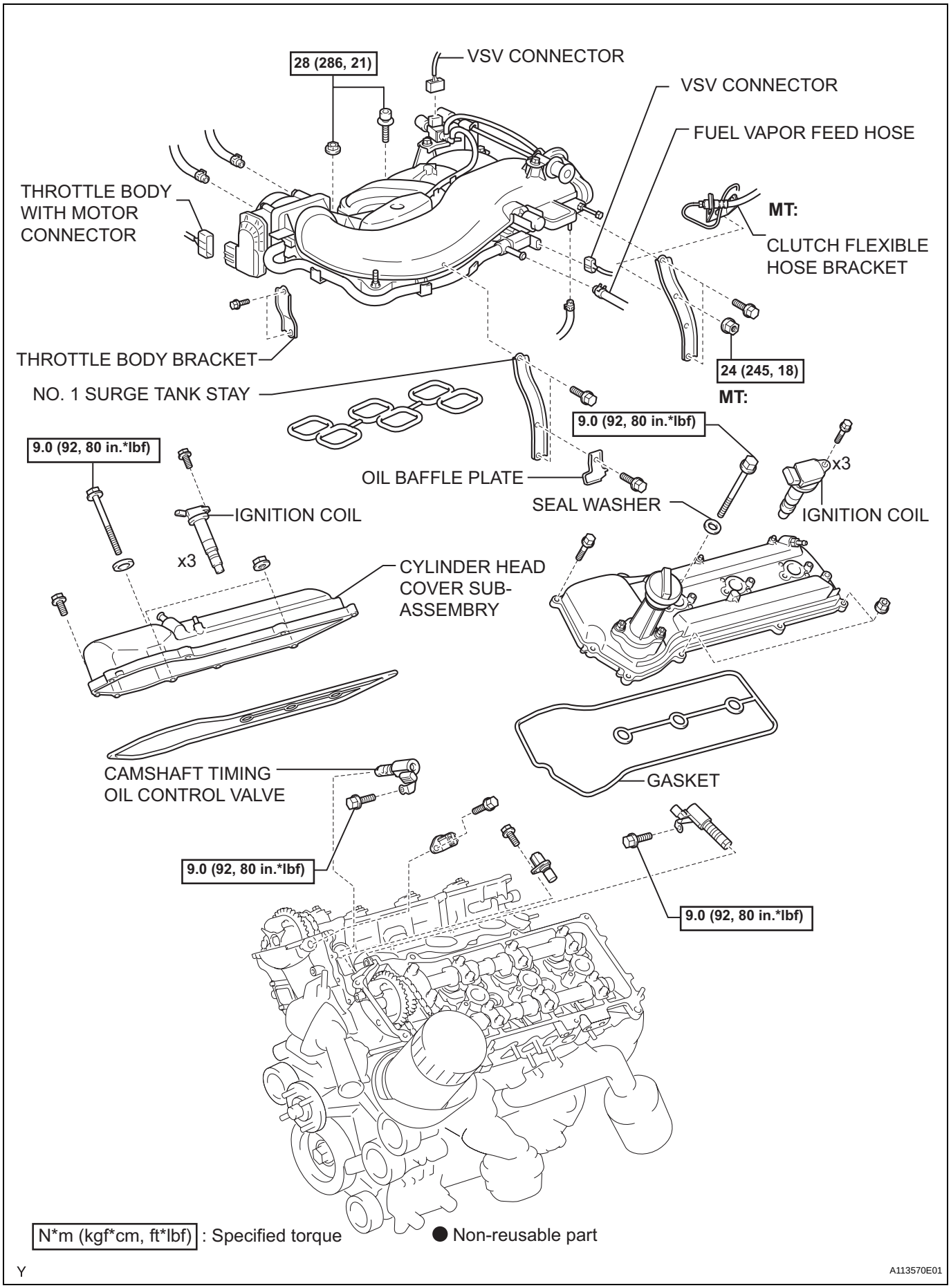
28 (286, 21)
VSV CONNECTOR
VSV CONNECTOR
FUEL VAPOR FEED HOSE
THROTTLE BODY WITH MOTOR CONNECTOR
MT:
CLUTCH FLEXIBLE HOSE BRACKET
THROTTLE BODY BRACKET
24 (245, 18)
MT:
NO. 1 SURGE TANK STAY
9.0 (92, 80 in.*lbf)
9.0 (92, 80 in.*lbf)
x3
OIL BAFFLE PLATE
SEAL WASHER
IGNITION COIL
IGNITION COIL
x3
CYLINDER HEAD COVER SUB-ASSEMBRY
CAMSHAFT TIMING OIL CONTROL VALVE
GASKET
9.0 (92, 80 in.*lbf)
9.0 (92, 80 in.*lbf)
N*m (kgf*cm, ft*lbf) : Specified torque
● Non-reusable part
Y
A113570E01

EM

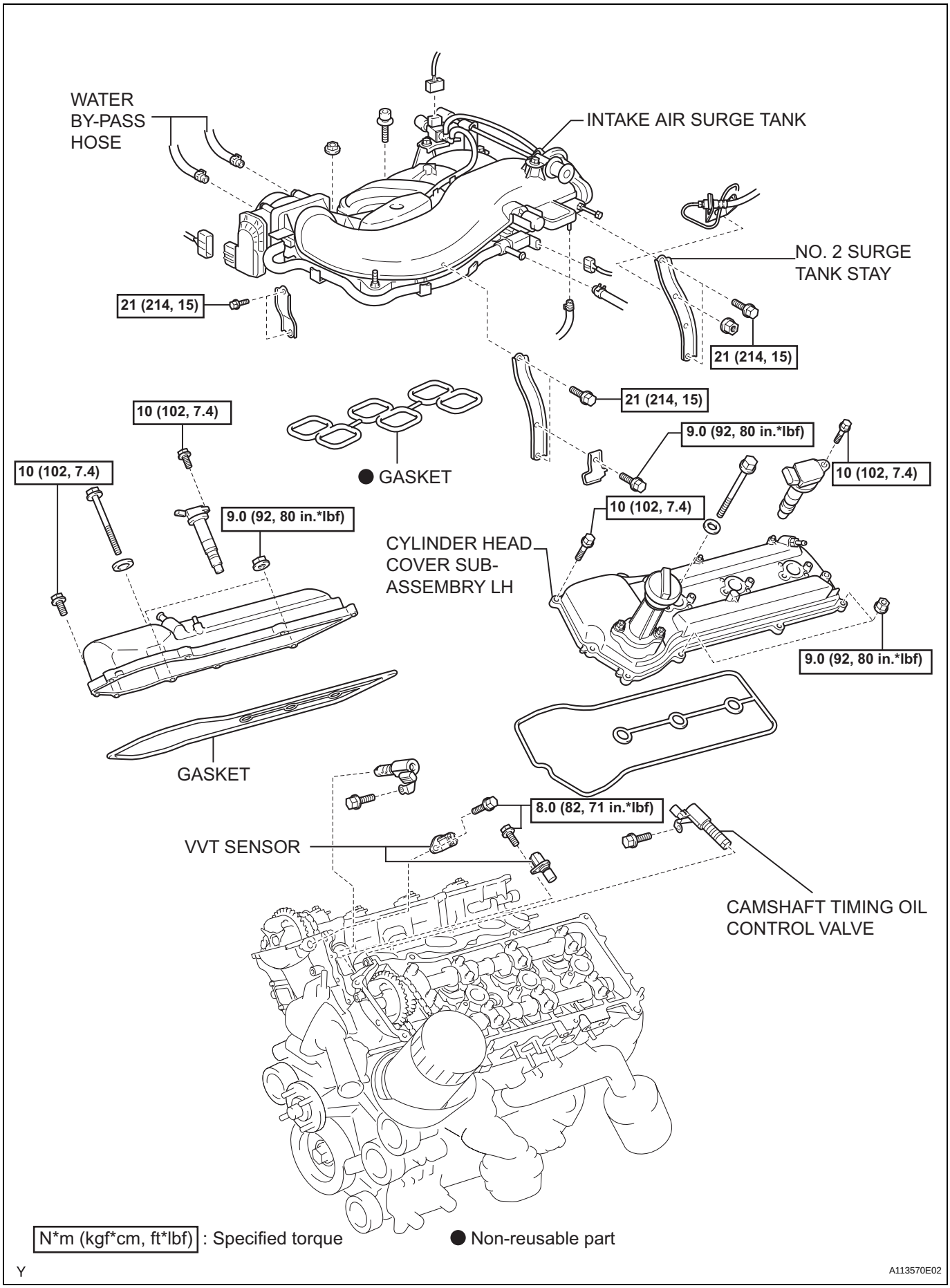
WATER BY-PASS HOSE
INTAKE AIR SURGE TANK
NO. 2 SURGE TANK STAY
21 (214, 15)
21 (214, 15)
21 (214, 15)
10 (102, 7.4)
9.0 (92, 80 in.*lbf)
10 (102, 7.4)
● GASKET
10 (102, 7.4)
9.0 (92, 80 in.*lbf)
10 (102, 7.4)
CYLINDER HEAD COVER SUB-ASSEMBRY LH
9.0 (92, 80 in.*lbf)
GASKET
8.0 (82, 71 in.*lbf)
VVT SENSOR
CAMSHAFT TIMING OIL CONTROL VALVE
N*m (kgf*cm, ft*lbf) : Specified torque
● Non-reusable part
Y
A113570E02

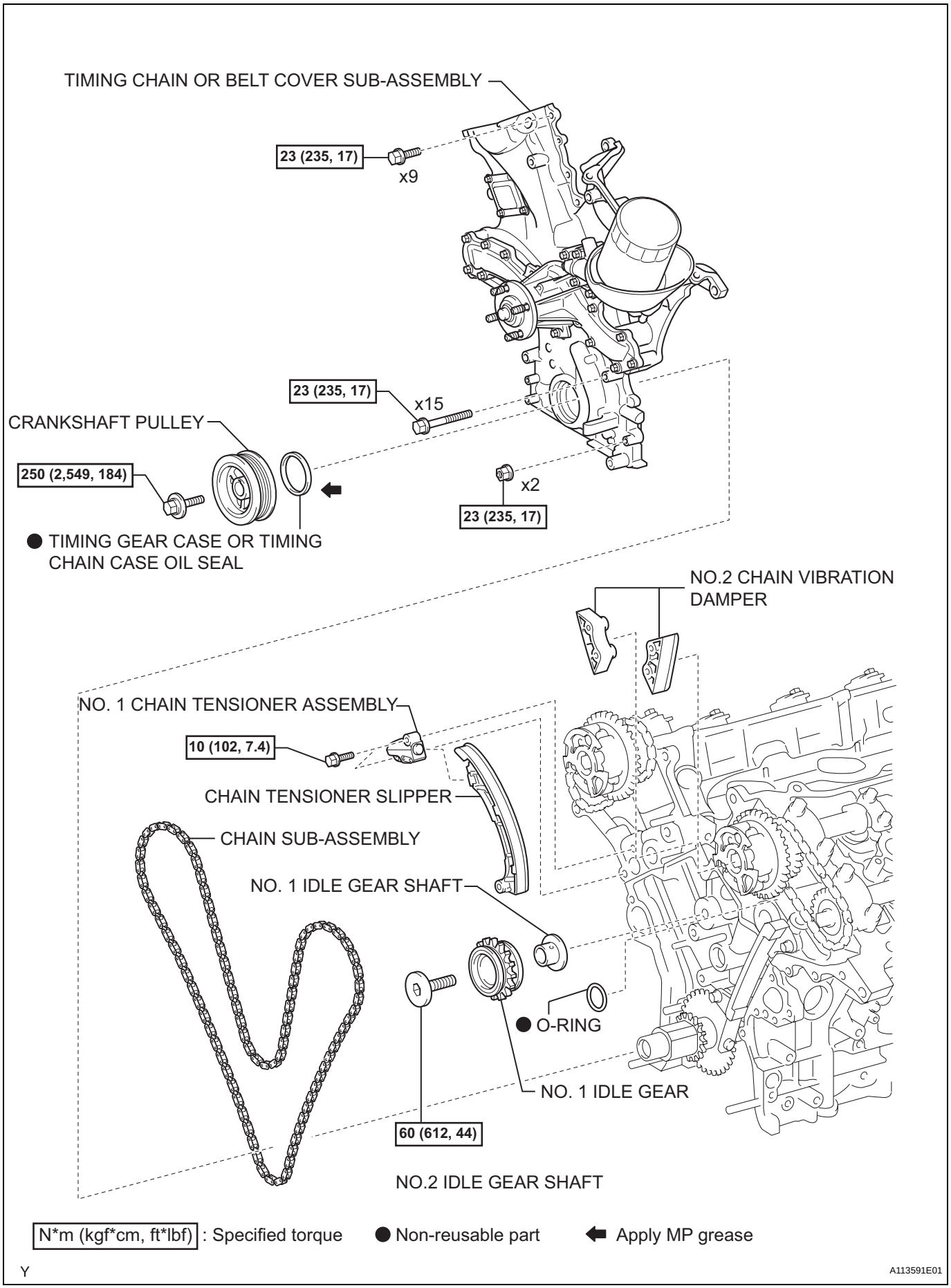
TIMING CHAIN OR BELT COVER SUB-ASSEMBLY
23 (235, 17)
x9
23 (235, 17)
x15
CRANKSHAFT PULLEY
250 (2,549, 184)
x2
23 (235, 17)
● TIMING GEAR CASE OR TIMING CHAIN CASE OIL SEAL
NO.2 CHAIN VIBRATION DAMPER
NO. 1 CHAIN TENSIONER ASSEMBLY
10 (102, 7.4)
CHAIN TENSIONER SLIPPER
CHAIN SUB-ASSEMBLY
NO. 1 IDLE GEAR SHAFT
● O-RING
NO. 1 IDLE GEAR
60 (612, 44)
NO.2 IDLE GEAR SHAFT
N*m (kgf*cm, ft*lbf) : Specified torque
● Non-reusable part
Apply MP grease
Y
A113591E01

EM

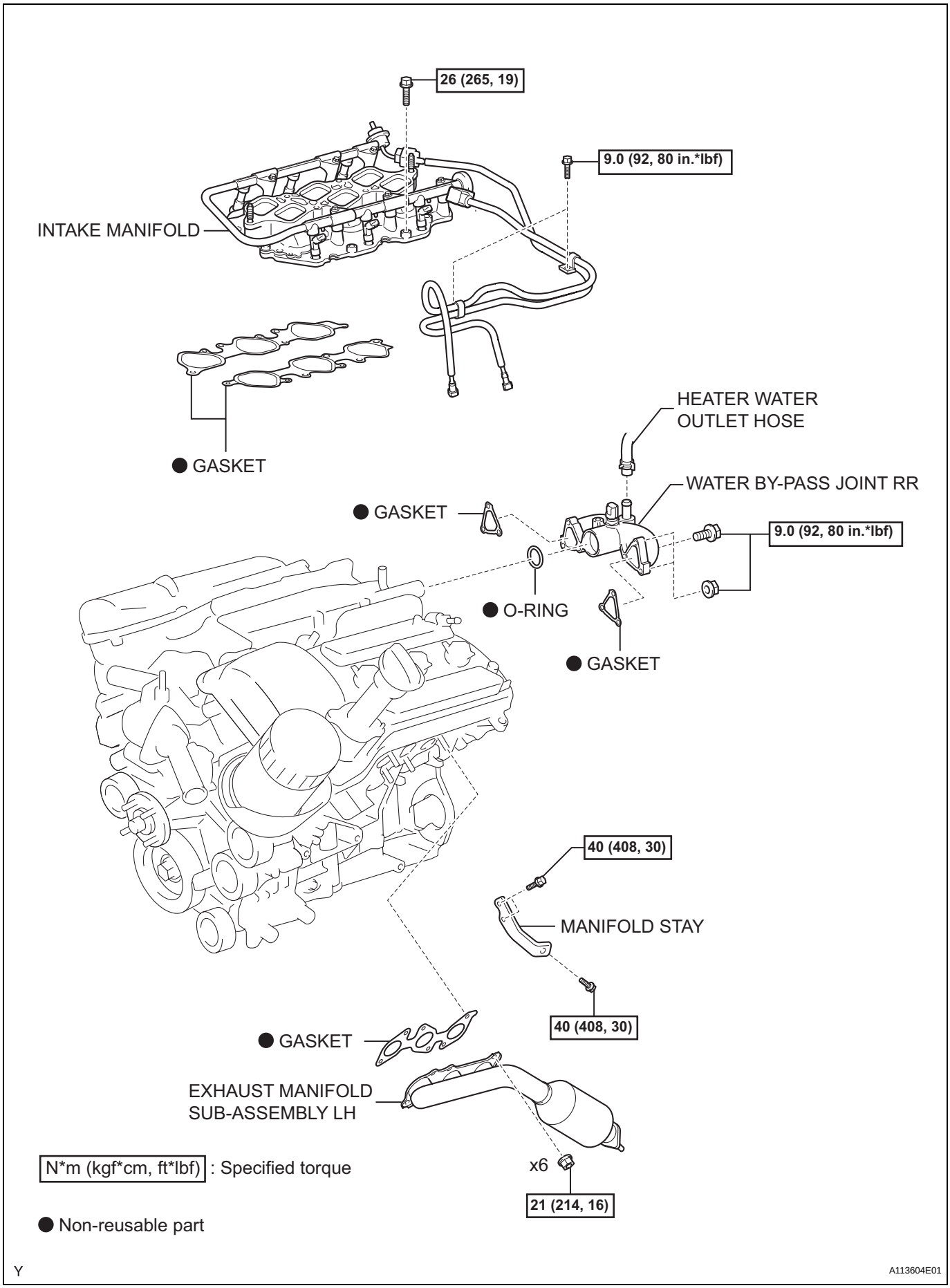
26 (265, 19)
9.0 (92, 80 in.*lbf)
INTAKE MANIFOLD
HEATER WATER OUTLET HOSE
● GASKET
WATER BY-PASS JOINT RR
● GASKET
9.0 (92, 80 in.*lbf)
● O-RING
● GASKET
40 (408, 30)
MANIFOLD STAY
40 (408, 30)
● GASKET
EXHAUST MANIFOLD SUB-ASSEMBLY LH
x6
21 (214, 16)
N*m (kgf*cm, ft*lbf) : Specified torque
● Non-reusable part
Y
A113604E01

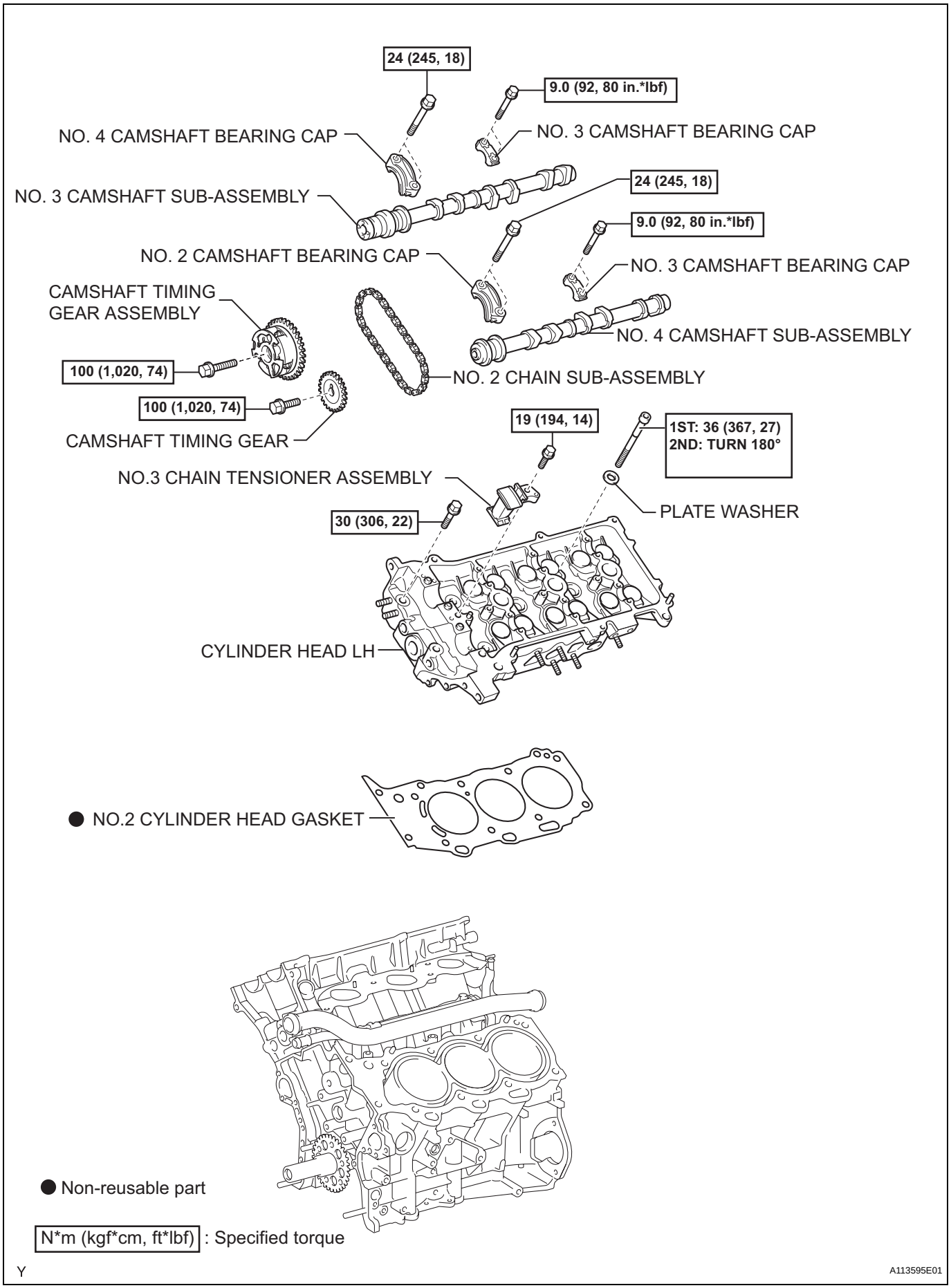
24 (245, 18)
9.0 (92, 80 in.*lbf)
NO. 4 CAMSHAFT BEARING CAP
NO. 3 CAMSHAFT BEARING CAP
NO. 3 CAMSHAFT SUB-ASSEMBLY
24 (245, 18)
9.0 (92, 80 in.*lbf)
NO. 2 CAMSHAFT BEARING CAP
NO. 3 CAMSHAFT BEARING CAP
CAMSHAFT TIMING GEAR ASSEMBLY
NO. 4 CAMSHAFT SUB-ASSEMBLY
100 (1,020, 74)
NO. 2 CHAIN SUB-ASSEMBLY
100 (1,020, 74)
19 (194, 14)
1ST: 36 (367, 27)
2ND: TURN 180°
CAMSHAFT TIMING GEAR
NO.3 CHAIN TENSIONER ASSEMBLY
PLATE WASHER
30 (306, 22)
CYLINDER HEAD LH
● NO.2 CYLINDER HEAD GASKET
● Non-reusable part
N*m (kgf*cm, ft*lbf) : Specified torque
Y
A113595E01

EM

REMOVAL

1. **DISCHARGE FUEL SYSTEM PRESSURE**
   (See page FU-1)
2. **REMOVE BATTERY**
3. **DRAIN ENGINE COOLANT (See page CO-3)**
4. **DRAIN ENGINE OIL (See page LU-4)**
5. **REMOVE POWER STEERING LINK ASSEMBLY**
   (See page PS-53)
6. **REMOVE FRONT DIFFERENTIAL CARRIER ASSEMBLY (for 4WD)**
   (See page DF-19)
7. **REMOVE TIMING CHAIN OR BELT COVER SUB-ASSEMBLY**
   (See page LU-34)
8. **REMOVE CHAIN SUB-ASSEMBLY**
   (See page EM-44)
9. **REMOVE NO.1 COOL AIR INLET**
   (a) Remove the 2 bolts, then remove the cool air inlet.
10. **REMOVE FRONT NO.2 EXHAUST PIPE ASSEMBLY**
    (See page EX-3)
11. **REMOVE MANIFOLD STAY**
    (a) Remove the 3 bolts, then remove the exhaust manifold stay.
12. **REMOVE EXHAUST MANIFOLD SUB-ASSEMBLY LH**
    (a) Disconnect the air fuel ratio sensor connector.
    (b) Remove the 6 nuts, then remove the exhaust manifold and gasket.
13. **DISCONNECT NO.1 FUEL PIPE SUB-ASSEMBLY (See page FU-13)**
14. **DISCONNECT NO.2 FUEL PIPE SUB-ASSEMBLY (See page FU-13)**
15. **REMOVE INTAKE MANIFOLD (See page EM-93)**
16. **REMOVE WATER BY-PASS JOINT RR (See page EM-93)**
17. **REMOVE NO.1 CHAIN VIBRATION DAMPER**
    (a) Remove the 2 bolts, then remove the chain vibration damper No. 1.

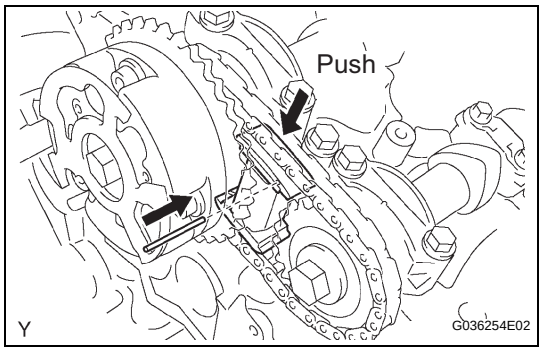

18. REMOVE CAMSHAFT TIMING GEARS AND NO.2 CHAIN (for Bank 2)

(a) While pushing down the chain tensioner No. 2, insert a pin of ϕ 10 mm (0.039 in.) into the hole to fix it.

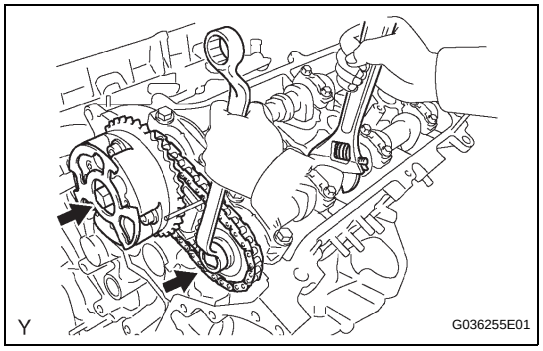

(b) Hold the hexagonal portion of the camshaft with a wrench.
NOTICE:
Be careful not to damage the cylinder head and valve lifter with the wrench.

(c) Remove the 2 bolts, then remove the camshaft timing gear, camshaft timing gear assembly and timing chain No. 2.
NOTICE:
Do not disassemble the camshaft timing gear assembly.

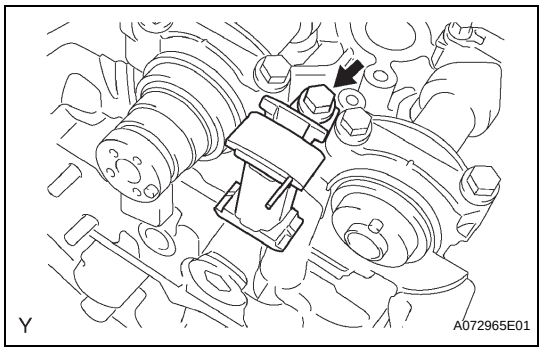

19. REMOVE NO.2 CHAIN TENSIONER ASSEMBLY

(a) Remove the bolt, then remove the chain tensioner No. 3.

20. REMOVE CAMSHAFTS
NOTICE:
Keep the camshaft level while it is being removed. The camshaft thrust clearance is very small and failing to keep it level could crack or damage the cylinder head journal surface, which receives the thrust. This could subsequently lead the camshaft to seize or break. Perform the following steps to avoid such problems.

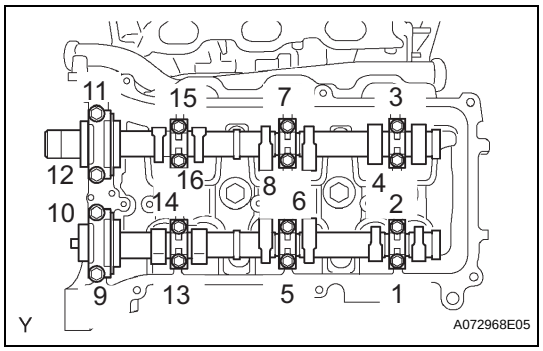

(a) Using several steps, loosen and remove the 16 bearing cap bolts uniformly in the sequence shown in the illustration.

(b) Remove the 8 bearing caps and 2 camshafts.

21. REMOVE CYLINDER HEAD LH

(a) Remove the bolt, then separate the ground cable.

EM

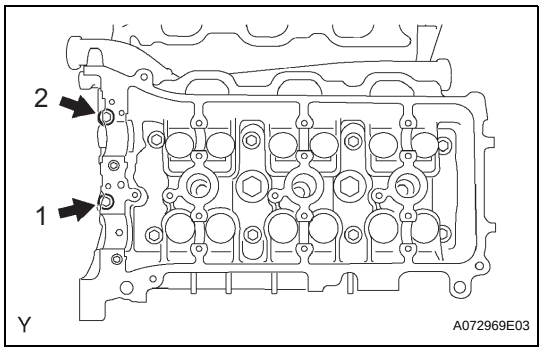

(b) Using several steps, remove the 2 cylinder head bolts on the cylinder head in the sequence shown in the illustration.

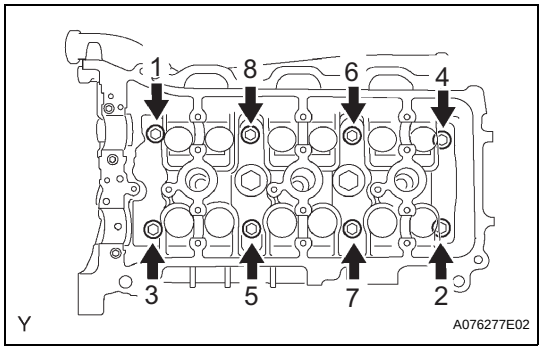

(c) Using several steps,uniformly loosen the 8 cylinder head bolts on the cylinder head with a 10 mm bi-hexagon wrench in the sequence shown in the illustration. Remove the 8 cylinder head bolts and 8 plate washers.

NOTICE:

- **Be careful not to drop the plate washers into the cylinder head.**
- **Cylinder head warpage or cracking could result form removing the bolts in the wrong order.**

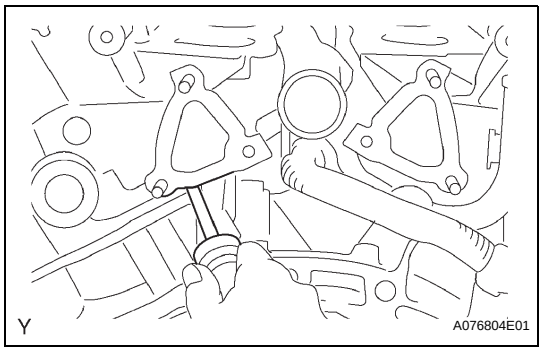

(d) Lift the cylinder head from the dowels on the cylinder block, and place the cylinder head on wooden blocks on a bench.

NOTICE:

Be careful not to drop the plate washers into the cylinder head.

If the cylinder head is difficult to remove, pry between the cylinder head and cylinder block with a screwdriver.

22. REMOVE NO.2 CYLINDER HEAD GASKET

INSPECTION

1. INSPECT CYLINDER HEAD SET BOLT

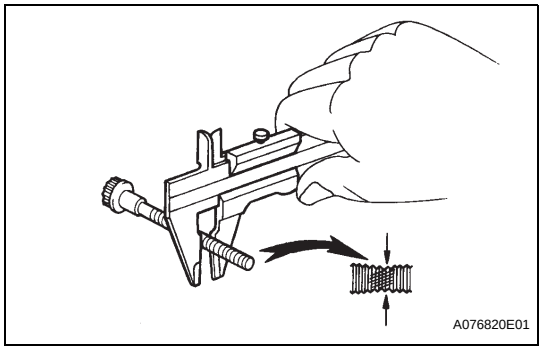

(a) Using vernier calipers, measure the outside diameter of the bolt thread.

Standard outside diameter:
10.85 to 11.00 mm (0.4272 to 0.4331 in.)

Minimum outside diameter:
10.7 mm (0.421 in.)

EM

INSTALLATION

1. INSTALL NO.2 CYLINDER HEAD GASKET

(a) Remove any old packing (FIPG) material and be careful not to drop any oil on the contact surface of the cylinder head and cylinder block.

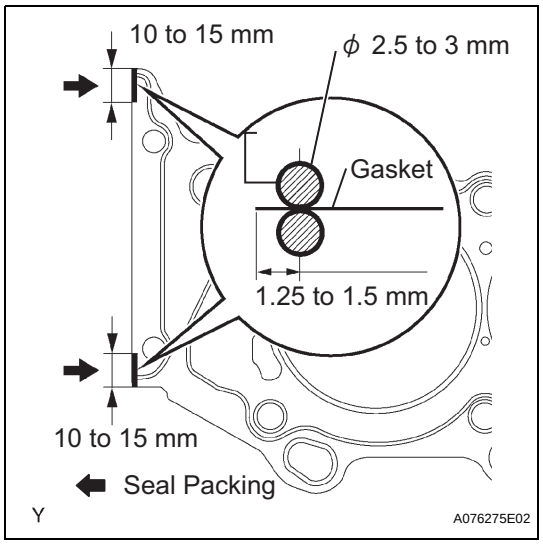

(b) Apply a continuous bead of seal packing (diameter 2.5 to 3.0 mm (0.098 to 0.118 in.)) to a new cylinder head gasket as shown in the illustration.
Seal packing:
Part No. 08826-00080 or equivalent
NOTICE:
Install the cylinder head within 3 minutes of applying the seal packing. Tighten the cylinder head bolts within 15 minutes of installing the cylinder head. Otherwise, the seal packing must be removed and reapplied.

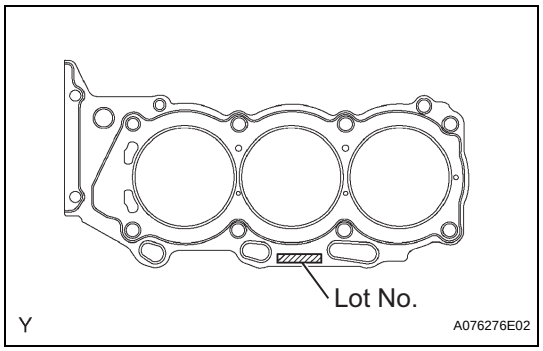

(c) Place the cylinder head gasket on the cylinder block surface with the Lot No. stamp upward.
NOTICE:
- **Be careful of the installation direction.**
- **Place the cylinder head carefully in order not to damage the gasket with the bottom part of the head.**

2. INSTALL CYLINDER HEAD LH

(a) Place the cylinder head on the cylinder head gasket.

(b) Install the 8 cylinder head bolts.
HINT:
- The cylinder head bolts are tightened in 2 successive steps (steps (3) and (5)).
- If any cylinder head bolts are broken or deformed, replace it.

(1) Apply a light coat of engine oil to the threads of the cylinder head bolts.

(2) Install the plate washer onto the cylinder head bolt.

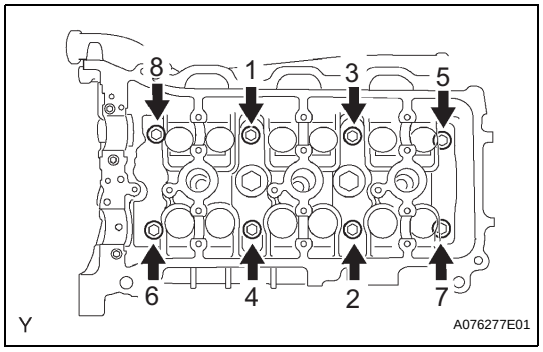

(3) Using several steps, uniformly tighten each bolt with a 10 mm bi-hexagon wrench in the sequence shown in the illustration.
Torque: 36 N*m (367 kgf*cm, 27 ft.*lbf)
If any cylinder head bolts do not meet the torque specification, replace them.
NOTICE:
Do not drop the washers into the cylinder head.

EM

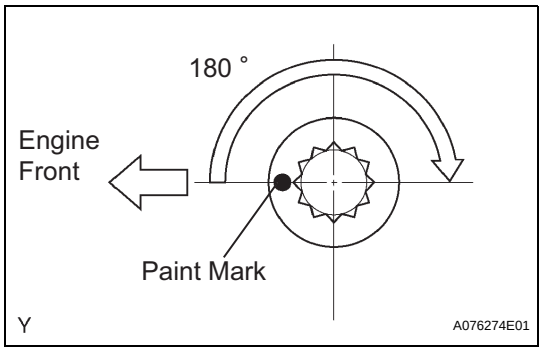

(4) Mark the front side of each cylinder head bolt with paint.
(5) Retighten the cylinder head bolts 180° as shown.
(6) Check that the painted marks are now at 180° from the engine front.

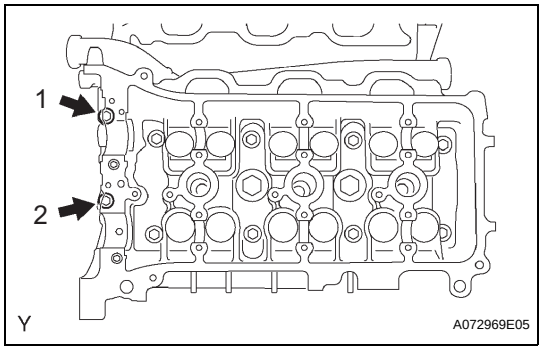

(c) Install the 2 cylinder head bolts.
(1) Apply a light coat of engine oil to the threads of the cylinder head bolts.
(2) Using several steps, uniformly install and tighten the 2 cylinder head bolts in the sequence as shown in the illustration.
Torque: 30 N*m (306 kgf*cm, 22 ft.*lbf)

(d) Install the ground cables with the 2 bolts.
Torque: 8.0 N*m (82 kgf*cm, 71 in.*lbf)

3. INSTALL CAMSHAFTS

NOTICE:
Keep the camshaft level while it is being removed. The camshaft thrust clearance is very small and failing to keep it level could crack or damage the cylinder head journal surface, which receives the thrust. This could subsequently lead the camshaft to seize or break. Perform the following steps to avoid such problems.

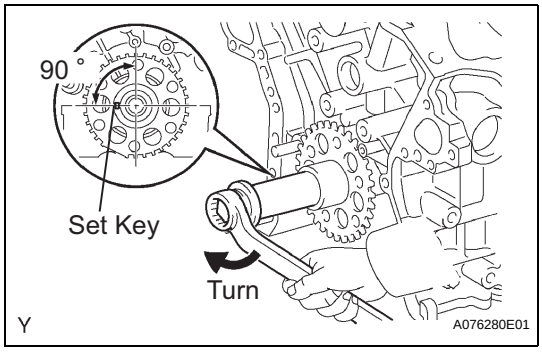

(a) Set the crankshaft position.
(1) Using the crankshaft pulley set bolt, turn the crankshaft, and set the crankshaft set key in the left horizontal position.
NOTICE:
Installing the crankshaft at the wrong angle could cause the piston head and valve head to come into contact with each other when installing the camshaft. This could cause damage, so always set the crankshaft at the correct angle.

(b) Apply new engine oil to the thrust portion and journal of the camshafts.

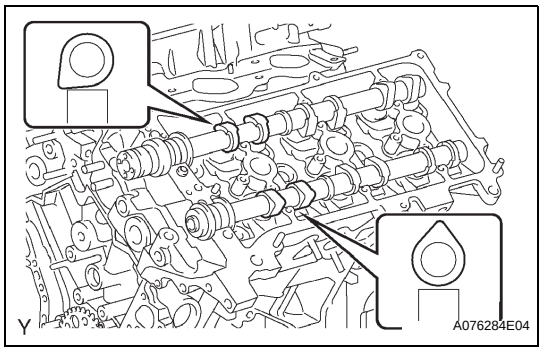

(c) Place the 2 camshafts onto the cylinder head with the cam lobes of No. 1 cylinder facing in the directions shown in the illustration.

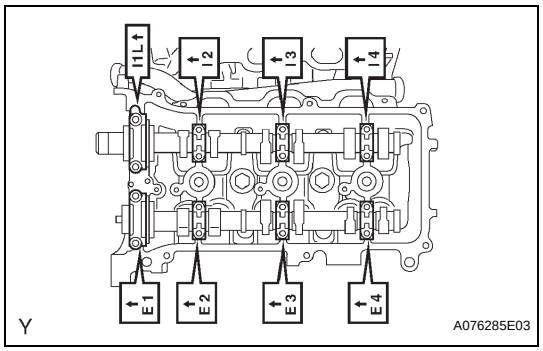

(d) Install the 8 bearing caps in the proper locations as shown.

(e) Apply a light coat of engine oil to the threads and under the leads of the bearing cap bolts.

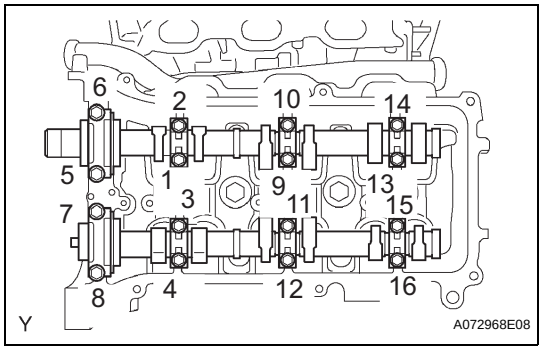

(f) Using several steps, uniformly install and tighten the 16 bearing cap bolts in the sequence as shown in the illustration.
Torque: 9.0 N*m (92 kgf*cm, 80 in.*lbf) for 10 mm (0.39 in.) head
24 N*m (245 kgf*cm, 18 ft.*lbf) for 12 mm (0.47 in.) head

EM

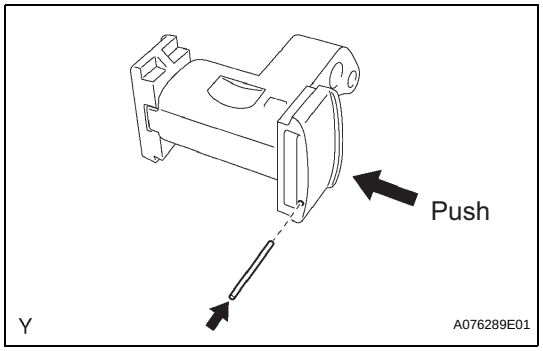

4. INSTALL NO.2 CHAIN TENSIONER ASSEMBLY

(a) While pushing in the tensioner, insert a pin of ϕ 1.0 mm (0.039 in.) into the hole to fix it.

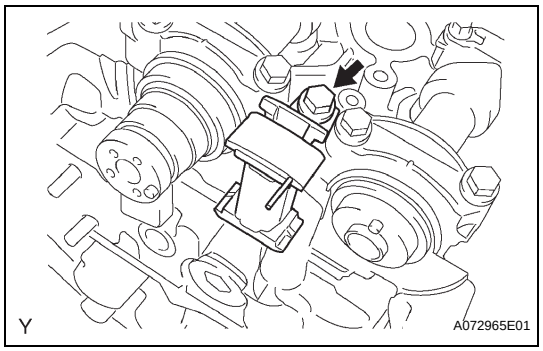

(b) Install the chain tensioner No. 2 with the bolt.
Torque: 19 N*m (194 kgf*cm, 14 ft.*lbf)

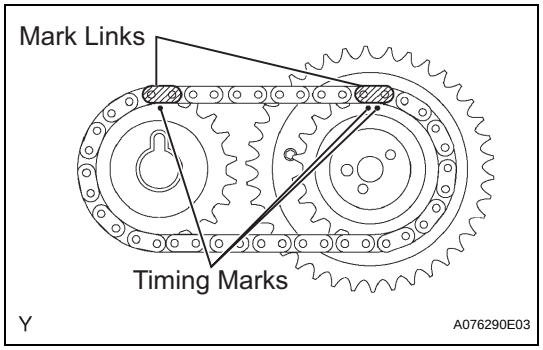

5. INSTALL CAMSHAFT TIMING GEARS AND NO.2 CHAIN (for Bank 2)

(a) Align the yellow mark links with the timing marks (1 dot mark and 2 dot marks) of camshaft timing gears as shown in the illustration.

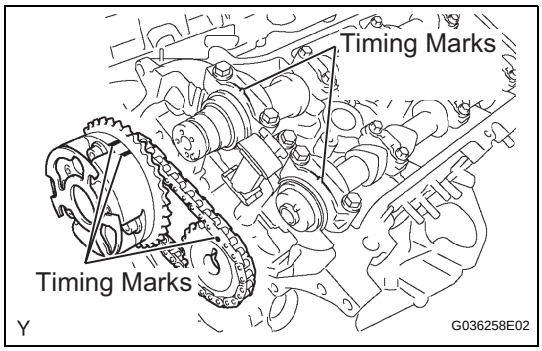

(b) Align the timing marks on the camshaft timing gears with the timing marks on the bearing caps, and install the camshaft timing gears with the chain onto the LH camshafts.

(c) Temporarily install the 2 camshaft timing gear bolts.
NOTICE:
Do not push camshaft timing gear assembly onto the camshaft forcibly when installing it.

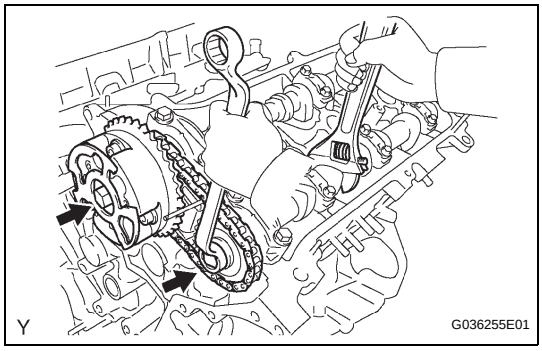

(d) Hold the hexagonal portion of the camshaft with a wrench, and tighten the 2 bolts.
Torque: 100 N*m (1,020 kgf*cm, 74 ft.*lbf)

(e) Remove the pin from the tensioner No. 2.

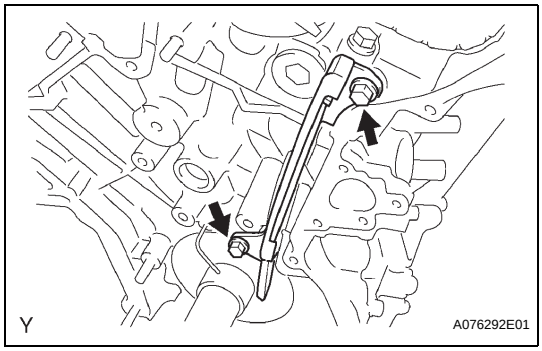

6. INSTALL NO.1 CHAIN VIBRATION DAMPER

(a) Install the chain vibration damper with the 2 bolts.
Torque: 19 N*m (194 kgf*cm, 14 ft.*lbf)

7. INSTALL WATER BY-PASS JOINT RR (See page EM-121)

8. INSTALL INTAKE MANIFOLD (See page EM-121)

9. CONNECT NO.2 FUEL PIPE SUB-ASSEMBLY

10. CONNECT NO.1 FUEL PIPE SUB-ASSEMBLY (See page FU-17)

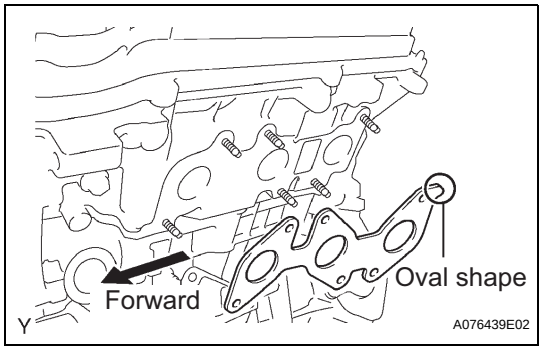

11. INSTALL EXHAUST MANIFOLD SUB-ASSEMBLY LH

(a) Set a new gasket to the LH cylinder head with the oval shape facing forward.
NOTICE:
Be careful of the installation direction.

(b) Install the exhaust manifold with the 6 nuts. Tighten the nuts uniformly in several steps.
Torque: 21 N*m (214 kgf*cm, 16 ft.*lbf)

(c) Connect the air fuel ratio sensor connector.

12. INSTALL MANIFOLD STAY

(a) Install the manifold stay with the 3 bolts.
Torque: 40 N*m (408 kgf*cm, 30 ft.*lbf)

13. INSTALL NO.2 EXHAUST PIPE ASSEMBLY
(See page EX-3)

14. INSTALL NO.1 COOL AIR INLET

(a) Install the cool air inlet with the 2 bolts.
Torque: 12 N*m (122 kgf*cm, 9.0 ft.*lbf)

15. INSTALL CHAIN TENSIONER SLIPPER

16. **INSTALL NO.1 CHAIN TENSIONER ASSEMBLY (See page EM-27)**
17. **INSTALL CHAIN SUB-ASSEMBLY**
    (See page EM-48)
18. **INSTALL TIMING CHAIN OR BELT COVER SUB-ASSEMBLY**
    (See page LU-38)
19. **INSTALL DIFFERENTIAL CARRIER ASSEMBLY FRONT (for 4WD)**
    (See page DF-38)
20. **INSTALL POWER STEERING LINK ASSEMBLY**
    (See page PS-67)
21. **INSTALL BATTERY**
22. **ADD ENGINE OIL (See page LU-5)**
23. **ADD ENGINE COOLANT (See page CO-3)**
24. **ADD DIFFERENTIAL OIL (for 4WD)**
25. **INSPECT DIFFERENTIAL OIL (for 4WD) (See page DF-8)**
26. **ADD POWER STEERING FLUID**
27. **BLEED POWER STEERING FLUID (See page PS-2)**
28. **CHECK FOR ENGINE OIL LEAKAGE**
29. **CHECK FOR ENGINE COOLANT LEAKAGE (See page CO-4)**
30. **CHECK FOR FUEL LEAKAGE**
31. **CHECK FOR EXHAUST GAS LEAKAGE**
32. **CHECK FOR POWER STEERING FLUID LEAKAGE**
33. **INSPECT AND ADJUST FRONT WHEEL ALIGNMENT**
    (See page SP-7)
34. **INSPECT IGNITION TIMING (See page EM-1)**
35. **INSPECT ENGINE IDLING SPEED (See page EM-2)**
36. **INSPECT CO/HC (See page EM-3)**
37. **INSPECT COMPRESSION (See page EM-2)**

ENGINE FRONT OIL SEAL

REMOVAL

1. **DISCONNECT CABLE FROM NEGATIVE BATTERY TERMINAL**
2. **REMOVE V-BANK COVER (See page ES-414)**
3. **REMOVE RADIATOR SUPPORT TO FRAME SEAL LH (See page CO-15)**
4. **REMOVE NO.1 ENGINE UNDER COVER SUB-ASSEMBLY (for 4WD and Pre Runner Drive Type)**
   (a) Remove the 4 bolts and engine under cover.
5. **REMOVE FAN SHROUD (See page CO-15)**
6. **REMOVE CRANKSHAFT PULLEY (See page EM-45)**
7. **REMOVE TIMING GEAR CASE OR TIMING CHAIN CASE OIL SEAL**
   (a) Using a screwdriver, pry out the oil seal.
   NOTICE:
   Be careful not to damage the crankshaft. Wrap a tip of the screwdriver with tape.

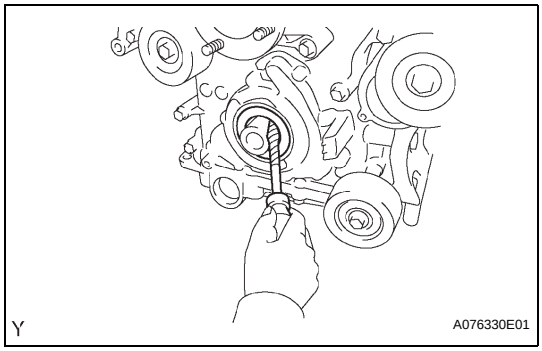

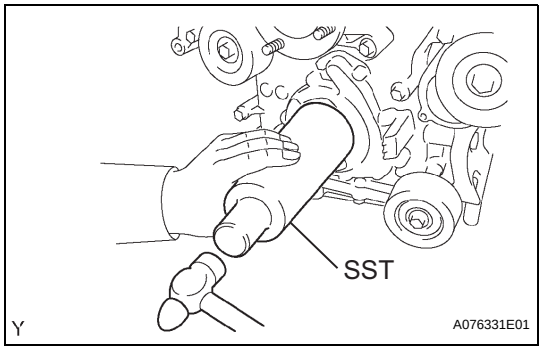

INSTALLATION

1. **INSTALL TIMING GEAR CASE OR TIMING CHAIN CASE OIL SEAL**
   (a) Apply MP grease to a new oil seal lip.
   (b) Using SST and a hammer, tap in the oil seal until its surface is flush with the timing chain cover edge.
   SST 09226-10010
2. **INSTALL CRANKSHAFT PULLEY (See page EM-30)**
3. **INSTALL FAN SHROUD (See page CO-20)**
4. **INSTALL RADIATOR SUPPORT TO FRAME SEAL LH**
5. **CONNECT CABLE TO NEGATIVE BATTERY TERMINAL**
   Torque: 3.9 N*m (40 kgf*cm, 35 in.*lbf)
6. **CHECK FOR ENGINE OIL LEAKAGE**
7. **INSTALL ENGINE UNDER COVER SUB-ASSEMBLY (for 4WD and Pre Runner Drive Type)**
   (a) Install the engine under cover with the 4 bolts.
   Torque: 29 N*m (296 kgf*cm, 21 ft.*lbf)
8. **INSTALL V-BANK COVER**
   (a) Install the V-bank cover with the 2 nuts.
   Torque: 7.5 N*m (76 kgf*cm, 66 in.*lbf)

ENGINE REAR OIL SEAL

REMOVAL

1. **REMOVE TRANSMISSION ASSEMBLY (See page EM-186)**

2. **REMOVE FLYWHEEL SUB-ASSEMBLY (for Manual Transmission)**

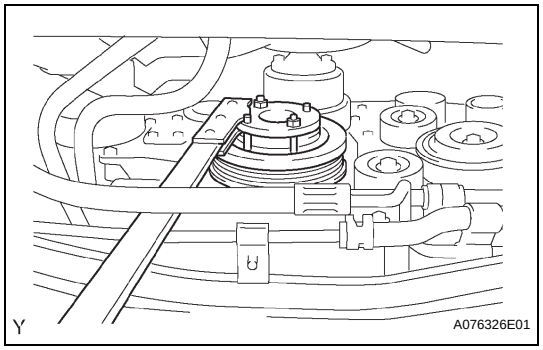

(a) Using SST, hold the crankshaft.
SST 09213-54015 (91651-60855), 09330-00021

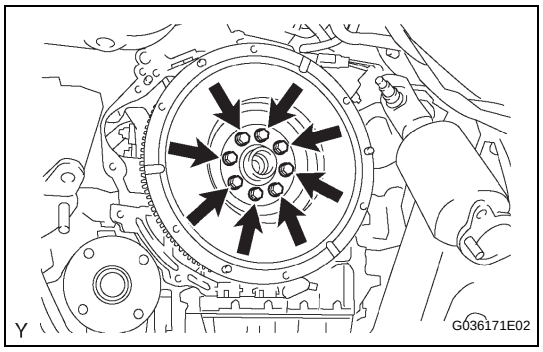

(b) Remove the 8 bolts, then remove the flywheel and 2 spacers.

3. **REMOVE DRIVE PLATE & RING GEAR SUB-ASSEMBLY (for Automatic Transmission)**

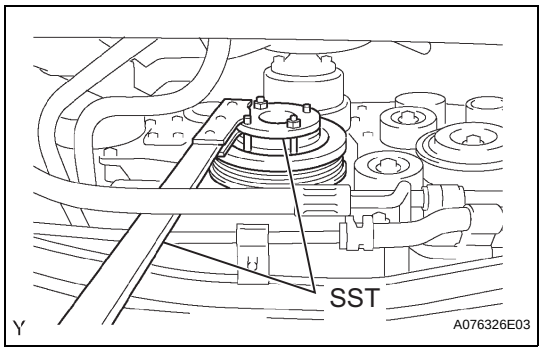

(a) Using SST, hold the crankshaft.
SST 09213-54015 (91651-60855), 09330-00021

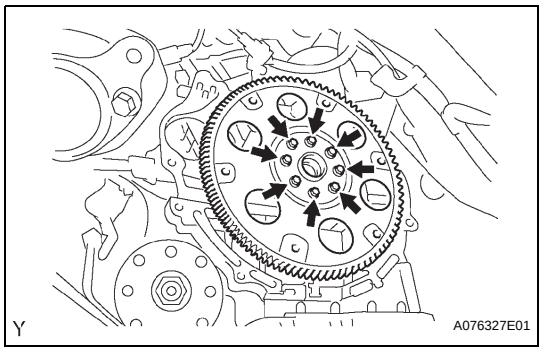

(b) Remove the 8 bolts, then remove the drive plate and 2 spacers.

EM

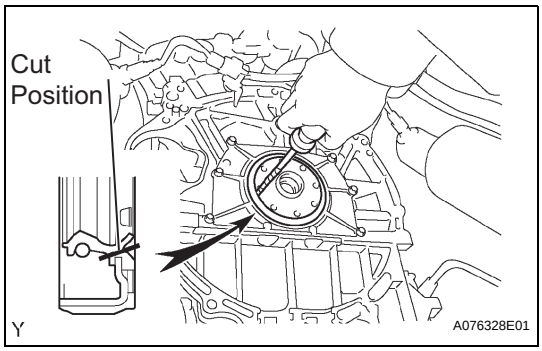

4. REMOVE REAR ENGINE OIL SEAL

(a) Using a knife, cut off the oil seal lip.

(b) Using a screwdriver, pry out the oil seal.

NOTICE:

Be careful not to damage the crankshaft. Wrap the screwdriver tip with tape.

INSTALLATION

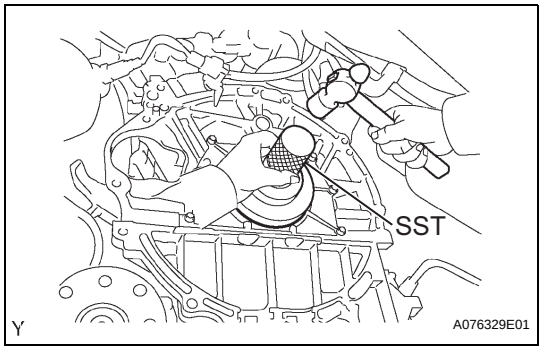

1. INSTALL REAR ENGINE OIL SEAL

(a) Apply MP grease to a new oil seal tip.

(b) Using SST and a hammer, tap in the oil seal until its surface is flush with the rear oil seal retainer edge.

SST 09223-78010

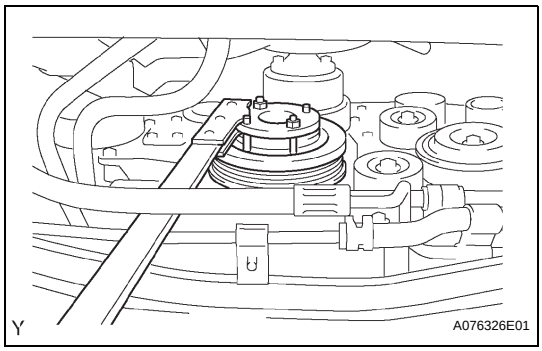

2. INSTALL FLYWHEEL SUB-ASSEMBLY (for Manual Transmission)

(a) Using SST, hold the crankshaft.

SST 09213-54015 (91651-60855), 09330-00021

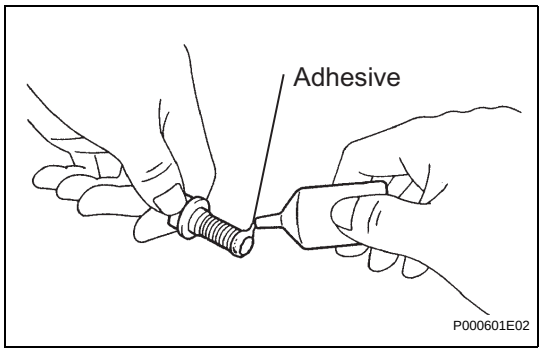

(b) Apply adhesive to 2 or 3 threads of the mounting bolt end.

Adhesive:

Part No. 08833-00070, THREE BOND 1324 or equivalent

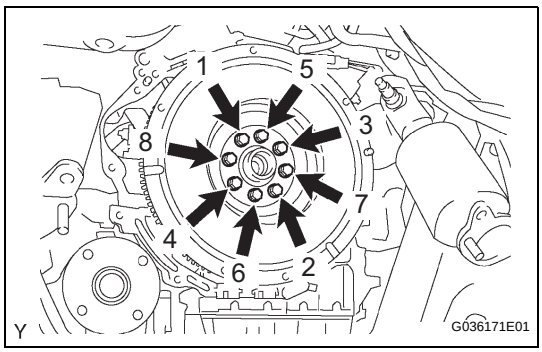

(c) Install the flywheel and 2 spacers onto the crankshaft.

(d) Using several steps, uniformly install and tighten the 8 mounting bolts in the sequence shown in the illustration.

Torque: 83 N*m (846 kgf*cm, 61 ft.*lbf)

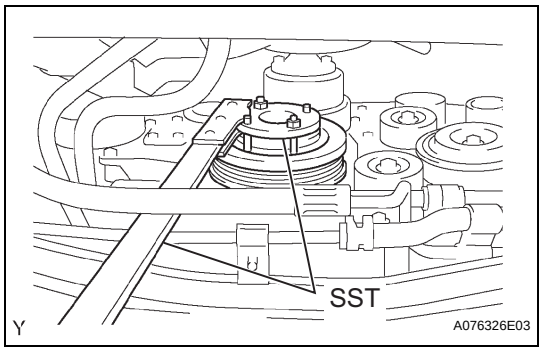

3. INSTALL DRIVE PLATE & RING GEAR SUB-ASSEMBLY (for Automatic Transmission)

(a) Using SST, hold the crankshaft.
SST 09213-54015 (91651-60855), 09330-00021

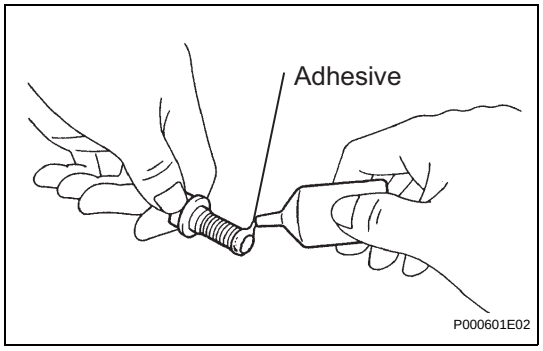

(b) Apply adhesive to 2 or 3 threads of the mounting bolt end.
Adhesive:
Part No. 08833-00070, THREE BOND 1324 or equivalent

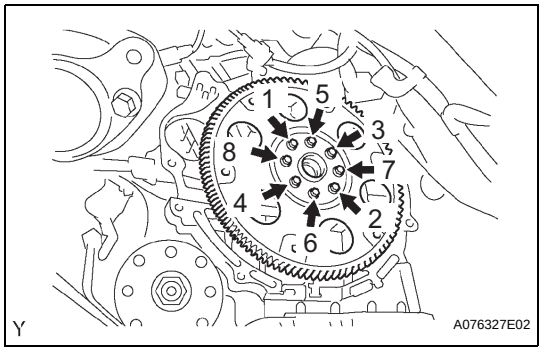

(c) Install the drive plate and 2 spacers onto the crankshaft.

(d) Using several steps, uniformly install and tighten the 8 mounting bolts in the sequence shown in the illustration.
Torque: 83 N*m (846 kgf*cm, 61 ft.*lbf)

4. INSTALL TRANSMISSION ASSEMBLY (See page EM-192)

EM

ENGINE ASSEMBLY

COMPONENTS

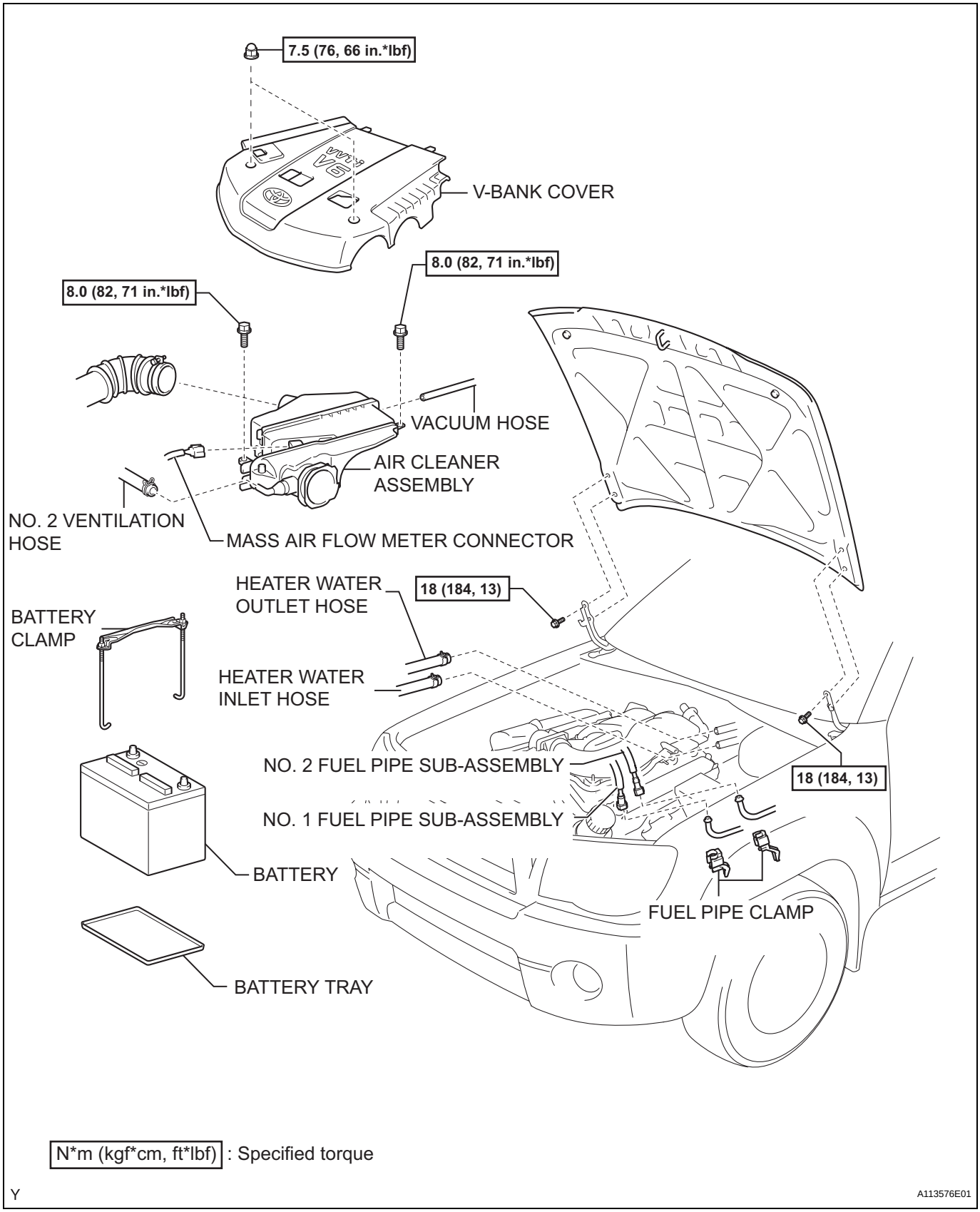

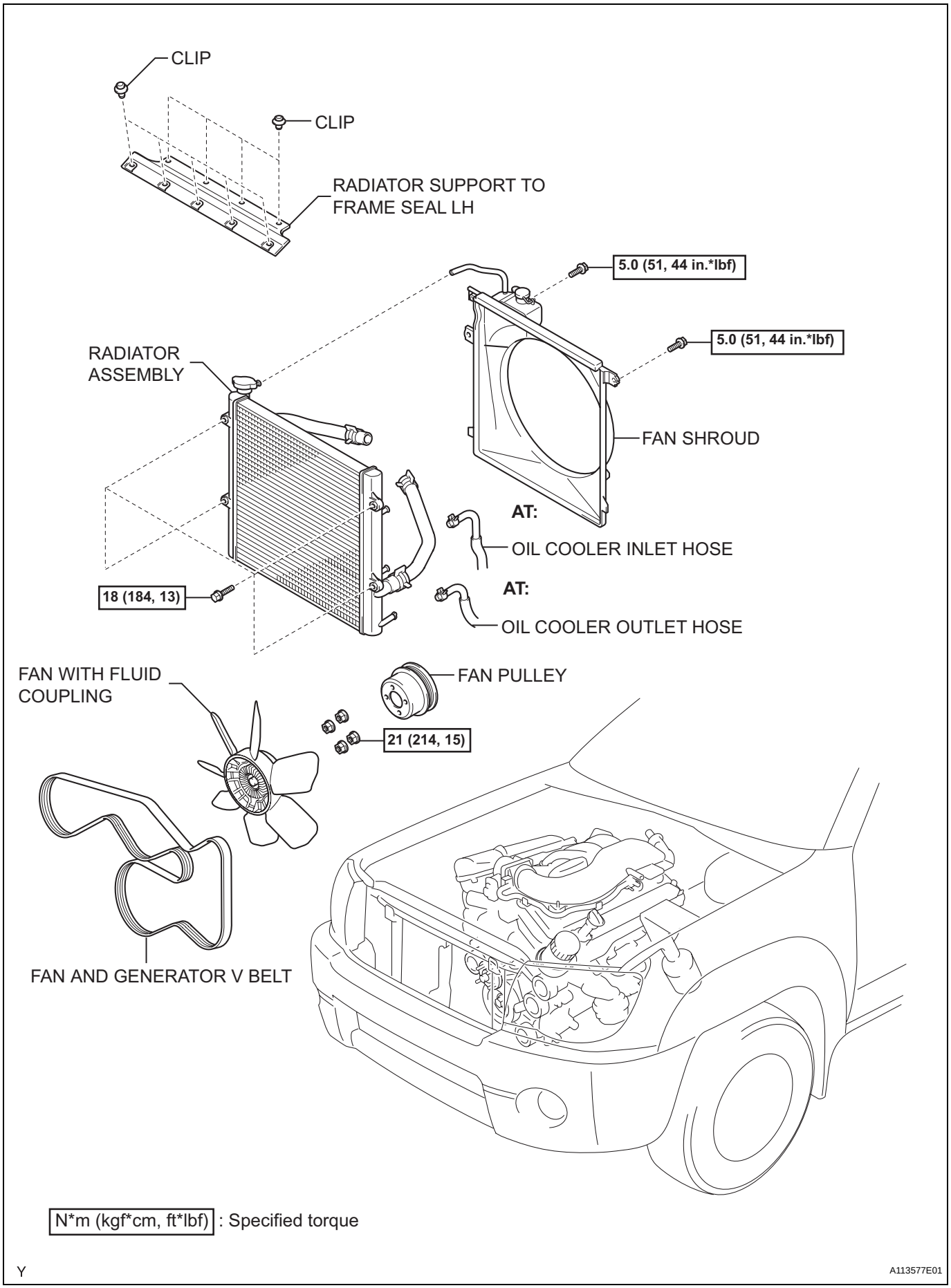
CLIP
CLIP
RADIATOR SUPPORT TO FRAME SEAL LH
5.0 (51, 44 in.*lbf)
5.0 (51, 44 in.*lbf)
RADIATOR ASSEMBLY
FAN SHROUD
AT:
OIL COOLER INLET HOSE
AT:
OIL COOLER OUTLET HOSE
18 (184, 13)
FAN WITH FLUID COUPLING
FAN PULLEY
21 (214, 15)
FAN AND GENERATOR V BELT
N*m (kgf*cm, ft*lbf) : Specified torque
Y
A113577E01

EM

EM

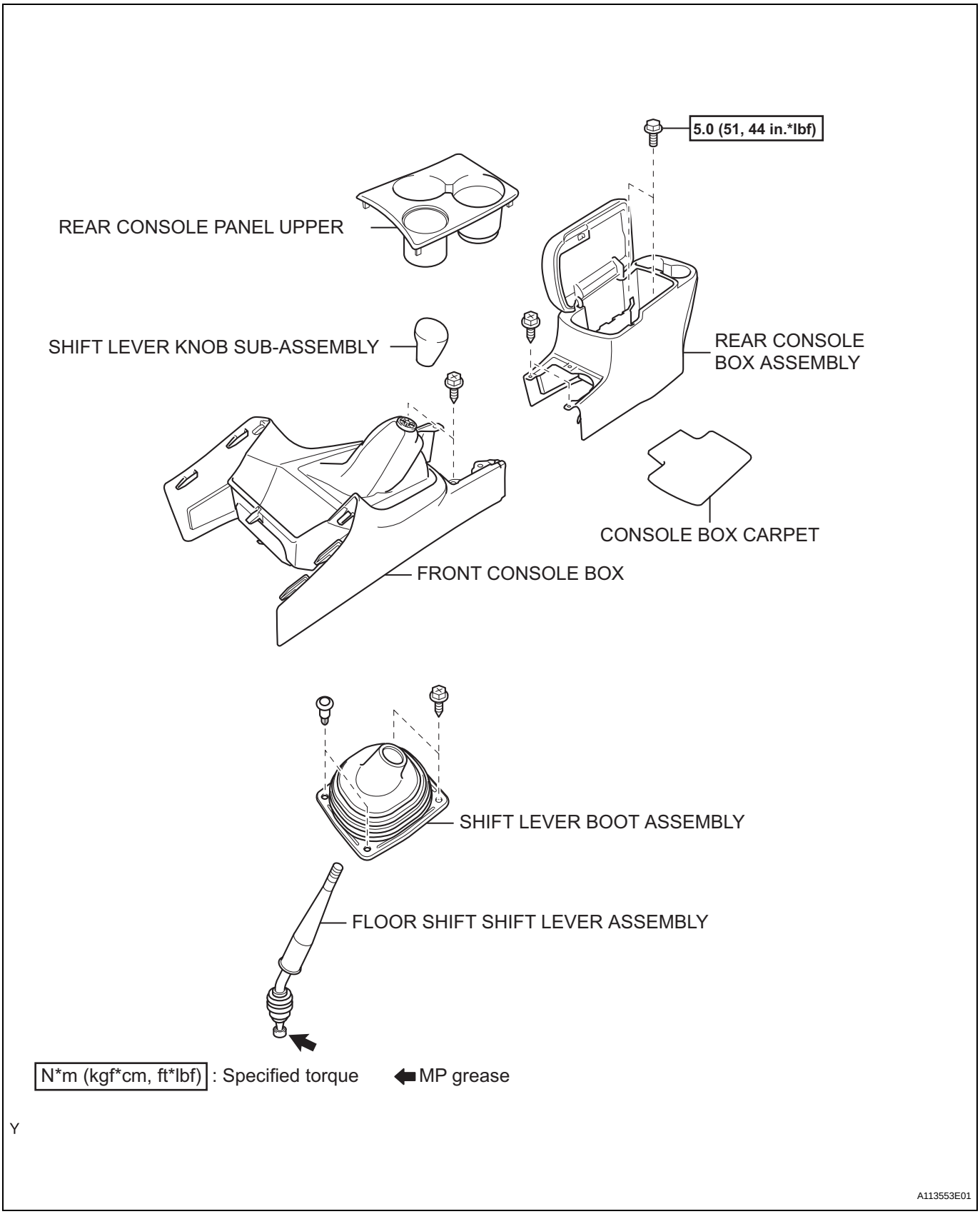
5.0 (51, 44 in.*lbf)
REAR CONSOLE PANEL UPPER
SHIFT LEVER KNOB SUB-ASSEMBLY
REAR CONSOLE BOX ASSEMBLY
CONSOLE BOX CARPET
FRONT CONSOLE BOX
SHIFT LEVER BOOT ASSEMBLY
FLOOR SHIFT SHIFT LEVER ASSEMBLY
N*m (kgf*cm, ft*lbf) : Specified torque
MP grease
A113553E01

Y

2WD AND PRE RUNNER, MANUAL TRANSMISSION:

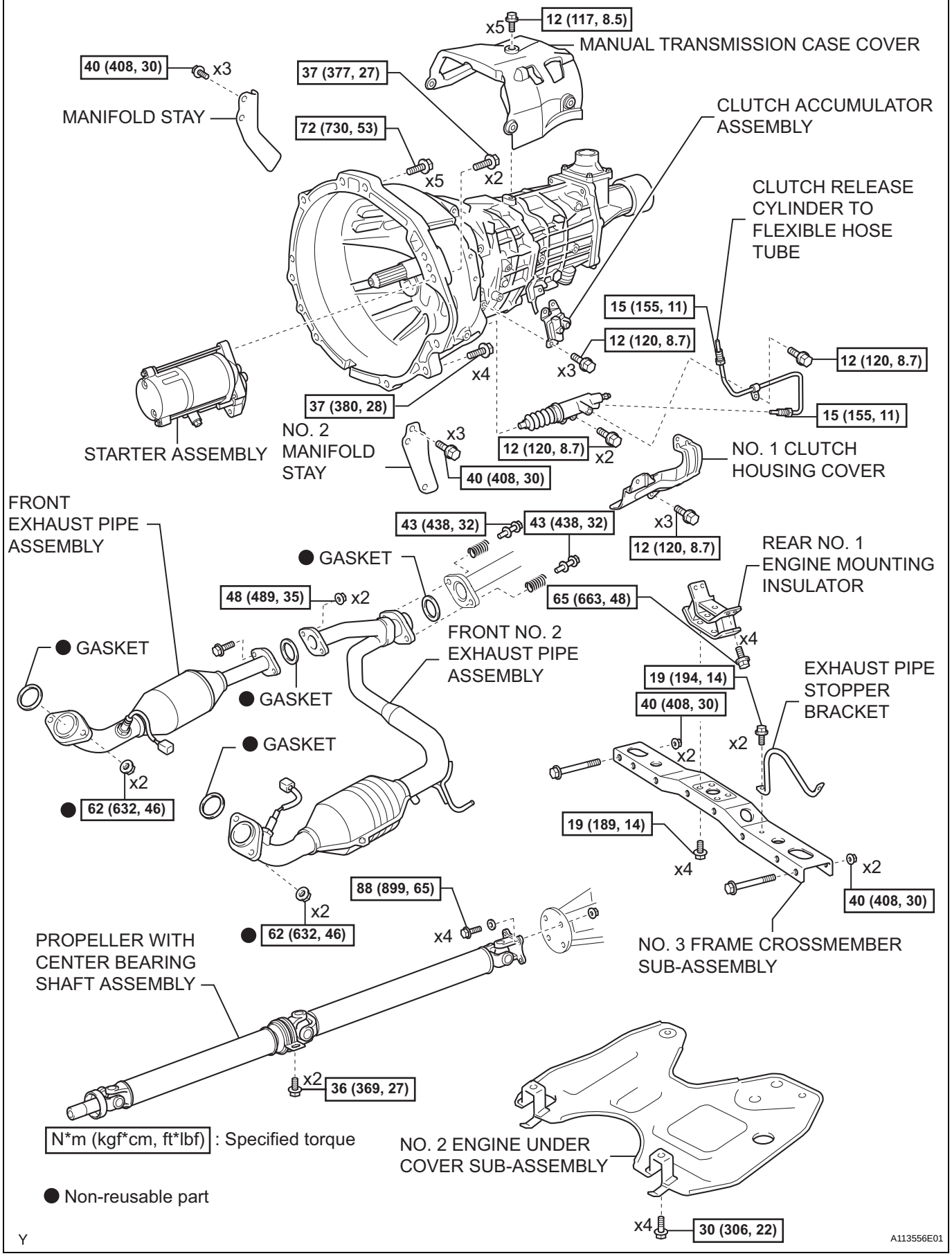

EM

4WD, MANUALTRANSMISSION:

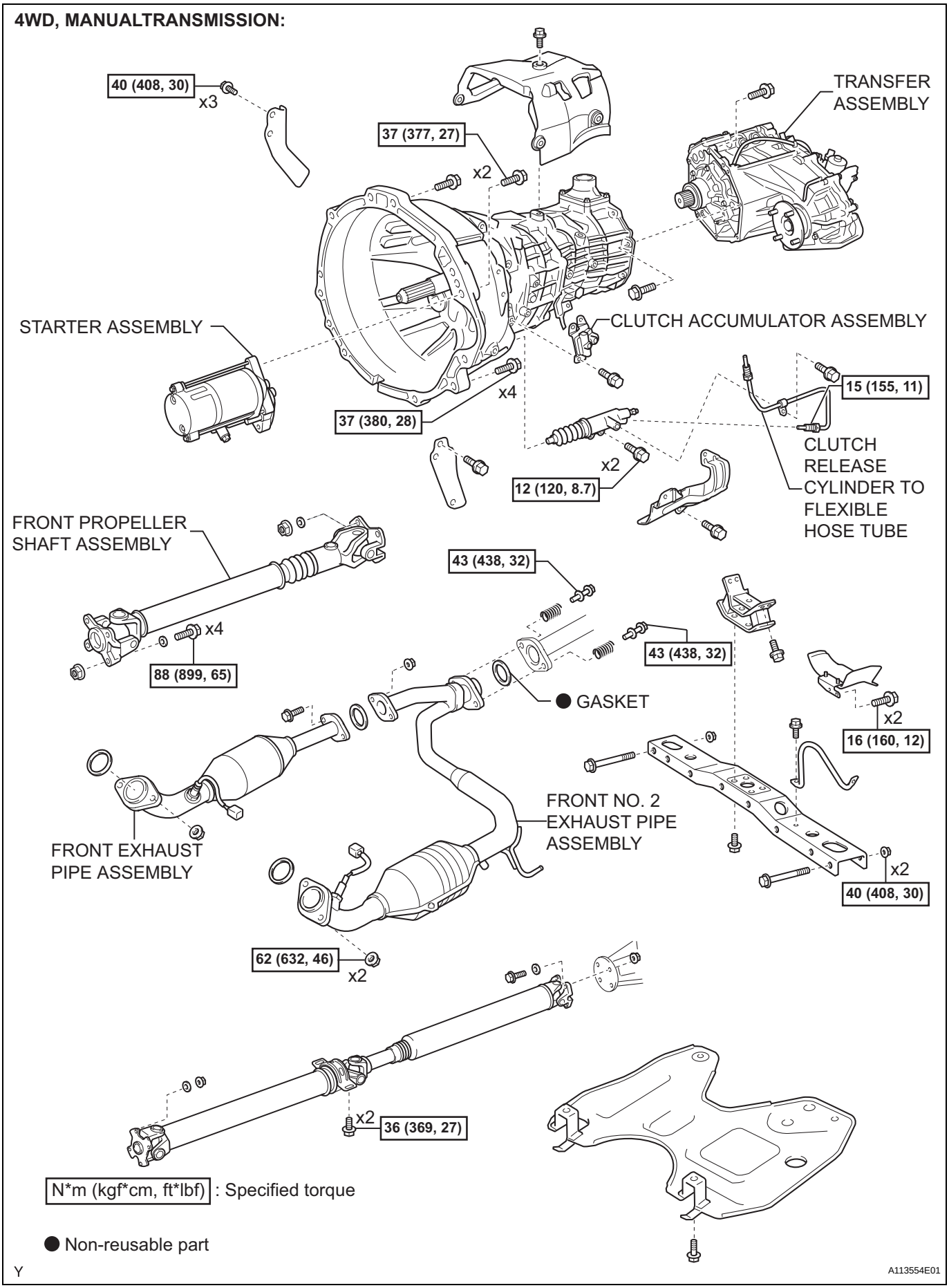

4WD, MANUALTRANSMISSION:

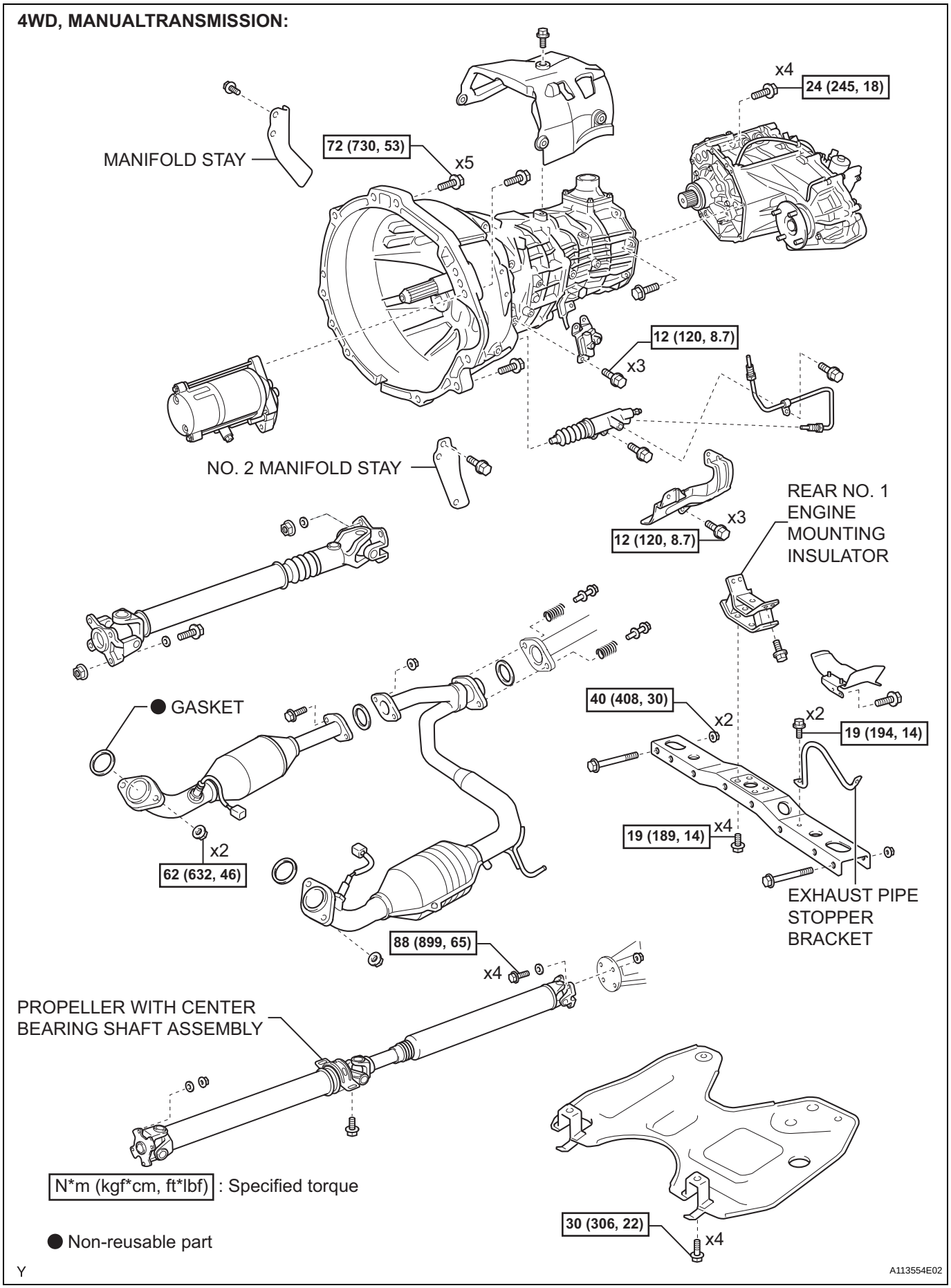

EM

EM

4WD, MANUALTRANSMISSION:

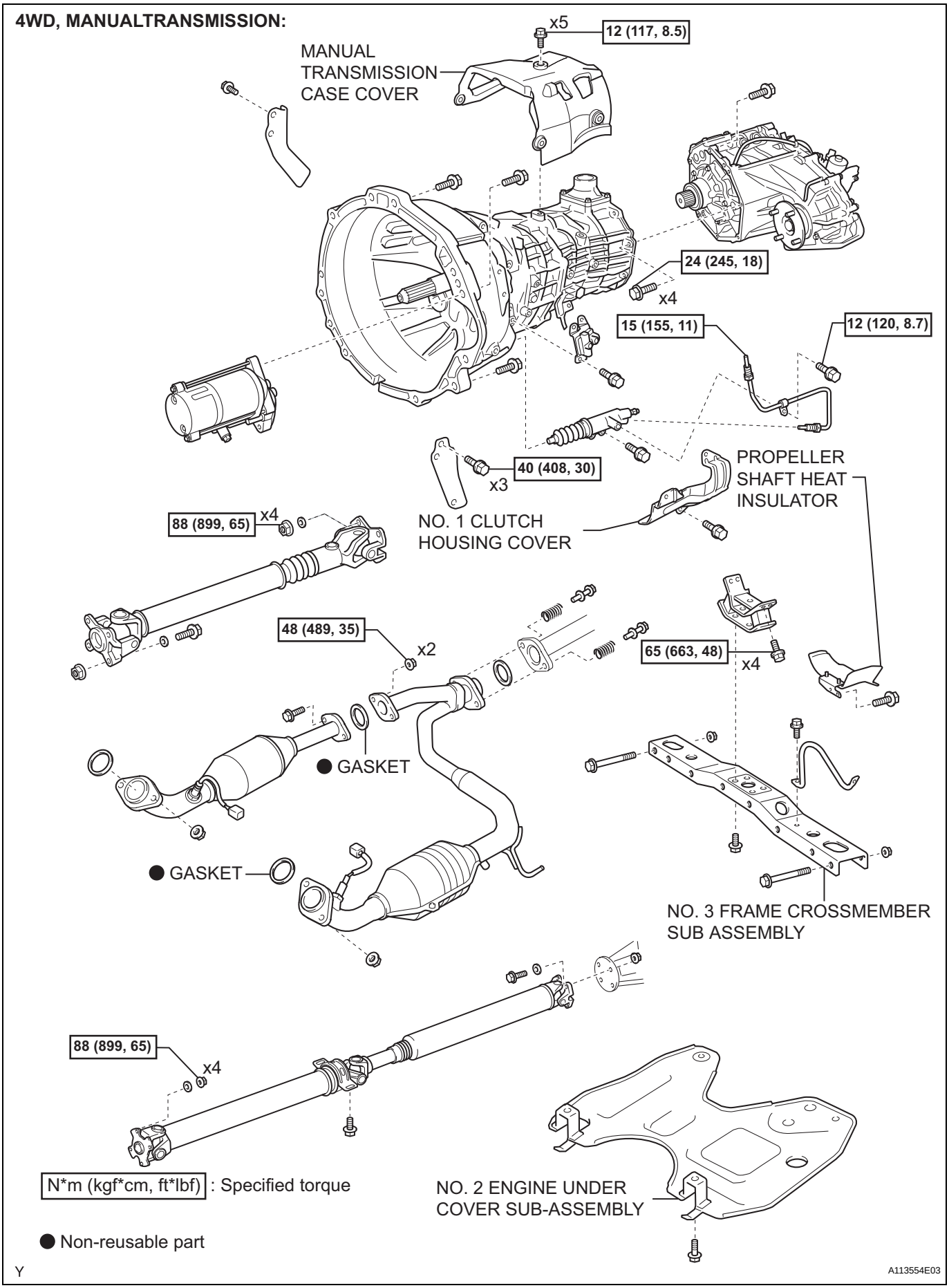

2WD AND PRE RUNNER, AUTOMATIC TRANSMISSION:

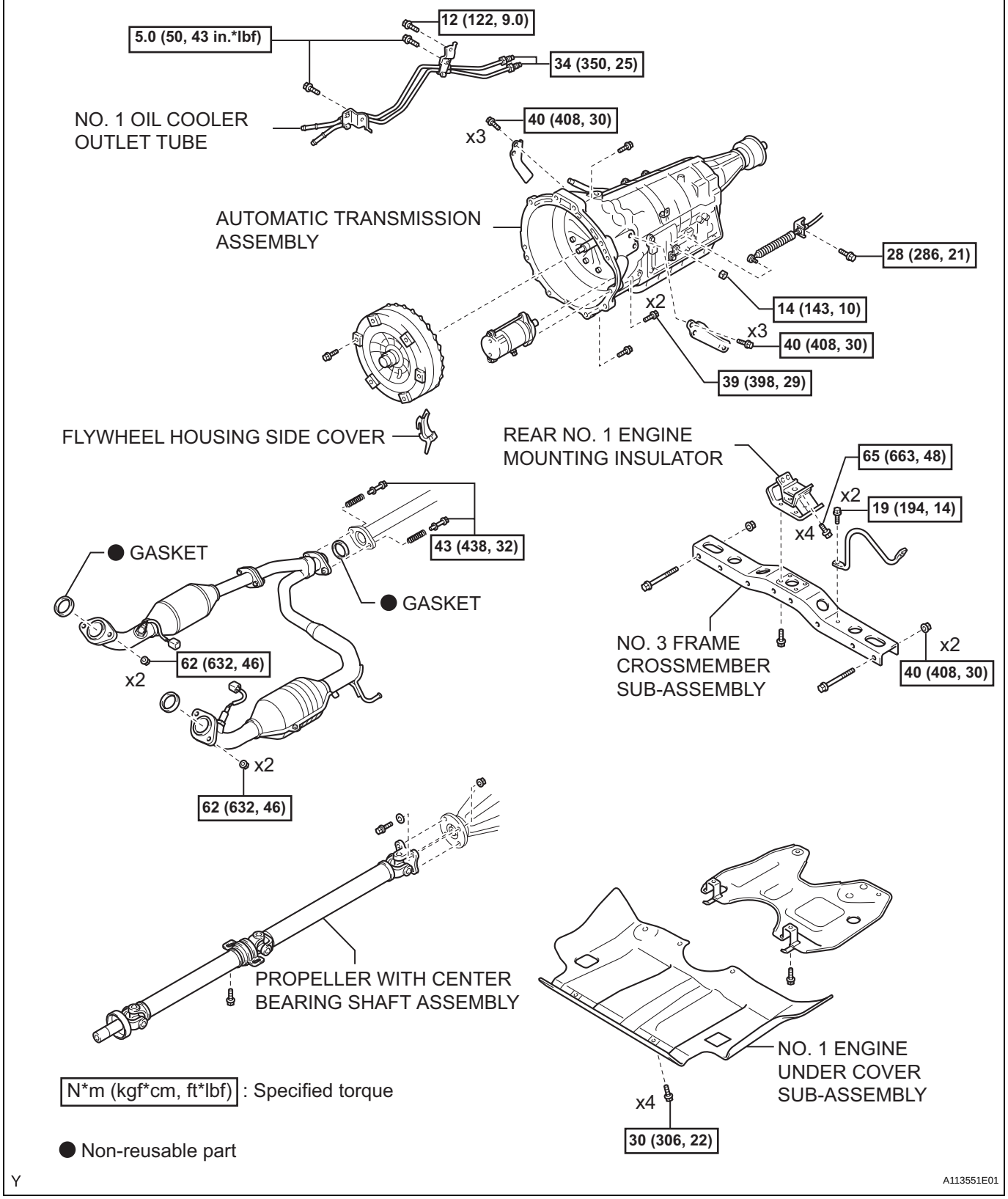

EM

2WD AND PRE RUNNER, AUTOMATIC TRANSMISSION:

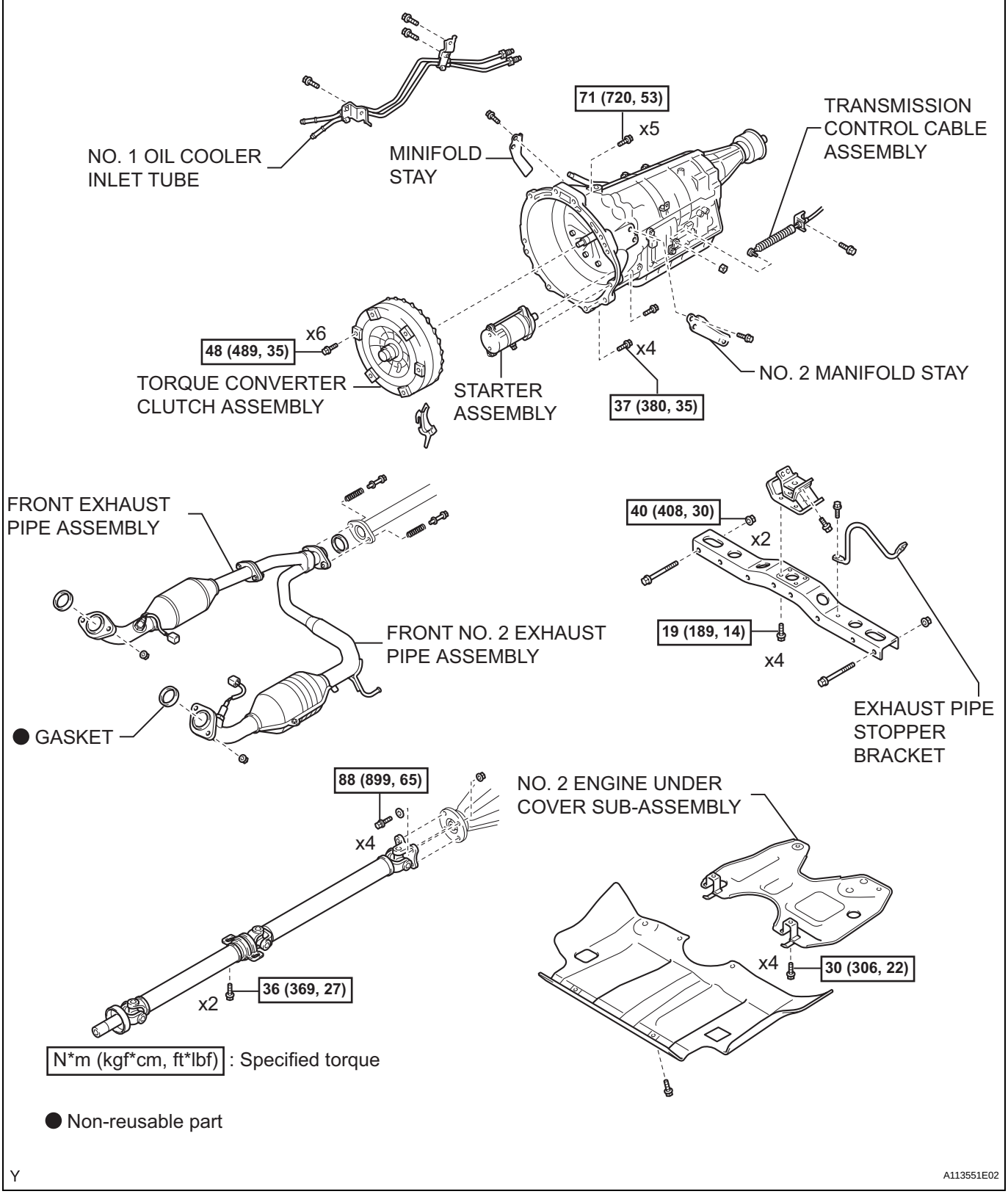

EM

4WD, MANUALTRANSMISSION:

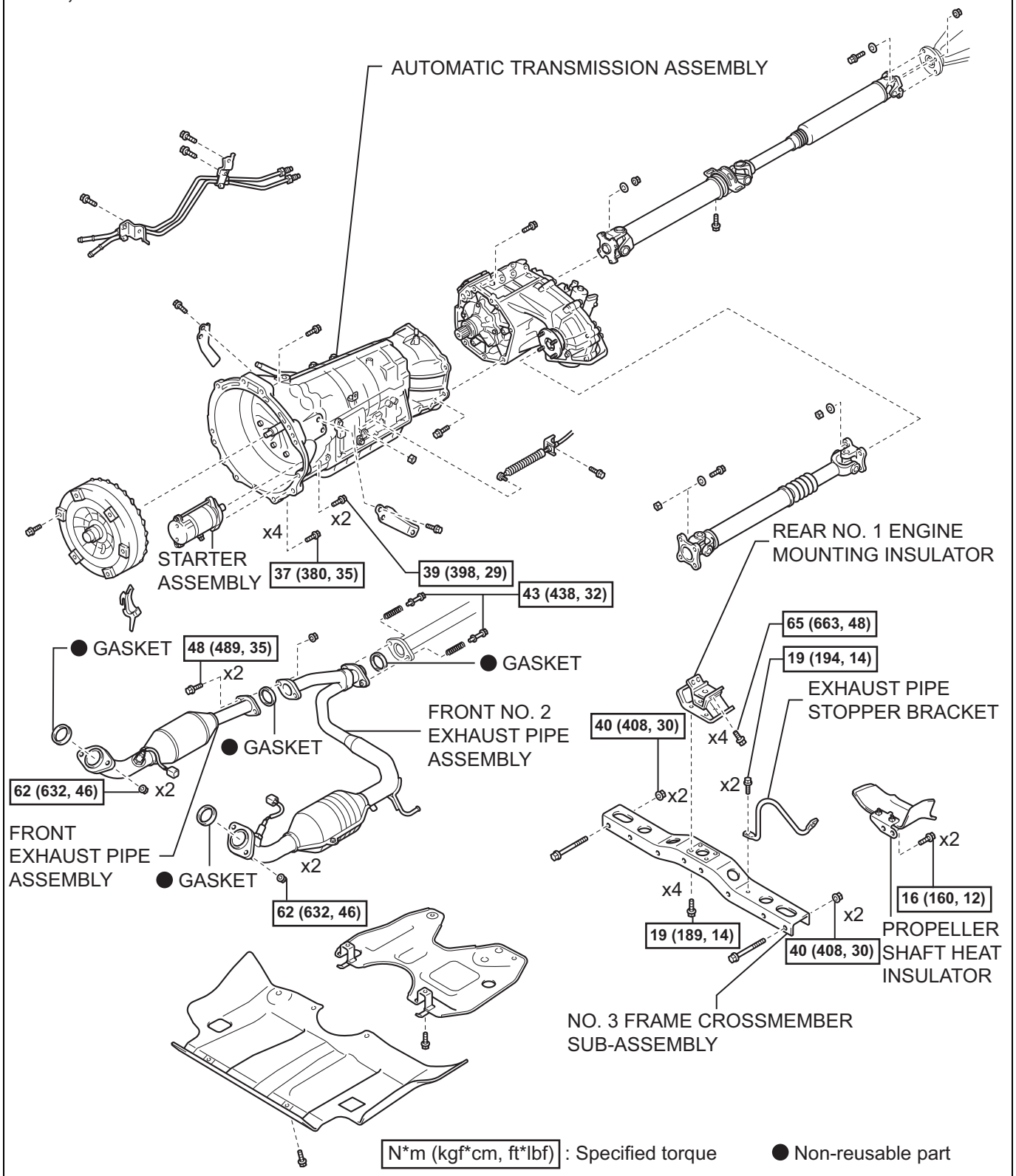

EM

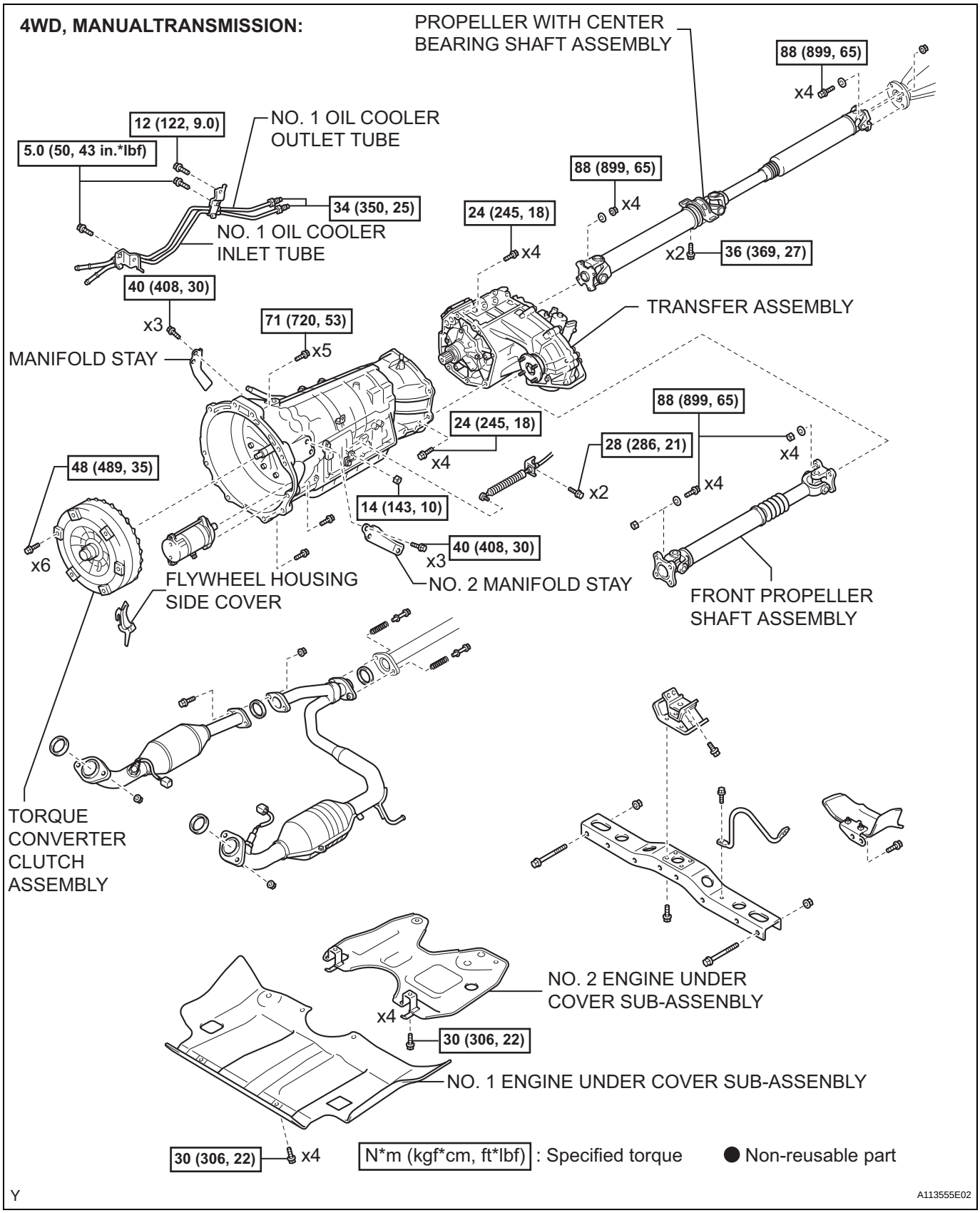
4WD, MANUALTRANSMISSION:
PROPELLER WITH CENTER BEARING SHAFT ASSEMBLY
88 (899, 65)
x4
12 (122, 9.0)
NO. 1 OIL COOLER OUTLET TUBE
5.0 (50, 43 in.*lbf)
88 (899, 65)
x4
34 (350, 25)
24 (245, 18)
NO. 1 OIL COOLER INLET TUBE
x4
x2
36 (369, 27)
40 (408, 30)
TRANSFER ASSEMBLY
x3
71 (720, 53)
x5
MANIFOLD STAY
88 (899, 65)
24 (245, 18)
28 (286, 21)
x4
x4
48 (489, 35)
x2
x4
14 (143, 10)
40 (408, 30)
x6
x3
FLYWHEEL HOUSING SIDE COVER
NO. 2 MANIFOLD STAY
FRONT PROPELLER SHAFT ASSEMBLY
TORQUE CONVERTER CLUTCH ASSEMBLY
NO. 2 ENGINE UNDER COVER SUB-ASSENBLY
x4
30 (306, 22)
NO. 1 ENGINE UNDER COVER SUB-ASSENBLY
30 (306, 22)
x4
N*m (kgf*cm, ft*lbf) : Specified torque
● Non-reusable part
Y
A113555E02

EM

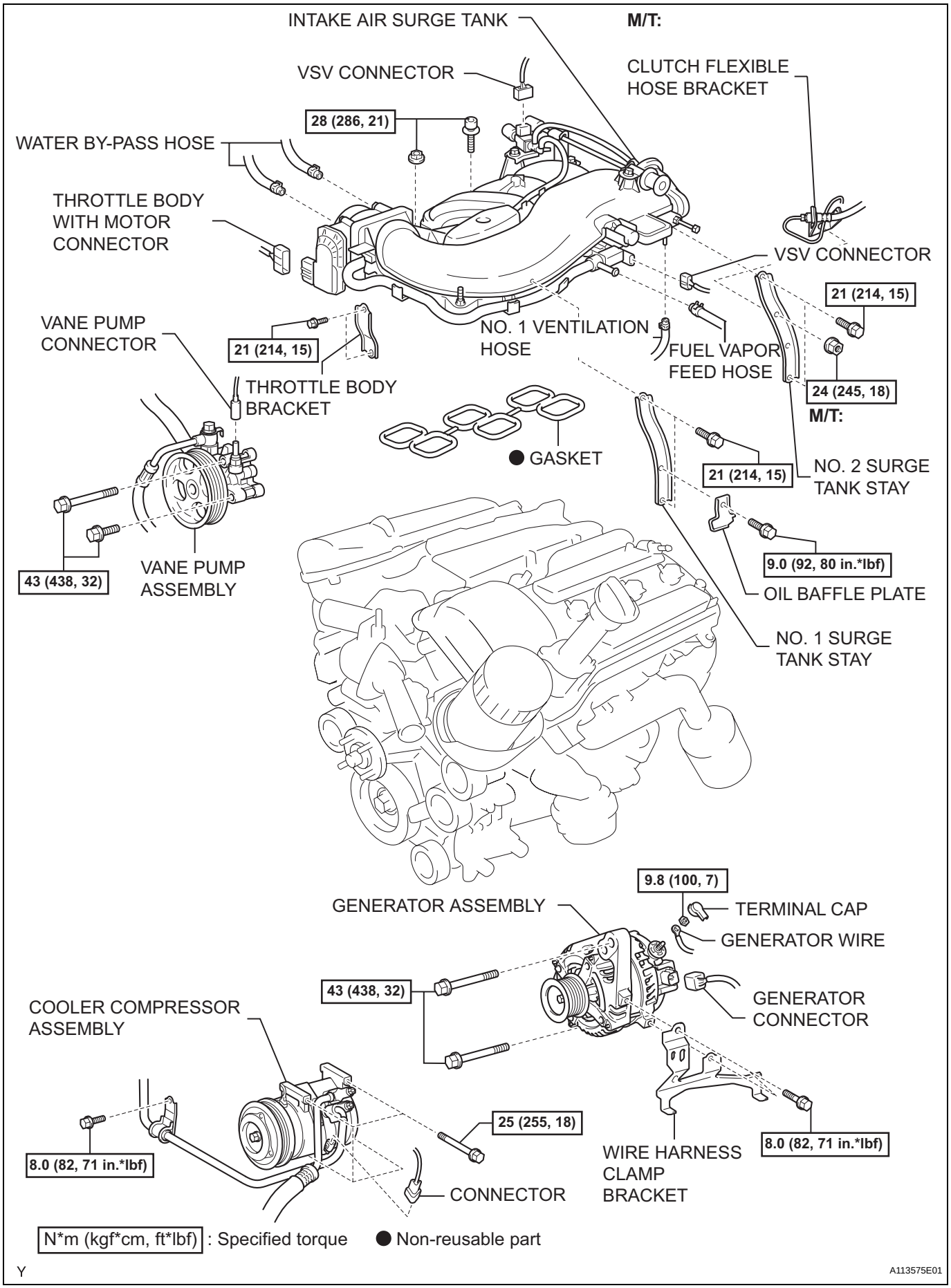
INTAKE AIR SURGE TANK
M/T:
VSV CONNECTOR
CLUTCH FLEXIBLE HOSE BRACKET
28 (286, 21)
WATER BY-PASS HOSE
THROTTLE BODY WITH MOTOR CONNECTOR
VSV CONNECTOR
21 (214, 15)
VANE PUMP CONNECTOR
21 (214, 15)
NO. 1 VENTILATION HOSE
FUEL VAPOR FEED HOSE
THROTTLE BODY BRACKET
24 (245, 18)
M/T:
GASKET
21 (214, 15)
NO. 2 SURGE TANK STAY
43 (438, 32)
VANE PUMP ASSEMBLY
9.0 (92, 80 in.*lbf)
OIL BAFFLE PLATE
NO. 1 SURGE TANK STAY
9.8 (100, 7)
GENERATOR ASSEMBLY
TERMINAL CAP
GENERATOR WIRE
43 (438, 32)
GENERATOR CONNECTOR
COOLER COMPRESSOR ASSEMBLY
25 (255, 18)
8.0 (82, 71 in.*lbf)
8.0 (82, 71 in.*lbf)
WIRE HARNESS CLAMP BRACKET
CONNECTOR
N*m (kgf*cm, ft*lbf) : Specified torque
Non-reusable part
Y
A113575E01

EM

EM

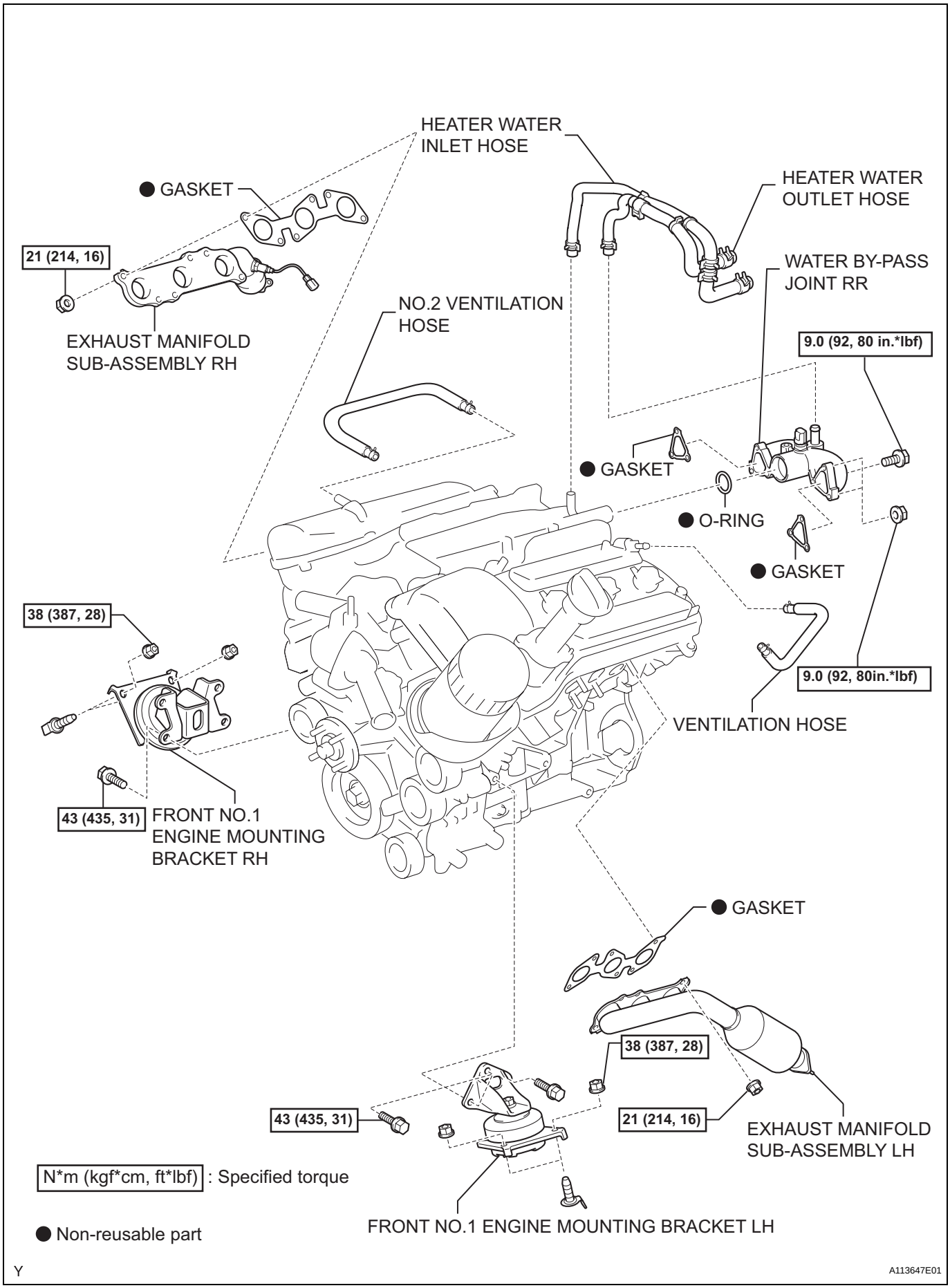

Y

A113647E01

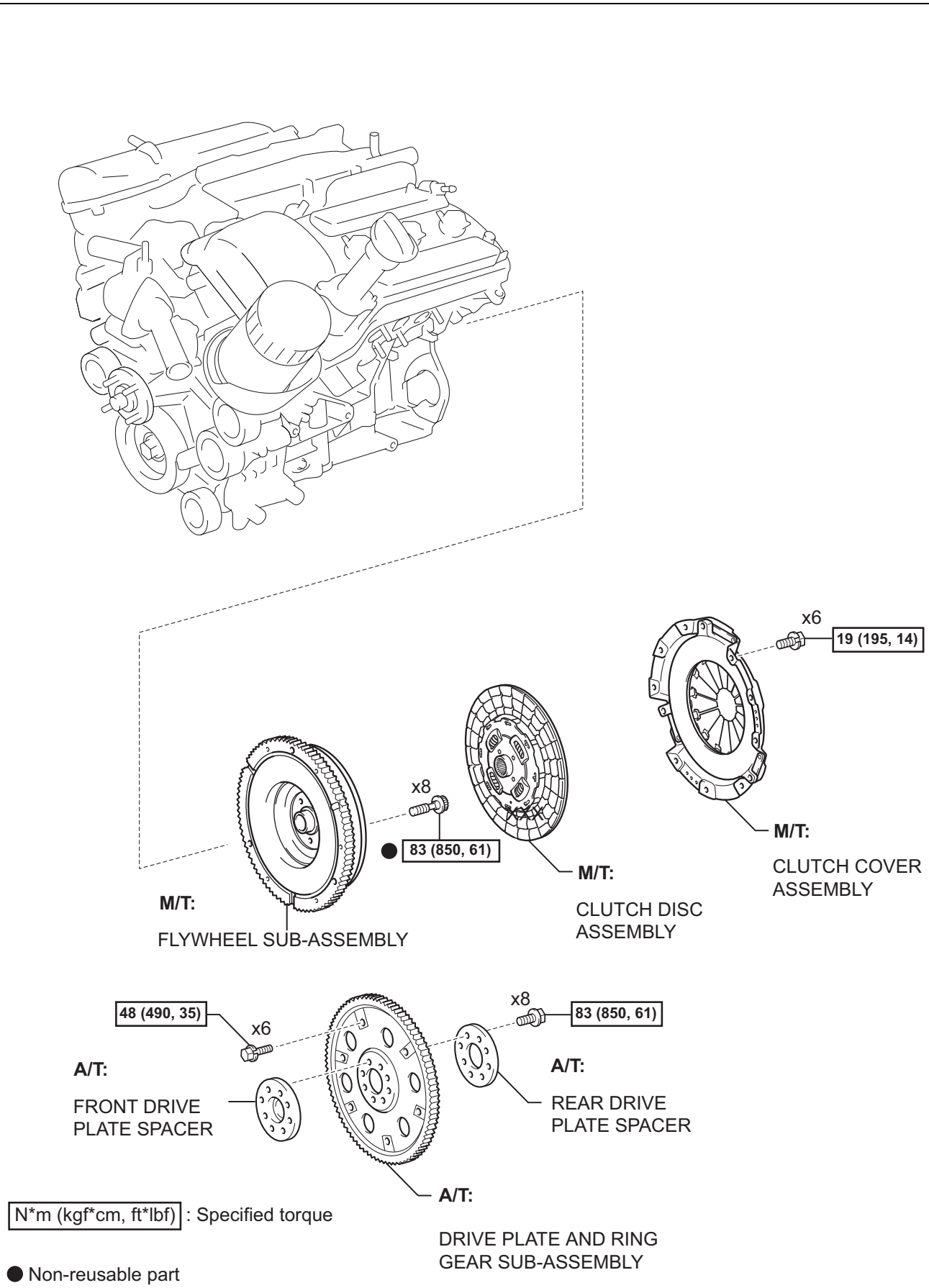

Y

A113550E01

EM

EM

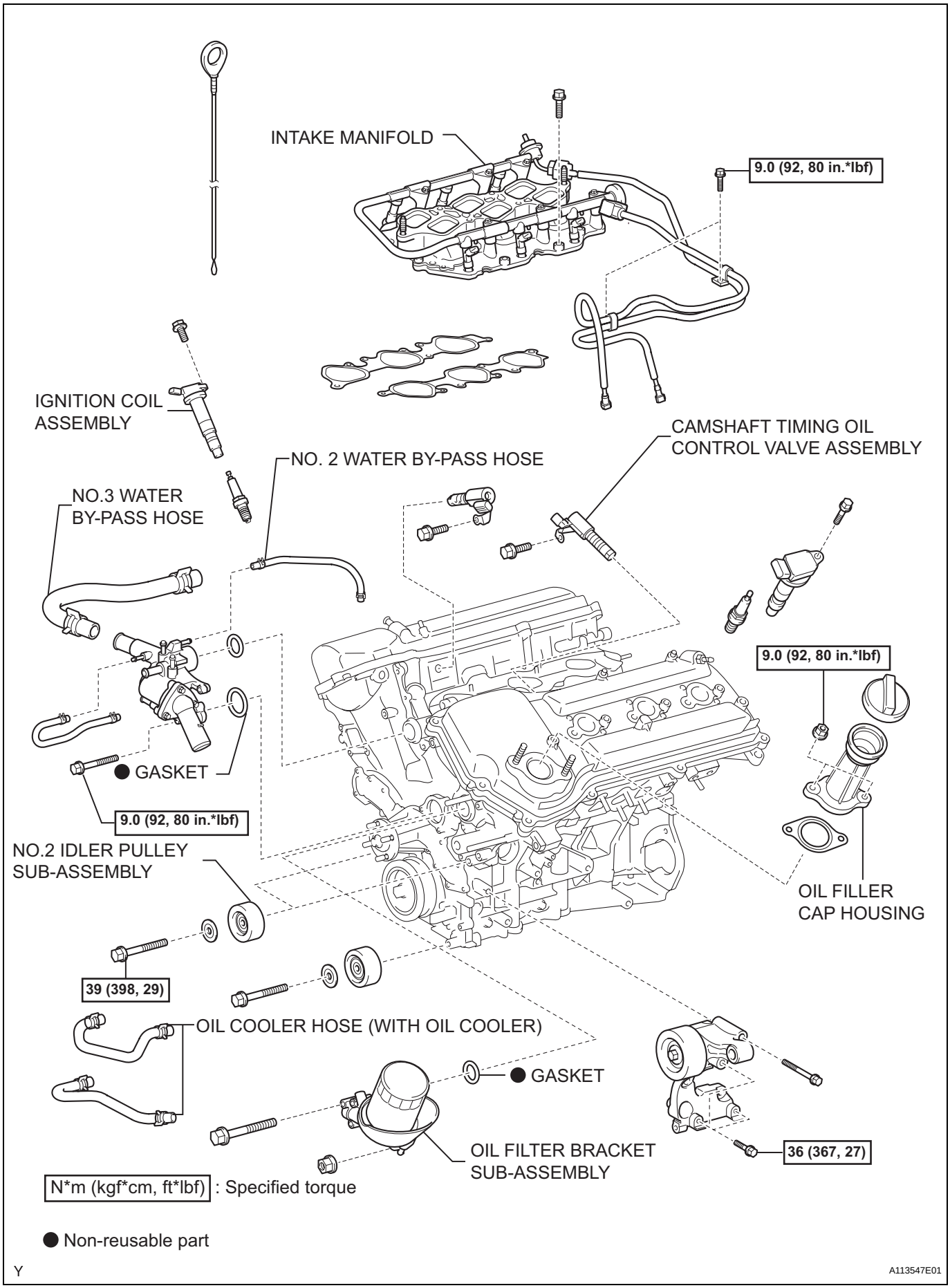
INTAKE MANIFOLD
9.0 (92, 80 in.*lbf)
IGNITION COIL ASSEMBLY
CAMSHAFT TIMING OIL CONTROL VALVE ASSEMBLY
NO. 2 WATER BY-PASS HOSE
NO.3 WATER BY-PASS HOSE
9.0 (92, 80 in.*lbf)
● GASKET
9.0 (92, 80 in.*lbf)
NO.2 IDLER PULLEY SUB-ASSEMBLY
OIL FILLER CAP HOUSING
39 (398, 29)
OIL COOLER HOSE (WITH OIL COOLER)
● GASKET
OIL FILTER BRACKET SUB-ASSEMBLY
36 (367, 27)
N*m (kgf*cm, ft*lbf) : Specified torque
● Non-reusable part
Y
A113547E01

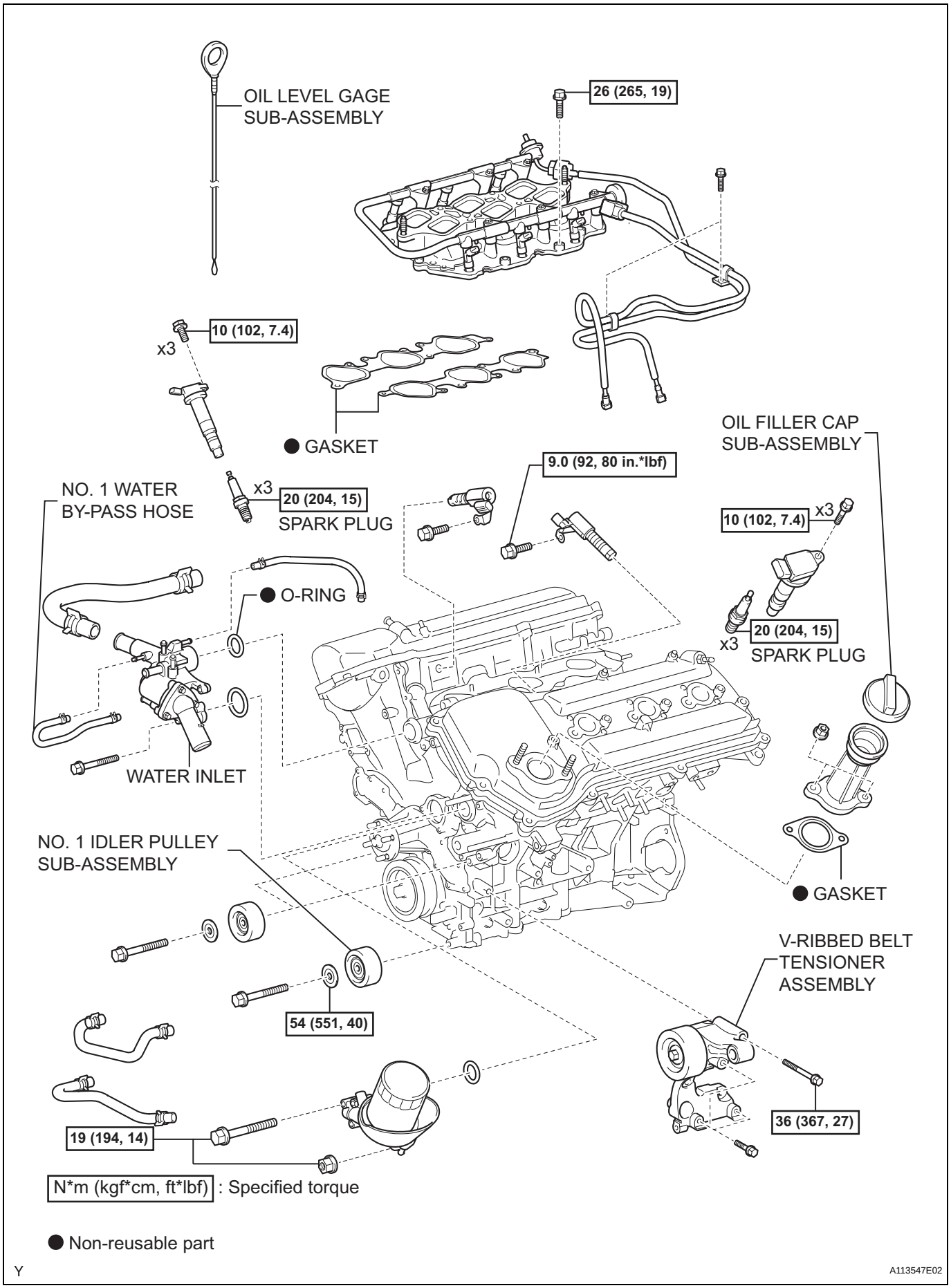
OIL LEVEL GAGE SUB-ASSEMBLY
26 (265, 19)
10 (102, 7.4)
x3
● GASKET
OIL FILLER CAP SUB-ASSEMBLY
9.0 (92, 80 in.*lbf)
NO. 1 WATER BY-PASS HOSE
x3
20 (204, 15)
SPARK PLUG
10 (102, 7.4)
x3
● O-RING
20 (204, 15)
x3
SPARK PLUG
WATER INLET
NO. 1 IDLER PULLEY SUB-ASSEMBLY
● GASKET
V-RIBBED BELT TENSIONER ASSEMBLY
54 (551, 40)
36 (367, 27)
19 (194, 14)
N*m (kgf*cm, ft*lbf) : Specified torque
● Non-reusable part
Y
A113547E02

EM

REMOVAL

1. **DISCHARGE FUEL SYSTEM PRESSURE**
   (See page FU-1)
2. **REMOVE BATTERY**
3. **DRAIN ENGINE COOLANT (See page CO-3)**
4. **DRAIN ENGINE OIL (See page LU-4)**
5. **REMOVE HOOD SUB-ASSEMBLY**
   (a) Disconnect the windshield washer hose.
   (b) Separate the 2 hood supports.
   (c) Remove the 4 bolts, then remove the hood.
6. **REMOVE RADIATOR SUPPORT TO FRAME SEAL LH (See page CO-15)**
7. **REMOVE FAN SHROUD (See page CO-15)**
8. **REMOVE RADIATOR ASSEMBLY (See page CO-15)**
9. **REMOVE V-BANK COVER (See page ES-414)**
10. **REMOVE TRANSMISSION ASSEMBLY**
    HINT:
    Refer to the table below when removing transmission.

Transmission	Drive Type	See Page
Manual Transmission	2WD	MT-7
Manual Transmission	4WD	MT-6
Automatic Transmission	2WD	AT-159
Automatic Transmission	4WD	AT-162

11. **REMOVE CLUTCH COVER ASSEMBLY (for Manual Transmission)**

Transmission	See page
RA60	CL-40
RA60F	CL-44

12. **REMOVE CLUTCH DISC ASSEMBLY (for Manual Transmission)**

Transmission	See page
RA60	CL-40
RA60F	CL-44

13. **REMOVE FAN PULLEY**
14. **REMOVE VANE PUMP ASSEMBLY (See page EM-44)**
15. **REMOVE GENERATOR ASSEMBLY (See page CH-7)**
16. **SEPARATE COOLER COMPRESSOR ASSEMBLY (See page ES-409)**
17. **DISCONNECT NO.1 FUEL PIPE SUB-ASSEMBLY (See page FU-13)**
18. **DISCONNECT NO.2 FUEL PIPE SUB-ASSEMBLY (See page FU-13)**
19. **DISCONNECT HEATER WATER INLET HOSE**

20. DISCONNECT HEATER WATER OUTLET HOSE

21. REMOVE INTAKE AIR SURGE TANK (See page EM-57)

22. SEPARATE ENGINE WIRE

(a) Remove the glove compartment door.
(b) Remove the instrument panel finish panel sub-assembly lower RH.
(c) Disconnect the 5 connectors from the ECM.
(d) Disconnect the 2 connectors from four wheel drive ECU (4WD only).
(e) Pull the wire harness into the engine room.
(f) Disconnect the front differential connector (4WD only).
(g) Disconnect the 3 connectors from the engine room relay block.
(h) Remove the nut, then separate the engine wire from the engine room relay block.

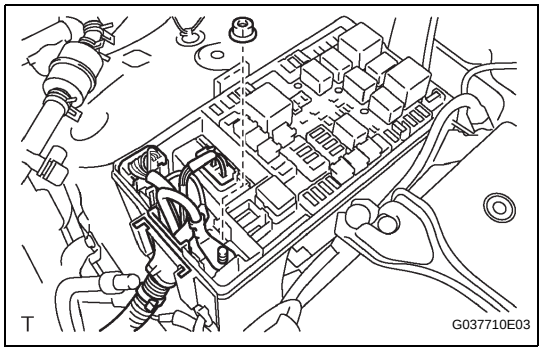

23. SEPARATE NO.2 ENGINE WIRE

(a) Disconnect the ground cable from the cylinder block.

24. REMOVE ENGINE ASSEMBLY

(a) Install the 2 engine hangers with the 4 bolts as shown in the illustration.
Part No:
Engine hanger No. 1 12281-31070
Engine hanger No. 2 12282-31050
Bolt 90119-08177
Torque: 33 N*m (336 kgf*cm, 24 ft.*lbf)

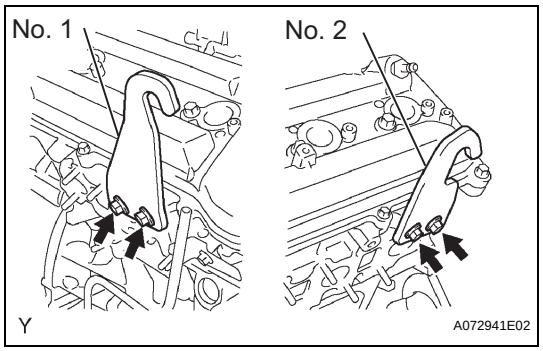

(b) Attach the engine sling device and hang the engine with the chain block.
(c) Remove the 4 bolts and 4 nuts, and separate the engine mounting brackets from the frame brackets.
(d) Lift the engine out of the vehicle carefully.
NOTICE:
Make sure that the engine is clear of all wiring and hoses.
(e) Place the engine onto a working bench.

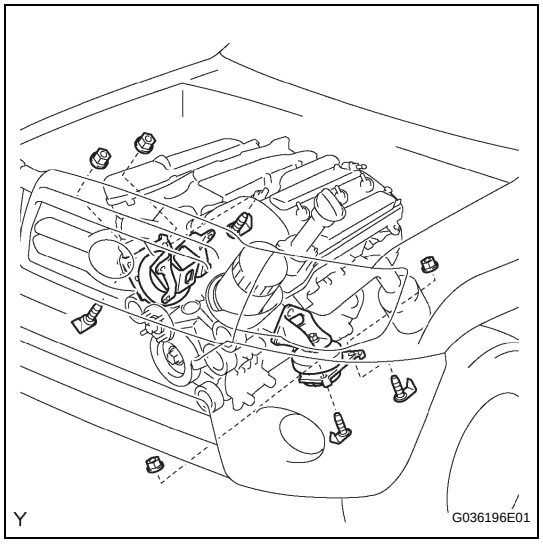

25. REMOVE FLYWHEEL SUB-ASSEMBLY (for Manual Transmission) (See page EM-167)

26. REMOVE DRIVE PLATE & RING GEAR SUB-ASSEMBLY (for Automatic Transmission) (See page EM-167)

EM

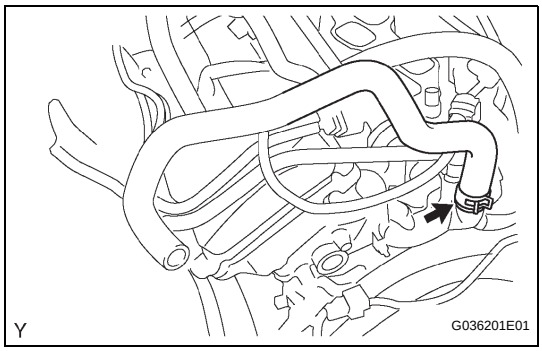

27. REMOVE HEATER WATER INLET HOSE

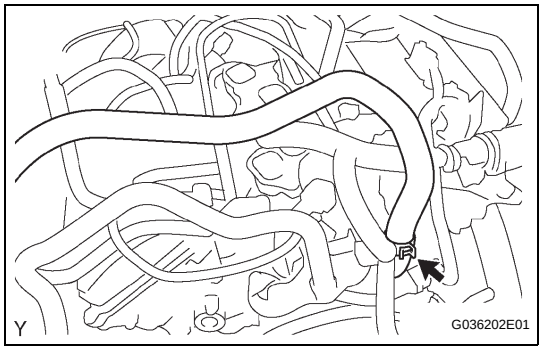

28. REMOVE HEATER WATER OUTLET HOSE

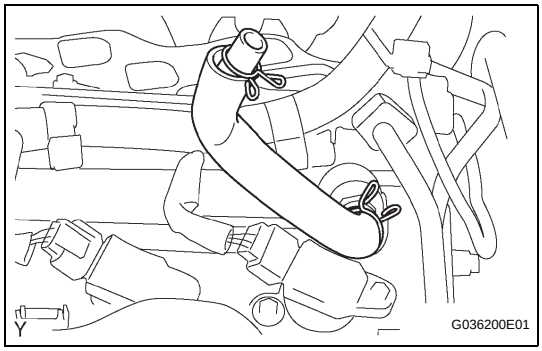

29. REMOVE VENTILATION HOSE

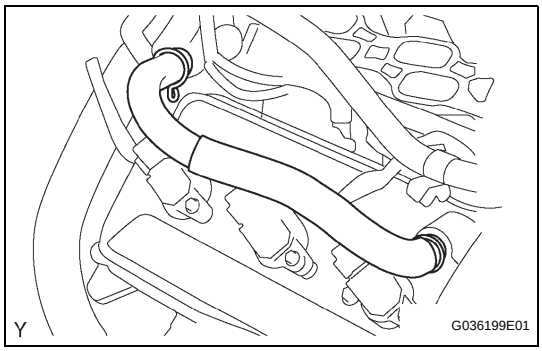

30. REMOVE NO.2 VENTILATION HOSE

31. REMOVE EXHAUST MANIFOLD SUB-ASSEMBLY RH

(a) Remove the 6 nuts, exhaust manifold and gasket.

32. REMOVE EXHAUST MANIFOLD SUB-ASSEMBLY LH

(a) Remove the 6 nuts, exhaust manifold and gasket.

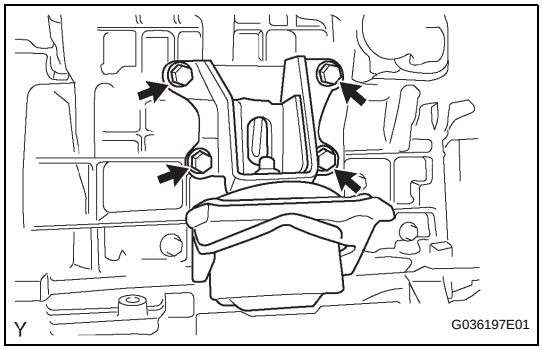

33. REMOVE FRONT NO.1 ENGINE MOUNTING BRACKET RH

(a) Remove the 4 bolts, then remove the engine mounting bracket RH.

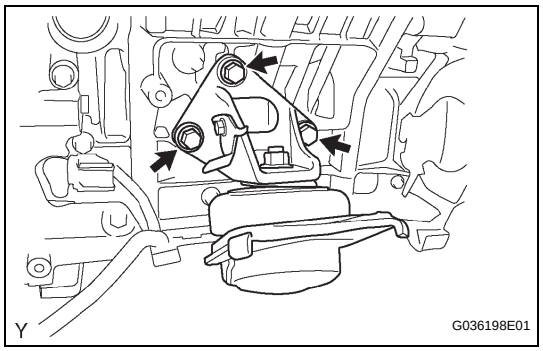

34. REMOVE FRONT NO.1 ENGINE MOUNTING BRACKET LH

(a) Remove the 3 bolts, then remove the engine mounting bracket LH.

35. REMOVE NO.2 IDLER PULLEY SUB-ASSEMBLY

(a) Remove the 2 bolts, then remove the 2 idler pulleys.

36. REMOVE NO.1 IDLER PULLEY SUB-ASSEMBLY

(a) Remove the bolt, then remove the idler pulley.

37. REMOVE V-RIBBED BELT TENSIONER ASSEMBLY (See page EM-44)

38. REMOVE WATER INLET (See page CO-9)

39. REMOVE OIL FILTER BRACKET SUB-ASSEMBLY

(a) Remove the 3 bolts and 2 nuts, then remove the oil filter bracket and gasket.

40. REMOVE INTAKE MANIFOLD (See page EM-93)

41. REMOVE CAMSHAFT TIMING OIL CONTROL VALVE ASSEMBLY (See page ES-407)

42. REMOVE WATER BY-PASS JOINT RR (See page EM-93)

43. REMOVE OIL FILTER CAP SUB-ASSEMBLY

44. REMOVE OIL FILLER CAP HOUSING

(a) Remove the 2 nuts, oil filler cap housing and gasket.

45. REMOVE IGNITION COIL ASSEMBLY (See page IG-7)

46. REMOVE SPARK PLUG

47. REMOVE OIL LEVEL GAGE SUB-ASSEMBLY

INSPECTION

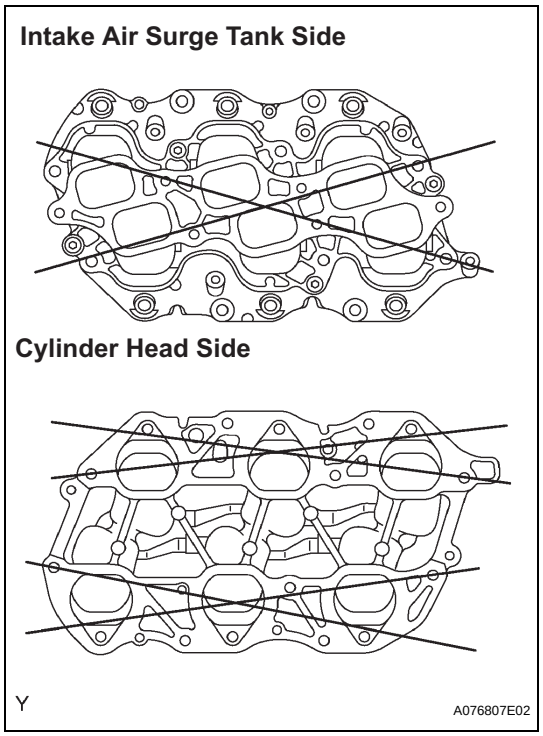

1. INSPECT INTAKE MANIFOLD FOR WARPAGE

(a) Using a precision straight edge and feeler gauge, measure the warpage of the contact surfaces of the cylinder head and intake air surge tank.

Maximum warpage:

0.8 mm (0.031 in.) for Intake air surge tank side

0.2 mm (0.008 in.) for Cylinder head side

If warpage is greater than the maximum, replace the intake manifold.

EM

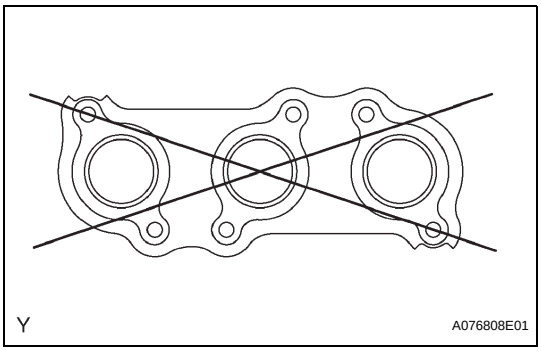

2. INSPECT EXHAUST MANIFOLD FOR WARPAGE

(a) Using a precision straight edge and feeler gauge, measure the warpage of the top surface of the cylinder head.

Maximum warpage:
0.7 mm (0.028 in.)

If warpage is greater than maximum, replace the exhaust manifold.

HINT:
Maximum warpage of each installation surface:
0.3 mm (0.012 in.)

INSTALLATION

1. **INSTALL OIL LEVEL GAGE SUB-ASSEMBLY**
2. **INSTALL SPARK PLUG**
   Torque: 20 N*m (204 kgf*cm, 15 ft.*lbf)
3. **INSTALL IGNITION COIL ASSEMBLY (See page IG-7)**
4. **INSTALL OIL FILLER CAP HOUSING**
   (a) Install a new gasket and oil filler cap housing with the 2 nuts.
   Torque: 9.0 N*m (92 kgf*cm, 80 in.*lbf)
5. **INSTALL OIL FILLER CAP SUB-ASSEMBLY**
6. **INSTALL WATER BY-PASS JOINT RR (See page EM-99)**
7. **INSTALL CAMSHAFT TIMING OIL CONTROL VALVE ASSEMBLY (See page ES-408)**
8. **INSTALL INTAKE MANIFOLD (See page EM-99)**
9. **INSTALL OIL FILTER BRACKET SUB-ASSEMBLY**
   (a) Install a new gasket and oil filler bracket with the 3 bolts and 2 nuts.
10. **INSTALL WATER INLET (See page CO-10)**
11. **INSTALL V-RIBBED BELT TENSIONER ASSEMBLY (See page EM-52)**
12. **INSTALL NO.1 IDLER PULLEY SUB-ASSEMBLY (See page EM-30)**
13. **INSTALL NO.2 IDLER PULLEY SUB-ASSEMBLY (See page EM-30)**
14. **INSTALL FRONT NO.1 ENGINE MOUNTING BRACKET LH**
    (a) Install the engine mounting bracket w/ engine mounting insulator with the 3 bolts.
    Torque: 43 N*m (435 kgf*cm, 31 ft.*lbf)
15. **INSTALL FRONT NO.1 ENGINE MOUNTING BRACKET RH**
    (a) Install the engine mounting bracket w/ engine mounting insulator with the 4 bolts.
    Torque: 43 N*m (435 kgf*cm, 31 ft.*lbf)
16. **INSTALL EXHAUST MANIFOLD SUB-ASSEMBLY LH (See page EM-142)**
17. **INSTALL EXHAUST MANIFOLD SUB-ASSEMBLY RH (See page EM-100)**
18. **INSTALL NO.2 VENTILATION HOSE**
19. **INSTALL VENTILATION HOSE**
20. **INSTALL HEATER WATER INLET HOSE**
21. **INSTALL HEATER WATER OUTLET HOSE**

22. INSTALL FLYWHEEL SUB-ASSEMBLY (for Manual Transmission) (See page EM-168)

23. INSTALL DRIVE PLATE & RING GEAR SUB-ASSEMBLY (for Automatic Transmission) (See page EM-169)

24. INSTALL ENGINE ASSEMBLY

(a) Attach the engine sling device and hang the engine with the chain block.
(b) Lower the engine into the engine compartment carefully.
(c) Attach the engine mounting brackets to the frame brackets.
(d) Install the engine mounting brackets onto the frame brackets with the 4 bolts and 4 nuts.
Torque: 38 N*m (387 kgf*cm, 28 ft.*lbf)
(e) Remove the 4 bolts and 2 engine hangers.

25. INSTALL NO.2 ENGINE WIRE

(a) Install the ground cable to the cylinder block.
Torque: 13 N*m (133 kgf*cm, 9 ft.*lbf)

26. INSTALL ENGINE WIRE

(a) Connect the 3 connectors to the engine room relay box.
(b) Install the nut, then install the engine wire into the engine room relay block.
(c) Connect the front differential connector (4WD only).
(d) Insert the engine wire into the vehicle room, and install the grommet.
(e) Connect the 2 connectors to the four wheel ECU (4WD only).
(f) Connect the 5 connectors to the ECM.
(g) Install the instrument panel finish panel sub-assembly lower RH.
(h) Install the glove compartment door.

27. INSTALL INTAKE AIR SURGE TANK (See page EM-69)

28. CONNECT HEATER WATER INLET HOSE

29. CONNECT HEATER WATER OUTLET HOSE

30. CONNECT NO.2 FUEL PIPE SUB-ASSEMBLY

31. CONNECT NO.1 FUEL PIPE SUB-ASSEMBLY (See page FU-17)

32. INSTALL COOLER COMPRESSOR ASSEMBLY (See page ES-410)

33. INSTALL GENERATOR ASSEMBLY (See page CH-13)

34. INSTALL VANE PUMP ASSEMBLY (See page EM-52)

35. INSTALL FAN PULLEY

36. INSTALL CLUTCH DISC ASSEMBLY (for Manual Transmission)

Transmission	See page
RA60	CL-42
RA60F	CL-46

37. INSTALL CLUTCH COVER ASSEMBLY (for Manual Transmission)

Transmission	See page
RA60	CL-42
RA60F	CL-46

38. INSTALL TRANSMISSION ASSEMBLY

HINT:
Refer to the table below when installing transmission.

Transmission	Drive Type	See Page
Manual Transmission	2WD	MT-9
Manual Transmission	4WD	MT-8
Automatic Transmission	2WD	AT-162
Automatic Transmission	4WD	AT-165

39. INSTALL RADIATOR ASSEMBLY (See page CO-19)

40. INSTALL FAN SHROUD (See page CO-20)

41. INSTALL RADIATOR SUPPORT TO FRAME SEAL LH

42. INSTALL HOOD SUB-ASSEMBLY
(See page ED-7)

43. INSTALL BATTERY

44. ADD ENGINE COOLANT (See page CO-3)

45. ADD ENGINE OIL (See page LU-5)

46. PERFORM INITIALIZATION

47. CHECK FOR ENGINE COOLANT LEAKAGE (See page CO-4)

48. CHECK FOR ENGINE OIL LEAKAGE

49. CHECK FOR FUEL LEAKAGE

50. CHECK FOR EXHAUST GAS LEAKAGE

51. INSTALL V-BANK COVER (See page ES-416)

52. INSPECT IGNITION TIMING (See page EM-1)

53. INSPECT ENGINE IDLING SPEED (See page EM-2)

54. INSPECT CO/HC (See page EM-3)

ENGINE UNIT

COMPONENTS

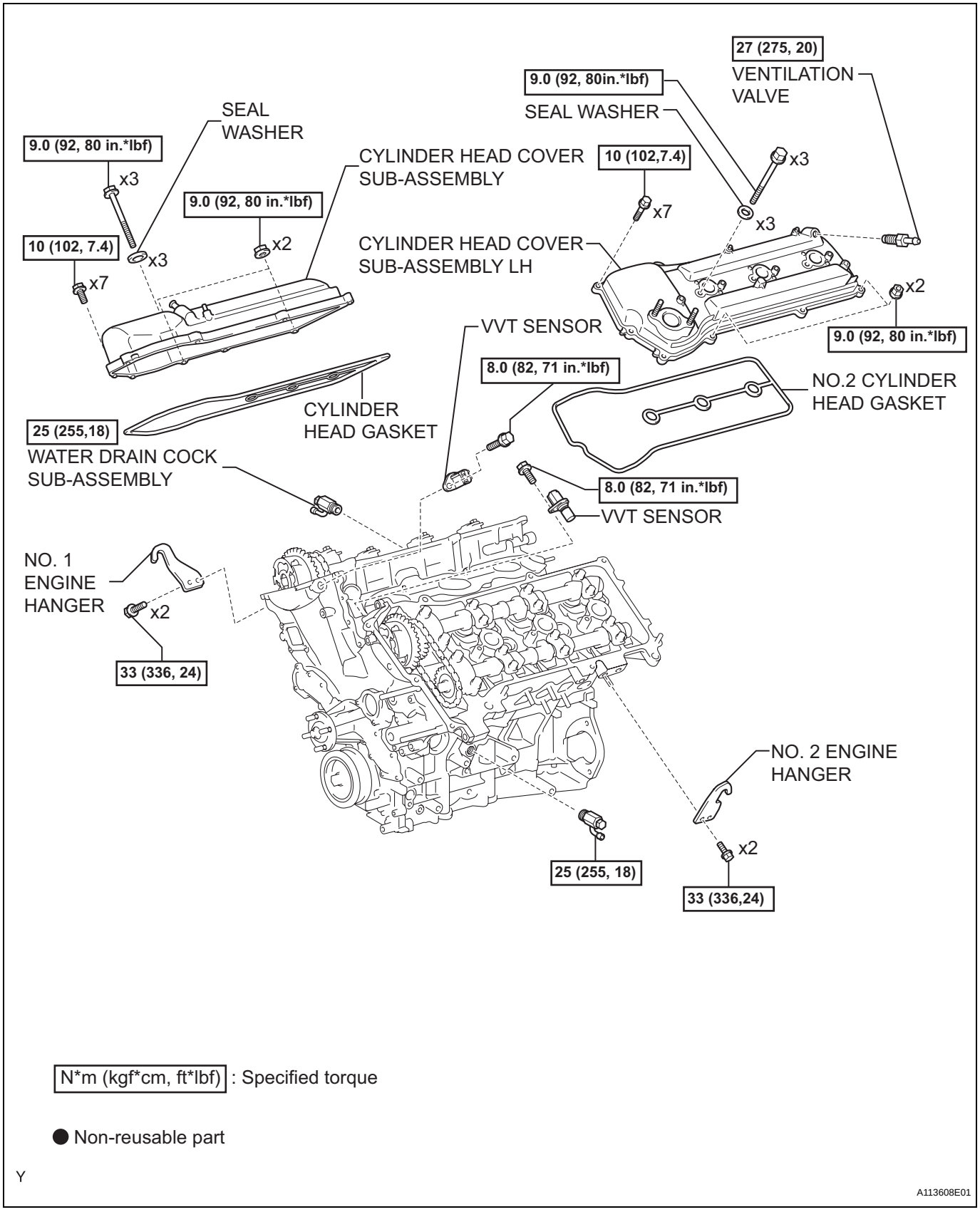

EM

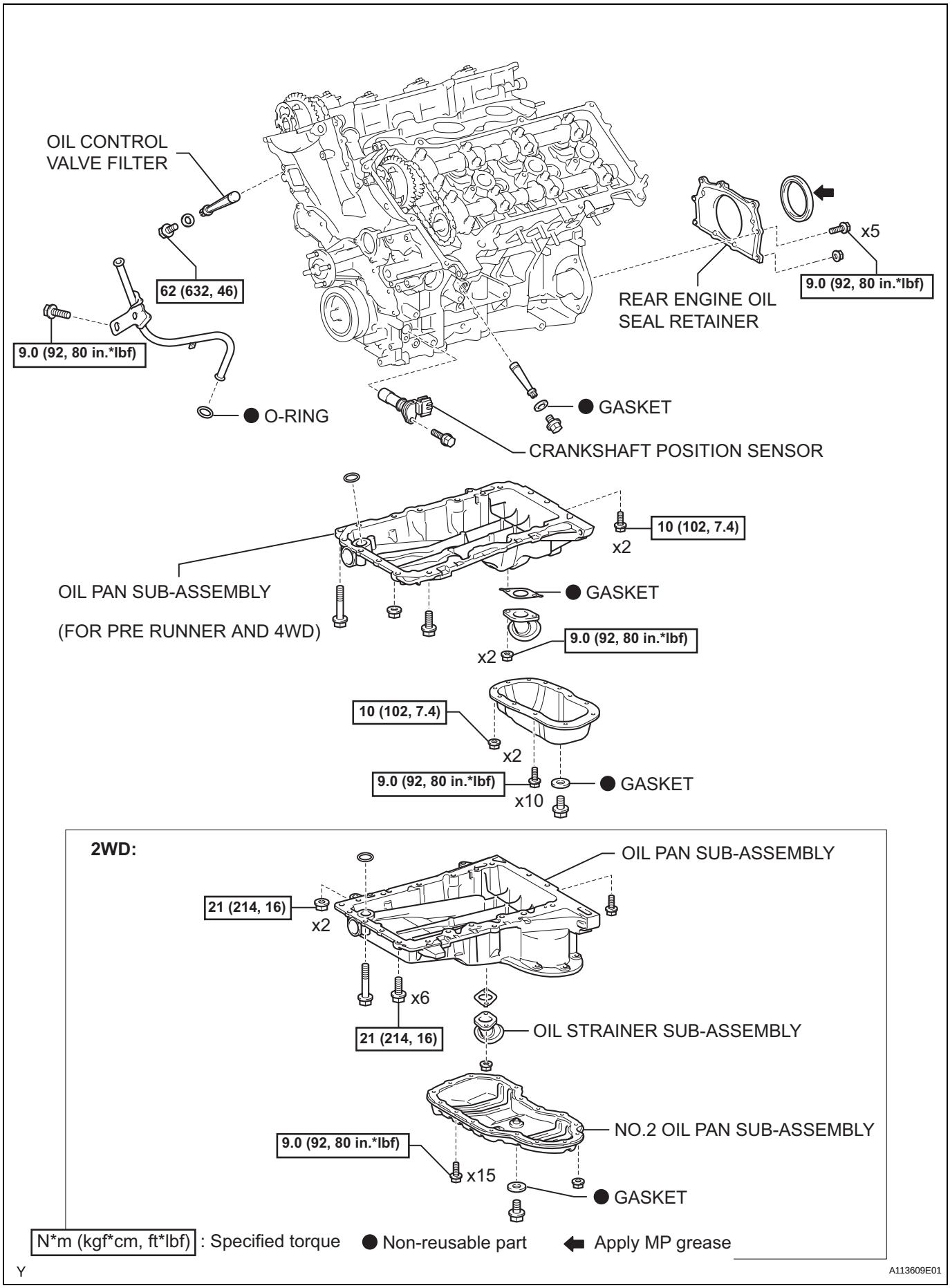
OIL CONTROL VALVE FILTER
62 (632, 46)
9.0 (92, 80 in.*lbf)
O-RING
GASKET
CRANKSHAFT POSITION SENSOR
x5
9.0 (92, 80 in.*lbf)
REAR ENGINE OIL SEAL RETAINER
10 (102, 7.4)
x2
OIL PAN SUB-ASSEMBLY
(FOR PRE RUNNER AND 4WD)
GASKET
9.0 (92, 80 in.*lbf)
x2
10 (102, 7.4)
x2
9.0 (92, 80 in.*lbf)
x10
GASKET
2WD:
OIL PAN SUB-ASSEMBLY
21 (214, 16)
x2
x6
21 (214, 16)
OIL STRAINER SUB-ASSEMBLY
NO.2 OIL PAN SUB-ASSEMBLY
9.0 (92, 80 in.*lbf)
x15
GASKET
N*m (kgf*cm, ft*lbf) : Specified torque
Non-reusable part
Apply MP grease
Y
A113609E01

EM

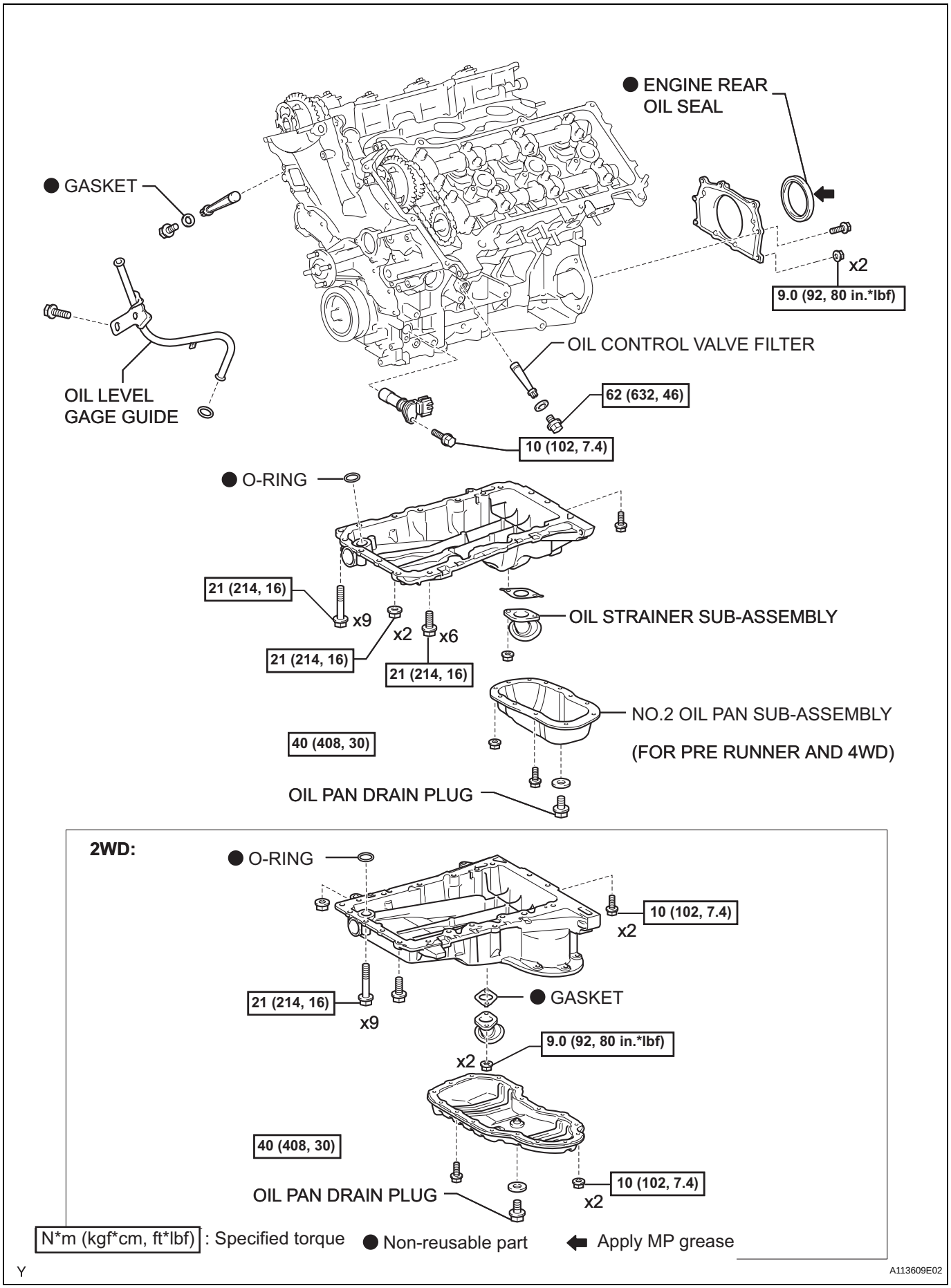
● ENGINE REAR OIL SEAL
● GASKET
x2
9.0 (92, 80 in.*lbf)
OIL CONTROL VALVE FILTER
OIL LEVEL GAGE GUIDE
62 (632, 46)
10 (102, 7.4)
● O-RING
21 (214, 16)
x9
x2
x6
OIL STRAINER SUB-ASSEMBLY
21 (214, 16)
21 (214, 16)
NO.2 OIL PAN SUB-ASSEMBLY
(FOR PRE RUNNER AND 4WD)
40 (408, 30)
OIL PAN DRAIN PLUG
2WD:
● O-RING
10 (102, 7.4)
x2
21 (214, 16)
x9
● GASKET
9.0 (92, 80 in.*lbf)
x2
40 (408, 30)
OIL PAN DRAIN PLUG
10 (102, 7.4)
x2
N*m (kgf*cm, ft*lbf) : Specified torque
● Non-reusable part
Apply MP grease
Y
A113609E02

EM

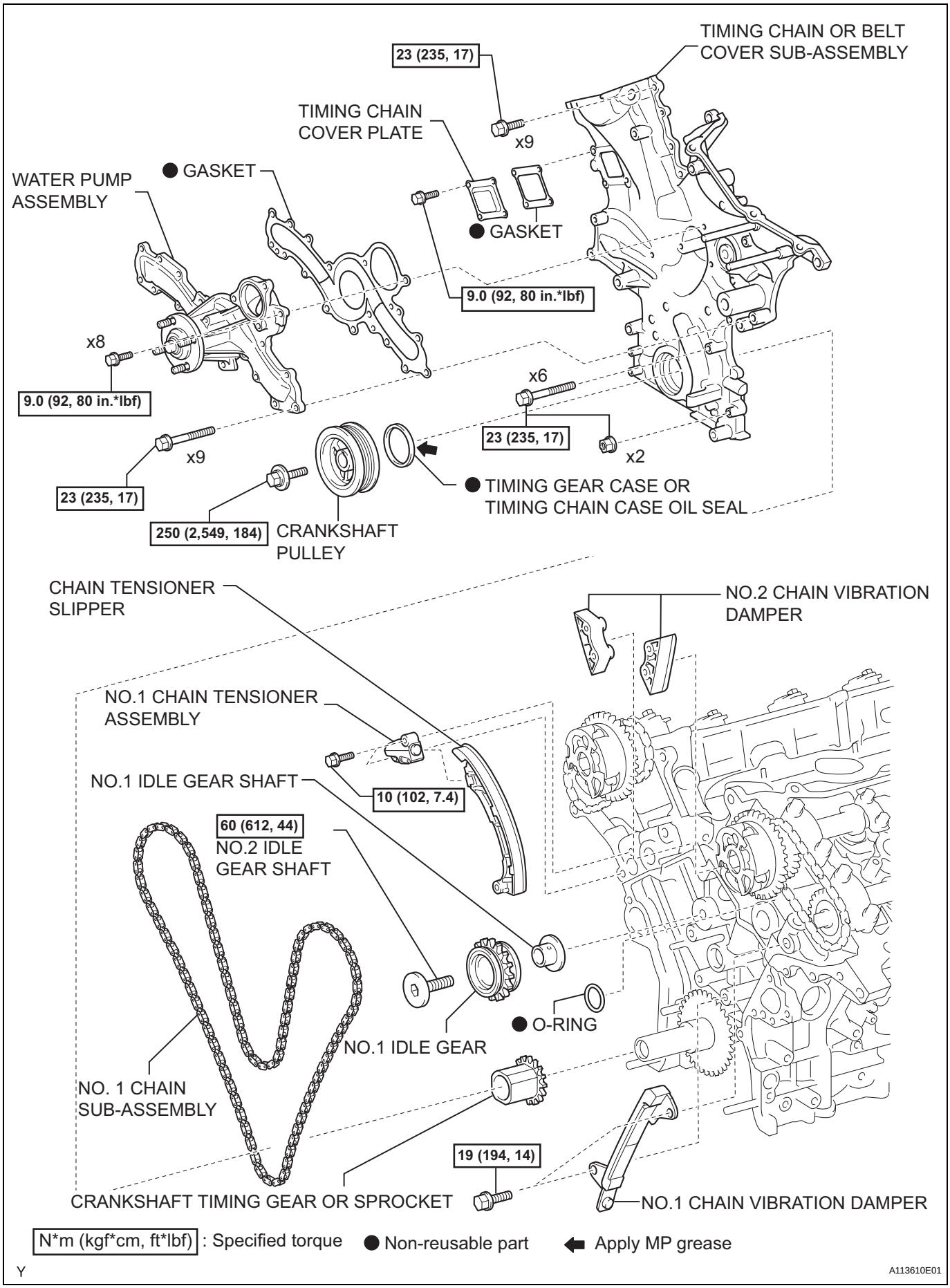
TIMING CHAIN OR BELT COVER SUB-ASSEMBLY
23 (235, 17)
x9
TIMING CHAIN COVER PLATE
GASKET
WATER PUMP ASSEMBLY
GASKET
9.0 (92, 80 in.*lbf)
x8
9.0 (92, 80 in.*lbf)
x6
23 (235, 17)
x2
x9
23 (235, 17)
TIMING GEAR CASE OR TIMING CHAIN CASE OIL SEAL
250 (2,549, 184)
CRANKSHAFT PULLEY
CHAIN TENSIONER SLIPPER
NO.2 CHAIN VIBRATION DAMPER
NO.1 CHAIN TENSIONER ASSEMBLY
NO.1 IDLE GEAR SHAFT
10 (102, 7.4)
60 (612, 44)
NO.2 IDLE GEAR SHAFT
O-RING
NO.1 IDLE GEAR
NO. 1 CHAIN SUB-ASSEMBLY
19 (194, 14)
CRANKSHAFT TIMING GEAR OR SPROCKET
NO.1 CHAIN VIBRATION DAMPER
N*m (kgf*cm, ft*lbf) : Specified torque
Non-reusable part
Apply MP grease
Y
A113610E01

EM

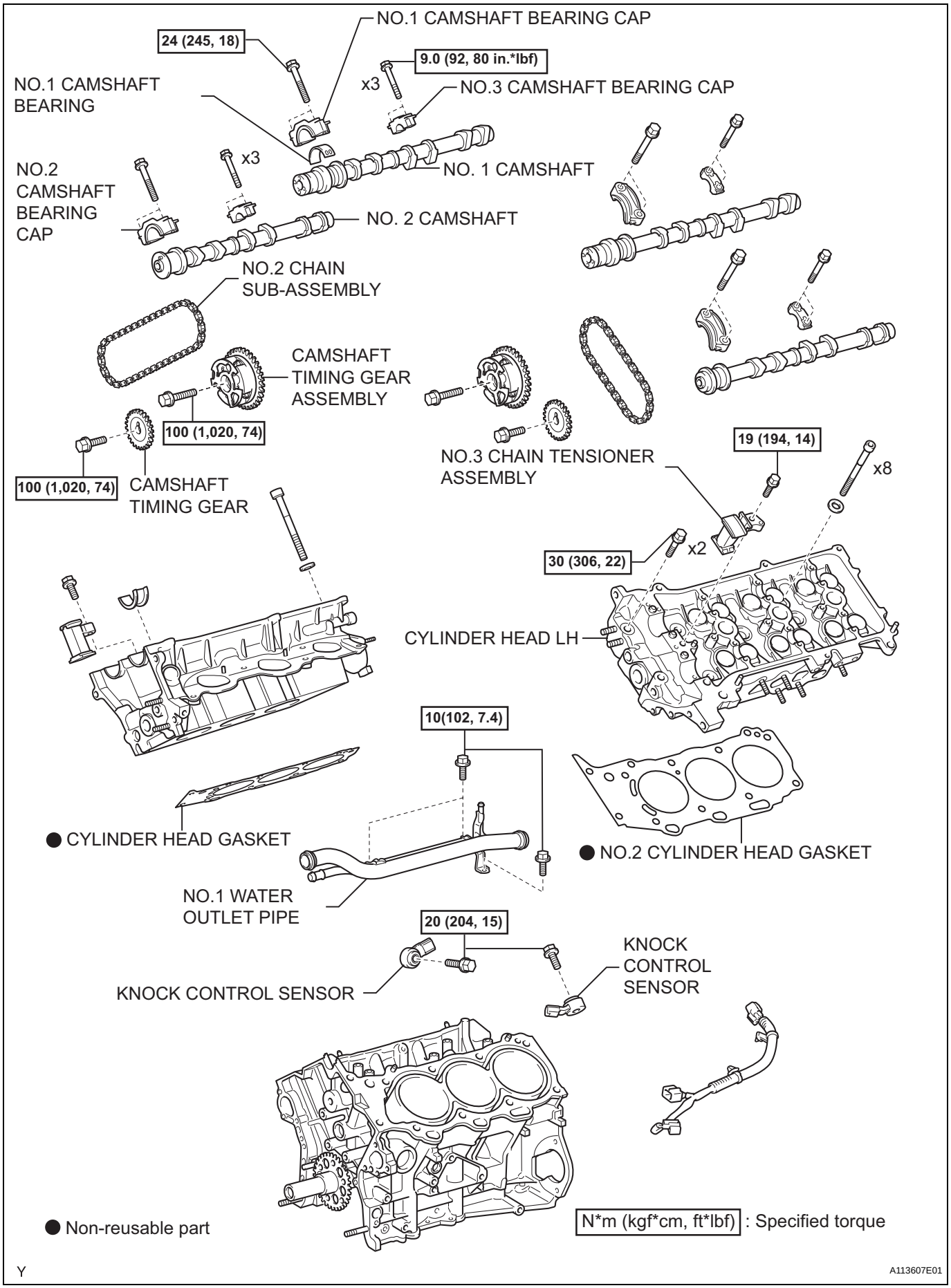
NO.1 CAMSHAFT BEARING CAP
24 (245, 18)
9.0 (92, 80 in.*lbf)
x3
NO.3 CAMSHAFT BEARING CAP
NO.1 CAMSHAFT BEARING
x3
NO. 1 CAMSHAFT
NO.2 CAMSHAFT BEARING CAP
NO. 2 CAMSHAFT
NO.2 CHAIN SUB-ASSEMBLY
CAMSHAFT TIMING GEAR ASSEMBLY
100 (1,020, 74)
100 (1,020, 74)
CAMSHAFT TIMING GEAR
NO.3 CHAIN TENSIONER ASSEMBLY
19 (194, 14)
x8
x2
30 (306, 22)
CYLINDER HEAD LH
10(102, 7.4)
● CYLINDER HEAD GASKET
● NO.2 CYLINDER HEAD GASKET
NO.1 WATER OUTLET PIPE
20 (204, 15)
KNOCK CONTROL SENSOR
KNOCK CONTROL SENSOR
● Non-reusable part
N*m (kgf*cm, ft*lbf) : Specified torque
Y
A113607E01

EM

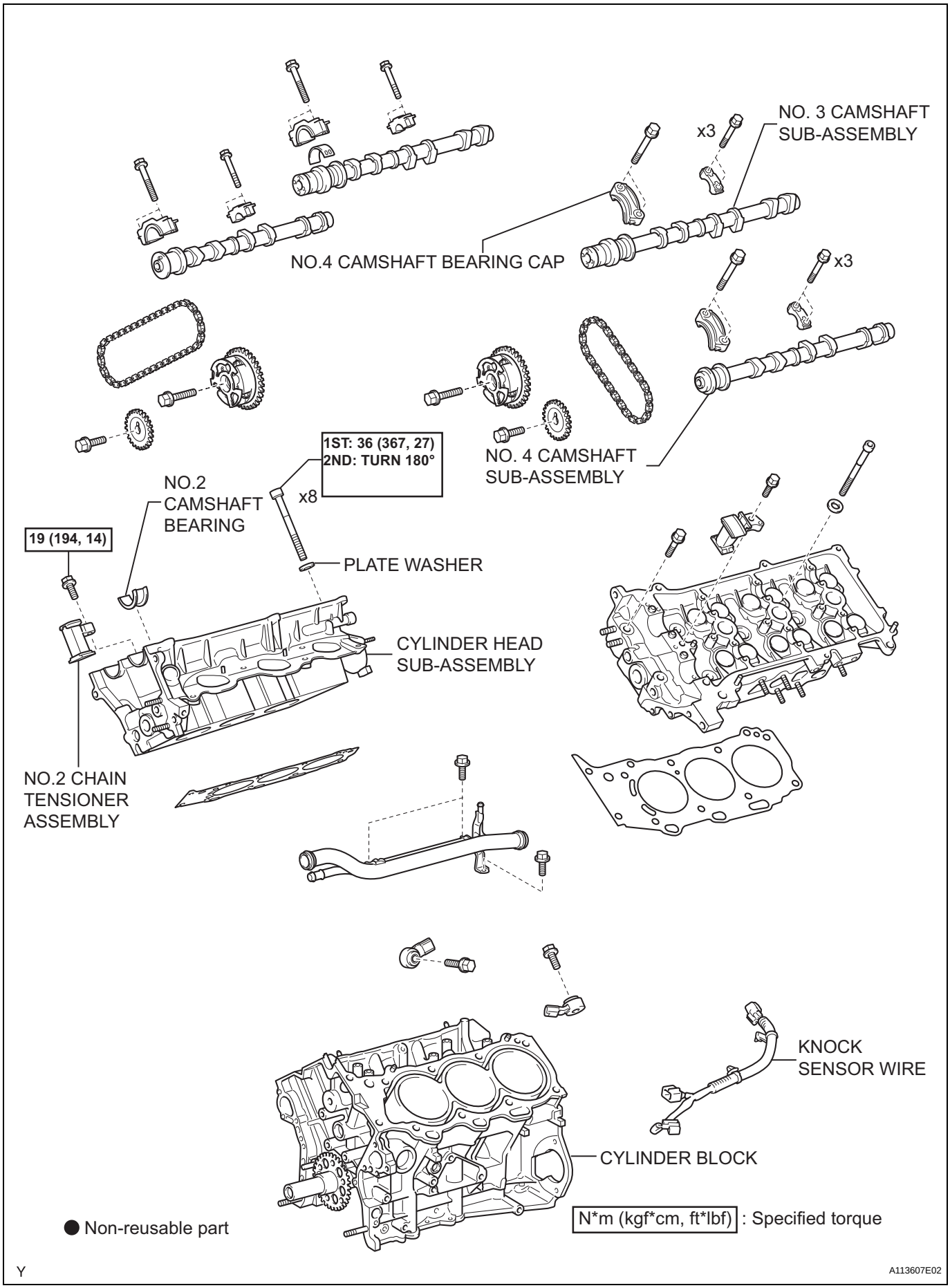
NO. 3 CAMSHAFT SUB-ASSEMBLY
x3
NO.4 CAMSHAFT BEARING CAP
x3
NO. 4 CAMSHAFT SUB-ASSEMBLY
1ST: 36 (367, 27)
2ND: TURN 180°
x8
NO.2 CAMSHAFT BEARING
19 (194, 14)
PLATE WASHER
CYLINDER HEAD SUB-ASSEMBLY
NO.2 CHAIN TENSIONER ASSEMBLY
KNOCK SENSOR WIRE
CYLINDER BLOCK
● Non-reusable part
N*m (kgf*cm, ft*lbf) : Specified torque
Y
A113607E02

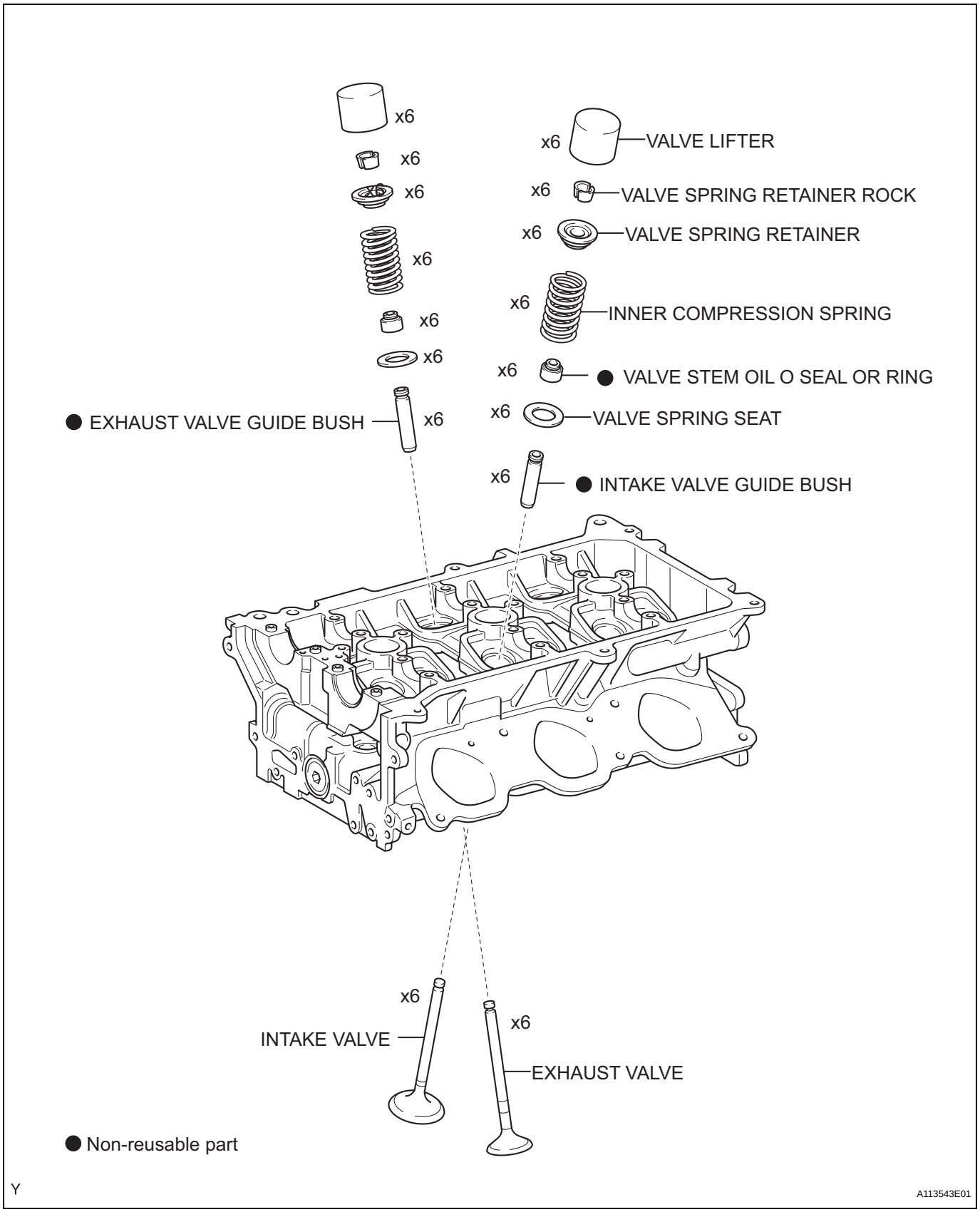
x6
x6
x6
x6
x6
x6
x6
x6
VALVE LIFTER
x6
VALVE SPRING RETAINER ROCK
x6
VALVE SPRING RETAINER
x6
INNER COMPRESSION SPRING
x6
● VALVE STEM OIL O SEAL OR RING
● EXHAUST VALVE GUIDE BUSH
x6
x6
VALVE SPRING SEAT
x6
● INTAKE VALVE GUIDE BUSH
x6
INTAKE VALVE
x6
EXHAUST VALVE
● Non-reusable part
Y
A113543E01

EM

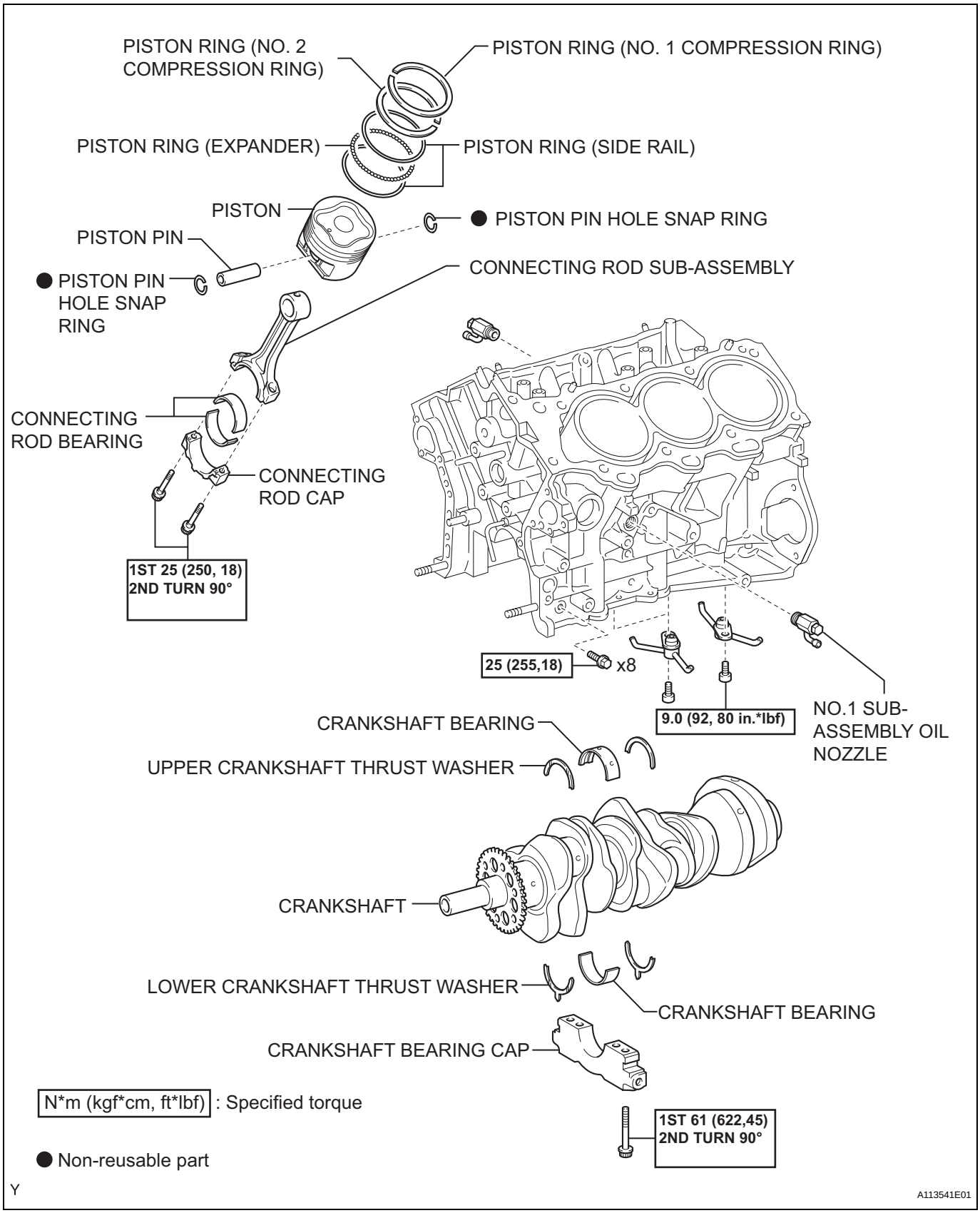
PISTON RING (NO. 2 COMPRESSION RING)
PISTON RING (NO. 1 COMPRESSION RING)
PISTON RING (EXPANDER)
PISTON RING (SIDE RAIL)
PISTON
● PISTON PIN HOLE SNAP RING
PISTON PIN
● PISTON PIN HOLE SNAP RING
CONNECTING ROD SUB-ASSEMBLY
CONNECTING ROD BEARING
CONNECTING ROD CAP
1ST 25 (250, 18)
2ND TURN 90°
25 (255,18)
x8
9.0 (92, 80 in.*lbf)
NO.1 SUB-ASSEMBLY OIL NOZZLE
CRANKSHAFT BEARING
UPPER CRANKSHAFT THRUST WASHER
CRANKSHAFT
LOWER CRANKSHAFT THRUST WASHER
CRANKSHAFT BEARING
CRANKSHAFT BEARING CAP
N*m (kgf*cm, ft*lbf) : Specified torque
1ST 61 (622,45)
2ND TURN 90°
● Non-reusable part
Y
A113541E01

EM

DISASSEMBLY

HINT:
- Thoroughly clean all parts to be assembled.
- Before installing the parts, apply new engine oil to all sliding and rotating surfaces.
- Replace all gaskets, O-rings and oil seals with new parts.

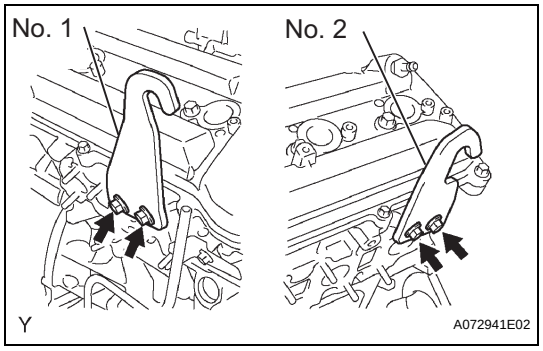

1. REMOVE ENGINE HANGERS
(a) Remove the 2 bolts and engine hanger No. 1.
(b) Remove the 2 bolts and engine hanger No. 2.

2. REMOVE OIL LEVEL GAGE GUIDE
(a) Remove the bolt, then pull out the oil level gauge guide.
(b) Remove the O-ring from the oil level gauge guide.

3. REMOVE CYLINDER BLOCK WATER DRAIN COCK SUB-ASSEMBLY
(a) Remove the 2 water drain cocks.

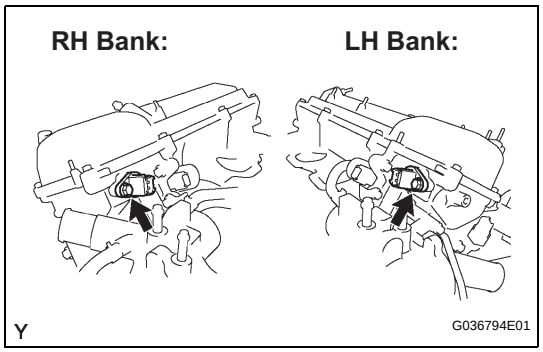

4. REMOVE VVT SENSOR
(a) Remove the 2 bolts, then remove the 2 VVT sensors.

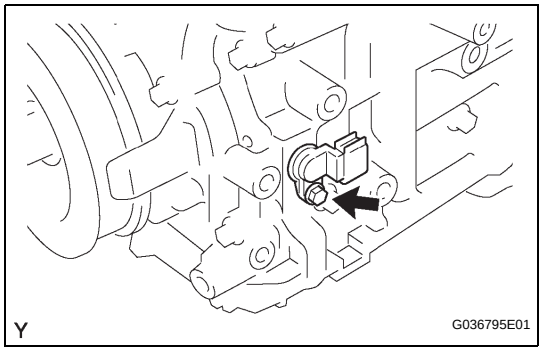

5. REMOVE CRANKSHAFT POSITION SENSOR
(a) Remove the bolt, then remove the crankshaft position sensor.

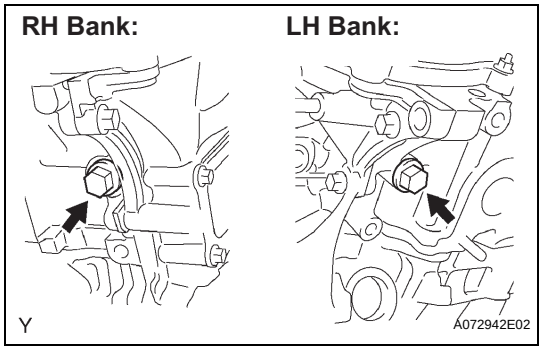

6. REMOVE OIL CONTROL VALVE FILTER
(a) Remove the plug and filter, then remove the gasket from each cylinder head.

EM

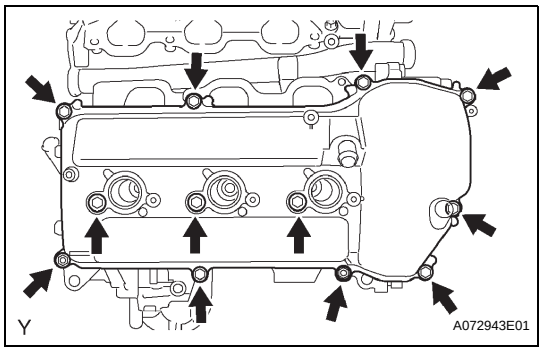

7. REMOVE CYLINDER HEAD COVER SUB-ASSEMBLY

(a) Remove the 10 bolts, 3 seal washers and 2 nuts, then remove the cylinder head cover.

(b) Remove the gasket from the cylinder head cover.

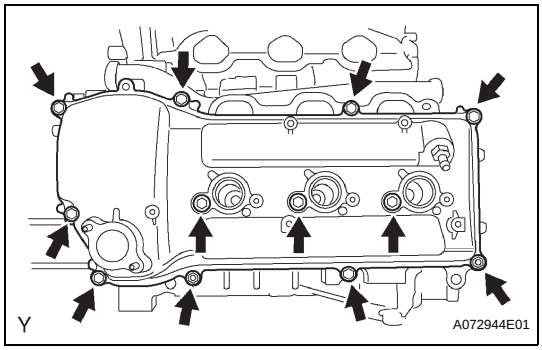

8. REMOVE CYLINDER HEAD COVER SUB-ASSEMBLY LH

(a) Remove the 10 bolts, 3 seal washers and 2 nuts, then remove the cylinder head cover.

(b) Remove the gasket from the cylinder head cover.

(c) Remove the ventilation valve from the cylinder head cover.

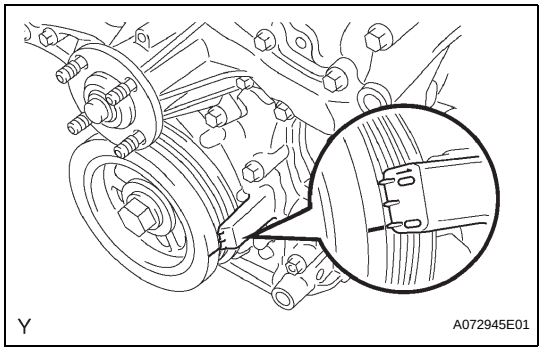

9. REMOVE CRANKSHAFT PULLEY

(a) Turn the crankshaft pulley until its groove and the timing mark "0" of the timing chain cover are aligned.

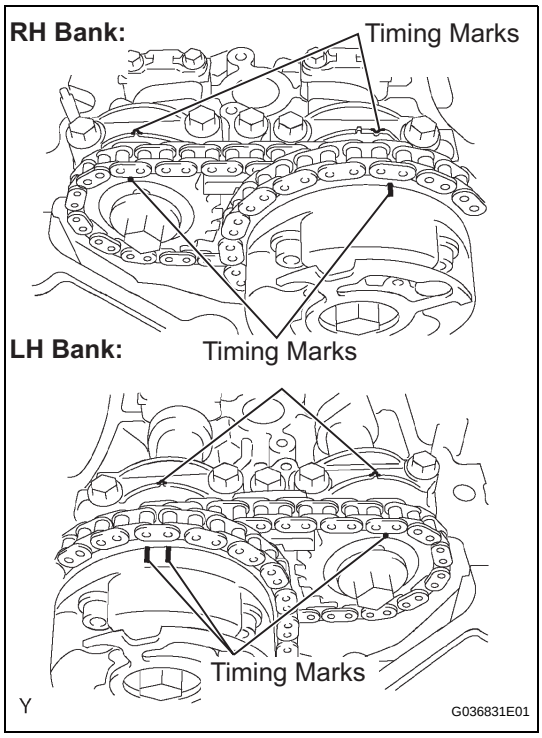

(b) Check that each timing mark of the camshaft timing gears is aligned with each timing mark located on the No. 1 and No. 2 bearing caps as shown in the illustration.
If not, turn the crankshaft 1 complete revolution (360°) and align the timing marks as above.

EM

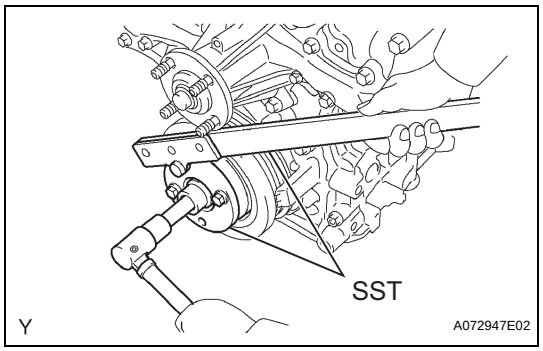

(c) Using SST, fix the pulley and loosen the pulley bolt.
SST 09213-54015 (91651-60855), 09330-00021

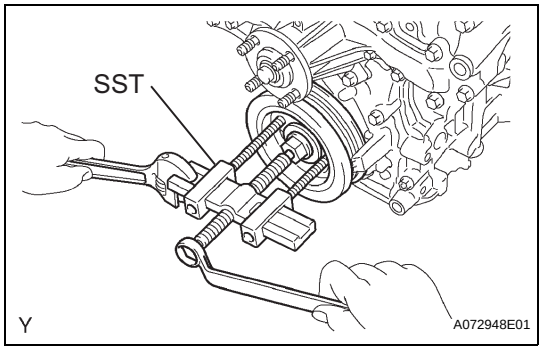

(d) Using the pulley set bolt and SST, remove the crankshaft pulley.
SST 09950-50013 (09951-05010, 09952-05010, 09953-05020, 09954-05030)

10. REMOVE OIL PAN DRAIN PLUG

(a) Remove the drain plug and gasket.

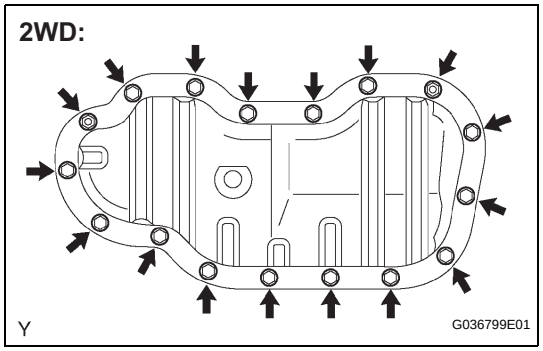

11. REMOVE NO.2 OIL PAN SUB-ASSEMBLY

(a) Remove the 15 bolts and 2 nuts (for 2WD).

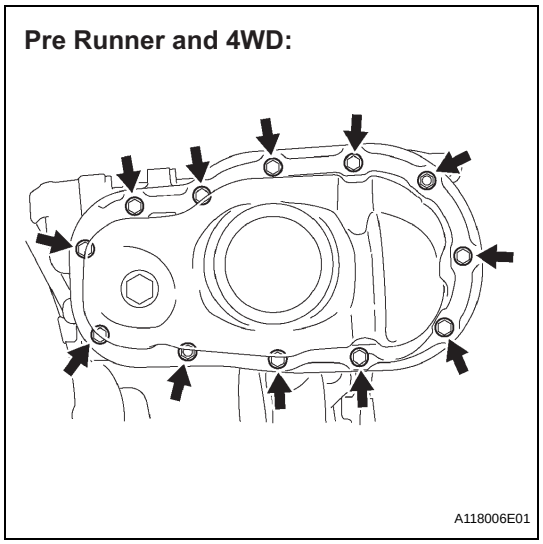

(b) Remove the 10 bolts and 2 nuts (for Pre Runner and 4WD).

EM

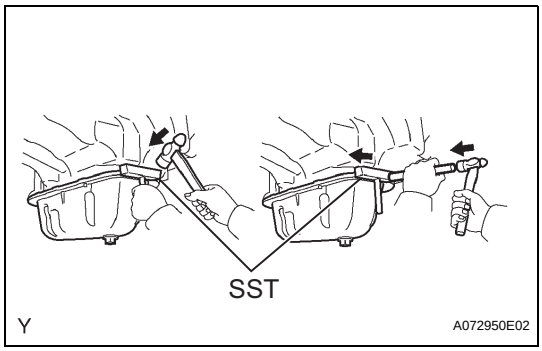

(c) Insert the blade of SST between the oil pan and oil pan No. 2, then cut off applied sealer and remove the oil pan No. 2.
SST 09032-00100
NOTICE:
- **Be careful not to damage the contact surface of the oil pan and oil pan No. 2.**
- **Be careful not to damage the oil pan No. 2 flange.**

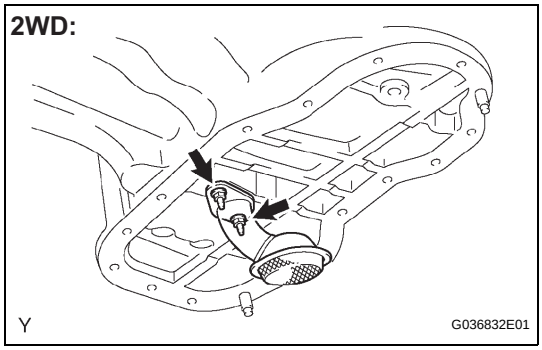

12. REMOVE OIL STRAINER SUB-ASSEMBLY

(a) Remove the 2 nuts, then remove the oil strainer and gasket (for 2WD).

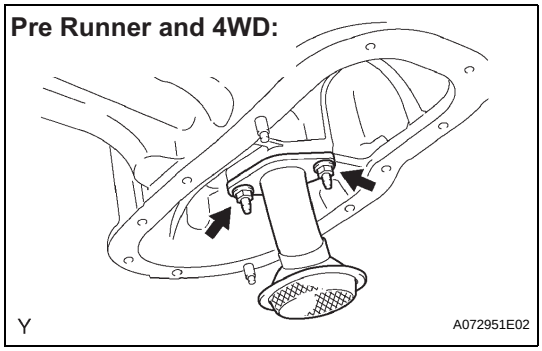

(b) Remove the 2 nuts, then remove the oil strainer and gasket (for Pre Runner and 4WD).

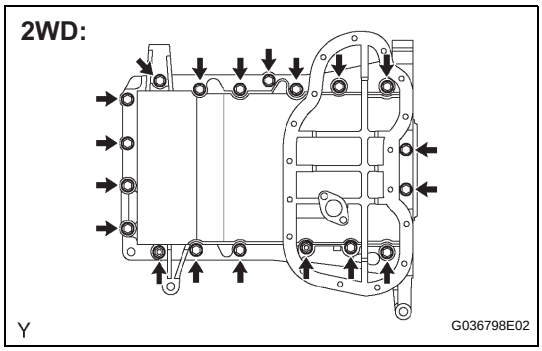

13. REMOVE OIL PAN SUB-ASSEMBLY

(a) Remove the 17 bolts and 2 nuts (for 2WD).

EM

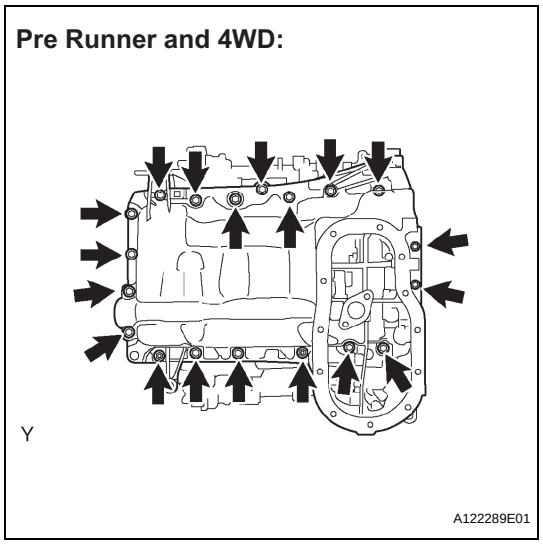

(b) Remove the 17 bolts and 2 nuts (for Pre Runner and 4WD).

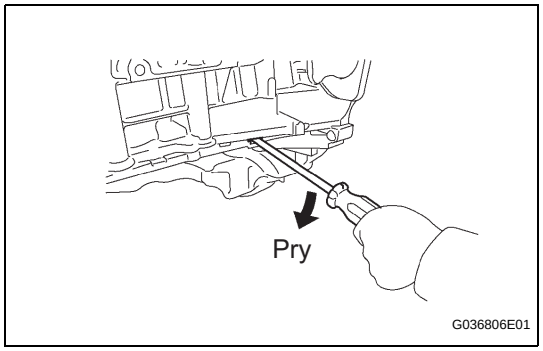

(c) Using a screwdriver, remove the oil pan by prying between the oil pan and cylinder block in the sequence shown.
NOTICE:
Be careful not to damage the contact surfaces of the cylinder block and oil pan.

(d) Remove the O-ring from the oil pump.

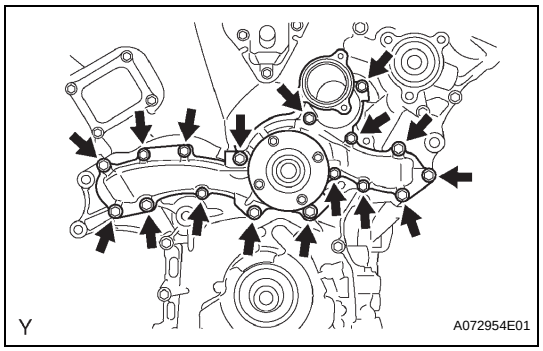

14. REMOVE WATER PUMP ASSEMBLY

(a) Remove the 17 bolts, then remove the water pump and gasket.

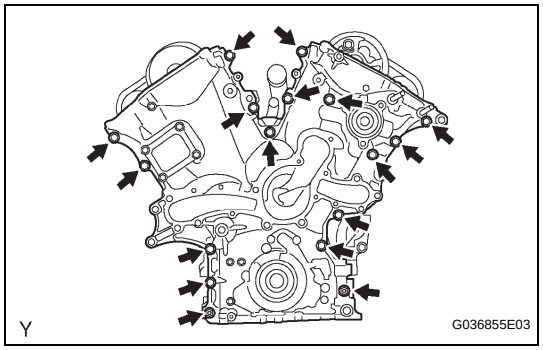

15. REMOVE TIMING CHAIN OR BELT COVER SUB-ASSEMBLY

(a) Remove the 15 bolts and 2 nuts.

EM

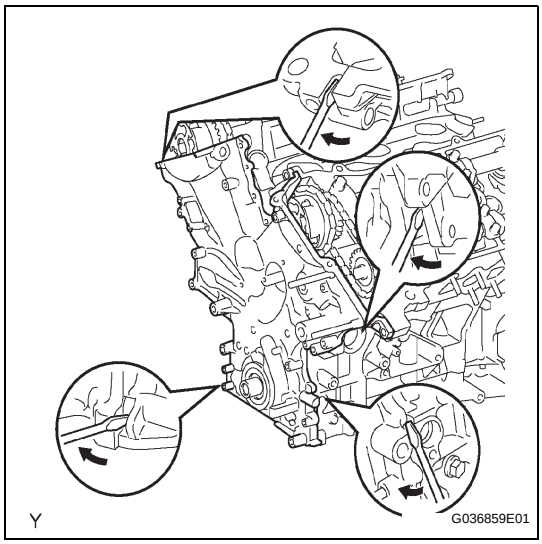

(b) Remove the timing chain cover by prying between the timing chain cover, cylinder head and cylinder block with a screwdriver.
NOTICE:
Be careful not to damage the contact surfaces of the timing chain cover, cylinder block and cylinder head.

(c) Remove the O-ring from the LH cylinder head.

16. REMOVE NO.1 CHAIN TENSIONER ASSEMBLY

NOTICE:

- **Never rotate the crankshaft with the chain tensioner removed.**
- **When rotating the camshaft with the timing chain removed, rotate the crankshaft counterclockwise 40° from the TDC first.**

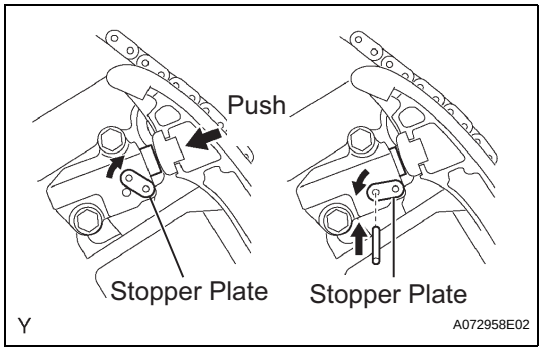

(a) While turning the stopper plate of the tensioner upward, push in the plunger of the chain tensioner as shown in the illustration.

(b) While turning the stopper plate of the tensioner downward, insert a bar of ϕ 3.5 mm (0.138 in.) into the holes in the stopper plate and tensioner to fix the stopper plate.

(c) Remove the 2 bolts, then remove the chain tensioner.

17. REMOVE CHAIN TENSIONER SLIPPER

18. REMOVE IDLE SPROCKET ASSEMBLY

(a) Using a 10 mm hexagon wrench, remove the idle gear shaft No. 2, idle gear No. 1 and idle gear shaft No. 1.

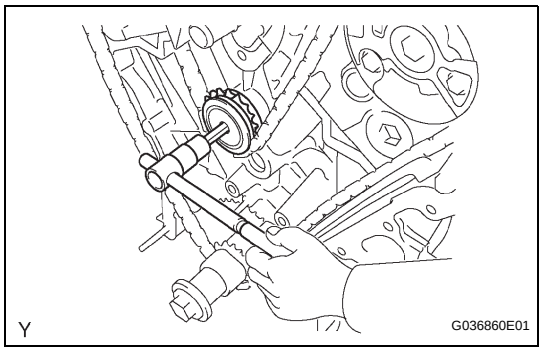

19. REMOVE NO.2 CHAIN VIBRATION DAMPER

(a) Remove the 2 chain vibration dampers No. 2.

20. REMOVE CHAIN SUB-ASSEMBLY

21. REMOVE CRANKSHAFT TIMING GEAR OR SPROCKET

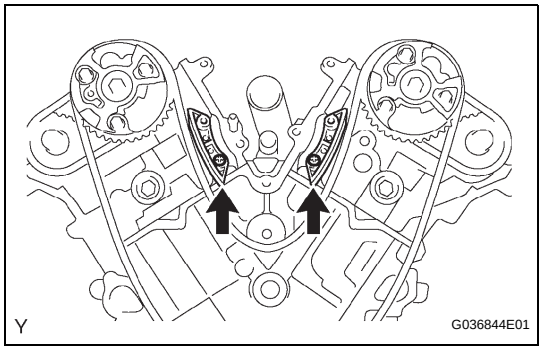

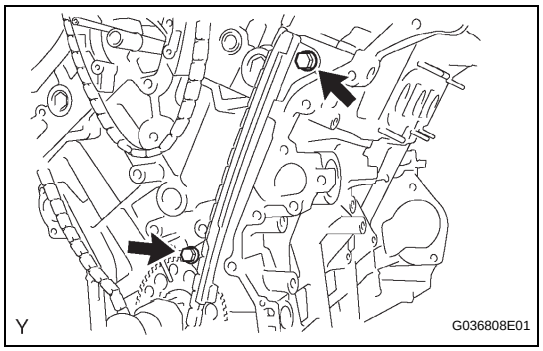

22. REMOVE NO.1 CHAIN VIBRATION DAMPER

(a) Remove the 2 bolts, then remove the chain vibration damper No. 1.

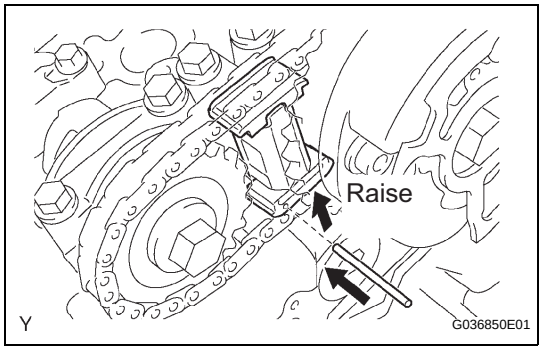

23. REMOVE CAMSHAFT TIMING GEARS AND NO.2 CHAIN (for Bank 1)

(a) While raising the chain tensioner No. 2 upward, insert a pin of ϕ 1.0 mm (0.039 in.) into the hole to fix it.

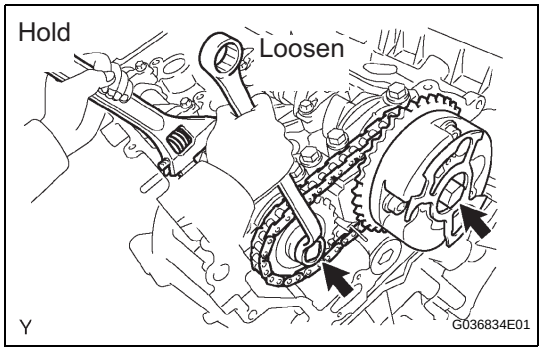

(b) Hold the hexagonal portion of the camshaft with a wrench, and remove the 2 bolts, camshaft timing gear, camshaft timing gear assembly and timing chain No. 2.

NOTICE:

- **Be careful not to damage the cylinder head and valve lifter with the wrench.**
- **Do not disassemble the camshaft timing gear assembly.**

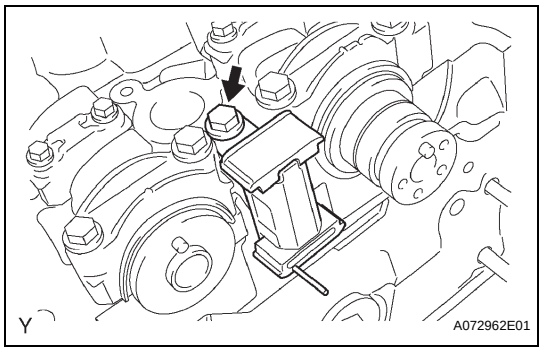

24. REMOVE NO.2 CHAIN TENSIONER ASSEMBLY

(a) Remove the bolt, then remove the chain tensioner No. 2.

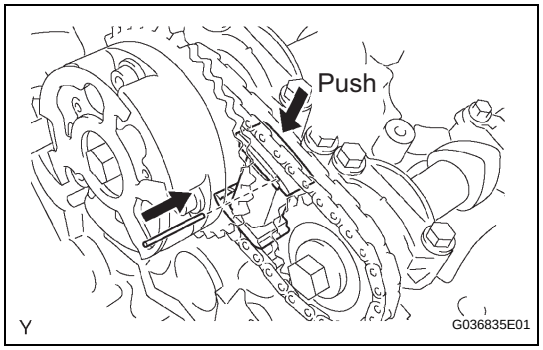

25. REMOVE CAMSHAFT TIMING GEARS AND NO.2 CHAIN (for Bank 2)

(a) While pushing down the chain tensioner No. 3, insert a pin of ϕ 1.0 mm (0.039 in.) into the hole to fix it.

EM

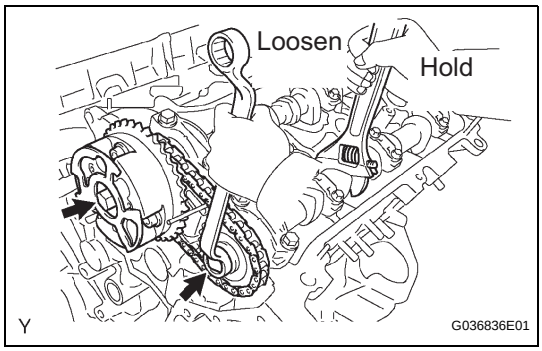

(b) Hold the hexagonal portion of the camshaft with a wrench, and remove the 2 bolts, camshaft timing gear, camshaft timing gear assembly and timing chain No. 2.
NOTICE:
- **Be careful not to damage the cylinder head and valve lifter with the wrench.**
- **Do not disassemble the camshaft timing gear assembly.**

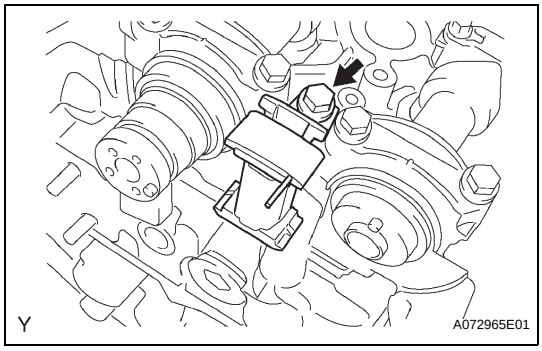

26. REMOVE NO.3 CHAIN TENSIONER ASSEMBLY

(a) Remove the bolt, then remove the chain tensioner No. 3.

27. REMOVE CAMSHAFTS

NOTICE:
Keep the camshaft level while it is being removed. The camshaft thrust clearance is very small and failing to keep it level could crack or damage the cylinder head journal surface, which receives the thrust. This could subsequently lead the camshaft to seize or break. Perform the following steps to avoid such problems.

(a) Remove the camshafts of the RH bank.

(1) Rotate the camshafts counterclockwise using a wrench so that cam lobes of No. 1 cylinder face in the directions as shown in the illustration.

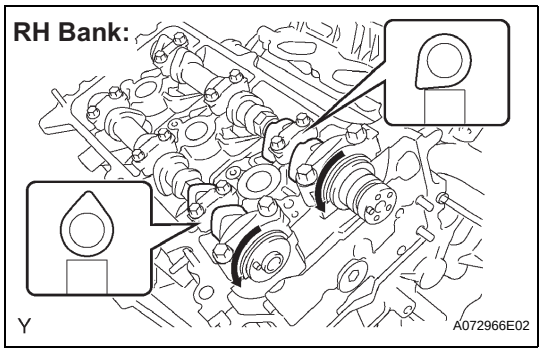

(2) Using several steps, uniformly loosen and remove the 16 bearing cap bolts in the sequence shown in the illustration.

(3) Remove the 8 bearing caps, then remove the 2 camshafts.

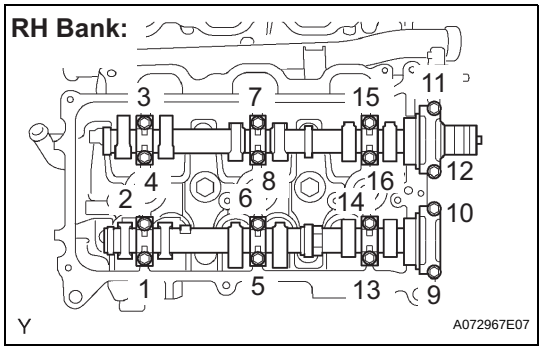

EM

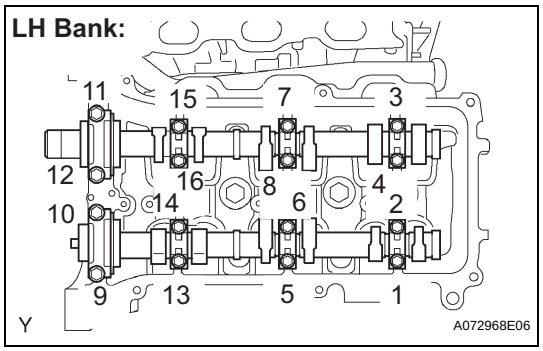

(b) Remove the camshafts of the LH bank.
  (1) Using several steps, uniformly loosen and remove the 16 bearing cap bolts in the sequence shown in the illustration.
  (2) Remove the 8 bearing caps, then remove the 2 camshafts.

28. REMOVE NO.1 CAMSHAFT BEARING

29. REMOVE NO.2 CAMSHAFT BEARING

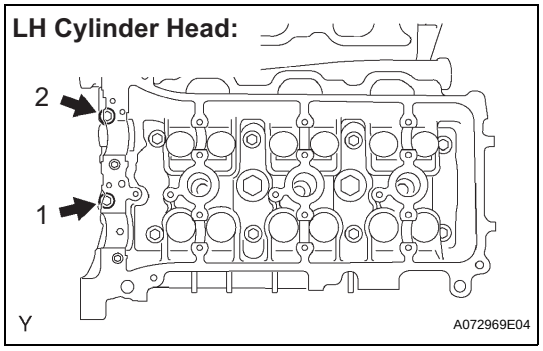

30. REMOVE CYLINDER HEADS

(a) Using several steps, remove the 2 cylinder head bolts on the LH cylinder head in the sequence shown in the illustration.

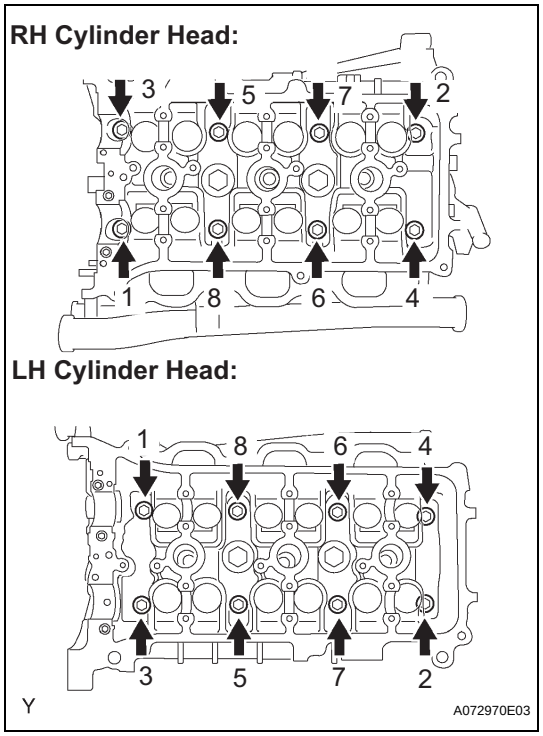

(b) Using several steps, loosen the 8 cylinder head bolts on each cylinder head with a 10 mm bi-hexagon wrench in the sequence shown in the illustration. Remove the 16 cylinder head bolts, then remove the plate washers.

NOTICE:

- **Be careful not to drop the plate washers into the cylinder head.**
- **Cylinder head warpage or cracking could result from removing the bolts in the wrong order.**

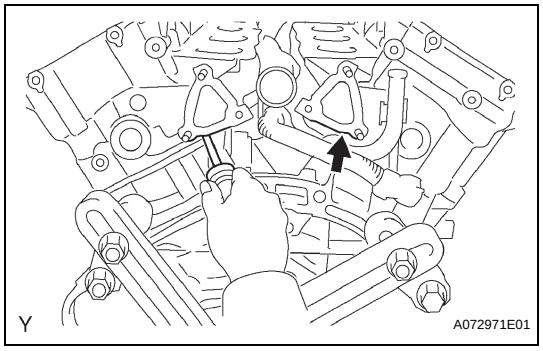

(c) Lift the cylinder head from the dowels on the cylinder block, and place the 2 cylinder heads on wooden blocks on a bench.

NOTICE:

Be careful not to damage the contact surfaces of the cylinder head and cylinder block.

HINT:

If the cylinder head is difficult to remove, pry between the cylinder head and cylinder block with a screwdriver.

(d) Remove the RH and LH cylinder head gaskets.

EM

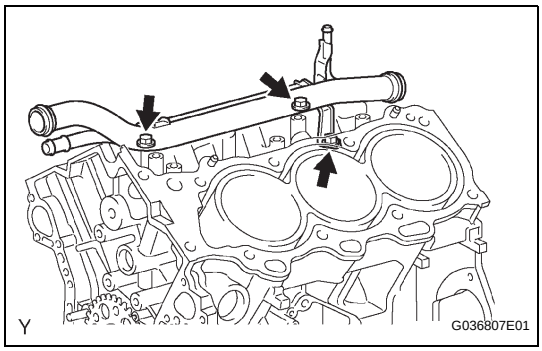

31. REMOVE NO.1 WATER OUTLET PIPE

(a) Separate the knock sensor wire.
(b) Remove the 3 bolts, then remove the water outlet pipe.

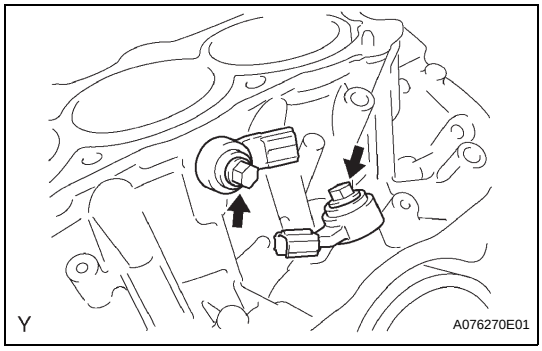

32. REMOVE KNOCK CONTROL SENSOR

(a) Disconnect the knock sensor connectors.
(b) Remove the 2 bolts, then remove the 2 knock sensors.

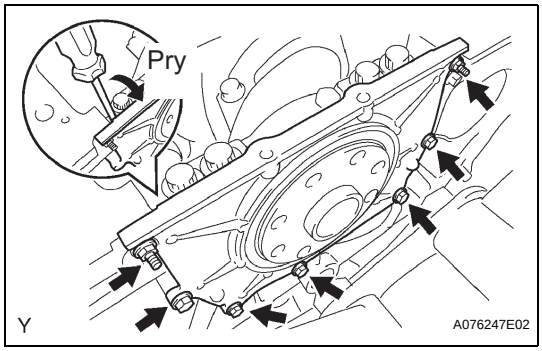

33. REMOVE REAR ENGINE OIL SEAL RETAINER

(a) Remove the 5 bolts and 2 nuts.
(b) Using a screwdriver, remove the oil seal retainer by prying between the oil seal retainer and crankshaft bearing cap.

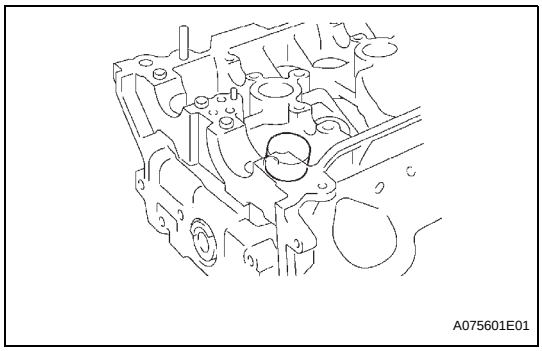

34. REMOVE VALVE LIFTER

HINT:
Arrange the valve lifter in the correct order.

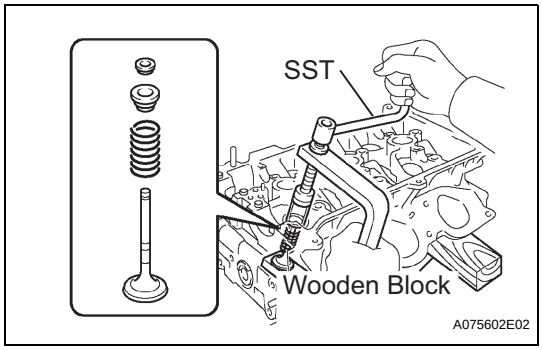

35. REMOVE VALVE

HINT:
Arrange the valves, inner compression springs, valve spring retainers and valve spring retainer rocks in the correct order.

(a) Place the cylinder head on a wooden block.
(b) Using SST, compress the inner compression spring and remove the 2 valve spring retainer rocks.
SST 09202-70020 (09202-00010)
(c) Remove the valve, inner compression spring and valve spring retainer.

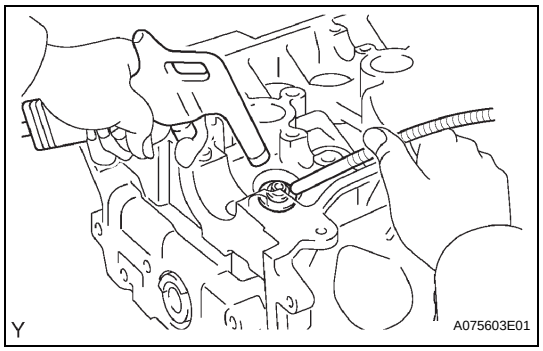

36. REMOVE VALVE SPRING SEAT

(a) Using compressed air and a magnetic finger, remove the valve spring seat by blowing air.

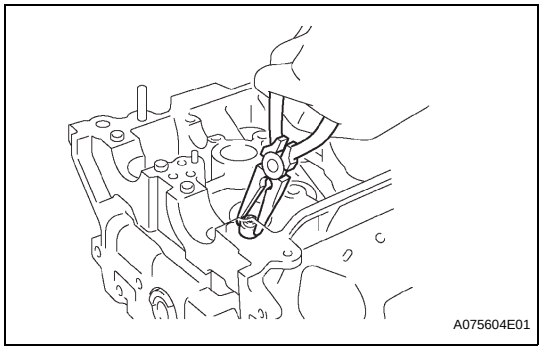

37. REMOVE VALVE STEM OIL O SEAL OR RING

(a) Using needle-nose pliers, remove the valve stem oil seal.

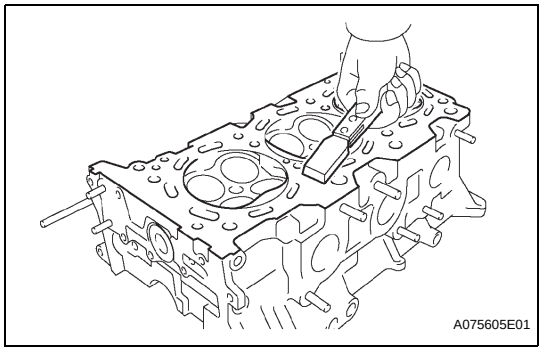

38. CLEAN CYLINDER HEAD SUB-ASSEMBLY

(a) Using a gasket scraper, remove all the gasket material from the cylinder block contact surface.
NOTICE:
Be careful not to scratch the cylinder block contact surface.

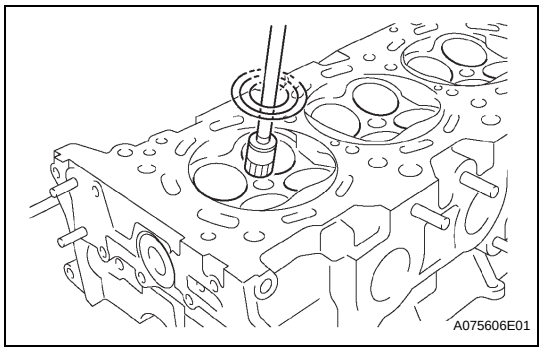

(b) Using a wire brush, remove all the carbon from the combustion chambers.
NOTICE:
Be careful not to scratch the combustion chambers.

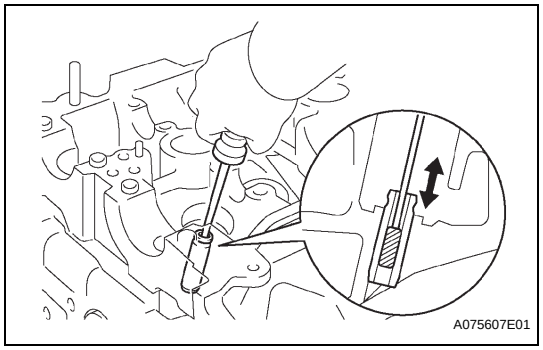

(c) Using a valve guide bushing brush and solvent, clean all the valve guide bushes.

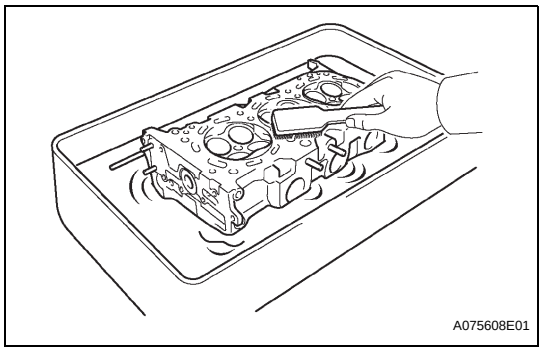

(d) Using a soft brush and solvent, thoroughly clean the cylinder head.

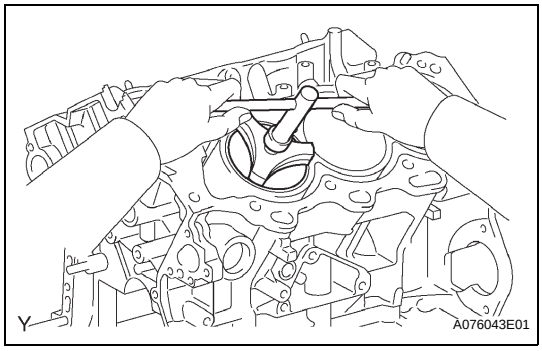

39. REMOVE WITH PISTON SUB-ASSEMBLY WITH CONNECTING ROD

(a) Using a ridge reamer, remove all the carbon from the top of the cylinder.

(b) Push in the piston, connecting rod assembly and upper bearing through the top of the cylinder block.
HINT:
- Keep the bearings, connecting rod and cap together.
- Arrange the piston and connecting rod in the correct order.

40. REMOVE CONNECTING ROD BEARING

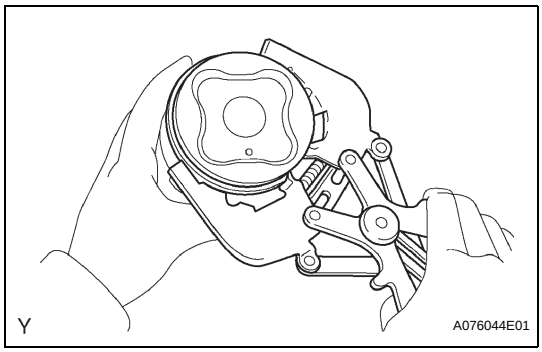

41. REMOVE PISTON RING SET

(a) Using a piston ring expander, remove the 2 compression rings.

(b) Remove the 2 side rails and oil ring by hand.

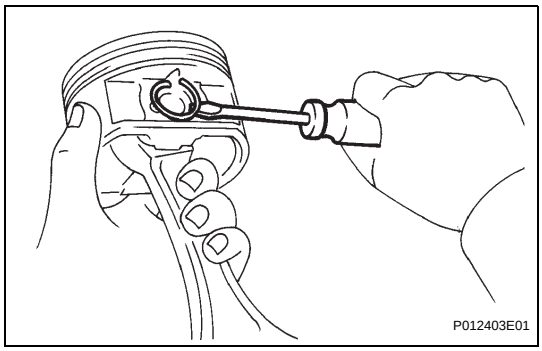

42. REMOVE HOLE SNAP RING

(a) Using a small screwdriver, pry out the 2 snap rings.

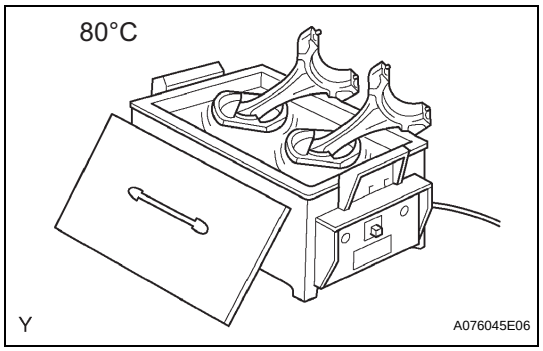

43. REMOVE WITH PISTON SUB-ASSEMBLY

(a) Gradually heat the piston to approximately 80°C (176°F).

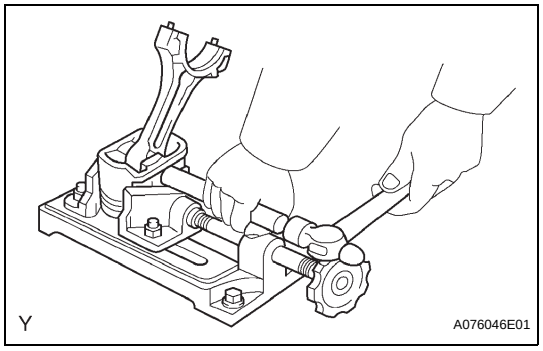

(b) Using a plastic-faced hammer and brass bar, lightly tap out the piston pin and remove the connecting rod.
HINT:
- The piston and pin are a matched set.
- Arrange the pistons, pins, rings, connecting rods and bearings in the correct order.

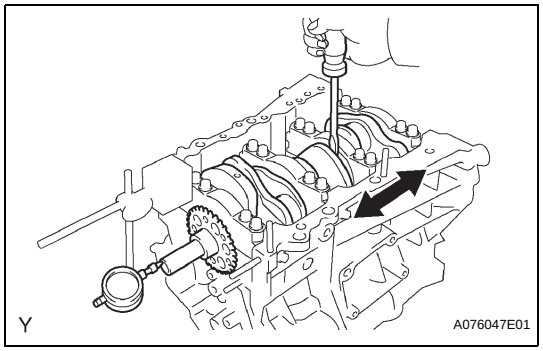

44. INSPECT CRANKSHAFT THRUST CLEARANCE

(a) Using a dial indicator, measure the thrust clearance while prying the crankshaft back and forth with a screwdriver.
Standard thrust clearance:
0.04 to 0.24 mm (0.0016 to 0.0094 in.)
Maximum thrust clearance:
0.30 mm (0.0118 in.)
If the thrust clearance is greater than the maximum, replace the pair of the thrust washers or crankshaft.
HINT:
Thrust washer thickness:
1.93 to 1.98 mm (0.0760 to 0.0780 in.)

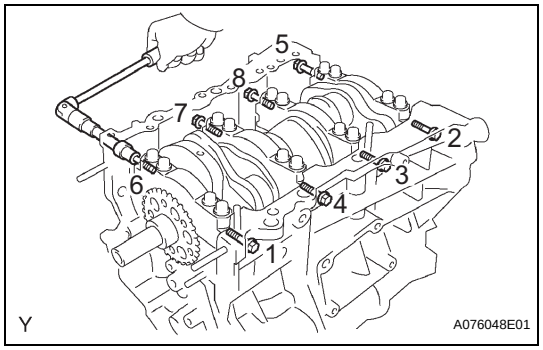

45. REMOVE CRANKSHAFT

(a) Using several steps, uniformly loosen and remove the 8 main bearing cap bolts and seal washers in the sequence shown in the illustration.

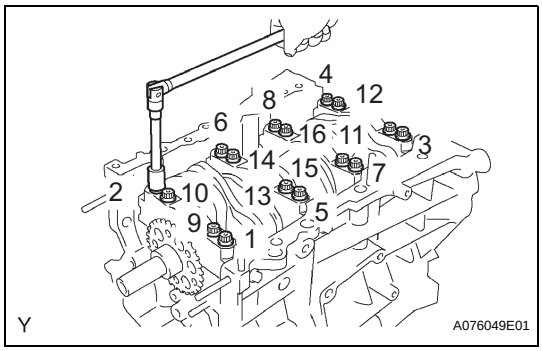

(b) Using several steps, uniformly loosen and remove the 16 main bearing cap bolts in the sequence shown in the illustration.

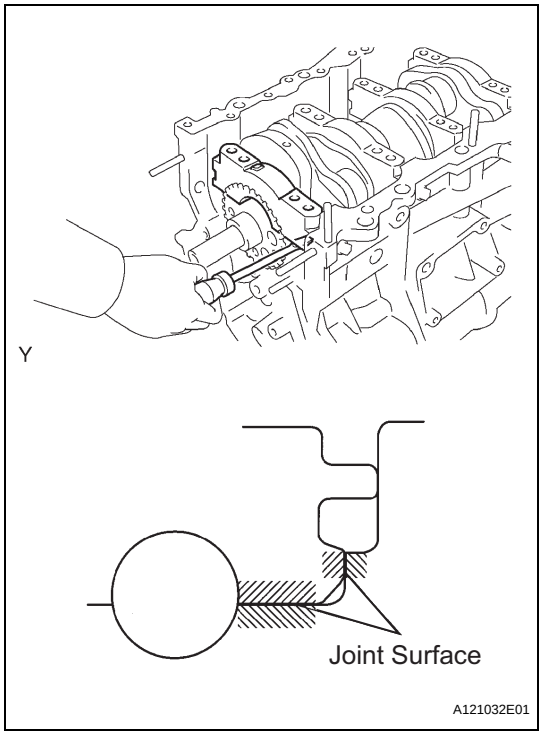

(c) Using a screwdriver, pry out the main bearing caps. Remove the 4 main bearing caps and lower bearings.
NOTICE:
- **Pull up the main bearing cap by turning it to the right and left little by little.**
- **Be careful not to damage the joint surfaces of the cylinder block and the main bearing cap.**

46. REMOVE CRANKSHAFT THRUST WASHER SET

47. REMOVE CRANKSHAFT BEARING

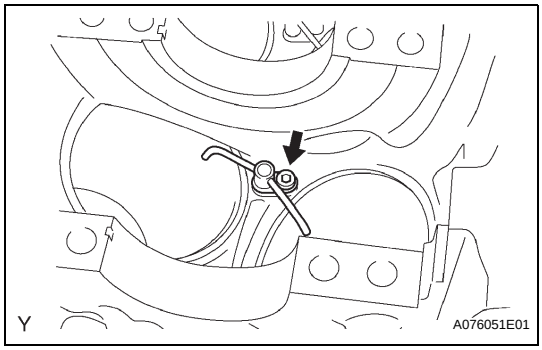

48. REMOVE NO.1 SUB-ASSEMBLY OIL NOZZLE

(a) Using a 5 mm socket hexagon wrench, remove the 3 oil nozzles.

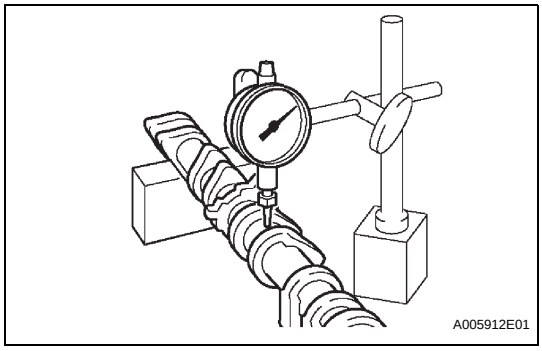

INSPECTION

1. INSPECT CAMSHAFTS

(a) Inspect the camshaft for runout.
  (1) Place the camshaft on V-blocks.
  (2) Using a dial indicator, measure the circle runout at the center journal.
  Maximum runout:
  0.06 mm (0.0024 in.)
  If the circle runout is greater than the maximum, replace the camshaft.

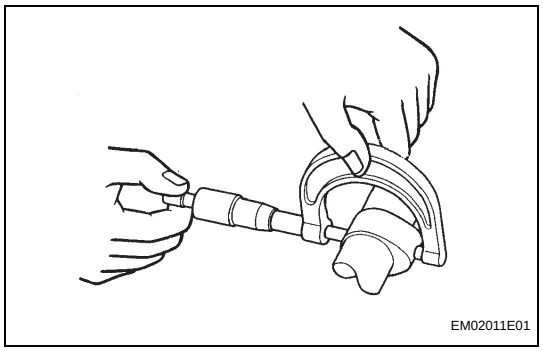

(b) Inspect the cam lobes.
(1) Using a micrometer, measure the cam lobe height.
Standard cam lobe height:
Intake 44.168 to 44.268 mm (1.7389 to 1.7428 in.)
Exhaust 44.580 to 44.680 mm (1.7551 to 1.7591 in.)
Minimum cam lobe height:
Intake 44.018 mm (1.7330 in.)
Exhaust 44.430 mm (1.7492 in.)
If the cam lobe height is less than the minimum, replace the camshaft.

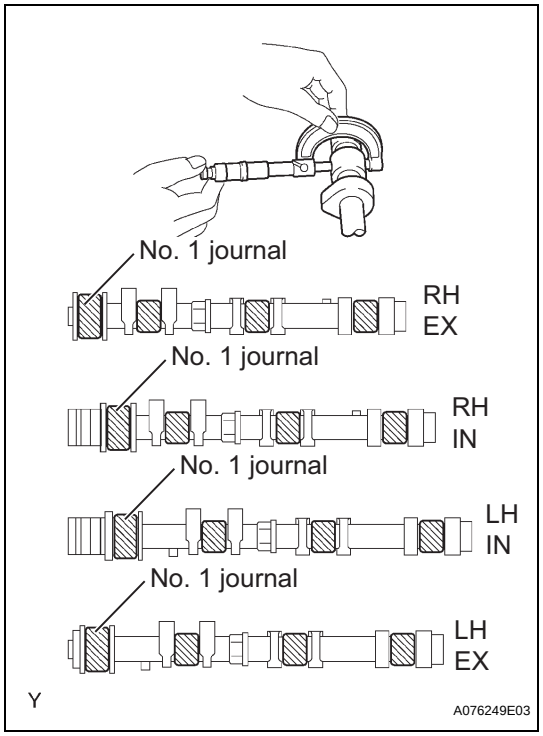

(c) Inspect the camshaft journals.
(1) Using a micrometer, measure the journal diameter.
No. 1 journal diameter:
35.971 to 35.985 mm (1.4162 to 1.4167 in.)
Other journal diameter:
22.959 to 22.975 mm (0.9039 to 0.9045 in.)
If the journal diameter is not as specified, check the oil clearance.

EM

2. INSPECT CAMSHAFT TIMING GEAR ASSEMBLY

(a) Fix the intake camshaft in a vise.
NOTICE:
Be careful not to damage the camshaft.

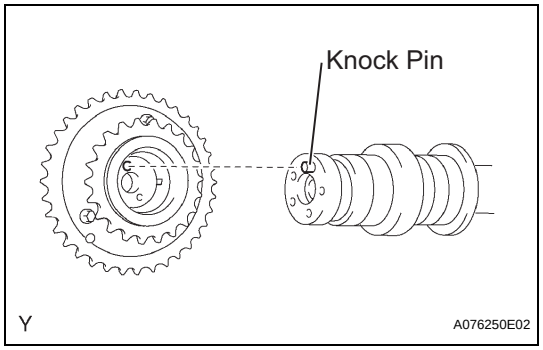

(b) Align the knock pin hole in the camshaft timing gear assembly with the knock pin of the camshaft, and install the camshaft timing gear assembly with the bolt.
Torque: 100 N*m (1,020 kgf*cm, 74 ft.*lbf)

(c) Confirm that the camshaft timing gear assembly is locked.

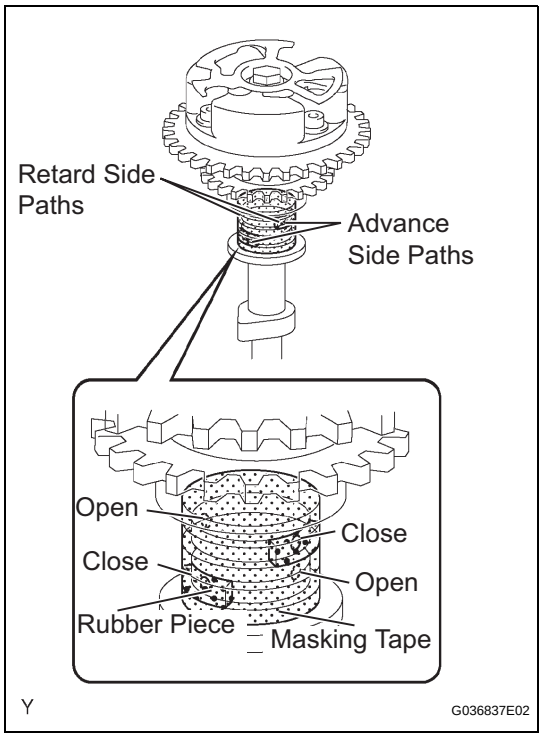

(d) Release that lock pin.

(1) Cover 4 oil paths of cam journal with masking tape as shown in the illustration.
HINT:
One of the 2 grooves on the cam journal is for the retard side path (upper) and the other is for the advance side path (lower). Each groove has 2 oil paths. Plug one of the oil paths for each groove with a piece of rubber before wrapping the cam journal with tape.

(2) Puncture the tape covering the advance oil path and retard oil path on the opposite side of the groove as shown in the illustration.

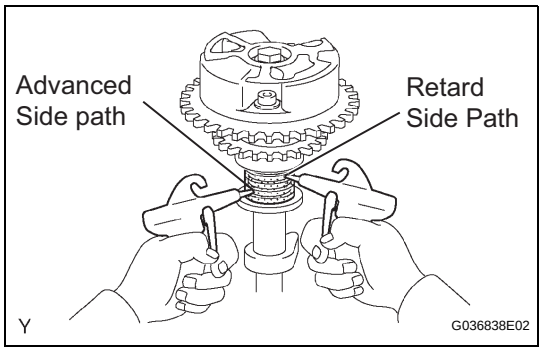

(3) Apply air pressure into two broken paths (the advance side path and the retard side path) of about 200 kPa (2.0 kgf/cm^2).
NOTICE:
Cover the paths with a shop rag to avoid oil splashes.

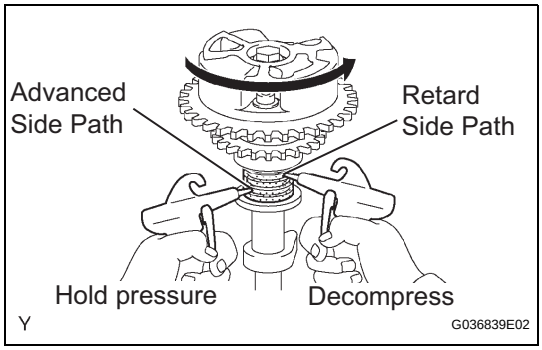

(4) Confirm that the camshaft timing gear assembly rotates in the timing advance direction when reducing the air pressure on the timing retard path.
HINT:
When the lock pin is released, the camshaft timing gear rotates in the advance direction.

(5) When the camshaft timing gear comes to the most advanced position, release the air pressure on the timing retard side path, and release that of the timing advance side path.
NOTICE:
Camshaft timing assembly gear occasionally shifts to the retard side abruptly if the air compression on the advanced side path is released first. This often causes the breakage of the lock pin.

EM

(e) Check the smooth revolution.
(1) Rotate the camshaft timing gear several times within the movable range except for the most retarded position and check it rotates smoothly.
Standard:
Move smoothly in the range about 31°
NOTICE:
Be sure to perform this check by hand, instead of using air pressure.

(f) Check that the lock is in the most retarded position.
(1) Confirm that the camshaft timing gear assembly is locked in the most retarded position.

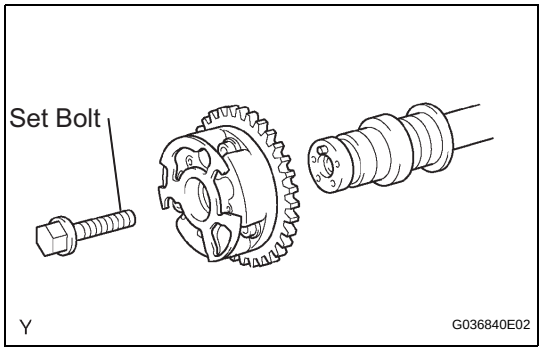

(g) Remove the set bolt, then remove the camshaft timing gear assembly.
NOTICE:
Be sure not to remove the other 3 bolts.

EM

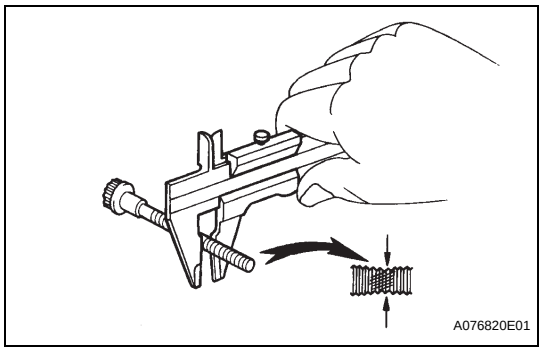

3. INSPECT CYLINDER HEAD SET BOLT

(a) Using vernier calipers, measure the outer diameter of the bolt thread.
Standard outer diameter:
10.85 to 11.00 mm (0.4272 to 0.4331 in.)
Minimum outer diameter:
10.7 mm (0.421 in.)
If the cylinder head set bolt is less than the minimum, replace the bolt.

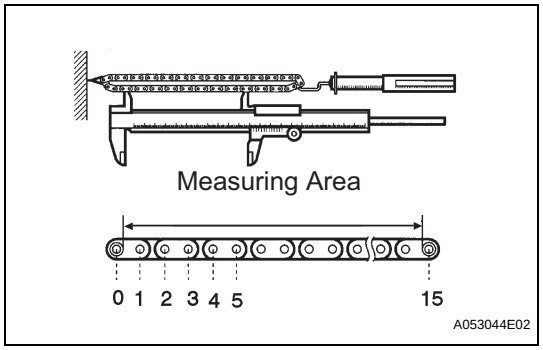

4. INSPECT CHAIN SUB-ASSEMBLY

(a) Using a spring scale, apply 147 N (15.0 kgf, 33.1 lbf) to the chain and measure the length.
Maximum chain length:
146.8 mm (5.780 in.)
NOTICE:
Measure the length at least 3 places and calculate the average length.
If the chain length is greater than the maximum, replace the chain.

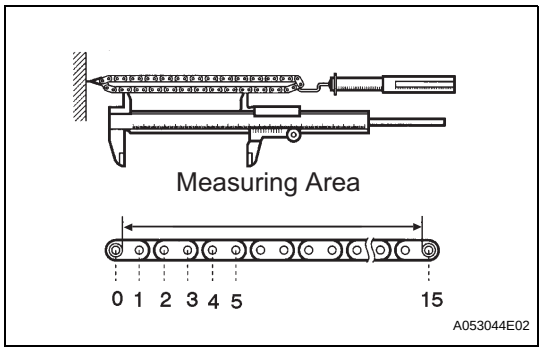

5. INSPECT NO.2 CHAIN SUB-ASSEMBLY

(a) Using a spring scale, apply 147 N (15.0 kgf, 33.1 lbf) to the chain and measure the length.
Maximum chain length:
146.8 mm (5.780 in.)
NOTICE:
Measure the length at least 3 places and calculate the average length.
If the chain length is greater than the maximum, replace the chain.

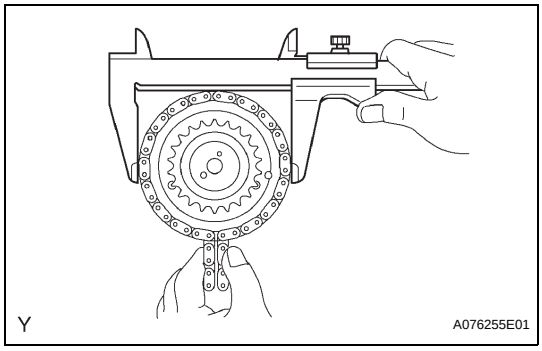

6. INSPECT CAMSHAFT TIMING GEAR ASSEMBLY

(a) Wrap the No. 1 chain around the larger gear of timing gear assembly.
(b) Using vernier caliper, measure the timing gear with the chain wrapped.
Minimum gear diameter (with chain):
115.5 mm (4.547 in.)
NOTICE:
Vernier caliper must be in contact with the chain rollers when measuring.
If the gear diameter is less than the minimum, replace the No. 1 chain and the camshaft timing gear assembly.

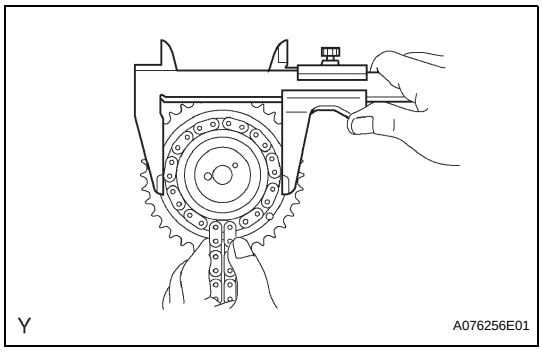

(c) Wrap the No. 2 chain around the smaller gear of timing gear assembly.
(d) Using vernier calipers, measure the timing gear with the chain wrapped.
Minimum gear diameter (with chain):
73.1 mm (2.878 in.)
NOTICE:
The vernier calipers must be in contact the chain rollers when measuring.
If the gear diameter is less than the minimum, replace the No. 2 chain and the camshaft timing gear assembly.

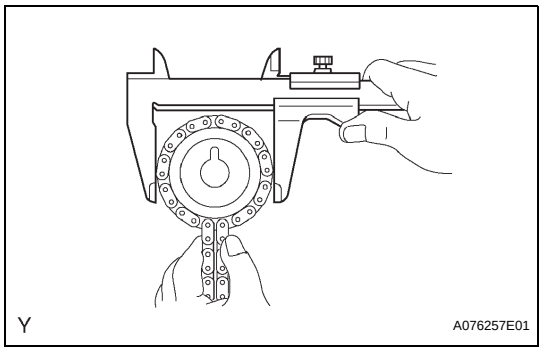

7. INSPECT CAMSHAFT TIMING GEAR OR SPROCKET

(a) Wrap the No. 2 chain around the timing gear.
(b) Using vernier calipers, measure the camshaft timing gear diameter with the chain wrapped.
Minimum gear diameter (with chain):
73.1 mm (2.878 in.)
NOTICE:
The vernier calipers must be in contact the chain rollers when measuring.
If the gear diameter is less than the minimum, replace the No. 2 chain and camshaft timing gear.

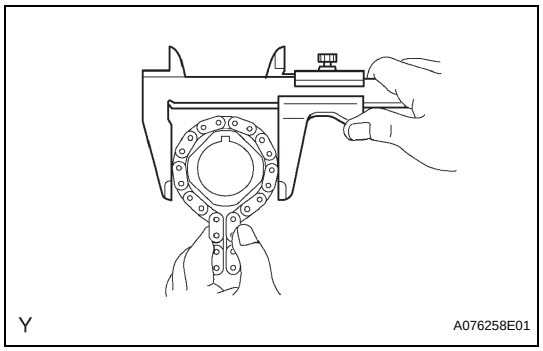

8. INSPECT CRANKSHAFT TIMING GEAR OR SPROCKET

(a) Wrap the No. 1 chain around the timing gear.

(b) Using vernier calipers, measure the timing gear diameter with the chain wrapped.

Minimum gear diameter (with chain):
61.0 mm (2.402 in.)

NOTICE:
The vernier calipers must be in contact with the chain rollers when measuring.

If the gear diameter is less than the minimum, replace the No. 1 chain and the crankshaft timing gear.

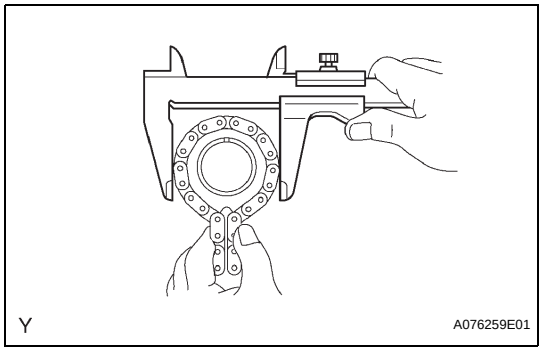

9. INSPECT IDLE SPROCKET ASSEMBLY

(a) Wrap the No. 1 chain around the idle sprocket.

(b) Using vernier caliper, measure the idle sprocket with the chain wrapped.

Minimum gear diameter (with chain):
61.0 mm (2.402 in.)

NOTICE:
The vernier caliper must be in contact with the chain rollers when measuring.

If the gear diameter is less than the minimum, replace the No. 1 chain and idle sprocket.

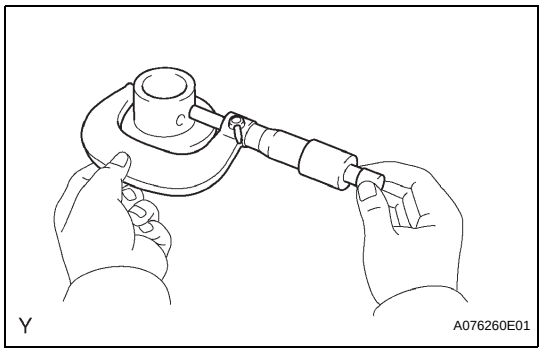

10. INSPECT NO.1 IDLE GEAR SHAFT

(a) Using a micrometer, measure the idle gear shaft diameter.

Idle gear shaft diameter:
22.987 to 23.000 mm (0.9050 to 0.9055 in.)

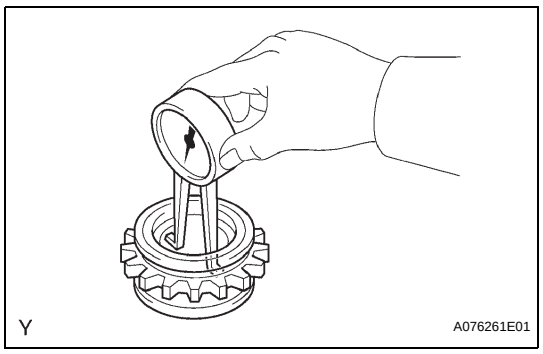

(b) Using a caliper gauge, measure the internal diameter of the idle gear.

Idle gear internal diameter:
23.02 to 23.03 mm (0.9063 to 0.9067 in.)

(c) Subtract the idle gear shaft diameter measurement from the idle gear internal diameter measurement.

Standard oil clearance:
0.020 to 0.043 mm (0.0008 to 0.0017 in.)

Maximum oil clearance:
0.093 mm (0.0037 in.)

EM

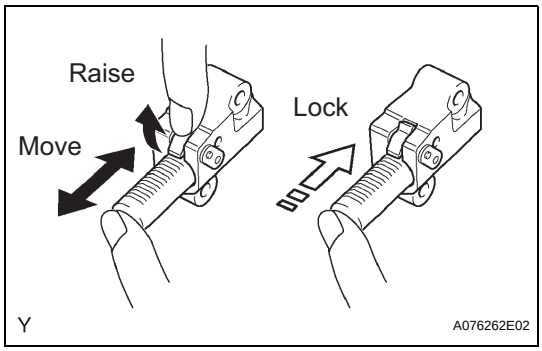

11. INSPECT NO.1 CHAIN TENSIONER ASSEMBLY

(a) Check that the plunger moves smoothly when the ratchet pawl is raised with finger.

(b) Release the ratchet pawl, then check that the plunger is locked in place by the ratchet pawl and does not move when pushing it with finger.

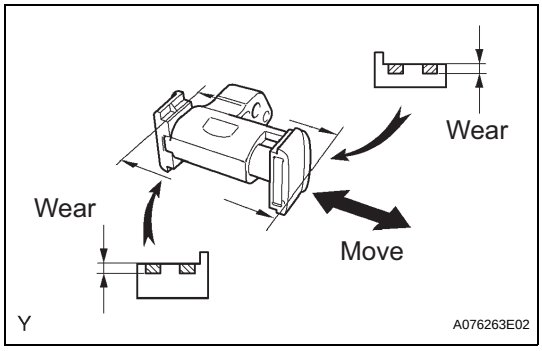

12. INSPECT NO.2 CHAIN TENSIONER ASSEMBLY

(a) Check that the plunger moves smoothly.

(b) Measure the wear of the chain tensioner slipper.
Maximum wear:
1.0 mm (0.039 in.)
If the wear is greater than the maximum, replace the chain tensioner No. 2.

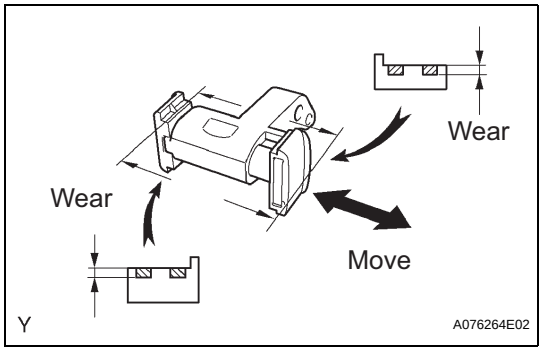

13. INSPECT NO.3 CHAIN TENSIONER ASSEMBLY

(a) Check that the plunger moves smoothly.

(b) Measure the wear of the chain tensioner slipper.
Maximum wear:
1.0 mm (0.039 in.)
If the wear is greater than the maximum, replace the chain tensioner No. 3.

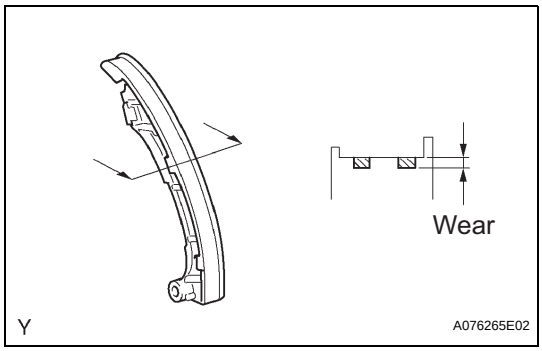

14. INSPECT CHAIN TENSIONER SLIPPER

(a) Measure the wear of the tensioner slipper.
Maximum wear:
1.0 mm (0.039 in.)
If the thickness is greater than the maximum, replace the tensioner slipper.

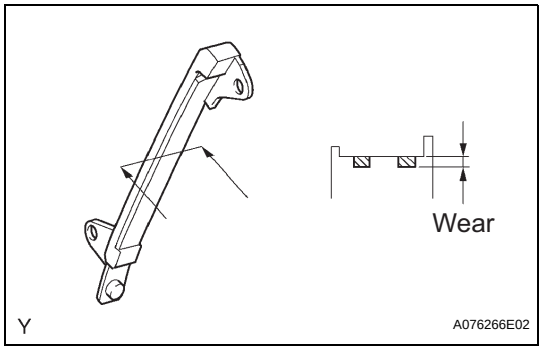

15. INSPECT NO.1 CHAIN VIBRATION DAMPER

(a) Measure the wear of the vibration damper No. 1.
Maximum wear:
1.0 mm (0.039 in.)
If the thickness is greater than the maximum, replace the vibration damper No. 1.

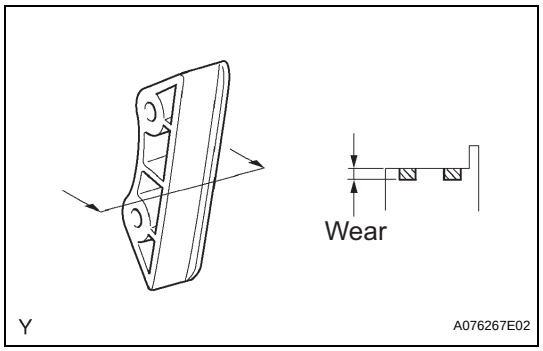

16. INSPECT NO.2 CHAIN VIBRATION DAMPER

(a) Measure the wear of the vibration damper No. 2 .
Maximum wear:
1.0 mm (0.039 in.)
If the thickness is greater than the maximum, replace the vibration damper No. 2.

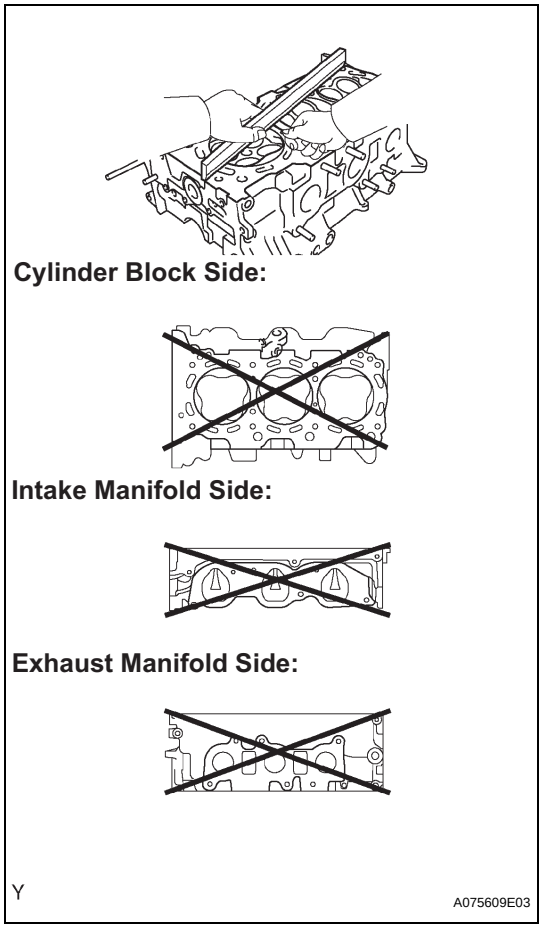

17. INSPECT CYLINDER HEAD SUB-ASSEMBLY

(a) Inspect the cylinder head for warpage.
(1) Using a precision straight edge and feeler gauge, measure the warpage on the cylinder block side and the intake and exhaust sides.
Maximum warpage:
0.10 mm (0.0039 in.)
If the warpage is greater than the maximum, replace the cylinder head.

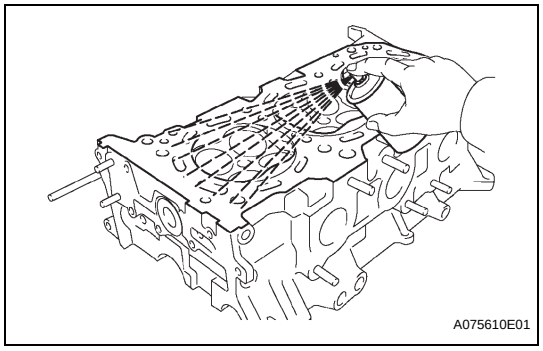

(b) Inspect the cylinder head for crack.
(1) Using a dye penetrant, check the combustion chamber, intake ports, exhaust ports and cylinder block surface for cracks.
If cracked, replace the cylinder head.

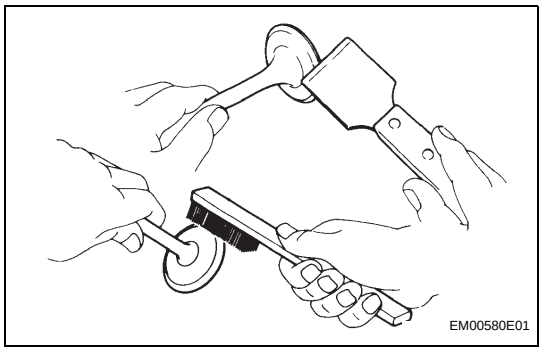

18. CLEAN VALVE

(a) Using a gasket scraper, chip off any carbon from the valve head.

(b) Using a wire brush, thoroughly clean the valve.

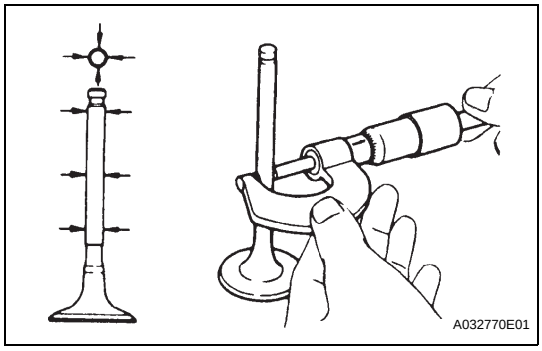

19. INSPECT VALVE

(a) Inspect valve stem diameter.

(1) Using a micrometer, measure the diameter of the valve stem.

Valve stem diameter

Intake	**5.470 to 5.485 mm (0.2154 to 0.2159 in.)**
Exhaust	**5.465 to 5.480 mm (0.2152 to 0.2158 in.)**

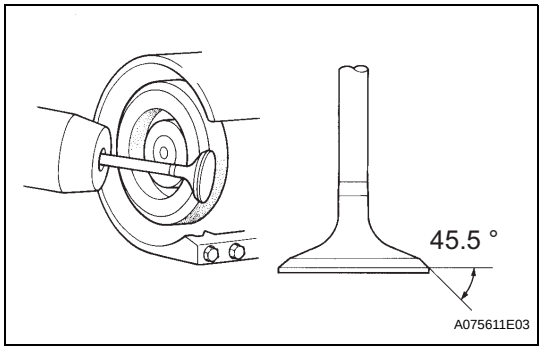

(b) Inspect valve face angle.

(1) Grind the valve enough to remove any pits and carbon.

(2) Check that the valve is ground to the correct valve face angle.

Valve face angle:
45.5°

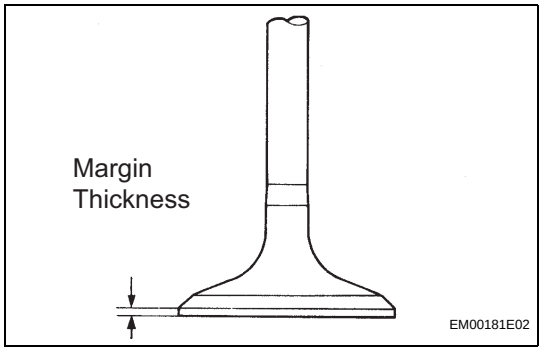

(c) Inspect valve head margin thickness.

(1) Using vernier calipers, check the valve head margin thickness.

Standard margin thickness:
1.0 mm (0.039 in.)
Minimum margin thickness:
0.5 mm (0.020 in.)

If the margin thickness is less than the minimum, replace the valve.

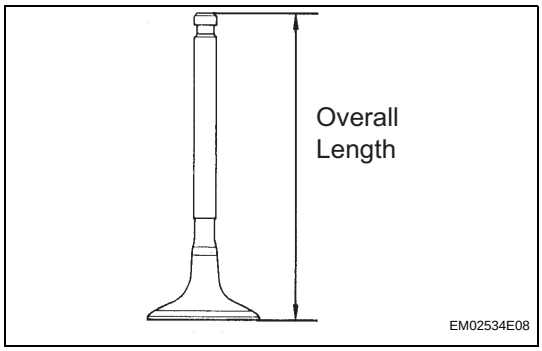

(d) Inspect overall length.

(1) Using vernier calipers, check the overall length.

Standard overall length

Intake	**106.95 mm (4.2106 in.)**
Exhaust	**105.80 mm (4.1654 in.)**

Minimum overall length

Intake	**106.70 mm (4.2008 in.)**
Exhaust	**105.55 mm (4.1555 in.)**

EM

If the overall length is less than the minimum, replace the valve.

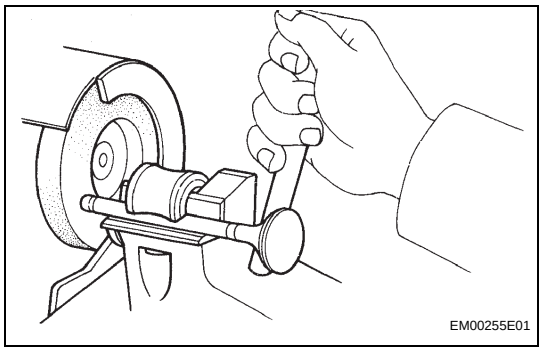

(e) Inspect valve stem tip.
  (1) Check the surface of the valve stem tip for wear.
  NOTICE:
  Do not grind to less than the minimum length.
  If the valve stem tip is worn, resurface the tip with a grinder or replace the valve.

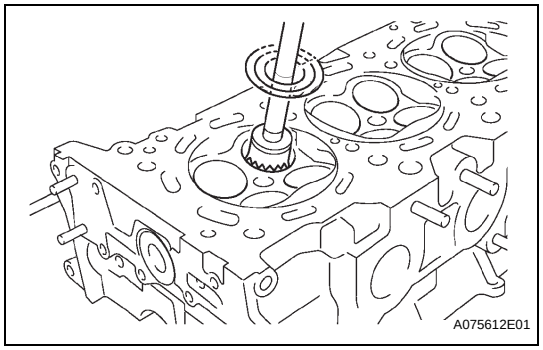

20. CLEAN VALVE SEAT
(a) Using a 45° carbide cutter, resurface the valve seats.
(b) Clean the valve seats.

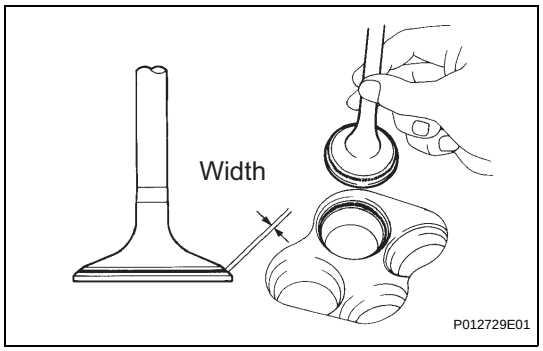

21. INSPECT VALVE SEAT
(a) Apply a light coat of prussian blue (or white lead) to the valve face.
(b) Lightly press the valve against the valve seat.
  NOTICE:
  Do not rotate the valve.
(c) Check the valve face and seat according to the following procedure.
  (1) If blue appears 360° around the face, the valve is concentric.
  If not, replace the valve.
  (2) If the blue appears 360° around the valve seat, the guide and face are concentric.
  If not, resurface the valve seat.
  (3) Check that the seat is in contact with the middle of the valve face with the following width.
  Standard width:
  1.0 to 1.4 mm (0.039 to 0.055 in.)

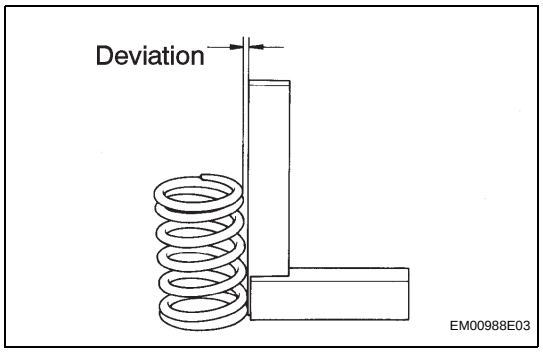

22. INSPECT INNER COMPRESSION SPRING
(a) Inspect the deviation.
  (1) Using steel squares, measure the deviation of the inner compression spring.
  Maximum deviation:
  2.0 mm (0.079 in.)
  If the deviation is greater than the maximum, replace the inner compression spring.

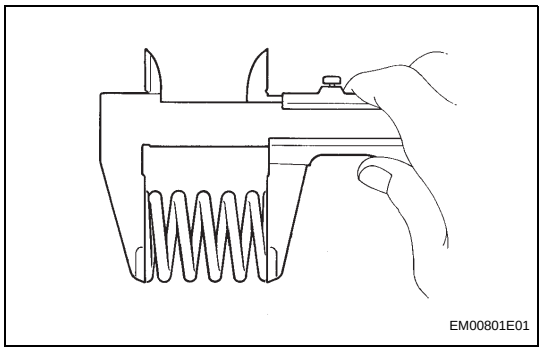

(b) Inspect the free length.
(1) Using vernier calipers, measure the free length of the inner compression spring.
Free length:
47.80 mm (1.8819 in.)
If the free length is not as specified, replace the inner compression spring.

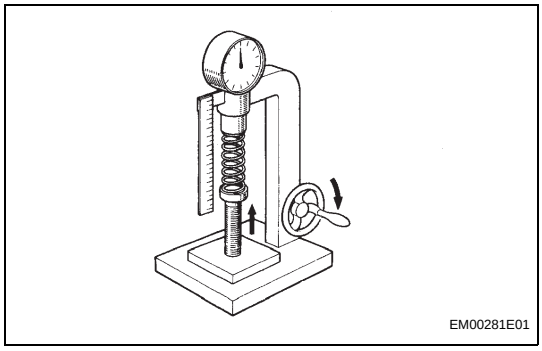

(c) Inspect the tension.
(1) Using a spring tester, measure the tension of the inner compression spring at the specified installed length.
Installed tension:
186.2 to 205.8 N (19.0 to 21.0 kgf, 41.9 to 46.3 lbf) at 33.3 mm (1.311 in.)
If the installed tension is not as specified, replace the inner compression spring.

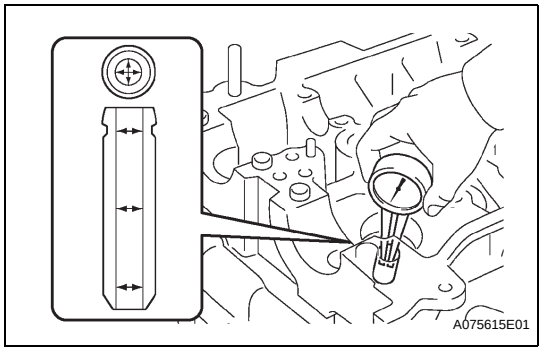

23. INSPECT VALVE GUIDE BUSH OIL CLEARANCE
(a) Using a caliper gauge, measure the internal diameter of the valve guide bush.
Inside diameter:
5.51 to 5.53 mm (0.2169 to 0.2177 in.)
(b) Subtract the valve stem diameter measurement (Step 8) from the valve guide bush internal diameter measurement.
Standard oil clearance

Intake	**0.025 to 0.060 mm (0.0010 to 0.0024 in.)**
Exhaust	**0.030 to 0.065 mm (0.0012 to 0.0026 in.)**

Maximum oil clearance

Intake	**0.08 mm (0.0031 in.)**
Exhaust	**0.10 mm (0.0039 in..)**

If the oil clearance is greater than the maximum, replace the valve and valve guide bush.

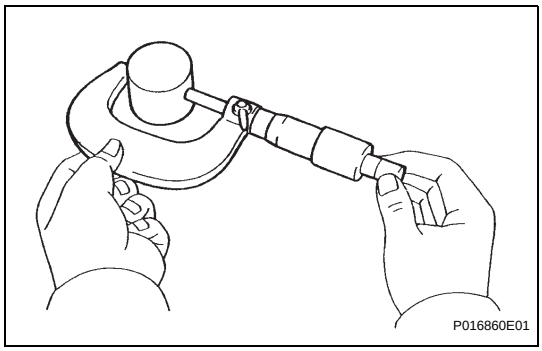

24. INSPECT VALVE LIFTER
(a) Using a micrometer, measure the valve lifter diameter.
Valve lifter diameter:
30.966 to 30.976 mm (1.2191 to 1.2195 in.)

EM

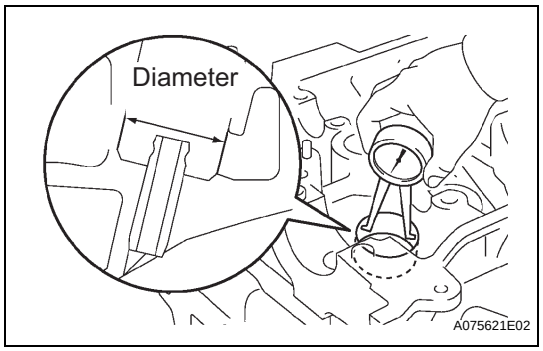

25. INSPECT VALVE LIFTER OIL CLEARANCE

(a) Using a caliper gauge, measure the lifter bore diameter of the cylinder head.
Lifter bore diameter:
31.009 to 31.025 mm (1.2208 to 1.2215 in.)

(b) Subtract the valve lifter diameter measurement (Step 16) from the lifter bore diameter measurement.
Standard oil clearance:
0.033 to 0.059 mm (0.0013 to 0.0023 in.)
Maximum oil clearance:
0.08 mm (0.0031 in.)
If the oil clearance is greater than the maximum, replace the valve lifter.
If necessary, replace the cylinder head.

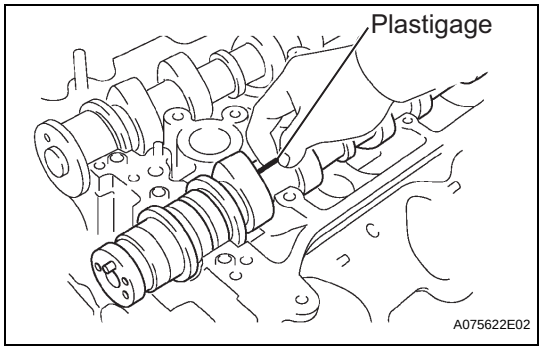

26. INSPECT CAMSHAFT OIL CLEARANCE

(a) Clean the camshaft bearing caps, camshaft bearings and camshaft journals.

(b) Install the camshaft bearing (see page EM-57 or EM-74).

(c) Place the camshaft on the cylinder head.

(d) Lay a strip of Plastigage across each camshaft journal.

(e) Install the camshaft bearing caps (see page EM-54 or EM-74).
NOTICE:
Do not turn the camshafts.

(f) Remove the camshaft bearing caps (see page EM-57 or EM-74).

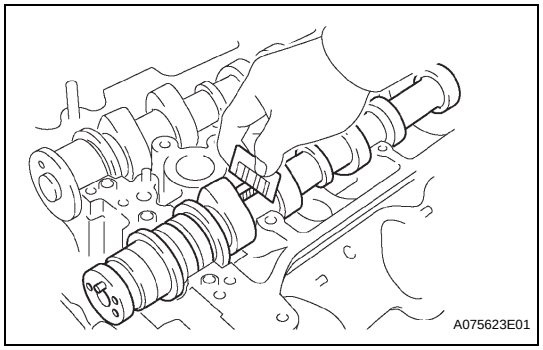

(g) Measure the Plastigage at its widest point.
Standard oil clearance (Cylinder head RH)

No. 1 (Intake)	0.008 to 0.038 mm (0.0003 to 0.0015 in.)
No. 1 (Exhaust)	0.040 to 0.079 mm (0.0016 to 0.0031 in.)
Others	0.025 to 0.062 mm (0.0010 to 0.0024 in.)

Standard oil clearance (Cylinder head LH)

No. 1	0.040 to 0.079 mm (0.0016 to 0.0031 in.)
Others	0.025 to 0.062 mm (0.0010 to 0.0024 in.)

Maximum oil clearance (Cylinder head RH)

No. 1 (Intake)	0.07 mm (0.0028 in.)
Others	0.10 mm (0.0039 in.)

Maximum oil clearance (Cylinder head LH):
0.10 mm (0.0039 in.)
If the oil clearance is greater than the maximum, replace the camshaft bearings and/or camshafts.
If necessary, replace the camshaft bearing caps and cylinder head together.
Reference

Cylinder head journal bore diameter	40.009 to 40.017 mm (1.5752 to 1.5755 in.)
Camshaft bearing center wall thickness (Mark "2")	2.004 to 2.008 mm (0.0789 to 0.0791 in.)

EM

Cylinder head journal bore diameter	**40.009 to 40.017 mm (1.5752 to 1.5755 in.)**
Camshaft journal diameter	**35.971 to 35.985 mm (1.4165 to 1.4167 in.)**

(h) Remove the Plastigage completely.
(i) Remove the camshafts.
(j) Remove the camshaft bearing.

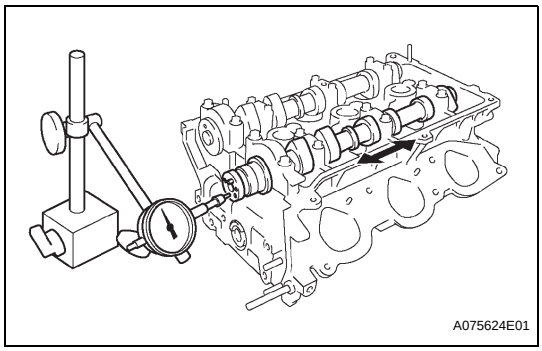

27. INSPECT CAMSHAFT THRUST CLEARANCE

(a) Install the camshafts. (See page EM-57 or EM-74).
(b) Using a dial indicator, measure the thrust clearance while moving the camshaft back and forth.
Standard thrust clearance:
0.04 to 0.09 mm (0.016 to 0.035 in.)
Maximum thrust clearance:
0.11 mm (0.0043 in.)
If the thrust clearance is greater than the maximum, replace the camshafts.
If necessary, replace the camshaft bearing caps and cylinder head as a set.

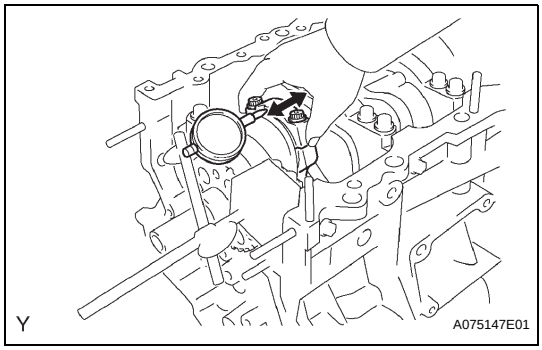

28. INSPECT CONNECTING ROD THRUST CLEARANCE

(a) Using a dial indicator, measure the thrust clearance while moving the connecting rod back and forth.
Standard thrust clearance:
0.15 to 0.30 mm (0.0059 to 0.0118 in.)
Maximum thrust clearance:
0.35 mm (0.0138 in.)

29. INSPECT CONNECTING ROD OIL CLEARANCE

(a) Check the matchmarks on the connecting rod and cap are aligned to ensure correct assembly.
(b) Using SST, remove the 2 connecting rod cap bolts.
SST 09011-38121
(c) Clean the crank pin, bearing and connecting rod.
(d) Check the crank pin and bearing for any pits and scratches.

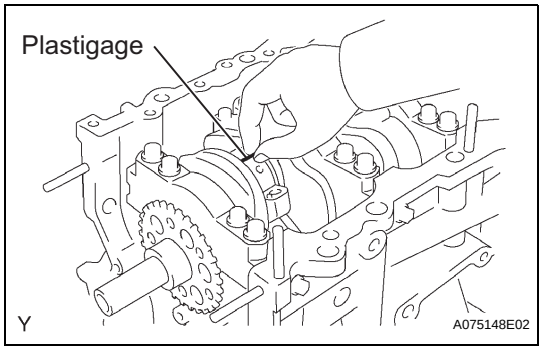

(e) Lay a strip of plastigage across the crank pin.

EM

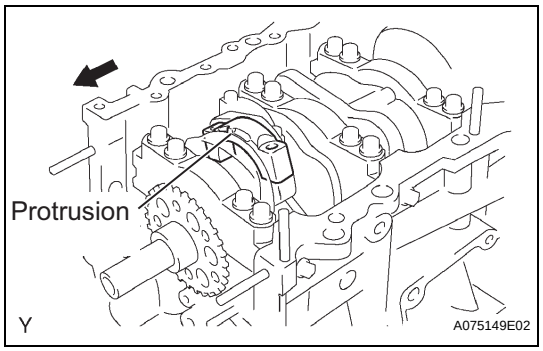

(f) Check that the protrusion of the connecting rod cap is facing in the correct direction.

(g) Apply a light coat of engine oil to the threads of the connecting rod cap bolts.

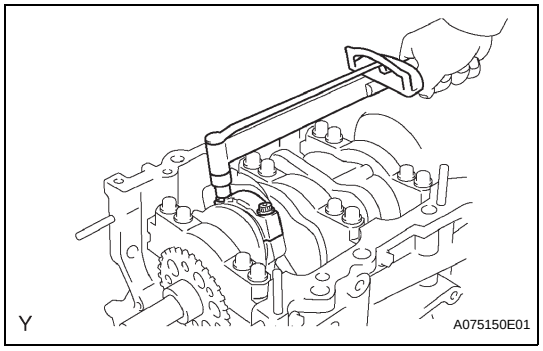

(h) Using SST, tighten the bolts alternately to the specified torque.
SST 09011-38121
Torque: 25 N*m (250 kgf*cm, 18 ft.*lbf)

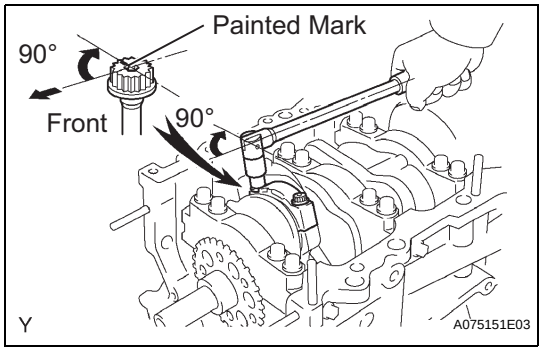

(i) Mark the front side of the each connecting cap bolt with paint.

(j) Retighten the cap bolts 90° as shown in the illustration.
NOTICE:
Do not turn the crankshaft.

(k) Remove the 2 bolts, connecting rod cap and lower bearing.

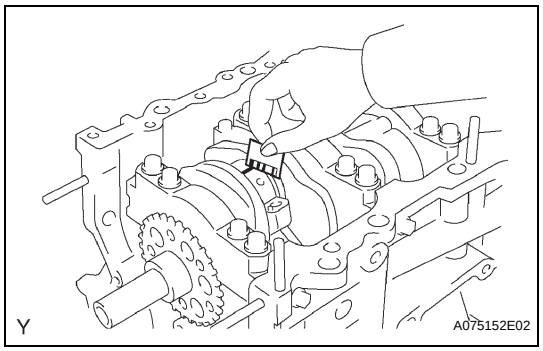

(l) Measure the plastigage at its widest point.
Standard oil clearance:
0.026 to 0.046 mm (0.0010 to 0.0018 in.)
Maximum oil clearance:
0.066 mm (0.0025 in.)
NOTICE:
Completely remove the plastigage.

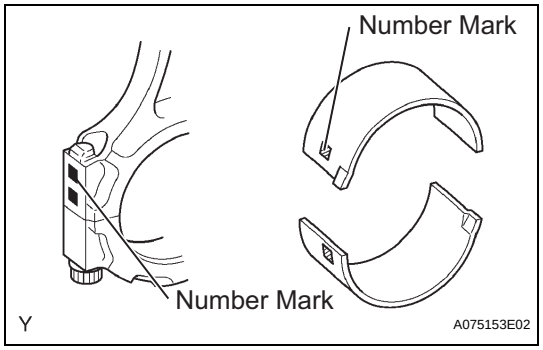

(m) When replacing the bearing, replace it with one with the same number as marked on the connecting rod. There are 4 sizes of standard bearings, marked "1 ", "2", "3" and "4" accordingly.
HINT:
Standard bearing center wall thickness

Mark	mm (in.)
"1"	1.484 to 1.487 (0.0584 to 0.0585)
"2"	1.487 to 1.490 (0.0585 to 0.0587)
"3"	1.490 to 1.493 (0.0587 to 0.0588)

Mark	mm (in.)
"4"	1.493 to 1.496 (0.0588 to 0.0589)

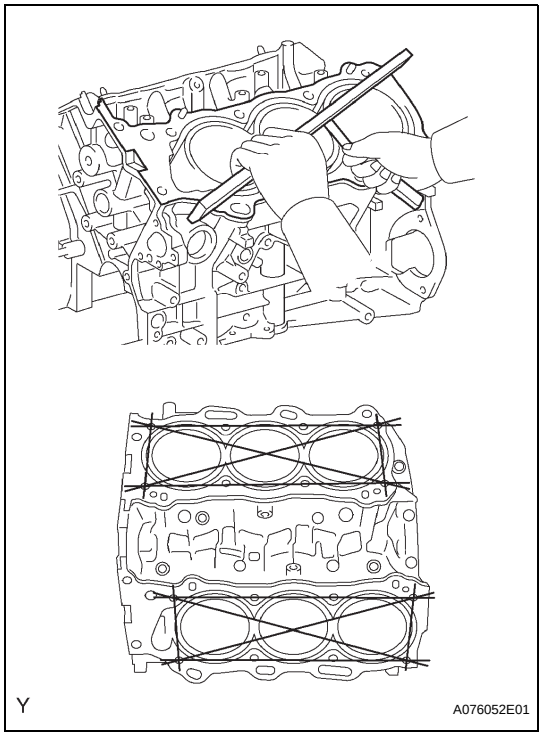

30. CHECK CYLINDER BLOCK FOR WARPAGE

(a) Using a precision straight edge and feeler gauge, measure the warpage of the contact surface of the cylinder head gasket.
Maximum warpage:
0.05 mm (0.0020 in.)
If the warpage is greater than the maximum, replace the cylinder block.

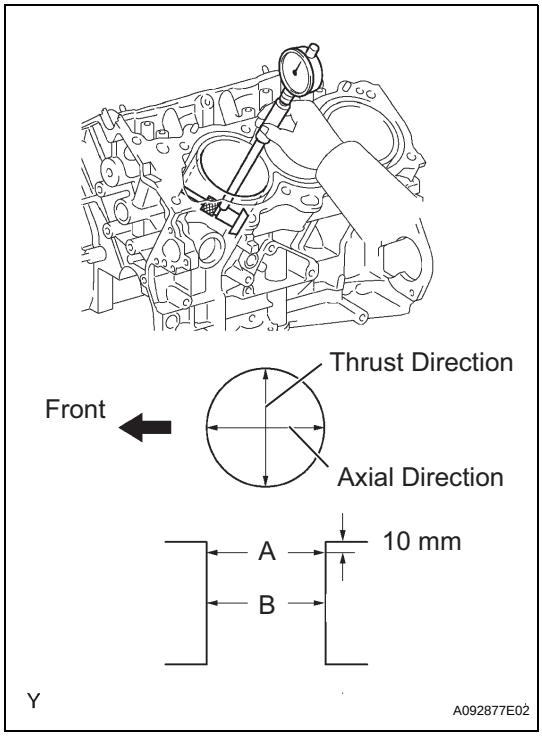

31. INSPECT CYLINDER BORE

(a) Using a cylinder gauge, measure the cylinder bore diameter at positions A and B in the thrust and axial directions.
Standard diameter:
94.000 to 94.012 mm (3.7008 to 3.7013 in.)
Maximum diameter:
94.132mm (3.7060 in.)
If the average diameter of 4 positions is greater than the maximum, replace the cylinder block.

EM

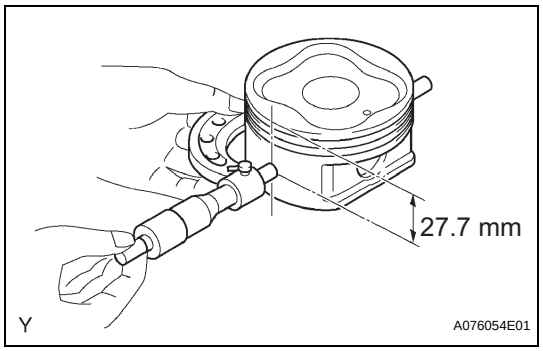

32. INSPECT WITH PISTON SUB-ASSEMBLY

(a) Using a micrometer, measure the piston diameter at right angles to the piston pin center line, 27.7 mm (1.091 in.) from the piston head.
Piston diameter:
93.910 to 93.940 mm (3.6972 to 3.6984 in.)

33. INSPECT PISTON OIL CLEARANCE

(a) Subtract the piston diameter measurement from the cylinder bore diameter measurement.
Standard oil clearance:
0.060 to 0.102 mm (0.0031 to 0.0040 in.)
Maximum oil clearance:
0.13 mm (0.0051 in.)
If the oil clearance is greater than the maximum, replace all the 6 pistons. If necessary, replace the cylinder block.

EM

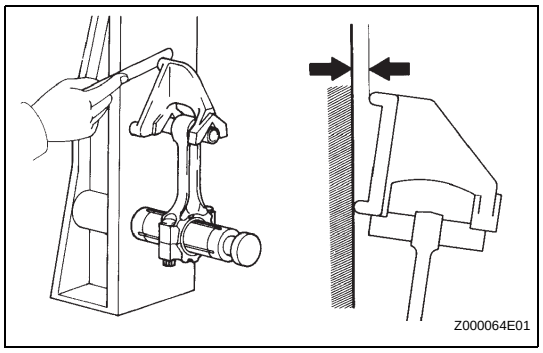

34. INSPECT CONNECTING ROD SUB-ASSEMBLY

(a) Using a rod aligner and feeler gauge, check the connecting rod alignment.

(1) Check for misalignment.
Maximum misalignment:
0.05 mm (0.0020 in.) per 100 mm (3.94 in.)
If misalignment is greater than the maximum, replace the connecting rod assembly.

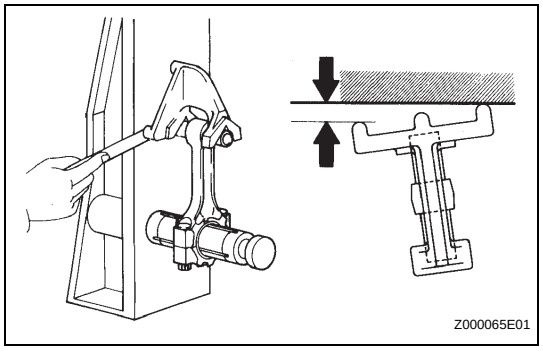

(2) Check the twist.
Maximum twist:
0.15 mm (0.0059 in.) per 100 mm (3.94 in.)
If the twist is greater than the maximum, replace the connecting rod assembly.

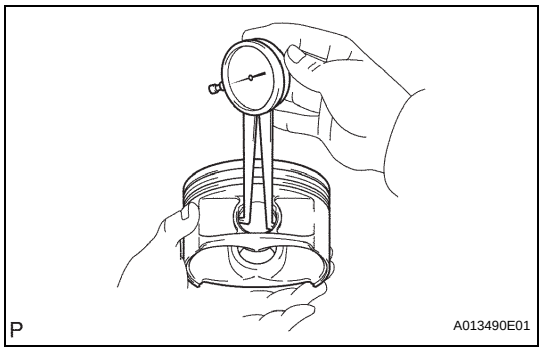

35. INSPECT PISTON PIN OIL CLEARANCE

(a) Using a caliper gauge, measure the internal diameter of the piston pin hole.
Piston pin hole internal diameter:
22.001 to 22.010 mm (0.8662 to 0.8665 in.)
Piston pin hole inside diameter

Mark	mm (in.)
A	22.001 to 22.004 (0.8662 to 0.8663)
B	22.005 to 22.007 (0.8663 to 0.8664)
C	22.008 to 22.010 (0.8665 to 0.8665)

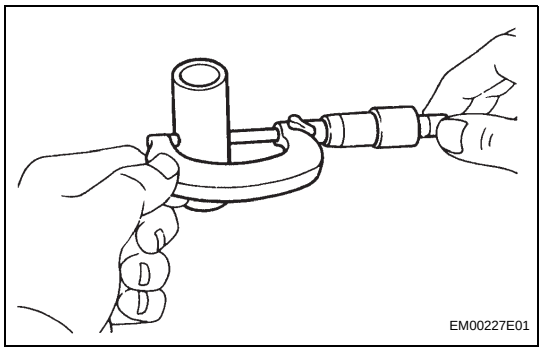

(b) Using a micrometer, measure the piston pin diameter.
Piston pin diameter:
21.997 to 22.006 mm (0.8660 to 0.8664 in.)
Piston pin diameter

Mark	mm (in.)
A	21.997 to 22.000 (0.8660 to 0.8661)
B	22.001 to 22.003 (0.8661 to 0.8663)
C	22.004 to 22.006 (0.8663 to 0.8664)

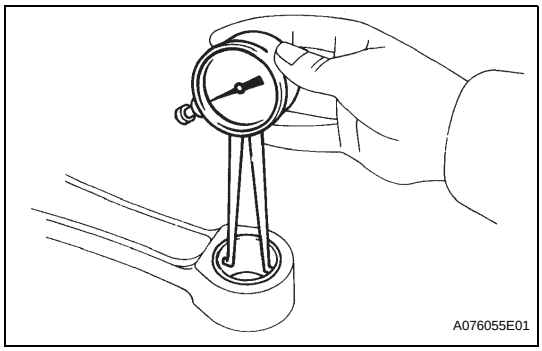

(c) Using a caliper gauge, measure the internal diameter of the connecting rod bushing.
Bushing internal diameter:
22.005 to 22.014 mm (0.8663 to 0.8667 in.)
Bushing internal diameter

Mark	mm (in.)
A	22.005 to 22.008 (0.8663 to 0.8665)
B	22.009 to 22.011 (0.8665 to 0.8666)
C	22.012 to 22.014 (0.8666 to 0.8667)

(d) Subtract the piston pin diameter measurement from the piton pin hole diameter measurement.
Standard oil clearance:
0.001 to 0.007 mm (0.00004 to 0.00028 in.)
Maximum oil clearance:
0.040 mm (0.0016 in.)

(e) If the oil clearance is greater than the maximum, replace the bushing. If necessary, replace the piston and piston pin together.

(f) Subtract the piston pin diameter measurement from the bushing inside diameter measurement.
Standard oil clearance:
0.005 to 0.011 mm (0.0002 to 0.0004 in.)
Maximum oil clearance:
0.050 mm (0.0020 in.)

(g) If the oil clearance is greater than the maximum, replace the bushing. If necessary, replace the connecting rod and piston pin together.

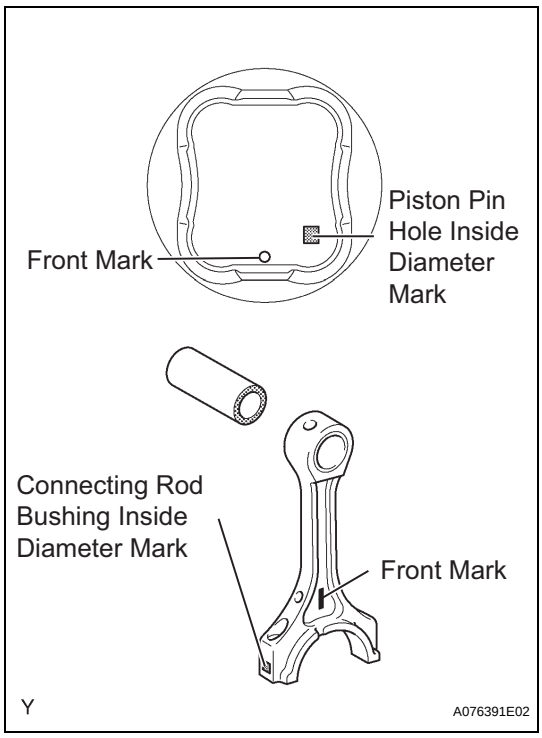

EM

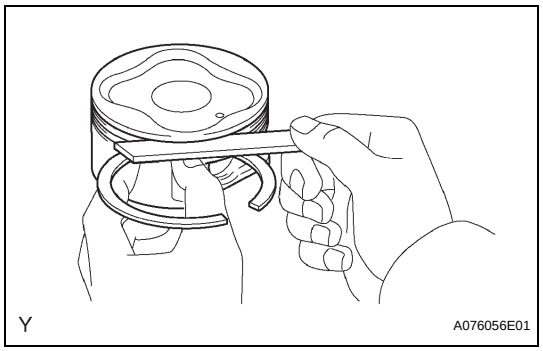

36. INSPECT RING GROOVE CLEARANCE

(a) Using a feeler gauge, measure the clearance between a new piston ring and the wall of the ring groove.

Ring groove clearance:

No.1 0.02 to 0.07 mm (0.0008 to 0.0028 in.)
No.2 0.02 to 0.06 mm (0.0008 to 0.0024 in.)
Oil 0.07 to 0.15 mm (0.0028 to 0.0060 in.)

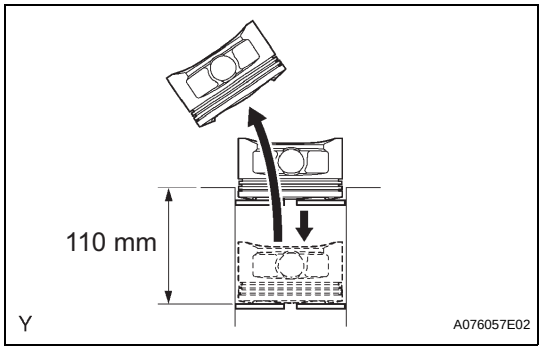

37. INSPECT PISTON RING END GAP

(a) Using a piston, push the piston ring a little beyond the bottom of the ring travel, 110 mm (4.33 in.) from the top of the cylinder block.

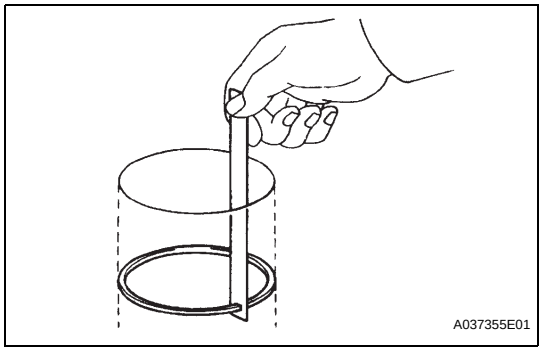

(b) Using a feeler gauge, measure the end gap.

Standard end gap:

No. 1 0.30 to 0.40 mm (0.0118 to 0.0157 in.)
No. 2 0.40 to 0.50 mm (0.0157 to 0.0197 in.)
Oil (Side rail) 0.10 to 0.40 mm (0.0039 to 0.0157 in.)

Maximum end gap:

No. 1 1.0 mm (0.039 in.)
No. 2 1.1 mm (0.043 in.)
Oil (Side rail) 1.0 mm (0.039 in.)

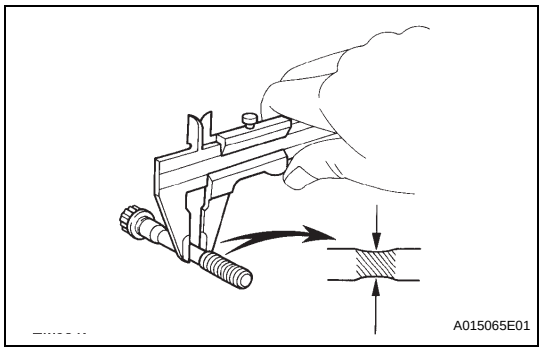

38. INSPECT CONNECTING ROD BOLT

(a) Using vernier calipers, measure the tension portion diameter of the bolt.

Standard diameter:

7.2 to 7.3 mm (0.283 to 0.287 in.)

Minimum diameter:

7.0 mm (0.276 in.)

If the diameter is less than the minimum, replace the bolt.

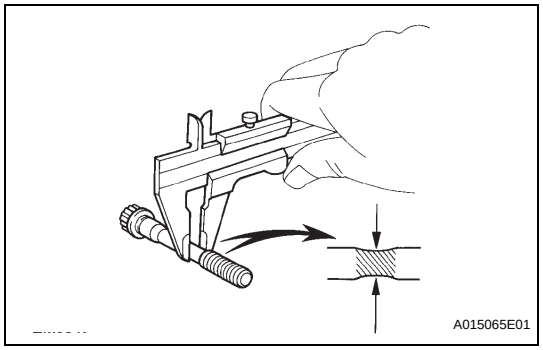

39. INSPECT CRANKSHAFT BEARING CAP SET BOLT

(a) Using vernier calipers, measure the tension portion diameter of the bolt.

Standard diameter:

10.0 to 10.2 mm (0.393 to 0.402 in.)

If the diameter is less than the minimum, replace the bolt.

EM

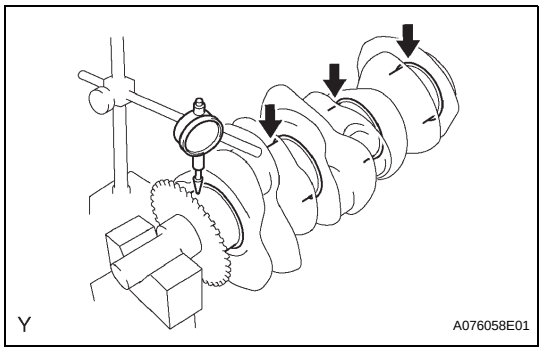

40. INSPECT CRANKSHAFT

(a) Using a dial indicator and V-blocks, measure the runout as shown in the illustration.
Maximum circle runout:
0.06 mm (0.0024 in.)

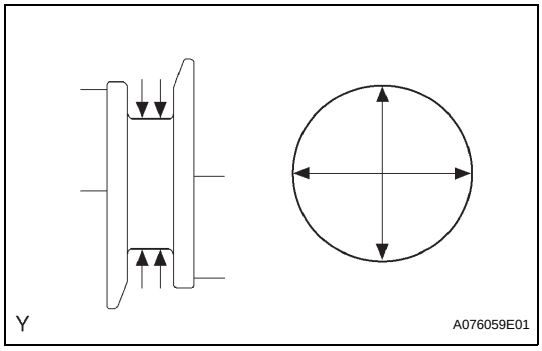

(b) Using a micrometer, measure the diameter of each main journal.
Diameter:
71.988 to 72.000 mm (2.8342 to 2.8346 in.)

(c) Check each main journal for taper and out-of-roundness as shown.
Maximum taper and out-of-roundness:
0.02 mm (0.0008 in.)

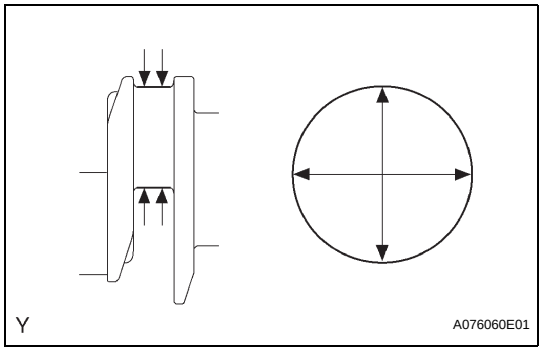

(d) Using a micrometer, measure the diameter of each crank pin.
Diameter:
55.992 to 56.000 mm (2.2044 to 2.2047 in.)

(e) Check each crank pin for taper and out-of-roundness as shown.
Maximum taper and out-of-roundness:
0.02 mm (0.0008 in.)

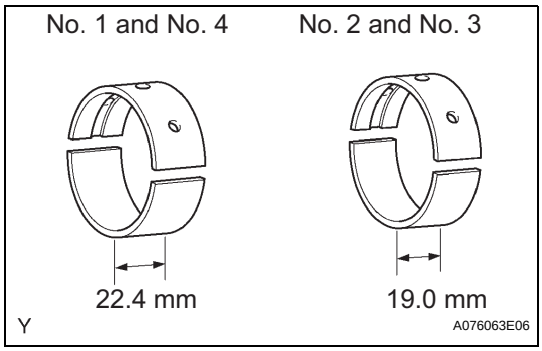

41. INSPECT CRANKSHAFT OIL CLEARANCE

HINT:
There are 2 types of main bearings with different widths (19.0 mm (0.748 in.) and 22.4 mm (0.882 in.)) for use in the inspection. Install the 22.4mm (0.882 in.) bearings in the No. 1 and No. 4 cylinder block journal positions with the main bearing cap. Install the 19.0 mm (0.748 in.) bearings in the No. 2 and No. 3 positions.

(a) Clean each main journal and bearing.

EM

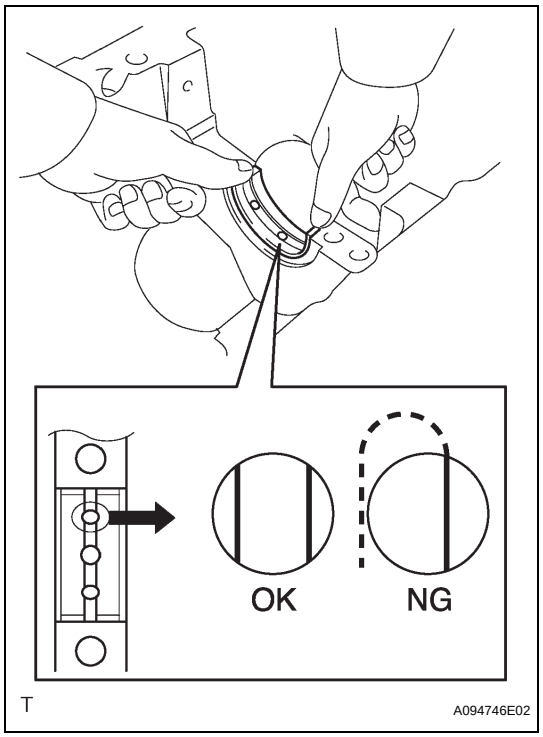

(b) Install the 4 upper bearings.
  (1) Install the upper bearing near the center of the cylinder block.
  NOTICE:
  - **The width of the No. 1 and No. 4 journal bearings is different from that of the No. 2 and No. 3 journal bearings. Therefore, confirm whether it is the correct journal bearing prior to installation.**
  - **Do not apply engine oil to the bearing installation surfaces of the cylinder block and the back side of the bearings.**
  - **Check that the oil groove on the cylinder block can be seen through the oil supply holes of the upper bearing.**

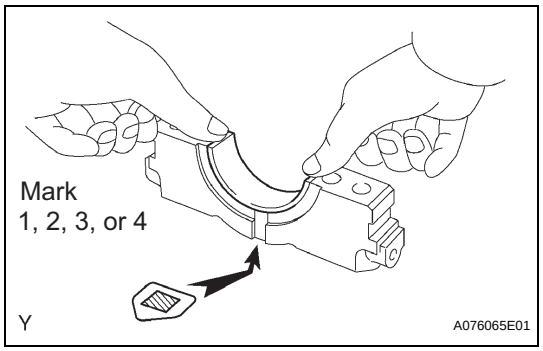

(c) Install the 4 lower bearings.
  (1) Install the lower bearing near the center of the cylinder block.
  NOTICE:
  Do not apply engine oil to the bearing and its contact surface.
  HINT:
  A number marked on each main bearing cap indicates the installation position.

(d) Place the crankshaft on the cylinder block.

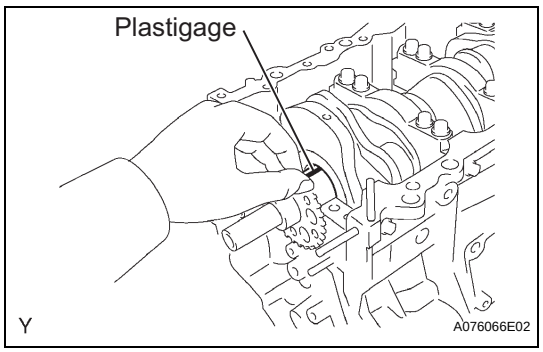

(e) Lay a strip of plastigage across each journal.

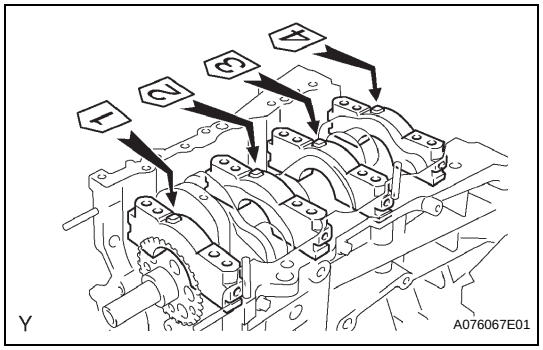

(f) Examine the front marks and numbers, check the sequence order is as shown and install the bearing caps onto the cylinder block.

(g) Apply a light coat of engine oil to the threads of bearing cap bolts.

(h) Temporarily install the 8 main bearing cap bolts in the inside positions.

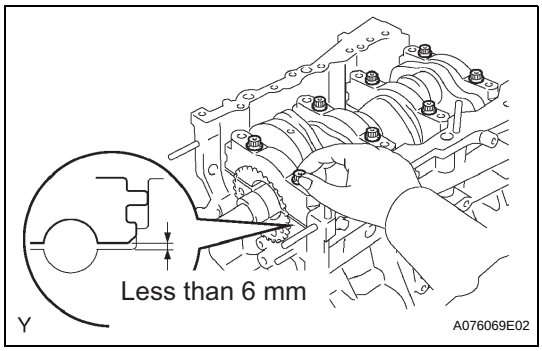

(i) Install the main bearing caps. Tighten the 2 bolts for each bearing cap until the clearance between the bearing cap and the cylinder block is under 6 mm (0.23 in.).

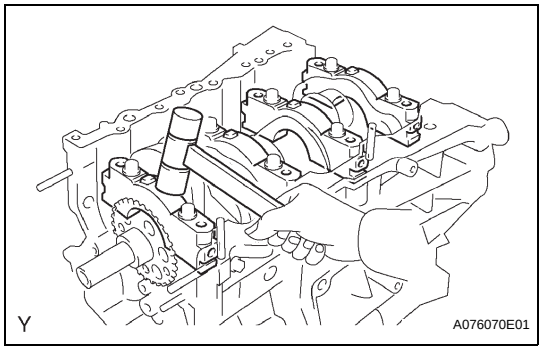

(j) Using a plastic-faced hammer, lightly tap the bearing cap to ensure a proper fit.
(k) Apply a light coat of engine oil to the threads of main bearing cap bolts.

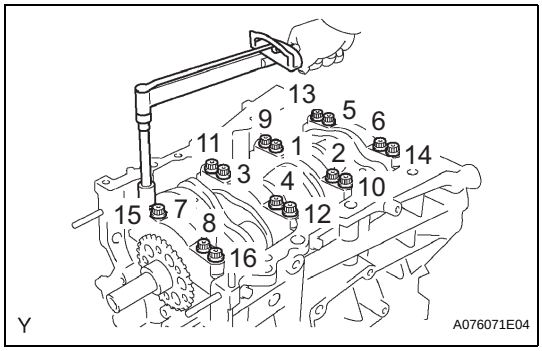

(l) Install the 16 main bearing cap bolts. Using several steps, tighten the bolts uniformly in the sequence shown in the illustration.
Torque: 61 N*m (622 kgf*cm, 45 ft.*lbf)

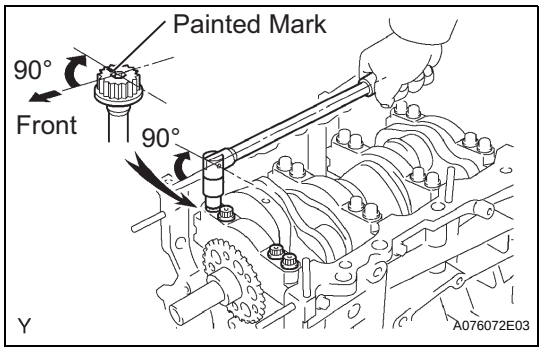

(m) Mark the front side of the bearing cap bolts with paint.
(n) Retighten the bearing cap bolts 90° in the sequence as shown.
(o) Check that the painted mark is now at a 90° angle from the front.
NOTICE:
Do not turn the crankshaft.

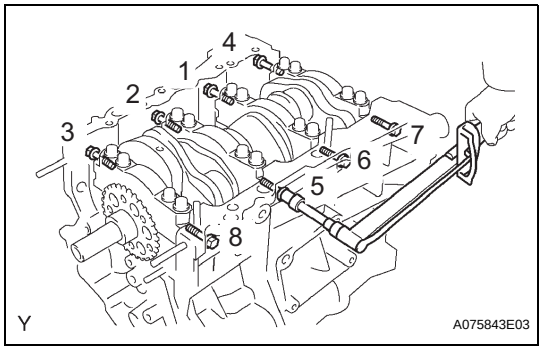

(p) Install the 8 main bearing cap bolts. Using several steps, tighten the bolts uniformly in the sequence shown in the illustration.
Torque: 25 N*m (255 kgf*cm, 18 ft.*lbf)
(q) Remove the main bearing caps.

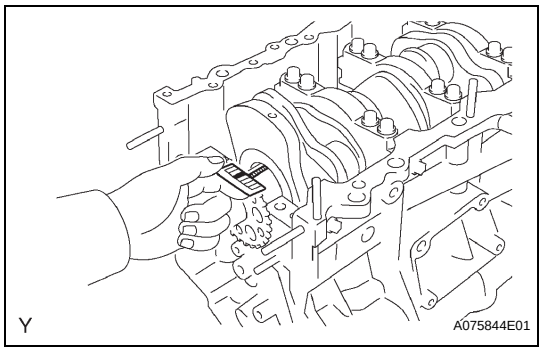

(r) Measure the Plastigage at its widest point.
Standard oil clearance:
0.018 to 0.030 mm (0.0007 to 0.0012 in.)
Maximum clearance:
0.046 mm (0.0018 in.)
If the oil clearance is greater than the maximum, replace the bearings. If necessary, replace the crankshaft.
NOTICE:
Completely remove the plastigage.

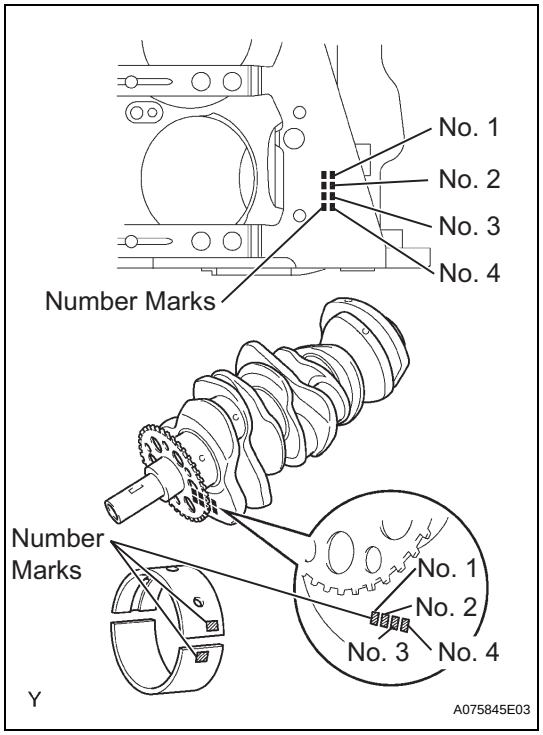

(s) Replace the bearing with the same number. If the number of the bearing cannot be determined, select the correct bearing by adding together the numbers imprinted on the cylinder block and crankshaft, then refer to the table below for the appropriate bearing number. There are 5 size of standard bearings, marked "1", "2", "3", "4" and "5" accordingly.
Journal bearing

Cylinder block (A) + Crankshaft	0 -5	6 -11	12 -17	18 - 23	24 - 28
Use Bearing	"1"	"2"	"3"	"4"	"5"

HINT:
EXAMPLE
Cylinder block "11" (A) + Crankshaft "06" (B)
=Total number 17 (Use bearing "3")

EM

Item	Mark	mm (in.)
Cylinder block main journal bore diameter (A)	"00"	77.000 (3.0315)
	"01"	77.001 (3.0315)
	"02"	77.002 (3.0316)
	"03"	77.003 (3.0316)
	"04"	77.004 (3.0317)
	"05"	77.005 (3.0317)
	"06"	77.006 (3.0317)
	"07"	77.007 (3.0318)
	"08"	77.008 (3.0318)
	"09"	77.009 (3.0319)
	"10"	77.010 (3.0319)
	"11"	77.011 (3.0319)
	"12"	77.012 (3.0320)
	"13"	77.013 (3.0320)
	"14"	77.014 (3.0320)
	"15"	77.015 (3.0321)
	"16"	77.016 (3.0321)

Item	Mark	mm (in.)
Crankshaft main journal diameter (B)	"00"	71.999 to 72.000 (2.8346 to 2.8346)
	"01"	71.998 to 71.999 (2.8346 to 2.8346)
	"02"	71.997 to 71.998 (2.8345 to 2.8346)
	"03"	71.996 to 71.997 (2.8345 to 2.8346)
	"04"	71.995 to 71.996 (2.8344 to 2.8345)
	"05"	71.994 to 71.995 (2.8344 to 2.8344)
	"06"	71.993 to 71.994 (2.8343 to 2.8344)
	"07"	71.992 to 71.993 (2.8343 to 2.8343)
	"08"	71.991 to 71.992 (2.8343 to 2.8343)
	"09"	71.990 to 71.991 (2.8343 to 2.8343)
	"10"	71.989 to 71.990 (2.8342 to 2.8343)
	"11"	71.988 to 71.989 (2.8342 to 2.8342)
Standard bearing center wall thickness	"1"	2.488 to 2.491 (0.0980 to 0.0981)
	"2"	2.491 to 2.494 (0.0981 to 0.0982)
	"3"	2.494 to 2.497 (0.0982 to 0.0983)
	"4"	2.497 to 2.500 (0.0982 to 0.0984)
	"5"	2.500 to 2.503 (0.0984 to 0.0985)

EM

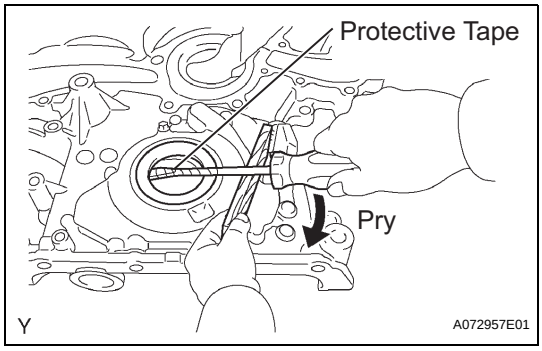

REPLACEMENT

1. REMOVE TIMING GEAR CASE OR TIMING CHAIN CASE OIL SEAL

(a) Using a screwdriver, pry out the oil seal.
NOTICE:
Be careful not to damage the oil pump assembly. Wrap a tip of the screwdriver with tape.

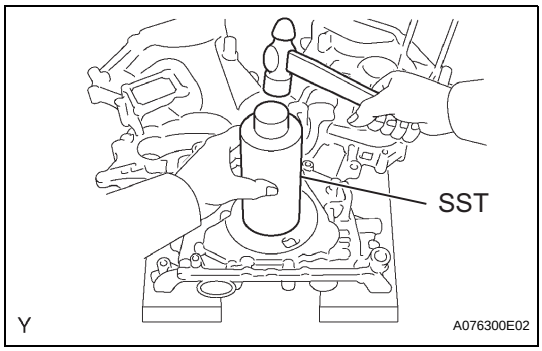

2. INSTALL TIMING GEAR CASE OR TIMING CHAIN CASE OIL SEAL

(a) Using SST and a hammer, tap in a new oil seal until its surface is flush with the timing chain cover edge.
SST 09226-10010

(b) Apply MP grease to the oil seal lip.

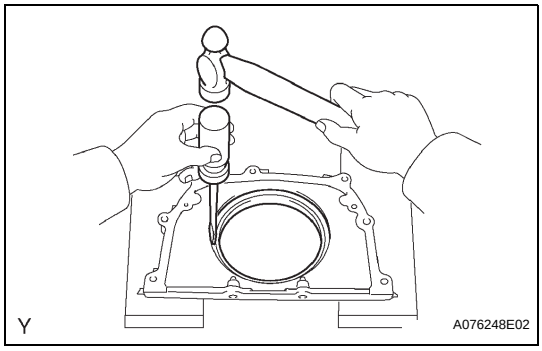

3. REMOVE REAR ENGINE OIL SEAL

(a) Using a screwdriver and hammer, tap the oil seal out.

Item	Mark	mm (in.)
Crankshaft main journal diameter (B)	"00"	71.999 to 72.000 (2.8346 to 2.8346)
	"01"	71.998 to 71.999 (2.8346 to 2.8346)
	"02"	71.997 to 71.998 (2.8345 to 2.8346)
	"03"	71.996 to 71.997 (2.8345 to 2.8346)
	"04"	71.995 to 71.996 (2.8344 to 2.8345)
	"05"	71.994 to 71.995 (2.8344 to 2.8344)
	"06"	71.993 to 71.994 (2.8343 to 2.8344)
	"07"	71.992 to 71.993 (2.8343 to 2.8343)
	"08"	71.991 to 71.992 (2.8343 to 2.8343)
	"09"	71.990 to 71.991 (2.8343 to 2.8343)
	"10"	71.989 to 71.990 (2.8342 to 2.8343)
	"11"	71.988 to 71.989 (2.8342 to 2.8342)
Standard bearing center wall thickness	"1"	2.488 to 2.491 (0.0980 to 0.0981)
	"2"	2.491 to 2.494 (0.0981 to 0.0982)
	"3"	2.494 to 2.497 (0.0982 to 0.0983)
	"4"	2.497 to 2.500 (0.0982 to 0.0984)
	"5"	2.500 to 2.503 (0.0984 to 0.0985)

EM

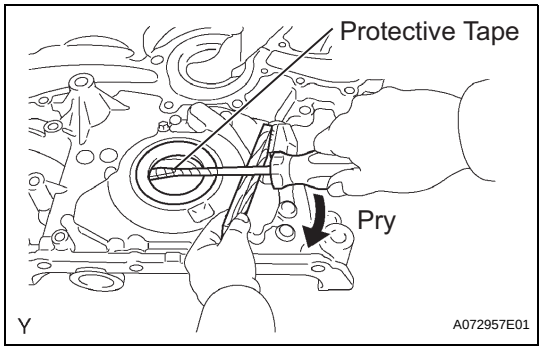

REPLACEMENT

1. REMOVE TIMING GEAR CASE OR TIMING CHAIN CASE OIL SEAL

(a) Using a screwdriver, pry out the oil seal.
NOTICE:
Be careful not to damage the oil pump assembly. Wrap a tip of the screwdriver with tape.

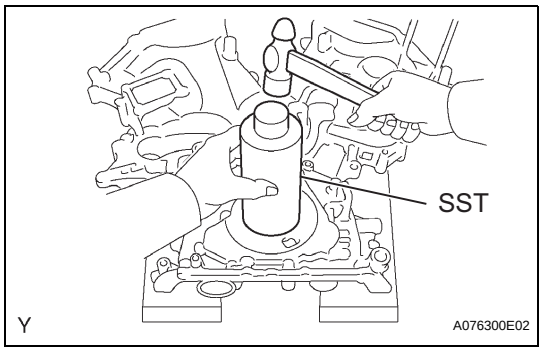

2. INSTALL TIMING GEAR CASE OR TIMING CHAIN CASE OIL SEAL

(a) Using SST and a hammer, tap in a new oil seal until its surface is flush with the timing chain cover edge.
SST 09226-10010

(b) Apply MP grease to the oil seal lip.

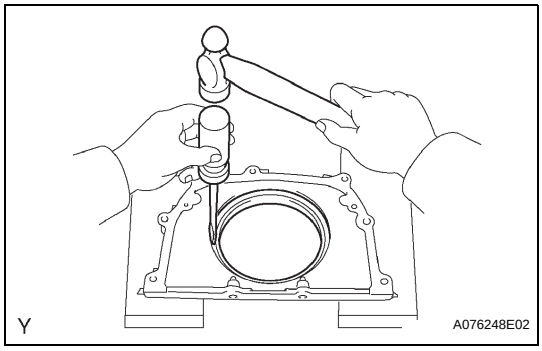

3. REMOVE REAR ENGINE OIL SEAL

(a) Using a screwdriver and hammer, tap the oil seal out.

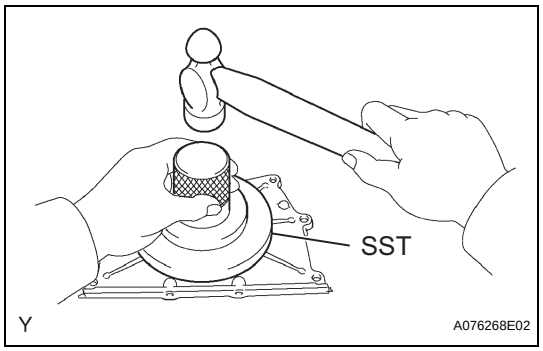

4. INSTALL REAR ENGINE OIL SEAL

(a) Using SST and a hammer, tap in a new oil seal until its surface is flush with the rear oil seal retainer edge.
SST 09223-78010

(b) Apply MP grease to the oil seal lip.

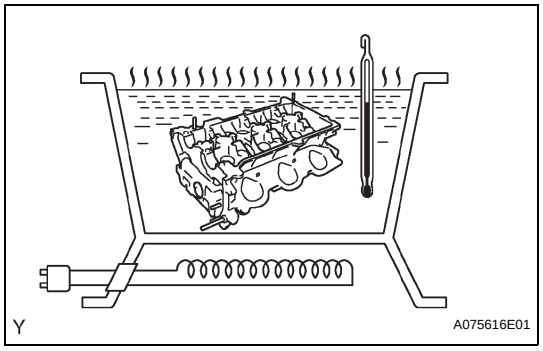

5. REMOVE VALVE GUIDE BUSH

(a) Gradually heat the cylinder head to 80 to 100°C (176 to 212°F).

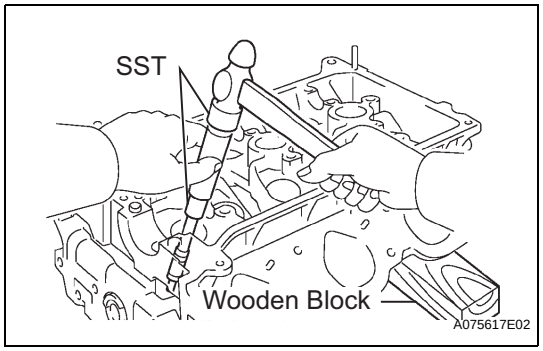

(b) Place the cylinder head on a wooden block.

(c) Using SST, tap out the valve guide bush.
SST 09201-10000, 09201-01055, 09950-70010 (09951-07100)

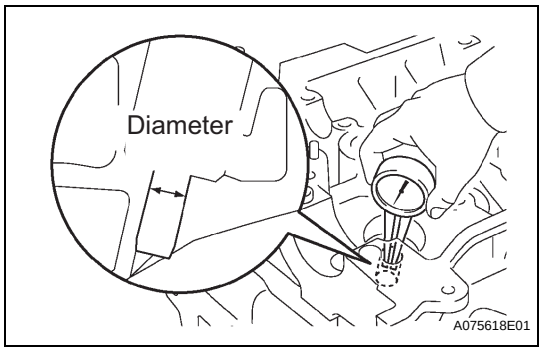

6. INSTALL VALVE GUIDE BUSH

(a) Using a caliper gauge, measure the bush bore diameter of the cylinder head.
Bush bore diameter:
10.295 to 10.315 mm (0.4053 to 0.4061 in.)
If the bush bore diameter of the cylinder head is greater than 10.315 mm (0.4061 in.), machine the bush bore to the dimension of 10.345 to 10.365 mm (0.4073 to 0.4081 in.).
Valve guide bush diameter

STD	**10.333 to 10.344 mm (0.4068 to 0.4072 in.)**
O/S 0.05	**10.383 to 10.394 mm (0.4088 to 0.4092 in.)**

EM

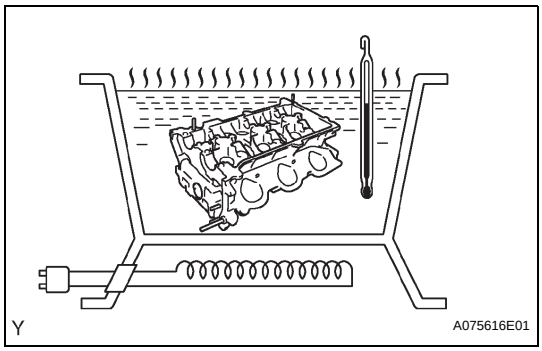

(b) Gradually heat the cylinder head to 80 to 100°C (176 to 212°F).

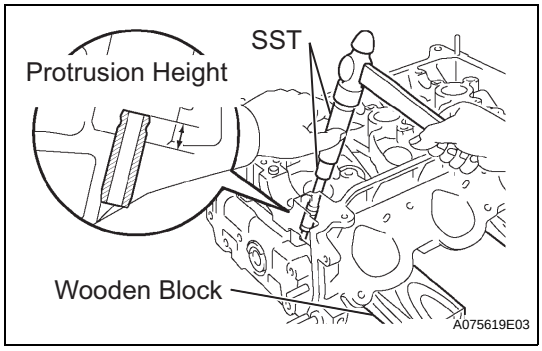

(c) Place the cylinder head on a wooden block.
(d) Using SST, tap in a new valve guide bush to the specified protrusion height.
SST 09201-10000, 09201-01055, 09950-70010 (09951-07100)
Protrusion height:
9.3 to 9.7 mm (0.366 to 0.382 in.)

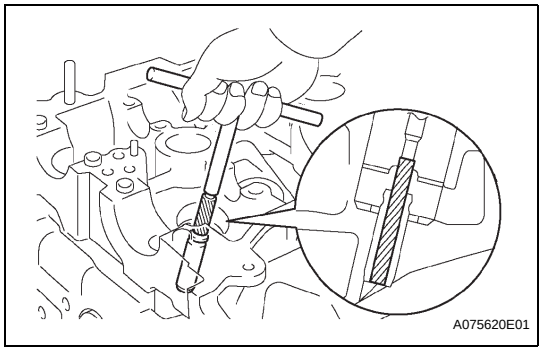

(e) Using a sharp 5.5 mm reamer, ream the valve guide bush to the standard specified clearance between the valve guide bush and valve stem.
Standard oil clearance:

Intake	**0.025 to 0.060 mm (0.0010 to 0.0024 in.)**
Exhaust	**0.030 to 0.065 mm (0.0012 to 0.0026 in.)**

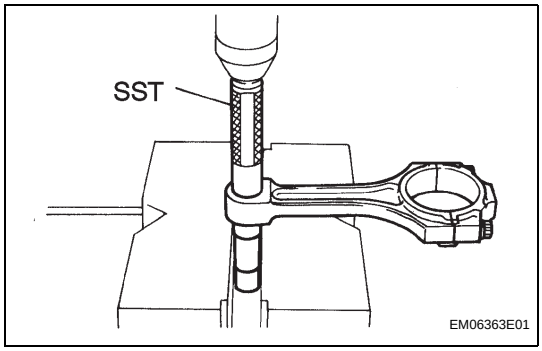

7. REMOVE CONNECTING ROD SMALL END BUSH
(a) Using SST and a press, press out the bushing.
SST 09222-30010

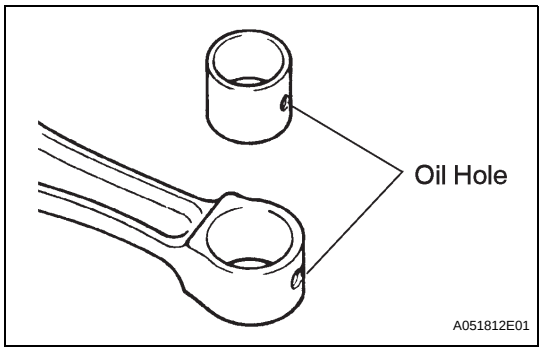

8. INSTALL CONNECTING ROD SMALL END BUSH
(a) Align the oil holes of a new bushing and the connecting rod.

EM

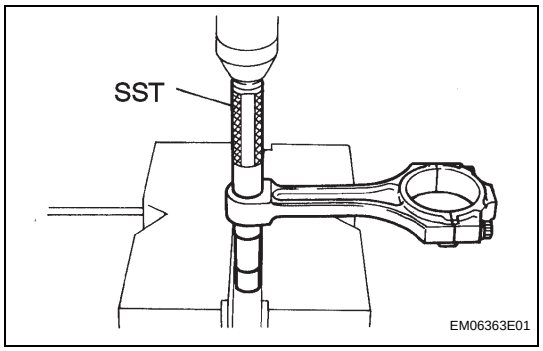

(b) Using SST and a press, press in the bushing.
SST 09222-30010

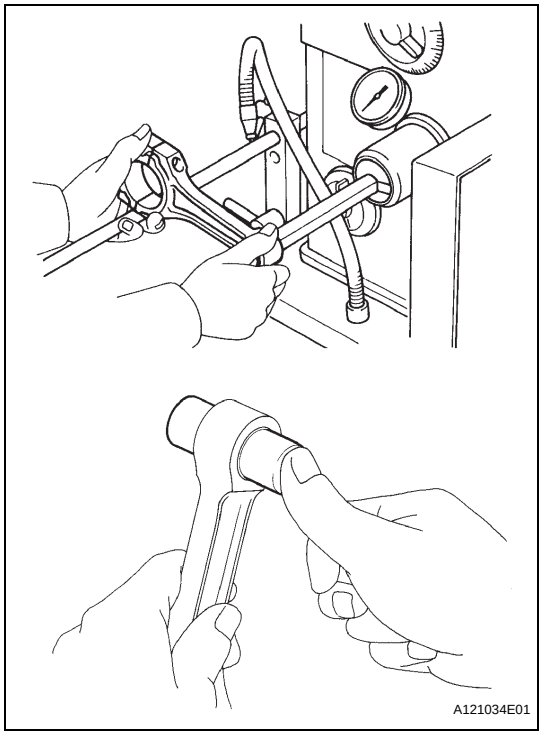

(c) Using a pin hole grinder, hone the bushing to the standard specified clearance between the bushing and piston pin.
Standard oil clearance:
0.005 to 0.011 mm (0.0002 to 0.0004 in.)
HINT:
Check the measurement at room temperature. Coat the piston pin with engine oil, and push it into the connecting rod with a thumb.

REASSEMBLY

1. INSTALL STUD BOLT

(a) Install the stud bolts as shown in the illustration.

Torque: 11 N*m (112 kgf*cm, 8.1 ft.*lbf) for stud bolt A
4.5 N*m (46 kgf*cm, 40 in.*lbf) for stud bolt B

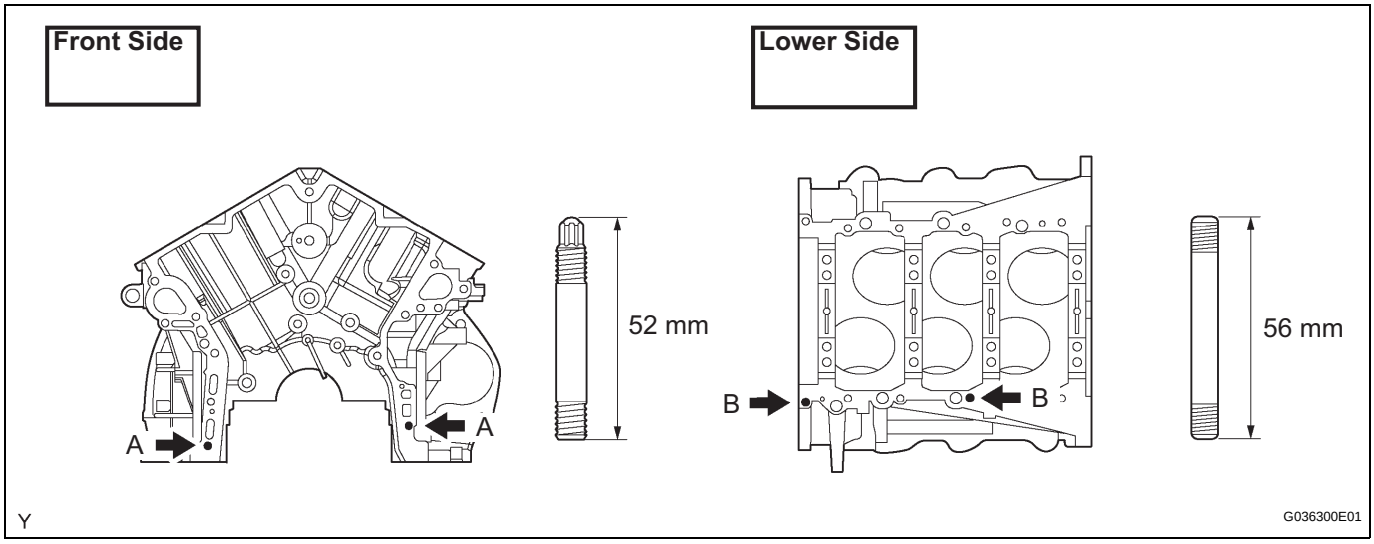

2. INSTALL STRAIGHT PIN

(a) Using a plastic-faced hammer, tap into the new straight pin.

Standard protrusion:
Pin A 22.5 to 23.5 mm (0.886 to 0.925 in.)
Pin B 10.5 to 11.5 mm (0.413 to 0.453 in.)
Pin C 8.5 to 9.5 mm (0.335 to 0.374 in.)
Pin D 5.5 to 6.5 mm (0.217 to 0.256 in.)

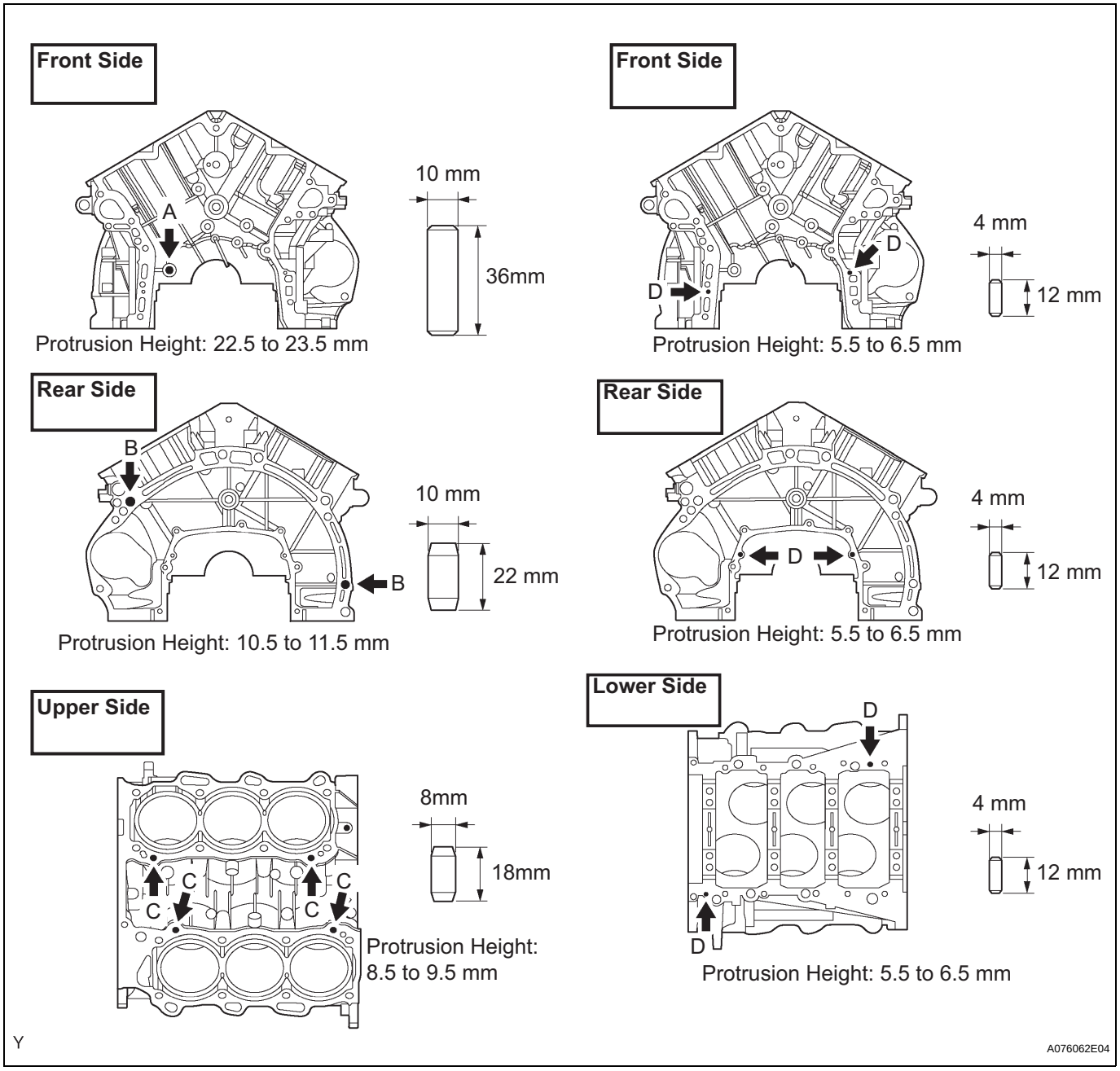

3. INSTALL TIGHT PLUG

(a) Apply adhesive around tight plugs.

Adhesive:

part No. 08833-00070, THREE BOND 1324 or equivalent.

(b) Using SST, install the tight plugs as shown in the illustration.

SST 09550-60010 (09951-00350), 09950-70010 (09951-07150)

Standard depth:

0.2 to 1.2 mm (0.008 to 0.047 in.)

EM

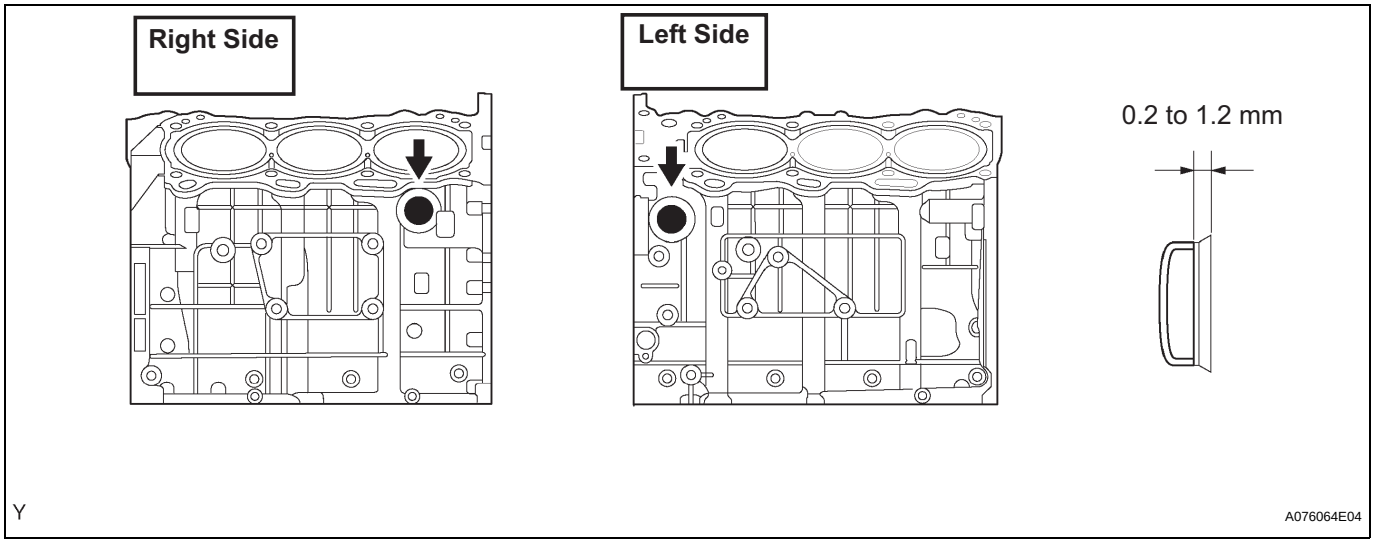

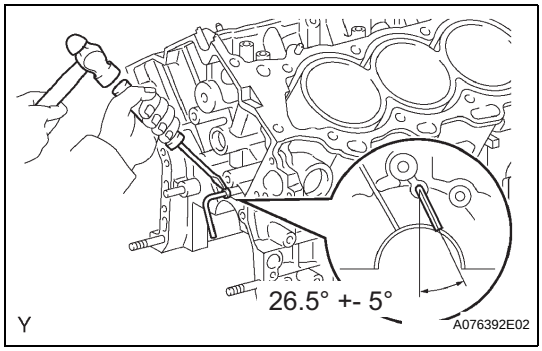

4. INSTALL OIL JET

(a) Using a screw driver and hammer, tap in a oil jet.

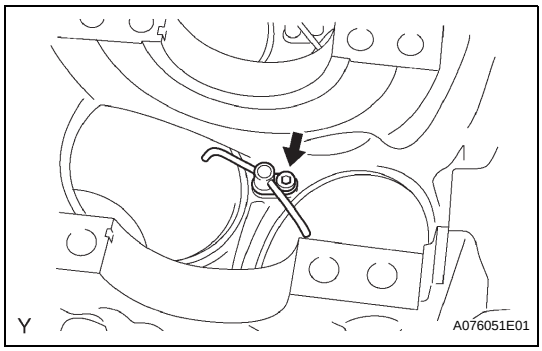

5. INSTALL NO.1 SUB-ASSEMBLY OIL NOZZLE

(a) Using a 5 mm socket hexagon wrench, install the 3 oil nozzles.
Torque: 9.0 N*m (92 kgf*cm, 80 in.*lbf)

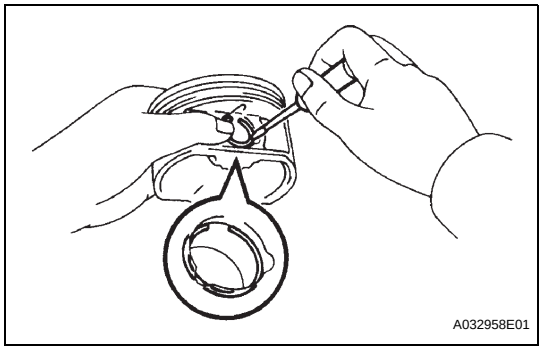

6. INSTALL HOLE SNAP RING

(a) Using a small screwdriver, install a new snap ring onto one side of the piston pin hole.
HINT:
Check that an end gap of the snap ring is not overlapped with the pin hole cutout portion of the piston.

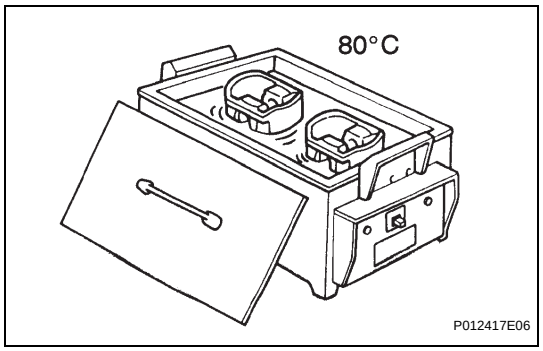

7. INSTALL WITH PIN PISTON SUB-ASSEMBLY

(a) Gradually heat the piston to about 80°C (176°F).

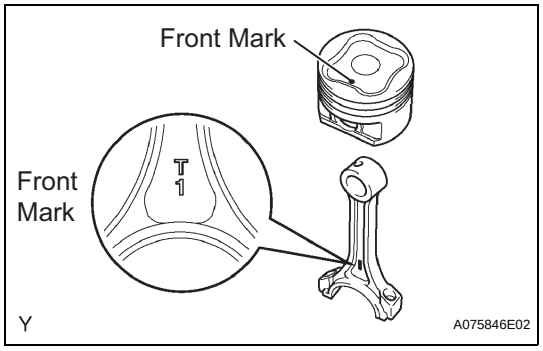

(b) Coat the piston pin with engine oil.

(c) Align the front marks of the piston and connecting rod, and push in the piston pin with thumb.

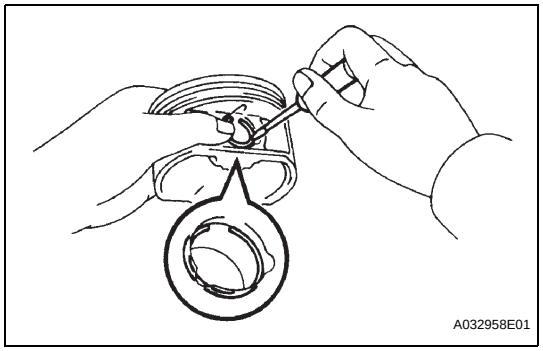

8. INSTALL HOLE SNAP RING

(a) Using a small screwdriver, install a new snap ring onto the other side of the piston pin hole.
HINT:
Make sure that the gap in the snap ring does not overlap with the pin hole cutout portion of the piston.

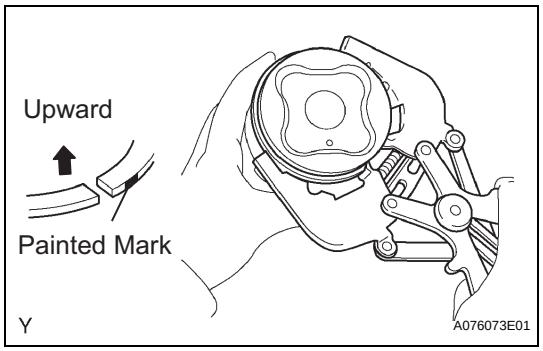

9. INSTALL PISTON RING SET

(a) Install the oil ring expander and 2 side rails by hand.

(b) Using a piston ring expander, install the 2 compression rings.
NOTICE:
Mark Install the compression ring No. 2 with the painted mark facing upward.

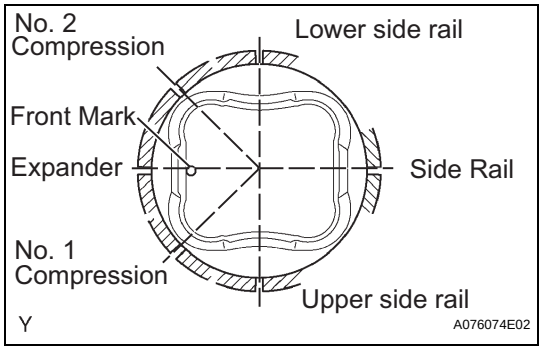

(c) Position the piston rings so that the ring ends are as shown.

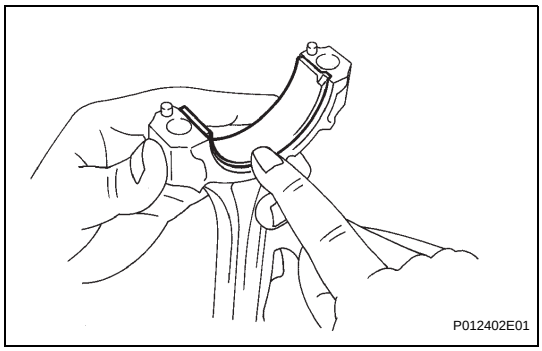

10. INSTALL CONNECTING ROD BEARING

(a) Align the bearing claw with the groove of the connecting rod or connecting cap.

NOTICE:

Clean the back side of the bearing and the bearing surface of the connecting rod and keep them free of oils and fats.

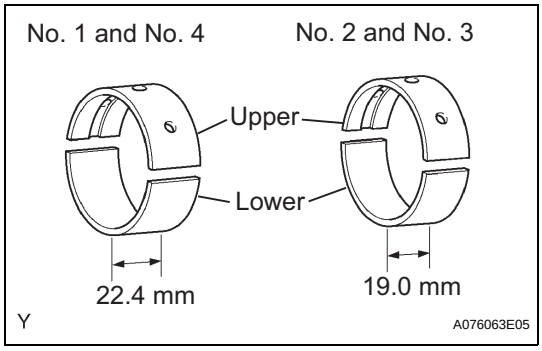

11. INSTALL CRANKSHAFT BEARING

HINT:

There are 2 types of main bearings with different widths (19.0 mm (0.748 in.) and 22.4 mm (0.882 in.)) for use in the inspection. Install the 22.4mm (0.882 in.) bearings in the No. 1 and No. 4 cylinder block journal positions with the main bearing cap. Install the 19.0 mm (0.748 in.) bearings in the No. 2 and No. 3 positions.

(a) Clean each main journal and bearing.

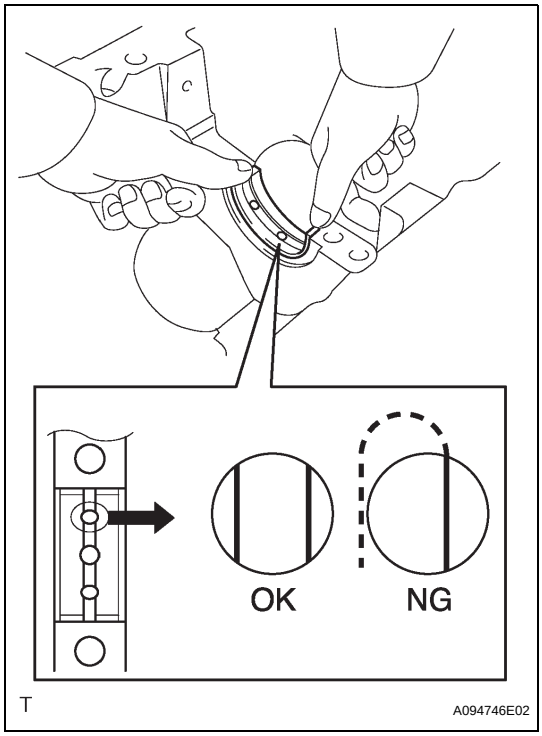

(b) Install the 4 upper bearings.

(1) Install the upper bearings near the center of the cylinder block.

NOTICE:

- **The width of the No. 1 and No. 4 journal bearings is different from that of the No. 2 and No. 3 journal bearings. Therefore, confirm whether it is the correct journal bearing prior to installation.**
- **Do not apply engine oil to the bearing installation surfaces of the cylinder block and the back side of the bearings.**
- **Check that the oil groove on the cylinder block can be seen through the oil supply holes of the upper bearing.**

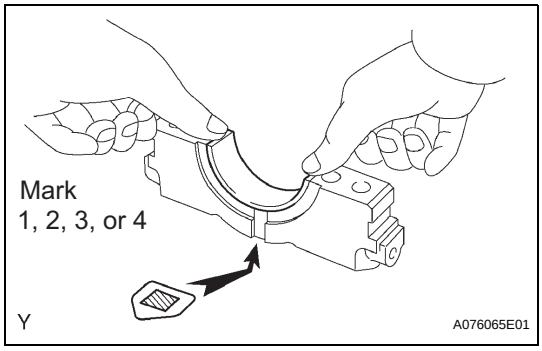

(c) Install the 4 lower bearings.

(1) Install the lower bearings near the center of the cylinder block.

NOTICE:

Do not apply engine oil to the bearing and its contact surface.

HINT:

A number marked on each main bearing cap indicates the installation position.

EM

12. INSTALL CRANKSHAFT

(a) Apply engine oil to the upper bearing and install the crankshaft onto the cylinder block.

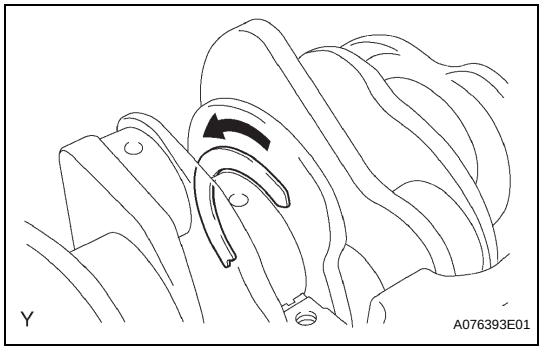

(b) Install the 2 upper thrust washers onto the No. 2 journal position of the cylinder block.
   (1) Push the crankshaft toward the front (rear) side.
   (2) Install the 2 upper thrust washers with the oil grooves facing outward.

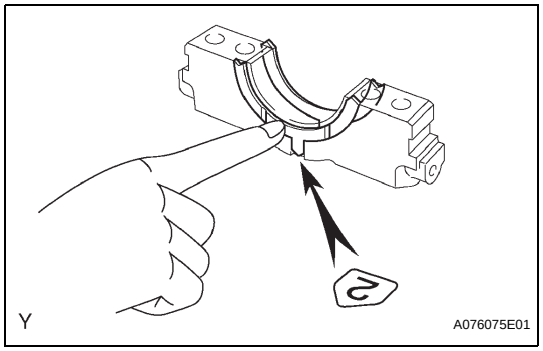

(c) Install the 2 lower thrust washers onto the No. 2 bearing cap with the grooves facing outward.

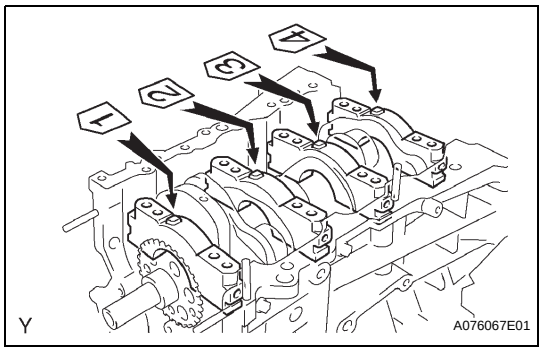

(d) Examine the front marks and numbers, check the sequence number is as shown in the illustration and install the bearing caps on the cylinder block.
(e) Apply a light coat of engine oil to the threads of bearing cap bolts.
(f) Temporarily install the 8 main bearing cap bolts in the inside positions.

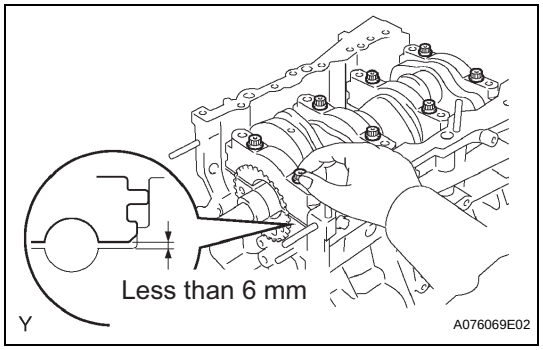

(g) Install the main bearing caps. Tighten the 2 bolts for each bearing cap until the clearance between the bearing cap and the cylinder block is under 6 mm (0.23 in.).

EM

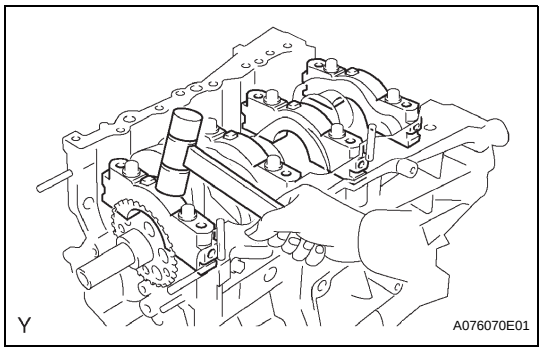

(h) Using a plastic-faced hammer, lightly tap the bearing cap to ensure a proper fit.
(i) Apply a light coat of engine oil to the threads of main bearing cap bolts.

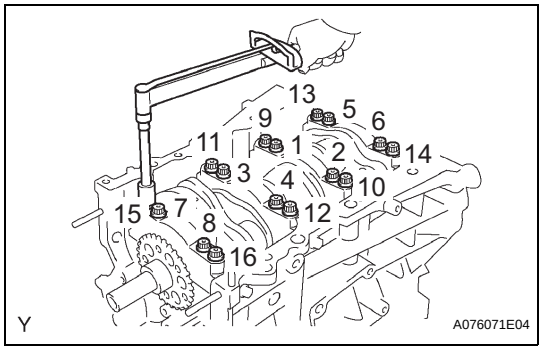

(j) Install the 16 main bearing cap bolts. Using several steps, tighten the bolts uniformly in the sequence shown in the illustration.
Torque: 61 N*m (622 kgf*cm, 45 ft.*lbf)

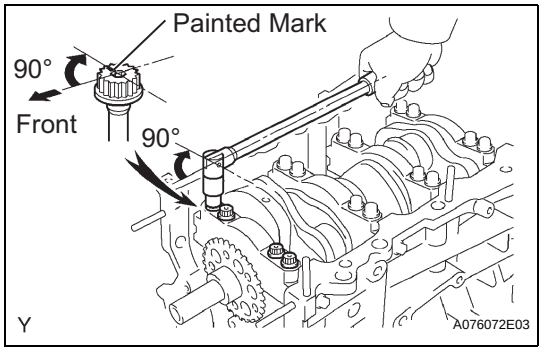

(k) Mark the front side of the bearing cap bolts with paint.
(l) Retighten the bearing cap bolts 90° in the sequence as shown.
(m) Check that the painted mark is now at a 90° angle from the front.
(n) Check that the crankshaft turns smoothly.

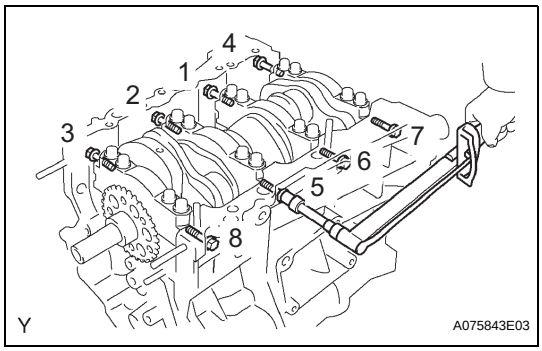

(o) Using several steps, tighten the 8 main bearing cap bolts uniformly in the sequence shown in the illustration.
Torque: 25 N*m (255 kgf*cm, 18 ft.*lbf)

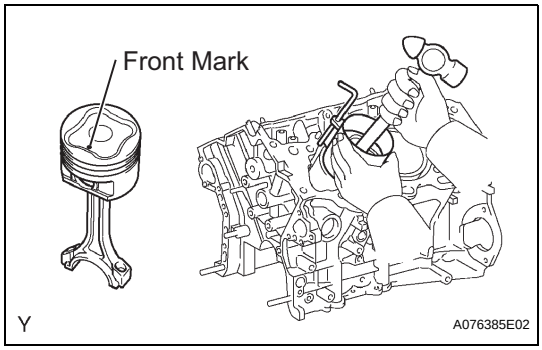

13. INSTALL PISTON SUB-ASSEMBLY WITH CONNECTIONG ROD

(a) Apply engine oil to the cylinder walls, pistons, and surfaces of connecting rod bearings.
(b) Check the position of the piston ring ends.

EM

(c) Using a piston ring compressor, push the correct number piston and connecting rod into each cylinder with the front mark of the piston facing forward.

NOTICE:

- **Clean the back side of the bearing and the bearing surface of the connecting rod cap and keep them free of oils and fats.**
- **Match the numbered connecting rod cap with the connecting rod.**

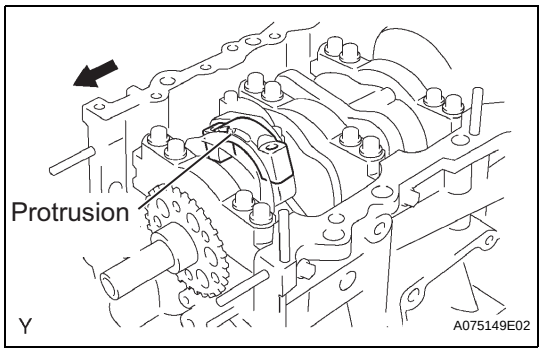

(d) Check that the protrusion of the connecting rod cap is facing in the correct direction.

(e) Apply a light coat of engine oil to the threads of the connecting rod cap bolts.

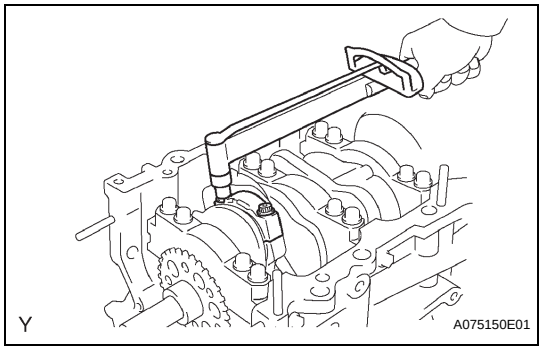

(f) Using SST, tighten the bolts alternately to the specified torque.

Torque: 25 N*m (250 kgf*cm, 18 ft.*lbf)

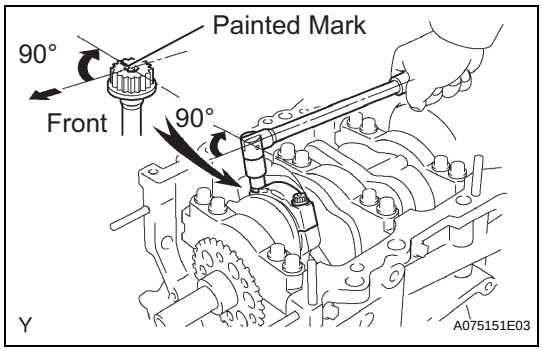

(g) Mark the front side of the each connecting cap bolt with paint.

(h) Retighten the cap bolts 90° as shown.

(i) Check that the crankshaft turns smoothly.

14. INSTALL RING PIN

(a) Using a plastic-faced hammer, tap in the new ring pins to the specified protrusion height.

Specified protrusion height:
2.7 to 3.3 mm (0.106 to 0.130 in.)

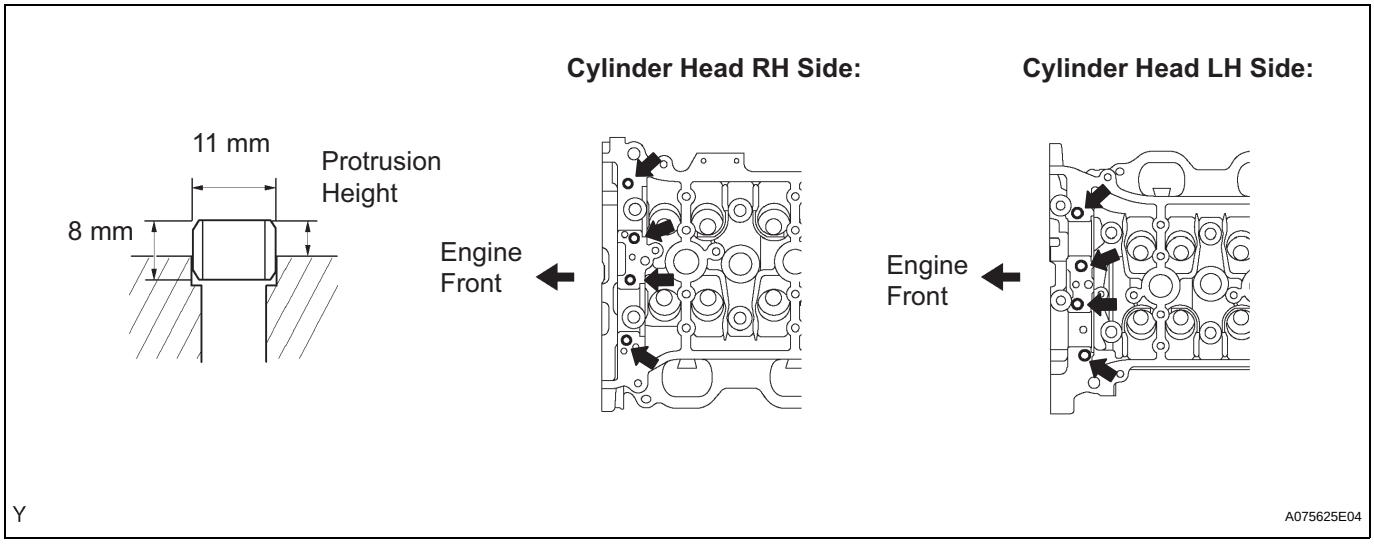

EM

15. INSTALL STRAIGHT PIN

(a) Using a plastic-faced hammer, tap in the new straight pins to the specified protrusion height.
Specified protrusion height

A	**17.5 to 19.5 mm (0.689 to 0.768 in.)**
B	**7.5 to 8.5 mm (0.295 to 0.335 in.)**
C	**7.0 to 9.0 mm (0.276 to 0.354 in.)**

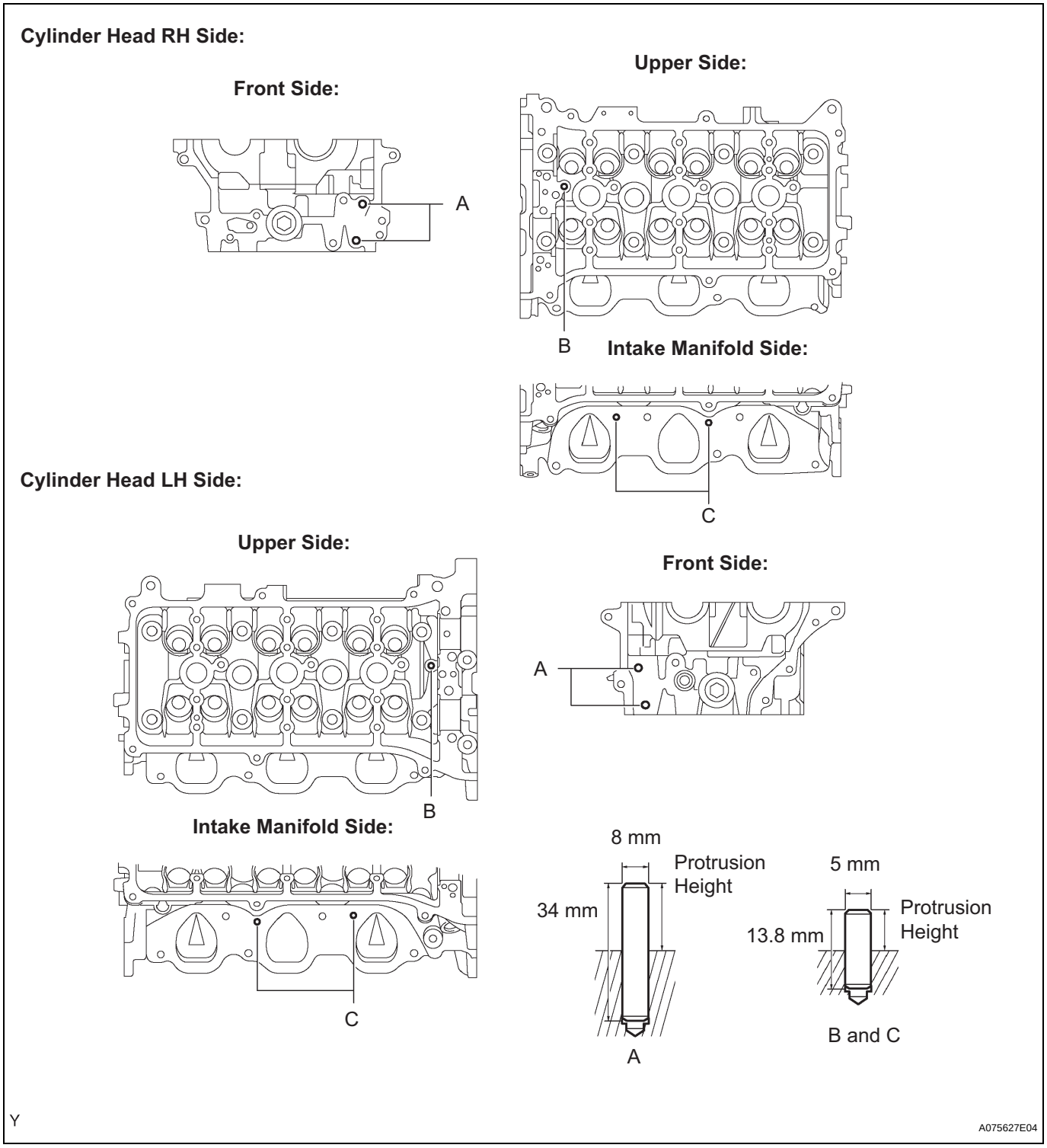

16. INSTALL STUD BOLT

(a) Using the torx socket wrenchs E5 and E7, install the stud bolts.

Torque: 4.0 N*m (41 kgf*cm, 35 in.*lbf) for stud bolt A
9.0 N*m (92 kgf*cm, 80 in.*lbf) for stud bolt B
4.0 N*m (41 kgf*cm, 35 in.*lbf) for stud bolt C

EM

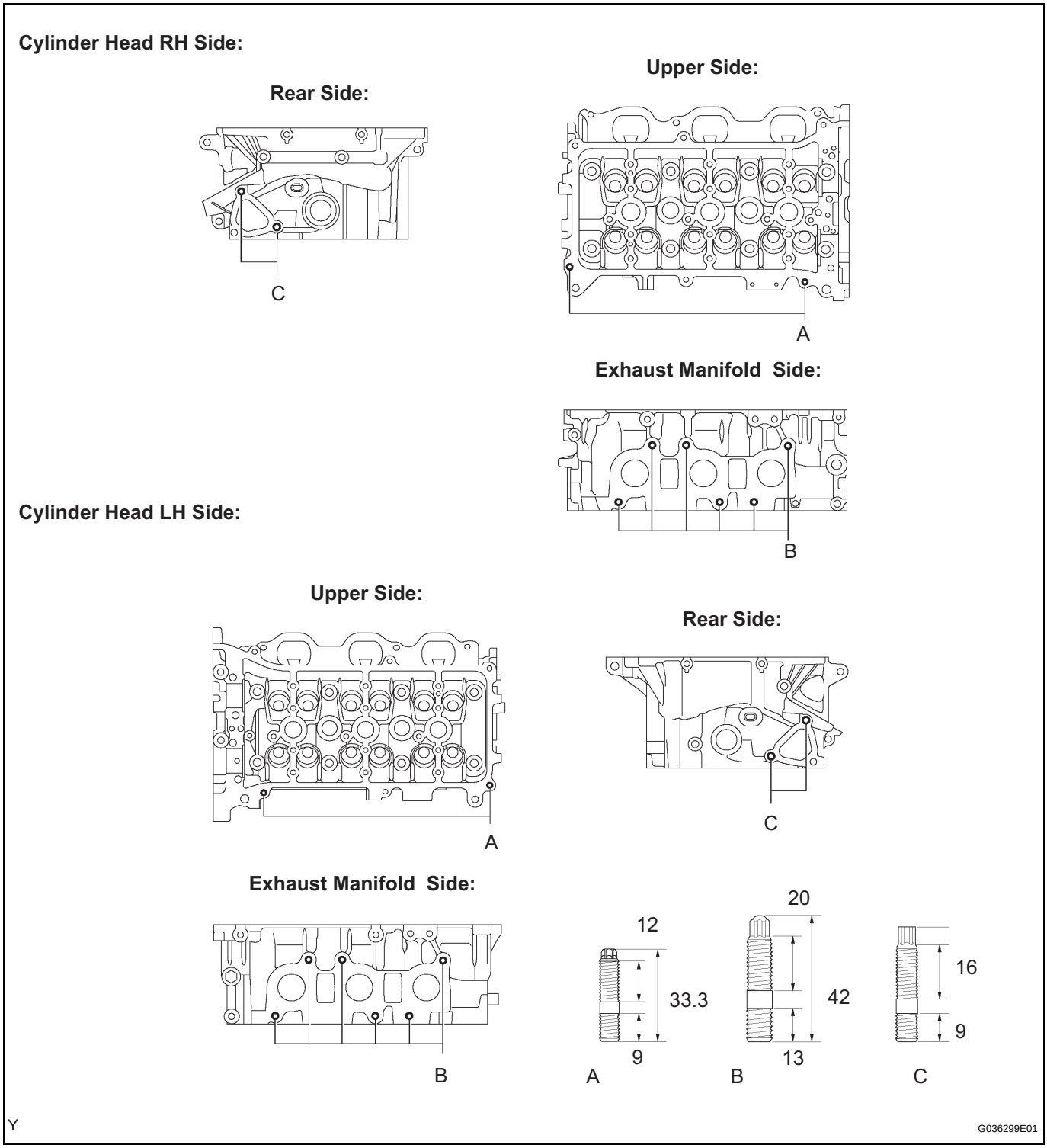

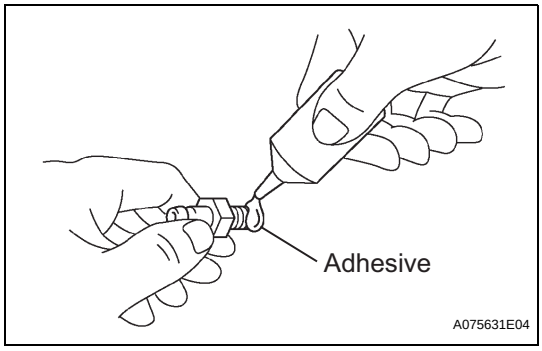

17. INSTALL UNION

(a) Apply adhesive to 2 or 3 threads of the bolt end.
Adhesive:
Part No. 08833-00070, THREE BOND 1324 or equivalent

(b) Using a deep socket wrench 12, install the unions.
Torque: 15 N*m (150 kgf*cm, 11 ft.*lbf)

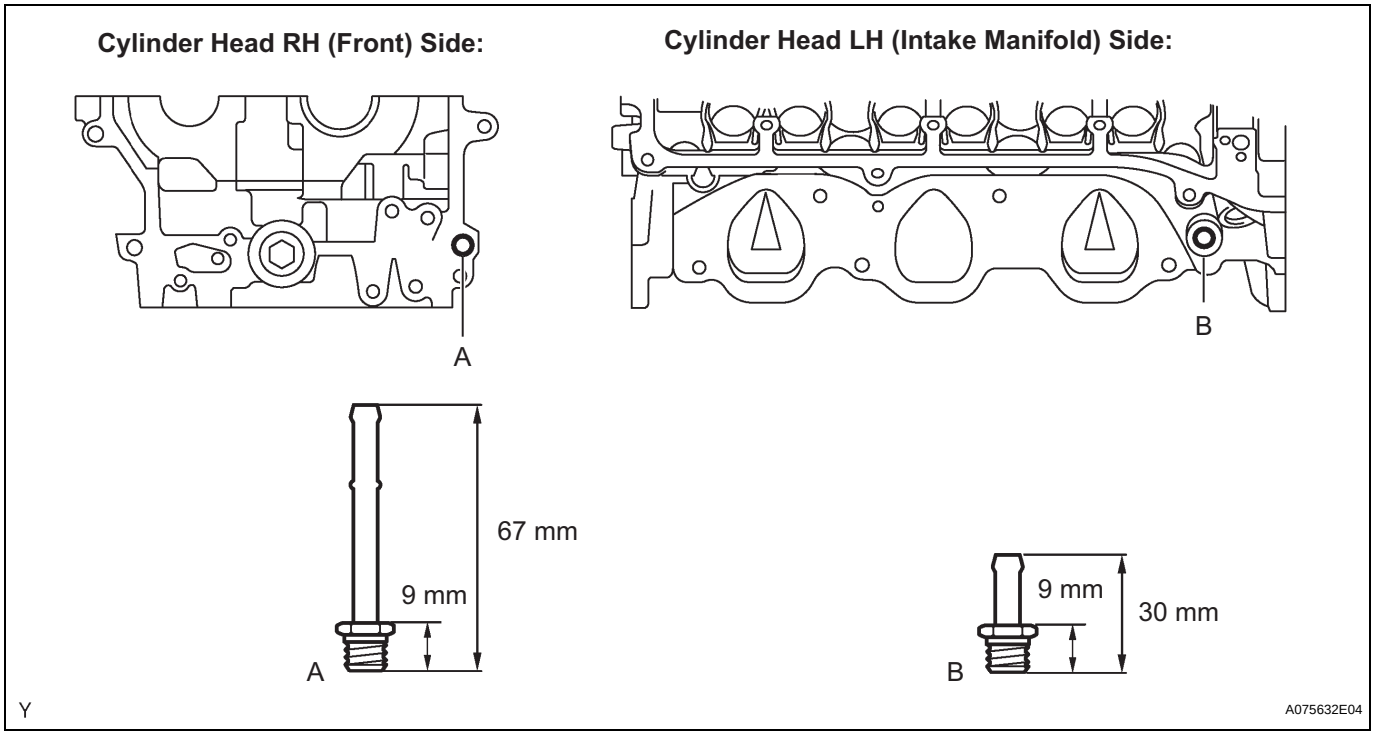

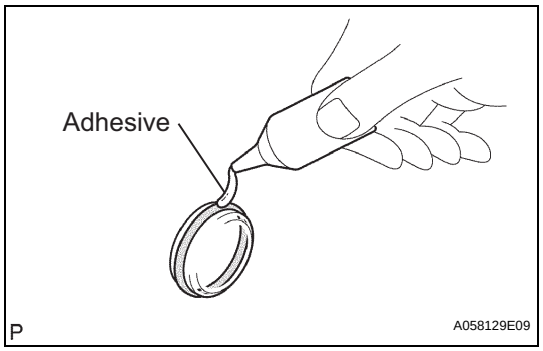

18. INSTALL TIGHT PLUG

(a) Apply adhesive around the tight plug.

(b) Using SST, tap in the tight plugs to the specified depth.

SST 09950-60010 (09951-00250), 09950-70010 (09951-07150)

Specified depth:
1.5 mm (0.059 in.)

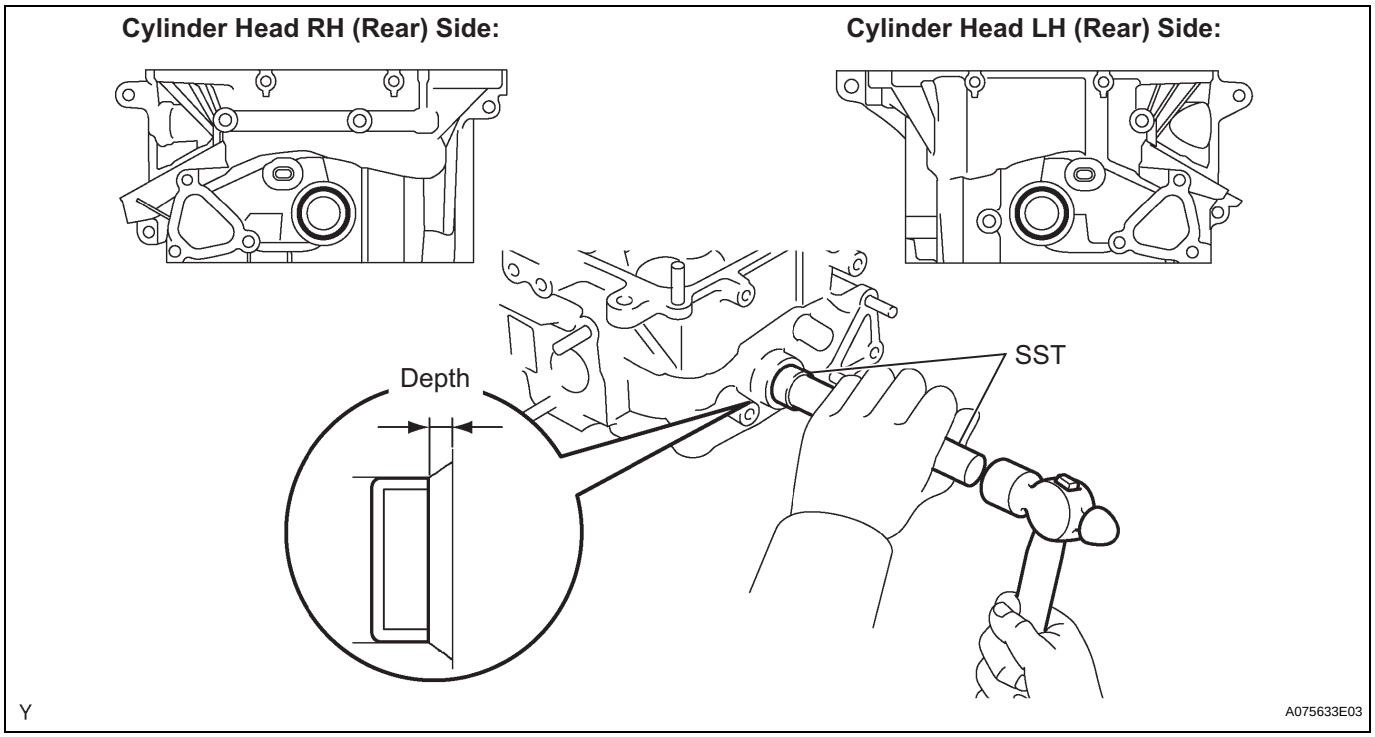

19. INSTALL WITH HEAD STRAIGHT SCREW PLUG

(a) Using a straight hexagon wrench 14, install a new gasket and straight screw plug.
Torque: 80 N*m (816 kgf*cm, 59 ft.*lbf)

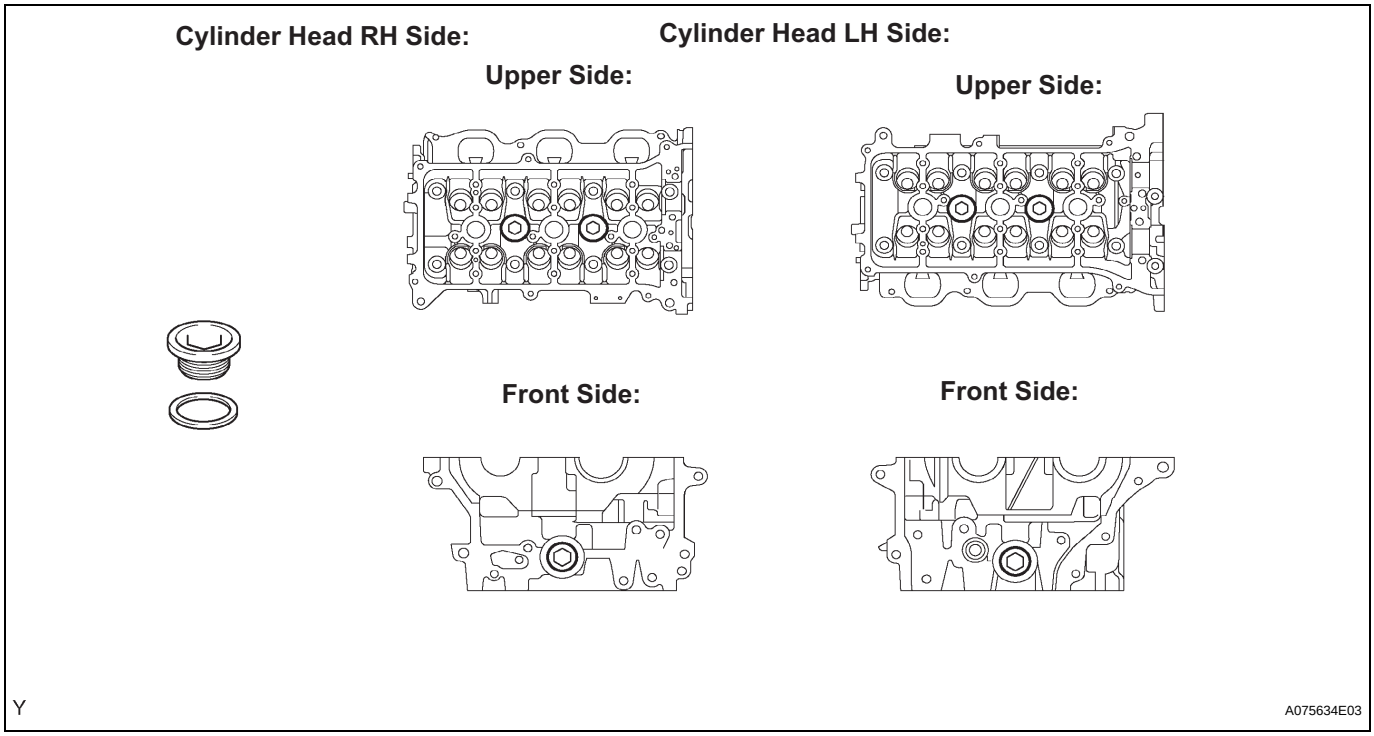

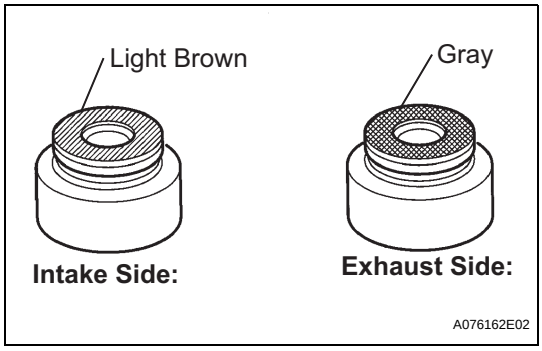

20. INSTALL VALVE STEM OIL O SEAL OR RING

HINT:
The intake valve stem oil seal is light brown and the exhaust valve stem oil seal is gray.

(a) Apply a light coat of engine oil to the valve guide bush.

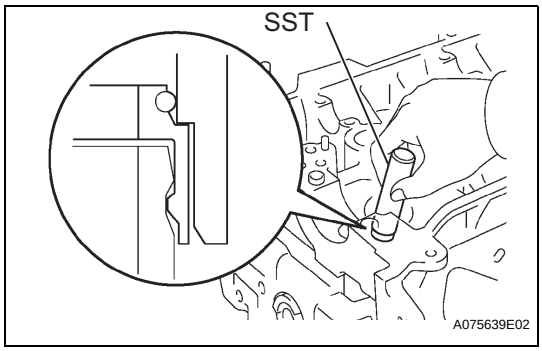

(b) Using SST, push in a new valve stem oil seal.
SST 09201-41020

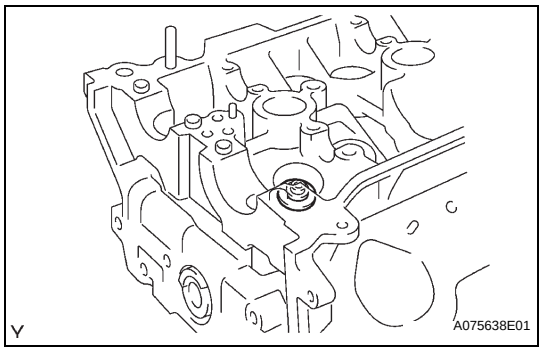

21. INSTALL VALVE SPRING SEAT

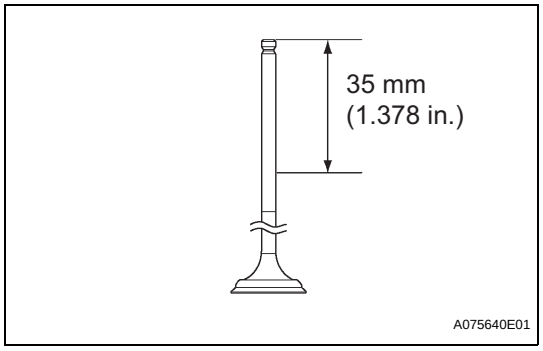

22. INSTALL VALVE

(a) Apply the engine oil to the valve as shown in the illustration.

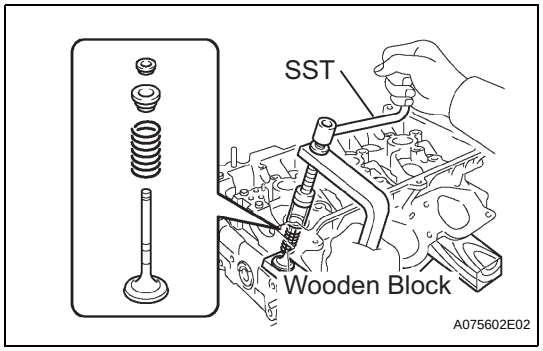

(b) Place the cylinder head on a wooden block.
(c) Install the valve, inner compression spring and valve spring retainer.
(d) Using SST, compress the inner compression spring and place the 2 valve spring retainer rocks around the valve stem.
SST 09202-70020 (09202-00010)

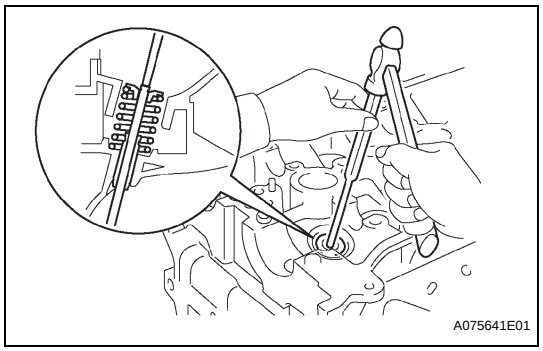

(e) Using a pin punch 5, lightly tap the valve stem tip to ensure a proper fit.
NOTICE:
Be careful not to damage the valve stem tip.

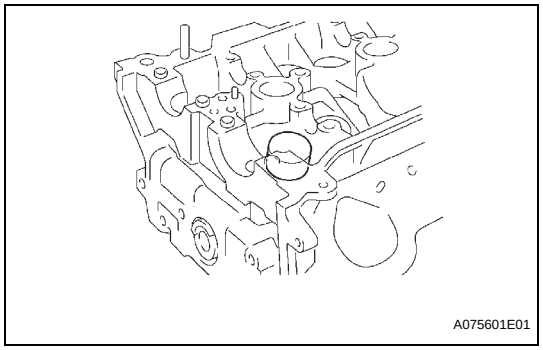

23. INSTALL VALVE LIFTER

(a) Apply the engine oil to the valve stem end and valve lifter, and install the valve lifter onto the valve stem.
(b) Check that the valve lifter rotates smoothly by hand.

24. INSTALL REAR ENGINE OIL SEAL RETAINER

(a) Remove any old packing material and be careful not to drop any oil on the contact surfaces of the oil seal retainer and cylinder block.

EM

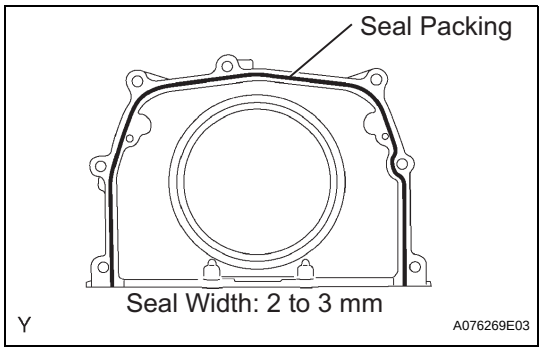

(b) Apply a continuous bead of seal packing (diameter 2 to 3 mm (0.08 to 0.12 in.)) to the oil seal retainer as shown in the illustration.
Seal packing:
Part No. 08826-00080 or equivalent
NOTICE:
Parts must be assembled within 3 minutes of application. Otherwise, the seal packing must be removed and reapplied.

(c) Install the oil seal retainer with the 5 bolts and 2 nuts.
Torque: 9.0 N*m (92 kgf*cm, 80 in.*lbf)
10 N*m (102 kgf*cm, 7.4 ft.*lbf)

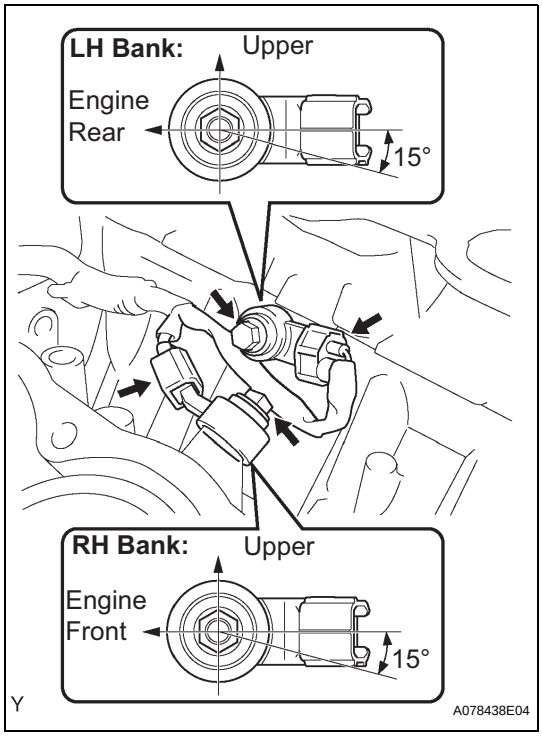

25. INSTALL KNOCK CONTROL SENSOR

(a) Install the 2 knock sensors with the 2 bolts as shown in the illustration.
Torque: 20 N*m (204 kgf*cm, 15 ft.*lbf)

(b) Connect the knock sensor connectors.

(c) Connect the knock sensor wire.

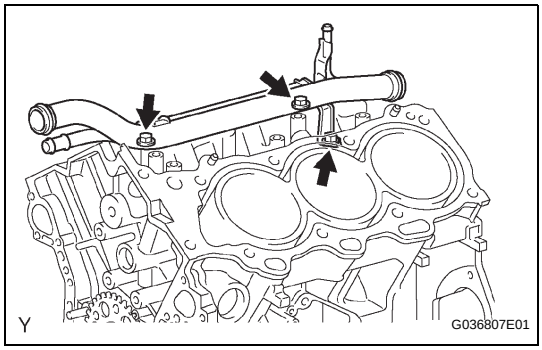

26. INSTALL NO.1 WATER OUTLET PIPE

(a) Install the water outlet pipe with the 3 bolts.
Torque: 10 N*m (102 kgf*cm, 7.4 ft.*lbf)

27. INSTALL CYLINDER HEAD GASKET

(a) Remove any old packing material and be careful not to drop any oil on the contact surfaces of the cylinder head and cylinder block.

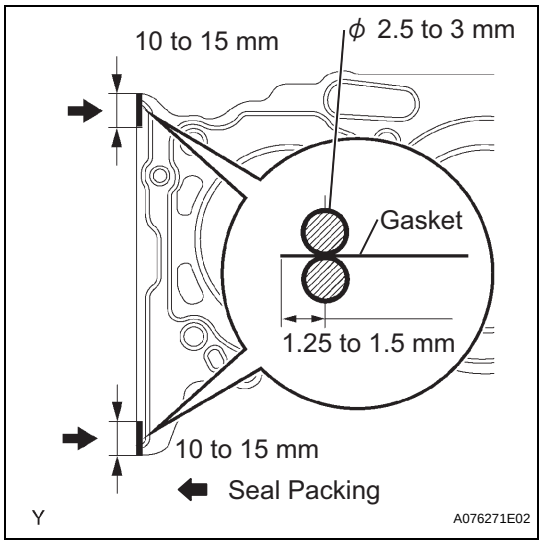

(b) Apply a continuous bead of seal packing (diameter 2.5 to 3 mm (0.098 to 0.118 in.)) to a new cylinder head gasket as shown in the illustration.
Seal packing:
Part No. 08826-00080 or equivalent
NOTICE:
Install the cylinder head within 3 minutes of applying the seal packing. After installation, cylinder head bolts must be tightened within 15 minutes. Otherwise, the seal packing must be removed and reapplied.

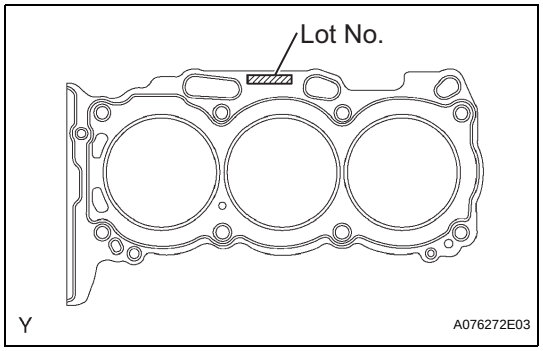

(c) Place the cylinder head gasket on the cylinder block surface with the Lot No. stamp upward.
NOTICE:
- **Be careful of the installation direction.**
- **Place the cylinder head carefully in order not to damage the gasket with the bottom part of the head.**

28. INSTALL CYLINDER HEAD SUB-ASSEMBLY

(a) Place the RH cylinder head on the cylinder head gasket.

(b) Install the 8 cylinder head bolts.
HINT:
- The cylinder head bolts are tightened in 2 successive steps (steps (3) and (5)).
- If any cylinder head bolts are broken or deformed, replace them.

(1) Apply a light coat of engine oil to the threads and under the heads of the cylinder head bolts.

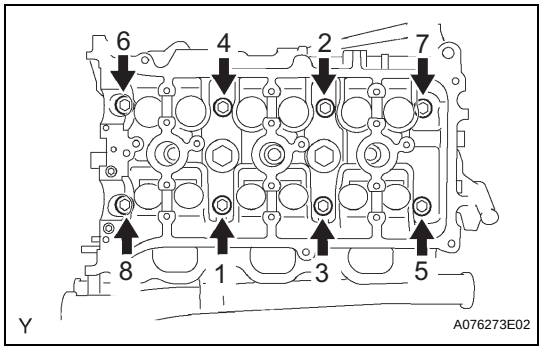

(2) Using several steps, uniformly install and tighten the 10 cylinder head bolts and plate washers with a bi-hexagon wrench 10 mm in the sequence shown in the illustration.
Torque: 36 N*m (367 kgf*cm, 27 ft.*lbf)
If any cylinder head bolts do not meet the torque specification, replace them.
NOTICE:
Do not drop the washers into the cylinder head.

EM

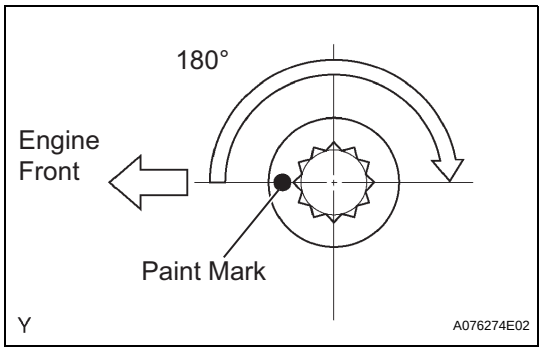

(3) Mark the front of the cylinder head bolt with paint.
(4) Retighten the cylinder head bolts by 180° as shown.
(5) Check that the painted marks are now at 180° from the engine front.

29. INSTALL NO.2 CYLINDER HEAD GASKET

(a) Remove any old packing material and be careful not to drop any oil on the contact surfaces of the cylinder head and cylinder block.

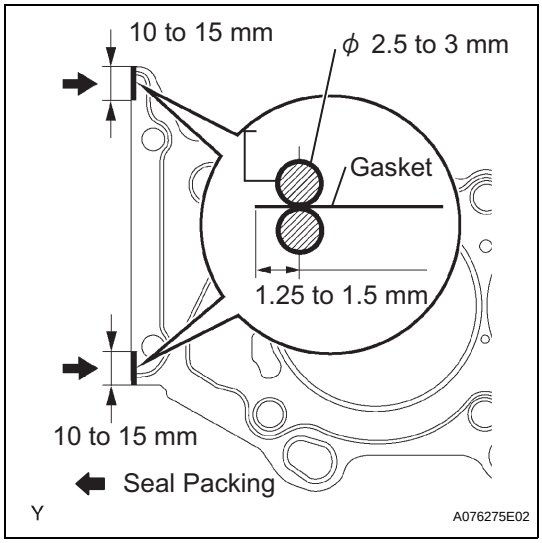

(b) Apply a continuous bead of seal packing (Diameter 2.5 to 3 mm (0.098 to 0.118 in.)) to a new cylinder head gasket as shown in the illustration.
Seal packing:
Part No. 08826-00080 or equivalent
NOTICE:
Install the cylinder head within 3 minutes of applying the seal packing. After installation, cylinder head bolts must be tightened within 15 minutes. Otherwise, the seal packing must be removed and reapplied.

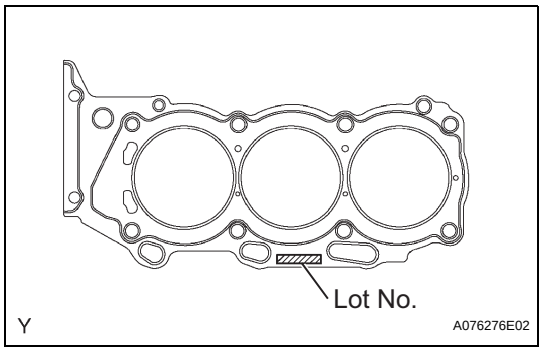

(c) Place the cylinder head gasket on the cylinder block surface with the Lot No. stamp upward.
NOTICE:
- **Be careful of the installation direction.**
- **Place the cylinder head carefully in order not to damage the gasket with the bottom part of the head.**

30. INSTALL CYLINDER HEAD LH

(a) Place the LH cylinder head on the cylinder head gasket.
(b) Install the 8 cylinder head bolts.
HINT:
- The cylinder head bolts are tightened in 2 successive steps (steps (3) and (5)).
- If any cylinder head bolts are broken or deformed, replace them.

(1) Apply a light coat of engine oil to the threads and under the heads of the cylinder head bolts.

EM

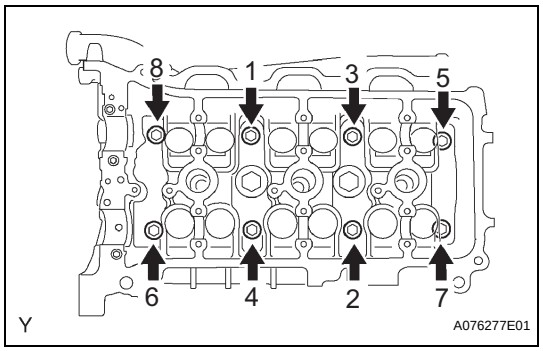

(2) Using several steps, uniformly install and tighten the 8 cylinder head bolts and plate washers with a bi-hexagon wrench 10 mm in the sequence shown in the illustration.
Torque: 36 N*m (367 kgf*cm, 27 ft.*lbf)
If any cylinder head bolts do not meet the torque specification, replace them.
NOTICE:
Do not drop the washers into the cylinder head.

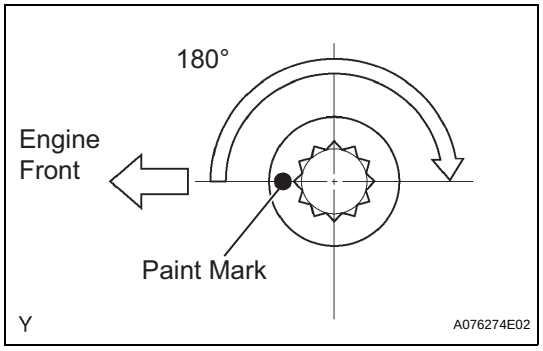

(3) Mark the front of the cylinder head bolt with paint.
(4) Retighten the cylinder head bolts by 180° as shown.
(5) Check that the painted marks are now at 180° from the engine front.

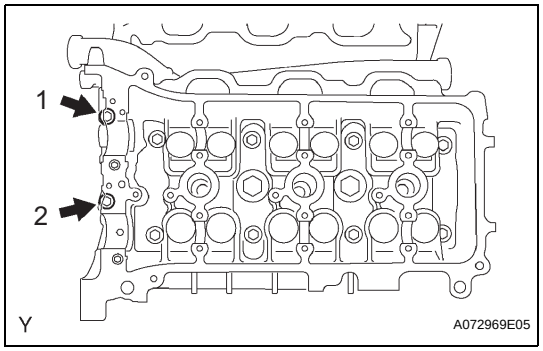

(c) Install the 2 cylinder head bolts.
(1) Apply a light coat of engine oil to the threads of the cylinder head bolts.
(2) Using several steps, uniformly install and tighten the 10 cylinder head bolts and plate washers with a bi-hexagon wrench 10 mm in the sequence shown in the illustration.
Torque: 30 N*m (306 kgf*cm, 22 ft.*lbf)

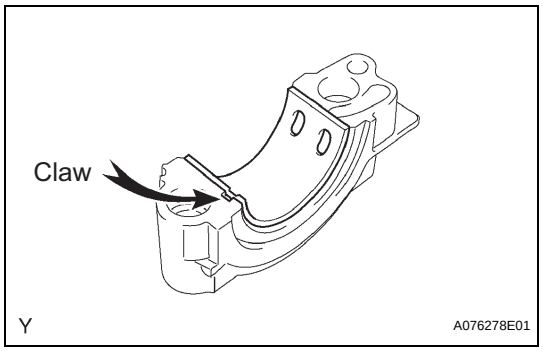

31. INSTALL NO.1 CAMSHAFT BEARING

(a) Align the bearing claw with the claw groove of the bearing cap, and push in the camshaft bearing.
NOTICE:
- **Install the bearing while aligning it with the oil hole in the bearing cap.**
- **Clean the back side of the bearing and the surface of the bearing cap and keep them free of oils and fats.**

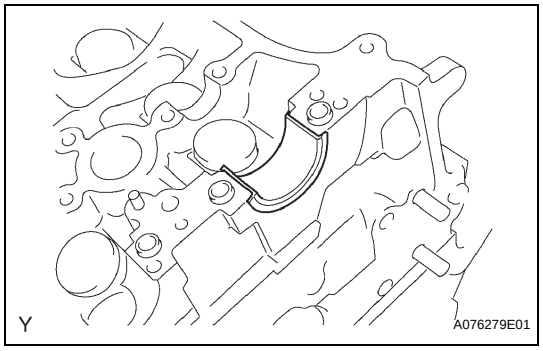

32. INSTALL NO.2 CAMSHAFT BEARING

(a) Install camshaft bearing No. 2 onto the cylinder head.
NOTICE:
Clean the back side of the bearing and the bearing surface of the cylinder head and keep them free of oils and fats.

EM

33. INSTALL CAMSHAFTS

NOTICE:

Keep the camshaft level while it is being removed. The camshaft thrust clearance is very small and failing to keep it level could crack or damage the cylinder head journal surface, which receives the thrust. This could subsequently lead the camshaft to seize or break. Perform the following steps to avoid such problems.

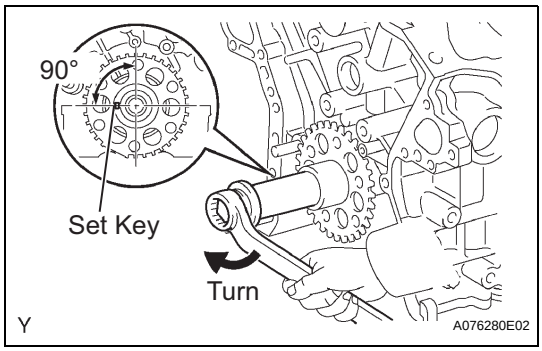

(a) Set the crankshaft position.

(1) Using the crankshaft pulley set bolt, turn the crankshaft, and set the crankshaft set key in the left horizontal position as indicated.

NOTICE:

Setting the crankshaft at the wrong angle could cause the piston head and valve head to come into contact with each other when the camshaft is installed. This could cause damage, so always set the camshaft at the correct angle.

(b) Apply new engine oil to the thrust portion and journal of the camshafts.

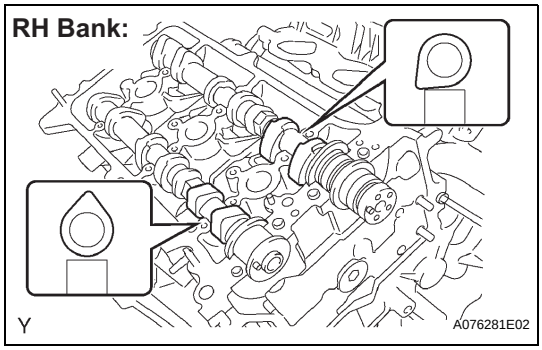

(c) Install the camshaft of the RH bank.

(1) Place the 2 camshafts on the RH cylinder head with the No. 1 cam lobes facing as shown the illustration.

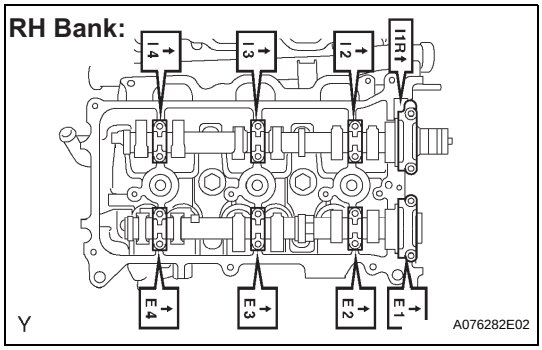

(2) Install the 8 bearing caps in their correct locations.

(3) Apply a light coat of engine oil to the threads of the bearing cap bolts.

EM

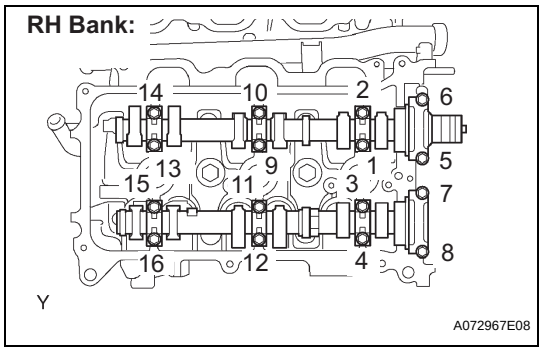

(4) Using several steps, uniformly tighten the 16 bearing cap bolts in the sequence shown in the illustration.
Torque: 9.0 N*m (92 kgf*cm, 80 in.*lbf) for 10 mm (0.39 in.) head
24 N*m (245 kgf*cm, 18 ft.*lbf) for 12 mm (0.47 in.) head

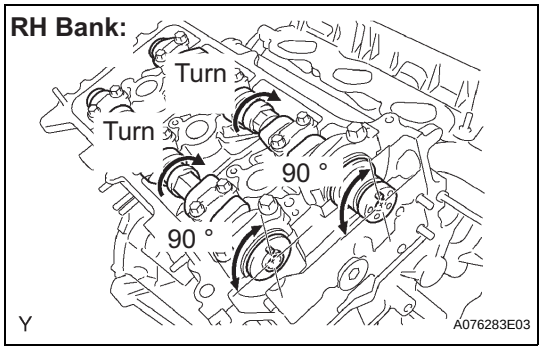

(5) Using a wrench, turn the camshafts clockwise until each camshaft knock pin comes to a position 90° to the cylinder head.

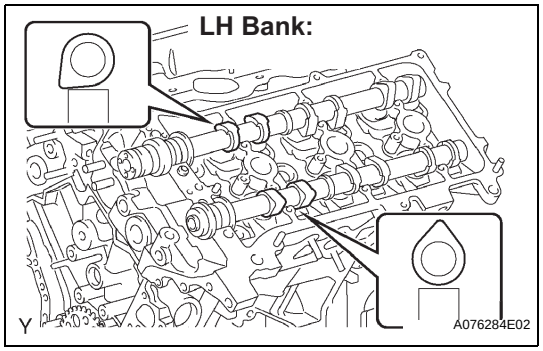

(d) Install the camshafts of the LH bank.
(1) Place the 2 camshafts on the LH cylinder head with the No.1 cam lobes facing as shown the illustration.

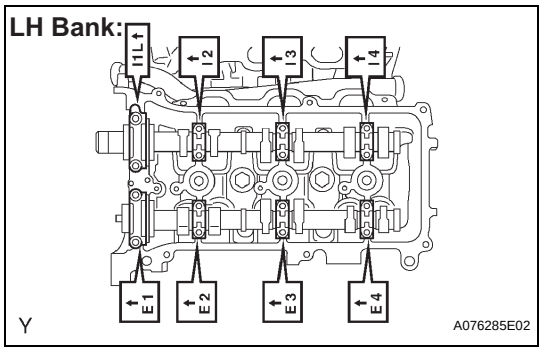

(2) Install the 8 bearing caps in the correct locations as shown.
(3) Apply a light coat of engine oil to the threads and under the heads of the bearing cap bolts.

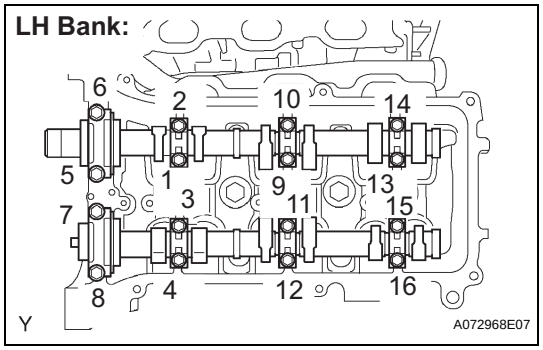

(4) Using several steps, uniformly tighten the 16 bearing cap bolts in the sequence shown in the illustration.
Torque: 9.0 N*m (92 kgf*cm, 80 in.*lbf) for 10 mm (0.39 in.) head
24 N*m (245 kgf*cm, 18 ft.*lbf) for 12 mm (0.47 in.) head

EM

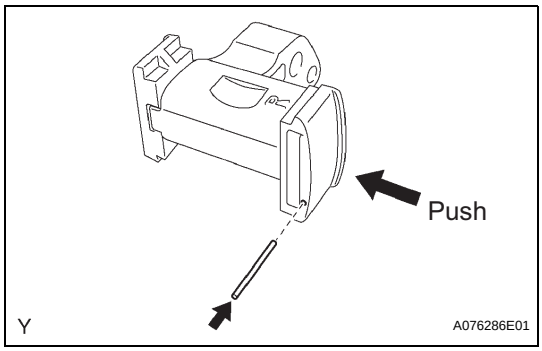

34. INSTALL NO.2 CHAIN TENSIONER ASSEMBLY

(a) While pushing in the tensioner, insert a pin of ϕ 1.0 mm (0.039 in.) into the hole to fix it.

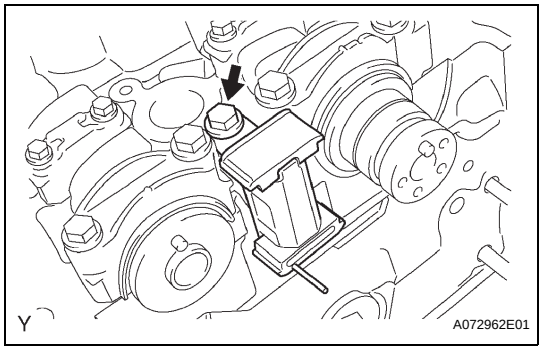

(b) Install the chain tensioner No. 2 with the bolt.
Torque: 19 N*m (194 kgf*cm, 14 ft.*lbf)

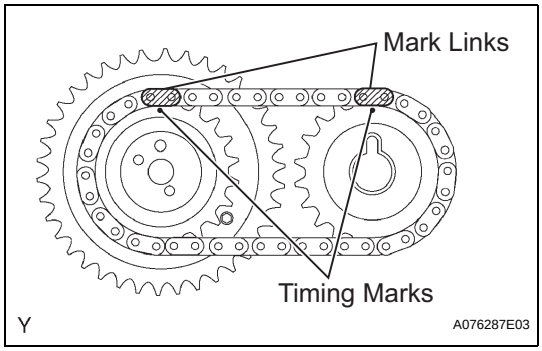

35. INSTALL CAMSHAFT TIMING GEARS AND NO.2 CHAIN (for Bank 1)

(a) Align the yellow mark links with the timing marks (1 dot mark) of camshaft timing gears as shown in the illustration.

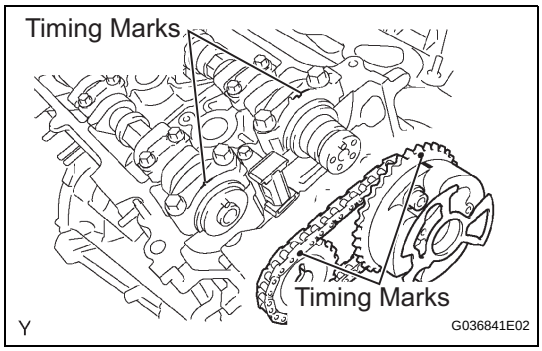

(b) Align the timing marks on the camshaft timing gears with the timing marks on the bearing caps, and install the camshaft timing gears with the chain onto the RH camshafts.

(c) Temporarily install the 2 camshaft timing gear bolts.
NOTICE:
Do not push the camshaft timing gear assembly onto the camshaft forcibly when installing it.

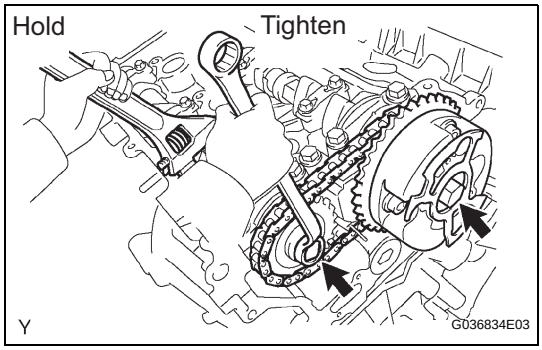

(d) Hold the hexagonal portion of the camshaft with a wrench, and tighten the 2 bolts.
Torque: 100 N*m (1,020 kgf*cm, 74 ft.*lbf)

(e) Remove the pin from the chain tensioner No. 2.

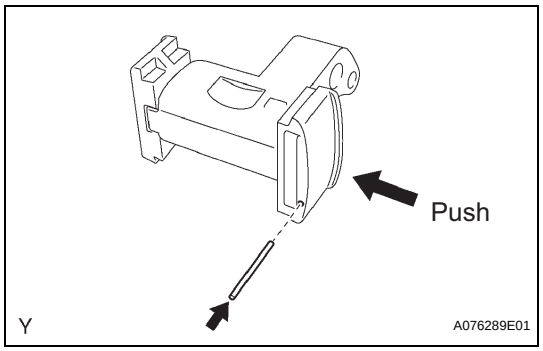

36. INSTALL NO.3 CHAIN TENSIONER ASSEMBLY

(a) While pushing in the tensioner, insert a pin of ϕ 1.0 mm (0.039 in.) into the hole to hold it.

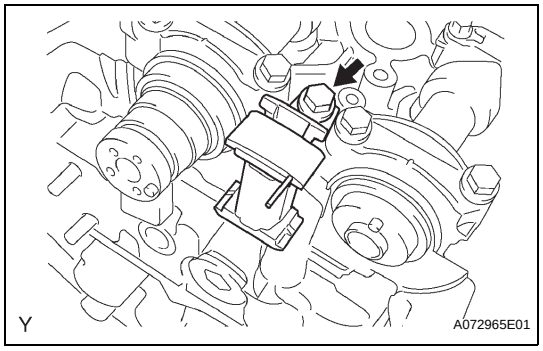

(b) Install the chain tensioner No. 3 with the bolt.
Torque: 19 N*m (194 kgf*cm, 14 ft.*lbf)

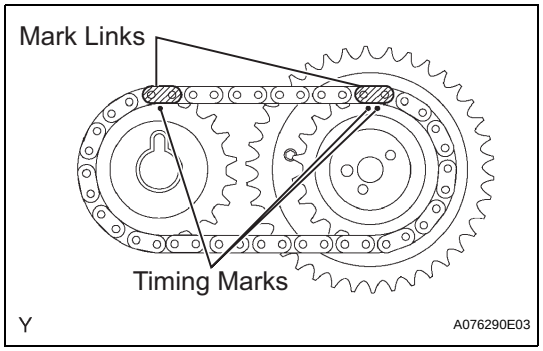

37. INSTALL CAMSHAFT TIMING GEARS AND NO.2 CHAIN (for Bank 2)

(a) Align the yellow mark links with the timing marks (1 dot mark and 2 dot marks) on camshaft timing gears as shown in the illustration.

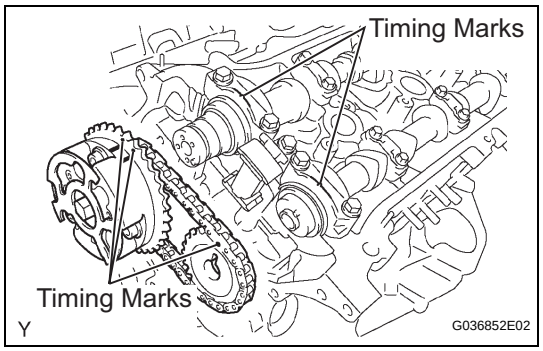

(b) Align the timing marks on the camshaft timing gears with the timing marks on the bearing caps, and install the camshaft timing gears with the chain onto the LH camshafts.

(c) Temporarily install the 2 camshaft timing gear bolts.
NOTICE:
Do not push camshaft timing gear assembly onto the camshaft forcibly when installing it.

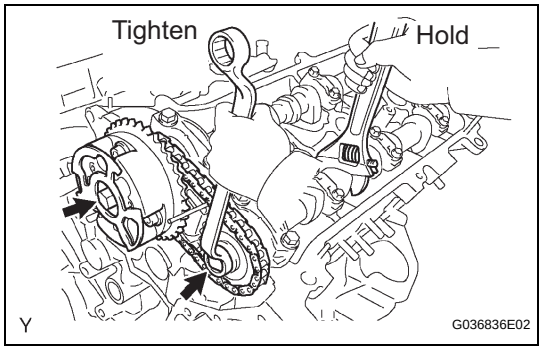

(d) Hold the hexagonal portion of the camshaft with a wrench, and tighten the 2 bolts.
Torque: 100 N*m (1,020 kgf*cm, 74 ft.*lbf)

(e) Remove the pin from the chain tensioner No. 3.

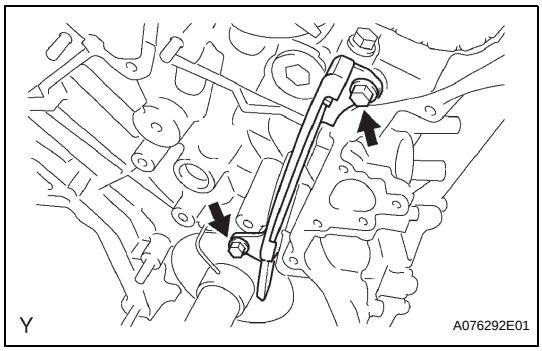

38. INSTALL NO.1 CHAIN VIBRATION DAMPER

(a) Install the chain vibration damper No. 1 with the 2 bolts.
Torque: 19 N*m (194 kgf*cm, 14 ft.*lbf)

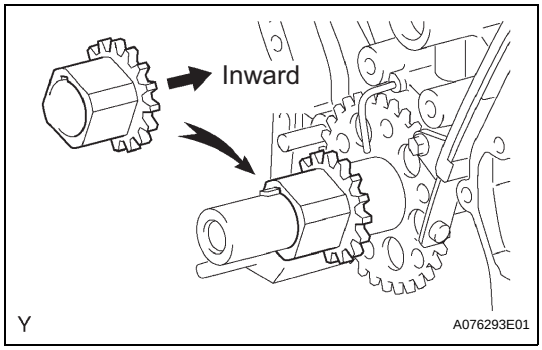

39. INSTALL CRANKSHAFT TIMING GEAR OR SPROCKET

(a) Align the timing gear set key with the key groove of the timing gear.
(b) Install the timing gear onto the crankshaft with the gear side facing inward.

40. INSTALL CHAIN TENSIONER SLIPPER

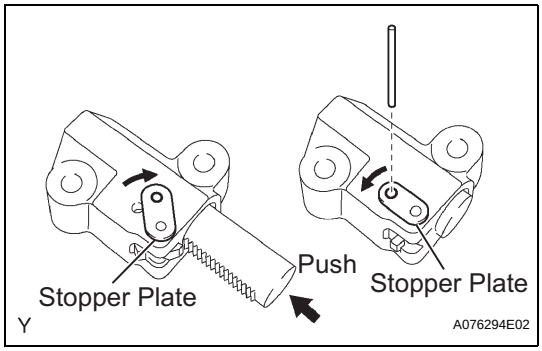

41. INSTALL NO.1 CHAIN TENSIONER ASSEMBLY

(a) While turning the stopper plate of the tensioner clockwise, push in the plunger of the tensioner as shown in the illustration.
(b) While turning the stopper plate of the tensioner counterclockwise, insert a bar of ϕ 3.5 mm (0.138 in.) into the holes in the stopper plate and tensioner to fix the stopper plate.
(c) Install the chain tensioner with the 2 bolts.
Torque: 10 N*m (102 kgf*cm, 7.4 ft.*lbf)

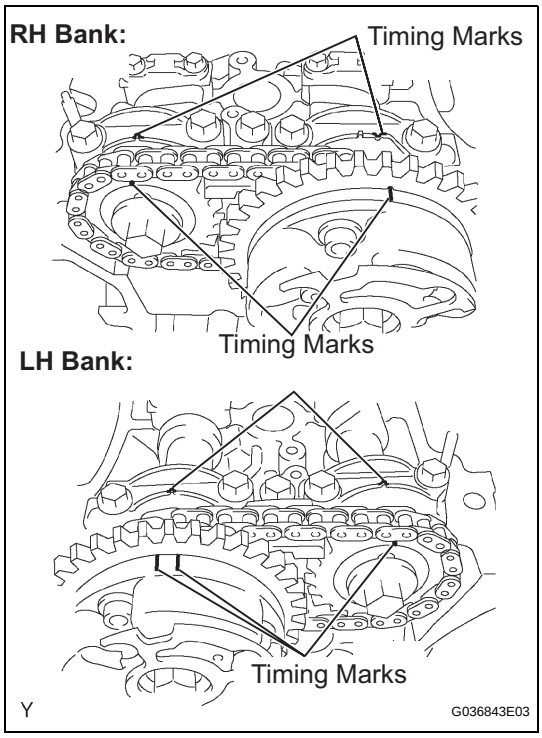

42. INSTALL CHAIN SUB-ASSEMBLY

(a) Set the No. 1 cylinder to TDC/ compression.
(1) Align the timing marks of the camshaft timing gears and bearing caps.

EM

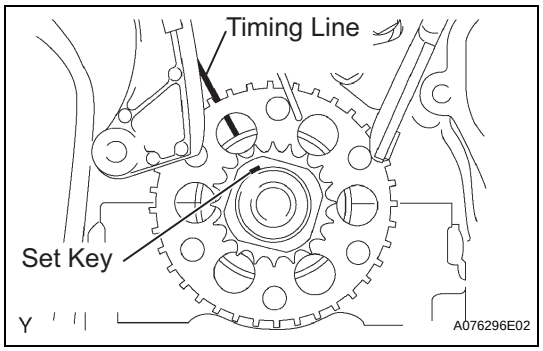

(2) Using the crankshaft pulley set bolt, turn the crankshaft to align the crankshaft set key with the timing line of the cylinder block.

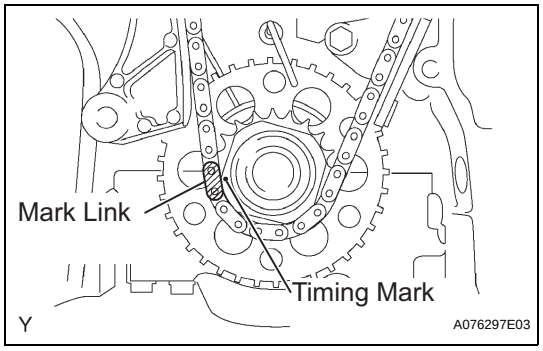

(b) Align the yellow mark link with the timing mark of the crankshaft timing gear.

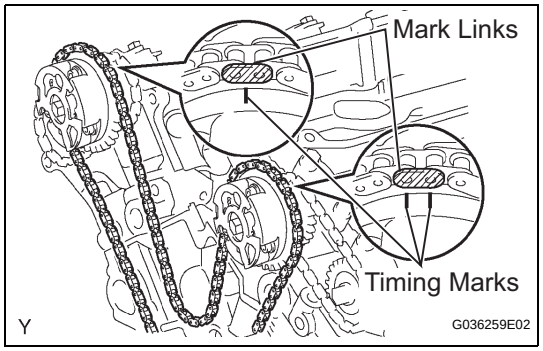

(c) Align the orange mark links with the timing marks of the camshaft timing gears, and install the chain.

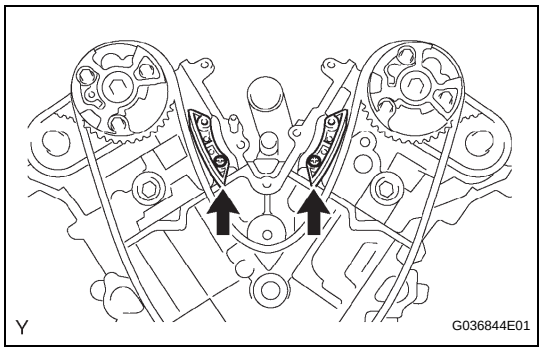

43. INSTALL NO.2 CHAIN VIBRATION DAMPER

(a) Instal the 2 chain vibration dampers No. 2.

44. INSTALL IDLE SPROCKET ASSEMBLY

(a) Apply a light coat of engine oil to rotating surface of the idle gear shaft No. 1.

EM

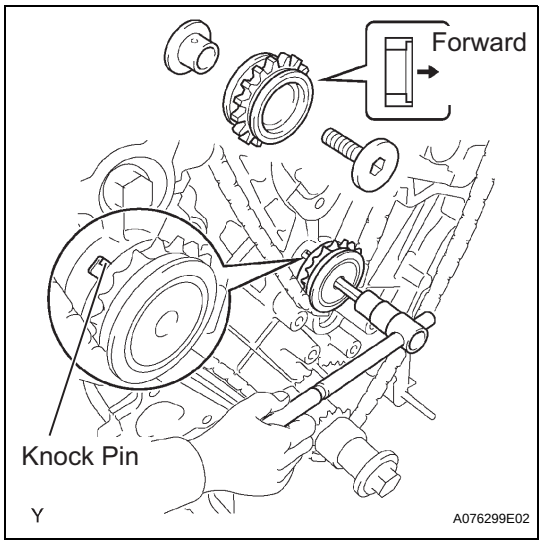

(b) Temporarily install the idle gear shaft No. 1 together with the idle gear shaft No. 2 while aligning the knock pin of the idle gear shaft No. 1 with the knock pin groove of the cylinder block.
NOTICE:
Be careful of the idle gear direction.

(c) Using a 10 mm hexagon wrench, tighten the idle gear shaft No. 2.
Torque: 60 N*m (612 kgf*cm, 44 ft.*lbf)

(d) Remove the bar from the chain tensioner.

45. INSTALL TIMING CHAIN OR BELT COVER SUB-ASSEMBLY

(a) Remove any old packing material and be careful not to drop any oil on the contact surfaces of the timing chain cover, cylinder head and cylinder block.

EM

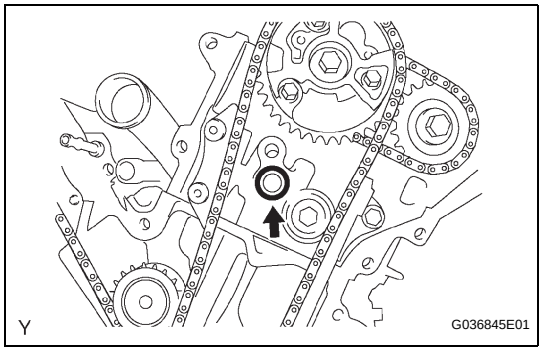

(b) Install a new O-ring onto the LH cylinder head as shown in the illustration.

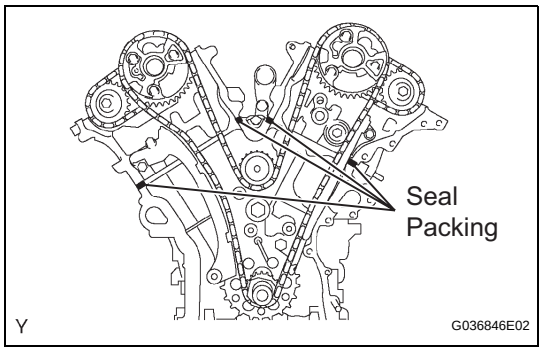

(c) Apply a continuous bead of seal packing (diameter 3 to 4 mm (0.12 to 0.16 in.)) to 4 locations as shown in the illustration.
Seal packing:
Part No. 08826-00080 or equivalent

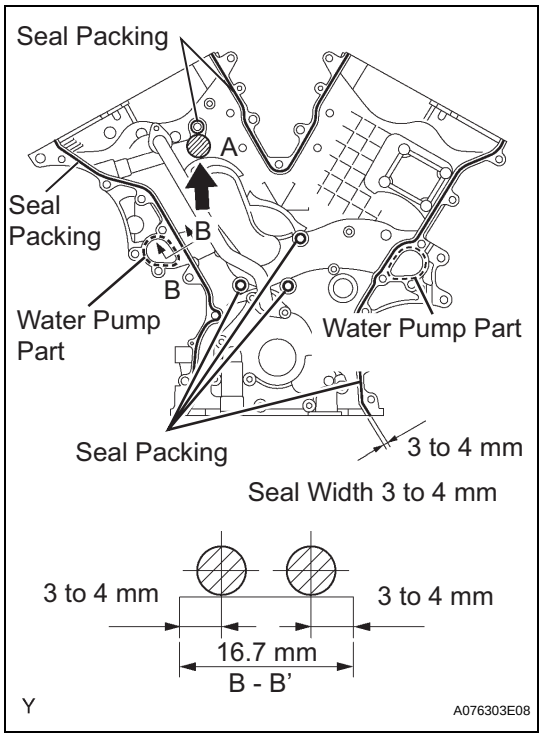

(d) Apply a continuous bead of seal packing (diameter 3 to 4 mm (0.12 to 0.16 in.)) to the timing chain cover as shown in the illustration.

Seal packing:

Water pump part: Part No. 08826-00100 or equivalent

Other part: Part No. 08826-00080 or equivalent

NOTICE:

- **Install the timing chain cover within 3 minutes of applying the seal packing. After installation, the timing chain cover bolts and nuts must be tightened within 15 minutes. Otherwise, the seal packing must be removed and reapplied.**
- **Do not apply seal packing to A as shown in the illustration.**

EM

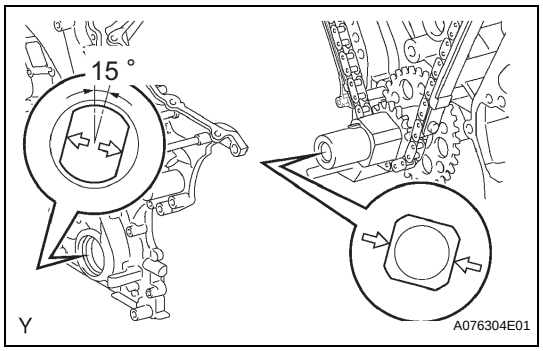

(e) Align the key way of the oil pump drive rotor with the rectangular portion of the crankshaft timing gear, and slide the timing chain cover into place.

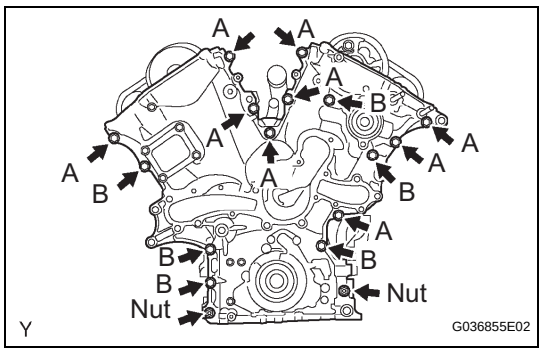

(f) Install the timing chain cover with the 15 bolts and 2 nuts. Tighten the bolts and nuts uniformly in several steps.

Torque: 23 N*m (235 kgf*cm, 17 ft.*lbf)

NOTICE:

- **Take care not to wrap the chain and slipper beyond the timing chain cover seal line.**
- **After installing the timing chain cover, install the water pump within 15 minutes.**

HINT:

Each bolt length is as follows:

Bolt	length
A	25 mm (0.98 in.)
B	55 mm (2.17 in.)

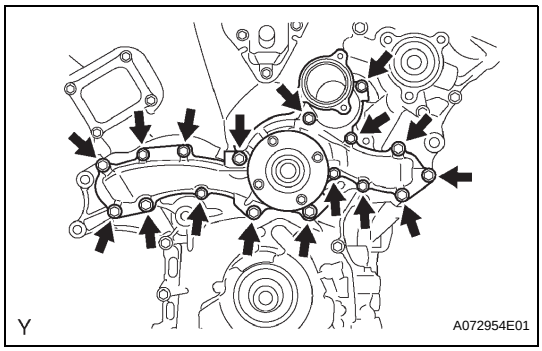

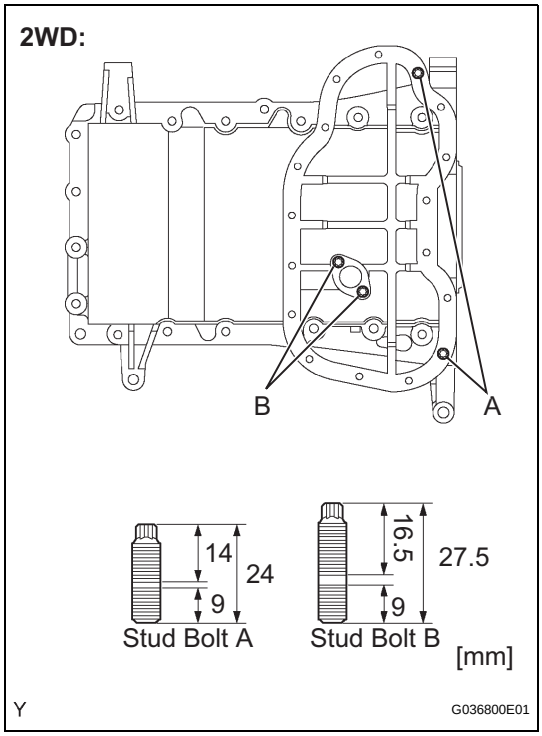

46. INSTALL WATER PUMP ASSEMBLY

(a) Install a new gasket and the water pump with the 17 bolts.

Torque: 9.0 N*m (92 kgf*cm, 80 in.*lbf) for 10 mm (0.39 in.) head
23 N*m (235 kgf*cm, 17 ft.*lbf) for 12 mm (0.47 in.) head

47. INSTALL OIL PAN SUB-ASSEMBLY

(a) Remove any old packing material and be careful not to drop any oil on the contact surfaces of the cylinder block, rear oil seal retainer and oil pan.

(b) Install the 4 stud bolts (for 2WD).
Torque: 4.0 N*m (41 kgf*cm, 35 in.*lbf)

EM

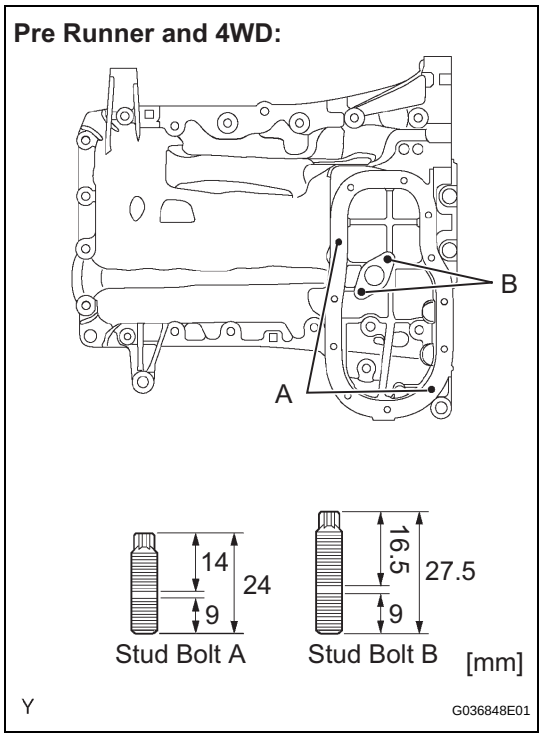

(c) Install the 4 stud bolts (for Pre Runner and 4WD).
Torque: 4.0 N*m (41 kgf*cm, 35 in.*lbf)

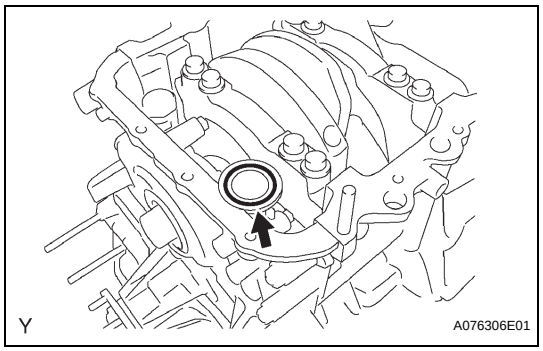

(d) Install a new O-ring onto the oil pump.

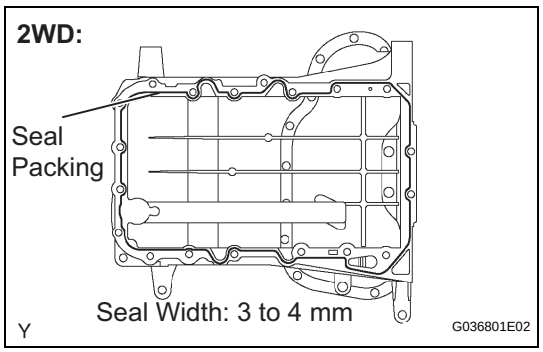

(e) Apply a continuous bead of seal packing (diameter 3 to 4 mm (0.12 to 1.16 in.)) to the oil pan as shown in the illustration (for 2WD).
Seal packing:
Part No. 08826-00080 or equivalent
NOTICE:
Install the oil pan within 3 minutes of applying the seal packing. After installation, the oil pan bolts and nuts must be tightened within 15 minutes. Otherwise, the seal packing must be removed and reapplied.

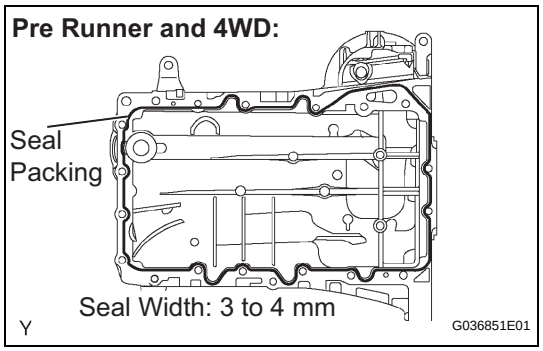

(f) Apply a continuous bead of the seal packing (diameter 3 to 4 mm (0.12 to 0.16 in.)) to the oil pan as shown in the illustration (for Pre Runner and 4WD).
Seal packing:
Part No. 08826-00080 or equivalent

EM

NOTICE:
Install the oil pan within 3 minutes of applying the seal packing. After installation, the oil pan bolts and nuts must be tightened within 15 minutes. Otherwise, the seal packing must be removed and reapplied.

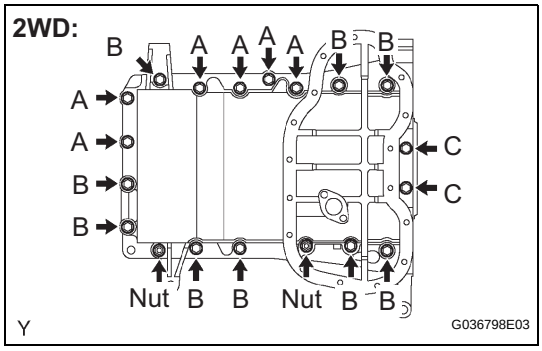

(g) Install the oil pan with the 17 bolts and 2 nuts. Tighten the bolts and nuts uniformly in several steps (for 2WD).
Torque: 10 N*m (102 kgf*cm, 7.4 ft.*lbf) for 10 mm (0.39 in.) head
Torque: 21 N*m (214 kgf*cm, 16 ft.*lbf) for 12 mm (0.47 in.) head
HINT:
Each bolt length is as follows:

Bolt	length
A	25 mm (0.98 in.)
B	45 mm (1.77 in.)
C	14 mm (0.55 in.)

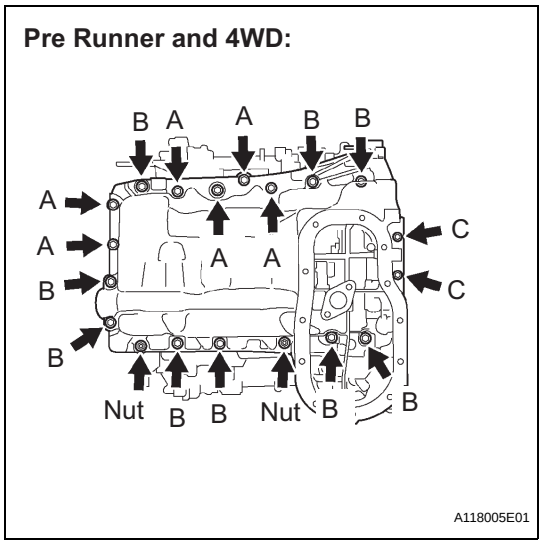

(h) Install the oil pan with the 17 bolts and 2 nuts. Tighten the bolts and nuts uniformly in several steps (for Pre Runner and 4WD).
Torque: 10 N*m (102 kgf*cm, 7 ft.*lbf) for 10 mm (0.39 in.) head
21 N*m (214 kgf*cm, 16 ft.*lbf) for 12 mm (0.47 in.) head
HINT:
Each bolt length is as follows:

Bolt	length
A	25 mm (0.98 in.)
B	45 mm (1.77 in.)
C	14 mm (0.55 in.)

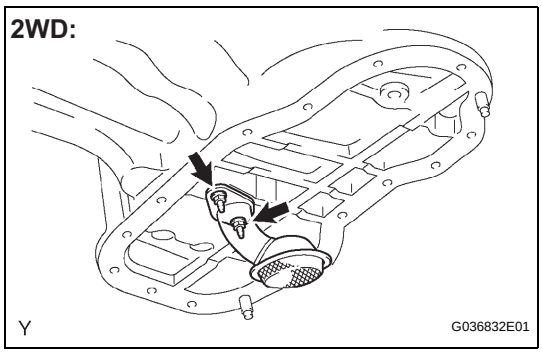

48. INSTALL OIL STRAINER SUB-ASSEMBLY

(a) Install a new gasket, then install the oil strainer with the 2 nuts (for 2WD).
Torque: 9.0 N*m (92 kgf*cm, 80 in.*lbf)

EM

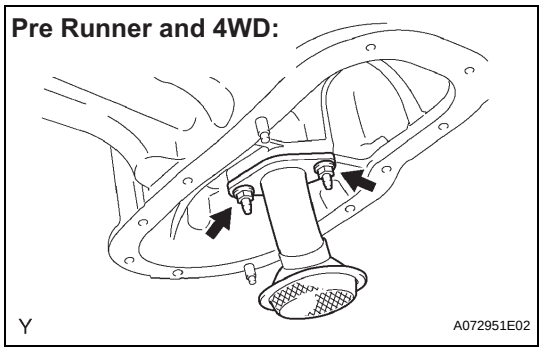

(b) Install a new gasket, then install the oil strainer with the 2 nuts (for Pre Runner and 4WD).
Torque: 9.0 N*m (92 kgf*cm, 80 in.*lbf)

49. INSTALL NO.2 OIL PAN SUB-ASSEMBLY

(a) Remove any old packing material and be careful not to drop any oil on the contact surfaces of the oil pan and oil pan No. 2.

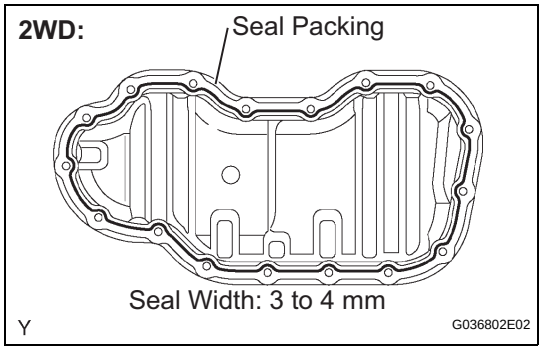

(b) Apply a continuous bead of the seal packing (diameter 3 to 4 mm (0.12 to 0.16 in.)) as shown in the illustration (for 2WD).
Seal packing:
Part No. 08826-00080 or equivalent
NOTICE:
Install the oil pan No. 2 within 3 minutes of applying the seal packing. After installation, oil pan No. 2 bolts and nuts must be tightened within 15 minutes. Otherwise, the seal packing must be removed and reapplied.

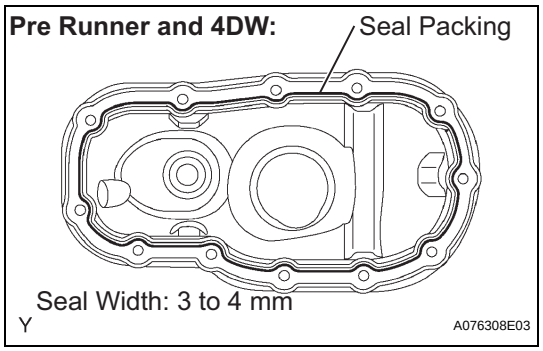

(c) Apply a continuous bead of seal packing (diameter 3 to 4mm(0.12 to 0.16 in.)) as shown in the illustration (for Pre Runner and 4WD).
Seal packing:
Part No. 08826-00080 or equivalent
NOTICE:
Install the oil pan No. 2 within 3 minutes of applying the seal packing. After installation, the oil pan No. 2 bolts and nuts must be tightened within 15 minutes. Otherwise, the seal packing must be removed and reapplied.

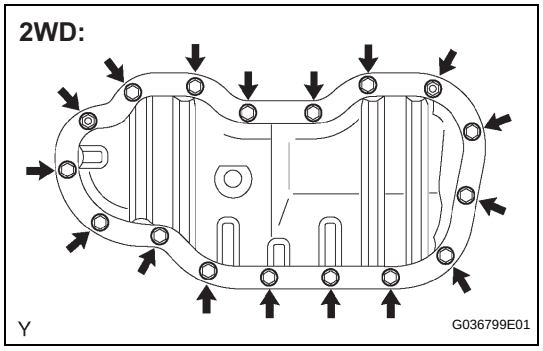

(d) Install the oil pan No. 2 with the 15 bolts and 2 nuts. Tighten the bolts and nuts uniformly in several steps (for 2WD).
Torque: 9.0 N*m (92 kgf*cm, 80 in.*lbf) for bolts
10 N*m (102 kgf*cm, 7.4 ft.*lbf) for nut

EM

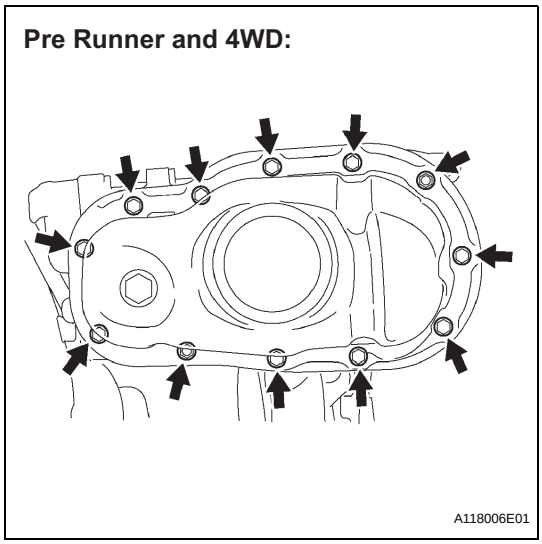

(e) Install the oil pan No. 2 with the 10 bolts and 2 nuts. Tighten the bolts and nuts uniformly in several steps (for Pre Runner and 4WD).
Torque: 9.0 N*m (92 kgf*cm, 80 in.*lbf) for bolts
10 N*m (102 kgf*cm, 7.4 ft.*lbf)

50. INSTALL OIL PAN DRAIN PLUG

(a) Install the drain plug with a new gasket.
Torque: 40 N*m (408 kgf*cm, 30 ft.*lbf)

EM

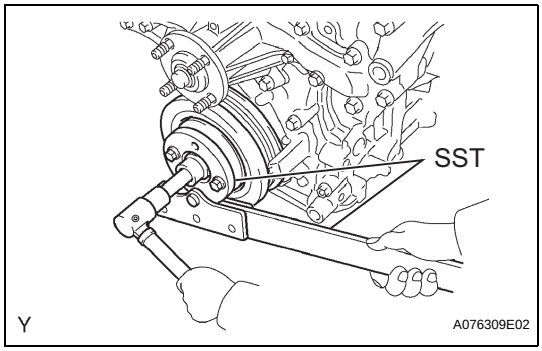

51. INSTALL CRANKSHAFT PULLEY

(a) Using SST, fix the pulley and tighten the bolt.
SST 09213-54015 (91651-60855), 09330-00021
Torque: 250 N*m (2,549 kgf*cm, 185 ft.*lbf)

52. SET NO.1 CYLINDER TO TDC/COMPRESSION

53. INSPECT VALVE CLEARANCE

54. ADJUST VALVE CLEARANCE

55. INSTALL CYLINDER HEAD COVER SUB-ASSEMBLY

(a) Remove any old packing material and be careful not to drop any oil on the contact surfaces of the cylinder head, timing chain cover and cylinder head cover.

(b) Install the gasket onto the cylinder head cover.

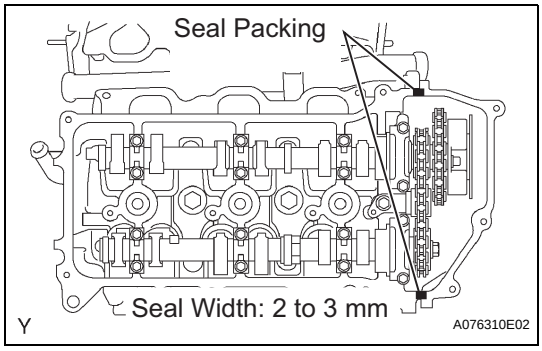

(c) Apply a continuous bead of seal packing (diameter 2 to 3 mm (0.08 to 0.12 in.)) to the cylinder head and timing chain cover as shown in the illustration.
Seal packing:
Part No. 08826-00080 or equivalent
NOTICE:
Install the cylinder head cover within 3 minutes of applying the seal packing. After installation, the cylinder head cover bolts and nuts must be tightened within 15 minutes. Otherwise the seal packing must be removed and reapplied.

(d) Install the seal washers onto the bolts.

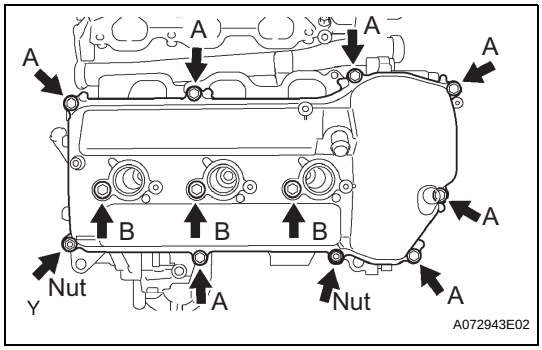

(e) Install the cylinder head cover with the 10 bolts and 2 nuts. Tighten the bolts and nuts uniformly in several steps.
Torque: 10 N*m (102 kgf*cm, 7.4 ft.*lbf) for bolts A
9.0 N*m (92 kgf*cm, 80 in.*lbf) for bolts B
9.0 N*m (92 kgf*cm, 80 in.*lbf) for nuts
HINT:
Each bolt length is as follows:

Bolt	length
A	25 mm
B	60 mm (2.36 in.)

56. INSTALL CYLINDER HEAD COVER SUB-ASSEMBLY LH

(a) Remove any old packing material and be careful not to drop any oil on the contact surfaces of the cylinder head, timing chain cover and cylinder head cover.

(b) Apply adhesive to the threads of the ventilation valve.
Adhesive:
Part No. 08833-00070, THREE BOND 1324 or equivalent

(c) Install the ventilation valve onto the cylinder head cover.
Torque: 27 N*m (275 kgf*cm, 20 ft.*lbf)

(d) Install the gasket onto the cylinder head cover.

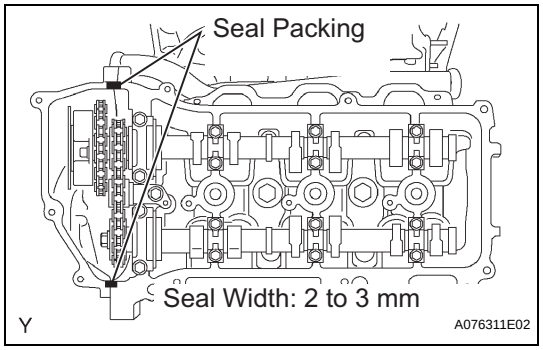

(e) Apply a continuous bead of seal packing (diameter 2 to 3 mm (0.08 to 0.12 in.)) to the cylinder head and timing chain cover as shown in the illustration.
Seal packing:
Part No. 08826-00080 or equivalent
NOTICE:
Install the cylinder head cover of 3 minutes of applying the seal packing. After installation, the cylinder head cover bolts and nuts must be tightened within 15 minutes. Otherwise, the seal packing must be removed and reapplied.

(f) Install the seal washers onto the bolts.

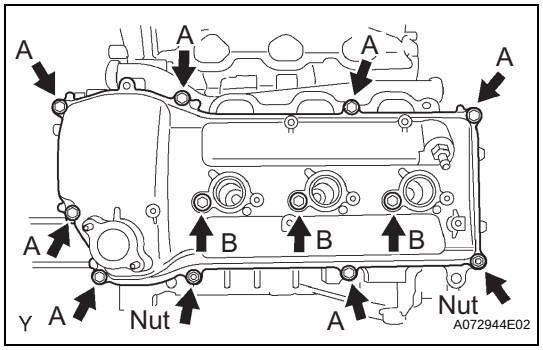

(g) Install the cylinder head cover with the 10 bolts and 2 nuts. Tighten the bolts and nuts uniformly in several steps.
Torque: 10 N*m (102 kgf*cm, 7.4 ft.*lbf) for bolts A
9.0 N*m (92 kgf*cm, 80 in.*lbf) for bolts B
9.0 N*m (92 kgf*cm, 80 in.*lbf) for nuts
HINT:
Each bolt length is as follows:

Bolt	length
A	25 mm (0.98 in.)
B	60 mm (2.36 in.)

EM

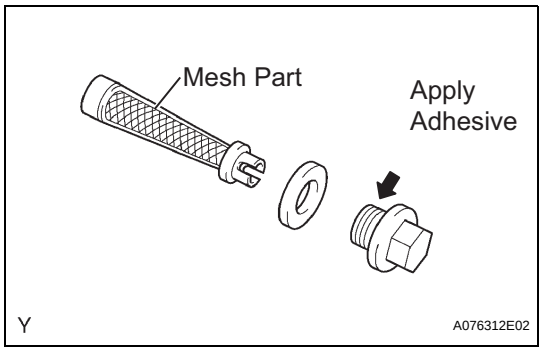

57. INSTALL OIL CONTROL VALVE FILTER

(a) Check that no foreign objects on the mesh part of the 2 filters.
(b) Install 2 new gaskets onto each new plug.
(c) Insert the filters into the plugs.
(d) Apply adhesive to 2 or 3 threads of the plugs.
Adhesive:
Part No. 08833-00080, THREE BOND 1344 LOCTITE 242 or equivalent
(e) Install the plugs onto each cylinder head.
Torque: 62 N*m (632 kgf*cm, 46 ft.*lbf)

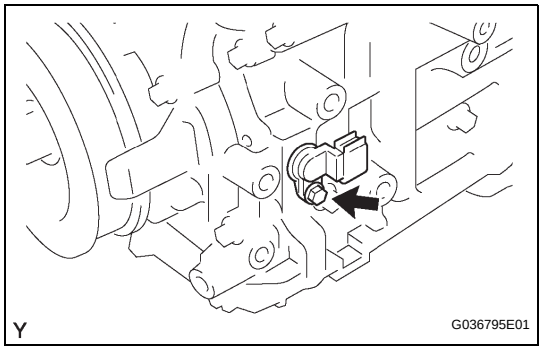

58. INSTALL CRANKSHAFT POSITION SENSOR

(a) Install the crankshaft position sensor with the bolt.
Torque: 10 N*m (102 kgf*cm, 7.4 ft.*lbf)

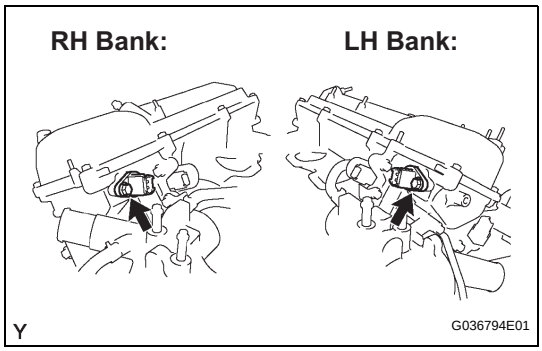

59. INSTALL VVT SENSOR

(a) Apply a light coat of engine oil to the O-ring of each VVT sensor.
(b) Install the 2 VVT sensors with the 2 bolts.
Torque: 8.0 N*m (82 kgf*cm, 71 in.*lbf)

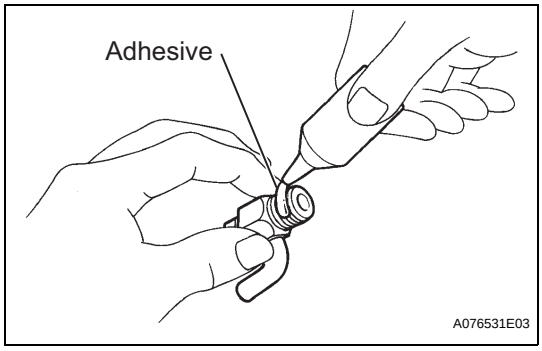

60. INSTALL CYLINDER BLOCK WATER DRAIN COCK SUB-ASSEMBLY

(a) Apply adhesive to 2 or 3 threads of the drain cocks end.
Adhesive:
Part No. 08833-00070, THREE BOND 1324 or equivalent

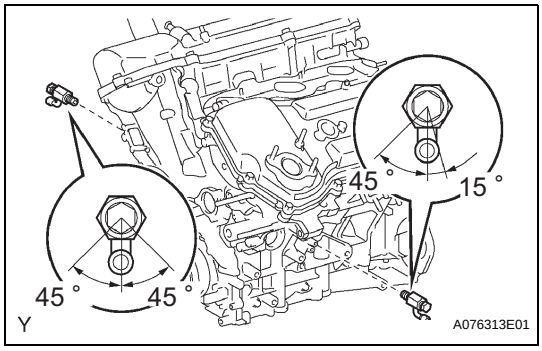

(b) Tighten the drain cocks to the specified torque, and rotate them clockwise as shown in the illustration.
Torque: 25 N*m (255 kgf*cm, 18 ft.*lbf)
NOTICE:
- **Do not rotate the drain cocks more than 1 complete revolution (360°) after tightening the drain cocks to the specified torque.**
- **Do not loosen the drain cocks after setting it correctly.**

EM

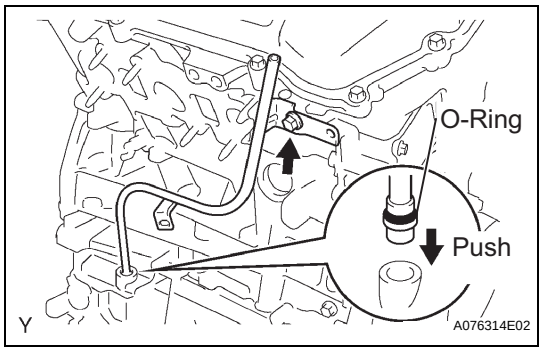

61. INSTALL OIL LEVEL GAGE GUIDE

(a) Install a new O-ring onto the oil level gauge guide.
(b) Apply a light coat of engine oil to the O-ring.
(c) Push the oil level gauge guide end into the guide hole of the oil pan.
(d) Install the oil level gauge guide with the bolt.
Torque: 9.0 N*m (92 kgf*cm, 80 in.*lbf)

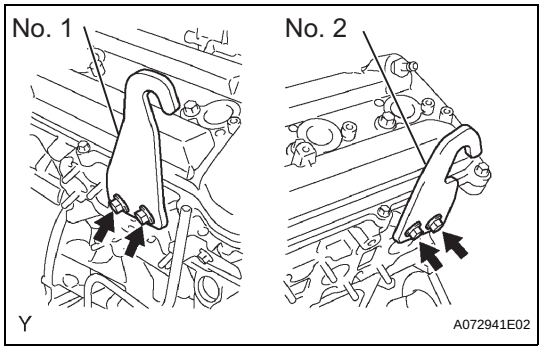

62. INSTALL ENGINE HANGERS

(a) Install the engine hanger with the 2 bolts.
Torque: 33 N*m (336 kgf*cm, 24 ft.*lbf)
(b) Install the engine hanger with the 2 bolts.
Torque: 33 N*m (336 kgf*cm, 24 ft.*lbf)

EM

REPAIR

1. REPAIR VALVE SEAT

NOTICE:
Use a cutter to gradually make the intake valve seat smoother.

(a) If the seating is too high on the valve face, use 30° and 45° cutters to correct the seat.

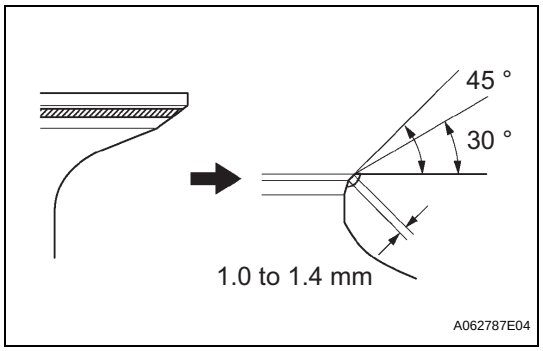

(b) Intake side:
If the seating is too low on the valve face, use 60° and 45° cutters to correct the seat.

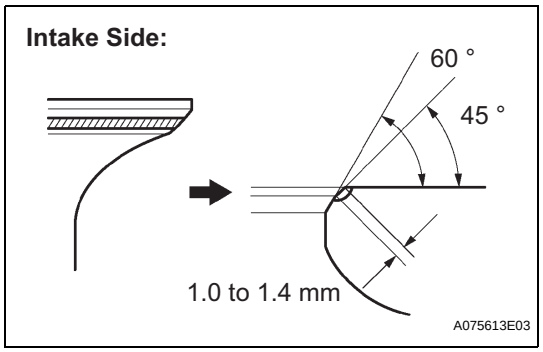

(c) Exhaust side:
If the seating is too low on the valve face, use 75° and 45° cutters to correct the seat.

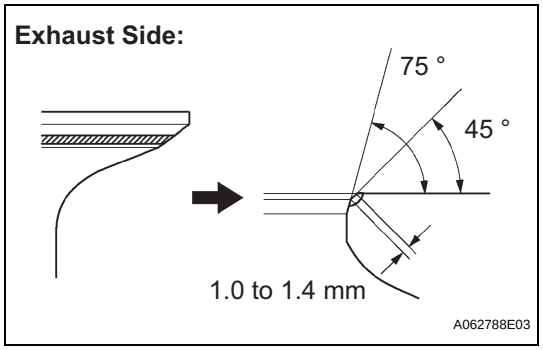

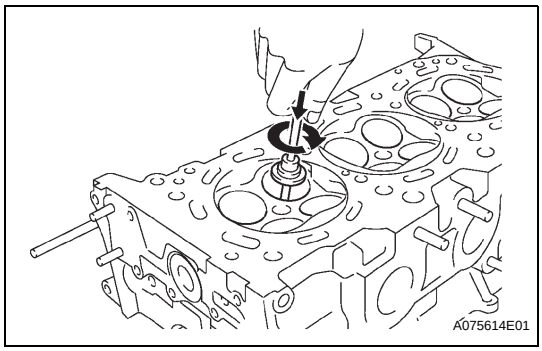

(d) Lap the valve and valve seat with an abrasive compound by hand.
(e) After lapping, clean the valve and valve seat.

ENGINE

ON-VEHICLE INSPECTION

1. INSPECT ENGINE COOLANT (See page CO-2)

2. INSPECT ENGINE OIL
(See page LU-1)

3. INSPECT BATTERY (See page CH-4)

4. INSPECT AIR CLEANER FILTER ELEMENT SUB-ASSEMBLY
(a) Remove the air filter.
(b) Visually check that the air filter is not excessively damaged or oily. If necessary, replace the air filter.

5. INSPECT SPARK PLUG
(See page IG-3)

6. INSPECT V-RIBBED BELT TENSIONER ASSEMBLY
(a) Idle the engine and then stop the engine. Check that the drive belt is between the edges of the tensioner pulley.
(b) Remove the drive belt from the tensioner pulley.
(c) Turn the pulley, and check that the tensioner bearing moves smoothly and quietly.
If necessary, replace the tensioner.

7. INSPECT VALVE LASH ADJUSTER NOISE
(a) Rev up the engine several times. Check that the engine does not make any abnormal noises [*a].
If abnormal noises are heard, warm up the engine and idle it for more than 30 minutes. Then repeat step [*a].
HINT:
If any defects or problems are found during the inspection above, perform the lash adjuster inspection.

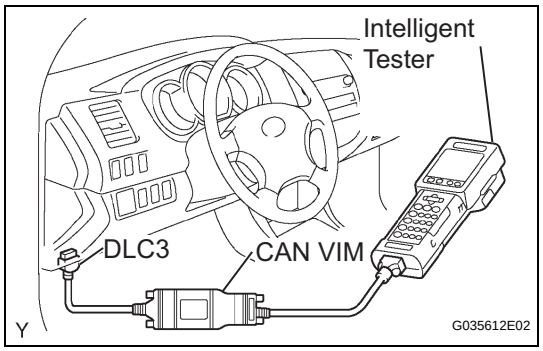

8. INSPECT IGNITION TIMING
(a) When using a intelligent tester:
(1) Connect the intelligent tester to the DLC3.
(2) Turn the ignition switch to ON.
(3) Turn the intelligent tester ON.
(4) Start the engine and warm it up.
(5) Select the following menu items:
DIAGNOSIS / ENHANCED OBDII / DATA LIST / PRIMARY / IGN ADVANCE.
Ignition timing:
3 to7°BTDC (during idling)
NOTICE:
Turn all electrical systems OFF.
HINT:
Refer to the intelligent tester operator's manual for further information regarding the selection of DATA LIST.

EM

(6) Check that the ignition timing advances immediately when engine speed is increased.

(b) When not using a intelligent tester:

(1) Turn the ignition switch to ON.

(2) Start the engine and warm it up.

(3) Install the tester terminal of a timing light in the position shown in the illustration.

NOTICE:

- **Use a timing light that detects the first signal.**
- **After checking, be sure to wrap the wire harness with tape.**

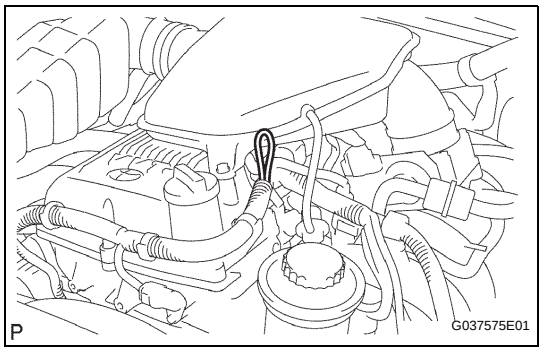

(4) Using SST, connect terminals 13 (TC) and 4 (CG) of the DLC3.

SST 09843-18040

NOTICE:

Be careful not to connect the wrong terminals. It may damage the engine.

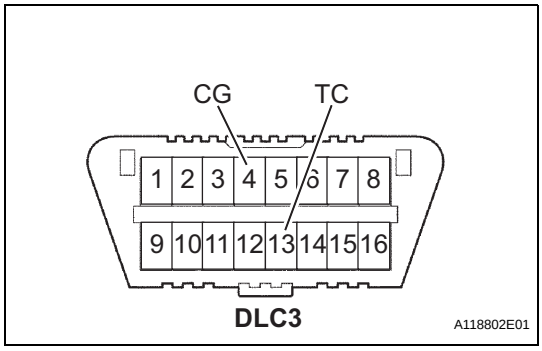

(5) Check that the ignition timing is within the specification.

Ignition timing:

3 to7° BTDC (during idling)

NOTICE:

Turn all electrical systems OFF.

9. INSPECT ENGINE IDLING SPEED

(a) When using a intelligent tester:

(1) Connect the intelligent tester to the DLC3

(2) Turn the ignition switch to ON.

(3) Turn the intelligent tester ON.

(4) Start the engine and warm it up.

(5) Select the following menu items:

DIAGNOSIS / ENHANCED OBDII / DATA LIST / PRIMARY / ENGINE SPD.

Idling speed:

600 to 700 rpm

NOTICE:

- **Turn all electrical system OFF.**
- **When checking the idling speed, the transmission is in the neutral position.**

HINT:

Refer to the intelligent tester operator's manual for further information regarding the selection of DATA LIST.

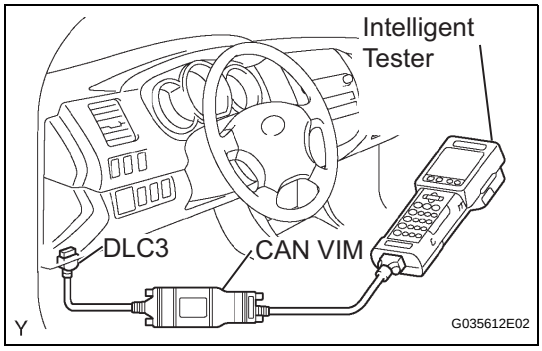

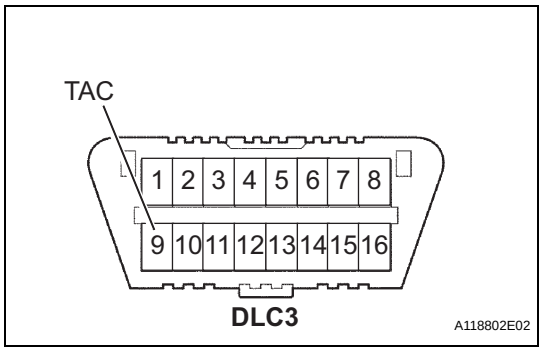

(b) When not using a intelligent tester:
  (1) Turn the ignition switch ON.
  (2) Start the engine and warm it up.
  (3) Install SST onto terminal 9 (TAC) of the DLC3. Connect a tachometer, then measure the engine idling speed.
  SST 09843-18030
  Idling speed:
  600 to 700 rpm
  NOTICE:
  - **Turn all electrical systems OFF.**
  - **When checking the idling speed, the transmission should be in the neutral position.**

10. INSPECT COMPRESSION

(a) Warm up the engine, then stop it.
(b) Remove the intake air connector
(c) Remove the ignition coils.
(d) Remove the spark plugs.
(e) Disconnect the fuel infector connector.

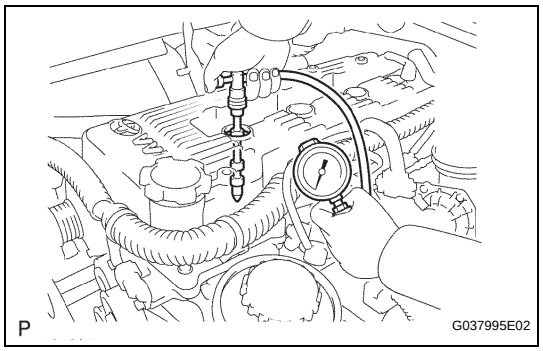

(f) Inspect the compression.
  (1) Insert a compression gauge into the plug hole.
  (2) Crank the engine, then measure the compression pressure.
  Compression pressure:
  1230 kPa (12.5 kgf/cm^2, 178 psi)
  Minimum pressure:
  880 kPa (9.0 kgf/cm^2, 128 psi) or more
  Difference between each cylinder:
  68 kPa (0.7 kgf/cm^2, 10psi) or less
  NOTICE:
  - **Use a fully-charged battery so the engine speed can be increased to 250 rpm or more.**
  - **Inspect the other cylinders in the same way.**
  - **Measure the compression pressure in as short a time as possible.**
  (3) If the compression pressure is low, pour a small amount of engine oil into the cylinder block, then measure it again.
  HINT:
  - If the compression pressure increases after adding the engine oil, the piston rings may be worn.
  - If the compression pressure does not charge after pouring engine oil, defects may be occurring around the valves.

11. INSPECT CO/HC

HINT:
This inspection is for checking whether the CO/HC concentration in the emission gas while idling complies with the regulations.

(a) Start the engine.
(b) Keep the engine speed at 2,500 rpm for approximately 180 seconds.
(c) Insert the CO/HC meter testing probe at least 40 cm (1.3 ft) into the tailpipe while idling.
(d) Immediately check the CO/HC concentration while idling and/or at 2,500 rpm.
HINT:
When performing the 2 mode (2,500 rpm and idle) test, follow the applicable local regulations. If the CO/HC concentration does not comply with the regulations, troubleshoot in the order given below.
(1) Check the A/F sensor and heated oxygen sensor operation.
(2) See the table below for possible causes, then inspect and correct the applicable parts if necessary.

CO	HC	Problems	Causes
Normal	High	Rough idling	1. Faulty ignition: – Incorrect timing – Fouled, shorted or improperly gapped plugs 2. Incorrect valve clearance 3. Leakage in intake and exhaust valves 4. Leakage in cylinders
Low	High	Rough idling (Fluctuation HC reading)	1. Vacuum leakage: – PCV hoses – Intake manifold – Throttle body – Brake booster line 2. Lean mixture causing misfire
High	High	Rough idling (Black smoke from exhaust)	1. Restricted air filter 2. Plugged PCV valve 3. Faulty SFI systems: – Faulty pressure regulator – Faulty engine coolant temperature sensor – Faulty mass air flow meter – Faulty ECM – Faulty injectors – Faulty throttle body

DRIVE BELT

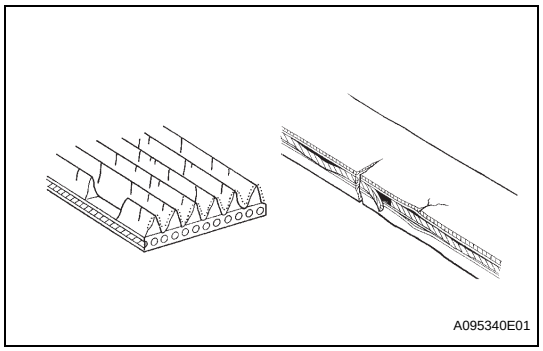

ON-VEHICLE INSPECTION

1. INSPECT FAN AND GENERATOR V BELT

(a) Visually check the belt for excessive wear, frayed cords, etc..
- If any defects are found, replace the V-ribbed belt.
- Cracks on the rib side of the belt are considered acceptable. If the belt has chunks missing from the ribs, it should be replaced.

(b) Check that the tensioner indicator mark is within range A shown in the illustration. If the mark is not within range A, replace the V belt.

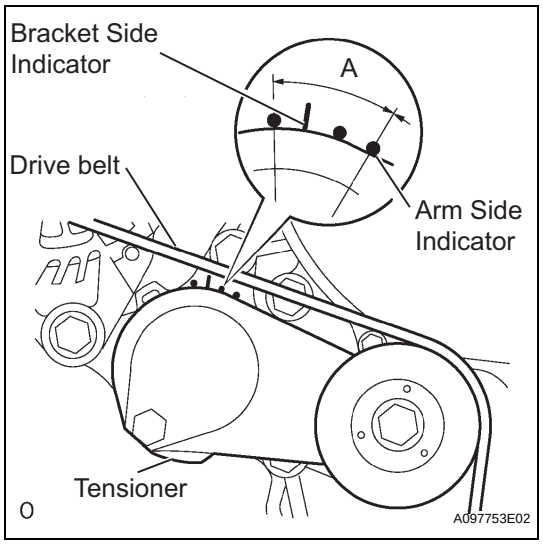

EM

REMOVAL

1. REMOVE FAN AND GENERATOR V BELT

(a) Turning the hexagonal bolt on the V-ribbed belt tensioner clockwise, loosen and then remove the V belt.

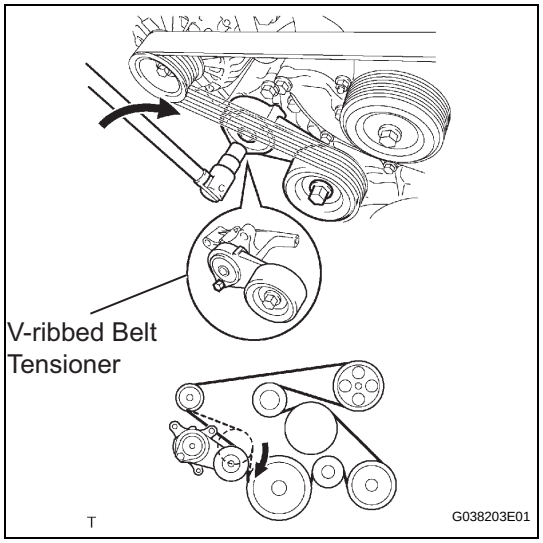

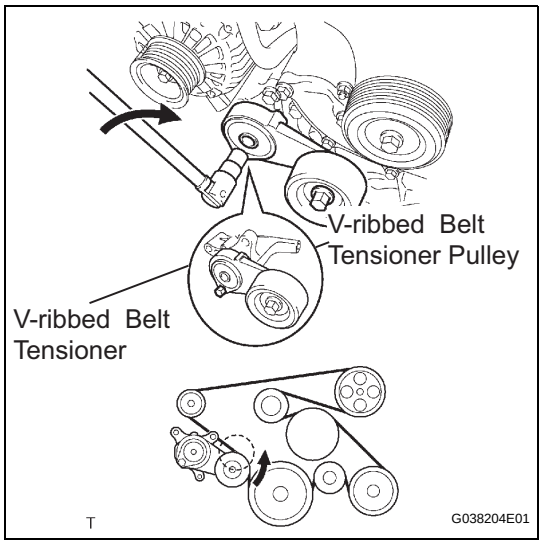

INSTALLATION

1. INSTALL FAN AND GENERATOR V BELT

(a) Provisionally install the V belt onto each pulley.
NOTICE:
Install the V belt onto each pulley and finally install the V belt onto the V-ribbed belt tensioner.

(b) Turn the hexagonal bolt on the V-ribbed belt tensioner clockwise and install the V belt onto the V-ribbed belt tensioner pulley.

2. INSPECT FAN AND GENERATOR V BELT (See page EM-5)

EM

TIMING CHAIN

COMPONENTS

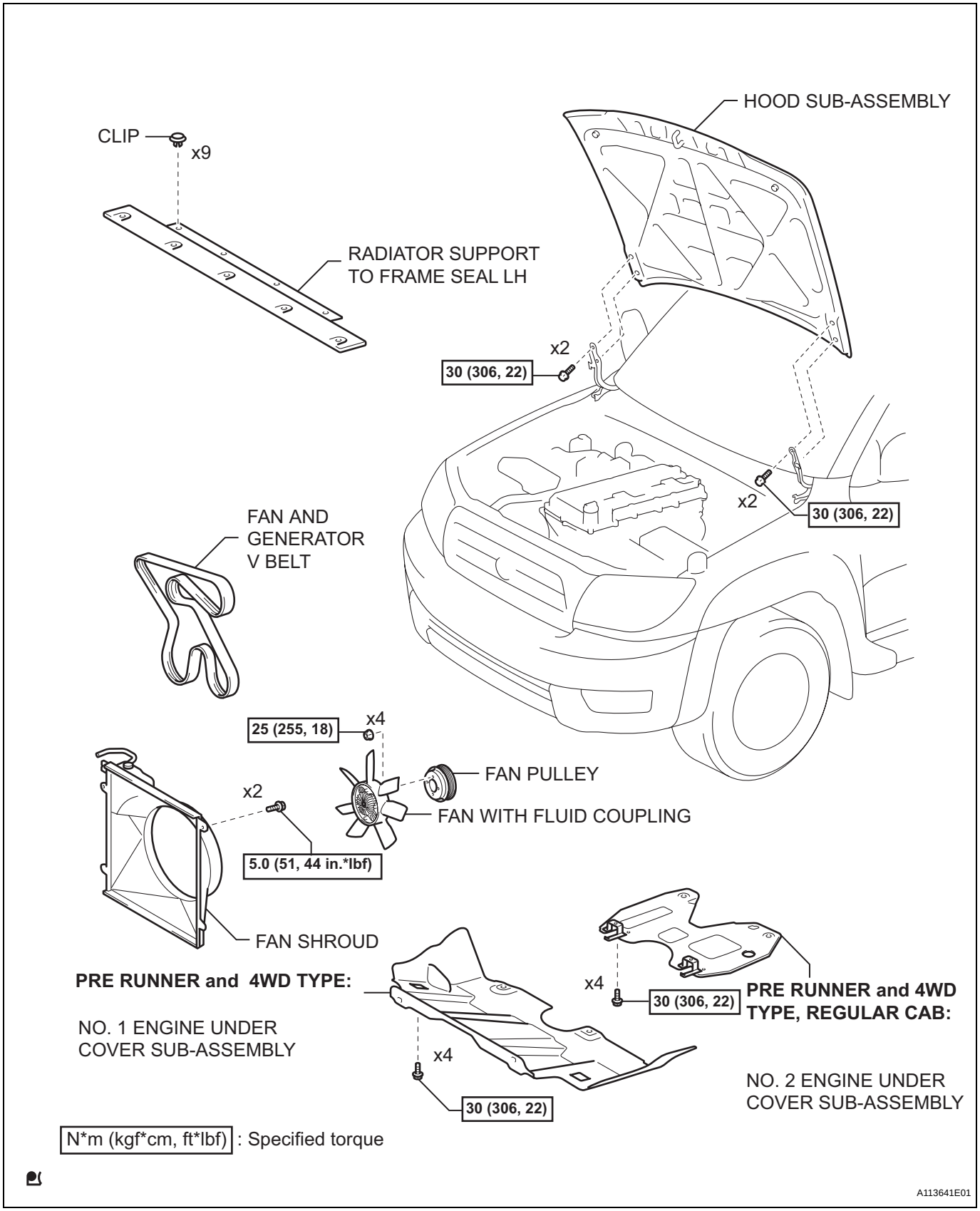

EM

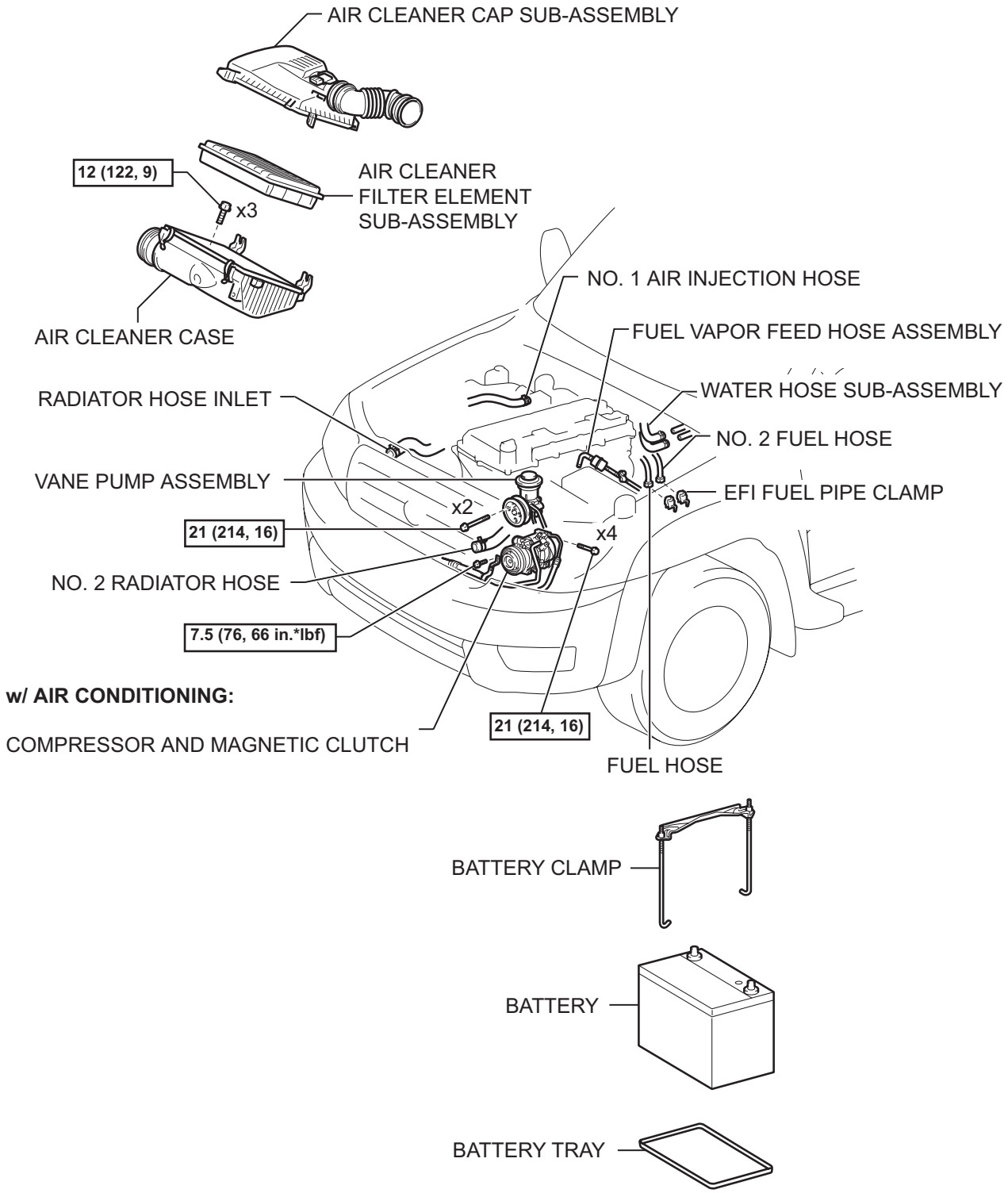

N*m (kgf*cm, ft*lbf) : Specified torque

A113642E01

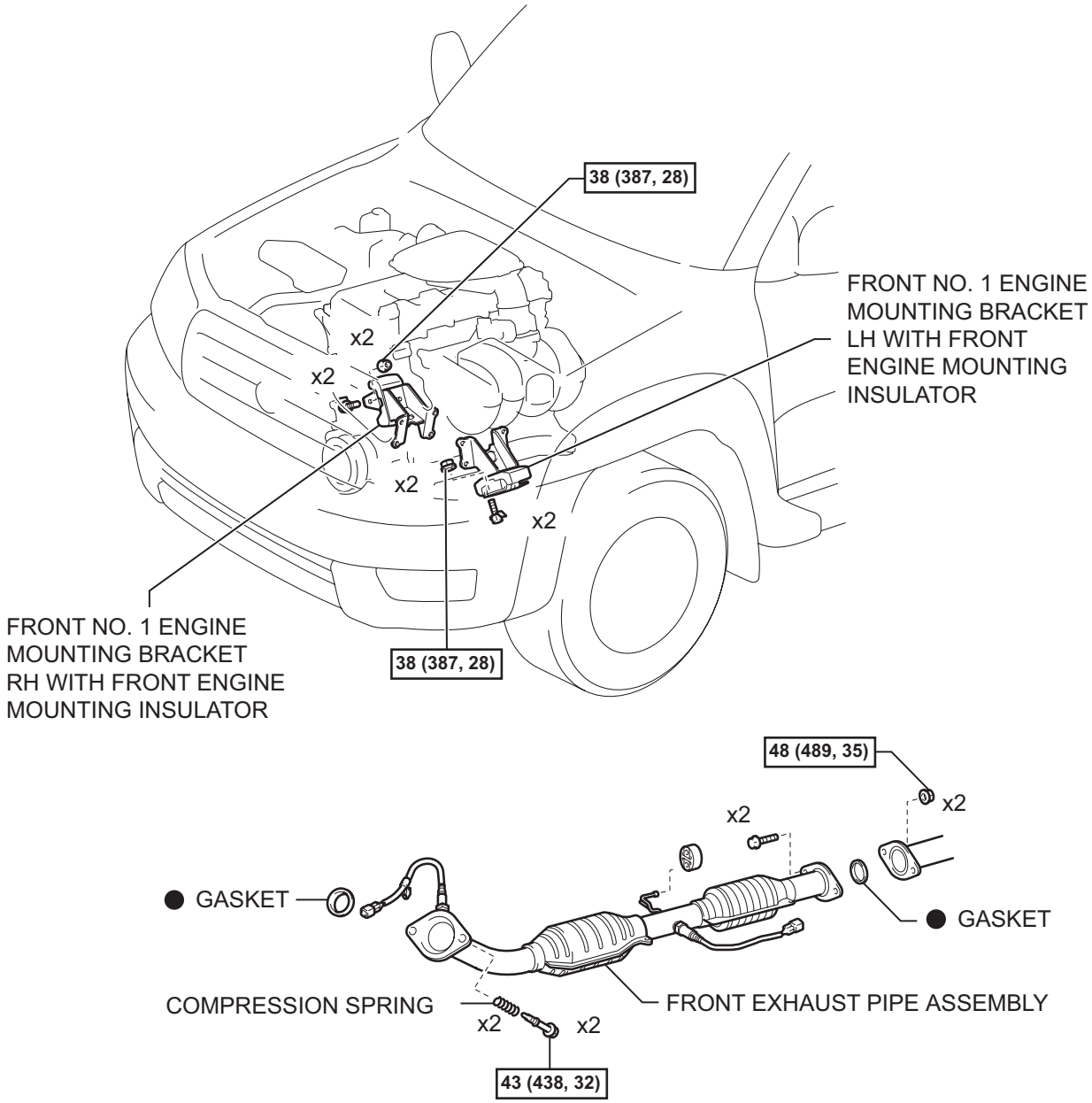

N*m (kgf*cm, ft*lbf) : Specified torque

● Non-reusable part

A113643E01

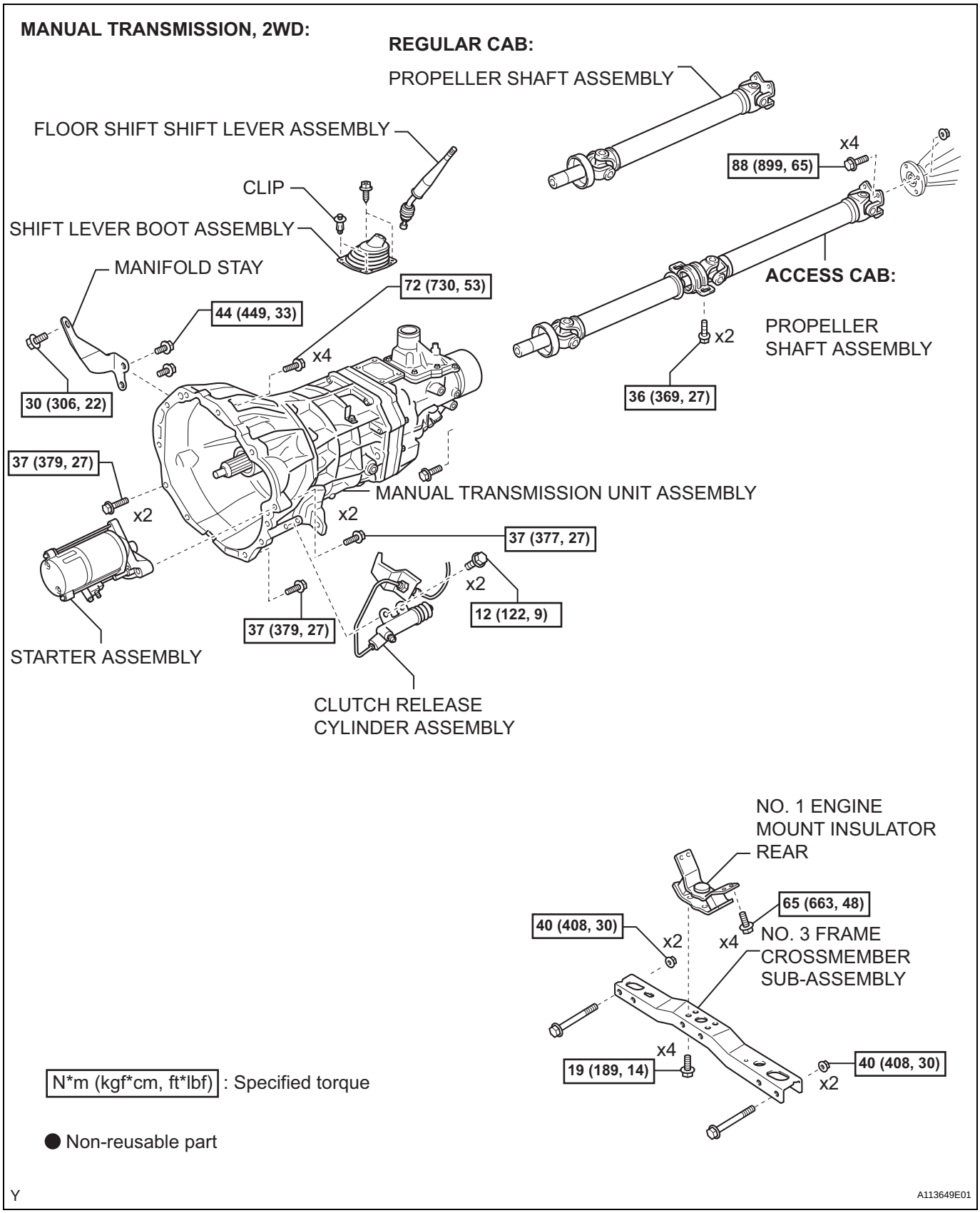
MANUAL TRANSMISSION, 2WD:
REGULAR CAB:
PROPELLER SHAFT ASSEMBLY
FLOOR SHIFT SHIFT LEVER ASSEMBLY
CLIP
SHIFT LEVER BOOT ASSEMBLY
MANIFOLD STAY
88 (899, 65)
x4
ACCESS CAB:
PROPELLER SHAFT ASSEMBLY
x2
36 (369, 27)
72 (730, 53)
44 (449, 33)
x4
30 (306, 22)
37 (379, 27)
x2
x2
MANUAL TRANSMISSION UNIT ASSEMBLY
37 (377, 27)
x2
12 (122, 9)
37 (379, 27)
STARTER ASSEMBLY
CLUTCH RELEASE CYLINDER ASSEMBLY
NO. 1 ENGINE MOUNT INSULATOR REAR
65 (663, 48)
40 (408, 30)
x2
x4
NO. 3 FRAME CROSSMEMBER SUB-ASSEMBLY
x4
19 (189, 14)
40 (408, 30)
x2
N*m (kgf*cm, ft*lbf) : Specified torque
● Non-reusable part
Y
A113649E01

EM

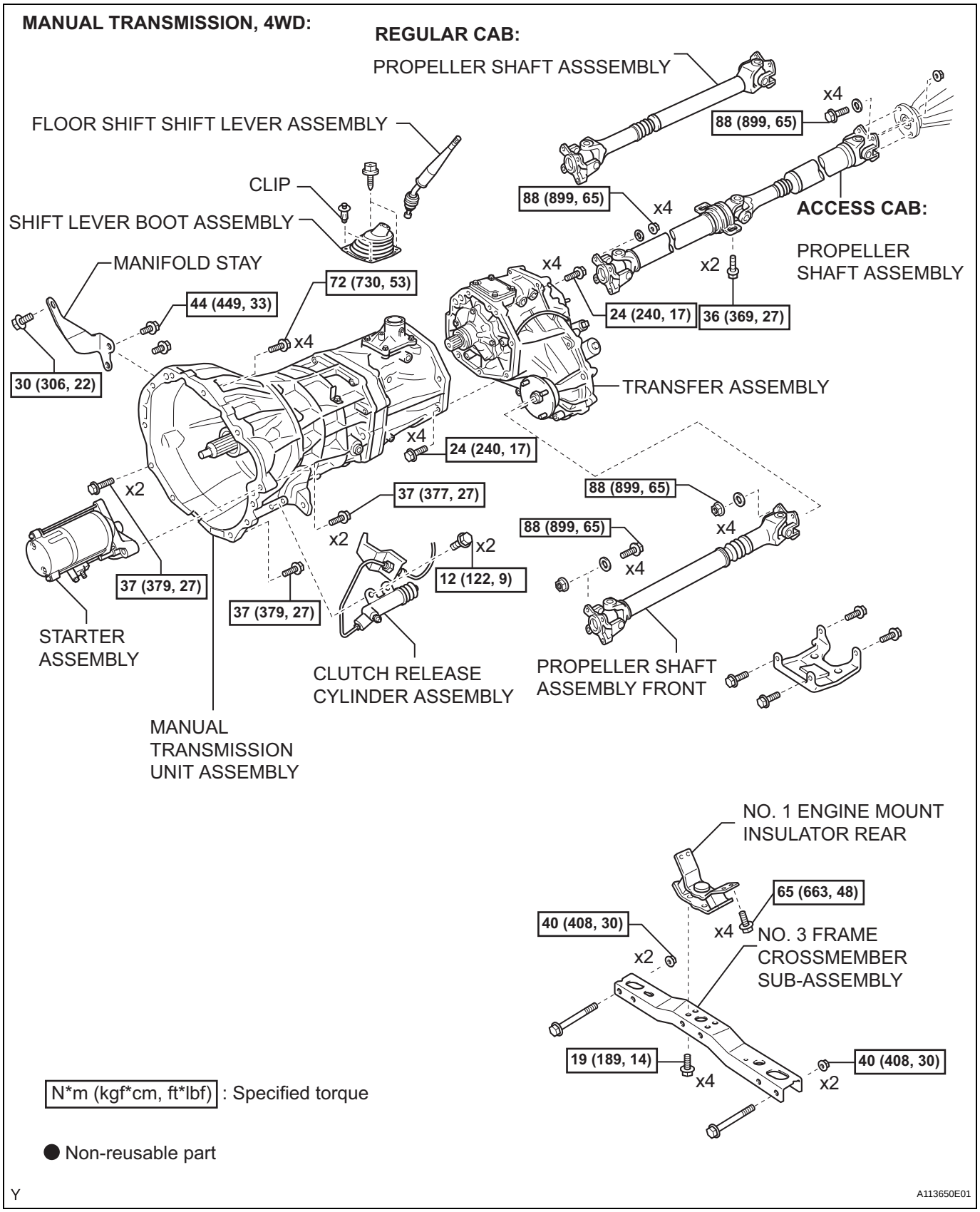
MANUAL TRANSMISSION, 4WD:
REGULAR CAB:
PROPELLER SHAFT ASSSEMBLY
FLOOR SHIFT SHIFT LEVER ASSEMBLY
CLIP
SHIFT LEVER BOOT ASSEMBLY
MANIFOLD STAY
88 (899, 65)
x4
88 (899, 65)
x4
ACCESS CAB:
PROPELLER SHAFT ASSEMBLY
x4
x2
24 (240, 17)
36 (369, 27)
72 (730, 53)
44 (449, 33)
x4
30 (306, 22)
TRANSFER ASSEMBLY
x4
24 (240, 17)
x2
37 (377, 27)
88 (899, 65)
88 (899, 65)
x4
x2
x2
x4
12 (122, 9)
37 (379, 27)
37 (379, 27)
STARTER ASSEMBLY
CLUTCH RELEASE CYLINDER ASSEMBLY
PROPELLER SHAFT ASSEMBLY FRONT
MANUAL TRANSMISSION UNIT ASSEMBLY
NO. 1 ENGINE MOUNT INSULATOR REAR
65 (663, 48)
40 (408, 30)
x4
NO. 3 FRAME CROSSMEMBER SUB-ASSEMBLY
x2
19 (189, 14)
x4
40 (408, 30)
x2
N*m (kgf*cm, ft*lbf) : Specified torque
● Non-reusable part
Y
A113650E01

EM

MANUAL TRANSMISSION:

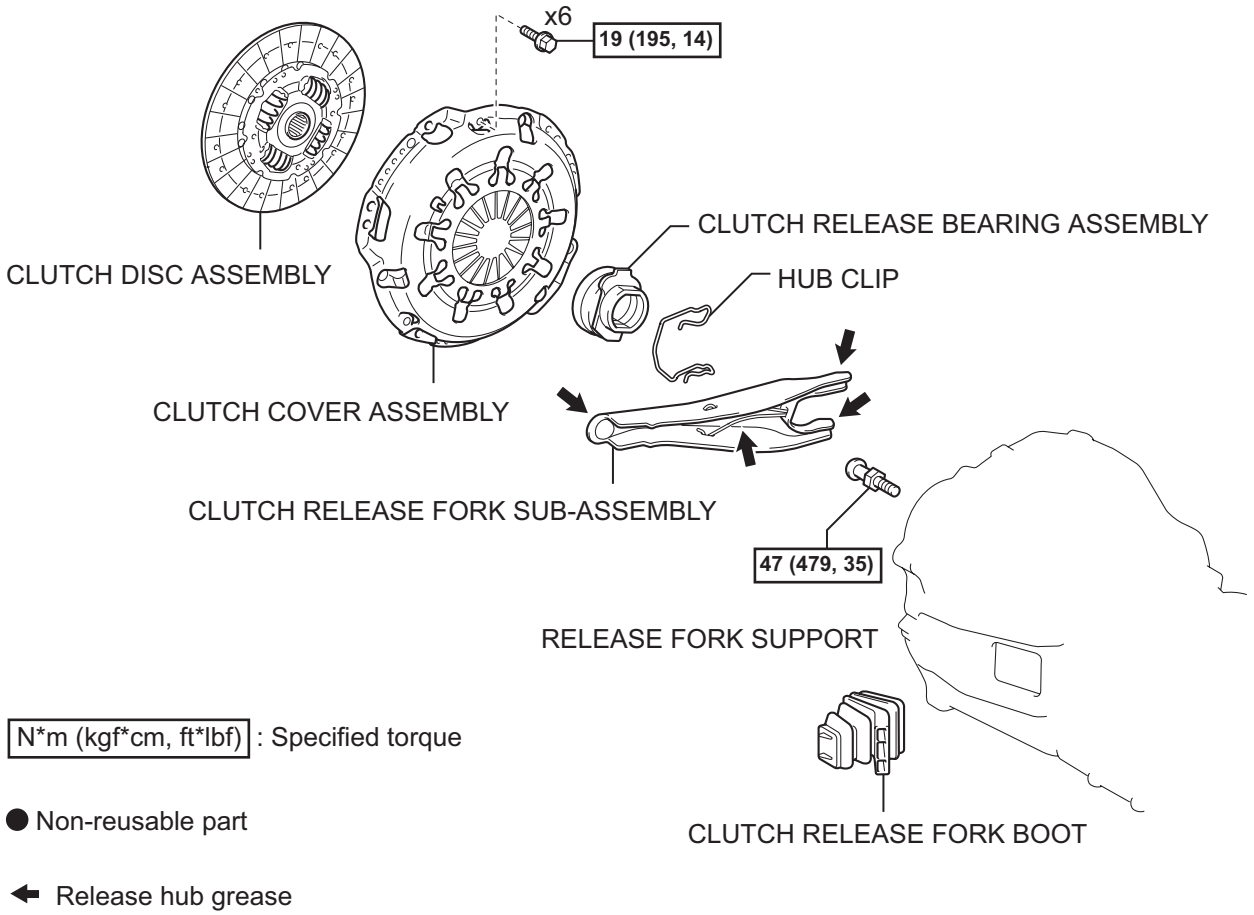

N*m (kgf*cm, ft*lbf) : Specified torque

● Non-reusable part

← Release hub grease

Y

A113651E01

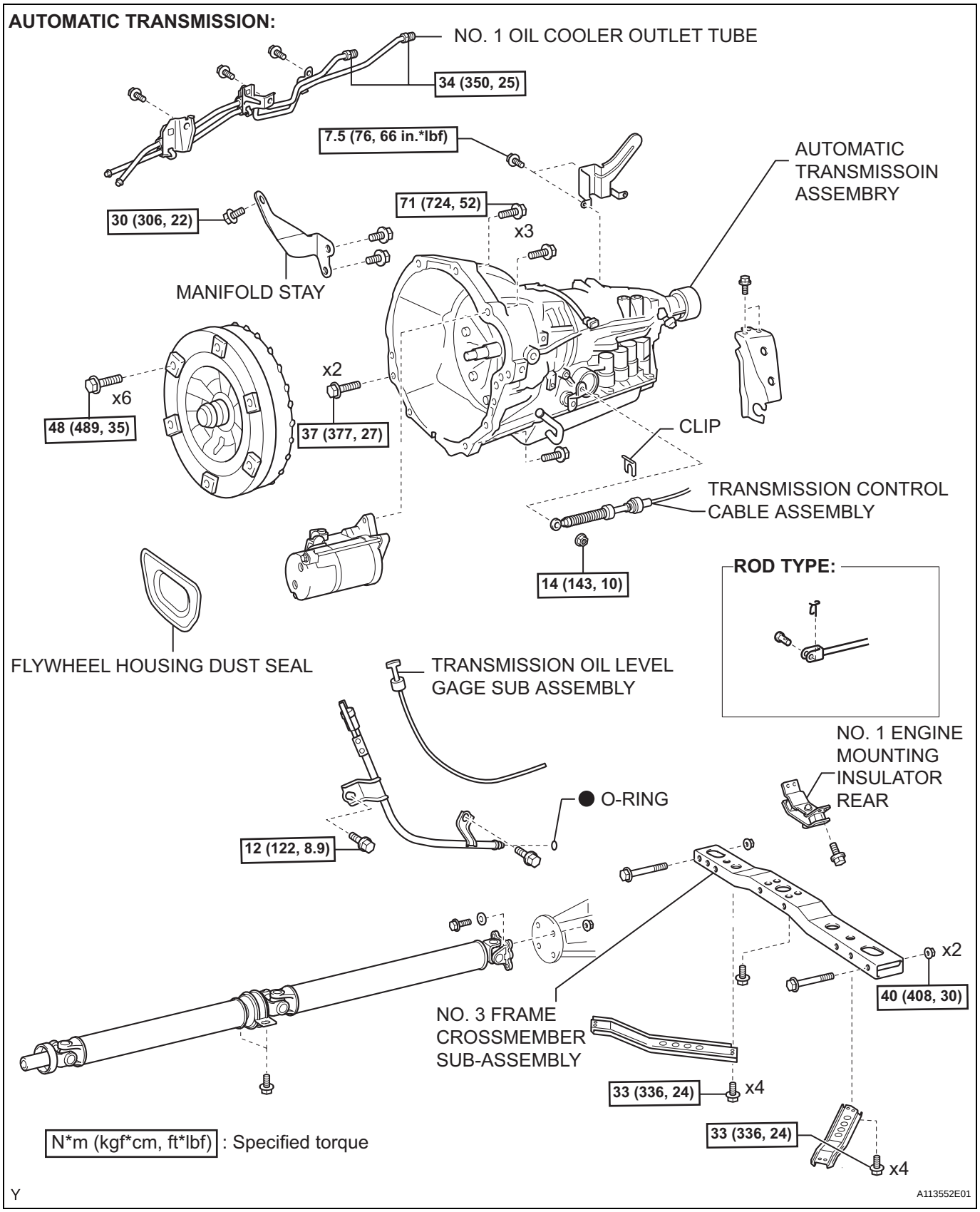
AUTOMATIC TRANSMISSION:
NO. 1 OIL COOLER OUTLET TUBE
34 (350, 25)
7.5 (76, 66 in.*lbf)
AUTOMATIC TRANSMISSOIN ASSEMBRY
71 (724, 52)
x3
30 (306, 22)
MANIFOLD STAY
x2
x6
48 (489, 35)
37 (377, 27)
CLIP
TRANSMISSION CONTROL CABLE ASSEMBLY
14 (143, 10)
ROD TYPE:
FLYWHEEL HOUSING DUST SEAL
TRANSMISSION OIL LEVEL GAGE SUB ASSEMBLY
NO. 1 ENGINE MOUNTING INSULATOR REAR
O-RING
12 (122, 8.9)
x2
40 (408, 30)
NO. 3 FRAME CROSSMEMBER SUB-ASSEMBLY
33 (336, 24)
x4
33 (336, 24)
x4
N*m (kgf*cm, ft*lbf) : Specified torque
Y
A113552E01

EM

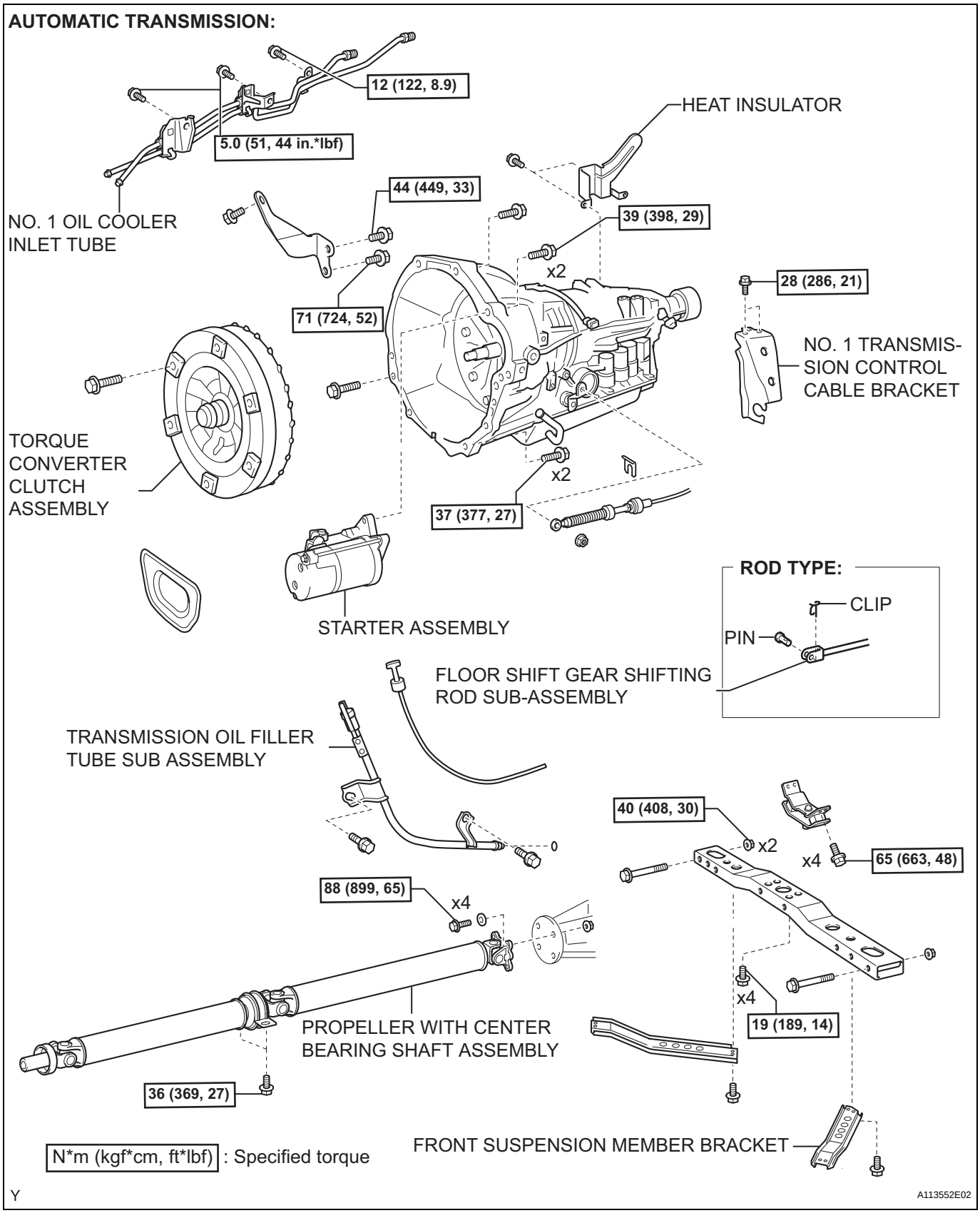
AUTOMATIC TRANSMISSION:
12 (122, 8.9)
5.0 (51, 44 in.*lbf)
NO. 1 OIL COOLER INLET TUBE
HEAT INSULATOR
44 (449, 33)
39 (398, 29)
x2
28 (286, 21)
71 (724, 52)
NO. 1 TRANSMISSION CONTROL CABLE BRACKET
TORQUE CONVERTER CLUTCH ASSEMBLY
x2
37 (377, 27)
STARTER ASSEMBLY
ROD TYPE:
CLIP
PIN
FLOOR SHIFT GEAR SHIFTING ROD SUB-ASSEMBLY
TRANSMISSION OIL FILLER TUBE SUB ASSEMBLY
40 (408, 30)
x2
x4
65 (663, 48)
88 (899, 65)
x4
x4
19 (189, 14)
PROPELLER WITH CENTER BEARING SHAFT ASSEMBLY
36 (369, 27)
FRONT SUSPENSION MEMBER BRACKET
N*m (kgf*cm, ft*lbf) : Specified torque
Y
A113552E02

EM

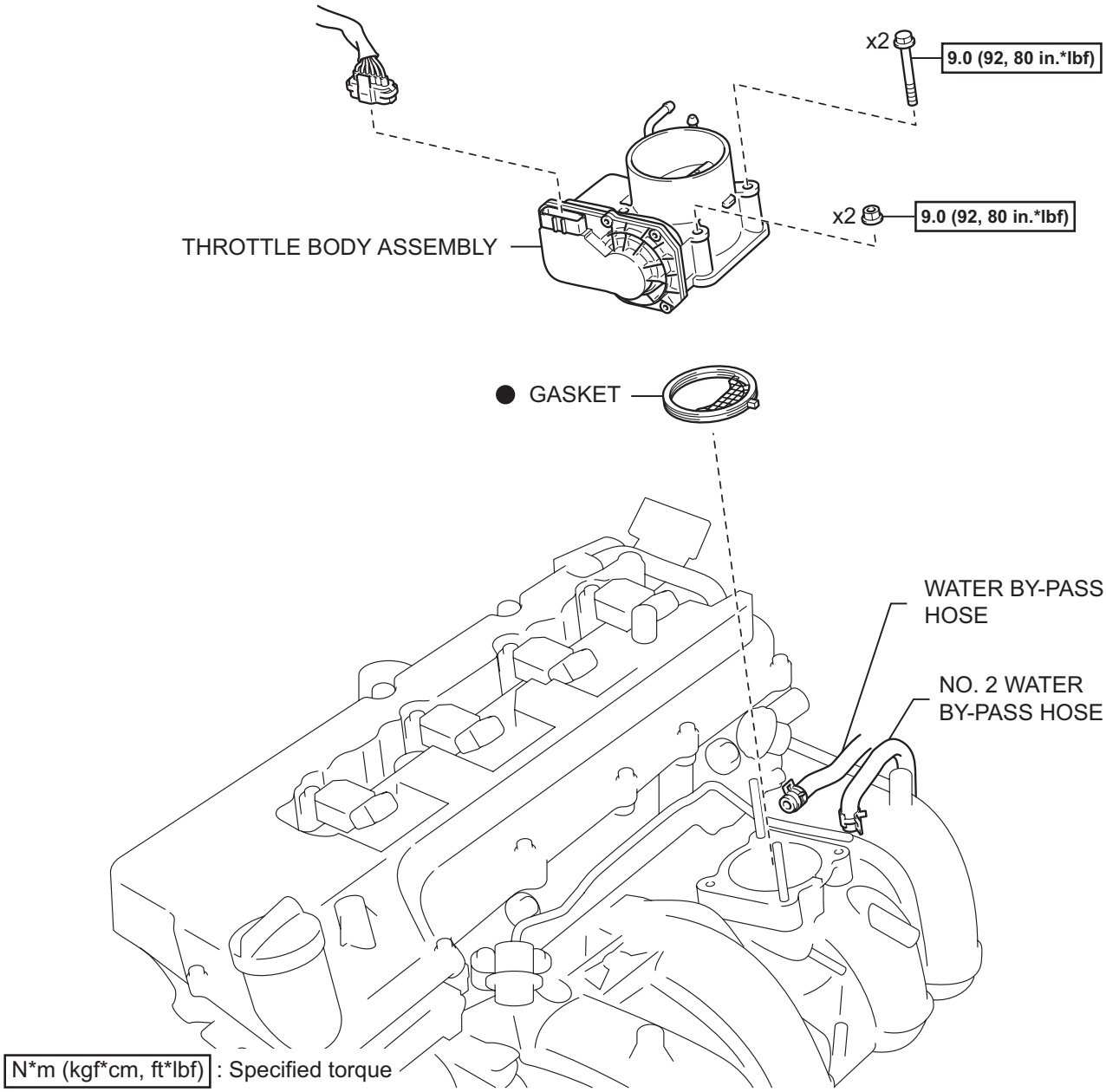

● Non-reusable part

T

A113624E01

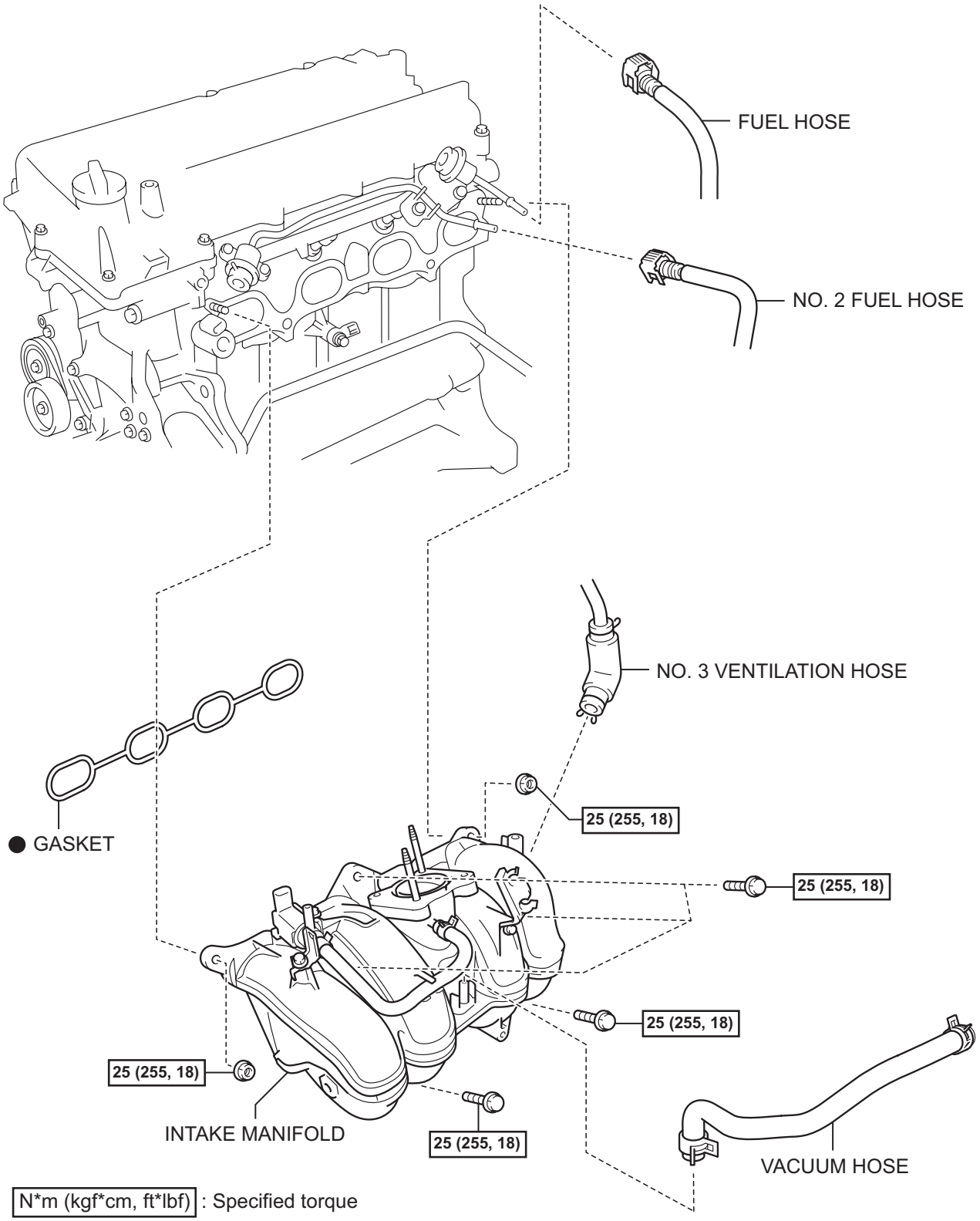

N*m (kgf*cm, ft*lbf) : Specified torque

● Non-reusable part

T

A113644E01

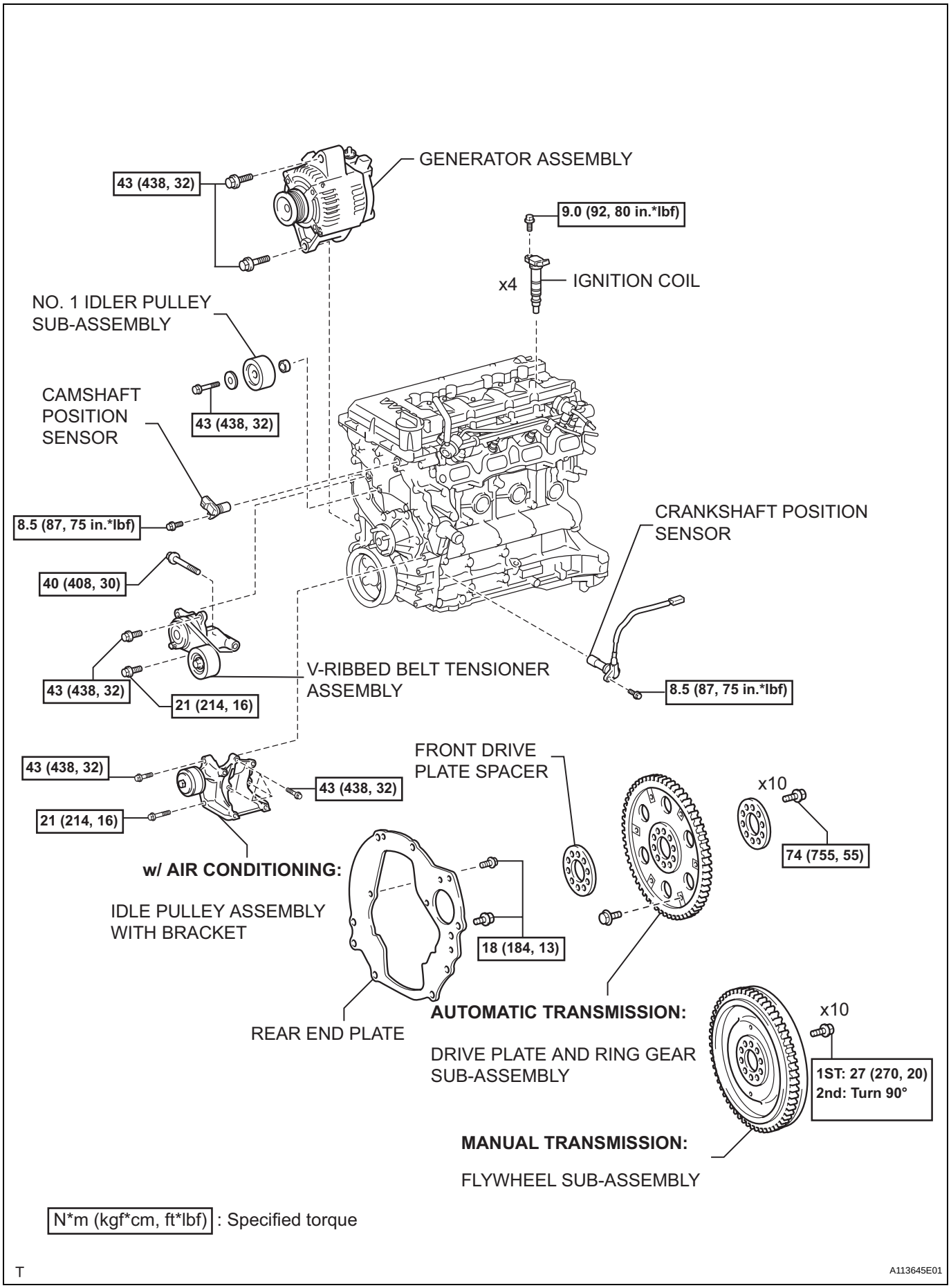
GENERATOR ASSEMBLY
43 (438, 32)
9.0 (92, 80 in.*lbf)
x4
IGNITION COIL
NO. 1 IDLER PULLEY SUB-ASSEMBLY
CAMSHAFT POSITION SENSOR
43 (438, 32)
8.5 (87, 75 in.*lbf)
CRANKSHAFT POSITION SENSOR
40 (408, 30)
43 (438, 32)
21 (214, 16)
V-RIBBED BELT TENSIONER ASSEMBLY
8.5 (87, 75 in.*lbf)
43 (438, 32)
43 (438, 32)
21 (214, 16)
FRONT DRIVE PLATE SPACER
x10
74 (755, 55)
w/ AIR CONDITIONING:
IDLE PULLEY ASSEMBLY WITH BRACKET
18 (184, 13)
REAR END PLATE
AUTOMATIC TRANSMISSION:
DRIVE PLATE AND RING GEAR SUB-ASSEMBLY
x10
1ST: 27 (270, 20)
2nd: Turn 90°
MANUAL TRANSMISSION:
FLYWHEEL SUB-ASSEMBLY
N*m (kgf*cm, ft*lbf) : Specified torque
T
A113645E01

EM

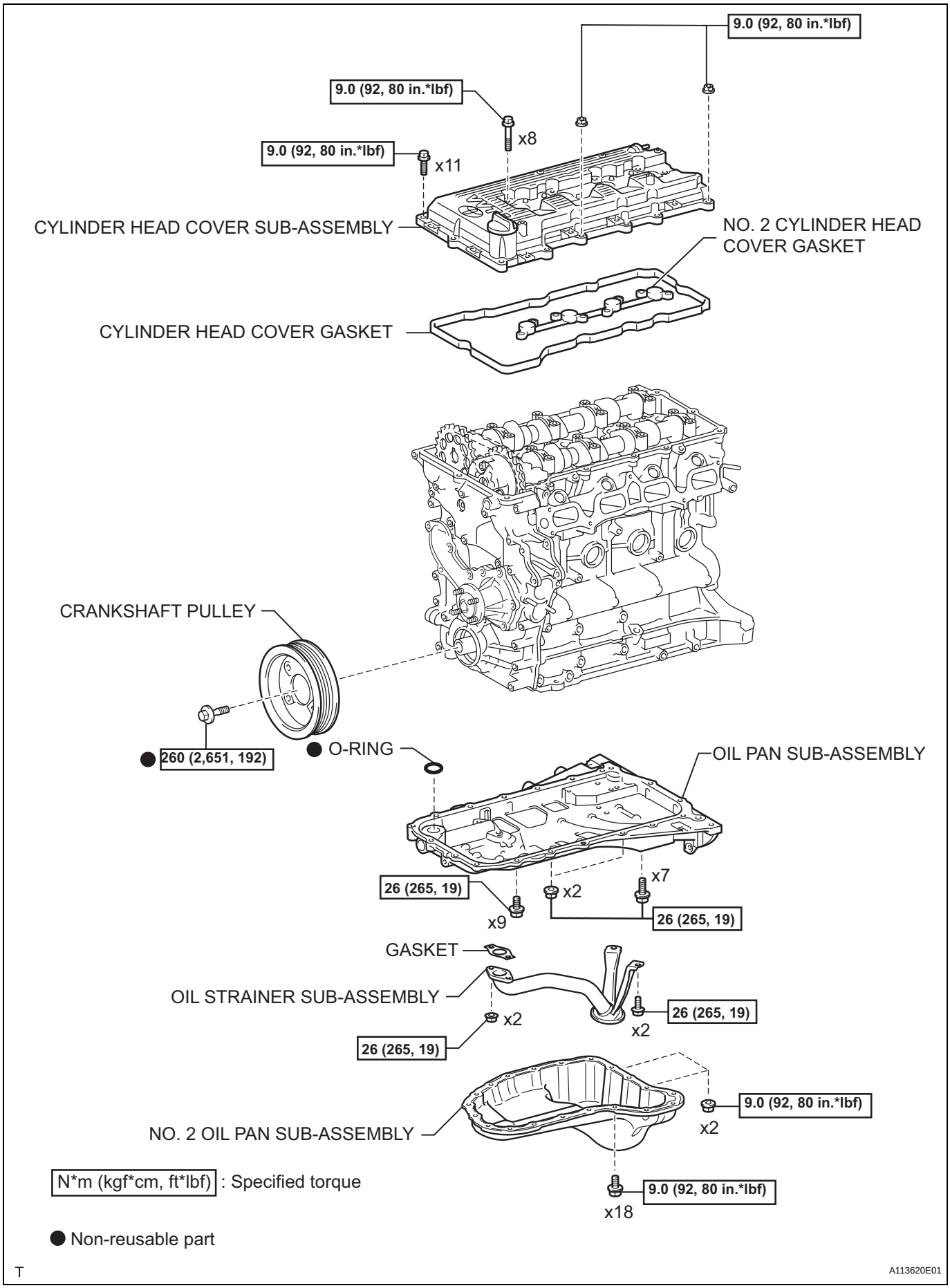
9.0 (92, 80 in.*lbf)
9.0 (92, 80 in.*lbf)
x8
9.0 (92, 80 in.*lbf)
x11
CYLINDER HEAD COVER SUB-ASSEMBLY
NO. 2 CYLINDER HEAD COVER GASKET
CYLINDER HEAD COVER GASKET
CRANKSHAFT PULLEY
260 (2,651, 192)
O-RING
OIL PAN SUB-ASSEMBLY
26 (265, 19)
x9
x2
x7
26 (265, 19)
GASKET
OIL STRAINER SUB-ASSEMBLY
x2
26 (265, 19)
x2
26 (265, 19)
9.0 (92, 80 in.*lbf)
x2
NO. 2 OIL PAN SUB-ASSEMBLY
N*m (kgf*cm, ft*lbf) : Specified torque
9.0 (92, 80 in.*lbf)
x18
Non-reusable part
T
A113620E01

EM

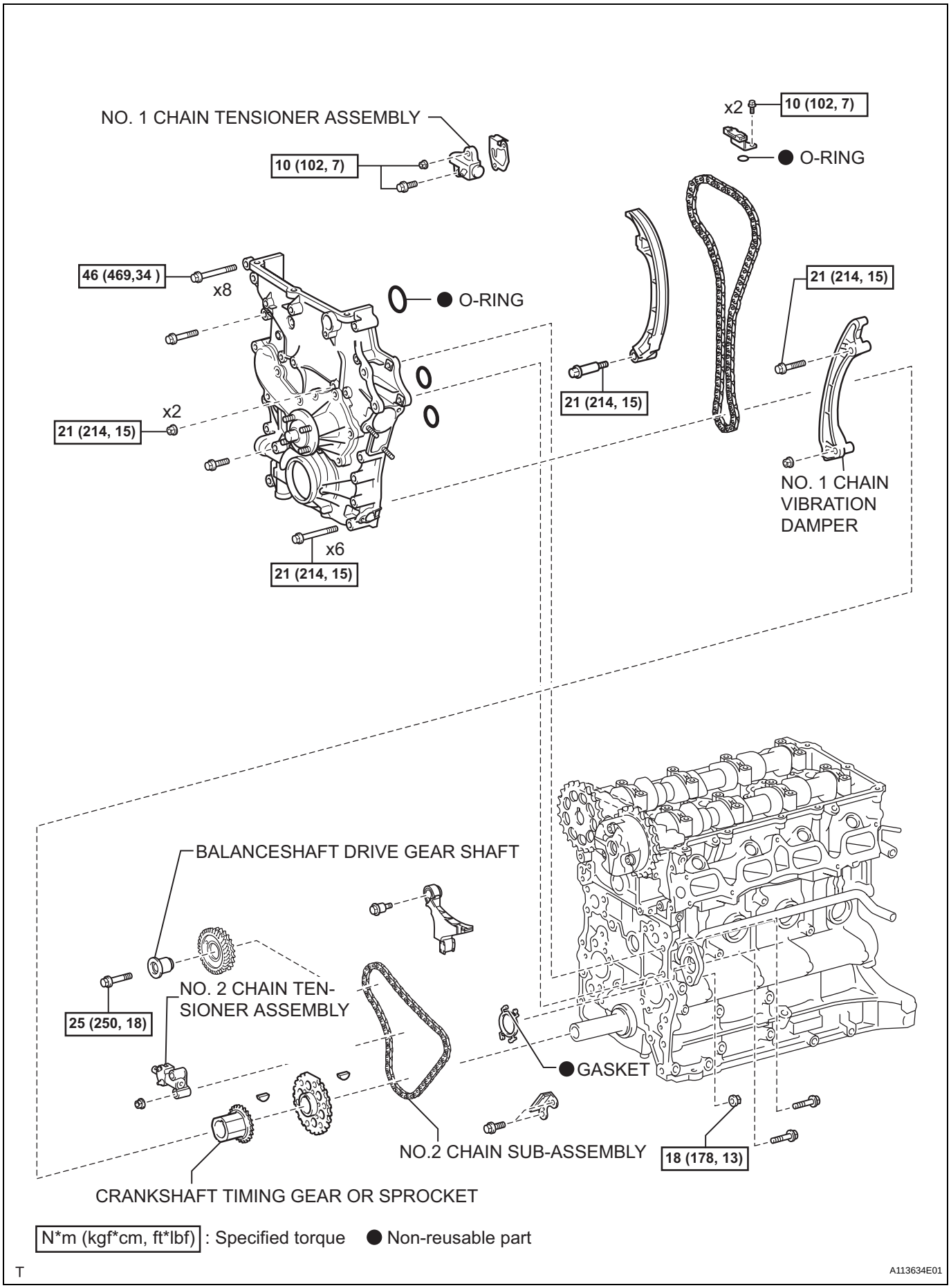

N*m (kgf*cm, ft*lbf) : Specified torque ● Non-reusable part

T

A113634E01

EM

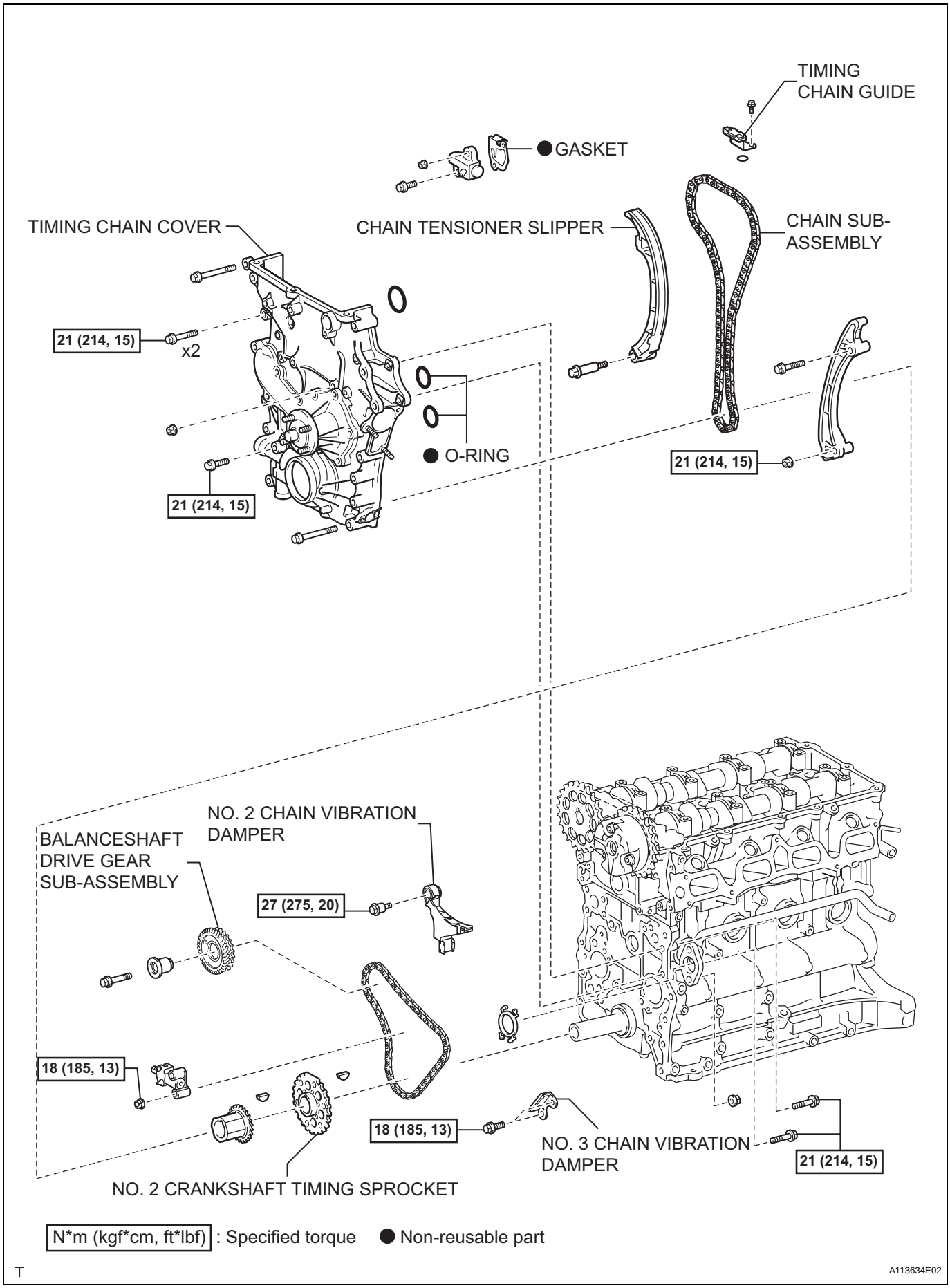
TIMING CHAIN GUIDE
GASKET
TIMING CHAIN COVER
CHAIN TENSIONER SLIPPER
CHAIN SUB-ASSEMBLY
21 (214, 15)
x2
O-RING
21 (214, 15)
21 (214, 15)
NO. 2 CHAIN VIBRATION DAMPER
BALANCESHAFT DRIVE GEAR SUB-ASSEMBLY
27 (275, 20)
18 (185, 13)
18 (185, 13)
NO. 3 CHAIN VIBRATION DAMPER
21 (214, 15)
NO. 2 CRANKSHAFT TIMING SPROCKET
N*m (kgf*cm, ft*lbf) : Specified torque
Non-reusable part
T
A113634E02

EM

REMOVAL

1. **REMOVE HOOD SUB-ASSEMBLY**
2. **DISCHARGE FUEL SYSTEM PRESSURE**
   (See page FU-1)
3. **REMOVE NO. 1 ENGINE UNDER COVER SUB-ASSEMBLY (for 4WD and Pre-Runner)**
   (a) Remove the 4 bolts, then remove the No. 1 engine under cover.
4. **REMOVE NO. 2 ENGINE UNDER COVER SUB-ASSEMBLY (for 4WD and Pre-Runner, Regular Cab)**
   (a) Remove the 4 bolts, then remove the No. 2 engine under cover.
5. **DRAIN ENGINE OIL (See page LU-3)**
6. **DRAIN ENGINE COOLANT (See page CO-3)**
7. **REMOVE BATTERY**
8. **REMOVE BATTERY TRAY**
9. **REMOVE RADIATOR SUPPORT TO FRAME SEAL LH (See page CO-12)**
10. **REMOVE FAN SHROUD (See page CO-13)**
11. **REMOVE AIR CLEANER CAP SUB-ASSEMBLY (See page EC-14)**
12. **REMOVE AIR CLEANER FILTER ELEMENT SUB-ASSEMBLY**
13. **REMOVE AIR CLEANER CASE**
    (a) Remove the 3 bolts, then remove the air cleaner case.
14. **SEPARATE VANE PUMP ASSEMBLY**
    (a) Disconnect the vane pump connector.
    (b) Remove the 2 bolts, then separate the vane pump.
    HINT:
    Do not disconnect the hose. Hang the vane pump with a rope.
15. **REMOVE NO. 2 RADIATOR HOSE**

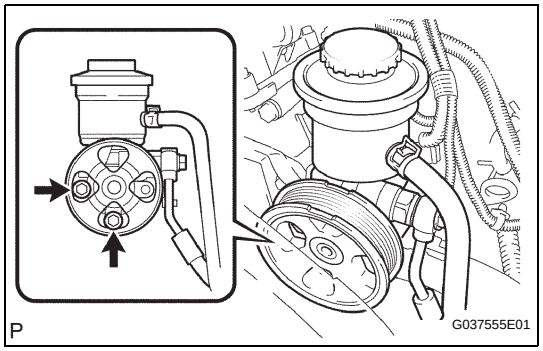

16. **SEPARATE COMPRESSOR AND MAGNETIC CLUTCH (w/ Air Conditioning System)**
    (a) Remove the bolt shown in the illustration.

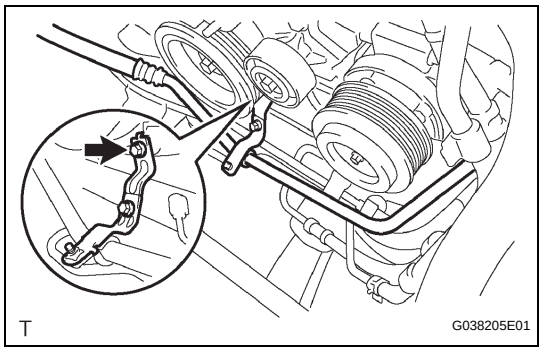

EM

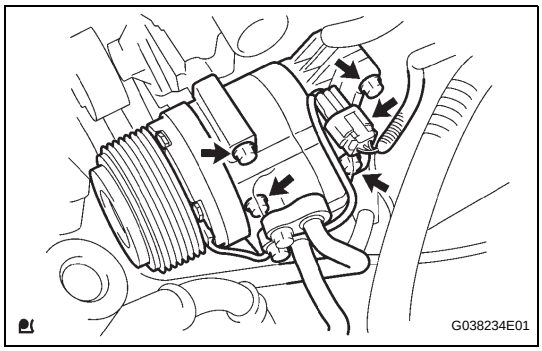

(b) Disconnect the compressor and magnetic clutch connector.

(c) Remove the 4 bolts, then separate the compressor and magnetic clutch.
HINT:
Do not disconnect the hose. Hang the vane pump with a rope.

17. REMOVE RADIATOR HOSE INLET

18. SEPARATE WATER HOSE SUB-ASSEMBLY (See page EM-92)

19. DISCONNECT FUEL HOSE (See page FU-11)

20. DISCONNECT FUEL HOSE NO.2 (See page FU-11)

21. SEPARATE FUEL VAPOR FEED HOSE ASSEMBLY (See page EM-93)

22. DISCONNECT NO. 1 AIR INJECTION HOSE (See page EM-93)

23. DISCONNECT ENGINE WIRE (See page EM-93)

24. REMOVE EXHAUST PIPE ASSEMBLY (See page EX-2)

25. REMOVE FRONT EXHAUST PIPE ASSEMBLY (See page EX-2)

26. REMOVE MANUAL TRANSMISSION UNIT ASSEMBLY

Transmission	See page
R155	MT-6
R155F	MT-8

27. REMOVE AUTOMATIC TRANSMISSION ASSEMBLY (See page AT-109)

28. REMOVE ENGINE ASSEMBLY (See page EM-93)

29. REMOVE CLUTCH COVER ASSEMBLY (for Manual Transmission)

Transmission	See page
R155	CL-30
R155F	CL-35

30. REMOVE CLUTCH DISC ASSEMBLY (for Manual Transmission)

Transmission	See page
R155	CL-30
R155F	CL-35

31. REMOVE FLYWHEEL SUB-ASSEMBLY (for Manual Transmission) (See page EM-77)

32. REMOVE DRIVE PLATE AND RING GEAR SUB-ASSEMBLY (for Automatic Transmission) (See page EM-78)

33. REMOVE REAR END PLATE

(a) Remove the 2 bolts, then remove the rear end plate.

34. REMOVE INTAKE AIR CONNECTOR (See page ES-452)

35. REMOVE GENERATOR ASSEMBLY (See page CH-7)

36. REMOVE V-RIBBED BELT TENSIONER ASSEMBLY (See page CO-5)

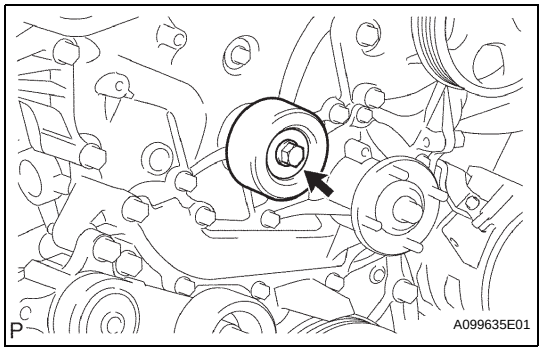

37. REMOVE NO. 1 IDLER PULLEY SUB-ASSEMBLY

(a) Remove the bolt and No. 1 idler pulley sub-assembly.

38. REMOVE IDLE PULLEY ASSEMBLY WITH BRACKET (w/ Air Conditioning System) (See page ES-446)

39. REMOVE CRANKSHAFT POSITION SENSOR (See page ES-444)

40. REMOVE CAMSHAFT POSITION SENSOR (See page ES-444)

41. REMOVE NO. 1 INTAKE MANIFOLD TO HEAD GASKET (See page ES-463)

42. REMOVE CYLINDER HEAD COVER SUB-ASSEMBLY (See page EM-38)

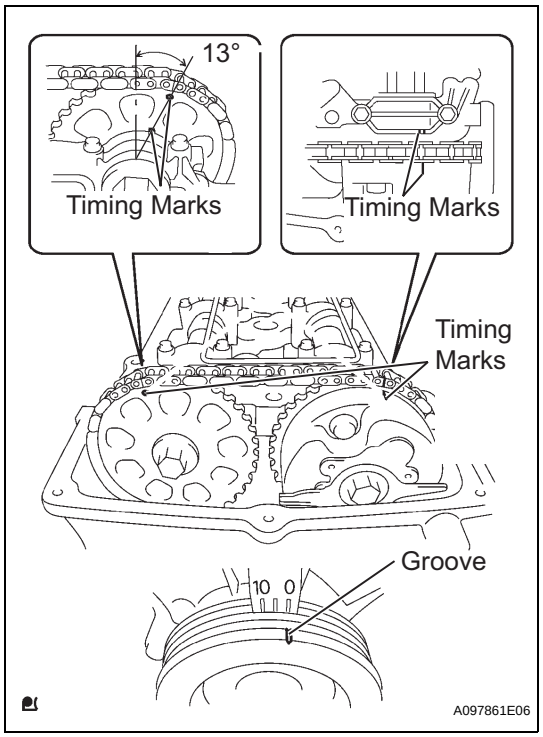

43. REMOVE CRANKSHAFT PULLEY

(a) Set the No. 1 cylinder to the TDC/ compression.

(1) Turn the crankshaft pulley clockwise and align its timing mark notch with the timing mark "0".

(2) Check that the timing marks of the camshaft timing gear are located as illustrated.

HINT:

If not, turn the crankshaft to align the marks.

EM

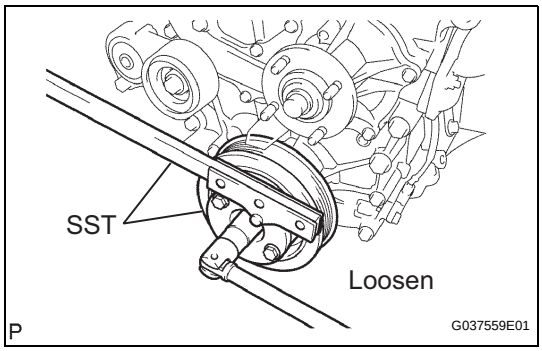

(b) Using SST, loosen the crankshaft pulley bolt.
SST 09213-54015 (91651-60855), 09330-00021
HINT:
Loosen the crankshaft pulley bolt until only 2 or 3 threads are still installed in the crankshaft.

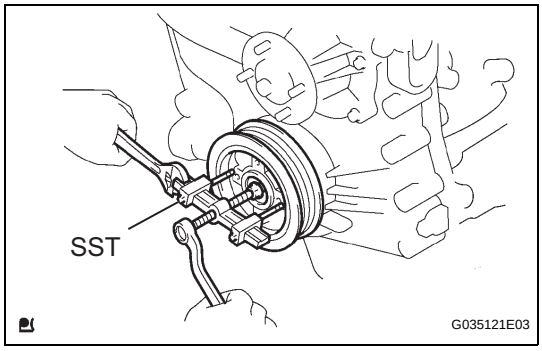

(c) Using SST, remove the crankshaft pulley and crankshaft pulley bolt.
SST 09950-50013 (09951-05010, 09952-05010, 09953-05010, 09954-05021)

44. REMOVE OIL LEVEL GAGE SUB-ASSEMBLY

EM

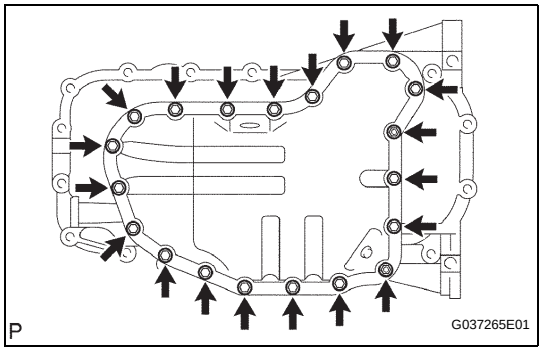

45. REMOVE NO. 2 OIL PAN SUB-ASSEMBLY
(a) Remove the 18 bolts and 2 nuts.

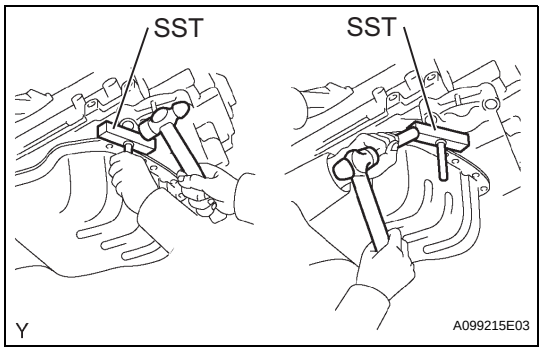

(b) Insert the blade of SST between the pans. Cut through the applied sealer and remove the oil pan.
SST 09032-00100
NOTICE:
Be careful not to damage the contact surface of the oil pans.

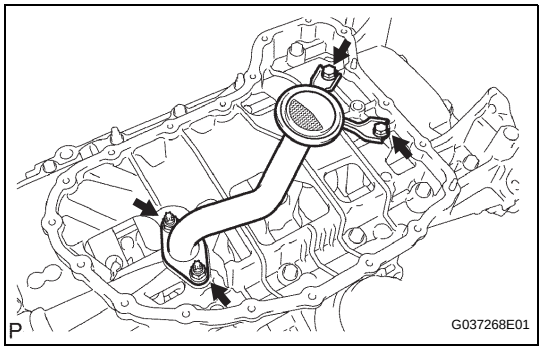

46. REMOVE OIL STRAINER SUB-ASSEMBLY
(a) Remove the 2 bolts, 2 nuts, oil strainer and gasket.

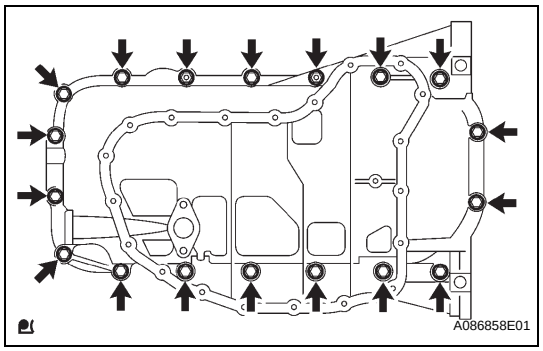

47. REMOVE OIL PAN SUB-ASSEMBLY

(a) Remove the 16 bolts and 2 nuts.

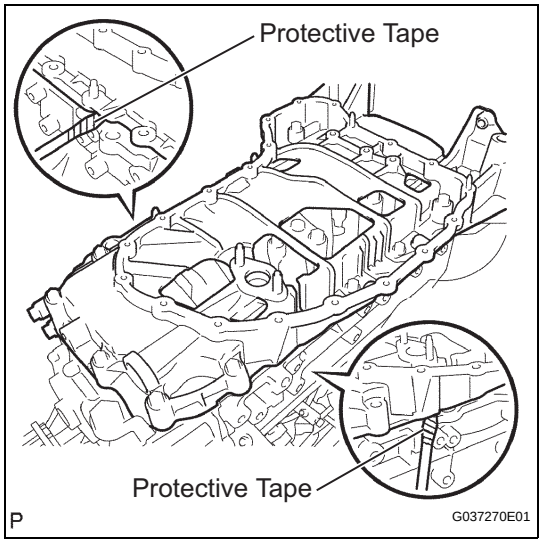

(b) Remove the oil pan by prying between the oil pan and cylinder block with a screwdriver.
HINT:
Tape the screwdriver tip before use.
NOTICE:
Be careful not to damage the contact surfaces of the cylinder block and oil pan.

48. REMOVE TIMING CHAIN COVER (See page LU-21)

EM

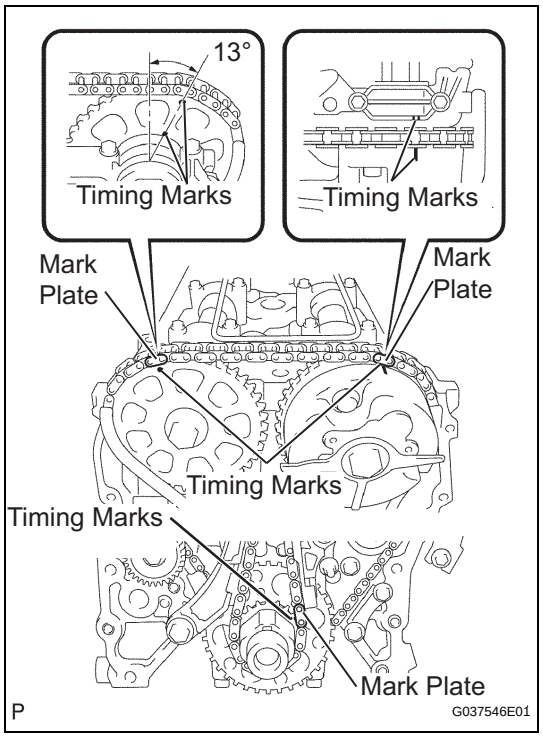

49. REMOVE TIMING CHAIN GUIDE

(a) Make sure that each matchmark is in the position shown in the illustration.

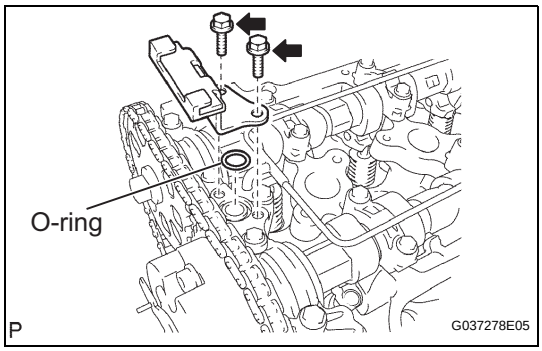

(b) Remove the 2 bolts, timing chain guide and O-ring.

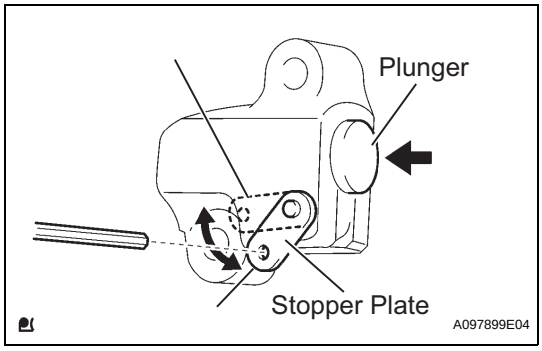

50. REMOVE NO. 1 CHAIN TENSIONER ASSEMBLY

NOTICE:

- **When the chain tensioner is removed, do not rotate the crankshaft.**
- **When the chain is removed and the camshaft needs to be rotated, rotate the crankshaft 90° to the right.**

(a) Move the stopper plate upward to release the lock, and push the plunger deep into the tensioner.

(b) Move the stopper plate downward to set the lock, and insert a 3.0 mm (0.118 in.) diameter bar into the stopper plate hole.

(c) Remove the bolt, nut, chain tensioner and gasket.

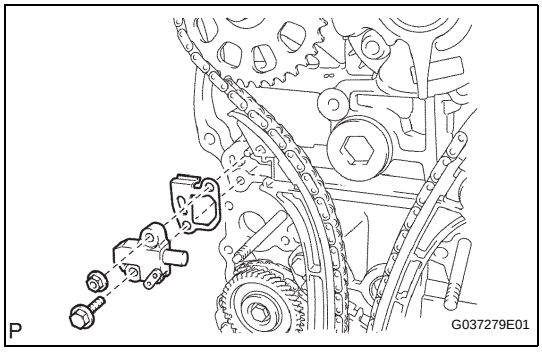

51. REMOVE CHAIN TENSIONER SLIPPER

(a) Remove the bolt and tensioner slipper.

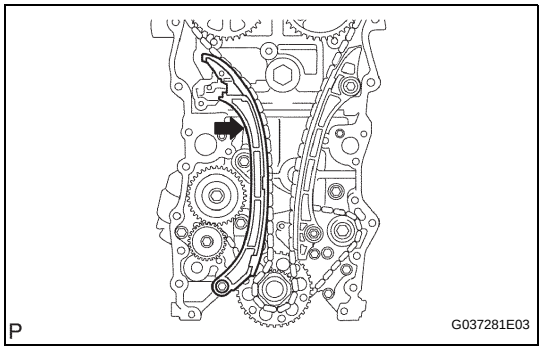

EM

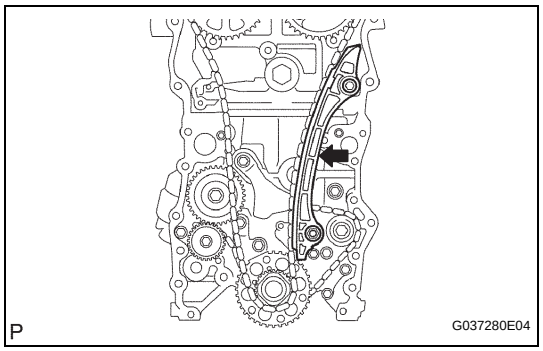

52. REMOVE NO. 1 CHAIN VIBRATION DAMPER

(a) Remove the 2 bolts and vibration damper.

53. REMOVE CHAIN SUB-ASSEMBLY

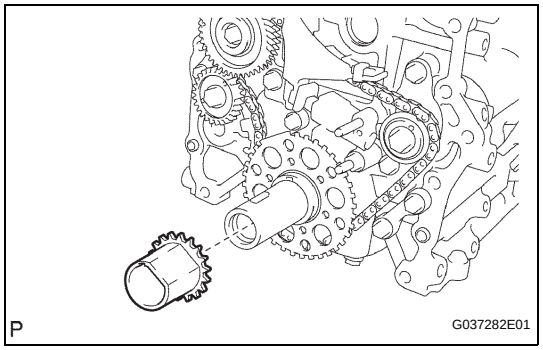

54. REMOVE CRANKSHAFT TIMING GEAR OR SPROCKET

(a) Remove the crankshaft timing gear from the crankshaft.

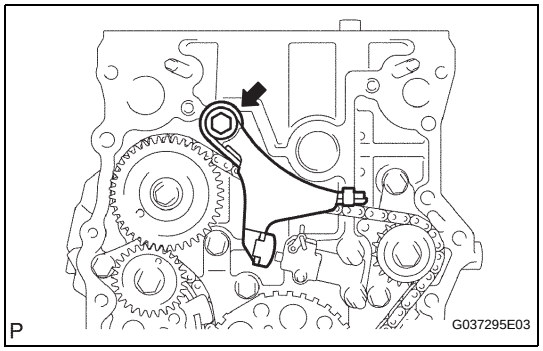

55. REMOVE NO. 2 CHAIN VIBRATION DAMPER

(a) Remove the bolt and No. 2chain vibration damper.

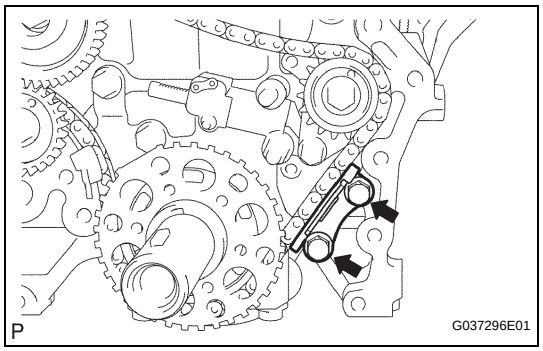

56. REMOVE NO. 3 CHAIN VIBRATION DAMPER

(a) Remove the 2 bolts and No. 3chain vibration damper.

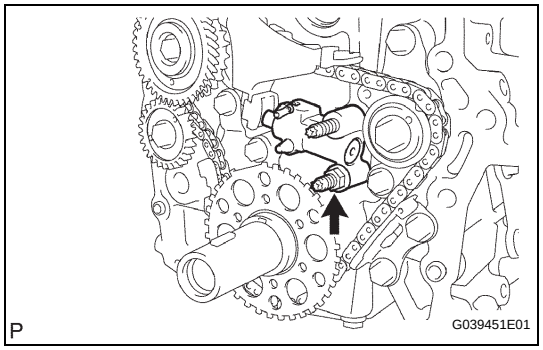

57. REMOVE NO. 2 CHAIN TENSIONER ASSEMBLY

(a) Remove the nut and No. 2 chain tensioner assembly.

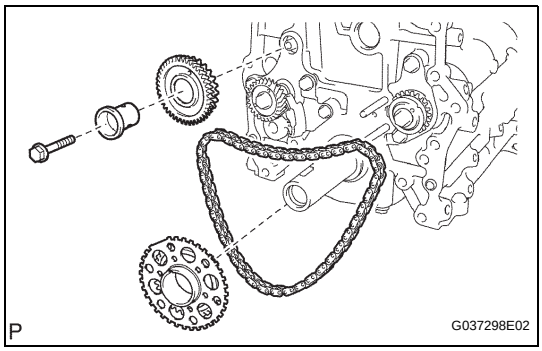

58. REMOVE NO.2 CHAIN SUB-ASSEMBLY

(a) Remove the bolt, balanceshaft drive gear shaft and balanceshaft drive gear.

(b) Remove the crankshaft timing sprocket No. 2 and chain.

INSTALLATION

1. INSTALL NO.2 CHAIN SUB-ASSEMBLY

(a) Install the chain with its mark links aligned with the timing marks on the crankshaft timing sprocket and balanceshaft timing sprocket.

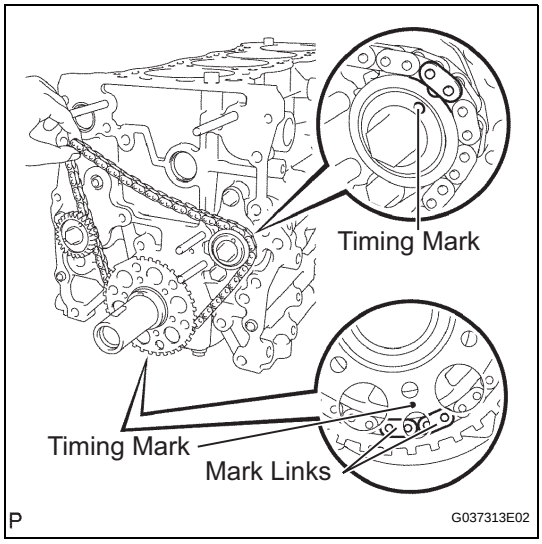

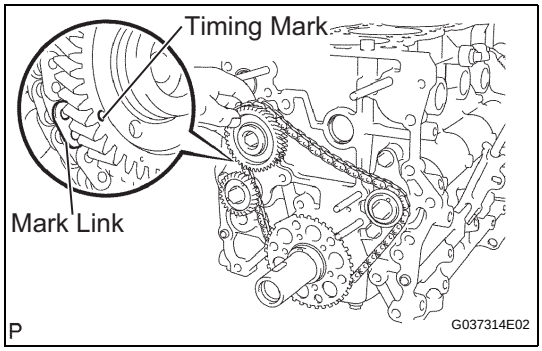

(b) Bring the other mark link of the crankshaft timing sprocket behind the large timing mark of the balanceshaft drive gear.

(c) Insert the balanceshaft drive gear shaft through the balanceshaft drive gear so that it fits into the thrust plate hole.

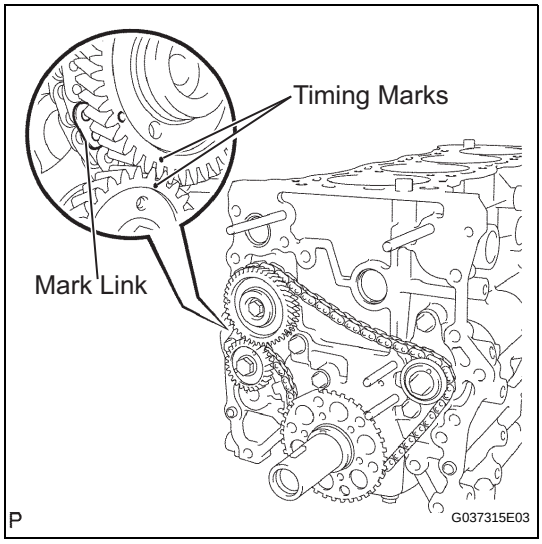

(d) Align the small timing mark of the balanceshaft drive gear with the timing mark of the balanceshaft timing gear.

(e) Install the bolt onto the balanceshaft drive gear and tighten it.
Torque: 25 N*m (250 kgf*cm, 18 ft.*lbf)

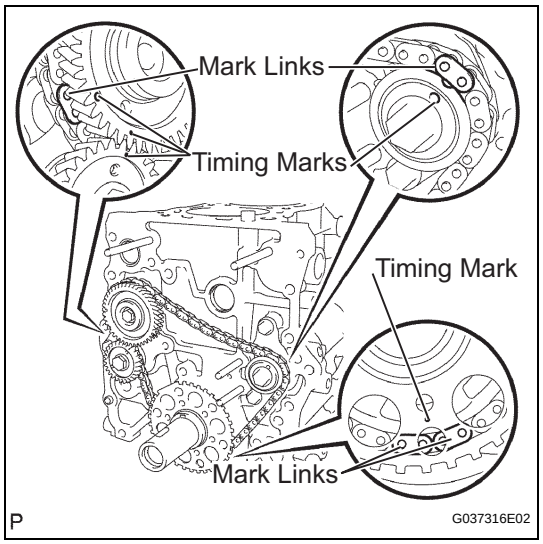

(f) Check that each timing mark is aligned with the corresponding mark link.

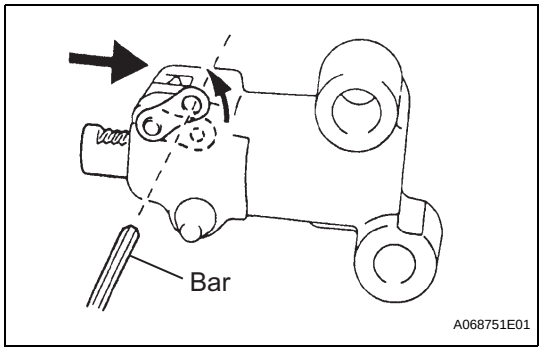

2. INSTALL NO. 2 CHAIN TENSIONER ASSEMBLY

(a) Install the chain tensioner with the nut.
Torque: 18 N*m (185 kgf*cm, 13 ft.*lbf)
NOTICE:
Assemble the chain tensioner with the 3.0 mm (0.118 in.) diameter bar installed, then remove the bar after assembly. When doing this, avoid pushing the vibration damper against the chain.

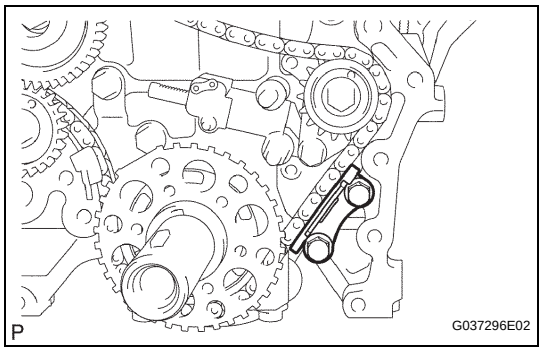

3. INSTALL NO. 3 CHAIN VIBRATION DAMPER

(a) Install the No. 3 chain vibration damper with the 2 bolts.
Torque: 18 N*m (185 kgf*cm, 13 ft.*lbf)

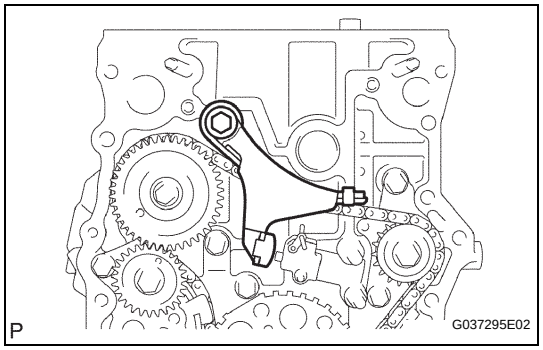

4. INSTALL CHAIN VIBRATION DAMPER NO.2

(a) Install the chain vibration damper with the bolt.
Torque: 27 N*m (270 kgf*cm, 20 ft.*lbf)

(b) Remove the pin from the chain tensioner and release the plunger.

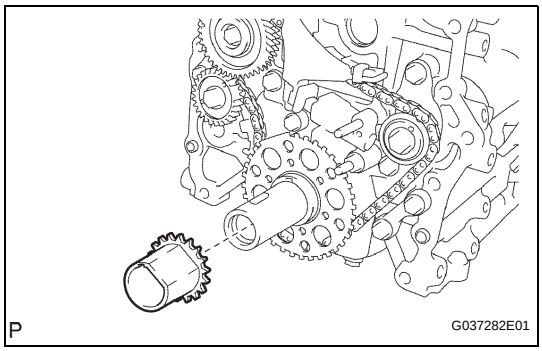

5. INSTALL CRANKSHAFT TIMING GEAR OR SPROCKET

(a) Install the timing sprocket as shown in the illustration.

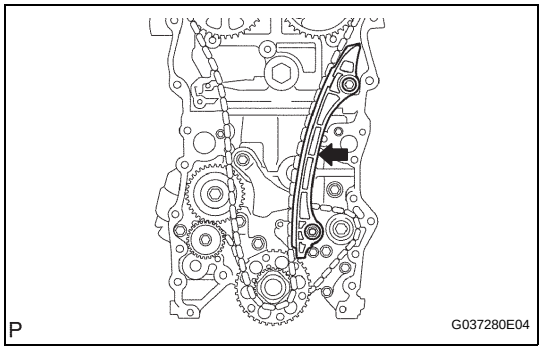

6. INSTALL NO. 1 CHAIN VIBRATION DAMPER

(a) Install the vibration damper with the bolt and nut.
Torque: 21 N*m (214 kgf*cm, 15 ft.*lbf)

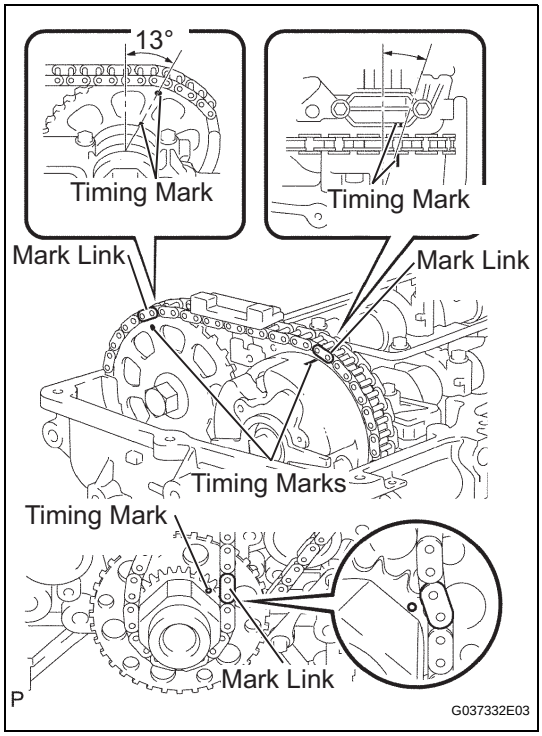

7. INSTALL CHAIN SUB-ASSEMBLY

(a) As shown in the illustration, install the chain onto the sprocket and gear with the painted marks aligned with the timing marks on the sprocket and gear.
HINT:
- The camshaft mark plate is orange.
- The crankshaft mark plate is yellow.

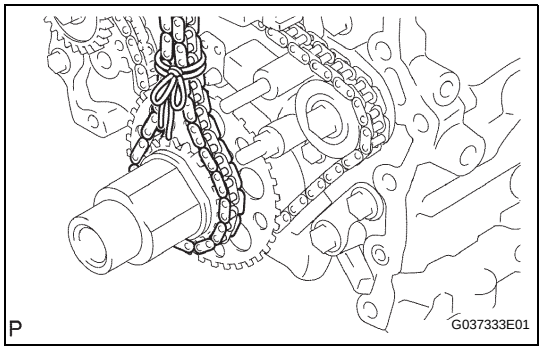

(b) Use a rope to tie the chain of the crankshaft timing sprocket. Tie the rope near the sprocket.
NOTICE:
After the chain tensioner has been installed, the rope must be removed.
HINT:
The rope is tied to prevent gear jumping.

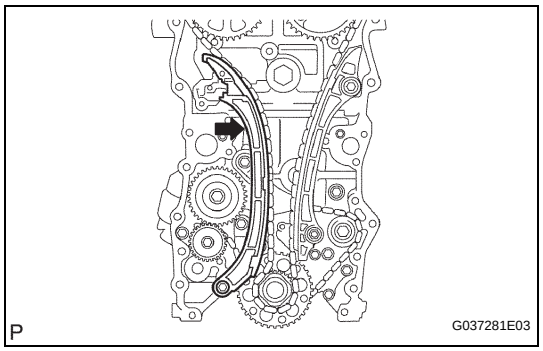

8. INSTALL CHAIN TENSIONER SLIPPER

(a) Install the tensioner slipper with the bolt.
Torque: 21 N*m (214 kgf*cm, 15 ft.*lbf)

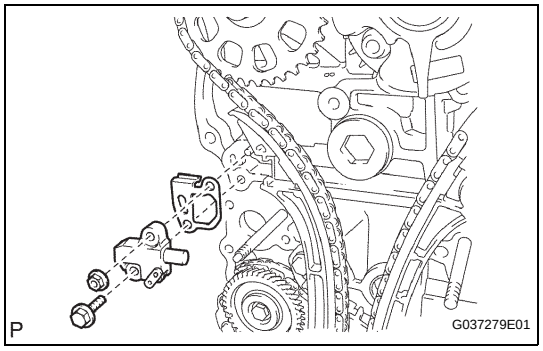

9. INSTALL NO. 1 CHAIN TENSIONER ASSEMBLY

(a) Install a new gasket and the chain tensioner with the bolt and nut.
Torque: 10 N*m (102 kgf*cm, 7 ft.*lbf)

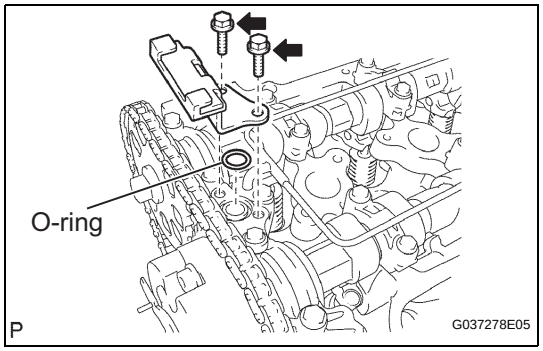

10. INSTALL TIMING CHAIN GUIDE

(a) Install a new O-ring and the chain guide with the 2 bolts.
Torque: 10 N*m (102 kgf*cm, 7 ft.*lbf)

11. INSTALL TIMING CHAIN COVER (See page LU-24)

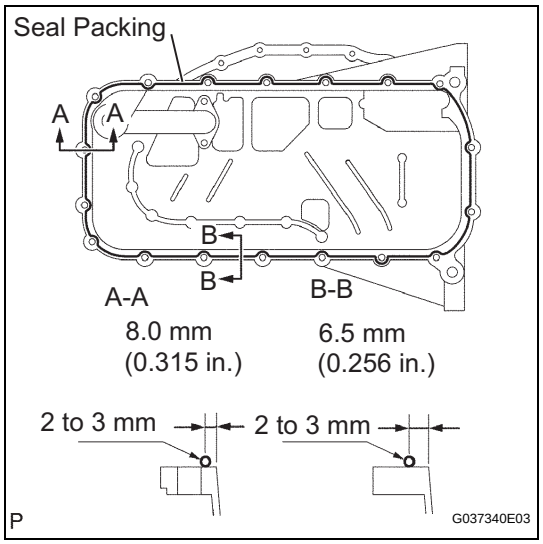

12. INSTALL OIL PAN SUB-ASSEMBLY

(a) Apply continuous beads of seal packing to the places shown in the illustration.
Seal packing:
Part No. 08826-00080 or equivalent
Seal width:
2 to 3 mm (0.079 to 0.118 in.)
NOTICE:
- **Remove any oil from the contact surface.**
- **Install the crankcase within 3 minutes of applying the seal packing.**
- **Do not start the engine for at least 2 hours after installation.**

EM

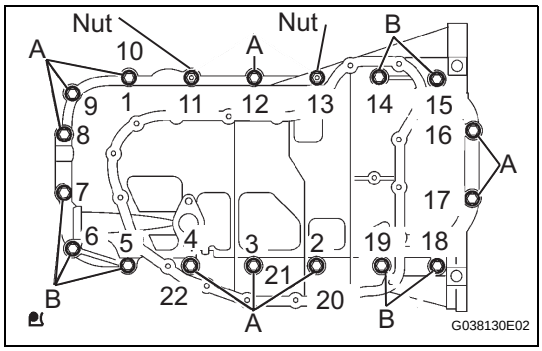

(b) Loosely install the oil pan with the 16 bolts and 2 nuts.
HINT:
Bolt length:
20 mm (0.79 in.) for bolt A,
40 mm (1.57 in.) for bolt B

(c) Uniformly tighten the 16 bolts and 2 nuts in the sequence shown in the illustration.
Torque: 26 N*m (265 kgf*cm, 19 ft.*lbf)

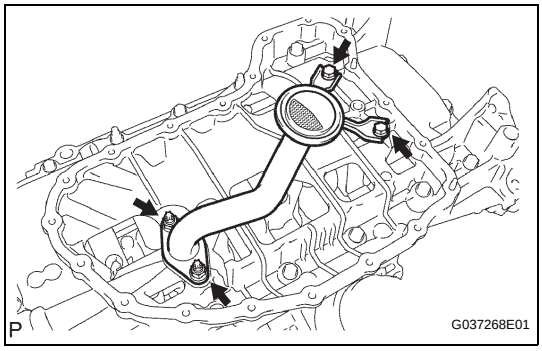

13. INSTALL OIL STRAINER SUB-ASSEMBLY

(a) Install a new gasket and the oil strainer with the 2 bolts and 2 nuts.
Torque: 26 N*m (265 kgf*cm, 19 ft.*lbf)

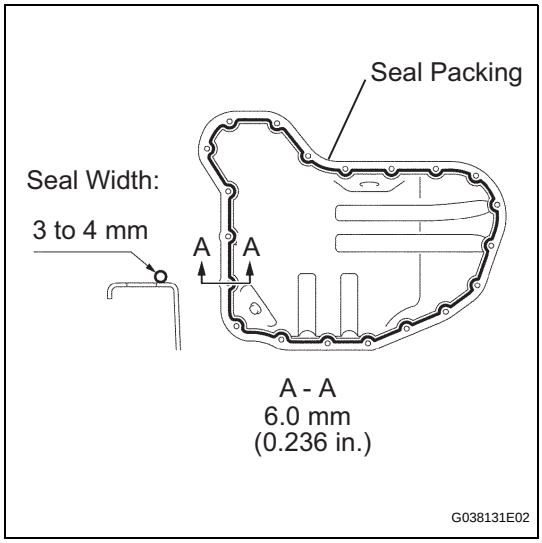

14. INSTALL NO. 2 OIL PAN SUB-ASSEMBLY

(a) Apply continuous beads of seal packing to the places shown in the illustration.
Seal packing:
Part No. 08826-00080 or equivalent
Seal width:
3 to 4 mm (0.118 to 0.157 in.)
NOTICE:
- **Remove any oil from the contact surface.**
- **Install the crankcase within 3 minutes of applying the seal packing.**
- **Do not start the engine for at least 2 hours after installation.**

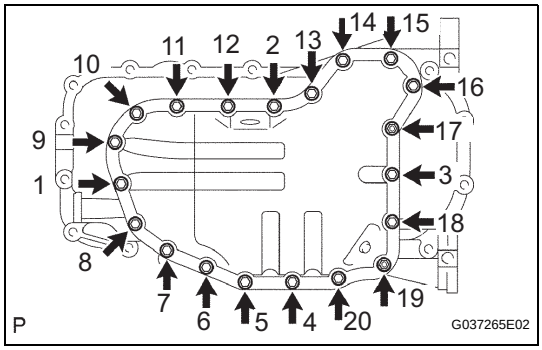

(b) Provisionally install the oil pan with the 18 bolts and 2 nuts.

(c) Uniformly tighten the 18 bolts and 2 nuts in the sequence shown in the illustration.
Torque: 9.0 N*m (92 kgf*cm, 80 in.*lbf)

(d) Install a new gasket and the drain plug.

15. INSTALL OIL LEVEL GAGE SUB-ASSEMBLY

16. INSTALL CRANKSHAFT PULLEY (See page EM-75)

17. INSTALL CYLINDER HEAD COVER SUB-ASSEMBLY (See page EM-48)

18. INSTALL NO. 1 INTAKE MANIFOLD TO HEAD GASKET (See page EM-38)

19. INSTALL CAMSHAFT POSITION SENSOR (See page ES-444)

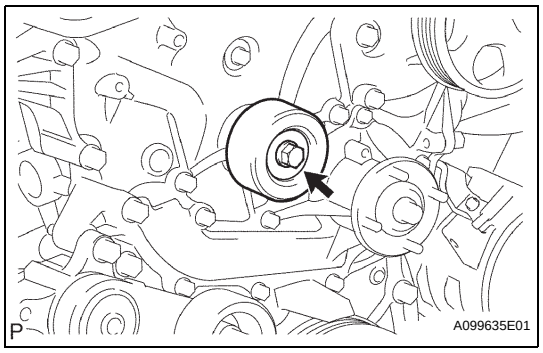

20. INSTALL CRANKSHAFT POSITION SENSOR (See page ES-444)

21. INSTALL IDLE PULLEY ASSEMBLY WITH BRACKET (w/ Air Conditioning System) (See page ES-444)

22. INSTALL NO. 1 IDLER PULLEY SUB-ASSEMBLY

(a) Install the No. 1 idler pulley sub-assembly with the bolt.
Torque: 43 N*m (438 kgf*cm, 32 ft.*lbf)

23. INSTALL V-RIBBED BELT TENSIONER ASSEMBLY (See page CO-6)

24. INSTALL GENERATOR ASSEMBLY (See page CH-13)

25. INSTALL INTAKE AIR CONNECTOR (See page ES-455)

26. INSTALL REAR END PLATE

(a) Install the rear end plate with the 2 bolts.
Torque: 18 N*m (184 kgf*cm, 13 ft.*lbf)

27. INSTALL DRIVE PLATE AND RING GEAR SUB-ASSEMBLY (for Automatic Transmission) (See page EM-79)

28. INSTALL FLYWHEEL SUB-ASSEMBLY (for Manual Transmission) (See page EM-79)

29. INSTALL CLUTCH DISC ASSEMBLY (for Manual Transmission)

Transmission	See page
R155	CL-32
R155F	CL-37

30. INSTALL CLUTCH COVER ASSEMBLY (for Manual Transmission)

Transmission	See page
R155	CL-32
R155F	CL-37

31. INSTALL ENGINE ASSEMBLY (See page EM-98)

32. INSTALL AUTOMATIC TRANSMISSION ASSEMBLY (See page AT-113)

33. INSTALL MANUAL TRANSMISSION UNIT ASSEMBLY

Transmission	See page
R155	MT-9
R155F	MT-11

34. INSTALL EXHAUST PIPE ASSEMBLY FRONT (See page EX-2)

35. INSTALL EXHAUST PIPE ASSEMBLY TAIL (See page EX-2)

36. CONNECT ENGINE WIRE

37. CONNECT NO. 1 AIR INJECTION HOSE (See page EM-99)

38. CONNECT FUEL VAPOR FEED HOSE ASSEMBLY (See page EM-99)

39. CONNECT NO. 2 FUEL HOSE (See page FU-17)

40. CONNECT FUEL HOSE (See page FU-17)

41. INSTALL WATER HOSE SUB-ASSEMBLY (See page EM-99)

42. INSTALL RADIATOR HOSE INLET

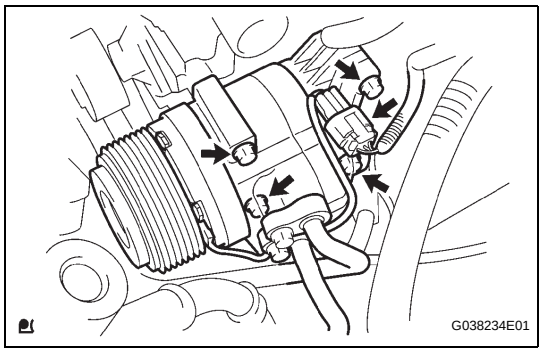

43. INSTALL COMPRESSOR AND MAGNETIC CLUTCH (w/ Air Conditioning System)

(a) Install the compressor and magnetic clutch with the 4 bolts.
Torque: 21 N*m (214 kgf*cm, 16 ft.*lbf)

(b) Connect the compressor and magnetic clutch connector.

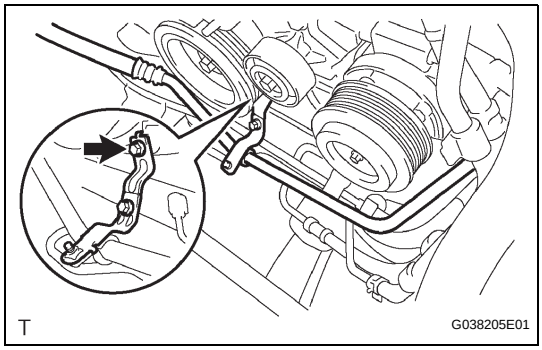

(c) Install the bolt shown in the illustration.
Torque: 7.5 N*m (76 kgf*cm, 66 in.*lbf)

44. INSTALL NO. 2 RADIATOR HOSE

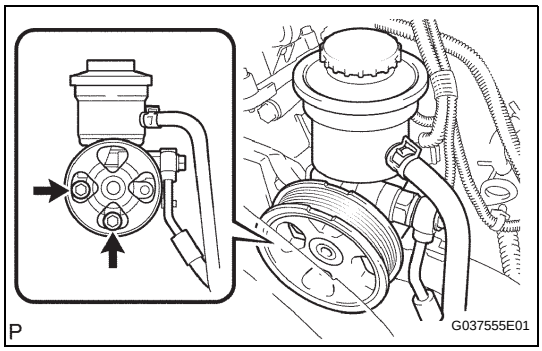

45. INSTALL VANE PUMP ASSEMBLY

(a) Install the vane pump with the 2 bolts.
Torque: 21 N*m (214 kgf*cm, 16 ft.*lbf)

(b) Connect the vane pump connector.

46. INSTALL AIR CLEANER CASE

(a) Install the air cleaner case with the 3 bolts.
Torque: 12 N*m (122 kgf*cm, 9 ft.*lbf)

47. INSTALL AIR CLEANER FILTER ELEMENT SUB-ASSEMBLY

48. INSTALL AIR CLEANER CAP SUB-ASSEMBLY (See page EC-17)

49. INSTALL FAN SHROUD (See page CO-18)

50. INSTALL RADIATOR SUPPORT TO FRAME SEAL LH (See page CO-19)

51. INSTALL BATTERY TRAY

52. INSTALL BATTERY

53. ADD ENGINE OIL (See page LU-4)

54. ADD ENGINE COOLANT (See page CO-3)

55. CHECK FOR ENGINE OIL LEVEL

56. CHECK FOR FUEL LEAKAGE

57. CHECK FOR ENGINE COOLANT LEAKAGE (See page CO-2)

58. CHECK FOR OIL LEAKAGE

59. CHECK FOR EXHAUST GAS LEAKAGE

60. INSTALL NO. 1 ENGINE UNDER COVER SUB-ASSEMBLY (for 4WD and Pre-Runner)

(a) Install the No. 1 engine under cover with the 4 bolts.
Torque: 30 N*m (306 kgf*cm, 22 ft.*lbf)

61. INSTALL NO. 2 ENGINE UNDER COVER SUB-ASSEMBLY (for 4WD and Pre-Runner, Regular Cab)

(a) Install the No. 2 engine under cover with the 4 bolts.
Torque: 30 N*m (306 kgf*cm, 22 ft.*lbf)

62. INSTALL HOOD SUB-ASSEMBLY

(See page ED-7)

CAMSHAFT

COMPONENTS

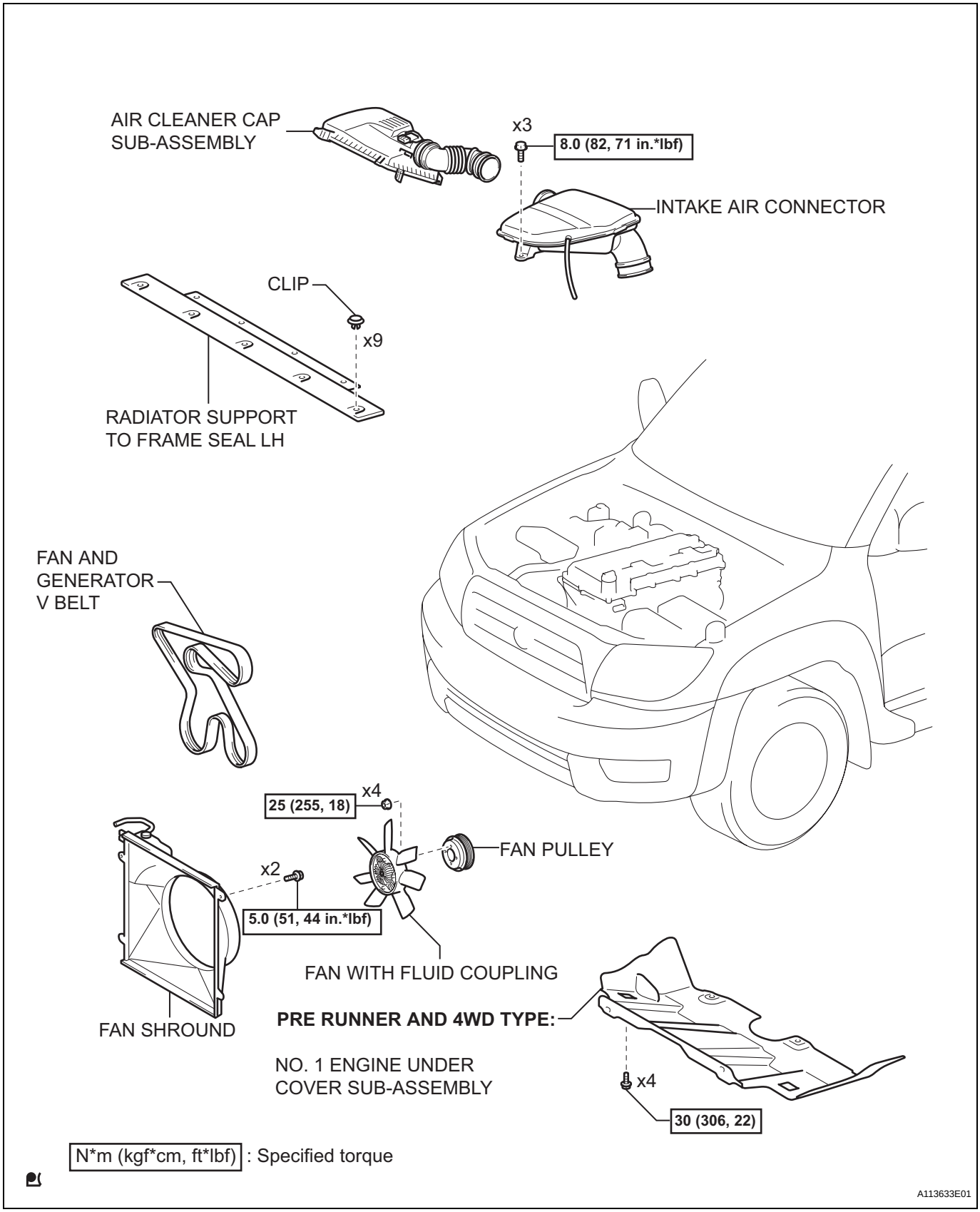

EM

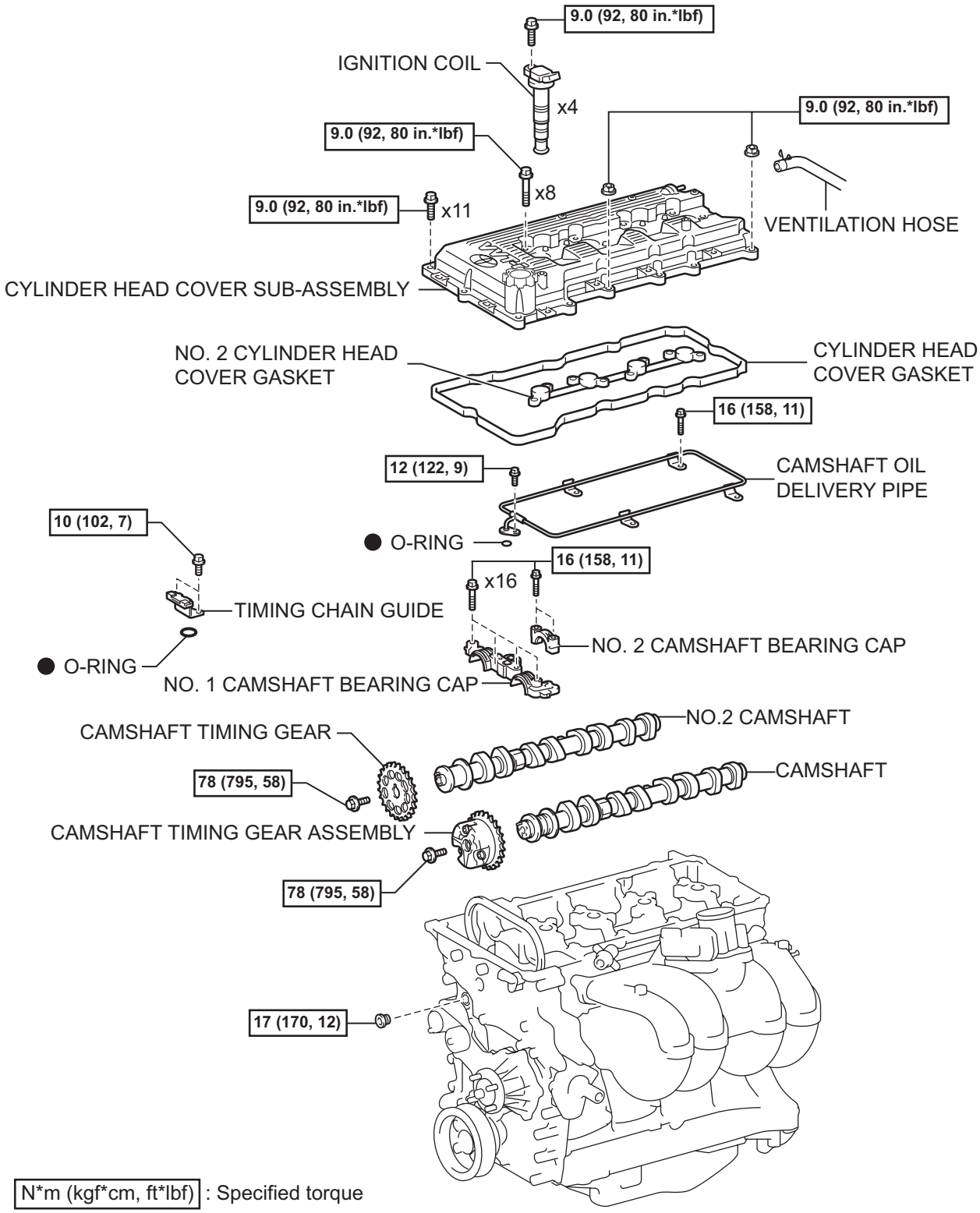

N*m (kgf*cm, ft*lbf) : Specified torque

● Non-reusable part

T

A113648E01

EM

REMOVAL

1. **DISCONNECT CABLE FROM NEGATIVE BATTERY TERMINAL**
2. **REMOVE NO. 1 ENGINE UNDER COVER SUB-ASSEMBLY (for 4WD)**
   (a) Remove the 4 bolts, then remove the No. 1 engine under cover.
3. **DRAIN ENGINE COOLANT (See page CO-3)**
4. **REMOVE RADIATOR SUPPORT TO FRAME SEAL LH (See page CO-12)**
5. **REMOVE FAN SHROUD (See page CO-13)**
6. **REMOVE AIR CLEANER CAP SUB-ASSEMBLY (See page EC-14)**
7. **REMOVE INTAKE AIR CONNECTOR (See page ES-452)**
8. **REMOVE CYLINDER HEAD COVER SUB-ASSEMBLY**
   (a) Disconnect the ignition coil connectors.
   (b) Disconnect the throttle with motor body connector.
   (c) Disconnect the VSV connector.
   (d) Disconnect the camshaft position sensor connector.
   (e) Disconnect the engine wire harness clamps.

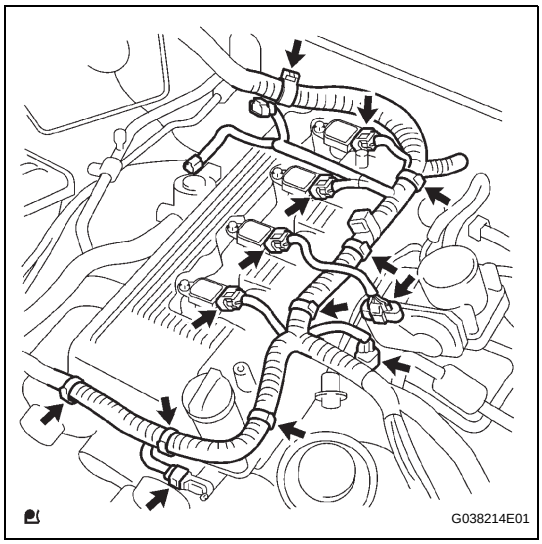

   (f) Remove the bolts, then remove the ignition coils.

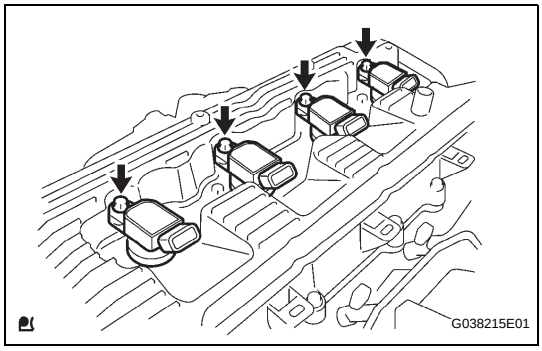

EM

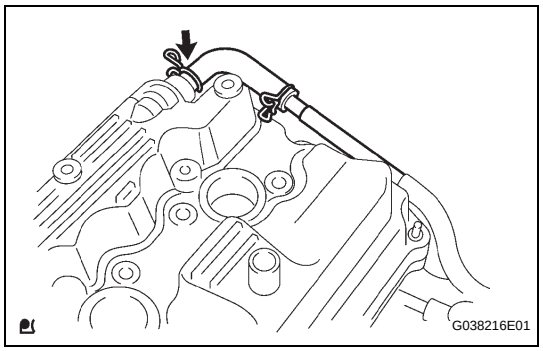

(g) Disconnect the ventilation hose.

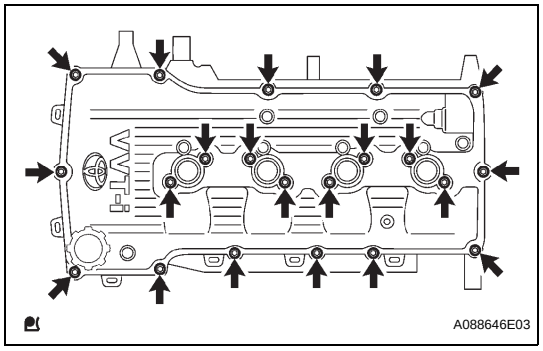

(h) Remove the 19 bolts and 2 nuts, then remove the cylinder head cover.

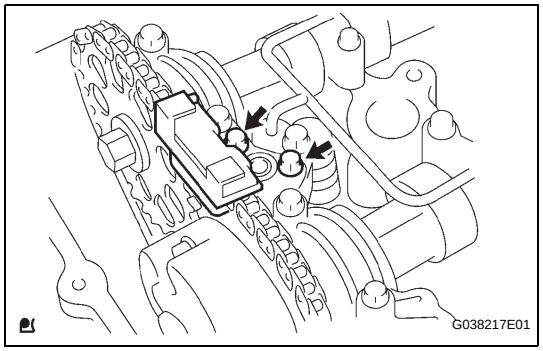

9. REMOVE TIMING CHAIN GUIDE

(a) Remove the 2 bolts, then remove the timing chain guide.

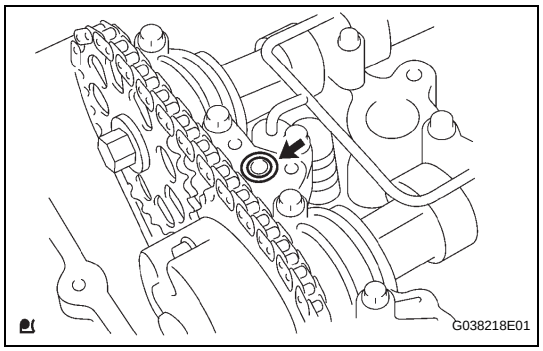

(b) Remove the O-ring.

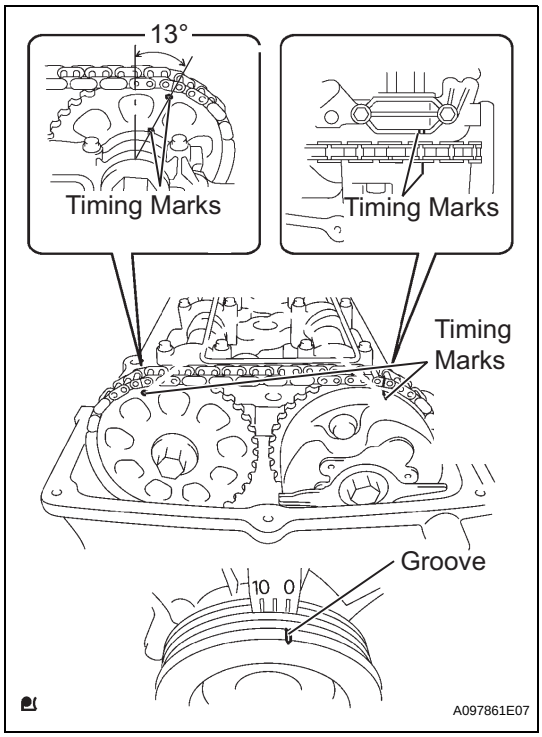

10. REMOVE CAMSHAFT

(a) Set the No. 1 cylinder to the TDC/compression.
  (1) Turn the crankshaft pulley clockwise and align its timing mark notch with the timing mark "0".
  (2) Check that the timing marks of the camshaft timing gear are located as illustrated.
  HINT:
  If not, turn the crankshaft to align the marks.

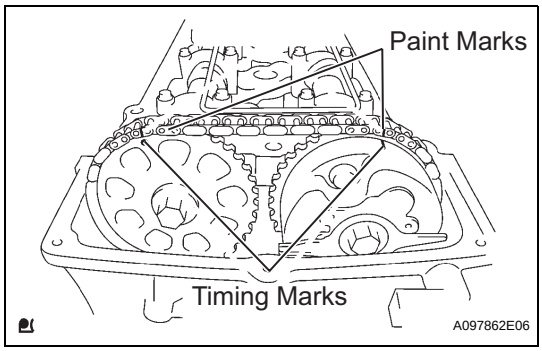

(b) Place paint marks on the timing chain plates that align with timing marks of the camshaft timing gear.

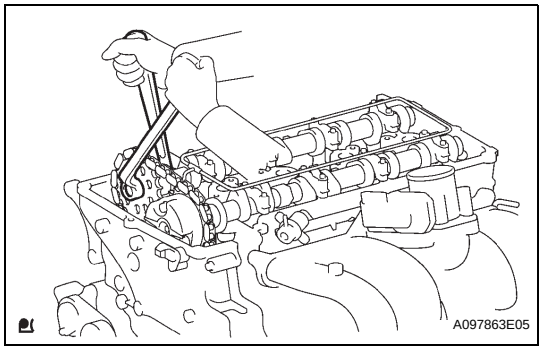

(c) Hold the hexagonal lobe of the No. 2 camshaft with an adjustable wrench.
  NOTICE:
  Be careful not to damage the camshaft oil delivery pipe.

(d) Loosen the bolt.

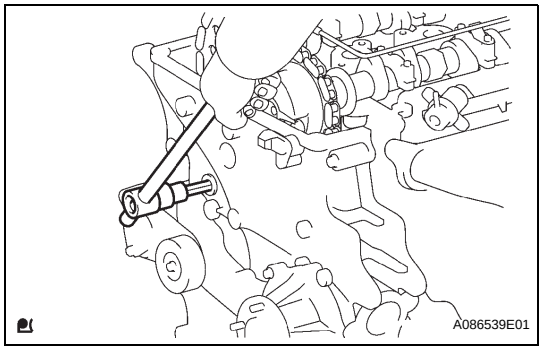

(e) Using 10 mm socket hexagon wrench, remove the head straight screw plug.

EM

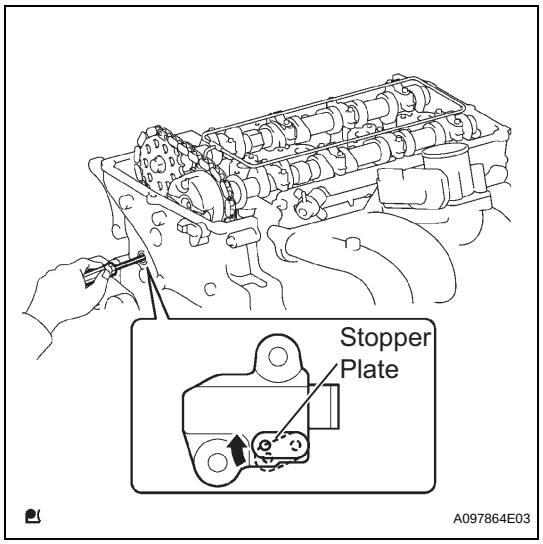

(f) Insert a screwdriver into the service hole of the chain tensioner to hold the stopper plate of the chain tensioner lifted up.
HINT:
Lifting up the stopper plate of the chain tensioner unlocks the plunger.

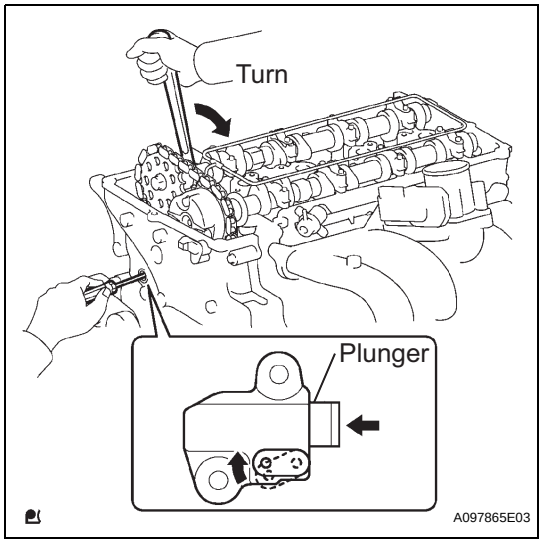

(g) While keeping the stopper plate of the chain tensioner lifted up, slightly rotate the hexagonal lobe of the No. 2 camshaft clockwise with an adjustable wrench so the plunger of the chain tensioner is pushed.
HINT:
When the No. 2 camshaft is slightly rotated clockwise, the plunger is pushed.
NOTICE:
Be careful not to damage the camshaft oil delivery pipe.

(h) Keeping the adjustable wrench installed, remove the screwdriver with the plunger pushed in.
NOTICE:
Do not move the adjustable wrench.
HINT:
Removing the screwdriver lifts down the stopper plate and locks the plunger.

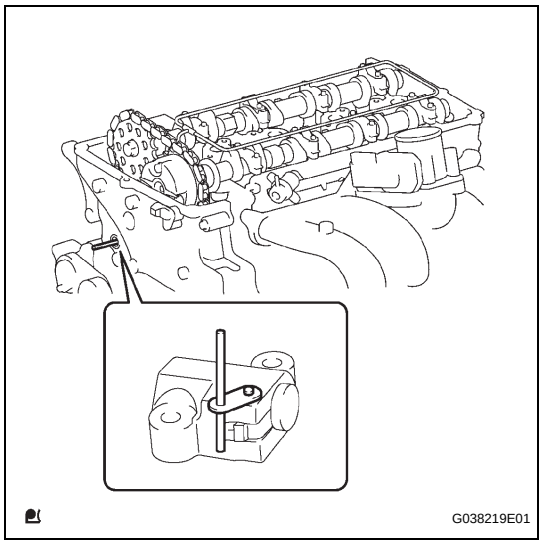

(i) Insert a 3.0 mm (0.118 in.) diameter bar into the hole of the stopper plate with the stopper plate of the chain tensioner lifted down and locked.
HINT:
If a 3.0 mm (0.118 in.) diameter bar cannot be inserted into the hole of the stopper plate, rotate the No. 2 camshaft slightly to the left and right. Then a 3.0 mm (0.118 in.) diameter bar can be inserted easily.

(j) Secure the 3.0 mm (0.118 in.) diameter bar with tape.

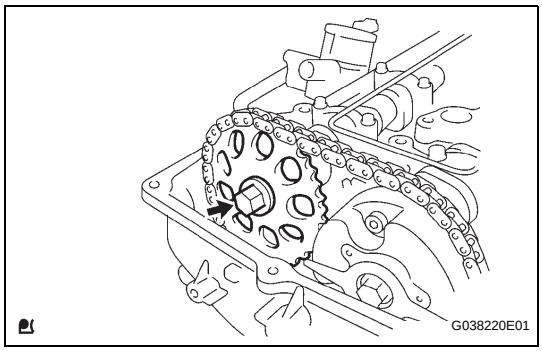

(k) Remove the bolt, then remove the camshaft timing gear.

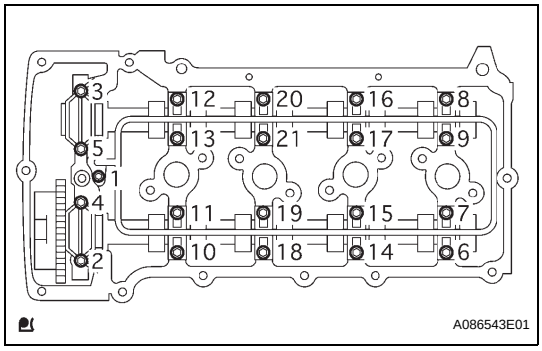

(l) Using several steps, uniformly loosen and remove the 21 bearing cap bolts in the sequence shown in the illustration.
NOTICE:
Place the camshaft on a flat surface and loosen the bolts uniformly.

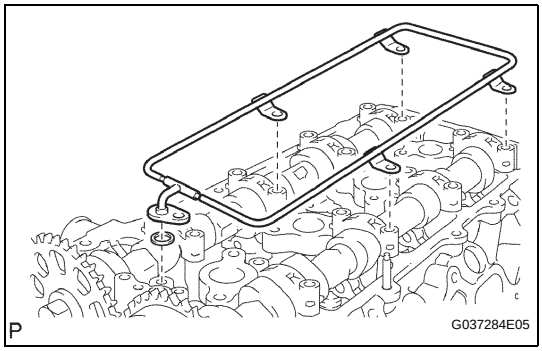

(m) Remove the camshaft oil delivery pipe and O-ring.

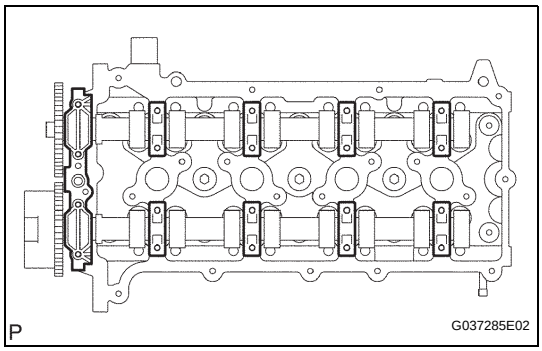

(n) Remove the camshaft bearing cap No. 1 and 8 camshaft bearing caps No. 2.

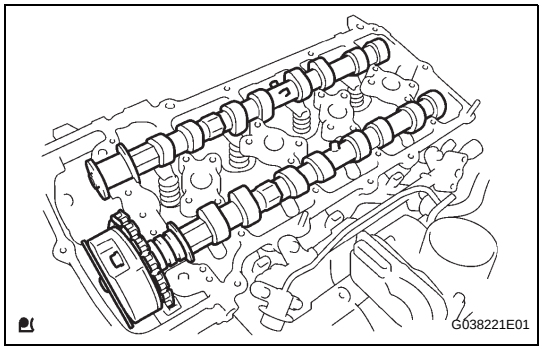

(o) Remove the camshaft and No. 2 camshaft.
NOTICE:
- **Do not pry the camshaft with a tool by applying excessive force to it.**
- **Do not damage the cylinder head when removing the camshafts.**

EM

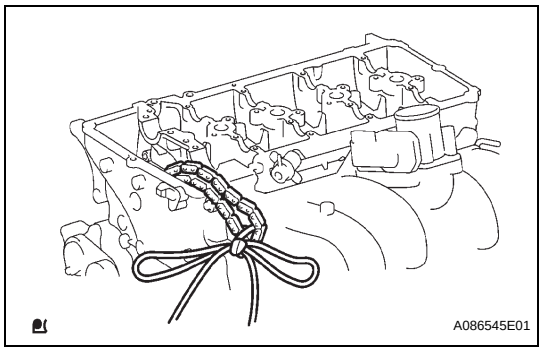

(p) Tie the chain with a piece of string or wire.
NOTICE:
Prevent foreign objects from getting into the engine compartment with a shop rag.

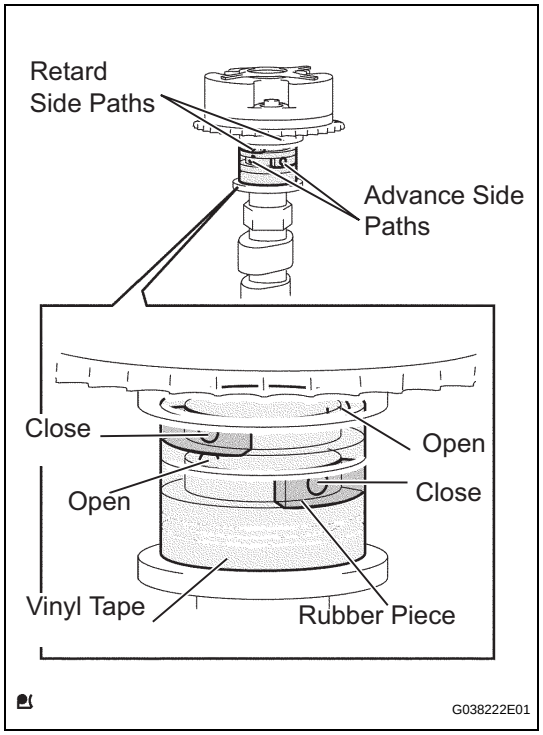

11. REMOVE CAMSHAFT TIMING GEAR ASSEMBLY

(a) Clamp the camshaft in a vise, then check that the camshaft timing gear does not rotate.
NOTICE:
Do not damage the camshaft by clamping it in a vise too tightly.

(b) Cover the 4 oil paths of the cam journal with vinyl tape as shown in the illustration.
HINT:
One of the 2 grooves located on the cam journal is for retarding cam timing (upper) and the other is for advancing cam timing (lower). Each groove has 2 oil paths. Plug one of the 2 oil paths for each groove with a piece of rubber before wrapping the cam journal with the tape.

(c) Puncture the tape covering the advance side path and retard side path on the opposite side.

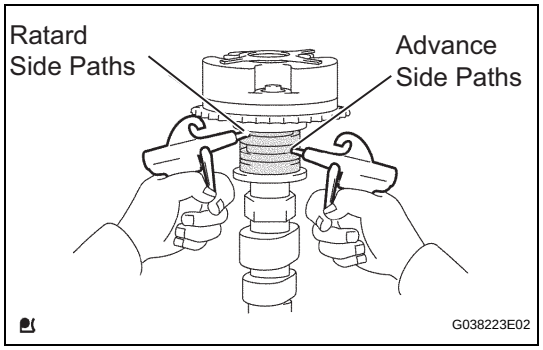

(d) Apply air pressure at approximately 200 kPa (2.0 kgf/cm^2, 29 psi) into the 2 paths (the advance side path and retard side path) from the 2 punctures.
NOTICE:
When applying air pressure, cover the paths with a shop rag to prevent oil splashes.

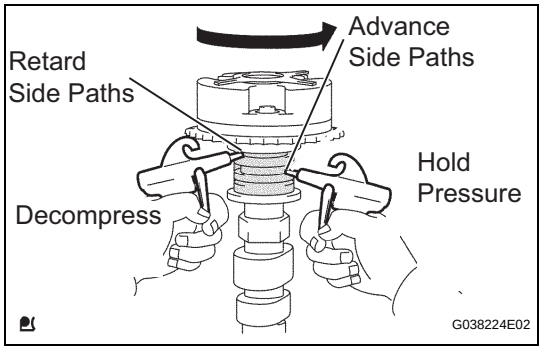

(e) Confirm that the camshaft timing gear revolves in the advance direction when reducing the air pressure on the retard side path.
HINT:
The lock pin is released and the camshaft timing gear revolves in the advance direction.

EM

(f) When the camshaft timing gear reaches the most advanced position, release the air pressure on the retard side path, then release the air pressure on the advance side path.
NOTICE:
If the air pressure on the advance side path is released first, the camshaft timing gear assembly occasionally shifts in the retard direction abruptly. This may damage the lock pin. Be sure to release the air pressure on the retard side path first.

(g) Remove the fringe bolt of the camshaft timing gear.
NOTICE:
Be sure not to remove the other 3 bolts.

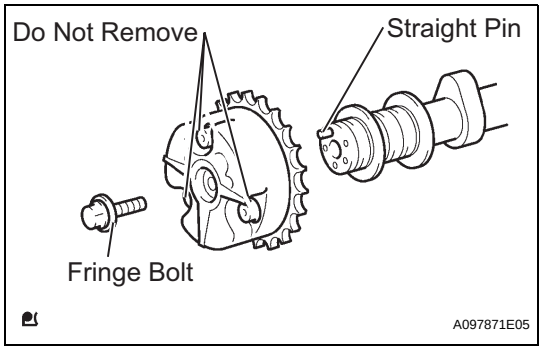

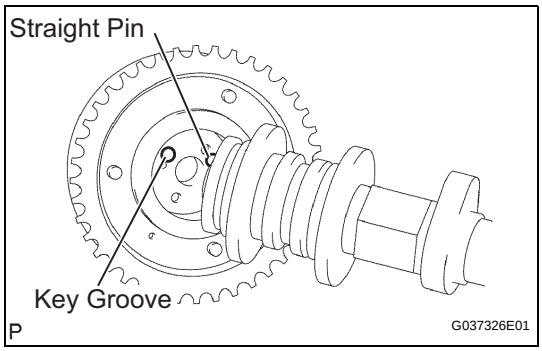

INSTALLATION

1. INSTALL CAMSHAFT TIMING GEAR ASSEMBLY

(a) Put the camshaft timing gear and camshaft together by aligning the key groove and straight pin.

(b) Gently press the gear against the camshaft, and turn the gear. Push further at the position where the pin fits into the groove.
CAUTION:
Be sure not to turn the camshaft timing gear to the retard angle side (to the right angle).

(c) Check that there is no clearance between the gear's fringe and the camshaft.

(d) Tighten the fringe bolt with the camshaft timing gear fixed.
Torque: 78 N*m (795 kgf*cm, 58 ft.*lbf)

(e) Check that the camshaft timing gear can move to the retard angle side (the right angle), and is locked in the extreme retard position.

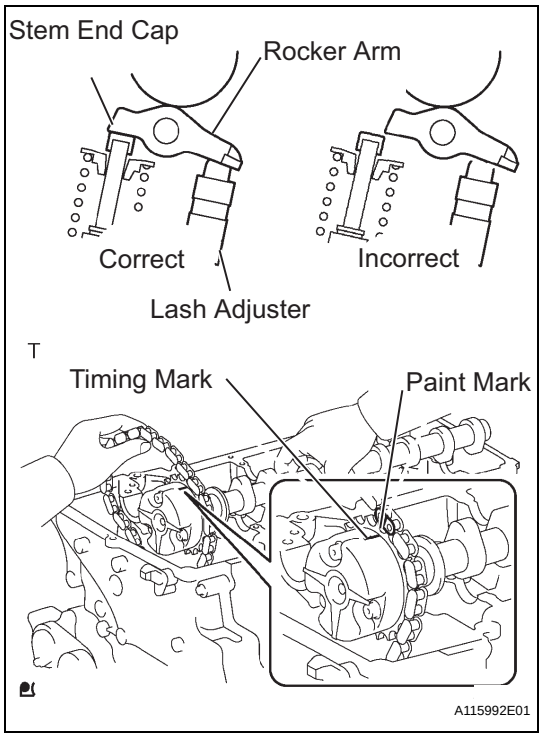

2. INSTALL CAMSHAFT

NOTICE:

Check that the valve rocker arm is correctly set as shown in the illustration.

(a) Apply clean engine oil to the camshaft's cam portion and the cylinder head journals.

(b) Install the chain onto the camshaft timing gear, with the painted mark of the link aligned with the timing mark of the camshaft timing gear.

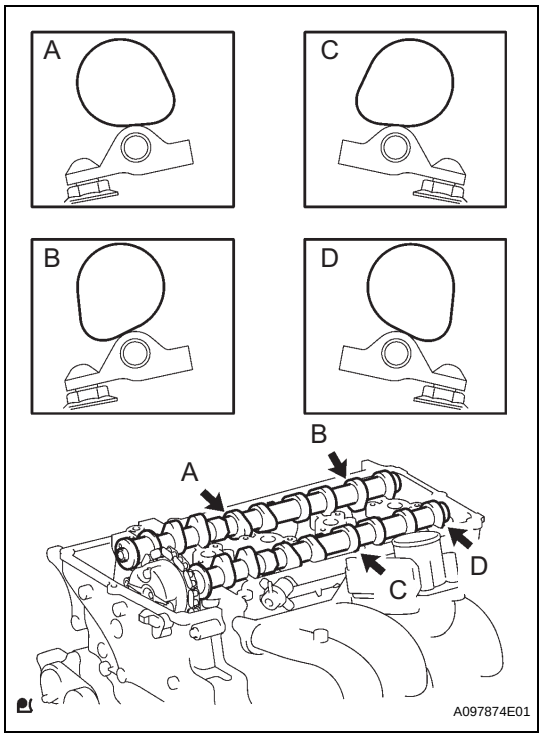

(c) Set the 2 camshafts as shown in the illustration.

NOTICE:

Align the paint mark with the timing mark before setting the camshaft.

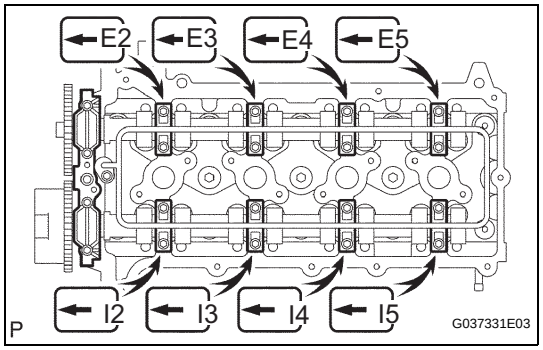

(d) Provisionally install the No. 1 camshaft bearing cap.

(e) Check the proper location of each No. 2 camshaft bearing cap and install each one.

EM

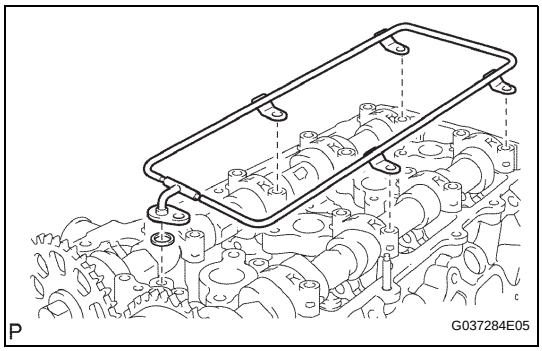

(f) Install a new O-ring onto the No. 1 camshaft bearing cap.

(g) Provisionally install the camshaft oil delivery pipe.

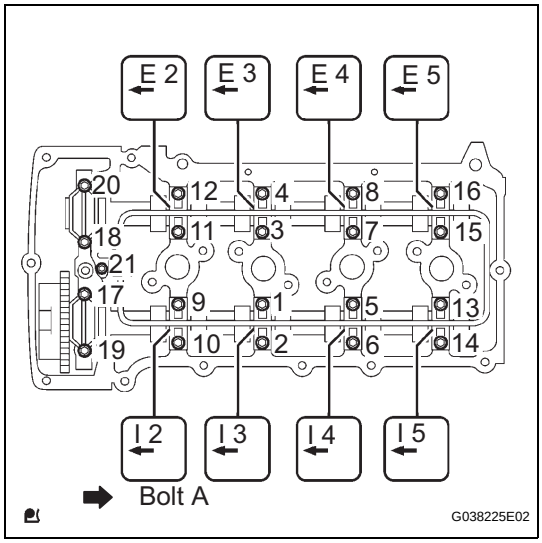

(h) Tighten the bolts in the order shown in the illustration.
Torque: 12 N*m (122 kgf*cm, 9 ft.*lbf) for bolt A
16 N*m (158 kgf*cm, 11 ft.*lbf) for bolts except bolt A

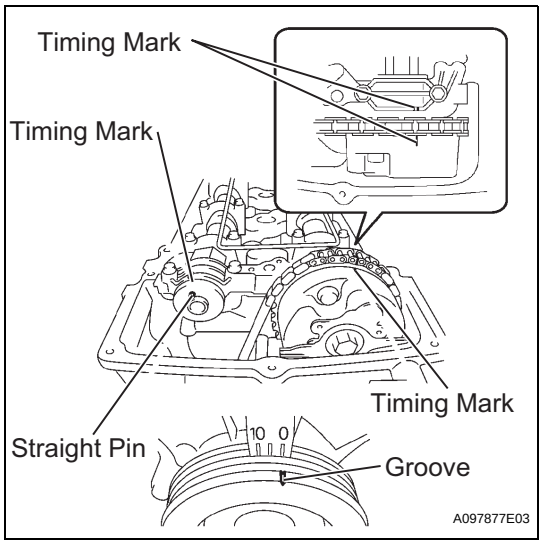

(i) Check that each timing mark is set in the position shown in the illustration.

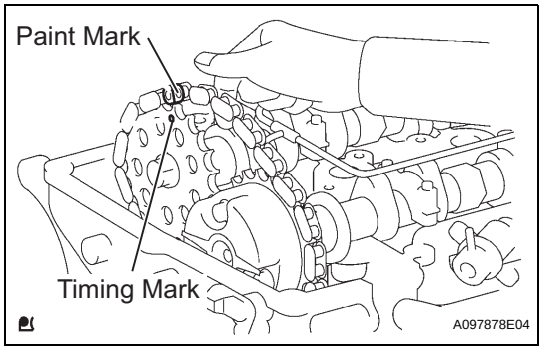

(j) Install the timing chain onto the camshaft timing gear, with the paint mark aligned with the timing mark on the camshaft timing gear.

(k) Align the No. 2 camshaft straight pin and camshaft timing gear straight pin hole. Then install the camshaft timing gear onto the No. 2 camshaft.
NOTICE:
If the straight pin and straight pin hole are difficult to align, slightly rotate the No. 2 camshaft to the left and right using the hexagonal lobe of the camshaft. Then attempt to align them again.

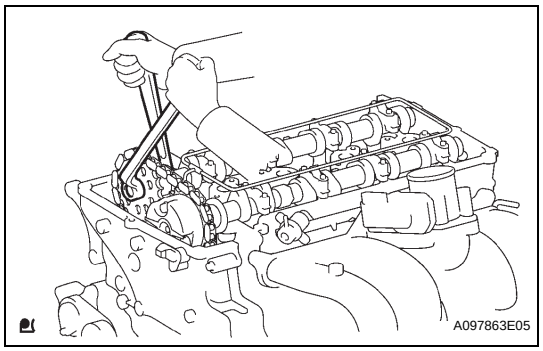

(l) Hold the hexagonal lobe of the No. 2 camshaft with the adjustable wrench.
(m) Tighten the bolt.
Torque: 78 N*m (795 kgf*cm, 58 ft.*lbf)
(n) Remove the 3.0 mm (0.118 in.) diameter bar from the chain tensioner.
(o) Apply adhesive to 2 or 3 threads of the timing gear case with head straight screw plug.
Adhesive:
Part No. 08833-00070, THREE BOND 1324 or equivalent

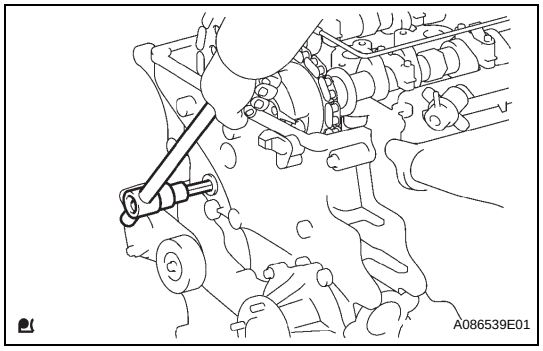

(p) Using a 10 mm socket hexagon wrench, install the timing gear case with head straight screw plug.
Torque: 17 N*m (170 kgf*cm, 12 ft.*lbf)

3. INSTALL TIMING CHAIN GUIDE

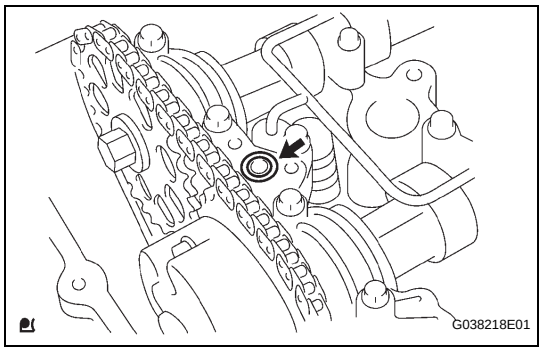

(a) Install a new O-ring onto the camshaft bearing cap.

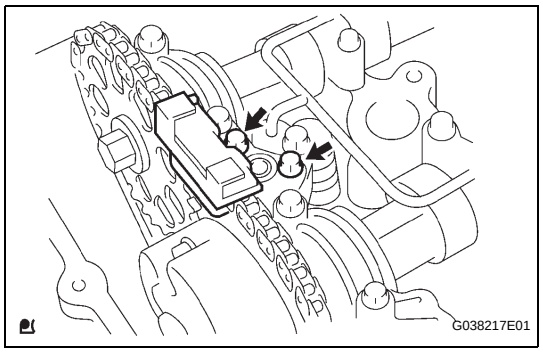

(b) Install the timing chain guide with the 2 bolts.
Torque: 10 N*m (102 kgf*cm, 7 ft.*lbf)

EM

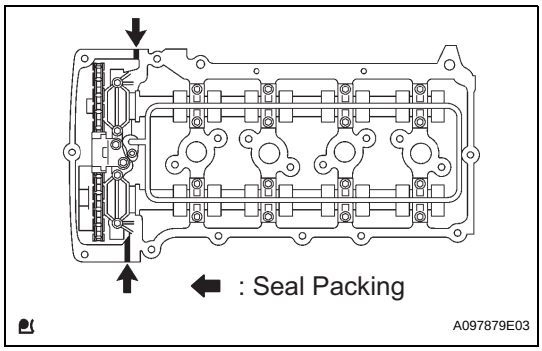

4. INSTALL CYLINDER HEAD COVER SUB-ASSEMBLY

(a) Apply seal packing to the 2 locations shown in the illustration.
Seal packing:
Part No. 08826-00080 or equivalent
NOTICE:
- **Remove any oil from the contact surface.**
- **Install the cylinder head cover within 3 minutes of applying the seal packing.**
- **Do not apply engine oil for at least 2 hours of installation.**

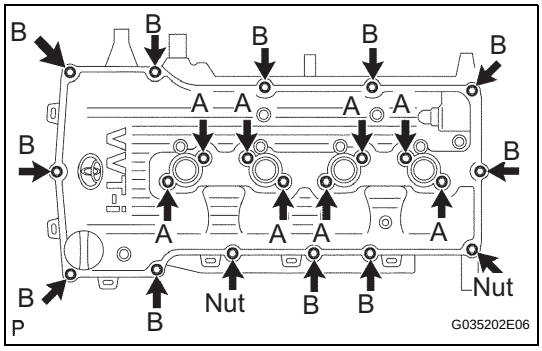

(b) Provisionally install the cylinder head cover with the 19 bolts and 2 nuts.
(c) Tighten bolts A shown in the illustration.
Torque: 9.0 N*m (92 kgf*cm, 80 in.*lbf)
(d) Tighten bolts B and nuts shown in the illustration.
Torque: 9.0 N*m (92 kgf*cm, 80 in.*lbf)
(e) Tighten bolts A again.
Torque: 9.0 N*m (92 kgf*cm, 80 in.*lbf)

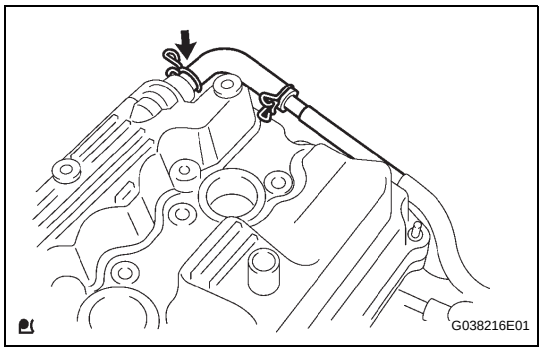

(f) Connect the ventilation hose.

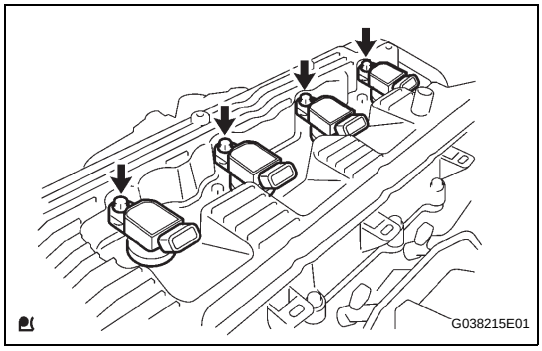

(g) Install the ignition coils with the bolts.
Torque: 9.0 N*m (92 kgf*cm, 80 in.*lbf)

EM

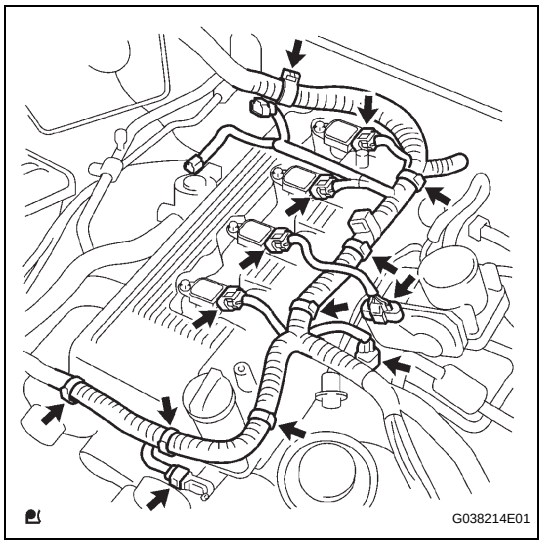

(h) Install the engine wire harness clamps.
(i) Connect the camshaft position sensor connector.
(j) Connect the VSV connector.
(k) Connect the throttle with motor body connector.
(l) Connect the ignition coil connectors.

5. INSTALL INTAKE AIR CONNECTOR (See page ES-455)

6. INSTALL AIR CLEANER CAP SUB-ASSEMBLY (See page EC-17)

7. INSTALL FAN SHROUD (See page CO-18)

8. INSTALL RADIATOR SUPPORT TO FRAME SEAL LH (See page CO-19)

9. CONNECT CABLE TO NEGATIVE BATTERY TERMINAL
Torque: 3.9 N*m (40 kgf*cm, 35 in.*lbf)

10. ADD ENGINE COOLANT (See page CO-3)

11. CHECK FOR ENGINE COOLANT LEAKAGE (See page CO-2)

12. CHECK FOR ENGINE OIL LEAKAGE

13. INSTALL NO. 1 ENGINE UNDER COVER SUB-ASSEMBLY (for Pre Runner and 4WD Type)
(a) Install the No. 1 engine under cover with the 4 bolts.
Torque: 30 N*m (306 kgf*cm, 22 ft.*lbf)

CYLINDER HEAD

COMPONENTS

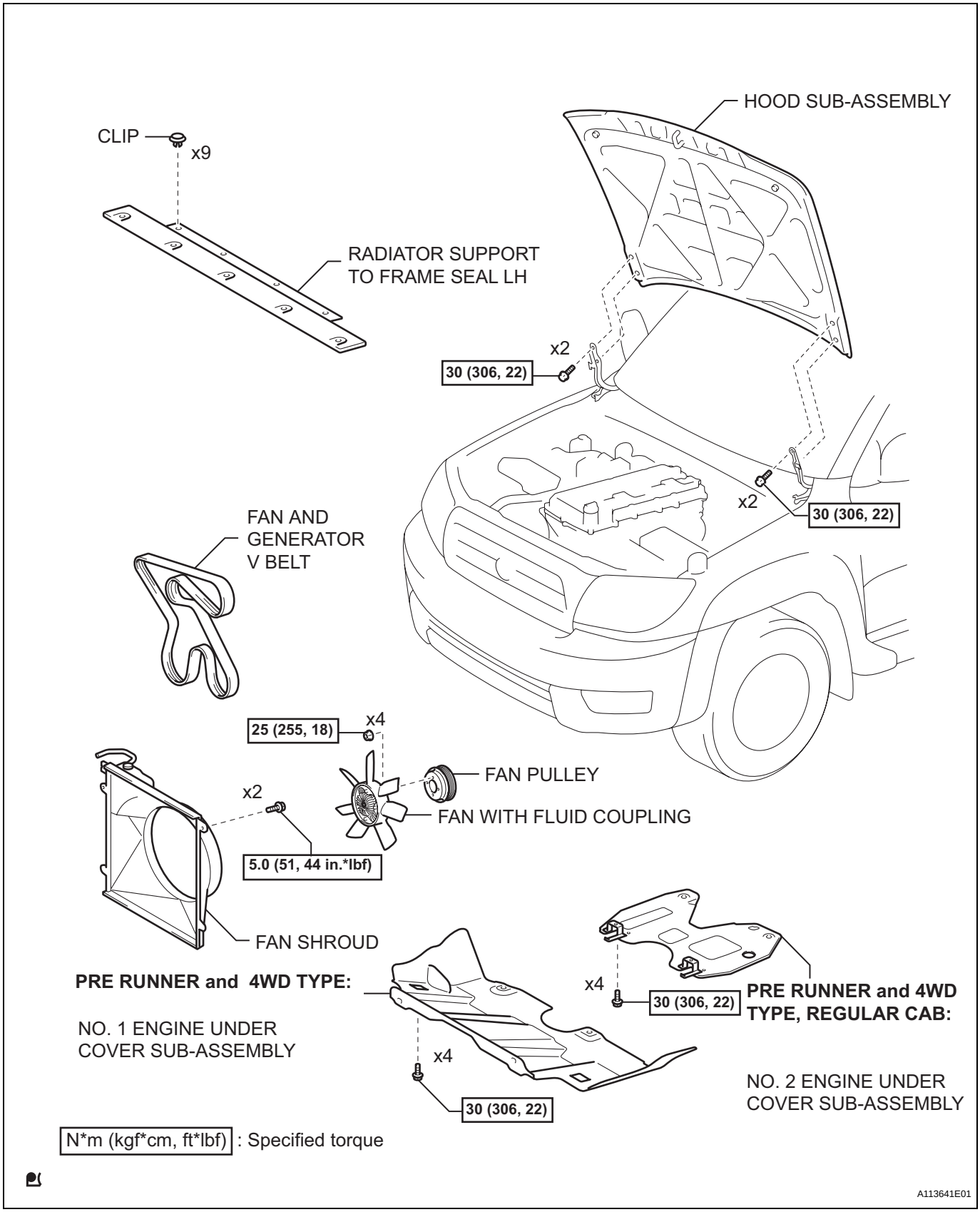

EM

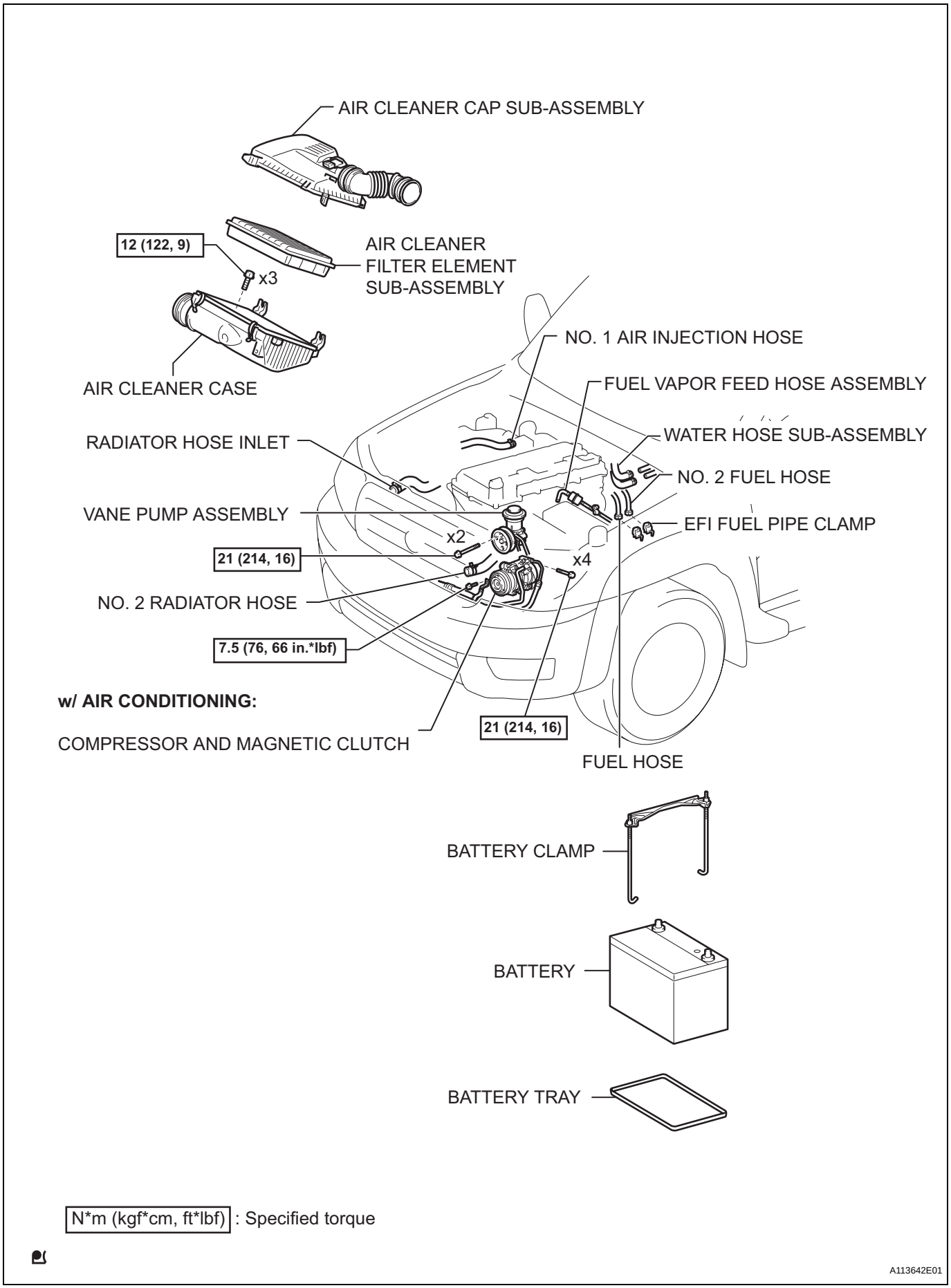
AIR CLEANER CAP SUB-ASSEMBLY
12 (122, 9)
x3
AIR CLEANER
FILTER ELEMENT
SUB-ASSEMBLY
AIR CLEANER CASE
NO. 1 AIR INJECTION HOSE
FUEL VAPOR FEED HOSE ASSEMBLY
RADIATOR HOSE INLET
WATER HOSE SUB-ASSEMBLY
NO. 2 FUEL HOSE
VANE PUMP ASSEMBLY
EFI FUEL PIPE CLAMP
x2
21 (214, 16)
x4
NO. 2 RADIATOR HOSE
7.5 (76, 66 in.*lbf)
w/ AIR CONDITIONING:
COMPRESSOR AND MAGNETIC CLUTCH
21 (214, 16)
FUEL HOSE
BATTERY CLAMP
BATTERY
BATTERY TRAY
N*m (kgf*cm, ft*lbf) : Specified torque
A113642E01

EM

EM

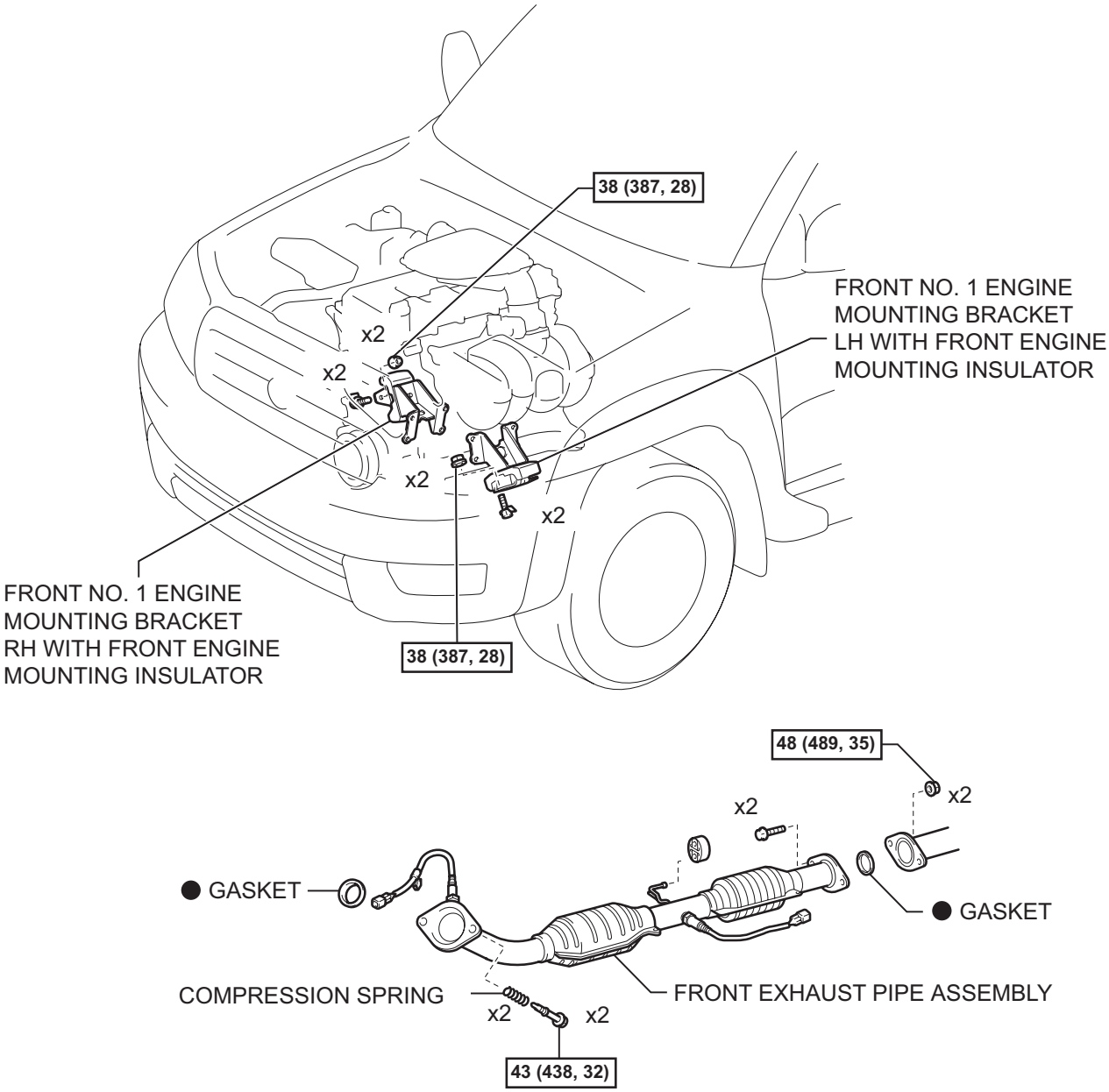

N*m (kgf*cm, ft*lbf) : Specified torque

● Non-reusable part

A113643E04

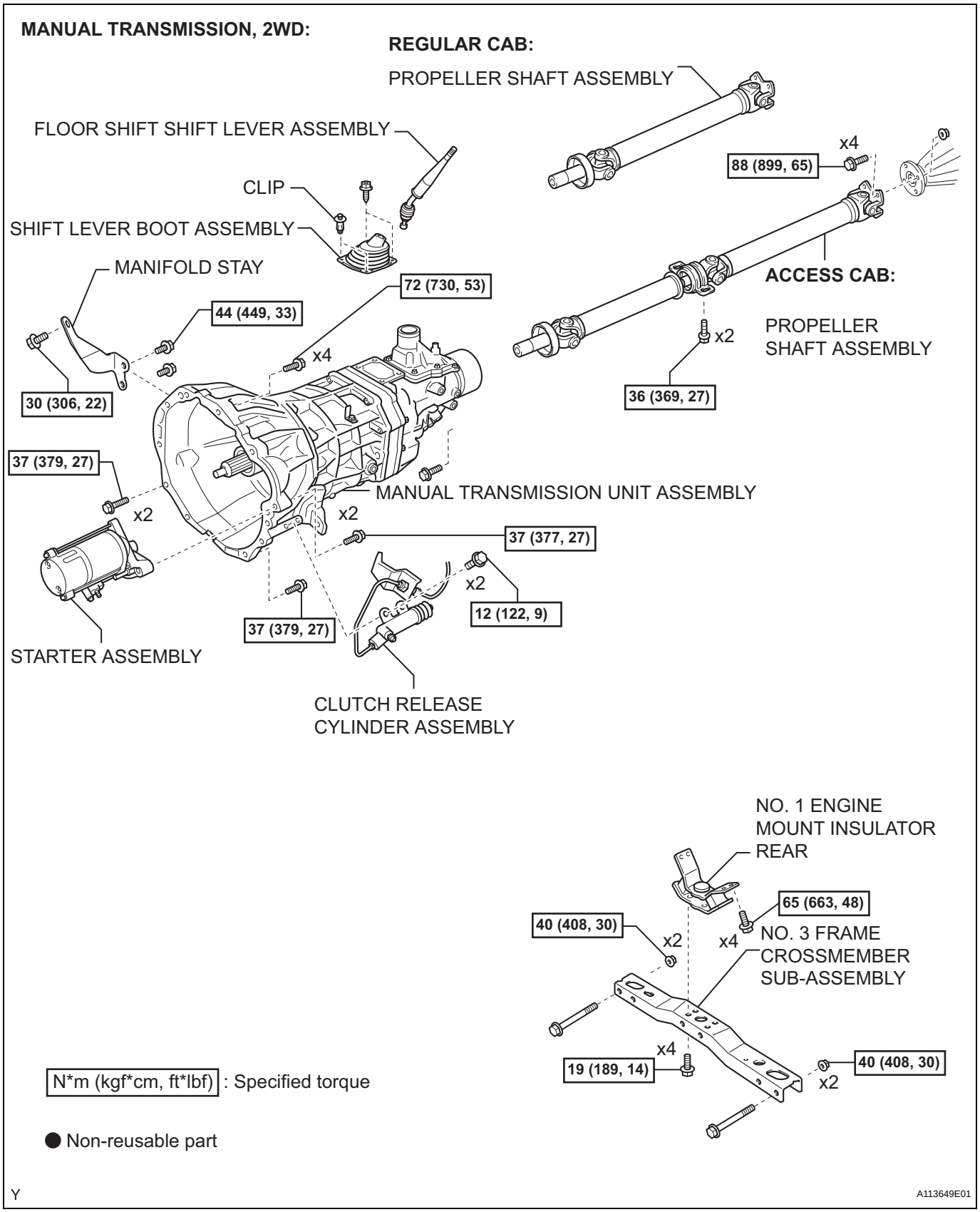
MANUAL TRANSMISSION, 2WD:
REGULAR CAB:
PROPELLER SHAFT ASSEMBLY
FLOOR SHIFT SHIFT LEVER ASSEMBLY
CLIP
SHIFT LEVER BOOT ASSEMBLY
MANIFOLD STAY
88 (899, 65)
x4
ACCESS CAB:
PROPELLER SHAFT ASSEMBLY
x2
36 (369, 27)
72 (730, 53)
44 (449, 33)
x4
30 (306, 22)
37 (379, 27)
x2
MANUAL TRANSMISSION UNIT ASSEMBLY
x2
37 (377, 27)
x2
12 (122, 9)
37 (379, 27)
STARTER ASSEMBLY
CLUTCH RELEASE CYLINDER ASSEMBLY
NO. 1 ENGINE MOUNT INSULATOR REAR
65 (663, 48)
40 (408, 30)
x2
x4
NO. 3 FRAME CROSSMEMBER SUB-ASSEMBLY
x4
19 (189, 14)
40 (408, 30)
x2
N*m (kgf*cm, ft*lbf) : Specified torque
● Non-reusable part
Y
A113649E01

EM

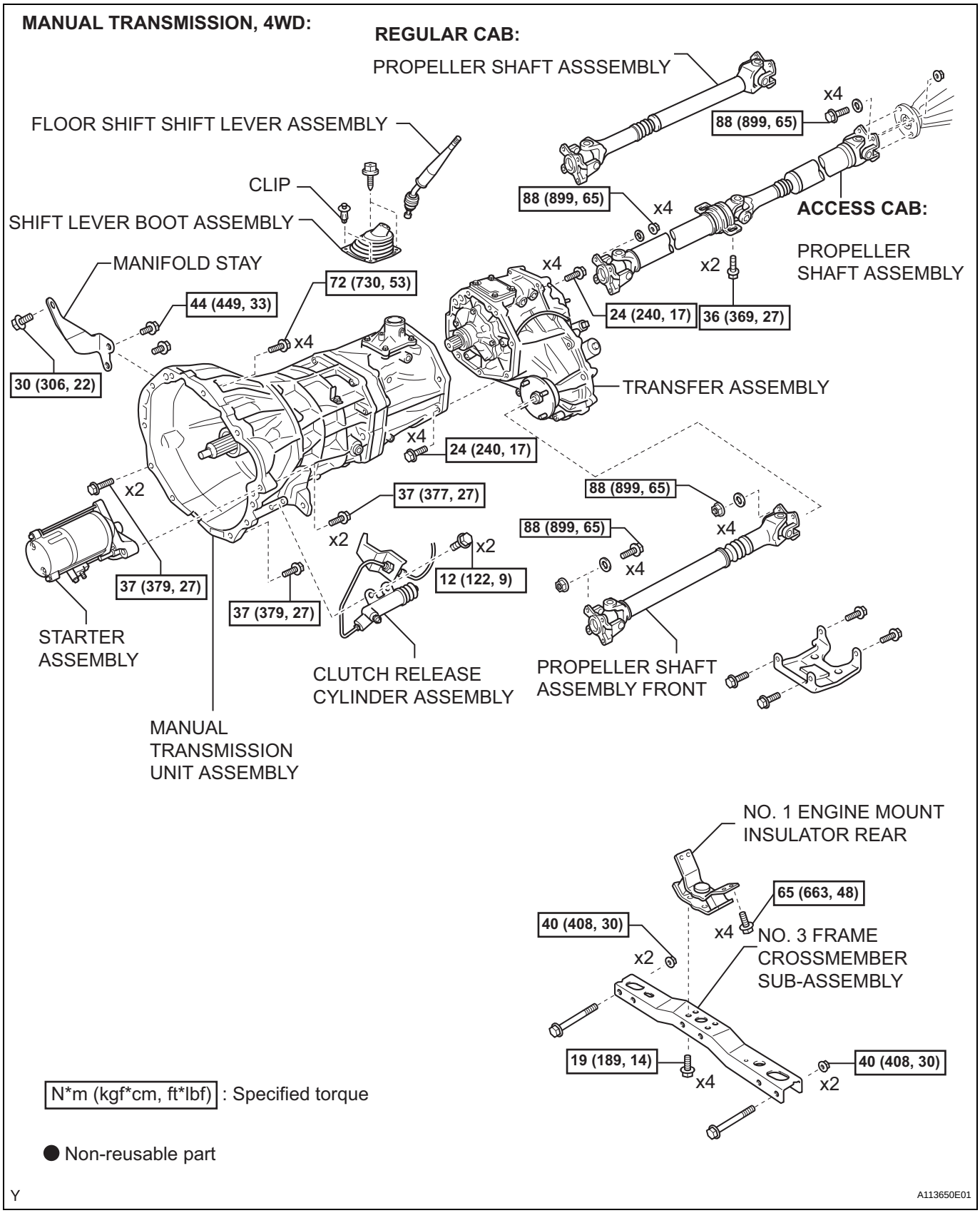
MANUAL TRANSMISSION, 4WD:
REGULAR CAB:
PROPELLER SHAFT ASSSEMBLY
FLOOR SHIFT SHIFT LEVER ASSEMBLY
CLIP
SHIFT LEVER BOOT ASSEMBLY
MANIFOLD STAY
44 (449, 33)
72 (730, 53)
30 (306, 22)
x4
88 (899, 65)
x4
88 (899, 65)
x4
ACCESS CAB:
PROPELLER SHAFT ASSEMBLY
x4
x2
24 (240, 17)
36 (369, 27)
TRANSFER ASSEMBLY
x4
24 (240, 17)
x2
37 (377, 27)
88 (899, 65)
x4
88 (899, 65)
x4
x2
x2
12 (122, 9)
37 (379, 27)
37 (379, 27)
STARTER ASSEMBLY
CLUTCH RELEASE CYLINDER ASSEMBLY
PROPELLER SHAFT ASSEMBLY FRONT
MANUAL TRANSMISSION UNIT ASSEMBLY
NO. 1 ENGINE MOUNT INSULATOR REAR
65 (663, 48)
40 (408, 30)
x4
NO. 3 FRAME CROSSMEMBER SUB-ASSEMBLY
x2
19 (189, 14)
x4
40 (408, 30)
x2
N*m (kgf*cm, ft*lbf) : Specified torque
● Non-reusable part
Y
A113650E01

EM

MANUAL TRANSMISSION:

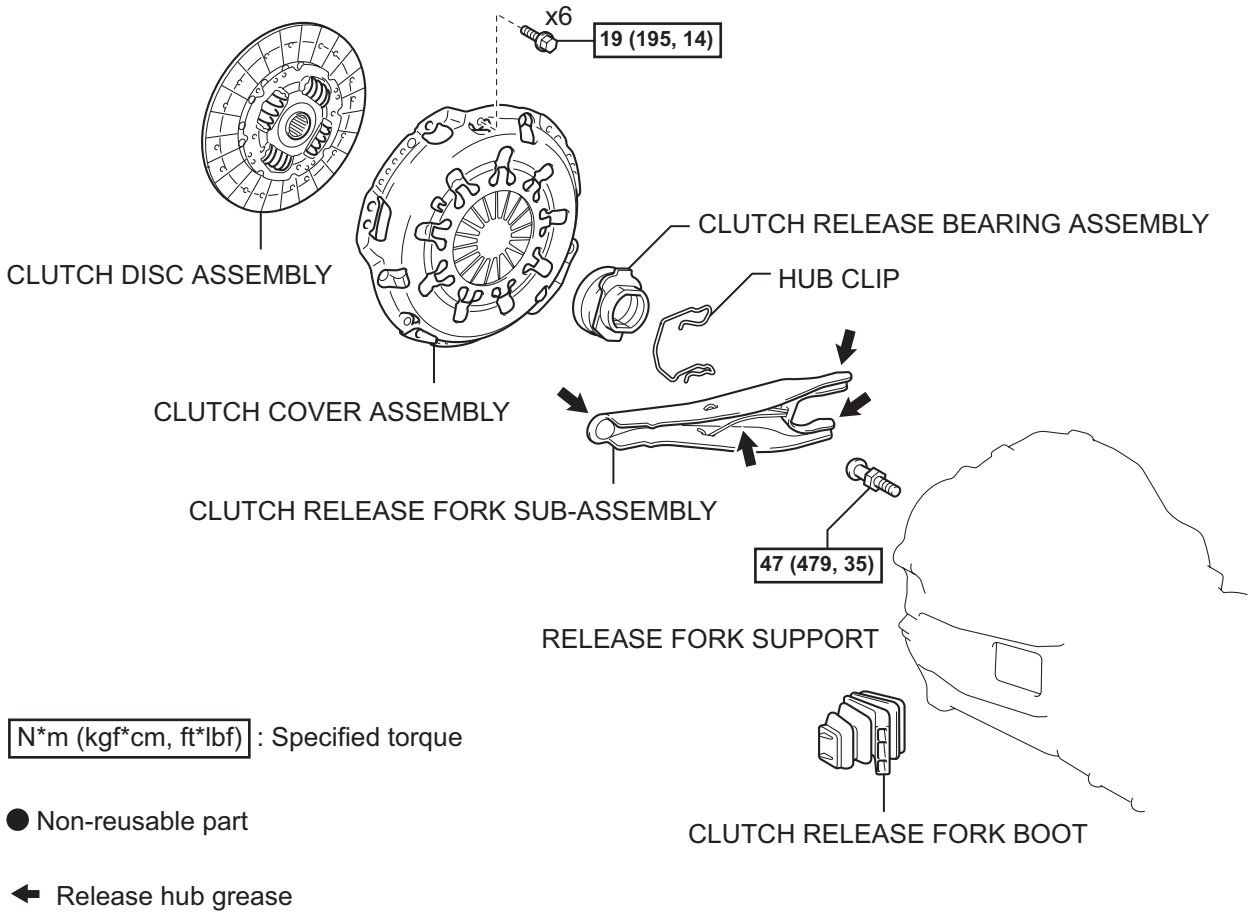

N*m (kgf*cm, ft*lbf) : Specified torque

● Non-reusable part

⬅ Release hub grease

Y

A113651E01

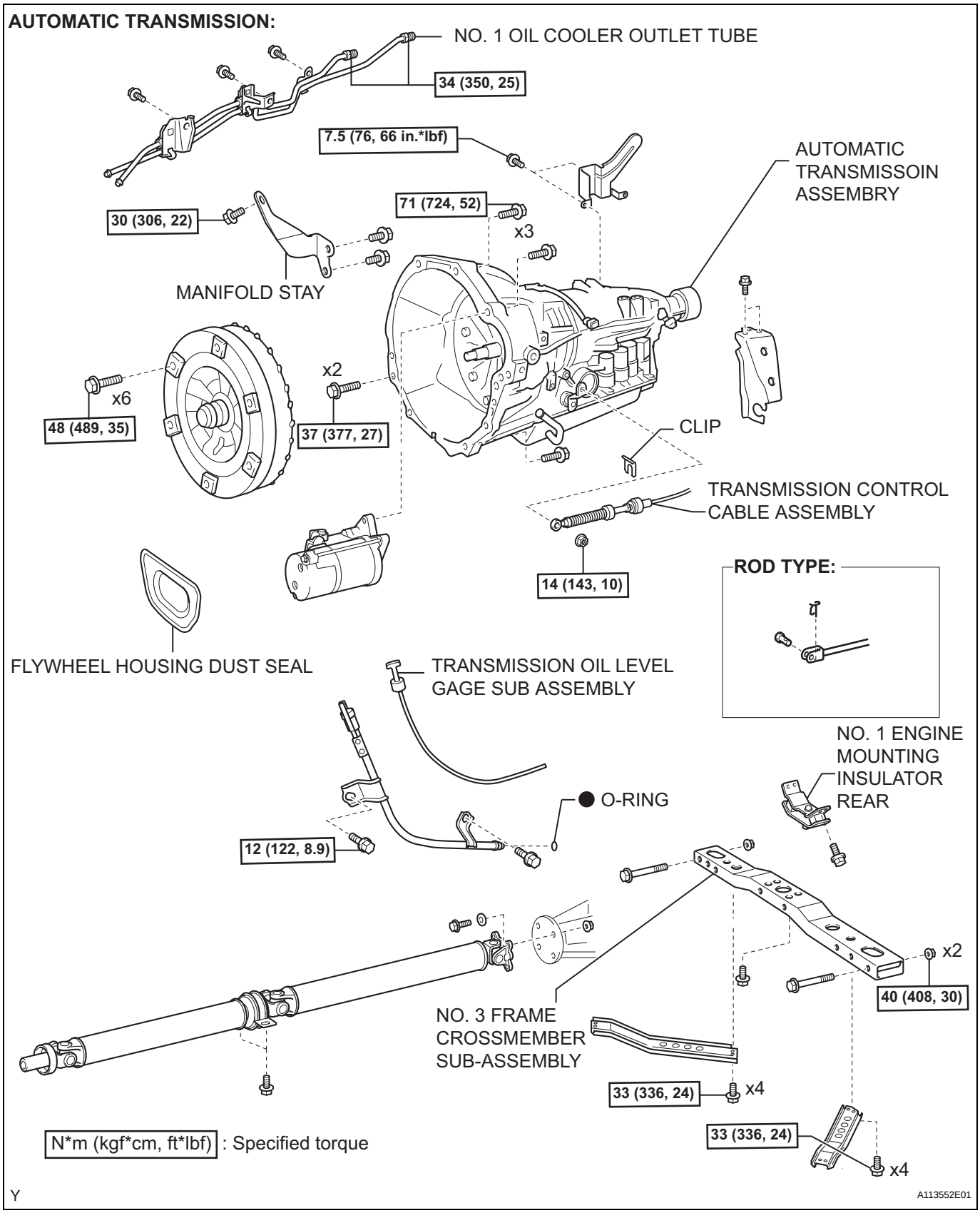
AUTOMATIC TRANSMISSION:
NO. 1 OIL COOLER OUTLET TUBE
34 (350, 25)
7.5 (76, 66 in.*lbf)
AUTOMATIC TRANSMISSOIN ASSEMBRY
71 (724, 52)
x3
30 (306, 22)
MANIFOLD STAY
x2
x6
48 (489, 35)
37 (377, 27)
CLIP
TRANSMISSION CONTROL CABLE ASSEMBLY
14 (143, 10)
ROD TYPE:
FLYWHEEL HOUSING DUST SEAL
TRANSMISSION OIL LEVEL GAGE SUB ASSEMBLY
NO. 1 ENGINE MOUNTING INSULATOR REAR
O-RING
12 (122, 8.9)
x2
40 (408, 30)
NO. 3 FRAME CROSSMEMBER SUB-ASSEMBLY
33 (336, 24)
x4
33 (336, 24)
x4
N*m (kgf*cm, ft*lbf) : Specified torque
Y
A113552E01

EM

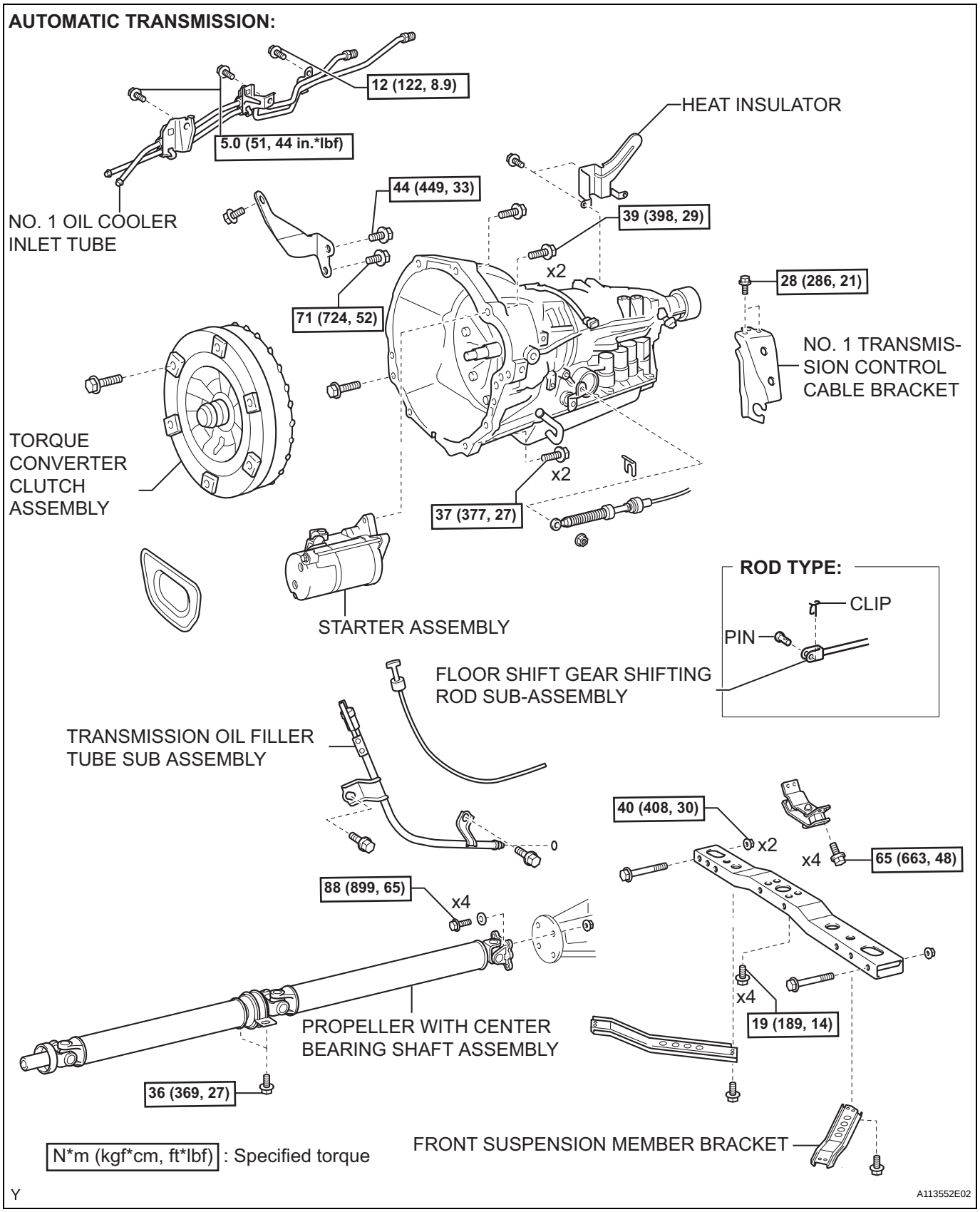
AUTOMATIC TRANSMISSION:
12 (122, 8.9)
5.0 (51, 44 in.*lbf)
NO. 1 OIL COOLER INLET TUBE
HEAT INSULATOR
44 (449, 33)
39 (398, 29)
x2
28 (286, 21)
71 (724, 52)
NO. 1 TRANSMISSION CONTROL CABLE BRACKET
TORQUE CONVERTER CLUTCH ASSEMBLY
x2
37 (377, 27)
STARTER ASSEMBLY
ROD TYPE:
CLIP
PIN
FLOOR SHIFT GEAR SHIFTING ROD SUB-ASSEMBLY
TRANSMISSION OIL FILLER TUBE SUB ASSEMBLY
40 (408, 30)
x2
x4
65 (663, 48)
88 (899, 65)
x4
x4
19 (189, 14)
PROPELLER WITH CENTER BEARING SHAFT ASSEMBLY
36 (369, 27)
FRONT SUSPENSION MEMBER BRACKET
N*m (kgf*cm, ft*lbf) : Specified torque
Y
A113552E02

EM

EM

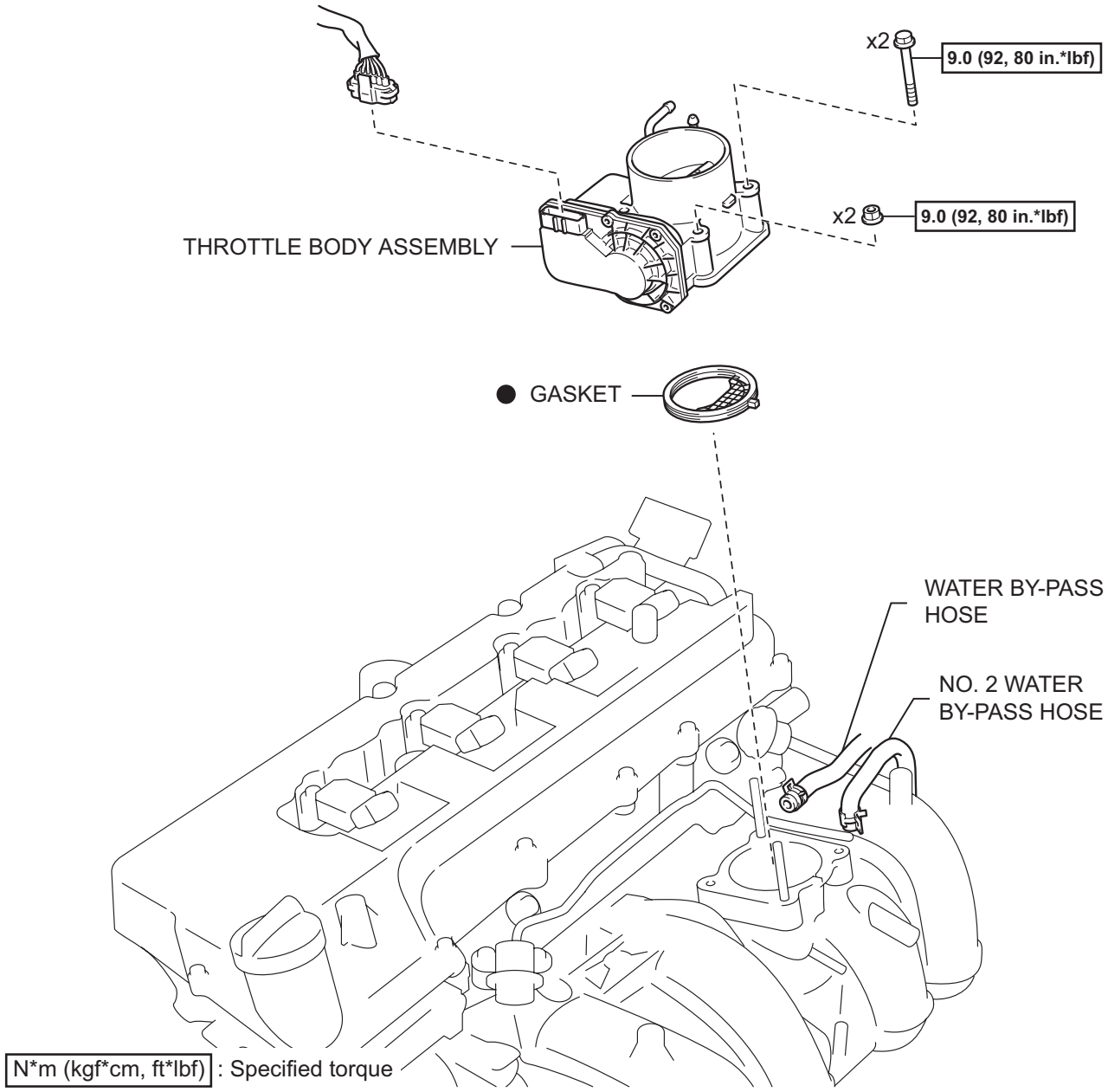

● Non-reusable part

T

A113624E01

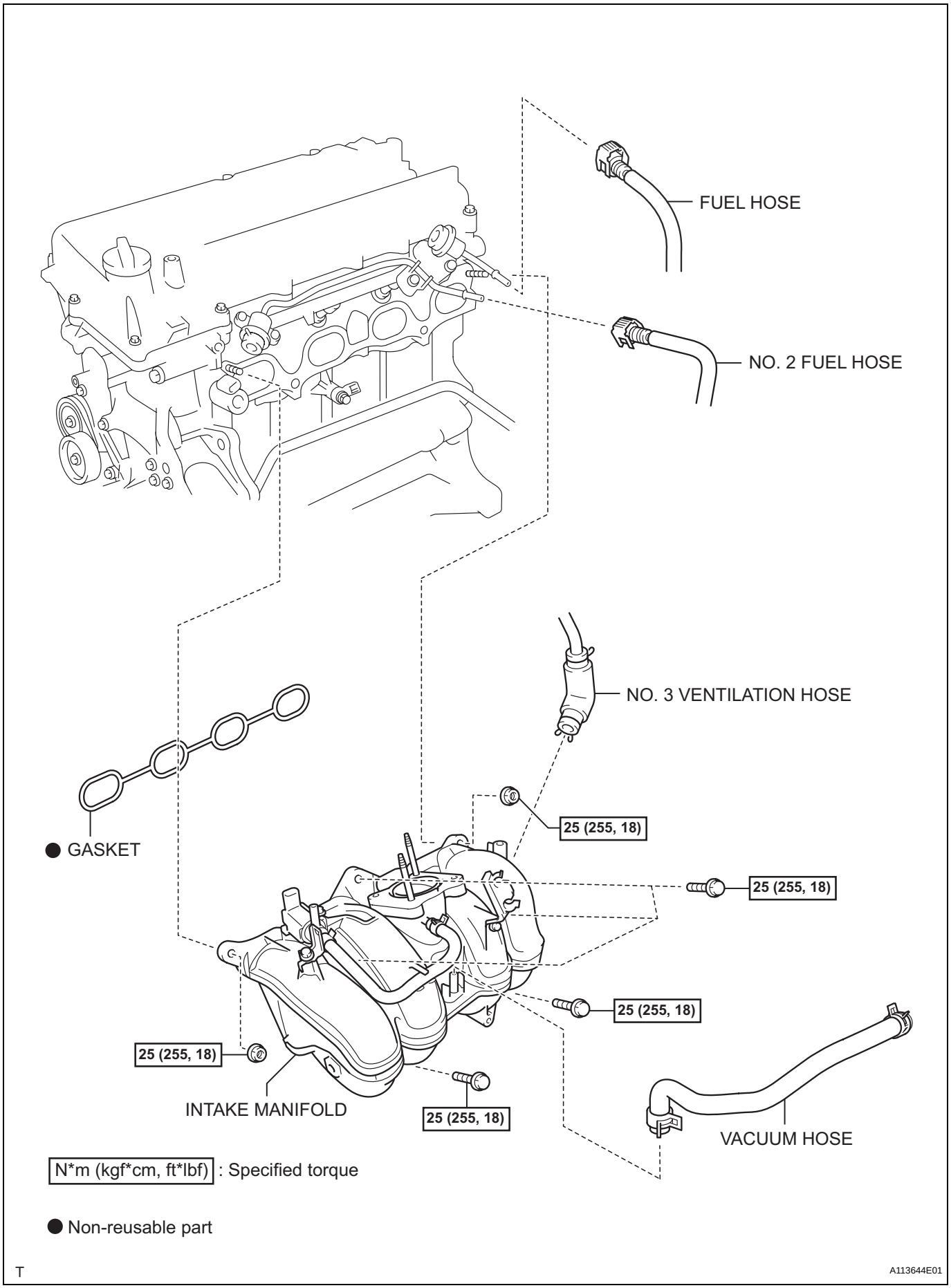
FUEL HOSE
NO. 2 FUEL HOSE
NO. 3 VENTILATION HOSE
25 (255, 18)
25 (255, 18)
25 (255, 18)
25 (255, 18)
25 (255, 18)
● GASKET
INTAKE MANIFOLD
VACUUM HOSE
N*m (kgf*cm, ft*lbf) : Specified torque
● Non-reusable part
T
A113644E01

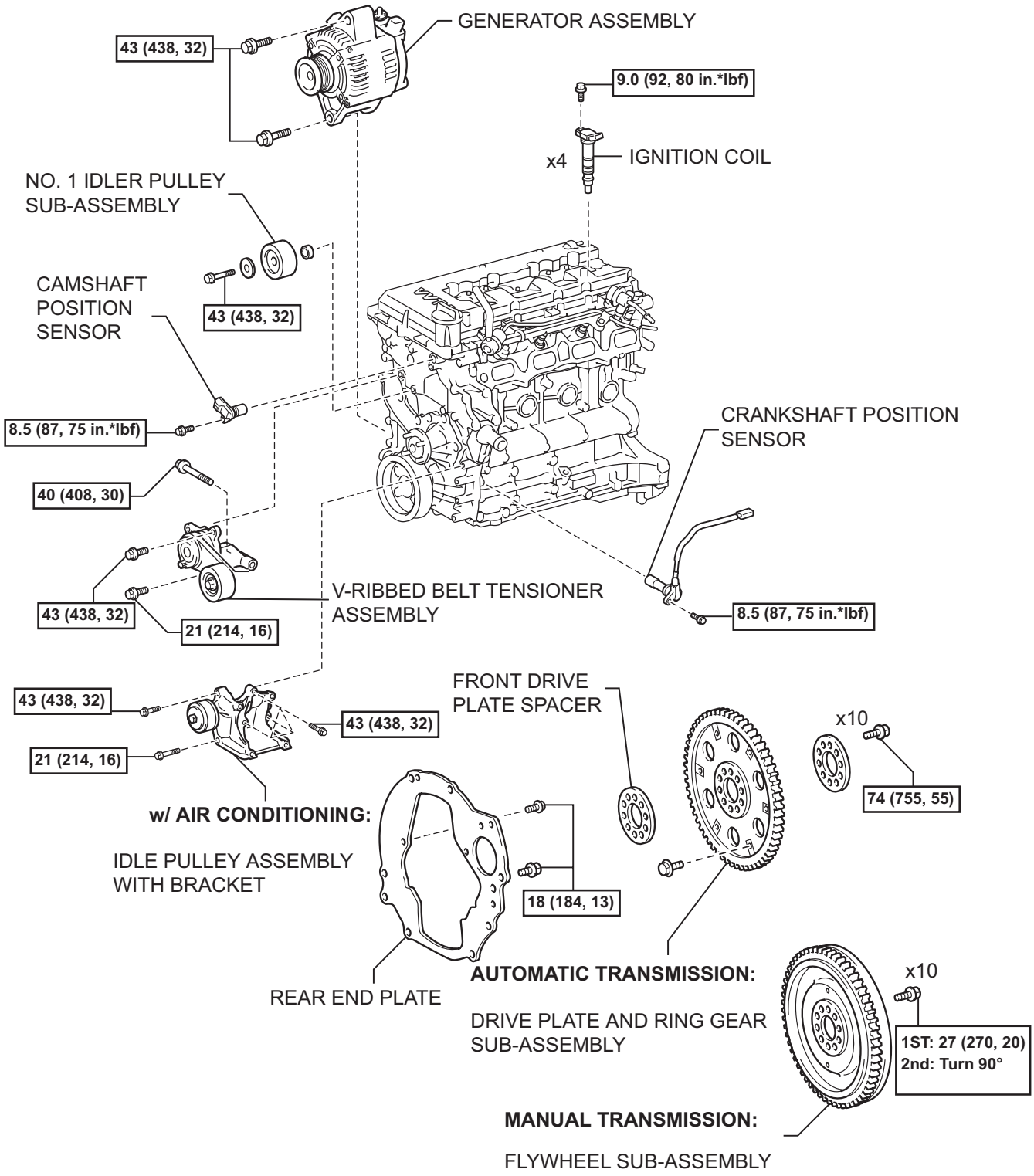
GENERATOR ASSEMBLY
43 (438, 32)
9.0 (92, 80 in.*lbf)
x4
IGNITION COIL
NO. 1 IDLER PULLEY SUB-ASSEMBLY
CAMSHAFT POSITION SENSOR
43 (438, 32)
8.5 (87, 75 in.*lbf)
CRANKSHAFT POSITION SENSOR
40 (408, 30)
V-RIBBED BELT TENSIONER ASSEMBLY
43 (438, 32)
21 (214, 16)
8.5 (87, 75 in.*lbf)
43 (438, 32)
43 (438, 32)
21 (214, 16)
FRONT DRIVE PLATE SPACER
x10
74 (755, 55)
w/ AIR CONDITIONING:
IDLE PULLEY ASSEMBLY WITH BRACKET
18 (184, 13)
REAR END PLATE
AUTOMATIC TRANSMISSION:
DRIVE PLATE AND RING GEAR SUB-ASSEMBLY
x10
1ST: 27 (270, 20)
2nd: Turn 90°
MANUAL TRANSMISSION:
FLYWHEEL SUB-ASSEMBLY
N*m (kgf*cm, ft*lbf) : Specified torque
T
A113645E01

EM

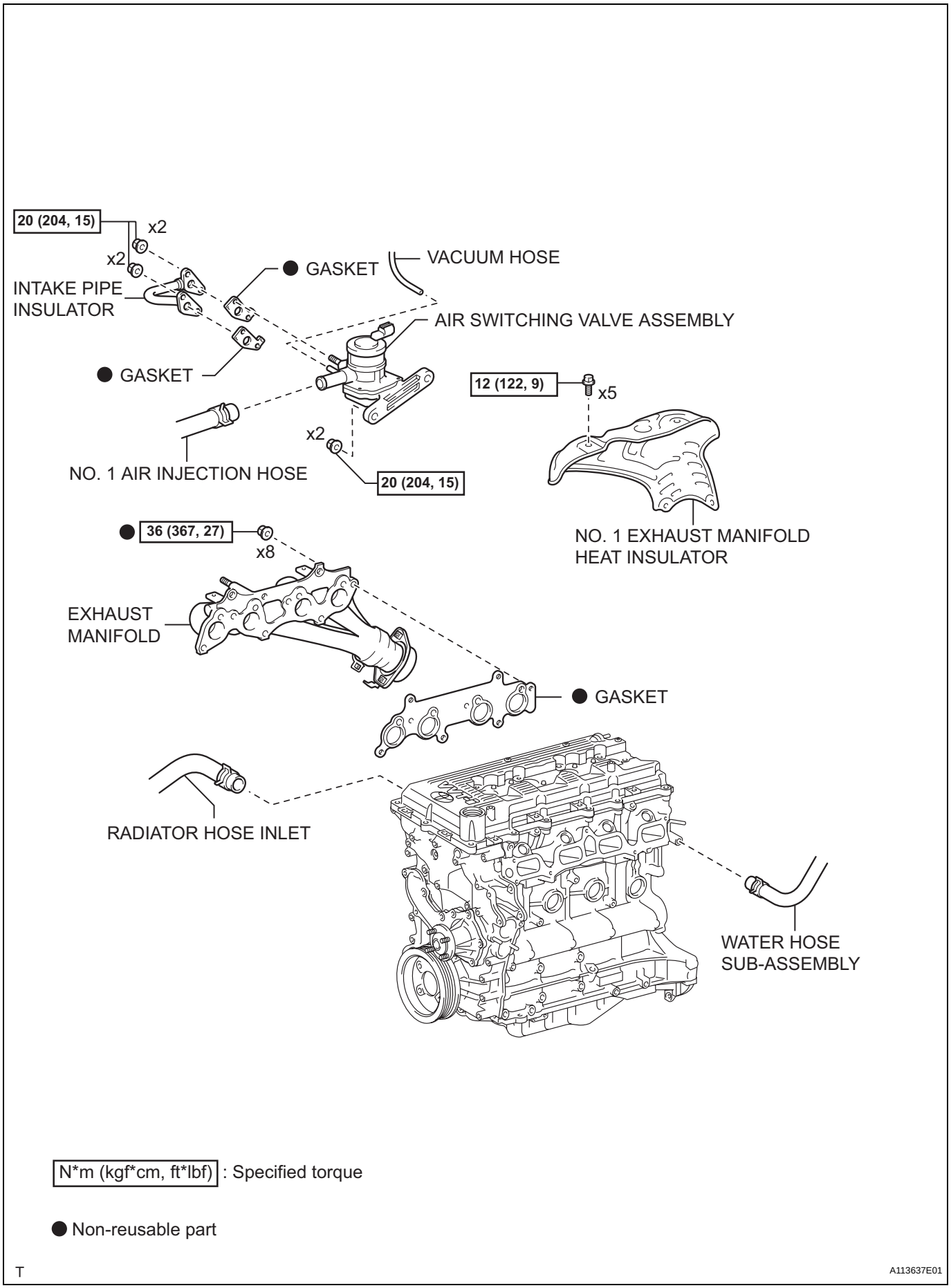
20 (204, 15)
x2
x2
INTAKE PIPE INSULATOR
● GASKET
VACUUM HOSE
AIR SWITCHING VALVE ASSEMBLY
● GASKET
12 (122, 9)
x5
x2
NO. 1 AIR INJECTION HOSE
20 (204, 15)
NO. 1 EXHAUST MANIFOLD HEAT INSULATOR
● 36 (367, 27)
x8
EXHAUST MANIFOLD
● GASKET
RADIATOR HOSE INLET
WATER HOSE SUB-ASSEMBLY
N*m (kgf*cm, ft*lbf) : Specified torque
● Non-reusable part
T
A113637E01

EM

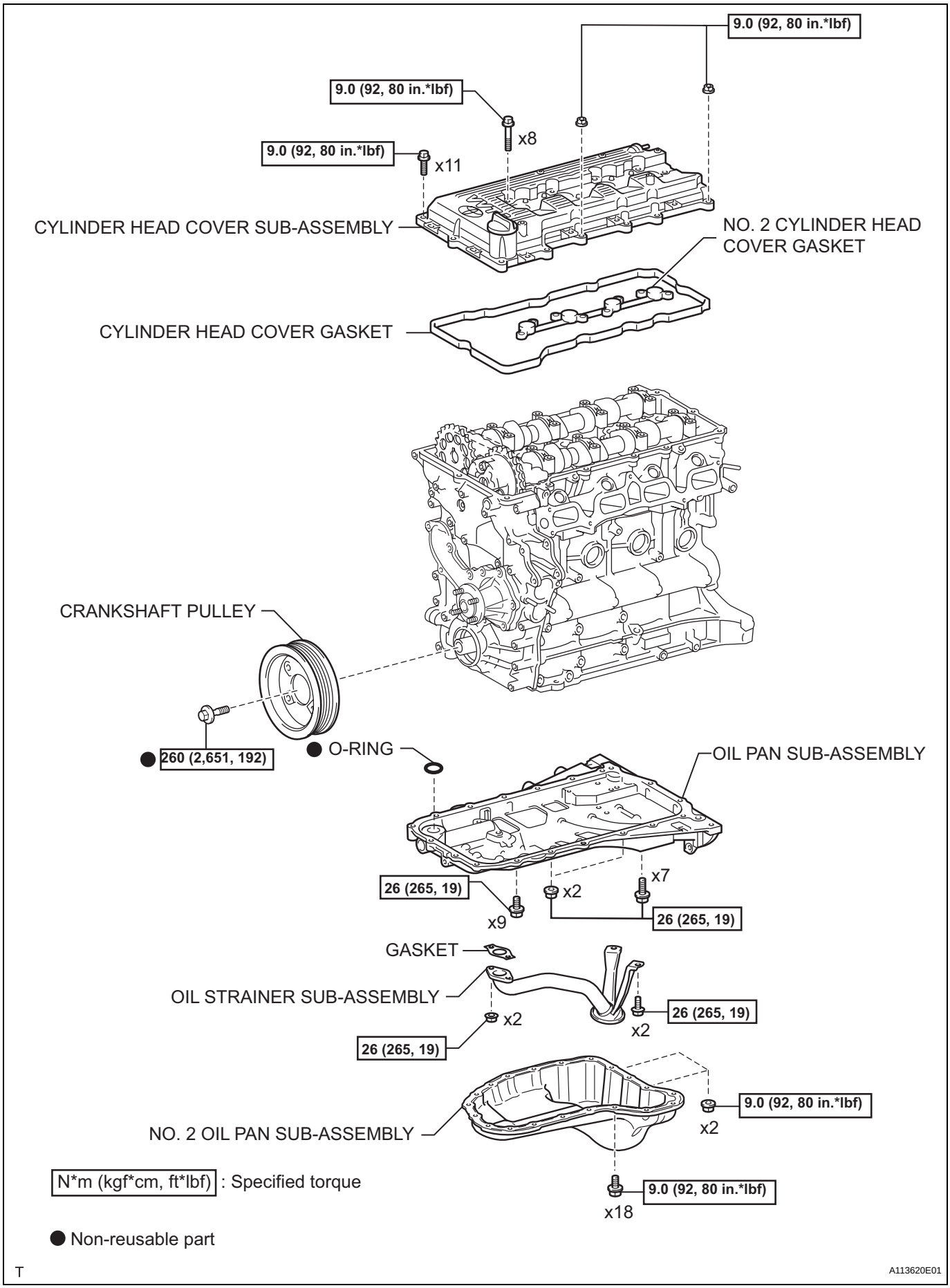
9.0 (92, 80 in.*lbf)
9.0 (92, 80 in.*lbf)
x8
9.0 (92, 80 in.*lbf)
x11
CYLINDER HEAD COVER SUB-ASSEMBLY
NO. 2 CYLINDER HEAD COVER GASKET
CYLINDER HEAD COVER GASKET
CRANKSHAFT PULLEY
260 (2,651, 192)
O-RING
OIL PAN SUB-ASSEMBLY
26 (265, 19)
x9
x2
x7
26 (265, 19)
GASKET
OIL STRAINER SUB-ASSEMBLY
x2
26 (265, 19)
x2
26 (265, 19)
9.0 (92, 80 in.*lbf)
x2
NO. 2 OIL PAN SUB-ASSEMBLY
N*m (kgf*cm, ft*lbf) : Specified torque
9.0 (92, 80 in.*lbf)
x18
Non-reusable part
T
A113620E01

EM

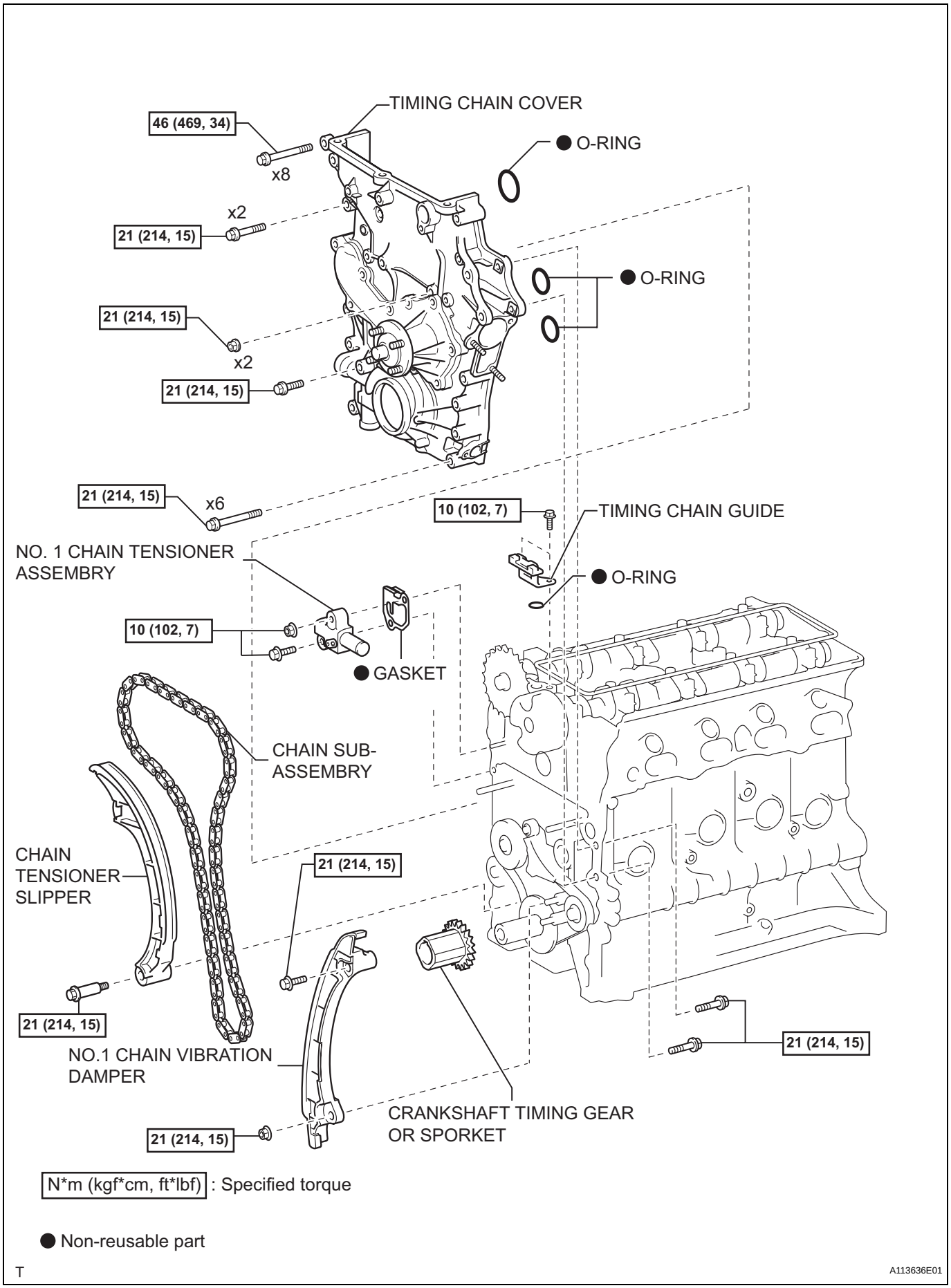
TIMING CHAIN COVER
46 (469, 34)
x8
● O-RING
x2
21 (214, 15)
● O-RING
21 (214, 15)
x2
21 (214, 15)
21 (214, 15)
x6
10 (102, 7)
TIMING CHAIN GUIDE
NO. 1 CHAIN TENSIONER ASSEMBRY
● O-RING
10 (102, 7)
● GASKET
CHAIN SUB-ASSEMBRY
CHAIN TENSIONER SLIPPER
21 (214, 15)
21 (214, 15)
NO.1 CHAIN VIBRATION DAMPER
21 (214, 15)
CRANKSHAFT TIMING GEAR OR SPORKET
21 (214, 15)
N*m (kgf*cm, ft*lbf) : Specified torque
● Non-reusable part
T
A113636E01

EM

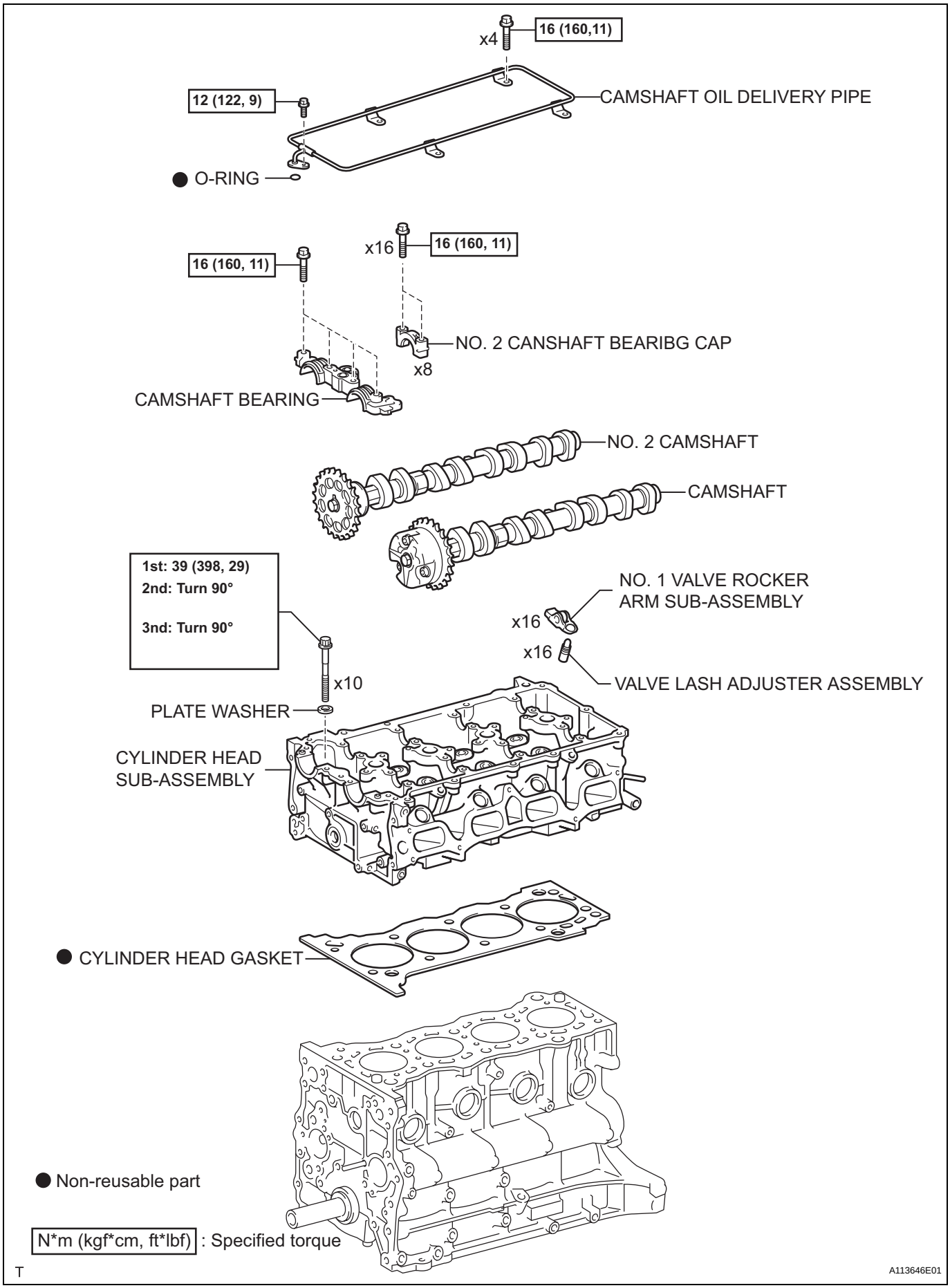
x4
16 (160,11)
CAMSHAFT OIL DELIVERY PIPE
12 (122, 9)
O-RING
x16
16 (160, 11)
16 (160, 11)
NO. 2 CANSHAFT BEARIBG CAP
x8
CAMSHAFT BEARING
NO. 2 CAMSHAFT
CAMSHAFT
1st: 39 (398, 29)
2nd: Turn 90°
3nd: Turn 90°
NO. 1 VALVE ROCKER ARM SUB-ASSEMBLY
x16
x16
VALVE LASH ADJUSTER ASSEMBLY
x10
PLATE WASHER
CYLINDER HEAD SUB-ASSEMBLY
CYLINDER HEAD GASKET
Non-reusable part
N*m (kgf*cm, ft*lbf) : Specified torque
T
A113646E01

EM

REMOVAL

1. **REMOVE HOOD SUB-ASSEMBLY**
2. **DISCHARGE FUEL SYSTEM PRESSURE**
   (See page FU-1)
3. **REMOVE NO. 1 ENGINE UNDER COVER SUB-ASSEMBLY (for Pre Runner and 4WD Type)**
   (a) Remove the 4 bolts, then remove the No. 1 engine under cover.
4. **REMOVE NO. 2 ENGINE UNDER COVER SUB-ASSEMBLY (for Pre Runner and 4WD Type, Regular Cab)**
   (a) Remove the 4 bolts, then remove the No. 2 engine under cover.
5. **DRAIN ENGINE OIL (See page LU-3)**
6. **DRAIN ENGINE COOLANT (See page CO-3)**
7. **REMOVE BATTERY**
8. **REMOVE BATTERY TRAY**
9. **REMOVE RADIATOR SUPPORT TO FRAME SEAL LH (See page CO-12)**
10. **REMOVE FAN SHROUD (See page CO-13)**
11. **REMOVE AIR CLEANER CAP SUB-ASSEMBLY (See page EC-14)**
12. **REMOVE AIR CLEANER FILTER ELEMENT SUB-ASSEMBLY**
13. **REMOVE AIR CLEANER CASE**
    (a) Remove the 3 bolts, then remove the air cleaner case.
14. **SEPARATE VANE PUMP ASSEMBLY (See page EM-21)**
15. **REMOVE NO. 2 RADIATOR HOSE**
16. **SEPARATE COMPRESSOR AND MAGNETIC CLUTCH (w/ Air Conditioning) (See page EM-21)**
17. **REMOVE RADIATOR HOSE INLET**
18. **SEPARATE WATER HOSE SUB-ASSEMBLY (See page EM-92)**
19. **DISCONNECT FUEL HOSE (See page FU-11)**
20. **DISCONNECT NO. 2 FUEL HOSE (See page FU-11)**
21. **SEPARATE FUEL VAPOR FEED HOSE ASSEMBLY (See page EM-93)**
22. **DISCONNECT NO. 1 AIR INJECTION HOSE (See page EM-93)**
23. **DISCONNECT ENGINE WIRE (See page EM-93)**

24. REMOVE EXHAUST PIPE ASSEMBLY TAIL (See page EX-2)

25. REMOVE EXHAUST PIPE ASSEMBLY FRONT (See page EX-2)

26. REMOVE MANUAL TRANSMISSION UNIT ASSEMBLY

Transmission	See page
R155	MT-6
R155F	MT-8

27. REMOVE AUTOMATIC TRANSMISSION ASSEMBLY (See page AT-113)

28. REMOVE ENGINE ASSEMBLY (See page EM-98)

29. REMOVE CLUTCH COVER ASSEMBLY (for Manual Transmission)

Transmission	See page
R155	CL-30
R155F	CL-35

30. REMOVE CLUTCH DISC ASSEMBLY (for Manual Transmission)

Transmission	See page
R155	CL-30
R155F	CL-35

31. REMOVE FLYWHEEL SUB-ASSEMBLY (for Automatic Transmission) (See page EM-77)

32. REMOVE DRIVE PLATE AND RING GEAR SUB-ASSEMBLY (for Manual Transmission) (See page EM-78)

33. REMOVE REAR END PLATE

(a) Remove the 2 bolts, then remove the rear end plate.

34. REMOVE INTAKE AIR CONNECTOR (See page ES-452)

35. REMOVE GENERATOR ASSEMBLY (See page CH-7)

36. REMOVE NO. 1 EXHAUST MANIFOLD HEAT INSULATOR (See page EC-14)

37. REMOVE INTAKE PIPE INSULATOR (See page EC-14)

38. REMOVE AIR SWITCHING VALVE ASSEMBLY (See page EC-15)

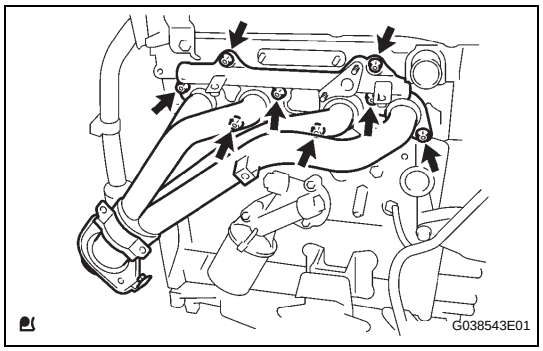

39. **REMOVE EXHAUST MANIFOLD**
    (a) Remove the 8 nuts, then remove the exhaust manifold.
40. **REMOVE V-RIBBED BELT TENSIONER ASSEMBLY (See page CO-5)**
41. **REMOVE NO. 1 IDLER PULLEY SUB-ASSEMBLY (See page EM-23)**
42. **REMOVE IDLE PULLEY ASSEMBLY WITH BRACKET (w/ Air Conditioning System) (See page ES-446)**
43. **REMOVE CRANKSHAFT POSITION SENSOR (See page ES-444)**
44. **REMOVE CAMSHAFT POSITION SENSOR (See page ES-444)**
45. **REMOVE NO. 1 INTAKE MANIFOLD HEAD GASKET (See page ES-460)**
46. **REMOVE CYLINDER HEAD COVER SUB-ASSEMBLY (See page EM-38)**
47. **REMOVE CRANKSHAFT PULLEY (See page EM-74)**
48. **REMOVE OIL LEVEL GAGE SUB-ASSEMBLY**
49. **REMOVE NO. 2 OIL PAN SUB-ASSEMBLY (See page EM-24)**
50. **REMOVE OIL STRAINER SUB-ASSEMBLY (See page EM-24)**
51. **REMOVE OIL PAN SUB-ASSEMBLY (See page EM-25)**
52. **REMOVE TIMING CHAIN COVER (See page LU-21)**
53. **REMOVE TIMING CHAIN GUIDE (See page EM-25)**
54. **REMOVE NO. 1 CHAIN TENSIONER ASSEMBLY (See page EM-26)**
55. **REMOVE CHAIN TENSIONER SLIPPER (See page EM-26)**
56. **REMOVE NO. 1 CHAIN VIBRATION DAMPER (See page EM-27)**
57. **REMOVE CHAIN SUB-ASSEMBLY**
58. **REMOVE CAMSHAFT (See page EM-40)**
59. **REMOVE NO. 1 VALVE ROCKER ARM SUB-ASSEMBLY**
    (a) Remove the 16 valve rocker arms.

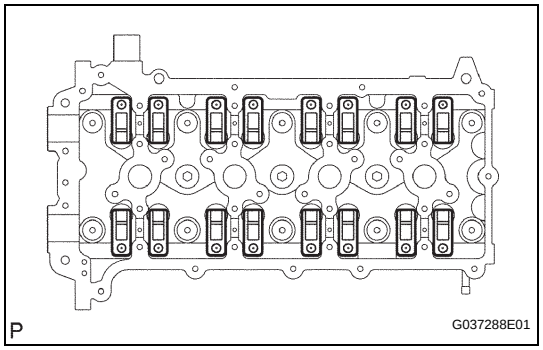

EM

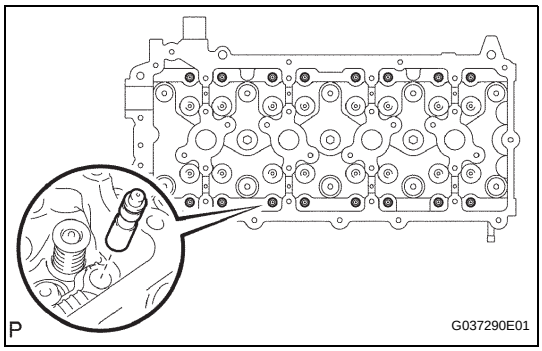

60. REMOVE VALVE LASH ADJUSTER ASSEMBLY

(a) Remove the valve lash adjuster.

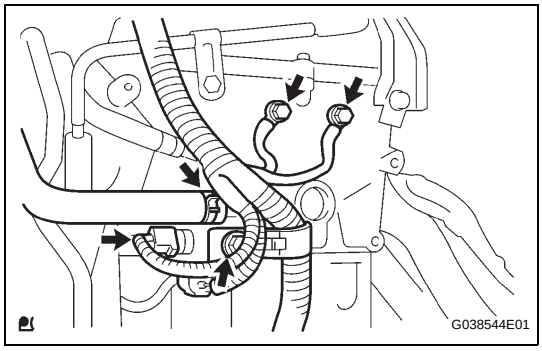

61. REMOVE CYLINDER HEAD SUB-ASSEMBLY

(a) Disconnect the water hose shown in the illustration.
(b) Disconnect the engine coolant temperature sensor connector.
(c) Remove the bolts, then separate the wire harnesses.
(d) Remove the bolt, then separate the wire harness bracket.

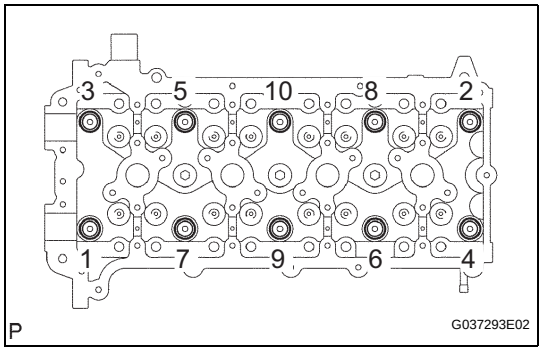

(e) Using a 10 mm bi-hexagon wrench, uniformly loosen the 10 bolts in the sequence shown in the illustration. Remove the 10 cylinder head bolts and plate washers.

NOTICE:

- **Be careful not to drop the washers into the cylinder head.**
- **Head warpage or cracking could result from removing the bolts in the wrong order.**

62. REMOVE CYLINDER HEAD GASKET

INSPECTION

1. INSPECT CYLINDER HEAD SET BOLT

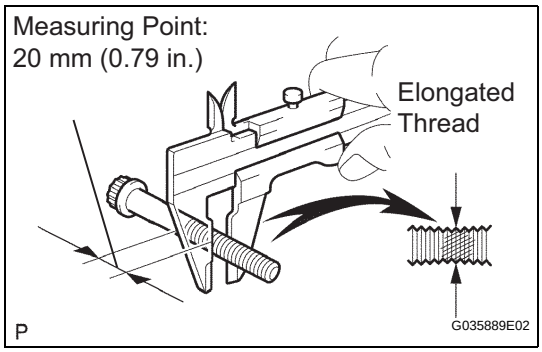

(a) Using vernier calipers, measure the minimum diameter of the elongated thread at the measuring point.

Standard outside diameter:
10.76 to 10.97 mm (0.4236 to 0.4319 in.)
Minimum outside diameter:
10.40 mm (0.4094 in.)

HINT:
If a visual check reveals no excessively thin areas, check the center of the bolt (see illustration) and find the area that has the smallest diameter.

EM

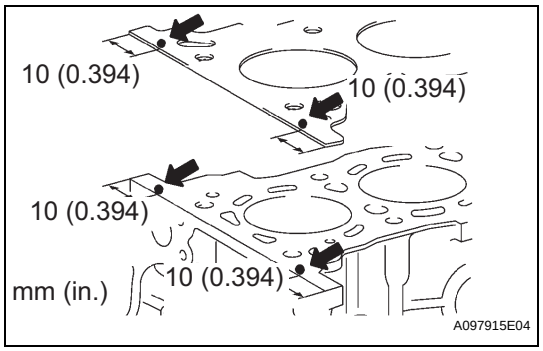

INSTALLATION

1. INSTALL CYLINDER HEAD GASKET

(a) Apply continuous beads of seal packing to the cylinder block upper side and cylinder head gasket upper side as shown in the illustration.

Seal packing:
Part No. 08826-00080 or equivalent
Seal width:
4 to 7 mm (0.15 to 0.28 in.)
NOTICE:
- **Remove any oil from the contact surface.**
- **Install the cylinder head gasket within 3 minutes of applying the seal packing.**
- **Install the cylinder head bolt within 15 minutes of applying the seal packing.**
- **Do not pour in engine oil for at least 4 hours after installation.**

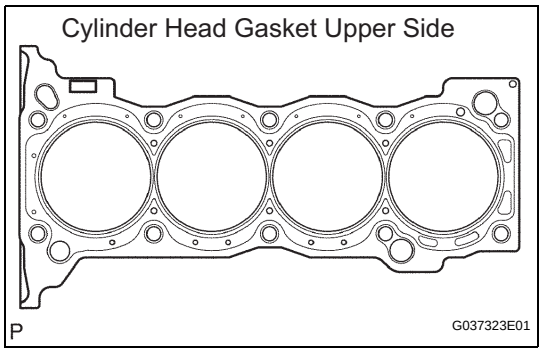

(b) Place a new cylinder head gasket on the cylinder block surface with the Lot No. stamp facing upward.

NOTICE:
- **Make sure that the cylinder head gasket is installed in the correct direction.**
- **Place the cylinder head gently in order to avoid damaging the gasket with the bottom part of the head.**

2. INSTALL CYLINDER HEAD SUB-ASSEMBLY

HINT:
The cylinder head bolts are tightened in 2 successive steps.

(a) Place the cylinder head on the cylinder block.

(b) Apply a light coat of engine oil to the threads and under the heads of the cylinder head bolts.

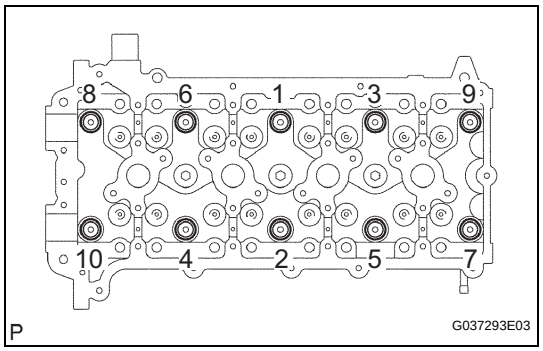

(c) Using several steps, uniformly install and tighten the 10 cylinder head bolts with plate washers with a 10 mm bi- hexagon wrench in the sequence shown in the illustration.

Torque: 39 N*m (398 kgf*cm, 29 ft.*lbf)

EM

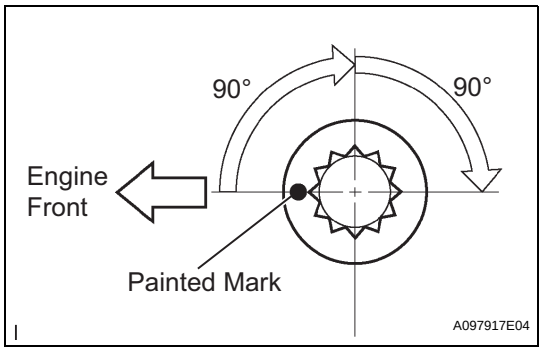

(d) Mark the front of the cylinder head bolt head with paint.
(e) Retighten the cylinder head bolts by 90° in the same order as in step (c).
(f) Retighten the cylinder head bolts by an additional 90°.
(g) Check that the painted mark is at a 180° from the original position.

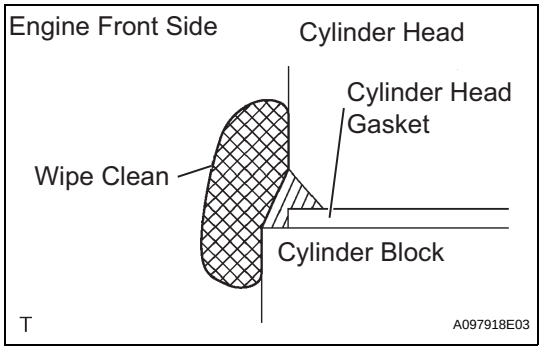

(h) Seal packing will seep out on the engine's front side. Thoroughly wipe clean any seal packing.
(i) Install the wire harness bracket with the bolt.
(j) Install the wire harness with the bolts.
(k) Connect the engine coolant temperature sensor connector.
(l) Install the water hose.

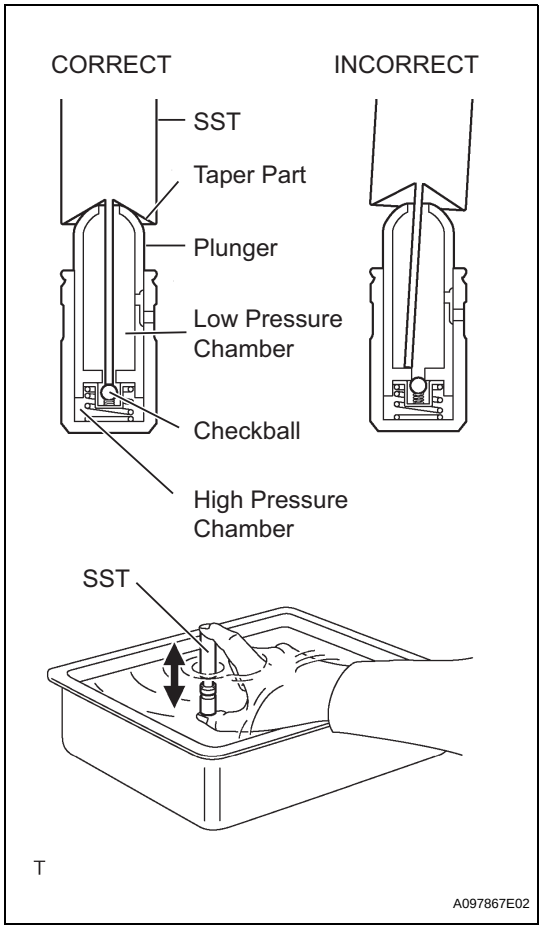

3. INSPECT VALVE LASH ADJUSTER ASSEMBLY

NOTICE:
- **Keep the lash adjuster free from dirt and foreign objects.**
- **Only use clean engine oil.**

(a) Place the lash adjuster into a container full of engine oil.
(b) Insert the tip of SST into the lash adjuster's plunger and press down the checkball inside the plunger.
SST 09276-75010
(c) Firmly hold SST and lash adjuster together and move the plunger up and down 5 to 6 times.
(d) Check the movement of the plunger and bleed air.
OK:
Plunger moves up and down.
NOTICE:
When bleeding high-pressure air from the compression chamber, make sure that the tip of the SST is actually pressing the checkball as shown in the illustration. If the checkball is not pressed, the air will not bleed.
(e) After bleeding the air, remove SST. Then quickly and firmly press the plunger with a finger.
OK:
Plunger is very difficult to move.
If the result is not as specified, replace the lash adjuster.

EM

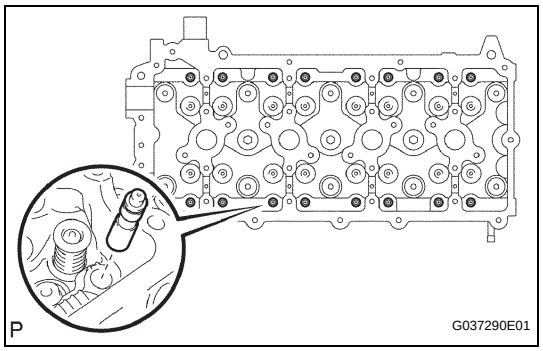

4. **INSTALL VALVE LASH ADJUSTER ASSEMBLY**
   (a) Install the valve lash adjuster.

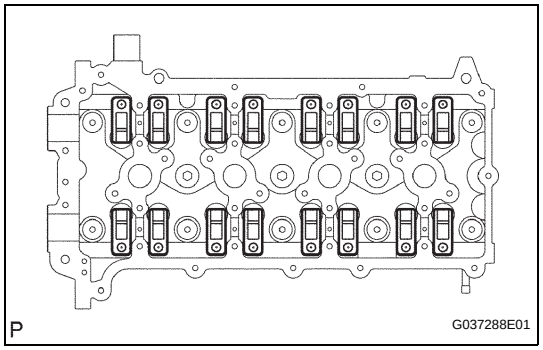

5. **INSTALL NO. 1 VALVE ROCKER ARM SUB-ASSEMBLY**
   (a) Install the 16 valve rocker arms.
6. **INSTALL CAMSHAFT (See page EM-45)**
7. **INSTALL NO. 1 CHAIN VIBRATION DAMPER (See page EM-30)**
8. **INSTALL CHAIN SUB-ASSEMBLY (See page EM-30)**
9. **INSTALL CHAIN TENSIONER SLIPPER (See page EM-31)**
10. **INSTALL NO. 1 CHAIN TENSIONER ASSEMBLY (See page EM-31)**
11. **INSTALL TIMING CHAIN GUIDE (See page EM-31)**
12. **INSTALL TIMING CHAIN COVER (See page LU-24)**
13. **INSTALL OIL PAN SUB-ASSEMBLY (See page EM-31)**
14. **INSTALL OIL STRAINER SUB-ASSEMBLY (See page EM-32)**
15. **INSTALL NO. 2 OIL PAN SUB-ASSEMBLY (See page EM-32)**
16. **INSTALL OIL LEVEL GAGE SUB-ASSEMBLY**
17. **INSTALL CRANKSHAFT PULLEY (See page EM-75)**
18. **INSTALL CYLINDER HEAD COVER SUB-ASSEMBLY (See page EM-48)**
19. **INSTALL NO. 1 INTAKE MANIFOLD TO HEAD GASKET (See page ES-463)**
20. **INSTALL CAMSHAFT POSITION SENSOR (See page ES-444)**
21. **INSTALL CRANKSHAFT POSITION SENSOR (See page ES-444)**
22. **INSTALL IDLE PULLEY ASSEMBLY WITH BRACKET (w/ Air Conditioning System) (See page ES-448)**
23. **INSTALL NO. 1 IDLER PULLEY SUB-ASSEMBLY (See page EM-33)**
24. **INSTALL V-RIBBED BELT TENSIONER ASSEMBLY (See page CO-6)**

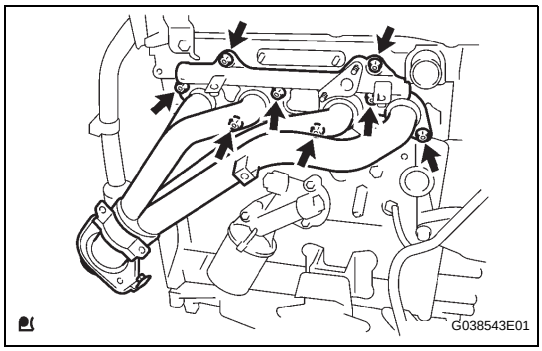

25. INSTALL EXHAUST MANIFOLD

(a) Install a new gasket and the exhaust manifold with 8 new nuts.
Torque: 36 N*m (367 kgf*cm, 27 ft.*lbf)

26. INSTALL AIR SWITCHING VALVE ASSEMBLY (See page EC-16)

27. INSTALL INTAKE PIPE INSULATOR (See page EC-16)

28. INSTALL NO. 1 EXHAUST MANIFOLD HEAT INSULATOR (See page EC-16)

29. INSTALL GENERATOR ASSEMBLY (See page CH-13)

30. INSTALL INTAKE AIR CONNECTOR (See page ES-455)

31. INSTALL REAR END PLATE

(a) Install the rear end plate with the 2 bolts.
Torque: 18 N*m (178 kgf*cm, 13 ft.*lbf)

EM

32. INSTALL DRIVE PLATE AND RING GEAR SUB-ASSEMBLY (for Automatic Transmission) (See page EM-79)

33. INSTALL FLYWHEEL SUB-ASSEMBLY (for Manual Transmission) (See page EM-79)

34. INSTALL CLUTCH DISC ASSEMBLY (for Manual Transmission)

Transmission	See page
R155	CL-32
R155F	CL-37

35. INSTALL CLUTCH COVER ASSEMBLY (for Manual Transmission)

Transmission	See page
R155	CL-32
R155F	CL-37

36. INSTALL ENGINE ASSEMBLY (See page EM-98)

37. INSTALL AUTOMATIC TRANSMISSION ASSEMBLY (See page ED-7)

38. INSTALL MANUAL TRANSMISSION UNIT ASSEMBLY

Transmission	See page
R155	MT-9
R155F	MT-11

39. INSTALL EXHAUST PIPE ASSEMBLY FRONT (See page CH-13)

40. INSTALL EXHAUST PIPE ASSEMBLY TAIL (See page EX-2)

41. CONNECT ENGINE WIRE

42. CONNECT NO. 1 AIR INJECTION HOSE (See page EM-99)

43. **CONNECT FUEL VAPOR FEED HOSE ASSEMBLY**

44. **CONNECT NO. 2 FUEL HOSE (See page FU-17)**

45. **CONNECT FUEL HOSE (See page FU-17)**

46. **INSTALL WATER HOSE SUB-ASSEMBLY (See page EM-99)**

47. **INSTALL RADIATOR HOSE INLET**

48. **INSTALL COMPRESSOR AND MAGNETIC CLUTCH (With Air Conditioning) (See page EM-34)**

49. **INSTALL NO. 2 RADIATOR HOSE**

50. **INSTALL VANE PUMP ASSEMBLY (See page EM-34)**

51. **INSTALL AIR CLEANER CASE**
    (a) Install the air cleaner case with the 3 bolts.
    Torque: 12 N*m (122 kgf*cm, 9 ft.*lbf)

52. **INSTALL AIR CLEANER FILTER ELEMENT SUB-ASSEMBLY**

53. **INSTALL AIR CLEANER CAP SUB-ASSEMBLY (See page EC-17)**

54. **INSTALL FAN SHROUD (See page CO-18)**

55. **INSTALL RADIATOR SUPPORT TO FRAME SEAL LH (See page CO-19)**

56. **INSTALL BATTERY TRAY**

57. **INSTALL BATTERY**

58. **ADD ENGINE OIL (See page LU-4)**

59. **ADD ENGINE COOLANT (See page CO-3)**

60. **CHECK ENGINE OIL LEVEL**

61. **CHECK FOR FUEL LEAKAGE**

62. **CHECK FOR ENGINE COOLANT LEAKAGE (See page CO-2)**

63. **CHECK FOR OIL LEAKAGE**

64. **CHECK FOR EXHAUST GAS LEAKAGE**

65. **INSTALL NO. 1 ENGINE UNDER COVER SUB-ASSEMBLY (for Pre Runner and 4WD Type)**
    (a) Install the No. 1 engine under cover with the 4 bolts.
    Torque: 30 N*m (306 kgf*cm, 22 ft.*lbf)

66. **INSTALL NO. 2 ENGINE UNDER COVER SUB-ASSEMBLY (for Pre Runner and 4WD Type, Regular Cab)**
    (a) Install the No. 2 engine under cover with the 4 bolts.
    Torque: 30 N*m (306 kgf*cm, 22 ft.*lbf)

67. **INSTALL HOOD SUB-ASSEMBLY**
    (See page ED-7)

ENGINE FRONT OIL SEAL

REMOVAL

1. **REMOVE ENGINE UNDER COVER SUB-ASSEMBLY NO.1 (for Pre Runner and 4WD Type)**
   (a) Remove the 4 bolts, then remove the No. 1 engine under cover.
2. **DRAIN ENGINE COOLANT (See page CO-3)**
3. **REMOVE RADIATOR SUPPORT TO FRAME SEAL LH (See page CO-12)**
4. **REMOVE FAN SHROUD (See page CO-13)**
5. **REMOVE CRANKSHAFT PULLEY**
   (a) Remove the bolt, then separate the bracket. (w/ AIR CONDITIONING)

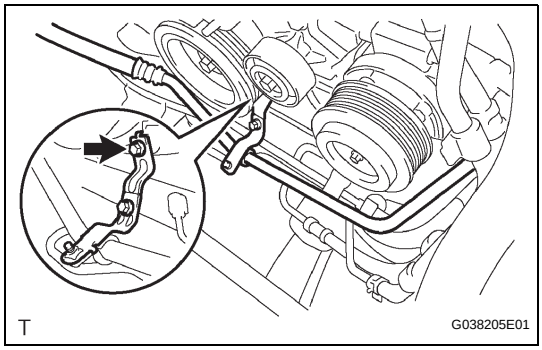

EM

(b) Using SST, loosen the crankshaft pulley bolt.
SST 09213-54015 (91651-60855), 09330-00021
HINT:
Loosen the crankshaft pulley bolt until only 2 or 3 threads are still installed in the crankshaft.

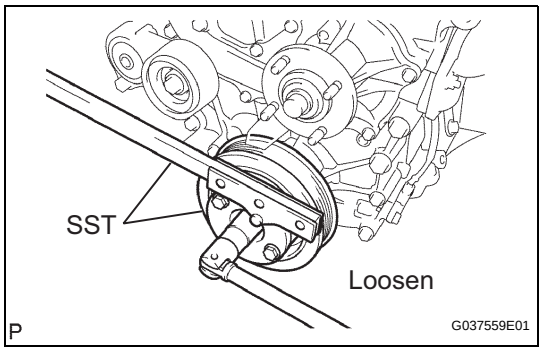

(c) Using SST, remove the crankshaft pulley and crankshaft pulley bolt.
SST 09950-50013 (09951-05010, 09952-05010, 09953-05010, 09954-05021)

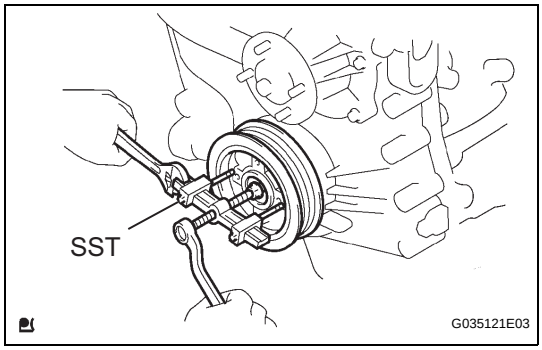

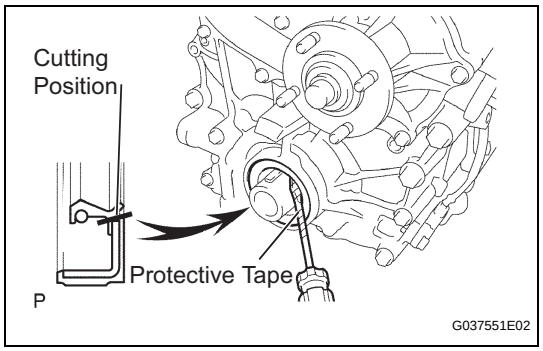

6. **REMOVE TIMING GEAR CASE OR TIMING CHAIN CASE OIL SEAL**
   (a) Using a cutter knife, cut off the lip of the oil seal.
   (b) Using a screwdriver with its tip wrapped in tape, pry out the oil seal and remove it.
   NOTICE:
   Check the crankshaft for damage after removing the oil seal. If damaged, smooth the surface with 400-grit sandpaper.

INSTALLATION

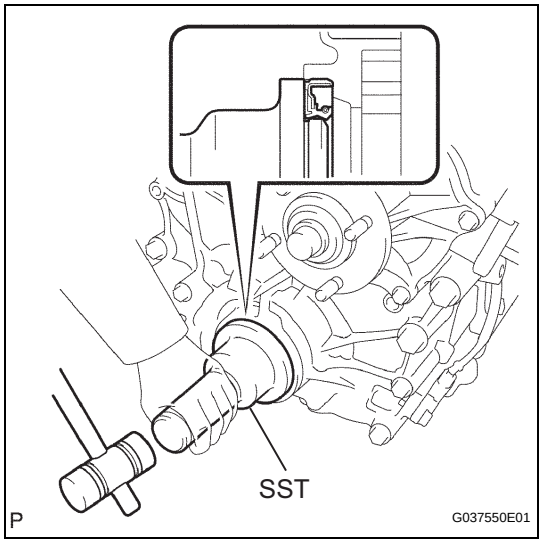

1. **INSTALL TIMING GEAR CASE OR TIMING CHAIN CASE OIL SEAL**
   (a) Apply a light coat of MP grease to the lip of a new oil seal.
   NOTICE:
   Keep the lip free of foreign objects.
   (b) Using SST, uniformly tap a new oil seal in until its surface is flush with the timing chain cover edge.
   SST 09223-50010
   NOTICE:
   - **Do not tap the oil seal in at an angle.**
   - **Wipe any extra grease off the crankshaft.**

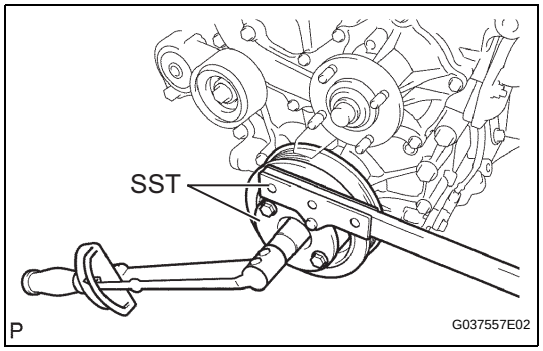

2. **INSTALL CRANKSHAFT PULLEY**
   (a) Align the set key of the crankshaft with the key groove of the pulley, and slide on the pulley.
   (b) Provisionally install a new crankshaft pulley bolt onto the crankshaft.
   (c) Using SST, hold the crankshaft pulley and tighten the crankshaft pulley bolt.
   SST 09213-54015 (91651-60855), 09330-00021
   Torque: 260 N*m (2,651 kgf*cm, 192 ft.*lbf)
   NOTICE:
   Do not reuse the pulley bolt.
   (d) Install the bracket with the bolt. (w/ AIR CONDITIONING)
   Torque: 7.5 N*m (76 kgf*cm, 66 in.*lbf)

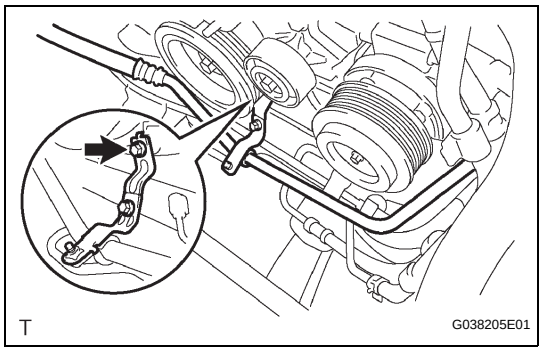

3. **INSTALL FAN SHROUD (See page CO-18)**
4. **INSTALL RADIATOR SUPPORT TO FRAME SEAL LH (See page CO-19)**
5. **ADD ENGINE COOLANT (See page CO-3)**
6. **CHECK FOR ENGINE COOLANT LEAKAGE (See page CO-2)**
7. **CHECK FOR ENGINE OIL LEAKAGE**

EM

8. INSTALL NO. 1 ENGINE UNDER COVER SUB-ASSEMBLY (for Pre Runner and 4WD Type)

(a) Install the No. 1 engine under cover with the 4 bolts.
Torque: 30 N*m (306 kgf*cm, 22 ft.*lbf)

ENGINE REAR OIL SEAL

REMOVAL

1. REMOVE MANUAL TRANSMISSION UNIT ASSEMBLY

Transmission	See page
R155	MT-6
R155F	MT-8

2. REMOVE AUTOMATIC TRANSMISSION ASSEMBLY
(See page AT-113)

3. REMOVE CLUTCH COVER ASSEMBLY (for Manual Transmission)

Transmission	See page
R155	CL-30
R155F	CL-35

4. REMOVE CLUTCH DISC ASSEMBLY (for Manual Transmission)

Transmission	See page
R155	CL-30
R155F	CL-35

5. REMOVE FLYWHEEL SUB-ASSEMBLY (for Manual Transmission)

(a) Using SST, hold the crankshaft pulley.
SST 09213-54015 (91651-60855), 09330-00021

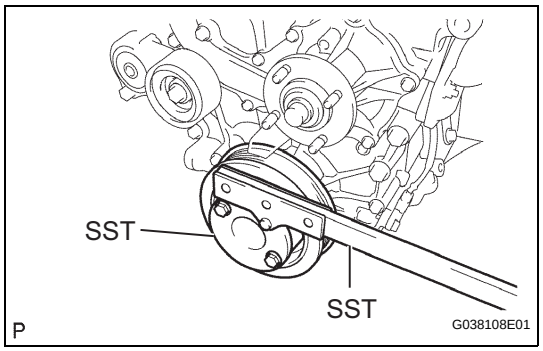

(b) Remove the 10 bolts, then remove the flywheel.

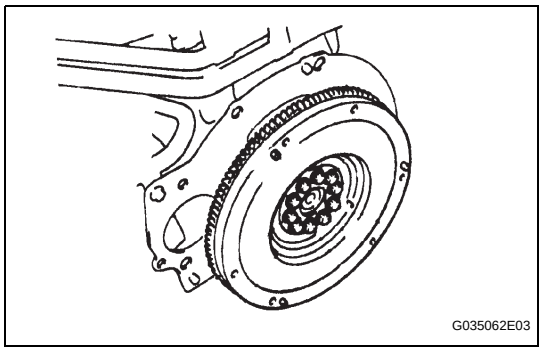

EM

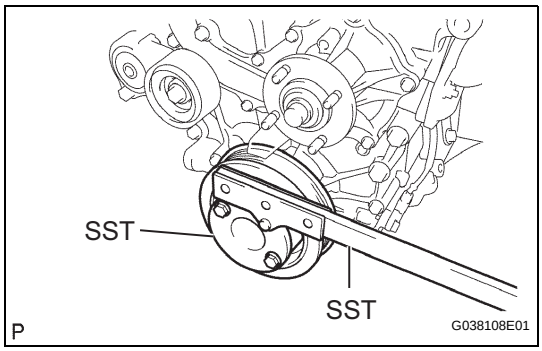

6. REMOVE DRIVE PLATE and RING GEAR SUB-ASSEMBLY (for Automatic Transmission)

(a) Using SST, hold the crankshaft pulley.
SST 09213-54015 (91651-60855), 09330-00021

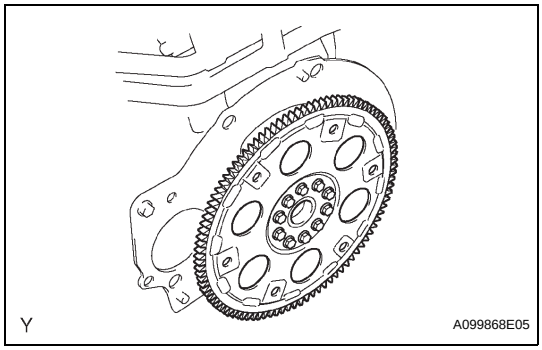

(b) Remove the 10 bolts, drive plate spacer rear, drive plate and ring gear and drive plate spacer front.

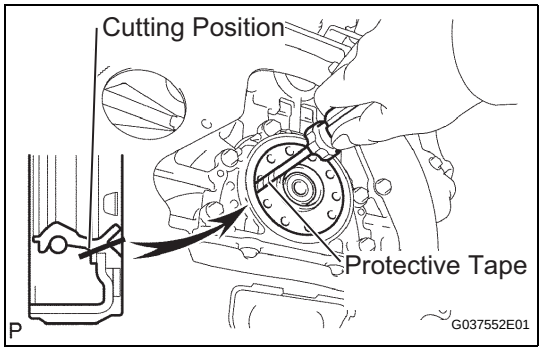

7. REMOVE ENGINE REAR OIL SEAL

(a) Using a cutter knife, cut off the lip of the oil seal.
(b) Using a screwdriver with its tip wrapped in tape, pry out the oil seal and remove it.
NOTICE:
Check the crankshaft for damage after removing the oil seal. If damaged, smooth the surface with 400-grit sandpaper.

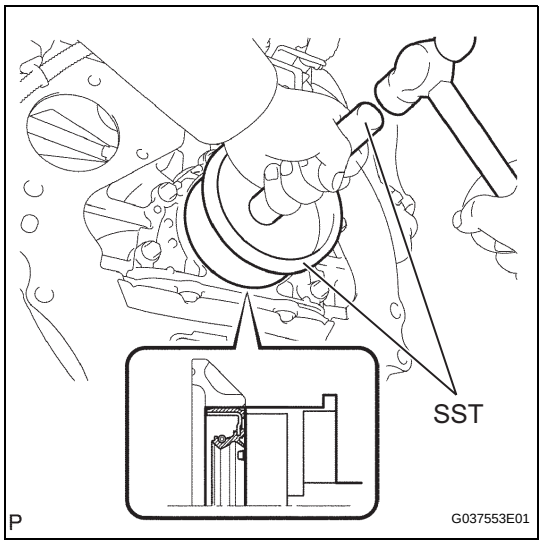

INSTALLATION

1. INSTALL ENGINE REAR OIL SEAL

(a) Apply a light coat of MP grease to the lip of a new oil seal.
NOTICE:
Keep the lip free of foreign objects.
(b) Using SST and a hammer, tap the oil seal in until its surface is flush with the rear oil seal retainer edge.
SST 09223-15030, 09950-70010 (09951-07150)
NOTICE:
- **Do not tap the oil seal in at an angle.**
- **Wipe any extra grease off the crankshaft.**

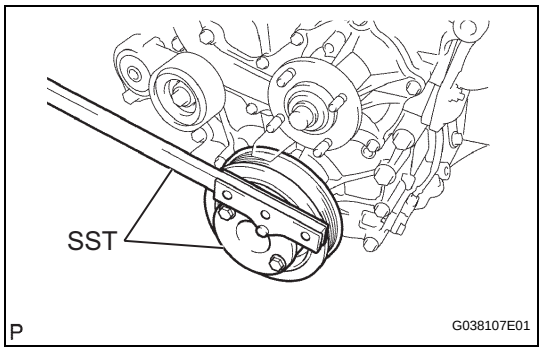

2. INSTALL FLYWHEEL SUB-ASSEMBLY (for Manual Transmission)

(a) Clean the 10 bolts and 10 bolt holes.

(b) Apply adhesive to 2 or 3 threads of the 10 bolts.
Adhesive:
Part No. 08833-00070, THREE BOND 1324 or equivalent

(c) Using SST, hold the crankshaft.
SST 09213-54015 (91651-60855), 09330-00021

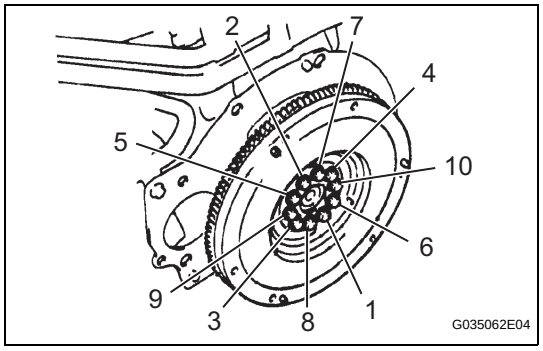

(d) Using several steps, uniformly install and tighten the 10 bolts in the sequence shown in the illustration.
Torque: 27 N*m (270 kgf*cm, 20 ft.*lbf)

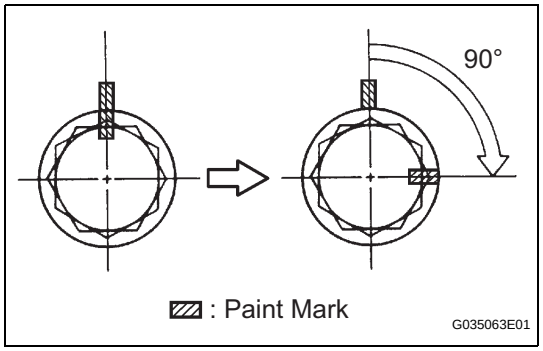

(e) Mark the bolts with paint as shown in the illustration.

(f) Retighten the bolts by 90° in the same sequence as in step (d).

(g) Check that the paint mark of each bolt is at a 90° from the original position.
NOTICE:
Do not start the engine for at least 1 hour after installation.

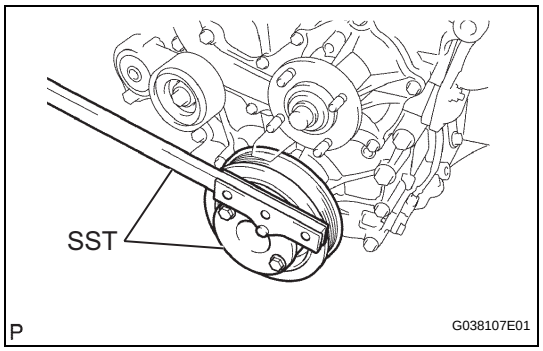

3. INSTALL DRIVE PLATE and RING GEAR SUB-ASSEMBLY (for Automatic Transmission)

(a) Clean the 10 bolts and 10 bolt holes.

(b) Apply adhesive to 2 or 3 threads of the 10 bolts.
Adhesive:
Part No. 08833-00070, THREE BOND 1324 or equivalent

(c) Provisionally install the drive plate spacer front, drive plate and ring gear and drive plate rear with the 10 bolts.

(d) Using SST, hold the crankshaft.
SST 09213-54015 (91651-60855), 09330-00021

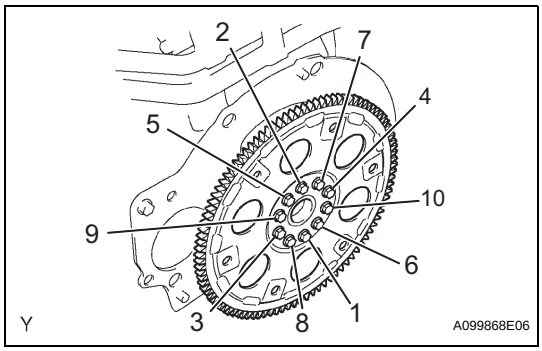

(e) Using several steps, uniformly install and tighten the 10 bolts in the sequence shown in the illustration.
Torque: 74 N*m (755 kgf*cm, 55 ft.*lbf)
NOTICE:
Do not start the engine for at least 1 hour after installation.

4. INSTALL CLUTCH DISC ASSEMBLY (for Manual Transmission)

Transmission	See page
R155	CL-32
R155F	CL-37

SST 09301-00210

5. INSTALL CLUTCH COVER ASSEMBLY (for Manual Transmission)

Transmission	See page
R155	CL-32
R155F	CL-37

6. INSTALL MANUAL TRANSMISSION UNIT ASSEMBLY

Transmission	See page
R155	MT-9
R155F	MT-11

7. INSTALL AUTOMATIC TRANSMISSION ASSEMBLY (See page ED-7)

8. CHECK FOR ENGINE OIL LEAKAGE

ENGINE ASSEMBLY

COMPONENTS

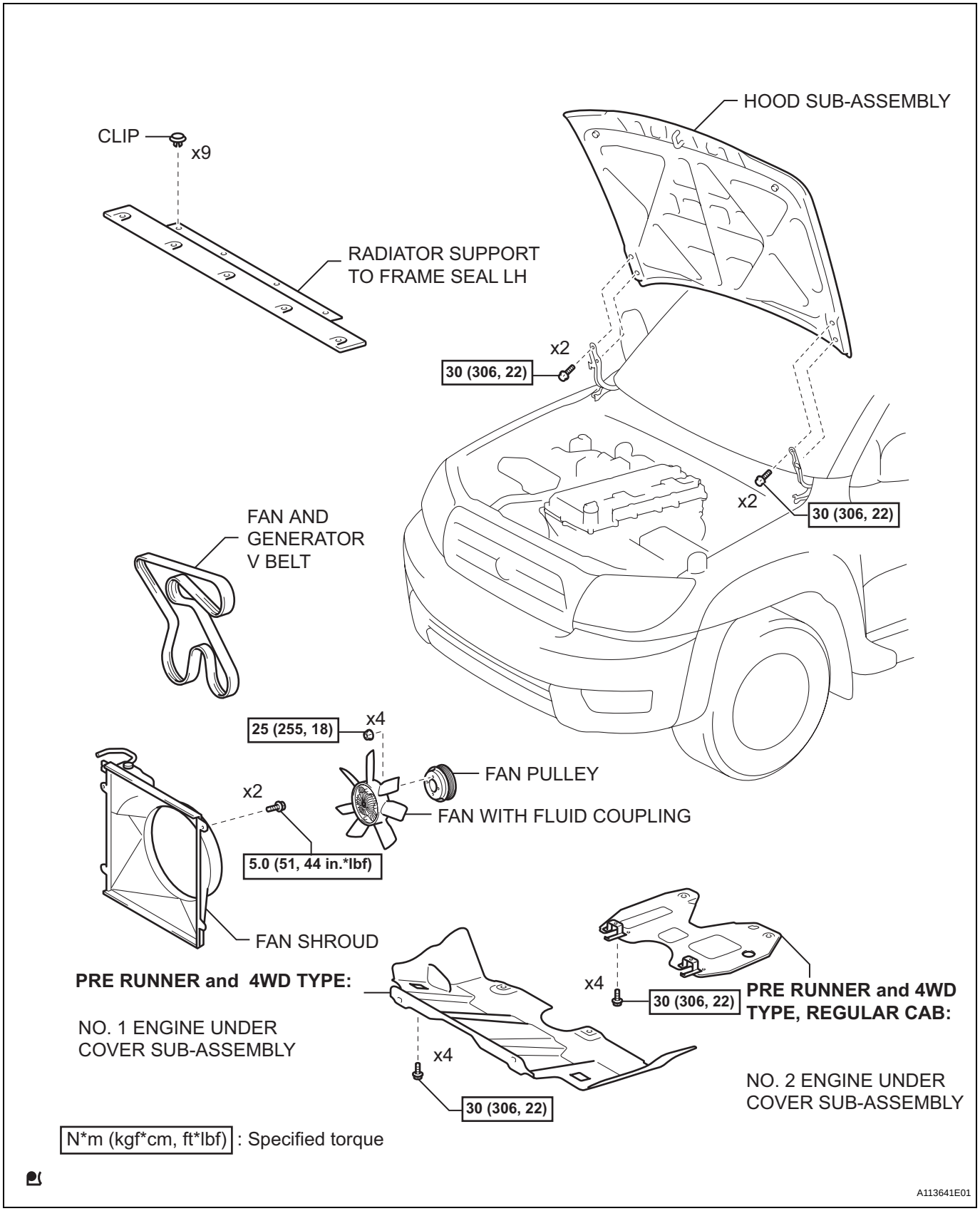

EM

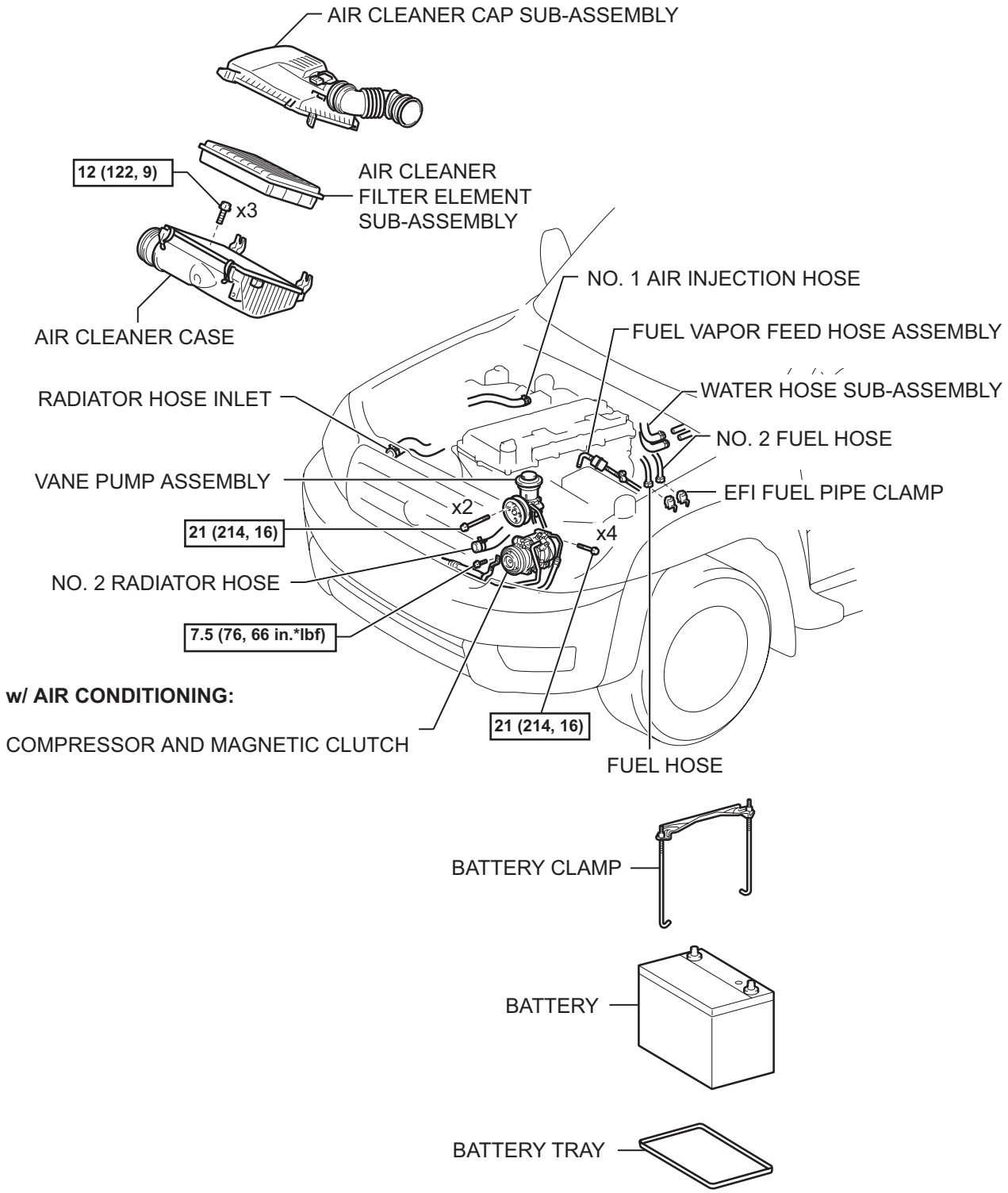

N*m (kgf*cm, ft*lbf) : Specified torque

A113642E01

EM

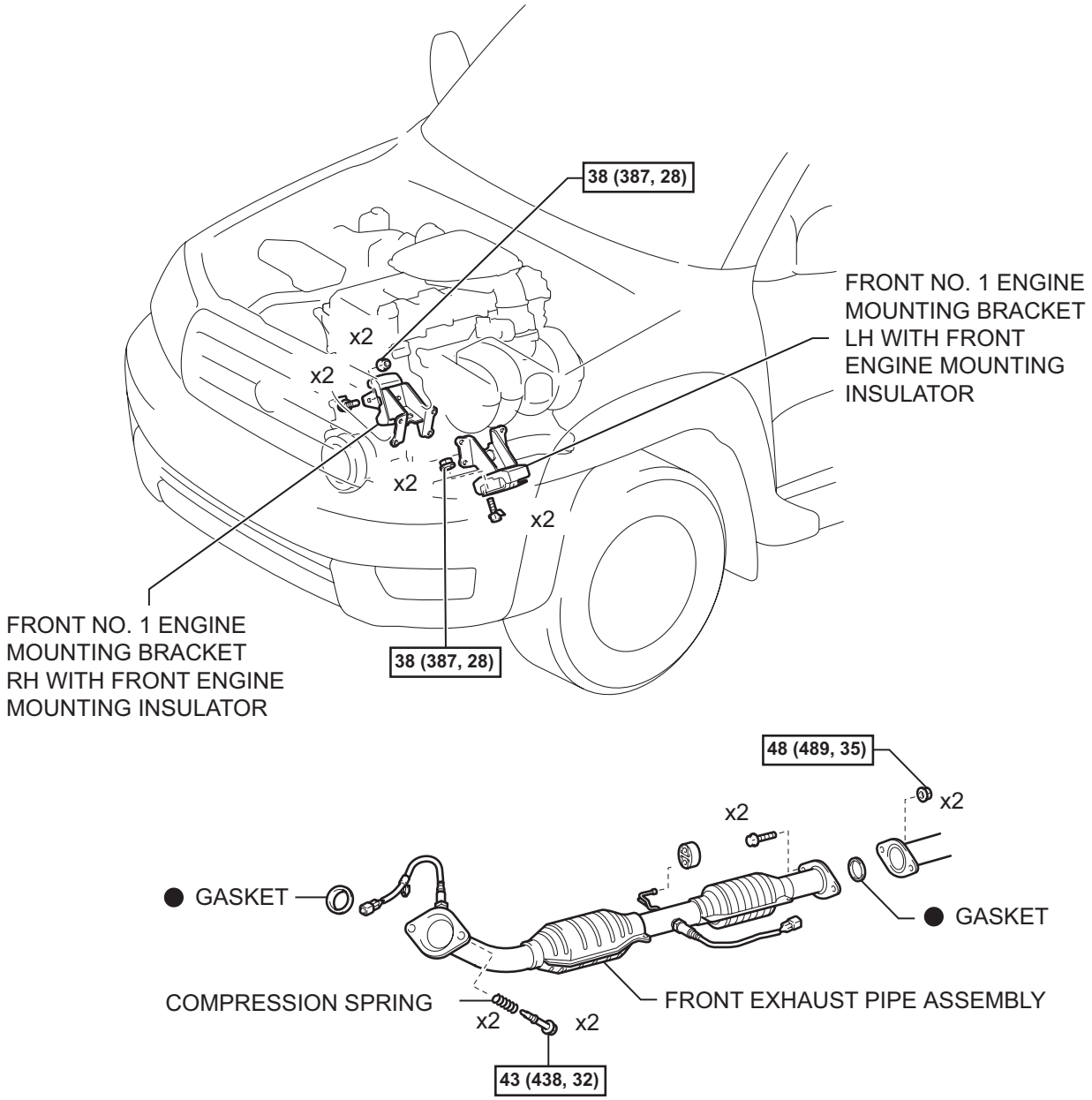

N*m (kgf*cm, ft*lbf) : Specified torque

● Non-reusable part

A113643E01

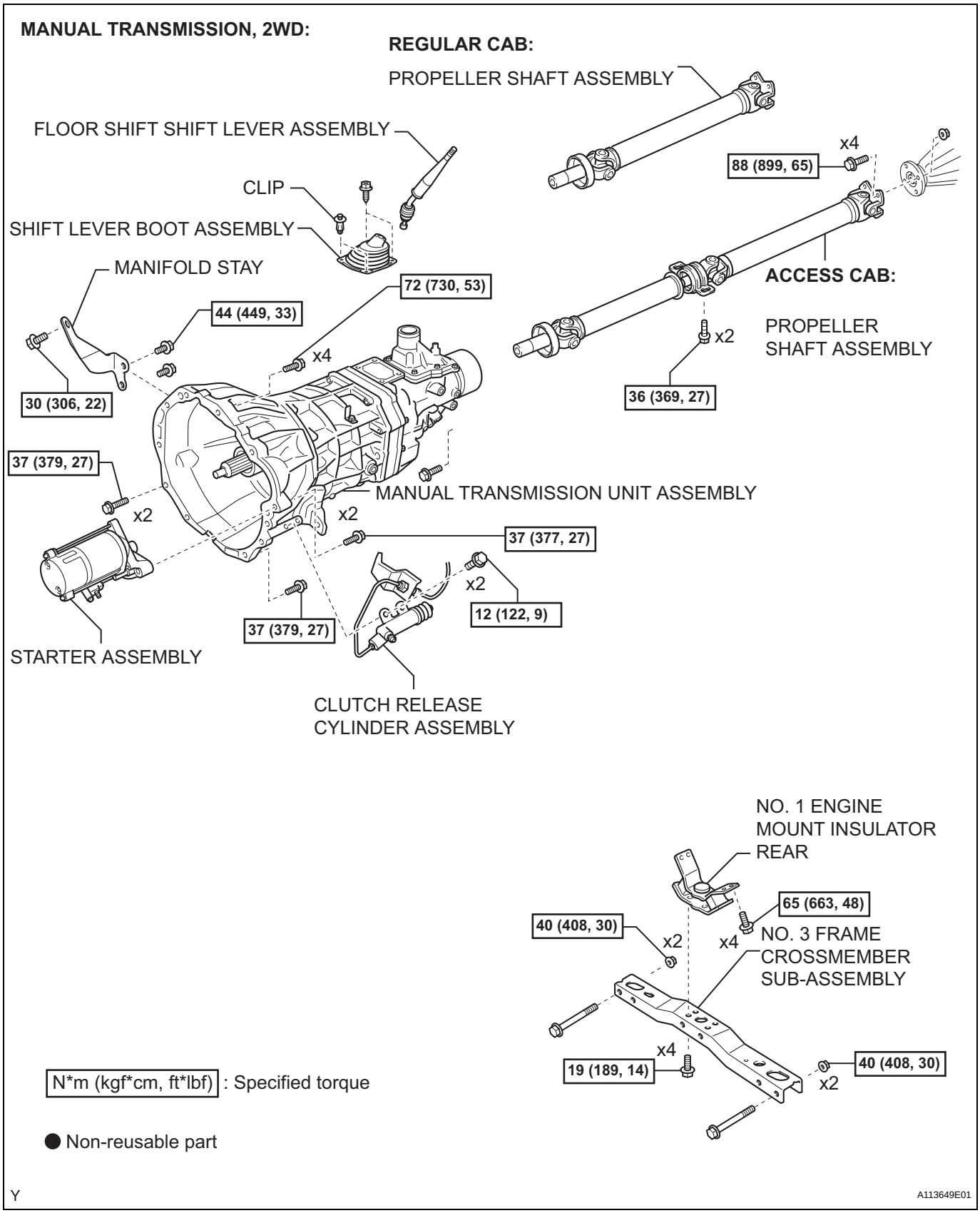
MANUAL TRANSMISSION, 2WD:
REGULAR CAB:
PROPELLER SHAFT ASSEMBLY
FLOOR SHIFT SHIFT LEVER ASSEMBLY
CLIP
SHIFT LEVER BOOT ASSEMBLY
MANIFOLD STAY
88 (899, 65)
x4
ACCESS CAB:
PROPELLER SHAFT ASSEMBLY
x2
36 (369, 27)
72 (730, 53)
44 (449, 33)
x4
30 (306, 22)
37 (379, 27)
x2
x2
MANUAL TRANSMISSION UNIT ASSEMBLY
37 (377, 27)
x2
12 (122, 9)
37 (379, 27)
STARTER ASSEMBLY
CLUTCH RELEASE CYLINDER ASSEMBLY
NO. 1 ENGINE MOUNT INSULATOR REAR
65 (663, 48)
40 (408, 30)
x2
x4
NO. 3 FRAME CROSSMEMBER SUB-ASSEMBLY
x4
19 (189, 14)
40 (408, 30)
x2
N*m (kgf*cm, ft*lbf) : Specified torque
● Non-reusable part
Y
A113649E01

EM

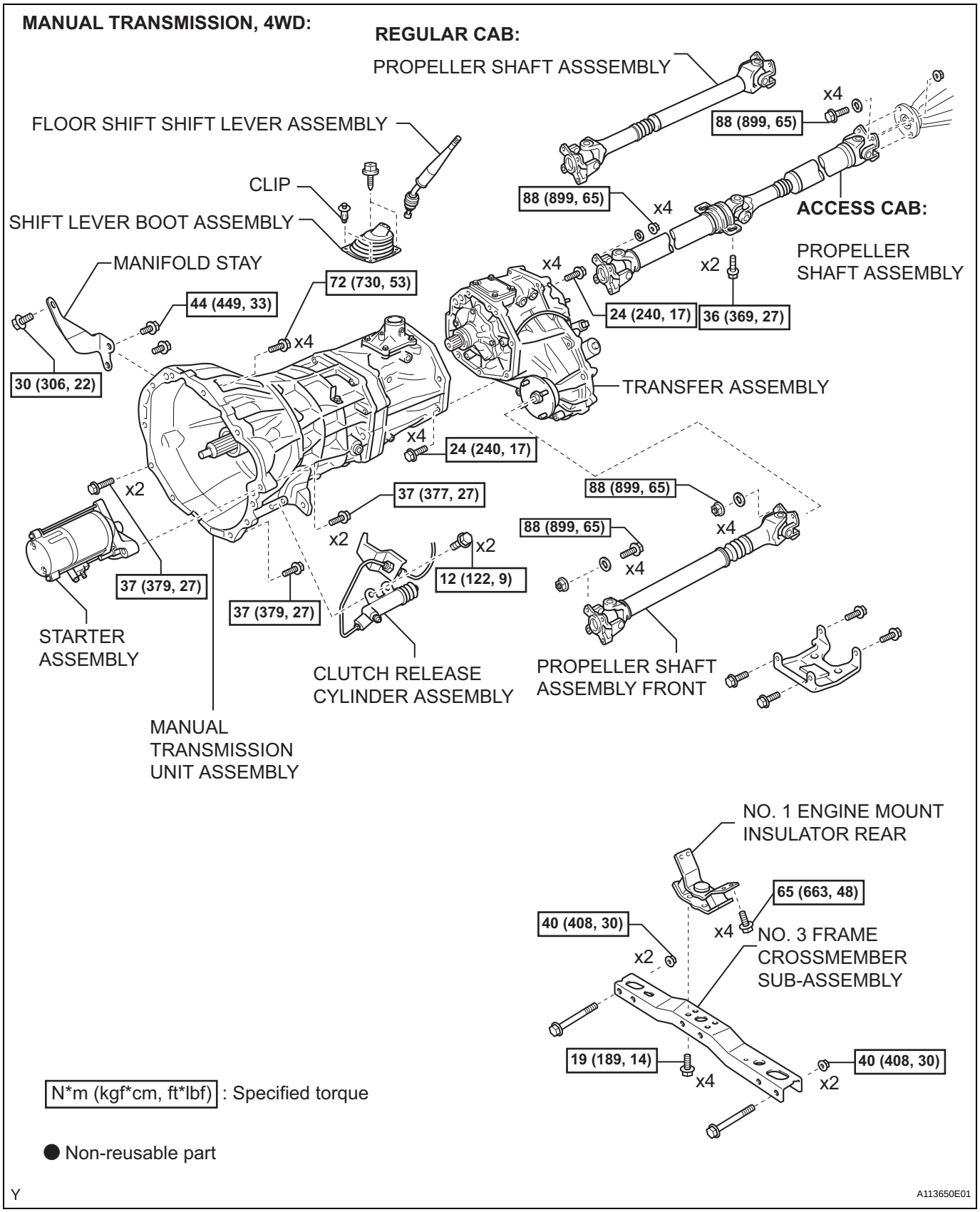
MANUAL TRANSMISSION, 4WD:
REGULAR CAB:
PROPELLER SHAFT ASSSEMBLY
FLOOR SHIFT SHIFT LEVER ASSEMBLY
CLIP
SHIFT LEVER BOOT ASSEMBLY
MANIFOLD STAY
88 (899, 65)
x4
88 (899, 65)
x4
ACCESS CAB:
PROPELLER SHAFT ASSEMBLY
x4
x2
24 (240, 17)
36 (369, 27)
44 (449, 33)
72 (730, 53)
x4
30 (306, 22)
TRANSFER ASSEMBLY
x4
24 (240, 17)
x2
37 (377, 27)
88 (899, 65)
x4
88 (899, 65)
x2
x2
x4
12 (122, 9)
37 (379, 27)
37 (379, 27)
STARTER ASSEMBLY
CLUTCH RELEASE CYLINDER ASSEMBLY
PROPELLER SHAFT ASSEMBLY FRONT
MANUAL TRANSMISSION UNIT ASSEMBLY
NO. 1 ENGINE MOUNT INSULATOR REAR
65 (663, 48)
40 (408, 30)
x4
x2
NO. 3 FRAME CROSSMEMBER SUB-ASSEMBLY
19 (189, 14)
x4
40 (408, 30)
x2
N*m (kgf*cm, ft*lbf) : Specified torque
● Non-reusable part
Y
A113650E01

EM

MANUAL TRANSMISSION:

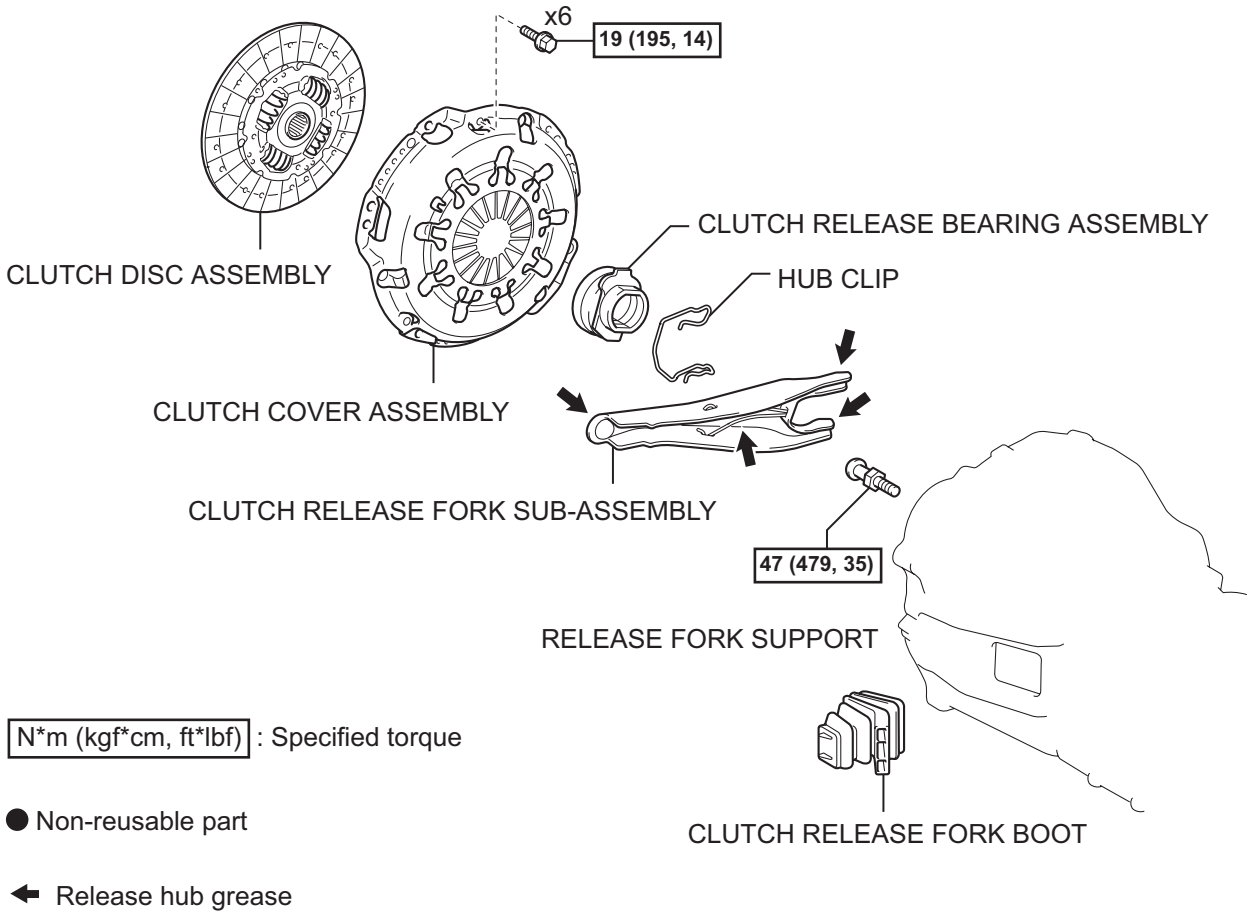

N*m (kgf*cm, ft*lbf) : Specified torque

● Non-reusable part

⬅ Release hub grease

Y

A113651E01

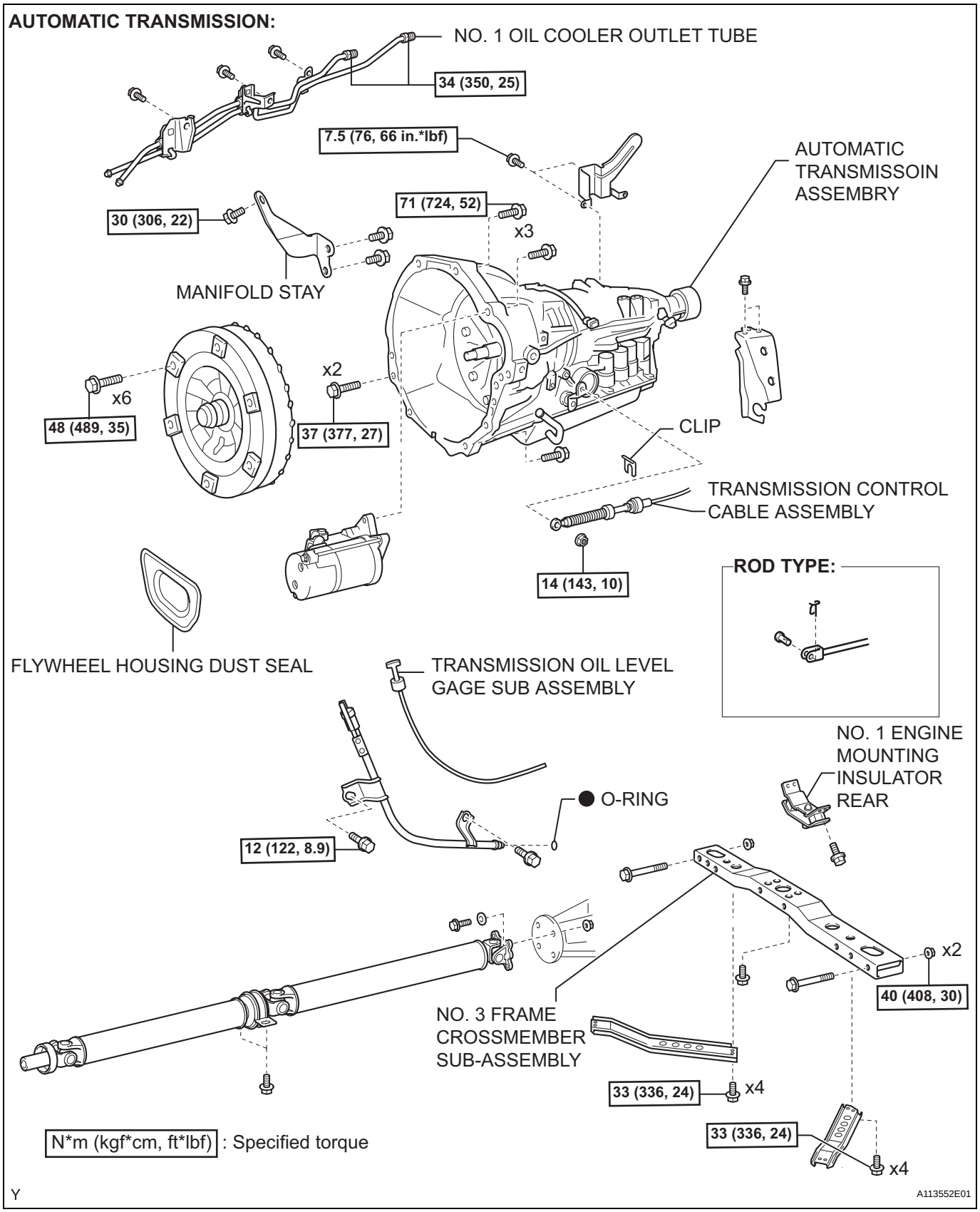
AUTOMATIC TRANSMISSION:
NO. 1 OIL COOLER OUTLET TUBE
34 (350, 25)
7.5 (76, 66 in.*lbf)
AUTOMATIC TRANSMISSOIN ASSEMBRY
71 (724, 52)
x3
30 (306, 22)
MANIFOLD STAY
x2
x6
48 (489, 35)
37 (377, 27)
CLIP
TRANSMISSION CONTROL CABLE ASSEMBLY
14 (143, 10)
ROD TYPE:
FLYWHEEL HOUSING DUST SEAL
TRANSMISSION OIL LEVEL GAGE SUB ASSEMBLY
NO. 1 ENGINE MOUNTING INSULATOR REAR
O-RING
12 (122, 8.9)
x2
40 (408, 30)
NO. 3 FRAME CROSSMEMBER SUB-ASSEMBLY
33 (336, 24)
x4
33 (336, 24)
x4
N*m (kgf*cm, ft*lbf) : Specified torque
Y
A113552E01

EM

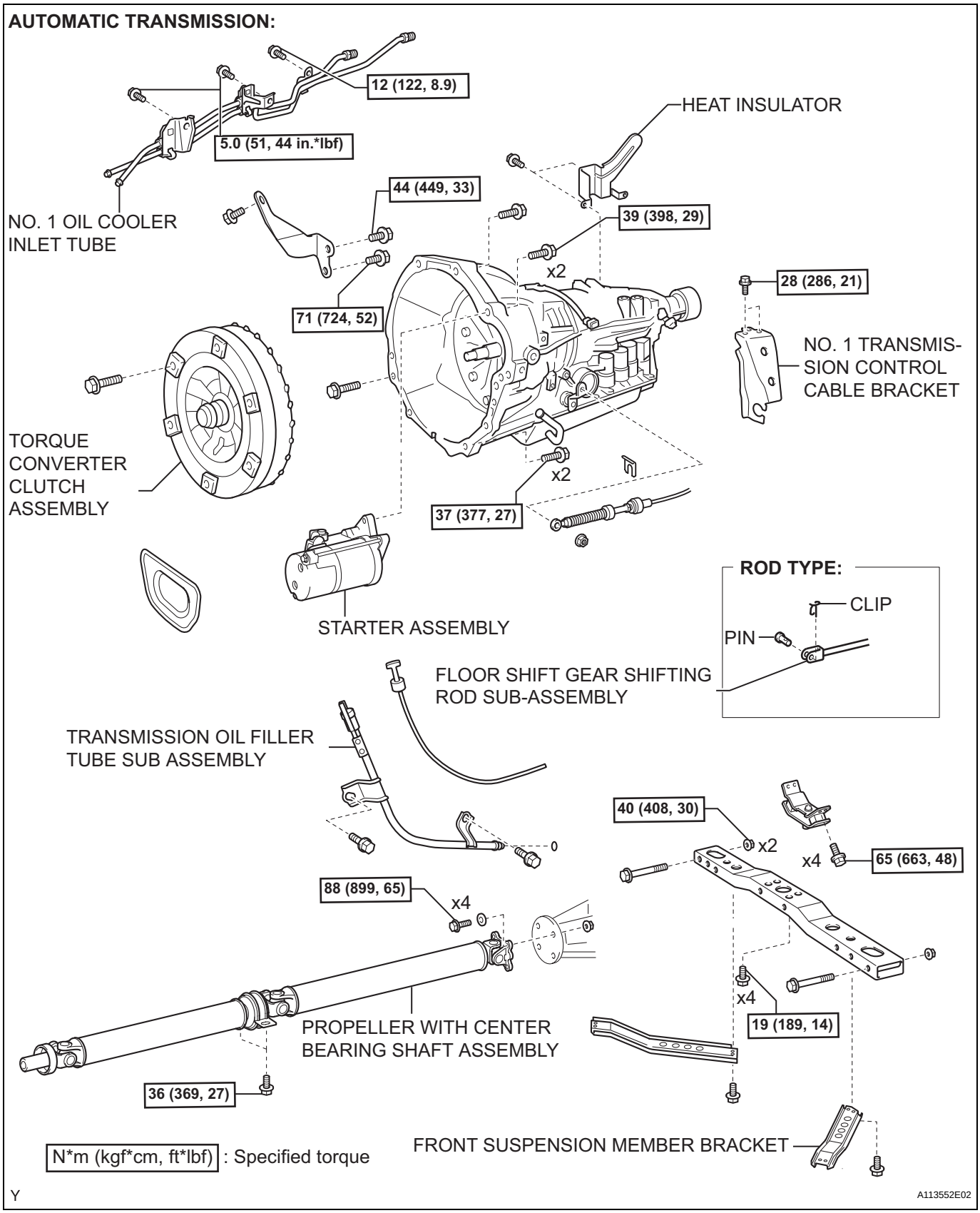
AUTOMATIC TRANSMISSION:
12 (122, 8.9)
5.0 (51, 44 in.*lbf)
NO. 1 OIL COOLER INLET TUBE
HEAT INSULATOR
44 (449, 33)
39 (398, 29)
x2
28 (286, 21)
71 (724, 52)
NO. 1 TRANSMISSION CONTROL CABLE BRACKET
TORQUE CONVERTER CLUTCH ASSEMBLY
x2
37 (377, 27)
STARTER ASSEMBLY
ROD TYPE:
CLIP
PIN
FLOOR SHIFT GEAR SHIFTING ROD SUB-ASSEMBLY
TRANSMISSION OIL FILLER TUBE SUB ASSEMBLY
40 (408, 30)
x2
x4
65 (663, 48)
88 (899, 65)
x4
x4
19 (189, 14)
PROPELLER WITH CENTER BEARING SHAFT ASSEMBLY
36 (369, 27)
FRONT SUSPENSION MEMBER BRACKET
N*m (kgf*cm, ft*lbf) : Specified torque
Y
A113552E02

EM

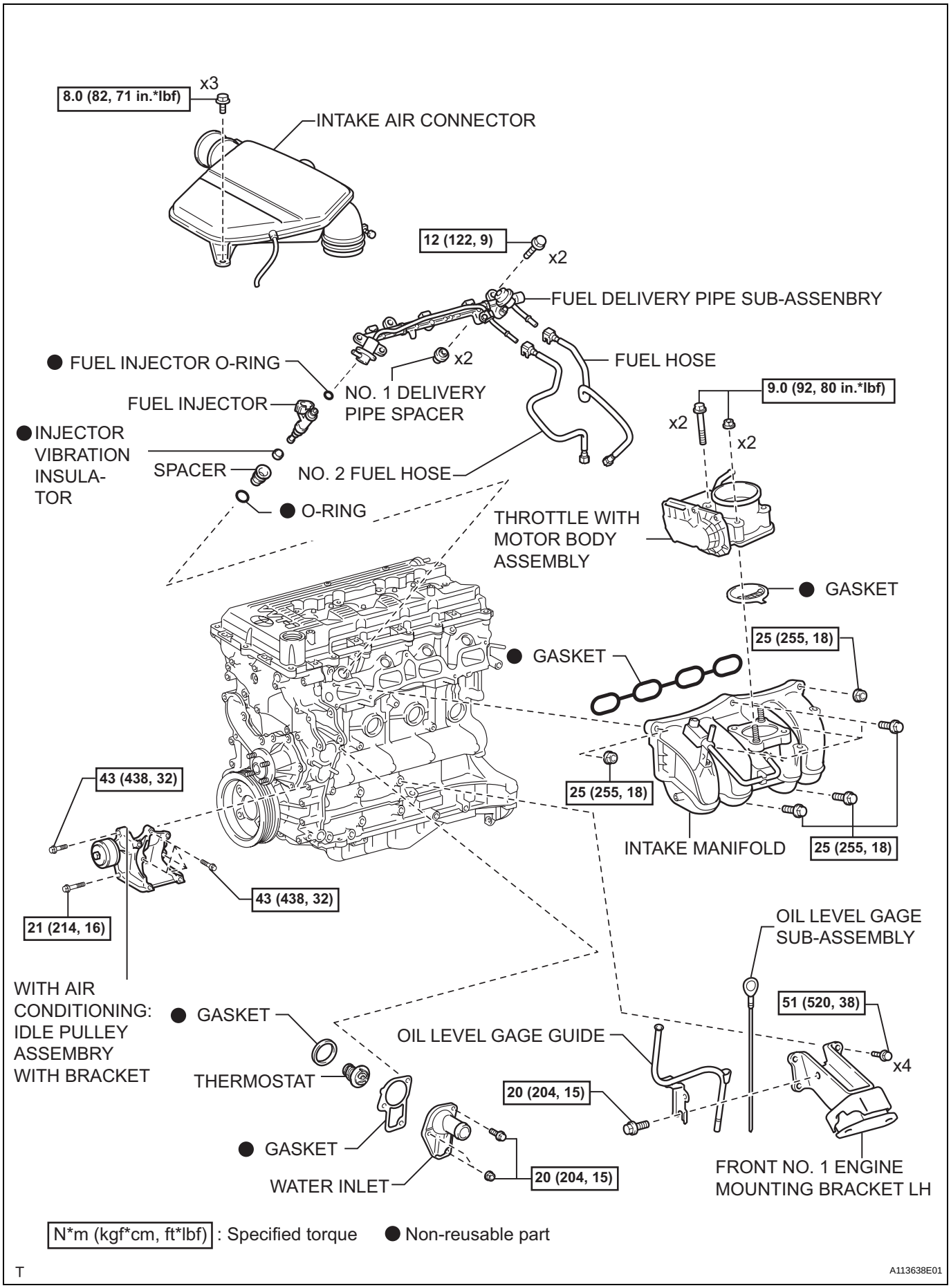
8.0 (82, 71 in.*lbf)
x3
INTAKE AIR CONNECTOR
12 (122, 9)
x2
FUEL DELIVERY PIPE SUB-ASSENBRY
FUEL INJECTOR O-RING
x2
FUEL HOSE
NO. 1 DELIVERY PIPE SPACER
FUEL INJECTOR
9.0 (92, 80 in.*lbf)
x2
x2
INJECTOR VIBRATION INSULA-TOR
SPACER
NO. 2 FUEL HOSE
O-RING
THROTTLE WITH MOTOR BODY ASSEMBLY
GASKET
25 (255, 18)
GASKET
43 (438, 32)
25 (255, 18)
INTAKE MANIFOLD
25 (255, 18)
43 (438, 32)
21 (214, 16)
OIL LEVEL GAGE SUB-ASSEMBLY
WITH AIR CONDITIONING: IDLE PULLEY ASSEMBRY WITH BRACKET
GASKET
51 (520, 38)
OIL LEVEL GAGE GUIDE
x4
THERMOSTAT
20 (204, 15)
GASKET
WATER INLET
20 (204, 15)
FRONT NO. 1 ENGINE MOUNTING BRACKET LH
N*m (kgf*cm, ft*lbf) : Specified torque
Non-reusable part
T
A113638E01

EM

EM

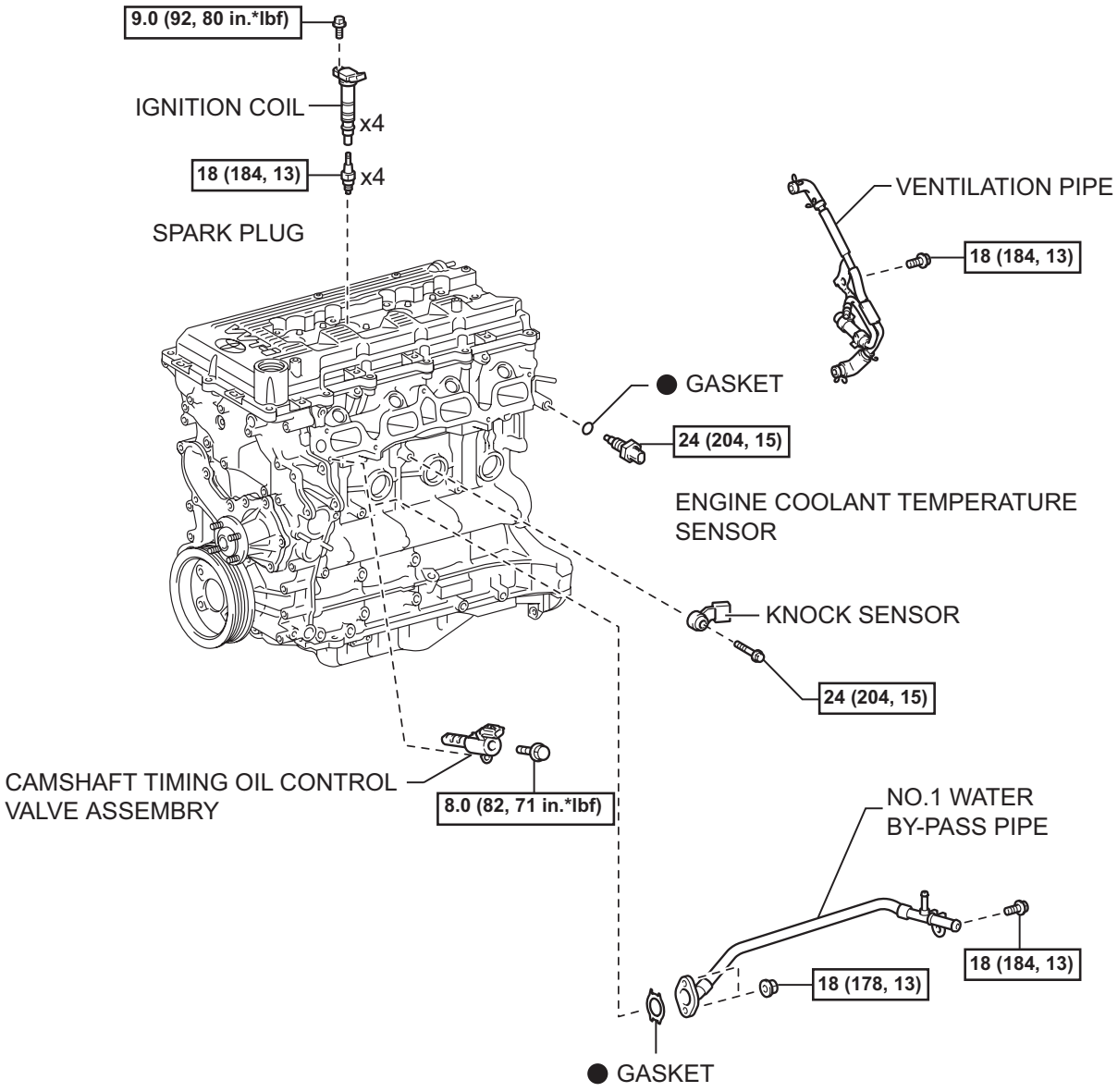

N*m (kgf*cm, ft*lbf) : Specified torque

● Non-reusable part

T

A113639E01

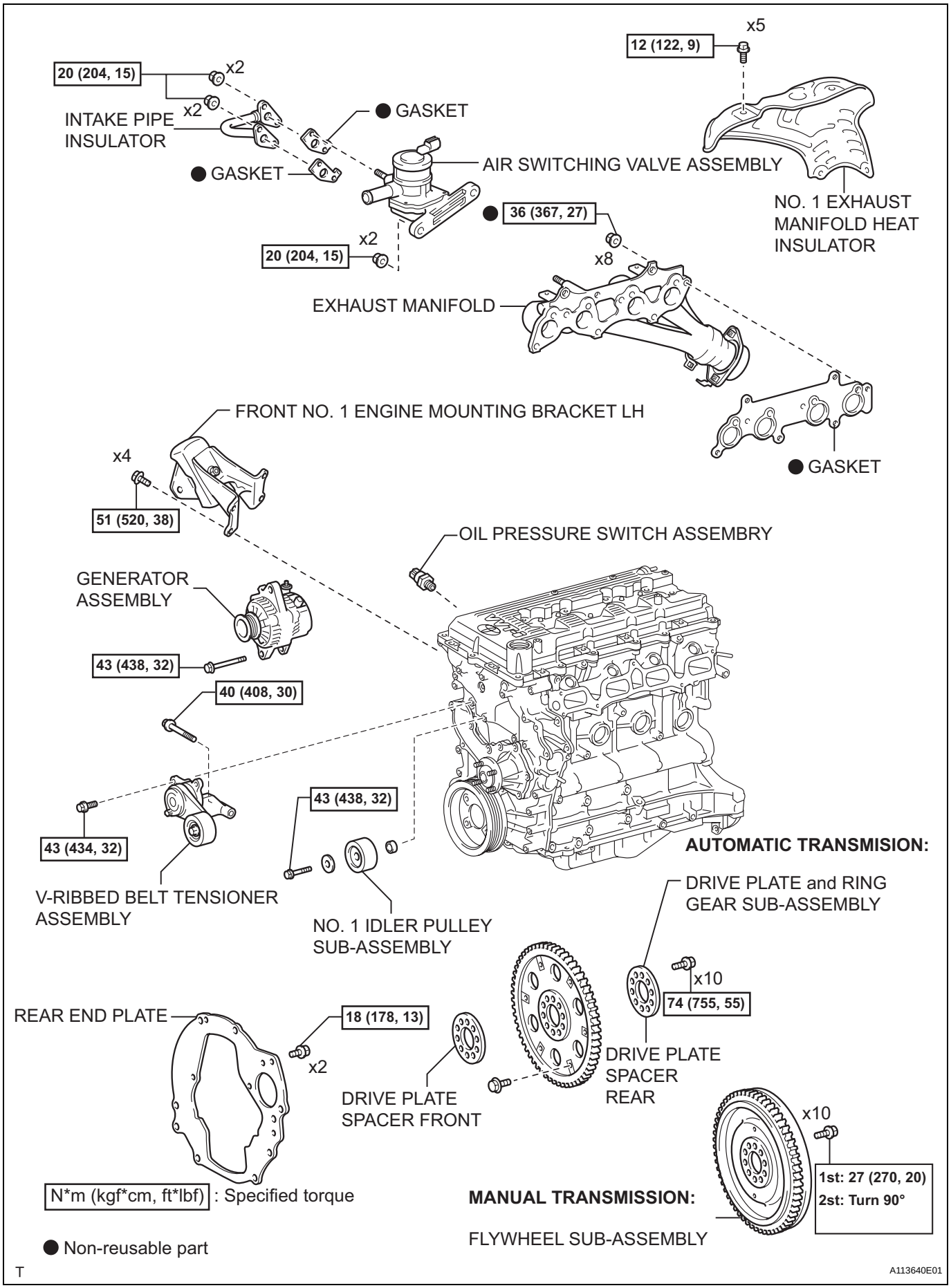
20 (204, 15)
x2
x2
INTAKE PIPE INSULATOR
● GASKET
● GASKET
AIR SWITCHING VALVE ASSEMBLY
12 (122, 9)
x5
NO. 1 EXHAUST MANIFOLD HEAT INSULATOR
● 36 (367, 27)
x8
20 (204, 15)
x2
EXHAUST MANIFOLD
● GASKET
FRONT NO. 1 ENGINE MOUNTING BRACKET LH
x4
51 (520, 38)
OIL PRESSURE SWITCH ASSEMBRY
GENERATOR ASSEMBLY
43 (438, 32)
40 (408, 30)
43 (434, 32)
V-RIBBED BELT TENSIONER ASSEMBLY
43 (438, 32)
NO. 1 IDLER PULLEY SUB-ASSEMBLY
AUTOMATIC TRANSMISION:
DRIVE PLATE and RING GEAR SUB-ASSEMBLY
x10
74 (755, 55)
REAR END PLATE
18 (178, 13)
x2
DRIVE PLATE SPACER FRONT
DRIVE PLATE SPACER REAR
x10
1st: 27 (270, 20)
2st: Turn 90°
N*m (kgf*cm, ft*lbf) : Specified torque
MANUAL TRANSMISSION:
FLYWHEEL SUB-ASSEMBLY
● Non-reusable part
T
A113640E01

EM

EM

REMOVAL

1. **REMOVE HOOD SUB-ASSEMBLY**
2. **DISCHARGE FUEL SYSTEM PRESSURE**
   (See page FU-1)
3. **REMOVE NO. 1 ENGINE UNDER COVER SUB-ASSEMBLY (for Pre Runner and 4WD Type)**
   (a) Remove the 4bolts, then remove the engine under cover No.1.
4. **REMOVE NO. 2 ENGINE UNDER COVER SUB-ASSEMBLY (for Pre Runner and 4WD Type, Regular Cab)**
   (a) Remove the 4 bolts, then remove engine cover No.2.
5. **DRAIN ENGINE COOLANT (See page CO-3)**
6. **REMOVE BATTERY**
7. **REMOVE BATTERY TRAY**
8. **REMOVE RADIATOR SUPPORT TO FRAME SEAL LH (See page CO-12)**
9. **REMOVE FAN SHROUD (See page CO-13)**
10. **REMOVE AIR CLEANER CAP SUB-ASSEMBLY (See page EC-14)**
11. **REMOVE AIR CLEANER FILTER ELEMENT SUB-ASSEMBLY**
12. **REMOVE AIR CLEANER CASE**
    (a) Remove the 3 bolts, then remove the air cleaner case.
13. **SEPARATE VANE PUMP (See page EM-21)**
14. **REMOVE NO. 2 RADIATOR HOSE**
15. **SEPARATE COMPRESSOR AND MAGNETIC CLUTCH (w/ Air Conditioning System) (See page EM-21)**
16. **REMOVE RADIATOR HOSE INLET**
17. **SEPARATE WATER HOSE SUB-ASSEMBLY**
    (a) Separate the water hoses.
18. **DISCONNECT FUEL HOSE (See page FU-11)**
19. **DISCONNECT NO. 2 FUEL HOSE (See page FU-11)**

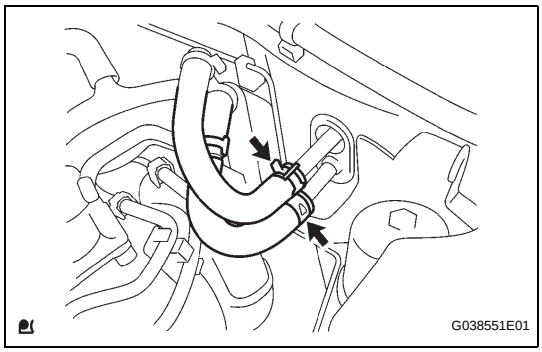

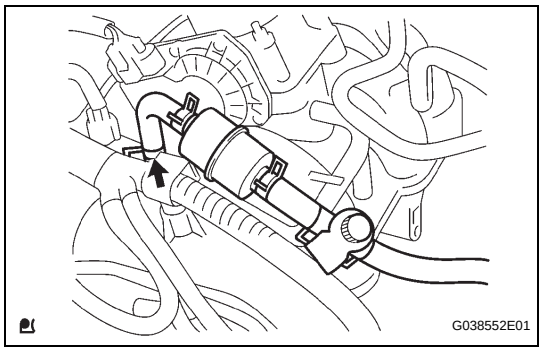

20. SEPARATE FUEL VAPOR FEED HOSE ASSEMBLY

(a) Disconnect the fuel vapor feed hose.

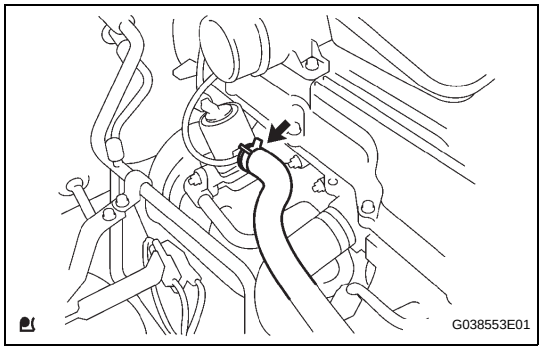

21. DISCONNECT NO. 1 AIR INJECTION HOSE

(a) Disconnect the No.1 air injection hose.

22. DISCONNECT ENGINE WIRE

(a) Disconnect the connector from the ECM, then pull the engine wire harness to the compartment side.
NOTICE:
Do not forcibly pull the wire harness to the engine compartment side.

(b) Disconnect all wire harnesses and connectors in the engine room.

23. REMOVE EXHAUST PIPE ASSEMBLY TAIL (See page EX-2)

24. REMOVE EXHAUST PIPE ASSEMBLY FRONT (See page EX-2)

25. REMOVE MANUAL TRANSMISSION UNIT ASSEMBLY

Transmission	See page
R155	MT-6
R155F	MT-8

26. REMOVE AUTOMATIC TRANSMISSION ASSEMBLY
(See page AT-113)

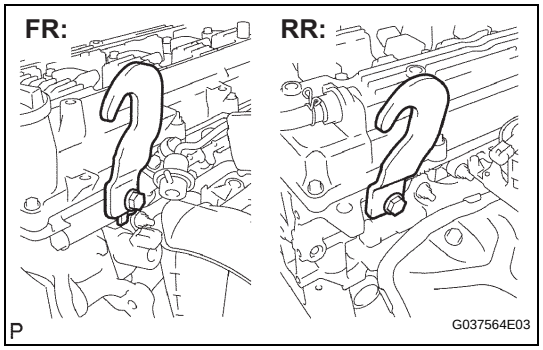

27. REMOVE ENGINE ASSEMBLY

(a) Install the engine hanger with the bolt.
Torque: 42 N*m (420 kgf*cm, 30 ft.*lbf)
Part No

Part Name	Part No.
Engine hanger	12281-75040
Bolt	91552-A1020

NOTICE:
Be sure to use the bolts when installing the engine hanger.

EM

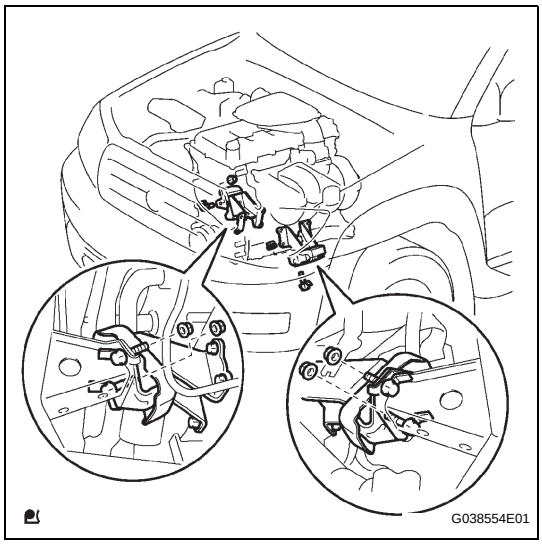

(b) Attach the engine sling device and chain block to the engine hangers.
(c) Remove the 4 bolts and 4 nuts.
(d) Lift the engine out of the vehicle slowly and carefully by operating the engine sling device and chain block.
NOTICE:
Make sure that no wires, hoses or cables are connected to the engine.

28. REMOVE CLUTCH COVER ASSEMBLY (for Manual Transmission)

Transmission	See page
R155	CL-30
R155F	CL-35

29. REMOVE CLUTCH DISC ASSEMBLY (for Manual Transmission)

Transmission	See page
R155	CL-30
R155F	CL-35

30. REMOVE FLYWHEEL SUB-ASSEMBLY (for Manual Transmission) (See page EM-77)

31. REMOVE DRIVE PLATE AND RING GEAR SUB-ASSEMBLY (for Automatic Transmission) (See page EM-78)

32. REMOVE REAR END PLATE (See page EM-66)

33. REMOVE INTAKE AIR CONNECTOR (See page ES-452)

34. REMOVE FUEL HOSE (See page FU-11)

35. REMOVE NO. 2 FUEL HOSE (See page FU-11)

36. REMOVE THROTTLE WITH MOTOR BODY ASSEMBLY (See page ES-453)

37. REMOVE NO. 1 INTAKE MANIFOLD TO HEAD GASKET (See page ES-460)

38. REMOVE IDLE PULLEY ASSEMBLY WITH BRACKET (w/ Air Conditioning System) (See page ES-446)

39. REMOVE ENGINE WIRE

40. REMOVE OIL LEVEL GAGE SUB-ASSEMBLY

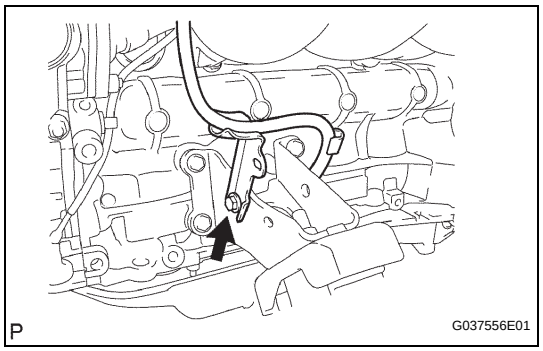

41. REMOVE OIL LEVEL GAGE GUIDE

(a) Remove the bolts, then remove the oil level gage guide.

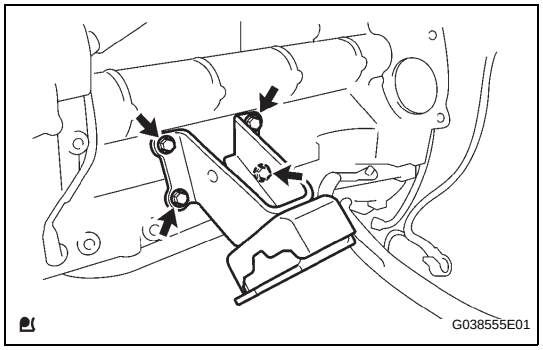

42. REMOVE FRONT NO. 1 ENGINE MOUNTING BRACKET

(a) Remove the 4 bolts, then remove the engine mounting bracket front No. 1 LH with engine mounting insulator front.

43. REMOVE THERMOSTAT (See page CO-7)

44. REMOVE FUEL INJECTOR ASSEMBLY (See page FU-13)

45. REMOVE KNOCK SENSOR (See page ES-462)

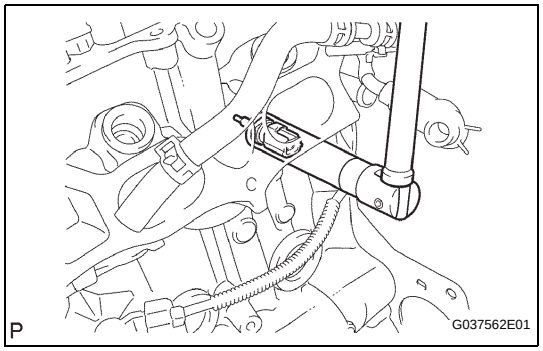

46. REMOVE ENGINE COOLANT TEMPERATURE SENSOR

(a) Using a 19 mm deep socket wrench, remove the engine coolant temperature sensor.

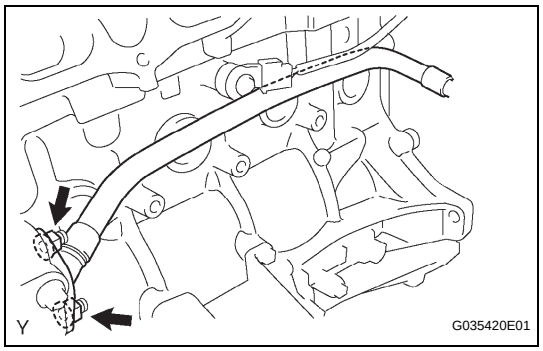

47. REMOVE NO. 1 WATER BY-PASS PIPE

(a) Remove the 2 nuts, then remove the water by-pass pipe No. 1.

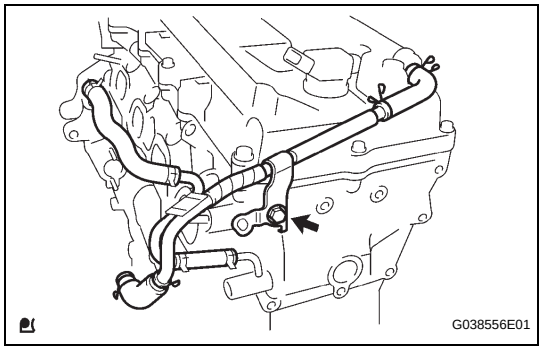

48. REMOVE VENTILATION PIPE

(a) Remove the bolts, then remove the ventilation pipe.

49. REMOVE IGNITION COIL ASSEMBLY
(See page EM-38)

50. REMOVE SPARK PLUG

51. REMOVE GENERATOR ASSEMBLY (See page CH-7)

52. REMOVE NO. 1 IDLER PULLEY SUB-ASSEMBLY (See page EM-23)

EM

53. REMOVE V-RIBBED BELT TENSIONER ASSEMBLY (See page CO-5)

54. REMOVE NO. 1 EXHAUST MANIFOLD HEAT INSULATOR (See page EC-14)

55. REMOVE AIR SWITCHING VALVE ASSEMBLY (See page EC-15)

56. REMOVE EXHAUST MANIFOLD (See page EM-67)

57. REMOVE FRONT NO. 1 ENGINE MOUNTING BRACKET RH

(a) Remove the 4 bolts, then remove the engine mounting bracket front No. 1 together with the engine mounting insulator front.

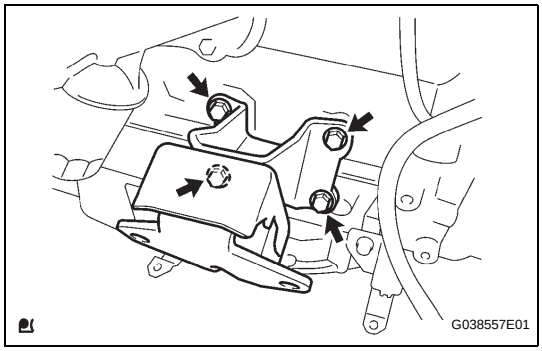

58. REMOVE ENGINE OIL PRESSURE SWITCH ASSEMBLY

(See page LU-1)

INSTALLATION

1. **INSTALL ENGINE OIL PRESSURE SWITCH ASSEMBLY**
   (See page LU-1)

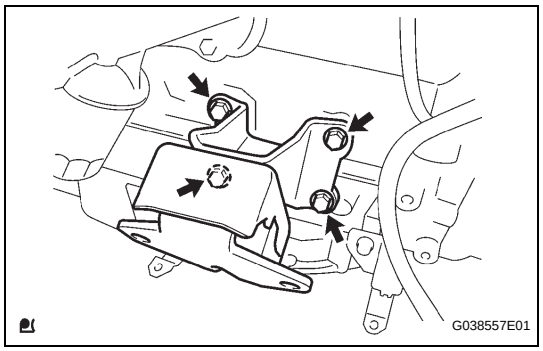

2. **INSTALL FRONT NO. 1 ENGINE MOUNTING BRACKET RH**
   (a) Install the engine mounting bracket front No. 1 RH with the 4 bolts.
   Torque: 51 N*m (520 kgf*cm, 38 ft.*lbf)
3. **INSTALL EXHAUST MANIFOLD (See page EM-72)**
4. **INSTALL AIR SWITCHING VALVE ASSEMBLY (See page EC-16)**
5. **INSTALL NO. 1 EXHAUST MANIFOLD HEAT INSULATOR (See page EC-16)**
6. **INSTALL V-RIBBED BELT TENSIONER ASSEMBLY (See page CO-6)**
7. **INSTALL NO. 1 IDLER PULLEY SUB-ASSEMBLY (See page EM-33)**
8. **INSTALL GENERATOR ASSEMBLY (See page CH-13)**
9. **INSTALL SPARK PLUG**
   Torque: 18 N*m (184 kgf*cm, 13 ft.*lbf)
10. **INSTALL IGNITION COIL ASSEMBLY**
    (See page EM-69)

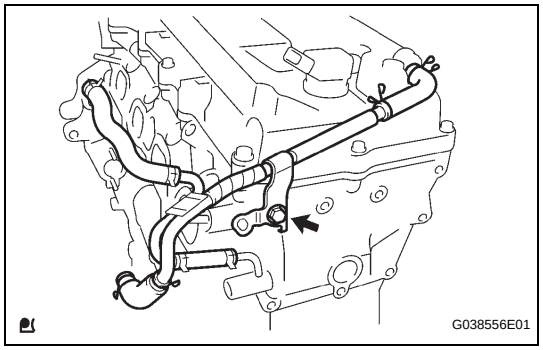

11. **INSTALL VENTILATION PIPE**
    (a) Install the ventilation pipe with the bolt.
    Torque: 18 N*m (184 kgf*cm, 13 ft.*lbf)

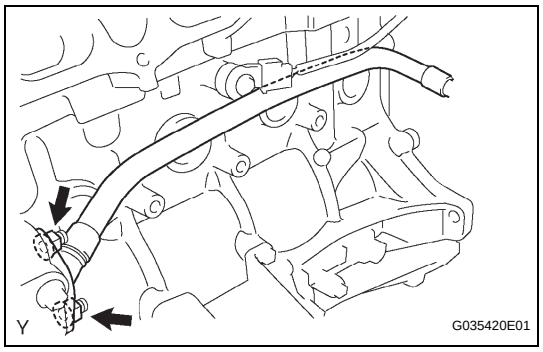

12. **INSTALL NO. 1 WATER BY-PASS PIPE**
    (a) Install a new gasket, then install the water by-pass pipe No. 1.
    Torque: 18 N*m (178 kgf*cm, 13 ft.*lbf)

EM

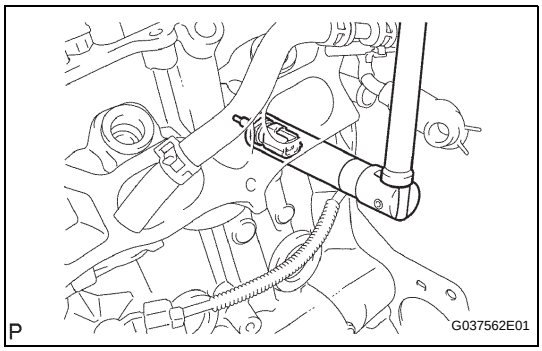

13. INSTALL ENGINE COOLANT TEMPERATURE SENSOR

(a) Install a new gasket onto the engine coolant temperature sensor.

(b) Using a 19 mm deep socket wrench, install the engine coolant temperature sensor.
Torque: 20 N*m (204 kgf*cm, 15 ft.*lbf)

14. INSTALL KNOCK SENSOR (See page ES-462)

15. INSTALL FUEL INJECTOR ASSEMBLY (See page FU-15)

16. INSTALL THERMOSTAT (See page CO-8)

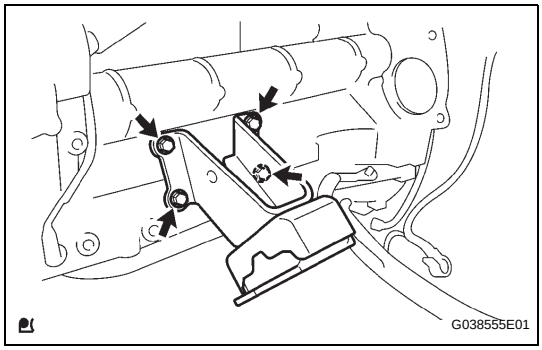

17. INSTALL FRONT NO. 1 ENGINE MOUNTING BRACKET LH

(a) Install engine mounting bracket front No. 1 LH with the 4 bolts.
Torque: 51 N*m (520 kgf*cm, 38 ft.*lbf)

EM

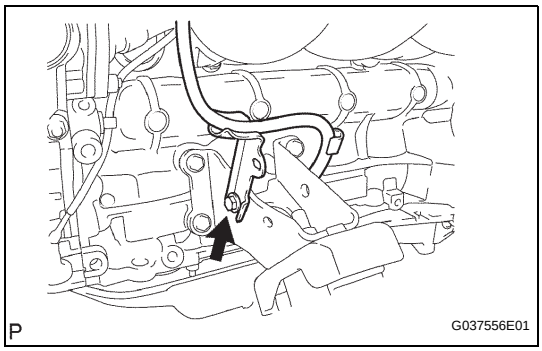

18. INSTALL OIL LEVEL GAGE GUIDE

(a) Install the oil level gage guide with the bolt.
Torque: 20 N*m (204 kgf*cm, 15 ft.*lbf)

19. INSTALL OIL LEVEL GAGE SUB-ASSEMBLY

20. INSTALL ENGINE WIRE

21. INSTALL IDLE PULLEY ASSEMBLY WITH BRACKET (w/ Air Conditioning System) (See page ES-448)

22. INSTALL NO. 1 INTAKE MANIFOLD TO HEAD GASKET (See page ES-463)

23. INSTALL THROTTLE WITH MOTOR BODY ASSEMBLY (See page ES-454)

24. INSTALL NO. 2 FUEL HOSE (See page FU-17)

25. INSTALL FUEL HOSE (See page FU-17)

26. INSTALL INTAKE AIR CONNECTOR (See page ES-455)

27. INSTALL REAR END PLATE (See page EM-72)

28. INSTALL DRIVE PLATE AND RING GEAR SUB-ASSEMBLY (for Automatic Transmission) (See page EM-79)

29. INSTALL FLYWHEEL SUB-ASSEMBLY (for Manual Transmission) (See page EM-79)

30. INSTALL CLUTCH DISC ASSEMBLY (for Manual Transmission)

Transmission	See page
R155	CL-32

Transmission	See page
R155F	CL-37

31. INSTALL CLUTCH COVER ASSEMBLY (for Manual Transmission)

Transmission	See page
R155	CL-32
R155F	CL-37

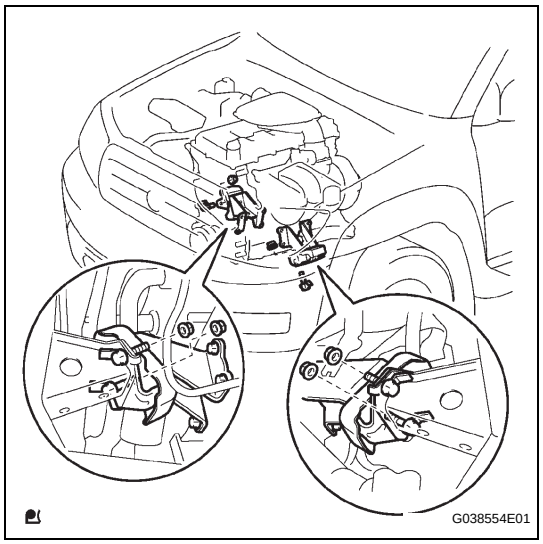

32. INSTALL ENGINE ASSEMBLY

(a) Attach the engine sling device and chain block to the engine hangers.

(b) Keep the engine level, and align the engine mounting bracket front No. 1 RH w/ engine mounting insulator front and LH with the body mountings.

(c) Attach the engine mounting bracket front No. 1 RH w/ engine mounting insulator front and LH, and install the 4 bolts and nuts.
Torque: 38 N*m (387 kgf*cm, 28 ft.*lbf)

(d) Remove the bolts, then remove the engine hangers.

33. INSTALL AUTOMATIC TRANSMISSION ASSEMBLY
(See page ED-7)

34. INSTALL MANUAL TRANSMISSION UNIT ASSEMBLY

Transmission	See page
R155	MT-9
R155F	MT-11

35. INSTALL FRONT EXHAUST PIPE ASSEMBLY (See page EX-2)

36. INSTALL EXHAUST PIPE ASSEMBLY TAIL (See page EX-2)

37. INSTALL ENGINE WIRE

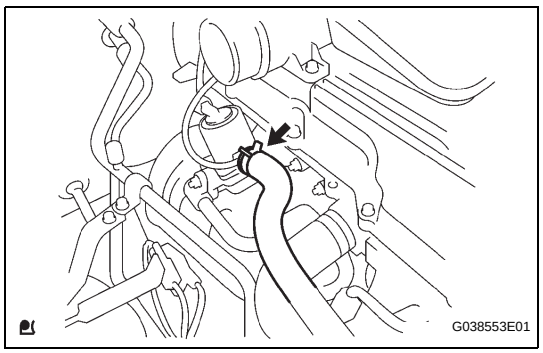

38. CONNECT NO. 1 AIR INJECTION HOSE

(a) Connect the fuel vapor feed hose.

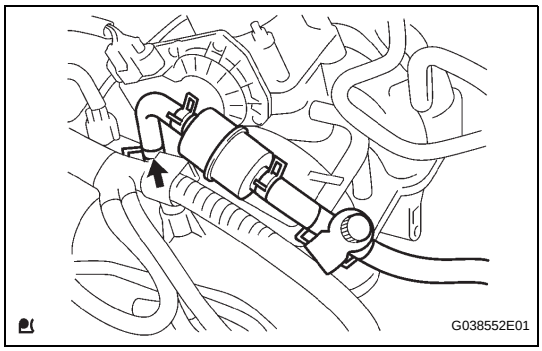

39. CONNECT FUEL VAPOR FEED HOSE ASSEMBLY
(a) Connect the fuel feed hose.

40. CONNECT NO. 2 FUEL HOSE (See page FU-17)

41. CONNECT FUEL HOSE (See page FU-17)

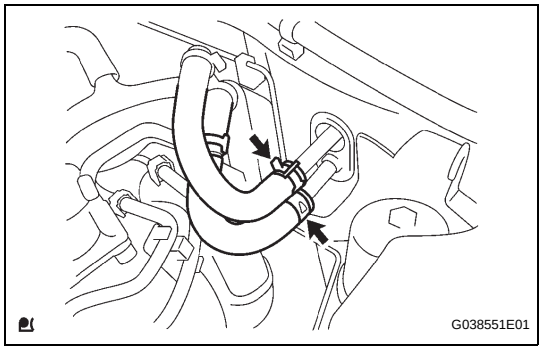

42. INSTALL WATER HOSE SUB-ASSEMBLY
(a) Install the water hose.

43. INSTALL RADIATOR HOSE INLET

44. INSTALL COMPRESSOR AND MAGNETIC CLUTCH (w/ Air Conditioning System) (See page EM-34)

45. INSTALL NO. 2 RADIATOR HOSE

46. INSTALL VANE PUMP ASSEMBLY (See page EM-34)

47. INSTALL AIR CLEANER CASE
(a) Install the air cleaner case with the 3 bolts.
Torque: 12 N*m (122 kgf*cm, 9 ft.*lbf)

48. INSTALL AIR CLEANER FILTER ELEMENT SUB-ASSEMBLY

49. INSTALL AIR CLEANER CAP SUB-ASSEMBLY (See page EC-17)

50. INSTALL FAN SHROUD (See page CO-18)

51. INSTALL RADIATOR SUPPORT TO FRAME SEAL LH (See page CO-19)

52. INSTALL BATTERY TRAY

53. INSTALL BATTERY

54. ADD ENGINE COOLANT (See page CO-3)

55. ADD ENGINE OIL (See page LU-4)

56. CHECK FOR ENGINE OIL LEVEL

57. CHECK FOR FUEL LEAKAGE

58. CHECK FOR ENGINE COOLANT LEAKAGE (See page CO-2)

59. CHECK FOR OIL LEAKAGE

60. CHECK FOR EXHAUST GAS LEAKAGE

61. INSPECT IGNITION TIMING (See page EM-1)

62. INSPECT ENGINE IDLE SPEED (See page EM-2)

63. INSPECT CO/HC (See page EM-3)

64. INSTALL NO. 1 ENGINE UNDER COVER SUB-ASSEMBLY (for Pre Runner and 4WD Type)

(a) Install the engine under cover No. 1 with the 4 bolts.
Torque: 30 N*m (306 kgf*cm, 22 ft.*lbf)

65. INSTALL NO. 2 ENGINE UNDER COVER SUB-ASSEMBLY (for Pre Runner and 4WD Type, Regular Cab)

(a) Install the engine under cover No. 2 with the 4 bolts.
Torque: 30 N*m (306 kgf*cm, 22 ft.*lbf)

66. INSTALL HOOD SUB-ASSEMBLY

(See page ED-7)

ENGINE UNIT

COMPONENTS

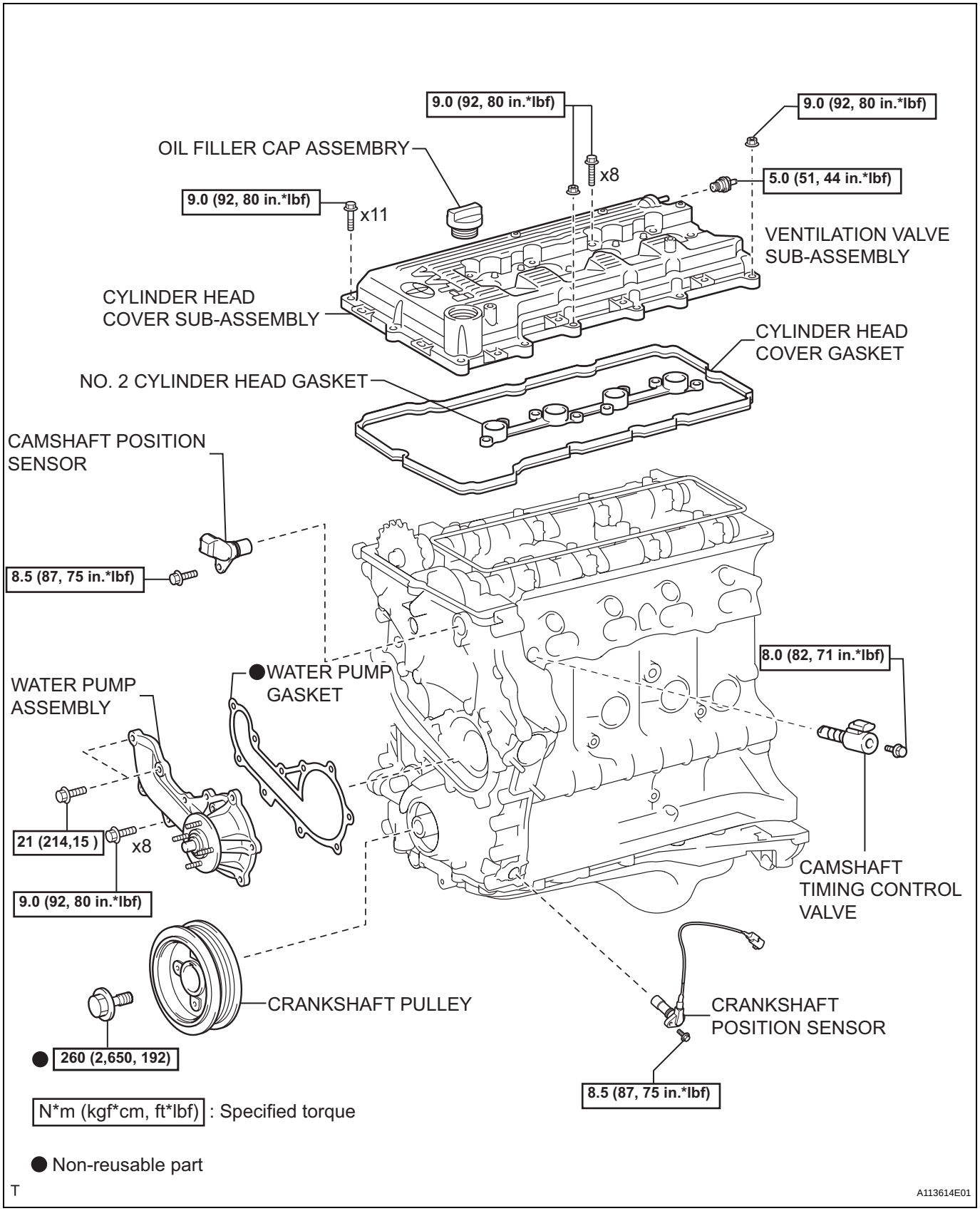

EM

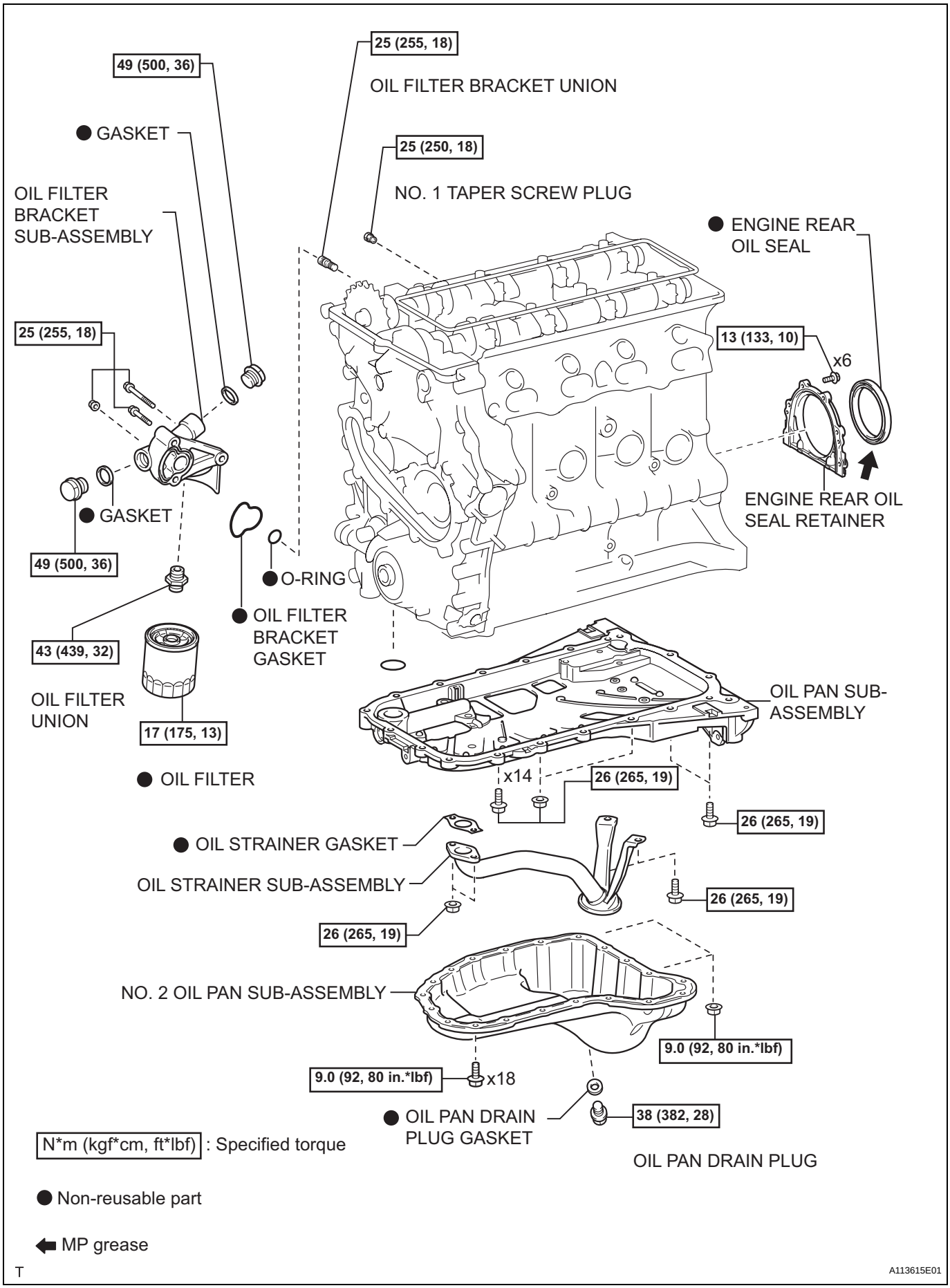
25 (255, 18)
OIL FILTER BRACKET UNION
49 (500, 36)
● GASKET
25 (250, 18)
NO. 1 TAPER SCREW PLUG
OIL FILTER BRACKET SUB-ASSEMBLY
● ENGINE REAR OIL SEAL
25 (255, 18)
13 (133, 10)
x6
● GASKET
ENGINE REAR OIL SEAL RETAINER
49 (500, 36)
● O-RING
● OIL FILTER BRACKET GASKET
43 (439, 32)
OIL FILTER UNION
17 (175, 13)
OIL PAN SUB-ASSEMBLY
● OIL FILTER
x14
26 (265, 19)
26 (265, 19)
● OIL STRAINER GASKET
OIL STRAINER SUB-ASSEMBLY
26 (265, 19)
26 (265, 19)
NO. 2 OIL PAN SUB-ASSEMBLY
9.0 (92, 80 in.*lbf)
9.0 (92, 80 in.*lbf)
x18
● OIL PAN DRAIN PLUG GASKET
38 (382, 28)
OIL PAN DRAIN PLUG
N*m (kgf*cm, ft*lbf) : Specified torque
● Non-reusable part
MP grease
T
A113615E01

EM

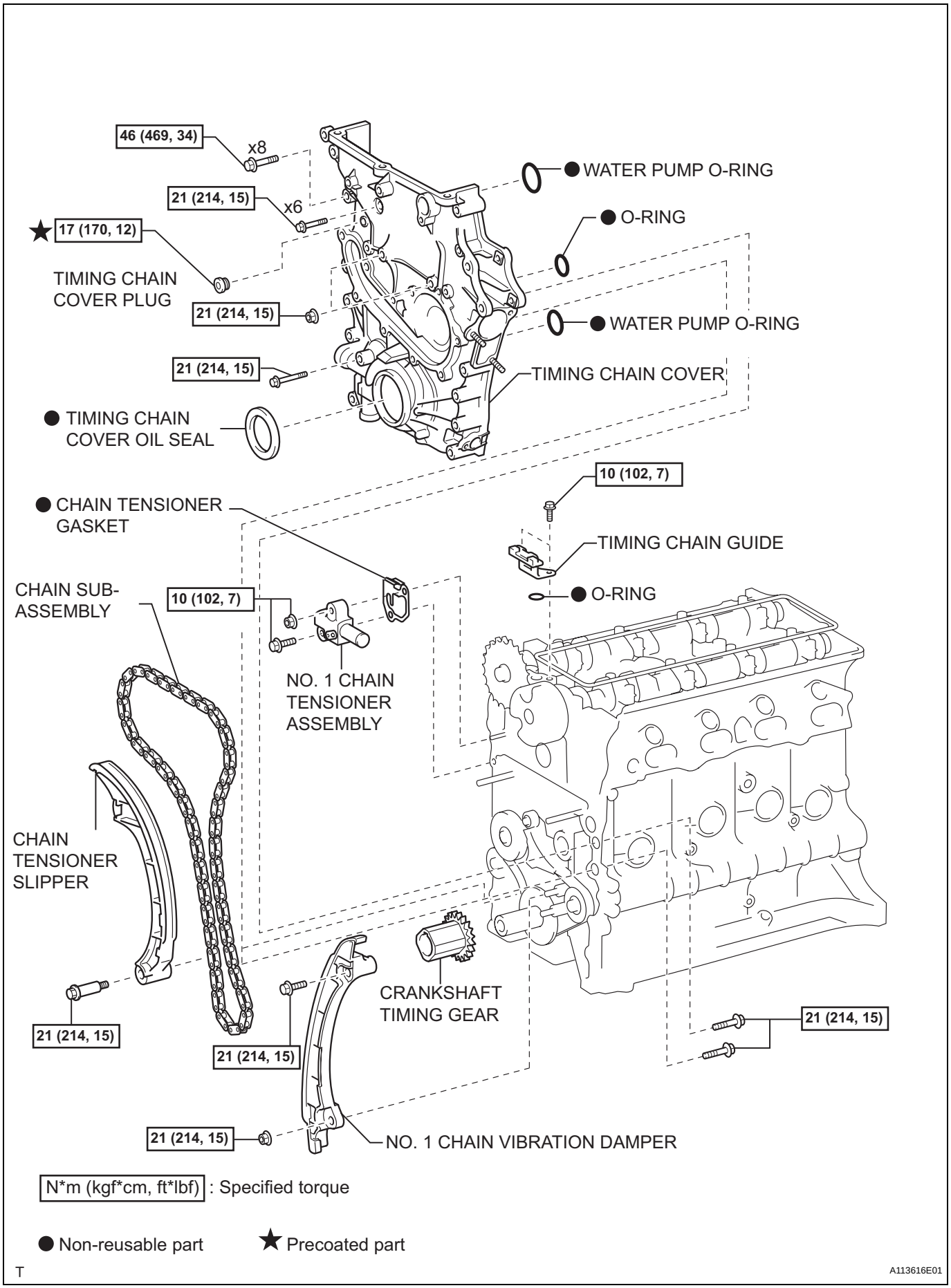
46 (469, 34)
x8
21 (214, 15)
x6
★ 17 (170, 12)
TIMING CHAIN COVER PLUG
21 (214, 15)
21 (214, 15)
● TIMING CHAIN COVER OIL SEAL
● WATER PUMP O-RING
● O-RING
● WATER PUMP O-RING
TIMING CHAIN COVER
10 (102, 7)
● CHAIN TENSIONER GASKET
TIMING CHAIN GUIDE
● O-RING
CHAIN SUB-ASSEMBLY
10 (102, 7)
NO. 1 CHAIN TENSIONER ASSEMBLY
CHAIN TENSIONER SLIPPER
CRANKSHAFT TIMING GEAR
21 (214, 15)
21 (214, 15)
21 (214, 15)
21 (214, 15)
NO. 1 CHAIN VIBRATION DAMPER
N*m (kgf*cm, ft*lbf) : Specified torque
● Non-reusable part
★ Precoated part
T
A113616E01

EM

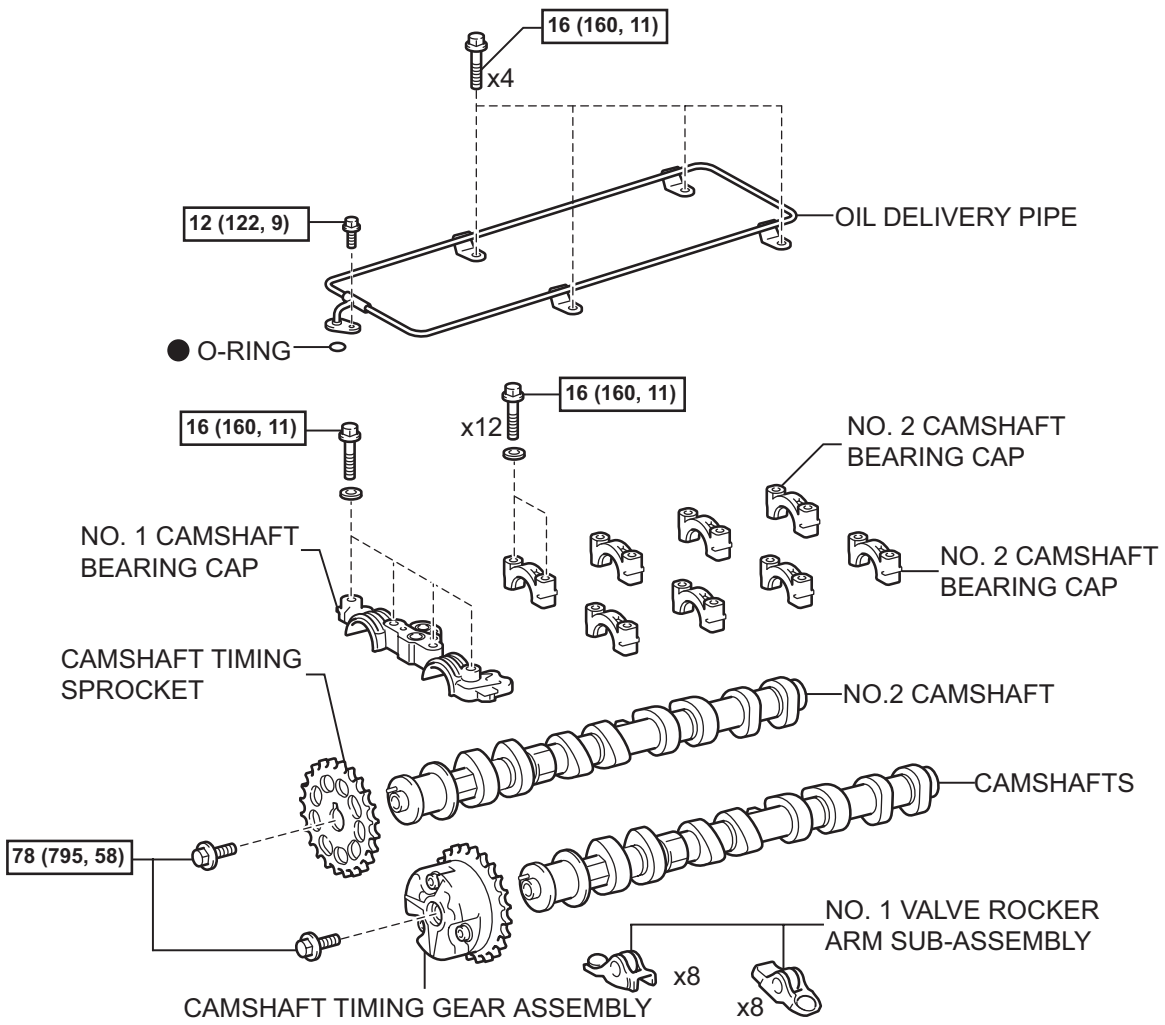

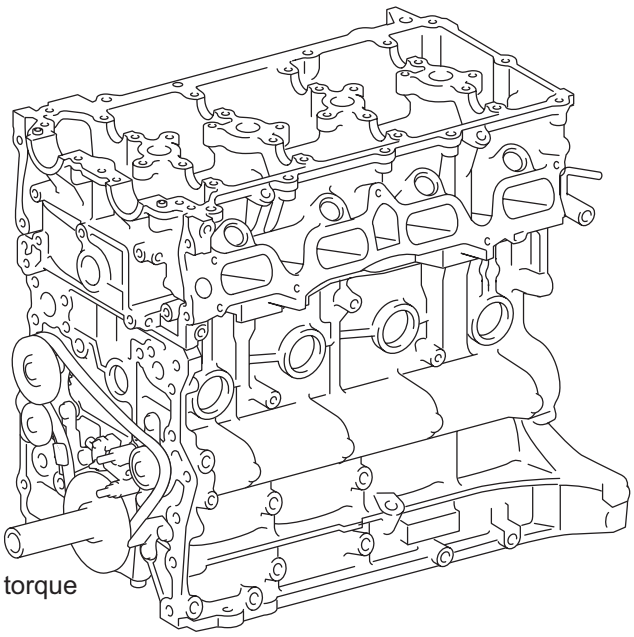

N*m (kgf*cm, ft*lbf) : Specified torque

● Non-reusable part

T

A113617E01

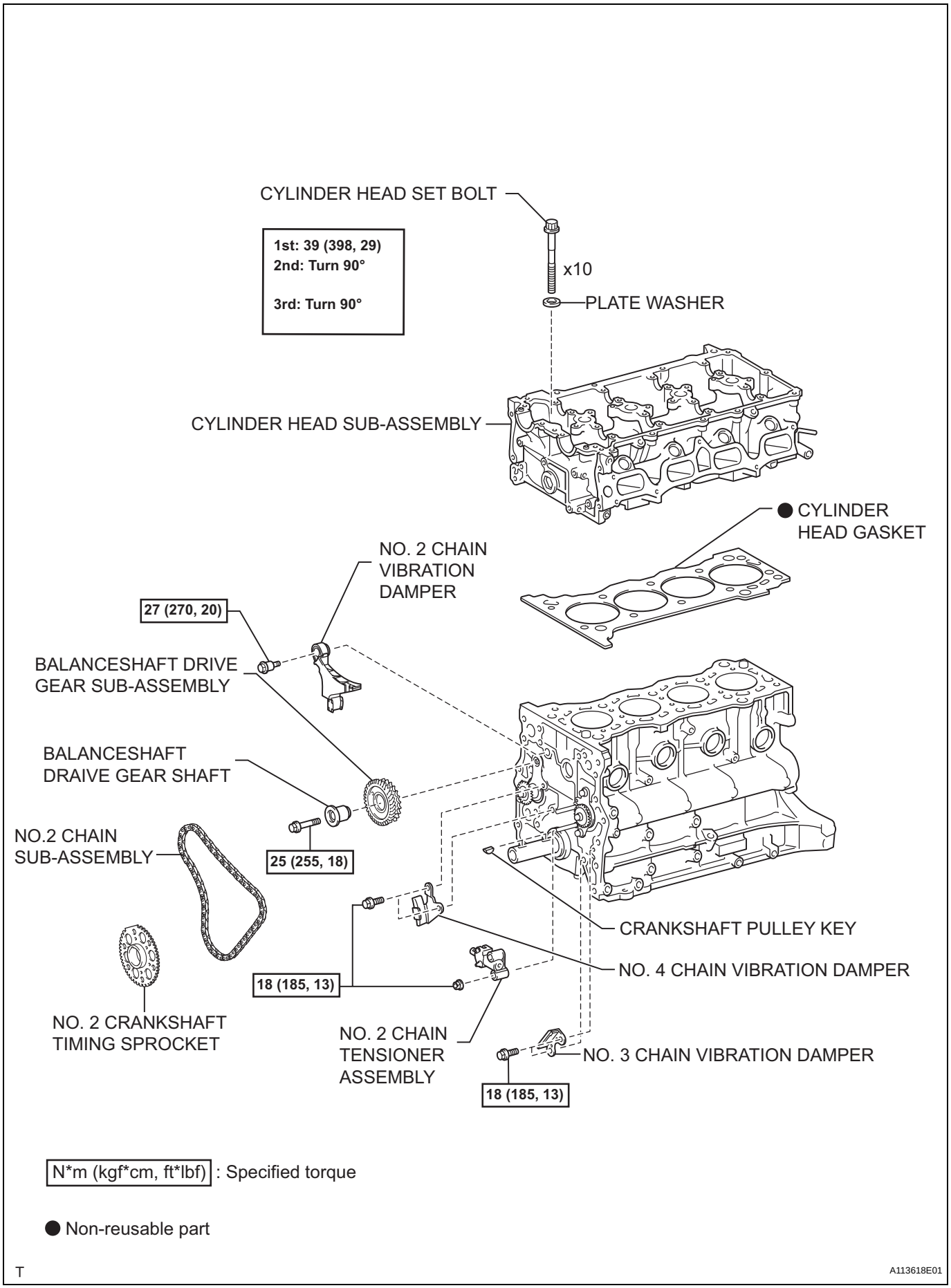
CYLINDER HEAD SET BOLT
1st: 39 (398, 29)
2nd: Turn 90°
3rd: Turn 90°
x10
PLATE WASHER
CYLINDER HEAD SUB-ASSEMBLY
● CYLINDER HEAD GASKET
NO. 2 CHAIN VIBRATION DAMPER
27 (270, 20)
BALANCESHAFT DRIVE GEAR SUB-ASSEMBLY
BALANCESHAFT DRAIVE GEAR SHAFT
NO.2 CHAIN SUB-ASSEMBLY
25 (255, 18)
CRANKSHAFT PULLEY KEY
NO. 4 CHAIN VIBRATION DAMPER
18 (185, 13)
NO. 2 CRANKSHAFT TIMING SPROCKET
NO. 2 CHAIN TENSIONER ASSEMBLY
NO. 3 CHAIN VIBRATION DAMPER
18 (185, 13)
N*m (kgf*cm, ft*lbf) : Specified torque
● Non-reusable part
T
A113618E01

EM

EM

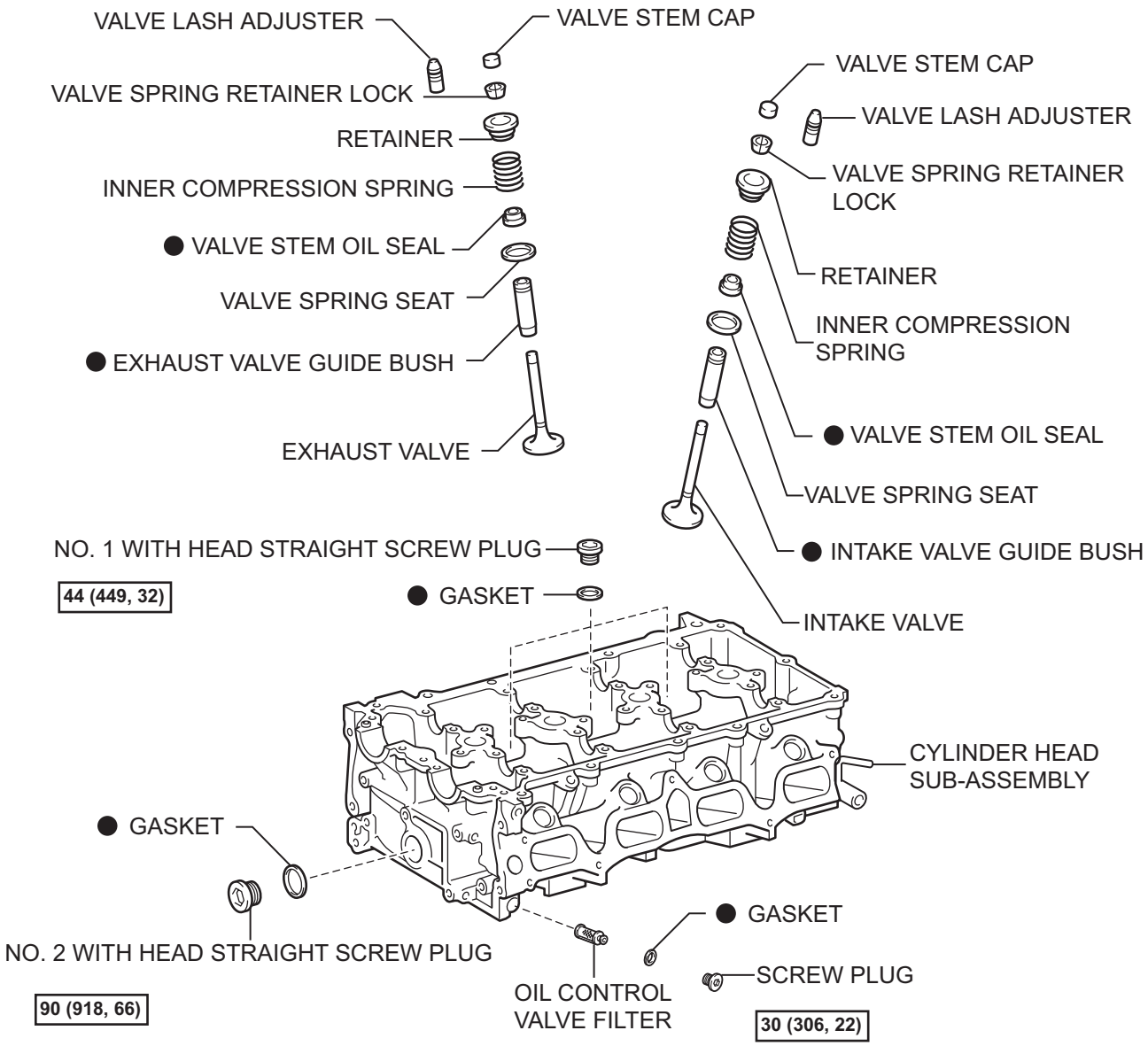

N*m (kgf*cm, ft*lbf) : Specified torque

● Non-reusable part

T

A113619E01

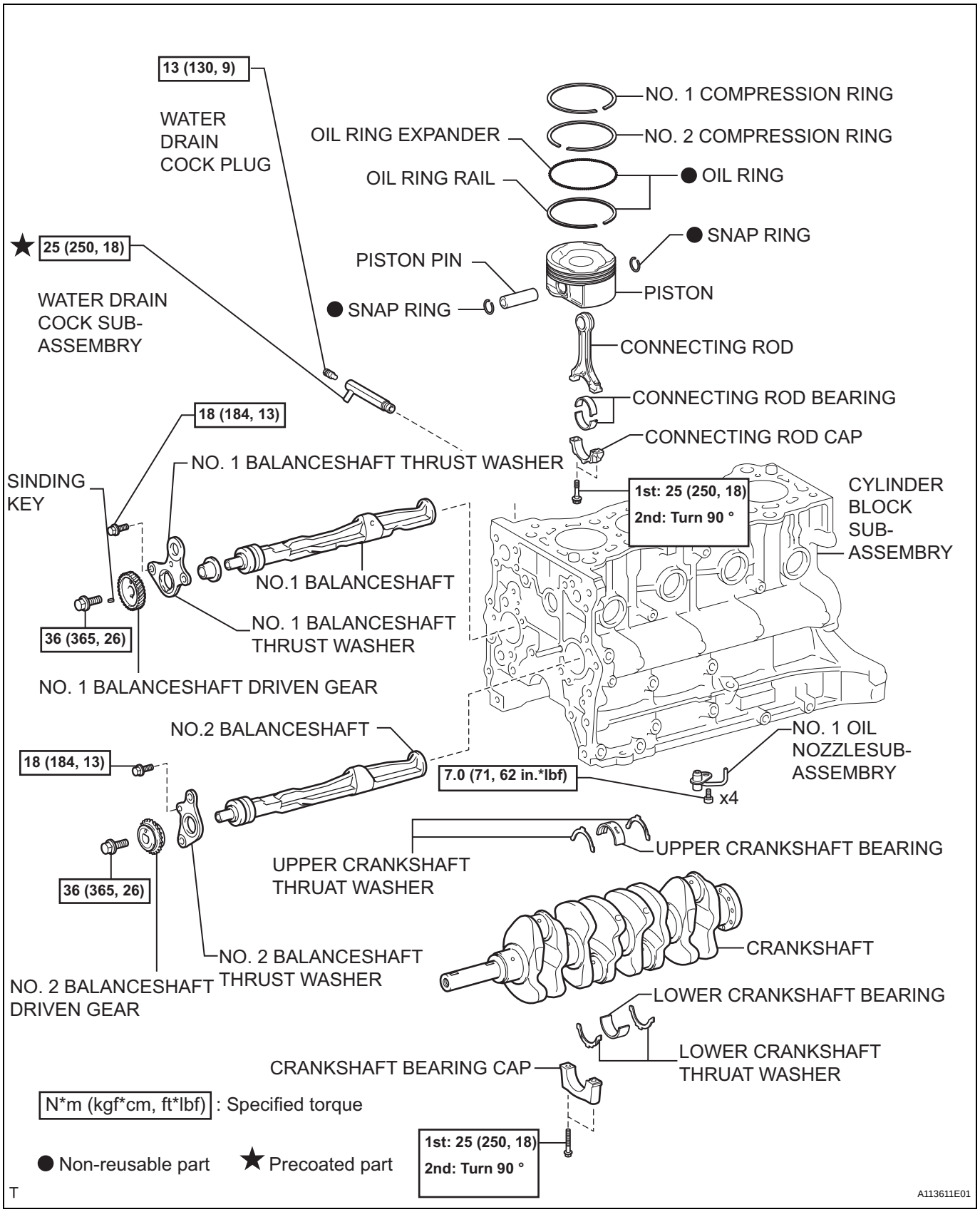
13 (130, 9)
WATER DRAIN COCK PLUG
NO. 1 COMPRESSION RING
OIL RING EXPANDER
NO. 2 COMPRESSION RING
OIL RING RAIL
● OIL RING
● SNAP RING
★ 25 (250, 18)
PISTON PIN
PISTON
WATER DRAIN COCK SUB-ASSEMBRY
● SNAP RING
CONNECTING ROD
CONNECTING ROD BEARING
18 (184, 13)
CONNECTING ROD CAP
NO. 1 BALANCESHAFT THRUST WASHER
SINDING KEY
1st: 25 (250, 18)
2nd: Turn 90 °
CYLINDER BLOCK SUB-ASSEMBRY
NO.1 BALANCESHAFT
NO. 1 BALANCESHAFT THRUST WASHER
36 (365, 26)
NO. 1 BALANCESHAFT DRIVEN GEAR
NO.2 BALANCESHAFT
NO. 1 OIL NOZZLESUB-ASSEMBRY
18 (184, 13)
7.0 (71, 62 in.*lbf)
x4
UPPER CRANKSHAFT BEARING
UPPER CRANKSHAFT THRUAT WASHER
36 (365, 26)
CRANKSHAFT
NO. 2 BALANCESHAFT THRUST WASHER
NO. 2 BALANCESHAFT DRIVEN GEAR
LOWER CRANKSHAFT BEARING
LOWER CRANKSHAFT THRUAT WASHER
CRANKSHAFT BEARING CAP
N*m (kgf*cm, ft*lbf) : Specified torque
1st: 25 (250, 18)
2nd: Turn 90 °
● Non-reusable part
★ Precoated part
T
A113611E01

EM

DISASSEMBLY

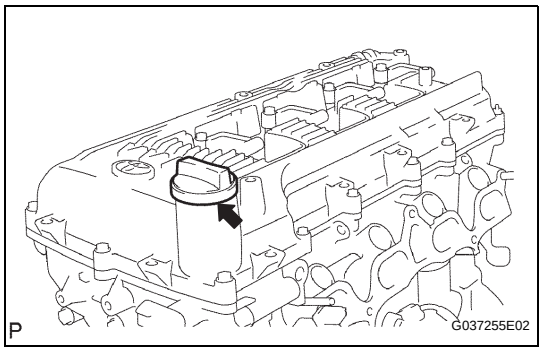

1. REMOVE OIL FILLER CAP SUB-ASSEMBLY

(a) Remove the oil filler cap sub-assembly.

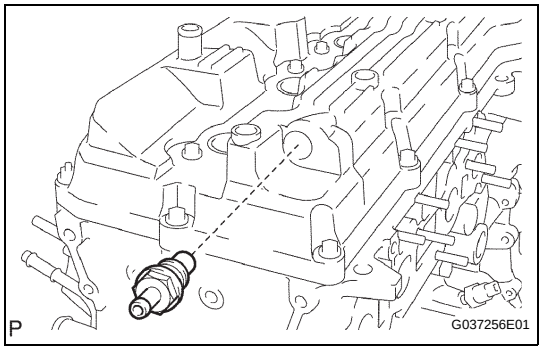

2. REMOVE VENTILATION VALVE SUB-ASSEMBLY

(a) Remove the ventilation valve sub-assembly.

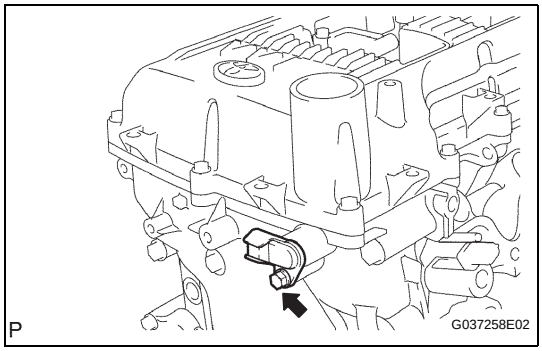

3. REMOVE CAMSHAFT POSITION SENSOR

(a) Remove the bolt and camshaft position sensor.

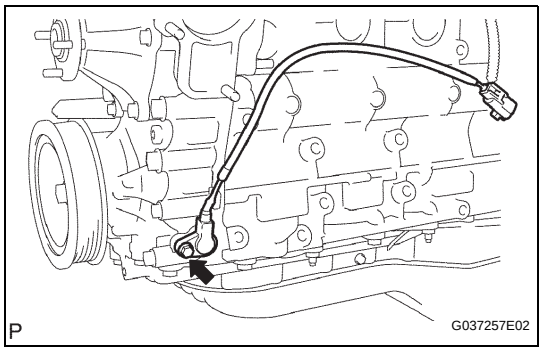

4. REMOVE CRANKSHAFT POSITION SENSOR

(a) Remove the bolt and crankshaft position sensor.

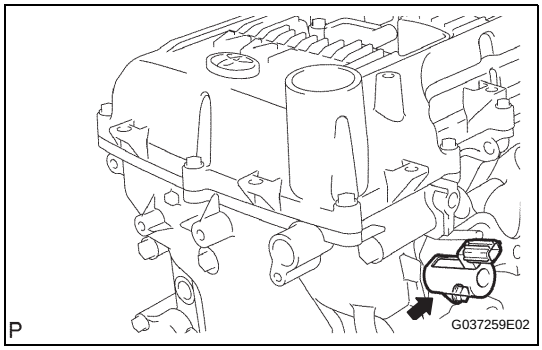

5. REMOVE CAMSHAFT TIMING OIL CONTROL VALVE ASSEMBLY

(a) Remove the bolt and camshaft timing oil control valve.

EM

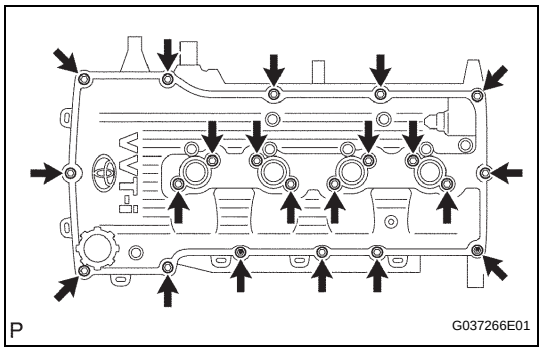

6. REMOVE CYLINDER HEAD COVER SUB-ASSEMBLY

(a) Remove the 19 bolts, 2 nuts, head cover and 2 gaskets.

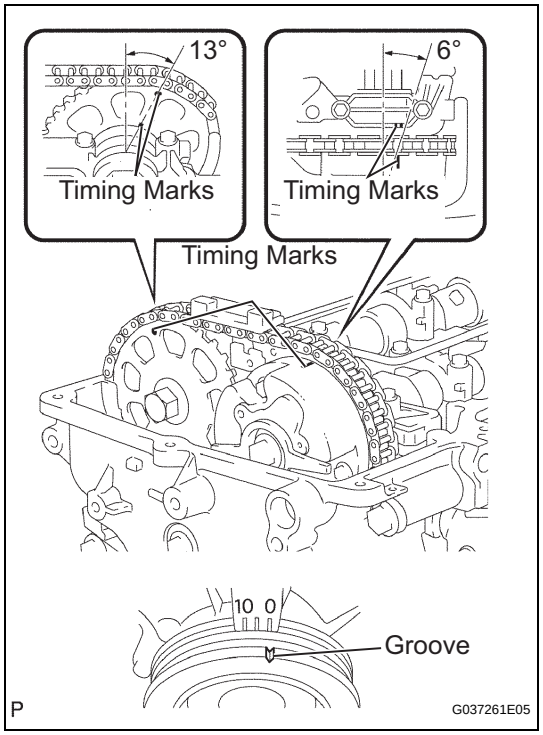

7. REMOVE CRANKSHAFT PULLEY

(a) Turn the crankshaft pulley, and align its groove with timing mark 0 of the timing chain cover.

(b) Check that the timing marks of the camshaft timing gear and sprocket are aligned with the timing marks of the bearing cap No.1, as shown in the illustration.

EM

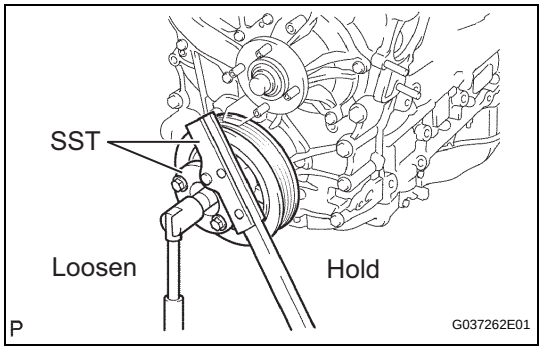

(c) Using SST, loosen the crankshaft pulley bolt.
SST 09213-54015 (91651-60855), 09330-00021

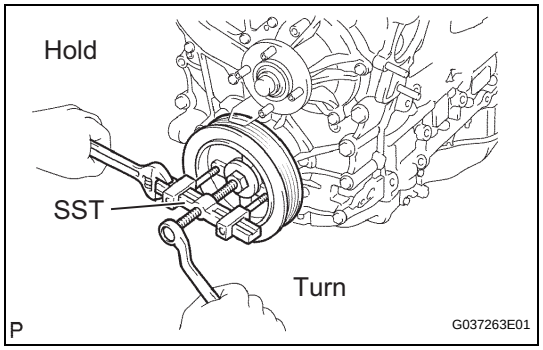

(d) Using SST, remove the crankshaft pulley bolt and crankshaft pulley.
SST 09950-50013 (09951-05010, 09952-05010, 09953-05010, 09954-05021)

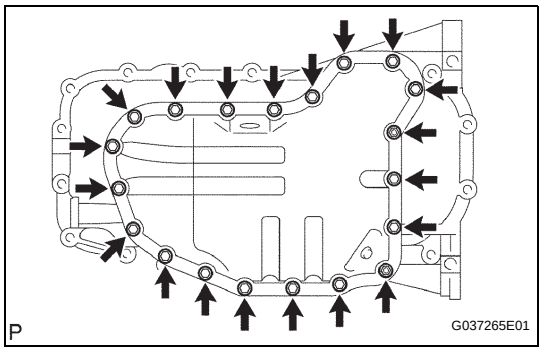

8. REMOVE NO. 2 OIL PAN SUB-ASSEMBLY

(a) Remove the drain plug and gasket.

(b) Remove the 18 bolts and 2 nuts.

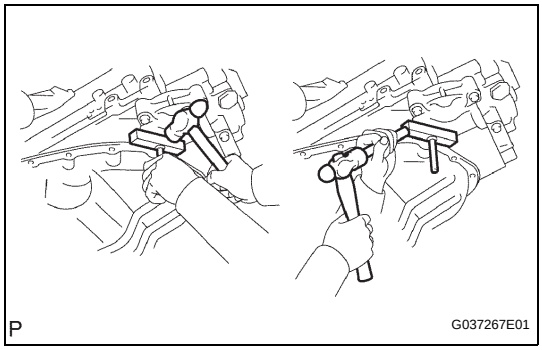

(c) Insert the blade of SST between the oil pans. Cut through the applied sealer and remove the oil pan sub-assembly No.2.

SST 09032-00100

NOTICE:

Be careful not to damage the contact surfaces of the oil pans.

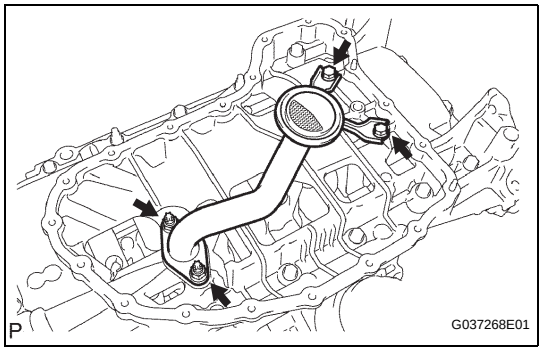

9. REMOVE OIL STRAINER SUB-ASSEMBLY

(a) Remove the 2 bolts, 2 nuts, oil strainer and gasket.

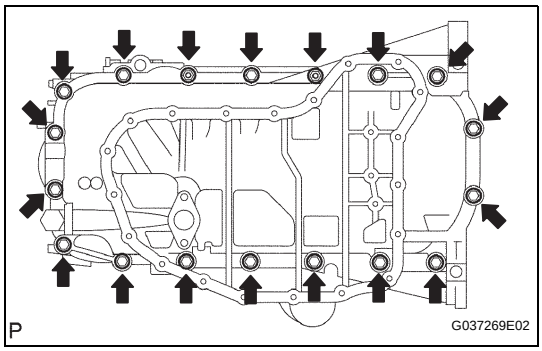

10. REMOVE OIL PAN SUB-ASSEMBLY

(a) Remove the 16 bolts and 2 nuts.

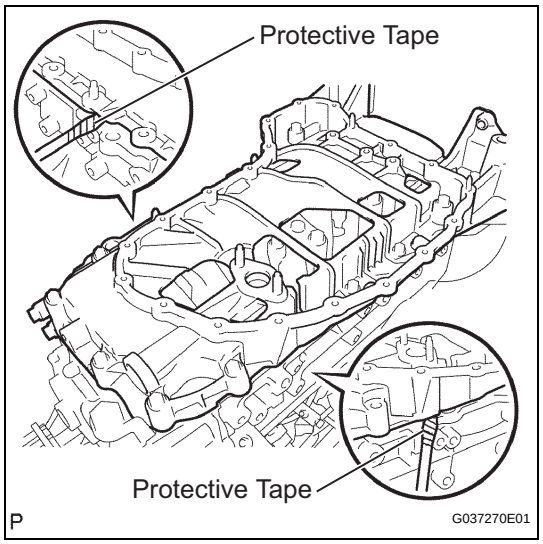

(b) Remove the oil pan by prying between the oil pan and cylinder block with a screwdriver.
NOTICE:
Be careful not to damage the contact surfaces of the cylinder block and oil pan.
HINT:
Tape the screwdriver tip before use.

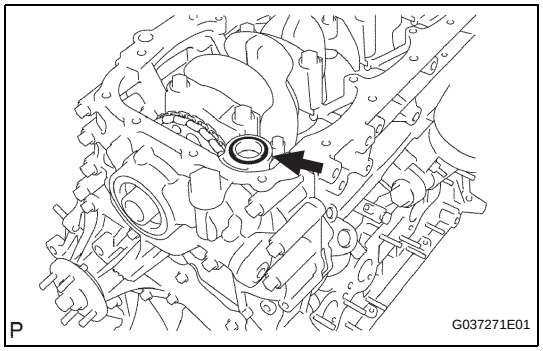

(c) Remove the O-ring.

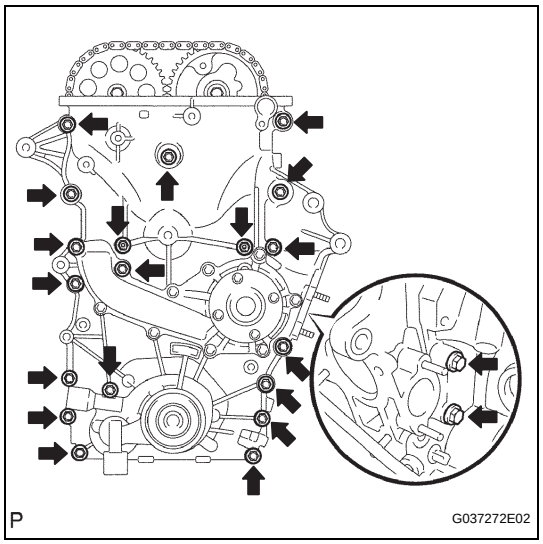

11. REMOVE TIMING CHAIN COVER

(a) Remove the 19 bolts and 2 nuts as shown in the illustration.

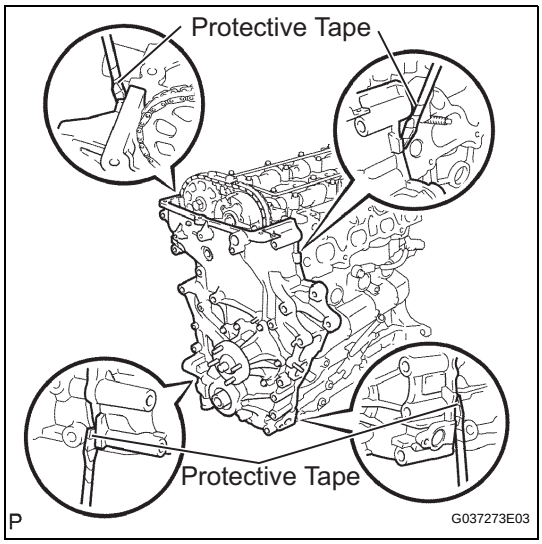

(b) Remove the timing chain cover by prying between the timing chain cover and cylinder head or cylinder block with a screwdriver.
HINT:
Tape the screwdriver tip before use.
NOTICE:
Be careful not to damage the contact surfaces of the cylinder head, cylinder block and timing chain cover.

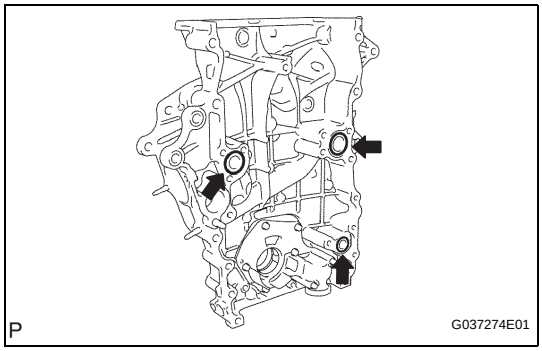

(c) Remove the 3 O-rings.

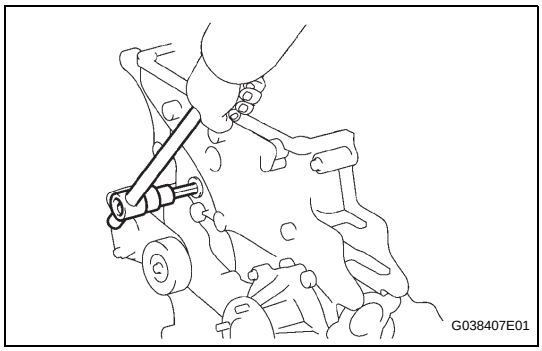

(d) Using a 10 mm socket hexagon wrench, remove the timing chain cover plug.

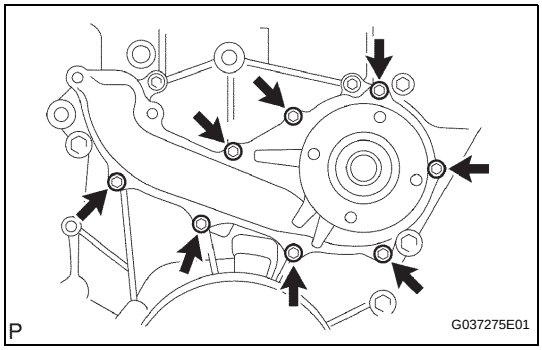

12. REMOVE WATER PUMP ASSEMBLY

(a) Remove the 8 bolts, water pump and gasket.

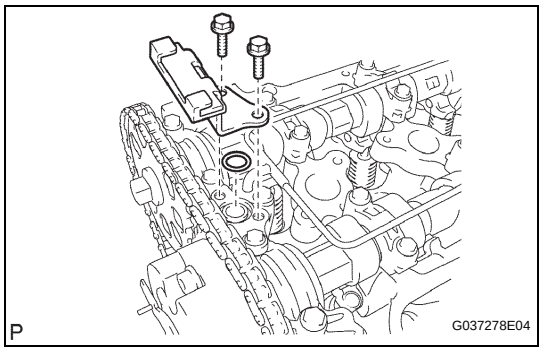

13. REMOVE TIMING CHAIN GUIDE

(a) Remove the 2 bolts, timing chain guide and O-ring.

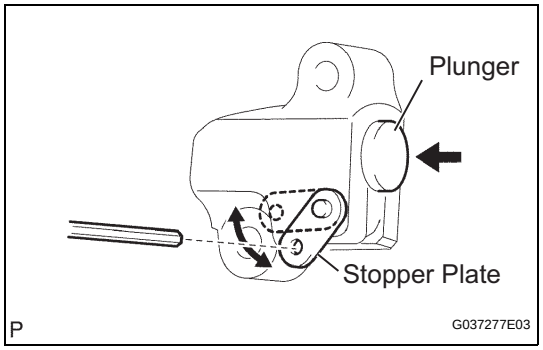

14. REMOVE NO. 1 CHAIN TENSIONER ASSEMBLY

NOTICE:

- **When the chain tensioner is removed, do not rotate the crankshaft.**
- **When the chain is removed and the camshaft needs to be rotated, rotate the crankshaft 90 degrees to the right.**

(a) Move the stopper plate upward to release the lock, and push the plunger deep into the tensioner.

(b) Move the stopper plate downward to set the lock, and insert a hexagon wrench into the stopper plate's hole.

(c) Remove the bolt, nut, chain tensioner assembly No.1 and gasket.

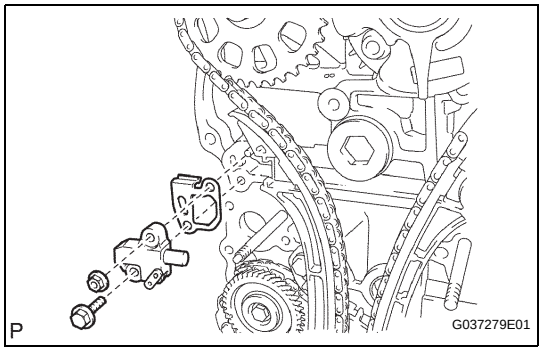

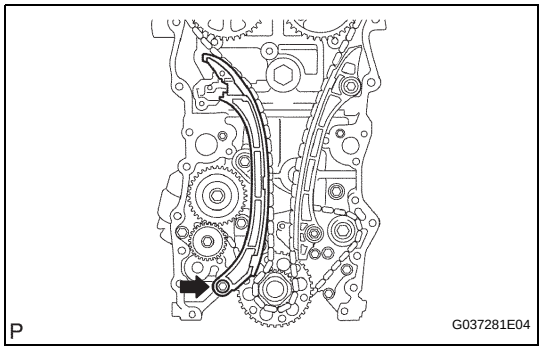

15. REMOVE CHAIN TENSIONER SLIPPER

(a) Remove the bolt and tensioner slipper.

EM

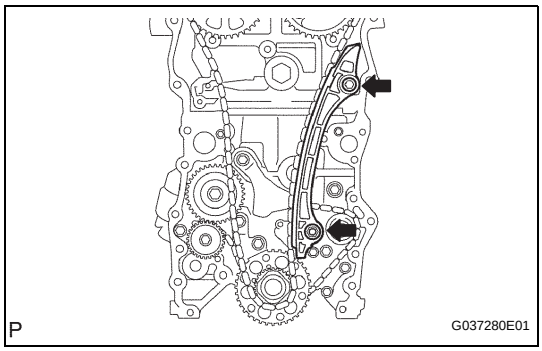

16. REMOVE NO. 1 CHAIN VIBRATION DAMPER

(a) Remove the bolt, nut, and vibration damper.

17. REMOVE CHAIN SUB-ASSEMBLY

(a) Remove the chain.

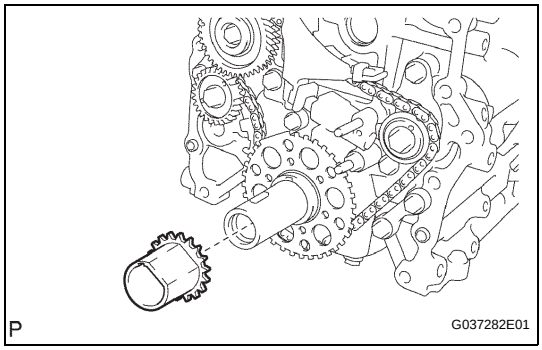

18. REMOVE CRANKSHAFT TIMING GEAR OR SPROCKET

(a) Remove the crankshaft timing gear from the crankshaft.

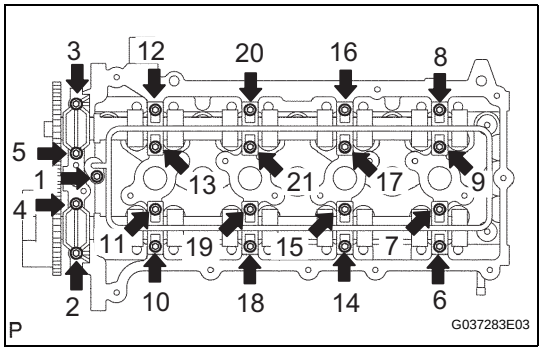

19. REMOVE CAMSHAFT BEARING CAP

(a) Uniformly loosen and remove the 21 bearing cap bolts and 20 washers on the camshafts in the sequence shown in the illustration.

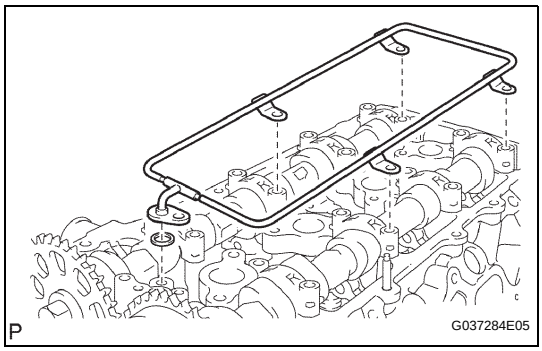

(b) Remove the oil delivery pipe and O-ring from the bearing caps.

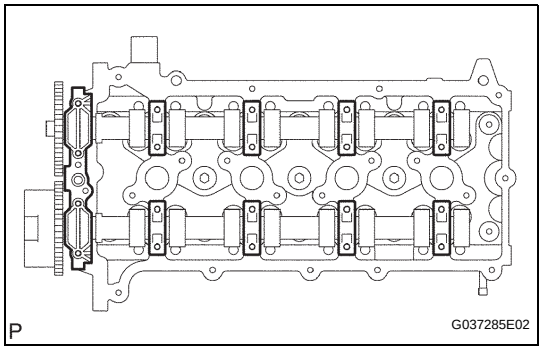

(c) Remove the 9 bearing caps.

EM

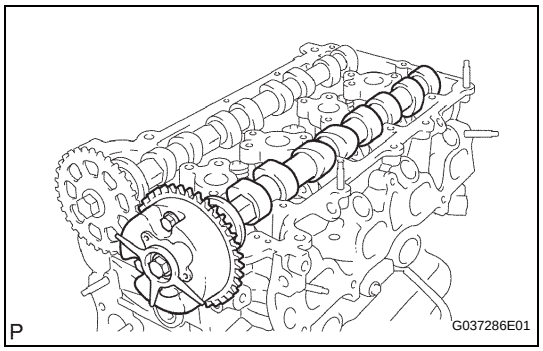

20. REMOVE CAMSHAFT

(a) Remove the camshaft sub-assembly.

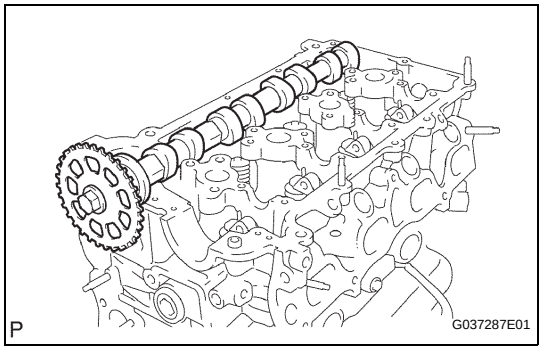

21. REMOVE NO.2 CAMSHAFT

(a) Remove the No.2 camshaft sub-assembly.

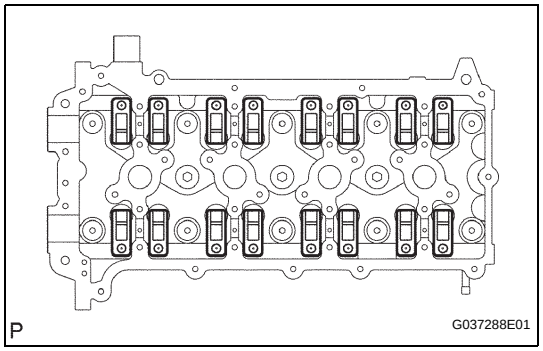

22. REMOVE NO. 1 VALVE ROCKER ARM SUB-ASSEMBLY

(a) Remove the 16 valve rocker arm sub-assembly.

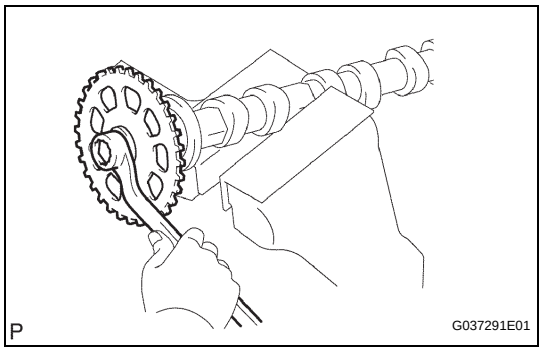

23. REMOVE CAMSHAFT TIMING SPROCKET

(a) Fix the camshaft with a vise and then remove the sprocket bolt and camshaft timing sprocket.
NOTICE:
Be careful not to damage the camshaft.

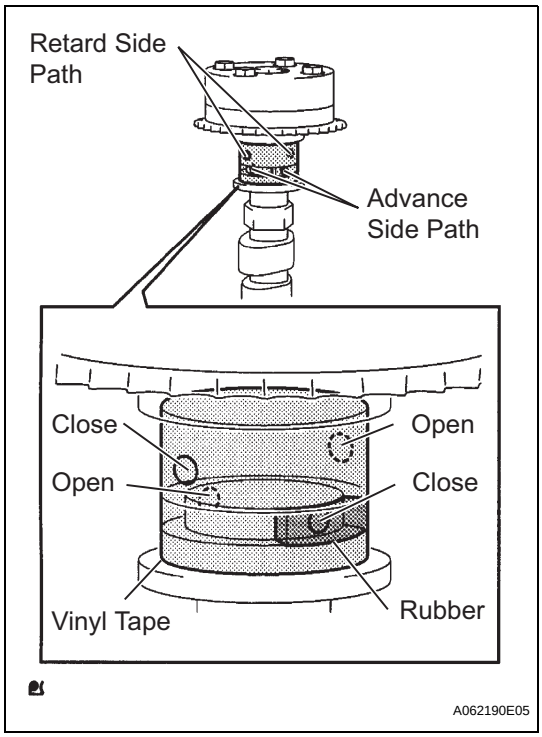

24. REMOVE CAMSHAFT TIMING GEAR ASSEMBLY

(a) Check the lock of the camshaft timing gear.

(1) Clamp the camshaft in a vise, and confirm that the camshaft timing gear is locked.

NOTICE:

Be careful not to damage the camshaft.

(b) Release the lock pin.

(1) Cover the 4 oil paths of the cam journal with vinyl tape as shown in the illustration.

HINT:

2 advance side paths are provided in the groove of the camshaft. Plug one of the paths with a rubber piece.

(2) Break through the tape of the advance side path and the retard side path on the opposite side to the hole of the advance side path, as shown in the illustration.

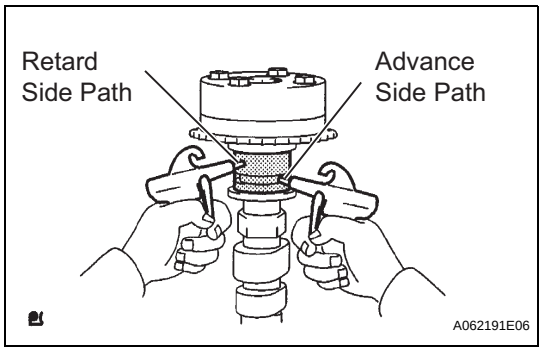

(3) Apply approximately 200 kPa (2.0 kgf*cm^2, 28 psi) of air pressure to the two broken paths.

CAUTION:

Some oil splashing will occur. Cover the paths with a shop rag.

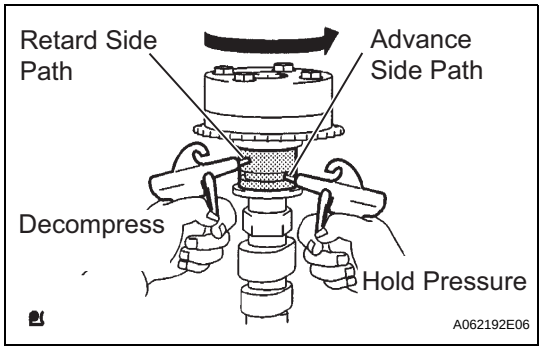

(4) Check that the camshaft timing gear revolves in the advance direction when reducing the air pressure applied to the retard side path.

OK:

Gear rotates in the advance direction.

HINT:

This operation releases the lock pin for the most retarded position.

(5) When the camshaft timing gear reaches the most advanced position, release the air pressure from the retard side path and advance side path, in that order.

NOTICE:

Do not release the air pressure from the advance side path first. The gear may abruptly shift in the retard direction and break the lock pin.

EM

(c) Check for smooth rotation.
(1) Rotate the camshaft timing gear within its movable range several times, but do not turn it to the most retarded position. Check that the gear rotates smoothly.
OK:
Gear rotates in the advance direction.
CAUTION:
Do not use an air pressure to perform the smooth operation check.

(d) Check the lock in the most retarded position.
(1) Confirm that the camshaft timing gear is locked at the most retarded position.

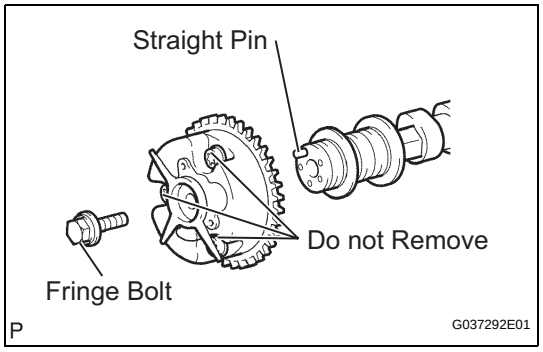

25. REMOVE CAMSHAFT TIMING GEAR ASSEMBLY
(a) Remove the fringe bolt and camshaft timing gear.
NOTICE:
- **Be sure not to remove the other 3 bolts.**
- **If planning to reuse the gear, be sure to release the straight pin lock before installing the gear.**

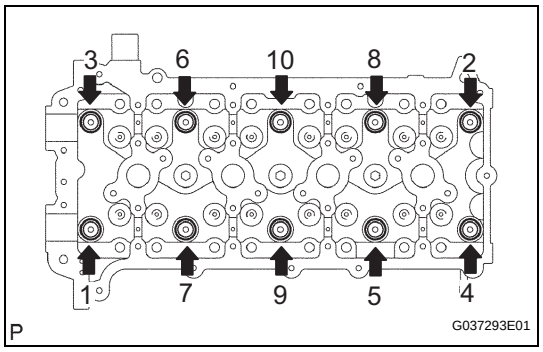

26. REMOVE CYLINDER HEAD SUB-ASSEMBLY
(a) Uniformly loosen the 10 bolts in the sequence shown in the illustration. Remove the 10 cylinder head bolts and plate washers.
NOTICE:
- **Be careful not to drop washers into the cylinder head.**
- **Head warpage or cracking could result from removing bolts in an incorrect order.**

(b) Remove the cylinder head.

27. REMOVE CYLINDER HEAD GASKET
(a) Remove the cylinder head and gasket.

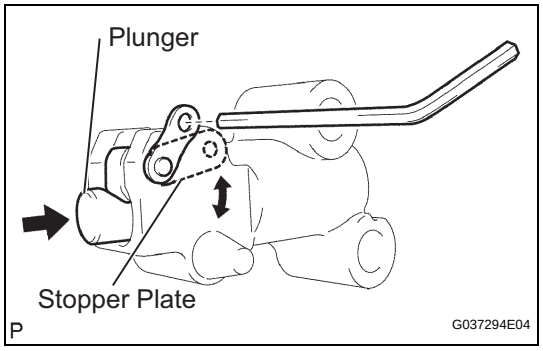

28. REMOVE NO. 2 CHAIN VIBRATION DAMPER
(a) Move the stopper plate downward to release the lock, and push the plunger deep into the tensioner.
(b) Move the stopper plate upward to set the lock, and insert a hexagon wrench into the stopper plate's hole.

EM

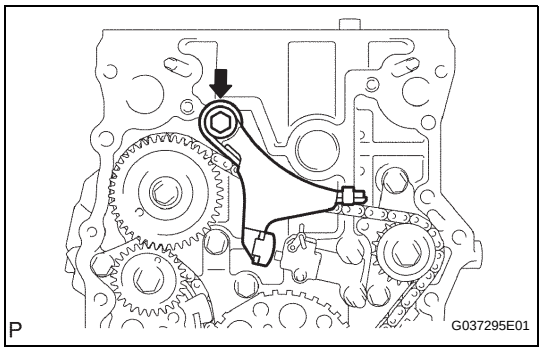

(c) Remove the bolt and chain vibration damper No.2.

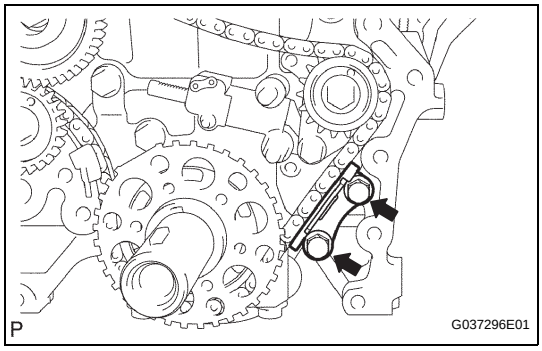

29. REMOVE NO. 3 CHAIN VIBRATION DAMPER

(a) Remove the 2 bolts and chain vibration damper No.3.

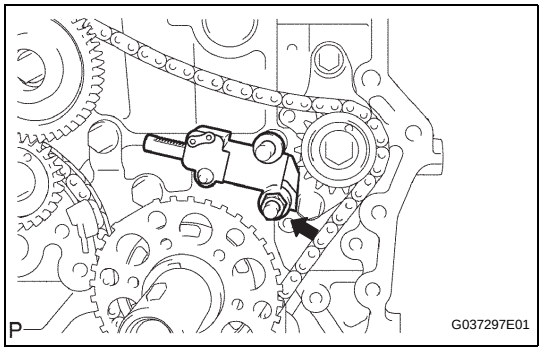

30. REMOVE NO. 2 CHAIN TENSIONER ASSEMBLY

(a) Remove the hexagon wrench from the tensioner assembly No.2.

(b) Remove the nut and chain tensioner assembly No.2.

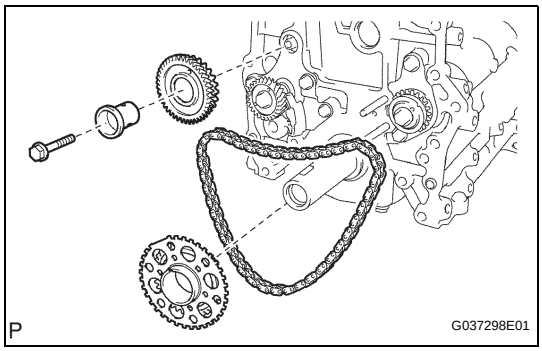

31. REMOVE NO.2 CHAIN SUB-ASSEMBLY

(a) Remove the bolt, balanceshaft drive gear shaft and balanceshaft drive gear.

(b) Remove the crankshaft timing sprocket No.2 and chain.

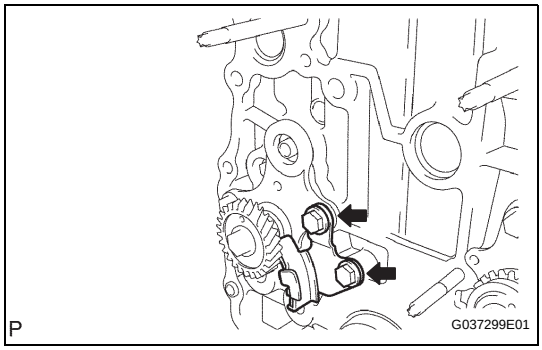

32. REMOVE NO. 4 CHAIN VIBRATION DAMPER

(a) Remove the 2 bolts and vibration damper No.4.

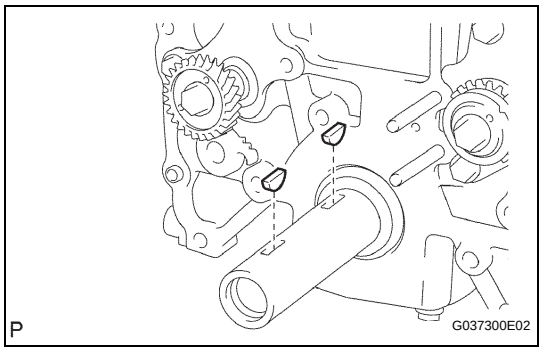

33. REMOVE CRANKSHAFT PULLEY SET CRANKSHAFT KEY

(a) Remove the 2 pulley set keys from the crankshaft.

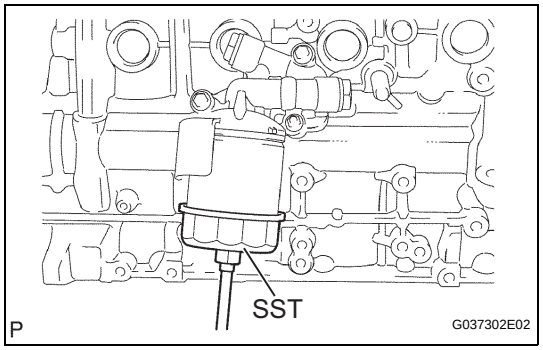

34. REMOVE OIL FILTER SUB-ASSEMBLY

(a) Using SST, remove the oil filter.
SST 09228-07501

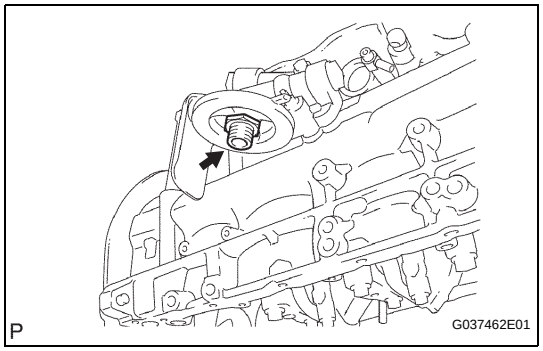

(b) Using a 27 mm socket wrench, remove the oil filter union.

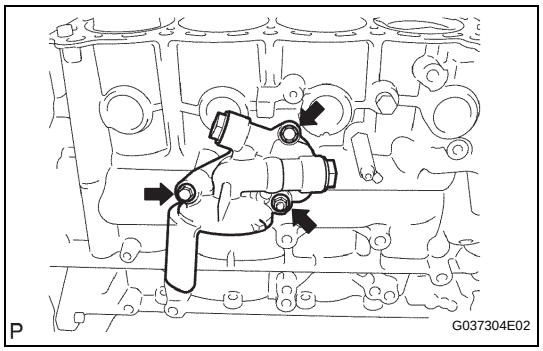

35. REMOVE OIL FILTER BRACKET SUB-ASSEMBLY

(a) Remove the 2 bolts and nut from the oil filter bracket.

(b) Remove the 2 screw plugs and 2 gaskets from the oil filter bracket.

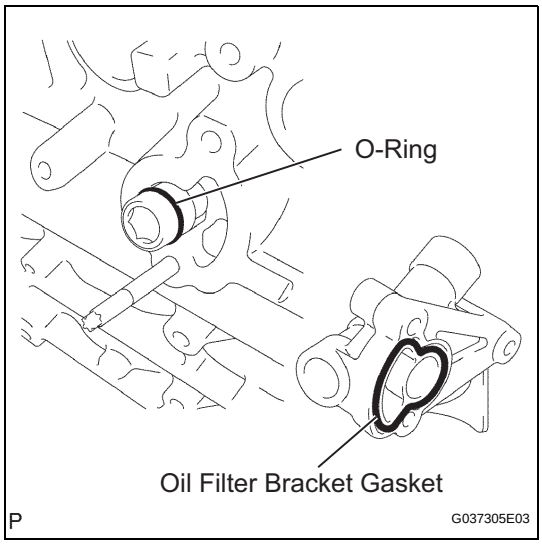

(c) Remove the oil filter bracket gasket and O-ring.

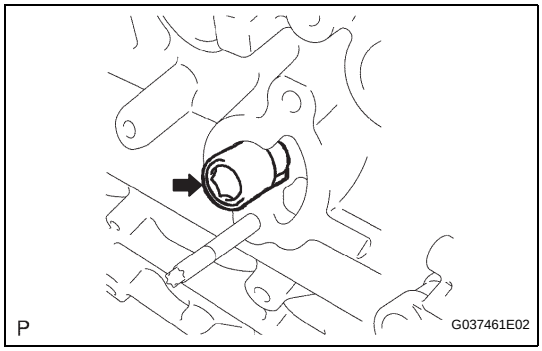

(d) Using a hexagon wrench, remove the oil filter bracket union.

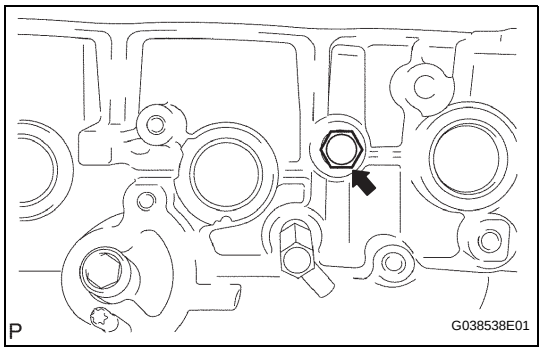

36. REMOVE NO. 1 WITH HEAD TAPER SCREW PLUG

(a) Remove the taper screw plug from the cylinder block.

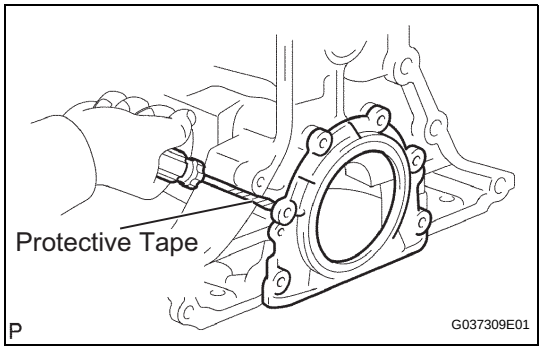

37. REMOVE ENGINE REAR OIL SEAL RETAINER

(a) Remove the 6 bolts.

(b) Using a screwdriver with its tip taped, pry out the oil seal retainer.
HINT:
Tape the screwdriver tip before use.

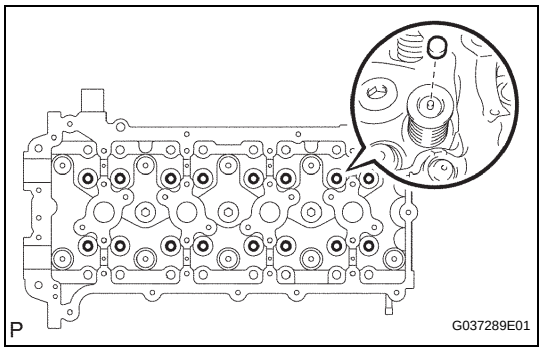

38. REMOVE VALVE STEM CAP

(a) Remove the valve stem caps from the cylinder head.
HINT:
Arrange the removed parts in the correct order.

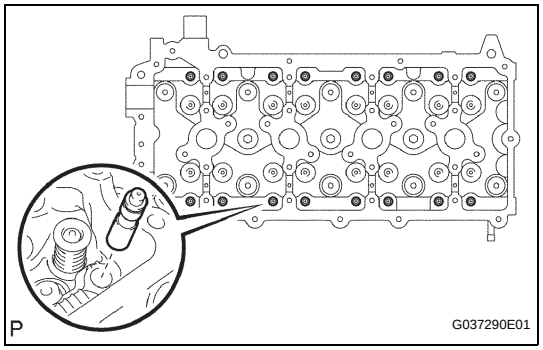

39. REMOVE VALVE LASH ADJUSTER ASSEMBLY

(a) Remove the valve lash adjusters from the cylinder head.
HINT:
Arrange the removed parts in the correct order.

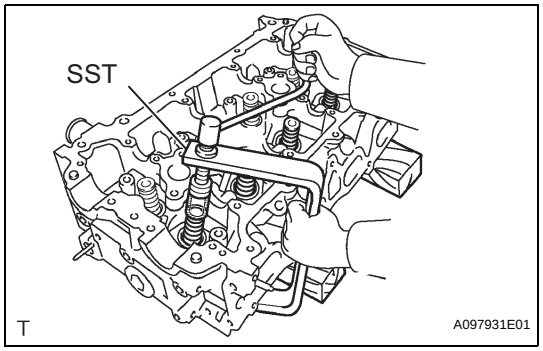

40. REMOVE INTAKE VALVE

(a) Using SST and wooden blocks, compress the compression spring and remove the valve retainer locks.
SST 09202-70020 (09202-00010)

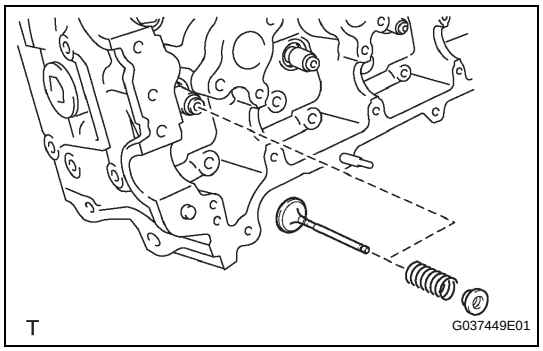

(b) Remove the retainer, compression spring, and valve.
HINT:
Arrange the removed parts in the correct order.

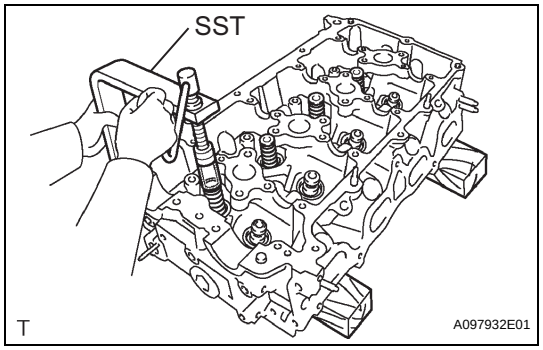

41. REMOVE EXHAUST VALVE

(a) Using SST and wooden blocks, compress the compression spring and remove the valve retainer locks.
SST 09202-70020 (09202-00010)

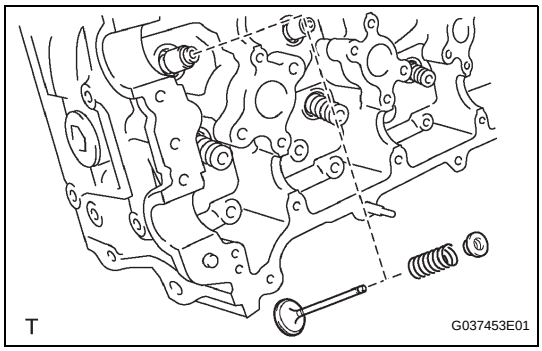

(b) Remove the retainer, compression spring, and valve.
HINT:
Arrange the removed parts in the correct order.

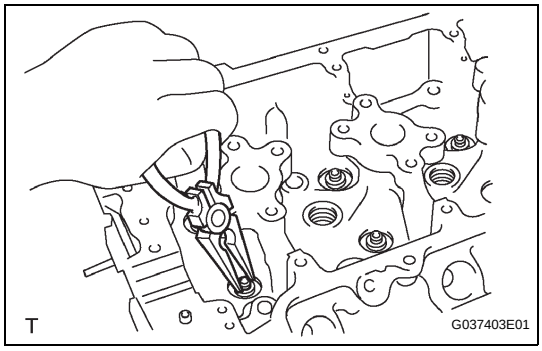

42. REMOVE VALVE STEM OIL SEAL
(a) Using needle-nose pliers, remove the oil seals.

43. REMOVE VALVE SPRING SEAT
(a) Remove the valve spring seats from the cylinder head.

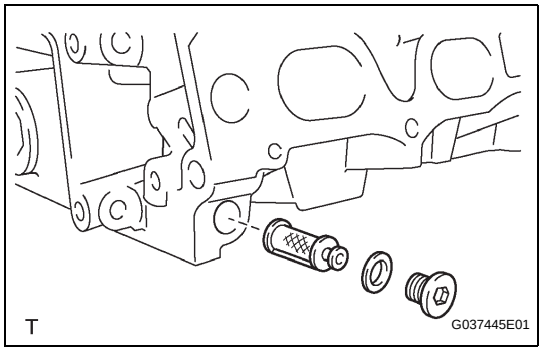

44. REMOVE OIL CONTROL VALVE FILTER
(a) Using an 8 mm hexagon wrench, remove the screw plug.
(b) Remove the oil control valve filter and gasket.

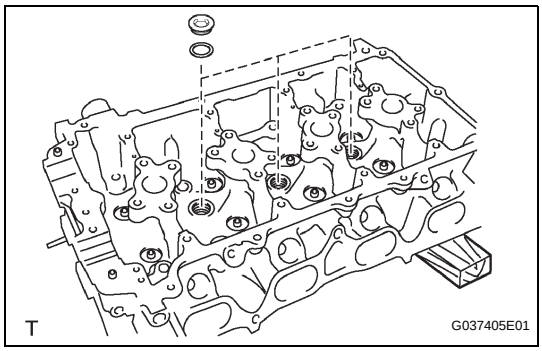

45. REMOVE NO. 1 WITH HEAD STRAIGHT SCREW PLUG
(a) Using a 10 mm hexagon wrench, remove the 3 screw plugs and 3 gaskets.
NOTICE:
If water leaks from the w/ head straight screw plug No.1 or the plug corrodes, replace it.

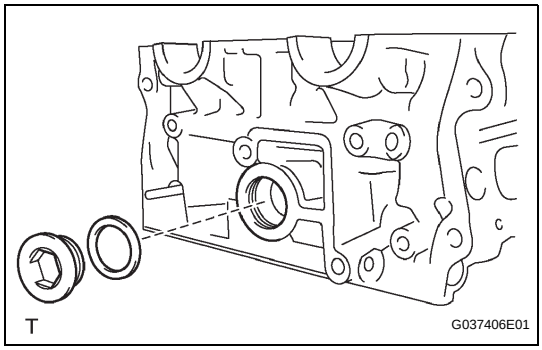

46. REMOVE NO. 2 WITH HEAD STRAIGHT SCREW PLUG
(a) Using a 19 mm hexagon wrench, remove the screw plug and gasket.
NOTICE:
If water leaks from the w/ head straight screw plug No.2 or the plug corrodes, replace it.

47. REMOVE CRANKSHAFT BEARING

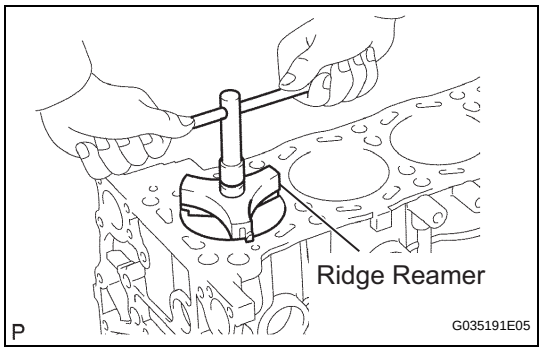

48. REMOVE PISTON SUB-ASSEMBLY WITH CONNECTING ROD

(a) Using a ridge reamer, remove all the carbon from the top of the cylinder.

(b) Push the piston, connecting rod assembly and upper bearing through the top of the cylinder block.
HINT:
- Keep the bearing, connecting rod and cap together.
- Arrange the piston and connecting rod assemblies in the correct order.

49. REMOVE CONNECTING ROD BEARING

HINT:
Arrange the removed parts in the correct order.

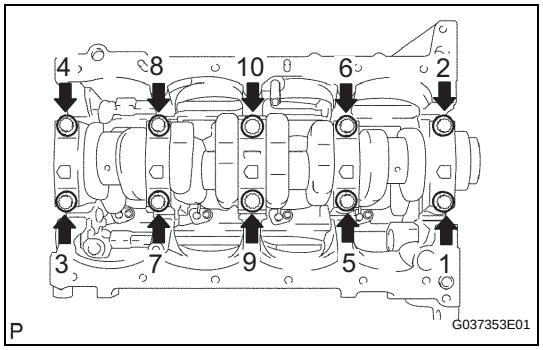

50. REMOVE CRANKSHAFT

(a) Uniformly loosen the 10 bearing cap bolts, in several steps, in the sequence shown in the illustration.
HINT:
- Keep the lower bearings and crankshaft bearing caps together.
- Arrange the thrust washers in the correct order.

(b) Lift out the crankshaft.

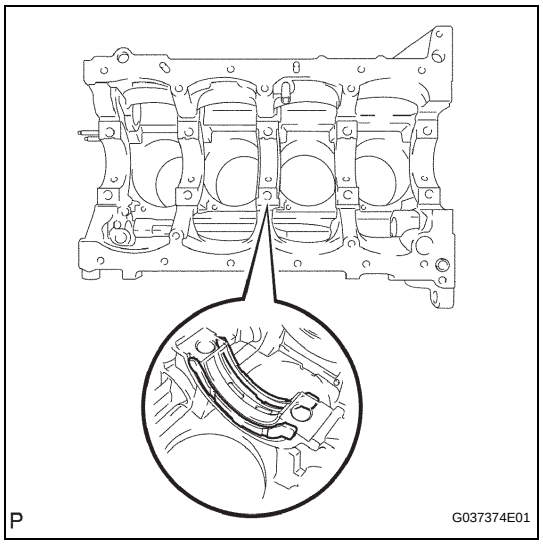

(c) Remove the upper bearings and upper thrust washers from the cylinder block.
HINT:
Arrange the main bearing caps, bearings and thrust washers in the correct order.

51. REMOVE CRANKSHAFT BEARING

HINT:
Arrange the removed parts in the correct order.

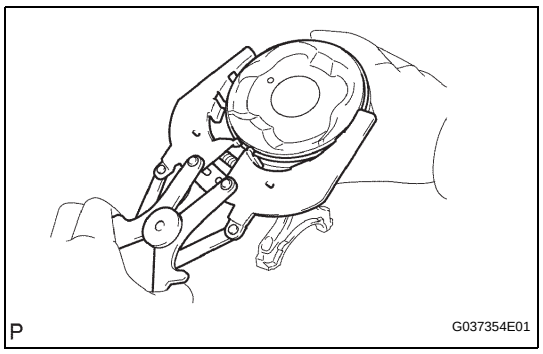

52. REMOVE PISTON RING SET

(a) Using a piston ring expander, remove the 2 compression rings.

(b) Using a piston ring expander, remove the oil ring rail.

(c) Remove the oil ring expander by hand.
HINT:
Arrange the piston rings in the correct order.

EM

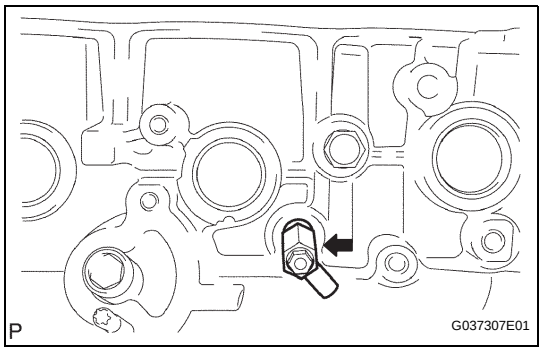

53. REMOVE CYLINDER BLOCK WATER DRAIN COCK SUB-ASSEMBLY

(a) Remove the water drain cock sub-assembly from the cylinder block.

(b) Remove the water drain cock plug from the water drain cock sub-assembly.

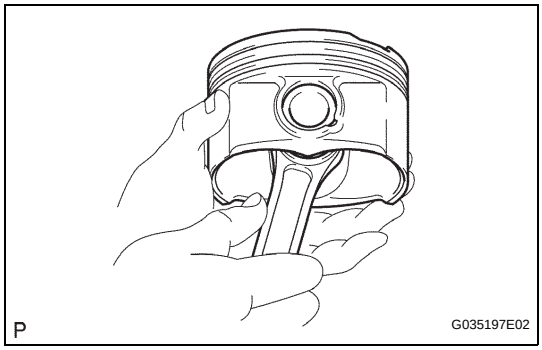

54. REMOVE WITH PIN PISTON SUB-ASSEMBLY

(a) Check the fitting condition between the piston and piston pin.

(1) Try to move the piston back and forth on the piston pin.
If any movement is felt, replace the piston and pin as a set.

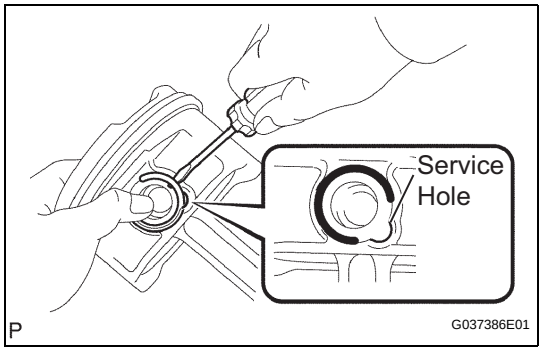

(b) Disconnect the connecting rod from the piston.

(1) Using a screwdriver, pry off the snap rings from the piston.

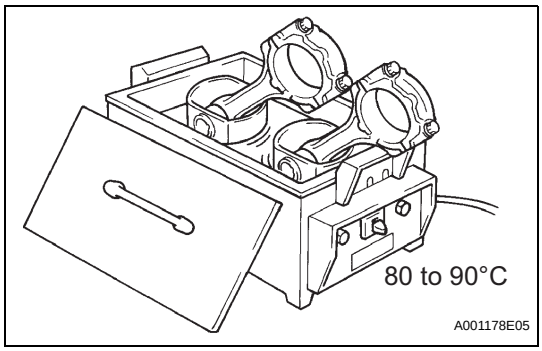

(2) Gradually heat the piston to approximately 80 to 90°C (176 to 194°F).

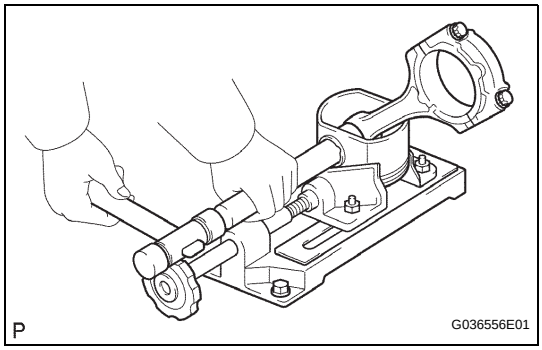

(3) Using a brass bar and plastic-faced hammer, lightly tap out the piston pin and remove the connecting rod.
HINT:
- The piston and pin are a matched set.
- Arrange the pistons, pins, rings, connecting rods and bearings in the correct order.

EM

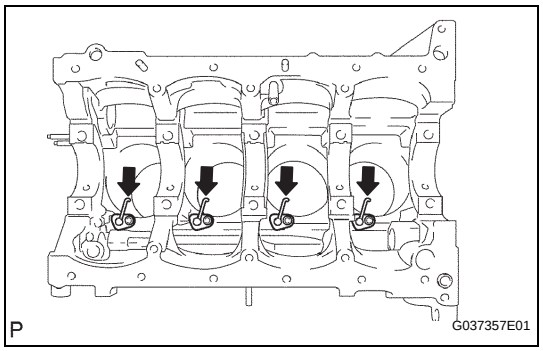

55. REMOVE NO. 1 OIL NOZZLE SUB-ASSEMBLY

(a) Using a 5 mm hexagon wrench, remove the oil nozzles.

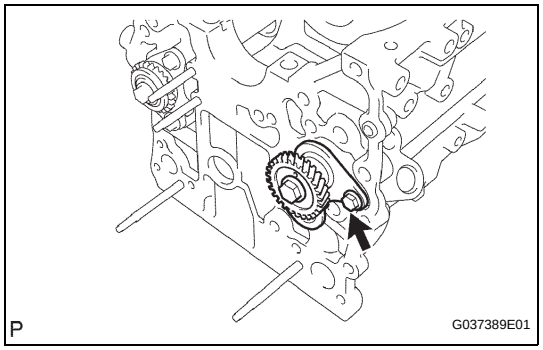

56. REMOVE NO.1 BALANCESHAFT

(a) Remove the bolt.

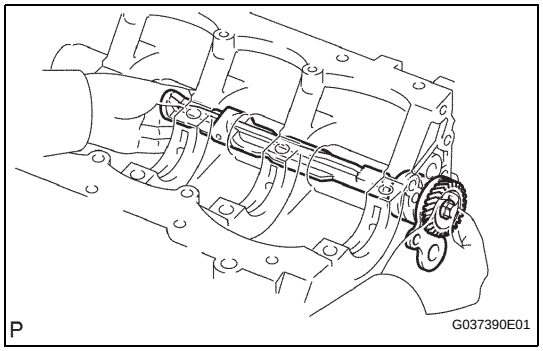

(b) Remove the balanceshaft from the cylinder block.
NOTICE:
When removing the balanceshaft, make sure to support the balanceshaft with both hands and avoid scratching the balanceshaft bearing on the cylinder block side.

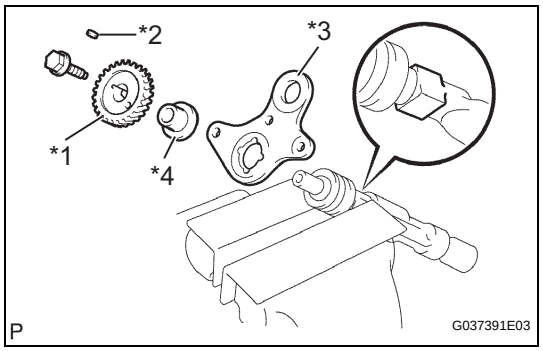

57. REMOVE NO. 1 BALANCESHAFT DRIVEN GEAR

(a) Mount the head portion of the balanceshaft in a vise.
NOTICE:
Be careful not to damage the balanceshaft.

(b) Remove the bolt.

(c) Remove the balanceshaft driven gear No.1 (*1), sliding key (*2), balanceshaft thrust washer No.1 (*3) and balanceshaft thrust spacer (*4).

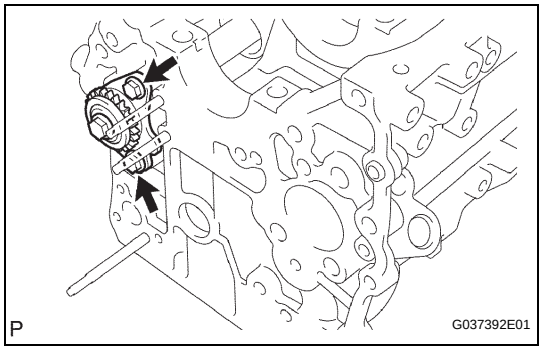

58. REMOVE NO.2 BALANCESHAFT

(a) Remove the 2 bolts.

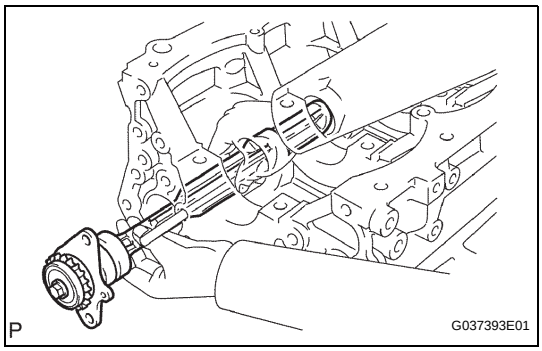

(b) Remove the balanceshaft from the cylinder block.
NOTICE:
When removing the balanceshaft, make sure to support the balanceshaft with both hands and avoid scratching the balanceshaft bearing on the cylinder block side.

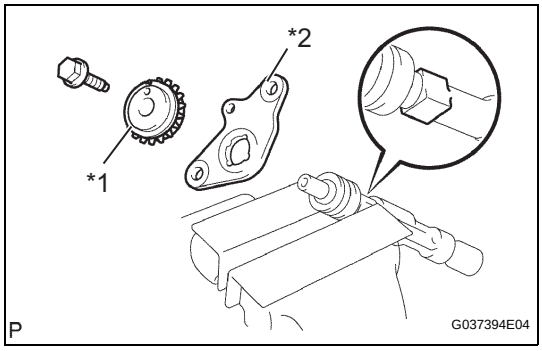

59. REMOVE NO. 2 BALANCESHAFT DRIVEN GEAR

(a) Mount the head portion of the balanceshaft in a vise.
NOTICE:
Be careful not to damage the balanceshaft.
(b) Remove the bolt.
(c) Remove the balanceshaft driven gear No.2 (*1) and balanceshaft thrust washer No.2 (*2).

INSPECTION

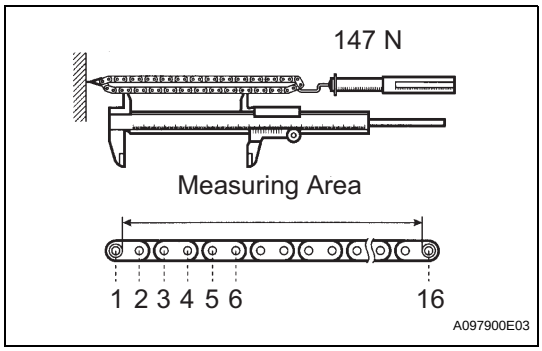

1. INSPECT CHAIN SUB-ASSEMBLY

(a) Pull the chain with a force of 147 N (15 kgf, 33 lbf) as shown in the illustration.
(b) Using vernier calipers, measure the length of 16 links.
Maximum chain elongation:
147.5 mm (5.807 in.)
If the elongation is greater than the maximum, replace the chain.
NOTICE:
Perform the same measurement by pulling at random in 3 or more places to obtain an average.

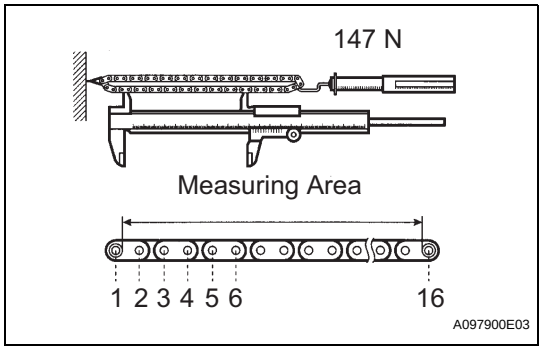

2. INSPECT NO.2 CHAIN SUB-ASSEMBLY

(a) Pull the chain with a force of 147 N (15 kgf, 33 lbf) as shown in the illustration.
(b) Using vernier calipers, measure the length of 16 links.
Maximum chain elongation:
123.6 mm (4.866 in.)
If the elongation is greater than the maximum, replace the chain.
NOTICE:
Perform the same measurement by pulling at random in 3 or more places to obtain an average.

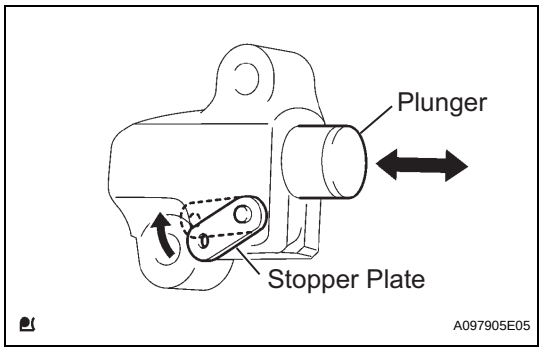

3. INSPECT NO. 1 CHAIN TENSIONER ASSEMBLY

(a) Move the stopper plate upward to release the lock. Push the plunger and check that it moves smoothly.

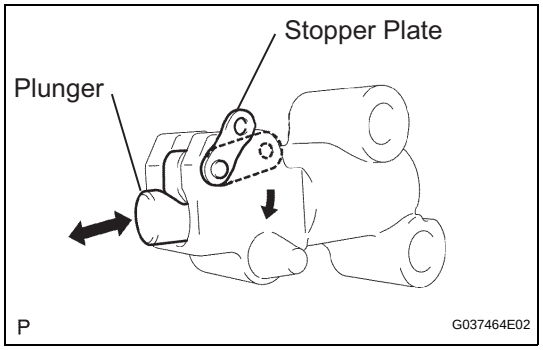

4. INSPECT NO. 2 CHAIN TENSIONER ASSEMBLY

(a) Move the stopper plate downward to release the lock. Push the plunger and check that it moves smoothly.

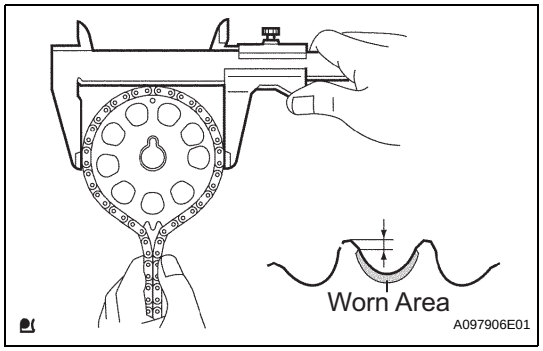

5. INSPECT CAMSHAFT TIMING GEAR OR SPROCKET

(a) Measure the distance between the most worn out sprocket tip and the beginning of the worn area below the tip.

Minimum distance:
1.0 mm (0.039 in.)

If the distance is less than the minimum, replace the sprocket.

HINT:
If the worn area is too small or difficult to distinguish from a normal area, perform steps (b) and (c) below.

(b) Wrap the chain around the sprocket.

(c) Using vernier calipers, measure the sprocket diameter with the chain.

Minimum sprocket diameter (with chain):
113.8 mm (4.480 in.)

HINT:
- The vernier calipers must contact the chain rollers for the measurement.
- If the diameter is less than the minimum, replace the chain and sprocket.

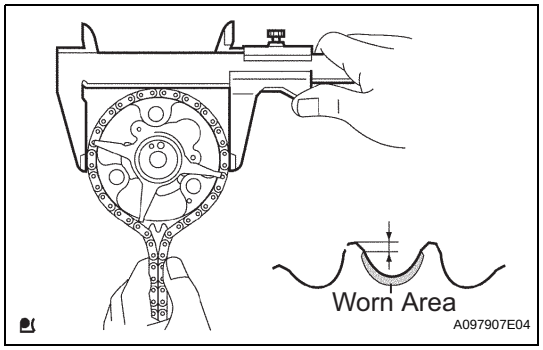

6. INSPECT CAMSHAFT TIMING GEAR ASSEMBLY

(a) Measure the distance between the most worn out timing gear tip and the beginning of the worn area below the tip.

Minimum distance:
1.0 mm (0.039 in.)

If the distance is less than the minimum, replace the timing gear.

HINT:
If the worn area is too small or difficult to distinguish from a normal area, perform steps (b) and (c) below.

(b) Wrap the chain around the timing gear.
(c) Using vernier calipers, measure the sprocket diameter with the chain.
Minimum sprocket diameter (with chain):
113.8 mm (4.480 in.)
HINT:
- The vernier calipers must contact the chain rollers for the measurement.
- If the diameter is less than the minimum, replace the chain and timing gear.

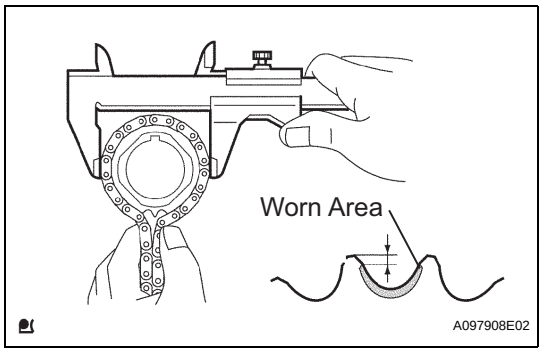

7. INSPECT CRANKSHAFT TIMING GEAR OR SPROCKET
(a) Measure the distance between the most worn out sprocket tip and the beginning of the worn area below the tip.
Minimum distance:
1.0 mm (0.039 in.)
If the distance is less than the minimum, replace the sprocket.
HINT:
If the worn area is too small or difficult to distinguish from a normal area, perform steps (b) and (c) below.
(b) Wrap the chain around the drive sprocket.
(c) Using vernier calipers, measure the sprocket diameter with the chain.
Minimum sprocket diameter (with chain):
59.4 mm (2.338 in.)
HINT:
- The vernier calipers must contact the chain rollers for the measurement.
- If the diameter is less than the minimum, replace the chain and sprocket.

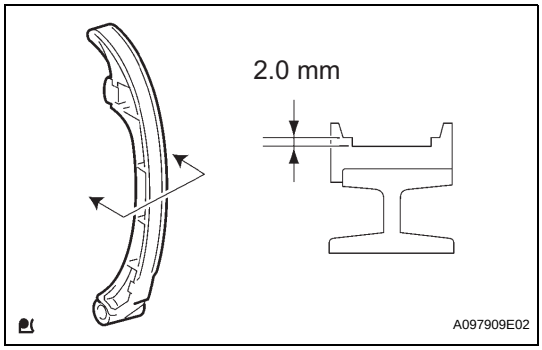

8. INSPECT CHAIN TENSIONER SLIPPER
(a) Using vernier calipers, measure the tensioner slipper wear.
Maximum wear:
2.0 mm (0.079 in.)
If the wear is greater than the maximum, replace the tensioner slipper.

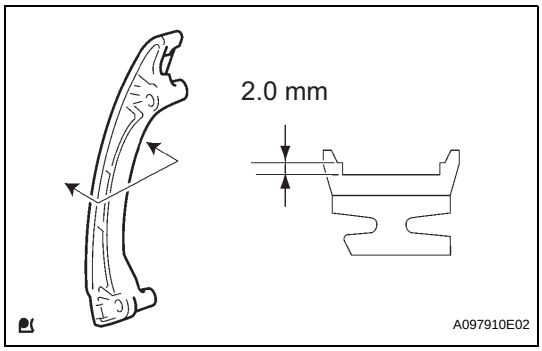

9. INSPECT NO. 1 CHAIN VIBRATION DAMPER
(a) Using vernier calipers, measure the vibration damper wear.
Maximum wear:
2.0 mm (0.079 in.)
If the wear is greater than the maximum, replace the vibration damper.

EM

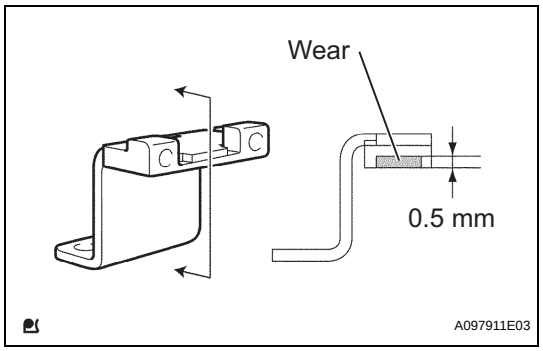

10. INSPECT TIMING CHAIN GUIDE

(a) Using vernier calipers, measure the chain guide wear.

Maximum wear:
0.5 mm (0.020 in.)

If the wear is greater than the maximum, replace the timing chain guide.

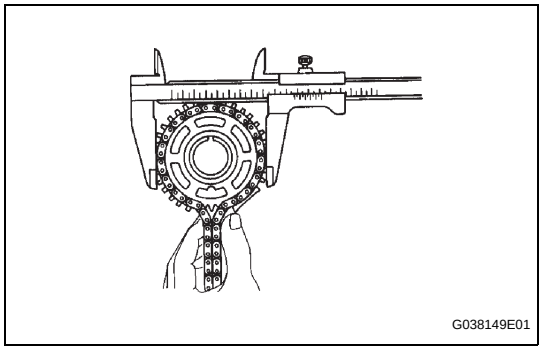

11. INSPECT NO. 2 CRANKSHAFT TIMING SPROCKET

(a) Wrap the chain around the sprocket.

(b) Using vernier calipers, measure the sprocket diameter with the chain.

Minimum sprocket diameter (with chain):
96.7 mm (3.807 in.)

HINT:
The vernier calipers must contact the chain rollers for the measurement.

If the diameter is less than the minimum, replace the chain and sprocket.

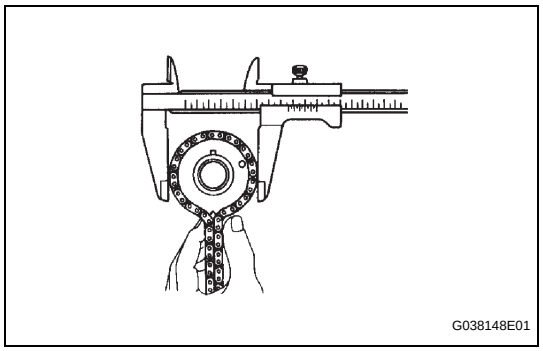

12. INSPECT BALANCESHAFT DRIVE GEAR SUB-ASSEMBLY

(a) Wrap the chain around the sprocket.

(b) Using vernier calipers, measure the sprocket diameter with the chain.

Minimum sprocket diameter (with chain):
75.9 mm (2.988 in.)

HINT:
The vernier calipers must contact the chain rollers for the measurement.

If the diameter is less than the minimum, replace the chain and sprocket.

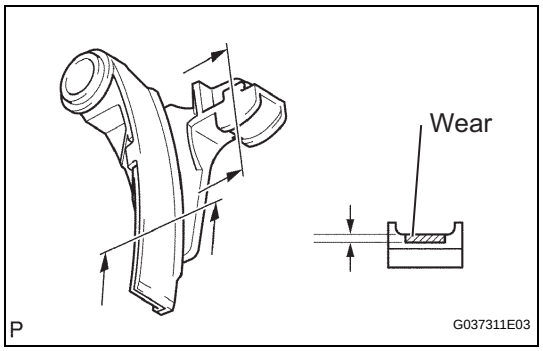

13. INSPECT NO. 2 CHAIN VIBRATION DAMPER

(a) Using vernier calipers, measure the vibration damper No.2 wear.

Maximum wear:
1.0 mm (0.039 in.)

If the wear is greater than the maximum, replace the vibration damper.

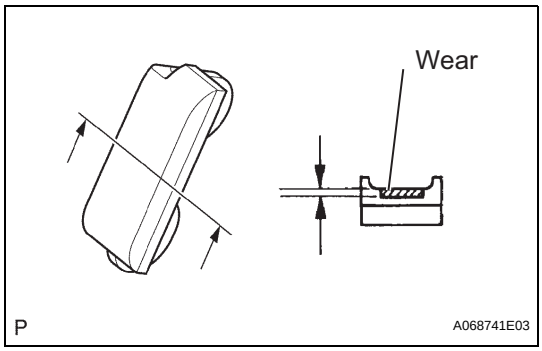

14. INSPECT NO. 3 CHAIN VIBRATION DAMPER

(a) Using vernier calipers, measure the vibration damper No.3 wear.
Maximum wear:
1.0 mm (0.039 in.)
If the wear is greater than the maximum, replace the vibration damper.

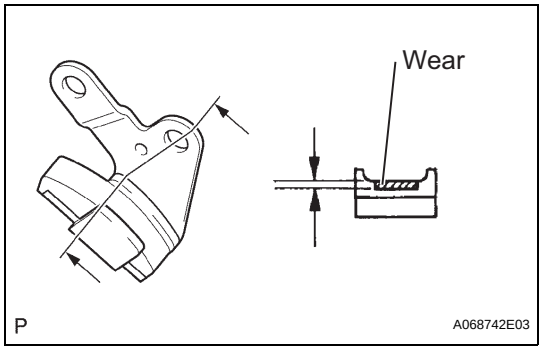

15. INSPECT NO. 4 CHAIN VIBRATION DAMPER

(a) Using vernier calipers, measure the vibration damper No.4 wear.
Maximum wear:
1.0 mm (0.039 in.)
If the wear is greater than the maximum, replace the vibration damper.

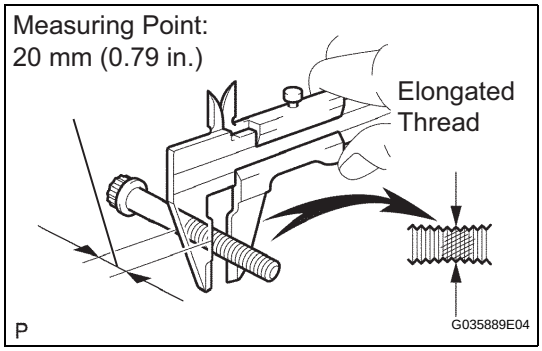

16. INSPECT CYLINDER HEAD SET BOLT

(a) Using vernier calipers, measure the minimum diameter of the elongated thread at the measuring point.
Standard outside diameter:
10.76 to 10.97 mm (0.4236 to 0.4319 in.)
Minimum outside diameter:
10.40 mm (0.4094 in.)
HINT:
- If a visual check reveals no excessively thin areas, check the center of the bolt (see illustration) and find the area that has the lowest diameter.
- If the diameter is less than the minimum, replace the cylinder head bolt.

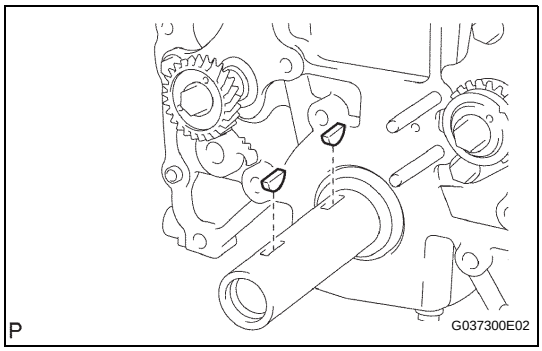

17. INSTALL CRANKSHAFT PULLEY SET CRANKSHAFT KEY

(a) Install the 2 pulley keys to the crankshaft.

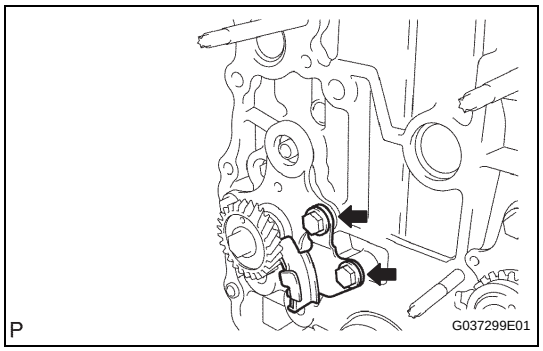

18. INSTALL NO. 4 CHAIN VIBRATION DAMPER

(a) Install the vibration damper No.4 with the 2 bolts.
Torque: 18 N*m (185 kgf*cm, 13 ft.*lbf)

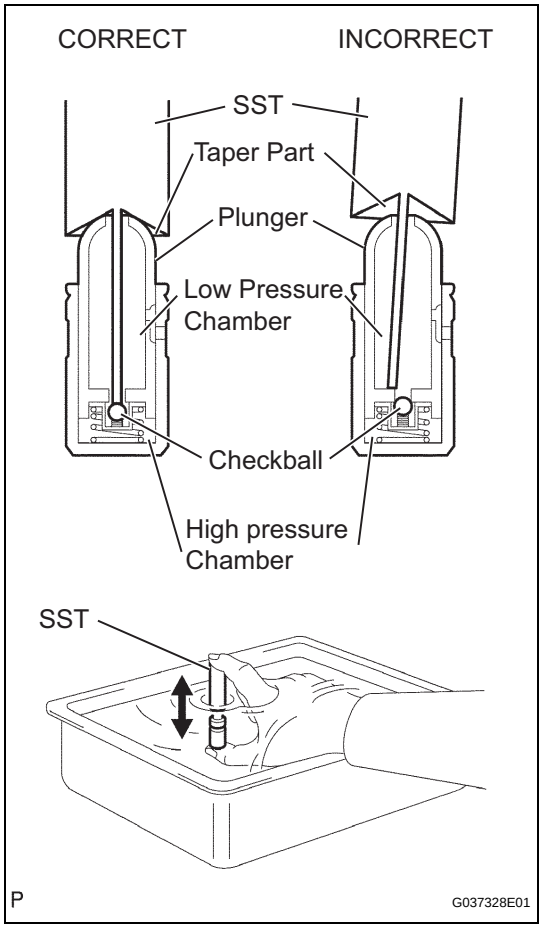

19. INSPECT VALVE LASH ADJUSTER ASSEMBLY

NOTICE:

- **Keep the lash adjuster free from dirt and foreign objects.**
- **Only use clean engine oil.**

(a) Place the lash adjuster into a container full of engine oil.

(b) Insert SST's tip into the lash adjuster's plunger and use the tip to press down on the checkball inside the plunger.
SST 09276-75010

(c) Squeeze the SST and lash adjuster together to move the plunger up and down 5 to 6 times.

(d) Check the movement of the plunger and bleed the air.
OK:
Plunger moves up and down.
NOTICE:
When bleeding high-pressure air from the compression chamber, make sure that the tip of the SST is actually pressing the checkball as shown in the illustration. If the checkball is not pressed, air will not bleed.

(e) After bleeding the air, remove the SST. Then quickly and firmly press the plunger with a finger.
OK:
Plunger is very difficult to move.
If the result is not as specified, replace the lash adjuster.

EM

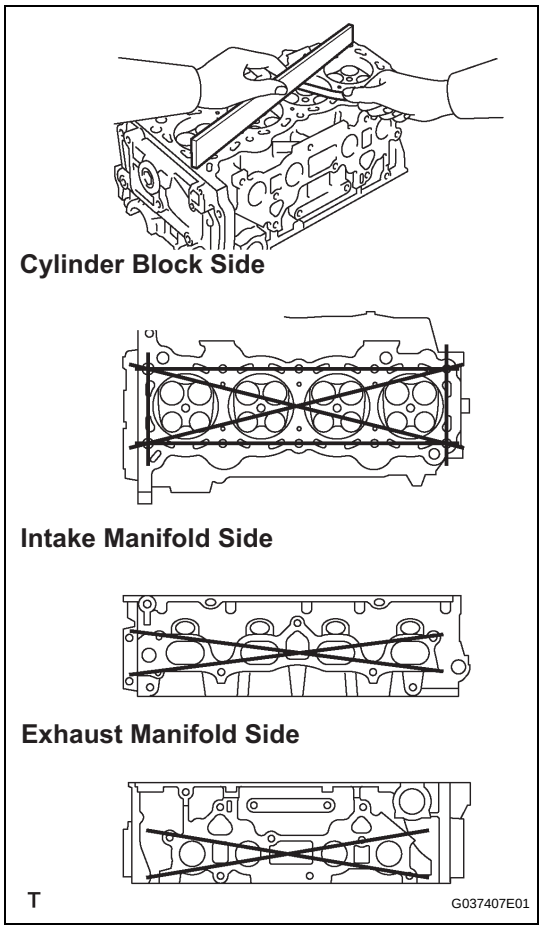

20. INSPECT CYLINDER HEAD FOR FLATNESS

(a) Using a precision straight edge and feeler gauge, measure the warpage of the contact surface of contacting the cylinder block and manifolds.
Maximum warpage:
0.05 mm (0.0020 in.)
If the warpage is greater than the maximum, replace the cylinder head.

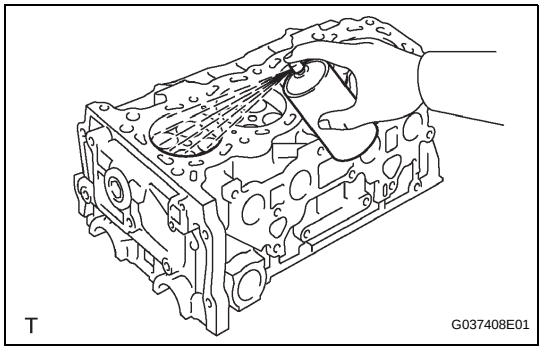

21. INSPECT CYLINDER HEAD FOR CRACKS

(a) Using a dye penetrate, check the intake ports, exhaust ports and cylinder surface for cracks.
If cracked, replace the cylinder head.

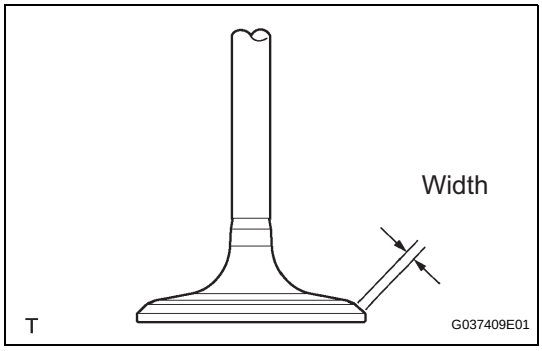

22. INSPECT INTAKE VALVE SEAT

(a) Apply a light coat of prussian blue (or white lead) to the valve face.
(b) Lightly press the valve face against the valve seat.
(c) Check the valve face and valve seat by using the following procedure.
  (1) If prussian blue appears around the entire valve face, the valve face is concentric. If not, replace the valve.
  (2) If prussian blue appears around the entire valve seat, the guide and valve face are concentric. If not, resurface the valve seat.
  (3) Check that the valve seat contacts in the middle of the valve face with the width between 1.0 and 1.4 mm (0.039 and 0.055 in.).

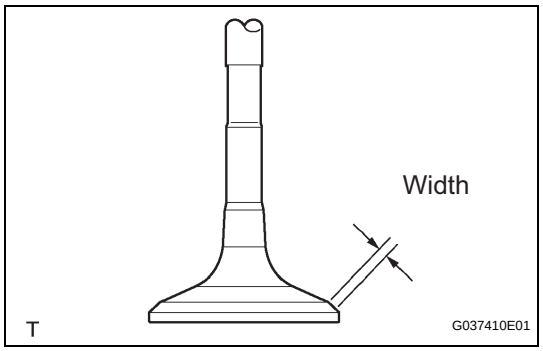

23. INSPECT EXHAUST VALVE SEAT

(a) Apply a light coat of prussian blue (or white lead) to the valve face.

(b) Lightly press the valve face against the valve seat.

(c) Check the valve face and valve seat by using to the following procedure.

(1) If prussian blue appears around the entire valve face, the valve face is concentric. If not, replace the valve.

(2) If prussian blue appears around the entire valve seat, the guide and valve face are concentric. If not, resurface the valve seat.

(3) Check that the valve seat contacts in the middle of the valve face with the width between 1.0 and 1.4 mm (0.039 and 0.055 in.).

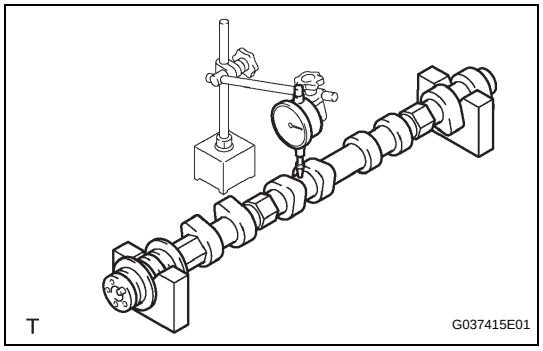

24. INSPECT CAMSHAFT

(a) Check the camshaft for runout.

(1) Place the camshaft on V-blocks.

(2) Using a dial indicator, measure the circle runout at the center journal.

Maximum circle runout:
0.03 mm (0.0012 in.)

If the circle runout is greater than the maximum, replace the camshaft.

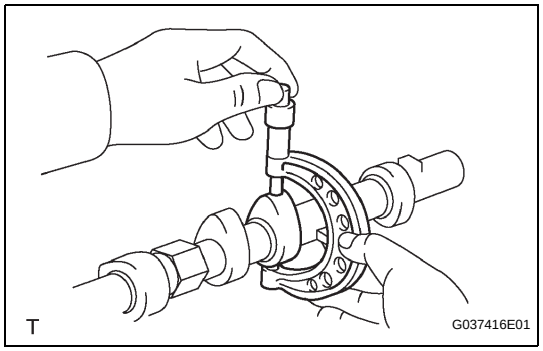

(b) Using a micrometer, measure the cam lobe height.

Standard cam lobe height:
42.855 to 42.955 mm (1.6872 to1.6911 in.)
Minimum cam lobe height:
42.855 mm (1.6872 in.)

If the cam lobe height is less than the minimum, replace the camshaft.

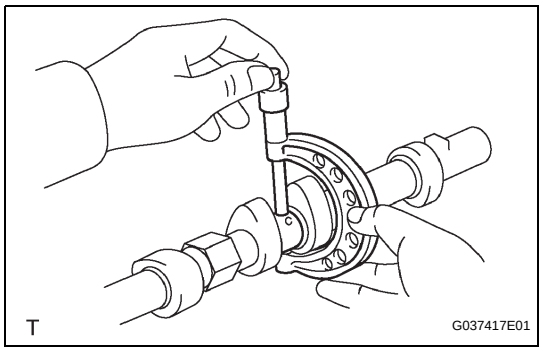

(c) Using a micrometer, measure the journal diameter.

Standard journal diameter

No.1 journal	**35.949 to 35.965 mm (1.4153 to 1.4159 in.)**
Other journal	**26.959 to 26.975 mm (1.0614 to 1.0620 in.)**

If the journal diameter is not as specified, check the oil clearance.

EM

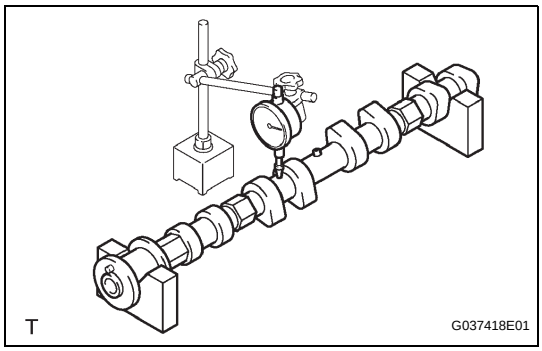

25. INSPECT NO.2 CAMSHAFT

(a) Check the camshaft for runout.

(1) Place the camshaft on V-blocks.

(2) Using a dial indicator, measure the circle runout at the center journal.

Maximum circle runout:
0.03 mm (0.0012 in.)

If the circle runout is greater than the maximum, replace the camshaft.

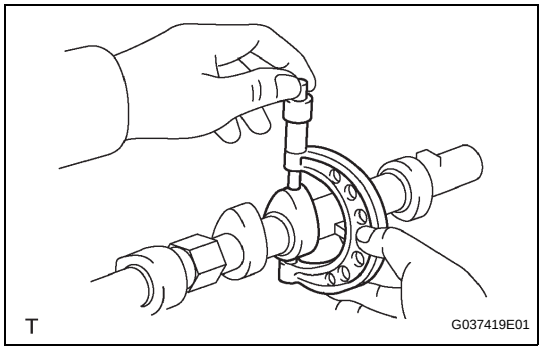

(b) Using a micrometer, measure the cam lobe height.

Standard cam lobe height:
42.854 to 42.954 mm (1.687 to 1.6911 in.)
Minimum cam lobe height:
42.854 mm (1.6872 in.)

If the cam lobe height is less than the minimum, replace the camshaft.

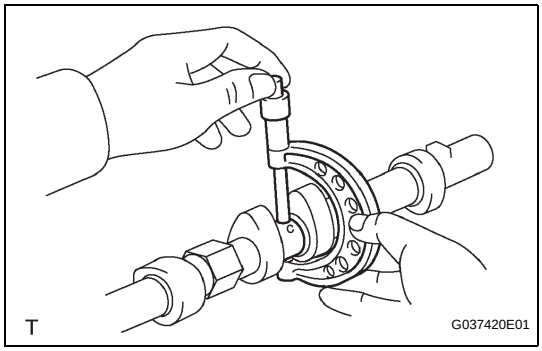

(c) Using a micrometer, measure the journal diameter.

Standard journal diameter

No.1 journal	**35.949 to 35.965 mm (1.4153 to 1.4159 in.)**
Other journal	**26.959 to 26.975 mm (1.0614 to 1.0620 in.)**

If the journal diameter is not as specified, check the oil clearance.

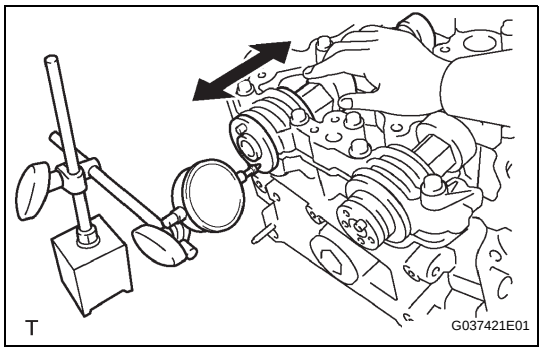

26. INSPECT CAMSHAFT THRUST CLEARANCE

(a) Install the camshafts.

(b) Using a dial indicator, measure the thrust clearance while moving the camshaft back and forth.

Standard thrust clearance:
0.10 to 0.24 mm (0.004 to 0.009 in.)
Maximum thrust clearance:
0.26 mm (0.010 in.)

If the thrust clearance is greater than the maximum, replace the cylinder head. If the thrust surface is damaged, replace the camshaft.

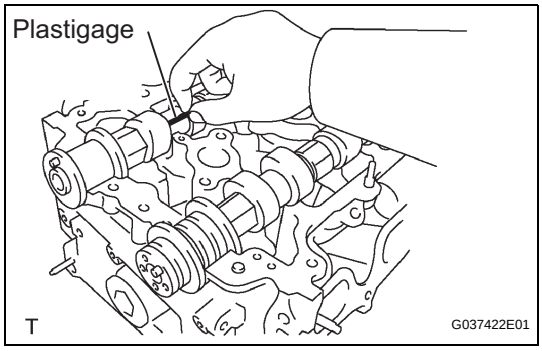

27. INSPECT CAMSHAFT OIL CLEARANCE

(a) Clean the bearing caps and camshaft journals.

(b) Place the camshafts on the cylinder head.

(c) Lay a strip of Plastigage across each of the camshaft journals.

(d) Install the bearing caps.

Torque: 16 N*m (160 kgf*cm, 11 ft.*lbf)
NOTICE:
Do not turn the camshaft.

(e) Remove the bearing caps.

EM

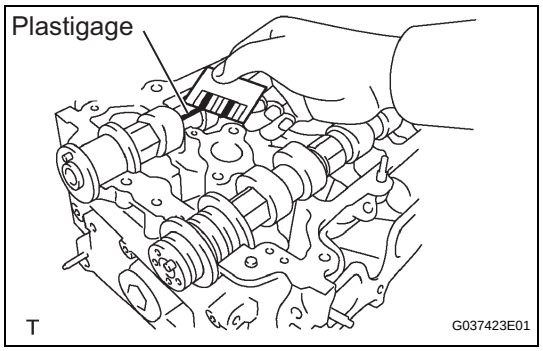

(f) Measure the Plastigage at its widest point.
Standard oil clearance

No.1 journal	**0.035 to 0.072 mm (0.0014 to 0.0029 in.)**
Other journal	**0.025 to 0.062 mm (0.00098 to 0.0024 in.)**

Maximum oil clearance:
0.08 mm (0.003 in.)
If the oil clearance is greater than the maximum, replace the camshaft. If necessary, replace the cylinder head.

(g) Completely remove the Plastigage.

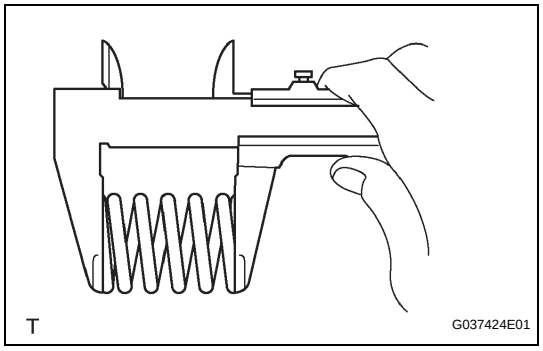

28. INSPECT INNER COMPRESSION SPRING

(a) Using vernier calipers, measure the free length of the inner compression spring.
Free length:
48.53 mm (1.9106 in.)
If the free length is not as specified, replace the spring.

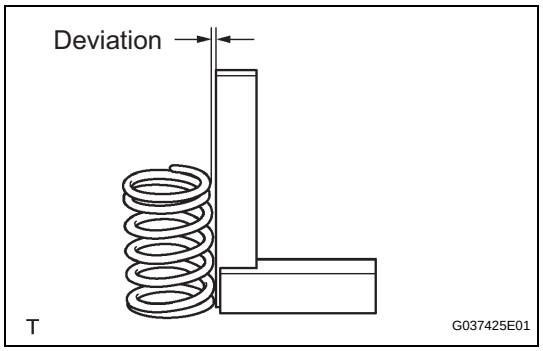

(b) Using a steel square, measure the deviation of the inner compression spring.
Maximum deviation:
1.5 mm (0.059 in.)
Maximum angle (reference):
2°
If the deviation is greater than the maximum, replace the spring.

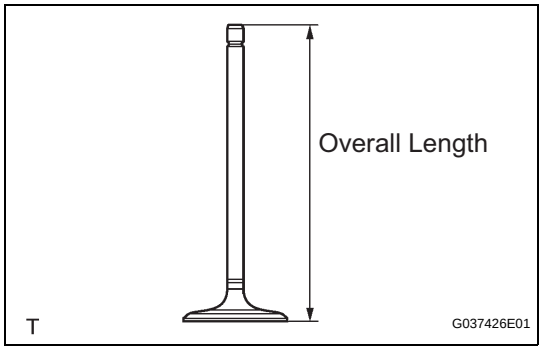

29. INSPECT INTAKE VALVE

(a) Using vernier calipers, measure the valve's overall length.
Standard overall length:
106.26 mm (4.1835 in.)
Minimum overall length:
105.96 mm (4.1716 in.)
If the overall length is less than the minimum, replace the valve.

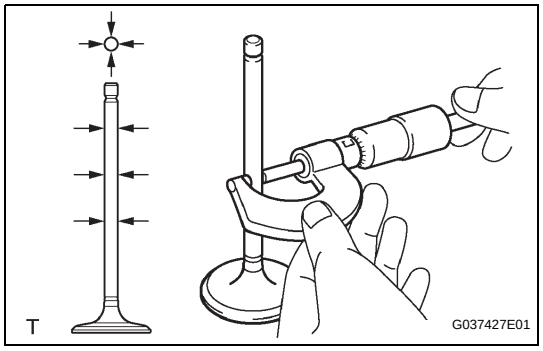

(b) Using a micrometer, measure the diameter of the valve stem.
Valve stem diameter:
5.470 to 5.485 mm (0.2154 to 0.2159 in.)

EM

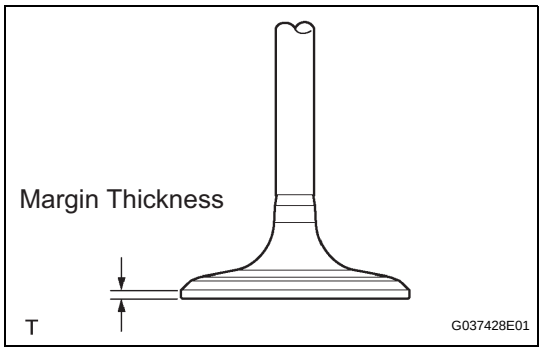

(c) Using vernier calipers, measure the valve head margin thickness.
Standard margin thickness:
1.05 to 1.45 mm (0.0413 to 0.0571 in.)
Minimum margin thickness:
0.50 mm (0.0197 in.)
Thickness If the margin thickness is less than the minimum, replace the valve.

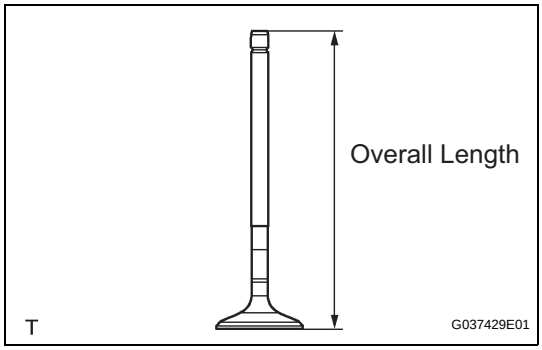

30. INSPECT EXHAUST VALVE

(a) Using vernier calipers, measure the valve's overall length.
Standard overall length:
106.74 mm (4.2024 in.)
Minimum overall length:
106.44 mm (4.1905 in.)
If the overall length is less than the minimum, replace the valve.

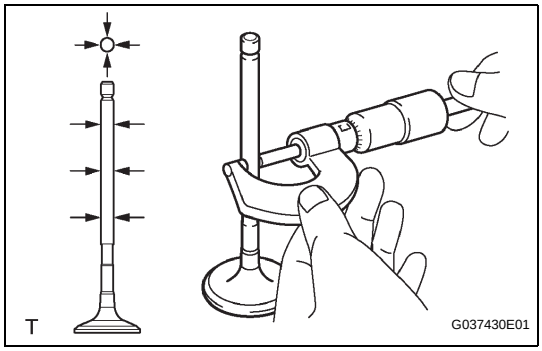

(b) Using a micrometer, measure the diameter of the valve stem.
Valve stem diameter:
5.465 to 5.480 mm (0.2151 to 0.2157 in.)

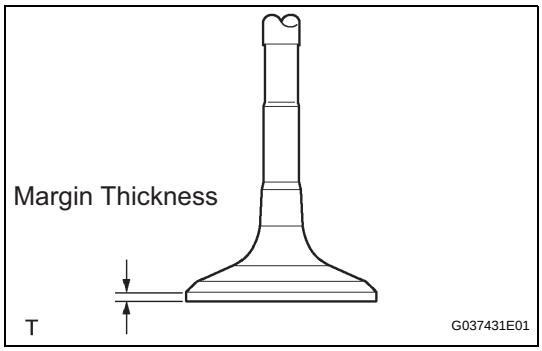

(c) Using vernier calipers, measure the valve head margin thickness.
Standard margin thickness:
1.2 to 1.6 mm (0.0472 to 0.0630 in.)
Minimum margin thickness:
0.50 mm (0.0197 in.)
If the margin thickness is less than the minimum, replace the valve.

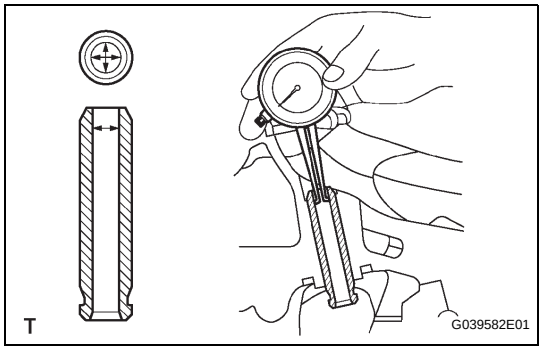

31. INSPECT VALVE GUIDE BUSHING

(a) Using a caliper gauge, measure the inside diameter of the guide bush.
Bush inside diameter:
5.510 to 5.530 mm (0.2169 to 0.2177 in.)

(b) Subtract the valve stem diameter measurement from the guide bush inside diameter measurement.
Standard oil clearance:
0.025 to 0.060 mm (0.0010 to 0.0024 in.) (Intake)
0.030 to 0.065 mm (0.0012 to 0.0026 in.) (Exhaust)

EM

Maximum oil clearance:
0.08 mm (0.0032 in.) (Intake)
0.10 mm (0.0039 in.) (Exhaust)

HINT:
- If the clearance is greater than the maximum, replace the intake valve and intake guide bush.
- If the clearance is greater than the maximum, replace the exhaust valve and exhaust guide bush.

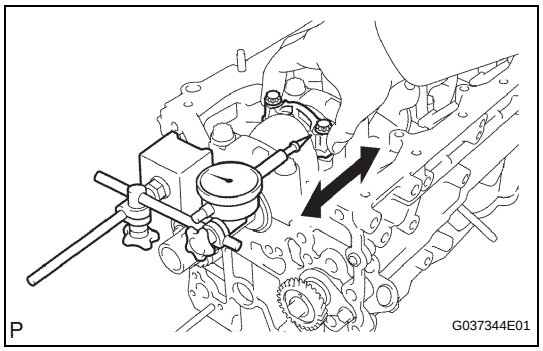

32. INSPECT CONNECTING ROD THRUST CLEARANCE

(a) Using a dial indicator, measure the thrust clearance while moving the connecting rod back and forth.
Standard thrust clearance:
0.150 to 0.350 mm (0.0059 to 0.0138 in.)
Maximum thrust clearance:
0.40 mm (0.016 in.)
If the thrust clearance is greater than the maximum, replace the connecting rod assembly(s). If necessary, replace the crankshaft.

EM

33. INSPECT CONNECTING ROD OIL CLEARANCE

(a) Check that the matchmarks on the connecting rod and cap are aligned to ensure the correct reassembly.
HINT:
The matchmarks on the connecting rods and caps are for ensuring the correct reassembly.

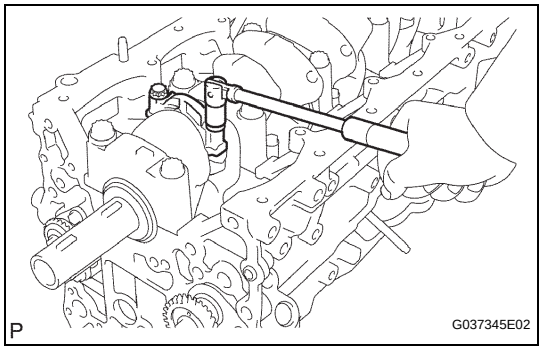

(b) Remove the 2 connecting rod cap bolts.
(c) Using the 2 removed connecting rod cap bolts, remove the connecting rod cap and lower bearing by wiggling the connecting rod cap right and left.
HINT:
Keep the lower bearing inserted to the connecting rod cap.
(d) Clean the crank pin and bearing.
(e) Check the crank pin and bearing for pitting and scratches.

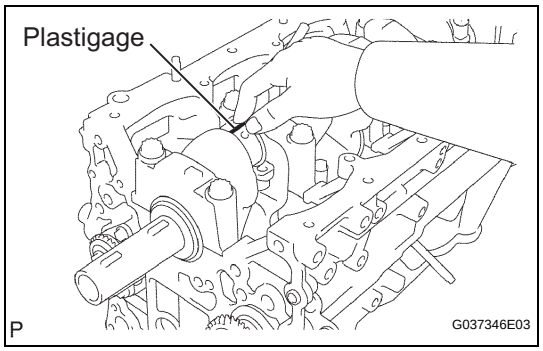

(f) Lay a strip of Plastigage on the crank pin.

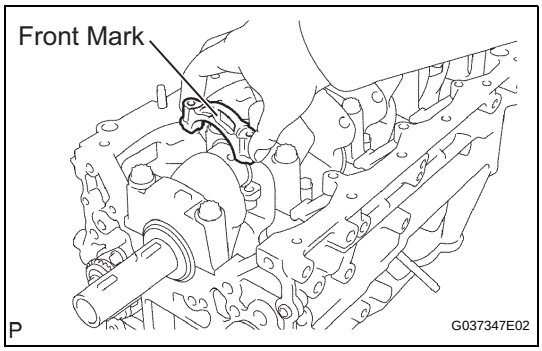

(g) Check that the front mark of the connecting rod cap is facing forward.

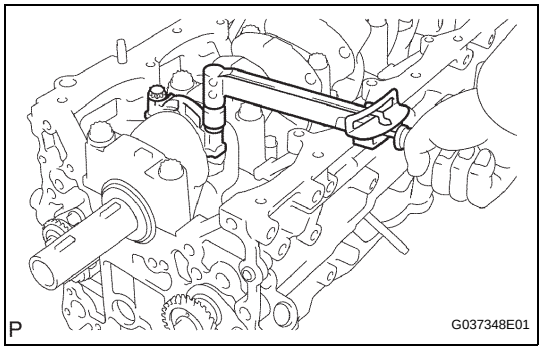

(h) Install the connecting rod cap.
NOTICE:
Do not turn the crankshaft.

(i) Remove the 2 bolts and connecting rod cap (see steps (b) and (c) above).

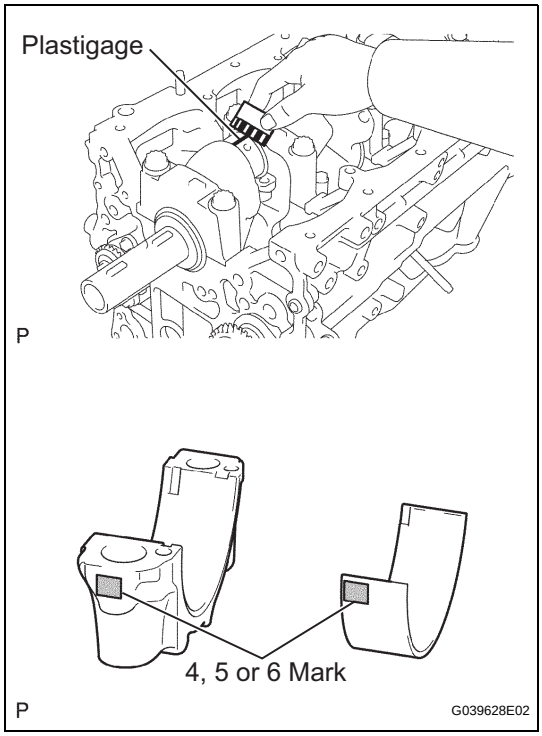

(j) Measure the Plastigage at its widest point.
Standard oil clearance:
0.024 to 0.049 mm (0.0009 to 0.0019 in.)
Maximum oil clearance:
0.066 mm (0.0026 in.)
If the oil clearance is greater than the maximum, replace the connecting rod bearings. If necessary, replace the crankshaft.
HINT:
If replacing a bearing, replace it with one that has the same number as its respective connecting rod cap. Each bearing's standard thickness is indicated by a 1, 2 and 3 mark on its surface.
Reference
Crankshaft pin diameter

Mark	Thickness
4	52.989 to 53.002 mm (2.0862 to 2.0867 in.)
5	52.989 to 53.002 mm (2.0862 to 2.0867 in.)
6	52.989 to 53.002 mm (2.0862 to 2.0867 in.)

Standard bearing center wall thickness

Mark	Thickness
4	1.484 to 1.487 mm (0.0584 to 0.0585 in.)
5	1.488 to 1.490 mm (0.0586 to 0.0587 in.)
6	1.491 to 1.493 mm (0.0587 to 0.0588 in.)

(k) Completely remove the Plastigage.

EM

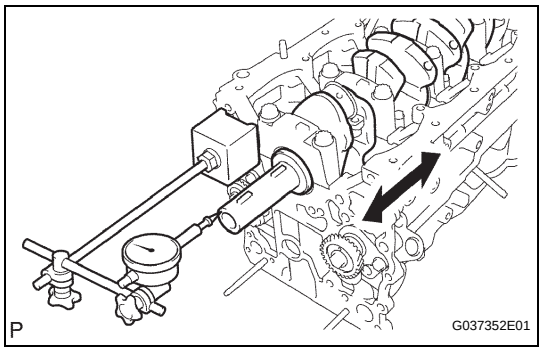

34. INSPECT CRANKSHAFT THRUST CLEARANCE

(a) Using a dial indicator, measure the thrust clearance while prying the crankshaft back and forth with a screwdriver.

Standard thrust clearance:
0.020 to 0.220 mm (0.0008 to 0.0087 in.)
Maximum thrust clearance:
0.30 mm (0.0118 in.)

If the thrust clearance is greater than the maximum, replace the thrust washers as a set. If necessary, replace the crankshaft.

Thrust washer thickness:
2.440 to 2.490 mm (0.0961 to 0.0980 in.)

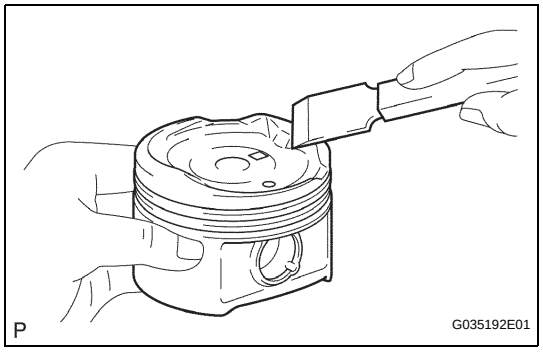

35. CLEAN WITH PIN PISTON SUB-ASSEMBLY

(a) Using a gasket scraper, remove the carbon from the piston top.

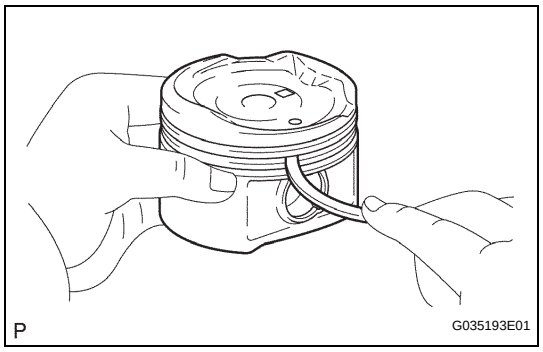

(b) Using a groove cleaning tool or broken ring, clean the piston ring grooves.

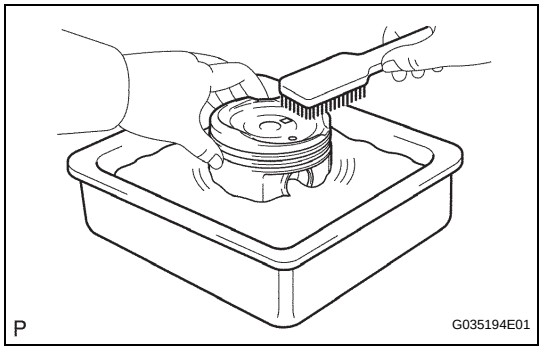

(c) Using solvent and a brush, thoroughly clean the piston.

NOTICE:
Do not use a wire brush.

36. INSPECT NO. 1 OIL NOZZLE SUB-ASSEMBLY

(a) Check the oil nozzles for damage or clogging.
If necessary, replace the oil nozzle.

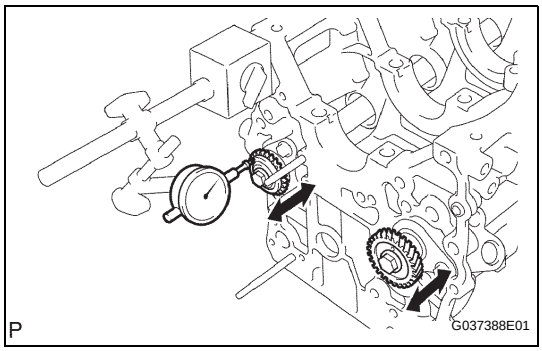

37. INSPECT BALANCE SHAFT THRUST CLEARANCE

(a) Using a dial indicator, measure the thrust clearance while moving the balanceshaft back and forth.
Standard thrust clearance:
0.07 to 0.13 mm (0.0027 to 0.0051 in.)
Maximum thrust clearance:
0.20 mm (0.0079 in.)
If the thrust clearance is greater than the maximum, replace the balanceshaft thrust washer. If necessary, replace the balanceshaft.

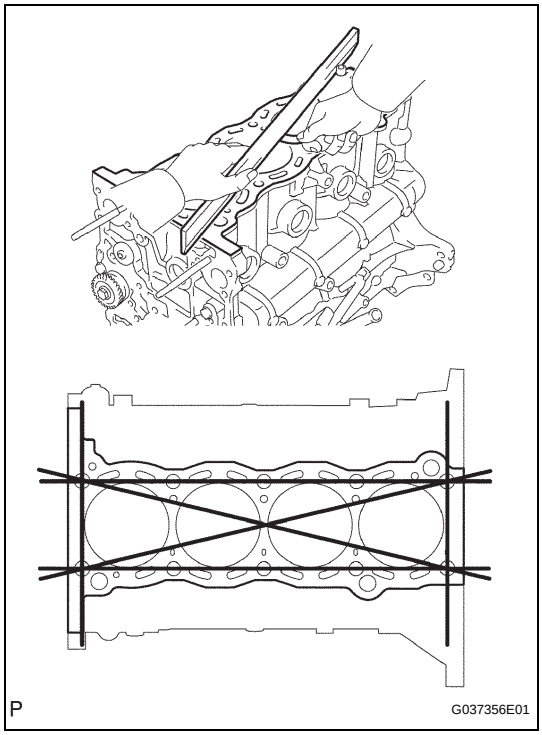

38. INSPECT CYLINDER BLOCK FOR FLATNESS

(a) Using a precision straight edge and feeler gauge, measure the warpage of the contact surface of the cylinder head gasket.
Maximum warpage:
0.05 mm (0.0020 in.)
If the warpage is greater than the maximum, replace the cylinder block.

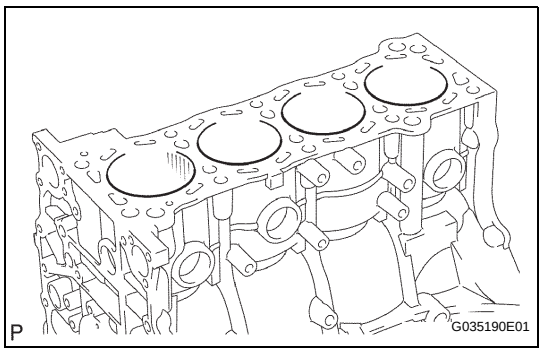

(b) Visually check the cylinder for vertical scratches. If deep scratches are present, rebore all the 4 cylinders. If necessary, replace the cylinder block.

EM

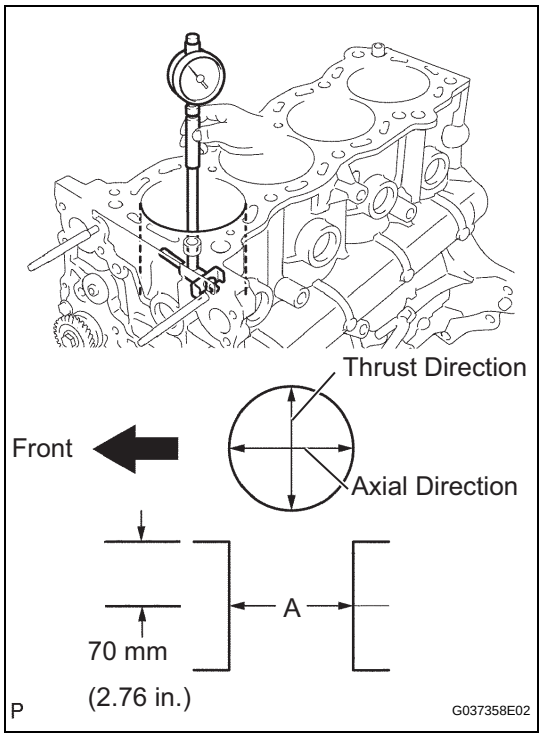

39. INSPECT CYLINDER BORE

(a) Using a cylinder gauge, measure the cylinder bore diameter at positions A in the thrust and axial directions.

Standard diameter:
94.990 to 95.003 mm (3.7398 to 3.7403 in.)
Maximum difference diameter:
0.2 mm (0.008 in.)

If the diameter is greater than the maximum, rebore all the 4 cylinders. If necessary, replace the cylinder block.

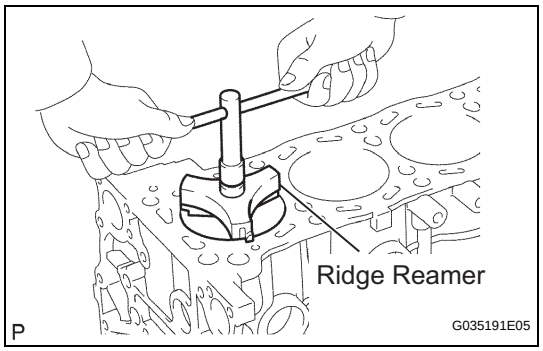

(b) Inspect the cylinder ridge.
If the wear is less than 0.2 mm (0.008 in.), using a ridge reamer, grind the top of the cylinder.

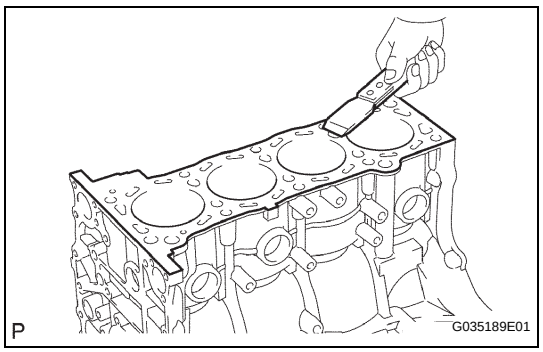

40. CLEAN CYLINDER BLOCK

(a) Using a gasket scraper, remove all the gasket material from the top surface of the cylinder block.

(b) Using a soft brush and solvent, thoroughly clean the cylinder block.

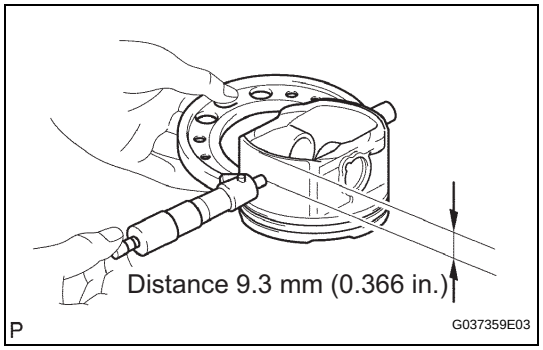

41. INSPECT PISTON DIAMETER

(a) Using a micrometer, measure the piston diameter at right angles to the piston center line, the indicated distance from the piston end.

Distance:
9.3 mm (0.366 in.)
Piston diameter:
94.941 to 94.971 mm (3.7378 to 3.7390 in.) (for standard)

EM

EM

42. INSPECT PISTON OIL CLEARANCE

(a) Measure the cylinder bore diameter in the thrust directions (see step 20).

(b) Subtract the piston diameter measurement from the cylinder bore diameter measurement.

Standard oil clearance:
0.019 to 0.052 mm (0.0007 to 0.0020 in.)

If the oil clearance is greater than the standard, replace all the pistons and rebore all the cylinders. If necessary, replace the cylinder block.

HINT:
- Bore all the cylinders for the O/S piston outside diameter.
- Replace all the piston rings with ones to match the O/S pistons.

(c) If the oil clearance is greater than the standard.

(1) Prepare 4 new O/S pistons.
O/S 0.50 piston diameter:
95.441 to 95.451 mm (3.7575 to 3.7579 in.)

(2) Using a micrometer, measure the piston diameter at right angles to the piston center line, the indicated distance from the piston end.
Distance:
9.3 mm (0.366 in.)

(3) Calculate the amount each cylinder is to be rebored as follows:
Size to be rebored = P + C -H

P	Piston diameter
C	Piston clearance: 0.019 to 0.052 mm (0.0007 to 0.0020 in.)
H	Allowance for honing: 0.02 mm (0.0008 in.) or less

(4) Bore and hone the cylinders to calculated dimensions.
Maximum honing:
0.02 mm (0.0008 in.)
NOTICE:
Excess honing will destroy the finished roundness.

43. INSPECT RING GROOVE CLEARANCE

(a) Using a feeler gauge, measure the clearance between a new piston ring and the wall of the ring groove.

Ring groove clearance

No.1	0.020 to 0.075 mm (0.0008 to 0.0030 in.)
No.2	0.020 to 0.065 mm (0.0008 to 0.0026 in.)
Oil	0.020 to 0.070 mm (0.0008 to 0.0028 in.)

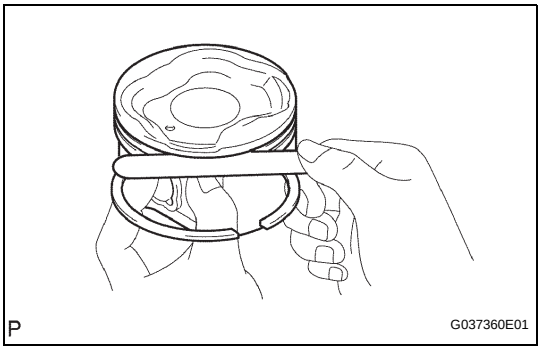

If the clearance is not as specified, replace the piston.

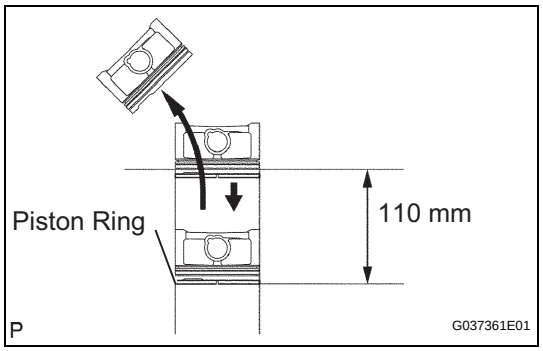

44. INSPECT PISTON RING END GAP

(a) Insert the piston ring into the cylinder bore.

(b) Using a piston, push the piston ring a little beyond the bottom of the ring travel, 110 mm (4.33 in.) from the top of the cylinder block.

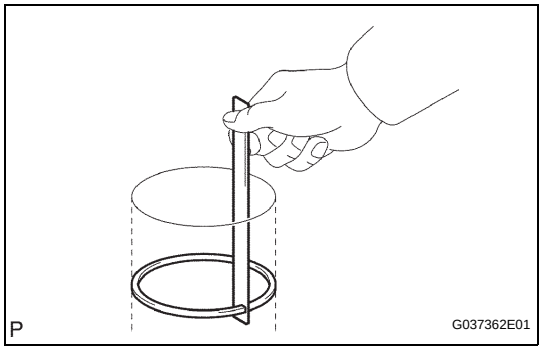

(c) Using a feeler gauge, measure the end gap.

Standard end gap

No.1	**0.22 to 0.34 mm (0.0087 to 0.0134 in.)**
No.2	**0.45 to 0.57 mm (0.0177 to 0.0224 in.)**
Oil	**0.10 to 0.40 mm (0.0039 to 0.0157 in.)**

Maximum end gap

No. 1	**0.90 mm (0.0354 in.)**
No.2	**1.36 mm (0.0535 in.)**
Oil	**0.75 mm (0.0295 in.)**

If the end gap is greater than the maximum, replace the piston ring. If the end gap is greater than the maximum, even with a new piston ring, rebore all the 4 cylinders or replace the cylinder block.

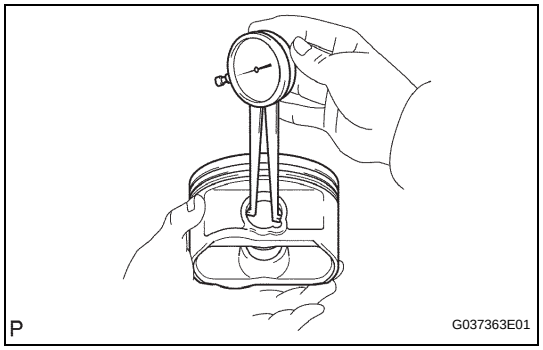

45. INSPECT PISTON PIN OIL CLEARANCE

(a) Using a caliper gauge, measure the inside diameter of the piston pin hole.

Piston pin hole inside diameter:
22.001 to 22.010 mm (0.8662 to 0.8665 in.)

EM

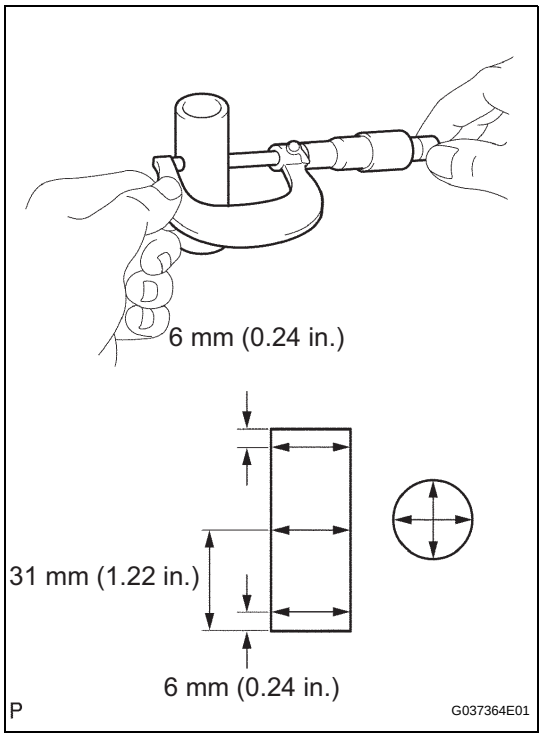

(b) Using a micrometer, measure the piston pin diameter.
Piston pin diameter:
21.997 to 22.006 mm (0.8660 to 0.8664 in.)

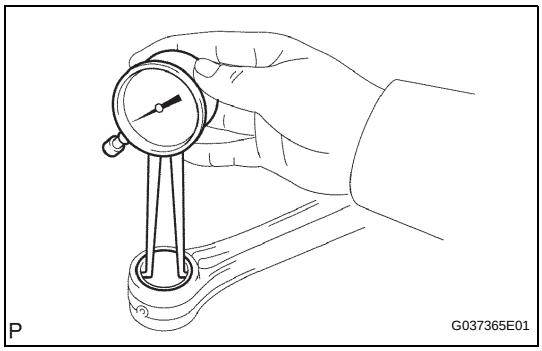

(c) Using a caliper gauge, measure the inside diameter of the connecting rod bushing.
Bushing inside diameter:
22.005 to 22.014 mm (0.8663 to 0.8667 in.)

(d) Subtract the piston pin diameter measurement from the piton pin hole diameter measurement.
Standard oil clearance:
0.001 to 0.007 mm (0.00004 to 0.00028 in.)
Maximum oil clearance:
0.010 mm (0.0004 in.)
HINT:
If the oil clearance is greater than the maximum, replace the piston and piston pin as a set.

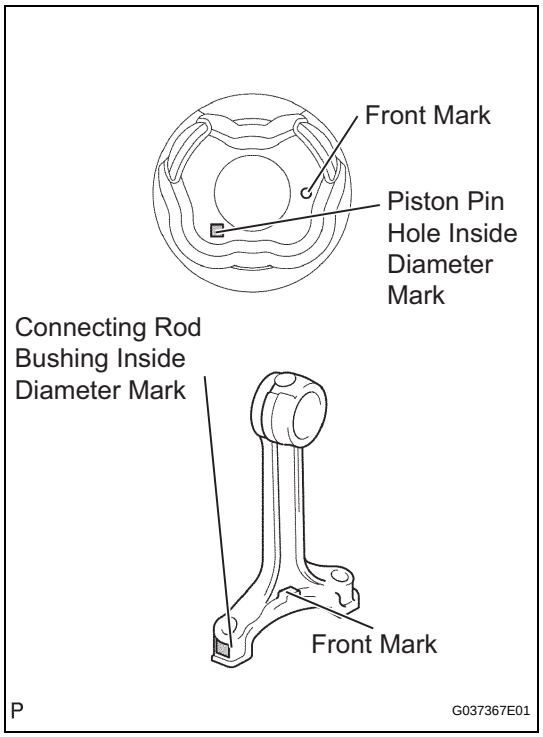

(e) Subtract the piston pin diameter measurement from the bushing inside diameter measurement.
Standard oil clearance:
0.005 to 0.011 mm (0.0002 to 0.0004 in.)
Maximum oil clearance:
0.025 mm (0.0010 in.)

(f) If the oil clearance is greater than the maximum, replace the bushing. If necessary, replace the connecting rod and piston pin as a set.

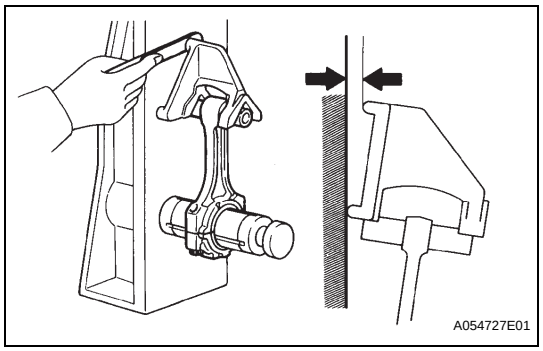

46. INSPECT CONNECTING ROD

(a) Using a rod aligner and feeler gauge, check the connecting rod alignment.

(1) Check for bend.
Maximum bend:
0.03 mm (0.0012 in.) per 100 mm (3.94 in.)
If the bend is greater than the maximum, replace the connecting rod sub-assembly.

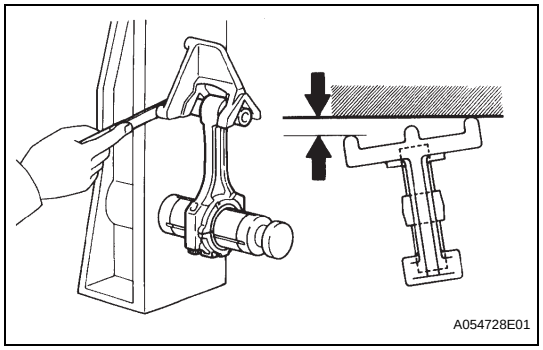

(2) Check for twist.
Maximum twist:
0.15 mm (0.0059 in.) per 100 mm (3.94 in.)
If the twist is greater than the maximum, replace the connecting rod sub-assembly.

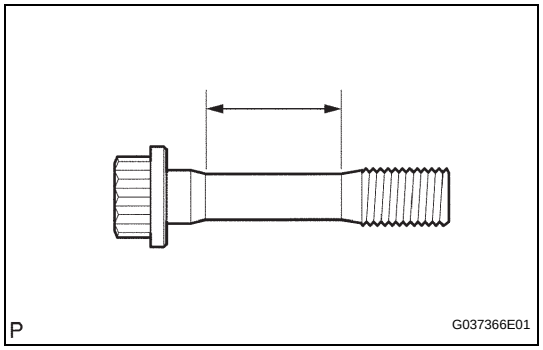

47. INSPECT CONNECTING ROD BOLT

(a) Using vernier calipers, measure the tension portion diameter of the bolt.
Standard diameter:
7.2 to 7.3 mm (0.283 to 0.287 in.)
Minimum diameter:
7.0 mm (0.276 in.)
If the diameter is less than the minimum, replace the bolt.

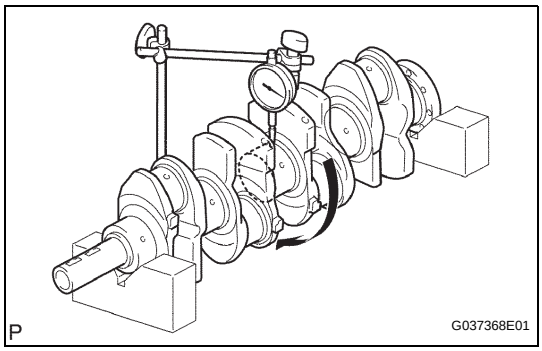

48. INSPECT CRANKSHAFT

(a) Inspect for circle runout.

(1) Place the crankshaft on V-blocks.

(2) Using a dial indicator, measure the circle runout at the center journal.

Maximum circle runout:
0.03 mm (0.0012 in.)

If the circle runout is greater than the maximum, replace the crankshaft.

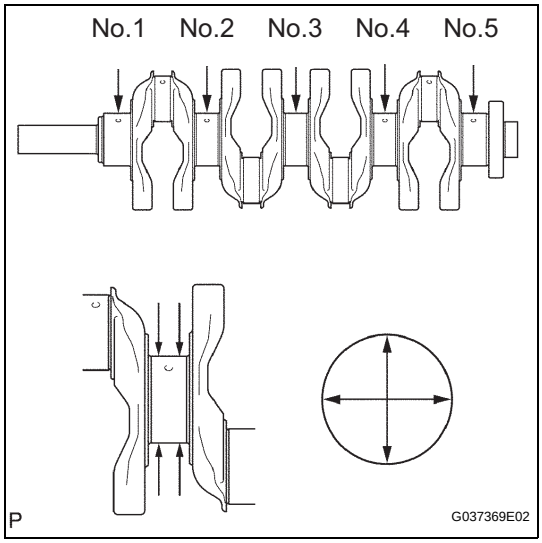

(b) Inspect the main journals.

(1) Using a micrometer, measure the diameter of each main journal.

Standard journal diameter:

No.3 journal	**59.981 to 59.994 mm (2.3615 to 2.3620 in.)**
Except No.3 journal	**59.987 to 60.000 mm (2.3619 to 2.3622 in.)**

If the diameter is not as specified, check the oil clearance (see step 30). If necessary, replace the crankshaft.

(2) Check each main journal for taper and out-of-round as shown in the illustration.

Maximum taper and out-of-round:
0.005 mm (0.0002 in.)

If the taper and out-of-round is greater than the maximum, replace the crankshaft.

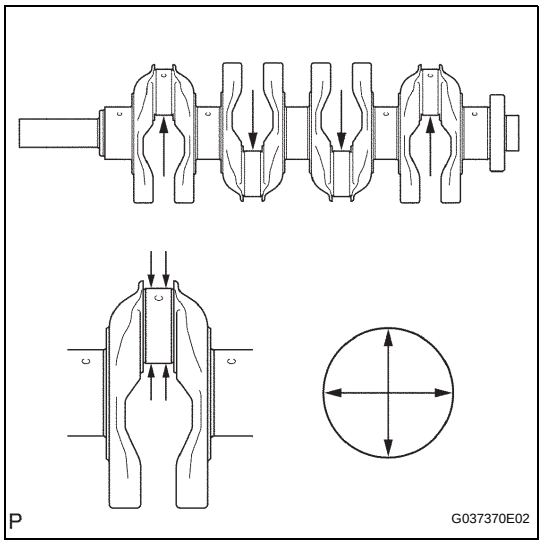

(c) Inspect the crank pin.

(1) Using a micrometer, measure the diameter of each crank pin.

Diameter:
52.989 to 53.002 mm (2.0862 to 2.0867 in.)

If the diameter is not as specified, check the oil clearance (see step 2). If necessary, replace the crankshaft.

(2) Check each crank pin for taper and out-of-round as shown in the illustration.

Maximum taper and out-of-round:
0.003 mm (0.0001 in.)

If the taper and out-of-round is greater than the maximum, replace the crankshaft.

49. INSPECT CRANKSHAFT OIL CLEARANCE

HINT:

- Keep the lower bearings and crankshaft bearing caps together.
- Arrange the thrust washers in the correct order.
- Keep the upper crankshaft bearings and upper thrust washers together with the cylinder block.

(a) Clean each main journal and bearing.

(b) Check each main journal and bearing for pitting and scratches.

If the journal or bearing is damaged, replace the bearing.

(c) Place the crankshaft on the cylinder block.

EM

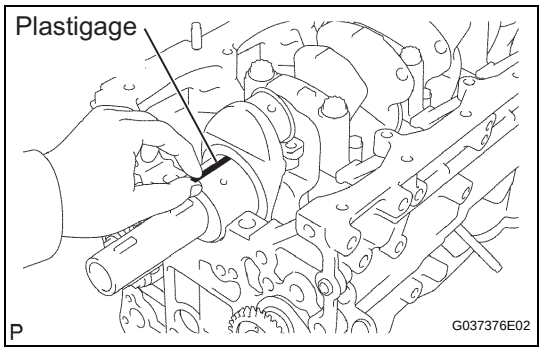

(d) Lay a strip of Plastigage across each journal.

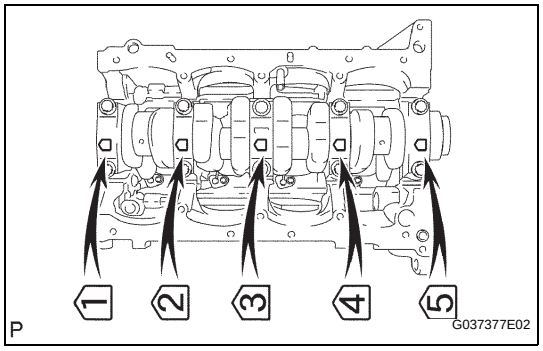

(e) Install the 5 crankshaft bearing caps in their proper locations.

(f) Install the 5 crankshaft bearing caps with the 10 bolts (see step 49).

NOTICE:

Do not turn the crankshaft.

(g) Remove the 10 bolts and 5 crankshaft bearing caps.

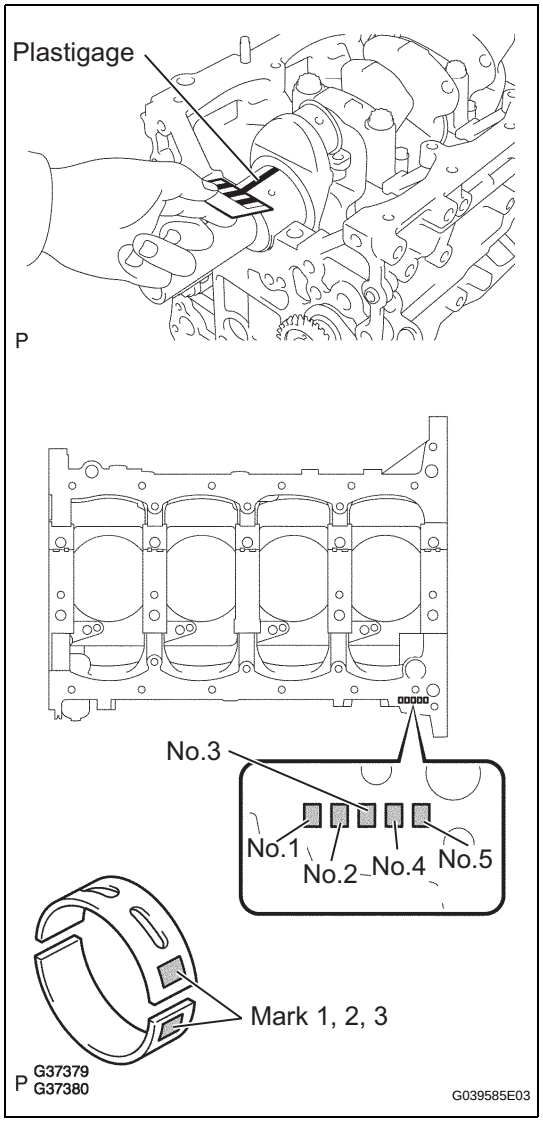

(h) Measure the Plastigage at its widest point.

Standard oil clearance

Bearing Cap	Standard
No.3	0.030 to 0.055 mm (0.0012 to 0.0022 in.)
Others	0.024 to 0.049 mm (0.0009 to 0.0019 in.)

Maximum oil clearance:
0.10 mm (0.0039 in.)

If the oil clearance is greater than the maximum, replace the crankshaft bearing.

HINT:

- If replacing the cylinder block, measure the bearing standard clearance.
- If replacing a bearing, first check the number on the cylinder block for the bearing's respective journal. Then replace the bearing with one that has the same number. Each bearing's standard thickness is indicated by a 1, 2 or 3 mark on its surface.

Reference

Cylinder block main journal bore diameter

Mark	Diameter
1	64.004 to 64.010 mm (2.5198 to 2.5201 in.)
2	64.011 to 64.016 mm (2.5201 to 2.5203 in.)
3	64.017 to 64.022 mm (2.5203 to 2.5206 in.)

Standard bearing center wall thickness

Mark	Thickness
1	1.987 to 1.990 mm (0.0782 to 0.0783 in.)
2	1.991 to 1.993 mm (0.0784 to 0.0785 in.)
3	1.994 to 1.996 mm (0.0785 to 0.0786 in.)

(i) Completely remove the Plastigage.

EM

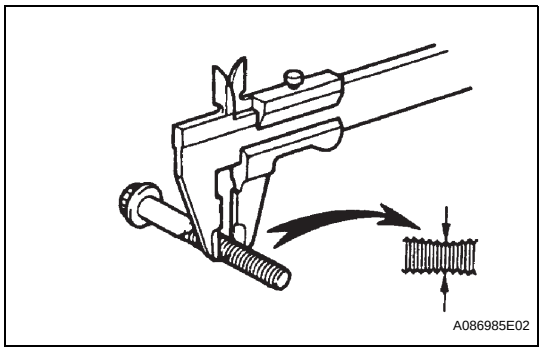

50. INSPECT CRANKSHAFT BEARING CAP SET BOLT

(a) Using vernier calipers, measure the minimum diameter of the compressed thread at the measuring point.

Standard diameter:
10.76 to 10.97 mm (0.4236 to 0.4319 in.)

Minimum diameter:
10.66 mm (0.4197 in.)

If the diameter is less than the minimum, replace the bolt.

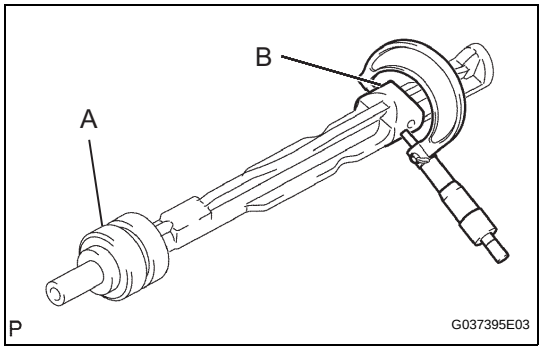

51. INSPECT NO.1 BALANCESHAFT

(a) Inspect the diameter of the journal.

(1) Using a micrometer, measure the diameter of the balanceshaft main journals.

Main journal diameter

A	37.969 to 37.985 mm (1.4948 to 1.4955 in.)
B	37.449 to 37.465 mm (1.4744 to 1.4750 in.)

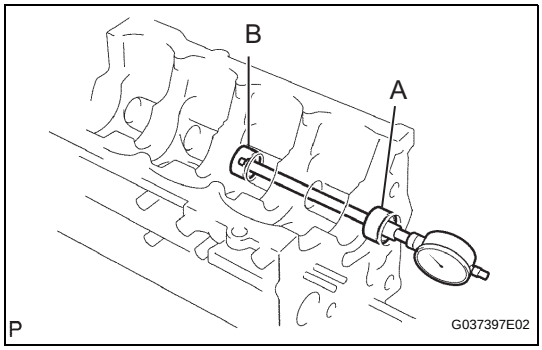

(b) Inspect the diameter of bearing.

(1) Using a cylinder gauge, measure the inside diameter of the balanceshaft bearing.

Bearing inside diameter

A	38.025 to 38.045 mm (1.4970 to 1.4978 in.)
B	37.525 to 37.545 mm (1.4774 to 1.4781 in.)

(c) Inspect oil clearance.

(1) Subtract the balanceshaft main journal diameter measurement from the balanceshaft bearing inside diameter measurement.

Standard oil clearance

A	0.040 to 0.076 mm (0.0016 to 0.0030 in.)
B	0.060 to 0.096 mm (0.0024 to 0.0038 in.)

Maximum oil clearance:
0.15 mm (0.0059 in.)

If the oil clearance is greater than the maximum, replace the cylinder block and balanceshaft.

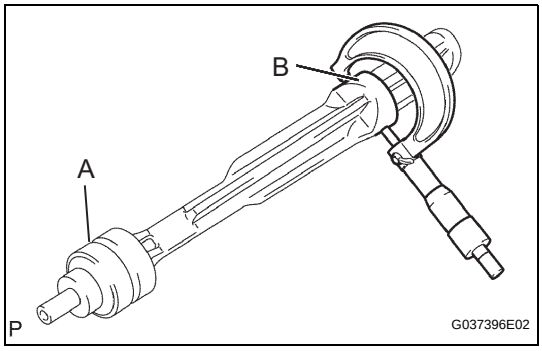

52. INSPECT NO.2 BALANCESHAFT

(a) Inspect the diameter of the journal.

(1) Using a micrometer, measure the diameter of the balanceshaft main journals.

Main journal diameter

A	37.969 to 37.985 mm (1.4948 to 1.4955 in.)
B	37.449 to 37.465 mm (1.4744 to 1.4750 in.)

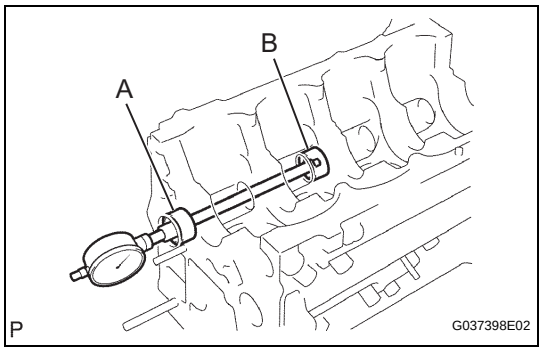

(b) Inspect the diameter of bearing.
(1) Using a cylinder gauge, measure the inside diameter of the balanceshaft bearing.
Bearing inside diameter

A	**38.025 to 38.045 mm (1.4970 to 1.4978 in.)**
B	**37.525 to 37.545 mm (1.4774 to 1.4781 in.)**

(c) Inspect oil clearance.
Standard oil clearance

A	**0.040 to 0.076 mm (0.0016 to 0.0030 in.)**
B	**0.060 to 0.096 mm (0.0024 to 0.0038 in.)**

Maximum oil clearance:
0.15 mm (0.0059 in.)
If the oil clearance is greater than the maximum, replace the cylinder block and balanceshaft.

REPLACEMENT

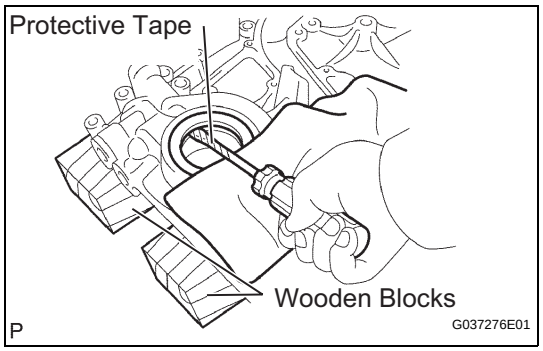

1. REMOVE TIMING CHAIN COVER OIL SEAL
(a) Using a screwdriver with its tip taped, pry out the oil seal.
HINT:
Tape the screwdriver tip before use.

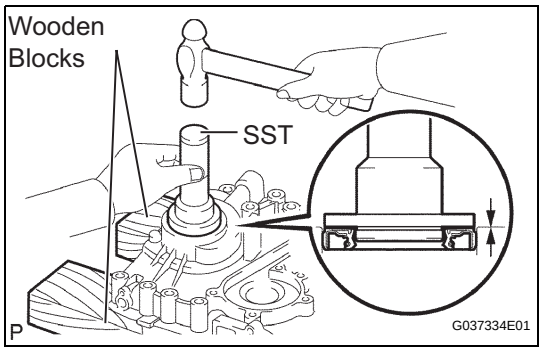

2. INSTALL TIMING CHAIN COVER OIL SEAL
(a) Place the timing chain cover on wooden blocks.
(b) Using SST, tap in a new oil seal until its surface is flush with the timing gear case edge.
SST 09223-50010
NOTICE:
- **Keep the lip free from foreign matter.**
- **Do not tap the oil seal at an angle.**

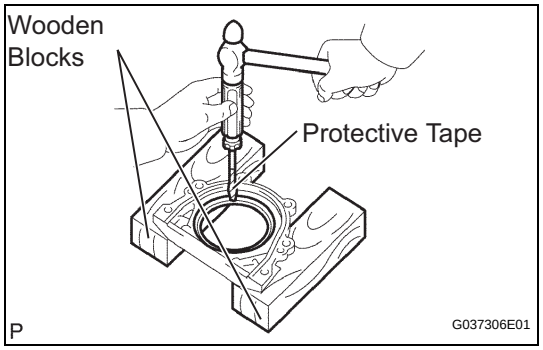

3. REMOVE ENGINE REAR OIL SEAL
(a) Place the oil seal retainer on wooden blocks.
(b) Using a screwdriver with its tip taped and a hammer, tap out the oil seal.
HINT:
Tape the screwdriver tip before use.

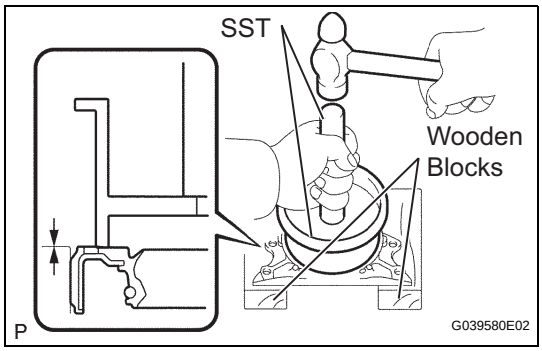

4. INSTALL ENGINE REAR OIL SEAL

(a) Place the oil seal retainer on wooden blocks.

(b) Using SST, tap in a new oil seal until its surface is flush with the oil seal retainer edge.
SST 09223-15030, 09950-70010 (09951-07150)
NOTICE:
- **Keep the lip free from foreign matter.**
- **Do not tap the oil seal at an angle.**

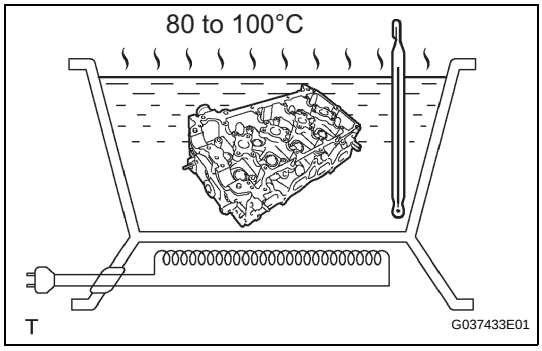

5. REMOVE INTAKE VALVE GUIDE BUSH

(a) Heat the cylinder head to 80 to 100 °C(176 to 212°F).

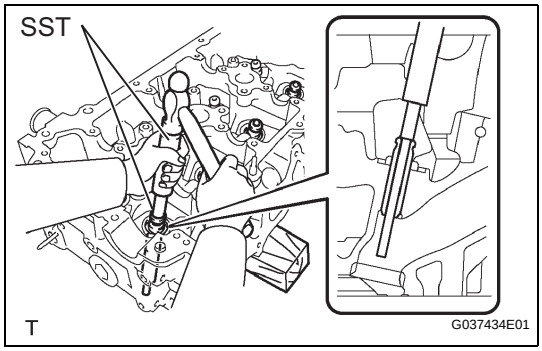

(b) Place the cylinder head on wooden blocks.

(c) Using SST and a hammer, tap out the guide bush.
SST 09201-01055, 09950-70010 (09951-07100)

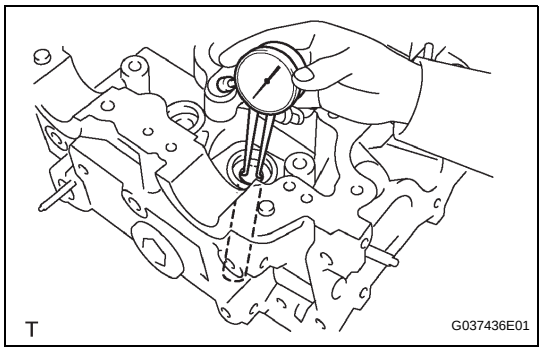

6. INSTALL INTAKE VALVE GUIDE BUSH

(a) Using a caliper gauge, measure the bush bore diameter of the cylinder head.
Cylinder bore diameter:
10.285 to 10.306 mm (0.4049 to 0.4057)

(b) Select a new guide bush (STD or O/S 0.05).

Bush bore diameter	Bush size
10.285 to 10.306 mm (0.4049 to 0.4057 in.)	Use STD
10.335 to 10.356 mm (0.4069 to 0.4077 in.)	Use O/S 0.05

If the bush bore diameter of the cylinder head is greater than 10.306 mm (0.4057 in.), machine the bush bore to the dimension of 10.335 to 10.356 mm (0.4069 to 0.4077 in.) to install a O/S 0.05 valve guide bush.
If the bush bore diameter of the cylinder head is greater than 10.356 mm (0.4077 in.), replace the cylinder head.

EM

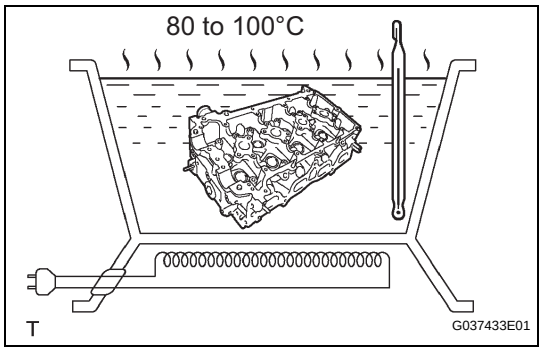

(c) Heat the cylinder head to 80 to 100°C (176 to 212°F).

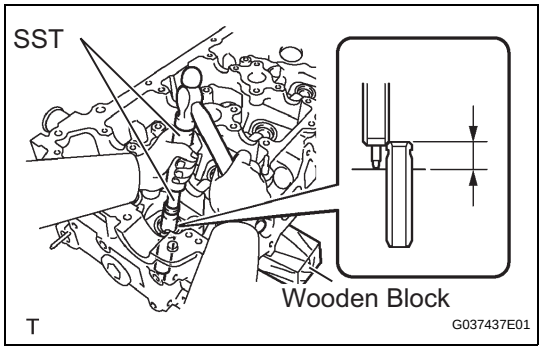

(d) Place the cylinder head on wooden blocks.
(e) Using SST, tap in a new valve guide bush to the specified protrusion height.
SST 09201-01055, 09950-70010 (09951-07100)
Protrusion height (A):
9.8 to 10.2 mm (0.3858 to 0.4016 in.)

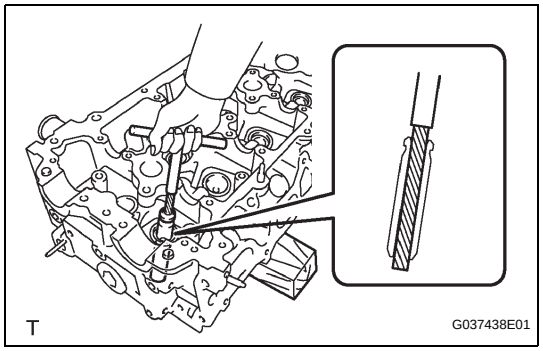

(f) Using a sharp 5.5 mm reamer, ream the valve guide bush to obtain the standard specified clearance.
Standard oil clearance:
0.025 to 0.060 mm (0.0010 to 0.0023 in.)

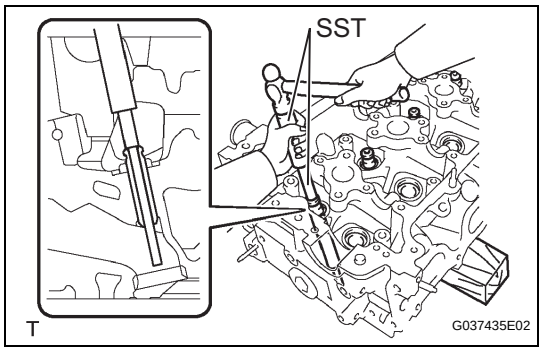

7. REMOVE EXHAUST VALVE GUIDE BUSH
(a) Heat the cylinder head to 80 to 100°C(176 to 212°F)
(b) Place the cylinder head on wooden blocks.
(c) Using SST and a hammer, tap out the guide bush.
SST 09201-01055, 09950-70010 (09951-07100)

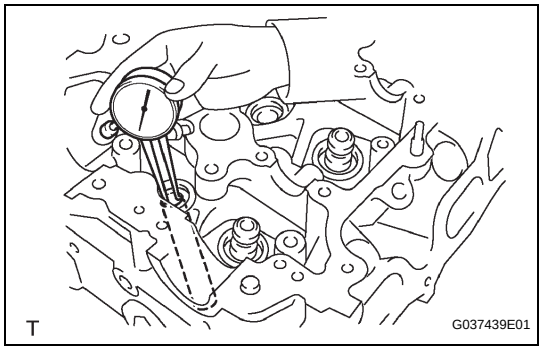

8. INSTALL EXHAUST VALVE GUIDE BUSH
(a) Using a caliper gauge, measure the bush bore diameter of the cylinder head.
Cylinder bore diameter:
10.285 to 10.306 mm (0.4049 to 0.4057)
(b) Select a new guide bush (STD or O/S 0.05).

Bush bore diameter	Bush size
10.285 to 10.306 mm (0.4049 to 0.4057 in.)	Use STD
10.335 to 10.356 mm (0.4069 to 0.4077 in.)	Use O/S 0.05

If the bush bore diameter of the cylinder head is greater than 10.306 mm (0.4057 in.), machine the bush bore to the dimension of 10.335 to 10.356 mm (0.4069 to 0.4077 in.) to install a O/S 0.05 valve guide bush.
If the bush bore diameter of the cylinder head is greater than 10.356 mm (0.4077 in.), replace the cylinder head.

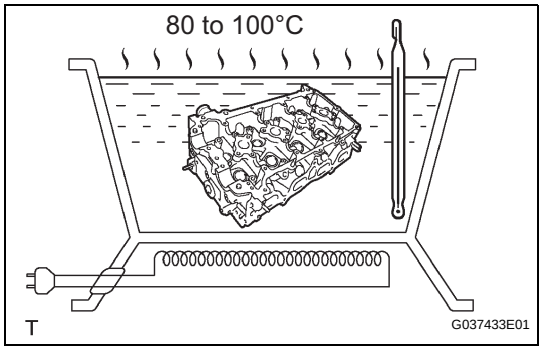

(c) Heat the cylinder head to 80 to 100°C (176 to 212°F).

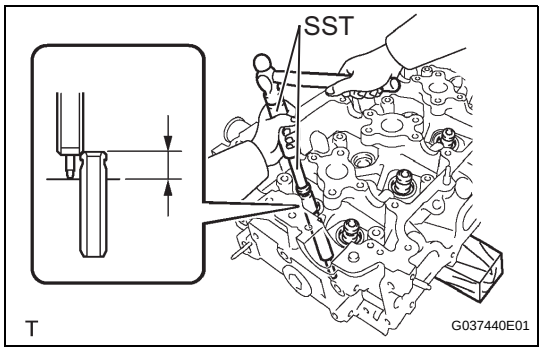

(d) Place the cylinder head on wooden blocks.
(e) Using SST, tap in a new valve guide bush to the specified protrusion height.
SST 09201-01055, 09950-70010 (09951-07100)
Protrusion height (A):
7.6 to 8.0 mm (0.2992 to 0.3150 in.)

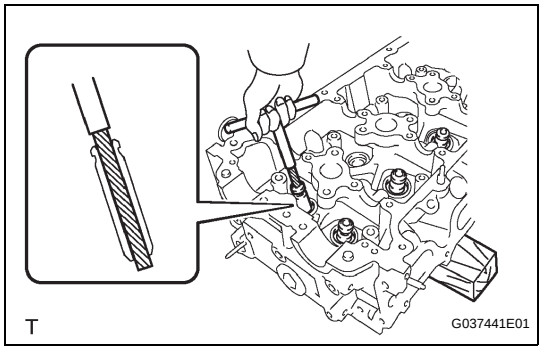

(f) Using a sharp 5.5 mm reamer, ream the valve guide bushing to obtain the standard specified clearance.
Standard oil clearance:
0.030 to 0.065 mm (0.0012 to 0.0026 in.)

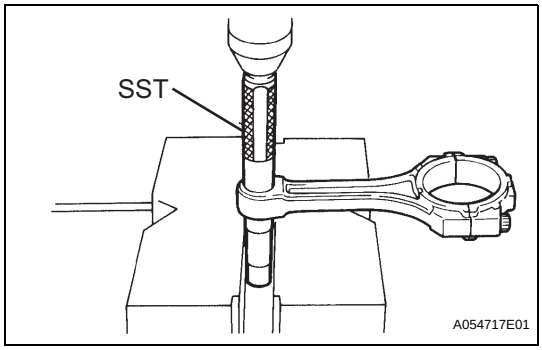

9. REMOVE CONNECTING ROD SMALL END BUSH
(a) Using SST and a press, press out the bush.
SST 09222-30010

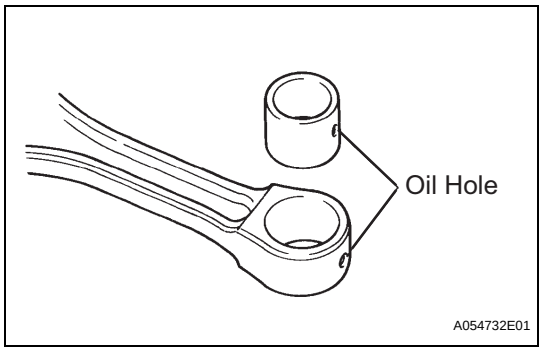

10. INSTALL CONNECTING ROD SMALL END BUSH

(a) Align the oil holes of a new bush and the connecting rod.

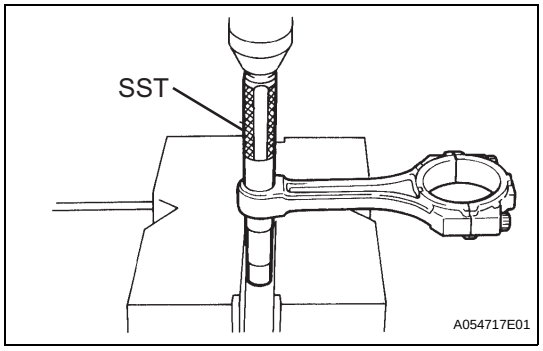

(b) Using SST and a press, press in the bush.
SST 09222-30010

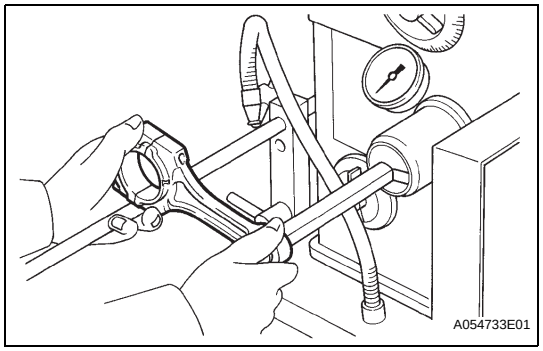

(c) Using a pin hole grinder, hone the bush to obtain the standard specified clearance (see step 26.) between the bush and piston pin.

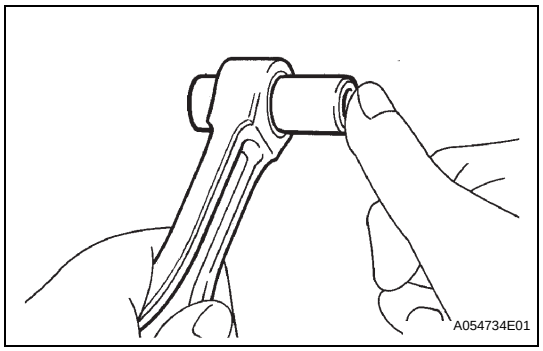

(d) Check that the piston pin fits at normal room temperature.
(1) Coat the piston pin with engine oil, and push it into the connecting rod with your thumb.

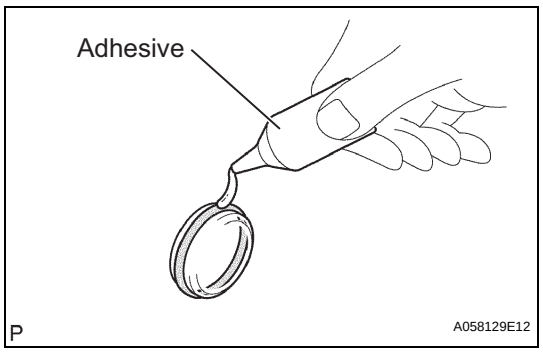

REASSEMBLY

1. INSTALL TIGHT PLUG

NOTICE:
If water leaks from the tight plug or the plug corrodes, replace it.

(a) Apply adhesive around the tight plugs.
Adhesive:
Part No. 08833-00070, THREE BOND 1324 or equivalent.

EM

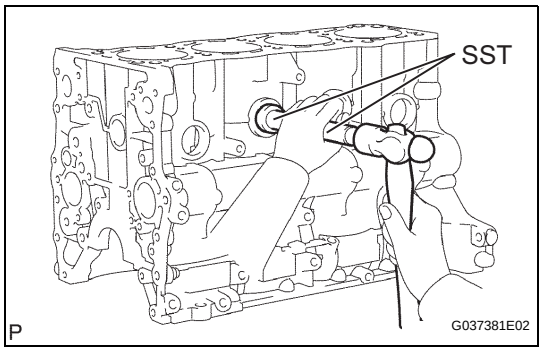

(b) Using SST and a hammer, tap in new tight plugs as shown in the illustration.

(c) Using SST, tap in the 8 tight plugs A and C.
SST 09950-60010 (09951-00350), 09950-70010 (09951-07100)

(d) Using SST, tap in the tight plug B.
SST 09950-60010 (09951-00300), 09950-70010 (09951-07100)

(e) Using SST, tap in the 3 tight plugs D.
SST 09950-60010 (09951-00400), 09950-70010 (09951-07100)

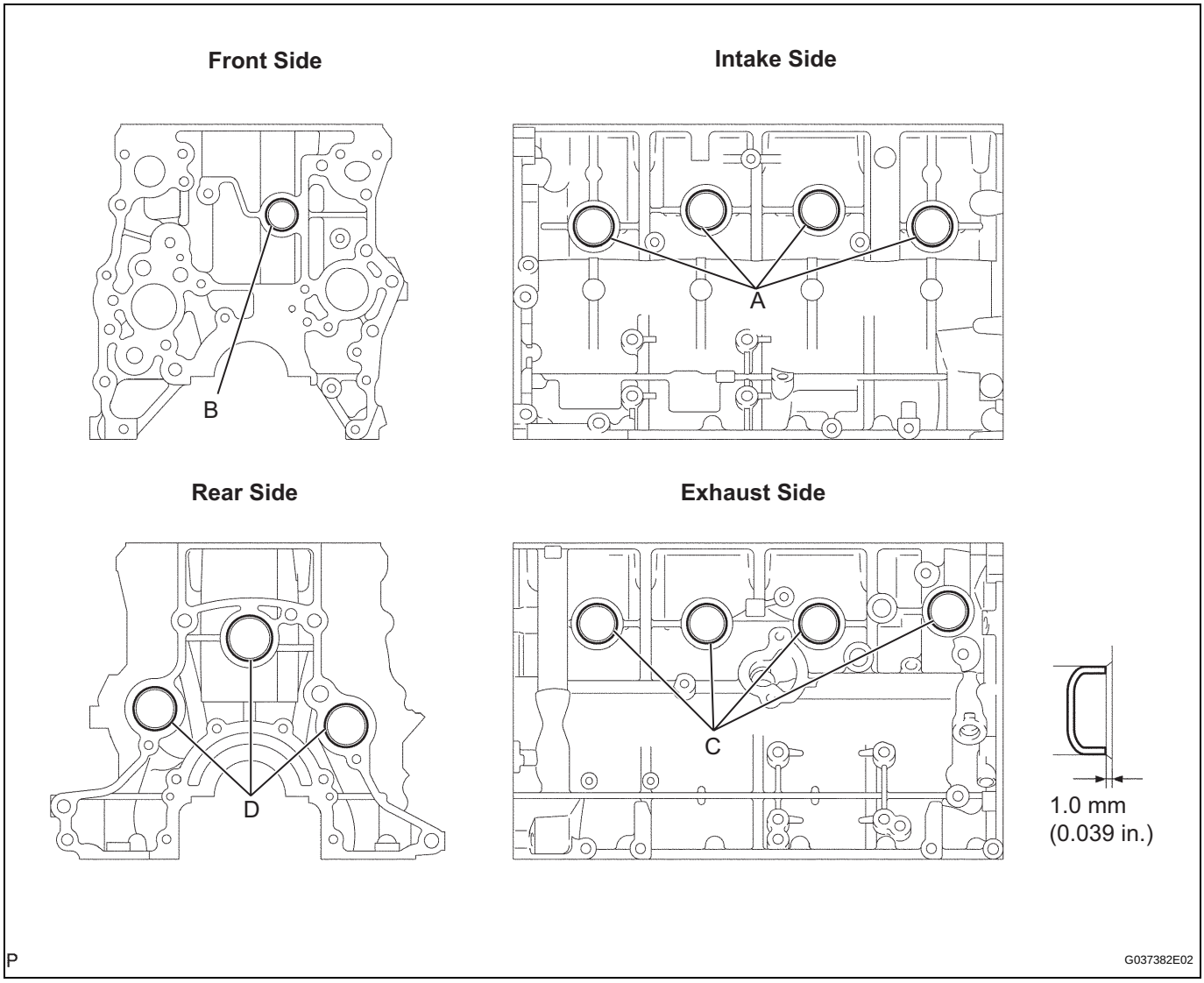

2. INSTALL STUD BOLT

(a) Using an E7 "torx" socket wrench, install the stud bolts B and D.
Torque: 7.5 N*m (77 kgf*cm, 66 in.*lbf) for stud bolts B and D

(b) Using an E8 "torx" socket wrench, install the stud bolts A.
Torque: 7.5 N*m (77 kgf*cm, 66 in.*lbf) for stud bolts A

(c) Apply adhesive to the hole for the stud bolt C on the cylinder block. Using an E7 "torx" socket wrench, install the stud bolts C.

Torque: 7.5 N*m (77 kgf*cm, 66 in.*lbf) for stud bolt C

NOTICE:

If the stud bolt is deformed or the threads are damaged, replace it.

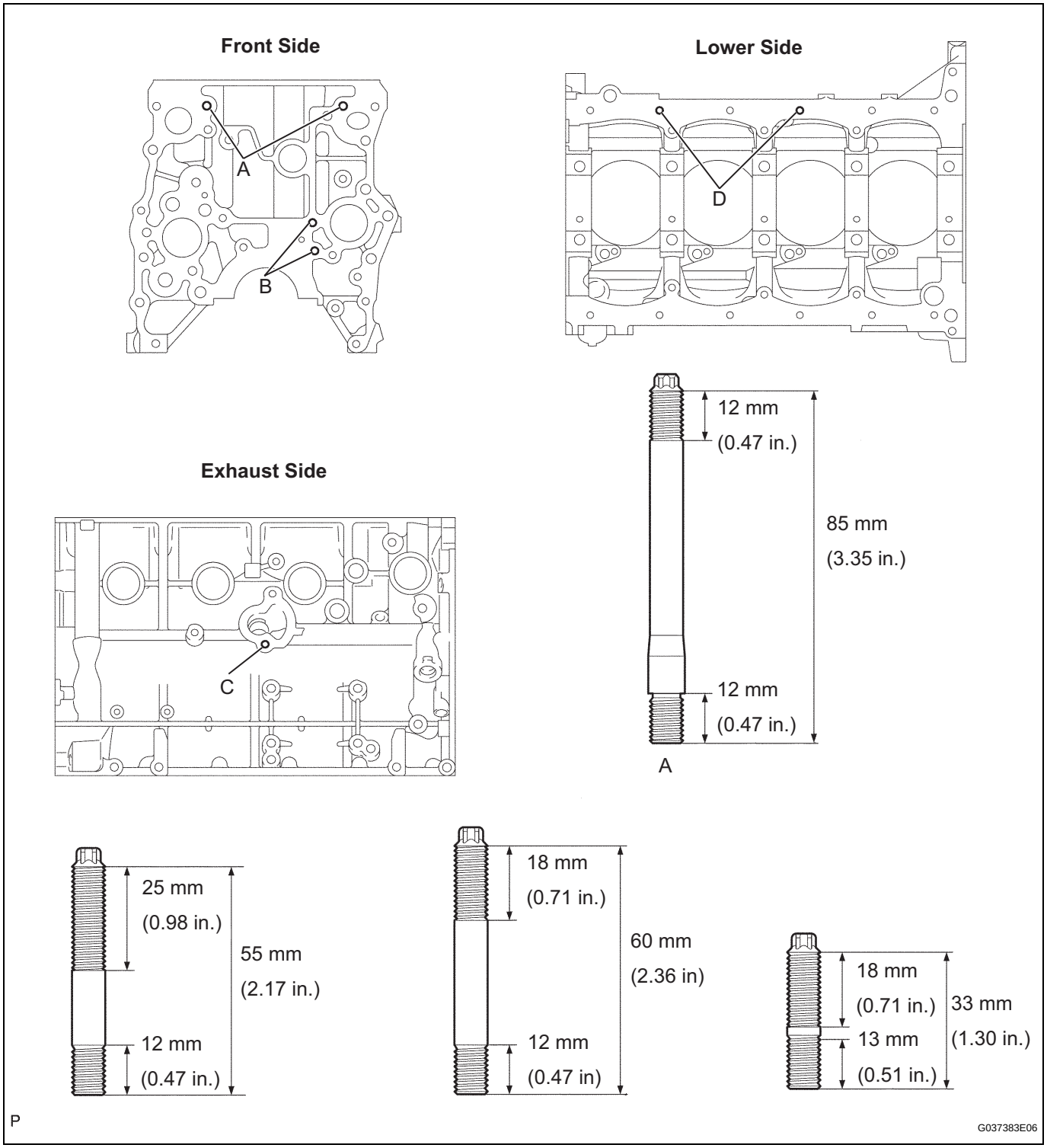

EM

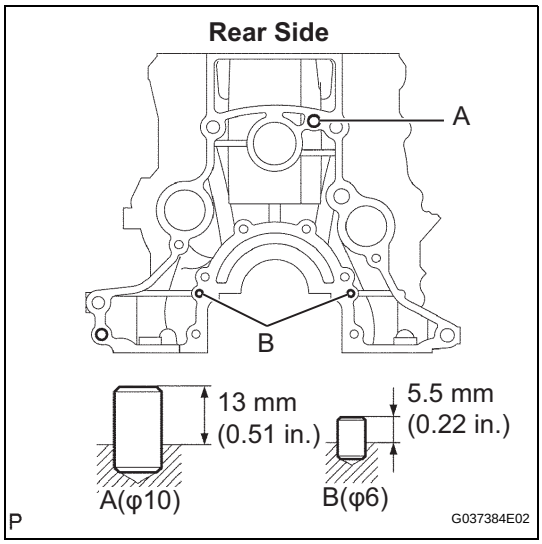

3. INSTALL STRAIGHT PIN

(a) Using a plastic-faced hammer, tap in new straight pins to the cylinder block.

4. INSTALL RING PIN

(a) Using a plastic-faced hammer, tap in new ring pins to the cylinder block.

EM

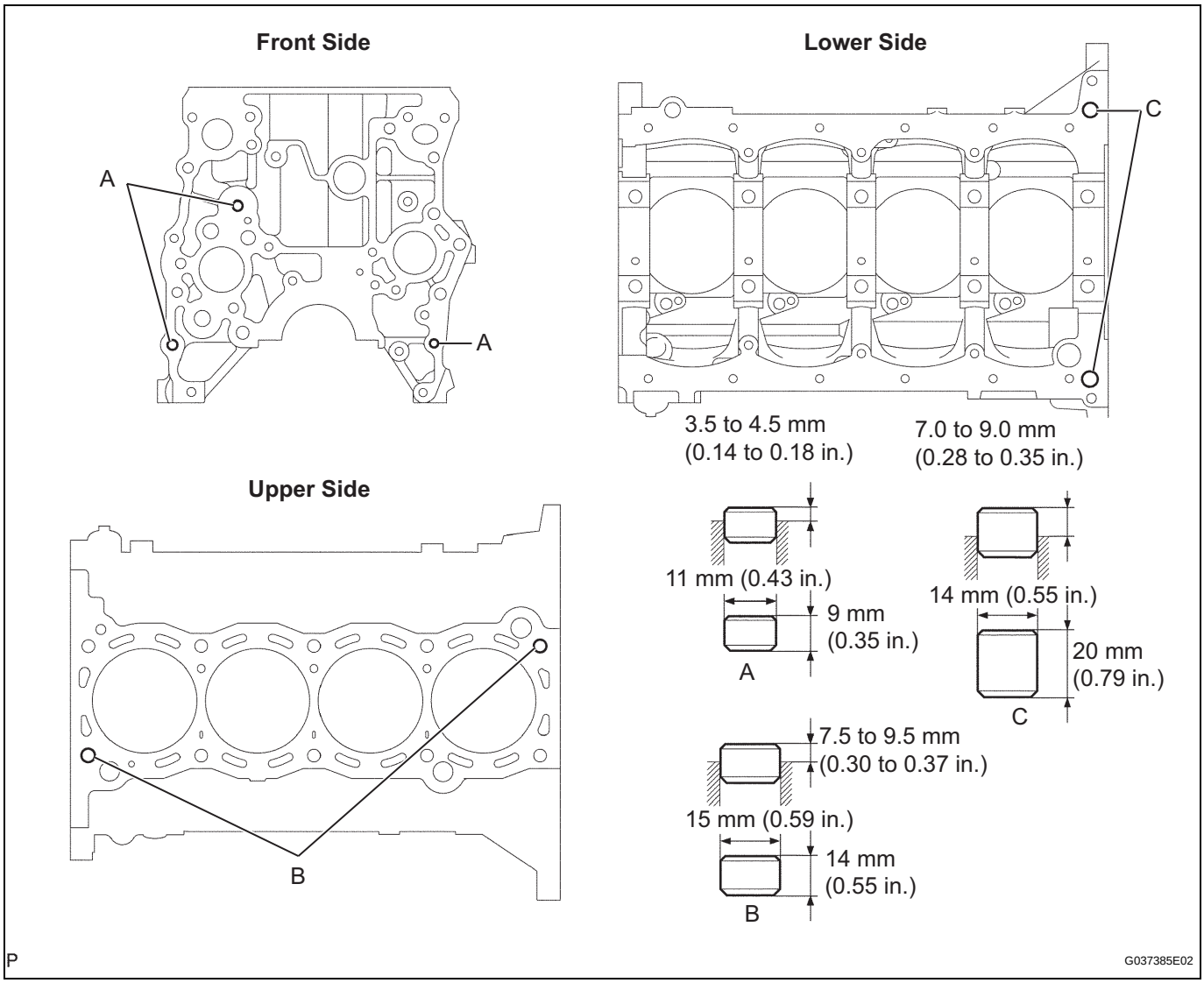

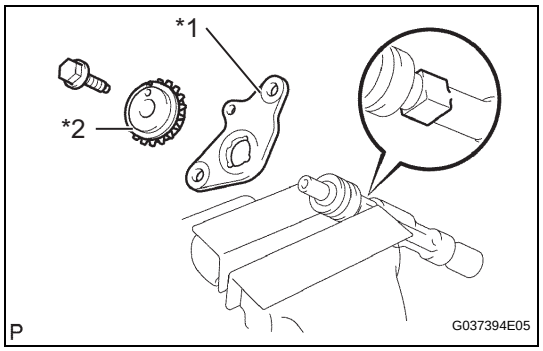

5. INSTALL NO. 2 BALANCESHAFT DRIVEN GEAR

(a) Mount the head portion of the balanceshaft in a vise.
NOTICE:
Be careful not to damage the balanceshaft.

(b) Install the balanceshaft thrust washer No.2 (* 1) and balanceshaft driven gear No.2 (* 2).

(c) Install and torque the bolt.
Torque: 36 N*m (365 kgf*cm, 26 ft.*lbf)

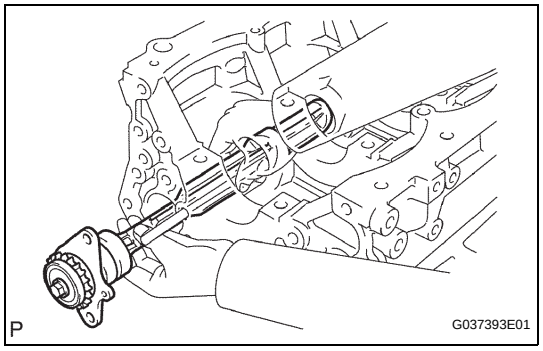

6. INSTALL NO.2 BALANCESHAFT

(a) Install the balanceshaft to the cylinder block.
NOTICE:
When installing the balanceshaft, make sure to support the balanceshaft with both hands and avoid scratching the balanceshaft bearing on the cylinder block side.

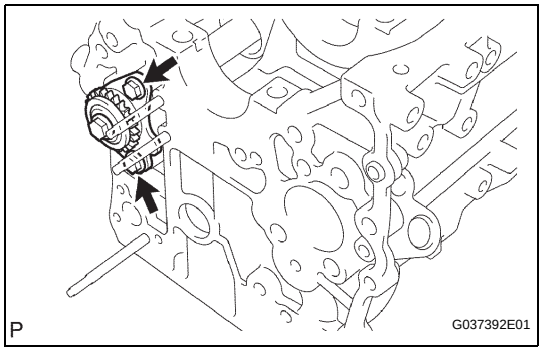

(b) Install and torque the 2 bolts.
Torque: 18 N*m (184 kgf*cm, 13 ft.*lbf)

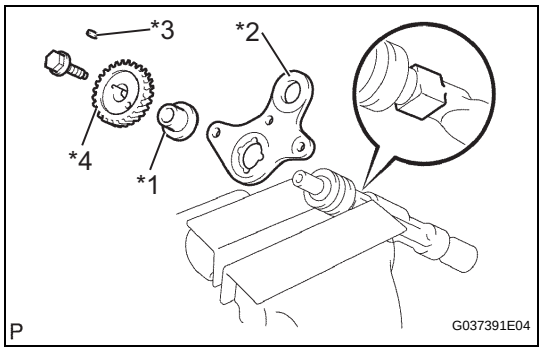

7. INSTALL NO. 1 BALANCESHAFT DRIVEN GEAR

(a) Mount the head portion of the balanceshaft in a vise.
NOTICE:
Be careful not to damage the balanceshaft.

(b) Install the balanceshaft thrust spacer (* 1), balanceshaft thrust washer No.1 (* 2), sliding key (* 3) and balanceshaft driven gear No.1 (* 4).

(c) Install and torque the bolt.
Torque: 36 N*m (365 kgf*cm, 26 ft.*lbf)

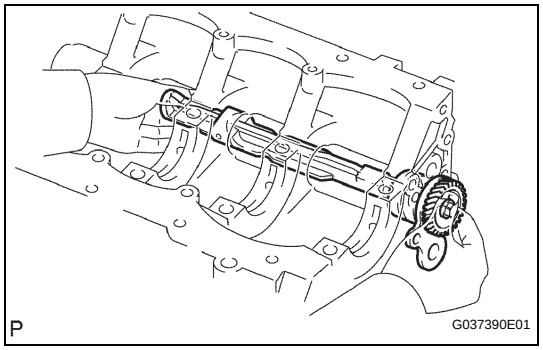

8. INSTALL NO.1 BALANCESHAFT

(a) Install the No.1 balanceshaft to the cylinder block.
NOTICE:
When installing the balanceshaft, make sure to support the balanceshaft with both hands and avoid scratching the balanceshaft bearing on the cylinder block side.

EM

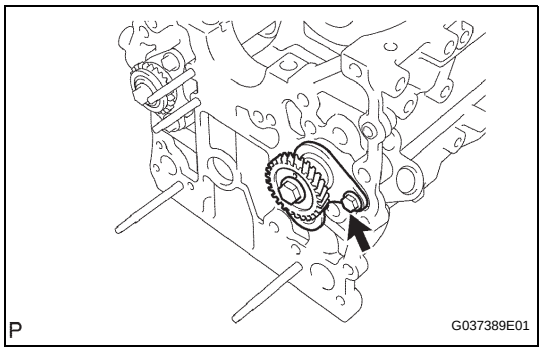

(b) Install and torque the bolt.
Torque: 18 N*m (184 kgf*cm, 13 ft.*lbf)

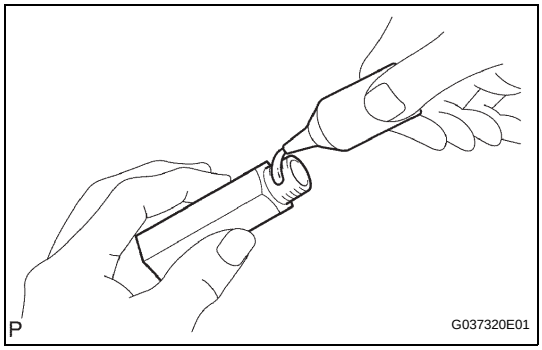

9. INSTALL CYLINDER BLOCK WATER DRAIN COCK SUB-ASSEMBLY

(a) Apply adhesive around the drain cock.

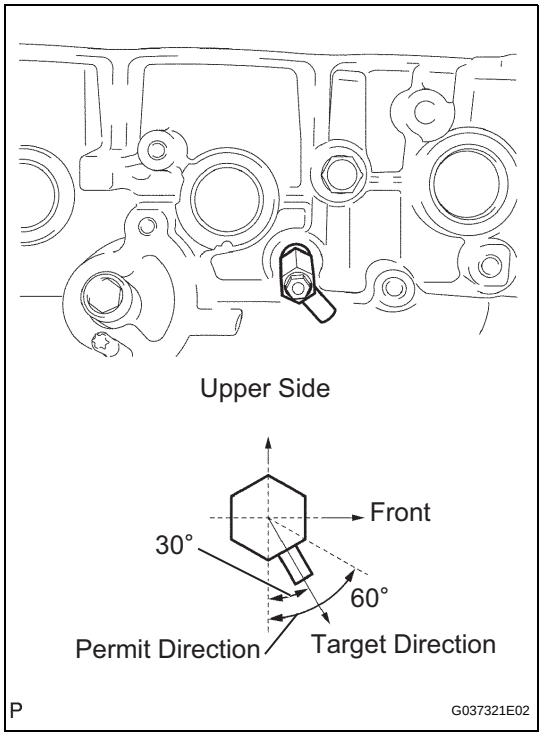

(b) Install the cylinder block water drain cock as shown in the illustration.
Torque: 25 N*m (250 kgf*cm, 18 in.*lbf)

(c) Install the water drain cock plug to the water drain cock sub-assembly.
Torque: 13 N*m (130 kgf*cm, 9 in.*lbf)

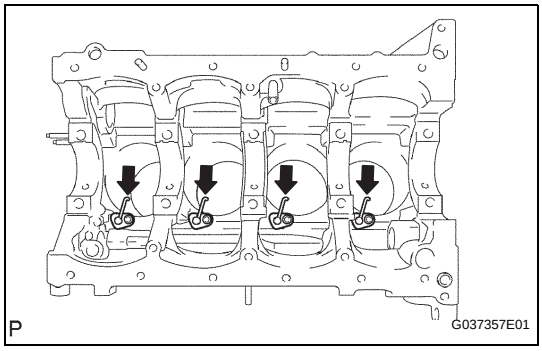

10. INSTALL NO. 1 OIL NOZZLE SUB-ASSEMBLY

(a) Using an E7 "torx" socket wrench, install the oil nozzles.
Torque: 7.0 N*m (71 kgf*cm, 62 in.*lbf)

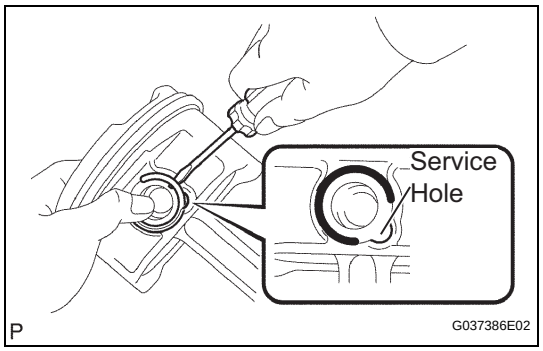

11. INSTALL WITH PIN PISTON SUB-ASSEMBLY

(a) Assemble the piston and connecting rod.

(1) Using a screwdriver, install a new snap ring at one end of the piston pin hole.

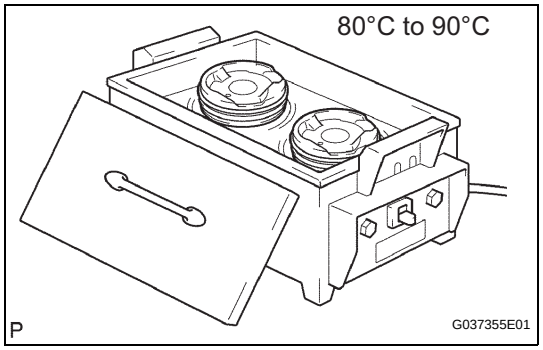

(2) Gradually heat the piston to approximately 80 to 90°C (176 to 194°F).

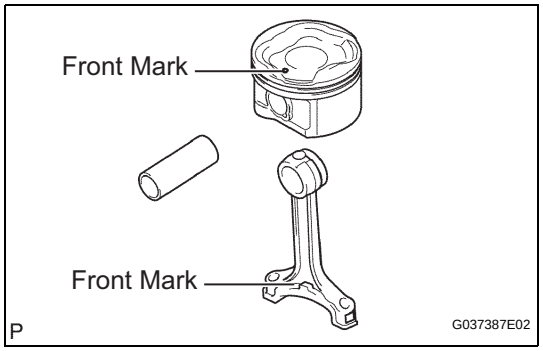

(3) Coat the piston pin with engine oil.

(4) Align the front marks of the piston and connecting rod, and push in the piston pin with your thumb.
HINT:
The piston and pin are a matched set.

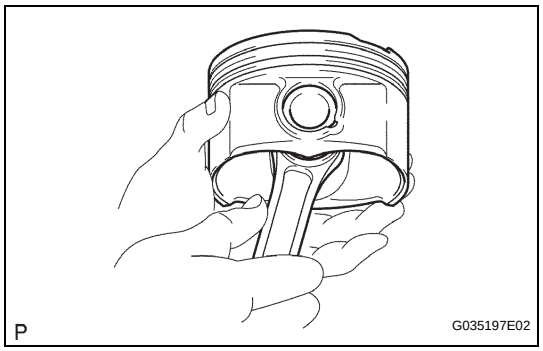

(5) Check the fitting condition between the piston and piston pin by trying to move the piston back and forth on the piston pin.

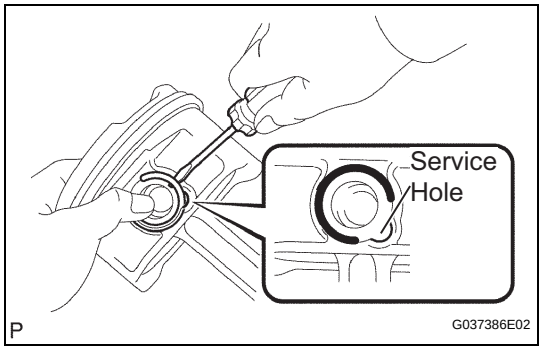

(6) Using a screwdriver, install a new snap ring at the other end of the piston pin hole.

EM