2007 ENGINE

Engine - Crown Victoria & Grand Marquis

SPECIFICATIONS

MATERIAL

Material

Item	Specification	Fill Capacity
Gasket Maker TA-16	WSK-M2G348-A5	-
Motorcraft Metal Surface Cleaner ZC-21	WSE-M5B392-A	-
Motorcraft Metal Surface Prep ZC-31	-	-
Motorcraft SAE 5W-20 Premium Synthetic Blend Motor Oil XO-5W20-QSP (US); Motorcract SAE 5W-20 Super Premium Motor Oil CXO-5W20-LSP12 (Canada); or equivalent	WSS-M2C930-A	5.9L (6.2 qt) includes filter change
Silicone Gasket and Sealant TA-30	WSE-M4G323-A4	-
Silicone Gasket Remover ZC-30	-	-

GENERAL SPECIFICATIONS

GENERAL SPECIFICATIONS

Item	Specification
Engine	
Displacement	4.6L (281 CID) (2V)
No. cylinders	8
Bore	90.2 mm (3.5512 in)
Stroke	90 mm (3.5433 in)
Firing order	1-3-7-2-6-5-4-8
Oil pressure hot @ 2,500 rpm	40-70 psi
Compression ratio	9.37:1
Engine weight (without accessory drive components and flexplate)	233.1 kg (514 lb)
Cylinder Head and Valve Train	
Combustion chamber volume	43.95 ± 1.5 cc (2.68 ± 0.092 ci)

Valve arrangement (front to rear) LH	EIEIEIEI
Valve arrangement (front to rear) RH	IEIEIEIE
Valve guide bore diameter	7.044-7.015 mm (0.2773-0.2762 in)
Valve stem diameter (intake)	6.995-6.975 mm (0.2753-0.2746 in)
Valve stem diameter (exhaust)	6.970-6.949 mm (0.2744-0.2735 in)
Valve stem-to-guide clearance (intake)	0.069-0.020 mm (0.0027-0.0007 in)
Valve stem-to-guide clearance (exhaust)	0.095-0.046 mm (0.0037-0.0018 in)
Valve head diameter (intake)	44.6 mm (1.7559 in)
Valve head diameter (exhaust)	36.1 mm (1.4212 in)
Valve face runout limit	0.05 mm (0.0019 in)
Valve face angle	45.5 degrees
Valve seat width (intake)	2.1-1.9 mm (0.0827-0.0748 in)
Valve seat width (exhaust)	2.1-1.9 mm (0.0827-0.0748 in)
Valve seat runout (TIR)	0.025 mm (0.0009 in)
Valve seat angle	45.00 degrees
Valve spring free length (intake)	50.2 mm (1.9763 in)
Valve spring free length (exhaust)	50.2 mm (1.9763 in)
Valve spring out-of-square limit (intake)	2.5 degrees
Valve spring out-of-square limit (exhaust)	2.5 degrees
Valve spring compression pressure (intake)	633.3-701.3 N @28.02 mm (1.1031 in)
Valve spring compression pressure (exhaust)	633.3-701.3 N @28.02 mm (1.1031 in)
Valve spring installed height (intake)	40.6-43.6 mm (1.5984-1.7165 in)
Valve spring installed height (exhaust)	40.6-43.6 mm (1.5984-1.7165 in)
Valve spring installed pressure (intake)	272.1-306.1 N @40.0 mm (1.5748 in)
Valve spring installed pressure (exhaust)	272.1-306.1 N @40.0 mm (1.5748 in)
Valve spring installed pressure service limit (intake)	274.6 N @40.01 mm (1.5752 in)
Valve spring installed pressure service limit (exhaust)	274.6 N @40-01 mm (1.5752 in)
Roller follower ratio	1.75:1
Hydraulic Lash Adjuster	
Diameter	15.988-16.00 mm (0.6294-0.6299 in)
Clearance to bore	0.018-0.069 mm (0.0007-0.0027 in)
Service limit	0.016 mm (0.0006 in)
Hydraulic leakdown rate	5-25 seconds
Collapsed lash adjuster gap	0.45-0.85 mm (0.0177-0.0334 in)
Camshaft	
Theoretical valve lift @zero lash (intake)	12.0 mm (0.4724 in)
Theoretical valve lift @zero lash (exhaust)	12.0 mm (0.4724 in)
Lobe lift (exhaust) (LH)	7.4974 mm (0.2951 in)
Lobe lift (exhaust) (RH)	7.4979 mm (0.2952 in)
Lobe lift (intake)	7.1103 mm (0.2799 in)

Allowable lobe lift loss	0
Journal diameter	26.96-26.93 mm (1.0615-1.0605 in)
Journal bore inside diameter (cap assembled)	27.01-26.99 mm (1.0635-1.0625 in)
Camshaft journal-to-bearing clearance	0.076-0.025 mm (0.0030-0.0010 in)
Runout: Full indicator measurement on all journals when supported on front and rear journal	0.09 mm (0.0035 in) (4 places)
Camshaft end play	0.03-0.19 mm (0.0011-0.0075 in)
Cylinder Block	
Cylinder bore diameter	90.213-90.226 (grade 2)
Cylinder bore maximum taper	0.013 mm (0.00051 in)
Cylinder bore maximum out-of-round	0.015 mm (0.00059)
Main bearing bore inside diameter	72.40-72.424 mm (2.8504-2.8513 in)
Crankshaft	
Main bearing journal diameter	67.483-67.503 mm (2.6568-2.6576 in)
Main bearing journal maximum taper	0.004 mm (0.0002 in)
Main bearing journal maximum-out-of-round	0.0075 mm (0.0003 in) between cross sections
Main bearing journal-to-cylinder block clearance	0.066-0.024 mm (0.0259-0.0009 in)
Connecting rod journal diameter	53.003-52.983 mm (2.0867-2.0859 in)
Connecting rod journal maximum taper (straightness)	0.004 mm (0.0002 in)
Connecting rod journal maximum-out-of-round	0.0075 mm (0.0003 in) between cross sections
Crankshaft maximum end play	0.301 mm (0.0118 in)
Piston and Connecting Rod	
Piston diameter Grade 1 Grade 2 Grade 3	 90.191-90.206 mm (3.5508-3.5514 in) 90.203-90.220 mm (3.5513-3.5519 in) 90.217-90.232 mm (3.5518-3.5524 in)
Piston-to-cylinder bore clearance @ 43 mm from top[a]	-0.005 to + 0.025 mm (-0.0002 to + 0.0010 in)
Piston ring end gap (top)	0.15-0.30 mm (0.0059-0.0118 in)
Piston ring end gap (intermediate)	0.15-0.30 mm (0.0059-0.0118 in)
Piston ring end gap (oil control)	0.15-0.30 mm (0.0059-0.0118 in)
Ring groove width (top)	1.520-1.540 mm (0.0598-0.0606 in)
Ring groove width (intermediate)	1.520-1.540 mm (0.0598-0.0606 in)
Ring groove width (oil control)	3.03-3.055 mm (0.1193-0.1203 in)
Piston ring width (top)	1.5 mm (0.05 in)
Piston ring width (intermediate)	1.5 mm (0.05 in)
Piston ring-to-groove clearance (top)	0.020-0.060 mm (0.0008-0.0024 in)
Piston ring-to-groove clearance (intermediate)	0.020-0.060 mm (0.0008-0.0023 in)
Piston ring-to-groove clearance (oil control)	0.030-0.070 mm (0.0012-0.0028 in)
Piston pin bore diameter	22.0065-22.0110 mm (0.8664-0.8666 in)

Piston pin diameter	21.995-21.997 mm (0.8659-0.8660 in)
Piston pin length	61.870-62.120 mm (2.4358-2.4456 in)
Piston pin-to-piston fit	0.0095-0.016 mm (0.0004-0.0006 in)
Piston-to-connecting rod clearance	6.58-7.58 mm (0.259-0.298 in)
Connecting rod-to-pin clearance	0.016-0.038 mm (0.0006-0.0015 in)
Connecting rod pin bore diameter	22.02-22.01 mm (0.8671-0.8666 in)
Connecting rod length (centerline bore-to-bore)	150.7 mm (5.9330 in)
Connecting rod maximum allowable bend	±0.038 mm (0.0015 in)
Connecting rod maximum allowable twist	±0.05 mm (0.0019 in)
Connecting rod bearing bore diameter	56.86-56.89 mm (2.2388-2.2396 in)
Connecting rod bearing-to-crankshaft clearance	0.06-0.02 mm (0.0026-0.0010 in)
Connecting rod side clearance (standard)	0.015-0.45 mm (0.0006-0.0177 in)
Connecting rod side clearance (maximum)	0.50 mm (0.0197 in)

[a] New pistons have a coating that may cause the piston-to-bore clearance to read negative, indicating the piston is slightly larger than the bore. This coating will wear off and should not be a cause of concern.

TORQUE SPECIFICATIONS

TORQUE SPECIFICATIONS

Description	Nm	lb-ft	lb-in
A/C compressor stud bolts	25	18	-
Accessory drive idler pulley bolt	25	18	-
Camshaft bearing cap bolts[a]	-	-	-
Camshaft sprocket bolt[a]	-	-	-
Catalytic converter-to-exhaust manifold nut	48	35	-
Connecting rod bearing cap bolts[a]	-	-	-
Crankshaft main bearing cap bolts[a]	-	-	-
Crankshaft pulley bolt[a]	-	-	-
Crankshaft rear seal retainer plate[a]	-	-	-
Cylinder head bolt[a]	-	-	-
Coolant bypass tube stud bolt	25	18	-
Coolant pump bolts	25	18	-
Coolant pump pulley bolts	25	18	-
Coolant outlet adapter bolts	25	18	-
Engine block coolant drain plug	20	15	-
Engine front cover[a]	-	-	-
Engine mount bolts	70	52	-
Engine mount nuts	90	66	-
Engine oil pressure (EOP) switch[a]	-	-	-

EGR tube	40	30	-
Exhaust manifold heat shield bolts	10	-	89
Exhaust manifold nut[a]	-	-	-
Exhaust manifold studs	12	9	-
Flexplate bolts[a]	-	-	-
Generator battery cable nut	9	-	80
Generator bolts	25	18	-
Generator bracket bolts	10	-	89
Ground strap nut	10	-	89
Ground strap-to-RH cylinder head stud bolt	25	18	-
Ground wire-to-fender bolt	10	-	89
Heated oxygen sensor (HO2S)	40	30	-
Ignition coil bolts	10	-	89
Intake manifold bolts[a]	-	-	-
Intake manifold crash bracket bolt	25	18	-
Intake manifold shield bolts	12	9	-
Intermediate steering shaft pinch bolt	30	22	-
Jack screws[a]	-	-	-
Knock sensor (KS) bolts	25	18	-
Oil cooler hose bolt	10	-	89
Oil filter adapter bolts[a]	-	-	-
Oil level indicator tube bolt	10	-	89
Oil pan bolts[a]	-	-	-
Oil pan drain plug	13	10	-
Oil pump bolts[a]	-	-	-
Oil pump screen cover and pickup tube bolts	10	-	89
Oil pump screen cover and pickup tube spacer	25	18	-
Oil pump screen cover and tube-to-oil pump screen cover and tube spacer bolt	25	18	-
Power steering pump bolts	25	18	-
Power steering tube bracket nut	10	-	89
Shield bolts	25	18	-
Spark plugs	15	11	-
Starter motor bolts[a]	-	-	-
Starter motor B-terminal nut	12	9	-
Starter motor S-terminal nut	6	-	53
Timing chain guide bolts	10	-	89
Timing chain tensioner bolts	25	18	-
Torque converter inspection cover bolts	19	14	-
Torque converter nuts	36	27	-

Transmission bellhousing bolts	48	35	-
Transmission cooler tube bracket bolt	15	11	-
Transmission cooler tube bracket nut	9	-	80
Transmission mount insulator nuts	30	22	-
Transmission wiring harness bracket (located at the rear of RH cylinder head) bolt and stud	25	18	-
Valve cover studs and bolts[a]	-	-	-

[a] Refer to the procedure.

DESCRIPTION AND OPERATION

ENGINE

NOTE: For additional information, refer to the exploded view under the assembly procedure.

The 4.6L (281 CID) is a V-8 engine with the following features:

- Single overhead camshafts
- Two valves per cylinder
- Sequential multi-port fuel injection (SFI)
- Aluminum cylinder heads
- Cast iron, 90-degree V-cylinder block
- Individually chain-driven camshafts with a hydraulic timing chain tensioner on each timing chain
- Electronic ignition system with 8 ignition coils
- Electronic returnless fuel system

Identification

Always refer to these labels when installation of new parts is necessary, or when checking engine calibrations. The engine parts often differ within a CID family. Verification of the identification codes will make sure that the correct parts are obtained. These codes contain all the pertinent information relating to the dates, optional equipment and revisions. The Ford Master Parts Catalog contains a complete listing of the codes and their application.

Code Information

The engine code information label, located on the side of the valve cover and the front side of the valve cover, contains the following:

- Engine build date
- Engine plant code

- Engine code

Exhaust Emission Control System

Operation and necessary maintenance of the exhaust emission control devices used on this engine are covered in the **Introduction - Gasoline Engines** article.

Induction System

The sequential multi-port fuel injection (SFI) provides the fuel/air mixture needed for combustion in the cylinders. The 8 solenoid-operated fuel injectors:

- are mounted in the intake manifold.
- meter fuel into the air intake stream in accordance with engine demand.
- are positioned so that their tips direct fuel just ahead of the engine intake valves.
- are connected in series with the fuel pressure sensor.

A constant fuel pressure is maintained across the fuel injectors by the fuel pressure sensor. The fuel pressure sensor:

- is positioned upstream from the fuel injectors on the fuel rail.

Valve Train

The valve train operates as follows:

- Ball-tip hydraulic lash adjusters provide automatic lash adjustment.
- Roller followers ride on the camshaft lobe, transferring the up-and-down motion of the camshafts to the valves in the cylinder heads.

PCV System

All engines are equipped with a closed-type PCV system recycling the crankcase vapors to the upper intake manifold.

Lubrication System

The engine lubrication system operates as follows:

- Oil is drawn into the oil pump through the oil pump screen cover and tube in the sump of the oil pan.
- Oil is pumped through the oil filter on the left front side of the cylinder block.
- Oil enters the main gallery where it is distributed to the crankshaft main journals and to both cylinder heads.
- From the main journals, the oil is routed through cross-drilled passages in the crankshaft to lubricate the connecting rod bearings. Controlled leakage through the crankshaft main bearings and connecting rod bearings is slung radially outward to cool and lubricate the cylinder walls as well as the entire connecting

rod, piston and piston ring assembly.

- The left cylinder head is fed from a drilling into the supply passage feeding the main gallery at the front of the cylinder block. The right cylinder head is fed from a drilling into the rear of the main gallery. Main gallery pressure is reduced as it enters the cylinder head galleries through fixed serviceable orifices, located at the upper part of the feed passages. It is this reduced pressure in the cylinder head galleries which feeds the camshaft journals, the hydraulic lash adjusters and the primary and secondary timing chain tensioners.
- The camshaft lobe and roller followers are lubricated by splash created through valve train operation.

Oil Pump

The lubrication system of the 4.6L (2V) engine is designed to provide optimum oil flow to critical components of the engine through its entire operating range. The heart of the system is a positive displacement internal gear oil pump using top seal rotors. Generically this design is known as a gerotor pump, which operates as follows:

- The oil pump is mounted on the front face of the cylinder block.
- The inner rotor is piloted on the crankshaft post and is driven through flats on the crankshaft.
- System pressure is limited by an integral, internally-vented relief valve which directs the bypassed oil back to the inlet side of the oil pump.
- Oil pump displacement has been selected to provide adequate volume to make sure of correct oil pressure, both at hot idle and maximum speed.
- The relief valve calibration protects the system from excessive pressure during high viscosity conditions.
- The relief valve is designed to provide adequate connecting rod bearing lubrication under high-temperature and high-speed conditions.

Engine Cylinder Identification

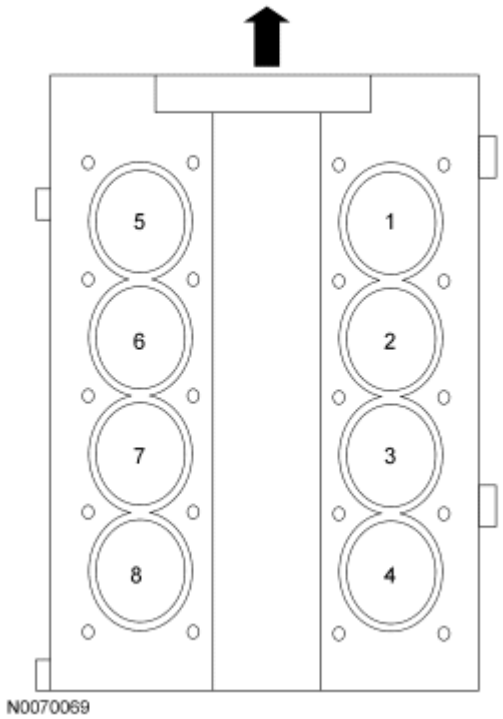

Fig. 1: Engine Cylinder Identification
Courtesy of FORD MOTOR CO.

DIAGNOSTIC TESTS

ENGINE

Refer to **ENGINE SYSTEM - GENERAL INFORMATION** article for basic mechanical concerns or refer to the **Introduction - Gasoline Engines** article.

IN-VEHICLE SERVICING

INTAKE MANIFOLD

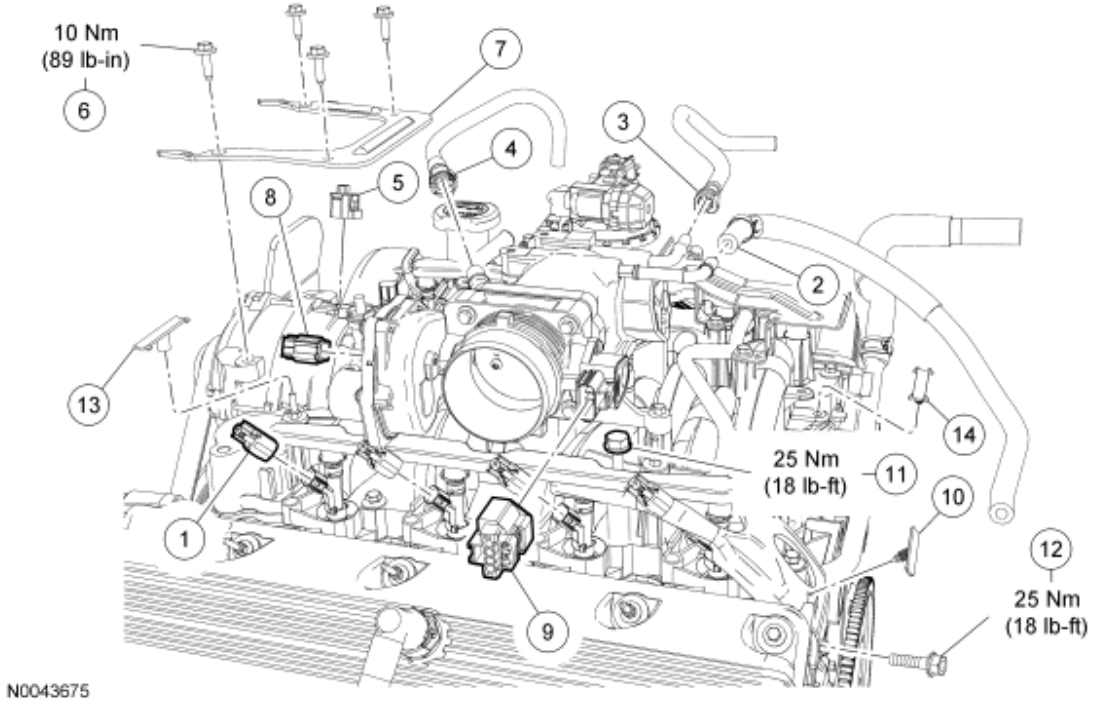

Fig. 2: Exploded View Of Intake Manifold Components (With Torque Specifications - 1 Of 3)
Courtesy of FORD MOTOR CO.

Item	Part Number	Description
1	14A464	Fuel injector electrical connector (4 required) (part of 12B637)
2	9C490	Brake booster vacuum hose
3	9D289	Evaporative emission (EVAP) canister purge valve tube
4	6K817	PCV tube
5	14A464	Generator electrical connector (part of 12B637)
6	N807309	Generator bracket bolt (4 required)
7	10153	Generator bracket
8	14A464	Throttle control electrical connector (part of 12B637)
9	14A464	Throttle position (TP) sensor electrical connector (part of 12B637)
10	13A506	Wire harness retainer
11	W705793	Intake manifold crash bracket bolt
12	W701725	Intake manifold crash bracket bolt
13	13A506	Wire harness retainer
14	13A506	Wire harness retainer

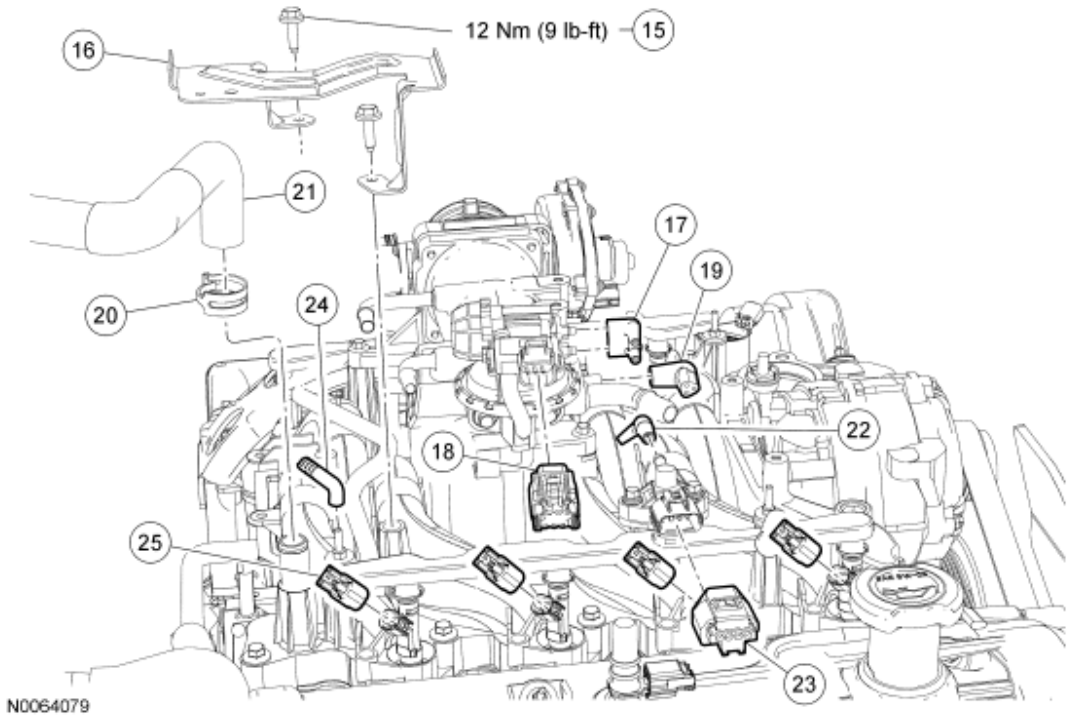

Fig. 3: Exploded View Of Intake Manifold Components (With Torque Specifications - 2 Of 3)
Courtesy of FORD MOTOR CO.

Item	Part Number	Description
15	N807309	Intake manifold shield bolt (2 required)
16	9F460	Intake manifold shield
17	9E489	EGR system module vacuum connector
18	14A464	EGR system module electrical connector (part of 12B637)
19	9E499	Intake manifold vacuum hose
20	15161	Heater hose spring clamp
21	18D334	Heater hose
22	9E489	Fuel rail pressure and temperature sensor vacuum connector
23	14A464	Fuel rail pressure and temperature sensor electrical connector (part of 12B637)
24	14A464	Ground wire connector (part of 12B637)
25	14A464	Fuel injector electrical connector (4 required) (part of 12B637)

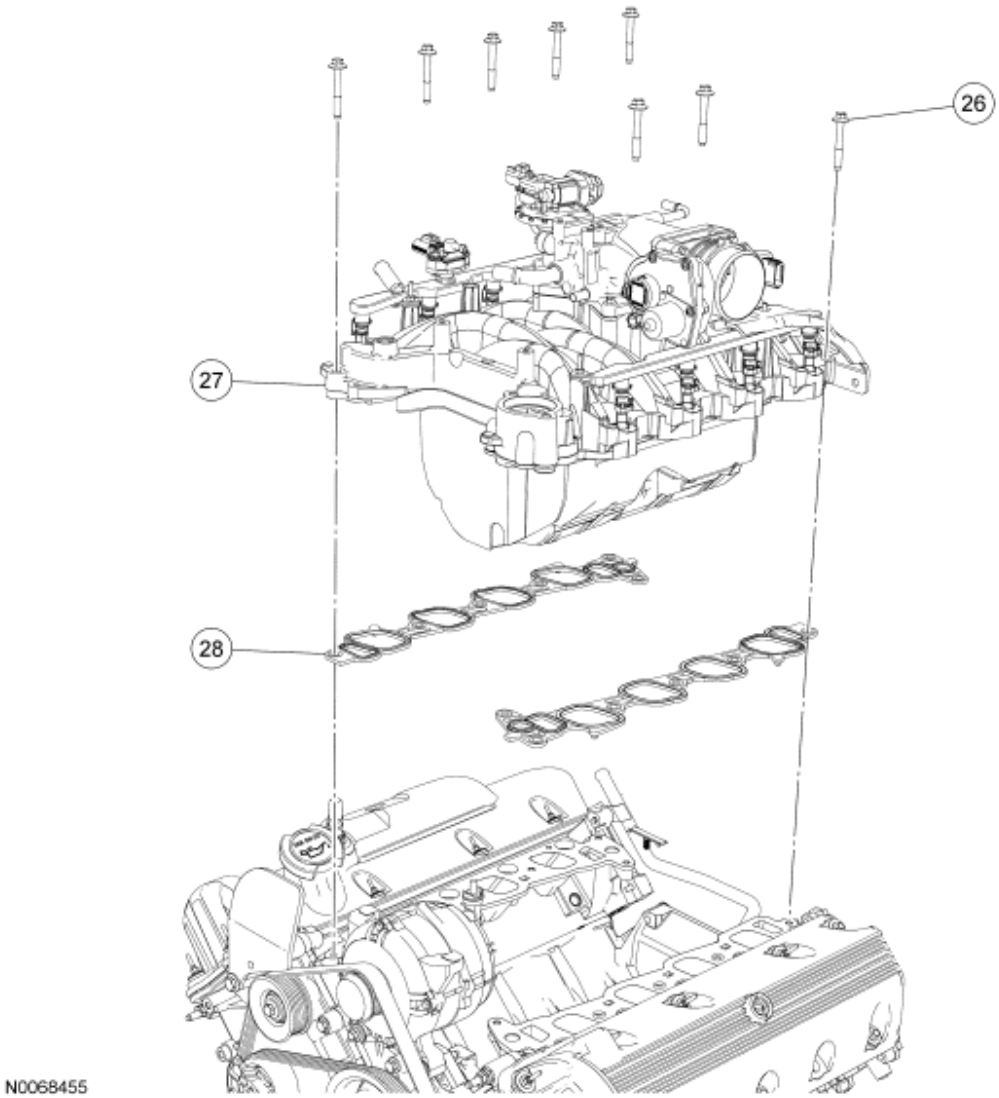

Fig. 4: Exploded View Of Intake Manifold Components (With Torque Specifications - 3 Of 3)
Courtesy of FORD MOTOR CO.

Item	Part Number	Description
26	N808130	Intake manifold bolt (8 required)
27	9424	Intake manifold
28	9439	Intake manifold gasket (2 required)

REMOVAL

WARNING: If equipped with fire suppression system, depower the system. For important safety warnings and procedures, refer to FIRE SUPPRESSION SYSTEM article.

1. With the vehicle in NEUTRAL, position it on a hoist. For additional information, refer to **JACKING**

AND LIFTING article.

2. Disconnect the fuel tube spring lock coupling. For additional information, refer to **FUEL SYSTEM - GENERAL INFORMATION** article.
3. Disconnect the battery ground cable. For additional information, refer to **BATTERY, MOUNTING AND CABLES** article.
4. Drain the engine cooling system. For additional information, refer to **ENGINE COOLING** article.
5. Remove the air cleaner and outlet pipe. For additional information, refer to **INTAKE AIR DISTRIBUTION AND FILTERING** article.
6. Remove the wiper mounting arm and pivot shaft. For additional information, refer to **WIPERS AND WASHERS** article.
7. Disconnect the 8 fuel injector electrical connectors.
8. Remove the 8 ignition coil-on-plugs. For additional information, refer to **ENGINE IGNITION** article.
9. Remove the 2 bolts and the intake manifold shield.
10. Disconnect the brake booster vacuum hose from the intake manifold.
11. Disconnect the quick connect coupling evaporative emission (EVAP) canister purge valve hoses from the throttle body (TB) spacer and from the EVAP canister purge valve. For additional information, refer to **FUEL SYSTEM - GENERAL INFORMATION** article.
12. Disconnect the quick connect coupling PCV tube from the TB spacer. For additional information, refer to **FUEL SYSTEM - GENERAL INFORMATION** article.
13. Disconnect the EGR system module vacuum and electrical connectors.
14. Disconnect the intake manifold-to-TB spacer vacuum hose.
15. Disconnect the generator electrical connector.
16. Remove the 4 generator bracket bolts and the bracket.
17. Remove the coolant thermostat. For additional information, refer to **ENGINE COOLING** article.
18. Disconnect the throttle control and the throttle position (TP) sensor electrical connectors.
19. Release the heater hose spring clamp and disconnect the heater hose.
20. Remove the EGR system module tube. For additional information, refer to **ENGINE EMISSION CONTROL** article.
21. If equipped, detach the wire harness retainer from the intake manifold crash bracket.
22. Remove the intake manifold crash bracket bolt and prevent the bolt from contacting the cylinder head with a rubber band or tie strap.

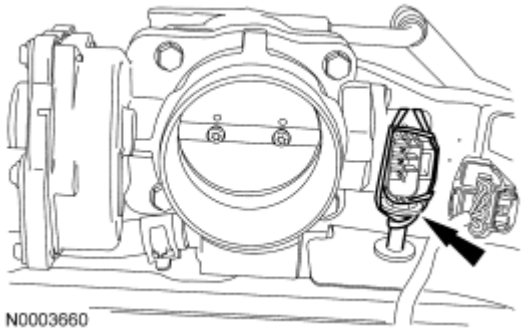

Fig. 5: Tying Up Intake Manifold Crash Bracket Bolt
Courtesy of FORD MOTOR CO.

23. Remove the intake manifold crash bracket bolt.
24. Disconnect the fuel rail pressure and temperature sensor vacuum and electrical connectors.
25. Remove the wire harness retainer from the LH front fuel rail stud.
26. Remove the wire harness retainer from the rear of the intake manifold.
27. Disconnect the ground connector from the RH rear fuel rail stud bolt.
28. Remove the 8 bolts and the intake manifold.
    - Remove and discard the intake manifold gaskets.
29. Clean the sealing surfaces.

INSTALLATION

NOTE: Align the gasket locator tabs with the slots in the cylinder head.

1. Install new intake manifold gaskets.

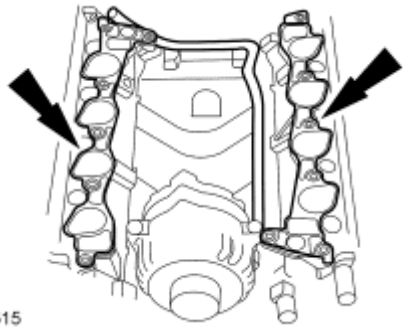

Fig. 6: Intake Manifold Gaskets
Courtesy of FORD MOTOR CO.

2. Install the intake manifold and hand-tighten the 8 bolts.
3. Install the 8 ignition coil-on-plugs. For additional information, refer to **ENGINE IGNITION** article.
4. Position the intake manifold crash bracket and loosely install the bolt and stud bolt.
5. Tighten the bolts in the sequence shown.
    - Tighten to 25 Nm (18 lb-ft).

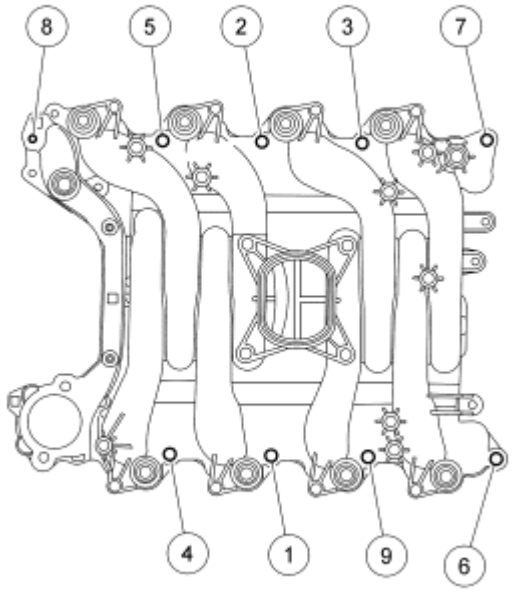

N0037509

Fig. 7: Intake Manifold Bolt Tightening Torque Sequence
Courtesy of FORD MOTOR CO.

6. Tighten the intake manifold crash bracket bolt.
   - Tighten to 25 Nm (18 lb-ft).
7. Install the EGR system module tube. For additional information, refer to **ENGINE EMISSION CONTROL** article.
8. Install the intake manifold shield and the 2 bolts.
   - Tighten to 12 Nm (9 lb-ft).
9. Connect the throttle control and the TP sensor electrical connectors.
10. Install the coolant thermostat. For additional information, refer to **ENGINE COOLING** article.
11. Install the generator bracket and the 4 bracket bolts.
    - Tighten to 10 Nm (89 lb-in).
12. Connect the generator electrical connector.
13. Connect the EVAP canister purge valve hoses to the TB and the EVAP canister purge valve. For additional information, refer to **FUEL SYSTEM - GENERAL INFORMATION** article.
14. Connect the intake manifold vacuum hose to the TB spacer.
15. Connect the EGR system module vacuum and electrical connectors.
16. Connect the PCV tube quick connect coupling to the TB spacer. For additional information, refer to **FUEL SYSTEM - GENERAL INFORMATION** article.
17. Connect the brake booster vacuum hose to the intake manifold.
18. Install the heater hose and spring clamp.
19. Connect the fuel rail pressure and temperature sensor vacuum and electrical connectors.

20. Connect the 8 fuel injector electrical connectors.
21. Install the wire harness retainer to the rear of the intake manifold.
22. Attach the wire harness retainer to the LH front fuel rail stud.
23. If equipped, attach the wire harness retainer to the intake manifold crash bracket.
24. Connect the ground connector to the RH rear fuel rail stud bolt.
25. Install the wiper mounting arm and pivot shaft. For additional information, refer to **WIPERS AND WASHERS** article.
26. Connect the fuel spring lock coupling. For additional information, refer to **FUEL SYSTEM - GENERAL INFORMATION** article.
27. Install the air cleaner and outlet pipe. For additional information, refer to **INTAKE AIR DISTRIBUTION AND FILTERING** article.
28. Connect the battery ground cable. For additional information, refer to **BATTERY, MOUNTING AND CABLES** article.
29. Fill and bleed the engine cooling system. For additional information, refer to **ENGINE COOLING** article.

WARNING: **If equipped with fire suppression system, repower the system. For important safety warnings and procedures, refer to FIRE SUPPRESSION SYSTEM article.**

30. If equipped with fire suppression system, repower the system.

VALVE COVER - RH

Material

Item	Specification
Motorcraft Metal Surface Prep ZC-31	-
Silicone Gasket and Sealant TA-30	WSE-M4G323-A4
Silicone Gasket Remover ZC-30	-

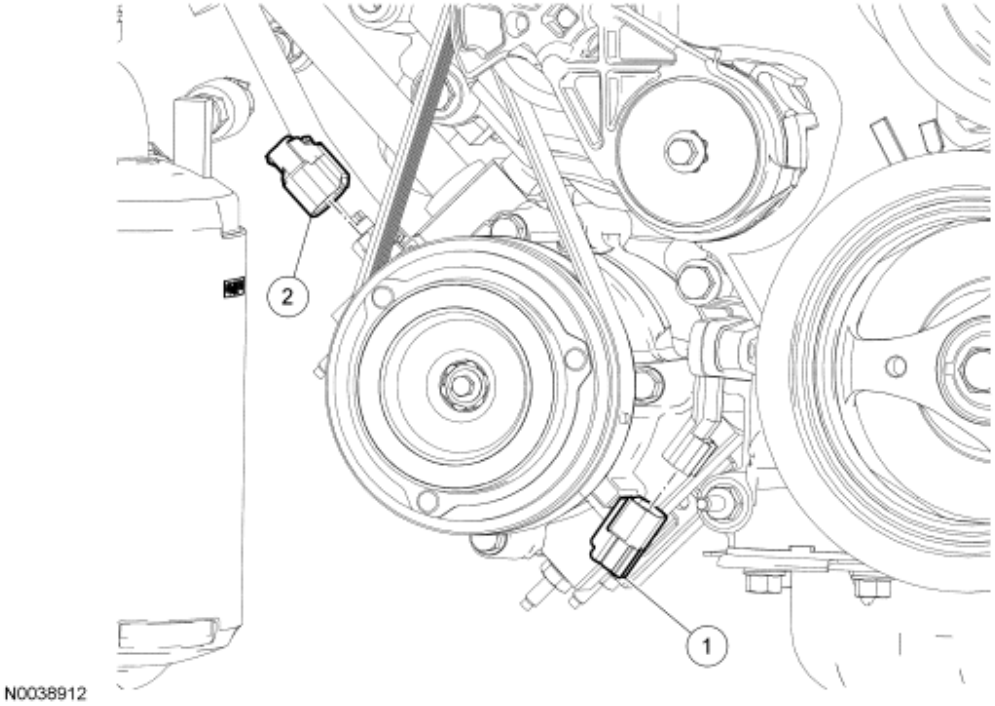

Fig. 8: Exploded View Of Right Hand Valve Cover (1 Of 4)
Courtesy of FORD MOTOR CO.

Item	Part Number	Description
1	14A464	Crankshaft position (CKP) sensor electrical connector (part of 12B637)
2	14A464	A/C compressor electrical connector (part of 12B637)

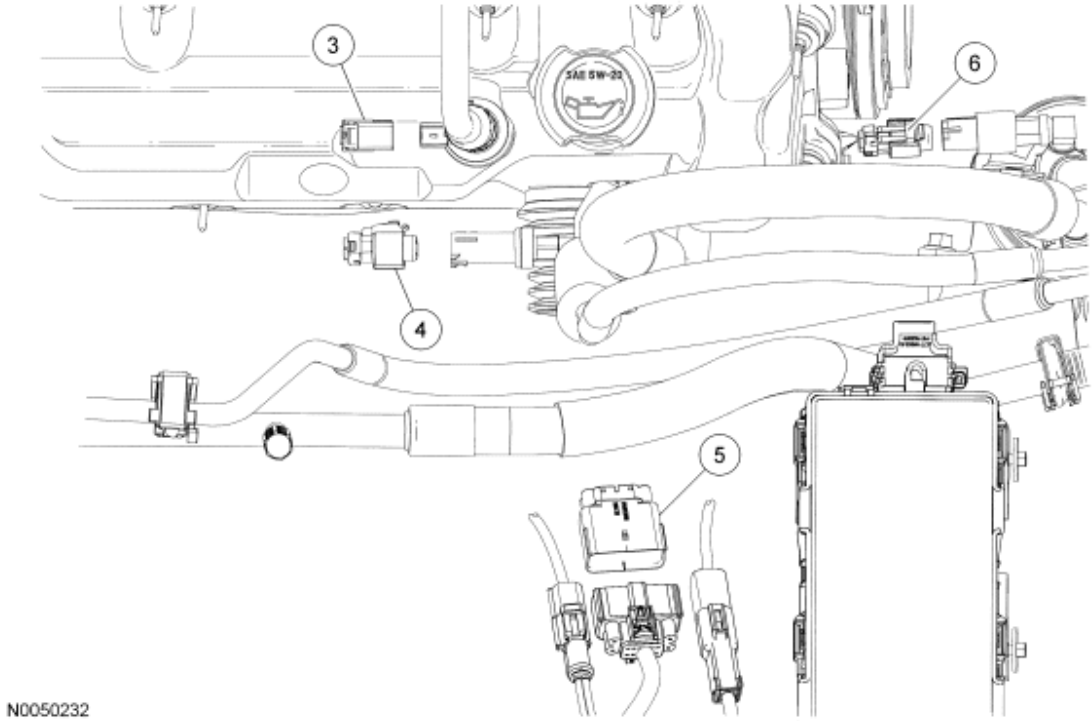

Fig. 9: Exploded View Of Right Hand Valve Cover (2 Of 4)
Courtesy of FORD MOTOR CO.

Item	Part Number	Description
3	14A464	PCV valve electrical connector (part of 12B637)
4	14A464	A/C pressure sensor electrical connector (part of 12B637)
5	14A464	Electronic engine control electrical connector (part of 12B637)
6	14A464	A/C accumulator switch electrical connector (part of 12B637)

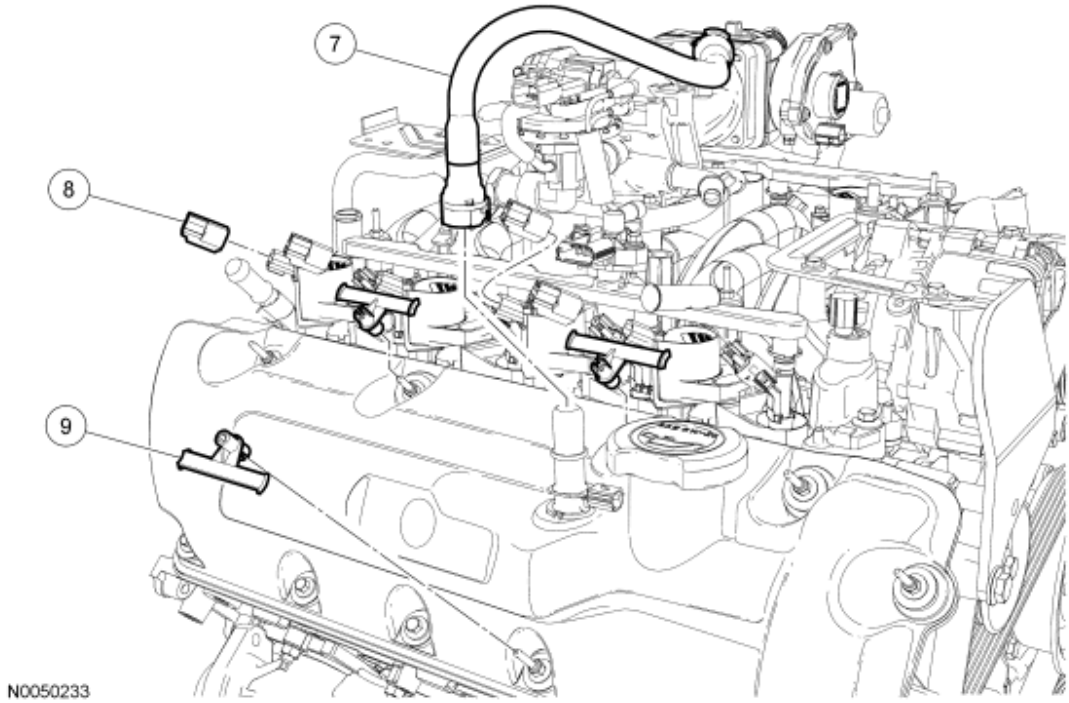

Fig. 10: Exploded View Of Right Hand Valve Cover (3 Of 4)
Courtesy of FORD MOTOR CO.

Item	Part Number	Description
7	6K817	PCV tube
8	14A464	Ignition coil electrical connector (4 required) (part of 12B637)
9	14A163	Engine wire harness retainer (3 required) (part of 12B637)

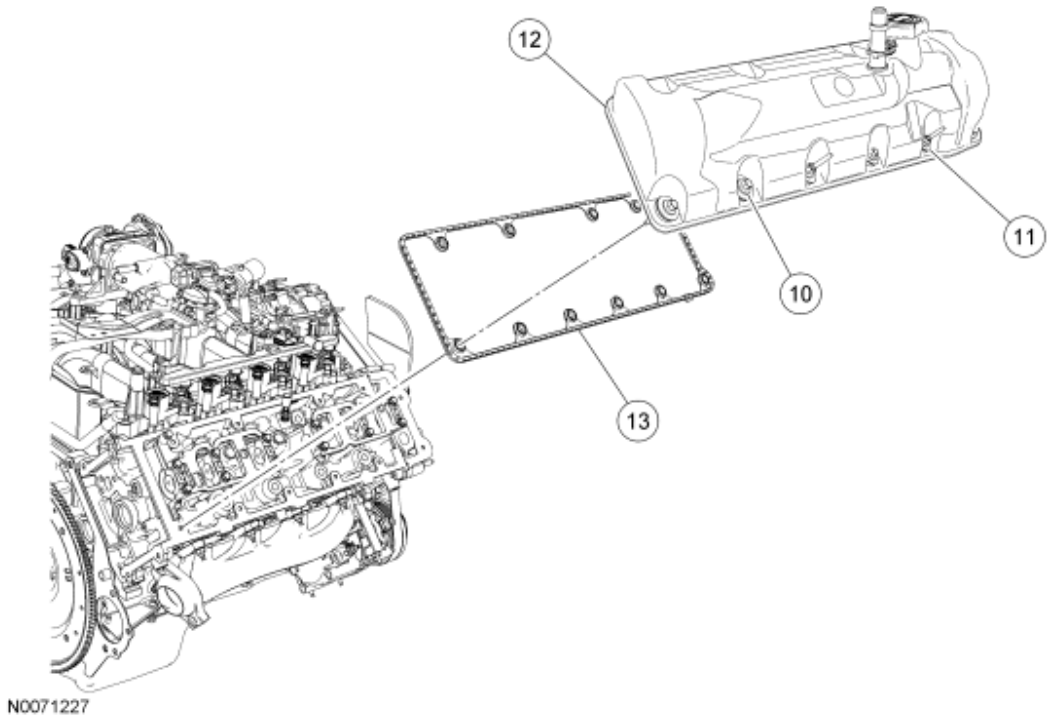

Fig. 11: Exploded View Of Right Hand Valve Cover (4 Of 4)
Courtesy of FORD MOTOR CO.

Item	Part Number	Description
10	N806183	RH valve cover bolt (4 required)
11	W705644	RH valve cover stud bolt (7 required)
12	6582	RH valve cover
13	6584	RH valve cover gasket

REMOVAL

WARNING: If equipped with fire suppression system, depower the system. For important safety warnings and procedures, refer to FIRE SUPPRESSION SYSTEM article.

1. With the vehicle in NEUTRAL, position it on a hoist. For additional information, refer to **JACKING AND LIFTING** article.
2. Disconnect the fuel tube spring lock coupling. For additional information, refer to **FUEL SYSTEM - GENERAL INFORMATION** article.
3. Disconnect the battery ground cable. For additional information, refer to **BATTERY, MOUNTING AND CABLES** article.
4. Remove the LH engine mount. For additional information, refer to **Engine Mount - LH**.
5. Remove the evaporative emission (EVAP) canister purge valve. For additional information, refer to **EVAPORATIVE EMISSIONS** article.

6. Disconnect the crankshaft position (CKP) sensor electrical connector.
7. Disconnect the A/C compressor electrical connector.
8. Disconnect the PCV valve electrical connector.
9. Disconnect the A/C pressure sensor electrical connector.
10. Disconnect the electronic engine control electrical connector.
11. Disconnect the A/C accumulator switch electrical connector.
12. Disconnect the PCV tube quick connect coupling from the PCV valve. For additional information, refer to **FUEL SYSTEM - GENERAL INFORMATION** article.
13. Disconnect the 4 RH ignition coil electrical connectors.
14. Disconnect the 3 wire harness retainers from the valve cover and position wire harness aside.
15. Lower the engine.

CAUTION: Do not use metal scrapers, wire brushes, power abrasive discs or other abrasive means to clean the sealing surface. These tools cause scratches and gouges that make leak paths. Use a plastic scraping tool to remove all traces of the gasket material.

16. Loosen the 7 studs, the 3 bolts and remove the valve cover and discard the gasket.
    - Clean the valve cover mating surface of the cylinder head with silicone gasket remover and metal surface prep. Follow the directions on the packaging.
    - Discard the valve cover gasket. Clean the valve cover gasket groove with soap and water or a suitable solvent.

INSTALLATION

CAUTION: If not secured within 4 minutes, the sealant must be removed and the sealing area cleaned with metal surface cleaner. Allow to dry until there is no sign of wetness, or 4 minutes, whichever is longer. Failure to follow this procedure may cause future oil leakage.

1. Apply a bead of silicone gasket and sealant in 2 locations shown where the engine front cover meets the cylinder head.

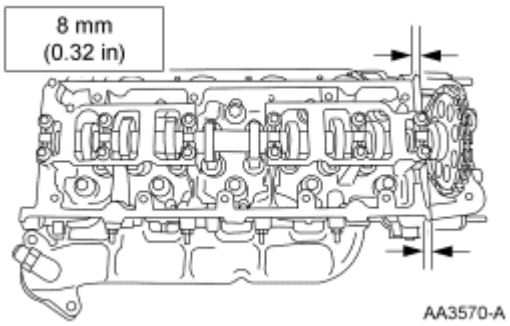

Fig. 12: Applying Sealant At Engine Front Cover/Cylinder Head Surface

Courtesy of FORD MOTOR CO.

2. Install a new valve cover gasket and the valve cover.
   - Tighten the fasteners in the sequence shown to 10 Nm (89 lb-in).

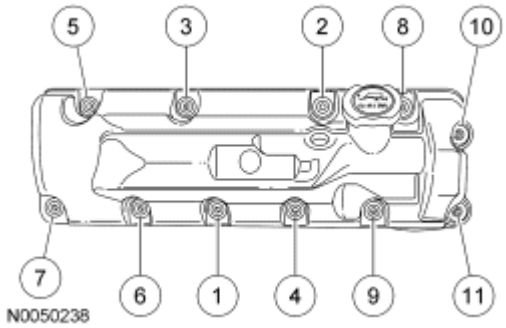

Fig. 13: Valve Cover Torque Sequence
Courtesy of FORD MOTOR CO.

3. Raise the engine.
4. Position wire harness and connect the 3 wire harness retainers to the valve cover.
5. Connect the 4 RH ignition coil electrical connectors.
6. Connect the PCV tube quick connect coupling to the PCV valve. For additional information, refer to **FUEL SYSTEM - GENERAL INFORMATION** article.
7. Connect the A/C accumulator switch electrical connector.
8. Connect the 3 electronic engine control electrical connectors.
9. Connect the A/C pressure sensor electrical connector.
10. Connect the PCV valve electrical connector.
11. Connect the A/C compressor electrical connector.
12. Connect the CKP sensor electrical connector.
13. Install the EVAP canister purge valve. For additional information, refer to **EVAPORATIVE EMISSIONS** article.
14. Install the LH engine mount. For additional information, refer to **Engine Mount - LH**.
15. Connect the fuel tube spring lock coupling. For additional information, refer to **FUEL SYSTEM - GENERAL INFORMATION** article.
16. Connect the battery ground cable. For additional information, refer to **BATTERY, MOUNTING AND CABLES** article.

WARNING: If equipped with fire suppression system, repower the system. For important safety warnings and procedures, refer to FIRE SUPPRESSION SYSTEM article.

17. If equipped with fire suppression system, repower the system.

VALVE COVER - LH

Material

Item	Specification
Motorcraft Metal Surface Prep ZC-31	-
Silicone Gasket and Sealant TA-30	WSE-M4G323-A4
Silicone Gasket Remover ZC-30	-

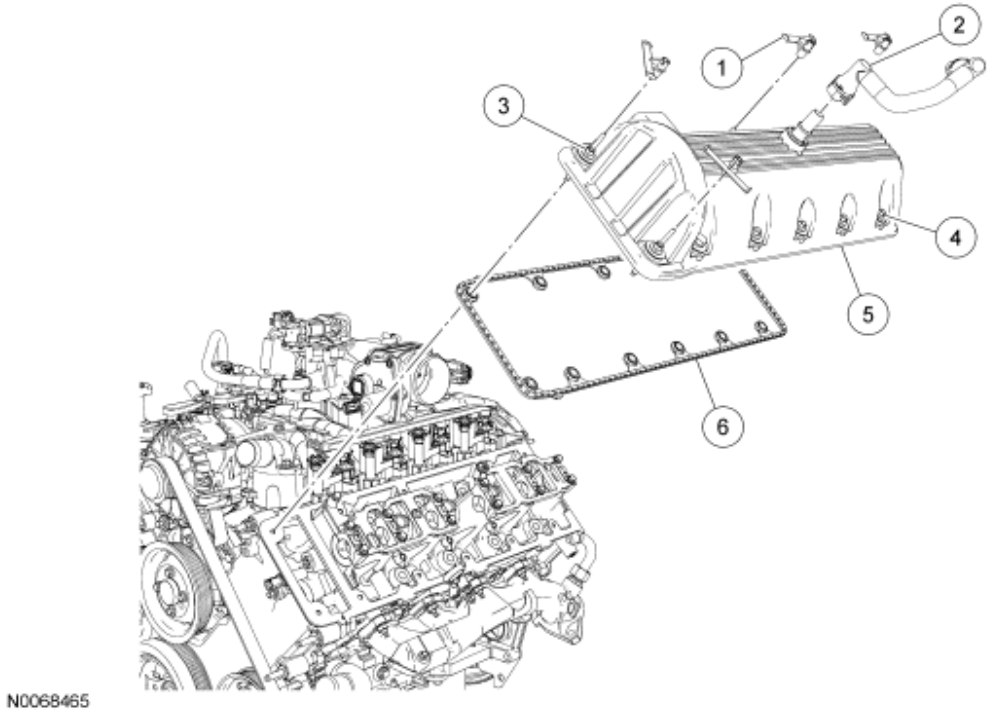

Fig. 14: Exploded View Of Left Hand Valve Cover
Courtesy of FORD MOTOR CO.

Item	Part Number	Description
1	13A506	Wire harness retainer (part of 12B637) (4 required)
2	6758	Crankcase ventilation tube
3	W705644	Valve cover stud bolt (6 required)
4	N806183	Valve cover bolt (5 required)
5	6A505	LH valve cover
6	6A559	LH valve cover gasket

REMOVAL

1. Remove the air cleaner and outlet pipe. For additional information, refer to **INTAKE AIR DISTRIBUTION AND FILTERING** article.
2. Disconnect the 4 wiring harness retainers from the valve cover and position the wire harness aside.

3. Disconnect the crankcase ventilation tube quick connect coupling from the valve cover. For additional information, refer to **FUEL SYSTEM - GENERAL INFORMATION** article.

CAUTION: Do not use metal scrapers, wire brushes, power abrasive discs or other abrasive means to clean the sealing surface. These tools cause scratches and gouges that make leak paths. Use a plastic scraping tool to remove all traces of the gasket material.

4. Loosen the 10 fasteners and remove the LH valve cover and gasket.
   - Clean the valve cover mating surface of the cylinder head with silicone gasket remover and metal surface prep. Follow the directions on the packaging.
   - Discard the valve cover gasket. Clean the valve cover gasket groove with soap and water or a suitable solvent.

INSTALLATION

CAUTION: If not secured within 4 minutes, the sealant must be removed and the sealing area cleaned with metal surface cleaner. Allow to dry until there is no sign of wetness, or 4 minutes, whichever is longer. Failure to follow this procedure may cause future oil leakage.

1. Apply a bead of silicone gasket and sealant in 2 locations shown where the engine front cover meets the cylinder head.

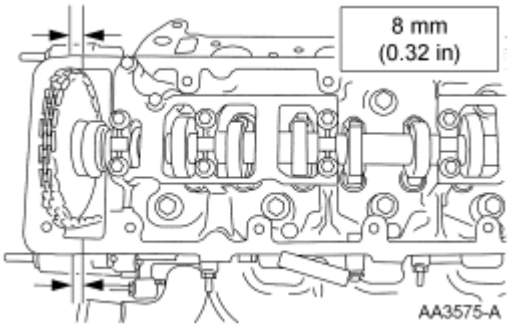

Fig. 15: Applying Sealant At Engine Front Cover/Cylinder Head Surface
Courtesy of FORD MOTOR CO.

2. Position the LH valve cover and new gasket on the cylinder head.
   - Tighten the fasteners in the sequence shown to 10 Nm (89 lb-in).

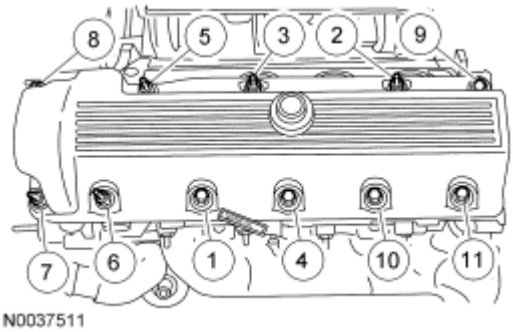

Fig. 16: Valve Cover Torque Sequence
Courtesy of FORD MOTOR CO.

3. Connect the crankcase ventilation tube quick connect coupling to the valve cover. For additional information, refer to **FUEL SYSTEM - GENERAL INFORMATION** article.
4. Position the wire harness and connect the 4 wiring harness retainers to the valve cover.
5. Install the air cleaner and outlet pipe. For additional information, refer to **INTAKE AIR DISTRIBUTION AND FILTERING** article.

LOWER END COMPONENTS - EXPLODED VIEW, CRANKSHAFT PULLEY AND CRANKSHAFT FRONT SEAL

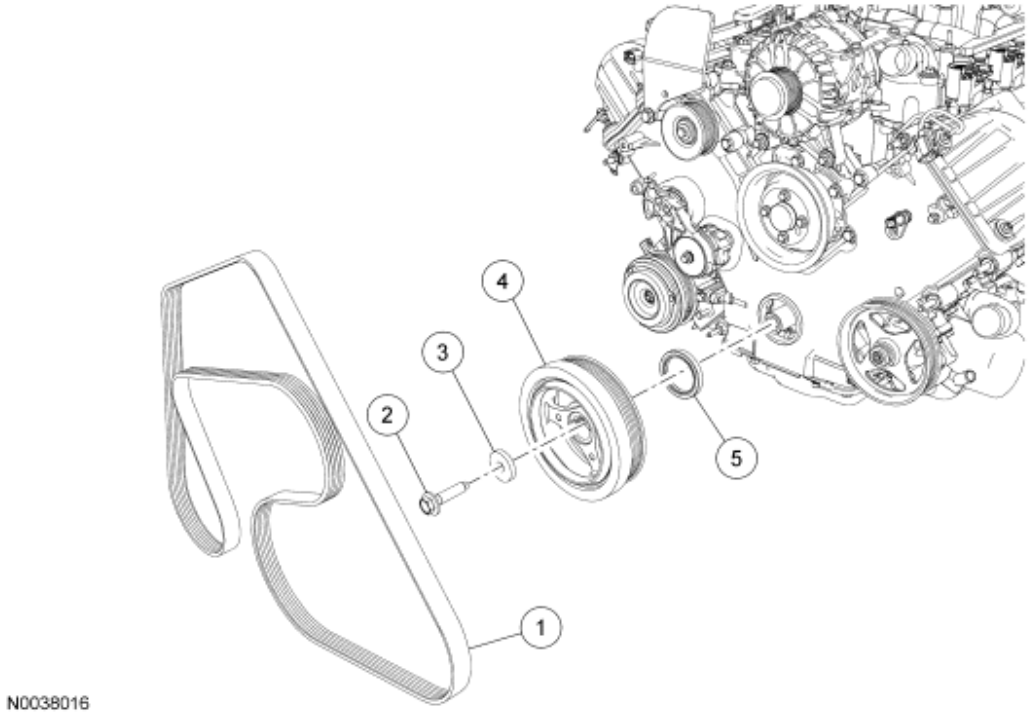

Fig. 17: Exploded View Of Crankshaft Pulley & Crankshaft Front Seal
Courtesy of FORD MOTOR CO.

Item	Part Number	Description

1	8620	Accessory drive belt
2	W701512	Crankshaft pulley bolt
3	N806165	Crankshaft pulley bolt washer
4	6316	Crankshaft pulley
5	6700	Crankshaft front seal

1. For additional information, refer to the following procedures.

CRANKSHAFT PULLEY

Special Tools

Illustration	Tool Name	Tool Number
 ST1287-A	Installer, Crankshaft Vibration Damper	303-102 (T74P-6316-B)
 ST1286-A	Remover, Crankshaft Vibration Damper	303-009 (T58P-6316-D)

Material

Item	Specification
Silicone Gasket and Sealant TA-30	WSE-M4G323-A4

REMOVAL

1. Remove the engine cooling fan and fan shroud. For additional information, refer to **ENGINE COOLING** article.
2. Rotate the tensioner clockwise and remove the accessory drive belt.


A0011763

Fig. 18: Rotating Tensioner Clockwise
Courtesy of FORD MOTOR CO.

3. Remove the crankshaft pulley bolt.

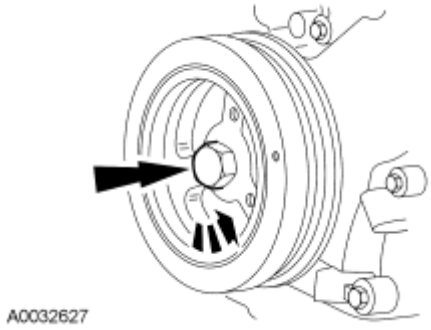

Fig. 19: Removing Crankshaft Pulley Bolt
Courtesy of FORD MOTOR CO.

4. Using the special tool, remove the crankshaft pulley.

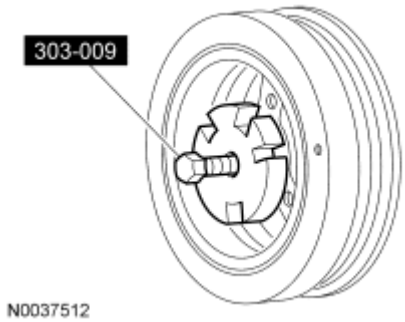

Fig. 20: Removing Crankshaft Pulley
Courtesy of FORD MOTOR CO.

INSTALLATION

NOTE: The crankshaft pulley must be installed within 4 minutes after applying the silicone.

1. Apply sealant to the Woodruff key slot on the crankshaft pulley.

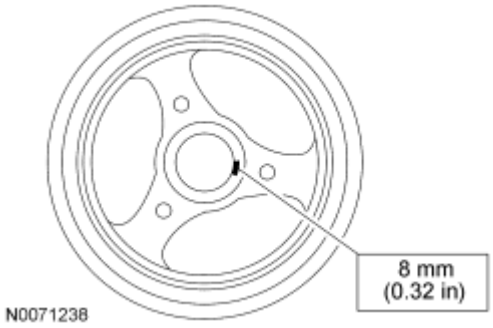

Fig. 21: Applying Sealant To Woodruff Key Slot
Courtesy of FORD MOTOR CO.

2. Using the special tool, install the crankshaft pulley.

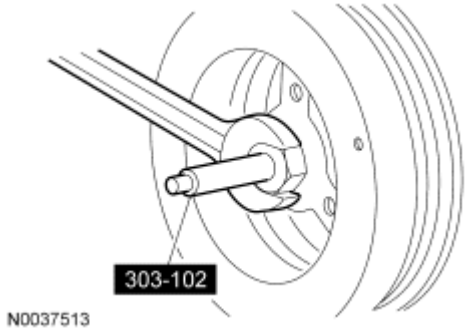

Fig. 22: Installing Crankshaft Pulley
Courtesy of FORD MOTOR CO.

3. Install the bolt and washer. Tighten the bolt in 4 steps.
   - Step 1: Tighten to 90 Nm (66 lb-ft).
   - Step 2: Loosen the bolt.
   - Step 3: Tighten to 50 Nm (37 lb-ft).
   - Step 4: Tighten an additional 90 degrees.

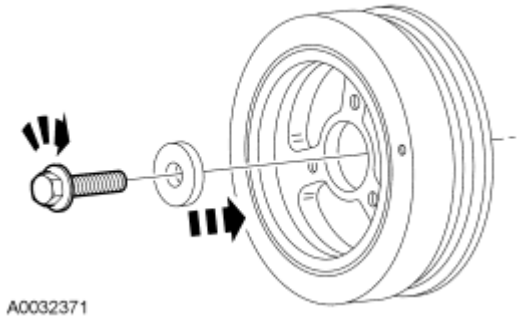

Fig. 23: Installing Crankshaft Pulley Bolt & Washer
Courtesy of FORD MOTOR CO.

4. Rotate the tensioner clockwise and install the accessory drive belt.

Fig. 24: Rotating Tensioner Clockwise
Courtesy of FORD MOTOR CO.

5. Install the engine cooling fan and the fan shroud. For additional information, refer to **ENGINE COOLING** article.

CRANKSHAFT FRONT SEAL

Special Tools

Illustration	Tool Name	Tool Number
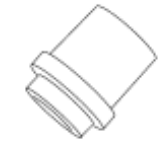 ST2197-A	Installer, Crankshaft Front Oil Seal	303-635
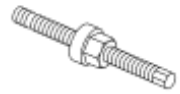 ST1287-A	Installer, Crankshaft Vibration Damper	303-102 (T74P-6316-B)
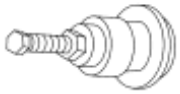 ST1328-A	Installer, Front Cover Oil Seal	303-335 (T88T-6701-A)
 ST1288-A	Remover, Crankshaft Front Oil Seal	303-107 (T74P-6700-A)

Material

Item	Specification
Motorcraft SAE 5W-20 Premium Synthetic Blend Motor Oil XO-5W20-QSP (US); Motorcraft SAE 5W-20 Super Premium Motor Oil CXO-5W20-LSP12 (Canada); or equivalent	WSS-M2C930-A

REMOVAL

1. Remove the crankshaft pulley. For additional information, refer to **Crankshaft Pulley**.
2. Using the special tool, remove the crankshaft front seal.

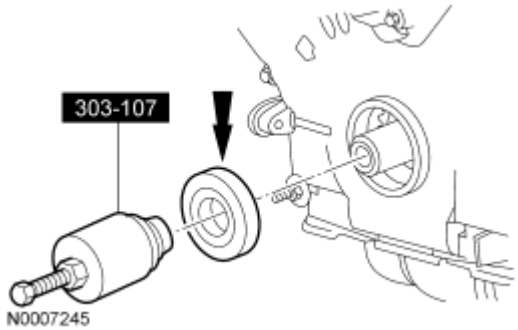

Fig. 25: Removing Crankshaft Front Seal Using Special Tool
Courtesy of FORD MOTOR CO.

INSTALLATION

1. Lubricate the engine front cover and the crankshaft front seal inner lip with clean engine oil.

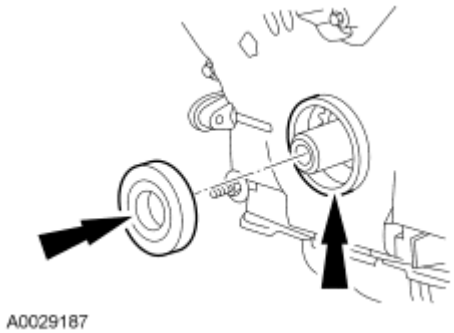

Fig. 26: Locating Crankshaft Front Seal
Courtesy of FORD MOTOR CO.

2. Using the special tools, install the crankshaft front seal into the engine front cover.

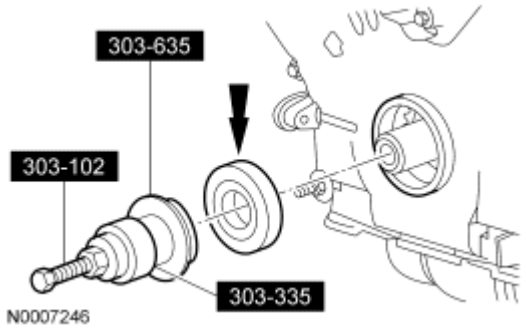

Fig. 27: Installing Crankshaft Front Seal Using Special Tools
Courtesy of FORD MOTOR CO.

3. Install the crankshaft pulley. For additional information, refer to **Crankshaft Pulley**.

ENGINE FRONT COVER

Material

Item	Specification
Motorcraft Metal Surface Cleaner ZC-21	WSE-M5B392-A
Motorcraft SAE 5W-20 Premium Synthetic Blend Motor Oil XO-5W20-QSP (US); Motorcraft SAE 5W-20 Super Premium Motor Oil CXO-5W20-LSP12 (Canada); or equivalent	WSS-M2C930-A
Silicone Gasket and Sealant TA-30	WSE-M4G323-A4

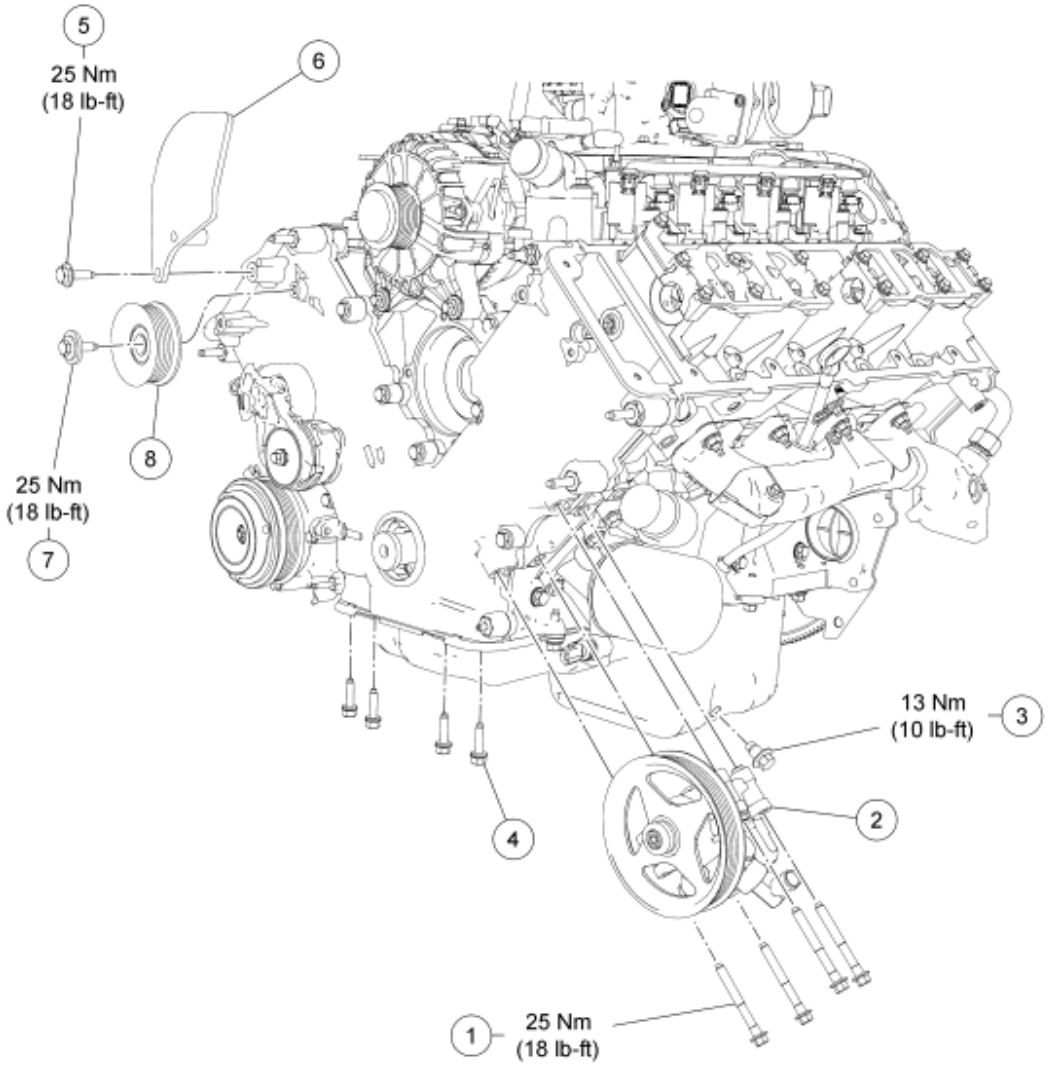

Fig. 28: Exploded View Of Engine Front Cover (With Torque Specifications - 1 Of 2)
Courtesy of FORD MOTOR CO.

Item	Part Number	Description
1	N806176	Power steering pump bolt (4 required)
2	3A674	Power steering pump assembly
3	6730	Oil pan drain plug
4	W701605	Oil pan bolt (4 required)
5	W701725	Shield bolt
6	9G609	Shield
7	N808102	Accessory drive idler pulley bolt
8	19A216	Accessory drive idler pulley

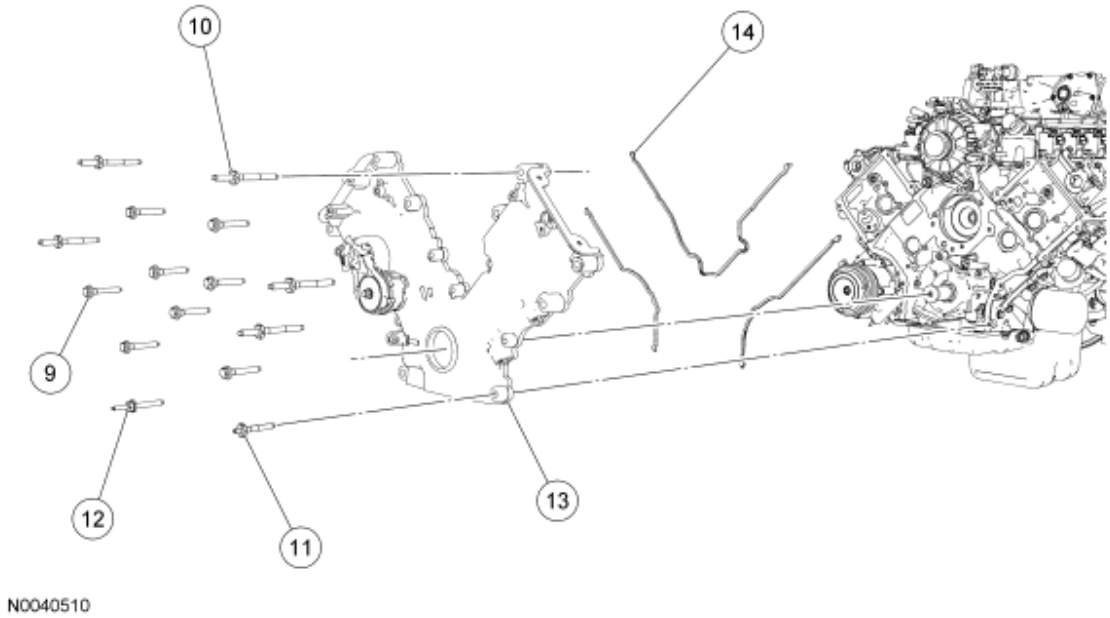

Fig. 29: Exploded View Of Engine Front Cover (With Torque Specifications - 2 Of 2)
Courtesy of FORD MOTOR CO.

Item	Part Number	Description
9	N806177	Engine front cover bolt (8 required)
10	N806300	Engine front cover stud bolt (5 required)
11	W706508	Engine front cover bolt
12	N808586	Engine front cover bolt
13	6D080	Engine front cover
14	6D081	Engine front cover gasket (3 required)

REMOVAL

WARNING: If equipped with fire suppression system, depower the system. For important safety warnings and procedures, refer to FIRE SUPPRESSION SYSTEM article.

1. With the vehicle in NEUTRAL, position it on a hoist. For additional information, refer to **JACKING AND LIFTING** article.
2. Remove both valve covers. For additional information, refer to **Valve Cover - RH** or **Valve Cover - LH**.
3. Remove the coolant pump. For additional information, refer to **ENGINE COOLING** article.
4. Remove the crankshaft front seal. For additional information, refer to **Crankshaft Front Seal**.
5. Remove the 4 bolts and position the power steering pump aside.
6. Drain the engine oil.

- Install the drain plug when finished.
- Tighten to 13 Nm (10 lb-ft).

7. Remove the 4 front oil pan-to-engine front cover bolts.
8. Remove the bolt and the shield.
9. Remove the bolt and the accessory drive idler pulley.
10. Remove the bolts and the stud bolts in the sequence shown.

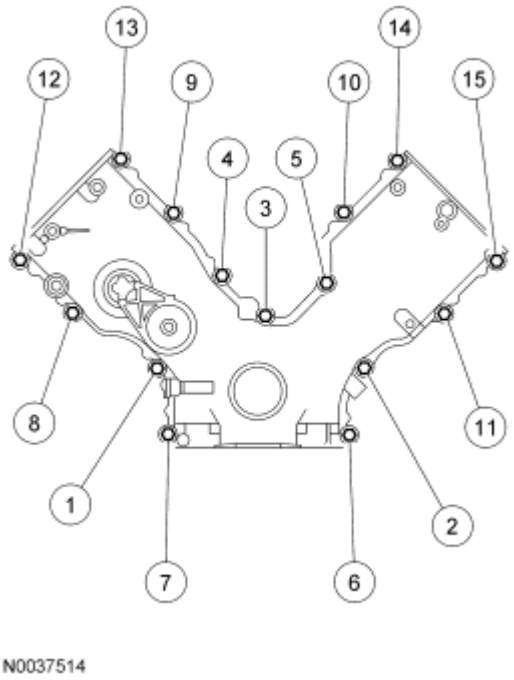

Fig. 30: Engine Front Cover Fastener Removal Sequence
Courtesy of FORD MOTOR CO.

11. Remove the engine front cover from the front cover-to-cylinder block dowel.

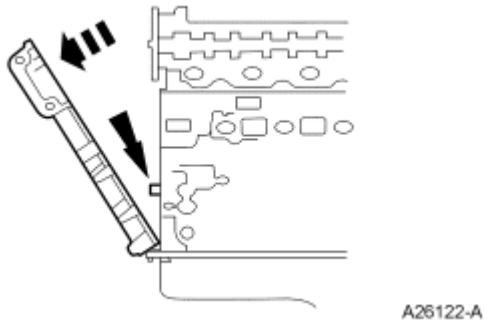

Fig. 31: Removing Engine Front Cover
Courtesy of FORD MOTOR CO.

CAUTION: Do not use metal scrapers, wire brushes, power abrasive discs or other abrasive means to clean the sealing surface. These tools cause scratches and gouges that make leak paths. Use a plastic scraping tool to remove all traces of the gasket material.

12. Clean the gasket surfaces with a plastic scraping tool and metal surface cleaner.

INSTALLATION

CAUTION: If the engine front cover is not secured within 4 minutes, the sealant must be removed and the sealing area cleaned with metal surface cleaner. Allow to dry until there is no sign of wetness, or for 4 minutes, whichever is longer. Failure to follow this procedure may cause future oil leakage.

1. Apply silicone gasket and sealant along the cylinder head-to-block surface and the oil pan-to-cylinder block surface.

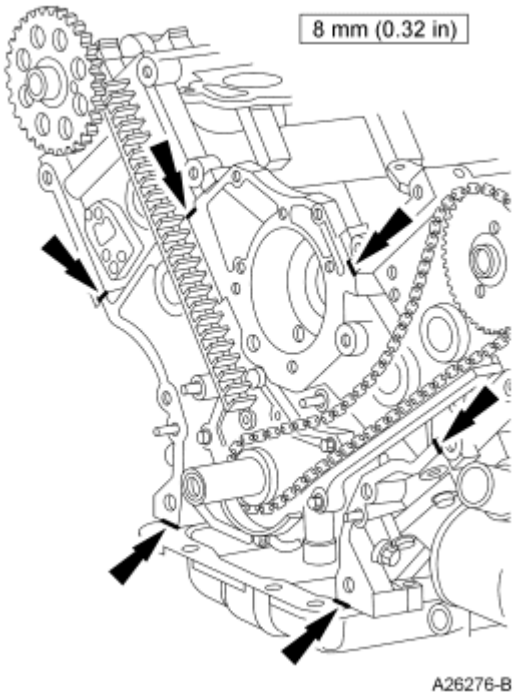

Fig. 32: Applying Bead of Silicone Gasket And Sealant Along Cylinder Head-To-Cylinder Block Surface And Oil Pan-To-Cylinder Block Surface
Courtesy of FORD MOTOR CO.

2. Install the engine front cover on the front cover-to-cylinder block dowel and loosely install the bolts.

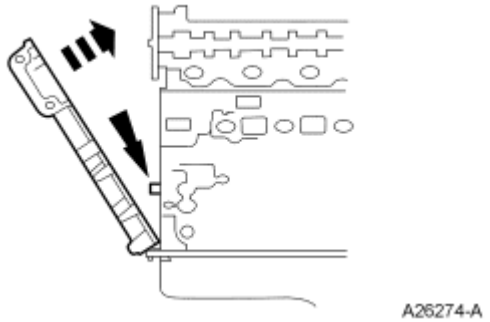

Fig. 33: Installing Engine Front Cover With Engine Front Cover Gasket On Front Cover-To-Cylinder Block Dowel
Courtesy of FORD MOTOR CO.

3. Tighten the front cover fasteners in the sequence shown to 25 Nm (18 lb-ft).

Item	Part Number	Description
1	N806177	Bolt, hex flange head pilot, M8 x 1.25 x 53
2	N806177	Bolt, hex flange head pilot, M8 x 1.25 x 53
3	N806177	Bolt, hex flange head pilot, M8 x 1.25 x 53
4	N806177	Bolt, hex flange head pilot, M8 x 1.25 x 53
5	N806177	Bolt, hex flange head pilot, M8 x 1.25 x 53
6	W706508	Stud, hex-head pilot, M8 x 1.25 x 50 - M6 x 1 x 10
7	N808586	Stud, washer hex-head pilot, M8 x 1.25 - M6 x 1.0 x 86.35
8	N806177	Bolt, hex flange head pilot, M8 x 1.25 x 53
9	N806177	Bolt, hex flange head pilot, M8 x 1.25 x 53
10	N806177	Bolt, hex flange head pilot, M8 x 1.25 x 53
11	N806300	Stud, hex-shoulder pilot, M8 x 1.25 x 1.25 x 91.1
12	N806300	Stud, hex-shoulder pilot, M8 x 1.25 x 1.25 x 91.1
13	N806300	Stud, hex-shoulder pilot, M8 x 1.25 x 1.25 x 91.1
14	N806300	Stud, hex-shoulder pilot, M8 x 1.25 x 1.25 x 91.1
15	N806300	Stud, hex-shoulder pilot, M8 x 1.25 x 1.25 x 91.1

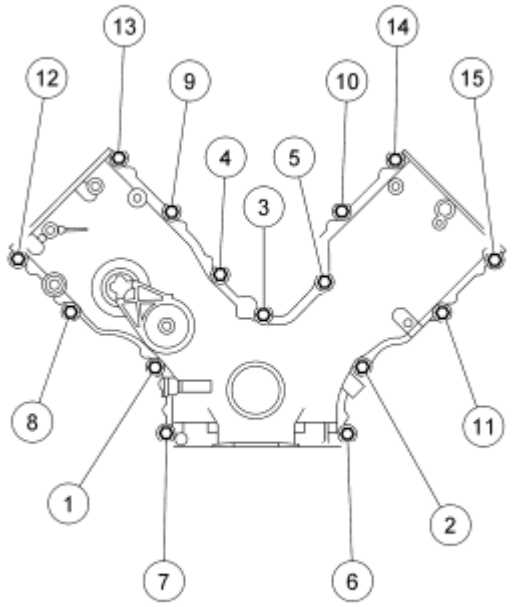

N0037514

Fig. 34: Engine Front Cover Fastener Tightening Sequence
Courtesy of FORD MOTOR CO.

4. Install the accessory drive idler pulley and the bolt.
   - Tighten to 25 Nm (18 lb-ft).
5. Install the shield and the bolts.
   - Tighten to 25 Nm (18 lb-ft).
6. Loosely install the 4 front oil pan bolts.

NOTE: Make sure to tighten the bolts in 2 stages.

7. Tighten the 4 front oil pan bolts in 2 stages.
   - Stage 1: Tighten to 20 Nm (15 lb-ft).
   - Stage 2: Tighten an additional 60 degrees.

NOTE: The front lower hole in the power steering pump is not used.

8. Position the power steering pump and install the 4 bolts.
   - Tighten to 25 Nm (18 lb-ft).
9. Install a new crankshaft front oil seal. For additional information, refer to **Crankshaft Front Seal**.
10. Install the coolant pump. For additional information, refer to **ENGINE COOLING** article.
11. Install the valve covers. For additional information, refer to **Valve Cover - RH** or **Valve Cover - LH**.
12. Fill the engine with clean engine oil.

WARNING: If equipped with fire suppression system, repower the system. For important safety warnings and procedures, refer to FIRE SUPPRESSION SYSTEM article.

13. If equipped with fire suppression system, repower the system.

TIMING DRIVE COMPONENTS

Special Tools

Illustration	Tool Name	Tool Number
	Aligner, Camshaft Position	303-557 (T96T-6256-B)
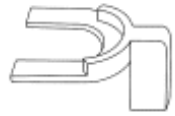 ST1331-A	Compressor Spacer, Valve Spring	303-382 (T91P-6565-AH)
 ST1330-A	Compressor, Valve Spring	303-581 (T97T-6565-A)
 ST1335-A	Holding Tool, Crankshaft	303-448 (T93P-6303-A)

Material

Item	Specification
Hydraulic Chain Tensioner Retaining Clip	1L3Z-6P250-AA
Motorcraft SAE 5W-20 Premium Synthetic Blend Motor Oil XO-5W20-QSP (US); Motorcraft SAE 5W-20 Super Premium Motor Oil CXO-5W20-LSP12 (Canada); or equivalent	WSS-M2C930-A

REMOVAL

CAUTION: Since the engine is not free-wheeling, timing procedures must be followed exactly or piston and valve damage may occur.

WARNING: If equipped with fire suppression system, depower the system. For important safety warnings and procedures, refer to FIRE SUPPRESSION SYSTEM article.

1. With the vehicle in NEUTRAL, position it on a hoist. For additional information, refer to **JACKING AND LIFTING** article.
2. Remove the engine front cover. For additional information, refer to **Engine Front Cover**.
3. Remove the crankshaft sensor ring from the crankshaft.

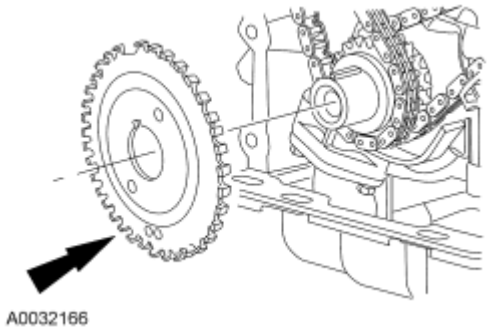

Fig. 35: View Of Crankshaft Sensor Ring At Crankshaft
Courtesy of FORD MOTOR CO.

4. Disconnect the 8 ignition coil electrical connectors.

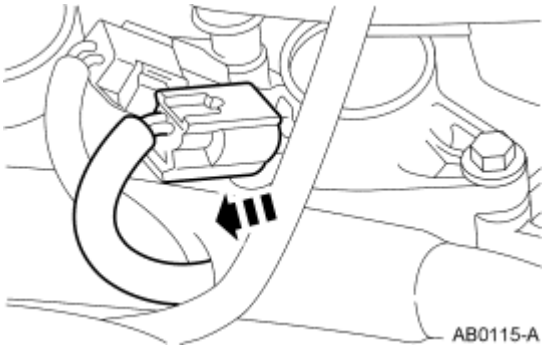

Fig. 36: Ignition Coil Electrical Connector
Courtesy of FORD MOTOR CO.

5. Remove the bolts and the 8 ignition coils.

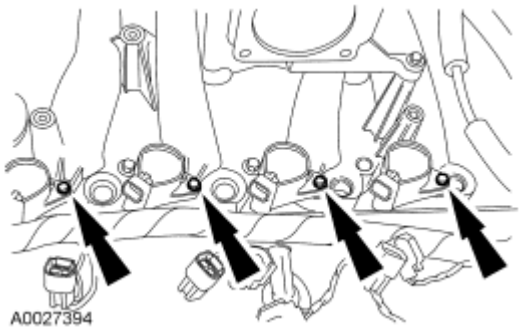

Fig. 37: Ignition Coils & Bolts
Courtesy of FORD MOTOR CO.

CAUTION: Only use hand tools when removing or installing the spark plugs, damage may occur to the cylinder head or spark plug.

NOTE: Use compressed air to remove any foreign material from the spark plug wells before removing the spark plugs.

6. Remove the 8 spark plugs.

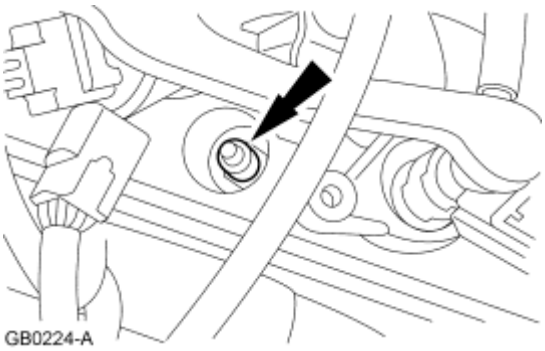

Fig. 38: Spark Plug
Courtesy of FORD MOTOR CO.

7. Position the lobe of the camshaft up.

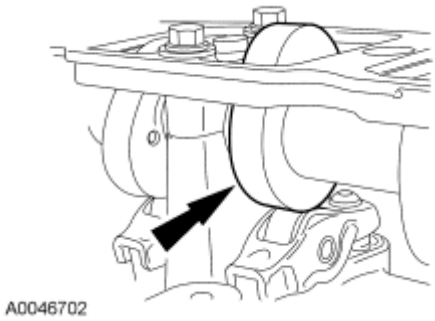

Fig. 39: Positioning Camshaft Lobe Up

Courtesy of FORD MOTOR CO.

8. Install the special tool between the valve spring coils to prevent valve stem seal damage.

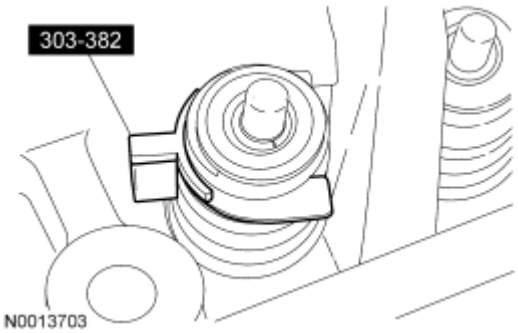

Fig. 40: Installing Special Tool Between Valve Spring Coils
Courtesy of FORD MOTOR CO.

CAUTION: If the components are to be reinstalled, they must be installed in the same positions. Mark the components for installation into their original locations. Failure to follow these instructions may result in engine damage.

9. Using the special tool, compress the valve spring and remove the camshaft roller followers.

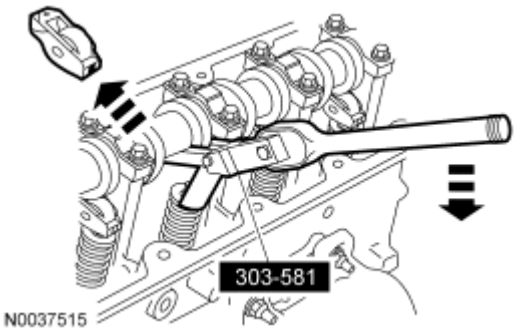

Fig. 41: Removing Camshaft Roller Followers
Courtesy of FORD MOTOR CO.

10. Position the crankshaft with the keyway at the 12 o'clock position.

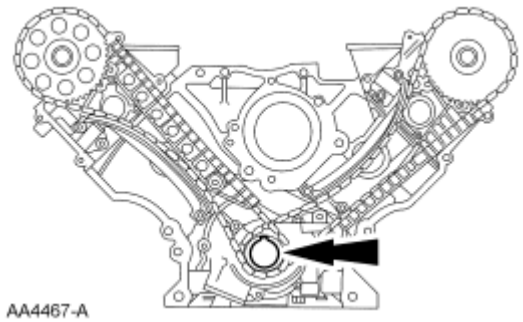

Fig. 42: Crankshaft With Keyway At 12 O'clock Position
Courtesy of FORD MOTOR CO.

11. Remove the timing chain tensioning system from both timing chains.
    1. Remove the bolts.
    2. Remove the timing chain tensioners.
    3. Remove the timing chain tensioner arms.

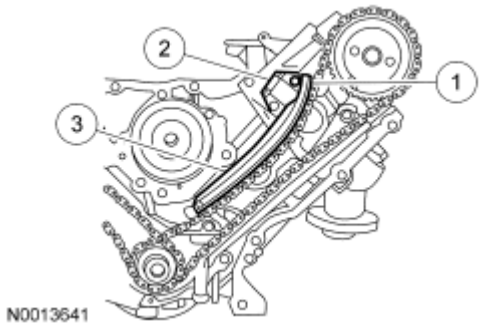

Fig. 43: Identifying Timing Chain Tensioning System
Courtesy of FORD MOTOR CO.

12. Remove the LH and RH timing chains and the crankshaft sprocket.
    - Remove the RH timing chain from the camshaft sprocket.
    - Remove the RH timing chain from the crankshaft sprocket.
    - Repeat for the LH timing chain and crankshaft sprocket.

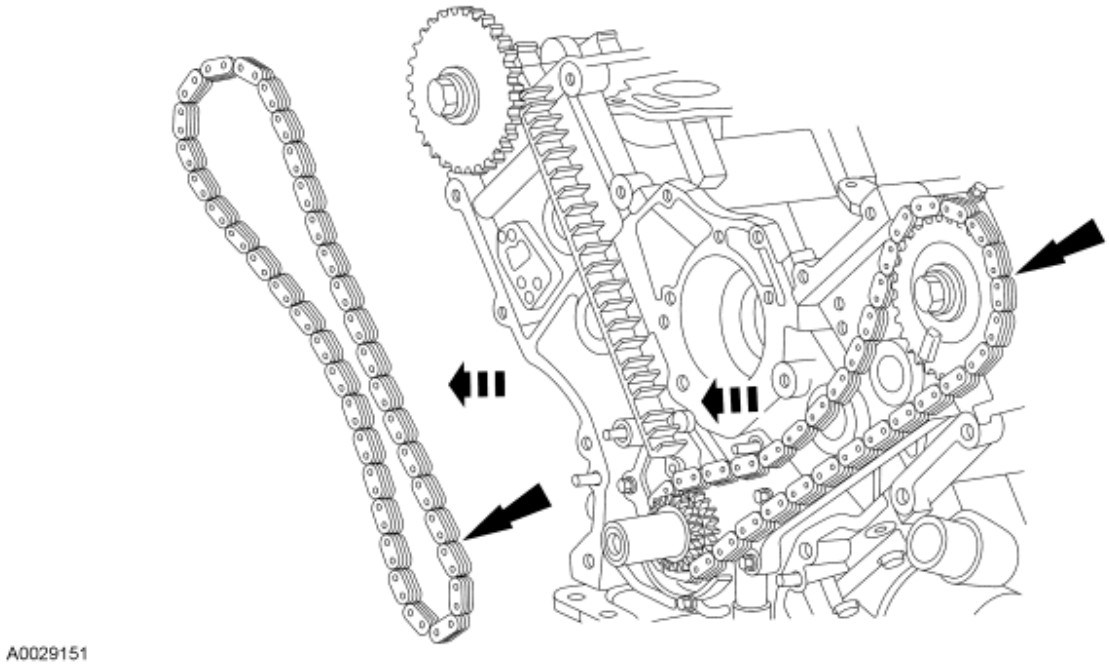

Fig. 44: View Of Left And Right Timing Chains, Sprockets And Crankshaft Gear
Courtesy of FORD MOTOR CO.

13. Remove the timing chain guides.
    1. Remove the bolts.
    2. Remove the LH timing chain guide.
    3. Remove the bolts.
    4. Remove the RH timing chain guide.

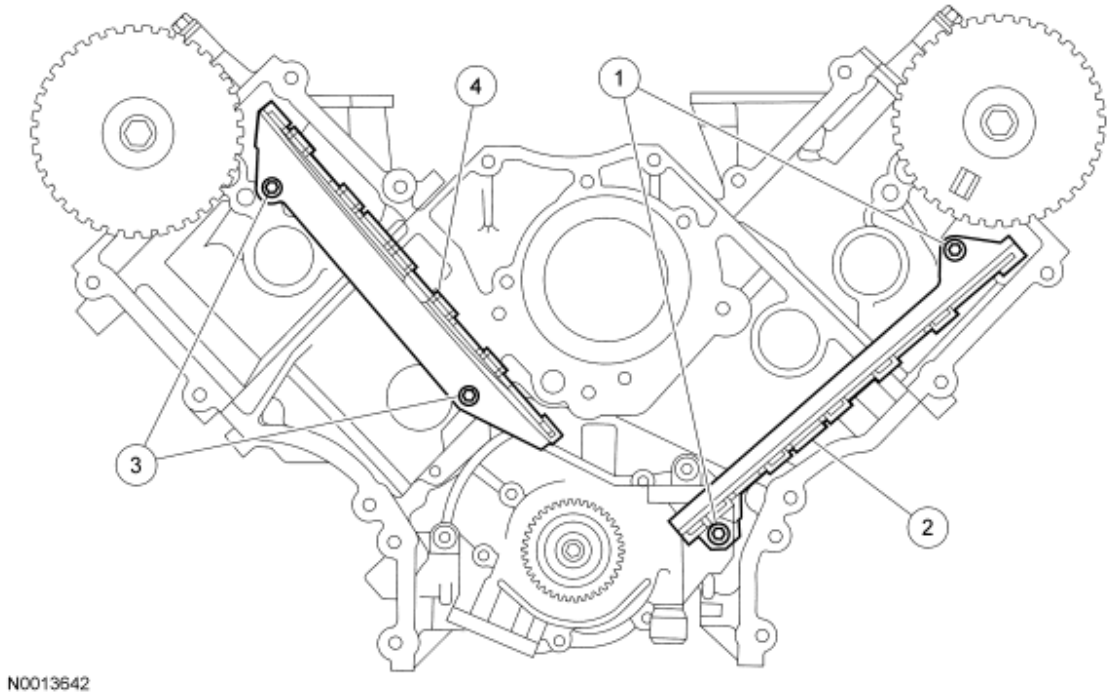

Fig. 45: Identifying Timing Chain Guides
Courtesy of FORD MOTOR CO.

NOTE: RH shown, LH similar.

14. Install the special tool.

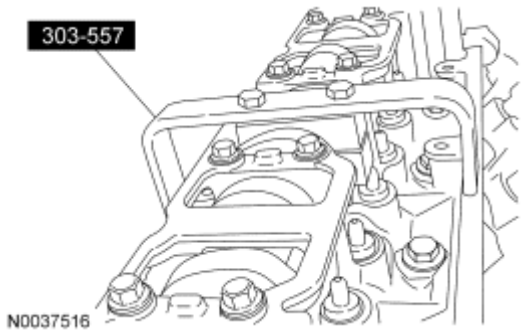

Fig. 46: Installing Special Tool
Courtesy of FORD MOTOR CO.

NOTE: RH shown, LH similar.

15. Remove the bolt and the camshaft gear.

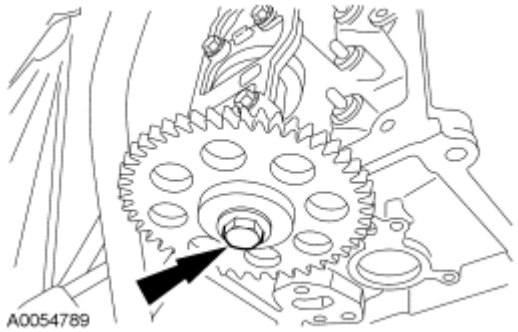

Fig. 47: Camshaft Gear Bolt
Courtesy of FORD MOTOR CO.

INSTALLATION

Engines with ratcheting timing chain tensioners

CAUTION: Timing chain procedure must be followed exactly or damage to valves and pistons will result.

CAUTION: Do not compress the ratchet assembly. This will damage the ratchet assembly.

NOTE: LH shown, RH similar.

1. Compress each tensioner plunger, using an edge of a vise.

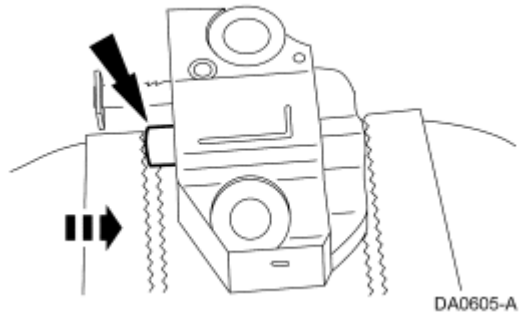

Fig. 48: Compressing Tensioner Plunger
Courtesy of FORD MOTOR CO.

2. Using a small screwdriver or pick, push back and hold the ratchet mechanism.

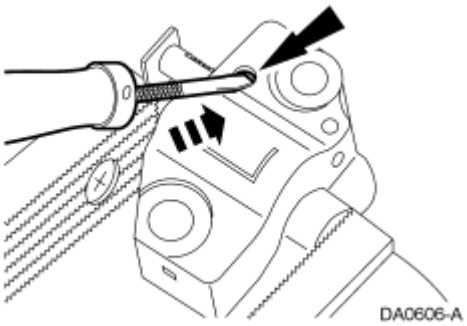

Fig. 49: Pushing Back And Holding Ratchet Mechanism
Courtesy of FORD MOTOR CO.

3. While holding the ratchet mechanism, push the ratchet arm back into the tensioner housing.

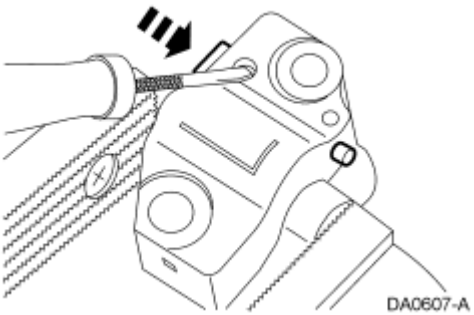

Fig. 50: Compressing Tensioner Plunger
Courtesy of FORD MOTOR CO.

4. Install a paper clip into the hole of each tensioner housing to hold the ratchet assembly and plunger in during installation.
   - Remove the tensioner from the vise.

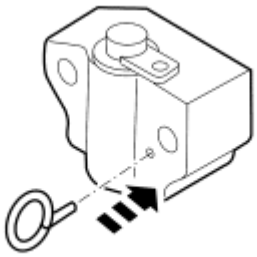

A26917-A

Fig. 51: Installing Paper Clip Into Tensioner Housing
Courtesy of FORD MOTOR CO.

Engines with non-ratcheting timing chain tensioners

NOTE: **If one or both tensioner mounting bolts are loosened or removed, the tensioner-sealing bead must be inspected for seal integrity. Any cracks, tears, cuts or separation from the tensioner body or permanent compression of the seal bead, will require installation of a new tensioner.**

5. Inspect the RH and LH timing chain tensioners.
   - Install new tensioners as necessary.

CAUTION: **The timing chain procedure must be followed exactly or damage to valves and pistons will result.**

NOTE: **LH shown, RH similar.**

6. Compress each tensioner plunger, using a vise.

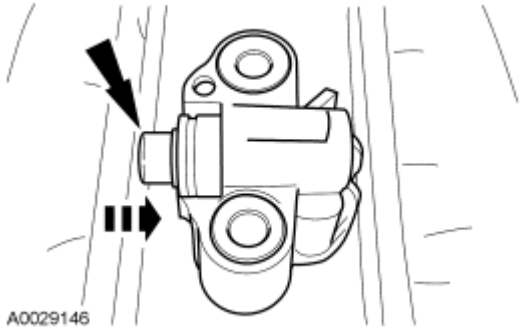

Fig. 52: Compressing Tensioner Plunger
Courtesy of FORD MOTOR CO.

7. Install a retaining clip on each tensioner to hold the plunger in during installation.

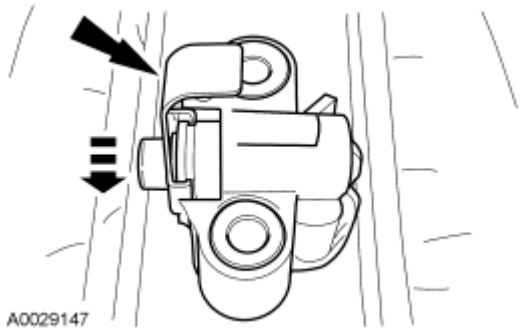

Fig. 53: Identifying Retaining Clip on Tensioner
Courtesy of FORD MOTOR CO.

All engines

8. If the colored links are not visible, mark one link on one end and one link on the other end, and use as

timing marks.

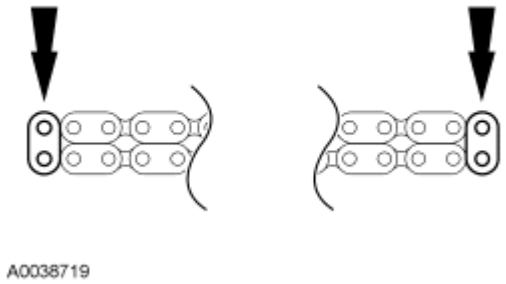

Fig. 54: Identifying Timing Chain Copper Links
Courtesy of FORD MOTOR CO.

9. Install the camshaft sprockets and new bolts. Tighten the bolts in 2 stages.
   - Stage 1: Tighten to 40 Nm (30 lb-ft).
   - Stage 2: Tighten an additional 90 degrees (1/4 turn).

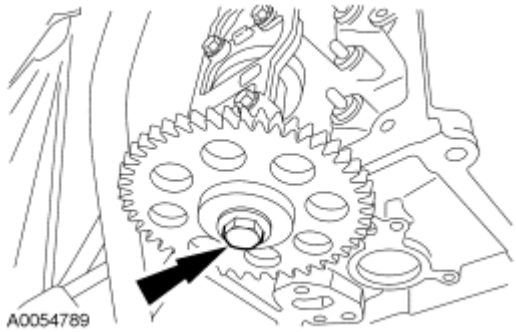

Fig. 55: Camshaft Gear Bolt
Courtesy of FORD MOTOR CO.

10. Using the special tool, position the crankshaft so the No. 1 cylinder is at top dead center (TDC).

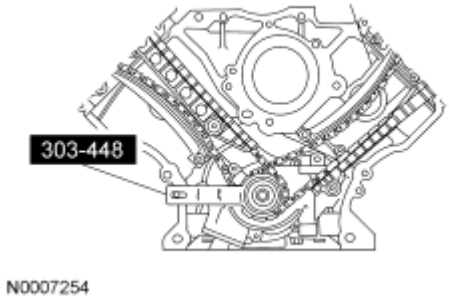

Fig. 56: Positioning Crankshaft With No. 1 Cylinder At TDC
Courtesy of FORD MOTOR CO.

11. Install the crankshaft sprocket, making sure the flange faces forward.

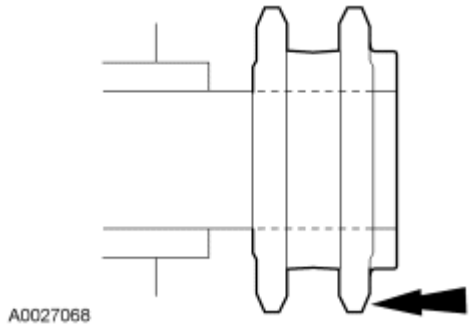

Fig. 57: Identifying Crankshaft Sprocket Flange
Courtesy of FORD MOTOR CO.

12. Install the timing chain guide.
    1. Position the LH timing chain guide.
    2. Install and tighten the LH bolts to 10 Nm (89 lb-in).
    3. Position the RH timing chain guide.
    4. Install and tighten the RH bolts to 10 Nm (89 lb-in).

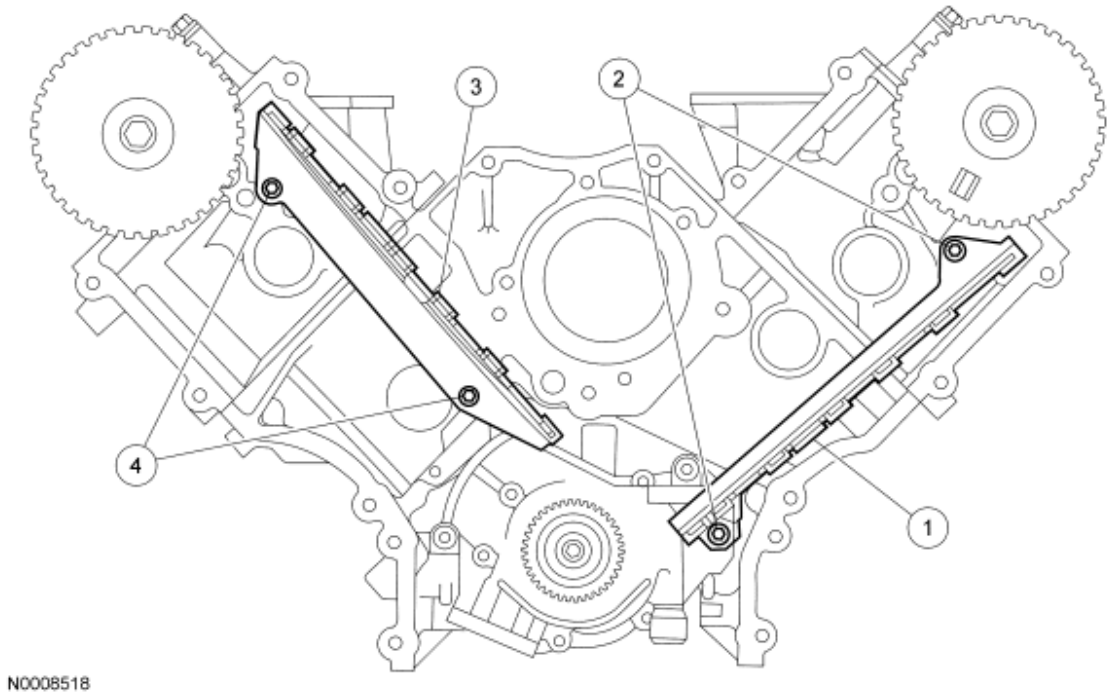

Fig. 58: Timing Chain Guides
Courtesy of FORD MOTOR CO.

13. Rotate the RH camshaft sprocket until the timing mark is approximately at the 11 o'clock position. Rotate the LH camshaft sprocket until the timing mark is approximately at the 12 o'clock position.

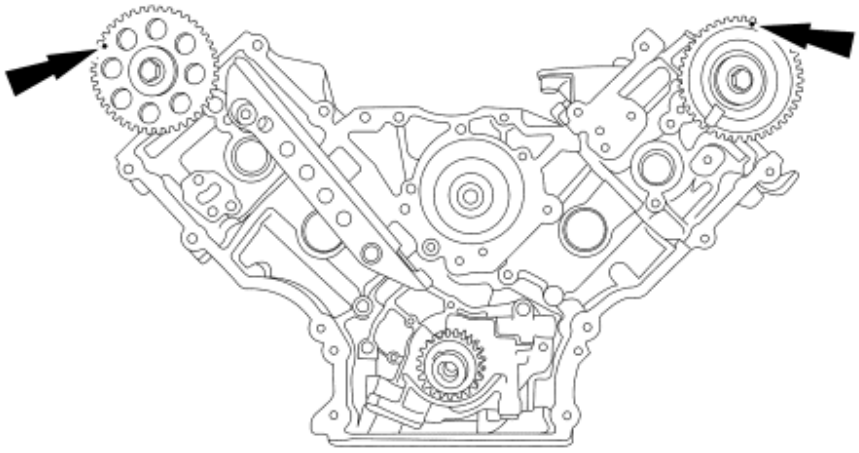

Fig. 59: Identifying LH And RH Camshaft Timing Mark Position
Courtesy of FORD MOTOR CO.

14. Position the LH (inner) timing chain on the crankshaft sprocket, aligning the colored (marked) link with the timing mark on the sprocket.

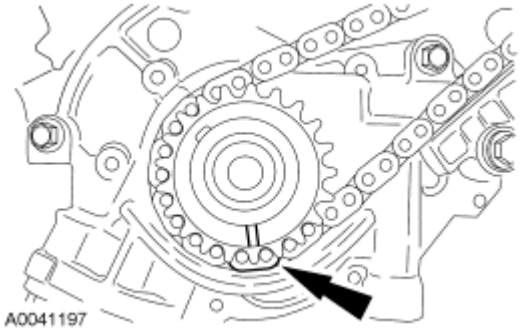

Fig. 60: Aligning Copper (Marked) Link With Timing Mark On Crankshaft Sprocket
Courtesy of FORD MOTOR CO.

15. Install the LH timing chain on the sprocket, aligning the colored (marked) link with the timing marks on the sprocket.

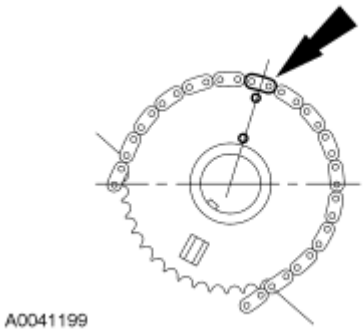

Fig. 61: Aligning Copper (Marked) Link With Timing Mark On Camshaft Sprocket

Courtesy of FORD MOTOR CO.

NOTE: The LH timing chain tensioner arm has a bump near the dowel hole for identification.

16. Position the LH timing chain tensioner arm on the dowel pin and install the LH timing chain tensioner.
    - Tighten to 25 Nm (18 lb-ft).

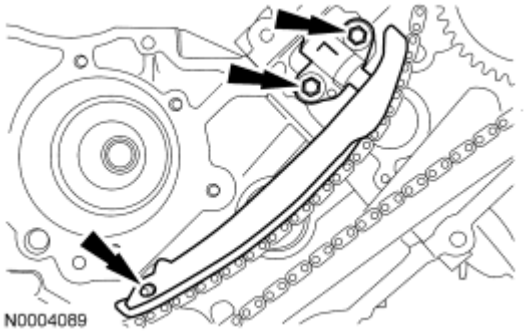

Fig. 62: Locating LH Timing Chain Tensioner
Courtesy of FORD MOTOR CO.

Engines with ratcheting timing chain tensioners

17. Remove the retaining clip from the LH timing chain tensioner.

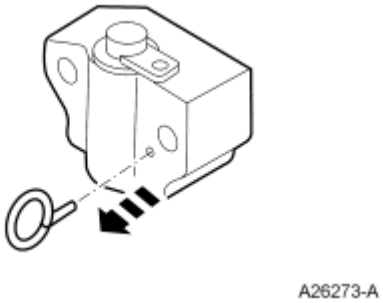

Fig. 63: Removing Paper Clip
Courtesy of FORD MOTOR CO.

Engines with non-ratcheting timing chain tensioners

18. Remove the retaining clip from the LH timing chain tensioner.

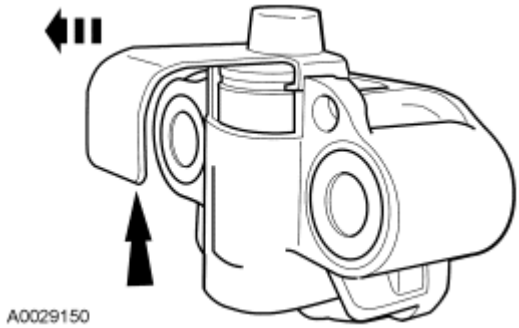

Fig. 64: View Of Retaining Clip And Timing Chain Tensioner
Courtesy of FORD MOTOR CO.

All engines

19. Position the RH (outer) timing chain on the crankshaft sprocket, aligning the colored (marked) link with the timing mark on the sprocket.

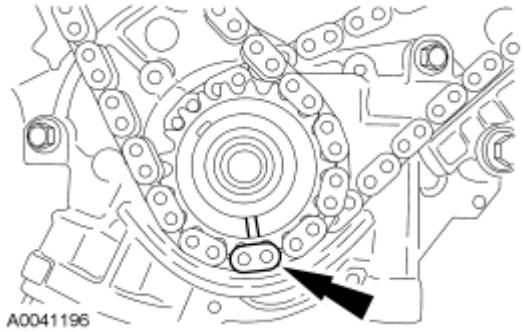

Fig. 65: Aligning Copper (Marked) Link With Timing Mark On Crankshaft Sprocket
Courtesy of FORD MOTOR CO.

20. Install the RH timing chain on the camshaft sprocket, aligning the colored (marked) link with the timing marks on the sprocket.

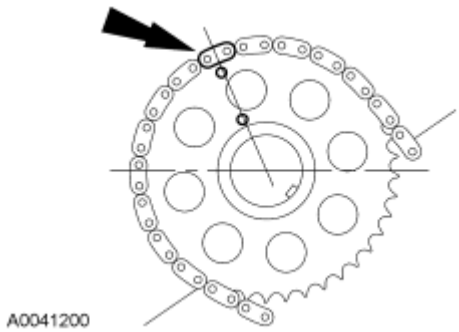

Fig. 66: Aligning Copper (Marked) Link With Timing Mark On Camshaft Sprocket
Courtesy of FORD MOTOR CO.

21. Position the RH timing chain tensioner arm on the dowel pin and install the RH timing chain tensioner.

- Tighten to 25 Nm (18 lb-ft).

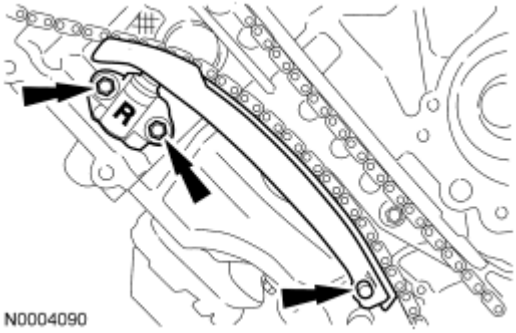

Fig. 67: RH Timing Chain Tensioner
Courtesy of FORD MOTOR CO.

Engines with ratcheting timing chain tensioners

22. Remove the retaining clip from the RH timing chain tensioner.

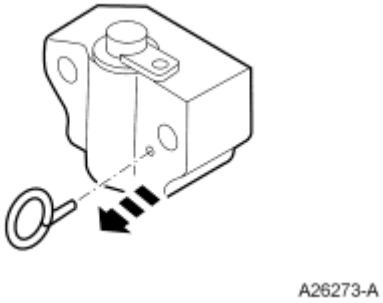

Fig. 68: Removing Paper Clip
Courtesy of FORD MOTOR CO.

Engines with non-ratcheting timing chain tensioners

23. Remove the retaining clip from the RH timing chain tensioner.

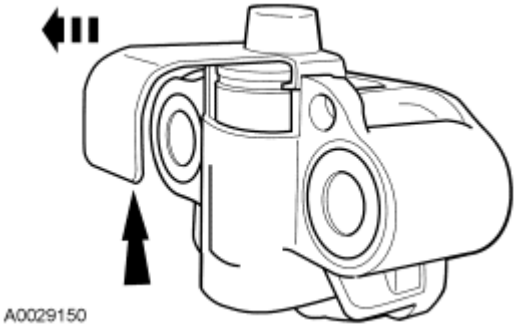

Fig. 69: View Of Retaining Clip And Timing Chain Tensioner

Courtesy of FORD MOTOR CO.

All engines

24. Make sure that the colored (marked) chain links are lined up with the dots on the crankshaft sprocket and the camshaft sprockets.

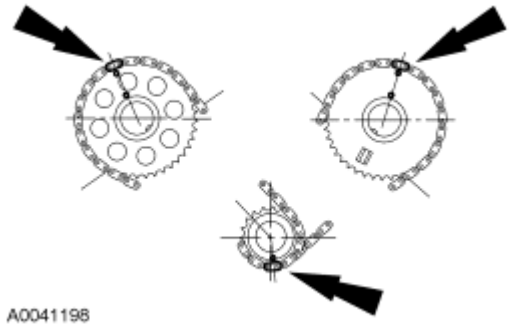

Fig. 70: Identifying Copper (Marked) Chain Links And Dots On Crankshaft Sprockets And Camshaft Sprockets
Courtesy of FORD MOTOR CO.

25. Rotate the camshaft until the lobe is in the up position.

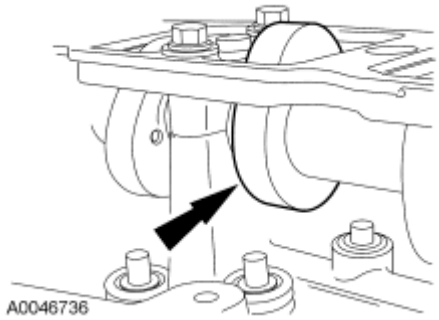

Fig. 71: Positioning Camshaft Lobe Up
Courtesy of FORD MOTOR CO.

26. Install the special tool between the valve spring coils to prevent valve stem seal damage.

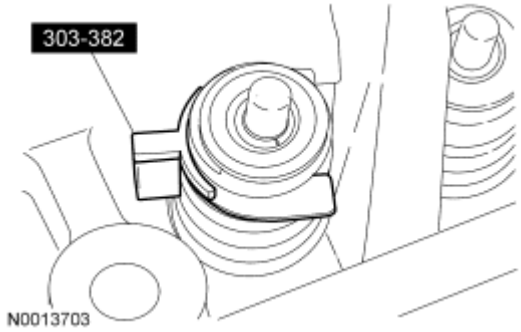

Fig. 72: Installing Special Tool Between Valve Spring Coils
Courtesy of FORD MOTOR CO.

NOTE: Lubricate the camshaft roller followers using clean engine oil.

27. Install the camshaft roller followers.
    1. Install the special tool.
    2. Compress the valve spring.
    3. Install the camshaft roller followers in their original locations.

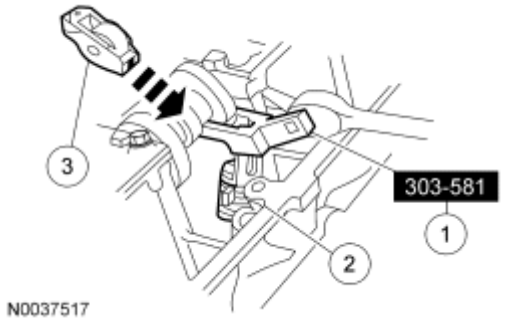

Fig. 73: Installing Camshaft Roller Followers
Courtesy of FORD MOTOR CO.

CAUTION: Only use hand tools when removing or installing the spark plugs, damage may occur to the cylinder head or spark plug.

28. Install the 8 spark plugs.
    - Tighten to 15 Nm (11 lb-ft).

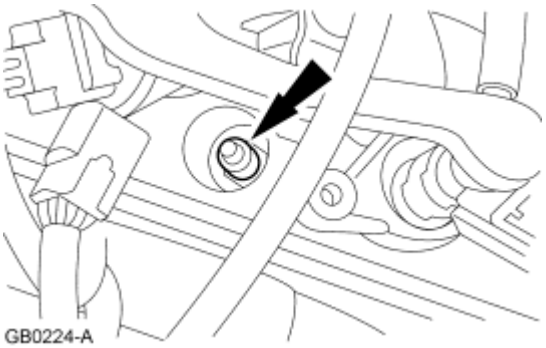

Fig. 74: Spark Plug
Courtesy of FORD MOTOR CO.

29. Install the 8 ignition coils and bolts.
    - Tighten to 10 Nm (89 lb-in).

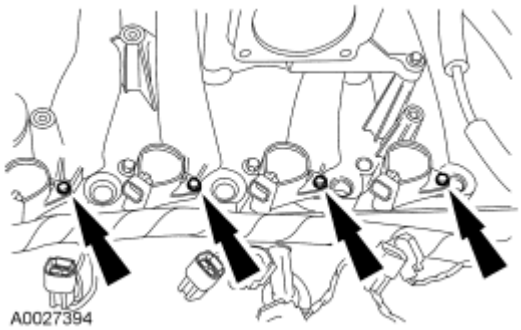

Fig. 75: Ignition Coils & Bolts
Courtesy of FORD MOTOR CO.

30. Connect the 8 ignition coil electrical connectors.

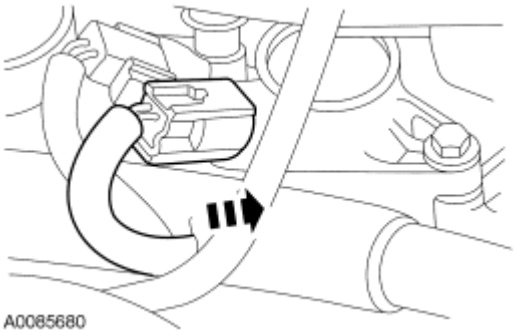

Fig. 76: Ignition Coil Electrical Connector
Courtesy of FORD MOTOR CO.

31. Install the crankshaft sensor ring on the crankshaft.

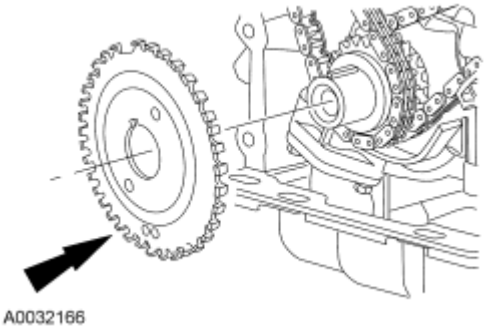

Fig. 77: View Of Crankshaft Sensor Ring At Crankshaft
Courtesy of FORD MOTOR CO.

32. Install the engine front cover. For additional information, refer to **Engine Front Cover**.

WARNING: If equipped with fire suppression system, repower the system. For important safety warnings and procedures, refer to FIRE

SUPPRESSION SYSTEM article.

33. If equipped with fire suppression system, repower the system.

VALVE TRAIN COMPONENTS - EXPLODED VIEW

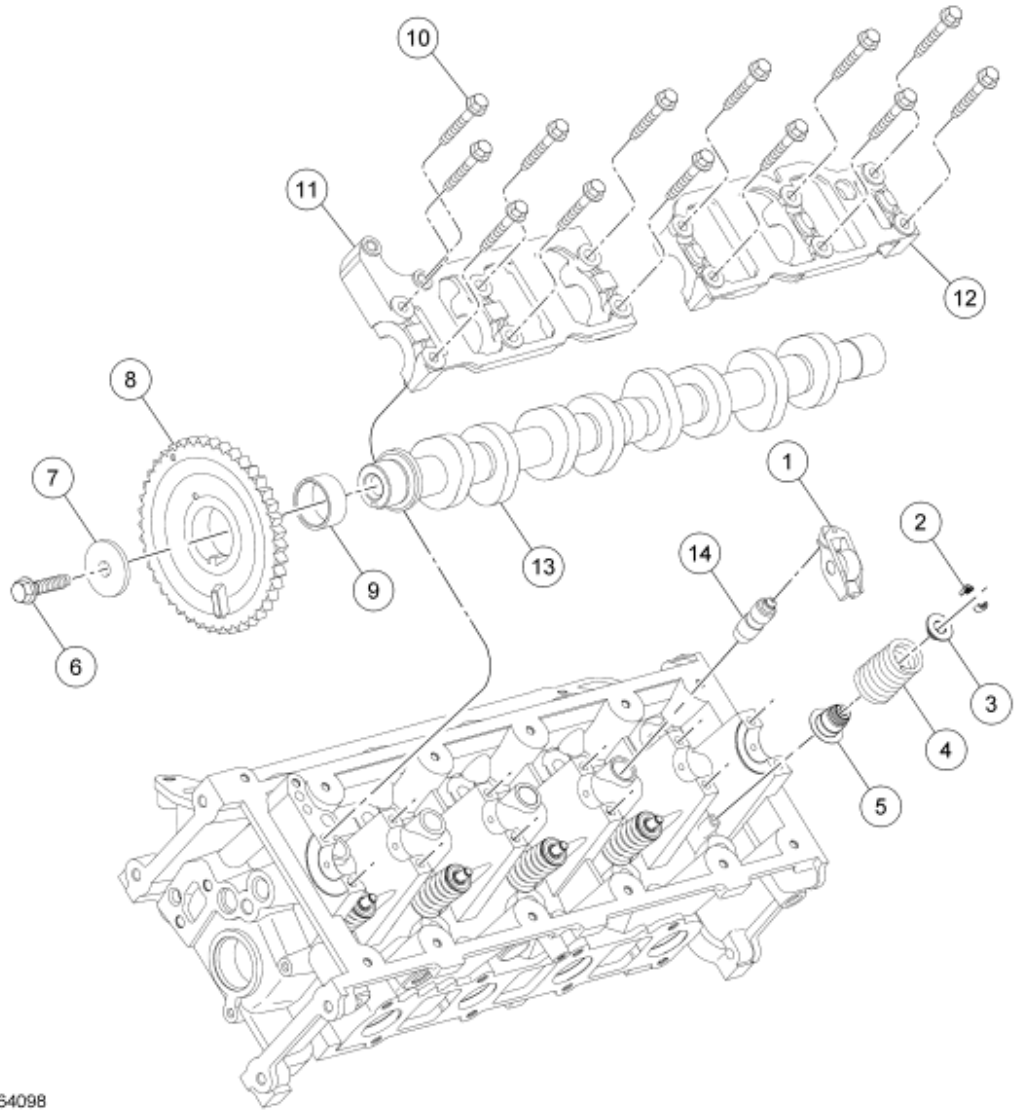

Fig. 78: Exploded View Of Valve Train Components
Courtesy of FORD MOTOR CO.

Item	Part Number	Description
1	6529	Camshaft roller follower (8 required)
2	6518	Valve spring retainer key (16 required)
3	6514	Valve spring retainer (8 required)
4	6513	Valve spring (8 required)

5	6A517	Valve stem seal (8 required)
6	N811085	Camshaft sprocket bolt
7	N806164	Camshaft sprocket bolt washer
8	6C255	Camshaft sprocket
9	6265	Camshaft gear spacer
10	N807834	Camshaft bearing cap assembly bolt (13 required)
11	6B280	Camshaft bearing cap
12	6B280	Camshaft bearing cap
13	6C255	Camshaft
14	6C501	Hydraulic lash adjuster (8 required)

1. For additional information, refer to the following procedures.

VALVE SPRINGS

Special Tools

Illustration	Tool Name	Tool Number
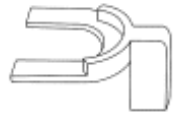 ST1331-A	Compressor Spacer, Valve Spring	303-382 (T91P-6565-AH)
 ST1330-A	Compressor, Valve Spring	303-581 (T97T-6565-A)

REMOVAL

WARNING: If equipped with fire suppression system, depower the system. For important safety warnings and procedures, refer to FIRE SUPPRESSION SYSTEM article.

1. With the vehicle in NEUTRAL, position it on a hoist. For additional information, refer to **JACKING AND LIFTING** article.
2. Remove the camshaft roller followers. For additional information, refer to **Camshaft Roller Follower**.
3. Position the piston at the top of the stroke.

CAUTION: Only use hand tools when removing or installing the spark plugs, damage may occur to the cylinder head or spark plug.

4. Remove the spark plugs. For additional information, refer to **ENGINE IGNITION** article.
5. Install compressed air in the cylinder to hold both valves in position.

CAUTION: If air pressure has forced the piston to the bottom of the cylinder, any loss of air pressure will allow the valve to fall into the cylinder. If air pressure must be removed, support the valve prior to removal or engine damage may occur.

6. Using the special tool, compress the valve springs.

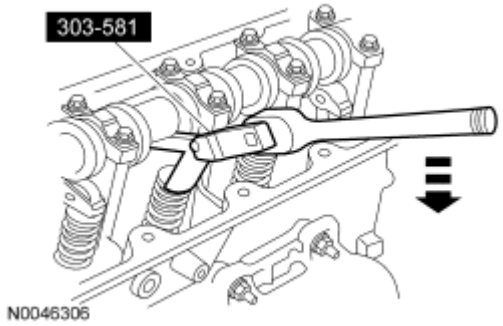

Fig. 79: Compressing Valve Springs
Courtesy of FORD MOTOR CO.

7. Remove the valve spring retainer keys, the valve spring retainer and the valve spring.

INSTALLATION

1. Position the valve spring and the valve spring retainer.
2. Install the special tool between the valve spring coils to prevent valve stem seal damage.

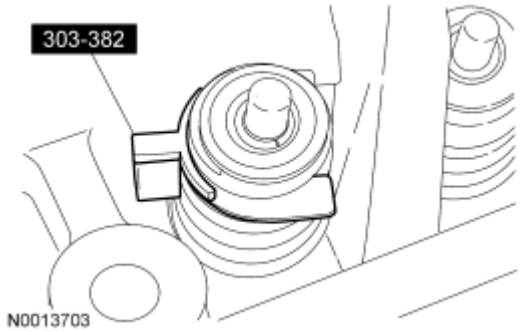

Fig. 80: Installing Special Tool Between Valve Spring Coils
Courtesy of FORD MOTOR CO.

3. Using the special tool, compress the valve spring. Install the valve spring retainer keys.

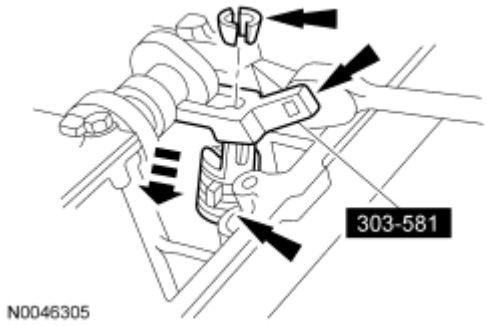

Fig. 81: Installing Valve Spring Retainer Keys
Courtesy of FORD MOTOR CO.

4. Remove the special tools.
5. Install the camshaft roller followers. For additional information, refer to **Camshaft Roller Follower**.

CAUTION: Only use hand tools when removing or installing the spark plugs, damage may occur to the cylinder head or spark plug.

6. Install the spark plugs. For additional information, refer to **ENGINE IGNITION** article.

WARNING: If equipped with fire suppression system, repower the system. For important safety warnings and procedures, refer to FIRE SUPPRESSION SYSTEM article.

7. If equipped with fire suppression system, repower the system.

VALVE SEALS

Special Tools

Illustration	Tool Name	Tool Number
 ST1330-A	Compressor, Valve Spring	303-581 (T97T-6565-A)
 ST1332-A	Installer, Valve Stem Seal	303-383 (T91P-6571-A)

REMOVAL

WARNING: If equipped with fire suppression system, depower the system. For important safety warnings and procedures, refer to FIRE SUPPRESSION SYSTEM article.

1. With the vehicle in NEUTRAL, position it on a hoist. For additional information, refer to **JACKING AND LIFTING** article.
2. Remove the valve springs. For additional information, refer to **Valve Springs**.
3. Remove the valve stem seals.

INSTALLATION

NOTE: The valve stem seal must be bottomed on the valve seat.

NOTE: Make sure that the garter spring is present in the valve stem seal.

1. Use the special tools to install the valve stem seals.

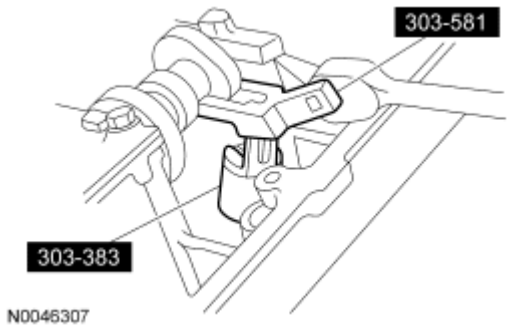

Fig. 82: Installing Valve Stem Seals
Courtesy of FORD MOTOR CO.

2. Install the valve springs. For additional information, refer to **Valve Springs**.

WARNING: If equipped with fire suppression system, repower the system. For important safety warnings and procedures, refer to FIRE SUPPRESSION SYSTEM article.

3. If equipped with fire suppression system, repower the system.

HYDRAULIC LASH ADJUSTER

REMOVAL AND INSTALLATION

WARNING: If equipped with fire suppression system, depower the system. For important safety warnings and procedures, refer to FIRE SUPPRESSION SYSTEM article.

1. With the vehicle in NEUTRAL, position it on a hoist. For additional information, refer to **JACKING AND LIFTING** article.
2. Remove the camshaft roller followers. For additional information, refer to **Camshaft Roller Follower**.
3. Remove the hydraulic lash adjusters.

WARNING: If equipped with fire suppression system, repower the system. For important safety warnings and procedures, refer to FIRE SUPPRESSION SYSTEM article.

4. To install, reverse the removal procedure. If equipped with fire suppression system, repower the system.

CAMSHAFT ROLLER FOLLOWER

Special Tools

Illustration	Tool Name	Tool Number
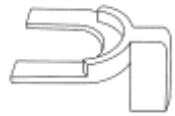 ST1331-A	Compressor Spacer, Valve Spring	303-382 (T91P-6565-AH)
 ST1330-A	Compressor, Valve Spring	303-581 (T97T-6565-A)

REMOVAL

WARNING: If equipped with fire suppression system, depower the system. For important safety warnings and procedures, refer to FIRE SUPPRESSION SYSTEM article.

1. With the vehicle in NEUTRAL, position it on a hoist. For additional information, refer to **JACKING AND LIFTING** article.
2. Remove the valve covers. For additional information, refer to **Valve Cover - RH** or **Valve Cover - LH**.
3. Position the piston of the cylinder being repaired at the bottom of the stroke.
4. Install the special tool between the valve spring coils to prevent valve stem seal damage.

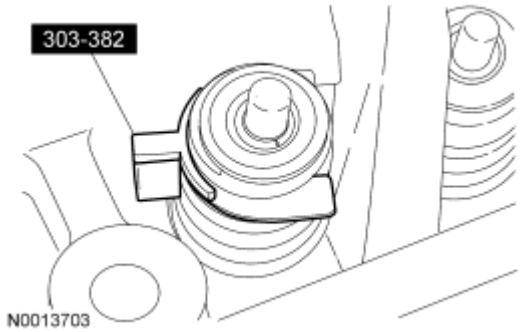

Fig. 83: Installing Special Tool Between Valve Spring Coils
Courtesy of FORD MOTOR CO.

5. Using the special tool, compress the valve springs and remove the camshaft roller followers.

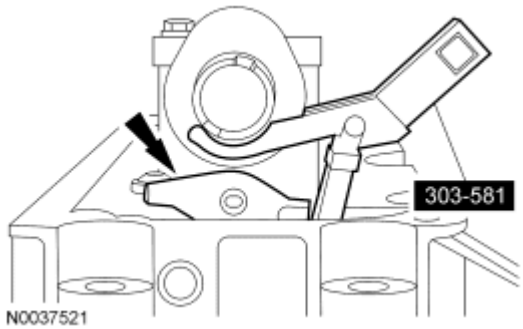

Fig. 84: Camshaft Roller Followers
Courtesy of FORD MOTOR CO.

INSTALLATION

1. Using the special tool, compress the valve spring and install the camshaft roller followers.

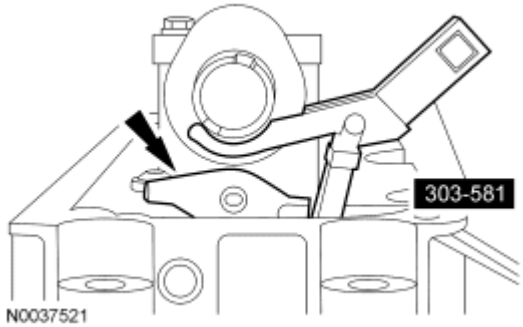

Fig. 85: Camshaft Roller Followers
Courtesy of FORD MOTOR CO.

2. Remove the special tool from between the valve spring.

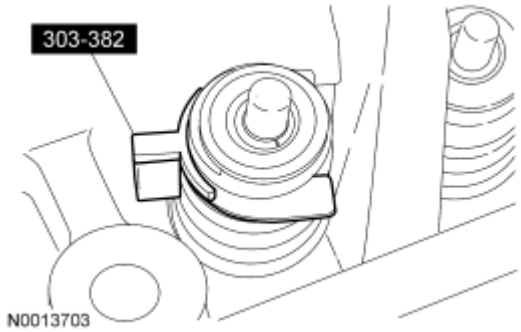

Fig. 86: Installing Special Tool Between Valve Spring Coils
Courtesy of FORD MOTOR CO.

3. Install the valve covers. For additional information, refer to **Valve Cover - RH** or **Valve Cover - LH**.

WARNING: If equipped with fire suppression system, repower the system. For important safety warnings and procedures, refer to FIRE SUPPRESSION SYSTEM article.

4. If equipped with fire suppression system, repower the system.

CAMSHAFT

Material

Item	Specification
Motorcraft SAE 5W-20 Premium Synthetic Blend Motor Oil XO-5W20-QSP (US); Motorcraft SAE 5W-20 Super Premium Motor Oil CXO-5W20-LSP12 (Canada); or equivalent	WSS-M2C930-A

REMOVAL

WARNING: If equipped with fire suppression system, depower the system. For important safety warnings and procedures, refer to FIRE SUPPRESSION SYSTEM article.

1. With the vehicle in NEUTRAL, position it on a hoist. For additional information, refer to **JACKING AND LIFTING** article.

CAUTION: At no time, when the timing chains are removed and the cylinder heads are installed, may the crankshaft or camshaft be rotated. Severe piston and valve damage will occur.

2. Remove the camshaft roller followers. For additional information, refer to **Camshaft Roller Follower**.
3. Remove the timing chain. For additional information, refer to **Timing Drive Components**.

4. Remove the bolt and the camshaft sprocket and spacer.
5. Remove the 13 camshaft bearing cap bolts.
6. Remove the camshaft bearing cap ladders.
7. Remove the camshaft from the cylinder head.

INSTALLATION

1. Lubricate the camshaft journals with clean engine oil.

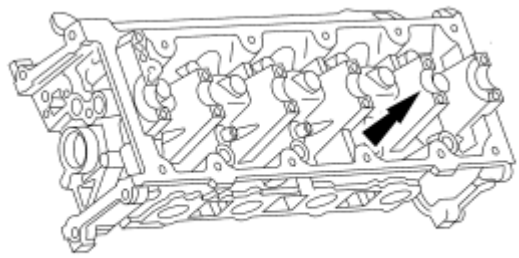

Fig. 87: Camshaft Journal
Courtesy of FORD MOTOR CO.

2. Install the camshaft onto the cylinder head.
3. Lubricate the camshaft bearing cap ladders with clean engine oil.
4. Install the camshaft bearing caps and loosely install the bolts.
5. Tighten the bolts in the sequence shown.
    - Tighten to 10 Nm (89 lb-in).

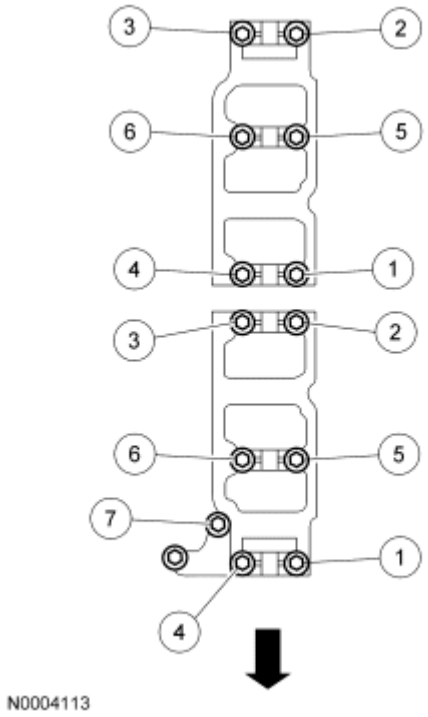

Fig. 88: Camshaft Bearing Cap Bolt Tightening Sequence
Courtesy of FORD MOTOR CO.

6. Install the camshaft sprocket and bolt. Tighten the bolt in 2 stages.
   - Stage 1: Tighten to 40 Nm (30 lb-ft).
   - Stage 2: Tighten an additional 90 degrees (1/4 turn).
7. Install the timing chains. For additional information, refer to **Timing Drive Components**.
8. Install the roller followers. For additional information, refer to **Camshaft Roller Follower**.

WARNING: If equipped with fire suppression system, repower the system. For important safety warnings and procedures, refer to FIRE SUPPRESSION SYSTEM article.

9. If equipped with fire suppression system, repower the system.

EXHAUST MANIFOLD - RH

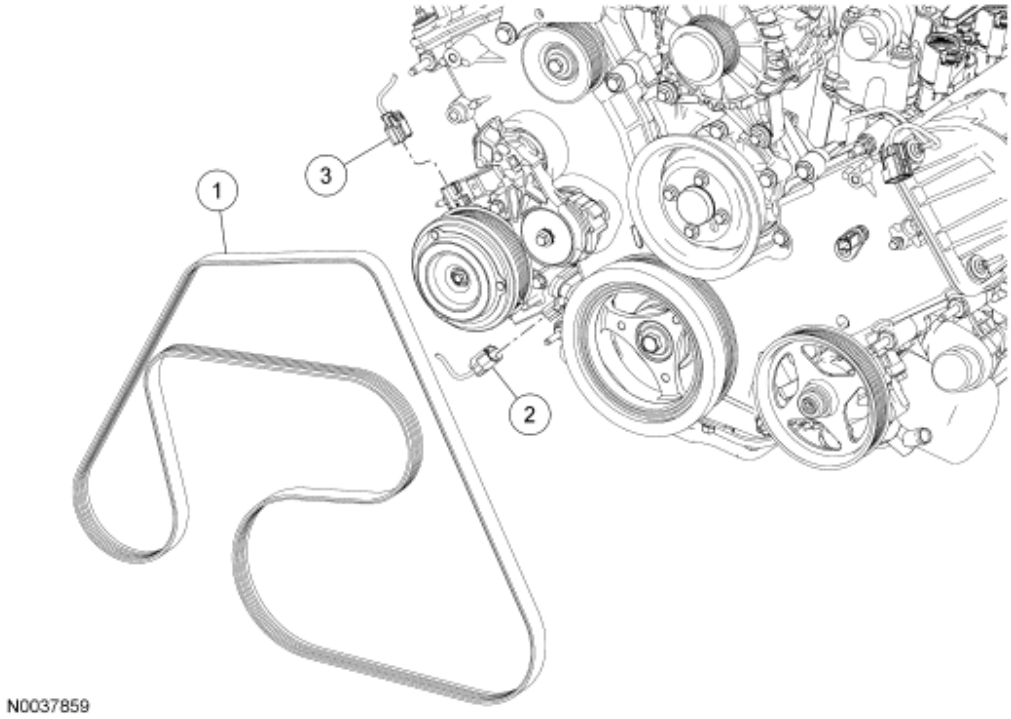

Fig. 89: Exploded View Of RH Exhaust Manifold (With Torque Specifications - 1 Of 3)
Courtesy of FORD MOTOR CO.

Item	Part Number	Description
1	8620	Accessory drive belt
2	14A464	Crankshaft position (CKP) sensor electrical connector (part of 12B637)
3	14A464	A/C compressor electrical connector (part of 12B637)

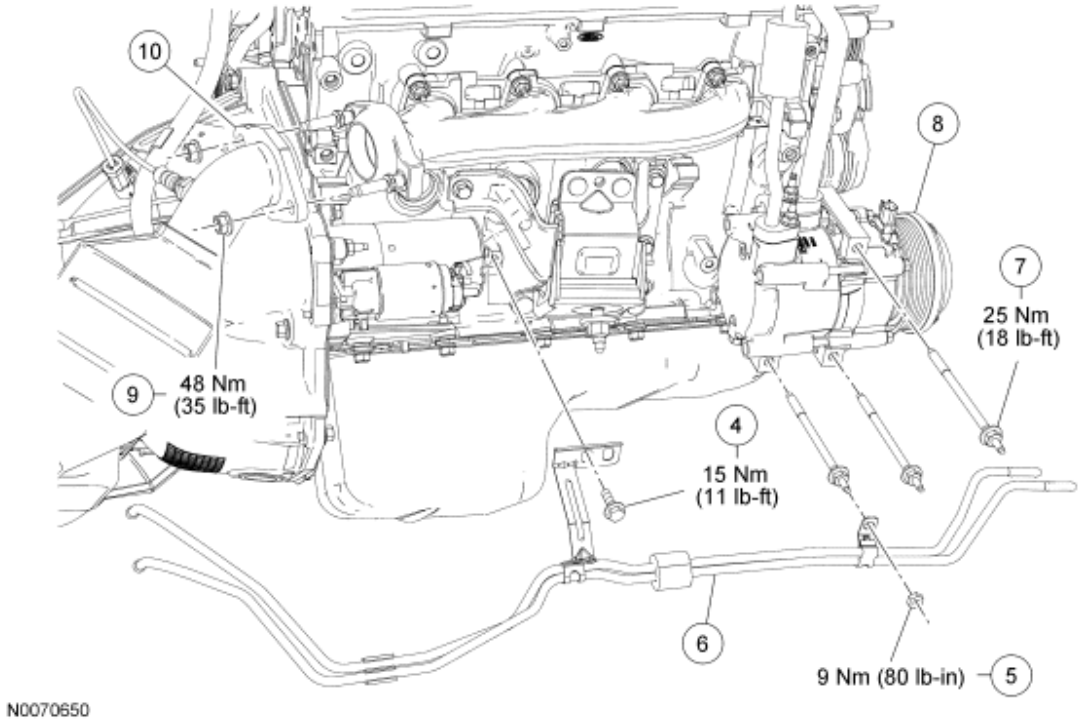

Fig. 90: Exploded View Of RH Exhaust Manifold (With Torque Specifications - 2 Of 3)
Courtesy of FORD MOTOR CO.

Item	Part Number	Description
4	N807218	Transmission cooler tube bracket bolt
5	W705443	Transmission cooler tube bracket nut
6	7H420	Transmission cooler tube assembly
7	W707821	A/C compressor stud bolt (3 required)
8	19703	A/C compressor
9	N811485	Catalytic converter-to-exhaust manifold nut (2 required)
10	5F250	Catalytic converter flange

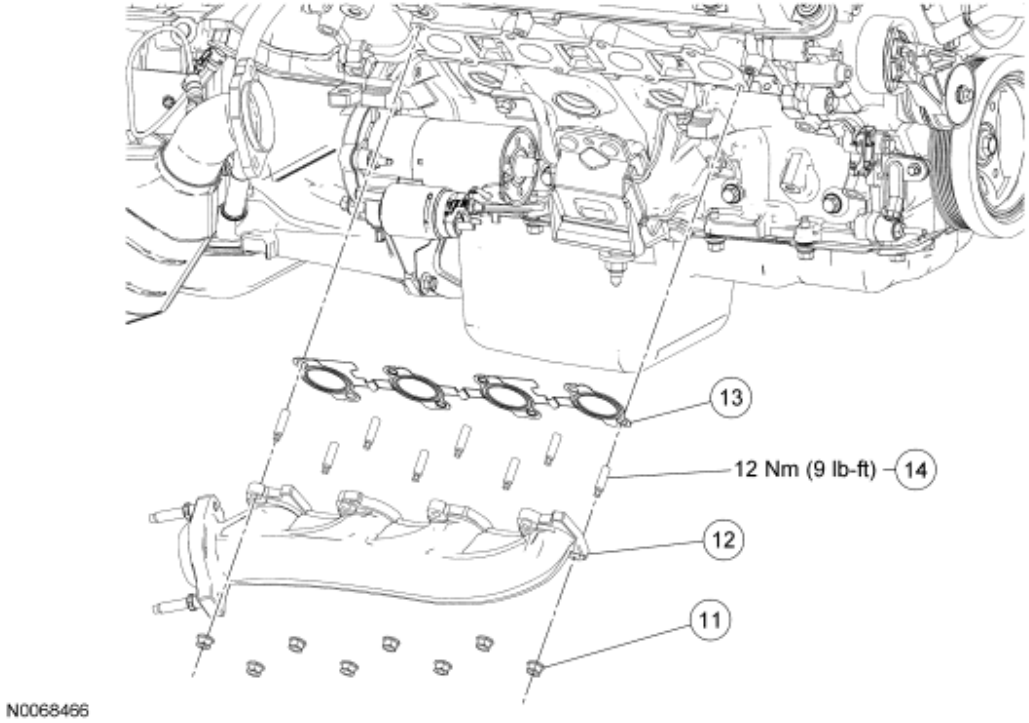

Fig. 91: Exploded View Of RH Exhaust Manifold (With Torque Specifications - 3 Of 3)
Courtesy of FORD MOTOR CO.

Item	Part Number	Description
11	W701706	Exhaust manifold nut (8 required)
12	9430	Exhaust manifold
13	9448	Exhaust manifold gasket
14	W707747	Exhaust manifold stud (8 required)

REMOVAL

WARNING: If equipped with fire suppression system, depower the system. For important safety warnings and procedures, refer to FIRE SUPPRESSION SYSTEM article.

1. With the vehicle in NEUTRAL, position it on a hoist. For additional information, refer to **JACKING AND LIFTING** article.
2. Disconnect the battery ground cable. For additional information, refer to **BATTERY, MOUNTING AND CABLES** article.
3. Rotate the drive belt tensioner clockwise and remove the drive belt.

Fig. 92: Rotating Tensioner Clockwise
Courtesy of FORD MOTOR CO.

4. Disconnect the crankshaft position (CKP) sensor electrical connector.
5. Disconnect the A/C compressor electrical connector.
6. Remove the bolt from the transmission cooler tube bracket.
7. Remove the nut and position aside the transmission cooler tube assembly.
8. Remove the 3 bolts and position aside the A/C compressor.
9. Remove the catalytic converter-to-exhaust manifold nuts and position aside the catalytic converter flange.
10. Remove the 8 nuts, the exhaust manifold and the gasket.
    - Discard the nuts and gasket.
11. Remove and discard the 8 exhaust manifold studs.
12. Inspect the exhaust manifold for flatness. For additional information, refer to **ENGINE SYSTEM - GENERAL INFORMATION** article.

INSTALLATION

1. Install the 8 new exhaust manifold studs.
    - Tighten to 12 Nm (9 lb-ft).
2. Install a new exhaust manifold gasket, the exhaust manifold and 8 new nuts.
    - Tighten in sequence shown to 25 Nm (18 lb-ft).

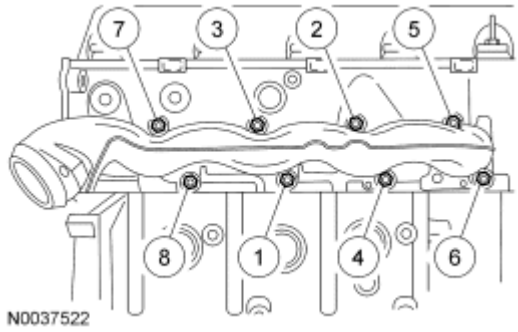

Fig. 93: Exhaust Manifold Nuts Tightening Sequence
Courtesy of FORD MOTOR CO.

3. Position the catalytic converter flange and install the catalytic converter-to-exhaust manifold nuts.
   - Tighten to 48 Nm (35 lb-ft).
4. Position the A/C compressor and install the 3 bolts.
   - Tighten to 25 Nm (18 lb-ft).
5. Position the transmission cooler tube assembly and install the nut.
   - To install, tighten to 9 Nm (80 lb-in).
6. Install the transmission cooler tube bracket bolt.
   - To install, tighten to 15 Nm (11 lb-ft).
7. Connect the A/C compressor electrical connector.
8. Connect the CKP sensor electrical connector.
9. Rotate the drive belt tensioner clockwise and install the drive belt.

Fig. 94: Rotating Tensioner Clockwise
Courtesy of FORD MOTOR CO.

10. Connect the battery ground cable. For additional information, refer to **BATTERY, MOUNTING AND CABLES** article.

WARNING: If equipped with fire suppression system, repower the system. For important safety warnings and procedures, refer to FIRE SUPPRESSION SYSTEM article.

11. If equipped with fire suppression system, repower the system.

EXHAUST MANIFOLD - LH

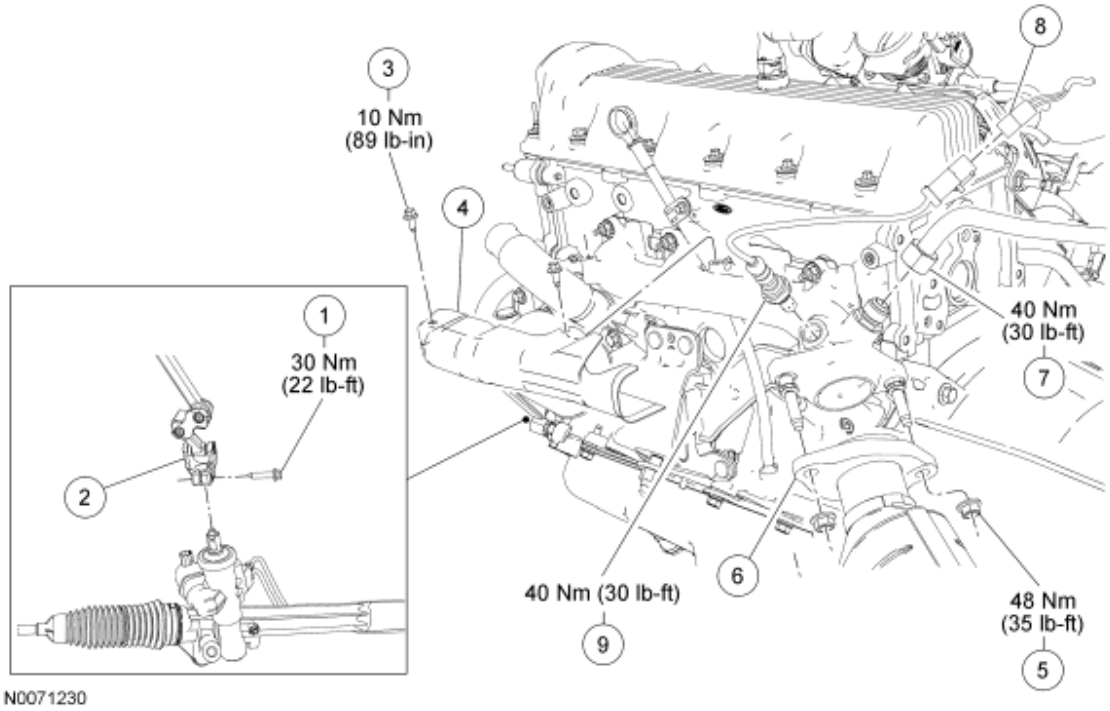

Fig. 95: Exploded View Of LH Exhaust Manifold (With Torque Specifications - 1 Of 2)
Courtesy of FORD MOTOR CO.

Item	Part Number	Description
1	W710821	Intermediate steering shaft pinch bolt
2	3C662	Intermediate steering shaft
3	W707130	Exhaust manifold heat shield bolt (2 required)
4	9Y423	Exhaust manifold heat shield
5	N811485	Catalytic converter-to-exhaust manifold nut (2 required)
6	5F250	Catalytic converter flange
7	9D477	EGR system module tube
8	14A464	Heated oxygen sensor (HO2S) electrical connector (12B637)
9	9Y472	HO2S sensor

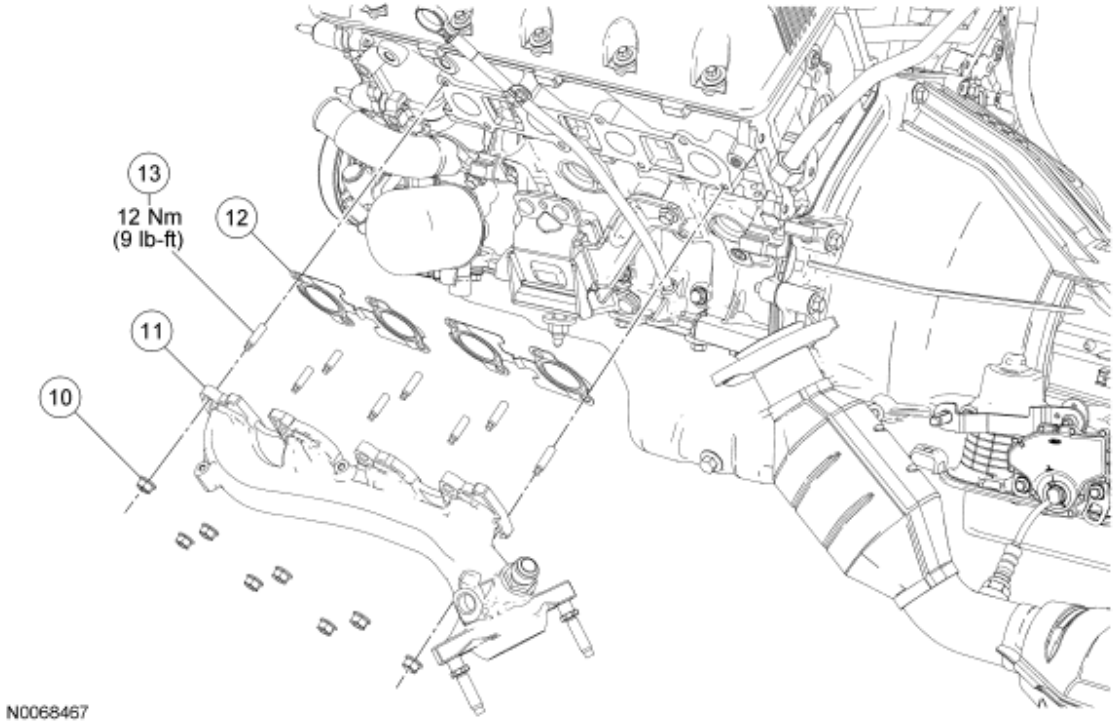

Fig. 96: Exploded View Of LH Exhaust Manifold (With Torque Specifications - 1 Of 2)
Courtesy of FORD MOTOR CO.

Item	Part Number	Description
10	W701706	Exhaust manifold nut (8 required)
11	9431	Exhaust manifold
12	9448	Exhaust manifold gasket (2 required)
13	W707747	Exhaust manifold stud (8 required)

REMOVAL

WARNING: If equipped with fire suppression system, depower the system. For important safety warnings and procedures, refer to FIRE SUPPRESSION SYSTEM article.

1. With the vehicle in NEUTRAL, position it on a hoist. For additional information, refer to **JACKING AND LIFTING** article.
2. Hold the steering wheel in the straight-ahead position, using a suitable holding device.

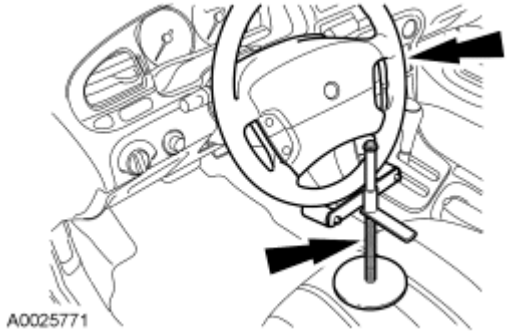

Fig. 97: Holding Steering Wheel In Straight Ahead Position
Courtesy of FORD MOTOR CO.

CAUTION: Do not allow the intermediate shaft to rotate while it is disconnected from the steering gear or damage to the clockspring may result. If there is evidence that the intermediate shaft has rotated, the clockspring must be removed and recentered. For additional information, refer to SUPPLEMENTAL RESTRAINT SYSTEM article.

3. Remove the intermediated shaft pinch bolt and detach the intermediate shaft from the steering gear and position aside.
4. Remove the 2 exhaust manifold heat shield bolts and the shield.
5. Remove the catalytic converter-to-exhaust manifold nuts and position aside the catalytic converter flange.
6. Disconnect the EGR system module tube from the exhaust manifold.
7. Disconnect and remove the LH heated oxygen sensor (HO2S). For additional information, refer to **ELECTRONIC ENGINE CONTROLS** article.
8. Remove the 8 nuts, the exhaust manifold and the gasket.
   - Discard the nuts and gasket.
9. Remove and discard the 8 exhaust manifold studs.
10. Inspect the exhaust manifold for flatness. For additional information, refer to **ENGINE SYSTEM - GENERAL INFORMATION** article.

INSTALLATION

1. Install the 8 new exhaust manifold studs.
   - Tighten to 12 Nm (9 lb-ft).
2. Install a new exhaust manifold gasket, the exhaust manifold and 8 new nuts.
   - Tighten in sequence shown to 25 Nm (18 lb-ft).

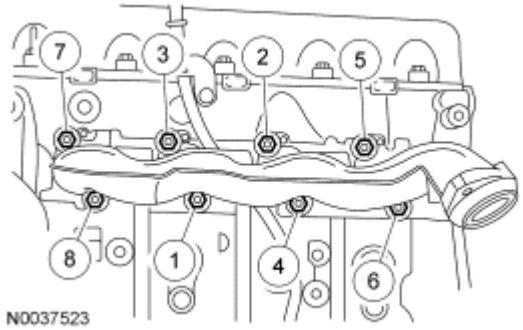

Fig. 98: Exhaust Manifold Nuts Tightening Sequence
Courtesy of FORD MOTOR CO.

3. Install and connect and the LH HO2S. For additional information, refer to **ELECTRONIC ENGINE CONTROLS** article.
   - Tighten to 40 Nm (30 lb-ft).
4. Connect the EGR system module tube to the exhaust manifold.
   - Tighten to 40 Nm (30 lb-ft).
5. Position the catalytic converter flange and install the catalytic converter-to-exhaust manifold nuts.
   - Tighten to 48 Nm (35 lb-ft).
6. Install the exhaust manifold heat shield and the 2 bolts.
   - Tighten to 10 Nm (89 lb-in).
7. Position the intermediate shaft on the steering gear and install the pinch bolt.
   - Tighten to 30 Nm (22 lb-ft).

WARNING: If equipped with fire suppression system, repower the system. For important safety warnings and procedures, refer to FIRE SUPPRESSION SYSTEM article.

8. If equipped with fire suppression system, repower the system.

ENGINE LUBRICATION COMPONENTS - EXPLODED VIEW, OIL PAN, OIL PUMP, OIL PUMP SCREEN AND PICKUP TUBE

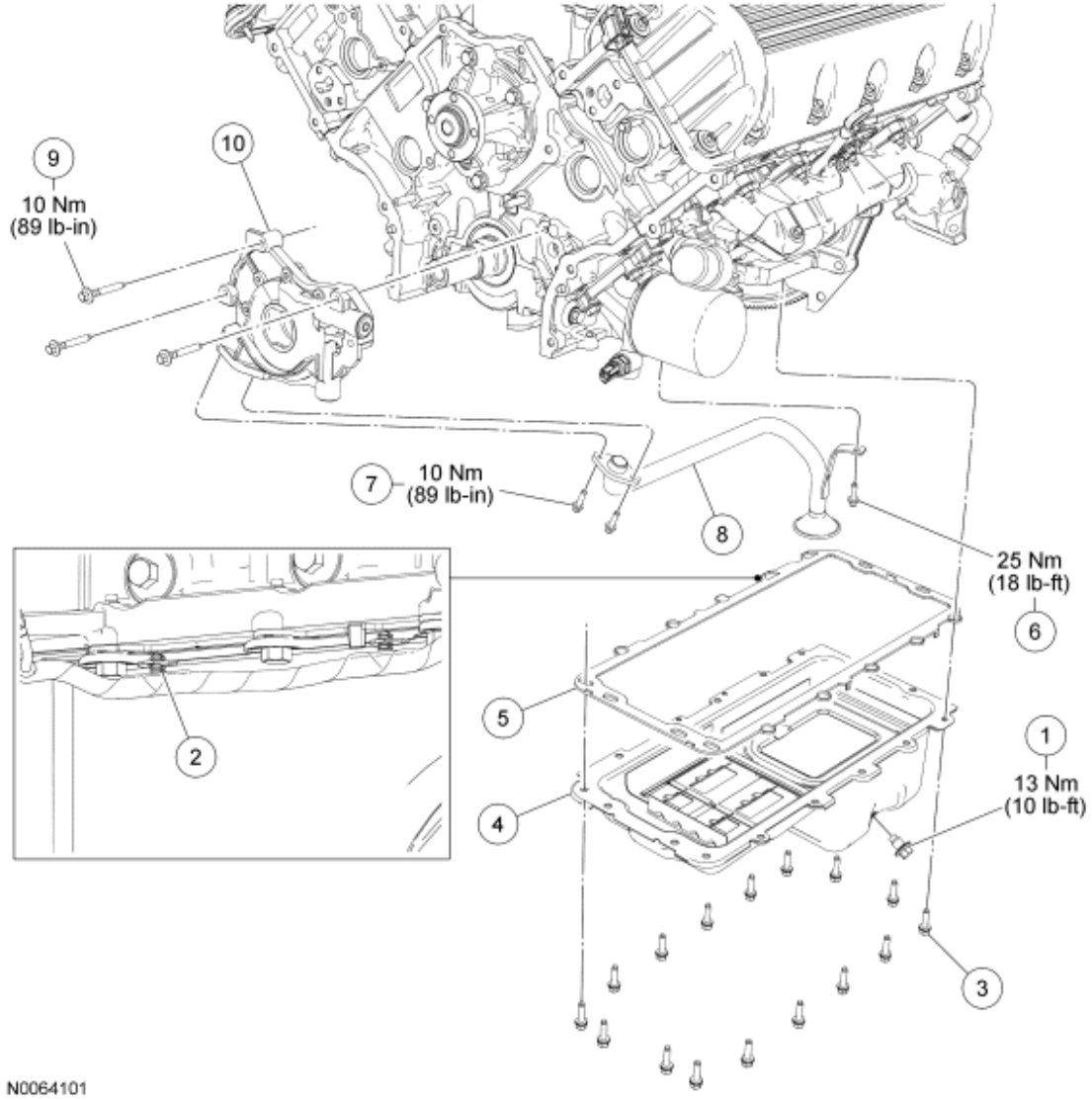

Fig. 99: Exploded View Of Oil Pan, Oil Pump, Oil Pump Screen and Pickup Tube (With Torque Specifications)
Courtesy of FORD MOTOR CO.

Item	Part Number	Description
1	6730	Oil pan drain plug
2	-	Pin-type wire harness retainer (2 required) (part of 12B637)
3	W701605	Oil pan bolt (16 required)
4	6675	Oil pan
5	6710	Oil pan gasket
6	N605904	Oil pump screen and pickup tube-to-spacer bolt
7	N806155	Oil pump screen and pickup tube-to-oil pump bolt (2 required)
8	6622	Oil pump screen and pickup tube
9	N806183	Oil pump bolt (3 required)

10	6621	Oil pump

1. For additional information, refer to the following procedures.

OIL PAN

Material

Item	Specification
Motorcraft Metal Surface Cleaner ZC-21	WSE-M5B392-A
Motorcraft SAE 5W-20 Premium Synthetic Blend Motor Oil XO-5W20-QSP (US); Motorcraft SAE 5W-20 Super Premium Motor Oil CXO-5W20-LSP12 (Canada); or equivalent	WSS-M2C930-A
Silicone Gasket and Sealant TA-30	WSE-M4G323-A4
Silicone Gasket Remover ZC-30	-

REMOVAL

WARNING: If equipped with fire suppression system, depower the system. For important safety warnings and procedures, refer to FIRE SUPPRESSION SYSTEM article.

1. With the vehicle in NEUTRAL, position it on a hoist. For additional information, refer to **JACKING AND LIFTING** article.
2. Remove the front crossmember. For additional information, refer to **FULL FRAME AND BODY MOUNTING** article.
3. Remove the bolt and the nut. Position the transmission cooler tubes aside.

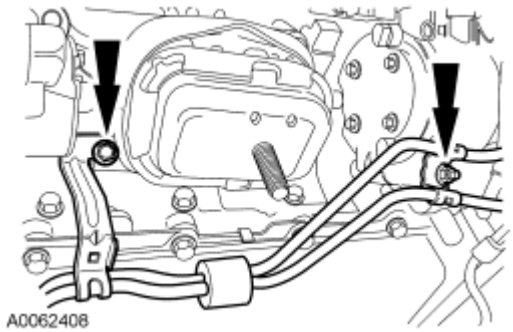

Fig. 100: Transmission Cooler Tube Brackets & Fasteners
Courtesy of FORD MOTOR CO.

4. Drain the engine oil.
   - Install the drain plug when finished.

- Tighten to 13 Nm (10 lb-ft).

5. Detach the 2 pin-type wire harness retainers.
6. Remove the oil pan bolts in the sequence shown.

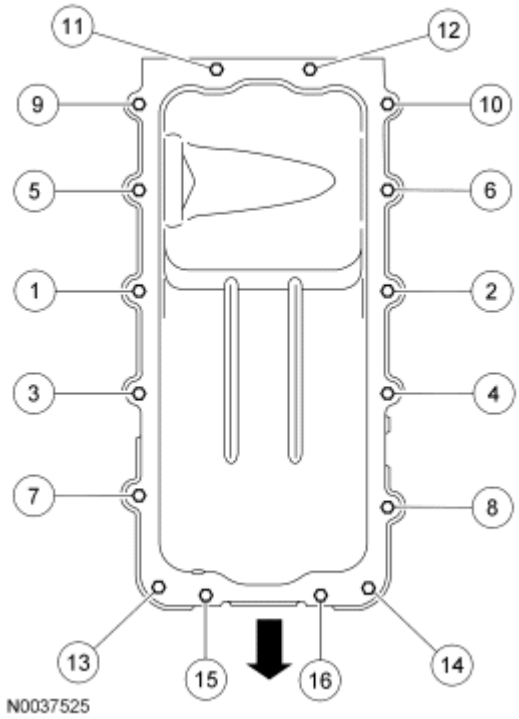

Fig. 101: Oil Pan Bolts Removal Sequence
Courtesy of FORD MOTOR CO.

7. Remove the oil pan and the gasket.

INSTALLATION

CAUTION: Do not use metal scrapers, wire brushes, power abrasive discs or other abrasive means to clean the gasket mating surfaces. These tools cause scratches and gouges, which make leak paths. Use a plastic scraping tool to remove all traces of old sealant.

1. Clean and inspect the mating surfaces.

CAUTION: If the oil pan is not secured within 4 minutes, the sealant must be removed and the sealing area cleaned with metal surface cleaner. Allow to dry until there is no sign of wetness, or 4 minutes, whichever is longer. Failure to follow this procedure may result in future oil leakage.

2. Apply silicone gasket and sealant at the rear seal retainer-to-cylinder block sealing surface.

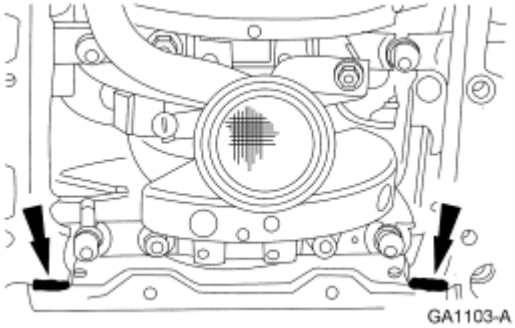

Fig. 102: Applying Silicone Gasket And Sealant
Courtesy of FORD MOTOR CO.

CAUTION: If the oil pan is not secured within 4 minutes, the sealant must be removed and the sealing area cleaned with metal surface cleaner. Allow to dry until there is no sign of wetness, or 4 minutes, whichever is longer. Failure to follow this procedure may result in future oil leakage.

3. Apply silicone gasket and sealant at the engine front cover-to-cylinder block mating surface.

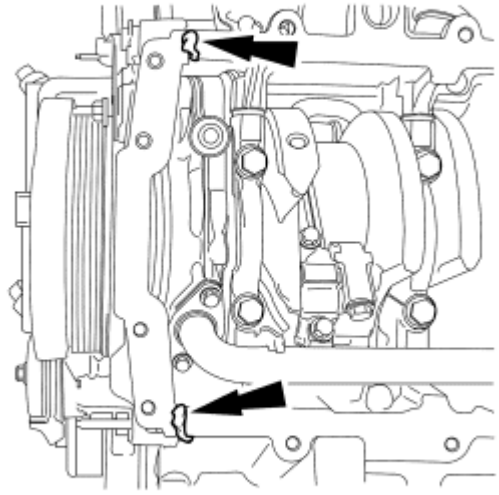

Fig. 103: Applying Sealant To Engine Front Cover-To-Cylinder Block Surface
Courtesy of FORD MOTOR CO.

4. Position the oil pan gasket and the oil pan.
5. Tighten the bolts in 2 stages, in the sequence shown.

- Stage 1: Tighten to 20 Nm (15 lb-ft).
- Stage 2: Rotate an additional 60 degrees.

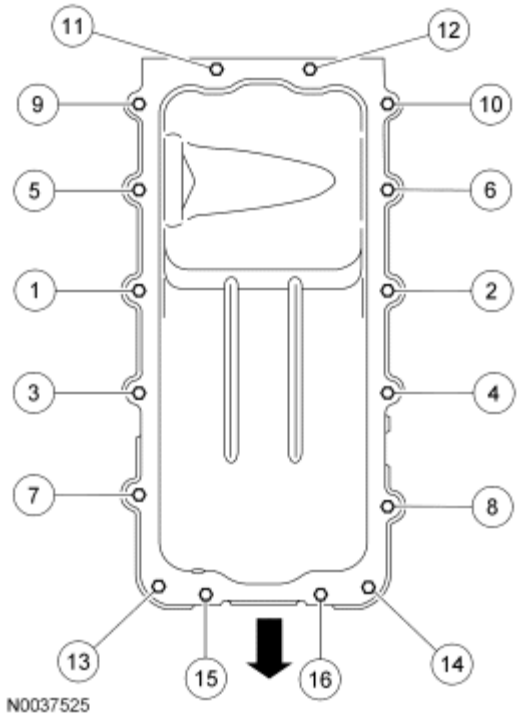

Fig. 104: Oil Pan Bolts Torque Sequence
Courtesy of FORD MOTOR CO.

6. Attach the 2 pin-type wire harness retainers.
7. Position the transmission cooler tubes and install the bolt and the nut.
   1. Tighten the bolt to 15 Nm (11 lb-ft).
   2. Tighten the nut to 9 Nm (80 lb-in).

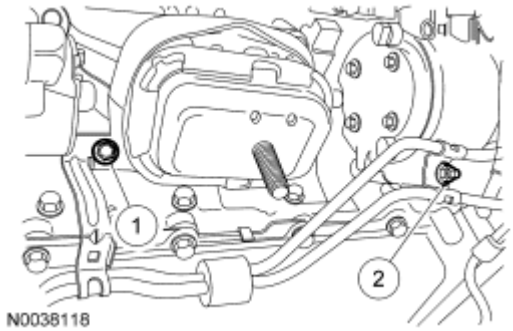

Fig. 105: Transmission Cooler Tube Bracket Fasteners
Courtesy of FORD MOTOR CO.

8. Install the front crossmember. For additional information, refer to **FULL FRAME AND BODY MOUNTING** article.

9. Fill the engine with clean engine oil.
10. Start the engine and check for leaks.

WARNING: If equipped with fire suppression system, repower the system. For important safety warnings and procedures, refer to FIRE SUPPRESSION SYSTEM article.

11. If equipped with fire suppression system, repower the system.

OIL PUMP

Material

Item	Specification
Motorcraft Metal Surface Prep ZC-31	-
Motorcraft SAE 5W-20 Premium Synthetic Blend Motor Oil XO-5W20-QSP (US); Motorcraft SAE 5W-20 Super Premium Motor Oil CXO-5W20-LSP12 (Canada); or equivalent	WSS-M2C930-A

REMOVAL

WARNING: If equipped with fire suppression system, depower the system. For important safety warnings and procedures, refer to FIRE SUPPRESSION SYSTEM article.

1. With the vehicle in NEUTRAL, position it on a hoist. For additional information, refer to **JACKING AND LIFTING** article.
2. Remove the oil pan. For additional information, refer to **Engine Lubrication Components - Exploded View, Oil Pan, Oil Pump, Oil Pump Screen and Pickup Tube** and **Oil Pan**.
3. Remove the timing drive components. For additional information, refer to **Timing Drive Components**.
4. Remove the 3 bolts, the oil pump screen and pickup tube.
   - Discard the O-ring seal.
5. Remove the 3 bolts and the oil pump.

INSTALLATION

CAUTION: Do not use metal scrapers, wire brushes, power abrasive discs or other abrasive means to clean the sealing surfaces. These tools cause scratches and gouges which make leak paths. Use a plastic scraping tool to remove all traces of old sealant.

1. Clean the sealing surfaces with metal surface prep. Follow the directions on the packaging. Inspect the mating surfaces
2. Position the oil pump and install the 3 bolts.

- Tighten to 10 Nm (89 lb-in).

CAUTION: Make sure the O-ring is in place and not damaged. A missing or damaged O-ring can cause foam in the lubrication system, low oil pressure and severe engine damage.

NOTE: Clean and inspect the mating surfaces and install a new O-ring. Lubricate the O-ring with clean engine oil prior to installation.

3. Position the oil pump screen and pickup tube and install the bolts.
   - Tighten the oil pump screen and pickup tube-to-oil pump bolts to 10 Nm (89 lb-in).
   - Tighten the oil pump screen and pickup tube-to-spacer bolt to 25 Nm (18 lb-ft).
4. Install the timing drive components. For additional information, refer to **Timing Drive Components**.
5. Install the oil pan. For additional information, refer to **Engine Lubrication Components - Exploded View, Oil Pan, Oil Pump, Oil Pump Screen and Pickup Tube** and **Oil Pan**.

WARNING: If equipped with fire suppression system, repower the system. For important safety warnings and procedures, refer to FIRE SUPPRESSION SYSTEM article.

6. If equipped with fire suppression system, repower the system.

OIL PUMP SCREEN AND PICKUP TUBE

Material

Item	Specification
Motorcraft Metal Surface Prep ZC-31	-
Motorcraft SAE 5W-20 Premium Synthetic Blend Motor Oil XO-5W20-QSP (US); Motorcraft SAE 5W-20 Super Premium Motor Oil CXO-5W20-LSP12 (Canada); or equivalent	WSS-M2C930-A

REMOVAL

WARNING: If equipped with fire suppression system, depower the system. For important safety warnings and procedures, refer to FIRE SUPPRESSION SYSTEM article.

1. With the vehicle in NEUTRAL, position it on a hoist. For additional information, refer to **JACKING AND LIFTING** article.
2. Remove the oil pan. For additional information, refer to **Engine Lubrication Components - Exploded View, Oil Pan, Oil Pump, Oil Pump Screen and Pickup Tube** and **Oil Pan**.
3. Remove the 3 bolts, the oil pump screen and pickup tube.

- Discard the O-ring seal.

INSTALLATION

CAUTION: Make sure the O-ring is in place and not damaged. A missing or damaged O-ring can cause foam in the lubrication system, low oil pressure and severe engine damage.

NOTE: Clean and inspect the mating surfaces and install a new O-ring. Lubricate the O-ring with clean engine oil prior to installation.

1. Position the oil pump screen and pickup tube and install the bolts.
   - Tighten the oil pump screen and pickup tube-to-oil pump bolts to 10 Nm (89 lb-in).
   - Tighten the oil pump screen and pickup tube-to-spacer bolt to 25 Nm (18 lb-ft).
2. Install the oil pan. For additional information, refer to **Engine Lubrication Components - Exploded View, Oil Pan, Oil Pump, Oil Pump Screen and Pickup Tube** and **Oil Pan**.

WARNING: If equipped with fire suppression system, repower the system. For important safety warnings and procedures, refer to FIRE SUPPRESSION SYSTEM article.

3. If equipped with fire suppression system, repower the system.

OIL FILTER ADAPTER

Material

Item	Specification
Motorcraft SAE 5W-20 Premium Synthetic Blend Motor Oil XO-5W20-QSP (US); Motorcraft SAE 5W-20 Super Premium Motor Oil CXO-5W20-LSP12 (Canada); or equivalent	WSS-M2C930-A

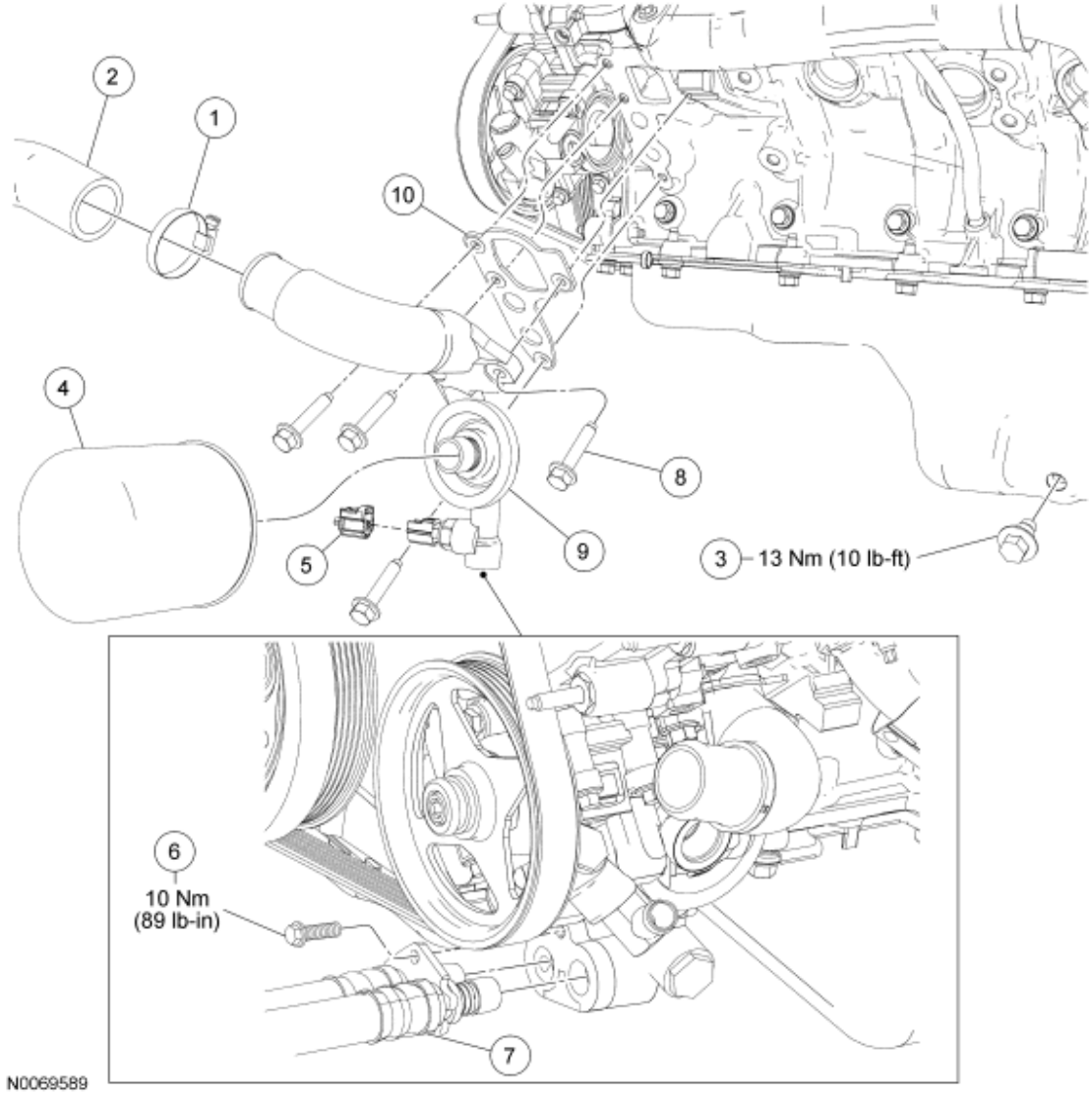

Fig. 106: Exploded View Of Oil Filter Adapter (With Torque Specifications)
Courtesy of FORD MOTOR CO.

Item	Part Number	Description
1	W525939	Lower radiator hose clamp
2	8B273	Lower radiator hose
3	6730	Oil pan drain plug
4	6714	Oil filter
5	14A464	Engine oil pressure (EOP) switch electrical connector (part of 12B637)
6	N806155	Oil cooler hose bolt (if equipped)
7	8N039	Oil cooler hose (if equipped) (part of 6A642)
8	W705128	Oil filter adapter bolt (4 required)
9	6884	Oil filter adapter
10	6A636	Oil filter adapter gasket

REMOVAL

WARNING: If equipped with fire suppression system, depower the system. For important safety warnings and procedures, refer to FIRE SUPPRESSION SYSTEM article.

1. With the vehicle in NEUTRAL, position it on a hoist. For additional information, refer to **JACKING AND LIFTING** article.
2. Drain the cooling system. For additional information, refer to **ENGINE COOLING** article.
3. Disconnect the lower radiator hose from the oil filter adapter.
4. Drain the engine oil.
   - Install the drain plug when finished.
   - Tighten to 13 Nm (10 lb-ft).
5. Remove the oil filter.
6. Disconnect the engine oil pressure (EOP) switch electrical connector.
7. If equipped, remove the oil cooler hose bolt and the oil cooler hoses from the oil filter adapter.
8. Remove the 4 bolts and the oil filter adapter and gasket.
   - Discard the oil filter adapter gasket.

INSTALLATION

CAUTION: Do not use metal scrapers, wire brushes, power abrasive discs or other abrasive means to clean the sealing surface. These tools cause scratches and gouges that make leak paths. Use a plastic scraping tool to remove all traces of the gasket material.

1. Clean the sealing surfaces.
2. Install a new gasket and the oil filter adapter and tighten the 4 bolts in the sequence shown.
   - Tighten to 25 Nm (18 lb-ft).

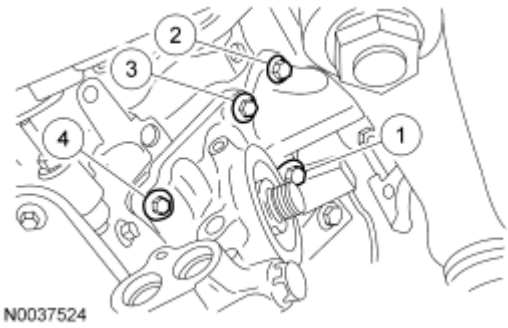

Fig. 107: Oil Filter Adapter Bolts Torque Sequence
Courtesy of FORD MOTOR CO.

3. If equipped, install the oil cooler hoses to the oil filter adapter and install the bolt.

- Tighten to 10 Nm (89 lb-in).

4. Connect the EOP switch electrical connector.

NOTE: Lubricate the oil filter O-ring seal with clean engine oil.

5. Install the oil filter.
6. Fill the crankcase with clean engine oil.
7. Connect the lower radiator hose to the oil filter adapter.
8. Fill and bleed the cooling system. For additional information, refer to **ENGINE COOLING** article.

WARNING: If equipped with fire suppression system, repower the system. For important safety warnings and procedures, refer to FIRE SUPPRESSION SYSTEM article.

9. If equipped with fire suppression system, repower the system.

OIL COOLER

Material

Item	Specification
Motorcraft SAE 5W-20 Premium Synthetic Blend Motor Oil XO-5W20-QSP (US); Motorcraft SAE 5W-20 Super Premium Motor Oil CXO-5W20-LSP12 (Canada); or equivalent	WSS-M2C930-A

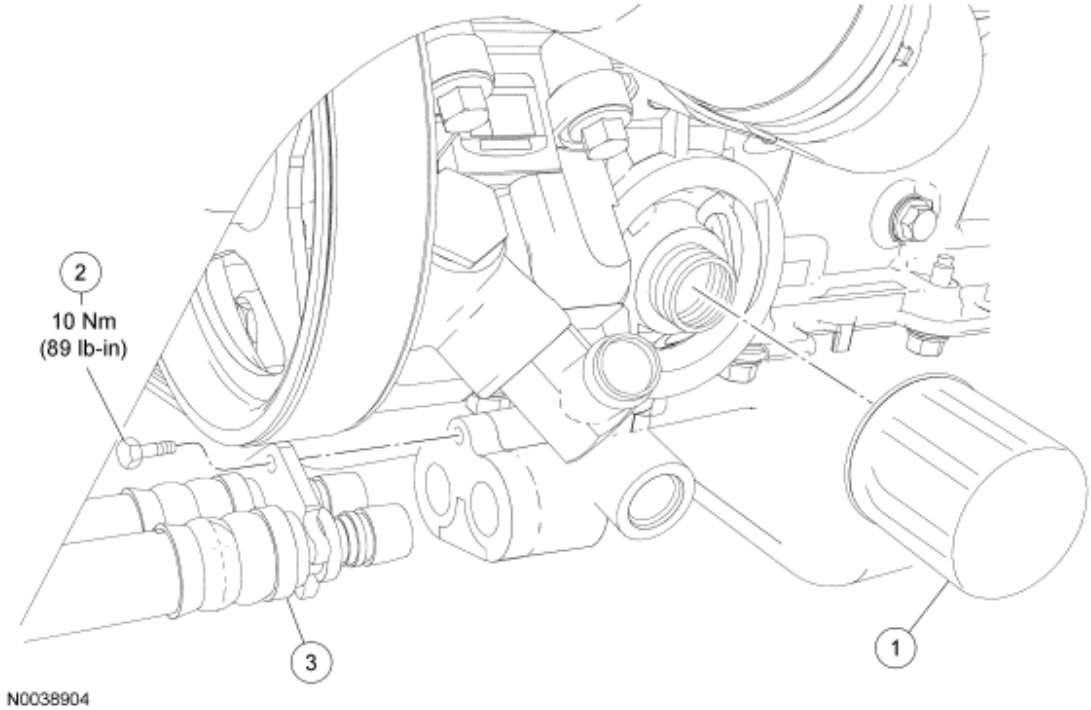

Fig. 108: Exploded View Of Oil Cooler (With Torque Specifications - 1 Of 2)
Courtesy of FORD MOTOR CO.

Item	Part Number	Description
1	6714	Oil filter
2	N806155	Oil cooler hose bolt
3	8N039	Oil cooler hoses (part of 6A642)

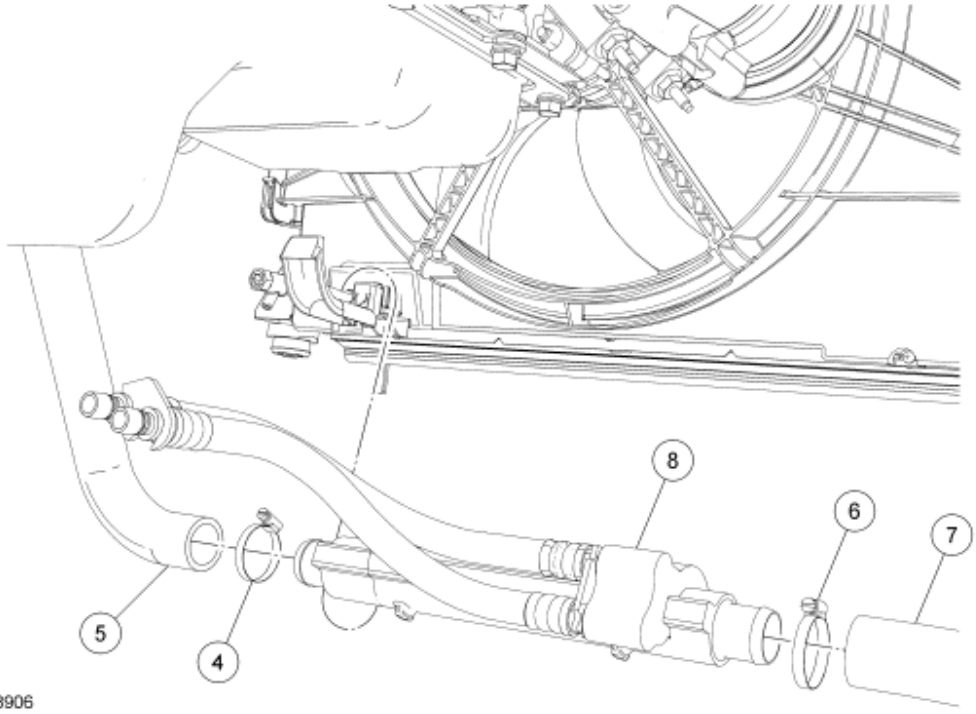

Fig. 109: Exploded View Of Oil Cooler (2 Of 2)
Courtesy of FORD MOTOR CO.

Item	Part Number	Description
4	W525939	Coolant hose clamp
5	8B273	Coolant hose
6	W525939	Coolant hose clamp
7	8B273	Coolant hose
8	6A642	Oil cooler assembly

REMOVAL AND INSTALLATION

WARNING: **If equipped with fire suppression system, depower the system. For important safety warnings and procedures, refer to FIRE SUPPRESSION SYSTEM article.**

1. With the vehicle in NEUTRAL, position it on a hoist. For additional information, refer to **JACKING**

AND LIFTING article.

2. Drain the cooling system. For additional information, refer to **ENGINE COOLING** article.
3. Remove and discard the oil filter.
   - To install, lubricate the new oil filter O-ring seal with clean engine oil.
4. Remove the oil cooler hose bolt and remove the oil cooler hoses from the oil filter adapter.
   - To install, tighten to 10 Nm (89 lb-in).

CAUTION: If metal or aluminum material is present in the oil cooler or oil cooler hoses, mechanical concerns exist. Severe damage to the engine may occur. To diagnose mechanical concerns, refer to ENGINE SYSTEM - GENERAL INFORMATION article.

5. Disconnect the 2 coolant hoses and remove the oil cooler assembly.
   - Inspect the oil cooler.

WARNING: If equipped with fire suppression system, repower the system. For important safety warnings and procedures, refer to FIRE SUPPRESSION SYSTEM article.

6. To install, reverse the removal procedure. If equipped with fire suppression system, repower the system.

ENGINE OIL PRESSURE (EOP) SWITCH

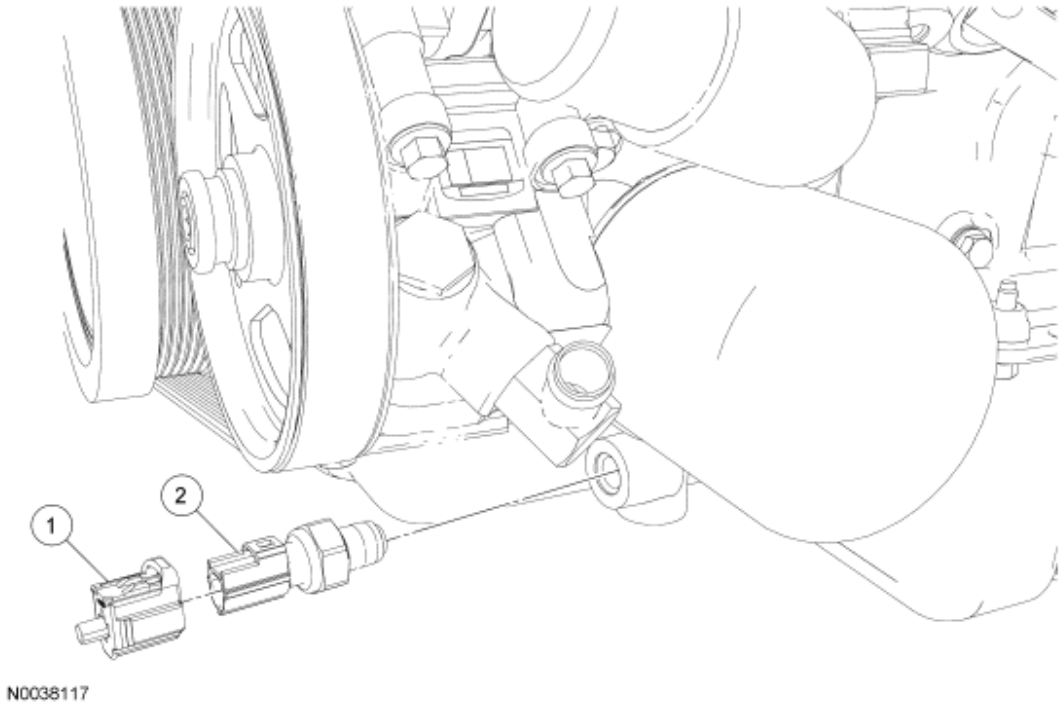

Fig. 110: Exploded View Of Engine Oil Pressure (EOP) Switch

Courtesy of FORD MOTOR CO.

Item	Part Number	Description
1	14A464	Engine oil pressure (EOP) switch electrical connector (part of 12B637)
2	9278	EOP switch

REMOVAL AND INSTALLATION

WARNING: If equipped with fire suppression system, depower the system. For important safety warnings and procedures, refer to FIRE SUPPRESSION SYSTEM article.

1. With the vehicle in NEUTRAL, position it on a hoist. For additional information, refer to **JACKING AND LIFTING** article.
2. Disconnect the engine oil pressure (EOP) switch electrical connector and remove the EOP switch.
   - To install, tighten to 14 Nm (10 lb-ft), then tighten an additional 180 degrees.

WARNING: If equipped with fire suppression system, repower the system. For important safety warnings and procedures, refer to FIRE SUPPRESSION SYSTEM article.

3. To install, reverse the removal procedure. If equipped with fire suppression system, repower the system.

OIL LEVEL INDICATOR AND TUBE

Material

Item	Specification
Motorcraft SAE 5W-20 Premium Synthetic Blend Motor Oil XO-5W20-QSP (US); Motorcraft SAE 5W-20 Super Premium Motor Oil CXO-5W20-LSP12 (Canada); or equivalent	WSS-M2C930-A

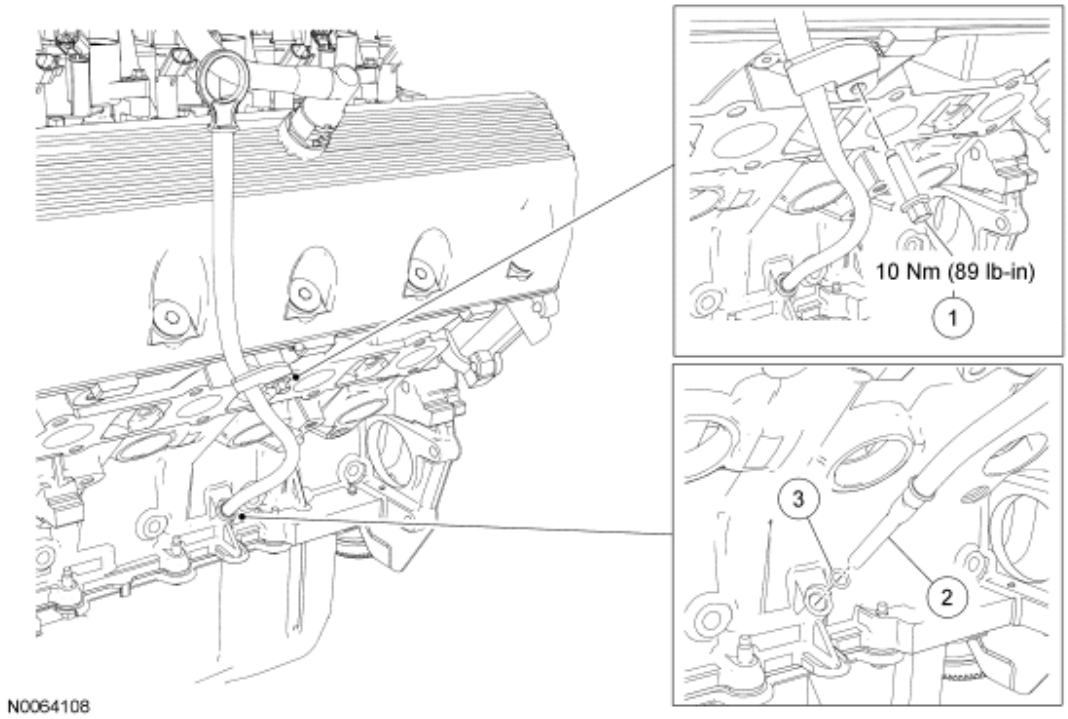

Fig. 111: Exploded View Of Oil Level Indicator and Tube (With Torque Specifications)
Courtesy of FORD MOTOR CO.

Item	Part Number	Description
1	N806155	Oil level indicator tube bolt
2	6750	Oil level indicator and tube
3	-	Oil level indicator tube O-ring seal

REMOVAL AND INSTALLATION

WARNING: If equipped with fire suppression system, depower the system. For important safety warnings and procedures, refer to FIRE SUPPRESSION SYSTEM article.

1. With the vehicle in NEUTRAL, position it on a hoist. For additional information, refer to **JACKING AND LIFTING** article.
2. Remove the LH exhaust manifold. For additional information, refer to **Exhaust Manifold - LH**.
3. Remove the bolt and the oil level indicator tube.
   - To install, tighten to 10 Nm (89 lb-in).

CAUTION: Failure to lubricate the O-ring seal and the oil level indicator tube-to-engine block mating surface with clean engine oil may result in engine oil leaks.

CAUTION: Make sure the O-ring seal remains in position and does not roll up the indicator tube during installation or engine oil leaks may occur.

4. Remove the O-ring seal and discard.

WARNING: If equipped with fire suppression system, repower the system. For important safety warnings and procedures, refer to FIRE SUPPRESSION SYSTEM article.

5. To install, reverse the removal procedure. If equipped with fire suppression system, repower the system.
   - Lubricate the new O-ring seal and engine mating surface with clean engine oil.

LOWER END COMPONENTS - EXPLODED VIEW, FLEXPLATE AND CRANKSHAFT REAR SEAL WITH RETAINER PLATE

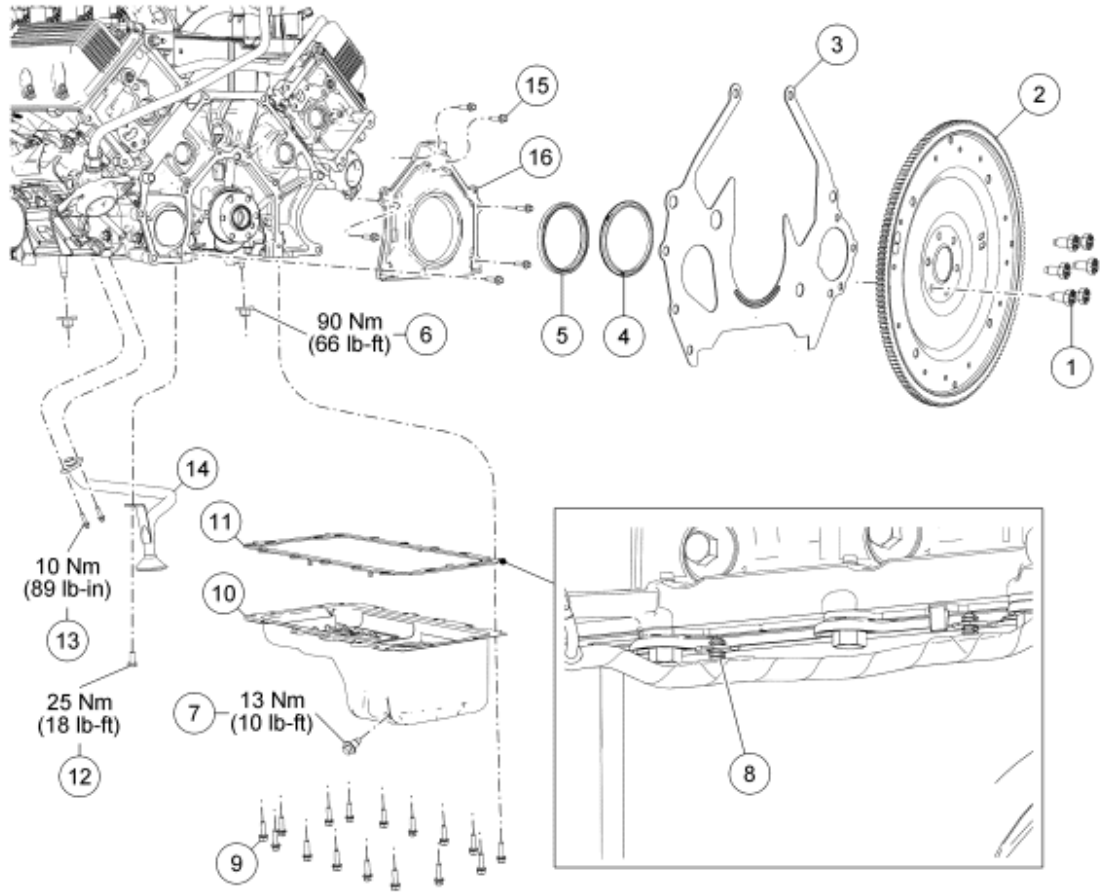

N0051193

Fig. 112: Exploded View Of Flexplate and Crankshaft Rear Seal with Retainer Plate (With Torque Specifications)
Courtesy of FORD MOTOR CO.

Item	Part Number	Description
1	N806168	Flexplate bolt (6 required)
2	6375	Flexplate
3	6A373	Engine-to-transmission spacer plate
4	6310	Crankshaft oil slinger
5	6701	Crankshaft rear seal
6	W707492	Engine mount nut (2 required)
7	6730	Oil pan drain plug
8	-	Wire harness pin-type retainer (2 required)
9	W701605	Oil pan bolt (16 required)
10	6675	Oil pan
11	6710	Oil pan gasket
12	N605904	Oil pump screen and pickup tube bolt
13	N806155	Oil pump screen and pickup tube bolt (2 required)
14	6622	Oil pump screen and pickup tube
15	N806155	Crankshaft rear seal retainer plate bolt (6 required)
16	6K318	Crankshaft rear seal retainer plate

1. For additional information, refer to the following procedures.

FLEXPLATE

REMOVAL

WARNING: If equipped with fire suppression system, depower the system. For important safety warnings and procedures, refer to FIRE SUPPRESSION SYSTEM article.

1. With the vehicle in NEUTRAL, position it on a hoist. For additional information, refer to **JACKING AND LIFTING** article.
2. Remove the transmission. For additional information, refer to **AUTOMATIC TRANSAXLE/TRANSMISSION** article.
3. Remove the 6 bolts and the flexplate.

INSTALLATION

1. Position the flexplate and loosely install the 6 bolts. Tighten the bolts in the sequence shown to 80 Nm (59 lb-ft).

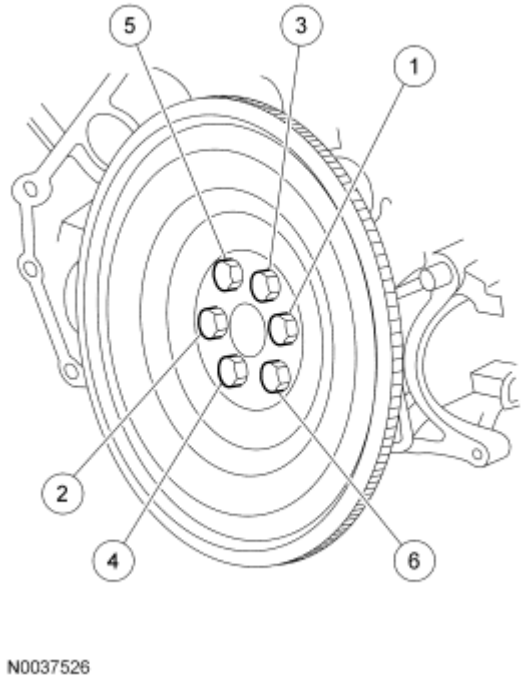

Fig. 113: Flexplate Bolt Torque Sequence
Courtesy of FORD MOTOR CO.

2. Install the transmission. For additional information, refer to **AUTOMATIC TRANSAXLE/TRANSMISSION** article.

WARNING: If equipped with fire suppression system, repower the system. For important safety warnings and procedures, refer to FIRE SUPPRESSION SYSTEM article.

3. If equipped with fire suppression system, repower the system.

CRANKSHAFT REAR SEAL

Special Tools

Illustration	Tool Name	Tool Number
 ST1482-A	Installer, Crankshaft Rear Oil Slinger	303-517 (T95P-6701-CH)
	Installer, Crankshaft Rear Seal	303-516 (T95P-6701-BH)

ST1479-A		
ST1480-A	Installer, Crankshaft Rear Seal	303-518 (T95P-6701-DH)
ST1481-A	Remover, Crankshaft Rear Oil Slinger	303-514 (T95P-6701-AH)
ST1382-A	Remover, Crankshaft Rear Seal	303-519 (T95P-6701-EH)
ST1185-A	Slide Hammer	100-001 (T50T-100-A)

Material

Item	Specification
Motorcraft SAE 5W-20 Premium Synthetic Blend Motor Oil XO-5W20-QSP (US); Motorcraft SAE 5W-20 Super Premium Motor Oil CXO-5W20-LSP12 (Canada); or equivalent	WSS-M2C930-A

REMOVAL

WARNING: If equipped with fire suppression system, depower the system. For important safety warnings and procedures, refer to FIRE SUPPRESSION SYSTEM article.

1. With the vehicle in NEUTRAL, position it on a hoist. For additional information, refer to **JACKING AND LIFTING** article.
2. Remove the flexplate. For additional information, refer to **Flexplate**.
3. Using the special tools, remove the crankshaft oil slinger.

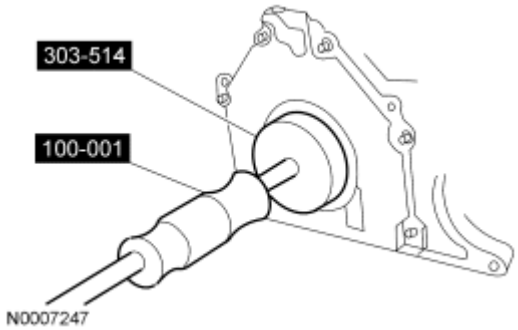

Fig. 114: Removing Crankshaft Rear Oil Seal Slinger
Courtesy of FORD MOTOR CO.

4. Using the special tools, remove the crankshaft rear seal.

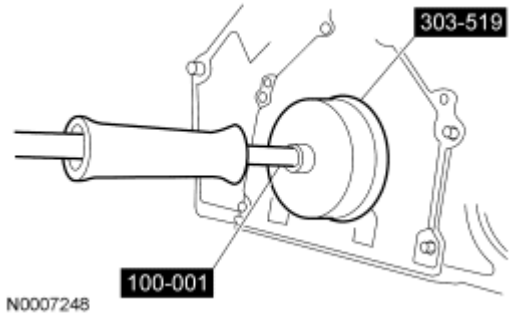

Fig. 115: Removing Crankshaft Rear Seal
Courtesy of FORD MOTOR CO.

INSTALLATION

NOTE: Lubricate the inner lip of the crankshaft rear seal with engine oil.

1. Using the special tools, install the crankshaft rear seal.

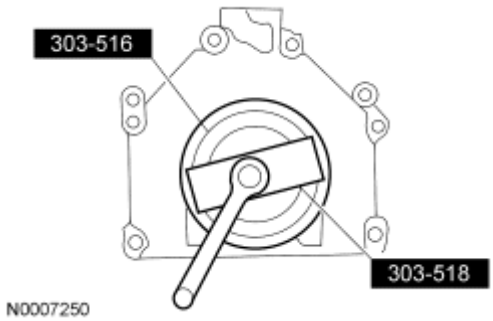

Fig. 116: Using Special Tools To Install New Crankshaft Rear Seal
Courtesy of FORD MOTOR CO.

2. Using the special tools, install the crankshaft oil slinger.

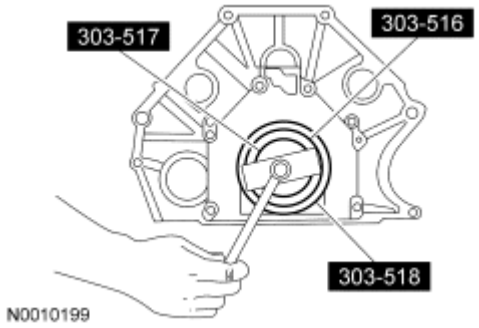

Fig. 117: Installing Crankshaft Rear Oil Slinger Using Special Tools
Courtesy of FORD MOTOR CO.

3. Install the flexplate. For additional information, refer to **Flexplate**.

WARNING: If equipped with fire suppression system, repower the system. For important safety warnings and procedures, refer to FIRE SUPPRESSION SYSTEM article.

4. If equipped with fire suppression system, repower the system.

CRANKSHAFT REAR SEAL WITH RETAINER PLATE

Special Tools

Illustration	Tool Name	Tool Number
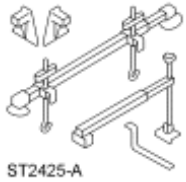 ST2425-A	3-Bar Engine Support Kit	303-F072
 ST1482-A	Installer, Crankshaft Rear Oil Slinger	303-517 (T95P-6701-CH)
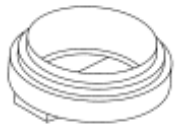 ST1479-A	Installer, Crankshaft Rear Seal	303-516 (T95P-6701-BH)
	Installer, Crankshaft Rear Seal	303-518 (T95P-6701-DH)

 ST1480-A		
 ST1603-A	Lifting Bracket, Engine	303-D087 (D93P-6001-A1)
 ST1604-A	Lifting Bracket, Engine	303-D088 (D93P-6001-A2)
 ST1481-A	Remover, Crankshaft Rear Oil Slinger	303-514 (T95P-6701-AH)
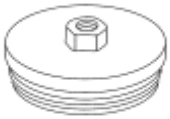 ST1382-A	Remover, Crankshaft Rear Seal	303-519 (T95P-6701-EH)
 ST1185-A	Slide Hammer	100-001 (T50T-100-A)

Material

Item	Specification
Gasket Maker TA-16	WSK-M2G348-A5
Motorcraft Metal Surface Cleaner ZC-21	WSE-M5B392-A
Motorcraft Metal Surface Prep ZC-31	-
Motorcraft SAE 5W-20 Premium Synthetic Blend Motor Oil XO-5W20-QSP (US); Motorcraft SAE 5W-20 Super Premium Motor Oil CXO-5W20-LSP12 (Canada); or equivalent	WSS-M2C930-A

Silicone Gasket and Sealant TA-30	WSE-M4G323-A4
Silicone Gasket Remover ZC-30	-

REMOVAL

WARNING: If equipped with fire suppression system, depower the system. For important safety warnings and procedures, refer to FIRE SUPPRESSION SYSTEM article.

1. With the vehicle in NEUTRAL, position it on a hoist. For additional information, refer to **JACKING AND LIFTING** article.
2. Remove the flexplate. For additional information, refer to **Flexplate**.
3. Remove the engine-to-transmission spacer plate.

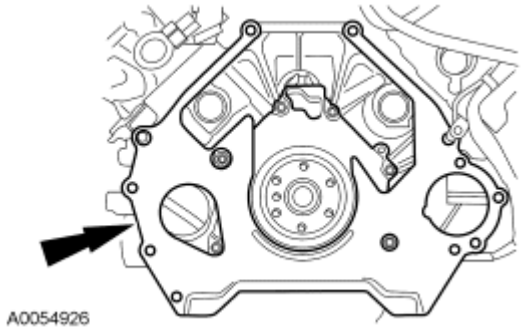

Fig. 118: Engine-To-Transmission Spacer Plate
Courtesy of FORD MOTOR CO.

4. Using the special tools, remove the crankshaft oil slinger.

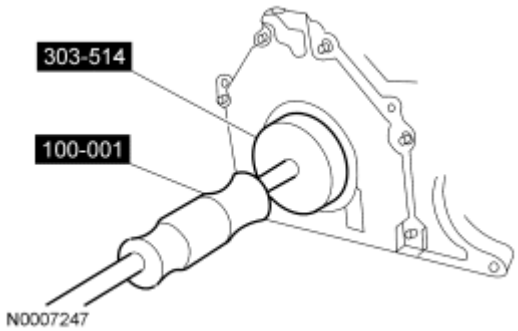

Fig. 119: Removing Crankshaft Rear Oil Seal Slinger
Courtesy of FORD MOTOR CO.

5. Using the special tools, remove the crankshaft rear seal.

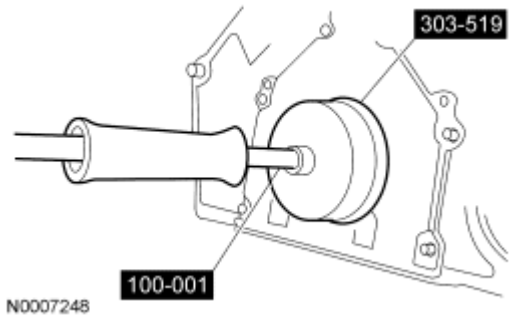

Fig. 120: Removing Crankshaft Rear Seal
Courtesy of FORD MOTOR CO.

NOTE: LH shown, RH similar.

6. Remove the 2 engine mount nuts.

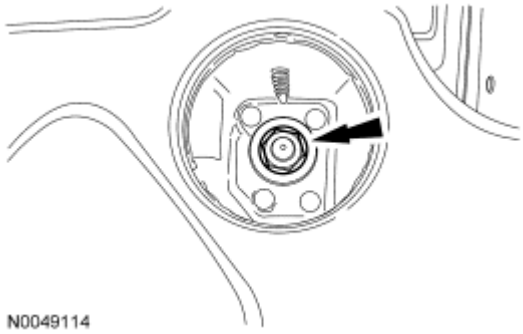

Fig. 121: Engine Mount Nut
Courtesy of FORD MOTOR CO.

7. Install the special tool to the RH cylinder head.

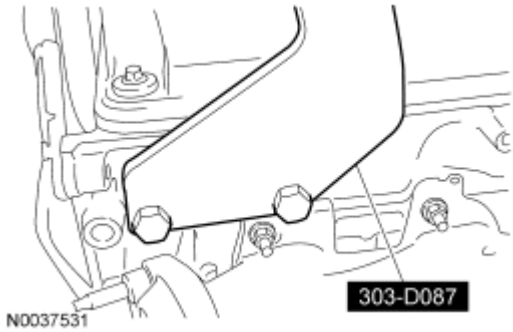

Fig. 122: Installing Special Tool To RH Cylinder Head
Courtesy of FORD MOTOR CO.

8. Install the special tool to the LH cylinder head.

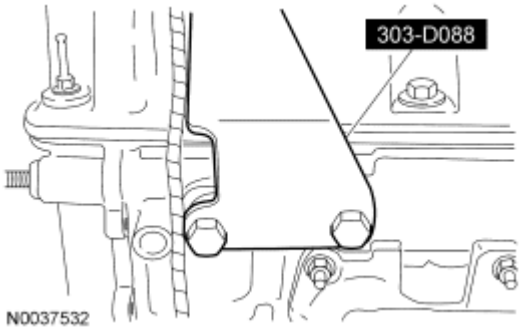

Fig. 123: Installing Special Tool To LH Cylinder Head
Courtesy of FORD MOTOR CO.

9. Install the special tool.

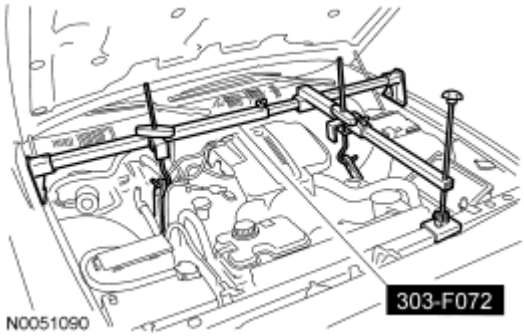

Fig. 124: Engine Support Tool
Courtesy of FORD MOTOR CO.

10. Using the special tool, raise the engine.

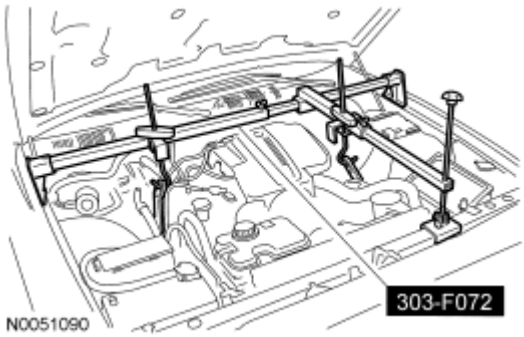

Fig. 125: Engine Support Tool
Courtesy of FORD MOTOR CO.

11. Drain the engine oil.
    - Install the drain plug when finished.
    - Tighten to 13 Nm (10 lb-ft).
12. Detach the 2 pin-type wire harness retainers.

13. Remove the oil pan bolts in the sequence shown and partially lower the oil pan.

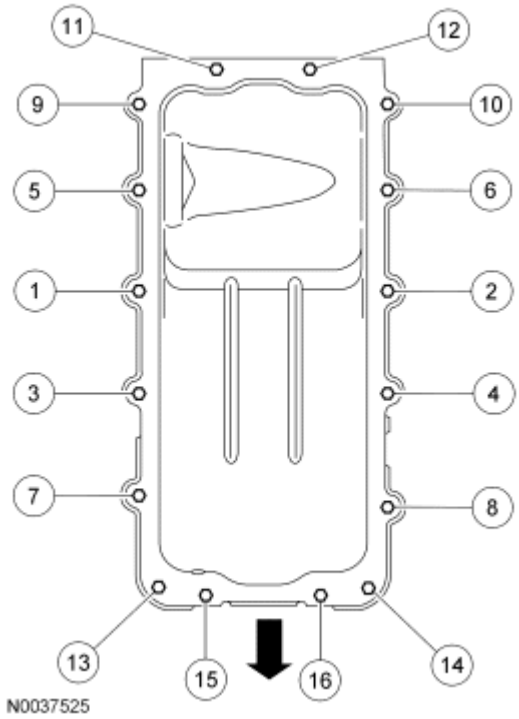

Fig. 126: Oil Pan Bolts Removal Sequence
Courtesy of FORD MOTOR CO.

14. Remove the 3 bolts and position the oil pump screen and pickup tube into the oil pan and remove the oil pan.
    - Discard the pickup tube O-ring seal.
    - Discard the oil pan gasket.
15. Remove the 6 bolts and the crankcase rear seal retainer plate.

INSTALLATION

CAUTION: Do not use metal scrapers, wire brushes, power abrasive discs or other abrasive means to clean the sealing surfaces. These tools cause scratches and gouges which make leak paths. Use a plastic scraping tool to remove all traces of old sealant.

CAUTION: Clean sealing surfaces with metal surface prep. Allow to dry until there is no sign of wetness, or 4 minutes, whichever is longer, failure to follow this procedure may cause future oil leakage.

1. Clean and inspect the mating surface.

NOTE: The rear crankshaft seal retainer plate does not have a sealant groove.

Gasket maker must be applied to the rear crankshaft seal retainer mating surface on the engine block.

2. Apply a bead of gasket maker to the rear crankshaft seal retainer mating surface on the engine block.

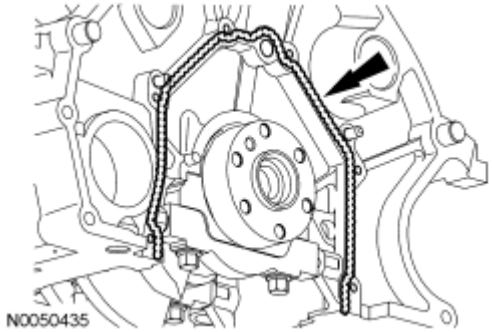

Fig. 127: Applying Bead Of Gasket Maker To Rear Crankshaft Seal Retainer
Courtesy of FORD MOTOR CO.

3. Install the rear oil seal retainer plate and loosely install the 6 crankcase rear seal retainer plate bolts.
4. Tighten the rear seal retainer plate bolts in the sequence shown.
   - Tighten to 10 Nm (89 lb-in).

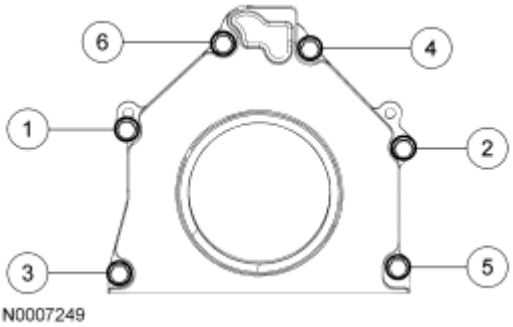

Fig. 128: Tightening Sequence Of Crankshaft Rear Seal Retainer Plate Bolts
Courtesy of FORD MOTOR CO.

NOTE: Lubricate the inner lip of the crankshaft rear seal with engine oil.

5. Using the special tools, install the crankshaft rear seal.

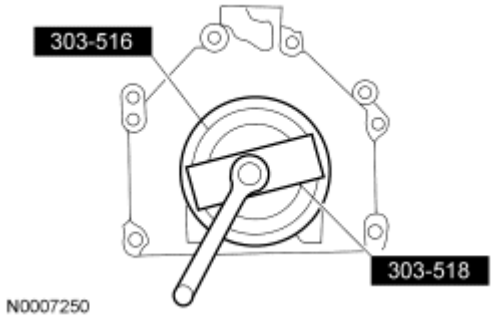

Fig. 129: Using Special Tools To Install New Crankshaft Rear Seal
Courtesy of FORD MOTOR CO.

6. Using the special tools, install the crankshaft oil slinger.

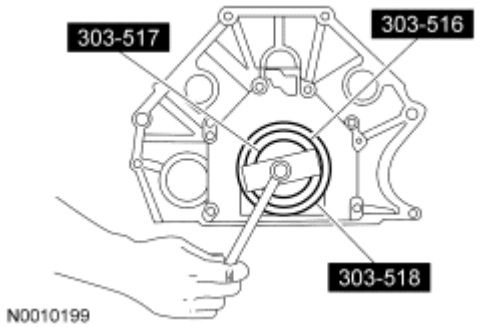

Fig. 130: Installing Crankshaft Rear Oil Slinger Using Special Tools
Courtesy of FORD MOTOR CO.

CAUTION: Do not use metal scrapers, wire brushes, power abrasive discs or other abrasive means to clean the sealing surfaces. These tools cause scratches and gouges, which make leak paths. Use a plastic scraping tool to remove all traces of old sealant.

7. Inspect the oil pan. Clean the mating surface for the oil pan with silicone gasket remover and metal surface prep. Follow the directions on the packaging.
8. Position the oil pump screen and pickup tube in the oil pan and position the oil pan and new gasket into the vehicle.

CAUTION: Make sure to install a new O-ring seal. A missing or damaged O-ring seal may cause foam in the lubrication system, low oil pressure and severe engine damage.

NOTE: Clean and inspect the mating surfaces and install a new O-ring seal. Lubricate the O-ring seal with clean engine oil prior to installation.

9. Position the oil pump screen and pickup tube and install the bolts.

- Tighten the oil pump screen and pickup tube-to-oil pump bolts to 10 Nm (89 lb-in).
- Tighten the oil pump screen and pickup tube-to-spacer bolt to 25 Nm (18 lb-ft).

CAUTION: If the oil pan is not secured within 4 minutes, the sealant must be removed and the sealing area cleaned with metal surface cleaner. Allow to dry until there is no sign of wetness, or 4 minutes, whichever is longer. Failure to follow this procedure may result in future oil leakage.

10. Apply silicone gasket and sealant at the rear seal retainer-to-cylinder block sealing surface.

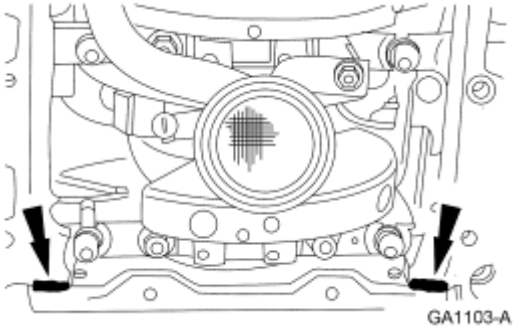

Fig. 131: Applying Silicone Gasket And Sealant
Courtesy of FORD MOTOR CO.

CAUTION: If the oil pan is not secured within 4 minutes, the sealant must be removed and the sealing area cleaned with metal surface cleaner. Allow to dry until there is no sign of wetness, or 4 minutes, whichever is longer. Failure to follow this procedure may result in future oil leakage.

11. Apply silicone gasket and sealant at the engine front cover-to-cylinder block mating surface.

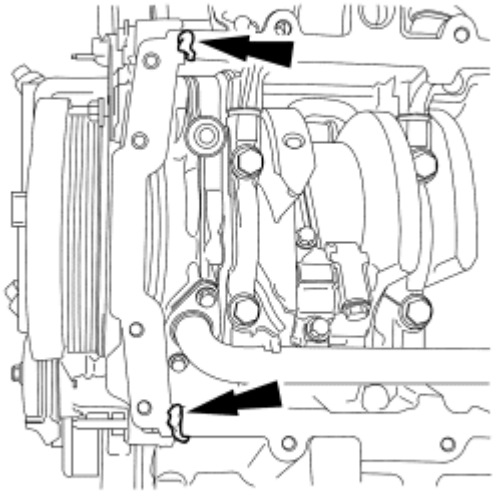

A0072750

Fig. 132: Applying Sealant To Engine Front Cover-To-Cylinder Block Surface
Courtesy of FORD MOTOR CO.

12. Install the oil pan bolts, tighten in the sequence shown, in 2 stages.
    - Stage 1: Tighten to 20 Nm (15 lb-ft).
    - Stage 2: Rotate an additional 60 degrees.

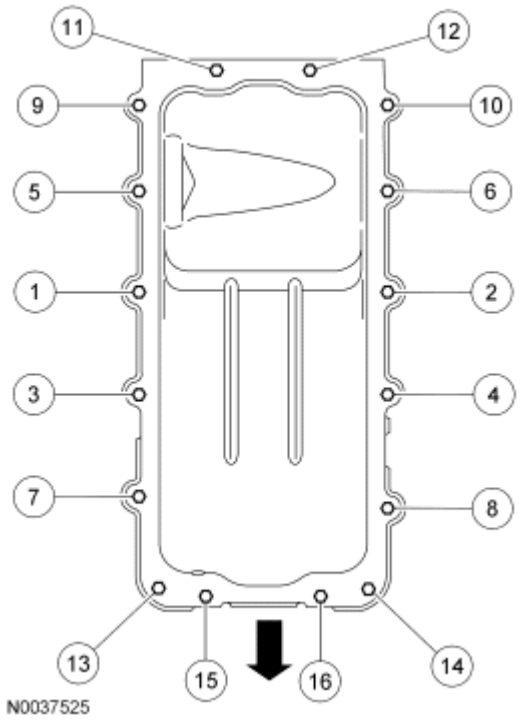

Fig. 133: Oil Pan Bolts Torque Sequence
Courtesy of FORD MOTOR CO.

13. Attach the 2 pin-type wire harness retainers.
14. Align the engine mount studs and lower the engine.

NOTE: LH shown, RH similar.

15. Install the 2 engine mount nuts.
    - Tighten to 90 Nm (66 lb-ft).

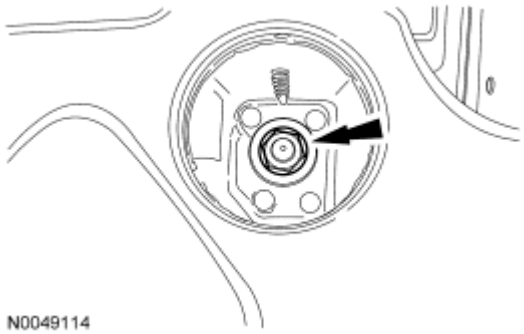

Fig. 134: Engine Mount Nut
Courtesy of FORD MOTOR CO.

16. Install the engine-to-transmission spacer plate.

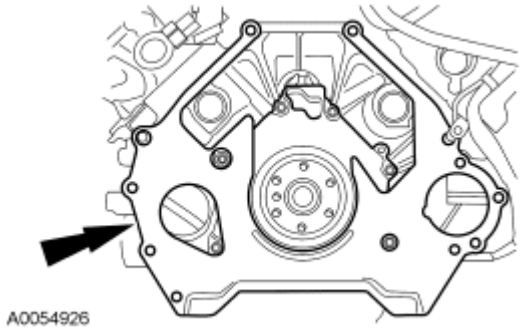

Fig. 135: Engine-To-Transmission Spacer Plate
Courtesy of FORD MOTOR CO.

17. Install the flexplate. For additional information, refer to **Flexplate**.
18. Fill the engine with clean engine oil.

WARNING: If equipped with fire suppression system, repower the system. For important safety warnings and procedures, refer to FIRE SUPPRESSION SYSTEM article.

19. If equipped with fire suppression system, repower the system.

ENGINE MOUNT - RH

Special Tools

Illustration	Tool Name	Tool Number
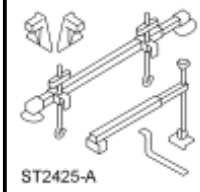 ST2425-A	3-Bar Engine Support Kit	303-F072
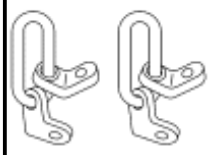 ST1595-A	Lifting Brackets, Engine	303-050 (T70P-6000)

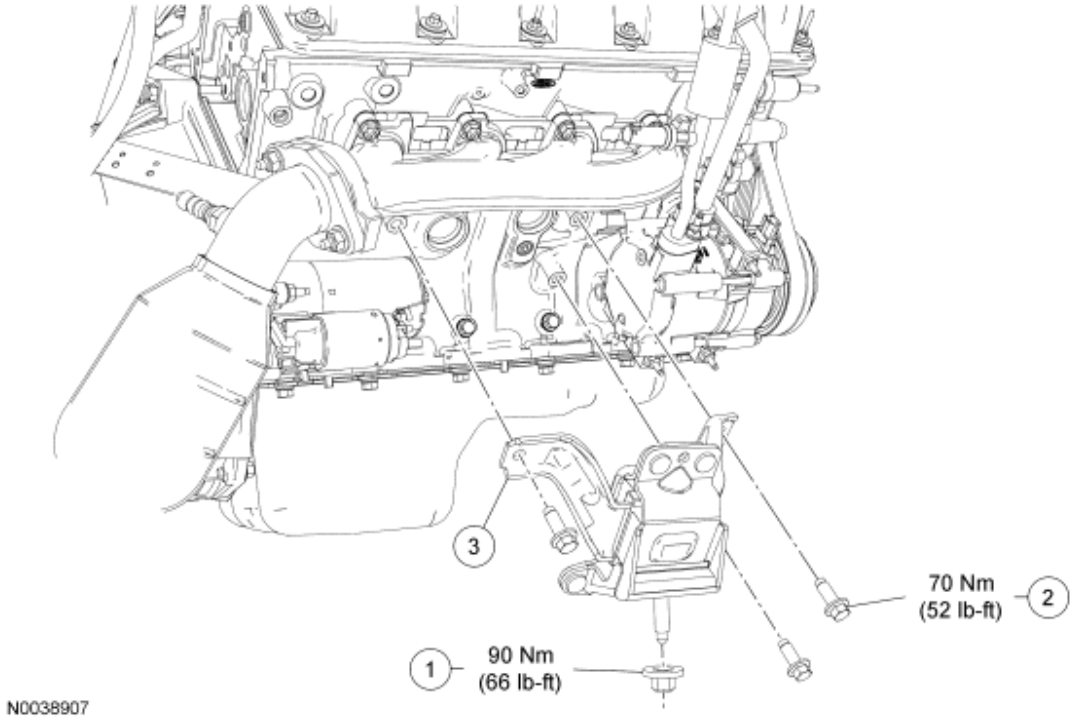

Fig. 136: Exploded View Of RH Engine Mount (With Torque Specifications)
Courtesy of FORD MOTOR CO.

Item	Part Number	Description
1	W707492	RH engine mount nut
2	W710646	RH engine mount bolt (3 required)
3	6038	RH engine mount

REMOVAL AND INSTALLATION

WARNING: If equipped with fire suppression system, depower the system. For important safety warnings and procedures, refer to FIRE SUPPRESSION SYSTEM article.

1. With the vehicle in NEUTRAL, position it on a hoist. For additional information, refer to **JACKING AND LIFTING** article.
2. Remove the generator. For additional information, refer to **GENERATOR AND REGULATOR** article.
3. Install the special tool.

Fig. 137: Special Tool
Courtesy of FORD MOTOR CO.

4. Install the special tool.

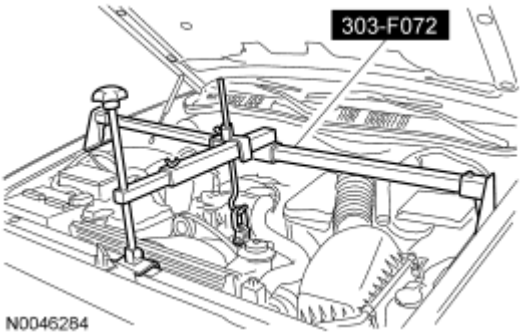

Fig. 138: Special Tool
Courtesy of FORD MOTOR CO.

5. Remove the RH and LH lower engine mount nuts.
   - To install, tighten to 90 Nm (66 lb-ft).
6. Using the special tool, raise the engine.

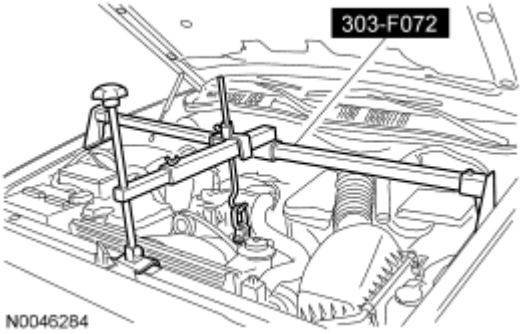

Fig. 139: Special Tool
Courtesy of FORD MOTOR CO.

7. Remove the 3 RH engine mount bolts.
   - To install, tighten to 70 Nm (52 lb-ft).

8. Remove the RH engine mount.

WARNING: If equipped with fire suppression system, repower the system. For important safety warnings and procedures, refer to FIRE SUPPRESSION SYSTEM article.

9. To install, reverse the removal procedure. If equipped with fire suppression system, repower the system

ENGINE MOUNT - LH

Special Tools

Illustration	Tool Name	Tool Number
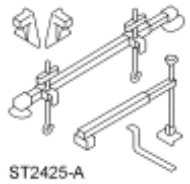 ST2425-A	3-Bar Engine Support Kit	303-F072
 ST1595-A	Lifting Brackets, Engine	303-050 (T70P-6000)

Material

Item	Specification
Motorcraft SAE 5W-20 Premium Synthetic Blend Motor Oil XO-5W20-QSP (US); Motorcraft SAE 5W-20 Super Premium Motor Oil CXO-5W20-LSP12 (Canada); or equivalent	WSS-M2C930-A

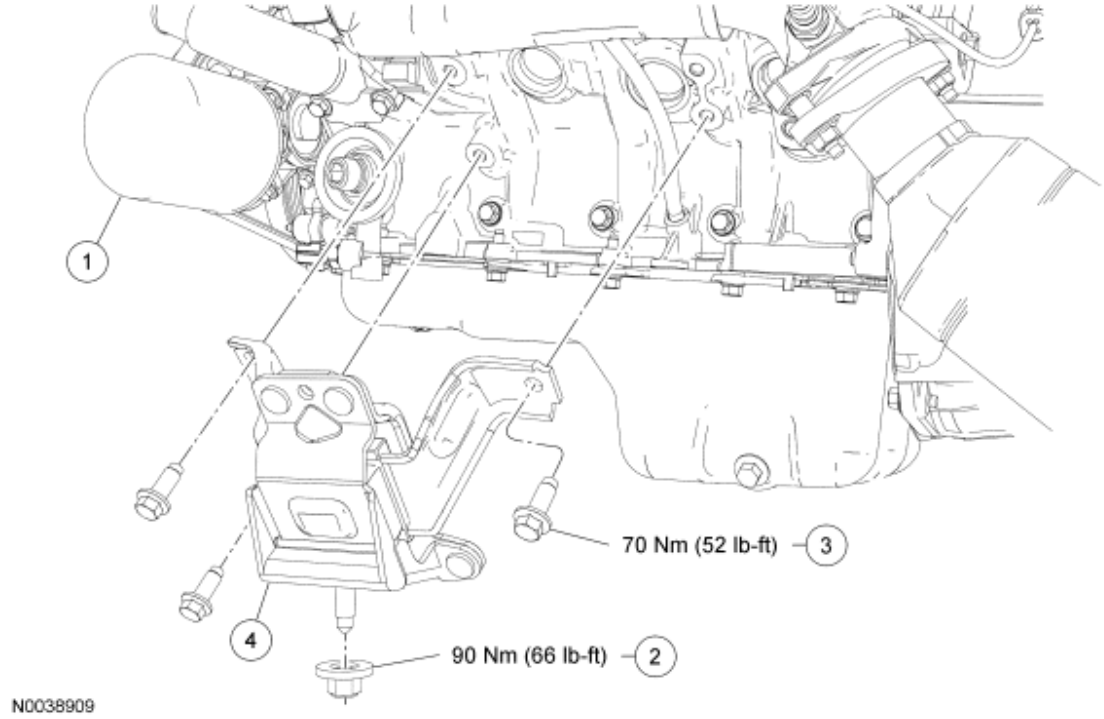

Fig. 140: Exploded View Of LH Engine Mount (With Torque Specifications)
Courtesy of FORD MOTOR CO.

Item	Part Number	Description
1	6714	Oil filter
2	W707492	LH engine mount nut
3	W710646-S439	LH engine mount bolt (3 required)
4	6B032	LH engine mount

REMOVAL AND INSTALLATION

WARNING: If equipped with fire suppression system, depower the system. For important safety warnings and procedures, refer to FIRE SUPPRESSION SYSTEM article.

1. With the vehicle in NEUTRAL, position it on a hoist. For additional information, refer to **JACKING AND LIFTING** article.
2. Remove the generator. For additional information, refer to **GENERATOR AND REGULATOR** article.
3. Install the special tool.

Fig. 141: Special Tool
Courtesy of FORD MOTOR CO.

4. Install the special tool.

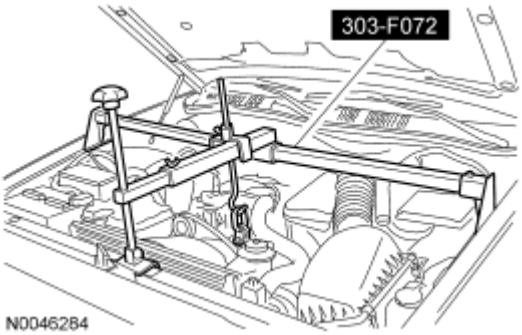

Fig. 142: Special Tool
Courtesy of FORD MOTOR CO.

5. Remove the oil filter and discard.
    - Lubricate the new oil filter O-ring seal with clean engine oil prior to installation.
6. Remove the LH and RH lower engine mount nuts.
    - To install, tighten to 90 Nm (66 lb-ft).
7. Using the special tool, raise the engine.

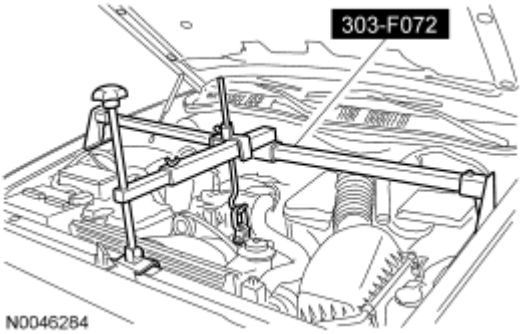

Fig. 143: Special Tool
Courtesy of FORD MOTOR CO.

8. Remove the 3 bolts and the LH engine mount.
   - To install, tighten to 70 Nm (52 lb-ft).

WARNING: If equipped with fire suppression system, repower the system. For important safety warnings and procedures, refer to FIRE SUPPRESSION SYSTEM article.

9. To install, reverse the removal procedure. If equipped with fire suppression system, repower the system.

REMOVAL

CYLINDER HEAD

Special Tools

Illustration	Tool Name	Tool Number
 ST1330-A	Compressor, Valve Spring	303-567 (T97P-6565-AH)
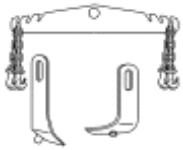 ST2443-A	Lifting Bracket Set, Engine	303-DS086 (D93P-6001-A)
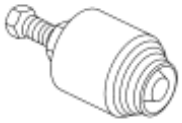 ST1730-A	Remover, Crankshaft Front Oil Seal	303-107 (T74P-6700-A)
 ST1286-A	Remover, Crankshaft Vibration Damper	303-009 (T58P-6316-D)
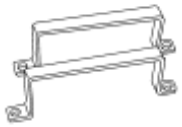 ST1668-A	Remover/Installer, Cylinder Head	303-572 (T97T-6000-A)

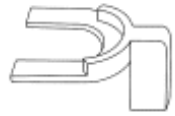 ST1331-A	Spacer, Valve Spring Compressor	303-382 (T91P-6565-AH)

Material

Item	Specification
Motorcraft Metal Surface Prep ZC-31	-
Silicone Gasket Remover ZC-30	-

REMOVAL

Cylinder heads

WARNING: If equipped with fire suppression system, depower the system. For important safety warnings and procedures, refer to FIRE SUPPRESSION SYSTEM article.

1. With the vehicle in NEUTRAL, position it on a hoist. For additional information, refer to **JACKING AND LIFTING** article.
2. Remove the engine. For additional information, refer to **Engine**.
3. Remove the bolts and the flexplate.

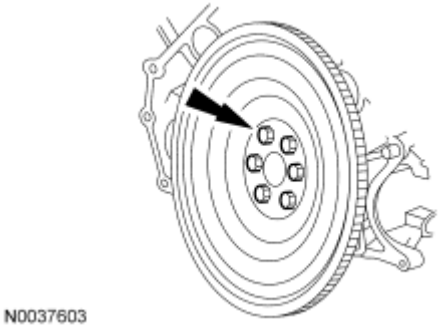

Fig. 144: Locating Flexplate Bolts
Courtesy of FORD MOTOR CO.

4. Remove the engine/transmission spacer plate.

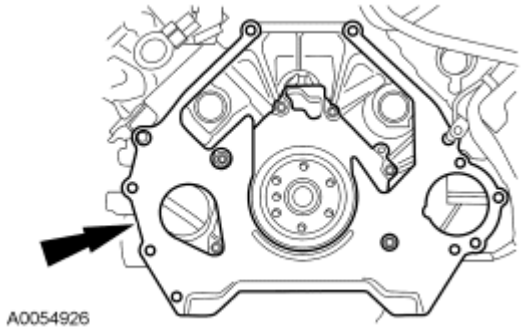

Fig. 145: Engine-To-Transmission Spacer Plate
Courtesy of FORD MOTOR CO.

5. Using the special tool, mount the engine on a suitable engine stand.

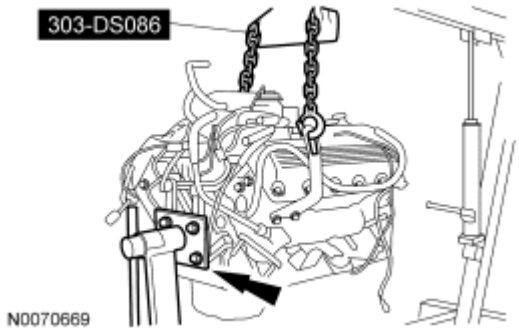

Fig. 146: Mounting Engine On A Suitable Engine Stand
Courtesy of FORD MOTOR CO.

6. Remove the bolts and the RH engine mount.

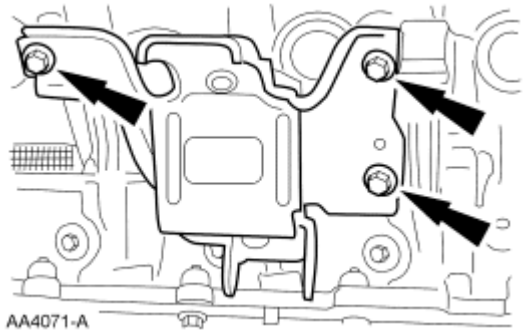

Fig. 147: Engine Mount Bolts
Courtesy of FORD MOTOR CO.

NOTE: LH shown, RH similar.

7. Remove the drain plugs from the engine block. Allow the coolant to completely drain.
   - Install the drain plugs when finished.

- To install, tighten to 20 Nm (15 lb-ft).

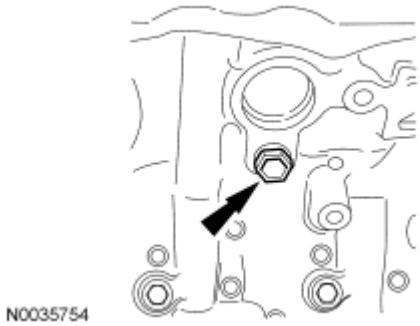

Fig. 148: Engine Block Drain Plug
Courtesy of FORD MOTOR CO.

8. Remove the bolt and the battery cables from the engine.

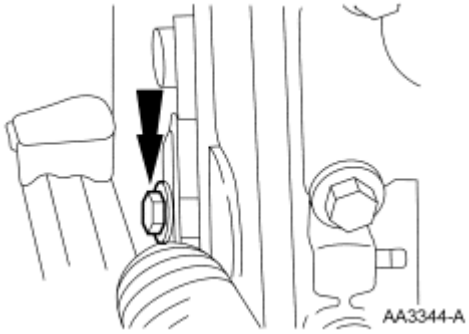

Fig. 149: Bolt
Courtesy of FORD MOTOR CO.

9. Disconnect the EGR tube from the exhaust manifold.

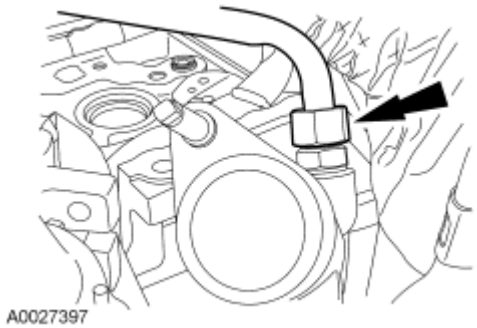

Fig. 150: EGR Tube At Exhaust Manifold
Courtesy of FORD MOTOR CO.

10. Disconnect the 8 ignition coil electrical connectors.

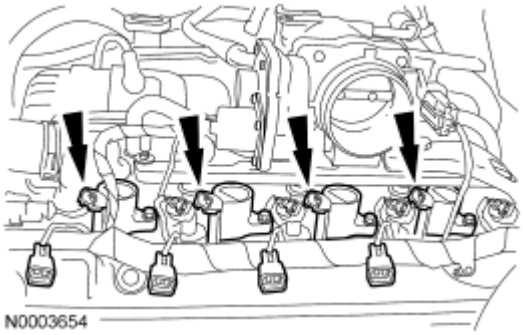

Fig. 151: Ignition Coil Electrical Connectors
Courtesy of FORD MOTOR CO.

11. Disconnect the 8 fuel injector electrical connectors.

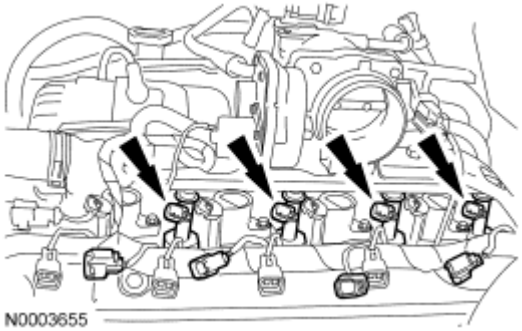

Fig. 152: Fuel Injector Electrical Connectors
Courtesy of FORD MOTOR CO.

12. Remove the 2 bolts and the intake manifold shield.

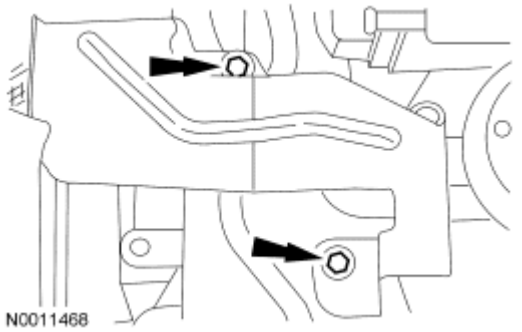

Fig. 153: Intake Manifold Shield
Courtesy of FORD MOTOR CO.

13. Remove the crankcase ventilation tube.

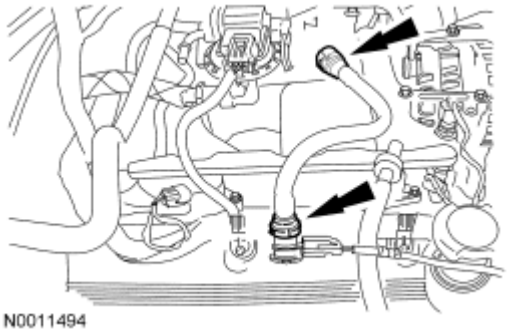

Fig. 154: Crankcase Ventilation Tube
Courtesy of FORD MOTOR CO.

14. Remove the generator mounting bracket.
    - Remove the 4 bolts.
    - Remove the bracket.

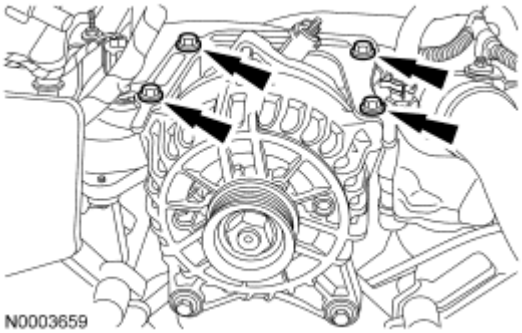

Fig. 155: Generator Mounting Bracket Bolts
Courtesy of FORD MOTOR CO.

15. Disconnect the throttle control and the throttle position (TP) sensor electrical connectors.

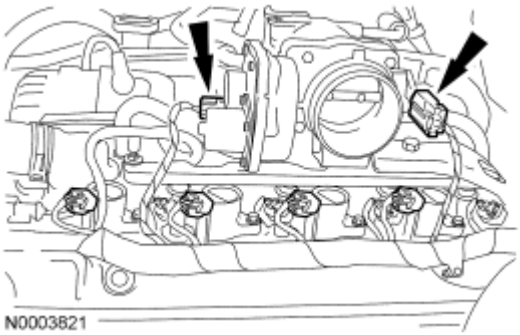

Fig. 156: Locating Throttle Control And Throttle Position (TP) Sensor Electrical Connectors
Courtesy of FORD MOTOR CO.

16. Disconnect the generator electrical connector.

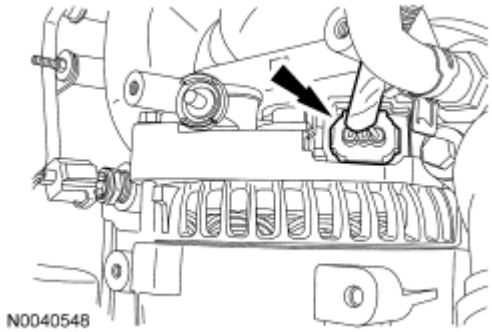

Fig. 157: Generator Electrical Connector
Courtesy of FORD MOTOR CO.

17. Disconnect the cylinder head temperature (CHT) sensor electrical connector.

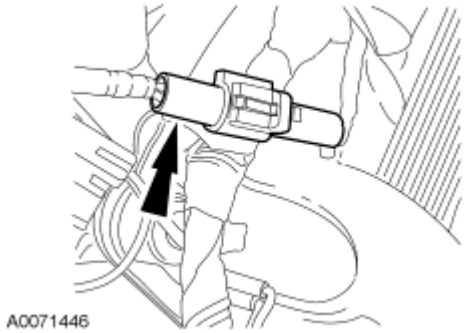

Fig. 158: Cylinder Head Temperature (CHT) Sensor Electrical Connector
Courtesy of FORD MOTOR CO.

18. Remove the generator wiring harness anchor from the LH front stud.

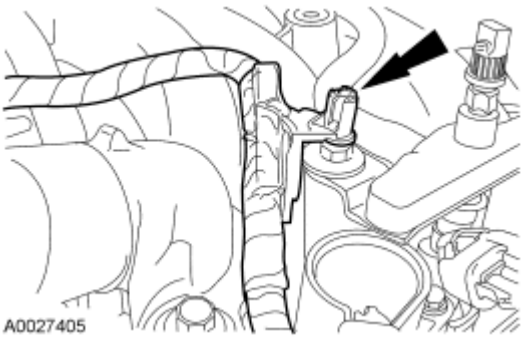

Fig. 159: Generator Wiring Harness Anchor
Courtesy of FORD MOTOR CO.

19. Disconnect the ground wire from the RH rear stud.

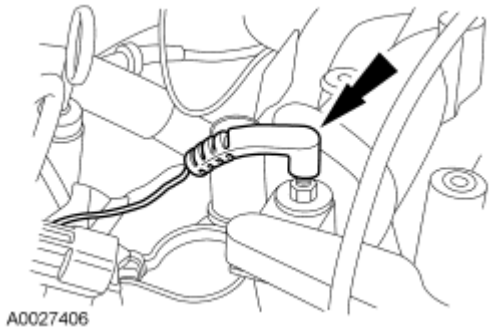

Fig. 160: Ground Wire At RH Rear Stud
Courtesy of FORD MOTOR CO.

20. Disconnect the camshaft position (CMP) sensor electrical connector.

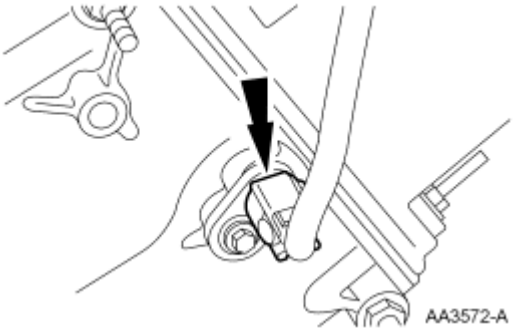

Fig. 161: Camshaft Position (CMP) Sensor Electrical Connector
Courtesy of FORD MOTOR CO.

21. Disconnect the radio ignition interference capacitor and remove the engine control sensor wiring.

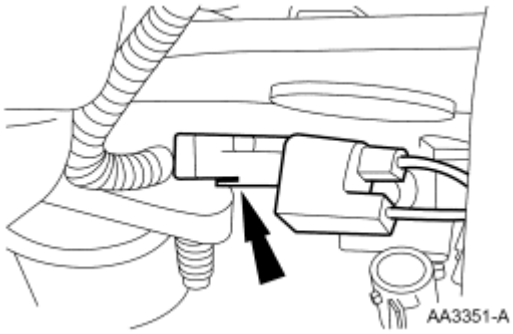

Fig. 162: Radio Ignition Interference Capacitor
Courtesy of FORD MOTOR CO.

22. Disconnect the fuel charging wiring from the crash bracket and the wiring support bracket and remove the harness from the engine.

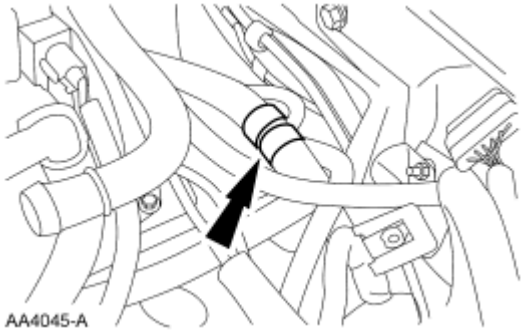

Fig. 163: Fuel Charging Wiring In Crash Bracket
Courtesy of FORD MOTOR CO.

23. Disconnect the EGR tube nut from the EGR system module.

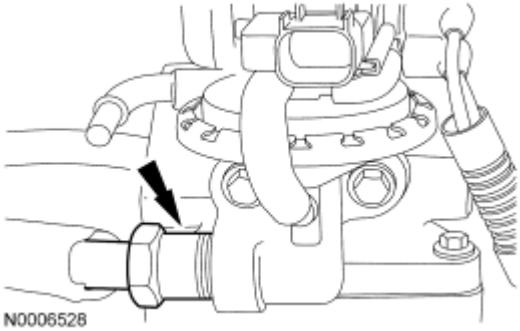

Fig. 164: EGR Tube Nut At EGR
Courtesy of FORD MOTOR CO.

24. Remove the generator.
    1. Remove the 2 bolts.
    2. Remove the generator.

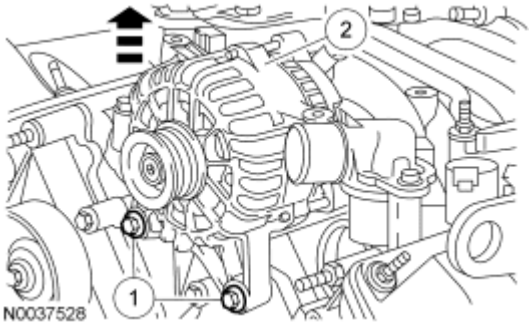

Fig. 165: Generator & Bolts
Courtesy of FORD MOTOR CO.

25. Remove the intake manifold crash bracket bolt and prevent the bolt from contacting the cylinder head with a rubber band or tie strap.

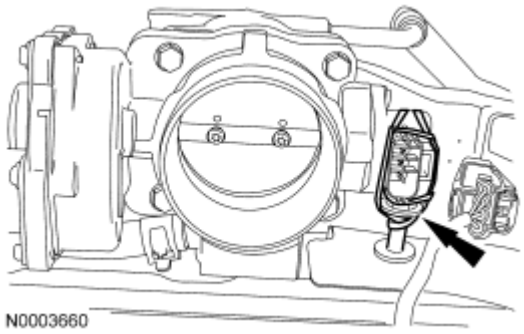

Fig. 166: Tying Up Intake Manifold Crash Bracket Bolt
Courtesy of FORD MOTOR CO.

26. Remove the intake manifold crash bracket stud bolt.

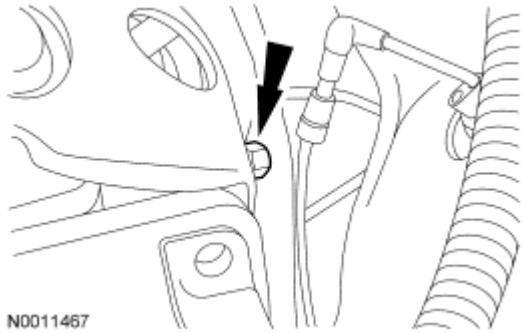

Fig. 167: Intake Manifold Crash Bracket Stud Bolt
Courtesy of FORD MOTOR CO.

27. Remove the 8 bolts and the 8 ignition coils.

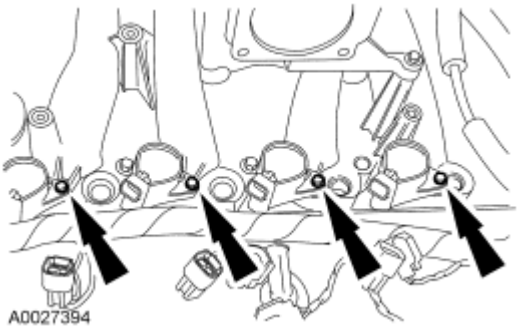

Fig. 168: Ignition Coils & Bolts
Courtesy of FORD MOTOR CO.

28. Remove the 2 bolts and the coolant outlet adapter.

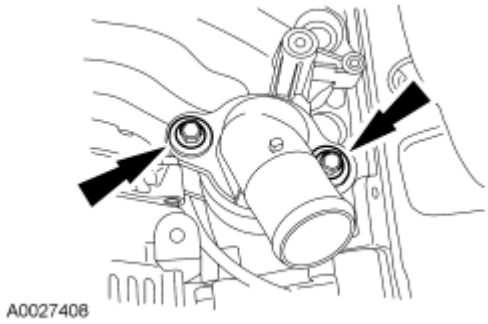

Fig. 169: Coolant Outlet Adapter & Bolts
Courtesy of FORD MOTOR CO.

29. Remove the thermostat.

Fig. 170: Thermostat
Courtesy of FORD MOTOR CO.

30. Remove the 8 bolts and the intake manifold.
    - Discard the intake manifold gaskets.

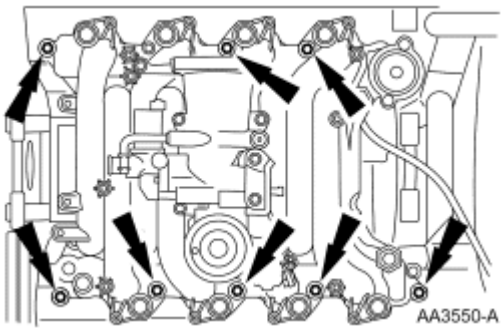

Fig. 171: Intake Manifold & Bolts
Courtesy of FORD MOTOR CO.

CAUTION: Do not use metal scrapers, wire brushes, power abrasive discs or other abrasive means to clean the sealing surfaces. These tools cause scratches and gouges which make leak paths.

31. Clean the sealing surfaces.

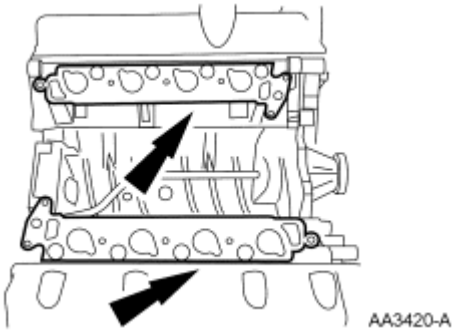

Fig. 172: Intake Manifold Sealing Surfaces
Courtesy of FORD MOTOR CO.

32. Remove the coolant bypass tube.
    1. Remove the retaining nut.
    2. Remove the ground strap.
    3. Remove the coolant bypass tube.

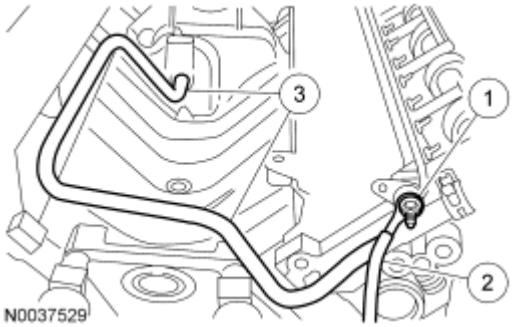

Fig. 173: Coolant Bypass Tube & Nut
Courtesy of FORD MOTOR CO.

33. Loosen the studs and bolts and remove the LH valve cover.
    - Clean the mating surface and discard gasket.

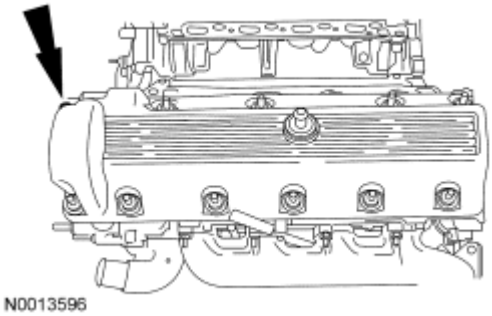

Fig. 174: LH Valve Cover
Courtesy of FORD MOTOR CO.

34. Loosen the studs and bolts and remove the RH valve cover.
    - Discard the gasket.

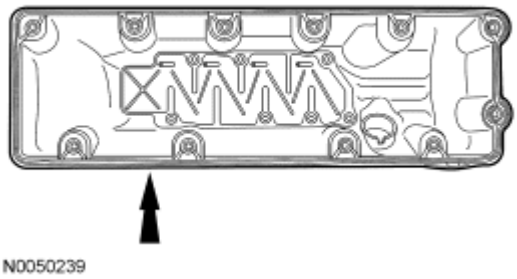

Fig. 175: RH Valve Cover
Courtesy of FORD MOTOR CO.

CAUTION: Only use hand tools when removing or installing the spark plugs, damage may occur to the cylinder head or spark plug.

NOTE: Use compressed air to remove any foreign material from the spark plug well before removing the spark plugs.

35. Remove the spark plugs.

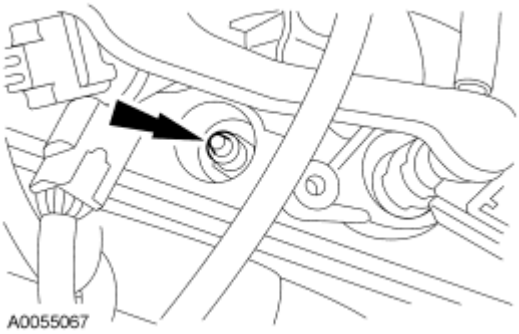

Fig. 176: Spark Plug
Courtesy of FORD MOTOR CO.

36. Position the lobe of the camshaft upward.

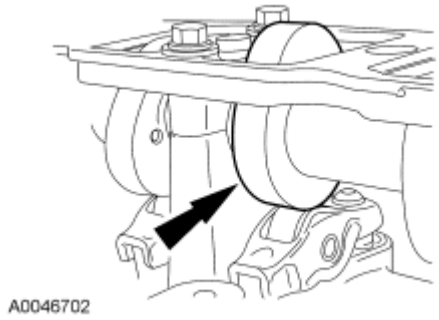

Fig. 177: Positioning Camshaft Lobe Up
Courtesy of FORD MOTOR CO.

37. Install the special tool between the valve spring coils to prevent valve stem seal damage.

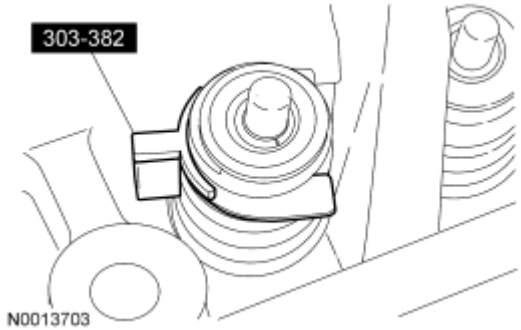

Fig. 178: Installing Special Tool Between Valve Spring Coils
Courtesy of FORD MOTOR CO.

CAUTION: If the components are to be reinstalled, they must be installed in the same positions. Mark the components for installation into their original locations. Failure to follow these instructions may result in engine damage.

38. Using the special tool, compress the valve springs and remove the camshaft roller followers.

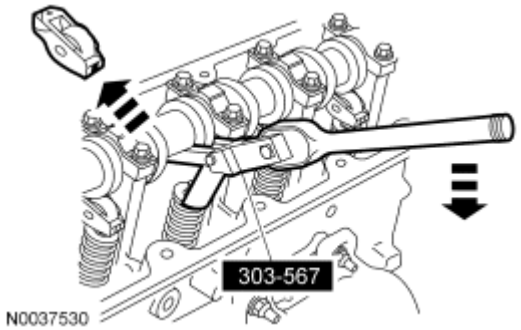

Fig. 179: Removing Camshaft Roller Followers
Courtesy of FORD MOTOR CO.

39. Remove the bolt and the belt idler pulley.

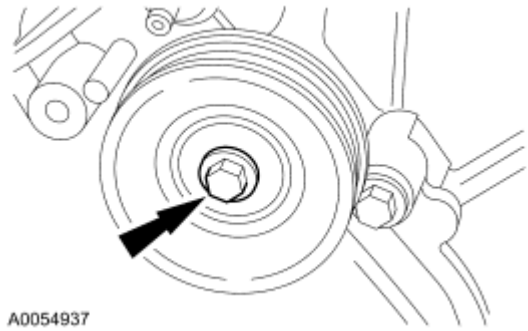

Fig. 180: Belt Idler Pulley Bolt
Courtesy of FORD MOTOR CO.

40. Remove the coolant pump pulley.

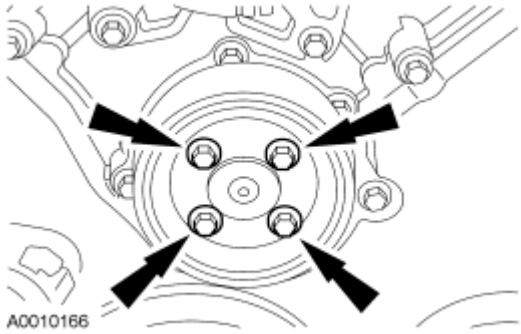

Fig. 181: Coolant Pump Pulley Bolts
Courtesy of FORD MOTOR CO.

41. Remove the crankshaft pulley bolt.

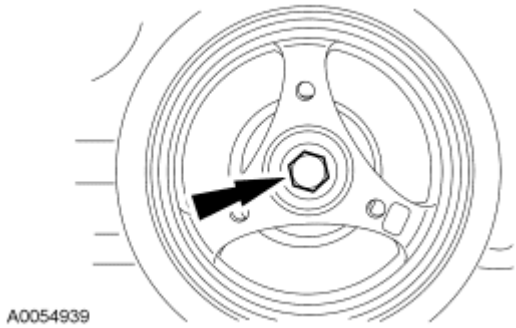

Fig. 182: Crankshaft Pulley Bolt
Courtesy of FORD MOTOR CO.

42. Using the special tool, remove the crankshaft pulley.

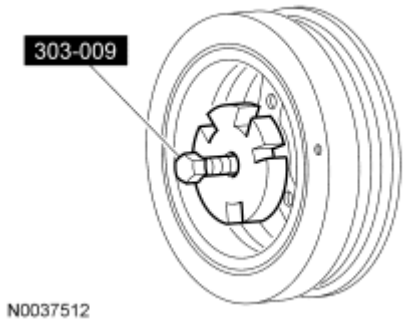

Fig. 183: Removing Crankshaft Pulley
Courtesy of FORD MOTOR CO.

43. Using the special tool, remove the crankshaft front oil seal.

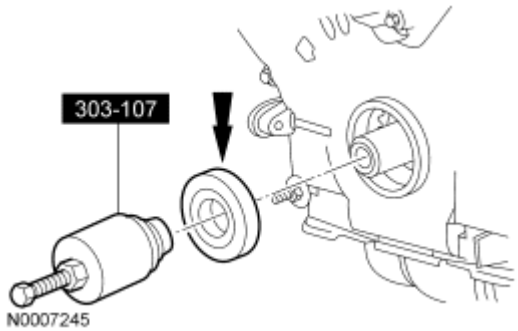

Fig. 184: Removing Crankshaft Front Seal Using Special Tool
Courtesy of FORD MOTOR CO.

44. Remove the front 4 oil pan bolts.

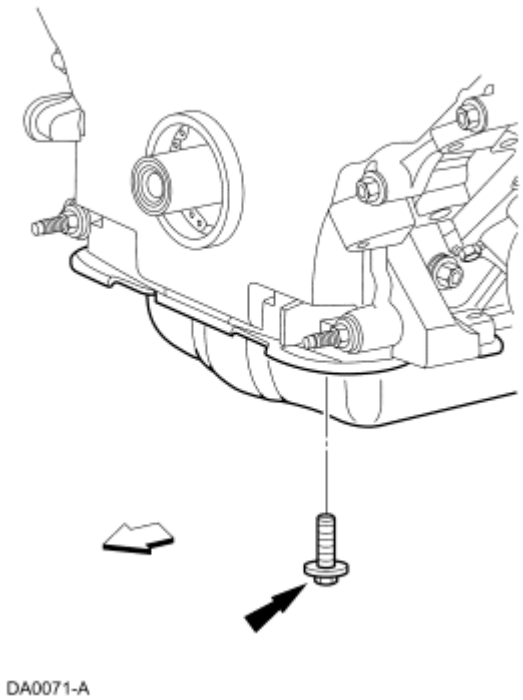

Fig. 185: Locating Front Oil Pan Bolts
Courtesy of FORD MOTOR CO.

NOTE: Correct fastener location is essential for the installation. Record fastener location.

45. Remove the 15 fasteners in the sequence shown.

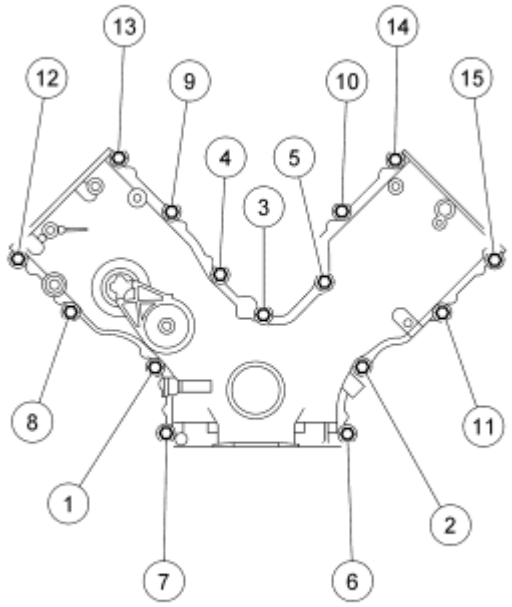

N0037514

Fig. 186: Engine Front Cover Fastener Removal Sequence
Courtesy of FORD MOTOR CO.

46. Remove the engine front cover from the cylinder block.
    - Discard the gaskets.

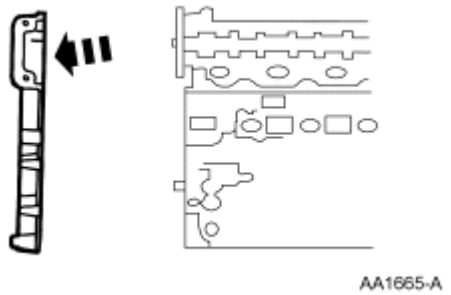

AA1665-A

Fig. 187: Removing Engine Front Cover From Cylinder Block
Courtesy of FORD MOTOR CO.

47. Remove the crankshaft sensor ring.

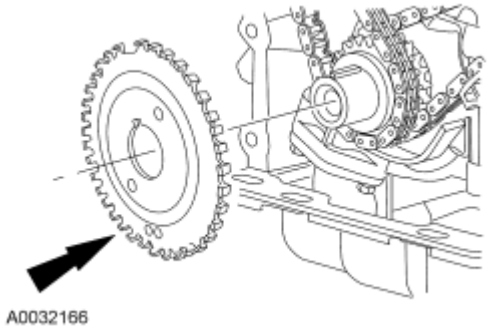

Fig. 188: View Of Crankshaft Sensor Ring At Crankshaft
Courtesy of FORD MOTOR CO.

48. Position the crankshaft with the keyway at the 12 o'clock position.

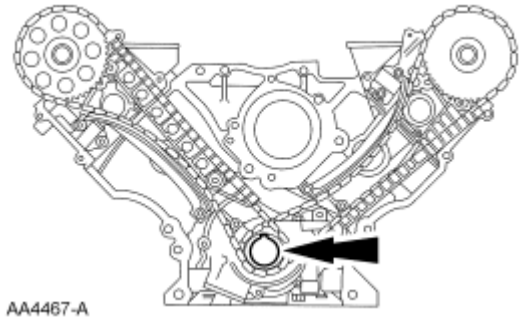

Fig. 189: Crankshaft With Keyway At 12 O'clock Position
Courtesy of FORD MOTOR CO.

49. Remove the timing chain tensioning system from both timing chains.
    1. Remove the bolts.
    2. Remove the timing chain tensioners.
    3. Remove the timing chain tensioner arms.

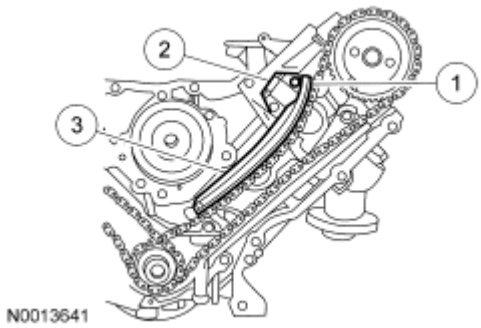

Fig. 190: Identifying Timing Chain Tensioning System
Courtesy of FORD MOTOR CO.

50. Remove the LH and RH timing chains and the crankshaft sprocket.

- Remove the RH timing chain from the camshaft sprocket.
- Remove the RH timing chain from the crankshaft sprocket.
- Repeat for the LH timing chain and crankshaft sprocket.

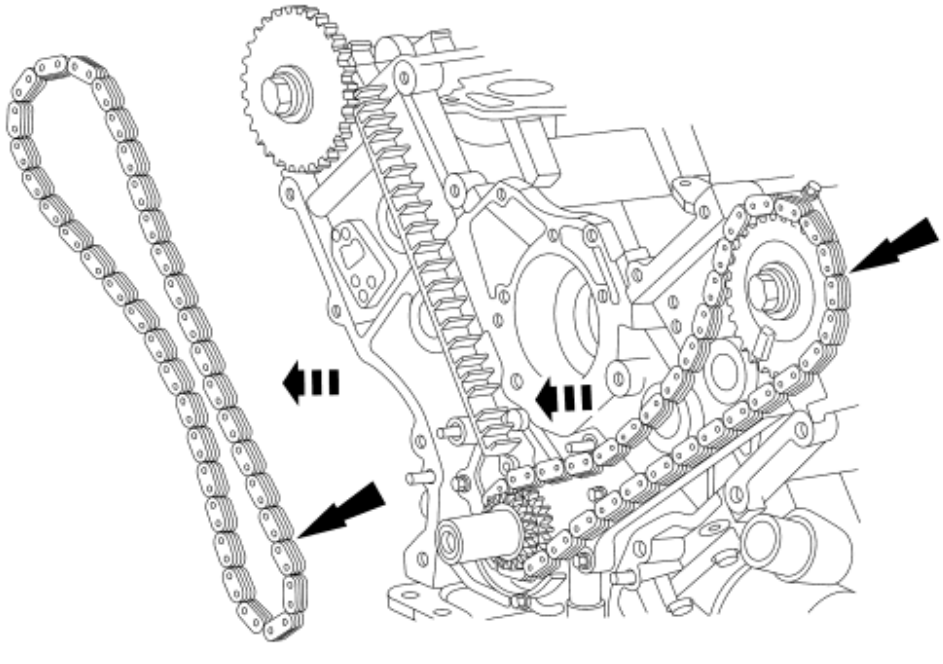

Fig. 191: View Of Left And Right Timing Chains, Sprockets And Crankshaft Gear
Courtesy of FORD MOTOR CO.

51. Remove both timing chain guides.
    1. Remove the bolts.
    2. Remove the LH timing chain guide.
    3. Remove the bolts.
    4. Remove the RH timing chain guide.

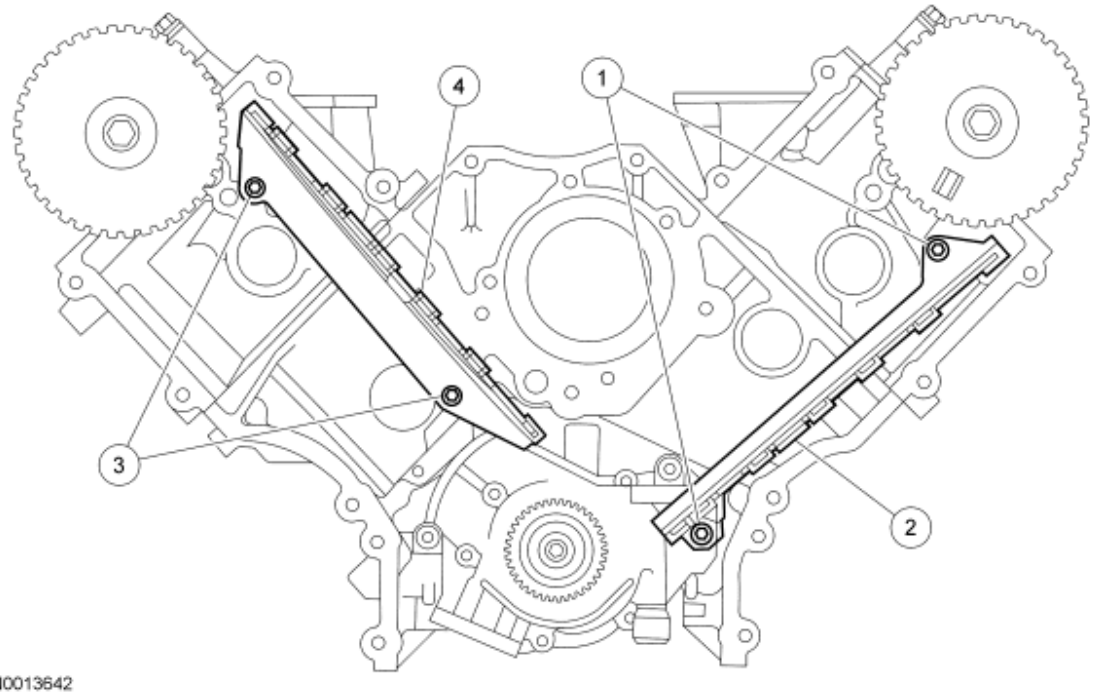

Fig. 192: Identifying Timing Chain Guides
Courtesy of FORD MOTOR CO.

RH cylinder head

52. Remove the RH exhaust manifold.
    1. Remove the nuts and discard.
    2. Remove the RH exhaust manifold.
    3. Remove and discard the RH exhaust manifold gasket.

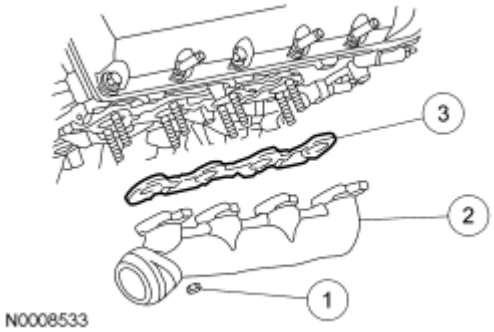

Fig. 193: Locating Exhaust Manifold
Courtesy of FORD MOTOR CO.

53. Remove and discard the 8 RH exhaust manifold studs.

LH cylinder head

54. Remove the LH exhaust manifold.
    1. Remove the nuts and discard.
    2. Remove the LH exhaust manifold.
    3. Remove and discard the LH exhaust manifold gaskets.

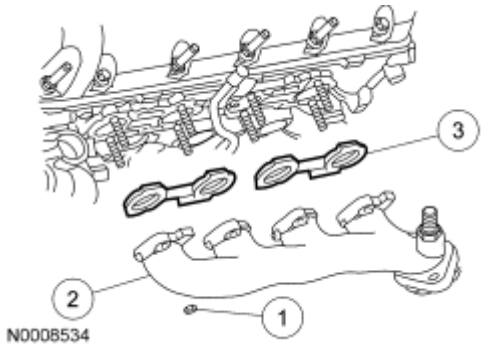

Fig. 194: Identifying LH Exhaust Manifold
Courtesy of FORD MOTOR CO.

55. Remove and discard the 8 LH exhaust manifold studs.
56. Remove the bolt and the oil level indicator tube.

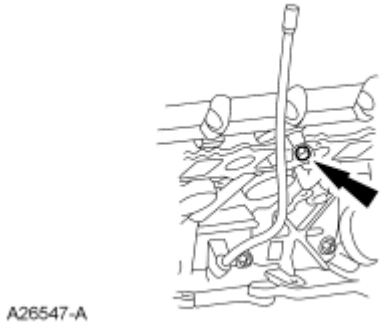

Fig. 195: Locating Oil Level Indicator Tube Bolts
Courtesy of FORD MOTOR CO.

Both cylinder heads

57. Clean and inspect the exhaust manifolds. For additional information, refer to **ENGINE SYSTEM - GENERAL INFORMATION** article.
58. Install the special tool on both ends of the cylinder head.

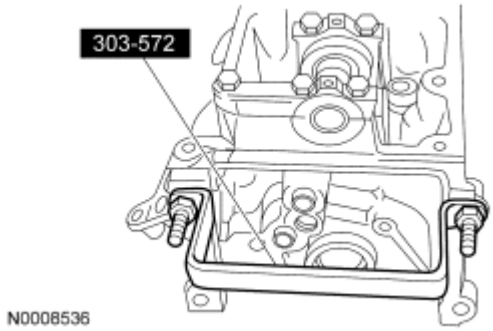

Fig. 196: Identifying Special Tool (303-572)
Courtesy of FORD MOTOR CO.

NOTE: The hydraulic lash adjusters must be reinstalled in their original locations. Record the hydraulic lash adjuster locations.

59. Remove the hydraulic lash adjusters.

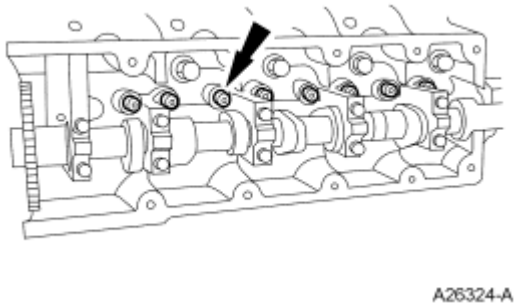

Fig. 197: Locating Hydraulic Lash Adjusters
Courtesy of FORD MOTOR CO.

RH cylinder head

CAUTION: The cylinder head must be cool before removing it from the engine. Cylinder head warpage may result if a warm or hot cylinder head is removed.

CAUTION: Aluminum surfaces are soft and can be scratched easily. Never place the cylinder head gasket surface, unprotected, on a bench surface. The scratches may cause leak paths.

CAUTION: Do not use metal scrapers, wire brushes, power abrasive discs or other abrasive means to clean the sealing surfaces. These tools cause scratches and gouges that make leak paths. Use a plastic scraping tool to remove all traces of the head gasket.

NOTE: **Place clean shop towels over exposed engine cavities. Carefully remove the towels so foreign material is not dropped into the engine.**

NOTE: **The cylinder head bolts must be discarded and new bolts installed. They are a tighten-to-yield design and cannot be reused.**

60. Remove the bolts and the RH cylinder head.
    - Discard the cylinder head gasket.
    - Discard the cylinder head bolts.

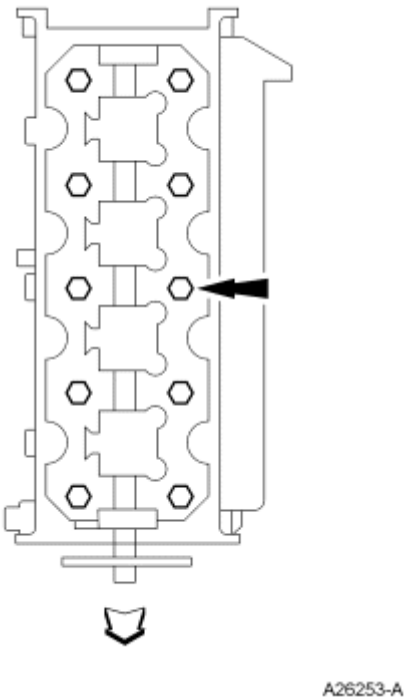

Fig. 198: Identifying Cylinder Head Bolts
Courtesy of FORD MOTOR CO.

LH cylinder head

CAUTION: **The cylinder head must be cool before removing it from the engine. Cylinder head warpage may result if a warm or hot cylinder head is removed.**

CAUTION: **Aluminum surfaces are soft and can be scratched easily. Never place the cylinder head gasket surface, unprotected, on a bench surface. The scratches may cause leak paths.**

CAUTION: **Do not use metal scrapers, wire brushes, power abrasive discs or**

other abrasive means to clean the sealing surfaces. These tools cause scratches and gouges that make leak paths. Use a plastic scraping tool to remove all traces of the head gasket.

NOTE: Place clean shop towels over exposed engine cavities. Carefully remove the towels so foreign material is not dropped into the engine.

NOTE: The cylinder head bolts must be discarded and new bolts installed. They are a tighten-to-yield design and cannot be reused.

61. Remove the bolts and the LH cylinder head.
    - Discard the cylinder head gasket.
    - Discard the cylinder head bolts.

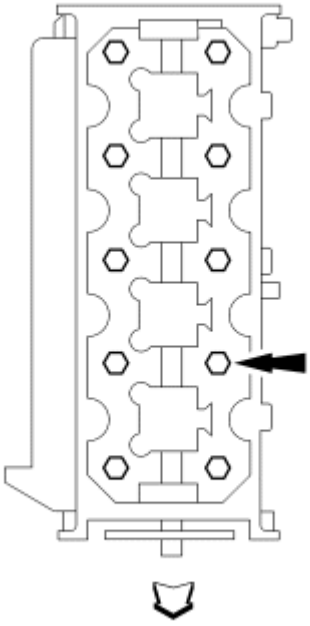

Fig. 199: Identifying Cylinder Head Bolts
Courtesy of FORD MOTOR CO.

Both cylinder heads

CAUTION: Do not use metal scrapers, wire brushes, power abrasive discs or other abrasive means to clean the sealing surfaces. These tools cause scratches and gouges that make leak paths. Use a plastic scraping tool to remove all traces of the head gasket.

NOTE: Observe all warnings or cautions and follow all application directions contained on the packaging of the silicone gasket remover and the metal surface prep.

NOTE: If there is no residual gasket material present, metal surface prep can be used to clean and prepare the surfaces.

62. Clean the cylinder head-to-cylinder block mating surfaces of both the cylinder head and the cylinder block.
    1. Remove any large deposits of silicone or gasket material with a plastic scraper.
    2. Apply silicone gasket remover, following package directions, and allow to set for several minutes.
    3. Remove the silicone gasket remover with a plastic scraper. A second application of silicone gasket remover may be required if residual traces of silicone or gasket material remain.
    4. Apply metal surface prep, following package directions, to remove any remaining traces of oil or coolant, and to prepare the surfaces to bond with the new gasket. Do not attempt to make the metal shiny. Some staining of the metal surfaces is normal.

NOTE: The straightedge used must be flat within 0.0051 mm (0.0002 in) per foot of tool length.

63. Support the cylinder head on a bench with the head gasket side up. Inspect all areas of the deck face with a straightedge, paying particular attention to the oil pressure feed area. The cylinder head must not have depressions deeper than 0.0254 mm (0.001 in) across a 38.1 mm (1.5 in) square area, or scratches more than 0.0254 mm (0.001 in).

ENGINE

Special Tools

Illustration	Tool Name	Tool Number
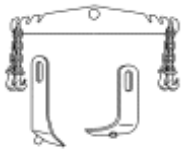 ST2443-A	Lifting Bracket Set, Engine	303-DS086 (D93P-6001-A)
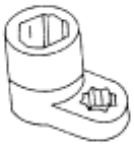 ST1448-A	Socket, Exhaust Gas Oxygen Sensor	303-476 (T94P-9472-A)

WARNING: If equipped with fire suppression system, depower the system. For important safety warnings and procedures, refer to FIRE SUPPRESSION SYSTEM article.

1. With the vehicle in NEUTRAL, position it on a hoist. For additional information refer to **JACKING AND LIFTING** article.
2. Release the fuel pressure. For additional information, refer to **FUEL SYSTEM - GENERAL INFORMATION** article.
3. Remove the hood.
4. Disconnect both battery cables. For additional information, refer to **BATTERY, MOUNTING AND CABLES** article.
5. Remove the air cleaner and outlet pipe. For additional information, refer to **INTAKE AIR DISTRIBUTION AND FILTERING** article.
6. Remove the wiper mounting arm and pivot shaft. For additional information, refer to **WIPERS AND WASHERS** article.
7. Remove the 2 nuts and the support bracket.

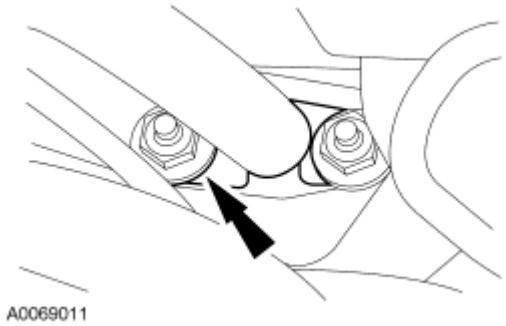

Fig. 200: Support Bracket & Nuts
Courtesy of FORD MOTOR CO.

8. Remove the accessory drive belt. For additional information, refer to **ACCESSORY DRIVE** article.
9. Drain the engine cooling system. For additional information, refer to **ENGINE COOLING** article.
10. Disconnect the vacuum hose.

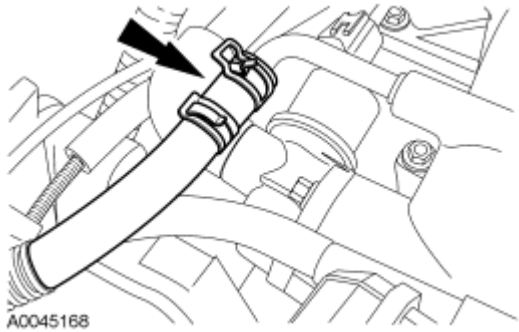

Fig. 201: Vacuum Hose
Courtesy of FORD MOTOR CO.

11. Disconnect the evaporative emission (EVAP) canister purge valve.
    - Disconnect the 2 quick release EVAP hoses.

- Disconnect the electrical connector.

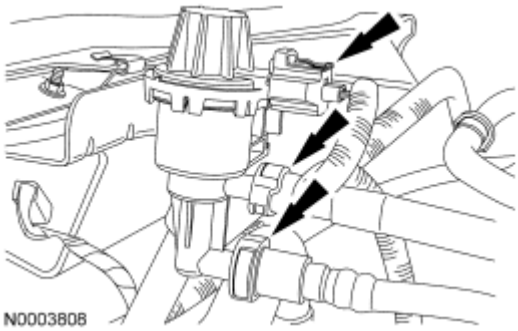

Fig. 202: Evaporative Emission (EVAP) Canister Purge Valve
Courtesy of FORD MOTOR CO.

12. Disconnect the fuel tube spring lock coupling. For additional information, refer to **FUEL SYSTEM - GENERAL INFORMATION** article.
13. Detach the generator battery cable retainer from the RH valve cover stud bolt.

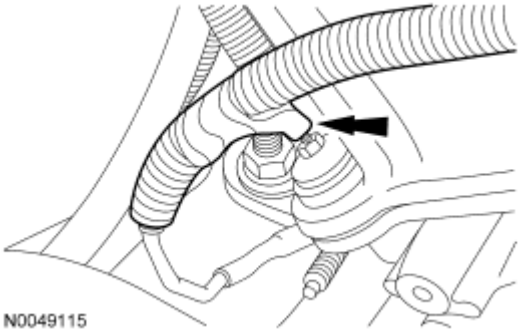

Fig. 203: Generator Battery Cable Retainer
Courtesy of FORD MOTOR CO.

14. Remove the nut and disconnect the generator battery cable.
    - Detach the generator battery cable pin-type retainer.

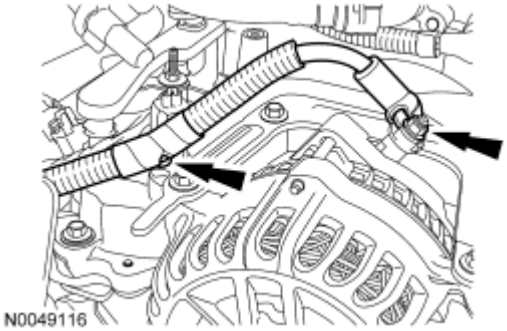

Fig. 204: Generator Battery Cable & Retainer
Courtesy of FORD MOTOR CO.

15. Disconnect the PCM electrical connectors.

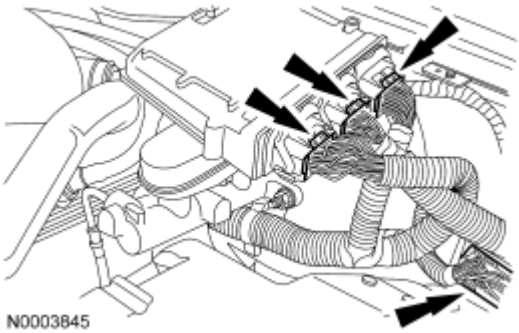

Fig. 205: PCM Electrical Connectors
Courtesy of FORD MOTOR CO.

16. Disconnect the ground wire.

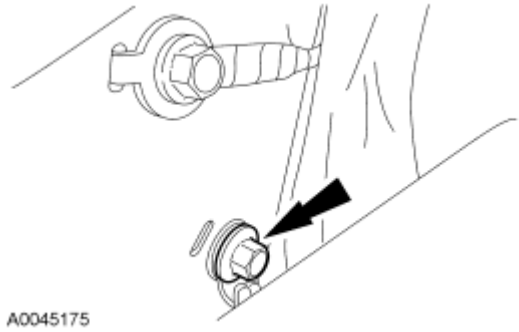

Fig. 206: Ground Wire Bolt
Courtesy of FORD MOTOR CO.

17. Disconnect the A/C electrical connector.

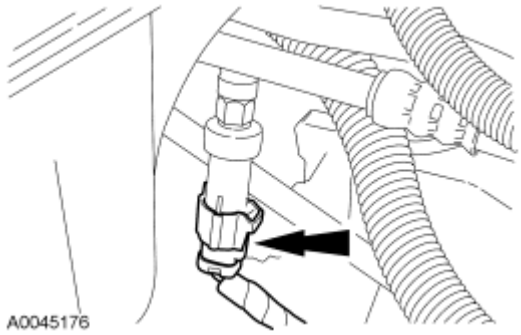

Fig. 207: A/C Electrical Connector
Courtesy of FORD MOTOR CO.

18. Disconnect the A/C low charge protection switch electrical connector.

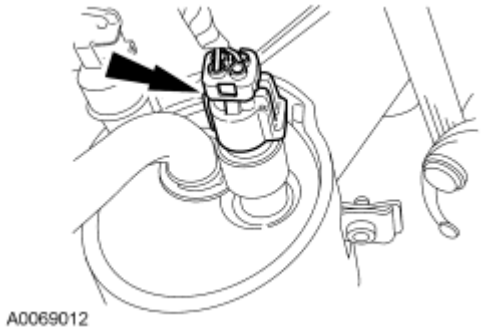

Fig. 208: A/C Low Charge Protection Switch Electrical Connector
Courtesy of FORD MOTOR CO.

19. Disconnect the heater hoses.

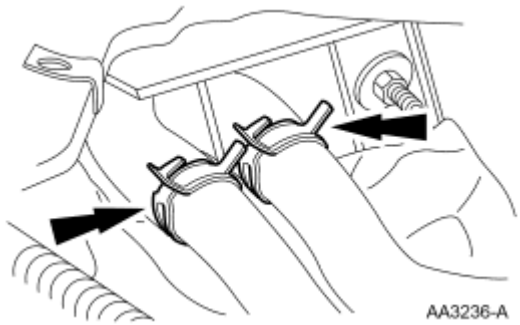

Fig. 209: Heater Hoses
Courtesy of FORD MOTOR CO.

20. Remove the ground strap.

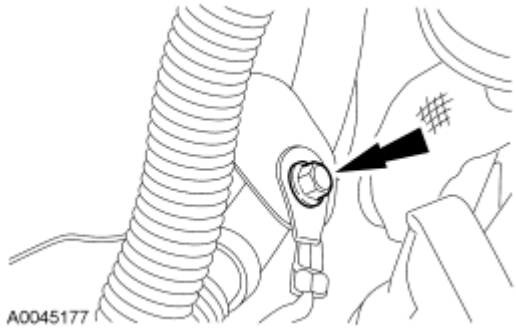

Fig. 210: Ground Strap
Courtesy of FORD MOTOR CO.

21. Disconnect the upper radiator hose from the hose connection. Secure the hose to the radiator assembly.

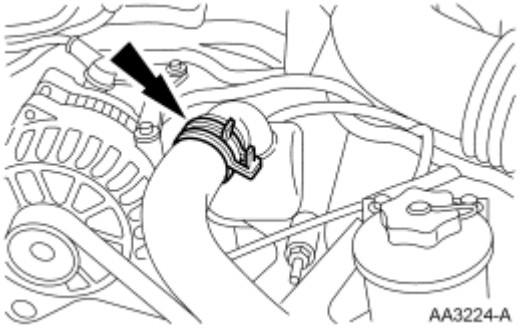

Fig. 211: Upper Radiator Hose
Courtesy of FORD MOTOR CO.

22. Disconnect the lower radiator hose from the oil filter adapter.

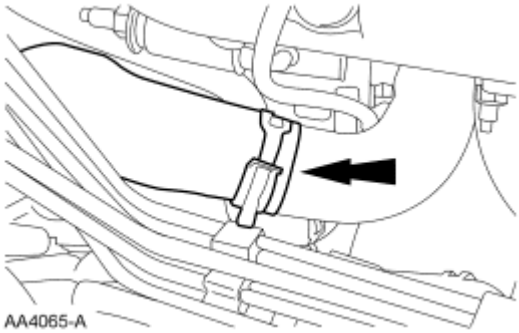

Fig. 212: Lower Radiator Hose
Courtesy of FORD MOTOR CO.

23. Remove the cooling fan. For additional information, refer to **ENGINE COOLING** article.
24. Drain the engine oil.
    - Install the drain plug when finished.
    - To install, tighten to 13 Nm (10 lb-ft).

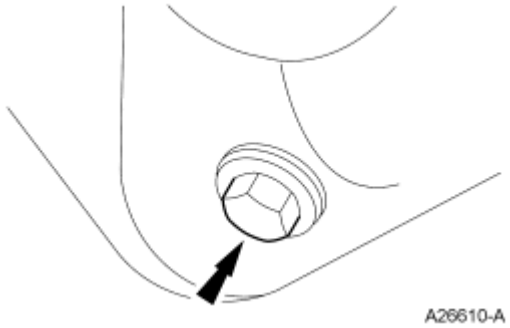

Fig. 213: Engine Oil Drain Plug
Courtesy of FORD MOTOR CO.

25. If equipped, disconnect the block heater electrical connector.

26. Disconnect the power steering electrical connector.

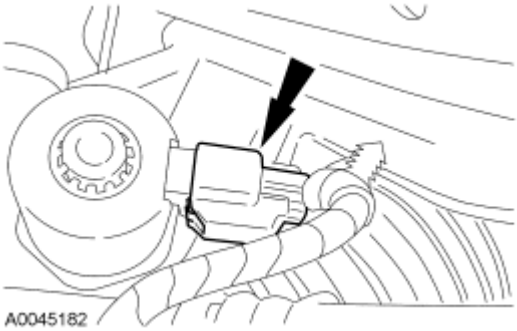

Fig. 214: Block Heater Electrical Connector
Courtesy of FORD MOTOR CO.

27. Disconnect the oil pressure sender electrical connector.

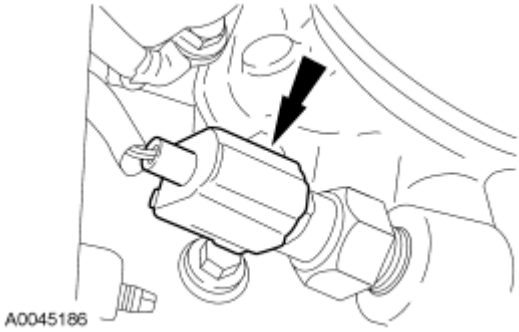

Fig. 215: Oil Pressure Sender Electrical Connector
Courtesy of FORD MOTOR CO.

28. Disconnect the power steering pressure (PSP) switch electrical connector.

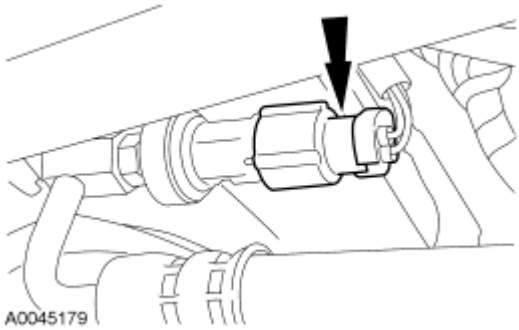

Fig. 216: Power Steering Pressure (PSP) Switch Electrical Connector
Courtesy of FORD MOTOR CO.

CAUTION: The oil cooler must be replaced or severe damage to the engine can occur.

29. If equipped, remove and discard the oil cooler. For additional information, refer to **Oil Cooler**.
30. Remove the nut and the transmission cooler tube support bracket.

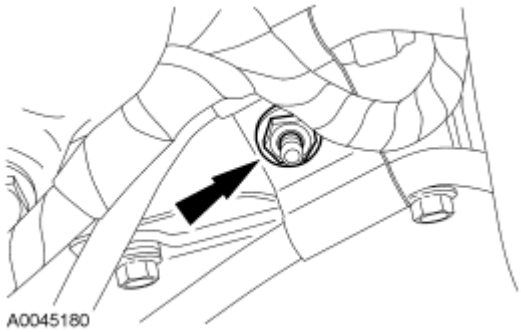

Fig. 217: Transmission Cooler Tube Support Bracket Nut
Courtesy of FORD MOTOR CO.

31. Remove the bolt.

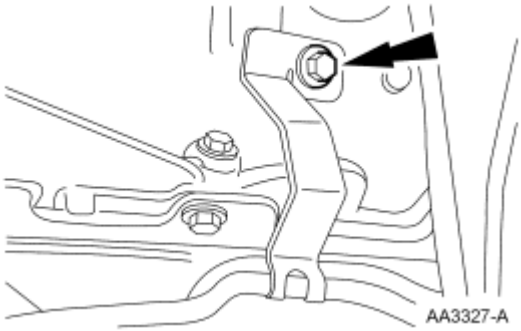

Fig. 218: Transmission Cooler Tube Support Bracket Bolt
Courtesy of FORD MOTOR CO.

32. Disconnect the crankshaft position (CKP) sensor electrical connector.
33. Position the power steering tube bracket aside.

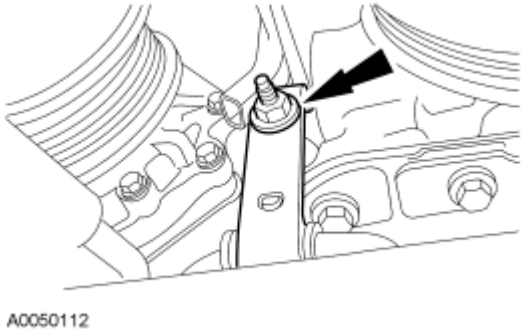

Fig. 219: Power Steering Tube Bracket
Courtesy of FORD MOTOR CO.

34. Disconnect the engine wiring harness retainers from the A/C compressor.

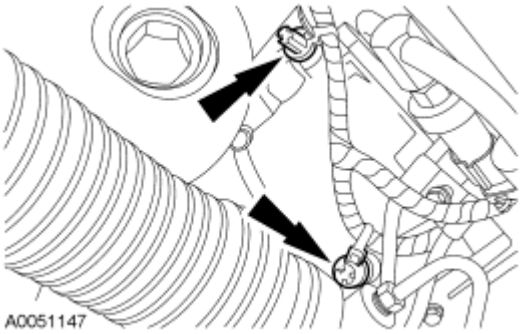

Fig. 220: Engine Wiring Harness Retainers
Courtesy of FORD MOTOR CO.

35. Disconnect the A/C compressor electrical connector.

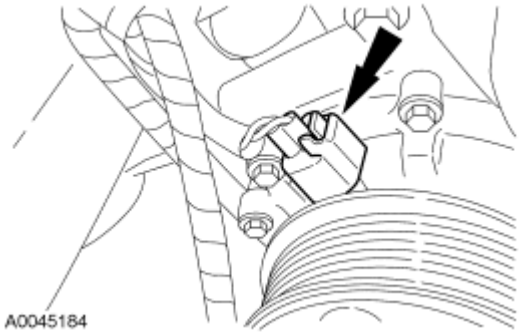

Fig. 221: A/C Compressor Electrical Connector
Courtesy of FORD MOTOR CO.

36. Remove the 3 bolts and position the A/C compressor aside.

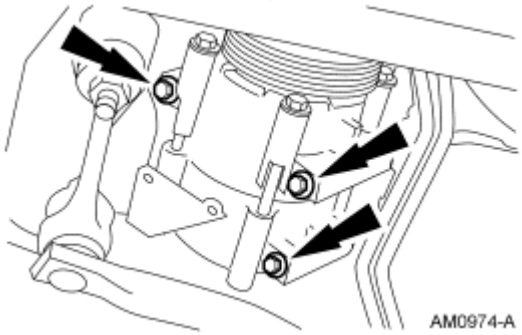

Fig. 222: A/C Compressor Bolts
Courtesy of FORD MOTOR CO.

37. Remove the 4 bolts and position the power steering pump aside.

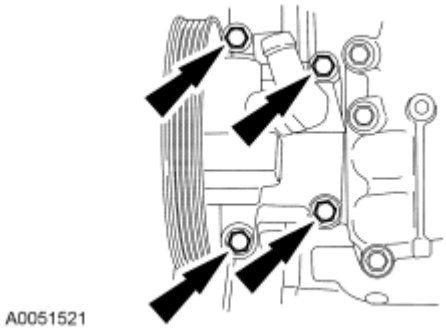

Fig. 223: Power Steering Pump Bolts
Courtesy of FORD MOTOR CO.

38. Remove the starter motor.
    - Remove the starter motor solenoid cover.
    - Disconnect the electrical connections.
    - Remove the bolts.
    - Remove the starter motor.

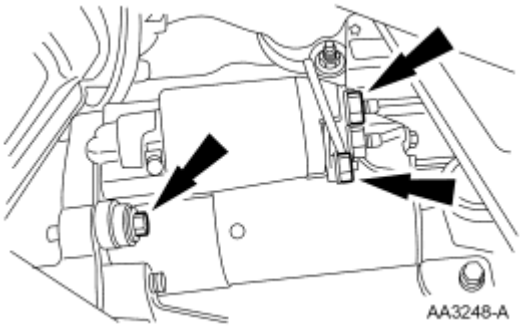

Fig. 224: starter motor & Connections
Courtesy of FORD MOTOR CO.

39. Disconnect the RH heated oxygen sensor (HO2S) electrical connectors.
40. Disconnect the LH HO2S electrical connector.

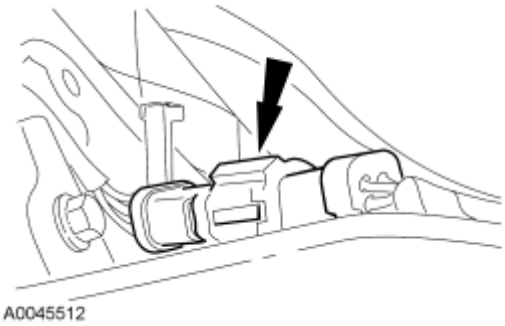

Fig. 225: LH HO2S Electrical Connector
Courtesy of FORD MOTOR CO.

41. Using the special tool, remove the LH HO2S.

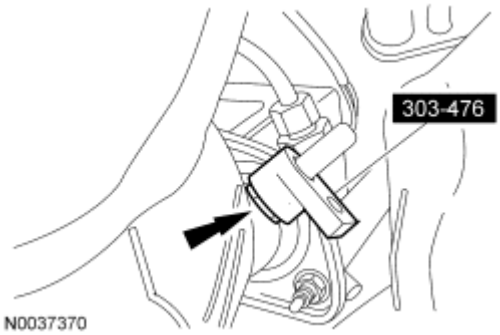

Fig. 226: Heated Oxygen Sensor (HO2S) Special Tool
Courtesy of FORD MOTOR CO.

42. Support the exhaust and remove the 4 nuts.

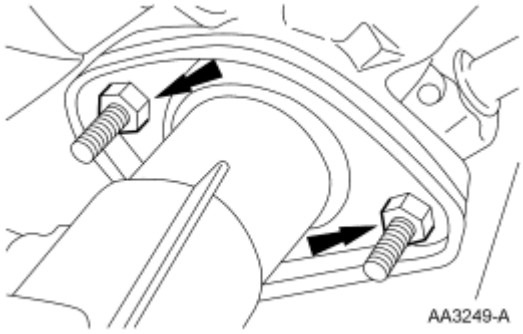

Fig. 227: Exhaust Nuts
Courtesy of FORD MOTOR CO.

NOTE: LH shown, RH similar.

43. Remove the 2 engine mount nuts.

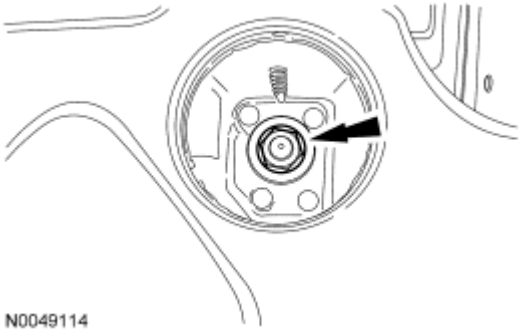

Fig. 228: Engine Mount Nut
Courtesy of FORD MOTOR CO.

44. Install a suitable lifting device under the transmission and support.
45. Remove the rear transmission insulator nuts.

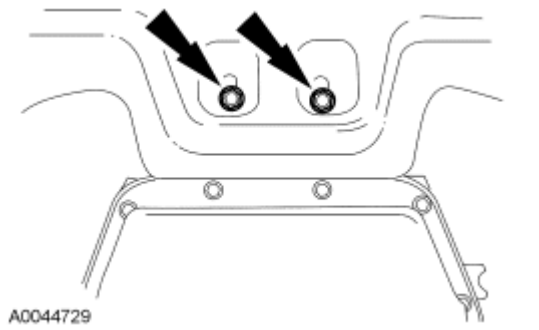

Fig. 229: Rear Transmission Insulator Nuts
Courtesy of FORD MOTOR CO.

46. Raise the transmission and remove the rear transmission insulator bolts.

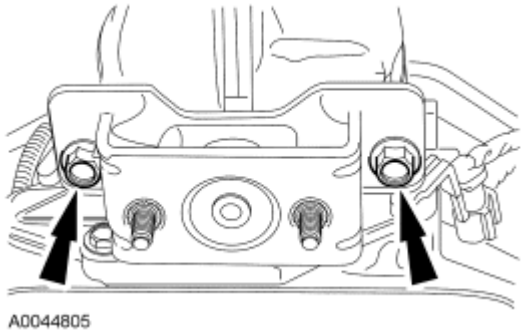

Fig. 230: Rear Transmission Insulator Bolts
Courtesy of FORD MOTOR CO.

47. Remove the transmission rear insulator and lower the transmission down to rest on the rear crossmember.
48. Disconnect the HO2S sensor and the solenoid body sensor electrical connectors.

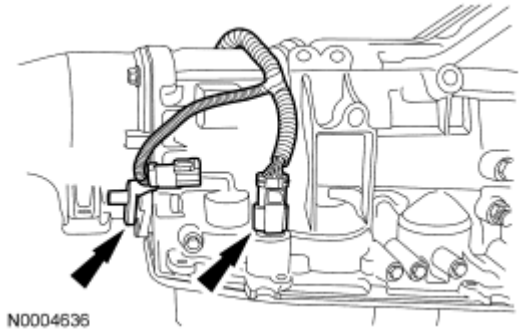

Fig. 231: HO2S Sensor & Solenoid Body Sensor Electrical Connectors
Courtesy of FORD MOTOR CO.

49. Disconnect the output shaft speed sensor, transmission range sensor and the turbine shaft speed sensor electrical connectors.

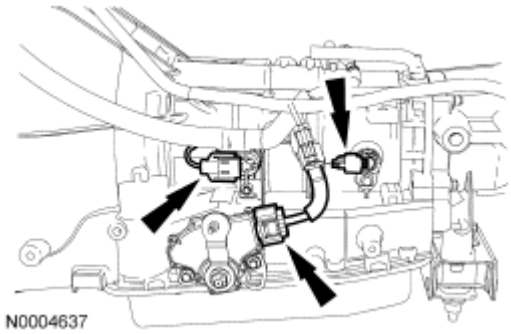

Fig. 232: Output Shaft Speed Sensor, Transmission Range Sensor & Turbine Shaft Speed Sensor Electrical Connectors
Courtesy of FORD MOTOR CO.

50. Release the wiring harness from the retainers on the transmission.
51. Remove the 3 bolts and the inspection cover.

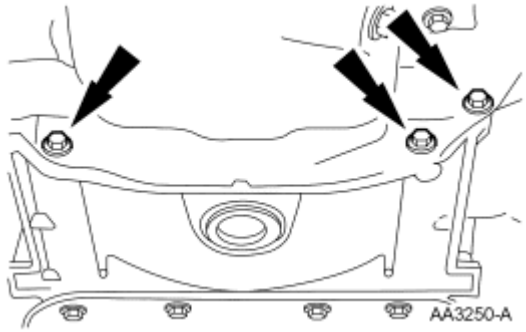

Fig. 233: Inspection Cover & Bolts
Courtesy of FORD MOTOR CO.

52. Remove the torque converter nut access plug.
    - Remove the 4 nuts.

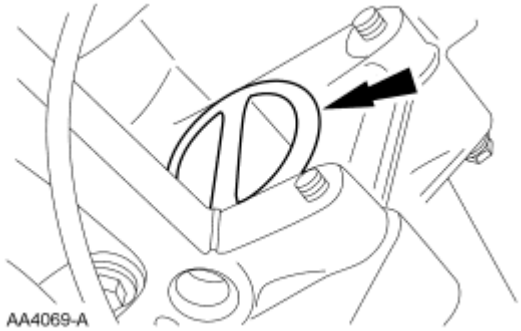

Fig. 234: Torque Converter Nut Access Plug

Courtesy of FORD MOTOR CO.

53. Remove the 4 bolts and 1 stud.

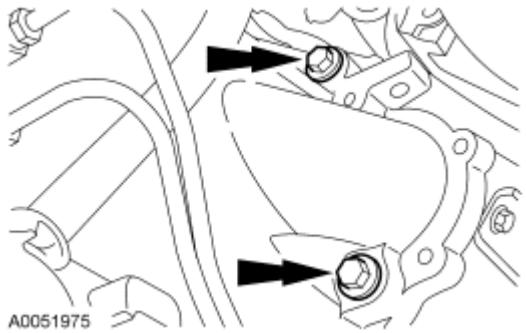

Fig. 235: Transmission Bolts
Courtesy of FORD MOTOR CO.

54. Remove the engine support insulator nuts.
55. Install the special tool to the RH cylinder head.

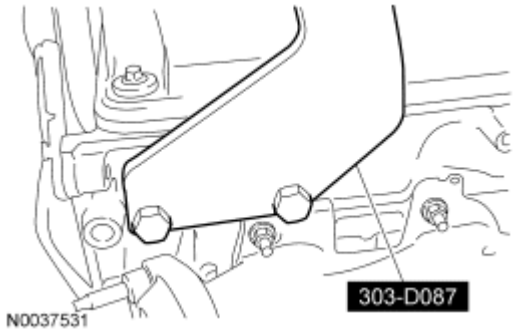

Fig. 236: Installing Special Tool To RH Cylinder Head
Courtesy of FORD MOTOR CO.

56. Install the special tool to the LH cylinder head.

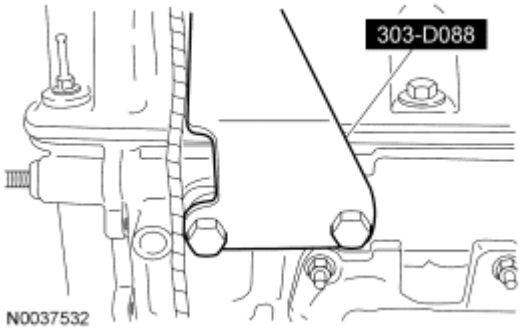

Fig. 237: Installing Special Tool To LH Cylinder Head
Courtesy of FORD MOTOR CO.

57. Install the special tools.

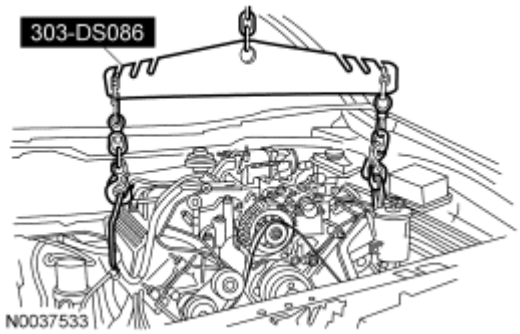

Fig. 238: Special Tools
Courtesy of FORD MOTOR CO.

58. Remove the 2 bolts.

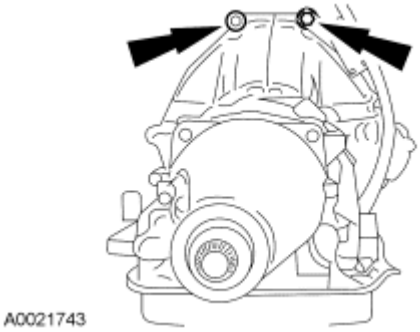

Fig. 239: Top Transmission Bolts
Courtesy of FORD MOTOR CO.

59. Remove the engine assembly from the vehicle.

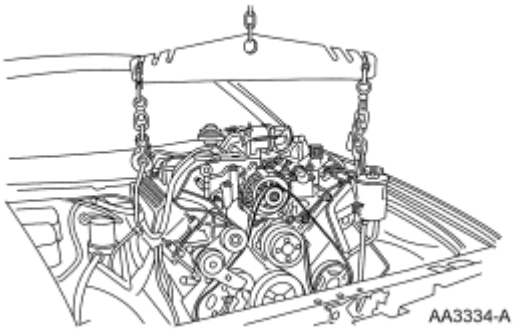

Fig. 240: Lifting Engine Assembly
Courtesy of FORD MOTOR CO.

DISASSEMBLY

ENGINE

Special Tools

Illustration	Tool Name	Tool Number
 ST1330-A	Compressor, Valve Spring	303-567 (T97P-6565-AH)
 ST1276-A	Cylinder Ridge Reamer	303-016 (T64L-6011-EA)
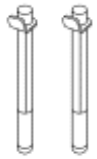 ST1337-A	Installer, Connecting Rod	303-442 (T93P-6136-A)
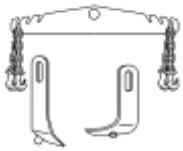 ST2443-A	Lifting Bracket Set, Engine	303-DS086 (D93P-6001-A)
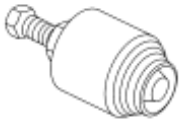 ST1730-A	Remover, Crankshaft Front Oil Seal	303-107 (T74P-6700-A)
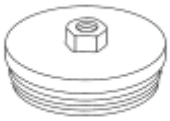 ST1382-A	Remover, Crankshaft Rear Oil Seal	303-519 (T95P-6701-EH)
 ST1481-A	Remover, Crankshaft Rear Oil Slinger	303-514 (T95P-6701-AH)
	Remover, Crankshaft Vibration	303-009 (T58P-6316-D)

 ST1286-A	Damper	
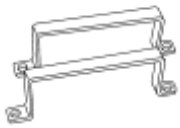 ST1668-A	Remover/Installer, Cylinder Head	303-572 (T97T-6000-A)
 ST1185-A	Slide Hammer	100-001 (T50T-100-A)
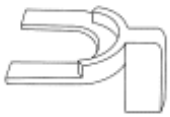 ST1331-A	Spacer, Valve Spring Compressor	303-382 (T91P-6565-AH)

Material

Item	Specification
Motorcraft Metal Surface Prep ZC-31	-
Silicone Gasket Remover ZC-30	-

DISASSEMBLY

CAUTION: Servicing the bottom end of the engine (crankshaft, bearings) requires that cylinder heads be removed. Failure to do so may result in engine damage.

CAUTION: During engine repair procedures, cleanliness is extremely important. Any foreign material (including any material created while cleaning gasket surfaces) that enters the oil passages, coolant passages or the oil pan may cause engine failure.

NOTE: The crankshaft rear seal, the rear oil seal slinger and the crankshaft rear seal retainer plate must be removed before mounting the engine on the engine stand.

NOTE: For additional information, refer to the exploded views under engine Assembly.

1. Remove the 6 bolts and the flexplate.

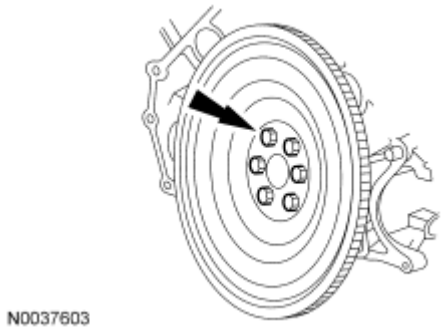

Fig. 241: Locating Flexplate Bolts
Courtesy of FORD MOTOR CO.

2. Remove the engine/transmission spacer plate.

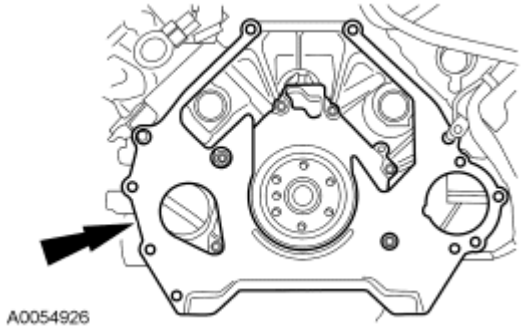

Fig. 242: Engine-To-Transmission Spacer Plate
Courtesy of FORD MOTOR CO.

3. Using the special tools, remove the crankshaft rear seal slinger.

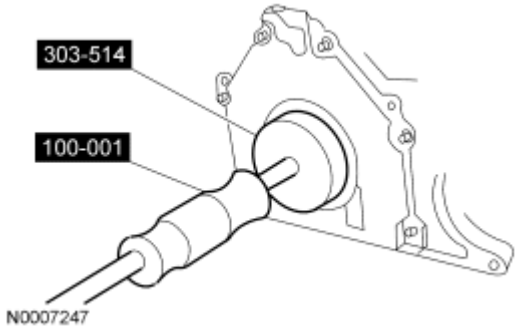

Fig. 243: Removing Crankshaft Rear Oil Seal Slinger
Courtesy of FORD MOTOR CO.

4. Using the special tools, remove the crankshaft rear seal.

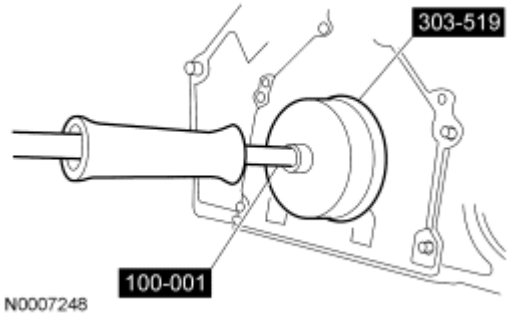

Fig. 244: Removing Crankshaft Rear Seal
Courtesy of FORD MOTOR CO.

5. Remove the 2 oil pan-to-crankcase rear seal retainer plate bolts and the 6 crankcase rear seal retainer plate bolts.

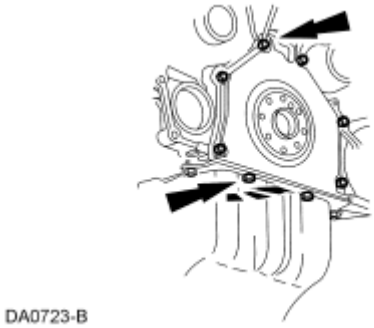

Fig. 245: Identifying Crankshaft Rear Seal Retainer Plate Bolts
Courtesy of FORD MOTOR CO.

6. Using the special tool, mount the engine on a suitable engine stand.

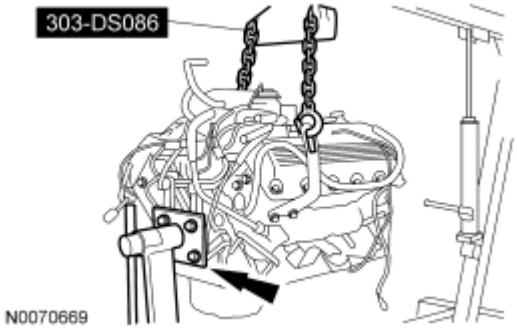

Fig. 246: Mounting Engine On A Suitable Engine Stand
Courtesy of FORD MOTOR CO.

NOTE: RH shown, LH similar.

7. Remove the bolts and the LH and RH engine mounts.

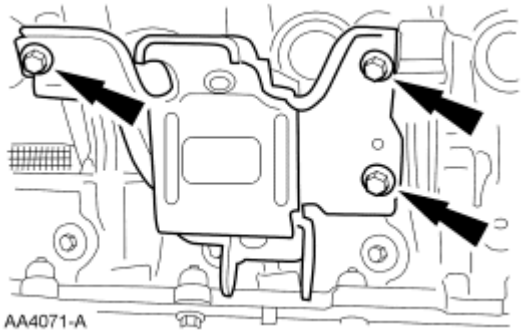

Fig. 247: Engine Mount Bolts
Courtesy of FORD MOTOR CO.

NOTE: LH shown, RH similar.

8. Remove the drain plugs from the engine block. Allow the coolant to completely drain.
   - Install the drain plugs when finished.
   - To install, tighten to 20 Nm (15 lb-ft).

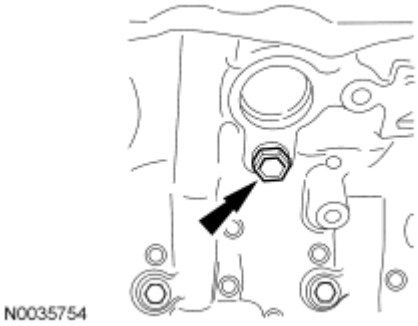

Fig. 248: Engine Block Drain Plug
Courtesy of FORD MOTOR CO.

9. Remove the bolt and the battery cables from the engine.

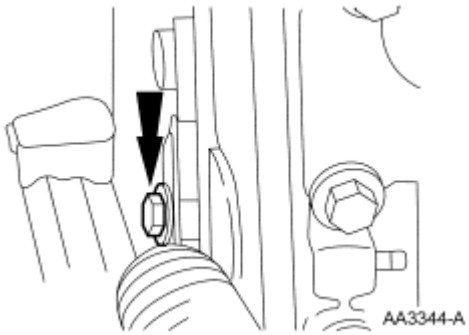

Fig. 249: Bolt

Courtesy of FORD MOTOR CO.

10. Disconnect the EGR tube from the exhaust manifold.

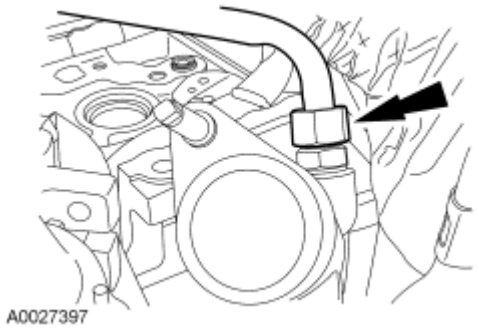

Fig. 250: EGR Tube At Exhaust Manifold
Courtesy of FORD MOTOR CO.

11. Disconnect the 8 ignition coil electrical connectors.

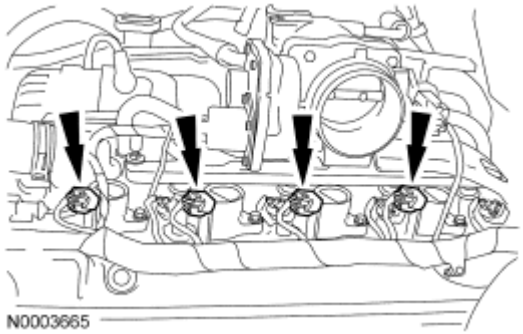

Fig. 251: Ignition Coil Electrical Connectors
Courtesy of FORD MOTOR CO.

12. Disconnect the 8 fuel injector electrical connectors.

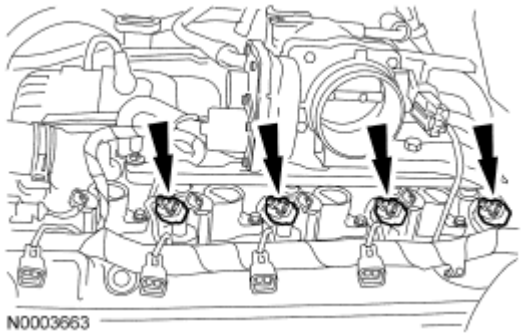

Fig. 252: Fuel Injector Electrical Connectors
Courtesy of FORD MOTOR CO.

13. Remove the 2 bolts and the intake manifold shield.

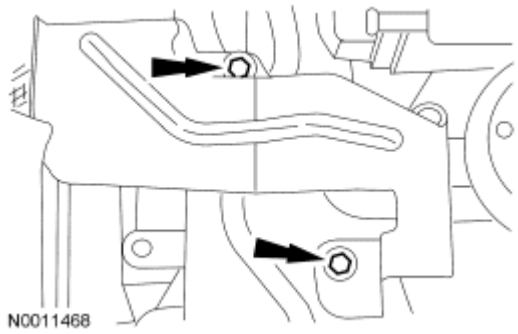

Fig. 253: Intake Manifold Shield
Courtesy of FORD MOTOR CO.

14. Disconnect and remove the crankcase ventilation tube.

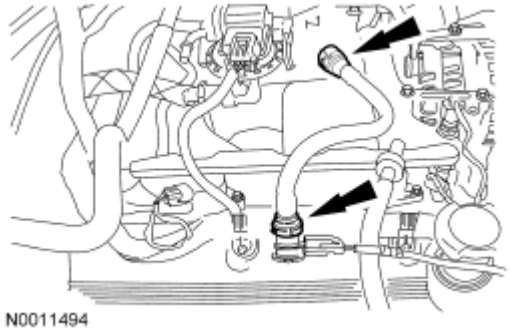

Fig. 254: Crankcase Ventilation Tube
Courtesy of FORD MOTOR CO.

15. Remove the 4 generator mounting bracket bolts and the bracket.

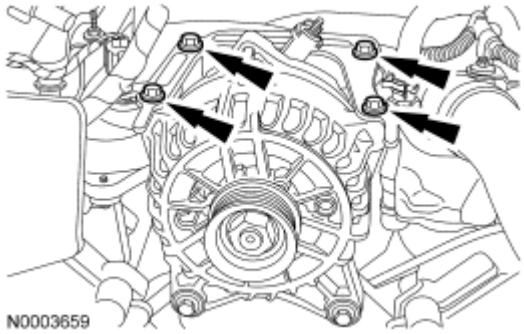

Fig. 255: Generator Mounting Bracket Bolts
Courtesy of FORD MOTOR CO.

16. Disconnect the throttle control and the throttle position (TP) sensor electrical connectors.

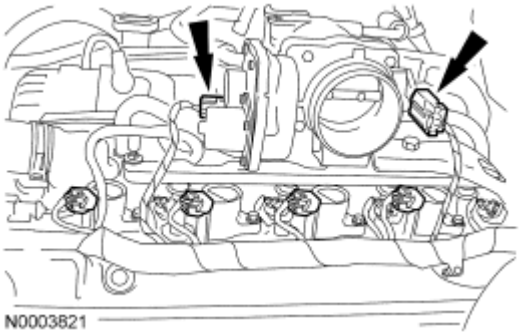

Fig. 256: Locating Throttle Control And Throttle Position (TP) Sensor Electrical Connectors
Courtesy of FORD MOTOR CO.

17. Disconnect the generator electrical connector.

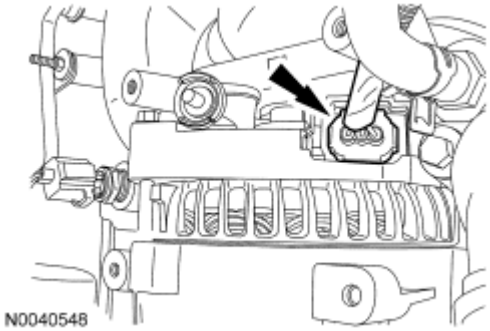

Fig. 257: Generator Electrical Connector
Courtesy of FORD MOTOR CO.

18. Disconnect the cylinder head temperature (CHT) sensor electrical connector.

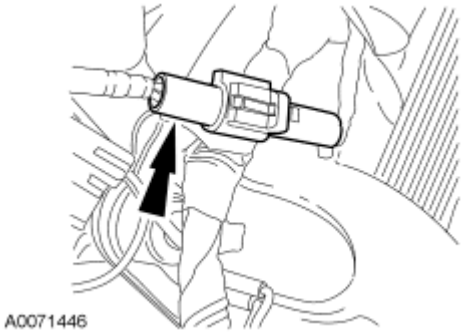

Fig. 258: Cylinder Head Temperature (CHT) Sensor Electrical Connector
Courtesy of FORD MOTOR CO.

19. Remove the generator wiring harness anchor from the LH front stud.

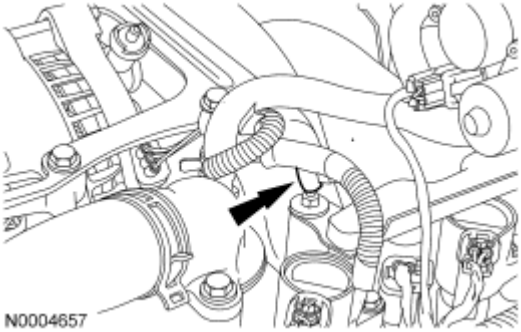

Fig. 259: Generator Wiring Harness Anchor
Courtesy of FORD MOTOR CO.

20. Disconnect the ground wire from the RH rear stud.

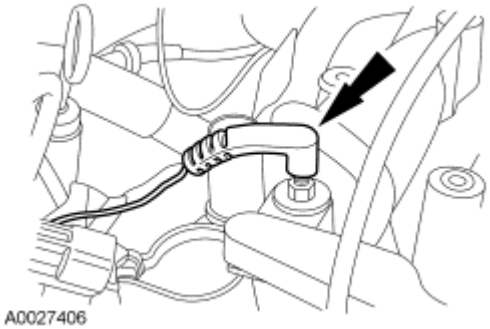

Fig. 260: Ground Wire At RH Rear Stud
Courtesy of FORD MOTOR CO.

21. Disconnect the camshaft position (CMP) sensor electrical connector.

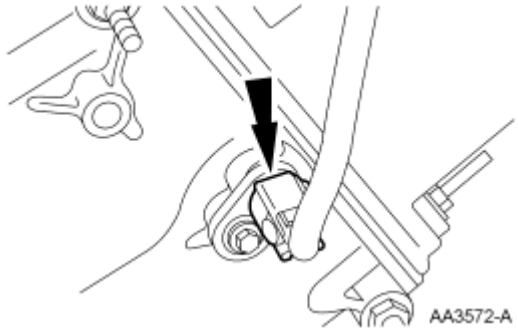

Fig. 261: Camshaft Position (CMP) Sensor Electrical Connector
Courtesy of FORD MOTOR CO.

22. Disconnect the radio ignition interference capacitor and remove the engine control sensor wiring.

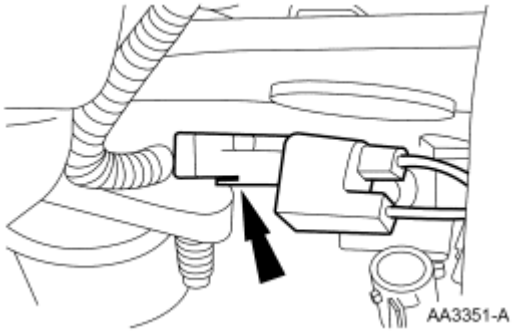

Fig. 262: Radio Ignition Interference Capacitor
Courtesy of FORD MOTOR CO.

23. Disconnect the knock sensor (KS) electrical connector and the wiring harness pin-type retainer.

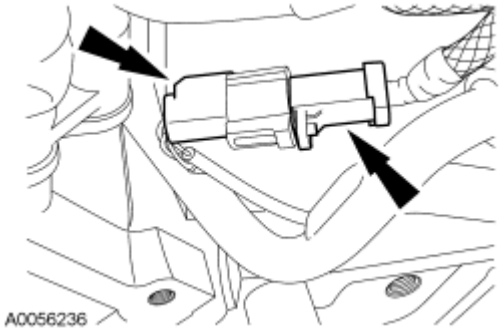

Fig. 263: Locating Knock Sensor (KS) Electrical Connector And Wiring Harness Pin-Type Retainer
Courtesy of FORD MOTOR CO.

24. Disconnect the vacuum hoses and the electrical connector.

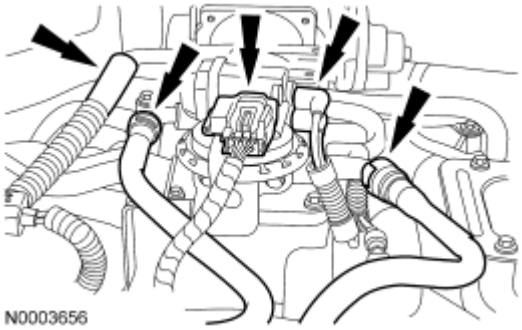

Fig. 264: Vacuum Hoses & Electrical Connector
Courtesy of FORD MOTOR CO.

25. Disconnect the fuel charging wiring from the intake manifold crash bracket and remove the harness from the engine assembly.

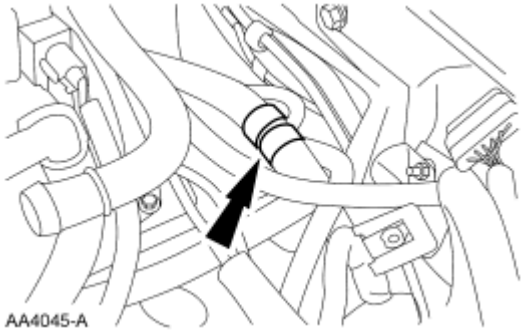

Fig. 265: Fuel Charging Wiring In Crash Bracket
Courtesy of FORD MOTOR CO.

26. Disconnect the EGR tube nut from the EGR valve.

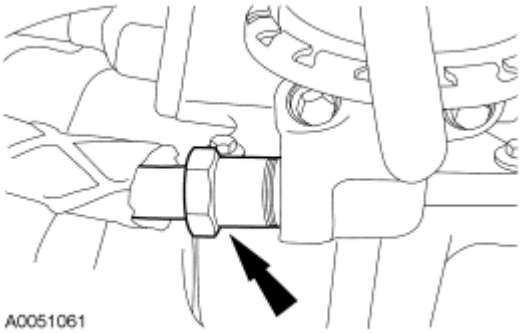

Fig. 266: EGR Tube Nut At EGR
Courtesy of FORD MOTOR CO.

27. Remove the 2 generator bolts and the generator.

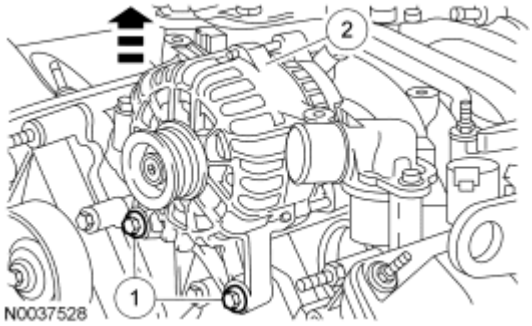

Fig. 267: Generator & Bolts
Courtesy of FORD MOTOR CO.

28. Remove the intake manifold crash bracket bolt and prevent the bolt from contacting the cylinder head with a rubber band or tie strap.

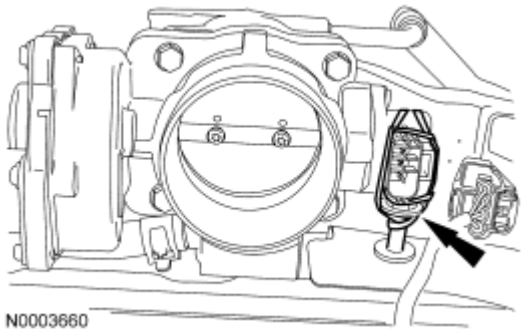

Fig. 268: Tying Up Intake Manifold Crash Bracket Bolt
Courtesy of FORD MOTOR CO.

29. Remove the intake manifold crash bracket stud bolt.

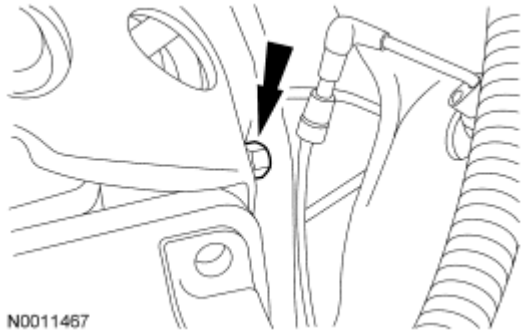

Fig. 269: Intake Manifold Crash Bracket Stud Bolt
Courtesy of FORD MOTOR CO.

30. Remove the 8 bolts and the 8 ignition coils.

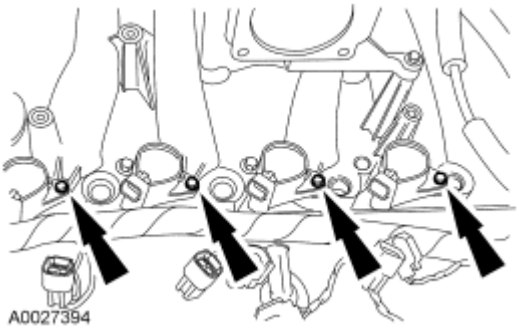

Fig. 270: Ignition Coils & Bolts
Courtesy of FORD MOTOR CO.

31. Remove the 2 bolts and the coolant outlet adapter.

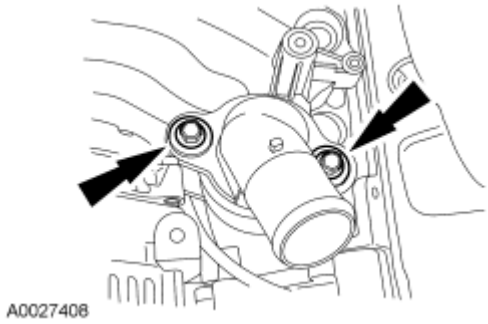

Fig. 271: Coolant Outlet Adapter & Bolts
Courtesy of FORD MOTOR CO.

32. Remove the thermostat.

Fig. 272: Thermostat
Courtesy of FORD MOTOR CO.

33. Remove the 8 bolts and the intake manifold.
    - Discard the intake manifold gaskets.

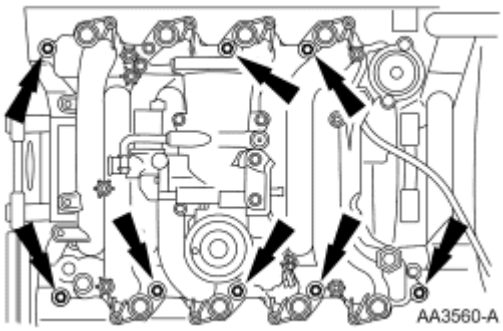

Fig. 273: Intake Manifold Bolts
Courtesy of FORD MOTOR CO.

CAUTION: Do not use metal scrapers, wire brushes, power abrasive discs or other abrasive means to clean the sealing surfaces. These tools cause scratches and gouges which make leak paths.

34. Clean the sealing surfaces.

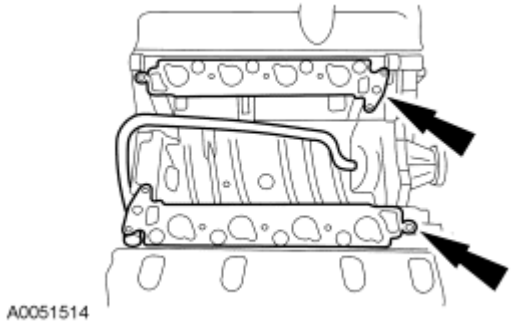

Fig. 274: Intake Manifold Sealing Surfaces
Courtesy of FORD MOTOR CO.

35. Remove the coolant bypass tube.
    1. Remove the retaining nut.
    2. Remove the ground strap.
    3. Remove the coolant bypass tube.

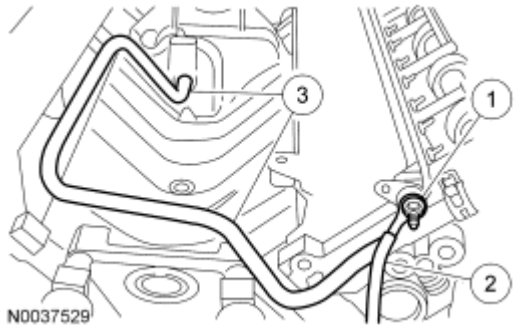

Fig. 275: Coolant Bypass Tube & Nut
Courtesy of FORD MOTOR CO.

36. Remove the 2 bolts and the KS.

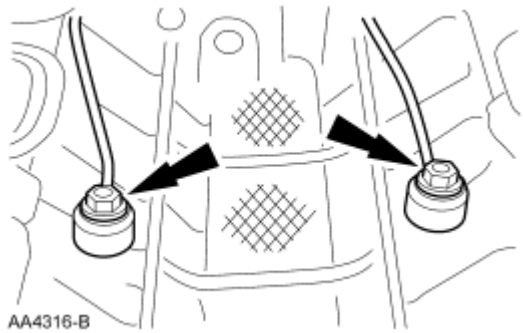

Fig. 276: Knock Sensor
Courtesy of FORD MOTOR CO.

37. Loosen the 6 studs and 5 bolts and remove the LH valve cover.
    - Discard the gasket.

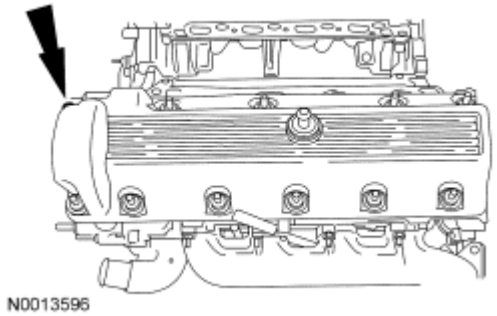

Fig. 277: LH Valve Cover
Courtesy of FORD MOTOR CO.

38. Loosen the 7 studs and 4 bolts and remove the RH valve cover.
    - Discard the gasket.

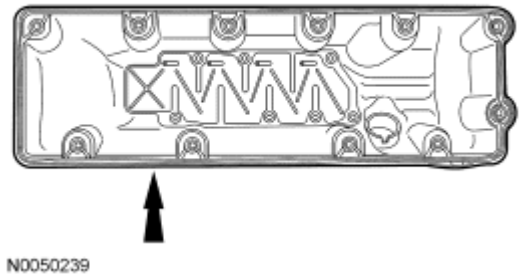

Fig. 278: RH Valve Cover
Courtesy of FORD MOTOR CO.

CAUTION: Only use hand tools when removing or installing the spark plugs, damage may occur to the cylinder head or spark plug.

NOTE: Use compressed air to remove any foreign material from the spark plug well before removing the spark plugs.

39. Remove the 8 spark plugs.

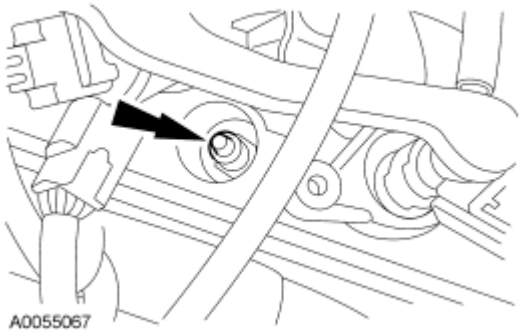

Fig. 279: Spark Plug
Courtesy of FORD MOTOR CO.

40. Position the lobe of the camshaft upward.

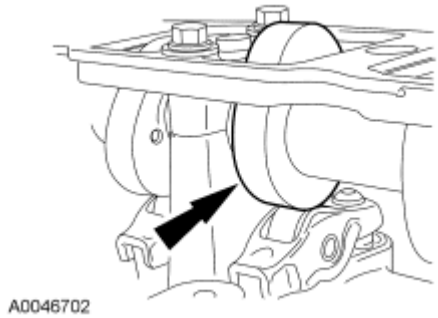

Fig. 280: Positioning Camshaft Lobe Up
Courtesy of FORD MOTOR CO.

41. Install the special tool between the valve spring coils to prevent valve stem seal damage.

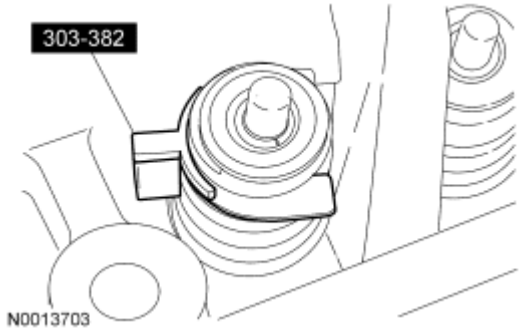

Fig. 281: Installing Special Tool Between Valve Spring Coils
Courtesy of FORD MOTOR CO.

CAUTION: If the components are to be reinstalled, they must be installed in the same positions. Mark the components for installation into their original locations. Failure to follow these instructions may result in engine damage.

42. Using the special tool, compress the valve springs and remove the 16 camshaft roller followers.

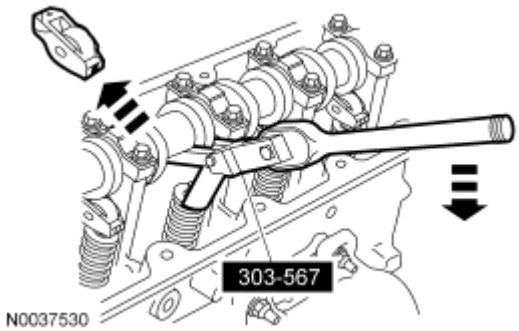

Fig. 282: Removing Camshaft Roller Followers
Courtesy of FORD MOTOR CO.

43. Remove the bolt and the accessory drive belt idler pulley.

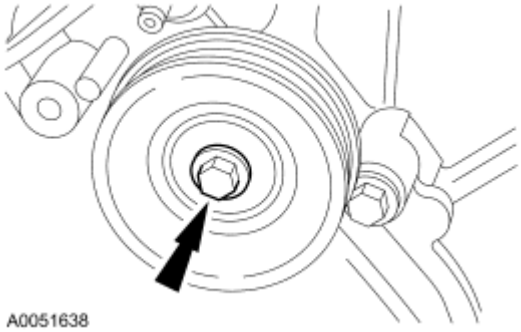

Fig. 283: Accessory Drive Belt Idler Pulley Bolt
Courtesy of FORD MOTOR CO.

44. Remove the 4 bolts and the coolant pump pulley.

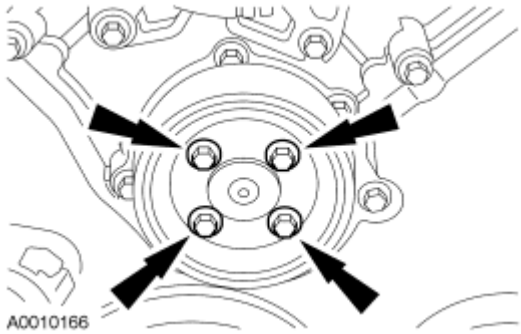

Fig. 284: Coolant Pump Pulley Bolts
Courtesy of FORD MOTOR CO.

45. Remove the 4 bolts and the coolant pump.

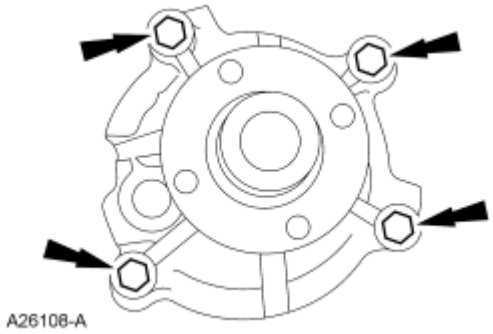

Fig. 285: Coolant Pump Bolts
Courtesy of FORD MOTOR CO.

46. Remove the crankshaft pulley bolt.

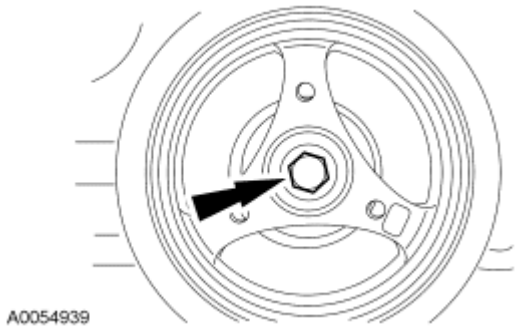

Fig. 286: Crankshaft Pulley Bolt
Courtesy of FORD MOTOR CO.

47. Using the special tool, remove the crankshaft pulley.

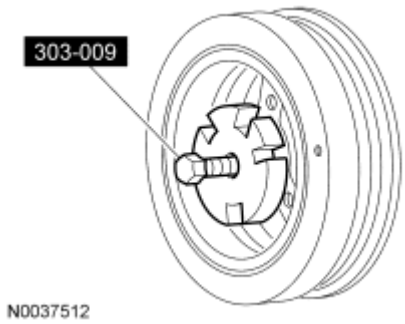

Fig. 287: Removing Crankshaft Pulley
Courtesy of FORD MOTOR CO.

48. Using the special tool, remove the crankshaft front seal.

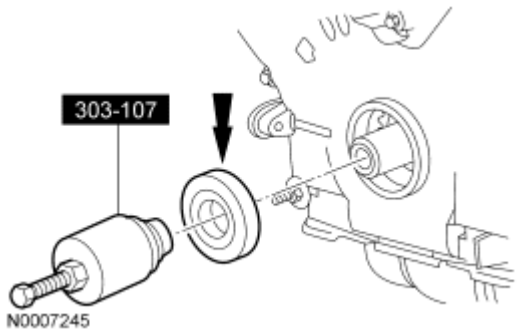

Fig. 288: Removing Crankshaft Front Seal Using Special Tool
Courtesy of FORD MOTOR CO.

49. Remove the 16 bolts and the oil pan.
    - Discard the gasket.

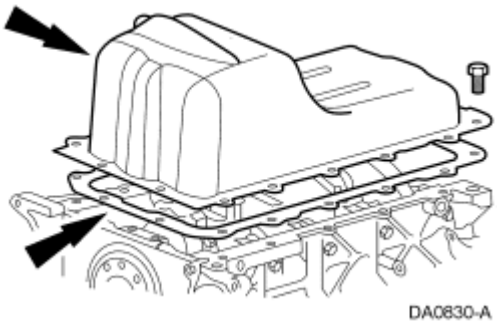

Fig. 289: Oil Pan, Bolt & Gasket
Courtesy of FORD MOTOR CO.

50. Remove the 3 bolts, the oil pump screen and pickup tube.

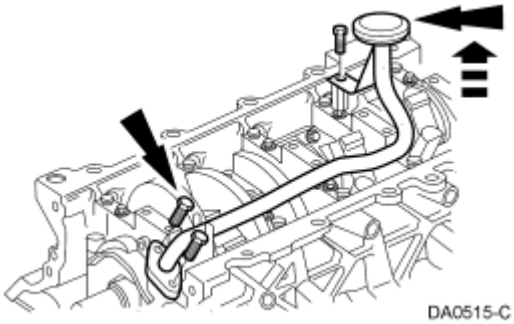

Fig. 290: Oil Pump Screen And Pickup Tube & Bolts
Courtesy of FORD MOTOR CO.

51. Remove the oil pump screen and pickup tube spacer.

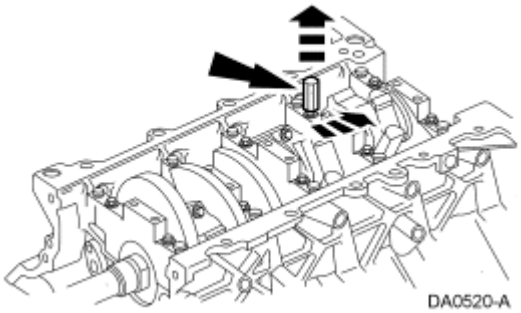

Fig. 291: Oil Pump Screen And Pickup Tube Spacer
Courtesy of FORD MOTOR CO.

NOTE: **Correct fastener location is essential for the assembly procedure. Record fastener location.**

52. Remove the 15 fasteners in the sequence shown.

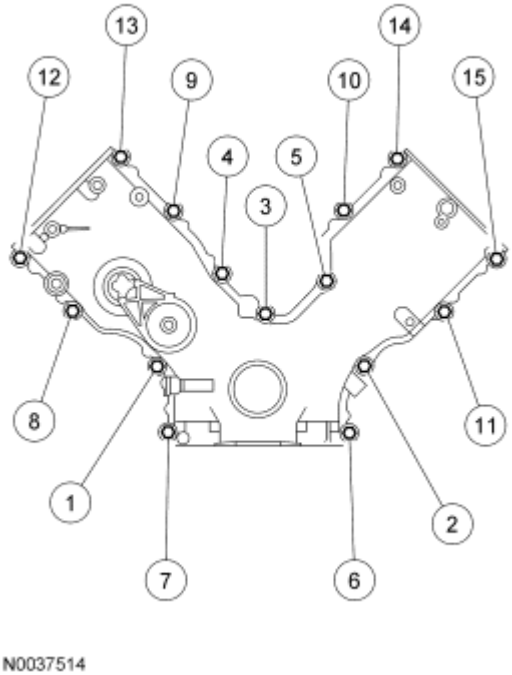

Fig. 292: Engine Front Cover Fastener Removal Sequence
Courtesy of FORD MOTOR CO.

53. Remove the engine front cover from the cylinder block.

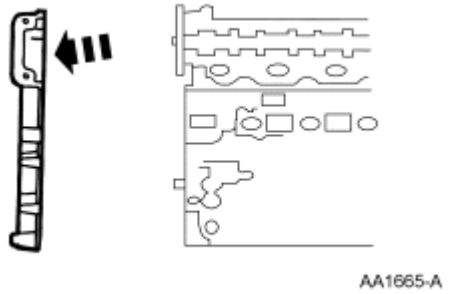

Fig. 293: Removing Engine Front Cover From Cylinder Block
Courtesy of FORD MOTOR CO.

54. Remove the crankshaft sensor ring from the crankshaft.

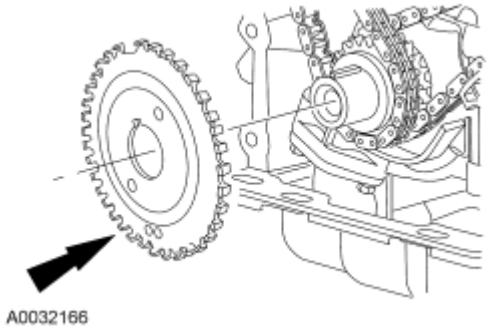

Fig. 294: View Of Crankshaft Sensor Ring At Crankshaft
Courtesy of FORD MOTOR CO.

55. Position the crankshaft with the keyway at the 12 o'clock position.

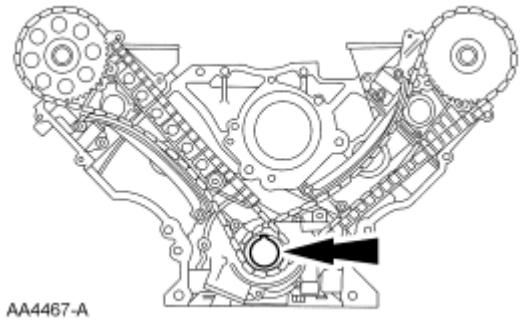

Fig. 295: Crankshaft With Keyway At 12 O'clock Position
Courtesy of FORD MOTOR CO.

56. Remove the timing chain tensioning system from both timing chains.
    1. Remove the 4 bolts.
    2. Remove the timing chain tensioners.
    3. Remove the timing chain tensioner arms.

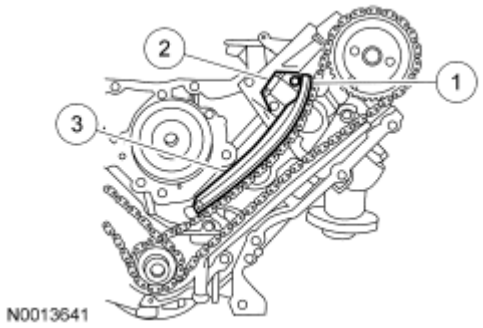

Fig. 296: Identifying Timing Chain Tensioning System
Courtesy of FORD MOTOR CO.

CAUTION: Unless otherwise instructed, at no time when the timing chains are removed and the cylinders heads are installed is the crankshaft or camshaft to be rotated. Severe piston and valve damage will occur.

57. Remove the LH and RH timing chains and the crankshaft sprocket.
    - Remove the RH timing chain from the camshaft sprocket.
    - Remove the RH timing chain from the crankshaft sprocket.
    - Repeat for the LH timing chain and crankshaft sprocket.

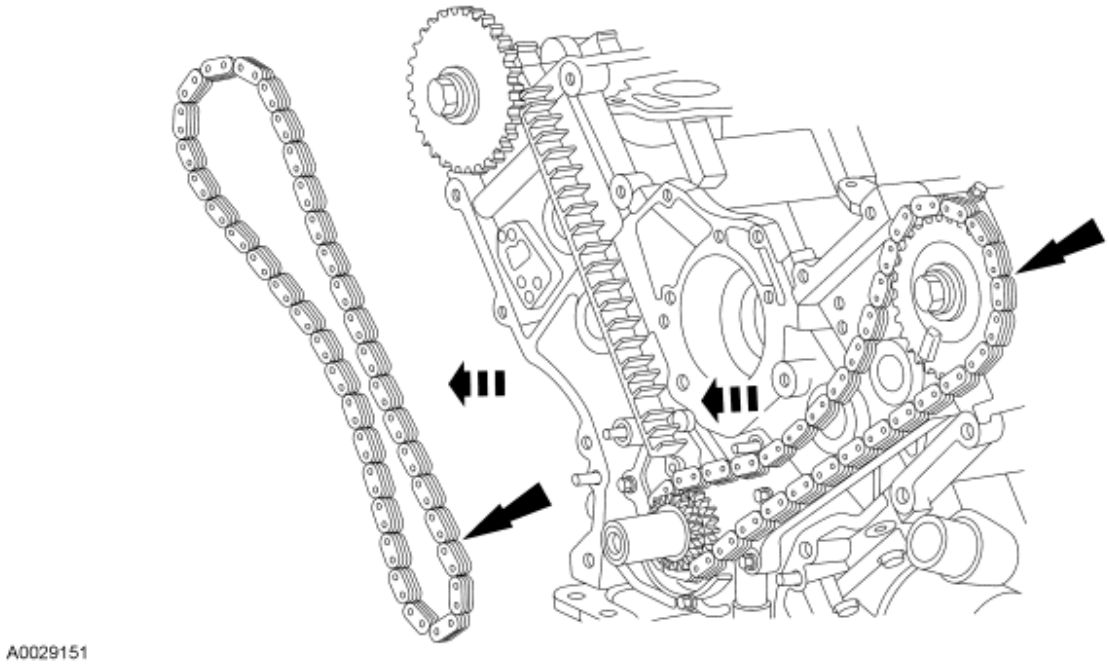

Fig. 297: View Of Left And Right Timing Chains, Sprockets And Crankshaft Gear
Courtesy of FORD MOTOR CO.

58. Remove both timing chain guides.

1. Remove the 4 bolts.
2. Remove the LH timing chain guide.
3. Remove the bolts.
4. Remove the RH timing chain guide.

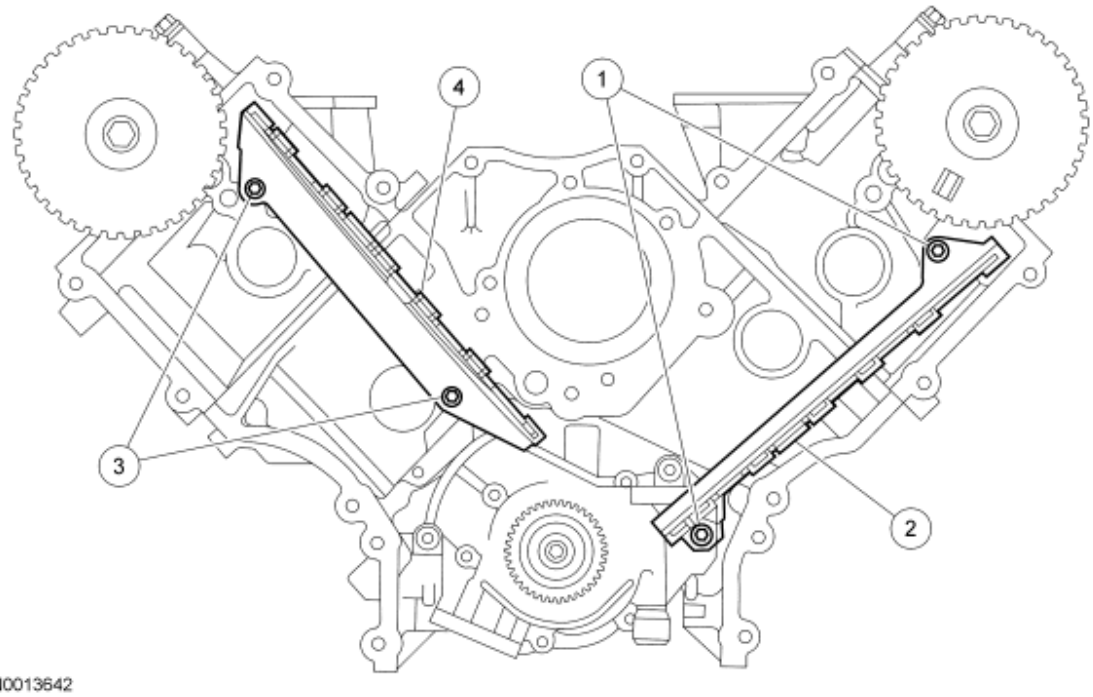

Fig. 298: Identifying Timing Chain Guides
Courtesy of FORD MOTOR CO.

59. Remove the RH exhaust manifold.
    1. Remove the 8 nuts and discard.
    2. Remove the RH exhaust manifold.
    3. Remove the RH exhaust manifold gasket and discard.

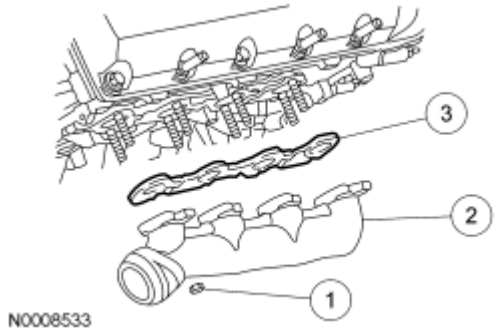

Fig. 299: Locating Exhaust Manifold
Courtesy of FORD MOTOR CO.

60. Remove and discard the 8 RH exhaust manifold studs.
61. Remove the LH exhaust manifold.
    1. Remove the 8 nuts and discard.
    2. Remove the LH exhaust manifold.
    3. Remove the LH exhaust manifold gaskets and discard.

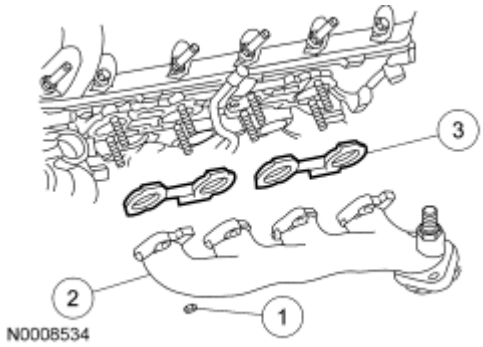

Fig. 300: Identifying LH Exhaust Manifold
Courtesy of FORD MOTOR CO.

62. Remove and discard the 8 LH exhaust manifold studs.
63. Clean and inspect the exhaust manifolds. For additional information, refer to **ENGINE SYSTEM - GENERAL INFORMATION** article.
64. Remove the bolt and the oil level indicator tube.

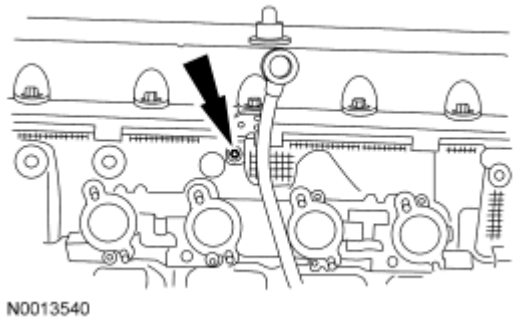

Fig. 301: Oil Level Indicator Tube Bolt
Courtesy of FORD MOTOR CO.

65. Install the special tool on both ends of the cylinder head.

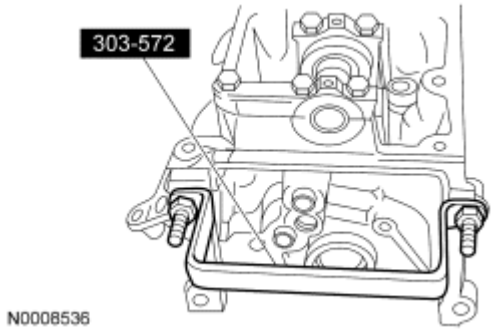

Fig. 302: Identifying Special Tool (303-572)
Courtesy of FORD MOTOR CO.

NOTE: The hydraulic lash adjusters must be reinstalled in their original locations. Record the hydraulic lash adjuster locations.

66. Remove the 16 hydraulic lash adjusters.

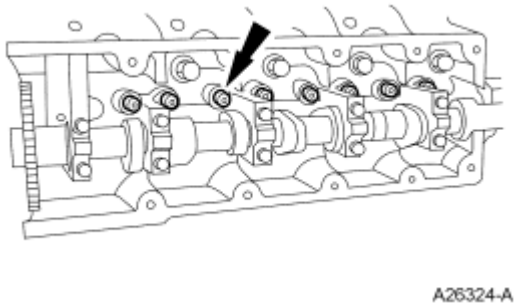

Fig. 303: Locating Hydraulic Lash Adjusters
Courtesy of FORD MOTOR CO.

CAUTION: The cylinder head must be cool before removing it from the engine. Cylinder head warpage may result if a warm or hot cylinder head is removed.

CAUTION: Aluminum surfaces are soft and can be scratched easily. Never place the cylinder head gasket surface, unprotected, on a bench surface. The scratches may cause leak paths.

CAUTION: Do not use metal scrapers, wire brushes, power abrasive discs or other abrasive means to clean the sealing surfaces. These tools cause scratches and gouges that make leak paths. Use a plastic scraping tool to remove all traces of the head gasket.

NOTE: Place clean shop towels over exposed engine cavities. Carefully remove the towels so foreign material is not dropped into the engine.

NOTE: **The cylinder head bolts must be discarded and new bolts installed. They are a tighten-to-yield design and cannot be reused.**

67. Remove the 10 bolts and the RH cylinder head.
    - Discard the cylinder head gasket.
    - Discard the cylinder head bolts.

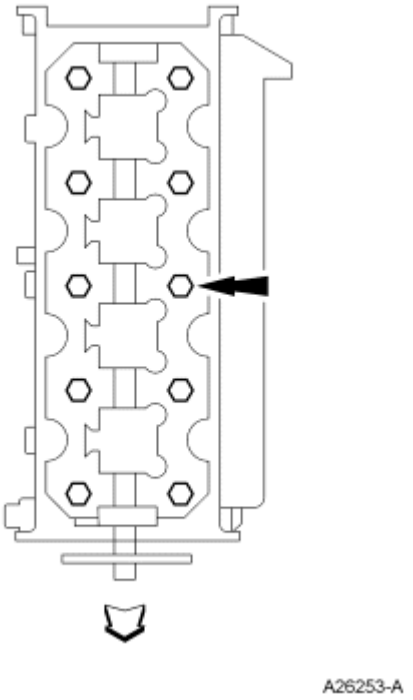

Fig. 304: Identifying Cylinder Head Gasket And Bolts
Courtesy of FORD MOTOR CO.

CAUTION: **The cylinder head must be cool before removing it from the engine. Cylinder head warpage may result if a warm or hot cylinder head is removed.**

CAUTION: **Aluminum surfaces are soft and can be scratched easily. Never place the cylinder head gasket surface, unprotected, on a bench surface. The scratches may cause leak paths.**

CAUTION: **Do not use metal scrapers, wire brushes, power abrasive discs or other abrasive means to clean the sealing surfaces. These tools cause scratches and gouges that make leak paths. Use a plastic scraping tool to remove all traces of the head gasket.**

NOTE: **Place clean shop towels over exposed engine cavities. Carefully remove the towels so foreign material is not dropped into the engine.**

NOTE: The cylinder head bolts must be discarded and new bolts installed. They are a tighten-to-yield design and cannot be reused.

68. Remove the 10 bolts and the LH cylinder head.
    - Discard the cylinder head gasket.
    - Discard the cylinder head bolts.

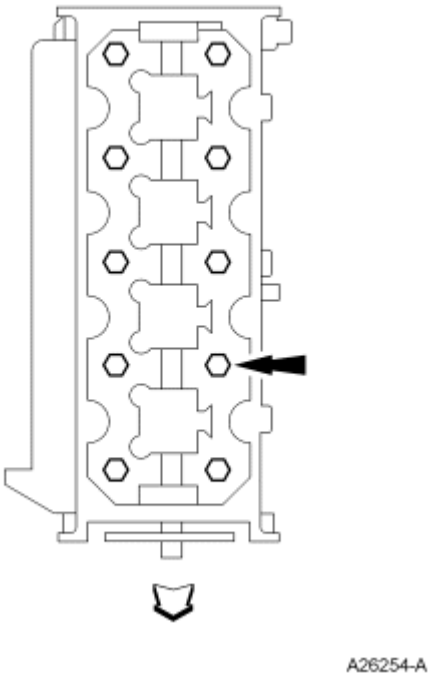

Fig. 305: Identifying Cylinder Head Bolts
Courtesy of FORD MOTOR CO.

CAUTION: Do not use metal scrapers, wire brushes, power abrasive discs or other abrasive means to clean the sealing surfaces. These tools cause scratches and gouges, which make leak paths. Use a plastic scraping tool to remove all traces of the head gasket.

NOTE: Observe all warnings or cautions and follow all application directions contained on the packaging of the silicone gasket remover and the metal surface prep.

NOTE: If there is no residual gasket material present, metal surface prep can be used to clean and prepare the surfaces.

69. Clean the cylinder head-to-cylinder block mating surfaces of both cylinder heads and the cylinder block.
    1. Remove any large deposits of silicone or gasket material with a plastic scraper.

2. Apply silicone gasket remover, following package directions, and allow to set for several minutes.
3. Remove the silicone gasket remover with a plastic scraper. A second application of silicone gasket remover may be required if residual traces of silicone or gasket material remain.
4. Apply metal surface prep, following package directions, to remove any remaining traces of oil or coolant, and to prepare the surfaces to bond with the new gasket. Do not attempt to make the metal shiny. Some staining of the metal surfaces is normal.

NOTE: The straightedge used must be flat within 0.0051 mm (0.0002 in) per foot of tool length.

70. Support the cylinder heads on a bench with the head gasket side up. Inspect all areas of the deck face with a straightedge, paying particular attention to the oil pressure feed area. The cylinder heads must not have depressions deeper than 0.0254 mm (0.001 in) across at 38.1 mm (1.5 in) square area, or scratches more than 0.0254 mm (0.001 in).
71. Remove the 4 bolts and the oil filter adapter.
    - Discard the gasket.

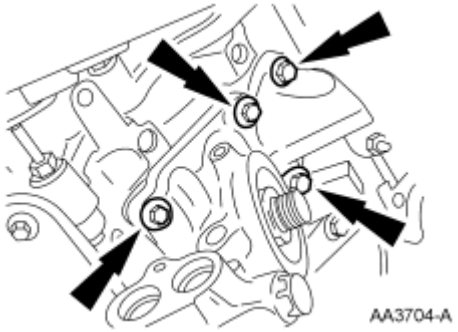

Fig. 306: Oil Filter Adapter Bolts
Courtesy of FORD MOTOR CO.

72. Remove the 3 oil pump bolts and the oil pump.

Fig. 307: Locating Oil Pump Bolts
Courtesy of FORD MOTOR CO.

73. Before removing the pistons, inspect the top of the cylinder bores. If necessary, remove the ridge or

carbon deposits from each cylinder using an cylinder ridge reamer, following the manufacturer instructions.

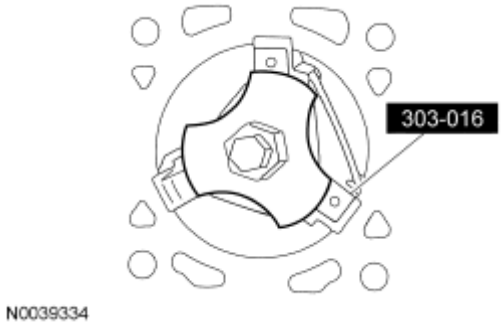

Fig. 308: Cylinder Ridge Reamer
Courtesy of FORD MOTOR CO.

NOTE: Verify that the connecting rods and rod caps have orientation numbers cast into them. If not, number the connecting rods and rod caps for correct orientation.

74. Remove the 2 bolts and the connecting rod cap.
    - Discard the bolts.

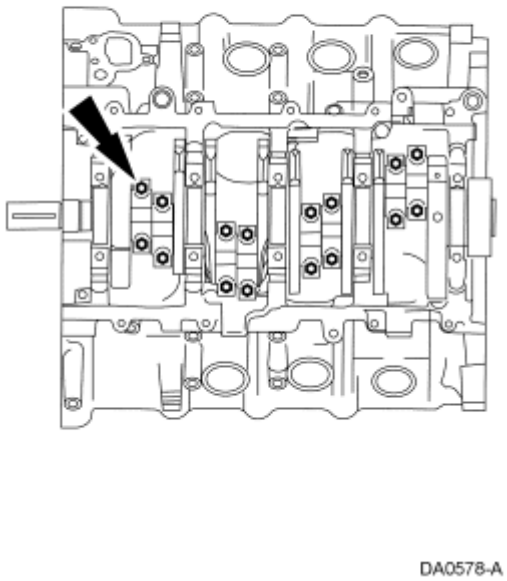

Fig. 309: Locating Connecting Rod Caps
Courtesy of FORD MOTOR CO.

NOTE: Do not scratch the cylinder walls or crankshaft journals with the connecting rod.

75. Using the special tool, push the piston through the top of the cylinder block.

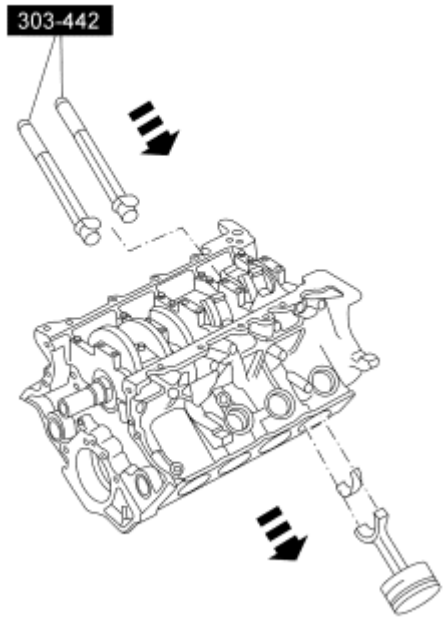

N0010189

Fig. 310: Pushing Piston Through Top Of Cylinder Block
Courtesy of FORD MOTOR CO.

CAUTION: Servicing the bottom end of the engine (crankshaft, bearings) requires that cylinder heads be removed. Failure to do so may result in engine damage.

76. Remove the crankshaft bearing cap fasteners.
    1. Remove and discard the 10 cross-mounted main cap bolts.
    2. Loosen the 10 jack screws.
    3. Remove and discard the 10 main cap bolts.

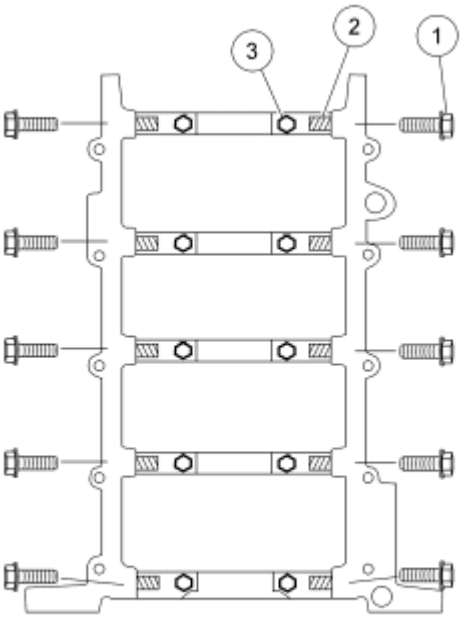

N0015130

Fig. 311: Locating Crankshaft Bearing Cap Fasteners
Courtesy of FORD MOTOR CO.

77. Remove the 5 main bearing caps and the lower crankshaft main bearings.

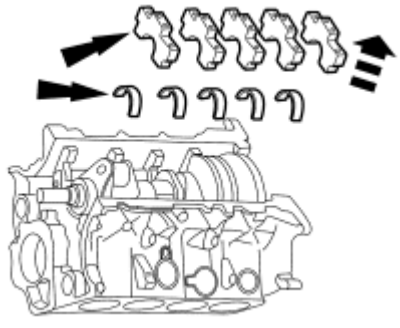

DA0518-B

Fig. 312: Locating Main Bearing Caps, Lower Crankshaft Main Bearings And Lower Thrust Washer
Courtesy of FORD MOTOR CO.

78. Remove the crankshaft and the upper crankshaft main bearings from the cylinder block.

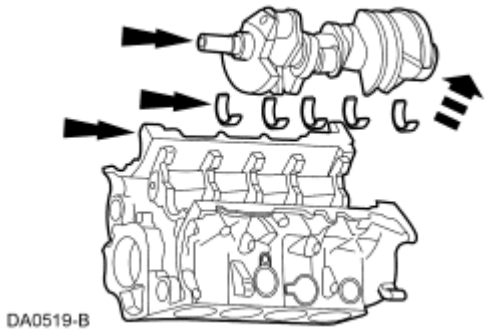

Fig. 313: Removing Crankshaft, Upper Crankshaft Main Bearings And Upper Thrust Washers From Cylinder Block
Courtesy of FORD MOTOR CO.

DISASSEMBLY AND ASSEMBLY OF SUBASSEMBLIES

CYLINDER HEAD

Special Tools

Illustration	Tool Name	Tool Number
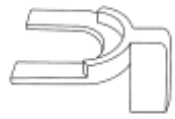 ST1331-A	Compressor Spacer, Valve Spring	303-382 (T91P-6565-AH)
 ST1330-A	Compressor, Valve Spring	303-567 (T97P-6565-AH)
 ST1332-A	Installer, Valve Stem Oil Seal	303-383 (T91P-6571-A)

Material

Item	Specification
Motorcraft Metal Surface Cleaner ZC-21	WSE-M5B392-A
Motorcraft SAE 5W-20 Premium Synthetic Blend Motor Oil XO-5W20-QSP (US); Motorcraft SAE 5W-20 Super Premium Motor Oil CXO-5W20-LSP12 (Canada); or equivalent	WSS-M2C930-A

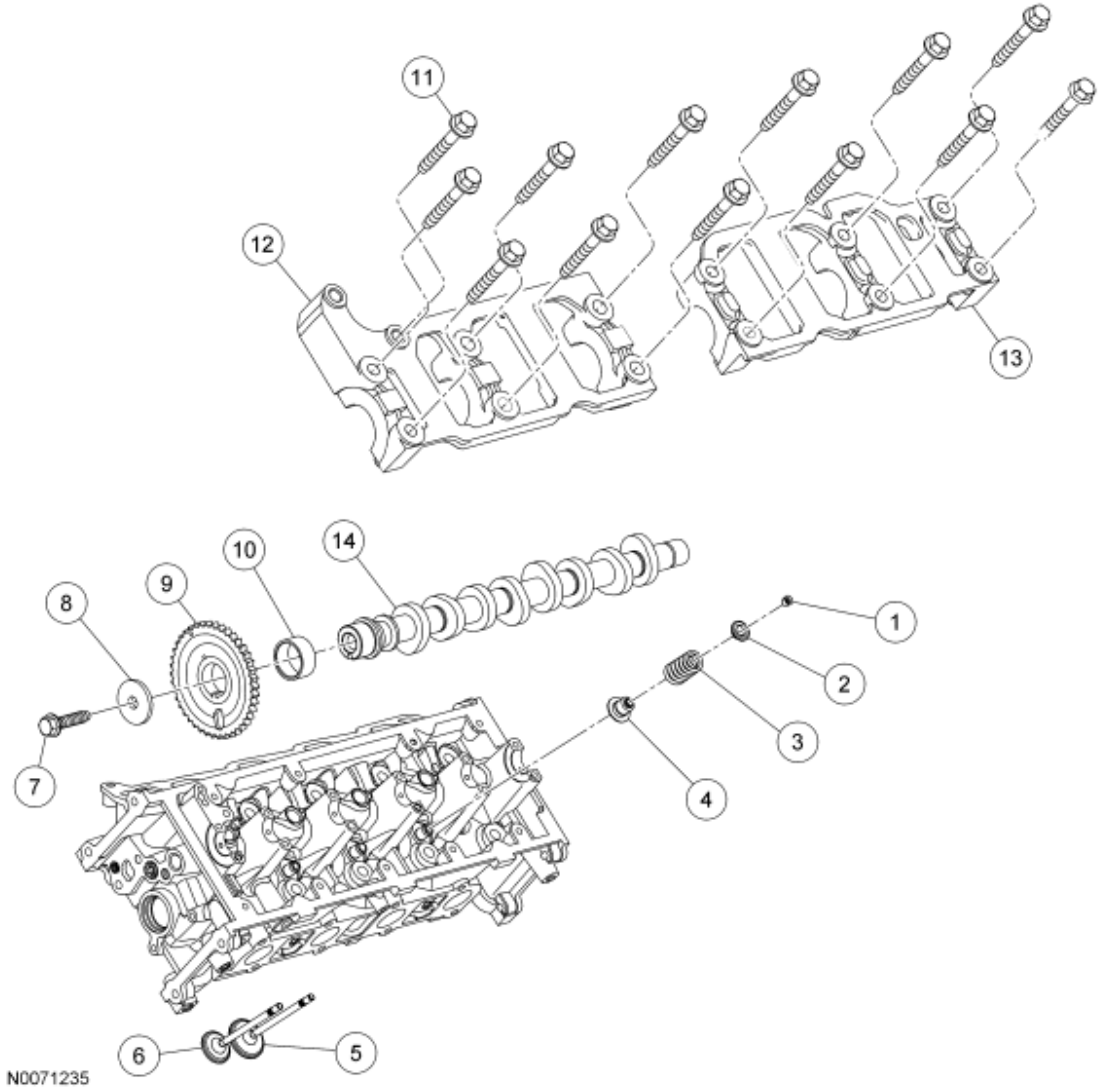

Fig. 314: Exploded View Of Cylinder Head
Courtesy of FORD MOTOR CO.

Item	Part Number	Description
1	6518	Valve spring retainer key (16 required)
2	6514	Valve spring retainer (8 required)
3	6513	Valve spring (8 required)
4	6A517	Valve stem seal (8 required)
5	6505	Intake valve (4 required)
6	6507	Exhaust valve (4 required)
7	N811085	Camshaft sprocket bolt
8	N806164	Camshaft sprocket bolt washer
9	6256	Camshaft sprocket
10	6265	Camshaft sprocket spacer

11	N807834	Camshaft bearing cap bolt (13 required)
12	W705438	Camshaft bearing cap
13	6B277	Camshaft bearing cap
14	6A271	Camshaft

DISASSEMBLY

CAUTION: Place cylinder head on a cardboard or wood surface to prevent damage to the joint face.

NOTE: Do not remove the camshaft before removing the roller followers.

1. Install the special tool between the valve spring coils to prevent valve stem seal damage.

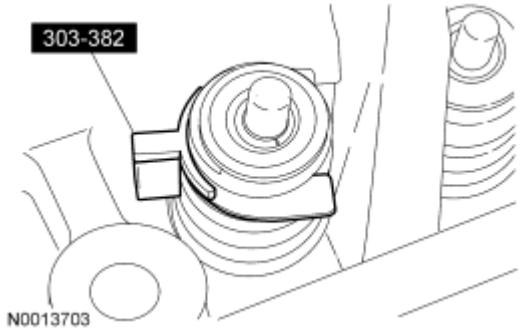

Fig. 315: Installing Special Tool Between Valve Spring Coils
Courtesy of FORD MOTOR CO.

CAUTION: If the components are to be reinstalled, they must be installed in the same positions. Mark the components for installation into their original locations. Failure to follow these instructions may result in engine damage.

2. Using the special tool, compress the valve springs and remove the roller followers.

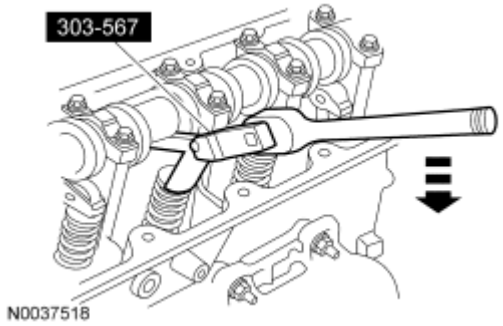

Fig. 316: Compressing Valve Spring
Courtesy of FORD MOTOR CO.

CAUTION: If the components are to be reinstalled, they must be installed in the same positions. Mark the components for installation into their original locations. Failure to follow these instructions may result in engine damage.

3. Remove the hydraulic lash adjusters.

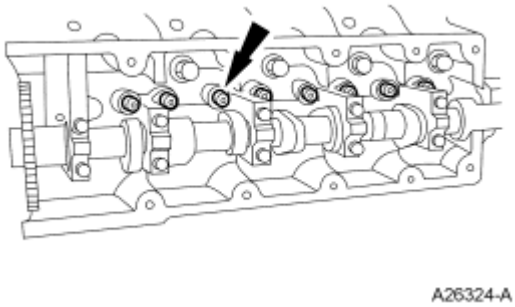

Fig. 317: Locating Hydraulic Lash Adjusters
Courtesy of FORD MOTOR CO.

4. Using the special tool, compress the valve springs.

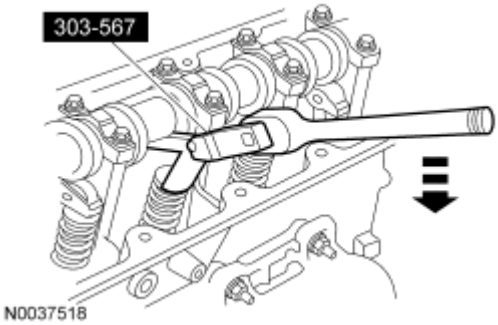

Fig. 318: Compressing Valve Spring
Courtesy of FORD MOTOR CO.

NOTE: Keep valves and valve spring retainer keys in order so they can be installed in their original positions.

5. Remove the valve spring retainer keys, the valve spring retainers, the valve springs and the valves.

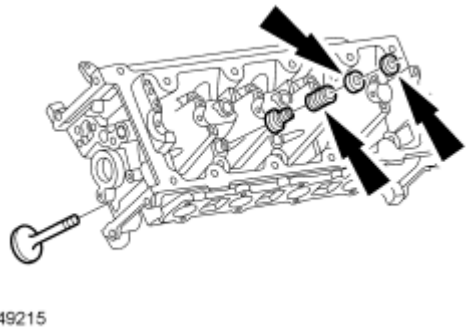

Fig. 319: Valve Spring Retainer Keys, Valve Spring Retainers, Valve Springs & Valves
Courtesy of FORD MOTOR CO.

6. Remove the valve stem seals.

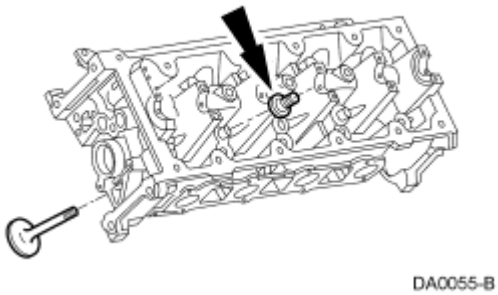

Fig. 320: Valve Stem Seal
Courtesy of FORD MOTOR CO.

NOTE: The camshaft bearing caps must be installed in their original locations. Record camshaft bearing cap locations.

7. Remove the bolts, the bearing caps and the camshaft.

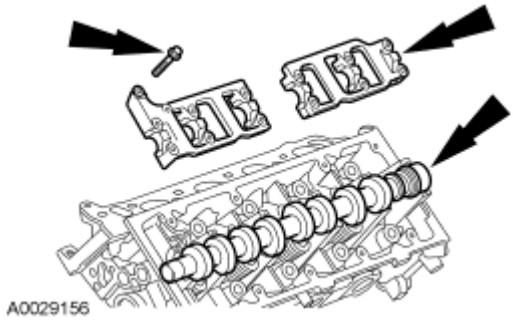

Fig. 321: Bearing Caps & Camshaft
Courtesy of FORD MOTOR CO.

ASSEMBLY

NOTE: Do not use metal scrapers or other tools to clean the cylinder head.

1. Use a plastic scraper and metal surface cleaner to clean the cylinder head.
2. Lubricate the camshaft journals with clean engine oil.

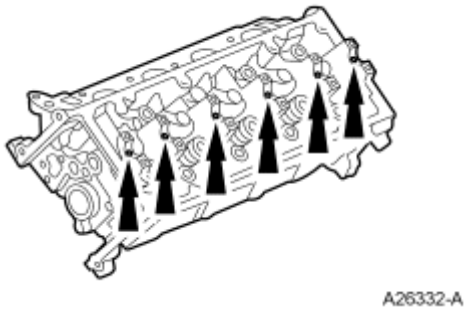

Fig. 322: Camshaft Journals
Courtesy of FORD MOTOR CO.

3. Install the camshaft and the camshaft bearing caps.
   - Lubricate with clean engine oil and position the camshaft bearing caps.
   - Install the bolts loosely.

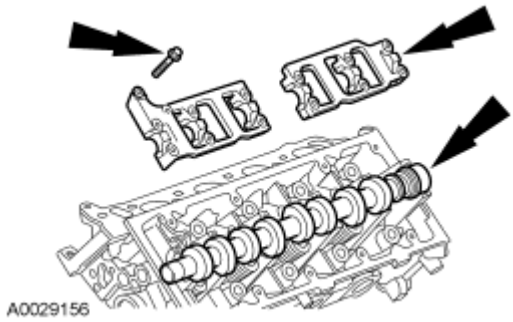

Fig. 323: Bearing Caps & Camshaft
Courtesy of FORD MOTOR CO.

4. Tighten the bolts in the sequence shown.
   - Tighten to 10 Nm (89 lb-in).

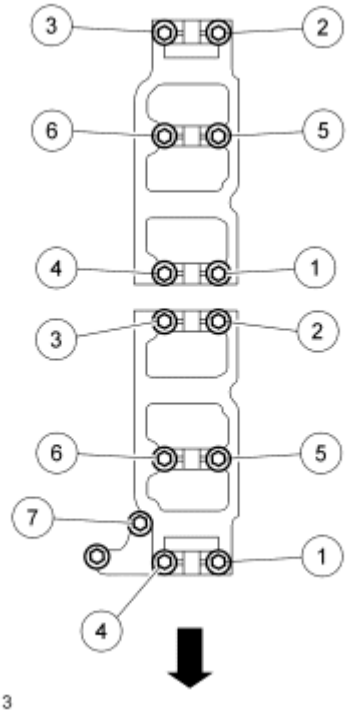

Fig. 324: Camshaft Bearing Cap Bolt Tightening Sequence
Courtesy of FORD MOTOR CO.

5. Install the valves in the valve guides located in the cylinder head.

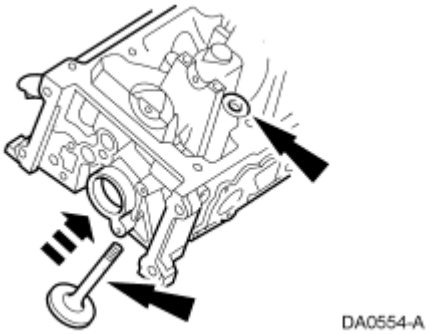

Fig. 325: Installing Valve
Courtesy of FORD MOTOR CO.

6. Using the special tool, install the valve stem seals.

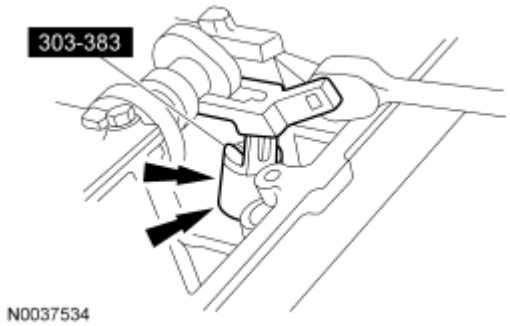

Fig. 326: Installing Valve Stem Seals
Courtesy of FORD MOTOR CO.

7. Install the valve springs and the valve spring retainers onto the valves.

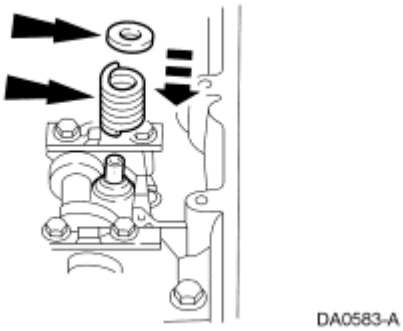

Fig. 327: Installing Valve Springs & Valve Spring Retainers
Courtesy of FORD MOTOR CO.

8. Install the special tool between the valve spring coils to prevent valve stem seal damage.

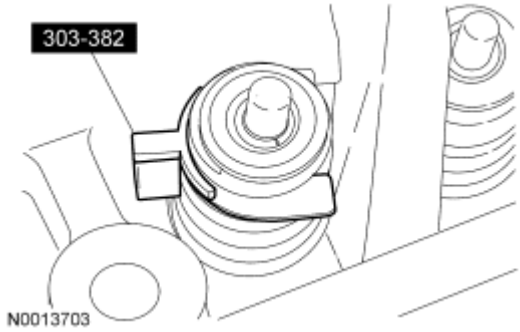

Fig. 328: Installing Special Tool Between Valve Spring Coils
Courtesy of FORD MOTOR CO.

9. Using the special tool, compress the valve springs and install the valve spring retainer keys.

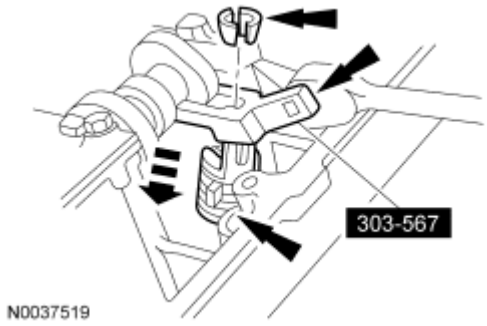

Fig. 329: Installing Valve Spring Retainer Keys
Courtesy of FORD MOTOR CO.

10. Install the hydraulic lash adjusters in their original locations.

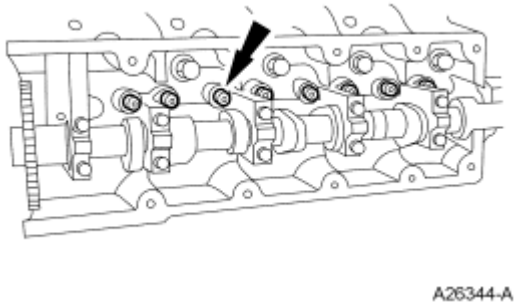

Fig. 330: Locating Hydraulic Lash Adjusters
Courtesy of FORD MOTOR CO.

11. Using the special tool, install the roller followers in their original locations.

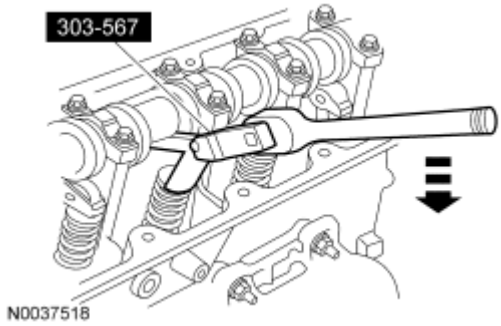

Fig. 331: Compressing Valve Spring
Courtesy of FORD MOTOR CO.

12. Remove the special tool.

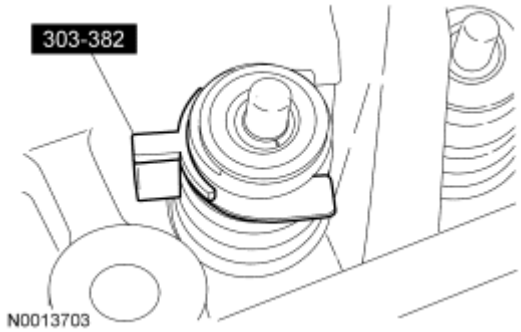

Fig. 332: Installing Special Tool Between Valve Spring Coils
Courtesy of FORD MOTOR CO.

PISTON

Material

Item	Specification
Motorcraft SAE 5W-20 Premium Synthetic Blend Motor Oil XO-5W20-QSP (US); Motorcraft SAE 5W-20 Super Premium Motor Oil CXO-5W20-LSP12 (Canada); or equivalent	WSS-M2C930-A

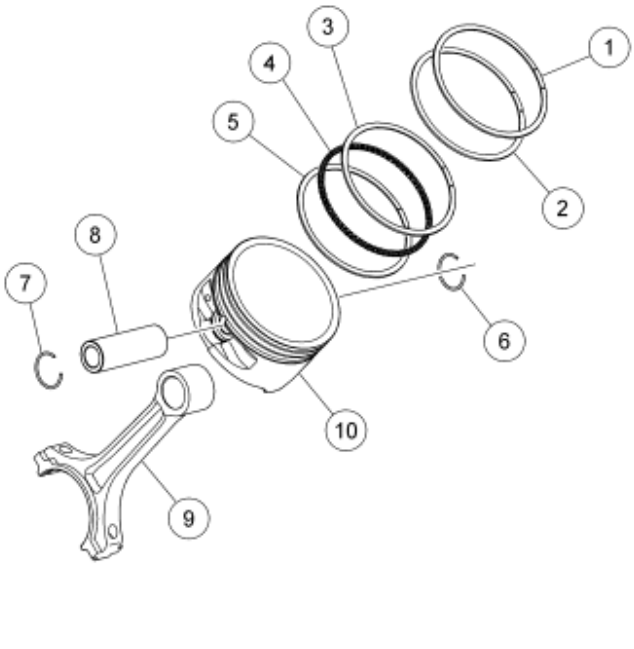

Fig. 333: Exploded View Of Piston
Courtesy of FORD MOTOR CO.

Item	Part Number	Description
1	6150	Piston compression upper ring
2	6152	Piston compression lower ring
3	6159	Piston oil control upper segment ring
4	6161	Piston oil control spacer
5	6159	Piston oil control lower segment ring
6	6140	Piston pin retainer
7	6140	Piston pin retainer
8	6135	Piston pin
9	6200	Connecting rod
10	6110	Piston

DISASSEMBLY

1. Remove the upper piston compression ring.
2. Remove the lower piston compression ring.
3. Remove the upper piston oil control segment ring.
4. Remove the piston oil control spacer.
5. Remove the lower piston oil control segment ring.
6. Remove the 2 piston pin retainers.
7. Remove the piston pin and remove the connecting rod from the piston.

ASSEMBLY

NOTE: Connecting rod must be installed into piston with identification markings toward front.

1. Position the connecting rod in the piston.

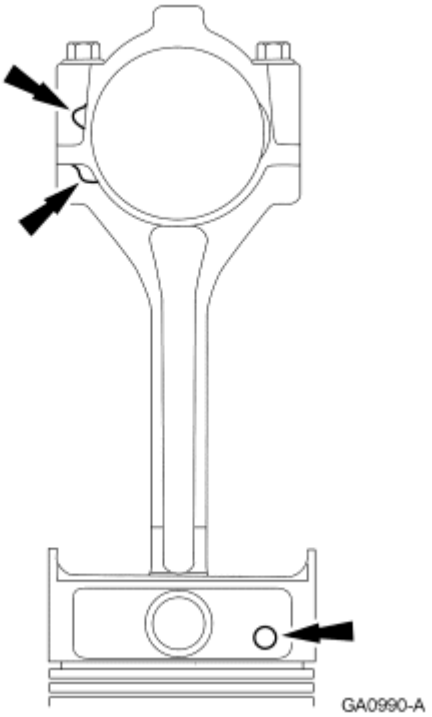

Fig. 334: Locating Piston & Connecting Rod Identification Marks
Courtesy of FORD MOTOR CO.

NOTE: Lubricate the piston pin and retainers with clean engine oil.

2. Install the piston pin and the 2 piston pin retainers.

NOTE: Lubricate all the piston rings and piston oil control spacer with clean engine oil.

3. Install the lower piston oil control segment ring.
4. Install the piston oil control spacer.
5. Install the upper piston oil control segment ring.
6. Install the lower piston compression ring.
7. Install the upper piston compression ring.

ASSEMBLY

ENGINE

Special Tools

Illustration	Tool Name	Tool Number

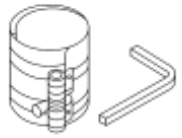 ST1376-A	Compressor, Piston Ring	303-D032 (D81L-6002-C) or equivalent
 ST1330-A	Compressor, Valve Spring	303-567 (T97P-6565-AH)
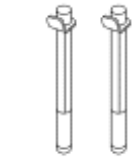 ST1337-A	Guides, Connecting Rod	303-442 (T93P-6136-A)
 ST1335-A	Holding Tool, Crankshaft	303-448 (T93P-6303-A)
 ST2197-A	Installer, Crankshaft Front Oil Seal	303-635
 ST1480-A	Installer, Crankshaft Rear Oil Seal	303-518 (T95P-6701-DH)
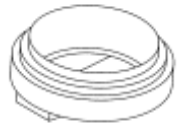 ST1479-A	Installer, Crankshaft Rear Oil Seal	303-516 (T95P-6701-BH)
 ST1482-A	Installer, Crankshaft Rear Oil Slinger	303-517 (T95P-6701-CH)

 ST1287-A	Installer, Crankshaft Vibration Damper	303-102 (T74P-6316-B)
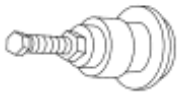 ST1328-A	Installer, Front Cover Oil Seal	303-335 (T88T-6701-A)
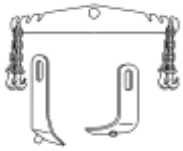 ST2443-A	Lifting Bracket Set, Engine	303-DS086 (D93P-6001-A)
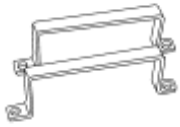 ST1668-A	Remover/Installer, Cylinder Head	303-572 (T97T-6000-A)
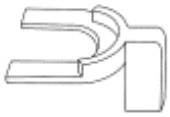 ST1331-A	Spacer, Valve Spring Compressor	303-382 (T91P-6565-AH)

Material

Item	Specification
Gasket Maker TA-16	WSK-M2G348-A5
Hydraulic Chain Tensioner Retaining Clip 1L3Z-6P250-AA	-
Motorcraft Metal Surface Cleaner ZC-21	WSE-M5B392-A
Motorcraft Metal Surface Prep ZC-31	-
Motorcraft SAE 5W-20 Premium Synthetic Blend Motor Oil XO-5W20-QSP (US); Motorcraft SAE 5W-20 Super Premium Motor Oil CXO-5W20-LSP12 (Canada); or equivalent	WSS-M2C930-A
Silicone Gasket and Sealant TA-30	WSE-M4G323-A4

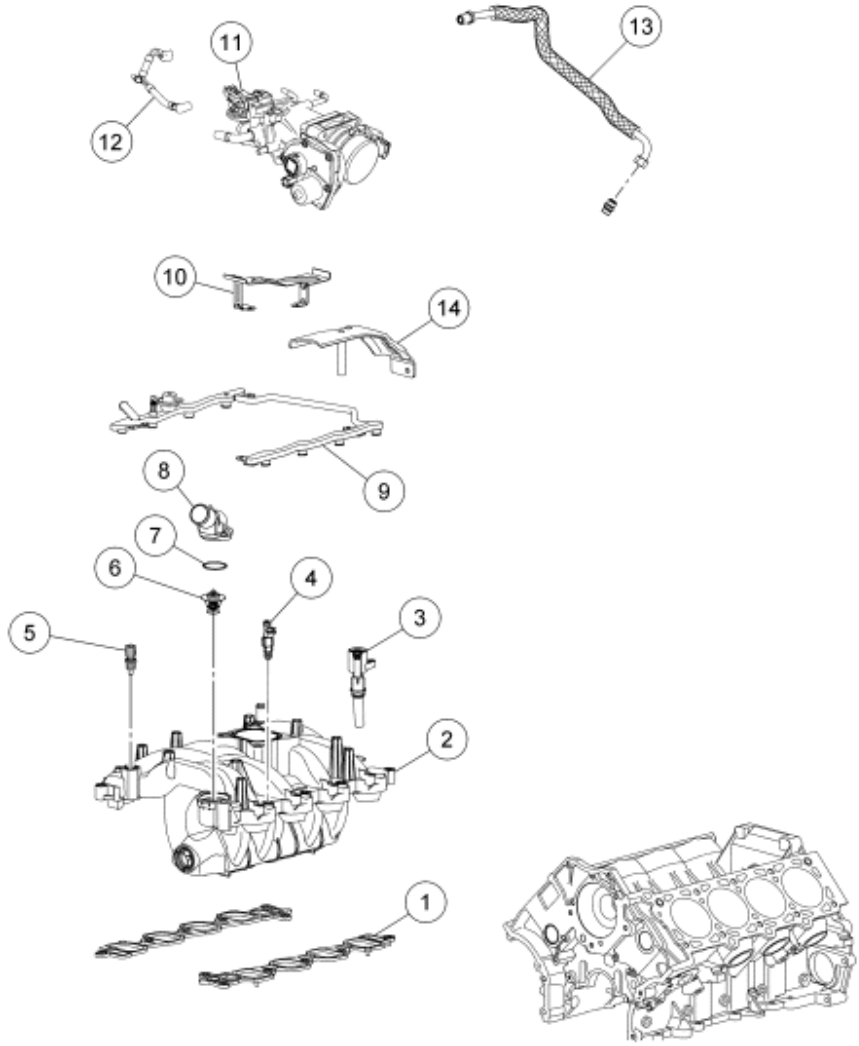

Fig. 335: Exploded View Of Engine Components (1 Of 4)
Courtesy of FORD MOTOR CO.

Item	Part Number	Description
1	9441	Intake manifold gasket (2 required)
2	9424	Intake manifold
3	12A366	Ignition coil (8 required)
4	9F593	Fuel injector (8 required)
5	10884	Engine coolant temperature (ECT) sensor
6	8575	Coolant thermostat
7	N806807	O-ring
8	8594	Coolant outlet adapter
9	9F792	Fuel rail
10	9F460	Intake manifold shield

11	9E930	Throttle body (TB)
12	9E498	Vacuum harness
13	9D477	EGR-to-exhaust manifold tube
14	9G609	Intake manifold bracket

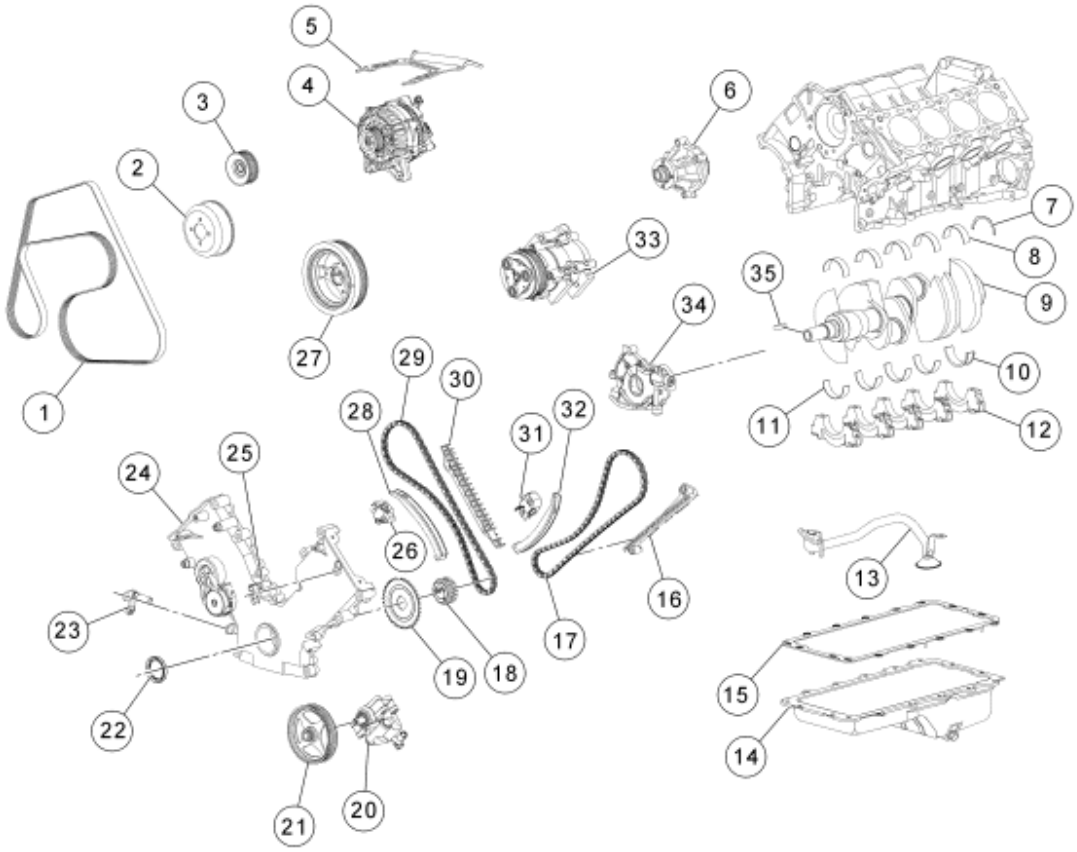

N0066815

Fig. 336: Exploded View Of Engine Components (2 Of 4)
Courtesy of FORD MOTOR CO.

Item	Part Number	Description
1	8620	Accessory drive belt
2	8A528	Coolant pump pulley
3	19A216	Idler pulley
4	10300	Generator
5	10153	Generator bracket

6	8502	Coolant pump
7	6A341	Crankshaft thrust washer
8	6333	Crankshaft main bearing (5 required)
9	6303	Crankshaft
10	6A339	Crankshaft thrust main bearing
11	6A338	Crankshaft main bearing (4 required)
12	6325	Main bearing cap (5 required)
13	6622	Oil pump screen cover and tube
14	6675	Oil pan
15	6710	Oil pan gasket
16	6B274	Timing chain guide
17	6268	Timing chain
18	6306	Crankshaft sprocket
19	12A227	Ignition pulse ring
20	3A674	Power steering pump
21	3D673	Power steering pump pulley
22	6700	Crankshaft front seal
23	6C315	Crankshaft position sensor
24	6C086	Engine front cover
25	6B288	Camshaft position sensor
26	6L266	Timing chain tensioner
27	6316	Crankshaft damper
28	6L253	Timing chain tensioner arm
29	6268	Timing chain
30	6M289	Timing chain guide
31	6M256	Timing chain tensioner
32	6L253	Timing chain tensioner arm
33	19D629	A/C compressor
34	6621	Oil pump
35	N806201	Crankshaft keyway

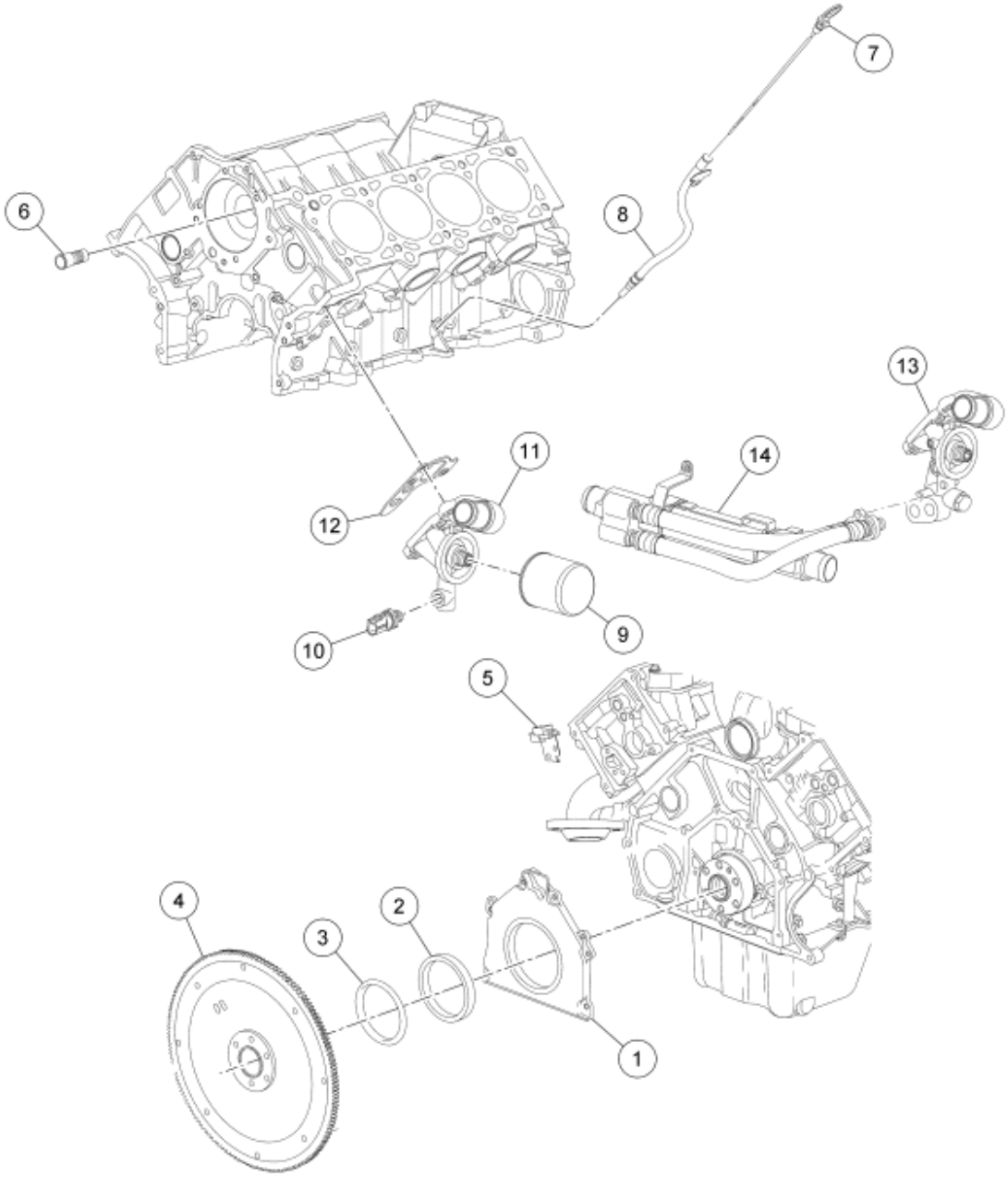

N0066816

Fig. 337: Exploded View Of Engine Components (3 Of 4)
Courtesy of FORD MOTOR CO.

Item	Part Number	Description
1	6K318	Crankshaft rear oil seal retainer
2	6701	Crankshaft rear oil seal
3	6310	Crankshaft oil slinger

4	6375	Flywheel
5	18801	Radio ignition interference capacitor
6	8555	Coolant bypass tube
7	6750	Oil level indicator
8	6K873	Oil level indicator tube
9	6714	Oil filter
10	9278	Oil pressure sender
11	6881	Oil filter adapter
12	6A636	Oil filter adapter gasket
13	6881	Oil filter adapter
14	6A642	Engine oil cooler

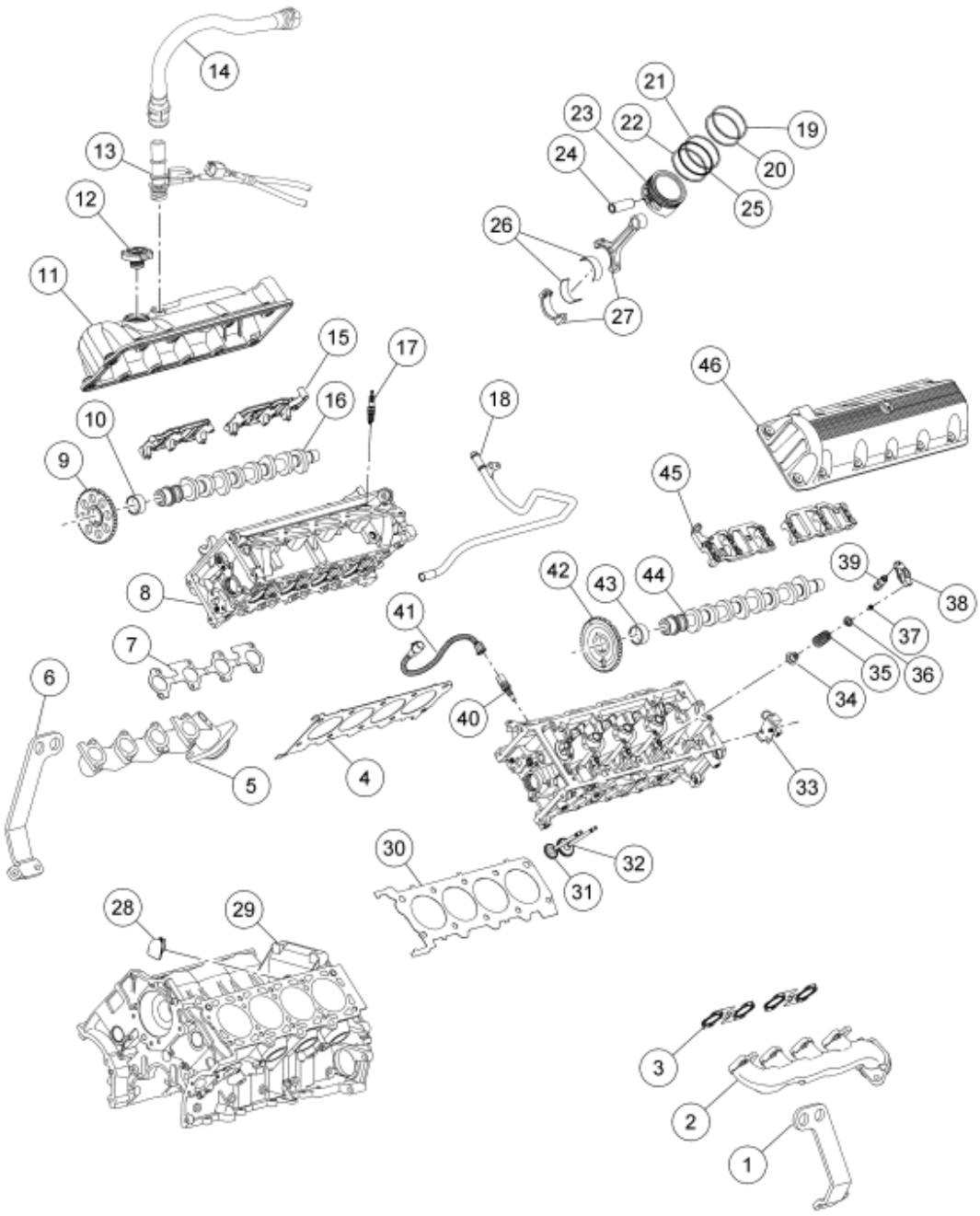

Fig. 338: Exploded View Of Engine Components (4 Of 4)
Courtesy of FORD MOTOR CO.

Item	Part Number	Description
1	0015810	Engine lift bracket
2	9431	Exhaust manifold
3	9Y431	Exhaust manifold gasket (2 required)

4	6051	Head gasket
5	9430	Exhaust manifold
6	0015810	Engine lift brackets
7	9448	Exhaust manifold gaskets
8	6049	Cylinder head
9	6256	Camshaft sprocket
10	6265	Camshaft sprocket spacer
11	6582	Valve cover
12	6766	Oil filler cap
13	6769	PCV valve
14	6K817	Crankcase vent connector and hose
15	6B280	Camshaft bearing cap
16	6250	Camshaft
17	12405	Spark plug (8 required)
18	18663	Heater coolant bypass tube
19	6150	Top compression ring (8 required)
20	6150	Lower compression ring (8 required)
21	6159	Top oil control ring (8 required)
22	6159	Lower oil control ring (8 required)
23	6110	Piston (8 required)
24	6135	Piston pin (8 required)
25	6161	Oil ring spacer (8 required)
26	6100	Connecting rod bearings (16 required)
27	6205	Connecting rod assembly (8 required)
28	6C070	Torque converter inspection hold cover
29	6010	Cylinder block
30	6083	Head gasket
31	6505	Exhaust valve (8 required)
32	6507	Intake valve (8 required)
33	18801	Bracket
34	6A517	Valve stem seal (16 required)
35	6513	Valve spring (16 required)
36	6514	Valve spring retainer (16 required)
37	6518	Valve spring retainer key (32 required)
38	6529	Roller follower (16 required)
39	6F807	Hydraulic lash adjuster (16 required)
40	6G004	Cylinder head temperature (CHT) sensor
41	14B102	CHT sensor harness
42	6256	Camshaft sprocket
43	6265	Camshaft sprocket spacer
44	6A274	Camshaft
45		

	6B280	Camshaft bearing cap
46	6A505	Valve cover

ASSEMBLY

All engines

1. Record the main bearing code found on the front of the engine block.

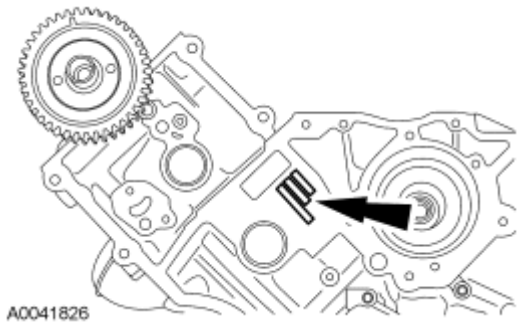

Fig. 339: Identifying Main Bearing Code Found On Front Of Engine Block
Courtesy of FORD MOTOR CO.

2. Record the main bearing code found on the back of the crankshaft.

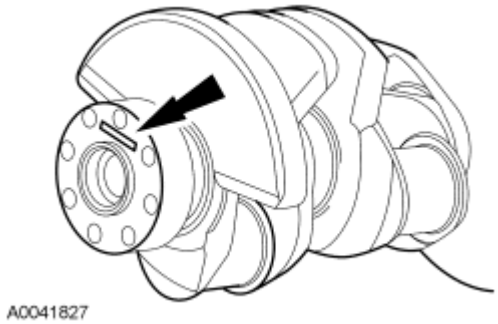

Fig. 340: Identifying Main Bearing Code - Found On Back Of Crankshaft
Courtesy of FORD MOTOR CO.

3. Using the data recorded earlier and the Bearing Select Fit Chart, Standard Bearings Chart determine the required bearing grade for each main bearing.
   - Read the first letter of the engine block main bearing code and the first letter of the crankshaft main bearing code.
   - Read down the column below the engine main bearing code letter, and across the row next to the crankshaft main bearing code letter, until the 2 intersect. This is the required bearing grade for the No. 1 crankshaft main bearing.
   - As an example, if the engine block code letter is "F" and the crankshaft code letter is "D," the correct bearing grade for this main bearing is "2."

- Repeat this process for the remaining 4 main bearings.

MINIMUM BLOCK DIA

MAXIMUM CRANKSHAFT DIA		A .401	B .402	C .403	D .404	E .405	F .406	G .407	H .408	I .409	J .410	K .411	L .412	M .413	N .414	O .415	P .416	Q .417	R .418	S .419	T .420	U .421	V .422	W .423	X .424
	72.400																								
X	67.504	1	1	1	1	1	1	1	1	1	1	1	1	1	1	1	1	1	2	2	2	2	2	2	2
W	67.503	1	1	1	1	1	1	1	1	1	1	1	1	1	1	1	1	2	2	2	2	2	2	2	2
V	67.502	1	1	1	1	1	1	1	1	1	1	1	1	1	1	1	2	2	2	2	2	2	2	2	2
U	67.501	1	1	1	1	1	1	1	1	1	1	1	1	1	1	2	2	2	2	2	2	2	2	2	2
T	67.500	1	1	1	1	1	1	1	1	1	1	1	1	1	2	2	2	2	2	2	2	2	2	2	2
S	67.499	1	1	1	1	1	1	1	1	1	1	1	1	2	2	2	2	2	2	2	2	2	2	2	2
R	67.498	1	1	1	1	1	1	1	1	1	1	1	2	2	2	2	2	2	2	2	2	2	2	2	2
Q	67.497	1	1	1	1	1	1	1	1	1	1	2	2	2	2	2	2	2	2	2	2	2	2	2	3
P	67.496	1	1	1	1	1	1	1	1	1	2	2	2	2	2	2	2	2	2	2	2	2	2	3	3
O	67.495	1	1	1	1	1	1	1	1	2	2	2	2	2	2	2	2	2	2	2	2	2	3	3	3
N	67.494	1	1	1	1	1	1	1	2	2	2	2	2	2	2	2	2	2	2	2	2	3	3	3	3
M	67.493	1	1	1	1	1	1	2	2	2	2	2	2	2	2	2	2	2	2	2	3	3	3	3	3
L	67.492	1	1	1	1	1	2	2	2	2	2	2	2	2	2	2	2	2	2	3	3	3	3	3	3
K	67.491	1	1	1	1	2	2	2	2	2	2	2	2	2	2	2	2	2	3	3	3	3	3	3	3
J	67.490	1	1	1	2	2	2	2	2	2	2	2	2	2	2	2	2	3	3	3	3	3	3	3	3
I	67.489	1	1	2	2	2	2	2	2	2	2	2	2	2	2	2	3	3	3	3	3	3	3	3	3
H	67.488	1	2	2	2	2	2	2	2	2	2	2	2	2	2	3	3	3	3	3	3	3	3	3	3
G	67.487	2	2	2	2	2	2	2	2	2	2	2	2	2	3	3	3	3	3	3	3	3	3	3	3
F	67.486	2	2	2	2	2	2	2	2	2	2	2	2	3	3	3	3	3	3	3	3	3	3	3	3
E	67.485	2	2	2	2	2	2	2	2	2	2	2	3	3	3	3	3	3	3	3	3	3	3	3	3
D	67.484	2	2	2	2	2	2	2	2	2	2	3	3	3	3	3	3	3	3	3	3	3	3	3	3
C	67.483	2	2	2	2	2	2	2	2	2	3	3	3	3	3	3	3	3	3	3	3	3	3	3	3
B	67.482	2	2	2	2	2	2	2	2	3	3	3	3	3	3	3	3	3	3	3	3	3	3	3	3
A	67.481	2	2	2	2	2	2	2	3	3	3	3	3	3	3	3	3	3	3	3	3	3	3	3	3

A0031544

Fig. 341: Bearing Select Fit Chart (Standard Bearings)
Courtesy of FORD MOTOR CO.

4. If oversize bearings are being used, use the procedure in the previous step and the Bearing Select Fit Chart, Oversize Bearing Chart to determine the required grade for each main bearing.

MINIMUM BLOCK DIA

MAXIMUM CRANKSHAFT DIA	72.400	A .401	B .402	C .403	D .404	E .405	F .406	G .407	H .408	I .409	J .410	K .411	L .412	M .413	N .414	O .415	P .416	Q .417	R .418	S .419	T .420	U .421	V .422	W .423	X .424
X	67.254	1	1	1	1	1	1	1	1	1	1	1	1	1	1	1	1	1	2	2	2	2	2	2	2
W	67.253	1	1	1	1	1	1	1	1	1	1	1	1	1	1	1	1	2	2	2	2	2	2	2	2
V	67.252	1	1	1	1	1	1	1	1	1	1	1	1	1	1	1	2	2	2	2	2	2	2	2	2
U	67.251	1	1	1	1	1	1	1	1	1	1	1	1	1	1	2	2	2	2	2	2	2	2	2	2
T	67.250	1	1	1	1	1	1	1	1	1	1	1	1	1	2	2	2	2	2	2	2	2	2	2	2
S	67.249	1	1	1	1	1	1	1	1	1	1	1	1	2	2	2	2	2	2	2	2	2	2	2	2
R	67.248	1	1	1	1	1	1	1	1	1	1	1	2	2	2	2	2	2	2	2	2	2	2	2	2
Q	67.247	1	1	1	1	1	1	1	1	1	1	2	2	2	2	2	2	2	2	2	2	2	2	2	3
P	67.246	1	1	1	1	1	1	1	1	1	2	2	2	2	2	2	2	2	2	2	2	2	2	3	3
O	67.245	1	1	1	1	1	1	1	1	2	2	2	2	2	2	2	2	2	2	2	2	2	3	3	3
N	67.244	1	1	1	1	1	1	1	2	2	2	2	2	2	2	2	2	2	2	2	2	3	3	3	3
M	67.243	1	1	1	1	1	1	2	2	2	2	2	2	2	2	2	2	2	2	2	3	3	3	3	3
L	67.242	1	1	1	1	1	2	2	2	2	2	2	2	2	2	2	2	2	2	3	3	3	3	3	3
K	67.241	1	1	1	1	2	2	2	2	2	2	2	2	2	2	2	2	2	3	3	3	3	3	3	3
J	67.240	1	1	1	2	2	2	2	2	2	2	2	2	2	2	2	2	3	3	3	3	3	3	3	3
I	67.239	1	1	2	2	2	2	2	2	2	2	2	2	2	2	2	3	3	3	3	3	3	3	3	3
H	67.238	1	2	2	2	2	2	2	2	2	2	2	2	2	2	3	3	3	3	3	3	3	3	3	3
G	67.237	2	2	2	2	2	2	2	2	2	2	2	2	2	3	3	3	3	3	3	3	3	3	3	3
F	67.236	2	2	2	2	2	2	2	2	2	2	2	2	3	3	3	3	3	3	3	3	3	3	3	3
E	67.235	2	2	2	2	2	2	2	2	2	2	2	3	3	3	3	3	3	3	3	3	3	3	3	3
D	67.234	2	2	2	2	2	2	2	2	2	2	3	3	3	3	3	3	3	3	3	3	3	3	3	3
C	67.233	2	2	2	2	2	2	2	2	2	3	3	3	3	3	3	3	3	3	3	3	3	3	3	3
B	67.232	2	2	2	2	2	2	2	2	3	3	3	3	3	3	3	3	3	3	3	3	3	3	3	3
A	67.231	2	2	2	2	2	2	2	3	3	3	3	3	3	3	3	3	3	3	3	3	3	3	3	3

A0041840

Fig. 342: Bearing Select Fit Chart (Oversize Bearings)
Courtesy of FORD MOTOR CO.

NOTE: **Before assembling the cylinder block, all sealing surfaces must be free of chips, dirt, paint and foreign material. Also, make sure the coolant and oil passages are clear.**

5. Lubricate with clean engine oil and install the crankshaft upper main bearings into the cylinder block.
6. Install the crankshaft onto the upper crankshaft thrust bearing and main bearings.

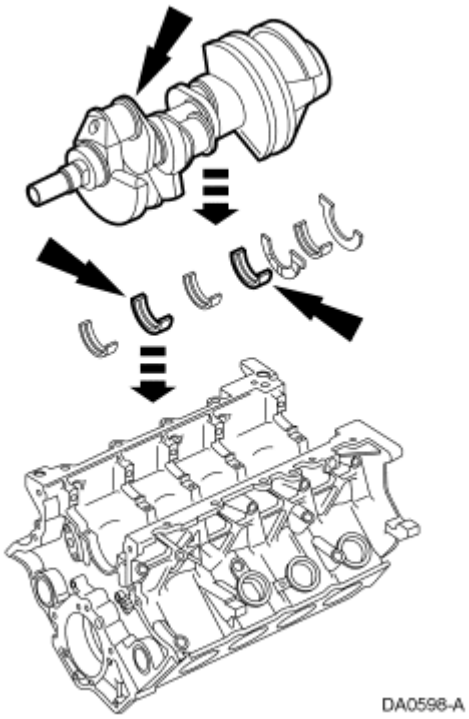

Fig. 343: Installing Crankshaft Onto Upper Crankshaft Main Bearings
Courtesy of FORD MOTOR CO.

NOTE: To aid in assembly, apply petroleum jelly to the back of the crankshaft thrust washer.

NOTE: The oil groove on the thrust washer must face toward the rear of the engine (crankshaft surface).

7. Install the rear main bearing cap.

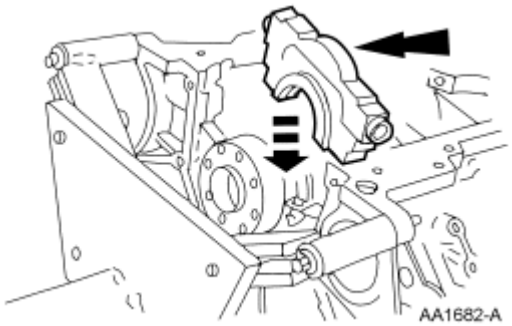

Fig. 344: Locating Rear Main Bearing Cap
Courtesy of FORD MOTOR CO.

8. Install the crankshaft lower main bearings, thrust bearing and thrust washer into the main bearing caps. Locate the main bearing cap on the cylinder block and tap into place using a plastic or dead-blow

hammer.

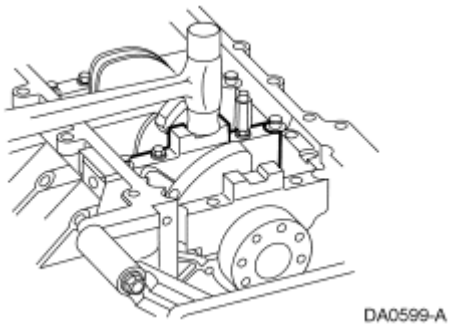

Fig. 345: Tapping Rear Main Bearing Cap
Courtesy of FORD MOTOR CO.

NOTE: The jack screws are a part of the main bearing cap assembly, and are screwed into the main caps, not the cylinder block.

9. Back out the 10 jack screws against the cylinder block in 2 stages, in the sequence shown.
   - Stage 1: Tighten to 5 Nm (44 lb-in).
   - Stage 2: Tighten to 10 Nm (89 lb-in).

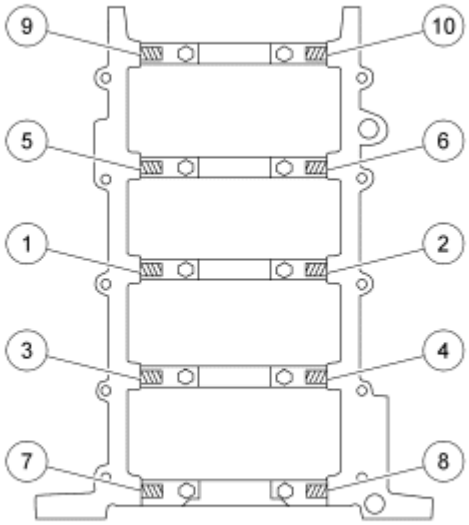

N0037535

Fig. 346: Jack Screw Torque Sequence
Courtesy of FORD MOTOR CO.

10. Install the 10 bolts and tighten in 2 stages, in the sequence shown.

- Stage 1: Tighten to 10 Nm (89 lb-in).
- Stage 2: Tighten to 21 Nm (15 lb-ft).

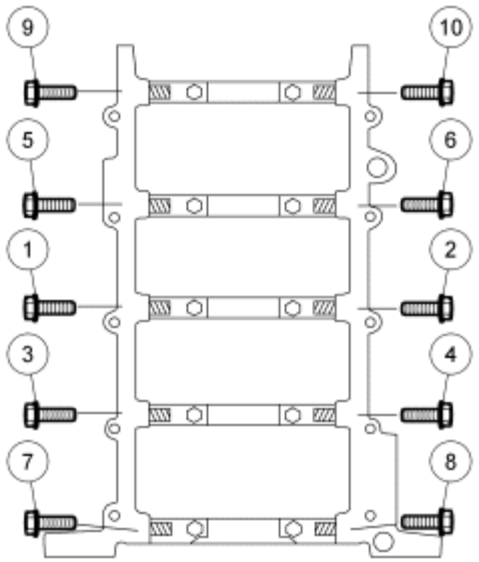

N0037536

Fig. 347: Cross Bolt Torque Sequence
Courtesy of FORD MOTOR CO.

11. Tighten the 10 bolts in 2 stages, in the sequence shown.
    - Stage 1: Tighten to 40 Nm (30 lb-ft).
    - Stage 2: Tighten an additional 90 degrees.

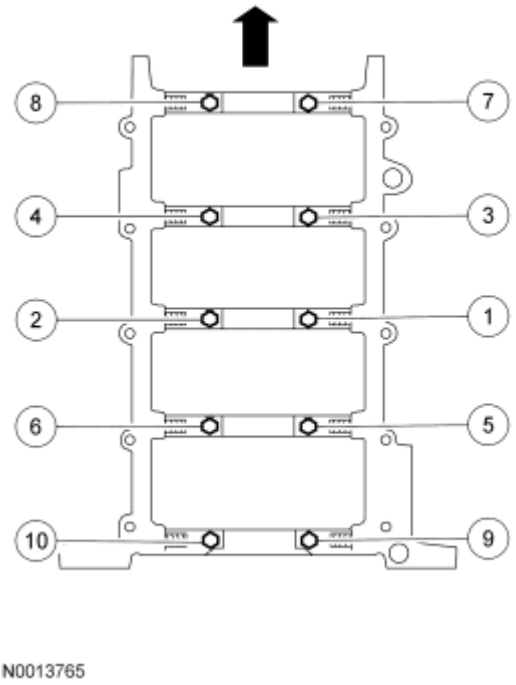

Fig. 348: Identifying Main Bearing Cap Fasteners Tightening Sequence
Courtesy of FORD MOTOR CO.

12. Check piston-to-cylinder block and ring clearances. For additional information, refer to **ENGINE SYSTEM - GENERAL INFORMATION** article.

CAUTION: Do not scratch the cylinder walls or crankshaft journals with the connecting rod or engine failure may occur.

NOTE: Make sure the piston arrow is facing forward.

NOTE: The next 3 steps are for all 8 connecting rods, rod caps and pistons. Only one connecting rod, rod cap and piston is shown.

13. Use the special tools to install the piston and connecting rod assemblies.
    - Lubricate the piston and ring with clean engine oil.
    - Lubricate the rod bearings with clean engine oil.
    - Rotate the crankshaft as necessary.

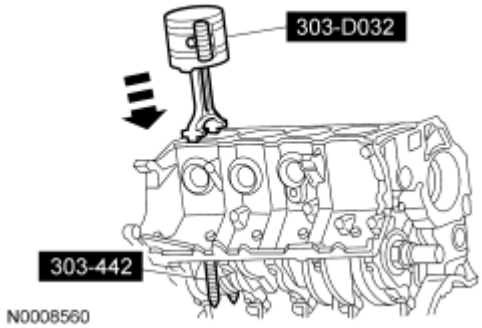

Fig. 349: Using Special Tools To Install Piston And Connecting Rod Assembly
Courtesy of FORD MOTOR CO.

CAUTION: Do not scratch the cylinder walls or crankshaft journals with the connecting rod.

14. Once the connecting rod is seated on the crankshaft journal, remove the special tools.

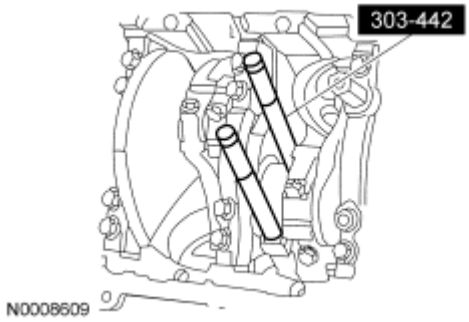

Fig. 350: Identifying Special Tool (303-442)
Courtesy of FORD MOTOR CO.

CAUTION: The rod cap installation must keep the same orientation as marked during disassembly or engine damage may occur.

NOTE: The connecting rod caps have a cracked design and must make mate with the connecting rod ends. Excessive bearing clearance will result if not mated correctly.

15. Position the lower bearing and connecting rod cap, and install the 2 new bolts loosely.

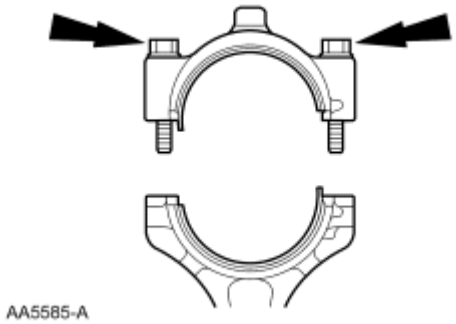

Fig. 351: Positioning Bearing, Rod Cap & Bolts
Courtesy of FORD MOTOR CO.

16. Tighten the 16 bolts in 2 stages, in the sequence shown.
    - Stage 1: Tighten to 43 Nm (32 lb-ft).
    - Stage 2: Rotate an additional 90-120 degrees.

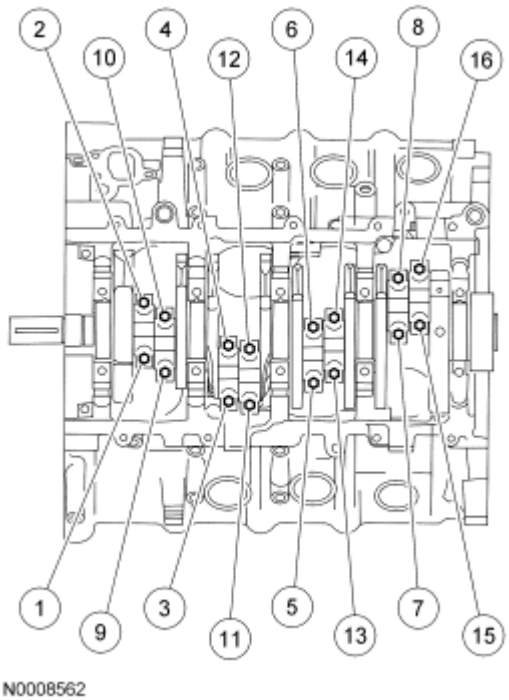

Fig. 352: Identifying Tighten Sequence Of Connecting Rod Bearing Caps
Courtesy of FORD MOTOR CO.

17. Position the oil pump and install the 3 bolts loosely. Tighten the bolts in the sequence shown.
    - Tighten to 10 Nm (89 lb-in).

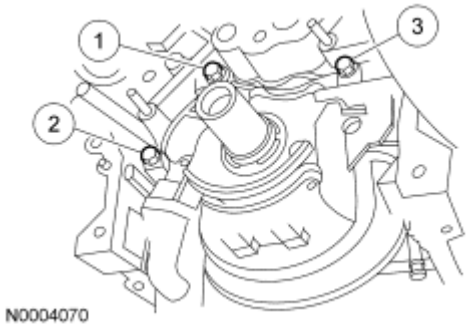

Fig. 353: Identifying Tightening Sequence Of Oil Pump Bolts
Courtesy of FORD MOTOR CO.

Both cylinder heads

NOTE: **The gasket sealing surfaces on the cylinder head and cylinder block must be clean. For additional information, refer to Cylinder Head.**

NOTE: **The use of sealing aids (aviation cement, copper spray and glue) is not permitted. The gasket must be installed dry.**

NOTE: **The new gasket has a film coating which is crucial to the gasket's ability to seat correctly. Do not scratch the gasket.**

NOTE: **RH head gasket shown, LH head gasket similar.**

18. Install the head gasket over the dowel pins.

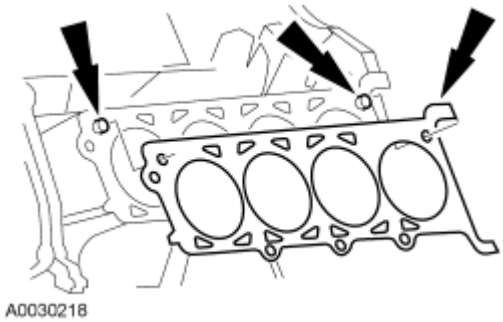

Fig. 354: Head Gasket & Dowel Pins
Courtesy of FORD MOTOR CO.

NOTE: **Cylinder head machining or milling is not authorized by the Ford Motor Company. Cylinder head flatness must be within 0.0254 mm (0.001 in) across a 38.1 mm (1.5 in) square area.**

NOTE: **The gasket sealing surfaces on the cylinder head and cylinder block must**

be clean. For additional information, refer to Cylinder Head.

NOTE: The use of sealing aids (aviation cement, copper spray and glue) is not permitted. The gasket must be installed dry.

NOTE: Do not allow the dowels to scratch the sealing of the cylinder head during cylinder head installation.

NOTE: The new cylinder head bolts must be lightly oiled with a rag, and allowed to drain for a few minutes prior to installation.

NOTE: RH cylinder head shown, LH cylinder head similar.

19. Install the cylinder head on the dowels and the head gasket. Loosely install new bolts.

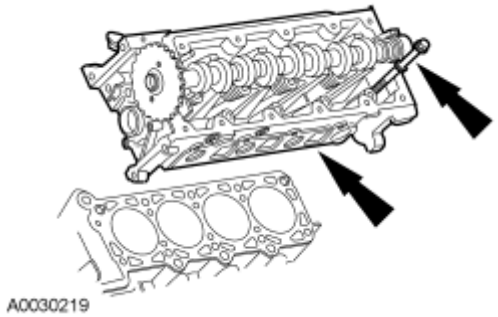

Fig. 355: Locating Cylinder Head
Courtesy of FORD MOTOR CO.

20. Tighten the 10 cylinder head bolts in 6 stages, in the sequence shown.
    - Stage 1: Tighten to 40 Nm (30 lb-ft).
    - Stage 2: Tighten an additional 90 degrees (1/4 turn).
    - Stage 3: Loosen a minimum of one full turn (360 degrees).
    - Stage 4: Tighten to 40 Nm (30 lb-ft).
    - Stage 5: Tighten an additional 90 degrees (1/4 turn).
    - Stage 6: Tighten an additional 90 degrees (1/4 turn).

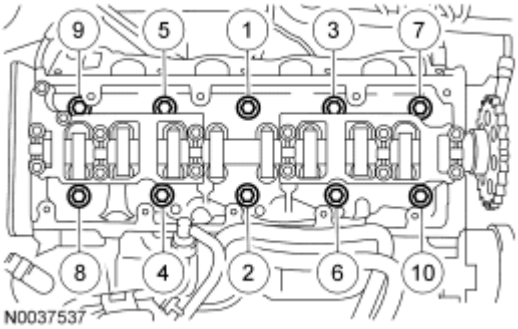

Fig. 356: Cylinder Head Bolt Torque Sequence
Courtesy of FORD MOTOR CO.

21. Remove the special tools from both ends of the cylinder head.

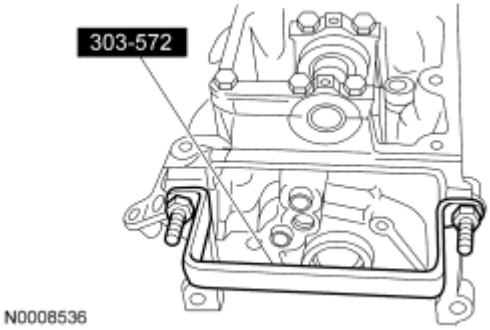

Fig. 357: Identifying Special Tool (303-572)
Courtesy of FORD MOTOR CO.

NOTE: Lubricate the hydraulic lash adjusters with clean engine oil.

22. Install the 16 hydraulic lash adjusters in their original locations.

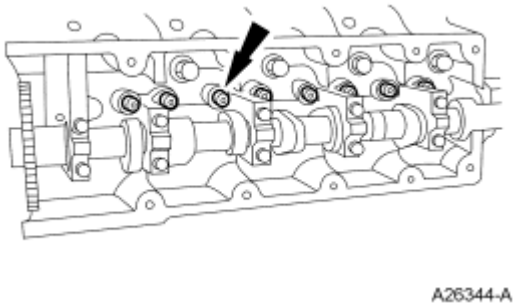

Fig. 358: Locating Hydraulic Lash Adjusters
Courtesy of FORD MOTOR CO.

NOTE: Lubricate the O-ring seal with clean engine oil.

23. Install a new O-ring seal on the oil level indicator tube and install the oil level indicator tube and bolt.
    - Tighten to 10 Nm (89 lb-in).

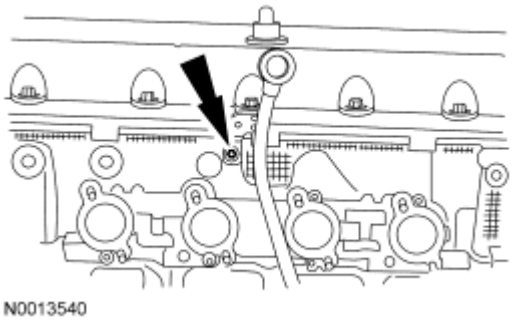

Fig. 359: Oil Level Indicator Tube Bolt
Courtesy of FORD MOTOR CO.

24. Install the new 8 LH exhaust manifold studs.
    - Tighten to 12 Nm (9 lb-ft).
25. Install a new LH exhaust manifold gasket the LH exhaust manifold and 8 new nuts.
    - Tighten to 25 Nm (18 lb-ft) in the sequence shown.

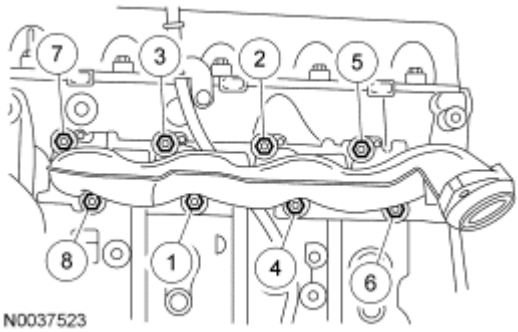

Fig. 360: Exhaust Manifold Nuts Tightening Sequence
Courtesy of FORD MOTOR CO.

26. Install the new 8 RH exhaust manifold studs.
    - Tighten to 12 Nm (9 lb-ft).
27. Install a new RH exhaust manifold gasket the RH exhaust manifold and 8 new nuts.
    - Tighten to 25 Nm (18 lb-ft) in the sequence shown.

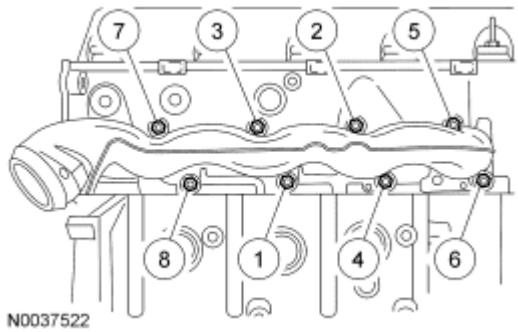

Fig. 361: Exhaust Manifold Nuts Tightening Sequence
Courtesy of FORD MOTOR CO.

Engines with ratcheting timing chain tensioners

CAUTION: Timing chain procedures must be followed exactly or damage to valves and pistons will result.

CAUTION: Do not compress the ratchet assembly. This will damage the ratchet assembly.

NOTE: LH shown, RH similar.

28. Compress each tensioner plunger, using an edge or a vise.

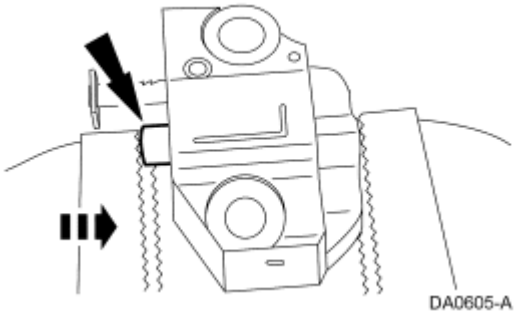

Fig. 362: Compressing Tensioner Plunger
Courtesy of FORD MOTOR CO.

29. Using a small screwdriver or pick, push back and hold the ratchet mechanism.

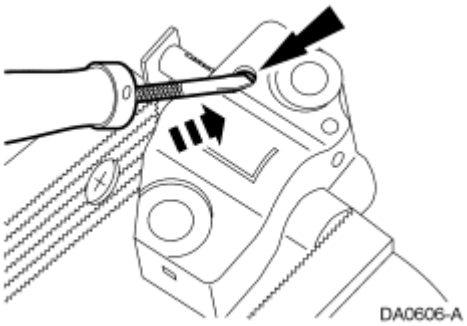

Fig. 363: Pushing Back And Holding Ratchet Mechanism
Courtesy of FORD MOTOR CO.

30. While holding the ratchet mechanism, push the ratchet arm back into the tensioner housing.

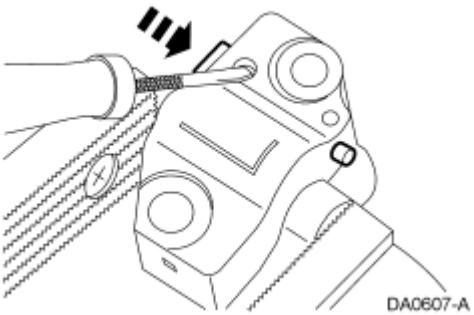

Fig. 364: Compressing Tensioner Plunger
Courtesy of FORD MOTOR CO.

31. Install a paper clip into the hole of each tensioner housing to hold the ratchet assembly and plunger in during installation.
    - Remove the tensioner from the vise.

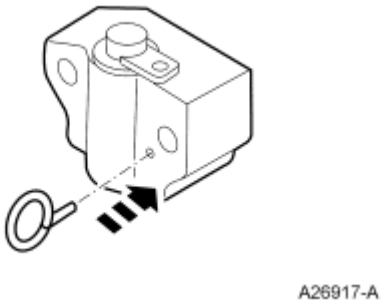

Fig. 365: Installing Paper Clip Into Tensioner Housing
Courtesy of FORD MOTOR CO.

Engines with non-ratcheting timing chain tensioners

NOTE: **If one or both tensioner mounting bolts are loosened or removed, the tensioner-sealing bead must be inspected for seal integrity. Any cracks, tears, cuts or separation from the tensioner body or permanent compression of the seal bead, will require replacement of the tensioner.**

32. Inspect the RH and LH timing chain tensioners.
    - Install new tensioners as necessary.

CAUTION: **Timing chain procedures must be followed exactly or damage to valves and pistons will result.**

NOTE: **LH shown, RH similar.**

33. Compress each tensioner plunger, using a vise.

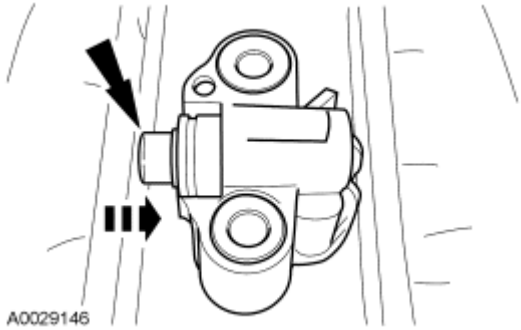

Fig. 366: Compressing Tensioner Plunger
Courtesy of FORD MOTOR CO.

34. Install a retaining clip on the tensioner to hold the plunger in during installation.

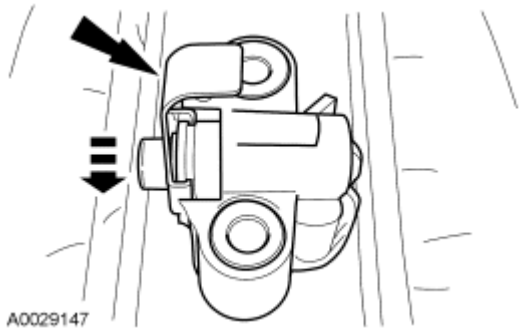

Fig. 367: Identifying Retaining Clip on Tensioner
Courtesy of FORD MOTOR CO.

All engines

35. If the colored links are not visible, mark one link on one end and one link on the other end, and use as

timing marks.

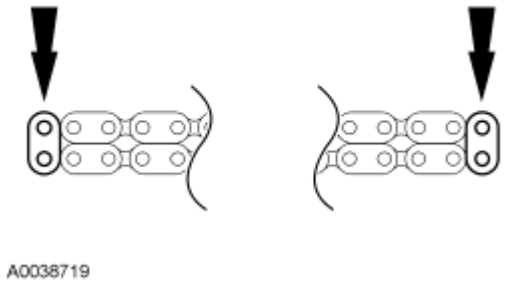

Fig. 368: Identifying Timing Chain Copper Links
Courtesy of FORD MOTOR CO.

36. Using the special tool, position the crankshaft.
    - Remove the special tool after crankshaft positioning.

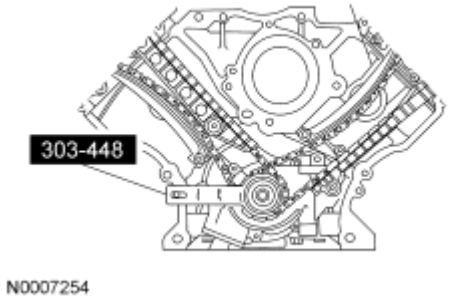

Fig. 369: Positioning Crankshaft With No. 1 Cylinder At TDC
Courtesy of FORD MOTOR CO.

37. Install the crankshaft sprocket, making sure the flange faces forward.

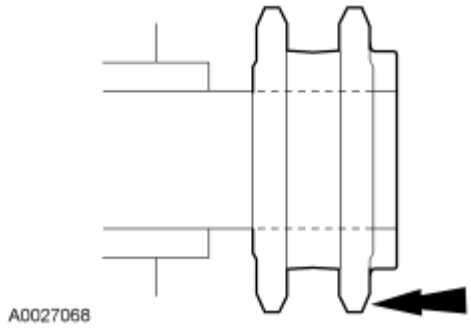

Fig. 370: Identifying Crankshaft Sprocket Flange
Courtesy of FORD MOTOR CO.

38. Install the timing chain guides.

1. Position the LH timing chain guide.
2. Install and tighten the 2 LH bolts to 10 Nm (89 lb-in).
3. Position the RH timing chain guide.
4. Install and tighten the 2 RH bolts to 10 Nm (89 lb-in).

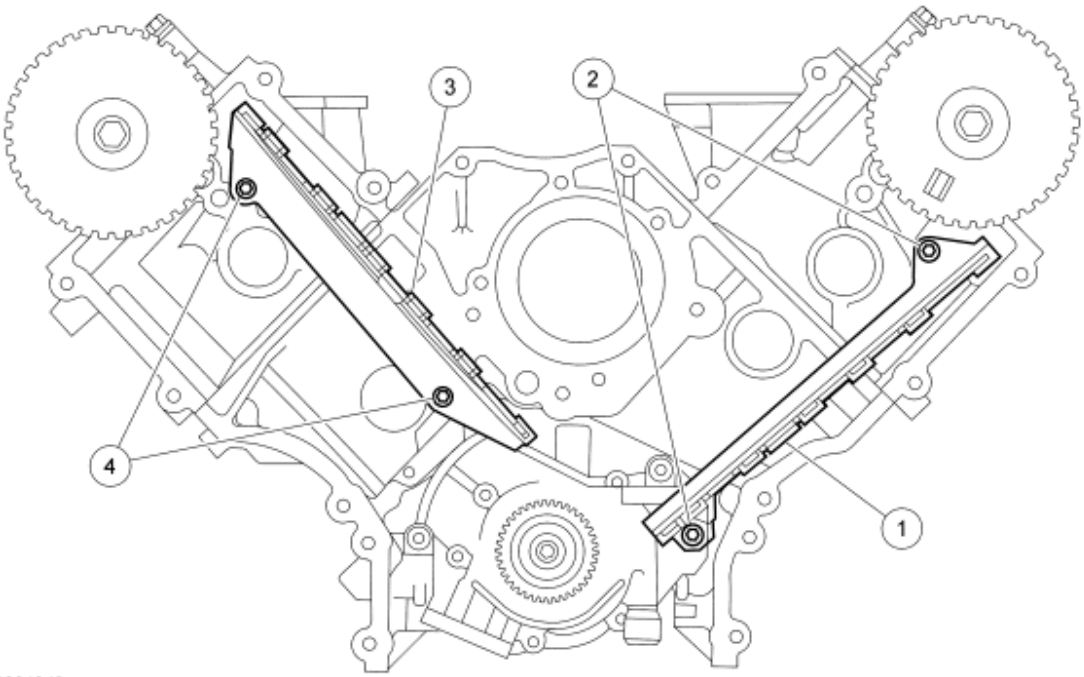

N0004048

Fig. 371: Identifying Timing Chain Guides
Courtesy of FORD MOTOR CO.

39. Rotate the RH camshaft sprocket until the timing mark is approximately at the 11 o'clock position. Rotate the LH camshaft sprocket until the timing mark is approximately at the 12 o'clock position.

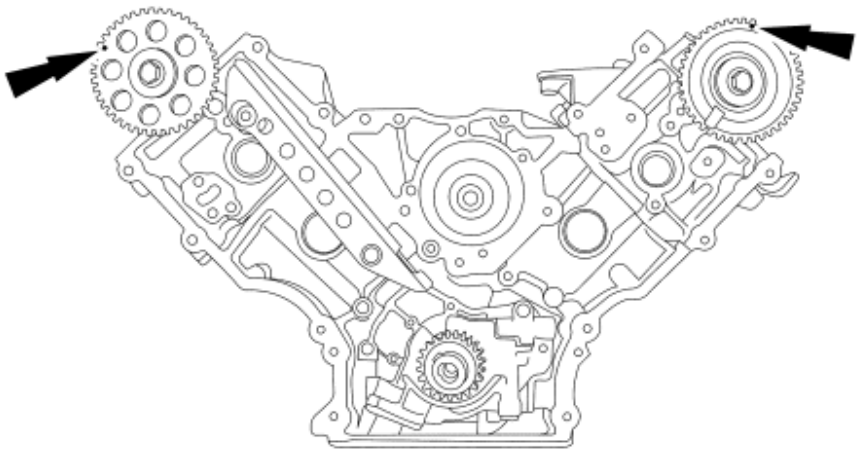

A0049181

Fig. 372: Identifying LH And RH Camshaft Timing Mark Position
Courtesy of FORD MOTOR CO.

40. Position the LH (inner) timing chain on the crankshaft sprocket, aligning the colored (marked) link with the timing mark on the sprocket.

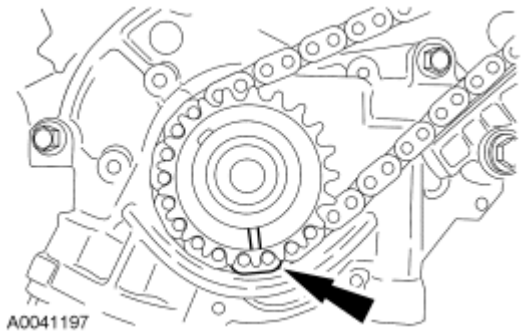

Fig. 373: Aligning Copper (Marked) Link With Timing Mark On Crankshaft Sprocket
Courtesy of FORD MOTOR CO.

41. Install the LH timing chain on the camshaft sprocket, aligning the colored (marked) link with the timing marks on the sprocket.

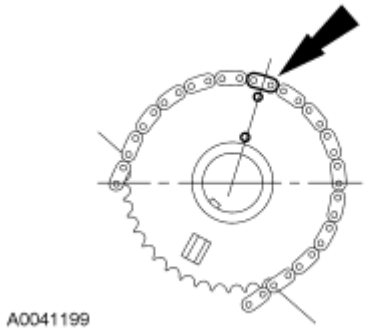

Fig. 374: Aligning Copper (Marked) Link With Timing Mark On Camshaft Sprocket
Courtesy of FORD MOTOR CO.

NOTE: The LH timing chain tensioner arm has a bump near the dowel hole for identification.

42. Position the LH timing chain tensioner on the dowel pin and install the LH timing chain tensioner and 2 bolts.
    - Tighten to 25 Nm (18 lb-ft).

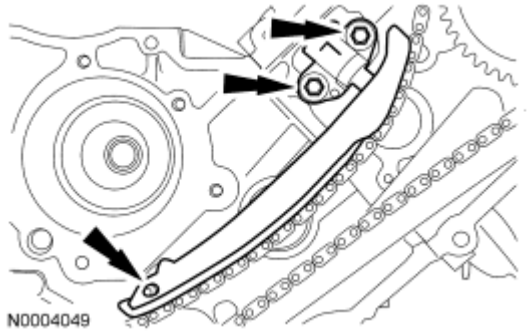

Fig. 375: Positioning LH Timing Chain Tensioner Arm On Dowel Pin
Courtesy of FORD MOTOR CO.

Engines with ratcheting timing chain tensioners

43. Remove the retaining clip from the LH timing chain tensioner.

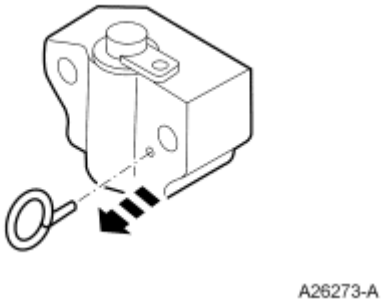

Fig. 376: Removing Paper Clip
Courtesy of FORD MOTOR CO.

Engines with non-ratcheting timing chain tensioners

44. Remove the retaining clip from the LH timing chain tensioner.

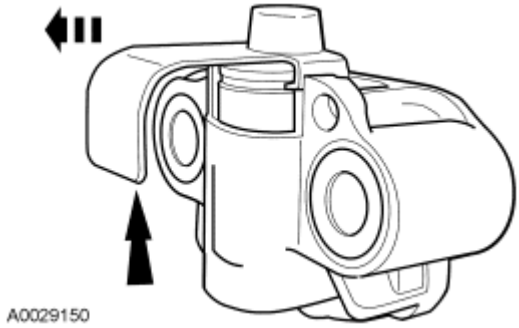

Fig. 377: View Of Retaining Clip And Timing Chain Tensioner
Courtesy of FORD MOTOR CO.

All engines

45. Position the RH (outer) timing chain on the crankshaft sprocket, aligning the colored (marked) link with the timing mark on the sprocket.

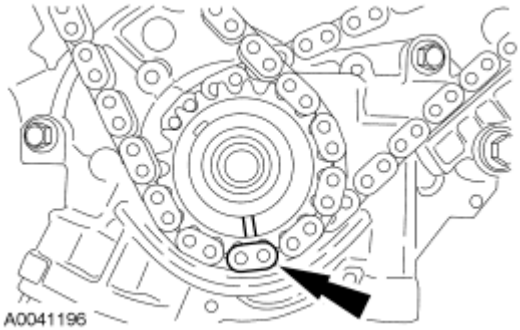

Fig. 378: Aligning Copper (Marked) Link With Timing Mark On Crankshaft Sprocket
Courtesy of FORD MOTOR CO.

46. Install the RH timing chain on the camshaft sprocket, aligning the colored (marked) link with the timing marks on the sprocket.

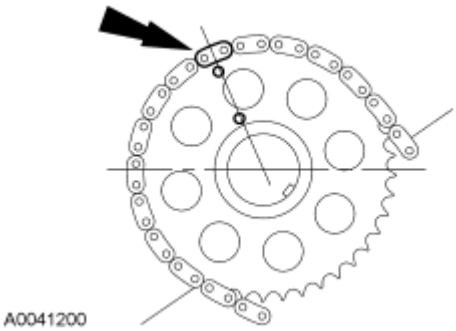

Fig. 379: Aligning Copper (Marked) Link With Timing Mark On Camshaft Sprocket
Courtesy of FORD MOTOR CO.

47. Position the RH timing chain tensioner arm on the dowel pin and install the RH timing chain tensioner and 2 bolts.
    - Tighten to 25 Nm (18 lb-ft).

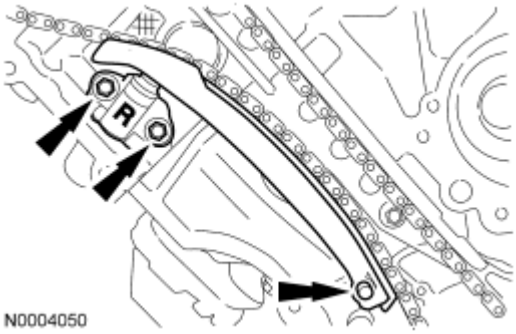

Fig. 380: Positioning RH Timing Chain Tensioner Arm On Dowel Pin

Courtesy of FORD MOTOR CO.

Engines with ratcheting timing chain tensioners

48. Remove the retaining clip from the RH timing chain tensioner.

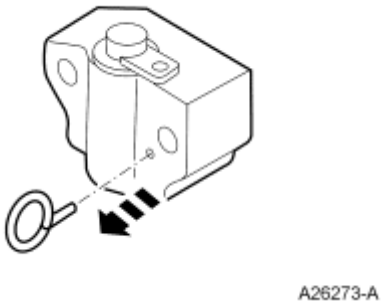

Fig. 381: Removing Paper Clip
Courtesy of FORD MOTOR CO.

Engines with non-ratcheting timing chain tensioners

49. Remove the retaining clip from the RH timing chain tensioner.

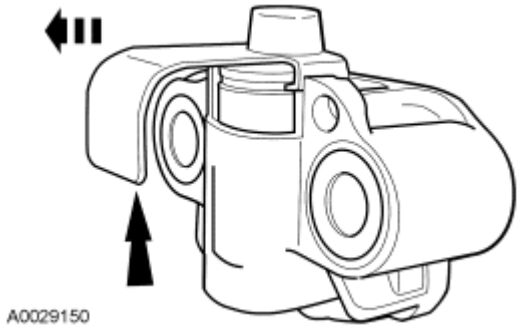

Fig. 382: View Of Retaining Clip And Timing Chain Tensioner
Courtesy of FORD MOTOR CO.

All engines

50. Make sure that the colored (marked) chain links are lined up with the dots on the crankshaft sprockets and the camshaft sprocket.

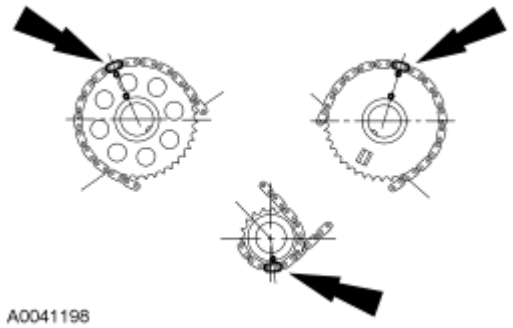

Fig. 383: Identifying Copper (Marked) Chain Links And Dots On Crankshaft Sprockets And Camshaft Sprockets
Courtesy of FORD MOTOR CO.

51. Rotate and camshaft until the lobe is in the upward position.

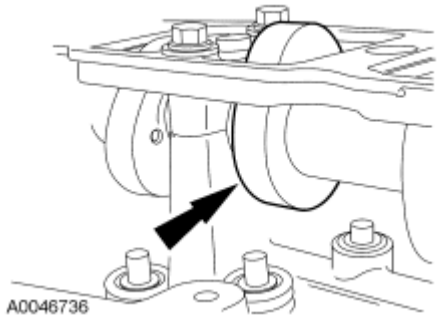

Fig. 384: Positioning Camshaft Lobe Up
Courtesy of FORD MOTOR CO.

52. Install the special tool between the valve spring coil to prevent valve stem seal damage.

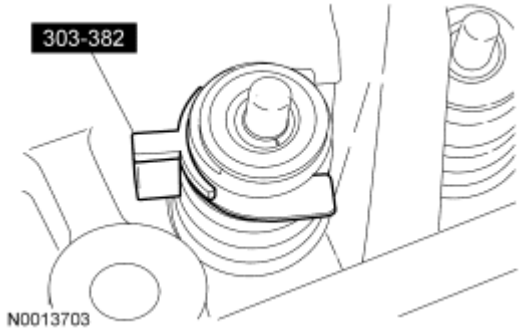

Fig. 385: Installing Special Tool Between Valve Spring Coils
Courtesy of FORD MOTOR CO.

NOTE: Lubricate the camshaft roller followers using clean engine oil.

NOTE: Position the cam lobe away from the camshaft roller follower location prior

to installing each camshaft roller follower.

53. Install the 16 camshaft roller followers.
    1. Install the special tool.
    2. Compress the valve spring.
    3. Install the 16 camshaft roller followers in their original locations.

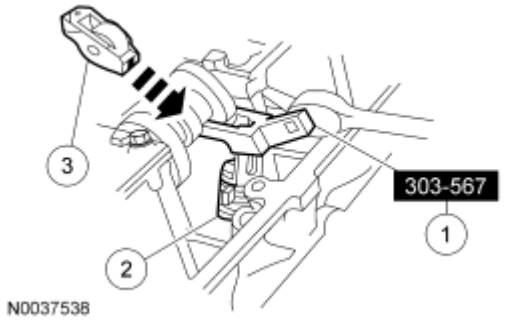

Fig. 386: Installing Camshaft Roller Follower
Courtesy of FORD MOTOR CO.

54. Remove the special tool.

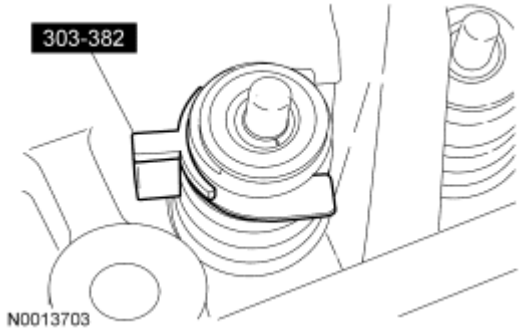

Fig. 387: Installing Special Tool Between Valve Spring Coils
Courtesy of FORD MOTOR CO.

CAUTION: Only use hand tools when removing or installing the spark plugs or damage may occur to the cylinder head or spark plug.

55. Install all 8 spark plugs.
    - Tighten to 15 Nm (11 lb-ft).

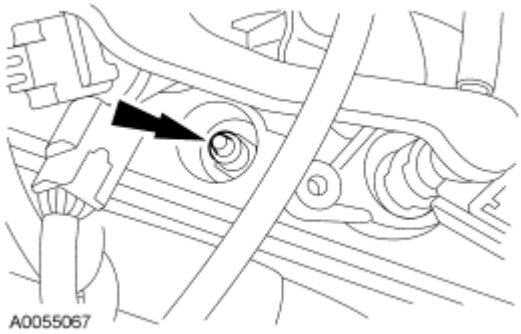

Fig. 388: Spark Plug
Courtesy of FORD MOTOR CO.

56. Install the crankshaft sensor ring.

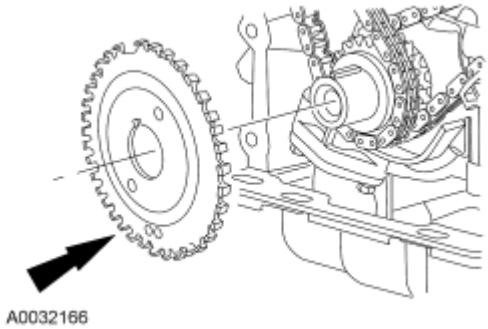

Fig. 389: View Of Crankshaft Sensor Ring At Crankshaft
Courtesy of FORD MOTOR CO.

CAUTION: If the engine front cover is not secured within 4 minutes, the sealant must be removed and the sealing area cleaned with metal surface cleaner. Allow to dry until there is no sign of wetness, or 4 minutes, whichever is longer. Failure to follow this procedure may cause future oil leakage.

NOTE: RH timing chain removed for clarity.

57. Apply a bead of sealant along the head-to-block surface and the oil pan-to-block surface as specified.

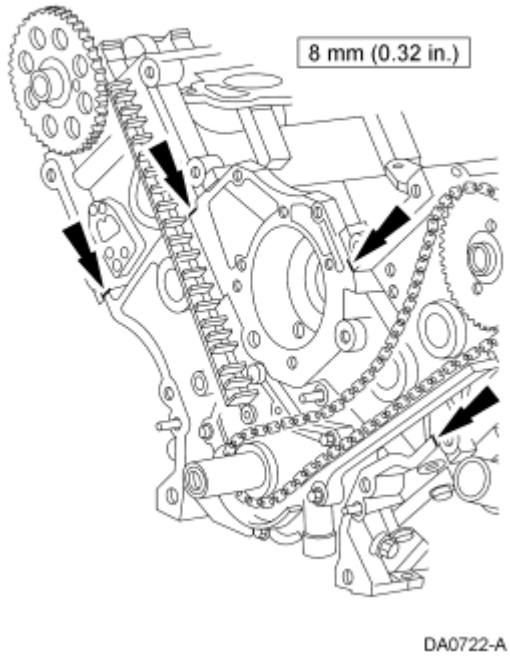

Fig. 390: Applying Bead Of Silicone Gasket And Sealant Along Cylinder Head-To-Cylinder Block Surface
Courtesy of FORD MOTOR CO.

58. Install a new engine front cover gasket on the engine front cover. Position the engine front cover. Install the fasteners finger-tight.

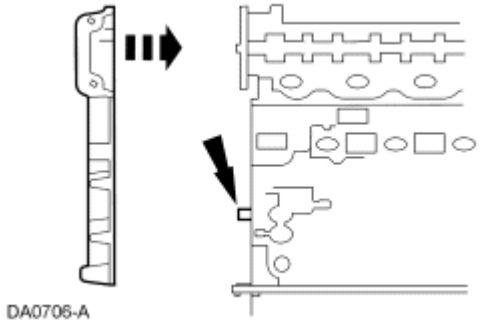

Fig. 391: Installing Engine Front Cover Gasket
Courtesy of FORD MOTOR CO.

59. Tighten the 15 front cover fasteners in the sequence shown to 25 Nm (18 lb-ft).

Item	Part Number	Description
1	N806177	Bolt, hex flange head

		pilot, M8 x 1.25 x 53
2	N806177	Bolt, hex flange head pilot, M8 x 1.25 x 53
3	N806177	Bolt, hex flange head pilot, M8 x 1.25 x 53
4	N806177	Bolt, hex flange head pilot, M8 x 1.25 x 53
5	N806177	Bolt, hex flange head pilot, M8 x 1.25 x 53
6	W706508	Stud, hex-head pilot, M8 x 1.25 x 50 - M6 x 1 x 10
7	N808586	Stud, washer hex-head pilot, M8 x 1.25 - M6 x 1.0 x 86.35
8	N806177	Bolt, hex flange head pilot, M8 x 1.25 x 53
9	N806177	Bolt, hex flange head pilot, M8 x 1.25 x 53
10	N806177	Bolt, hex flange head pilot, M8 x 1.25 x 53
11	N806300	Stud, hex-shoulder pilot, M8 x 1.25 x 1.25 x 91.1

12	N806300	Stud, hex-shoulder pilot, M8 x 1.25 x 1.25 x 91.1
13	N806300	Stud, hex-shoulder pilot, M8 x 1.25 x 1.25 x 91.1
14	N806300	Stud, hex-shoulder pilot, M8 x 1.25 x 1.25 x 91.1
15	N806300	Stud, hex-shoulder pilot, M8 x 1.25 x 1.25 x 91.1

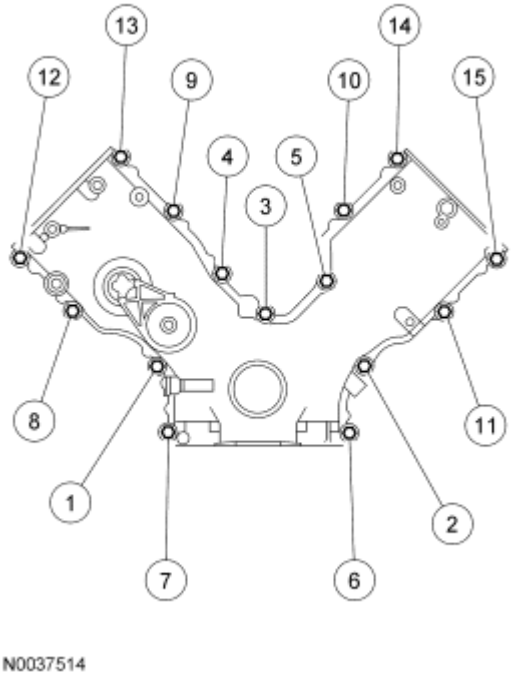

Fig. 392: Engine Front Cover Fastener Tightening Sequence
Courtesy of FORD MOTOR CO.

NOTE: RH shown, LH similar.

60. Install the RH and LH engine mounts and the 6 bolts.
    - Tighten to 70 Nm (52 lb-ft).

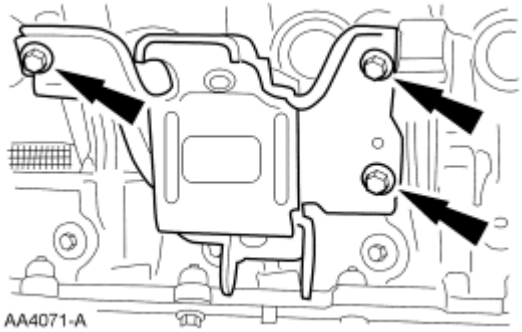

Fig. 393: Engine Mount Bolts
Courtesy of FORD MOTOR CO.

61. Lubricate the engine front cover and the front oil seal inner lip with clean engine oil.

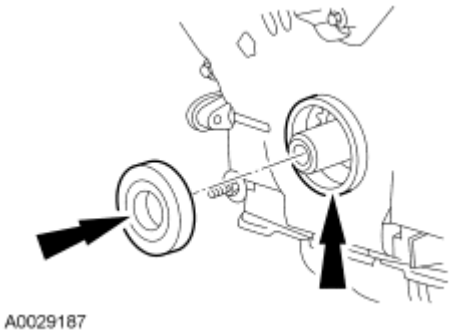

Fig. 394: Locating Crankshaft Front Seal
Courtesy of FORD MOTOR CO.

62. Using the special tools, install the front oil seal.

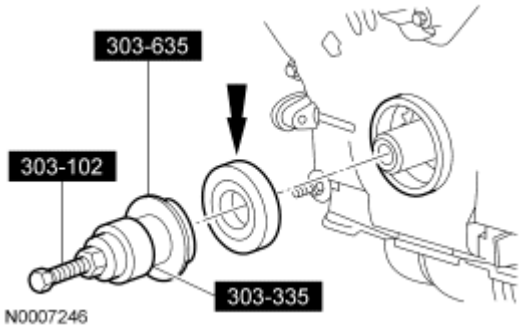

Fig. 395: Installing Crankshaft Front Seal Using Special Tools
Courtesy of FORD MOTOR CO.

CAUTION: If not secured within 4 minutes, sealant must be removed and the

sealing area cleaned with metal surface cleaner. Allow to dry until there is no sign of wetness, or 4 minutes, whichever is longer. Failure to follow this procedure can cause future oil leakage.

63. Apply sealant to the Woodruff key slot on the crankshaft pulley.

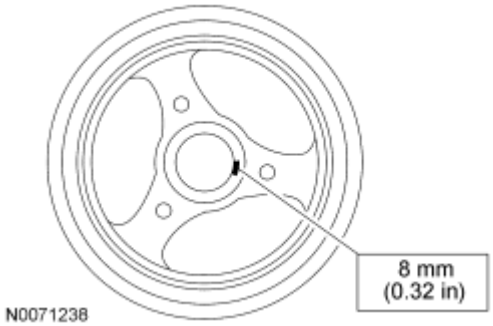

Fig. 396: Applying Sealant To Woodruff Key Slot
Courtesy of FORD MOTOR CO.

64. Using the special tool, install the crankshaft pulley.

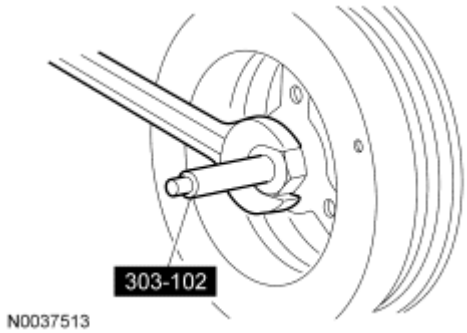

Fig. 397: Installing Crankshaft Pulley
Courtesy of FORD MOTOR CO.

NOTE: Use a suitable strap wrench to hold the pulley.

65. Tighten the crankshaft pulley bolt in 4 stages.
    - Stage 1: Tighten to 90 Nm (66 lb-ft).
    - Stage 2: Loosen 360 degrees.
    - Stage 3: Tighten to 50 Nm (37 lb-ft).
    - Stage 4: Rotate an additional 90 degrees (1/4 turn).

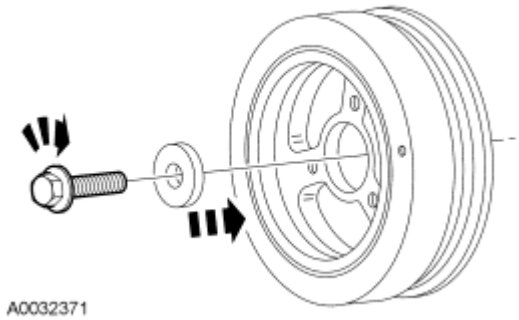

Fig. 398: Installing Crankshaft Pulley Bolt & Washer
Courtesy of FORD MOTOR CO.

CAUTION: Make sure the O-ring seal is in place and not damaged. A missing or damaged O-ring seal may cause foam in the lubrication system, low oil pressure and severe engine damage.

NOTE: Clean and inspect the mating surfaces and install a new O-ring seal. Lubricate the O-ring seal with clean engine oil.

66. Install the oil pump screen and pickup tube spacer.
    - Tighten to 25 Nm (18 lb-ft).

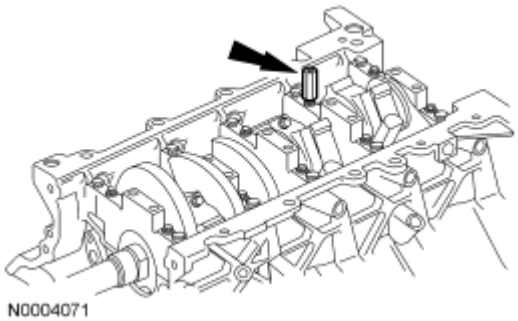

Fig. 399: Locating Pickup Tube Spacer
Courtesy of FORD MOTOR CO.

67. Position the oil pump screen and pickup tube, and install the 3 bolts.
    1. Tighten to 25 Nm (18 lb-ft).
    2. Tighten to 10 Nm (89 lb-in).

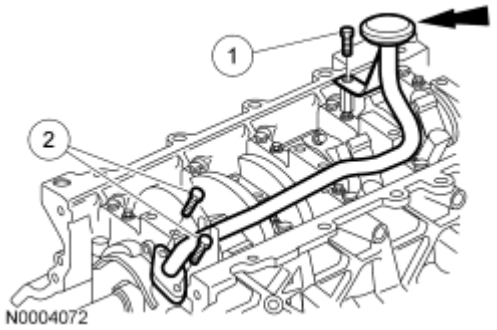

Fig. 400: Locating Oil Pump Screen And Pickup Tube
Courtesy of FORD MOTOR CO.

68. Install the new oil filter adapter gasket, oil filter adapter and the 4 bolts.
    - Tighten to 25 Nm (18 lb-ft) in the sequence shown.

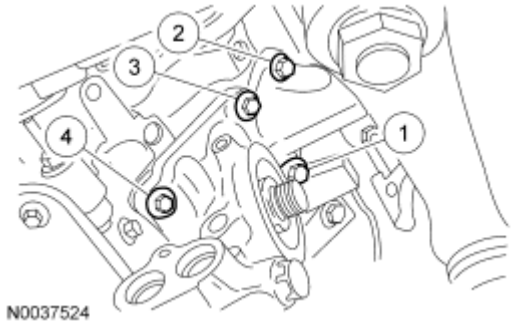

Fig. 401: Oil Filter Adapter Bolts Torque Sequence
Courtesy of FORD MOTOR CO.

CAUTION: Do not rotate the coolant pump housing once the coolant pump has been positioned in the cylinder block. Damage to the O-ring seal will occur.

69. Install the coolant pump.
    1. Lubricate the new O-ring seal using engine coolant.
    2. Position the coolant pump into the engine block.
    3. Install the 4 bolts and tighten to 25 Nm (18 lb-ft).

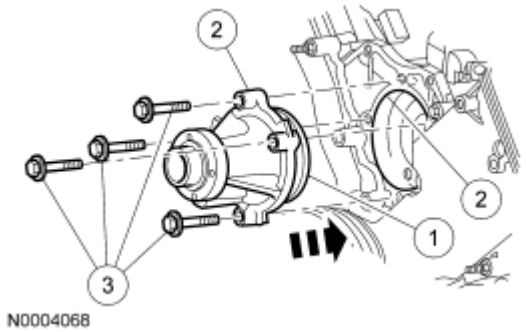

Fig. 402: Installing Coolant Pump
Courtesy of FORD MOTOR CO.

70. Position the coolant pump pulley on the coolant pump and install the 4 bolts.
    - Tighten to 25 Nm (18 lb-ft).

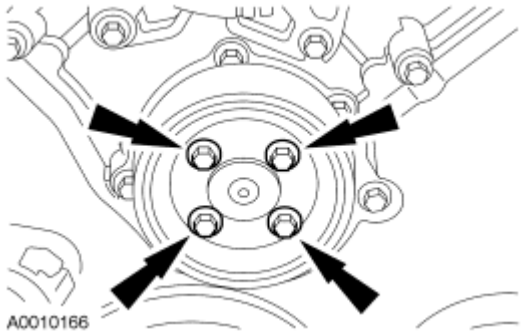

Fig. 403: Coolant Pump Pulley Bolts
Courtesy of FORD MOTOR CO.

71. Position the accessory drive belt idler pulley and install the bolt.
    - Tighten to 25 Nm (18 lb-ft).

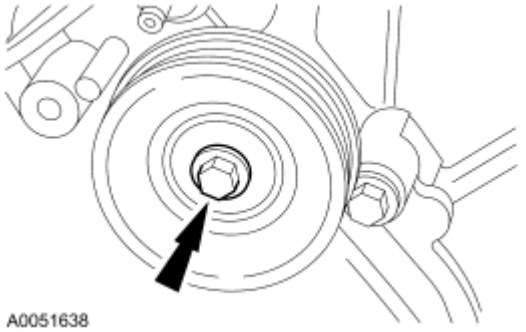

Fig. 404: Accessory Drive Belt Idler Pulley Bolt
Courtesy of FORD MOTOR CO.

CAUTION: If not secured within 4 minutes, sealant must be removed and the sealing area cleaned with metal surface cleaner. Allow to dry until

there is no sign of wetness, or 4 minutes, whichever is longer. Failure to follow this procedure may cause future oil leakage.

72. Apply sealant in 2 places where the engine front cover meets the cylinder head.

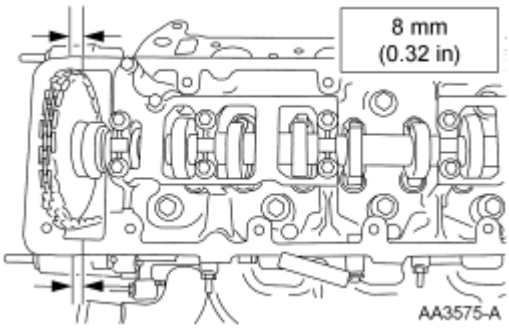

Fig. 405: Applying Sealant At Engine Front Cover/Cylinder Head Surface
Courtesy of FORD MOTOR CO.

73. Install the new LH gasket into the valve cover and position on the cylinder head. Tighten the bolts in the sequence shown.
    - Tighten to 10 Nm (89 lb-in).

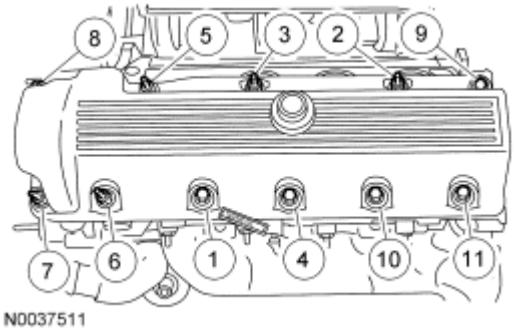

Fig. 406: Valve Cover Torque Sequence
Courtesy of FORD MOTOR CO.

CAUTION: If not secured within 4 minutes, sealant must be removed and the sealing area cleaned with metal surface cleaner. Allow to dry until there is no sign of wetness, or 4 minutes, whichever is longer. Failure to follow this procedure may cause future oil leakage.

74. Apply sealant in 2 places where the engine front cover meet the cylinder head.

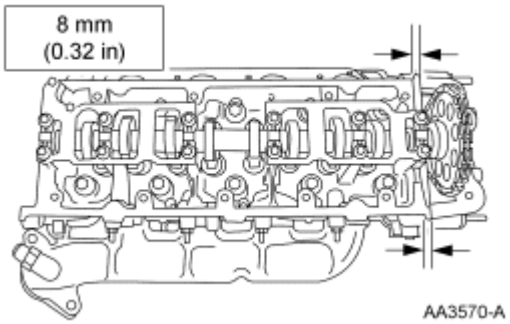

Fig. 407: Applying Sealant At Engine Front Cover/Cylinder Head Surface
Courtesy of FORD MOTOR CO.

75. Install the new RH gasket into the valve cover and position on the cylinder head. Tighten the 11 bolts in the sequence shown.
    - Tighten to 10 Nm (89 lb-in).

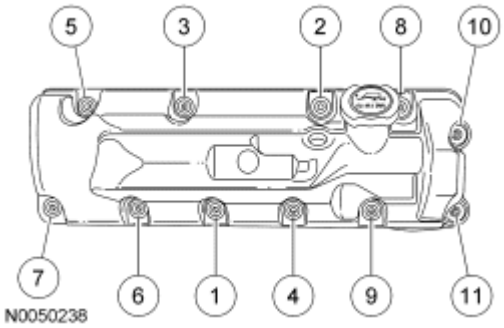

Fig. 408: Valve Cover Torque Sequence
Courtesy of FORD MOTOR CO.

76. Install the knock sensor (KS) and the 2 bolts.
    - Tighten to 25 Nm (18 lb-ft).

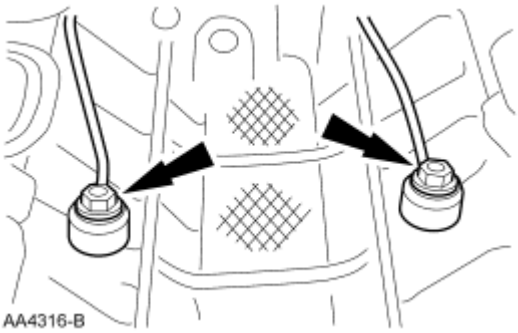

Fig. 409: Knock Sensor
Courtesy of FORD MOTOR CO.

77. Inspect the O-rings seals. Install new seals if necessary.

Fig. 410: O-Ring Seals
Courtesy of FORD MOTOR CO.

78. Install the coolant bypass tube.

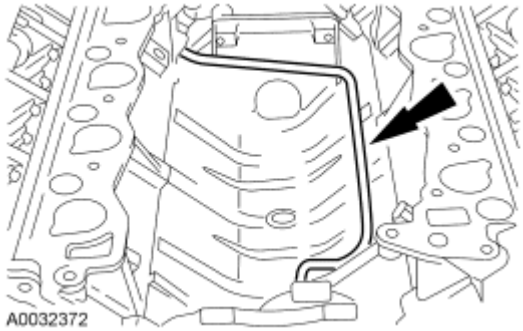

Fig. 411: Coolant Bypass Tube
Courtesy of FORD MOTOR CO.

79. Install the ground strap on the rear of the RH cylinder head.
    1. Install the stud bolt and tighten to 25 Nm (18 lb-ft).
    2. Install the ground strap.
    3. Install the retaining nut and tighten to 10 Nm (89 lb-in).

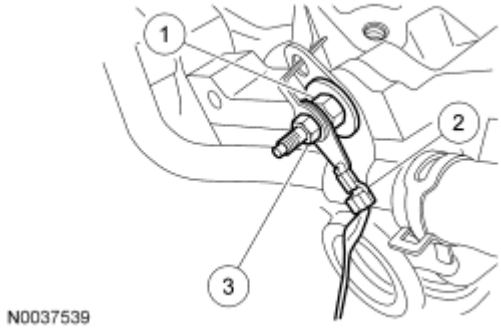

Fig. 412: Ground Strap, Stud & Nut
Courtesy of FORD MOTOR CO.

NOTE: Align the gasket locator tabs to slots in cylinder head.

80. Install the new intake manifold gaskets, intake manifold and hand-tighten the 8 bolts at the locations shown.

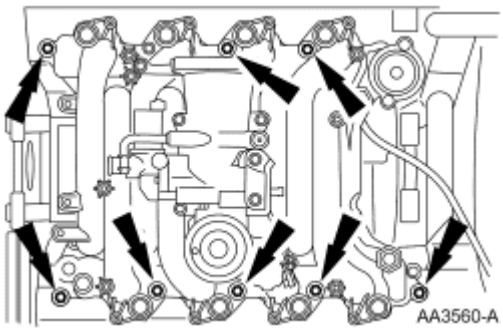

Fig. 413: Intake Manifold Bolts
Courtesy of FORD MOTOR CO.

81. Install the 8 ignition coils and tighten the 8 bolts.
    - Tighten to 10 Nm (89 lb-in).

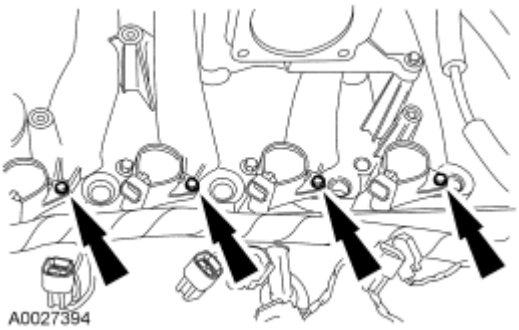

Fig. 414: Ignition Coils & Bolts
Courtesy of FORD MOTOR CO.

82. Install the intake manifold crash bracket bolt and loosely install the bolt and the stud bolt.

Fig. 415: Intake Manifold Crash Bracket Bolt
Courtesy of FORD MOTOR CO.

83. Install the thermostat.

Fig. 416: Thermostat
Courtesy of FORD MOTOR CO.

84. Install the coolant outlet adapter and loosely install the 2 bolts.

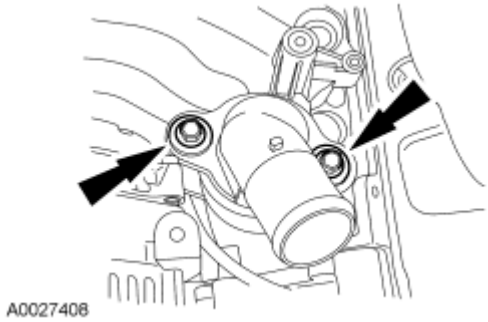

Fig. 417: Coolant Outlet Adapter & Bolts
Courtesy of FORD MOTOR CO.

85. Tighten the 9 bolts in the sequence shown.
    - Tighten to 25 Nm (18 lb-ft).

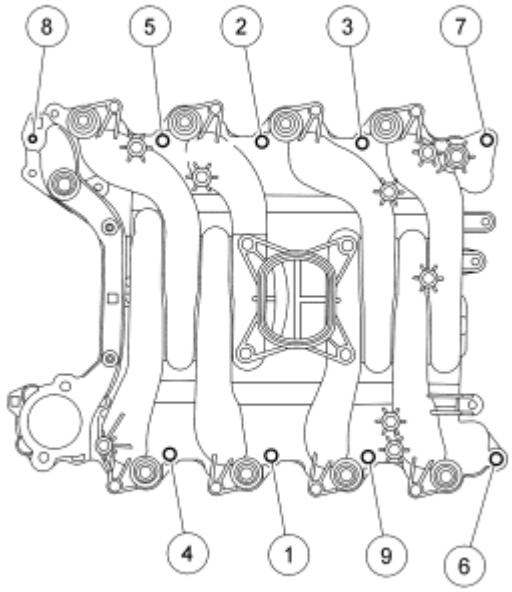

N0037509

Fig. 418: Intake Manifold Bolt Tightening Torque Sequence
Courtesy of FORD MOTOR CO.

86. Tighten the stud bolt.
    - Tighten to 25 Nm (18 lb-ft).

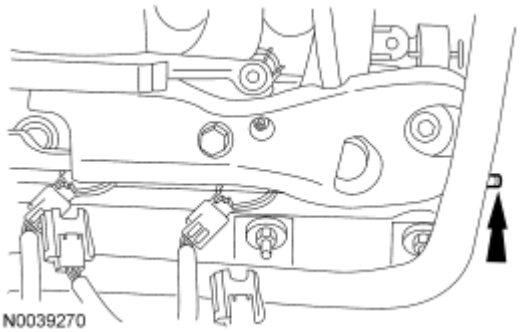

N0039270

Fig. 419: Stud Bolt
Courtesy of FORD MOTOR CO.

87. Tighten the 2 coolant outlet adapter bolts.
    - Tighten to 25 Nm (18 lb-ft).

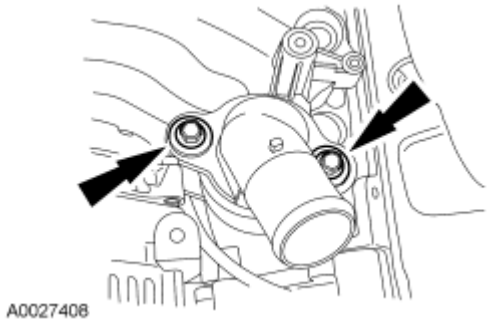

Fig. 420: Coolant Outlet Adapter & Bolts
Courtesy of FORD MOTOR CO.

88. Connect the throttle control and throttle positioning sensor electrical connector.

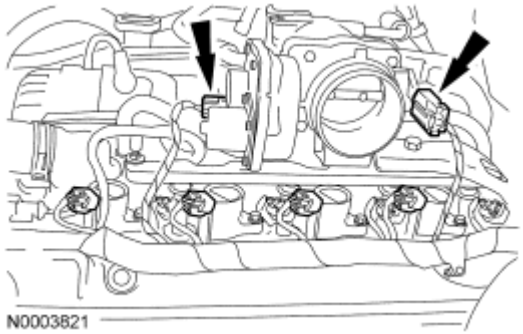

Fig. 421: Locating Throttle Control And Throttle Position (TP) Sensor Electrical Connectors
Courtesy of FORD MOTOR CO.

89. Connect the EGR tube to the EGR valve.
    - Tighten to 40 Nm (30 lb-ft).

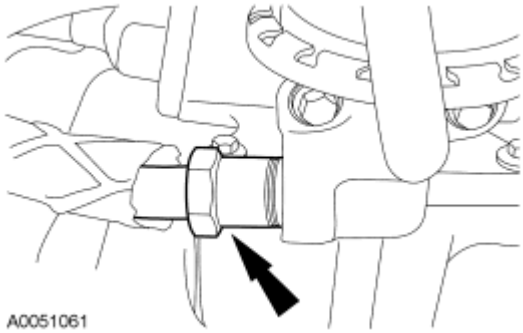

Fig. 422: EGR Tube Nut At EGR
Courtesy of FORD MOTOR CO.

90. Connect the EGR tube to the exhaust manifold.
    - Tighten to 40 Nm (30 lb-ft).

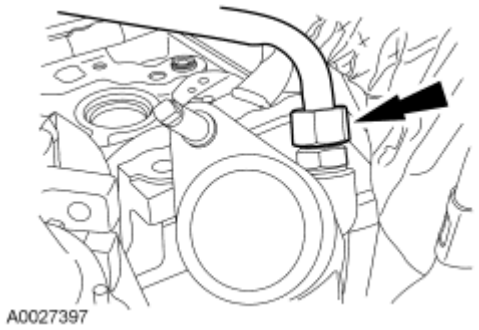

Fig. 423: EGR Tube At Exhaust Manifold
Courtesy of FORD MOTOR CO.

91. Position the fuel charging wiring at 2 locations at the back of the intake manifold.
92. Install the generator and the 2 bolts.
    - Tighten to 25 Nm (18 lb-ft).

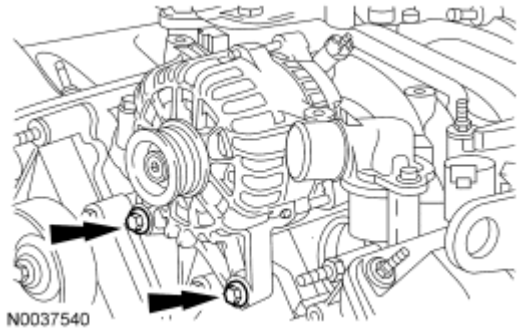

Fig. 424: Generator & Bolts
Courtesy of FORD MOTOR CO.

93. Install the generator mounting bracket and the 4 bolts.
    - Tighten to 10 Nm (89 lb-in).

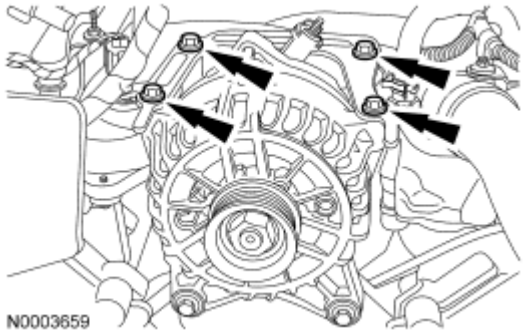

Fig. 425: Generator Mounting Bracket Bolts
Courtesy of FORD MOTOR CO.

94. Connect the generator electrical connector.

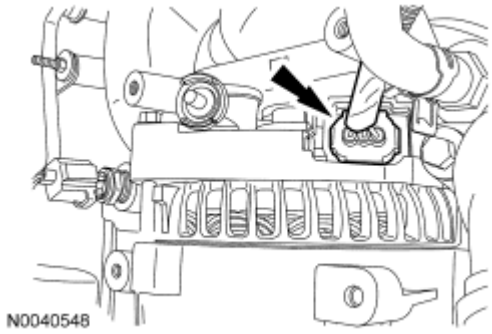

Fig. 426: Generator Electrical Connector
Courtesy of FORD MOTOR CO.

95. Position the vacuum harness and connect the vacuum hoses for the evaporative emission (EVAP) canister purge valve, the main chassis hose and the EGR valve.

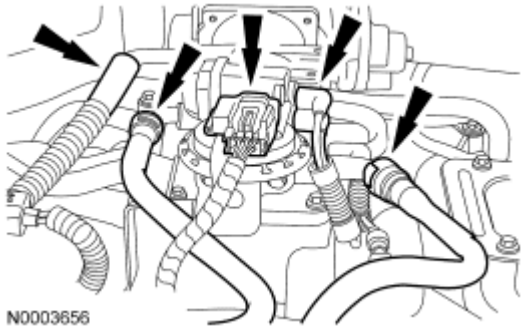

Fig. 427: Vacuum Hoses & Electrical Connector
Courtesy of FORD MOTOR CO.

96. Install the generator wiring harness anchor to the LH front stud.

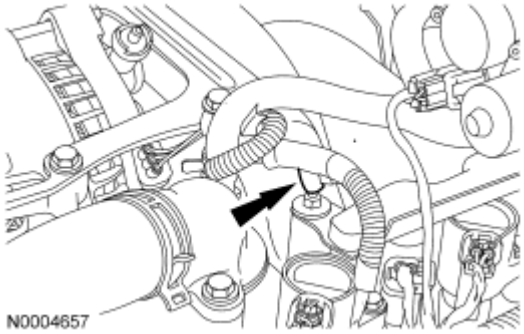

Fig. 428: Generator Wiring Harness Anchor
Courtesy of FORD MOTOR CO.

97. Connect the crankcase ventilation tube.

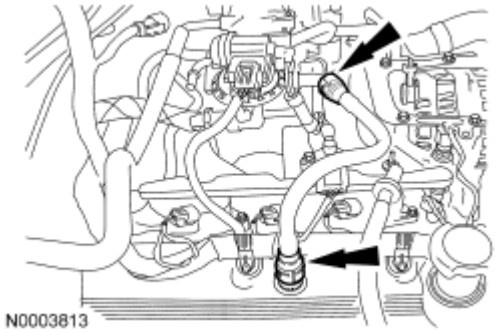

Fig. 429: Crankcase Ventilation Tube
Courtesy of FORD MOTOR CO.

98. Install the intake manifold shield and 2 bolts.
    - Tighten to 12 Nm (9 lb-ft).

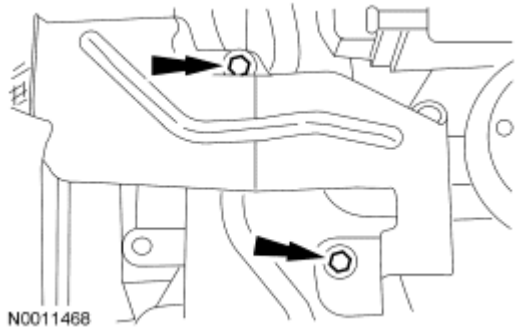

Fig. 430: Intake Manifold Shield
Courtesy of FORD MOTOR CO.

99. Connect the 8 fuel injector electrical connectors.

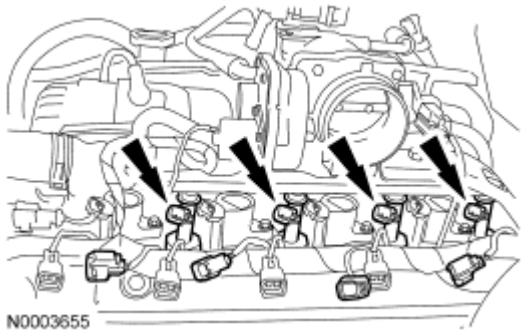

Fig. 431: Fuel Injector Electrical Connectors
Courtesy of FORD MOTOR CO.

100. Connect the 8 ignition coil electrical connectors.

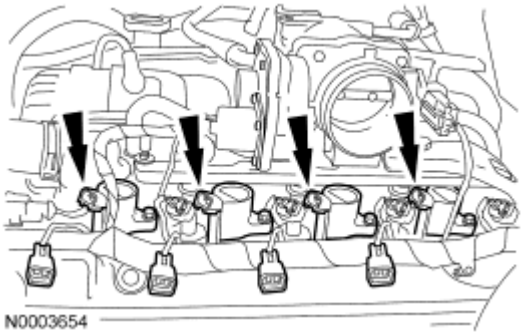

Fig. 432: Ignition Coil Electrical Connectors
Courtesy of FORD MOTOR CO.

101. Connect the camshaft position (CMP) sensor electrical connector.

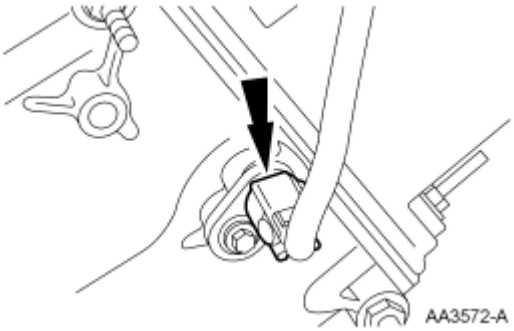

Fig. 433: Camshaft Position (CMP) Sensor Electrical Connector
Courtesy of FORD MOTOR CO.

102. Connect the radio interference capacitor electrical connector.

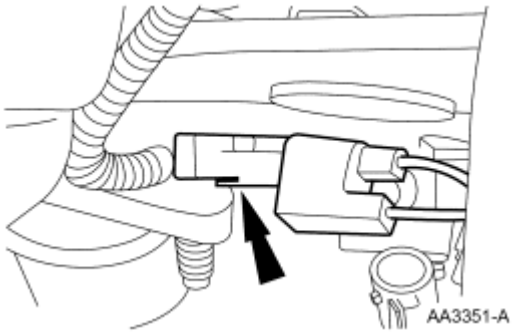

Fig. 434: Radio Ignition Interference Capacitor
Courtesy of FORD MOTOR CO.

103. Connect the KS electrical connector and install the harness retainer to the intake manifold.

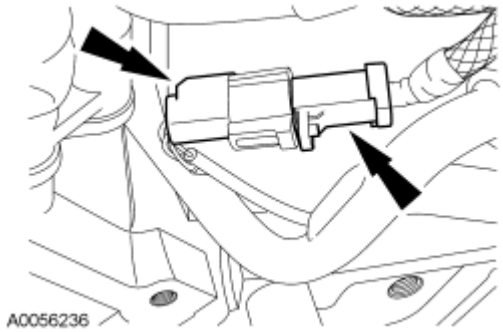

Fig. 435: Locating Knock Sensor (KS) Electrical Connector And Wiring Harness Pin-Type Retainer
Courtesy of FORD MOTOR CO.

104. Connect the cylinder head temperature (CHT) sensor electrical connector.

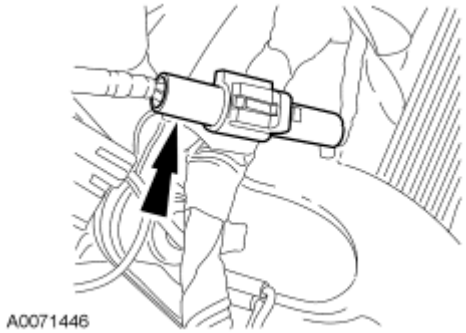

Fig. 436: Cylinder Head Temperature (CHT) Sensor Electrical Connector
Courtesy of FORD MOTOR CO.

105. Connect the ground wire to the right rear fuel rail stud.

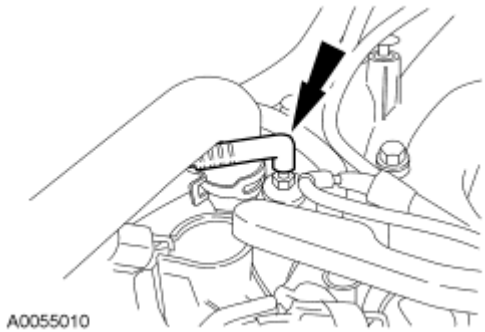

Fig. 437: Ground Wire
Courtesy of FORD MOTOR CO.

106. Install the battery cables and the bolt.
107. Install the special tool to the RH cylinder head.

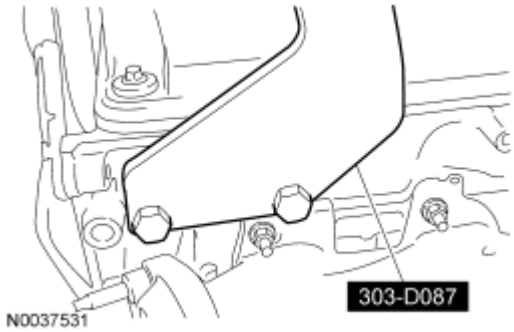

Fig. 438: Installing Special Tool To RH Cylinder Head
Courtesy of FORD MOTOR CO.

108. Install the special tool to the LH cylinder head.

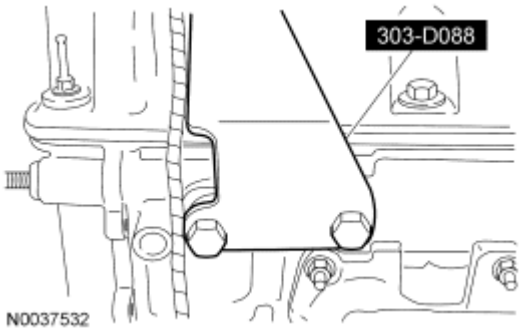

Fig. 439: Installing Special Tool To LH Cylinder Head
Courtesy of FORD MOTOR CO.

109. Using the special tool, remove the engine from the engine stand.

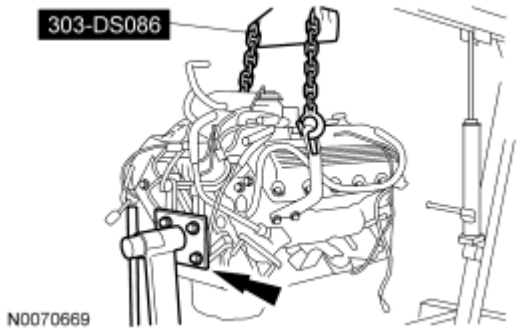

Fig. 440: Mounting Engine On A Suitable Engine Stand
Courtesy of FORD MOTOR CO.

NOTE: **The rear crankshaft seal retainer plate does not have a sealant groove. Gasket maker must be applied to the rear crankshaft seal retainer mating surface on the engine block.**

110. Apply a bead of gasket maker to the crankshaft rear seal retainer plate mating surface on the engine block.

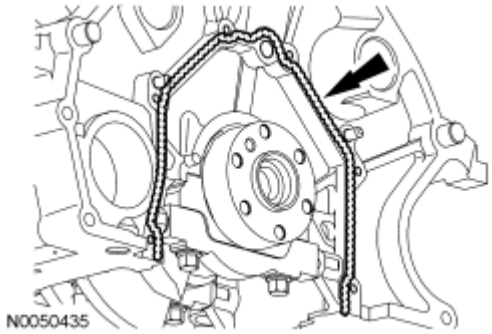

Fig. 441: Applying Bead Of Gasket Maker To Rear Crankshaft Seal Retainer
Courtesy of FORD MOTOR CO.

111. Install the crankshaft rear seal retainer plate and loosely install the 6 bolts.

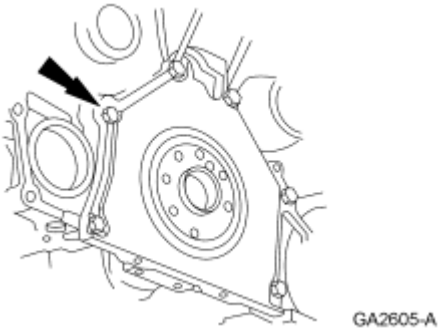

Fig. 442: Locating Crankshaft Rear Seal Retainer Plate Bolts
Courtesy of FORD MOTOR CO.

112. Tighten the 6 crankshaft rear seal retainer plate bolts in the sequence shown.
   - Tighten to 10 Nm (89 lb-in).

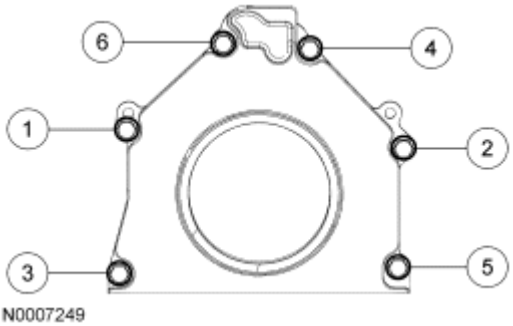

Fig. 443: Tightening Sequence Of Crankshaft Rear Seal Retainer Plate Bolts
Courtesy of FORD MOTOR CO.

CAUTION: If not secured within 4 minutes, sealant must be removed and the

sealing area cleaned with metal surface cleaner. Allow to dry until there is no sign of wetness, or 4 minutes, whichever is longer. Failure to follow this procedure may cause future oil leakage.

113. Apply the sealant at the rear oil seal retainer to cylinder block sealing surface.

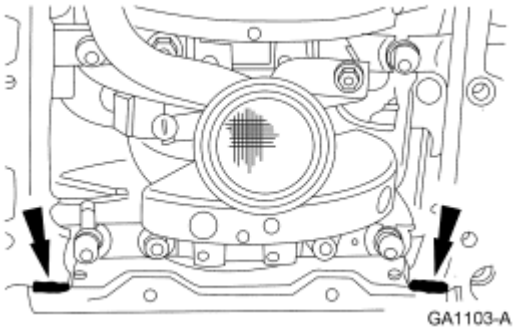

Fig. 444: Applying Silicone Gasket And Sealant
Courtesy of FORD MOTOR CO.

114. Apply sealant at the front cover-to-cylinder block sealing surface.

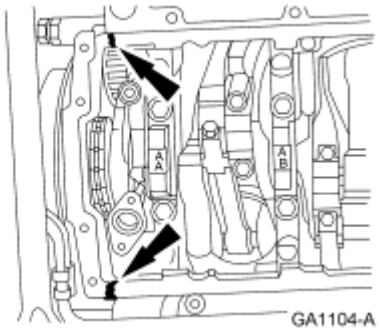

Fig. 445: Applying Sealant At Front Cover-To-Cylinder Block
Courtesy of FORD MOTOR CO.

115. Position the new oil pan gasket, the oil pan and the loosely install the 16 bolts.

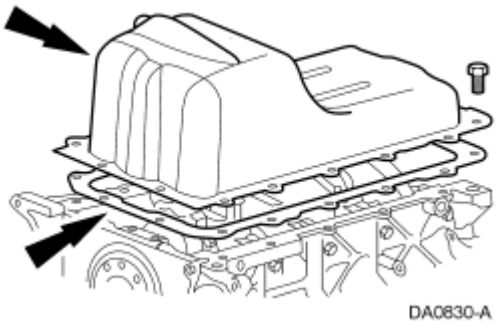

Fig. 446: Oil Pan, Bolt & Gasket

Courtesy of FORD MOTOR CO.

116. Tighten the 16 bolts in 2 stages, in the sequence shown.
    - Stage 1: Tighten to 20 Nm (15 lb-ft).
    - Stage 2: Rotate an additional 60 degrees.

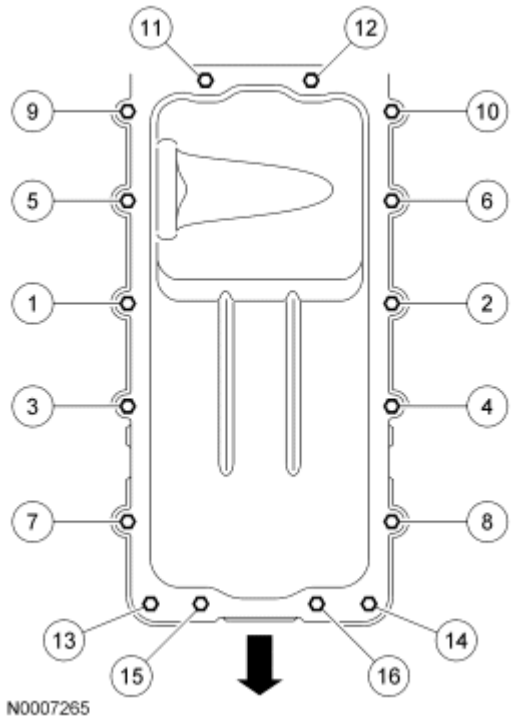

Fig. 447: Identifying Oil Pan Bolt Tightening Sequence
Courtesy of FORD MOTOR CO.

117. Using the special tools, install the crankshaft rear oil seal.

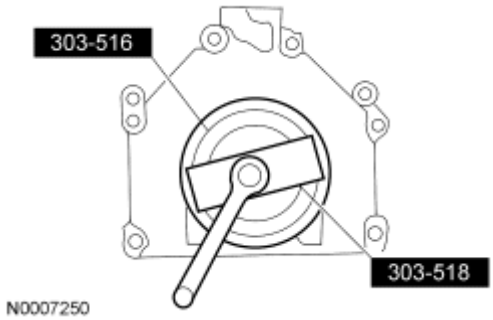

Fig. 448: Using Special Tools To Install New Crankshaft Rear Seal
Courtesy of FORD MOTOR CO.

118. Using the special tools, install the crankshaft oil slinger.

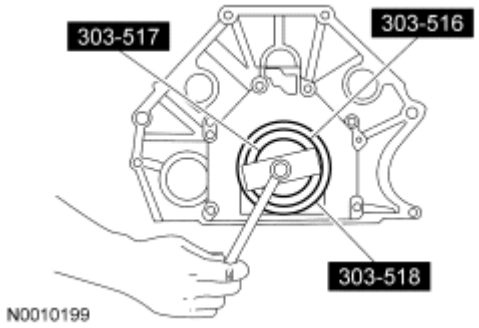

Fig. 449: Installing Crankshaft Rear Oil Slinger Using Special Tools
Courtesy of FORD MOTOR CO.

119. Install the engine/transmission spacer plate.

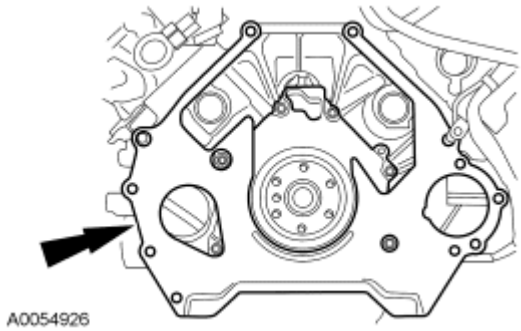

Fig. 450: Engine-To-Transmission Spacer Plate
Courtesy of FORD MOTOR CO.

120. Position the flexplate and install the 6 bolts in the sequence shown.
    - Tighten to 80 Nm (59 lb-ft).

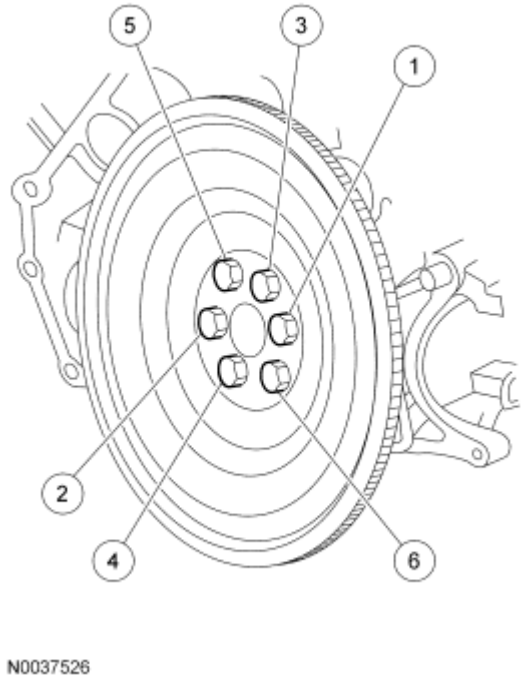

Fig. 451: Flexplate Bolt Torque Sequence
Courtesy of FORD MOTOR CO.

INSTALLATION

CYLINDER HEAD

Special Tools

Illustration	Tool Name	Tool Number
 ST1330-A	Compressor, Valve Spring	303-567 (T97P-6565-AH)
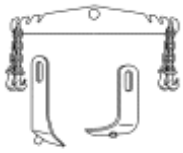 ST2443-A	Engine Lift Bracket Set	303-DS086 (D93P-6001-A)
 ST1335-A	Holding Tool, Crankshaft	303-448 (T93P-6303-A)

 ST2197-A	Installer, Crankshaft Front Oil Seal	303-635
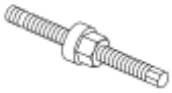 ST1287-A	Installer, Crankshaft Vibration Damper	303-102 (T74P-6316-B)
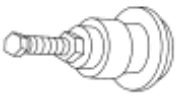 ST1328-A	Installer, Front Cover Oil Seal	303-335 (T88T-6701-A)
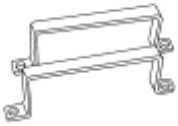 ST1668-A	Remover/Installer, Cylinder Head	303-572 (T97T-6000-A)
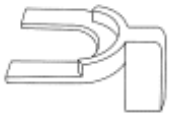 ST1331-A	Spacer, Valve Spring Compressor	303-382 (T91P-6565-AH)
 ST1438-A	Strap Wrench	303-D055 (D85L-6000-A)

Material

Item	Specification
Hydraulic Chain Tensioner Retaining Clip 1L3Z-6P250-AA	-
Motorcraft Metal Surface Cleaner ZC-21	WSE-M5B392-A
Motorcraft SAE 5W-20 Premium Synthetic Blend Motor Oil XO-5W20-QSP (US); Motorcraft SAE 5W-20 Super Premium Motor Oil CXO-5W20-LSP12 (Canada); or equivalent	WSS-M2C930-A
Silicone Gasket and Sealant TA-30	WSE-M4G323-A4

INSTALLATION

Both cylinder heads

NOTE: **The gasket sealing surfaces on the cylinder head and cylinder block must be clean. For additional information, refer to Cylinder Head.**

NOTE: **The use of sealing aids (aviation cement, copper spray and glue) is not permitted. The gasket must be installed dry.**

NOTE: **The new gasket has a film coating which is crucial to the gasket's ability to seal correctly. Do not scratch the gasket.**

NOTE: **RH head gasket shown, LH head gasket similar.**

1. Install the new head gasket over the dowel pins.

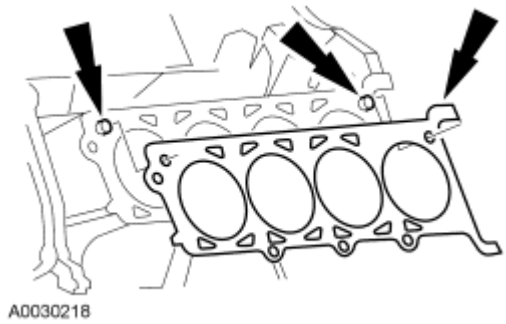

Fig. 452: Head Gasket & Dowel Pins
Courtesy of FORD MOTOR CO.

NOTE: **Cylinder head machining or milling is not authorized by the Ford Motor Company. Cylinder head flatness must be within 0.0254 mm (0.001 in) across a 38.1 mm (1.5 in) square area.**

NOTE: **The gasket sealing surfaces on the cylinder head and cylinder block must be clean. For additional information, refer to Cylinder Head.**

NOTE: **The use of sealing aids (aviation cement, copper spray and glue) is not permitted. The gasket must be installed dry.**

NOTE: **Do not allow the dowels to scratch the sealing surface of the cylinder head during cylinder head installation.**

NOTE: **The new cylinder head bolts must be lightly oiled with a rag, and allowed to drain for a few minutes prior to installation.**

NOTE: RH cylinder head shown, LH cylinder head similar.

2. Install the cylinder head on the dowels and the head gasket. Loosely install new bolts.

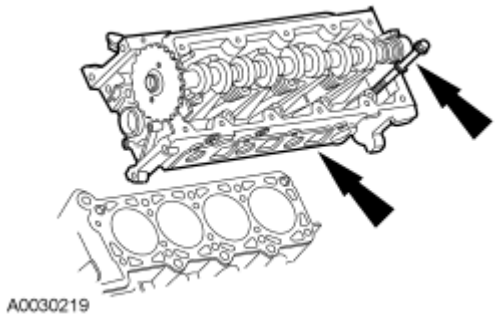

Fig. 453: Locating Cylinder Head
Courtesy of FORD MOTOR CO.

3. Tighten the cylinder head bolts in 6 stages, in the sequence shown.
   - Stage 1: Tighten to 40 Nm (30 lb-ft).
   - Stage 2: Tighten an additional 90 degrees (1/4 turn).
   - Stage 3: Loosen a minimum of one full turn (360 degrees).
   - Stage 4: Tighten to 40 Nm (30 lb-ft).
   - Stage 5: Tighten an additional 90 degrees (1/4 turn).
   - Stage 6: Tighten an additional 90 degrees (1/4 turn).

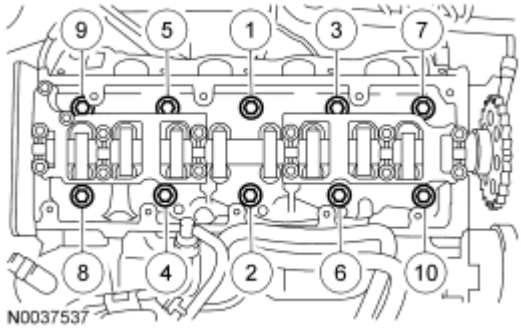

Fig. 454: Cylinder Head Bolt Torque Sequence
Courtesy of FORD MOTOR CO.

4. Remove the special tools from both ends of the cylinder head.

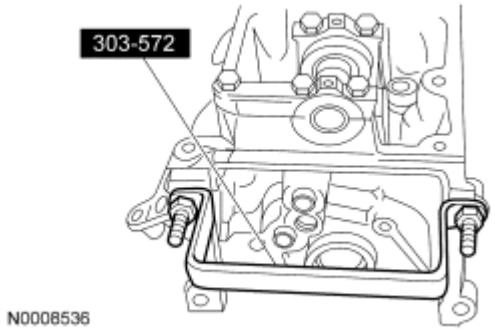

Fig. 455: Identifying Special Tool (303-572)
Courtesy of FORD MOTOR CO.

NOTE: Lubricate the hydraulic lash adjusters with clean engine oil.

5. Install the hydraulic lash adjusters in their original locations.

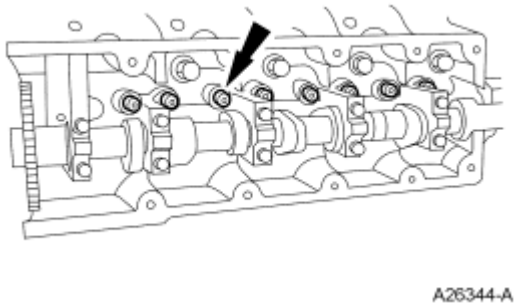

Fig. 456: Locating Hydraulic Lash Adjusters
Courtesy of FORD MOTOR CO.

LH cylinder head

NOTE: Lubricate the O-ring seal with clean engine oil.

6. Install a new O-ring seal on the oil level indicator tube and install the oil level indicator tube and bolt.
   - Tighten to 10 Nm (89 lb-in).

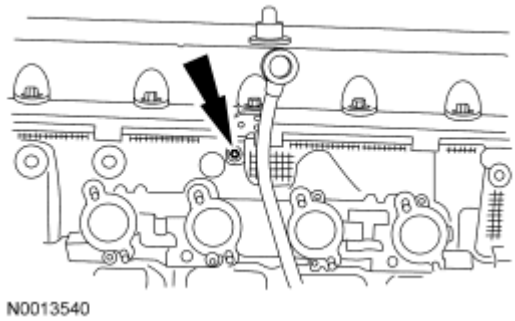

Fig. 457: Oil Level Indicator Tube Bolt
Courtesy of FORD MOTOR CO.

7. Install the 8 new LH exhaust manifold studs.
   - Tighten to 12 Nm (9 lb-ft).
8. Install a new LH exhaust manifold gasket the LH exhaust manifold and 8 new nuts.
   - Tighten to 25 Nm (18 lb-ft) in the sequence shown.

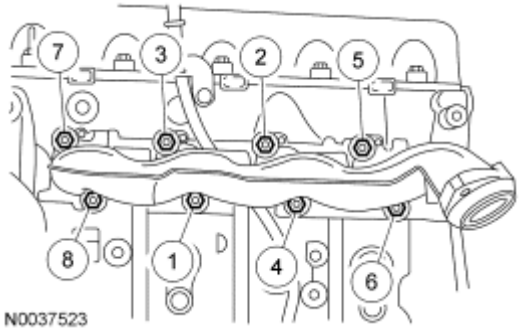

Fig. 458: Exhaust Manifold Nuts Tightening Sequence
Courtesy of FORD MOTOR CO.

RH cylinder head

9. Install the 8 new RH exhaust manifold studs.
   - Tighten to 12 Nm (9 lb-ft).
10. Install a new RH exhaust manifold gasket the RH exhaust manifold and 8 new nuts.
   - Tighten to 25 Nm (18 lb-ft) in the sequence shown.

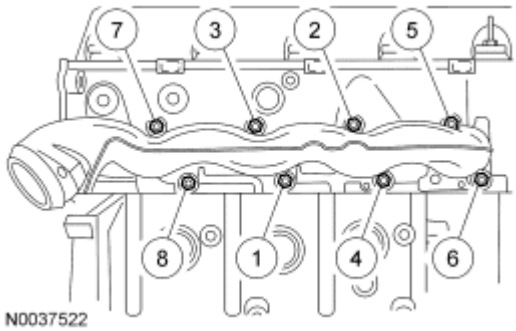

Fig. 459: Exhaust Manifold Nuts Tightening Sequence
Courtesy of FORD MOTOR CO.

Engines with ratcheting timing chain tensioners

CAUTION: Timing chain procedures must be followed exactly or damage to valves and pistons will result.

CAUTION: Do not compress the ratchet assembly. This will damage the ratchet assembly.

NOTE: LH shown, RH similar.

11. Compress each tensioner plunger, using an edge of a vise.

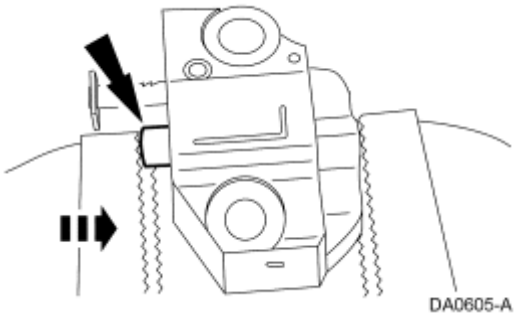

Fig. 460: Compressing Tensioner Plunger
Courtesy of FORD MOTOR CO.

12. Using a small screwdriver or pick, push back and hold the ratchet mechanism.

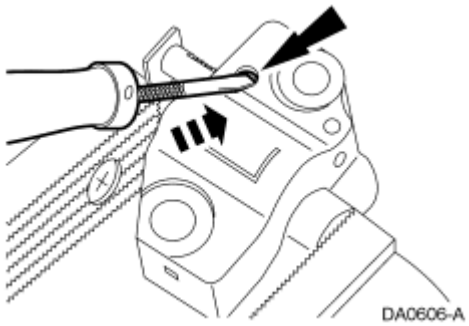

Fig. 461: Pushing Back And Holding Ratchet Mechanism
Courtesy of FORD MOTOR CO.

13. While holding the ratchet mechanism, push the ratchet arm back into the tensioner housing.

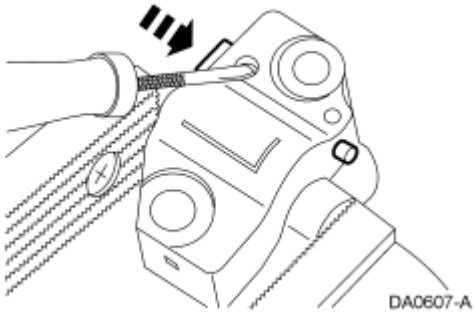

Fig. 462: Compressing Tensioner Plunger
Courtesy of FORD MOTOR CO.

14. Install a paper clip into the hole of each tensioner housing to hold the ratchet assembly and plunger in during installation.
    - Remove the tensioner from the vise.

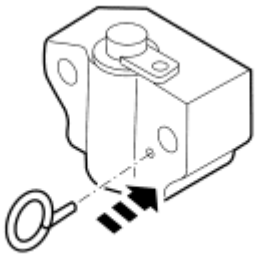

A26917-A

Fig. 463: Installing Paper Clip Into Tensioner Housing
Courtesy of FORD MOTOR CO.

Engines with non-ratcheting timing chain tensioners

NOTE: If one or both tensioner mounting bolts are loosened or removed, the tensioner-sealing bead must be inspected for seal integrity. Any cracks, tears, cuts or separation from the tensioner body or permanent compression of the seal bead, will require the installation of a new tensioner.

15. Inspect the RH and LH timing chain tensioners.
    - Install new tensioners as necessary.

CAUTION: Timing chain procedures must be followed exactly or damage to valves and pistons will result.

NOTE: LH shown, RH similar.

16. Compress each tensioner plunger, using an edge of a vise.

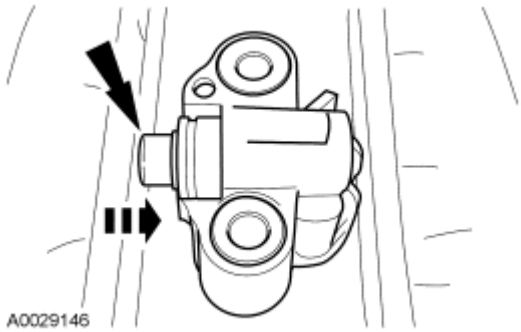

Fig. 464: Compressing Tensioner Plunger
Courtesy of FORD MOTOR CO.

17. Install a retaining clip on the tensioner to hold the plunger in during installation.

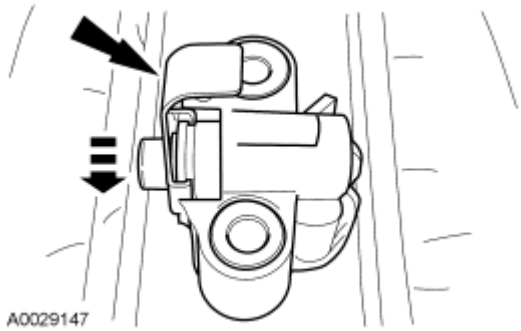

Fig. 465: Identifying Retaining Clip on Tensioner
Courtesy of FORD MOTOR CO.

Both cylinder heads

18. If the colored links are not visible, mark one link on one end and one link on the other end, and use as timing marks.

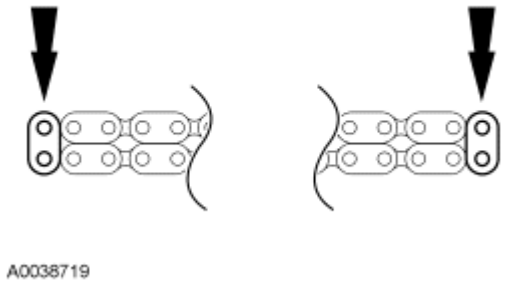

Fig. 466: Identifying Timing Chain Copper Links
Courtesy of FORD MOTOR CO.

19. Using the special tool, position the crankshaft.
    - Remove the special tool after crankshaft positioning.

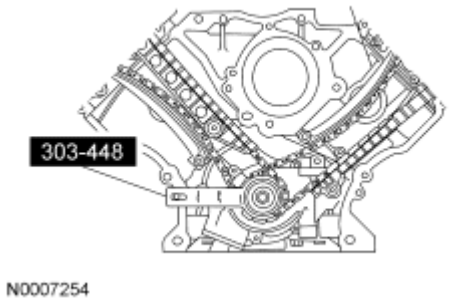

Fig. 467: Positioning Crankshaft With No. 1 Cylinder At TDC
Courtesy of FORD MOTOR CO.

20. Install the crankshaft sprocket, making sure the flange faces forward.

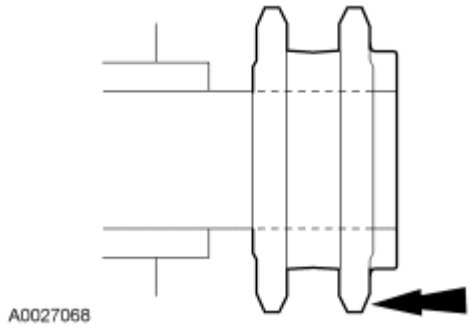

Fig. 468: Identifying Crankshaft Sprocket Flange
Courtesy of FORD MOTOR CO.

21. Install the timing chain guides.
    1. Position the LH timing chain guide.
    2. Install and tighten the LH bolts to 10 Nm (89 lb-in).
    3. Position the RH timing chain guide.
    4. Install and tighten the RH bolts to 10 Nm (89 lb-in).

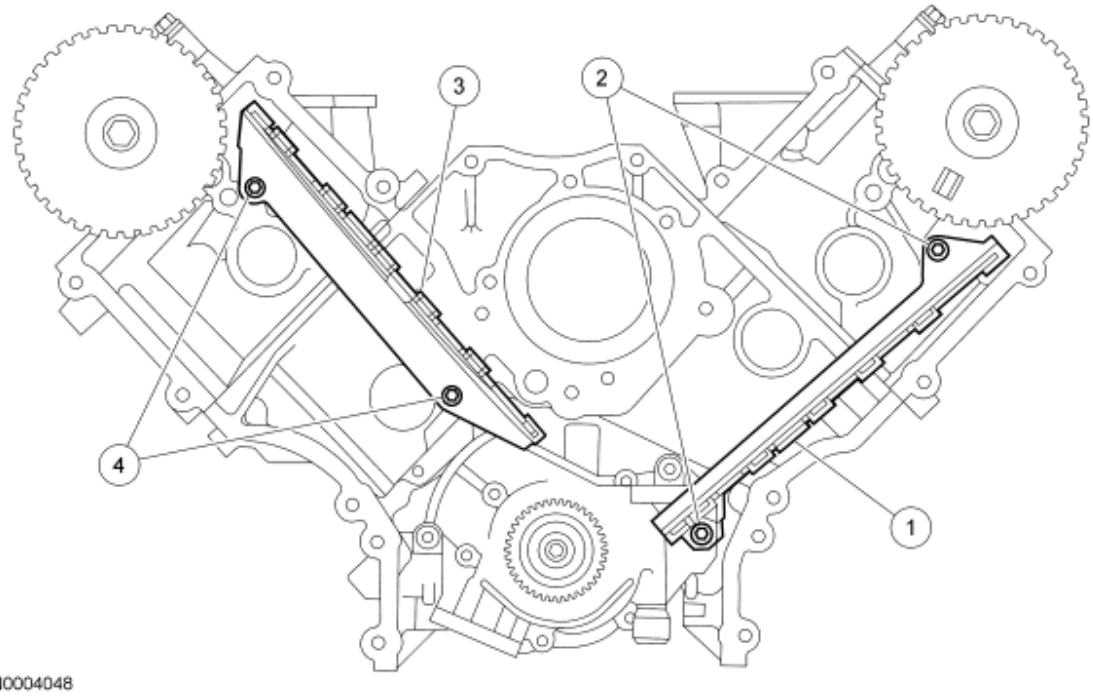

Fig. 469: Identifying Timing Chain Guides
Courtesy of FORD MOTOR CO.

22. Rotate the RH camshaft sprocket until the timing mark is approximately at the 11 o'clock position. Rotate the LH camshaft sprocket until the timing mark is approximately at the 12 o'clock position.

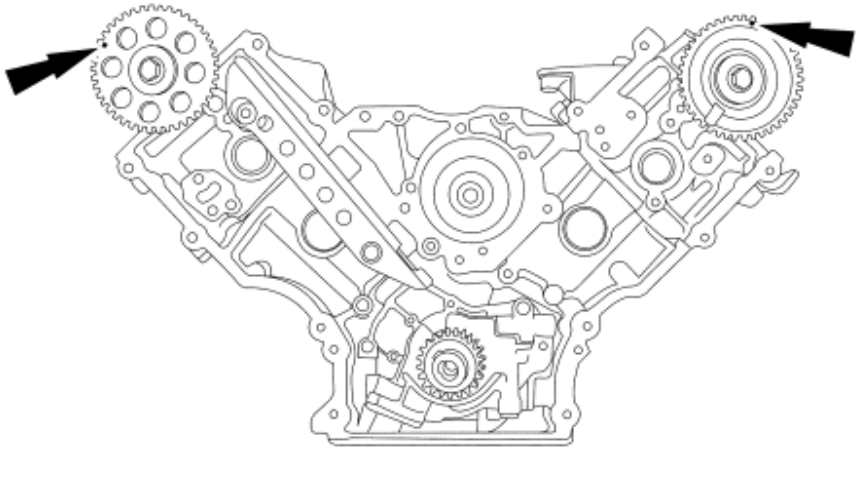

Fig. 470: Identifying LH And RH Camshaft Timing Mark Position
Courtesy of FORD MOTOR CO.

23. Position the LH (inner) timing chain on the crankshaft sprocket, aligning the colored (marked) link with the timing mark on the sprocket.

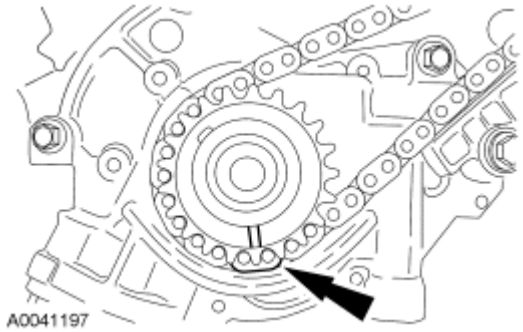

Fig. 471: Aligning Copper (Marked) Link With Timing Mark On Crankshaft Sprocket
Courtesy of FORD MOTOR CO.

24. Install the LH timing chain on the camshaft sprocket, aligning the colored (marked) link with the timing marks on the sprocket.

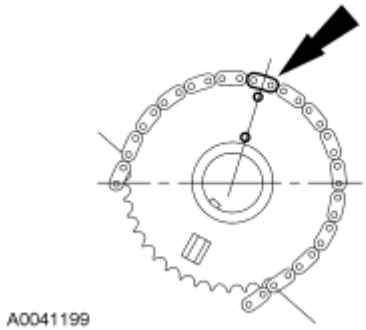

Fig. 472: Aligning Copper (Marked) Link With Timing Mark On Camshaft Sprocket
Courtesy of FORD MOTOR CO.

NOTE: The LH timing chain tensioner arm has a bump near the dowel hole for identification.

25. Position the LH timing chain tensioner on the dowel pin and install the LH timing chain tensioner.
    - Tighten to 25 Nm (18 lb-ft).

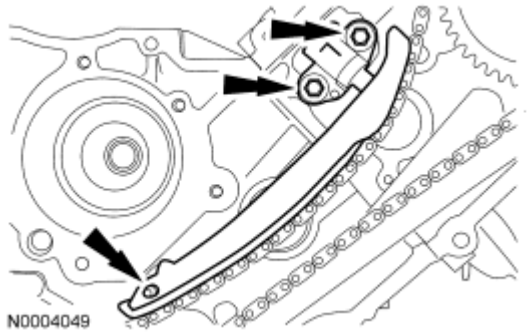

Fig. 473: Positioning LH Timing Chain Tensioner Arm On Dowel Pin
Courtesy of FORD MOTOR CO.

26. Remove the retaining clip from the LH timing chain tensioner.

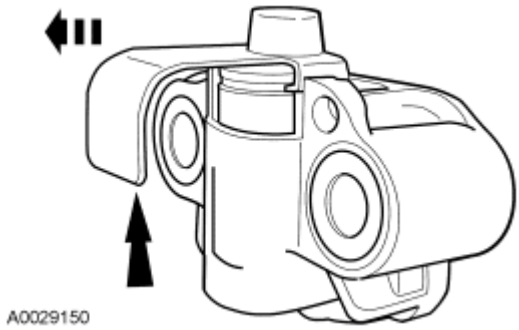

Fig. 474: View Of Retaining Clip And Timing Chain Tensioner
Courtesy of FORD MOTOR CO.

27. Position the RH (outer) timing chain on the crankshaft sprocket, aligning the colored (marked) link with the timing mark on the sprocket.

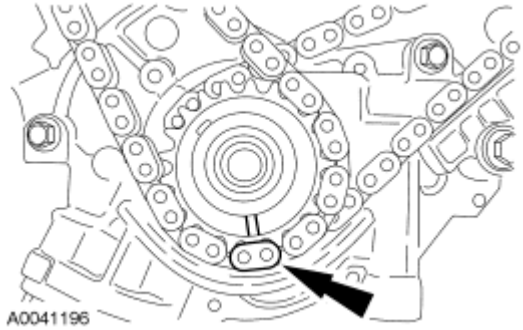

Fig. 475: Aligning Copper (Marked) Link With Timing Mark On Crankshaft Sprocket
Courtesy of FORD MOTOR CO.

28. Install the RH timing chain on the camshaft sprocket, aligning the colored (marked) link with the timing marks on the sprocket.

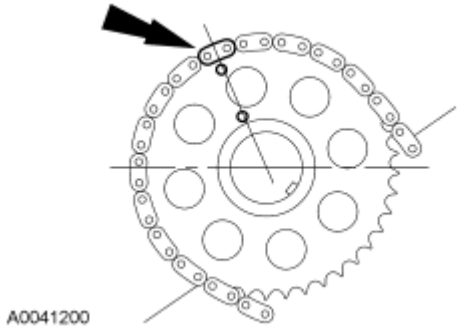

Fig. 476: Aligning Copper (Marked) Link With Timing Mark On Camshaft Sprocket
Courtesy of FORD MOTOR CO.

29. Position the RH timing chain tensioner arm on the dowel pin and install the RH timing chain tensioner.

- Tighten to 25 Nm (18 lb-ft).

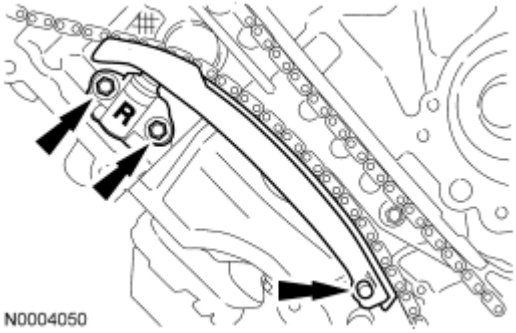

Fig. 477: Positioning RH Timing Chain Tensioner Arm On Dowel Pin
Courtesy of FORD MOTOR CO.

30. Remove the retaining clip from the RH timing chain tensioner.

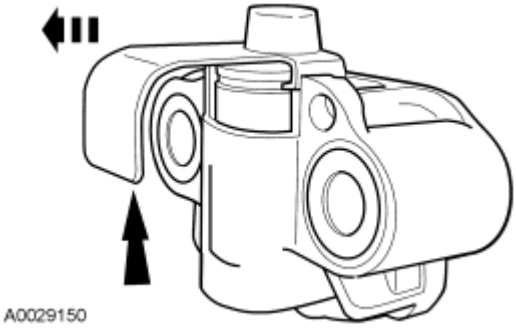

Fig. 478: View Of Retaining Clip And Timing Chain Tensioner
Courtesy of FORD MOTOR CO.

31. Make sure that the colored (marked) chain links are lined up with the dots on the crankshaft sprockets and the camshaft sprocket.

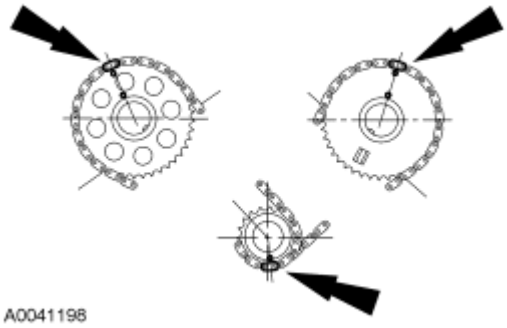

Fig. 479: Identifying Copper (Marked) Chain Links And Dots On Crankshaft Sprockets And Camshaft Sprockets
Courtesy of FORD MOTOR CO.

32. Rotate the camshaft until the lobe is in the upward position.

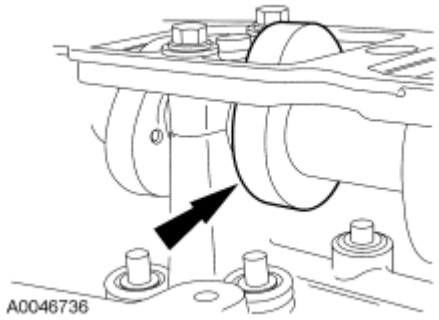

Fig. 480: Positioning Camshaft Lobe Up
Courtesy of FORD MOTOR CO.

33. Install the special tool between the valve spring coils to prevent valve stem seal damage.

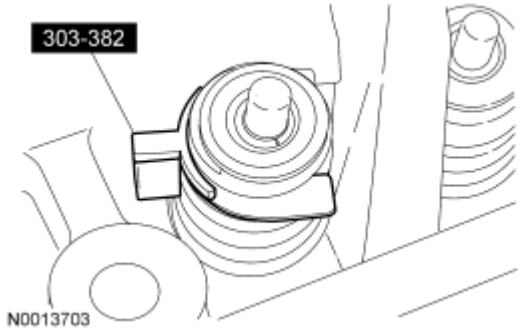

Fig. 481: Installing Special Tool Between Valve Spring Coils
Courtesy of FORD MOTOR CO.

NOTE: Lubricate the camshaft roller followers using clean engine oil.

NOTE: Position the cam lobe away from the camshaft roller follower location prior to installing each camshaft roller follower.

34. Install the camshaft roller follower.
    1. Install the special tool.
    2. Compress the valve spring.
    3. Install the camshaft roller followers in their original locations.

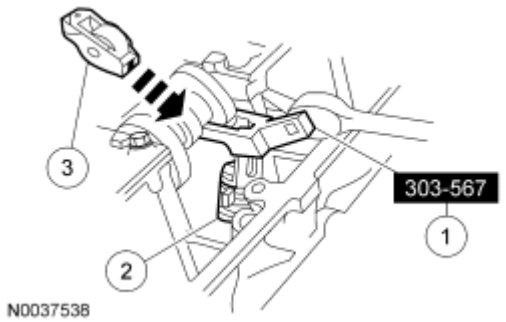

Fig. 482: Installing Camshaft Roller Follower
Courtesy of FORD MOTOR CO.

35. Remove the special tool.

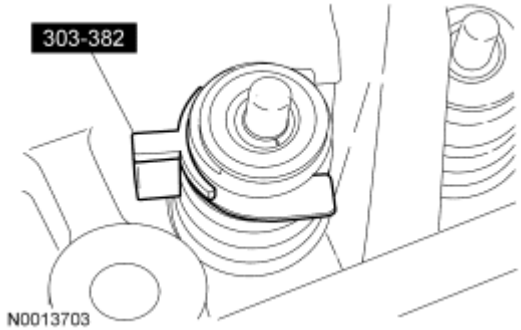

Fig. 483: Installing Special Tool Between Valve Spring Coils
Courtesy of FORD MOTOR CO.

CAUTION: Only use hand tools when removing or installing the spark plugs, damage may occur to the cylinder head or spark plug.

36. Install all 8 spark plugs.
    - Tighten to 15 Nm (11 lb-ft).

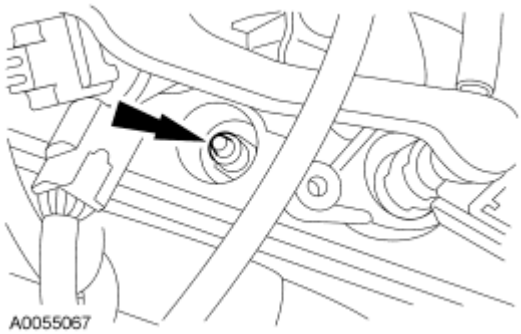

Fig. 484: Spark Plug
Courtesy of FORD MOTOR CO.

37. Install the crankshaft sensor ring.

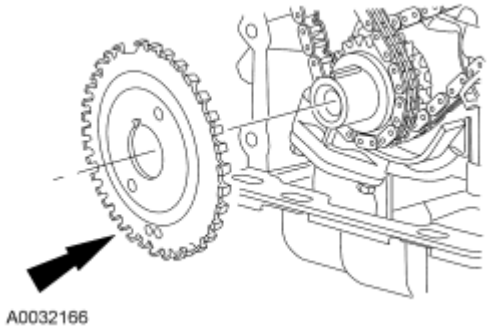

Fig. 485: View Of Crankshaft Sensor Ring At Crankshaft
Courtesy of FORD MOTOR CO.

NOTE: **If the engine front cover is not secured within 4 minutes, the sealant must be removed and the sealing area cleaned with metal surface cleaner. Allow to dry until there is no sign of wetness, or 4 minutes, whichever is longer. Failure to follow this procedure may cause future oil leakage.**

38. Apply a bead of sealant along the head-to-block surface and the oil pan-to-block surface as specified.

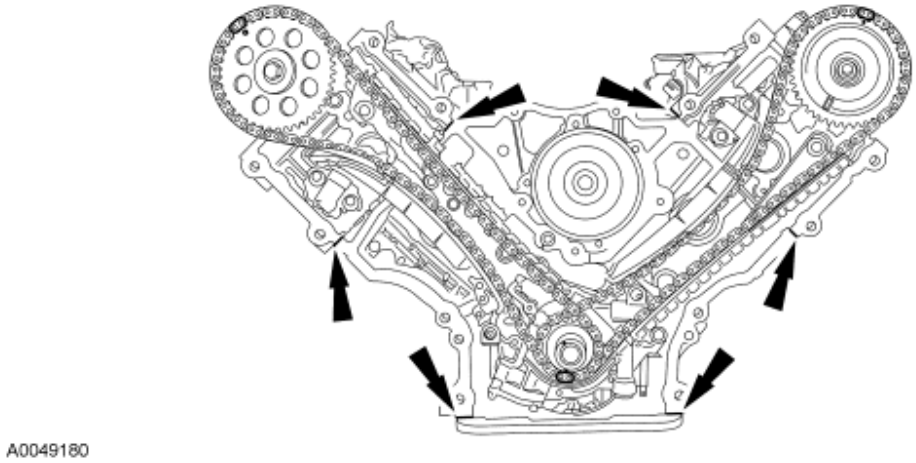

Fig. 486: Applying Sealant At Head-To-Block Surface & The Oil Pan-To-Block Surface
Courtesy of FORD MOTOR CO.

39. Install a new engine front cover gasket on the engine front cover. Position the engine front cover. Install the fasteners finger-tight.

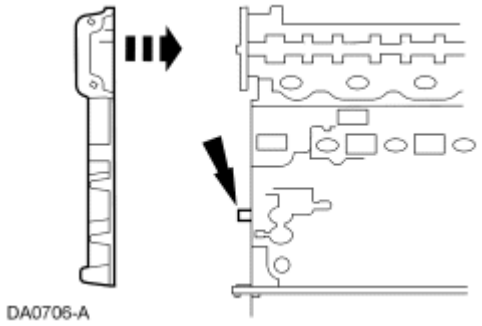

Fig. 487: Installing Engine Front Cover Gasket
Courtesy of FORD MOTOR CO.

40. Tighten the front cover fasteners in the sequence shown to 25 Nm (18 lb-ft).

Item	Part Number	Description
1	N806177	Bolt, hex flange head pilot, M8 x 1.25 x 53
2	N806177	Bolt, hex flange head pilot, M8 x 1.25 x 53
3	N806177	Bolt, hex flange head pilot, M8 x 1.25 x 53
4	N806177	Bolt, hex flange head pilot, M8 x 1.25 x 53
5	N806177	Bolt, hex flange head pilot, M8 x 1.25 x 53
6	W706508	Stud, hex-head pilot, M8 x 1.25 x 50 - M6 x 1 x 10
7	N808586	Stud, washer hex-head pilot, M8 x 1.25 - M6 x 1.0 x 86.35
8	N806177	Bolt, hex flange head pilot, M8 x 1.25 x 53
9	N806177	Bolt, hex flange head pilot, M8 x 1.25 x 53
10	N806177	Bolt, hex flange head pilot, M8 x 1.25 x 53
11	N806300	Stud, hex-shoulder pilot, M8 x 1.25 x 1.25 x 91.1
12	N806300	Stud, hex-shoulder pilot, M8 x 1.25 x 1.25 x 91.1
13	N806300	Stud, hex-shoulder pilot, M8 x 1.25 x 1.25 x 91.1
14	N806300	Stud, hex-shoulder pilot, M8 x 1.25 x 1.25 x 91.1
15	N806300	Stud, hex-shoulder pilot, M8 x 1.25 x 1.25 x 91.1

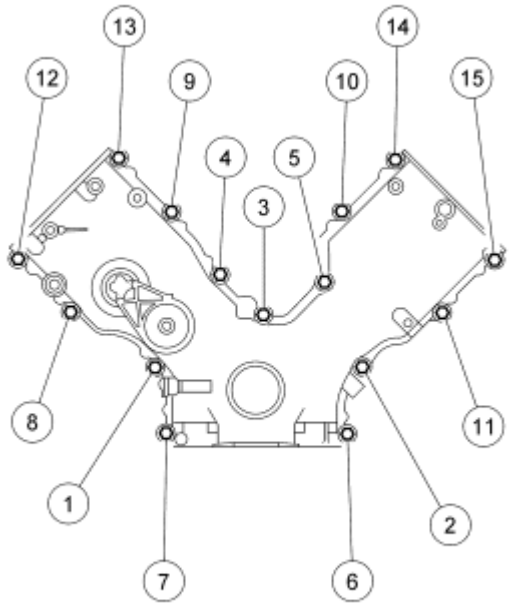

N0037514

Fig. 488: Engine Front Cover Fastener Tightening Sequence
Courtesy of FORD MOTOR CO.

41. Loosely install the bolts, then tighten in 2 stages in the sequence shown.
    - Stage 1: Tighten to 20 Nm (15 lb-ft).
    - Stage 2: Tighten an additional 90 degrees.

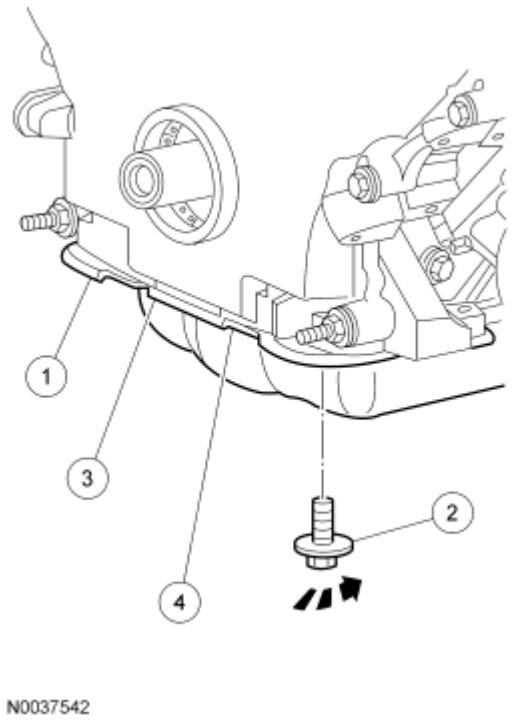

Fig. 489: Front Oil Pan Bolt Torque Sequence
Courtesy of FORD MOTOR CO.

NOTE: RH shown, LH similar.

42. Install the RH and LH engine mounts and the bolts.
    - Tighten to 70 Nm (52 lb-ft).

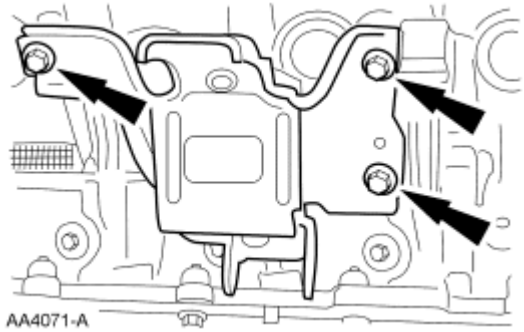

Fig. 490: Engine Mount Bolts
Courtesy of FORD MOTOR CO.

43. Lubricate the engine front cover and the front oil seal inner lip with clean engine oil.

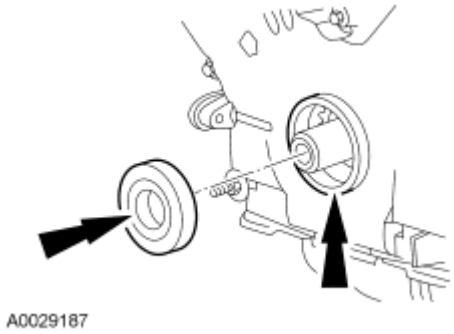

Fig. 491: Locating Crankshaft Front Seal
Courtesy of FORD MOTOR CO.

44. Using the special tools, install the front oil seal.

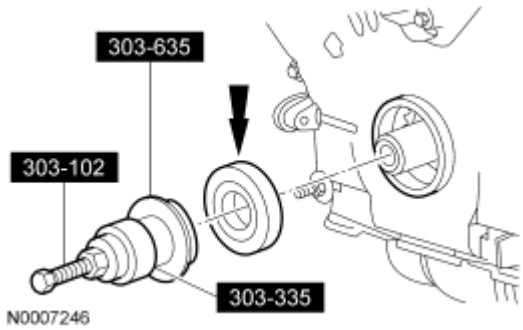

Fig. 492: Installing Crankshaft Front Seal Using Special Tools
Courtesy of FORD MOTOR CO.

CAUTION: If not secured within 4 minutes, sealant must be removed and the sealing area cleaned with metal surface cleaner. Allow to dry until there is no sign of wetness, or 4 minutes, whichever is longer. Failure to follow this procedure may cause future oil leakage.

45. Apply sealant to the Woodruff key slot on the crankshaft pulley.

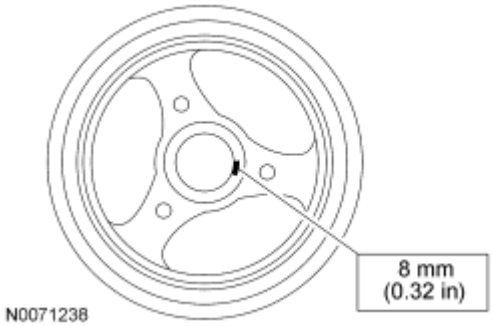

Fig. 493: Applying Sealant To Woodruff Key Slot
Courtesy of FORD MOTOR CO.

46. Using the special tool, install the crankshaft pulley.

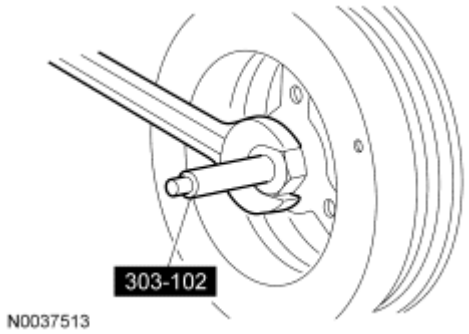

Fig. 494: Installing Crankshaft Pulley
Courtesy of FORD MOTOR CO.

NOTE: Use a suitable strap wrench to hold the pulley.

47. Tighten the crankshaft pulley bolt in 4 stages.
    - Stage 1: Tighten to 90 Nm (66 lb-ft).
    - Stage 2: Loosen 360 degrees.
    - Stage 3: Tighten to 50 Nm (37 lb-ft).
    - Stage 4: Rotate an additional 90 degrees (1/4 turn).

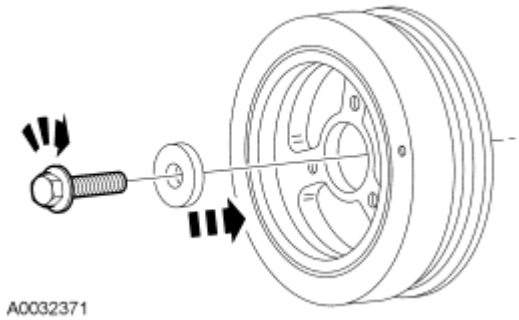

Fig. 495: Installing Crankshaft Pulley Bolt & Washer
Courtesy of FORD MOTOR CO.

48. Position the coolant pump pulley on the coolant pump and install the bolts.
    - Tighten to 25 Nm (18 lb-ft).

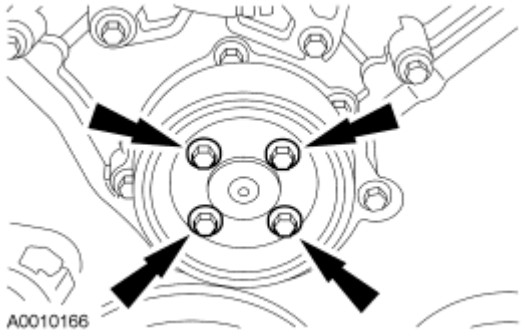

Fig. 496: Coolant Pump Pulley Bolts
Courtesy of FORD MOTOR CO.

49. Install the accessory drive belt idler pulley and bolt.
    - Tighten to 25 Nm (18 lb-ft).

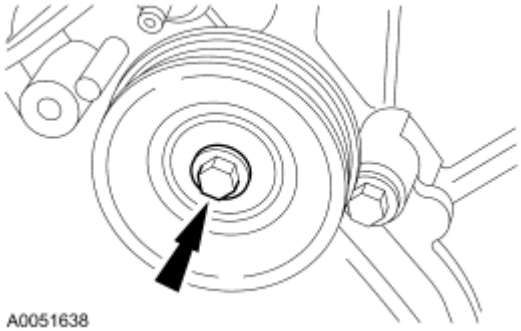

Fig. 497: Accessory Drive Belt Idler Pulley Bolt
Courtesy of FORD MOTOR CO.

CAUTION: If not secured within 4 minutes, sealant must be removed and the sealing area cleaned with metal surface cleaner. Allow to dry until there is no sign of wetness, or 4 minutes, whichever is longer. Failure to follow this procedure may cause future oil leakage.

50. Apply sealant in 2 places where the engine front cover meets the cylinder head.

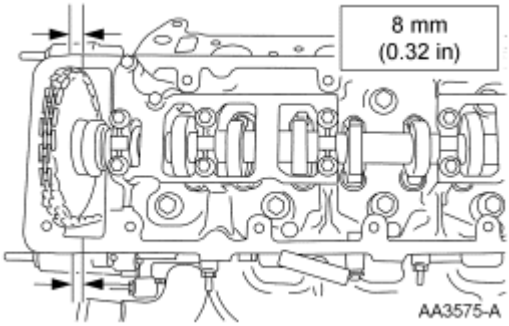

Fig. 498: Applying Sealant At Engine Front Cover/Cylinder Head Surface

Courtesy of FORD MOTOR CO.

51. Install the new valve cover gasket into the valve cover and position on the cylinder head. Tighten the bolts in the sequence shown.
    - Tighten to 10 Nm (89 lb-in).

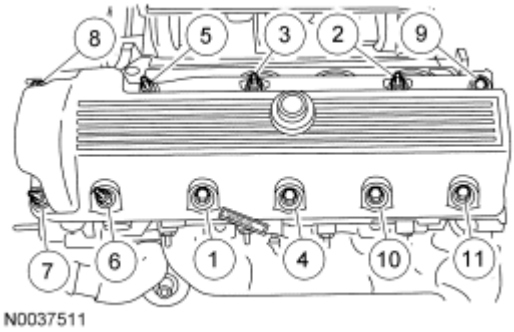

Fig. 499: Valve Cover Torque Sequence
Courtesy of FORD MOTOR CO.

CAUTION: If not secured within 4 minutes, sealant must be removed and the sealing area cleaned with metal surface cleaner. Allow to dry until there is no sign of wetness, or 4 minutes, whichever is longer. Failure to follow this procedure may cause future oil leakage.

52. Apply sealant in 2 places where the engine front cover meets the cylinder head.

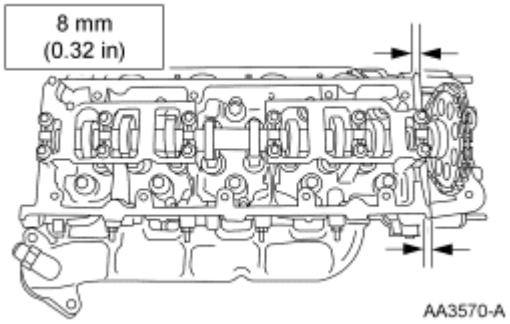

Fig. 500: Applying Sealant At Engine Front Cover/Cylinder Head Surface
Courtesy of FORD MOTOR CO.

53. Install the gasket into the valve cover and position on the cylinder head. Tighten the bolts in the sequence shown.
    - Tighten to 10 Nm (89 lb-in).

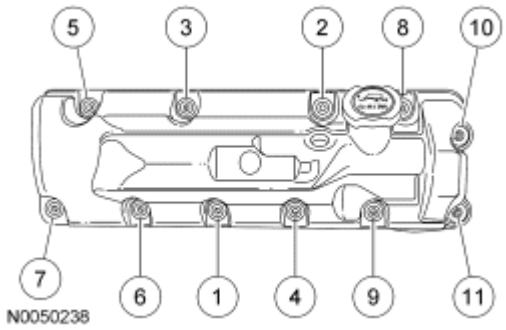

Fig. 501: Valve Cover Torque Sequence
Courtesy of FORD MOTOR CO.

54. Inspect the O-ring seals. Install new seals if necessary.

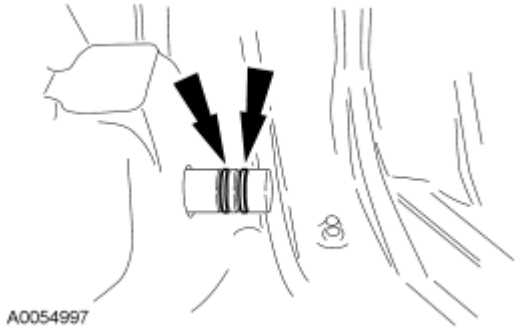

Fig. 502: O-Ring Seals
Courtesy of FORD MOTOR CO.

55. Install the coolant bypass tube.

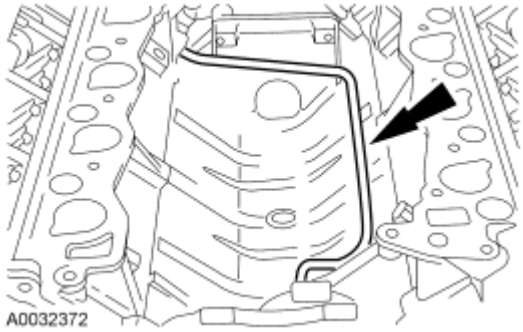

Fig. 503: Coolant Bypass Tube
Courtesy of FORD MOTOR CO.

56. Install the ground strap on the rear of the RH cylinder head.
    1. Install the stud bolt and tighten to 25 Nm (18 lb-ft).
    2. Install the ground strap.
    3. Install the retaining nut and tighten to 10 Nm (89 lb-in).

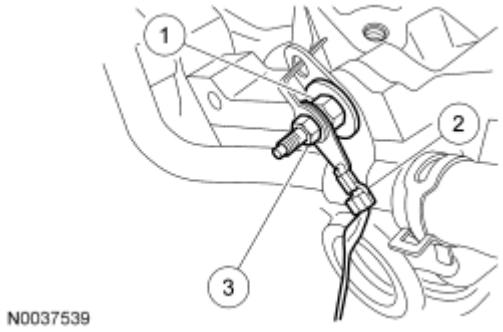

Fig. 504: Ground Strap, Stud & Nut
Courtesy of FORD MOTOR CO.

NOTE: Align the gasket locator tabs to slots in cylinder head.

57. Install the new intake manifold gaskets, intake manifold and hand-tighten the bolts at the locations shown.

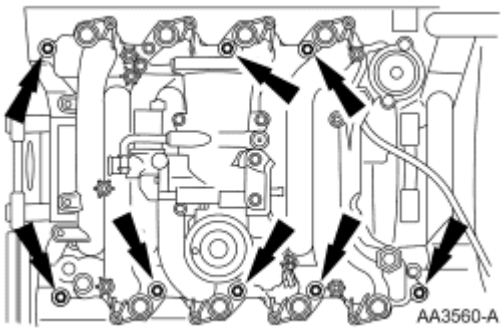

Fig. 505: Intake Manifold Bolts
Courtesy of FORD MOTOR CO.

58. Install the 8 ignition coils and tighten the 8 bolts.
    - Tighten to 10 Nm (89 lb-in).

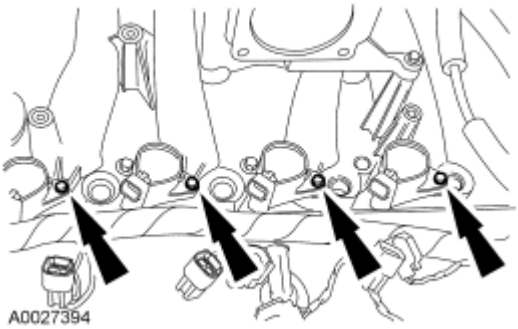

Fig. 506: Ignition Coils & Bolts
Courtesy of FORD MOTOR CO.

59. Install the intake manifold bracket and loosely install the bolt and the stud bolt.

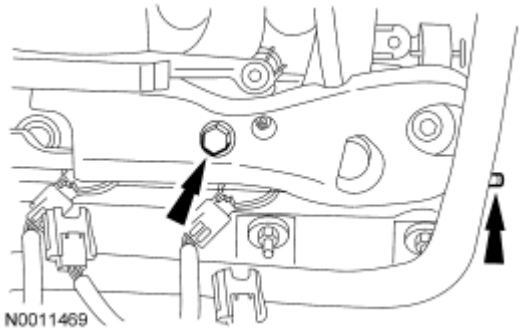

Fig. 507: Intake Manifold Crash Bracket Bolt
Courtesy of FORD MOTOR CO.

60. Install the thermostat.

Fig. 508: Thermostat
Courtesy of FORD MOTOR CO.

61. Install the coolant outlet adapter and loosely install the 2 bolts.

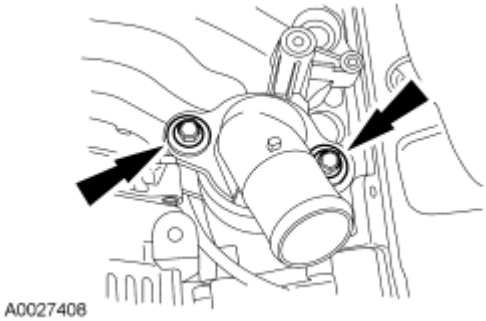

Fig. 509: Coolant Outlet Adapter & Bolts
Courtesy of FORD MOTOR CO.

62. Tighten the bolts in the sequence shown.
    - Tighten to 25 Nm (18 lb-ft).

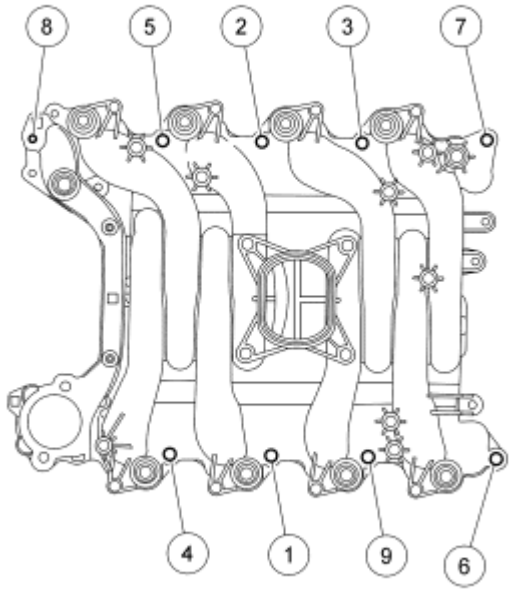

N0037509

Fig. 510: Intake Manifold Bolt Tightening Torque Sequence
Courtesy of FORD MOTOR CO.

63. Tighten the stud bolt.
    - Tighten to 25 Nm (18 lb-ft).

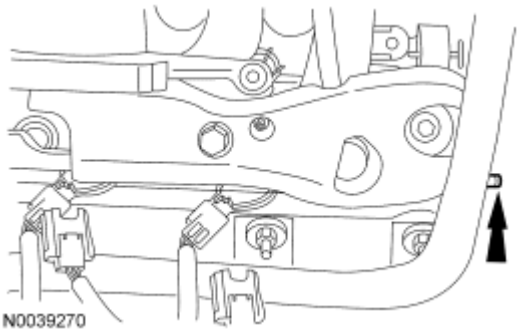

N0039270

Fig. 511: Stud Bolt
Courtesy of FORD MOTOR CO.

64. Tighten the bolts.
    - Tighten to 25 Nm (18 lb-ft).

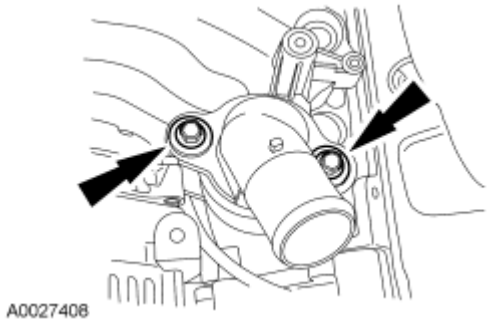

Fig. 512: Coolant Outlet Adapter & Bolts
Courtesy of FORD MOTOR CO.

65. Connect the EGR tube to the EGR valve.
    - Tighten to 40 Nm (30 lb-ft).

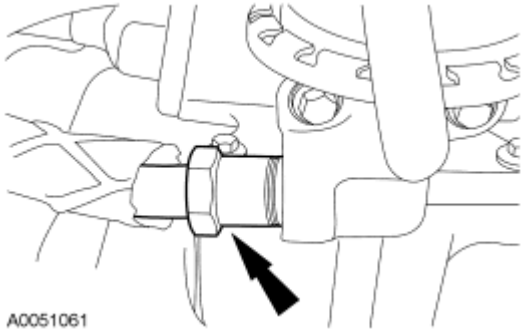

Fig. 513: EGR Tube Nut At EGR
Courtesy of FORD MOTOR CO.

66. Connect the EGR tube-to-exhaust manifold connector.
    - Tighten to 40 Nm (30 lb-ft).

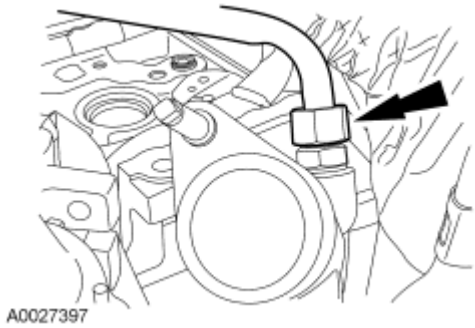

Fig. 514: EGR Tube At Exhaust Manifold
Courtesy of FORD MOTOR CO.

67. Position the fuel charging wiring at 2 locations at the back of the intake manifold.
68. Install the generator and the 2 bolts.

- Tighten to 25 Nm (18 lb-ft).

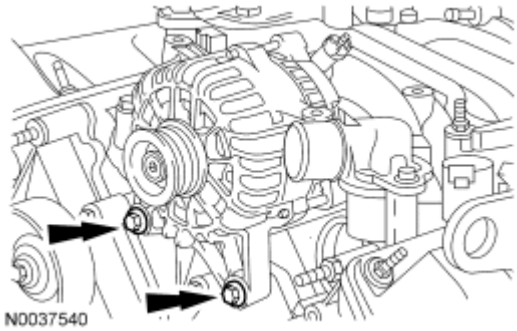

Fig. 515: Generator & Bolts
Courtesy of FORD MOTOR CO.

69. Connect the throttle control and the throttle position (TP) sensor electrical connector.

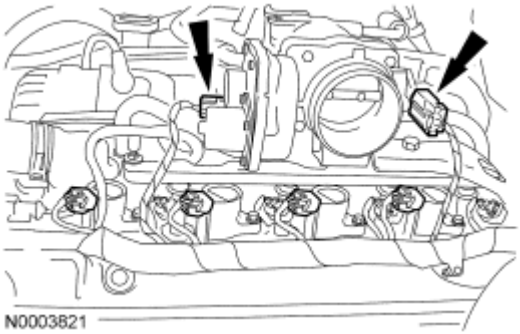

Fig. 516: Locating Throttle Control And Throttle Position (TP) Sensor Electrical Connectors
Courtesy of FORD MOTOR CO.

70. Install the generator mounting bracket and the 4 bolts.
    - Tighten to 10 Nm (89 lb-in).

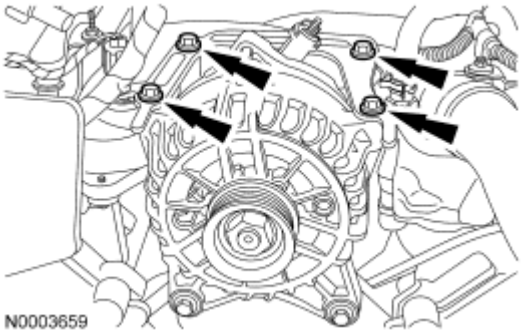

Fig. 517: Generator Mounting Bracket Bolts
Courtesy of FORD MOTOR CO.

71. Connect the generator electrical connector.

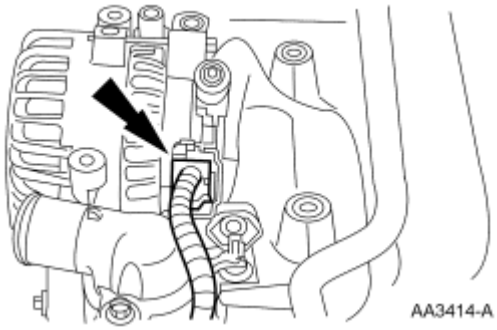

Fig. 518: Generator Electrical Connector
Courtesy of FORD MOTOR CO.

72. Connect the electrical connector to the EGR vacuum regulator solenoid.

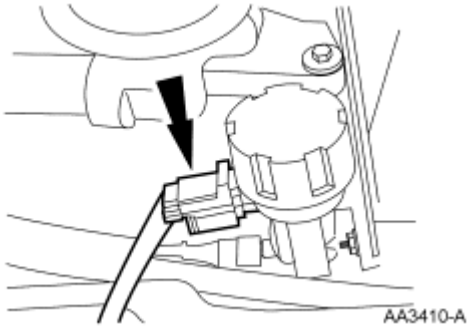

Fig. 519: EGR Vacuum Regulator Solenoid Electrical Connector
Courtesy of FORD MOTOR CO.

73. Install the generator wiring harness anchor to the LH front stud.

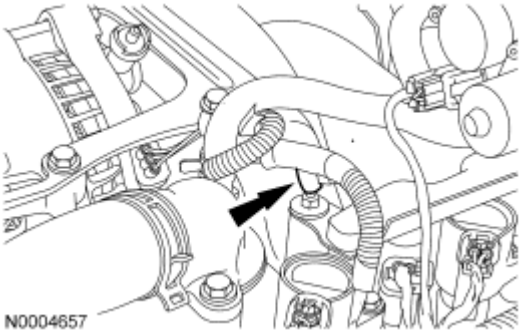

Fig. 520: Generator Wiring Harness Anchor
Courtesy of FORD MOTOR CO.

74. Connect the crankcase ventilation tube.

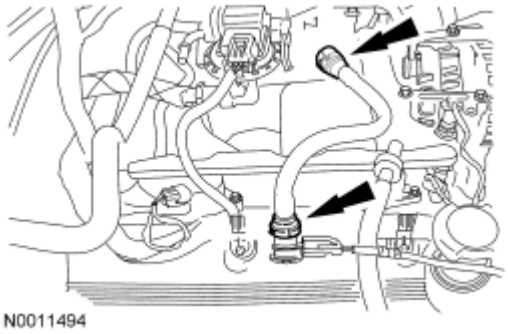

Fig. 521: Crankcase Ventilation Tube
Courtesy of FORD MOTOR CO.

75. Install the intake manifold shield and the 2 bolts.
    - Tighten to 12 Nm (9 lb-ft).

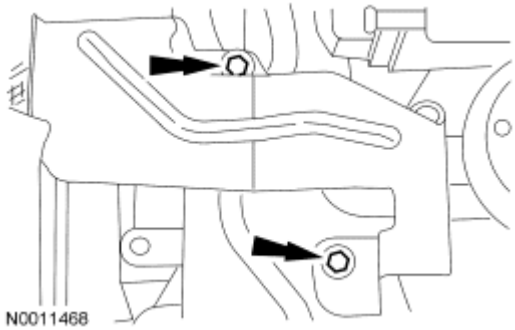

Fig. 522: Intake Manifold Shield
Courtesy of FORD MOTOR CO.

76. Connect the 8 fuel injector electrical connectors.

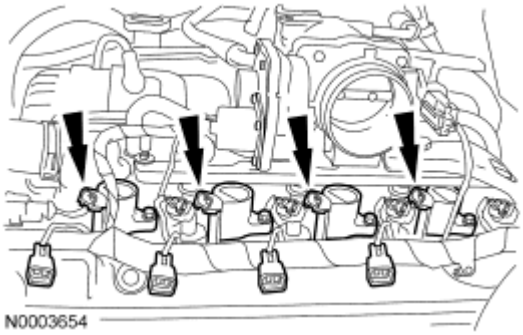

Fig. 523: Ignition Coil Electrical Connectors
Courtesy of FORD MOTOR CO.

77. Connect the 8 ignition coil electrical connectors.

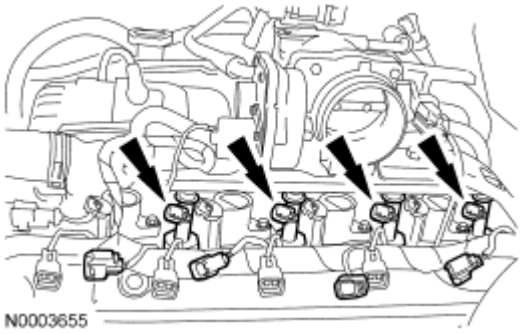

Fig. 524: Fuel Injector Electrical Connectors
Courtesy of FORD MOTOR CO.

78. Connect the camshaft position (CMP) sensor electrical connector.

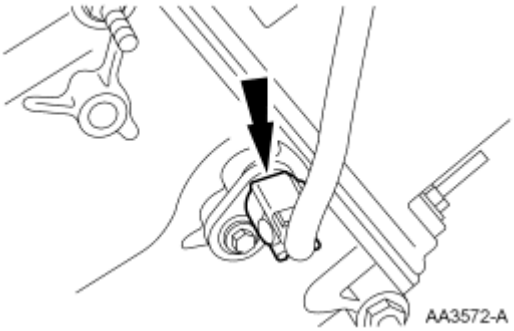

Fig. 525: Camshaft Position (CMP) Sensor Electrical Connector
Courtesy of FORD MOTOR CO.

79. Connect the radio interference capacitor electrical connector.

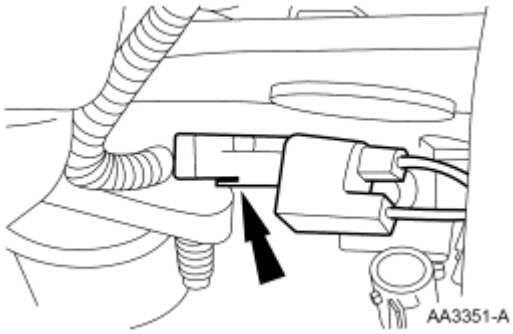

Fig. 526: Radio Ignition Interference Capacitor
Courtesy of FORD MOTOR CO.

80. Connect the cylinder head temperature (CHT) sensor electrical connector.

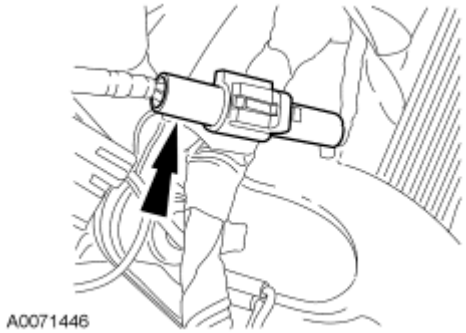

Fig. 527: Cylinder Head Temperature (CHT) Sensor Electrical Connector
Courtesy of FORD MOTOR CO.

81. Connect the ground wire to the right rear fuel rail stud.

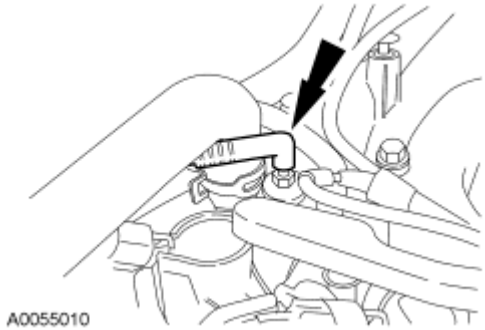

Fig. 528: Ground Wire
Courtesy of FORD MOTOR CO.

82. Install the battery cables and the bolt.
83. Install the special tool to the RH cylinder head.

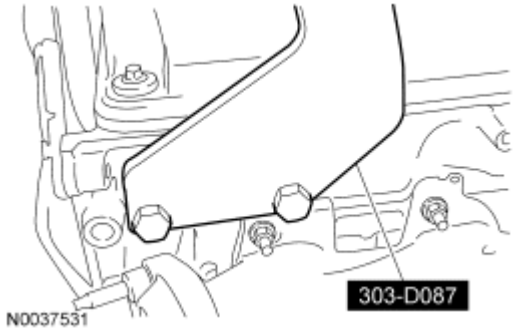

Fig. 529: Installing Special Tool To RH Cylinder Head
Courtesy of FORD MOTOR CO.

84. Install the special tool to the LH cylinder head.

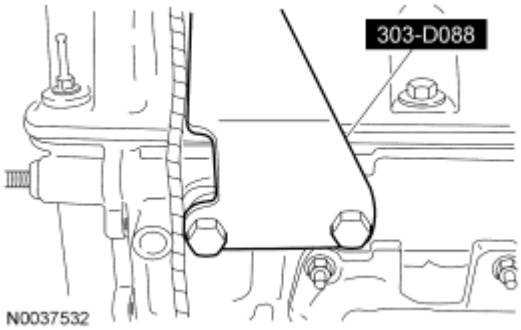

Fig. 530: Installing Special Tool To LH Cylinder Head
Courtesy of FORD MOTOR CO.

85. Using the special tool, remove the engine from the engine stand.

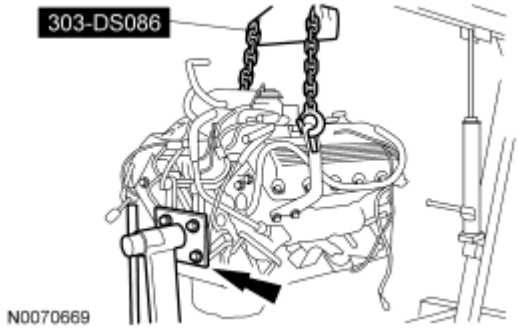

Fig. 531: Mounting Engine On A Suitable Engine Stand
Courtesy of FORD MOTOR CO.

86. Install the engine/transmission spacer plate.

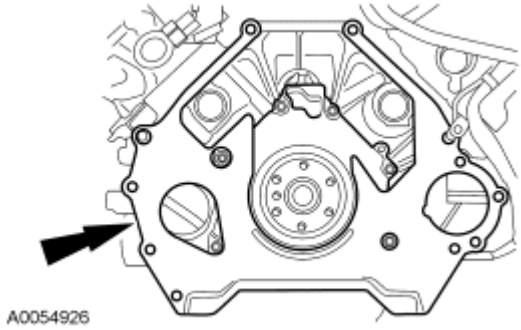

Fig. 532: Engine-To-Transmission Spacer Plate
Courtesy of FORD MOTOR CO.

87. Position the flexplate and install the bolts in the sequence shown.
    - Tighten to 80 Nm (59 lb-ft).

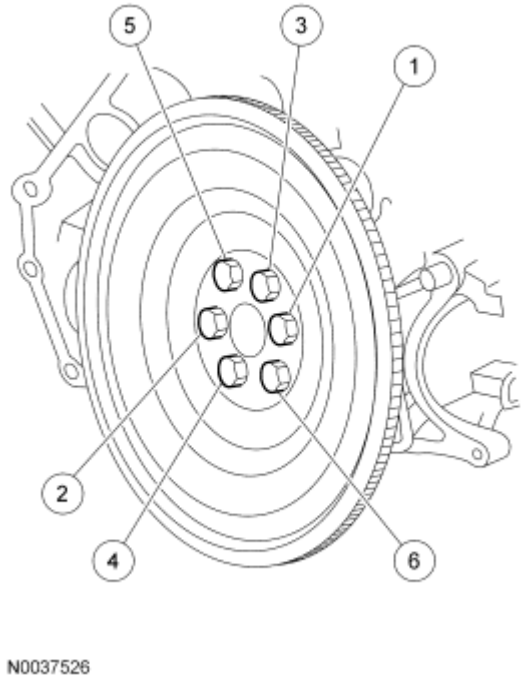

Fig. 533: Flexplate Bolt Torque Sequence
Courtesy of FORD MOTOR CO.

88. Install the engine. For additional information, refer to **Engine** in the Installation portion of this section.

WARNING: If equipped with fire suppression system, repower the system. For important safety warnings and procedures, refer to FIRE SUPPRESSION SYSTEM article.

89. If equipped with fire suppression system, repower the system

ENGINE

Special Tools

Illustration	Tool Name	Tool Number
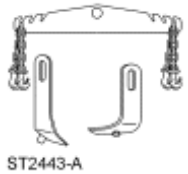 ST2443-A	Lifting Bracket Set, Engine	303-DS086 (D93P-6001-A)
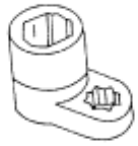 ST1448-A	Socket, Exhaust Gas Oxygen Sensor	303-476 (T94P-9472-A)

Material

Item	Specification
Motorcraft SAE 5W-20 Premium Synthetic Blend Motor Oil XO-5W20-QSP (US); Motorcraft SAE 5W-20 Super Premium Motor Oil CXO-5W20-LSP12 (Canada); or equivalent	WSS-M2C930-A

INSTALLATION

WARNING: If equipped with fire suppression system, depower the system. For important safety warnings and procedures, refer to FIRE SUPPRESSION SYSTEM article.

1. With the vehicle in NEUTRAL, position it on a hoist. For additional information, refer to **JACKING AND LIFTING** article.
2. Using the special tool, install the engine assembly in the vehicle.

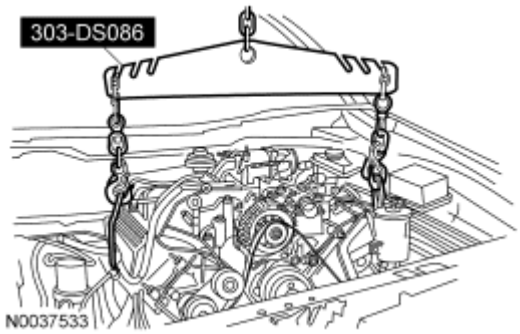

Fig. 534: Special Tools
Courtesy of FORD MOTOR CO.

NOTE: When vehicle is raised, verify that the torque converter is correctly seated.

3. Install the 4 bolts and 1 stud.
   - Tighten to 34 Nm (25 lb-ft).

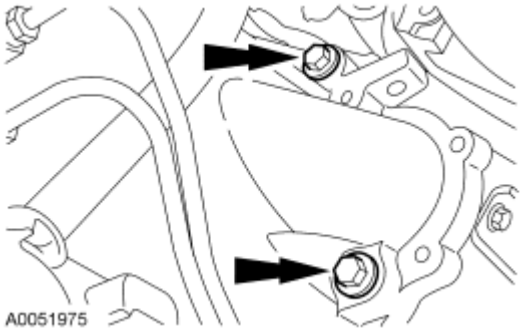

Fig. 535: Transmission Bolts
Courtesy of FORD MOTOR CO.

4. Attach the wiring harness to the retainers on the transmission.
5. Connect the output shaft speed sensor, transmission range sensor and the turbine shaft speed sensor electrical connectors.

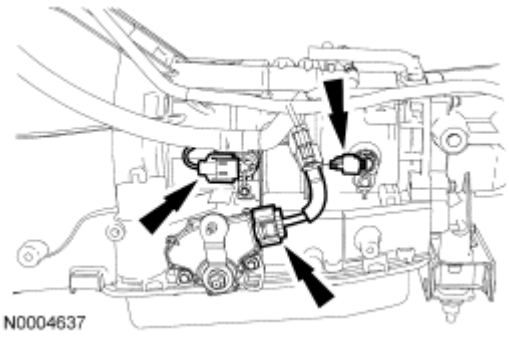

Fig. 536: Output Shaft Speed Sensor, Transmission Range Sensor & Turbine Shaft Speed Sensor Electrical Connectors
Courtesy of FORD MOTOR CO.

6. Connect the heated oxygen sensor (HO2S) and the solenoid body sensor electrical sensors.

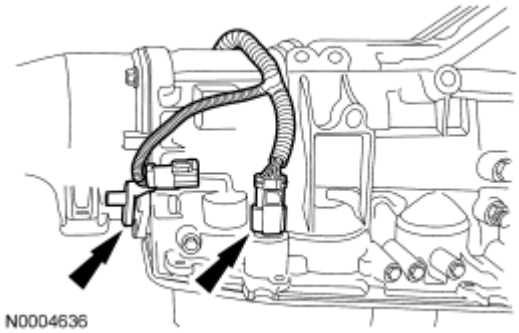

Fig. 537: HO2S Sensor & Solenoid Body Sensor Electrical Connectors
Courtesy of FORD MOTOR CO.

7. Raise the transmission and install the transmission insulator.
8. Install the 2 insulator bolts.
   - Tighten to 90 Nm (66 lb-ft).

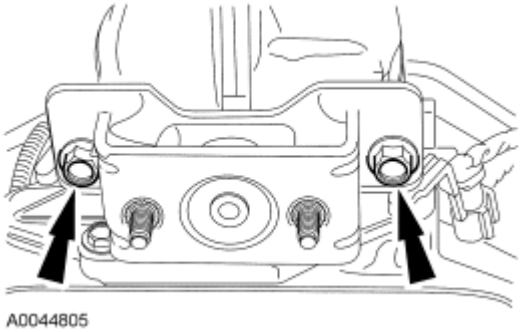

Fig. 538: Rear Transmission Insulator Bolts
Courtesy of FORD MOTOR CO.

9. Lower the transmission and install the 2 transmission insulator nuts.
   - Tighten to 30 Nm (22 lb-ft).

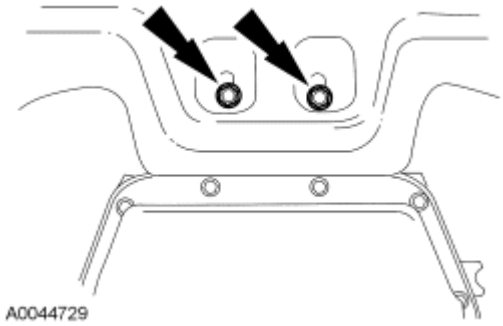

Fig. 539: Rear Transmission Insulator Nuts
Courtesy of FORD MOTOR CO.

NOTE: LH shown, RH similar.

10. Install the 2 engine mount nuts.
    - Tighten to 90 Nm (66 lb-ft).

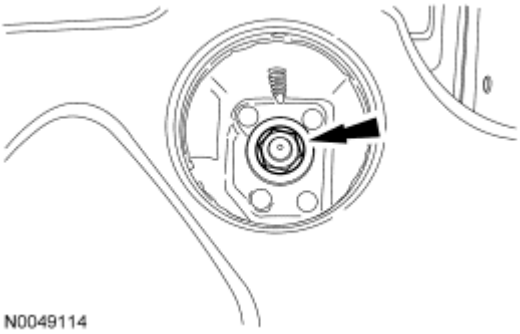

Fig. 540: Engine Mount Nut
Courtesy of FORD MOTOR CO.

11. Using the special tool, install the LH HO2S.
    - Tighten to 41 Nm (30 lb-ft).

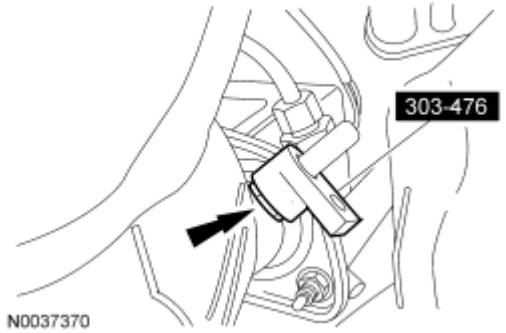

Fig. 541: Heated Oxygen Sensor (HO2S) Special Tool
Courtesy of FORD MOTOR CO.

12. Connect the LH HO2S electrical connector.

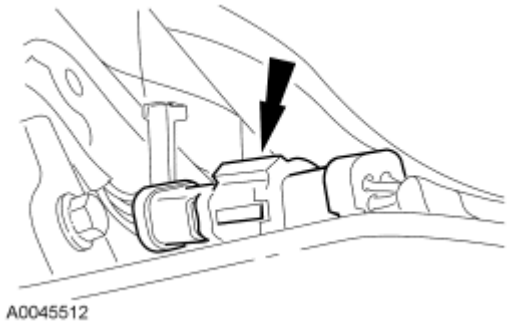

Fig. 542: LH HO2S Electrical Connector
Courtesy of FORD MOTOR CO.

13. Install the 4 torque converter nuts.
    - Rotate the crankshaft to access the nuts.
    - Tighten to 36 Nm (27 lb-ft).

Fig. 543: Torque Converter Nut
Courtesy of FORD MOTOR CO.

14. Install the rubber access plug.

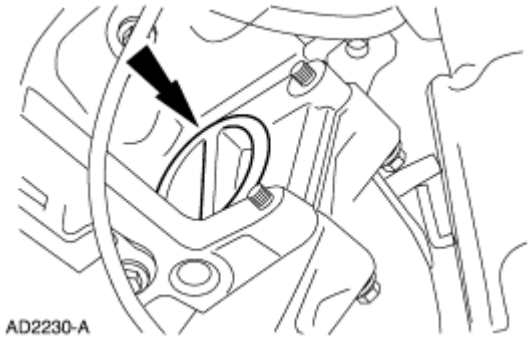

Fig. 544: Locating Rubber Access Plug
Courtesy of FORD MOTOR CO.

15. Install the inspection cover and the 3 bolts.
    - Tighten to 19 Nm (14 lb-ft).

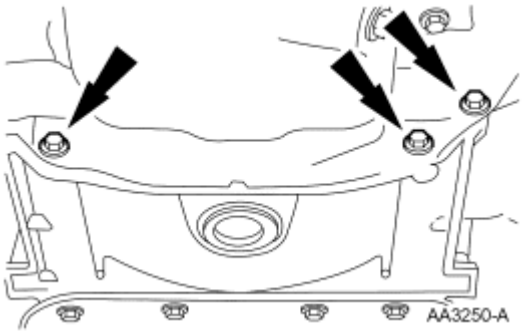

Fig. 545: Inspection Cover & Bolts
Courtesy of FORD MOTOR CO.

16. Install the starter motor and install the upper and lower starter bolts finger-tight.
    - Tighten the upper bolt to 25 Nm (18 lb-ft).
    - Tighten the lower bolt to 25 Nm (18 lb-ft).

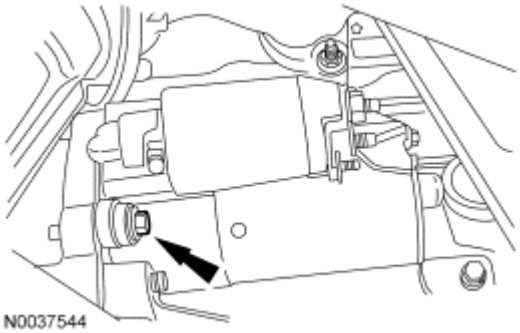

Fig. 546: Starter Motor Bolt
Courtesy of FORD MOTOR CO.

17. Connect the starter electrical connections and install the nuts.

- Tighten the B-terminal nut to 12 Nm (9 lb-ft).
- Tighten the S-terminal nut to 6 Nm (53 lb-in).
- Install the solenoid terminal cover.

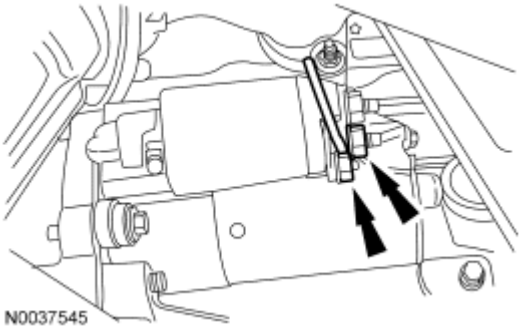

Fig. 547: Starter Motor Electrical Connections
Courtesy of FORD MOTOR CO.

18. Position the exhaust, install the 4 nuts and remove the support.
    - Tighten to 48 Nm (35 lb-ft).

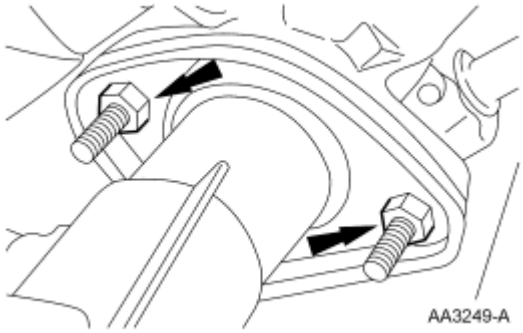

Fig. 548: Exhaust Nuts
Courtesy of FORD MOTOR CO.

19. Install the power steering pump and the 4 bolts.
    - Tighten to 25 Nm (18 lb-ft).

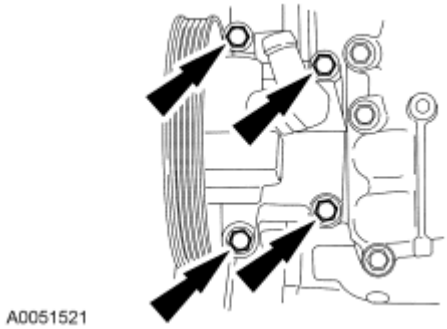

Fig. 549: Power Steering Pump Bolts
Courtesy of FORD MOTOR CO.

20. Install the A/C compressor and the 3 bolts.
    - Tighten to 25 Nm (18 lb-ft).

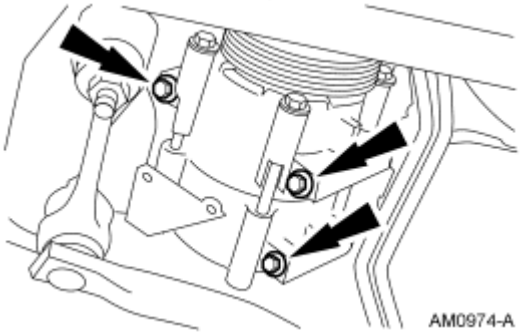

Fig. 550: A/C Compressor Bolts
Courtesy of FORD MOTOR CO.

21. Connect the A/C compressor electrical connector.

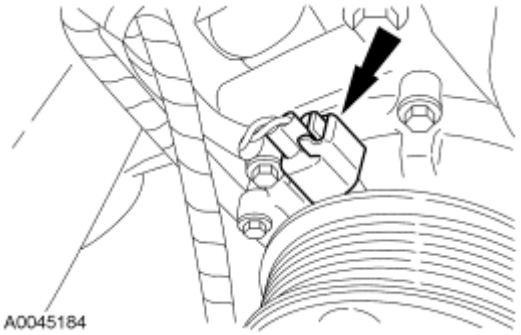

Fig. 551: A/C Compressor Electrical Connector
Courtesy of FORD MOTOR CO.

22. Connect the engine wiring harness retainers to the A/C compressor.

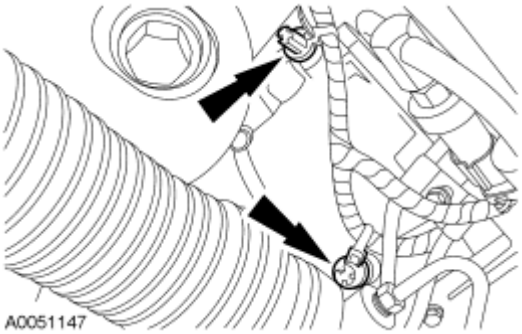

Fig. 552: Engine Wiring Harness Retainers
Courtesy of FORD MOTOR CO.

23. Connect the crankshaft position (CKP) sensor electrical connector.

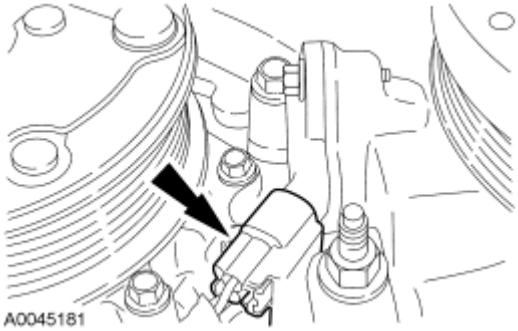

Fig. 553: Crankshaft Position (CKP) Sensor Electrical Connector
Courtesy of FORD MOTOR CO.

24. Position the transmission oil cooler tubes and install the bolt.
    - Tighten to 15 Nm (11 lb-ft).

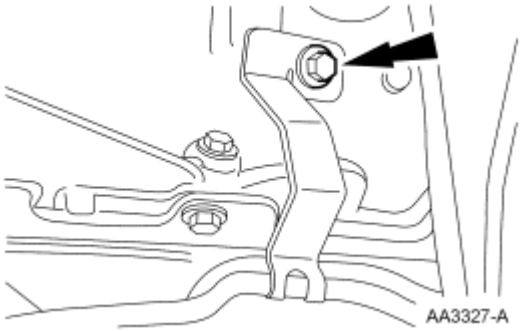

Fig. 554: Transmission Cooler Tube Support Bracket Bolt
Courtesy of FORD MOTOR CO.

25. Install the transmission cooler tube support bracket.
    - Tighten to 10 Nm (89 lb-in).

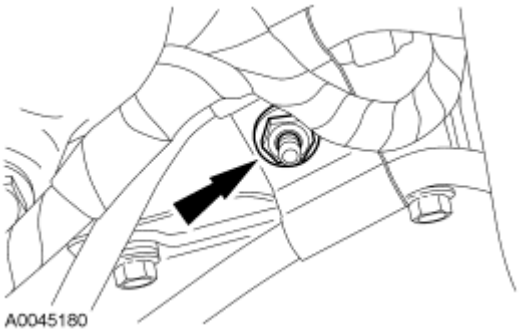

Fig. 555: Transmission Cooler Tube Support Bracket Nut
Courtesy of FORD MOTOR CO.

26. Install the power steering tube bracket.
    - Tighten to 10 Nm (89 lb-in).

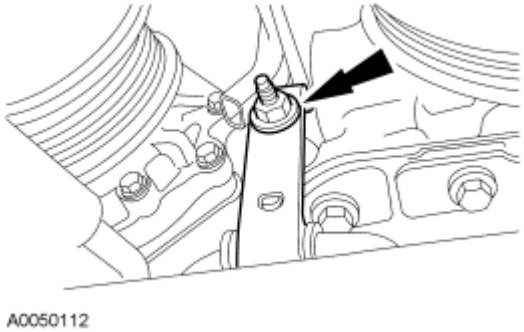

Fig. 556: Power Steering Tube Bracket
Courtesy of FORD MOTOR CO.

CAUTION: The oil cooler must be replaced or severe damage to the engine can occur.

27. If equipped, install a new oil cooler and oil cooler hoses. For additional information, refer to **Oil Cooler**.
28. Connect the power steering pressure (PSP) switch electrical connector.

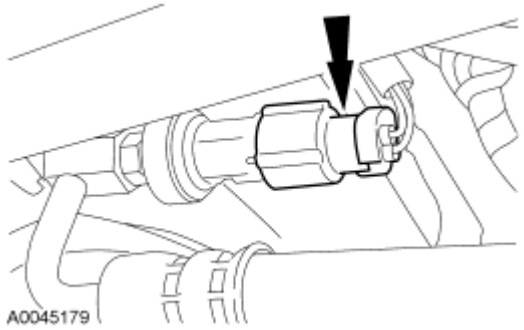

Fig. 557: Power Steering Pressure (PSP) Switch Electrical Connector
Courtesy of FORD MOTOR CO.

29. Connect the power steering electrical connector.

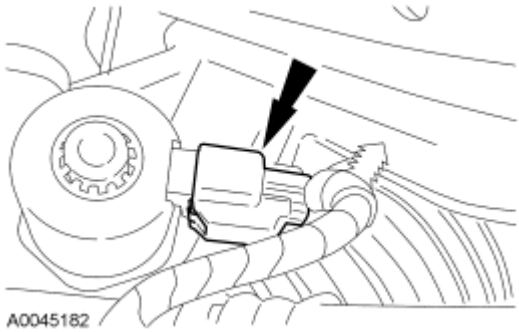

Fig. 558: Block Heater Electrical Connector
Courtesy of FORD MOTOR CO.

30. If equipped, connect the block heater electrical connector.
31. Connect the oil pressure sender electrical connector.

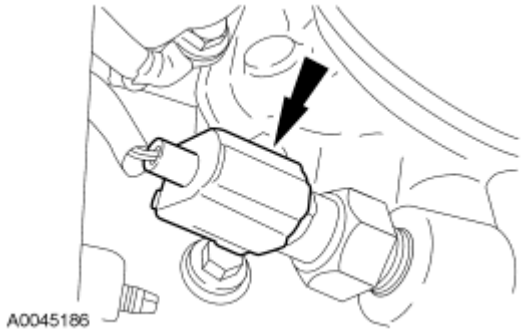

Fig. 559: Oil Pressure Sender Electrical Connector
Courtesy of FORD MOTOR CO.

32. Install the 2 top bellhousing bolts.
    - Tighten to 48 Nm (35 lb-ft).

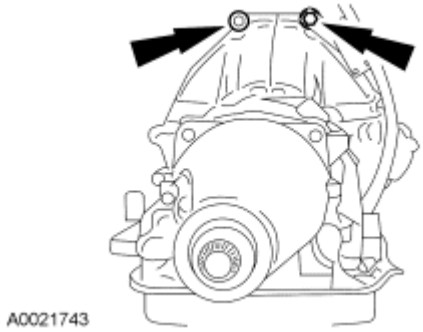

Fig. 560: Top Transmission Bolts
Courtesy of FORD MOTOR CO.

33. Install the cooling fan. For additional information, refer to **ENGINE COOLING** article.

NOTE: Do not reuse hose clamps. Use appropriately sized worm-style clamps in place of the constant tension clamps.

34. Connect the lower radiator hose.

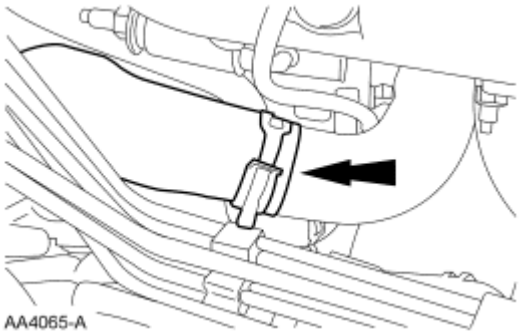

Fig. 561: Lower Radiator Hose
Courtesy of FORD MOTOR CO.

35. Connect the upper radiator hose to the hose connection.

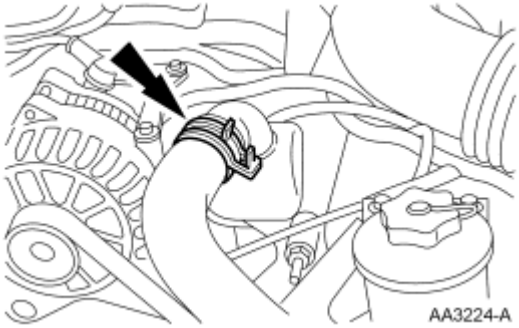

Fig. 562: Upper Radiator Hose
Courtesy of FORD MOTOR CO.

36. Connect the PCM electrical connectors.

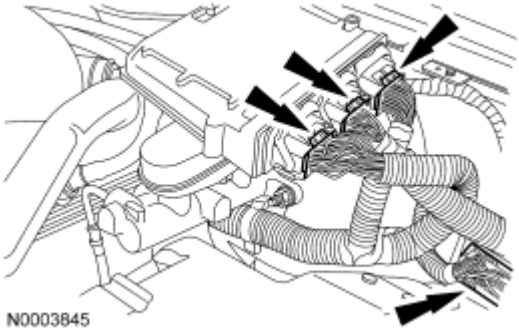

Fig. 563: PCM Electrical Connectors
Courtesy of FORD MOTOR CO.

37. Position the ground strap and install the bolt.
    - Tighten to 10 Nm (89 lb-in).

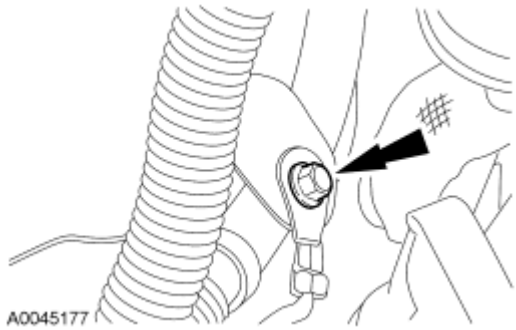

Fig. 564: Ground Strap
Courtesy of FORD MOTOR CO.

NOTE: Do not reuse hose clamps. Use appropriately sized worm-style clamps in place of the constant tension clamps.

38. Connect the heater hoses.

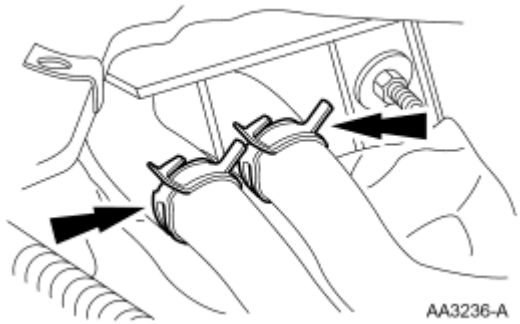

Fig. 565: Heater Hoses
Courtesy of FORD MOTOR CO.

39. Connect the A/C low charge protection switch electrical connector.

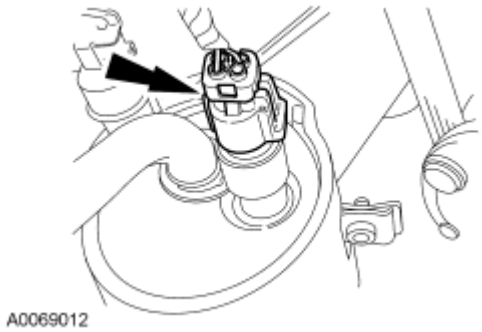

Fig. 566: A/C Low Charge Protection Switch Electrical Connector

Courtesy of FORD MOTOR CO.

40. Connect the A/C electrical connector.

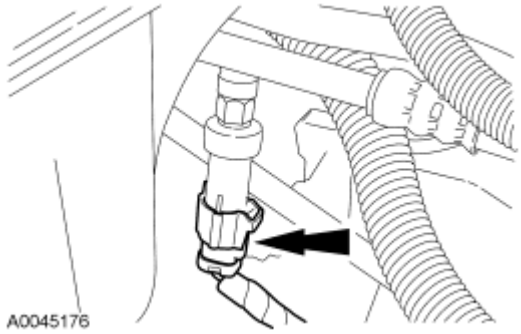

Fig. 567: A/C Electrical Connector
Courtesy of FORD MOTOR CO.

41. Install the ground strap.
    - Tighten to 10 Nm (89 lb-in).

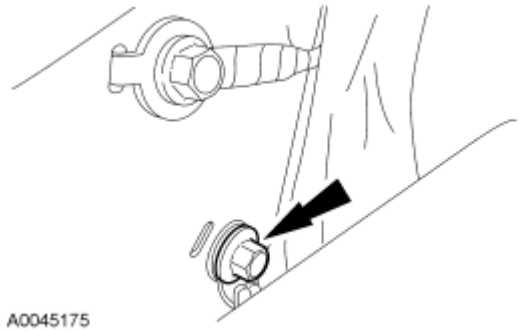

Fig. 568: Ground Wire Bolt
Courtesy of FORD MOTOR CO.

42. Attach the pin-type retainer and install the generator battery cable and nut.
    - Tighten to 9 Nm (80 lb-in).

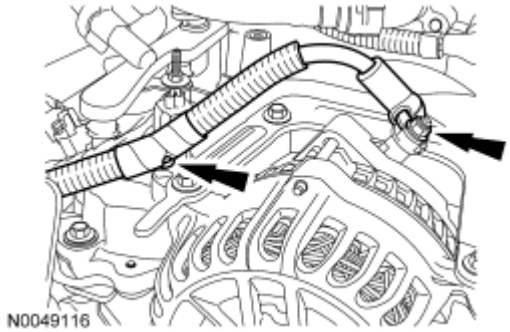

Fig. 569: Generator Battery Cable & Retainer

Courtesy of FORD MOTOR CO.

43. Attach the generator battery cable retainer to the RH valve cover stud bolt.

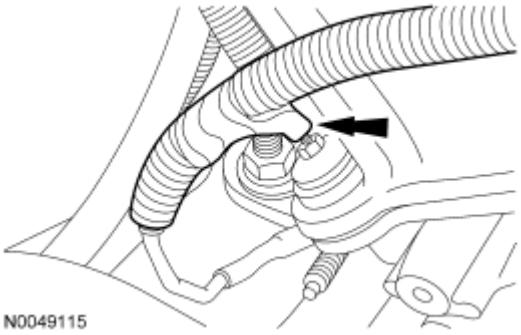

Fig. 570: Generator Battery Cable Retainer
Courtesy of FORD MOTOR CO.

44. Connect the fuel tube spring lock coupling. For additional information, refer to **FUEL SYSTEM - GENERAL INFORMATION** article.
45. Connect the 2 hoses and the canister purge valve electrical connection.

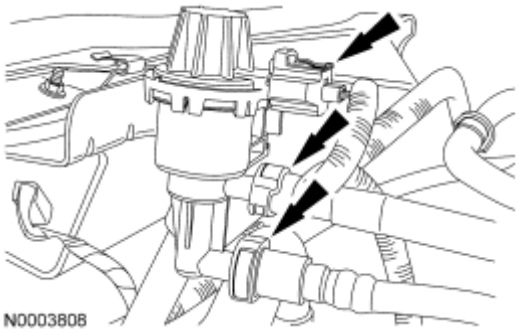

Fig. 571: Evaporative Emission (EVAP) Canister Purge Valve
Courtesy of FORD MOTOR CO.

46. Connect the vacuum hose.

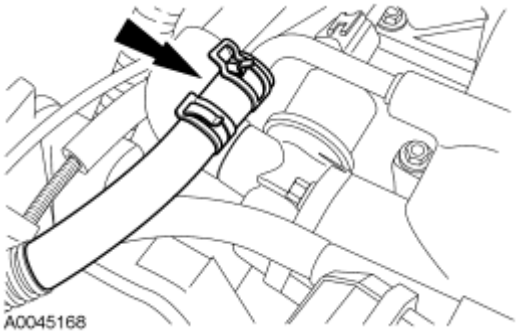

Fig. 572: Vacuum Hose
Courtesy of FORD MOTOR CO.

47. Install the air cleaner and outlet pipe. For additional information, refer to **INTAKE AIR DISTRIBUTION AND FILTERING** article.
48. Install the accessory drive belt. For additional information, refer to **ACCESSORY DRIVE** article.
49. Install the support bracket and the 2 nuts.
    - Tighten to 10 Nm (89 lb-in).

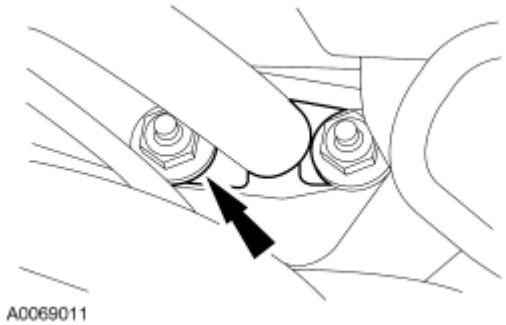

Fig. 573: Support Bracket & Nuts
Courtesy of FORD MOTOR CO.

50. Install the wiper mounting arm and pivot shaft. For additional information, refer to **WIPERS AND WASHERS** article.
51. Fill the crankcase with clean engine oil.
52. Connect both battery cables. For additional information, refer to **CHARGING SYSTEM - GENERAL INFORMATION** article.
53. Fill and bleed the cooling system. For additional information, refer to **ENGINE COOLING** article.
54. Install the hood.

WARNING: **If equipped with fire suppression system, repower the system. For important safety warnings and procedures, refer to FIRE SUPPRESSION SYSTEM article.**

55. If equipped with fire suppression system, repower the system.

