2009 ENGINE

Engine Mechanical (2GR-FE) - Highlander

ENGINE

ON-VEHICLE INSPECTION

1. **INSPECT ENGINE COOLANT**
   a. Inspect the engine coolant (See **COOLING SYSTEM**).
2. **INSPECT ENGINE OIL**
   a. Inspect the engine oil (See **LUBRICATION SYSTEM**).
3. **INSPECT BATTERY**
   a. Inspect the battery (See **PROBLEM SYMPTOMS TABLE**).
4. **INSPECT AIR CLEANER FILTER ELEMENT SUB-ASSEMBLY**
   a. Remove the air cleaner filter element sub-assembly.
   b. Visually check that there is no dirt, blockage, and/or damage to the air cleaner filter element sub-assembly.

      HINT:

      - If there is any dirt or a blockage in the air cleaner filter element sub-assembly, clean it with compressed air.
      - If any dirt or a blockage remains even after cleaning the air cleaner filter element sub-assembly with compressed air, replace it.
5. **INSPECT SPARK PLUG**
   a. Inspect the spark plugs (See **ON-VEHICLE INSPECTION**).
6. **INSPECT VALVE LASH ADJUSTER NOISE**
   a. Rev up the engine several times. Check that the engine does not emit unusual noises. If unusual noises occur, warm up the engine and idle it for over 30 minutes. Then perform the preceding inspection.

      HINT:

      If any defects or problems are found during the preceding inspection, perform valve lash adjuster inspection (See **INSPECTION**).

7. **INSPECT IGNITION TIMING**
   a. When using Techstream:

      Check the ignition timing.

      1. Connect Techstream to the DLC3.

 © 2011 Mitchell Repair Information Company, LLC.

2. Warm up the engine.
3. Turn the tester on.
4. Enter the following menu items: Powertrain/Engine and ECT/Data List/IGN Advance.
5. Read the value displayed on the tester.

Ignition timing:

8 to 12° BTDC at idle

HINT:

Refer to Techstream operator's manual for help when selecting the DATA LIST.

b. When not using Techstream:

Check the ignition timing.

1. Warm up the engine.
2. Using SST, connect terminals 13 (TC) and 4 (CG) of the DLC3.

SST 09843-18040

NOTE:

- **Confirm the terminal numbers before connecting them. Connecting the wrong terminals can damage the engine.**
- **Turn off all electrical systems before connecting the terminals.**
- **Perform this inspection after the cooling fan motor is turned off.**

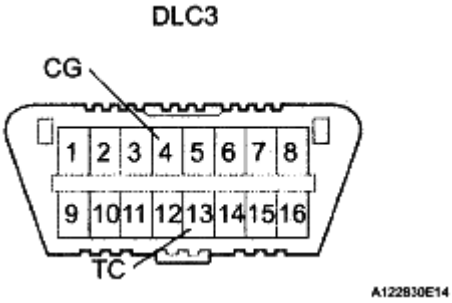

Fig. 1: Identifying DLC3 Connector
Courtesy of TOYOTA MOTOR SALES, U.S.A., INC.

3. Remove the V-bank cover sub-assembly.
4. Pull out the red lead wire harness.
5. Connect the tester terminal of the timing light to the red lead wire as shown in the

 © 2011 Mitchell Repair Information Company, LLC.

illustration.

NOTE: Use a timing light which detects the No. 1 cylinder ignition signal.

6. Check the ignition timing at idle.

   Standard ignition timing:

   8 to 12° BTDC at idle

   NOTE: When checking the ignition timing, the transmission should be in the neutral position.

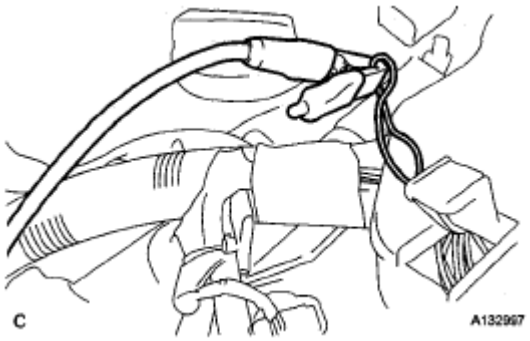

Fig. 2: Connecting Tester Terminal Of Timing Light To Red Lead Wire
Courtesy of TOYOTA MOTOR SALES, U.S.A., INC.

HINT:

Run the engine at 1000 to 1300 rpm for 5 seconds, and then check that the engine rpm returns to idle speed.

7. Disconnect terminals 13 (TC) and 4 (CG) of the DLC3.
8. Check the ignition timing at idle.

   Standard ignition timing:

   7 to 24° BTDC at idle

9. Confirm that the ignition timing advances immediately when the engine rpm is increased.
10. Remove the timing light from the engine.

8. **INSPECT ENGINE IDLE SPEED**
   a. When using Techstream: Check the idle speed.
      1. Connect Techstream to the DLC3.
      2. Warm up the engine.

 © 2011 Mitchell Repair Information Company, LLC.

3. Turn the tester on.
4. Enter the following menu items: Powertrain/Engine and ECT/Data List/Engine Speed.
5. Read the value displayed on the tester.

Idle speed:

600 to 700 rpm

NOTE:

- **When checking the idle speed, the transmission should be the in neutral position.**
- **Check the idle speed with the cooling fan off.**
- **Switch off all accessories and air conditioning before connecting Techstream.**

HINT:

Refer to Techstream operator's manual for further details.

b. When not using Techstream:

Check the idle speed.

1. Warm up the engine.
2. Using SST, connect the tachometer test probe to terminal 9 (TAC) of the DLC3.

SST 09843-18030

3. Check the idle speed.

Standard idle speed:

600 to 700 rpm

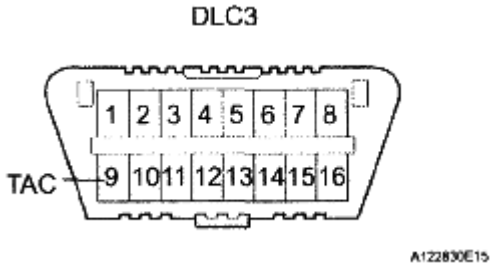

Fig. 3: Identifying DLC3 Connector
Courtesy of TOYOTA MOTOR SALES, U.S.A., INC.

9. **INSPECT COMPRESSION**

 © 2011 Mitchell Repair Information Company, LLC.

a. Warm up and stop the engine.
b. Disconnect the injector assembly connectors.
c. Remove the intake air surge tank assembly (See **REMOVAL**).
d. Remove the 6 ignition coils.
e. Remove the 6 spark plugs.
f. Check the cylinder compression pressure.
   1. Insert a compression gauge into the spark plug hole.
   2. While cranking the engine, measure the compression pressure.

      Standard compression pressure:

      1.3 MPa (13 kgf/cm^2 , 189 psi)

      Minimum pressure:

      0.98 MPa (10 kgf/cm^2 , 142 psi)

      Difference between each cylinder:

      0.1 MPa (1.0 kgf/cm^2 , 15 psi)

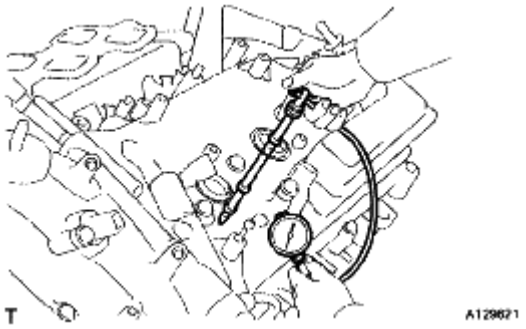

Fig. 4: Checking Cylinder Compression Pressure
Courtesy of TOYOTA MOTOR SALES, U.S.A., INC.

NOTE:

- **Always use a fully charged battery to obtain an engine speed of 250 rpm or more.**
- **Check the other cylinders' compression pressure in the same way.**
- **This measurement must be done as quickly as possible.**

   3. If the cylinder compression is low, pour a small amount of engine oil into the cylinder through the spark plug hole and inspect again.

 © 2011 Mitchell Repair Information Company, LLC.

HINT:

- If adding oil increases the compression, the piston rings and/or cylinder bore may be worn or damaged.
- If pressure stays low, a valve may be stuck or seated improperly, or there may be leakage in the gasket.

g. Install the 6 spark plugs.

Torque: 18 N*m (184 kgf*cm, 13 ft.*lbf)

h. Install the 6 ignition coils.

Torque: 10 N*m (102 kgf*cm, 7 ft.*lbf)

i. Install the intake air surge tank assembly (See **INSTALLATION**).

10. **INSPECT CO/HC**

a. Start the engine.
b. Run the engine at 2500 rpm for approximately 180 seconds.
c. Insert the CO/HC meter testing probe at least 40 cm (1.3 ft.) into the tailpipe during idling.
d. Check CO/HC concentration at idle and/or 2500 rpm.

HINT:

Check regulations and restrictions in your area when performing 2 mode CO/HC concentration testing (engine check at both idle speed and at 2500 rpm).

If the CO/HC concentration does not comply with regulations, perform troubleshooting in the following order.

1. Check the air fuel ratio sensor and heated oxygen sensor operation.
2. See the following table for possible causes, and then inspect and repair if necessary.

PROBLEM AND CAUSE CHART

CO	HC	Problem	Cause
Normal	High	Rough idle	1. Faulty ignitions: o Incorrect timing o Fouled, shorted or improperly gapped plugs 2. Incorrect valve clearance (valve lash adjuster) 3. Leaks in intake and exhaust valves 4. Leaks in cylinders
			1. Vacuum leaks:

 © 2011 Mitchell Repair Information Company, LLC.

Low	High	Rough idle (Fluctuating HC reading)	○ PCV hoses ○ Intake manifold ○ Throttle body assembly ○ Brake booster line 2. Lean mixture causing misfire
High	High	Rough idle (Black smoke from exhaust)	1. Restricted air filter 2. Plugged PCV valve 3. Faulty SFI system: ○ Faulty fuel pressure regulator ○ Defective engine coolant temperature sensor ○ Defective mass air flow meter ○ Faulty ECM ○ Faulty injector assemblies ○ Faulty

DRIVE BELT

COMPONENTS

 © 2011 Mitchell Repair Information Company, LLC.

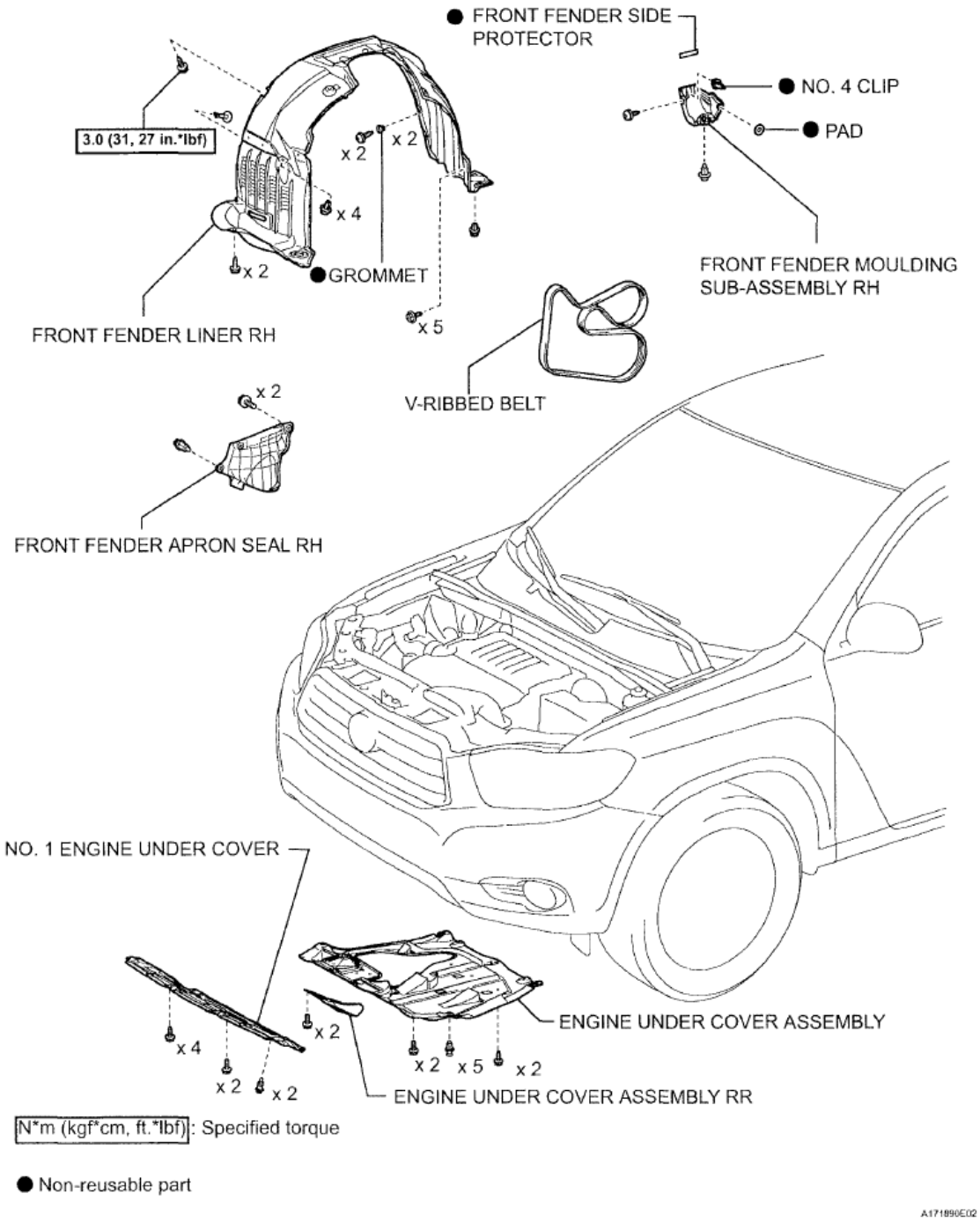

Fig. 5: Identifying Drive Belt Components With Torque Specification With Torque Specification
Courtesy of TOYOTA MOTOR SALES, U.S.A., INC.

REMOVAL

1. **REMOVE FRONT WHEEL RH**
2. **REMOVE ENGINE UNDER COVER ASSEMBLY** (See **REMOVAL**)
3. **REMOVE NO. 1 ENGINE UNDER COVER** (See **REMOVAL**)

 © 2011 Mitchell Repair Information Company, LLC.

4. **REMOVE FRONT FENDER MOULDING SUB-ASSEMBLY RH**
   a. Remove the clip.
   b. Using a 4 mm hexagon wrench, remove the screw.

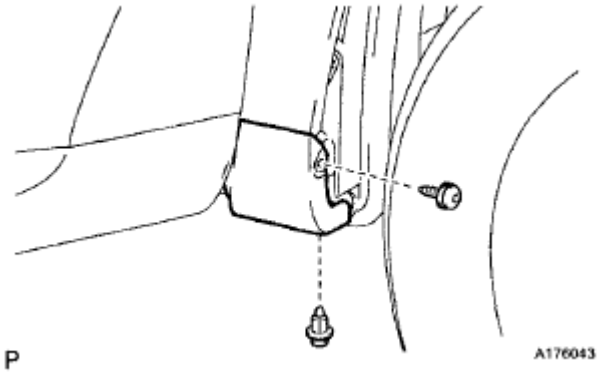

Fig. 6: Identifying Front Fender Moulding Sub-Assembly RH And Screw
Courtesy of TOYOTA MOTOR SALES, U.S.A., INC.

   c. Peel off the front fender side protector and disengage the 3 clips, and then remove the front fender moulding sub-assembly RH.
   d. Remove the pad from the front fender moulding sub-assembly RH.
   e. Remove the 2 clips No. 4 from the front fender moulding sub-assembly RH.

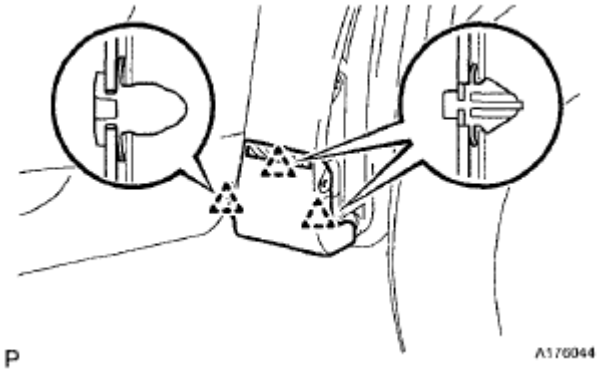

Fig. 7: Identifying Front Fender Moulding Sub-Assembly RH And Clips
Courtesy of TOYOTA MOTOR SALES, U.S.A., INC.

   f. Remove the front fender side protector from the front fender moulding sub-assembly RH.
5. **REMOVE FRONT FENDER LINER RH** (See **REMOVAL**)
6. **REMOVE FRONT FENDER APRON SEAL RH** (See **REMOVAL**)

 © 2011 Mitchell Repair Information Company, LLC.

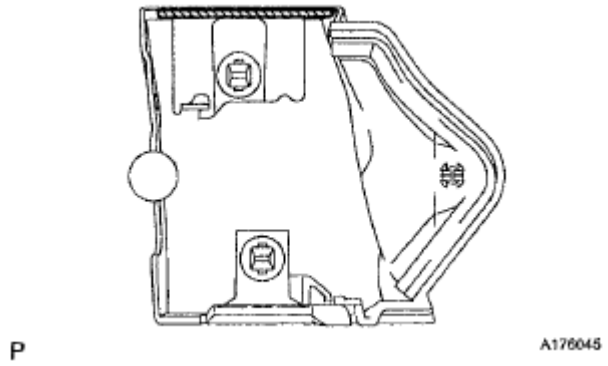

Fig. 8: Identifying Front Fender Moulding Sub-Assembly RH
Courtesy of TOYOTA MOTOR SALES, U.S.A., INC.

7. **REMOVE V-RIBBED BELT**
   a. Using SST, release the V-ribbed belt tension by turning the V-ribbed belt tensioner assembly counterclockwise, and remove the V-ribbed belt from the V-ribbed belt tensioner assembly.

      SST 09961-00950

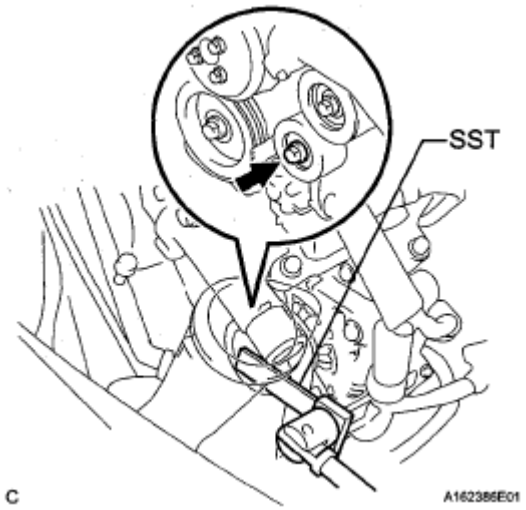

Fig. 9: Locating V-ribbed Belt Tensioner Assembly
Courtesy of TOYOTA MOTOR SALES, U.S.A., INC.

   b. While turning the V-ribbed belt tensioner assembly counterclockwise, align with its holes, and then insert the 5 mm bi-hexagon wrench into the holes to fix the V-ribbed belt tensioner assembly.

 © 2011 Mitchell Repair Information Company, LLC.

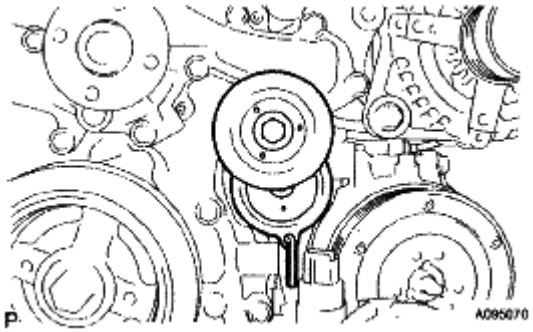

Fig. 10: Identifying Bi-Hexagon Wrench Into Holes To Fix V-Ribbed Belt Tensioner
Courtesy of TOYOTA MOTOR SALES, U.S.A., INC.

INSPECTION

1. **INSPECT V-RIBBED BELT**
   a. Check the belt for wear, cracks or other signs of damage.

   If any of the following defects is found, replace the V-ribbed belt.

   - The belt is cracked.
   - The belt is worn out to the extent that the cords are exposed.
   - The belt has chunks missing from the ribs.

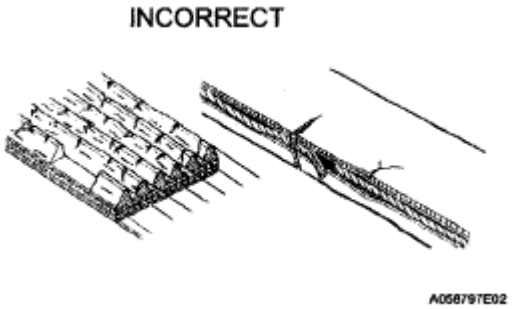

Fig. 11: Identifying Drive Belt Incorrect Position
Courtesy of TOYOTA MOTOR SALES, U.S.A., INC.

   b. Check that the belt fits properly in the ribbed grooves.

   HINT:

   Check with your hand to confirm that the belt has not slipped out of the groove on the bottom to the pulley. If it has slipped out, replace the V-ribbed belt. Install a new V-ribbed belt correctly.

2. **INSPECT V-RIBBED BELT TENSIONER ASSEMBLY**
   a. Check that nothing gets caught in the tensioner by turning it clockwise and counterclockwise. If a malfunction exists, replace the tensioner.

 © 2011 Mitchell Repair Information Company, LLC.

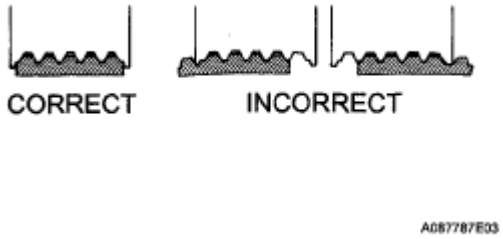

Fig. 12: Identifying Correct And Incorrect Ribbed Grooves
Courtesy of TOYOTA MOTOR SALES, U.S.A., INC.

INSTALLATION

1. **INSTALL V-RIBBED BELT**
   a. Install the V-ribbed belt.
   b. Using SST, turn the V-ribbed belt tensioner assembly counterclockwise and remove the bar.

   SST 09961-00950

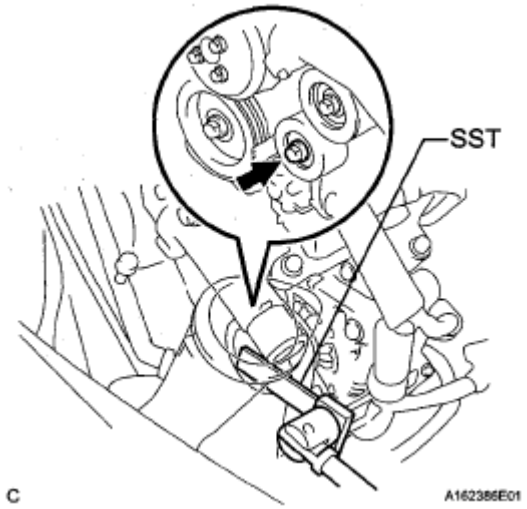

Fig. 13: Identifying V-ribbed Belt Tensioner Assembly
Courtesy of TOYOTA MOTOR SALES, U.S.A., INC.

   c. If it is difficult to install the V-ribbed belt, perform the following procedure:
      1. Put the V-ribbed belt on every pulley except the tensioner pulley as shown in the illustration.
      2. Release the V-ribbed belt tension by turning the V-ribbed belt tensioner assembly counterclockwise, and put the V-ribbed belt on the V-ribbed tensioner assembly pulley.

NOTE:

- **Put the backside of the V-ribbed belt on the V-ribbed belt tensioner assembly pulley and No. 2 idler pulley sub-assembly.**
- **Check that the V-ribbed belt is properly set to each pulley.**

 © 2011 Mitchell Repair Information Company, LLC.

3. After installing the V-ribbed belt, check that it fits properly in the ribbed grooves. Confirm that the belt has not slipped out of the grooves on the bottom of the crankshaft pulley by hand.

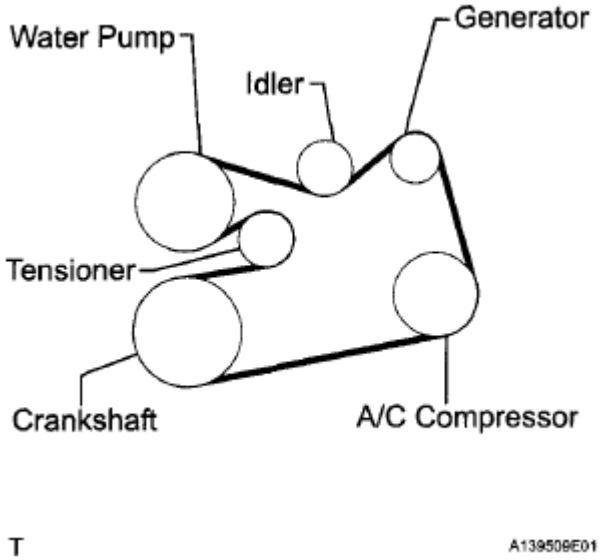

Fig. 14: Identifying V-Ribbed Belt Components
Courtesy of TOYOTA MOTOR SALES, U.S.A., INC.

2. **INSTALL FRONT FENDER APRON SEAL RH** (See **INSTALLATION**)
3. **INSTALL FRONT FENDER LINER RH** (See **INSTALLATION**)
4. **INSTALL FRONT FENDER MOULDING SUB-ASSEMBLY RH**
   a. Clean the vehicle body surface.
      1. Using a heat light, heat the vehicle body surface.
      2. Remove the front fender side protector from the vehicle body.
      3. Wipe off any tape adhesive residue with cleaner.
   b. Clean the front fender moulding sub-assembly RH. (If reusing the front fender moulding sub-assembly RH)
      1. Using a heat light, heat the front fender moulding sub-assembly RH.
      2. Remove the front fender side protector from the front fender moulding sub-assembly RH.
      3. Wipe off any tape adhesive residue with cleaner.
      4. Install a new front fender side protector to the the front fender moulding sub-assembly RH.

 © 2011 Mitchell Repair Information Company, LLC.

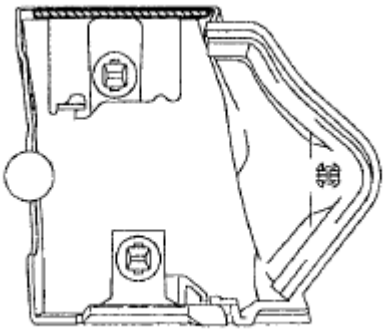

Fig. 15: Identifying Front Fender Moulding Sub-Assembly RH
Courtesy of TOYOTA MOTOR SALES, U.S.A., INC.

c. Install the front fender moulding sub-assembly RH.
   1. Using a heat light, heat the vehicle body and the front fender moulding sub-assembly.
   2. Remove the release paper from the front fender moulding sub-assembly.

      HINT:

      After removing the release paper, keep the exposed adhesive free from foreign matter.

   3. Engage the 3 clips and install the front fender moulding sub-assembly RH.

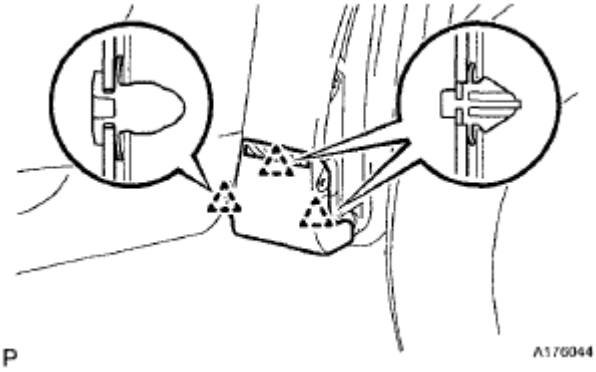

Fig. 16: Identifying Front Fender Moulding Sub-Assembly RH And Clips
Courtesy of TOYOTA MOTOR SALES, U.S.A., INC.

d. Using a 4 mm hexagon wrench, install the screw.
e. Install the clip.

5. **INSTALL NO. 1 ENGINE UNDER COVER** (See **INSTALLATION**)
6. **INSTALL ENGINE UNDER COVER ASSEMBLY** (See **INSTALLATION**)
7. **INSTALL FRONT WHEEL RH**

   Torque: 103 N*m (1050 kgf*cm, 76 ft.*lbf)

 © 2011 Mitchell Repair Information Company, LLC.

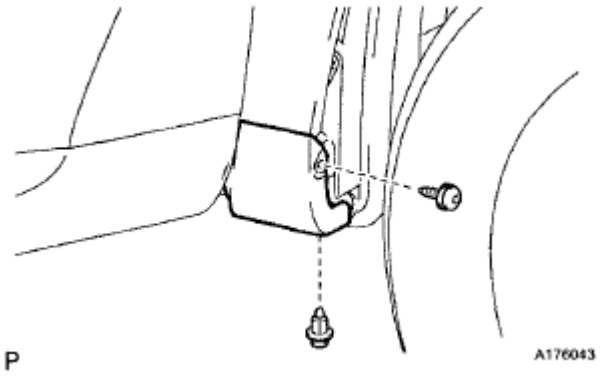

Fig. 17: Identifying Front Fender Moulding Sub-Assembly RH And Screw
Courtesy of TOYOTA MOTOR SALES, U.S.A., INC.

CAMSHAFT (FOR BANK 1)

COMPONENTS

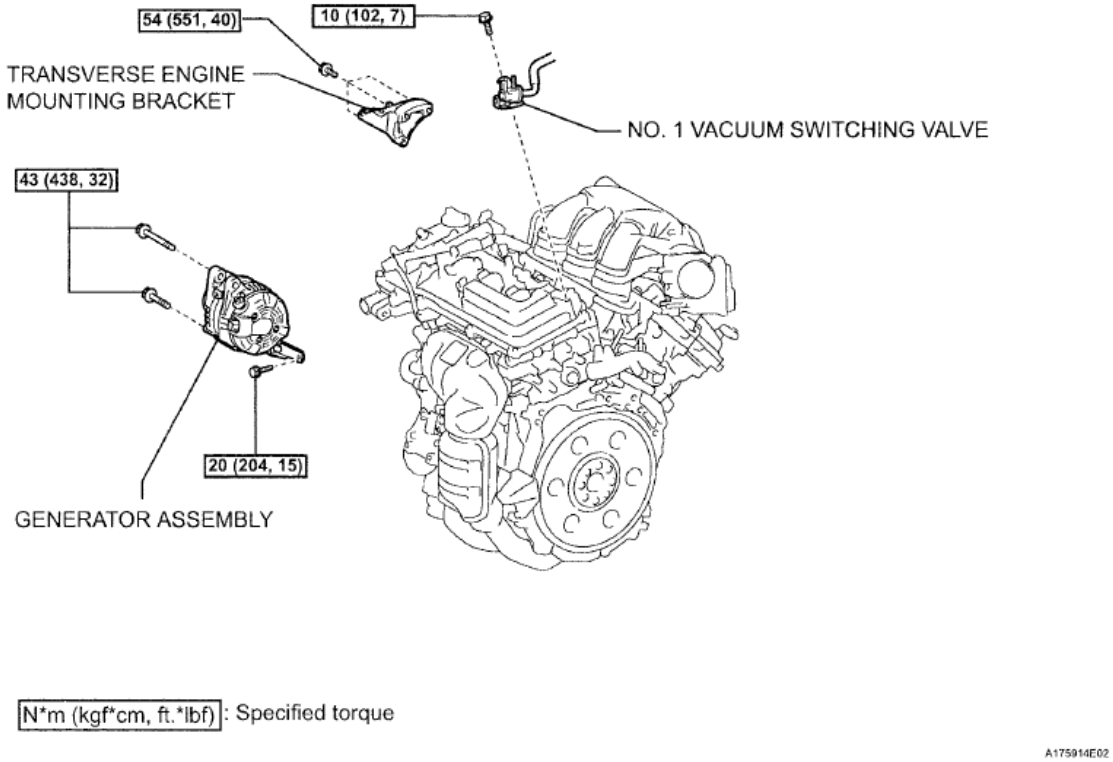

Fig. 18: Identifying Camshaft Components With Torque Specification (1 Of 8)
Courtesy of TOYOTA MOTOR SALES, U.S.A., INC.

 © 2011 Mitchell Repair Information Company, LLC.

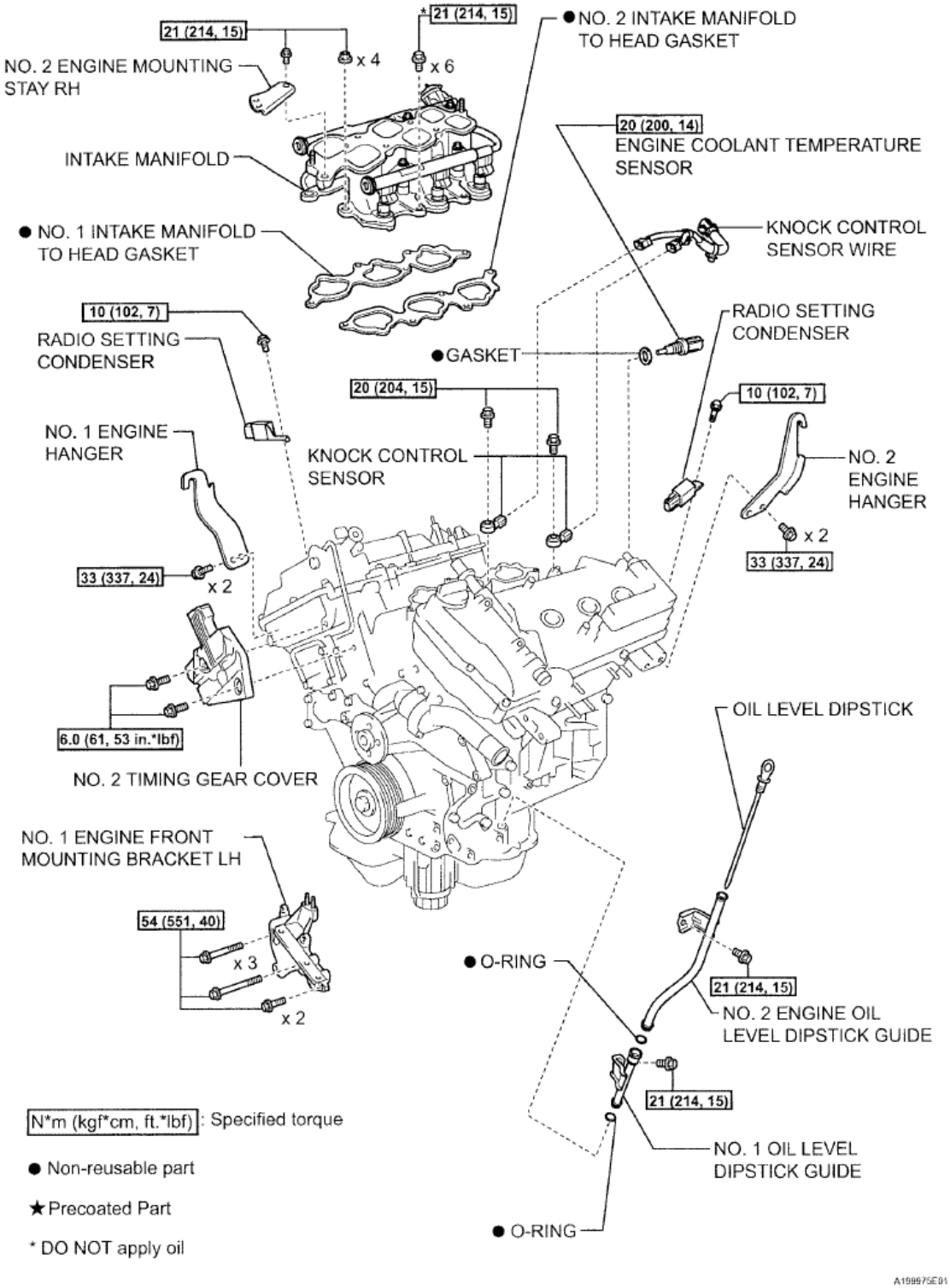

Fig. 19: Identifying Camshaft Components With Torque Specification (2 Of 8)
Courtesy of TOYOTA MOTOR SALES, U.S.A., INC.

 © 2011 Mitchell Repair Information Company, LLC.

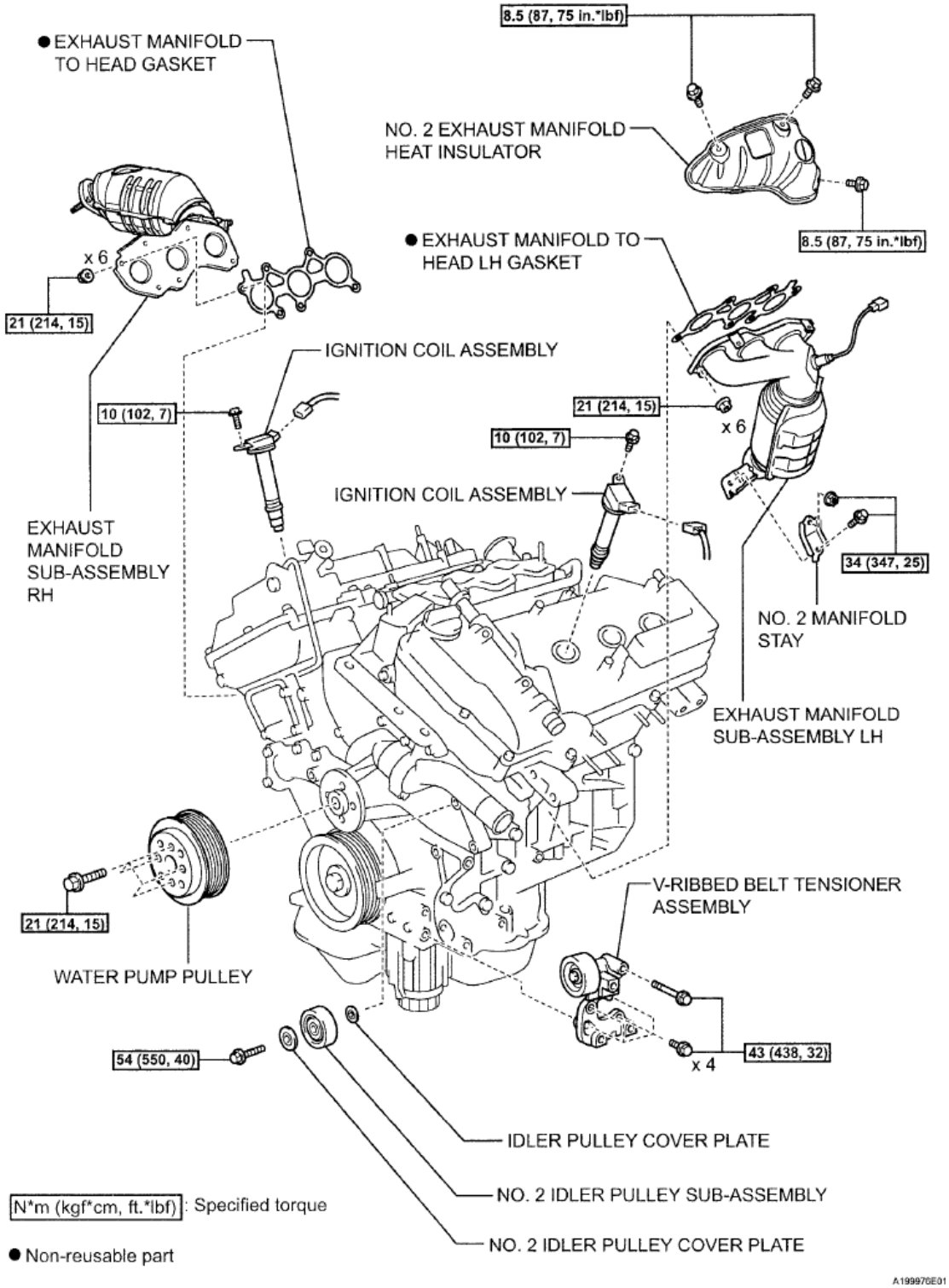

Fig. 20: Identifying Camshaft Components With Torque Specification (3 Of 8)
Courtesy of TOYOTA MOTOR SALES, U.S.A., INC.

 © 2011 Mitchell Repair Information Company, LLC.

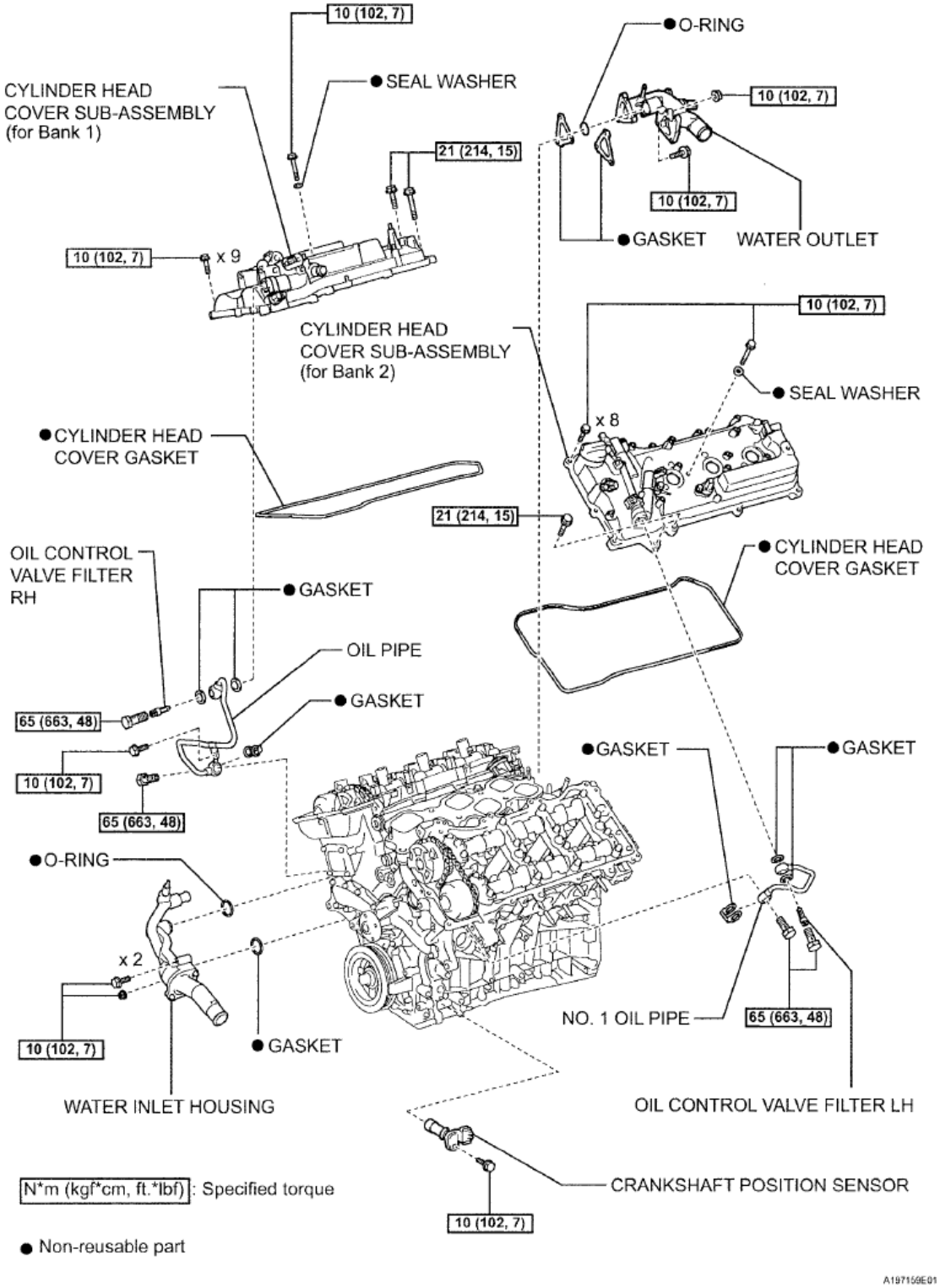

Fig. 21: Identifying Camshaft Components With Torque Specification (4 Of 8)
Courtesy of TOYOTA MOTOR SALES, U.S.A., INC.

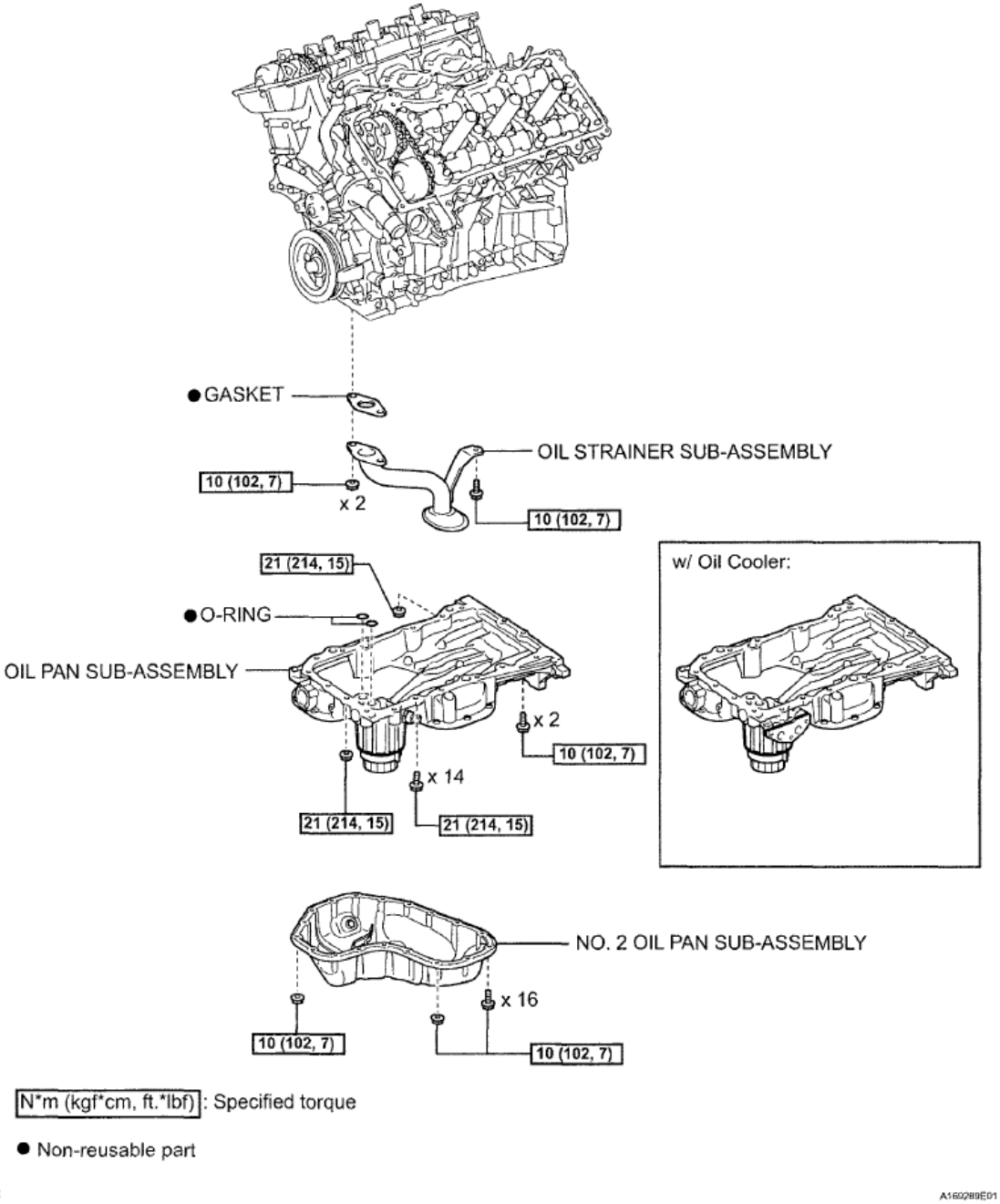

Fig. 22: Identifying Camshaft Components With Torque Specification (5 Of 8)
Courtesy of TOYOTA MOTOR SALES, U.S.A., INC.

 © 2011 Mitchell Repair Information Company, LLC.

w/ Oil Cooler:

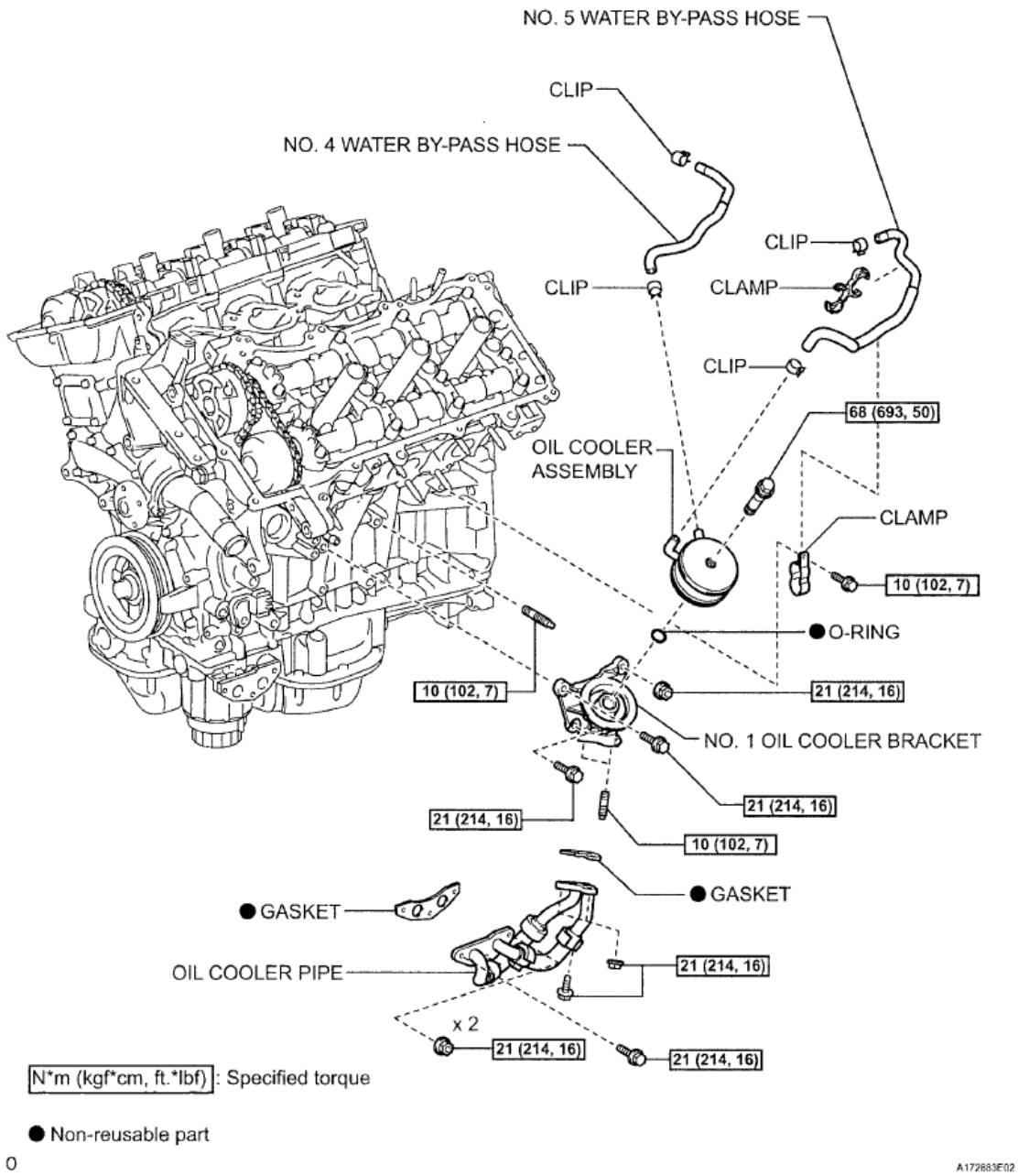

Fig. 23: Identifying Camshaft Components With Torque Specification (6 Of 8)
Courtesy of TOYOTA MOTOR SALES, U.S.A., INC.

 © 2011 Mitchell Repair Information Company, LLC.

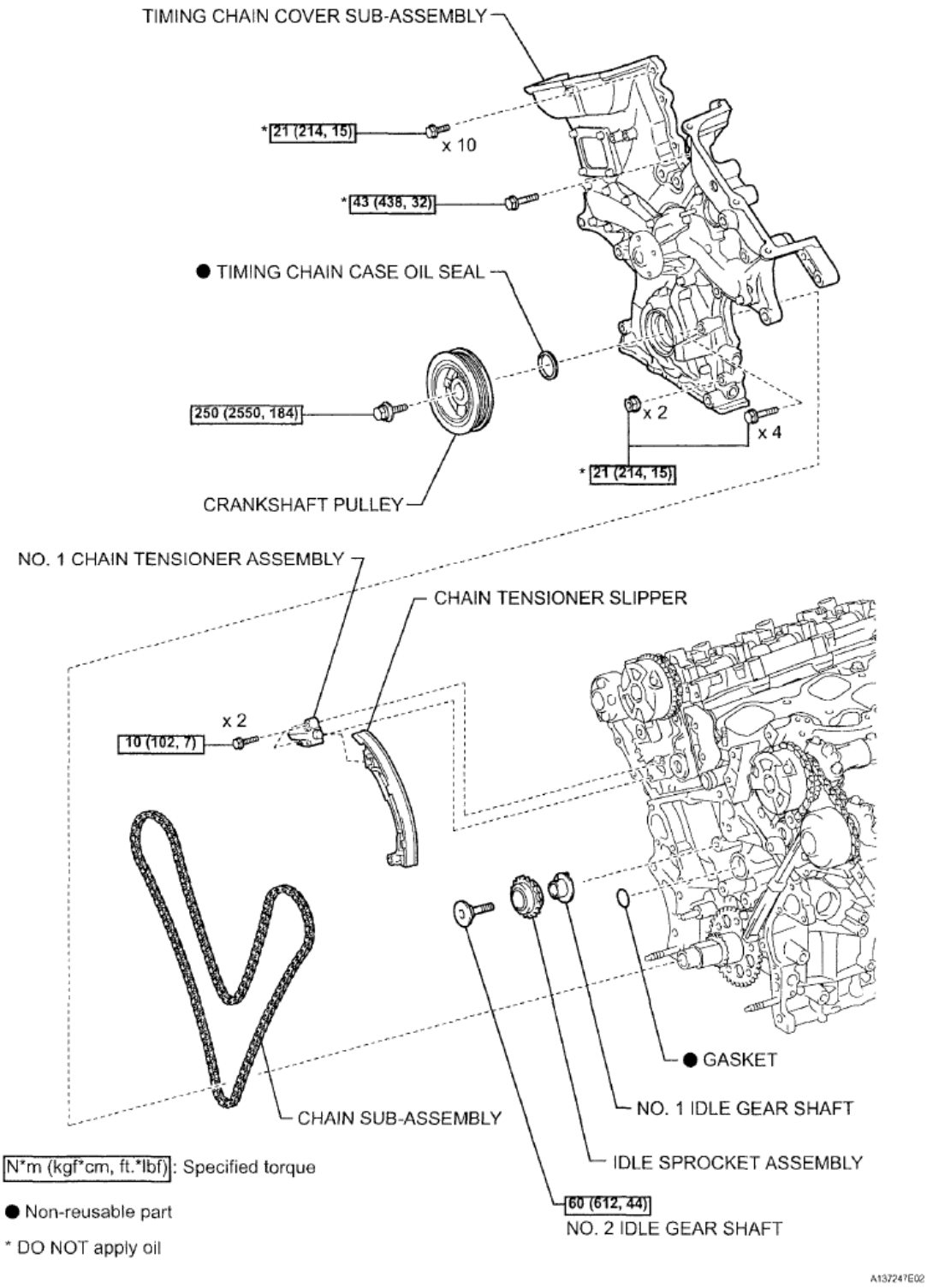

Fig. 24: Identifying Camshaft Components With Torque Specification (7 Of 8)
Courtesy of TOYOTA MOTOR SALES, U.S.A., INC.

 © 2011 Mitchell Repair Information Company, LLC.

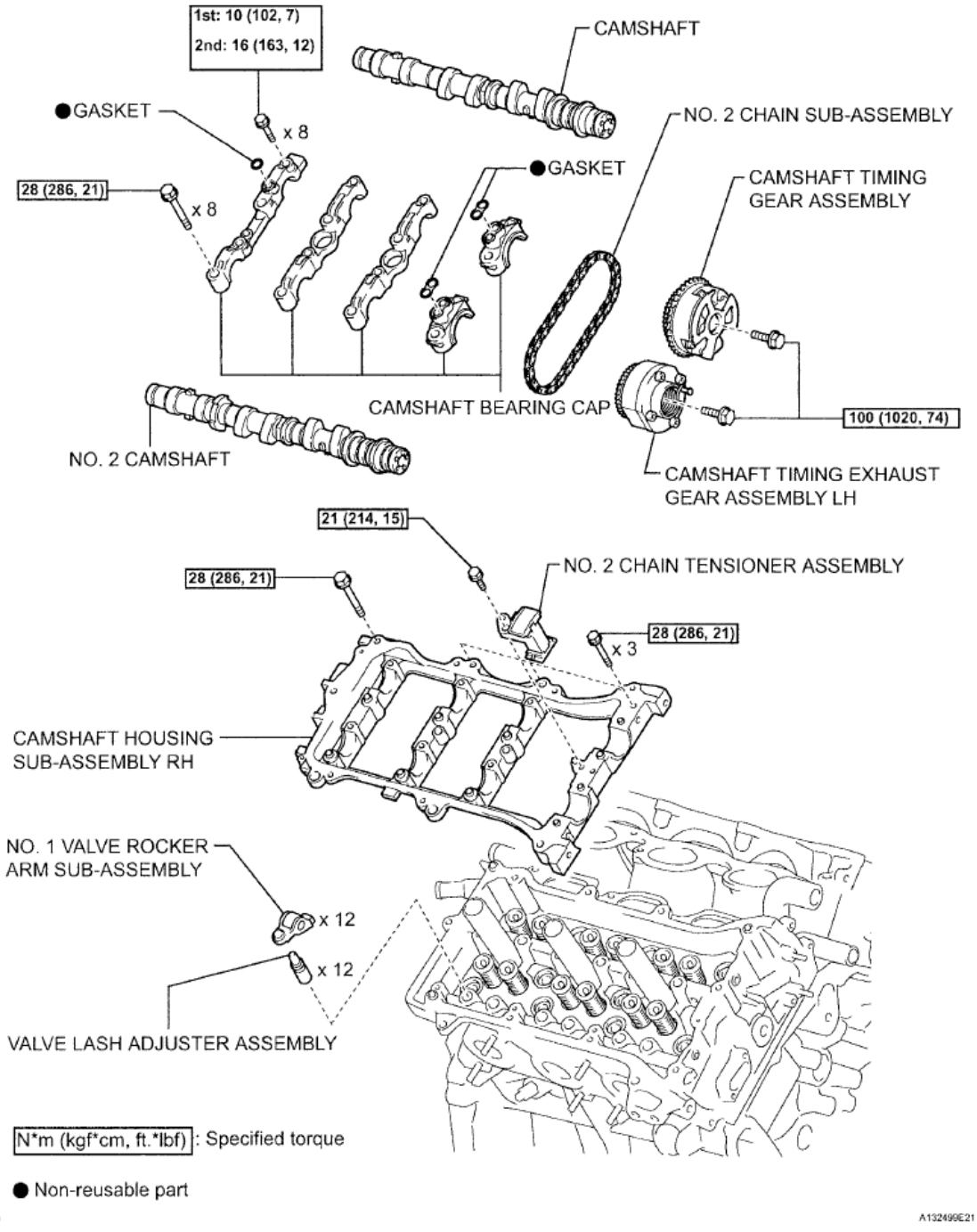

Fig. 25: Identifying Camshaft Components With Torque Specification (8 Of 8)
Courtesy of TOYOTA MOTOR SALES, U.S.A., INC.

REMOVAL

CAUTION: For additional information on timing chain/gear removal guidelines, installtion and camshaft timing gear alignment, see 2GR-FE VALVE TIMING PROCEDURE .

1. **REMOVE ENGINE ASSEMBLY**

   HINT:

   See **REMOVAL** .

2. **INSTALL ENGINE STAND**
3. **REMOVE IGNITION COIL ASSEMBLY** (See **REMOVAL**)
4. **REMOVE NO. 2 ENGINE MOUNTING STAY RH** (See **REMOVAL**)
5. **REMOVE INTAKE MANIFOLD** (See **REMOVAL**)
6. **REMOVE EXHAUST MANIFOLD SUB-ASSEMBLY RH** (See **REMOVAL**)
7. **REMOVE NO. 2 ENGINE OIL LEVEL DIPSTICK GUIDE** (See **REMOVAL**)
8. **REMOVE NO. 2 MANIFOLD STAY** (See **REMOVAL**)
9. **REMOVE NO. 2 EXHAUST MANIFOLD HEAT INSULATOR** (See **REMOVAL**)
10. **REMOVE EXHAUST MANIFOLD SUB-ASSEMBLY LH** (See **REMOVAL**)
11. **REMOVE TRANSVERSE ENGINE MOUNTING BRACKET** (See **REMOVAL**)
12. **REMOVE GENERATOR ASSEMBLY** (See **REMOVAL**)
13. **REMOVE V-RIBBED BELT TENSIONER ASSEMBLY** (See **REMOVAL**)
14. **REMOVE NO. 2 TIMING GEAR COVER** (See **REMOVAL**)
15. **REMOVE NO. 2 IDLER PULLEY SUB-ASSEMBLY** (See **REMOVAL**)
16. **REMOVE NO. 1 ENGINE FRONT MOUNTING BRACKET LH**
    a. Remove the 6 bolts and No. 1 engine front mounting bracket LH.
17. **REMOVE RADIO SETTING CONDENSER** (See **REMOVAL**)
18. **REMOVE NO. 1 VACUUM SWITCHING VALVE** (See **REMOVAL**)

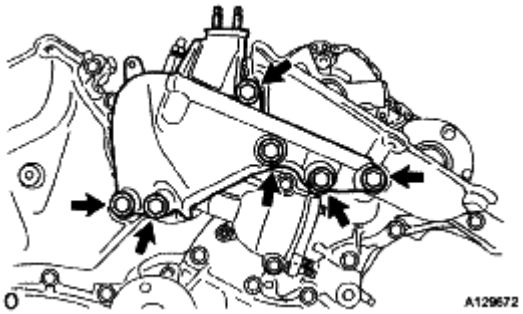

Fig. 26: Locating Engine Mounting Bracket Front And Bolts
Courtesy of TOYOTA MOTOR SALES, U.S.A., INC.

19. **REMOVE KNOCK CONTROL SENSOR WIRE** (See **REMOVAL**)
20. **REMOVE KNOCK CONTROL SENSOR** (See **REMOVAL**)
21. **REMOVE CRANKSHAFT POSITION SENSOR** (See **DISASSEMBLY**)
22. **REMOVE NO. 1 OIL PIPE** (See **DISASSEMBLY**)

 © 2011 Mitchell Repair Information Company, LLC.

23. **REMOVE OIL PIPE** (See **DISASSEMBLY**)
24. **REMOVE CRANKSHAFT PULLEY** (See **DISASSEMBLY**)
25. **REMOVE OIL COOLER ASSEMBLY (w/ Oil Cooler)** (See **DISASSEMBLY**)
26. **REMOVE NO. 1 OIL COOLER BRACKET (w/ Oil Cooler)** (See **DISASSEMBLY**)
27. **REMOVE WATER INLET HOUSING** (See **DISASSEMBLY**)
28. **REMOVE WATER OUTLET** (See **DISASSEMBLY**)
29. **REMOVE CYLINDER HEAD COVER SUB-ASSEMBLY (for Bank 1)** (See **DISASSEMBLY**)
30. **REMOVE CYLINDER HEAD COVER SUB-ASSEMBLY ° (for Bank 2)** (See **DISASSEMBLY**)
31. **REMOVE NO. 2 OIL PAN SUB-ASSEMBLY** (See **DISASSEMBLY**)
32. **REMOVE OIL STRAINER SUB-ASSEMBLY** (See **DISASSEMBLY**)
33. **REMOVE OIL PAN SUB-ASSEMBLY** (See **DISASSEMBLY**)
34. **REMOVE TIMING CHAIN COVER SUB-ASSEMBLY** (See **DISASSEMBLY**)
35. **REMOVE TIMING CHAIN CASE OIL SEAL** (See **DISASSEMBLY**)
36. **SET NO. 1 CYLINDER TO TDC/COMPRESSION** (See **DISASSEMBLY**)
37. **REMOVE NO. 1 CHAIN TENSIONER ASSEMBLY** (See **DISASSEMBLY**)
38. **REMOVE CHAIN TENSIONER SLIPPER** (See **DISASSEMBLY**)
39. **REMOVE CHAIN SUB-ASSEMBLY** (See **DISASSEMBLY**)
40. **REMOVE IDLE SPROCKET ASSEMBLY** (See **DISASSEMBLY**)
41. **REMOVE CAMSHAFT TIMING GEARS AND NO. 2 CHAIN (for Bank 1)**

CAUTION: For additional information on timing chain/gear removal guidelines, installtion and camshaft timing gear alignment, see 2GR-FE VALVE TIMING PROCEDURE .

a. While raising the No. 2 chain tensioner assembly, insert a pin of 1.0 mm (0.0394 in.) diameter into the hole to fix the No. 2 chain tensioner assembly.

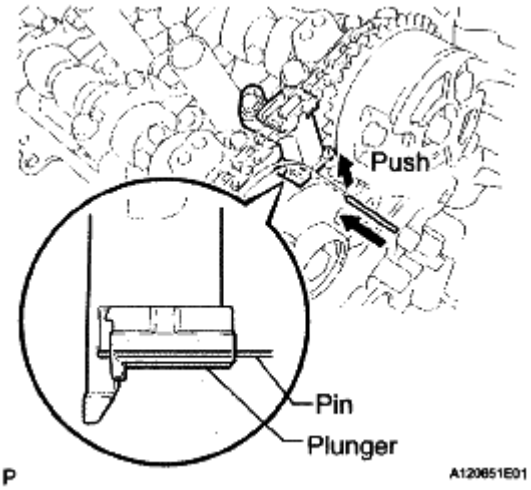

Fig. 27: Inserting Pin Into Hole For Fixing No. 2 Chain Tensioner

Courtesy of TOYOTA MOTOR SALES, U.S.A., INC.

b. Using SST to hold the hexagonal portion of each camshaft, loosen the flange bolts of the camshaft timing gear assembly and the camshaft timing exhaust gear assembly LH.

SST 09922-10010

NOTE: Do not loosen the other bolts. If any of the bolts is loosened, replace the camshaft timing gear assembly and/or the camshaft timing exhaust gear assembly LH with a new one.

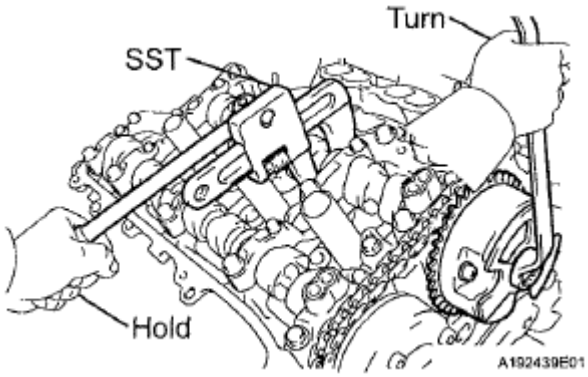

Fig. 28: Loosening Flange Bolts Of Camshaft Timing Gear Assembly
Courtesy of TOYOTA MOTOR SALES, U.S.A., INC.

c. Remove the 2 flange bolts, the camshaft timing gear assembly and the camshaft timing exhaust gear assembly LH together with the No. 2 chain.

42. **REMOVE NO. 2 CHAIN TENSIONER ASSEMBLY**

a. Remove the bolt and No. 2 chain tensioner assembly.

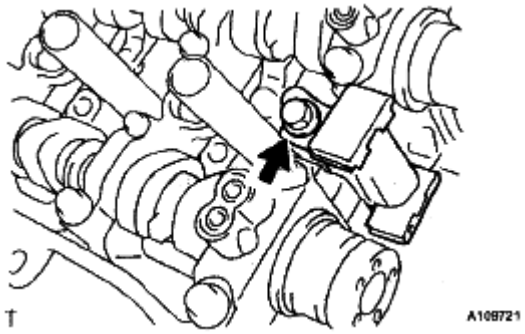

Fig. 29: Identifying No.2 Chain Tensioner Bolt
Courtesy of TOYOTA MOTOR SALES, U.S.A., INC.

43. **REMOVE CAMSHAFT BEARING CAP**

a. Check that the camshafts are positioned as shown in the illustration.

 © 2011 Mitchell Repair Information Company, LLC.

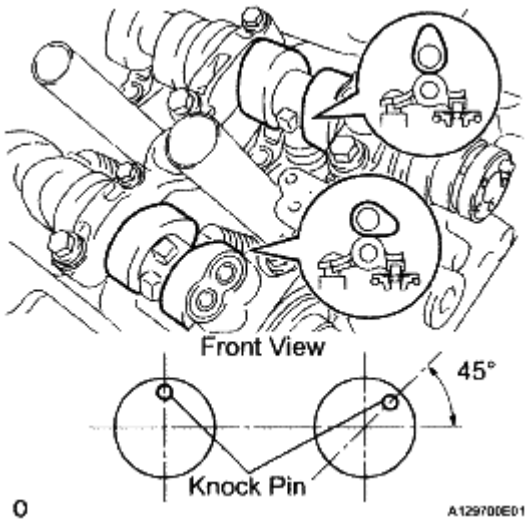

Fig. 30: Identifying Camshaft Bearing Cap
Courtesy of TOYOTA MOTOR SALES, U.S.A., INC.

b. Uniformly loosen and remove the 8 bearing cap bolts in several steps and in the sequence shown in the illustration.

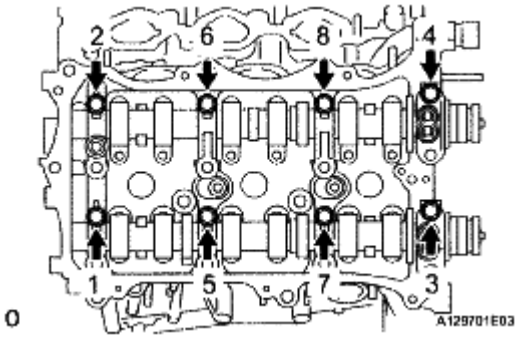

Fig. 31: Identifying Bearing Cap Bolts Loosening Sequence
Courtesy of TOYOTA MOTOR SALES, U.S.A., INC.

c. Uniformly loosen and remove the 12 bearing cap bolts in several steps and in the sequence shown in the illustration.

NOTE: Uniformly loosen the bolts while keeping the camshaft level.

d. Remove the 5 camshaft bearing caps.

44. **REMOVE CAMSHAFT**
    a. Remove the camshaft.

 © 2011 Mitchell Repair Information Company, LLC.

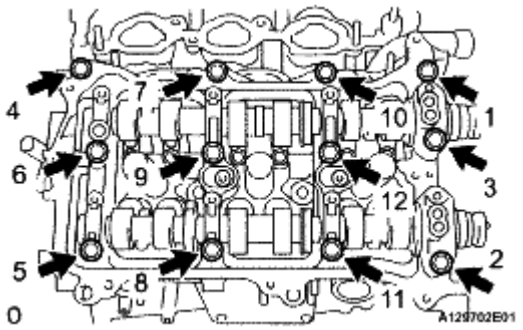

Fig. 32: Pushing Bearing Cap Bolts In Sequence
Courtesy of TOYOTA MOTOR SALES, U.S.A., INC.

45. **REMOVE NO. 2 CAMSHAFT**
    a. Remove the No. 2 camshaft.
46. **REMOVE CAMSHAFT HOUSING SUB-ASSEMBLY RH**
    a. Remove the camshaft housing sub-assembly RH by prying between the cylinder head and camshaft housing sub-assembly RH with a screwdriver.

NOTE: Be careful not to damage the contact surfaces of the cylinder head and camshaft housing sub-assembly RH.

HINT:

Tape the screwdriver tip before use.

47. **INSPECT CAMSHAFT TIMING GEAR ASSEMBLY**
    a. Clamp the camshaft in a vise.

NOTE: Be careful not to damage the camshaft in the vise.

 © 2011 Mitchell Repair Information Company, LLC.

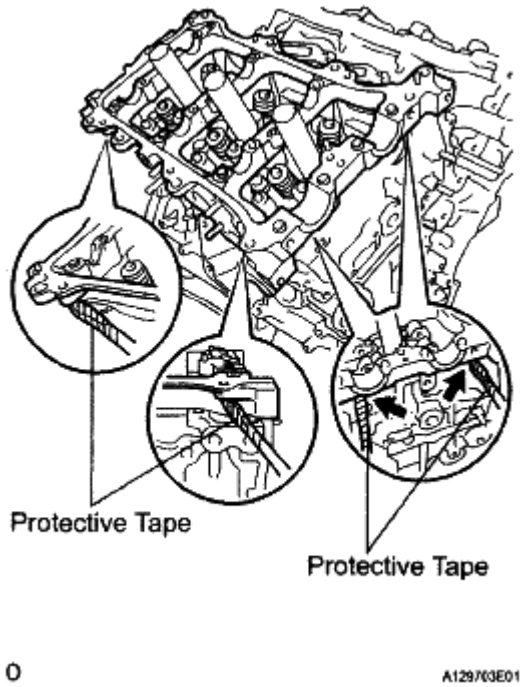

Fig. 33: Inspecting Camshaft Timing Gear Assembly
Courtesy of TOYOTA MOTOR SALES, U.S.A., INC.

b. Put the camshaft timing gear assembly and camshaft together by aligning the key groove and straight pin.
c. Lightly press and turn the camshaft timing gear assembly against the camshaft, and press harder after.

NOTE: Be sure not to turn the camshaft timing gear assembly in the retard direction.

d. Check that there is no clearance between the camshaft timing gear assembly's flange and the camshaft.

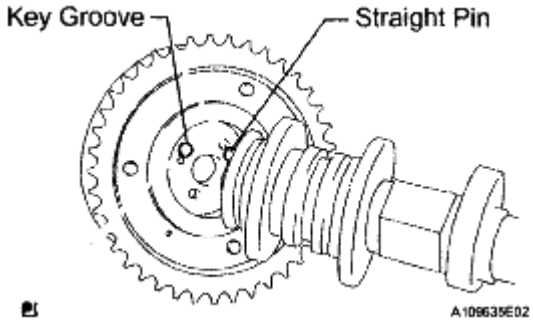

Fig. 34: Aligning Key Groove And Straight Pin
Courtesy of TOYOTA MOTOR SALES, U.S.A., INC.

e. Tighten the flange bolt with the camshaft timing gear assembly fixed.

Torque: 100 N*m (1020 kgf*cm, 74 ft.*lbf)

f. Check the lock of the camshaft timing gear assembly.
   1. Clamp the camshaft in a vise, and confirm that the camshaft timing gear assembly locks.

NOTE: Be careful not to damage the camshaft.

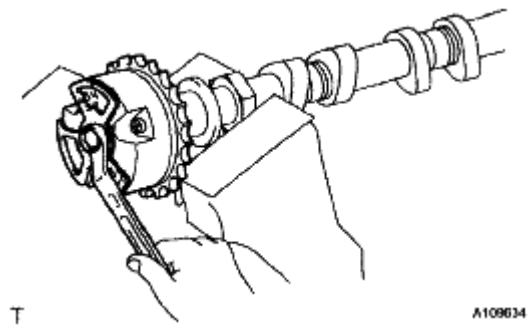

Fig. 35: Checking Lock Of Camshaft Timing Gear
Courtesy of TOYOTA MOTOR SALES, U.S.A., INC.

g. Release the lock pin.
   1. Cover the 4 oil paths of the cam journal with vinyl tape as shown in the illustration.

      HINT:

      The 2 advance side paths are located in the camshaft grove. Plug one of the paths with a rubber piece.

   2. Break through the tape on the advance side path and the retard side path on the opposite side of the hole of the advance side path, as shown in the illustration.

 © 2011 Mitchell Repair Information Company, LLC.

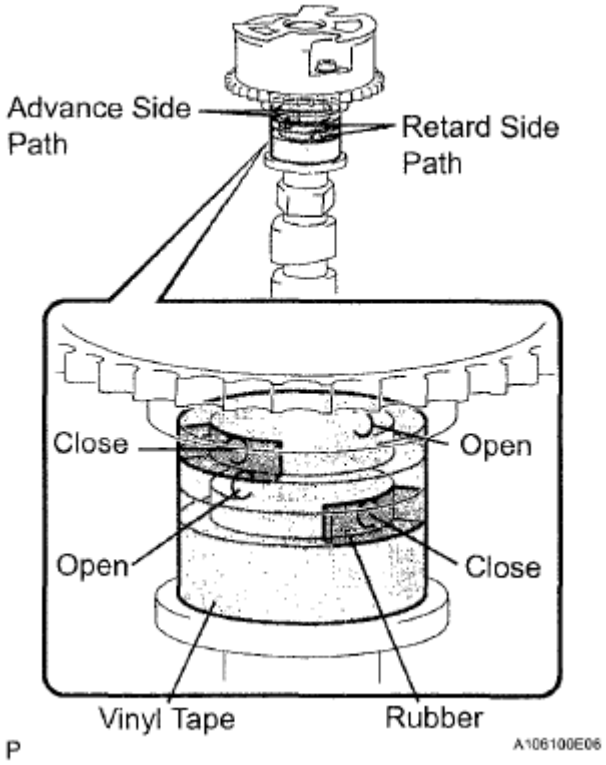

Fig. 36: Releasing Lock Pin
Courtesy of TOYOTA MOTOR SALES, U.S.A., INC.

3. Apply approximately 200 kPa (2.0 kgf/cm^2 , 28 psi) of air pressure to the 2 opened paths.

CAUTION: Cover the paths with a piece of cloth when applying pressure to prevent oil from spraying.

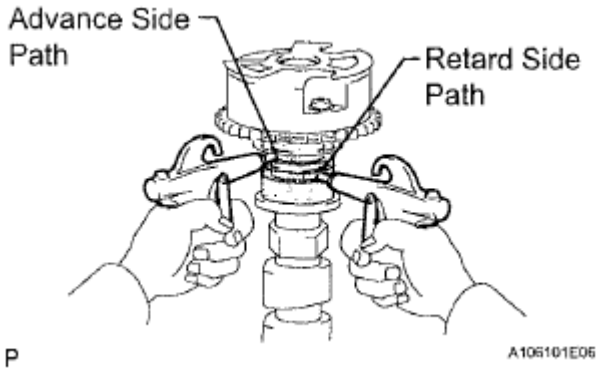

Fig. 37: Applying Air Pressure To Advance Side Path And Retard Side Path
Courtesy of TOYOTA MOTOR SALES, U.S.A., INC.

4. Check that the camshaft timing gear assembly rotates in the advance direction when reducing the air pressure applied to the retard side path.

HINT:

This operation releases the lock pin at the most retarded position.

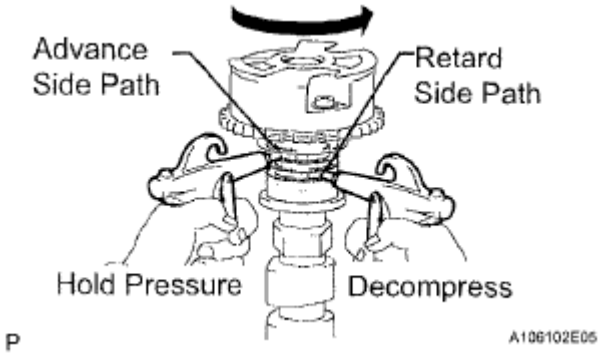

Fig. 38: Identifying Flange Bolt And Straight Pin
Courtesy of TOYOTA MOTOR SALES, U.S.A., INC.

5. When the camshaft timing gear assembly reaches the most advanced position, release the air pressure first from the retard side path and then from advance side path.

NOTE: **Do not release the air pressure from the advance side path first. The gear may abruptly shift in the retard direction and break the lock pin.**

h. Check for smooth rotation.
   1. Turn the camshaft timing gear assembly within its movable range (21°) 2 or 3 times, but do not turn it to the most retarded position. Make sure that the gear turns smoothly.

NOTE: **Do not use air pressure to perform the smooth operation check.**

i. Check the lock in the most retarded position.
   1. Confirm that the camshaft timing gear assembly locks at the most retarded position.

j. Remove the flange bolt and camshaft timing gear assembly.

NOTE:
- **Do not remove the other 3 bolts.**
- **If planning to reuse the camshaft timing gear, be sure to release the straight pin lock before installing the camshaft timing gear.**

48. **INSPECT CAMSHAFT TIMING EXHAUST GEAR ASSEMBLY LH**

 © 2011 Mitchell Repair Information Company, LLC.

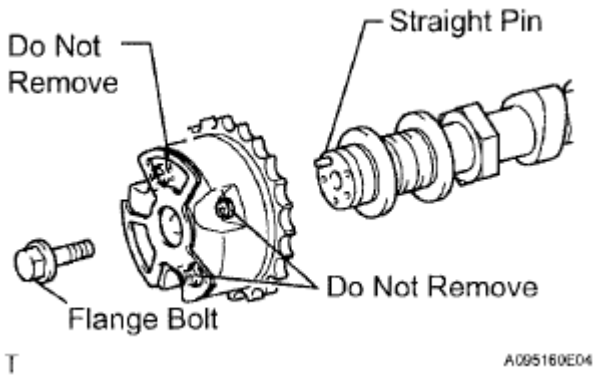

Fig. 39: Identifying Straight Pin And Flange Bolt
Courtesy of TOYOTA MOTOR SALES, U.S.A., INC.

a. Clamp the camshaft in a vise.

NOTE: Be careful not to damage the camshaft in the vise.

b. Put the camshaft timing exhaust gear assembly LH and camshaft together by aligning the key groove and straight pin.
c. Lightly press and turn the camshaft timing gear against the camshaft, and press harder after the pin enters the groove.

NOTE: Be sure not to turn the camshaft timing exhaust gear LH in the retard direction.

d. Check that there is no clearance between the gear's flange and the camshaft.

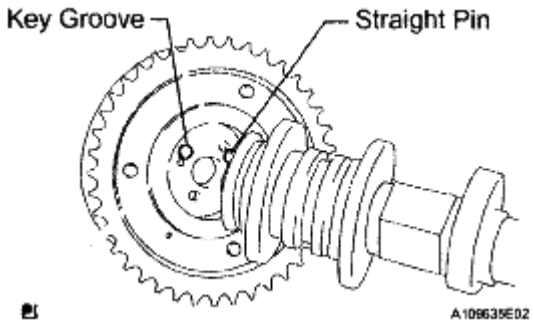

Fig. 40: Aligning Key Groove And Straight Pin
Courtesy of TOYOTA MOTOR SALES, U.S.A., INC.

e. Tighten the flange bolt with the camshaft timing exhaust gear assembly LH fixed.

Torque: 100 N*m (1020 kgf*cm, 74 ft.*lbf)

f. Check the camshaft timing exhaust gear lock.

 © 2011 Mitchell Repair Information Company, LLC.

1. Make sure that the camshaft timing exhaust gear assembly LH is locked.

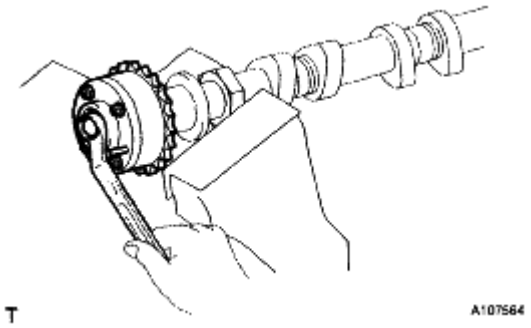

Fig. 41: Checking Camshaft Timing Exhaust Gear Lock
Courtesy of TOYOTA MOTOR SALES, U.S.A., INC.

g. Release the lock pin.
   1. Cover the 4 oil paths of the cam journal with vinyl tape as shown in the illustration.

      HINT:

      The 2 advance side paths are located in the camshaft grove. Plug one of the paths with a rubber piece.

   2. Break through the tape on the advance side path and the retard side path on the opposite side of the hole of the advance side path, as shown in the illustration.

 © 2011 Mitchell Repair Information Company, LLC.

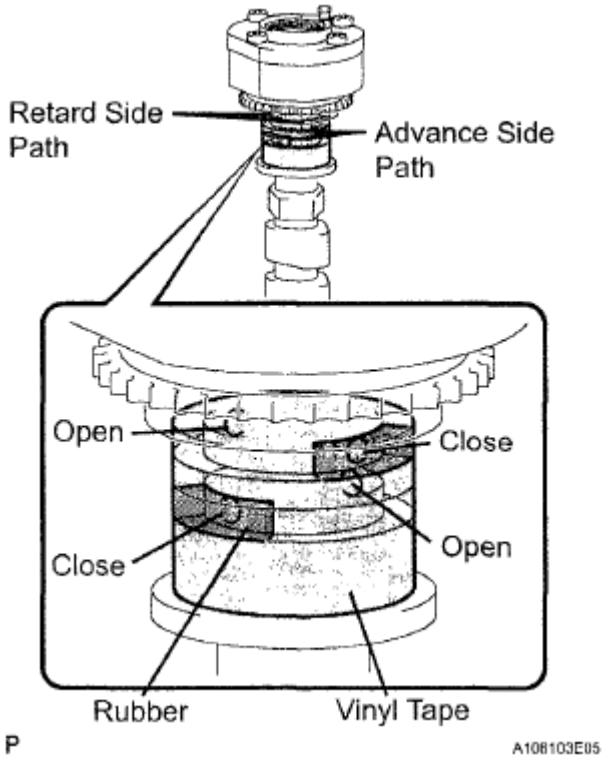

Fig. 42: Releasing Lock Pin
Courtesy of TOYOTA MOTOR SALES, U.S.A., INC.

3. Apply approximately 200 kPa (2.0 kgf/cm^2 , 28 psi) of air pressure to the 2 opened paths (the advance side path and the retard side path).

CAUTION: Cover the paths with a piece of cloth when applying pressure to prevent oil from spraying.

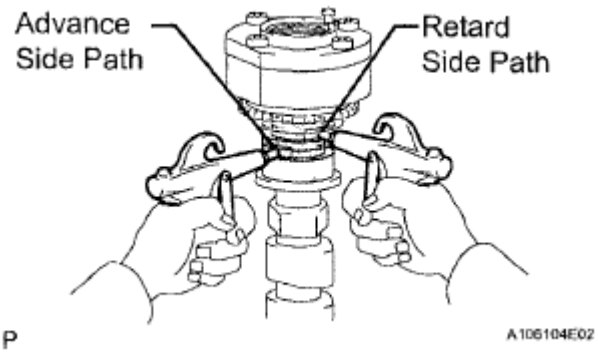

Fig. 43: Applying Air Pressure To Camshaft Advance Side Path And Retard Side Path
Courtesy of TOYOTA MOTOR SALES, U.S.A., INC.

4. Make sure that the camshaft timing exhaust gear assembly LH rotates in the retard direction when reducing the air pressure applied to the advance side path.

HINT:

The lock pin is released and the camshaft timing exhaust gear assembly LH turns in the retard direction.

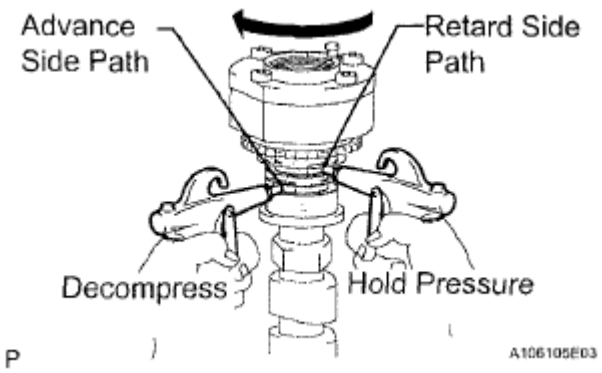

Fig. 44: Applying Air Pressure To Camshaft Advance Side Path And Retard Side Path
Courtesy of TOYOTA MOTOR SALES, U.S.A., INC.

5. When the camshaft timing exhaust gear assembly LH moves to the most retarded position, release the air pressure from the advance side path, and then release the air pressure from the retard side path.

NOTE: **Be sure to release the air pressure from the advance side path first. If the air pressure of the retard side path is released first, the camshaft timing exhaust gear assembly LH may abruptly shift in the advance direction and break the lock pin or other parts.**

h. Check for smooth rotation.
   1. Turn the camshaft timing exhaust gear assembly LH within its movable range (18.5°) 2 or 3 times, but do not turn it to the most advanced position. Make sure that the gear assembly turns smoothly.

NOTE: **When the air pressure is released from the advance side path and then from the retard side path, the gear assembly automatically returns to the most advanced position due to the advance assist spring operation and locks. Gradually release the air pressure from the retard side path before performing the smooth rotation check.**

i. Check the lock at the most advanced position.
   1. Make sure that the camshaft timing exhaust gear assembly LH locks at the most advanced position.
j. Remove the flange bolt and camshaft timing exhaust gear assembly LH.

 © 2011 Mitchell Repair Information Company, LLC.

NOTE:

- **Be sure not to remove the other 4 bolts.**
- **If planning to reuse the gear, be sure to release the straight pin lock before installing the gear.**

INSTALLATION

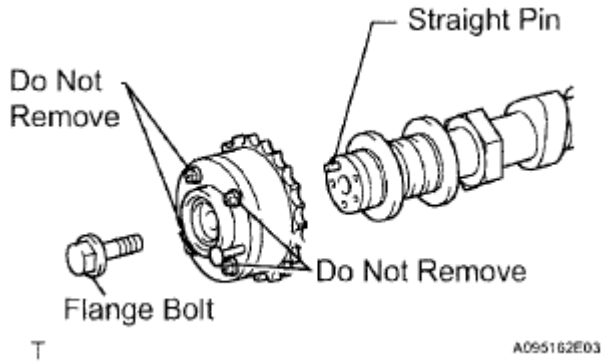

Fig. 45: Identifying Flange Bolt And Straight Pin
Courtesy of TOYOTA MOTOR SALES, U.S.A., INC.

1. **INSTALL CAMSHAFT BEARING CAP**
   a. Apply engine oil to the camshaft journals, camshaft housing sub-assembly RH and camshaft bearing caps.
   b. Install the camshaft and No. 2 camshaft to the camshaft housing sub-assembly RH.
   c. Make sure of the marks and numbers on the camshaft bearing caps and place them in each proper position and direction.

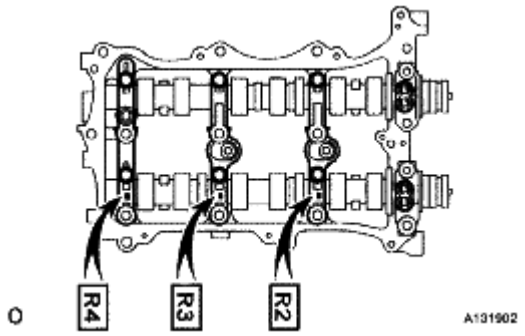

Fig. 46: Identifying Marks And Numbers On Camshaft Bearing Caps
Courtesy of TOYOTA MOTOR SALES, U.S.A., INC.

   d. Temporarily tighten the 8 bearing cap bolts in the order shown in the illustration.

   Torque: 10 N*m (102 kgf*cm, 7 ft.*lbf)

 © 2011 Mitchell Repair Information Company, LLC.

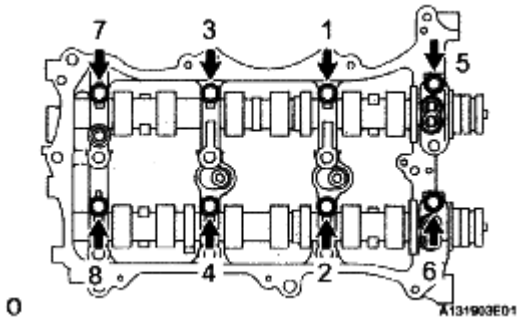

Fig. 47: Tightening Bolts In Sequence
Courtesy of TOYOTA MOTOR SALES, U.S.A., INC.

2. **INSTALL CAMSHAFT HOUSING SUB-ASSEMBLY RH**
   a. Make sure that the No. 1 valve rocker arm sub-assembly is installed as shown in the illustration.

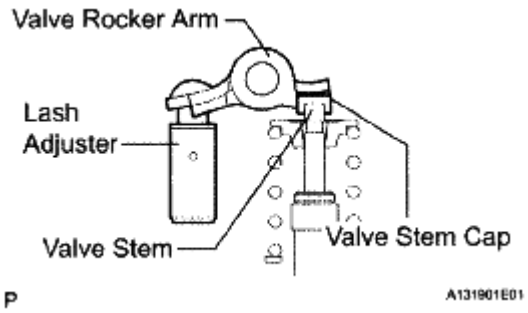

Fig. 48: Applying Engine Oil To Lash Adjuster Tips And Valve Stem Cap Ends
Courtesy of TOYOTA MOTOR SALES, U.S.A., INC.

   b. Apply seal packing in a continuous line as shown in the illustration.

Seal packing:

Toyota Genuine Seal Packing Black, Three Bond 1207B or equivalent

Seal diameter:

3.5 to 4.5 mm (0.138 to 0.177 in.)

NOTE:

- **Remove any oil from the contact surface.**
- **Install the camshaft housing sub-assembly RH within 3 minutes.**
- **Do not start the engine for at least 2 hours after installing.**

 © 2011 Mitchell Repair Information Company, LLC.

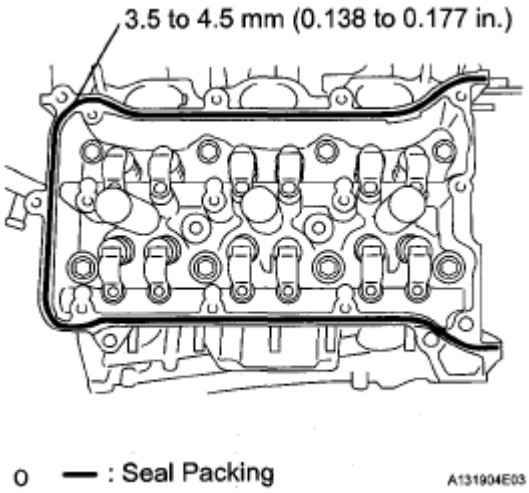

Fig. 49: Identifying Seal Packing
Courtesy of TOYOTA MOTOR SALES, U.S.A., INC.

c. Install the camshaft housing sub-assembly RH and tighten the 12 bolts in the order shown in the illustration.

Torque: 28 N*m (286 kgf*cm, 21 ft.*lbf)

NOTE:

- **When installing the camshaft housing RH, it is necessary to correctly position the camshafts as shown in the illustration. Failure to correctly position these parts may result in damage due to contact between the pistons and valves. If a camshaft is rotated with a piston at TDC, valve contact will occur.**
- **If any of the bolts are loosened during installation, remove the camshaft housing, clean the installation surfaces, and reapply seal packing.**
- **If the camshaft housing sub-assembly is removed because any of the bolts are loosened during installation, make sure that the previously applied seal packing does not enter any oil passages.**

 © 2011 Mitchell Repair Information Company, LLC.

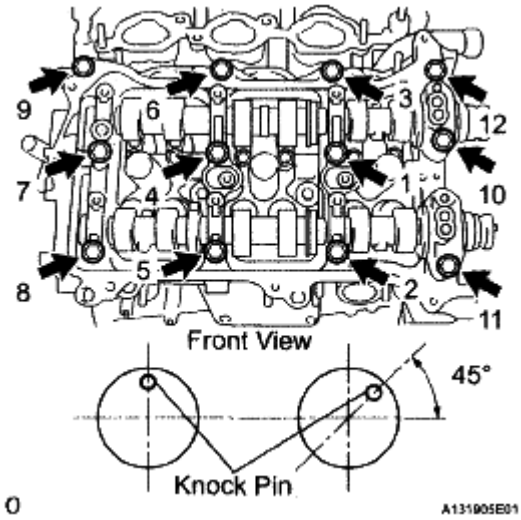

Fig. 50: Identifying Camshaft Housing Tighten Bolts Sequence
Courtesy of TOYOTA MOTOR SALES, U.S.A., INC.

d. Tighten the 8 bolts in the order shown in the illustration.

Torque: 16 N*m (163 kgf*cm, 12 ft.*lbf)

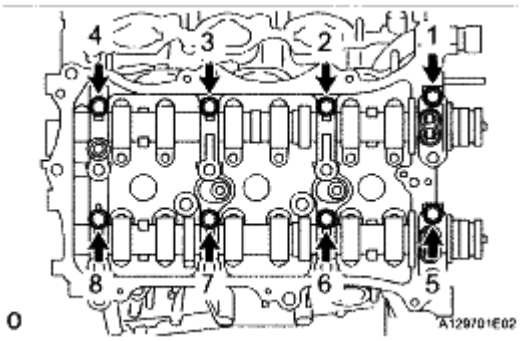

Fig. 51: Identifying Camshaft Housing Tighten Bolts Sequence
Courtesy of TOYOTA MOTOR SALES, U.S.A., INC.

3. **INSTALL NO. 2 CHAIN TENSIONER ASSEMBLY**
   a. Install the No. 2 chain tensioner assembly with the bolt.

   Torque: 21 N*m (214 kgf*cm, 15 ft.*lbf)

   b. While pushing in the tensioner, insert a pin of 1.0 mm (0.0394 in.) diameter into the hole to fix it.

 © 2011 Mitchell Repair Information Company, LLC.

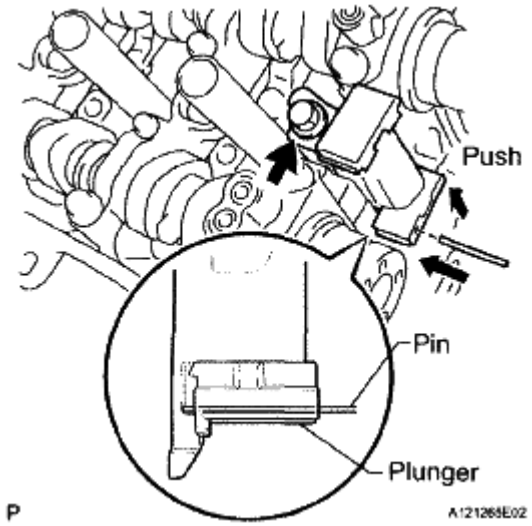

Fig. 52: Installing No 2 Chain Tensioner
Courtesy of TOYOTA MOTOR SALES, U.S.A., INC.

4. **INSTALL CAMSHAFT TIMING GEARS AND NO. 2 CHAIN (for Bank 1)**
   a. Align the mark plates (yellow) with the timing marks of the camshaft timing gear assemblies as shown in the illustration.
   b. Apply a light coat of engine oil to the bolt threads and bolt-seating surface.
   c. Align the knock pin of the camshaft with the pin hole of the camshaft timing gear assembly. Install the camshaft timing gear assembly and camshaft timing exhaust gear assembly LH with the No. 2 chain subassembly installed.

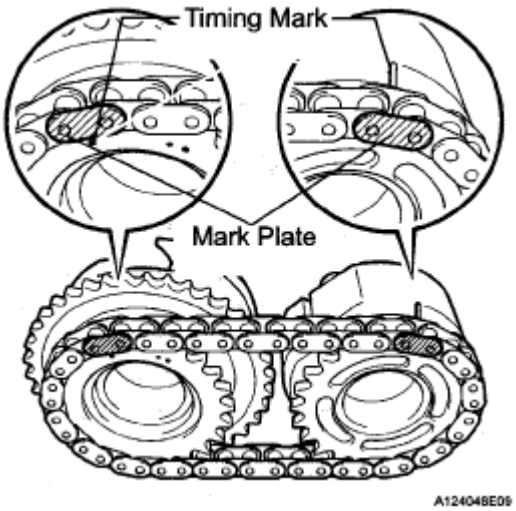

Fig. 53: Identifying Camshaft Timing Gear Timing Mark
Courtesy of TOYOTA MOTOR SALES, U.S.A., INC.

   d. Using SST to hold the hexagonal portion of each camshaft, tighten the flange bolts of the camshaft timing gear assembly and the camshaft timing exhaust gear assembly LH.

 © 2011 Mitchell Repair Information Company, LLC.

SST 09922-10010

Torque: 100 N*m (1020 kgf*cm, 74 ft.*lbf)

e. Remove the pin from the No. 2 chain tensioner assembly.

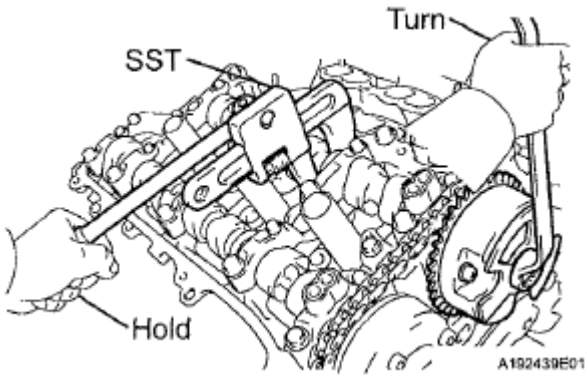

Fig. 54: Tightening Flange Bolts Of Camshaft Timing Gear Assembly
Courtesy of TOYOTA MOTOR SALES, U.S.A., INC.

5. **INSTALL IDLE SPROCKET ASSEMBLY** (See **REASSEMBLY**)
6. **INSTALL CHAIN SUB-ASSEMBLY** (See **REASSEMBLY**)
7. **INSTALL CHAIN TENSIONER SLIPPER** (See **REASSEMBLY**)
8. **INSTALL NO. 1 CHAIN TENSIONER ASSEMBLY** (See **REASSEMBLY**)
9. **INSTALL TIMING CHAIN CASE OIL SEAL** (See **REASSEMBLY**)
10. **INSTALL TIMING CHAIN COVER SUB-ASSEMBLY** (See **REASSEMBLY**)
11. **INSTALL OIL PAN SUB-ASSEMBLY** (See **REASSEMBLY**)
12. **INSTALL OIL STRAINER SUB-ASSEMBLY** (See **REASSEMBLY**)
13. **INSTALL NO. 2 OIL PAN SUB-ASSEMBLY** (See **REASSEMBLY**)
14. **INSTALL CYLINDER HEAD COVER SUB-ASSEMBLY (for Bank 1)** (See **REASSEMBLY**)
15. **INSTALL CYLINDER HEAD COVER SUB-ASSEMBLY (for Bank 2)** (See **REASSEMBLY**)
16. **INSTALL WATER OUTLET** (See **REASSEMBLY**)
17. **INSTALL WATER INLET HOUSING** (See **REASSEMBLY**)
18. **INSTALL NO. 1 OIL COOLER BRACKET (w/ Oil Cooler)** (See **REASSEMBLY**)
19. **INSTALL OIL COOLER ASSEMBLY (w/ Oil Cooler)** (See **REASSEMBLY**)
20. **INSTALL CRANKSHAFT PULLEY** (See **REASSEMBLY**)
21. **INSTALL OIL PIPE** (See **REASSEMBLY**)
22. **INSTALL NO. 1 OIL PIPE** (See **REASSEMBLY**)
23. **INSTALL CRANKSHAFT POSITION SENSOR** (See **REASSEMBLY**)
24. **INSTALL KNOCK CONTROL SENSOR** (See **INSPECTION**)
25. **INSTALL KNOCK CONTROL SENSOR WIRE** (See **INSTALLATION**)
26. **INSTALL NO. 1 VACUUM SWITCHING VALVE** (See **INSTALLATION**)

 © 2011 Mitchell Repair Information Company, LLC.

27. **INSTALL RADIO SETTING CONDENSER** (See **INSTALLATION**)
28. **INSTALL NO. 1 ENGINE FRONT MOUNTING BRACKET LH**
    a. Install the No. 1 front engine mounting bracket LH with the 6 bolts.

    Torque: 54 N*m (551 kgf*cm, 40 ft.*lbf)

NOTE:

- **Install the water inlet and mounting bracket within 15 minutes after installing the chain cover.**
- **Do not start the engine for at least 2 hours after installation.**

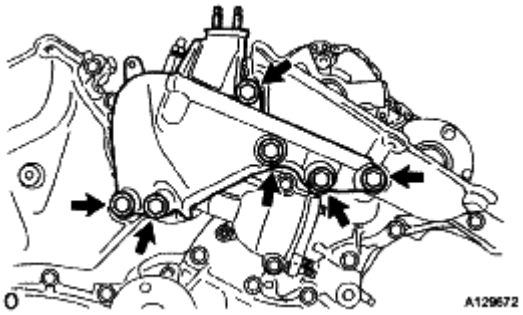

Fig. 55: Locating Engine Mounting Bracket Front And Bolts
Courtesy of TOYOTA MOTOR SALES, U.S.A., INC.

29. **INSTALL NO. 2 IDLER PULLEY SUB-ASSEMBLY** (See **INSTALLATION**)
30. **INSTALL NO. 2 TIMING GEAR COVER** (See **INSTALLATION**)
31. **INSTALL V-RIBBED BELT TENSIONER ASSEMBLY** (See **INSTALLATION**)
32. **INSTALL GENERATOR ASSEMBLY** (See **INSTALLATION**)
33. **INSTALL TRANSVERSE ENGINE MOUNTING BRACKET** (See **INSTALLATION**)
34. **INSTALL EXHAUST MANIFOLD SUB-ASSEMBLY LH** (See **INSTALLATION**)
35. **INSTALL NO. 2 EXHAUST MANIFOLD HEAT INSULATOR** (See **INSTALLATION**)
36. **INSTALL NO. 2 MANIFOLD STAY** (See **INSTALLATION**)
37. **INSTALL NO. 2 ENGINE OIL LEVEL DIPSTICK GUIDE** (See **INSTALLATION**)
38. **INSTALL EXHAUST MANIFOLD SUB-ASSEMBLY RH** (See **INSTALLATION**)
39. **INSTALL INTAKE MANIFOLD** (See **INSTALLATION**)
40. **INSTALL NO. 2 ENGINE MOUNTING STAY RH** (See **INSTALLATION**)
41. **INSTALL IGNITION COIL ASSEMBLY** (See **INSTALLATION**)
42. **REMOVE ENGINE STAND**
43. **INSTALL ENGINE ASSEMBLY**

HINT:

See **INSTALLATION** .

 © 2011 Mitchell Repair Information Company, LLC.

CAMSHAFT (FOR BANK 2)

COMPONENTS

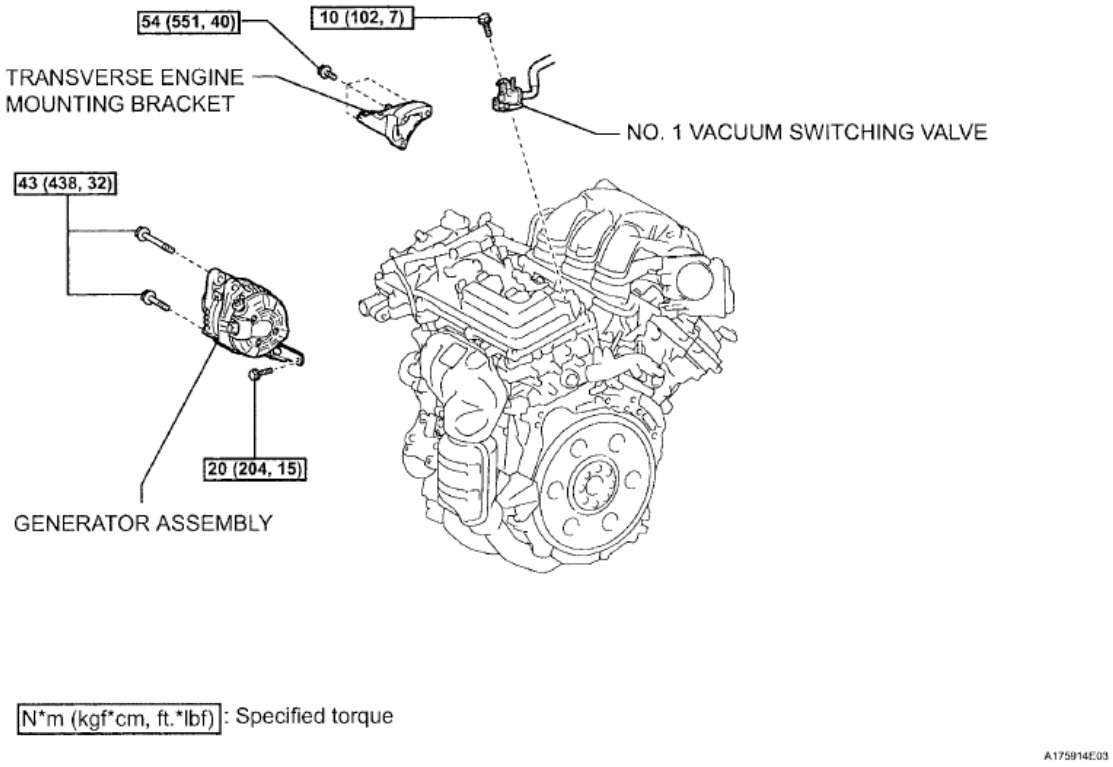

Fig. 56: Identifying Camshaft Components With Torque Specification (1 Of 8)
Courtesy of TOYOTA MOTOR SALES, U.S.A., INC.

 © 2011 Mitchell Repair Information Company, LLC.

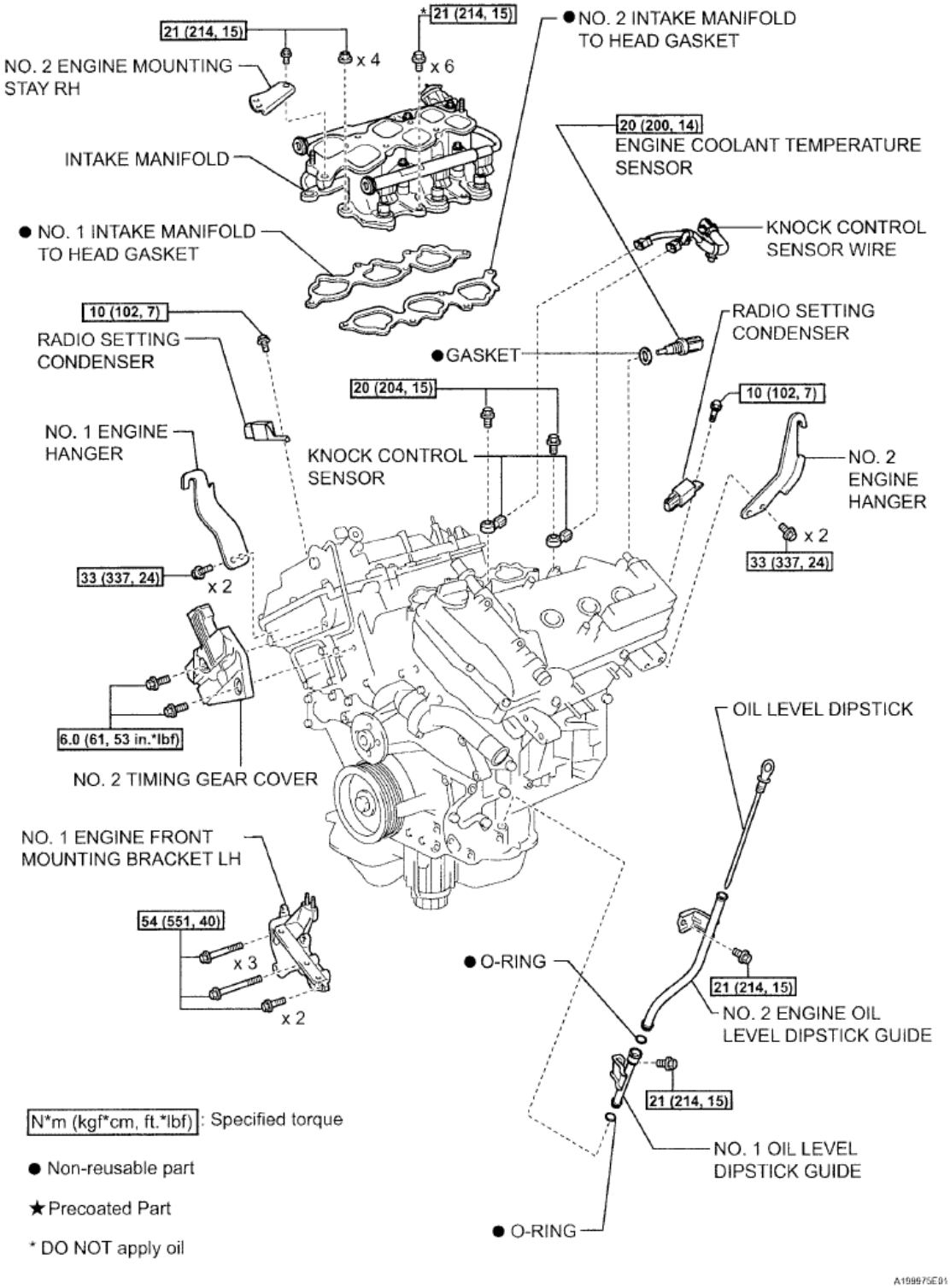

Fig. 57: Identifying Camshaft Components With Torque Specification (2 Of 8)
Courtesy of TOYOTA MOTOR SALES, U.S.A., INC.

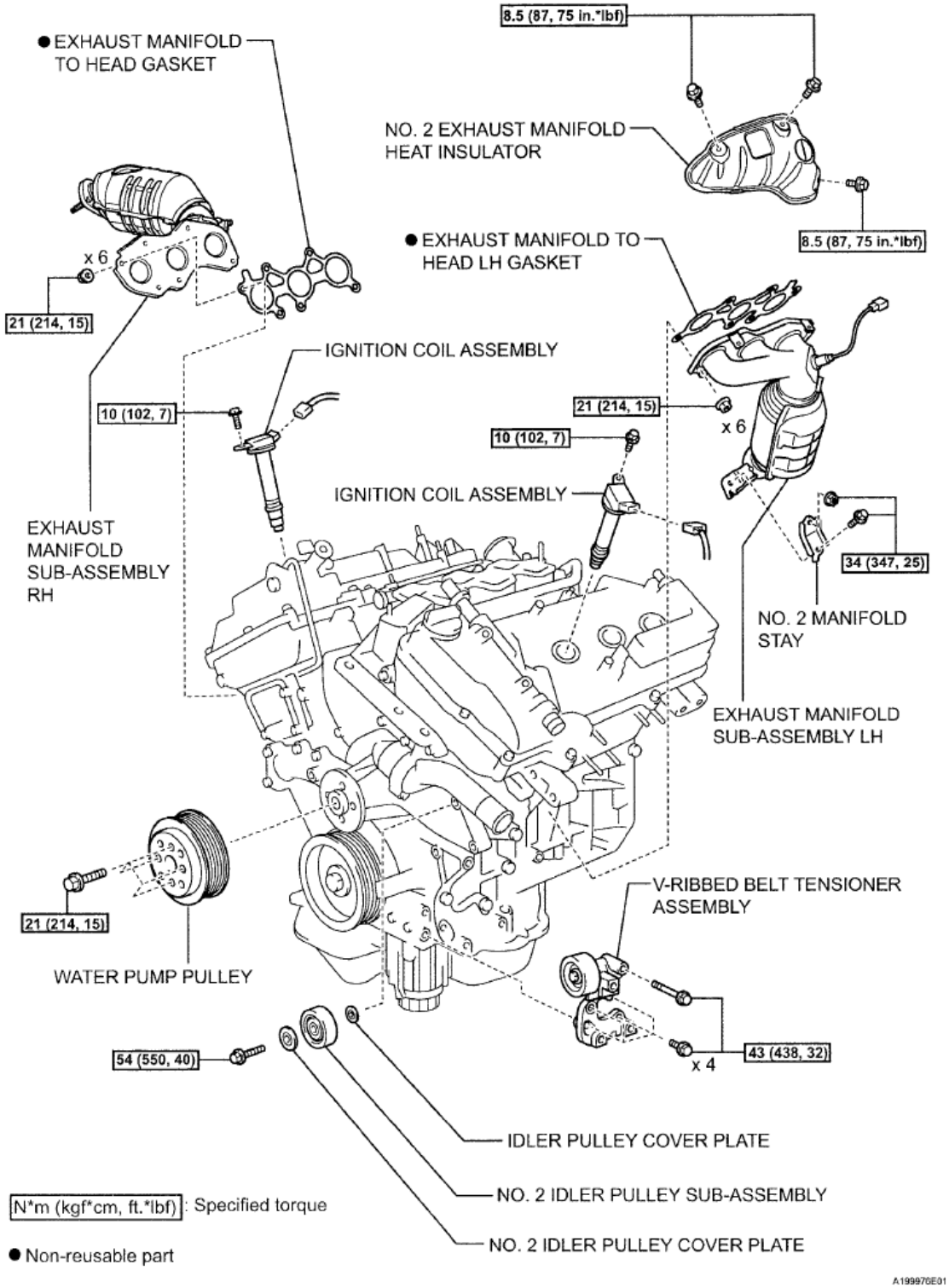

Fig. 58: Identifying Camshaft Components With Torque Specification (3 Of 8)
Courtesy of TOYOTA MOTOR SALES, U.S.A., INC.

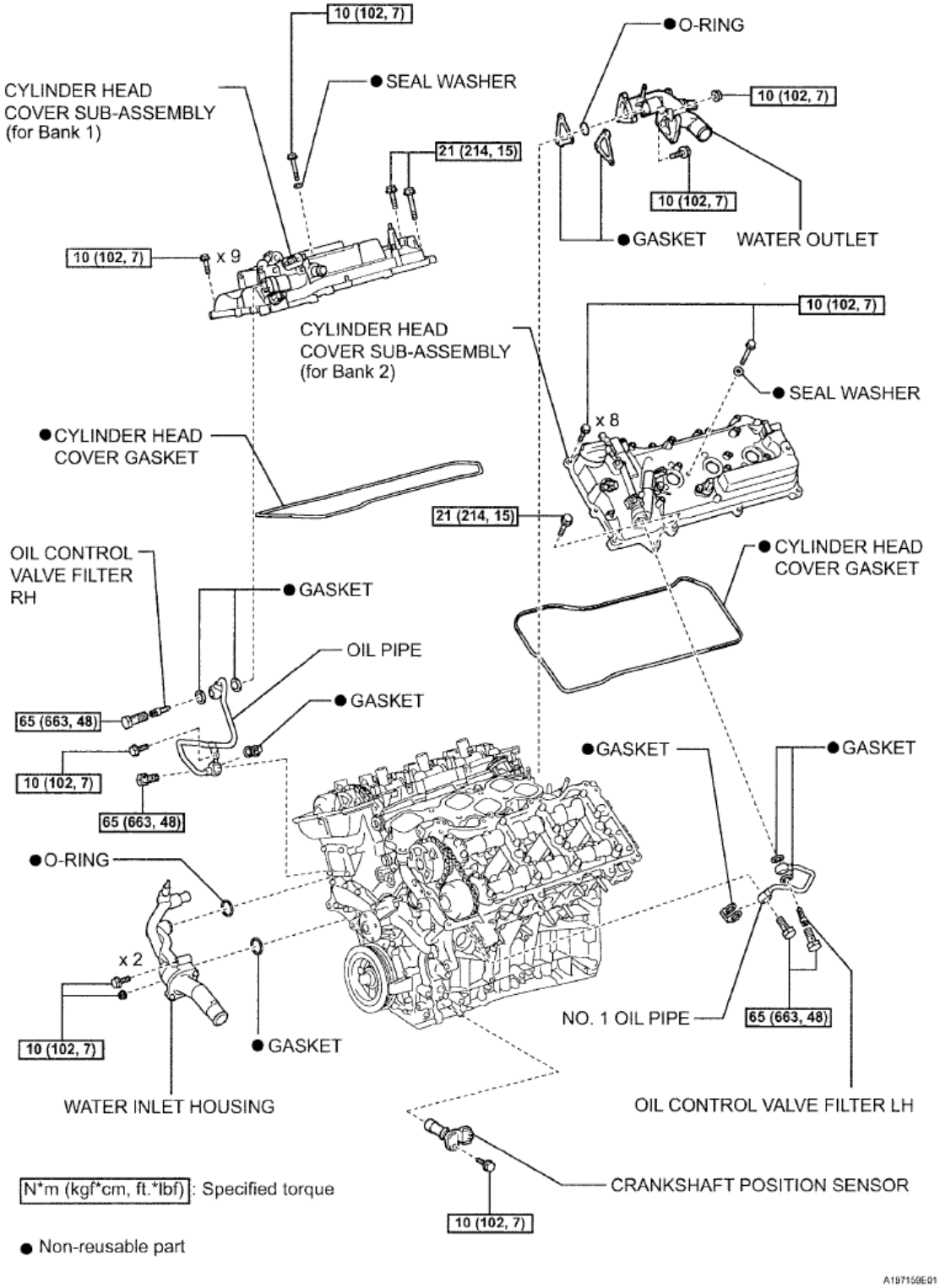

Fig. 59: Identifying Camshaft Components With Torque Specification (4 Of 8)
Courtesy of TOYOTA MOTOR SALES, U.S.A., INC.

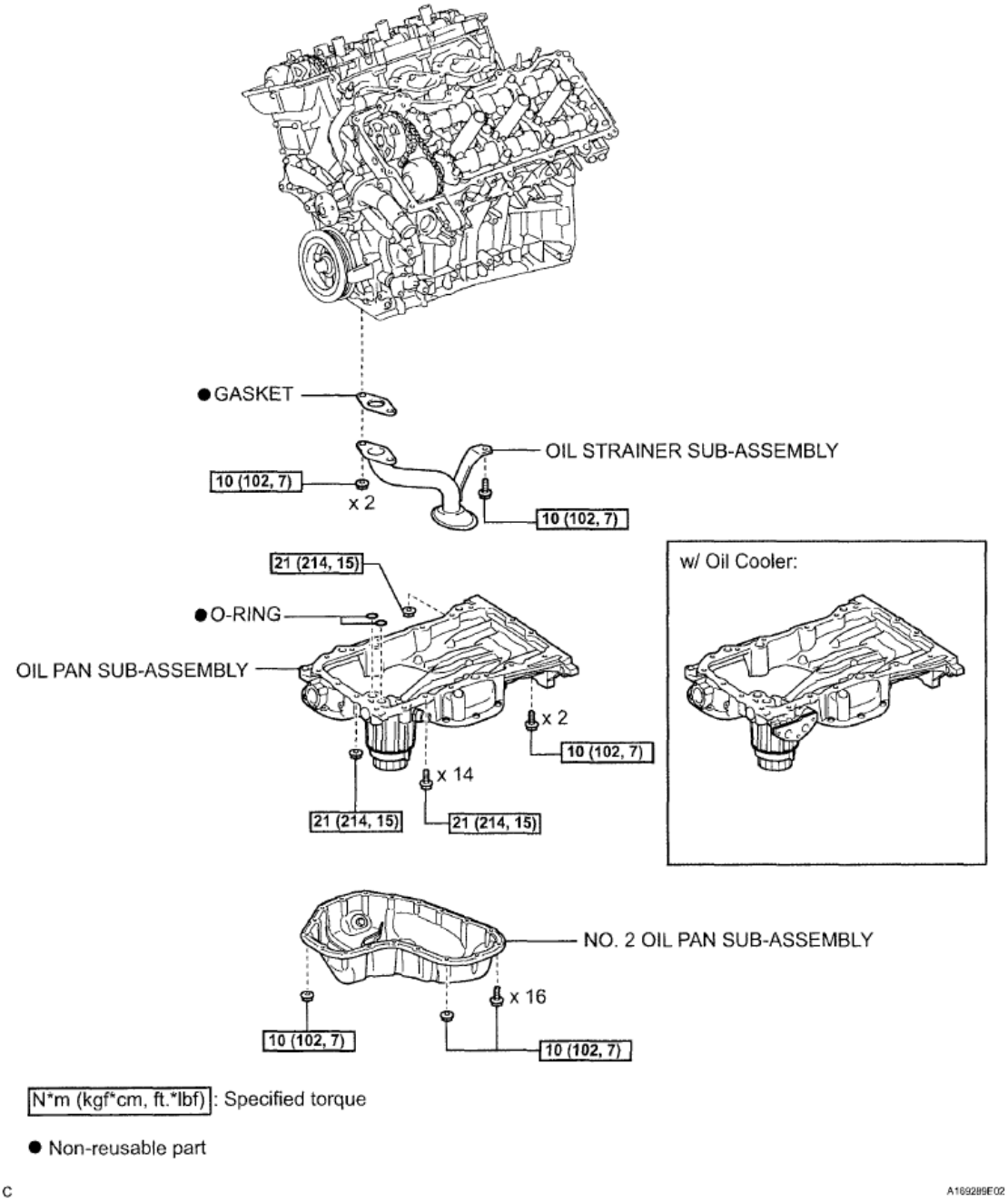

Fig. 60: Identifying Camshaft Components With Torque Specification (5 Of 8)
Courtesy of TOYOTA MOTOR SALES, U.S.A., INC.

 © 2011 Mitchell Repair Information Company, LLC.

w/ Oil Cooler:

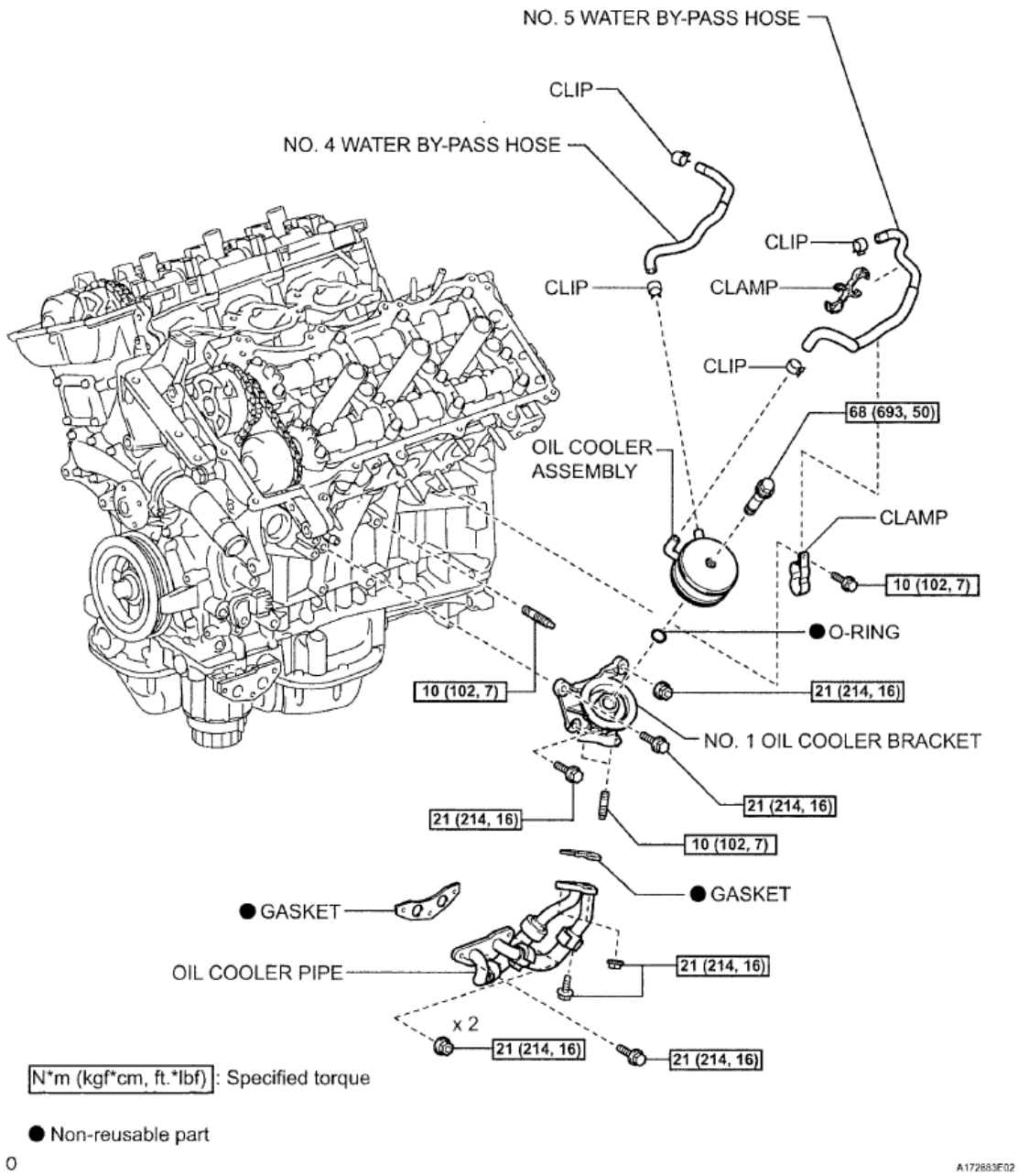

Fig. 61: Identifying Camshaft Components With Torque Specification (6 Of 8)
Courtesy of TOYOTA MOTOR SALES, U.S.A., INC.

 © 2011 Mitchell Repair Information Company, LLC.

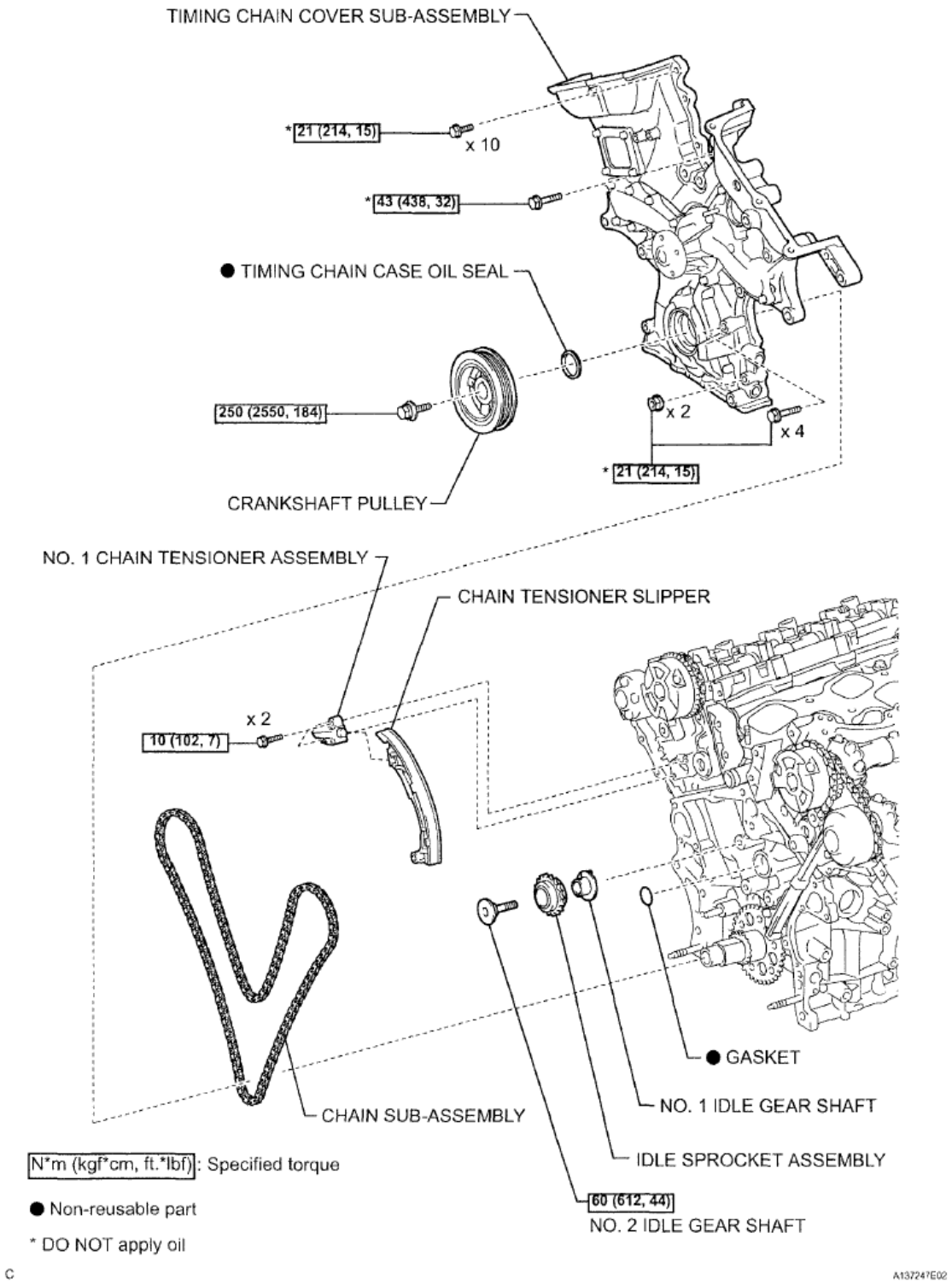

Fig. 62: Identifying Camshaft Components With Torque Specification (7 Of 8)
Courtesy of TOYOTA MOTOR SALES, U.S.A., INC.

 © 2011 Mitchell Repair Information Company, LLC.

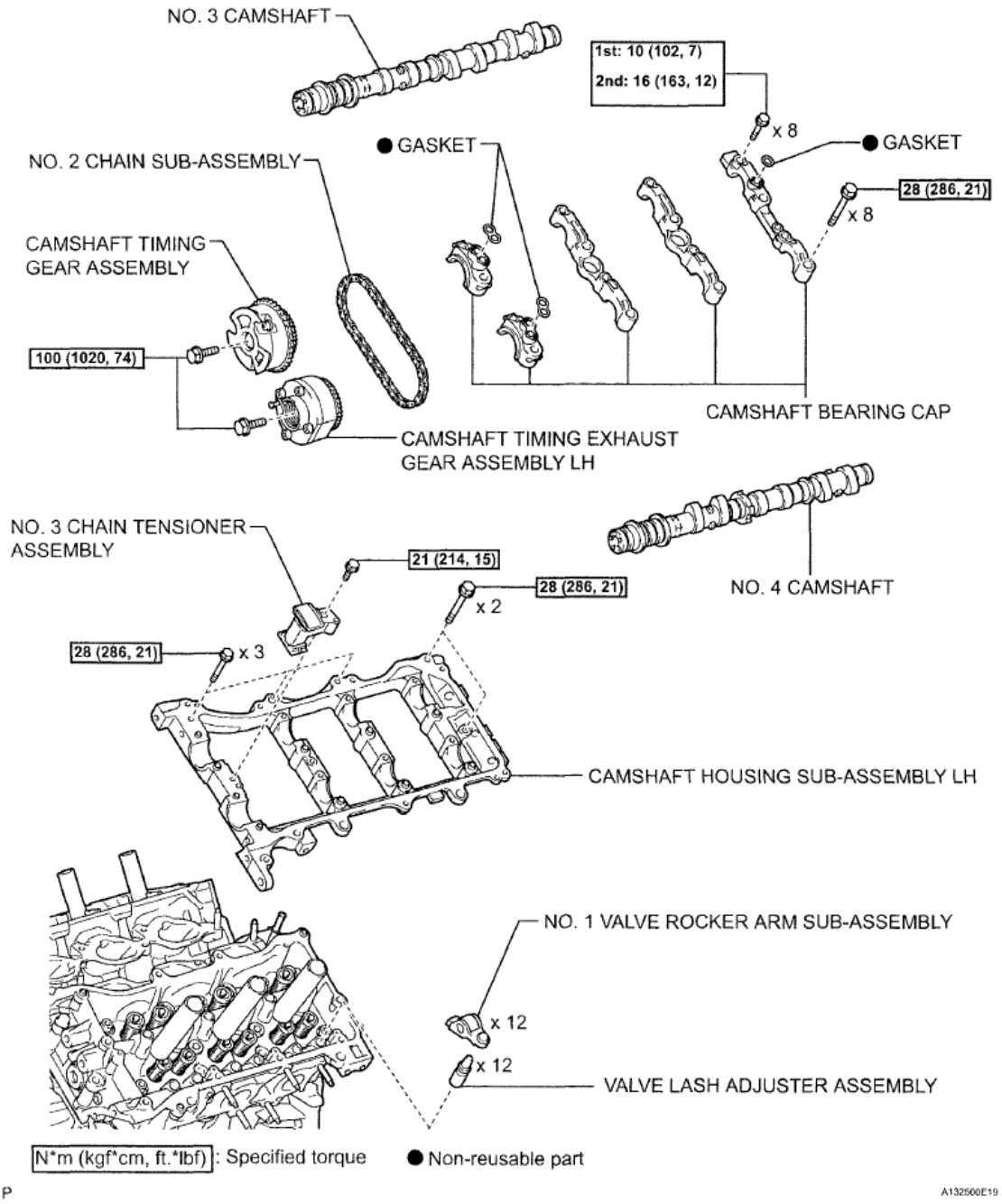

Fig. 63: Identifying Camshaft Components With Torque Specification (8 Of 8)
Courtesy of TOYOTA MOTOR SALES, U.S.A., INC.

REMOVAL

CAUTION: For additional information on timing chain/gear removal guidelines, installtion and camshaft timing gear alignment, see 2GR-FE VALVE TIMING PROCEDURE .

1. **REMOVE ENGINE ASSEMBLY**

HINT:

See **REMOVAL** .

2. **INSTALL ENGINE STAND**
3. **REMOVE IGNITION COIL ASSEMBLY** (See **REMOVAL**)
4. **REMOVE NO. 2 ENGINE MOUNTING STAY RH** (See **REMOVAL**)
5. **REMOVE INTAKE MANIFOLD** (See **REMOVAL**)
6. **REMOVE EXHAUST MANIFOLD SUB-ASSEMBLY RH** (See **REMOVAL**)
7. **REMOVE NO. 2 ENGINE OIL LEVEL DIPSTICK GUIDE** (See **REMOVAL**)
8. **REMOVE NO. 2 MANIFOLD STAY** (See **REMOVAL**)
9. **REMOVE NO. 2 EXHAUST MANIFOLD HEAT INSULATOR** (See **REMOVAL**)
10. **REMOVE EXHAUST MANIFOLD SUB-ASSEMBLY LH** (See **REMOVAL**)
11. **REMOVE TRANSVERSE ENGINE MOUNTING BRACKET** (See **REMOVAL**)
12. **REMOVE GENERATOR ASSEMBLY** (See **REMOVAL**)
13. **REMOVE V-RIBBED BELT TENSIONER ASSEMBLY** (See **REMOVAL**)
14. **REMOVE NO. 2 TIMING GEAR COVER** (See **REMOVAL**)
15. **REMOVE NO. 2 IDLER PULLEY SUB-ASSEMBLY** (See **REMOVAL**)
16. **REMOVE NO. 1 ENGINE FRONT MOUNTING BRACKET LH** (See **REMOVAL**)
17. **REMOVE RADIO SETTING CONDENSER** (See **REMOVAL**)
18. **REMOVE NO. 1 VACUUM SWITCHING VALVE** (See **REMOVAL**)
19. **REMOVE KNOCK CONTROL SENSOR WIRE** (See **REMOVAL**)
20. **REMOVE KNOCK CONTROL SENSOR** (See **REMOVAL**)
21. **REMOVE CRANKSHAFT POSITION SENSOR** (See **DISASSEMBLY**)
22. **REMOVE NO. 1 OIL PIPE** (See **DISASSEMBLY**)
23. **REMOVE OIL PIPE** (See **DISASSEMBLY**)
24. **REMOVE CRANKSHAFT PULLEY** (See **DISASSEMBLY**)
25. **REMOVE OIL COOLER ASSEMBLY (w/ Oil Cooler)** (See **DISASSEMBLY**)
26. **REMOVE NO. 1 OIL COOLER BRACKET (w/ Oil Cooler)** (See **DISASSEMBLY**)
27. **REMOVE WATER INLET HOUSING** (See **DISASSEMBLY**)
28. **REMOVE WATER OUTLET** (See **DISASSEMBLY**)
29. **REMOVE CYLINDER HEAD COVER SUB-ASSEMBLY (for Bank 1)** (See **DISASSEMBLY**)
30. **REMOVE CYLINDER HEAD COVER SUB-ASSEMBLY (for Bank 2)** (See **DISASSEMBLY**)
31. **REMOVE NO. 2 OIL PAN SUB-ASSEMBLY** (See **DISASSEMBLY**)
32. **REMOVE OIL STRAINER SUB-ASSEMBLY** (See **DISASSEMBLY**)
33. **REMOVE OIL PAN SUB-ASSEMBLY** (See **DISASSEMBLY**)
34. **REMOVE TIMING CHAIN COVER SUB-ASSEMBLY** (See **DISASSEMBLY**)
35. **REMOVE TIMING CHAIN CASE OIL SEAL** (See **DISASSEMBLY**)
36. **SET NO. 1 CYLINDER TO TDC/COMPRESSION** (See **DISASSEMBLY**)

 © 2011 Mitchell Repair Information Company, LLC.

37. **REMOVE NO. 1 CHAIN TENSIONER ASSEMBLY** (See **DISASSEMBLY**)
38. **REMOVE CHAIN TENSIONER SLIPPER** (See **DISASSEMBLY**)
39. **REMOVE CHAIN SUB-ASSEMBLY** (See **DISASSEMBLY**)
40. **REMOVE IDLE SPROCKET ASSEMBLY** (See **DISASSEMBLY**)
41. **REMOVE CAMSHAFT TIMING GEARS AND NO. 2 CHAIN (for Bank 2)**

CAUTION: For additional information on timing chain/gear removal guidelines, installtion and camshaft timing gear alignment, see 2GR-FE VALVE TIMING PROCEDURE .

a. While pushing down the No. 3 chain tensioner assembly, insert a pin of 1.0 mm (0.0394 in.) diameter into the hole to fix the No. 3 chain tensioner assembly.

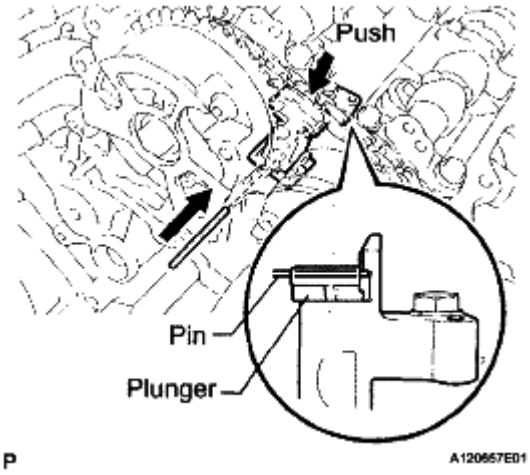

Fig. 64: Inserting Pin Of Diameter Into Hole
Courtesy of TOYOTA MOTOR SALES, U.S.A., INC.

b. Using SST to hold the hexagonal portion of each camshaft, loosen the flange bolts of the camshaft timing gear assembly and the camshaft timing exhaust gear assembly LH.

SST 09922-10010

NOTE: Do not loosen the other bolts. If any of the bolts is loosened, replace the camshaft timing gear assembly and/or the camshaft timing exhaust gear assembly LH with a new one.

 © 2011 Mitchell Repair Information Company, LLC.

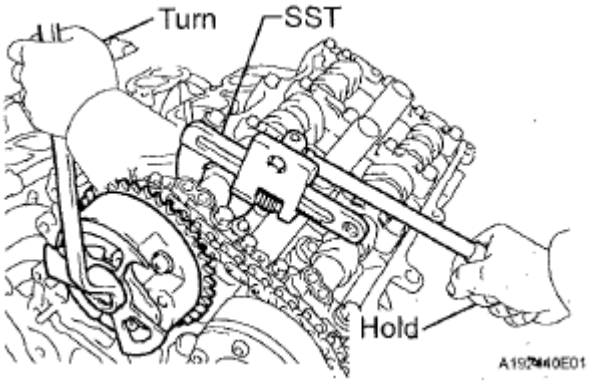

Fig. 65: Loosening Flange Bolts Of Camshaft Timing Gear Assembly
Courtesy of TOYOTA MOTOR SALES, U.S.A., INC.

c. Remove the 2 flange bolts, the camshaft timing gear assembly and the camshaft timing exhaust gear assembly LH together with the No. 2 chain.

42. **REMOVE NO. 3 CHAIN TENSIONER ASSEMBLY**
    a. Remove the bolt and No. 3 chain tensioner assembly.

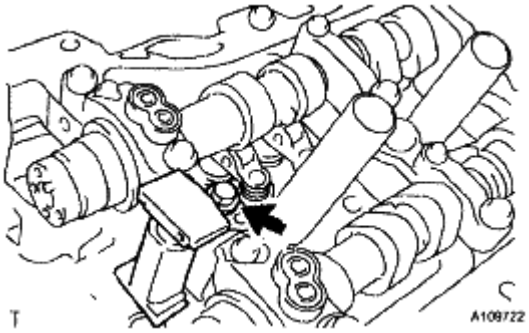

Fig. 66: Identifying No.3 Chain Tensioner Bolt
Courtesy of TOYOTA MOTOR SALES, U.S.A., INC.

43. **REMOVE CAMSHAFT BEARING CAP**
    a. Check that the camshafts are positioned as shown in the illustration.

 © 2011 Mitchell Repair Information Company, LLC.

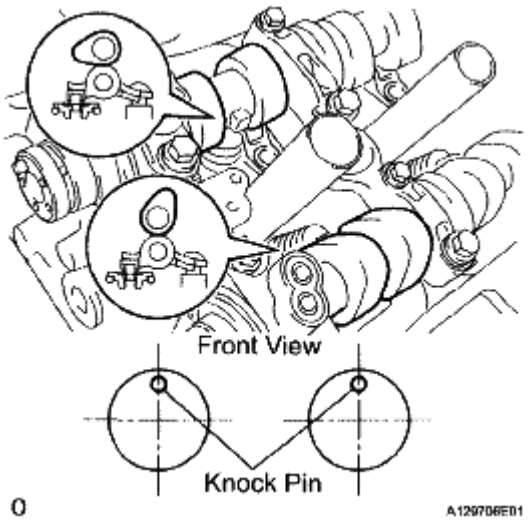

Fig. 67: Identifying Knock Pin Of Camshaft
Courtesy of TOYOTA MOTOR SALES, U.S.A., INC.

b. Uniformly loosen and remove the 8 bearing cap bolts in several steps and in the sequence shown in the illustration.

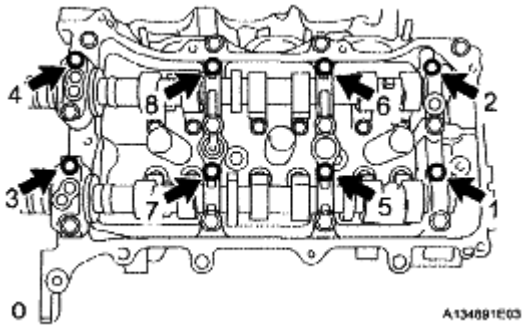

Fig. 68: Identifying Bearing Cap Bolts Loosening Sequence
Courtesy of TOYOTA MOTOR SALES, U.S.A., INC.

c. Uniformly loosen and remove the 13 bearing cap bolts in several steps and in the sequence shown in the illustration.

NOTE: Uniformly loosen the bolts while keeping the camshaft level.

d. Remove the 5 camshaft bearing caps.

44. **REMOVE NO. 3 CAMSHAFT**

a. Remove the No. 3 camshaft.

 © 2011 Mitchell Repair Information Company, LLC.

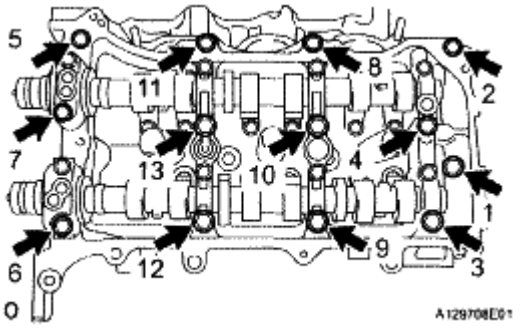

Fig. 69: Locating Bearing Cap Bolts In Sequence
Courtesy of TOYOTA MOTOR SALES, U.S.A., INC.

45. **REMOVE NO. 4 CAMSHAFT**
    a. Remove the No. 4 camshaft.
46. **REMOVE CAMSHAFT HOUSING SUB-ASSEMBLY LH**
    a. Remove the camshaft housing sub-assembly LH by prying between the cylinder head and camshaft housing sub-assembly LH with a screwdriver.

NOTE: Be careful not to damage the contact surfaces of the cylinder head and camshaft housing sub-assembly LH.

HINT:

Tape the screwdriver tip before use.

47. **INSPECT CAMSHAFT TIMING GEAR ASSEMBLY**
    a. Clamp the camshaft in a vise.

NOTE: Be careful not to damage the camshaft in the vise.

 © 2011 Mitchell Repair Information Company, LLC.

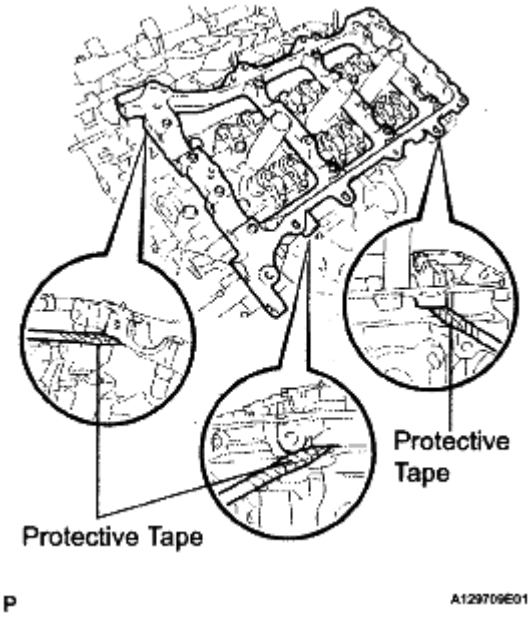

Fig. 70: Taping Screwdriver Tip
Courtesy of TOYOTA MOTOR SALES, U.S.A., INC.

b. Put the camshaft timing gear assembly and camshaft together by aligning the key groove and straight pin.
c. Lightly press and turn the camshaft timing gear assembly against the camshaft, and press harder after the pin enters the groove.

NOTE: Be sure not to turn the camshaft timing gear assembly in the retard direction.

d. Check that there is no clearance between the camshaft timing gear assembly's flange and the camshaft.

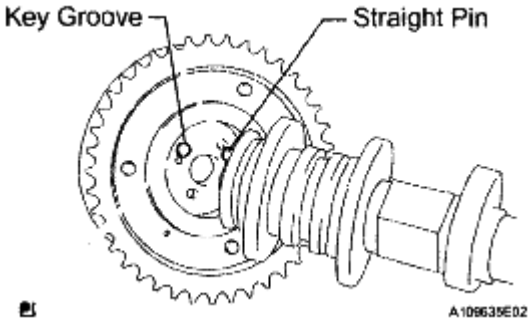

Fig. 71: Aligning Key Groove And Straight Pin
Courtesy of TOYOTA MOTOR SALES, U.S.A., INC.

e. Tighten the flange bolt with the camshaft timing gear assembly fixed.

Torque: 100 N*m (1020 kgf*cm, 74 ft.*lbf)

f. Check the lock of the camshaft timing gear assembly.
   1. Clamp the camshaft in a vise, and confirm that the camshaft timing gear assembly locks.

NOTE: Be careful not to damage the camshaft.

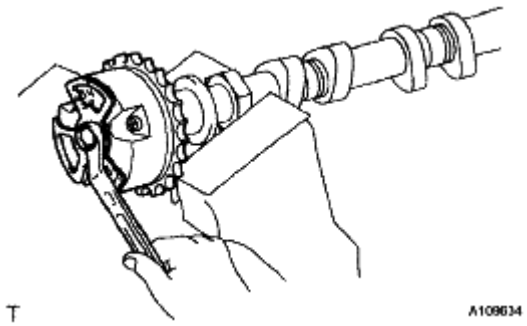

Fig. 72: Checking Lock Of Camshaft Timing Gear
Courtesy of TOYOTA MOTOR SALES, U.S.A., INC.

g. Release the lock pin.
   1. Cover the 4 oil paths of the cam journal with vinyl tape as shown in the illustration.

      HINT:

      The 2 advance side paths are located in the camshaft grove. Plug one of the paths with a rubber piece.

   2. Break through the tape on the advance side path and the retard side path on the opposite side of the hole of the advance side path, as shown in the illustration.

 © 2011 Mitchell Repair Information Company, LLC.

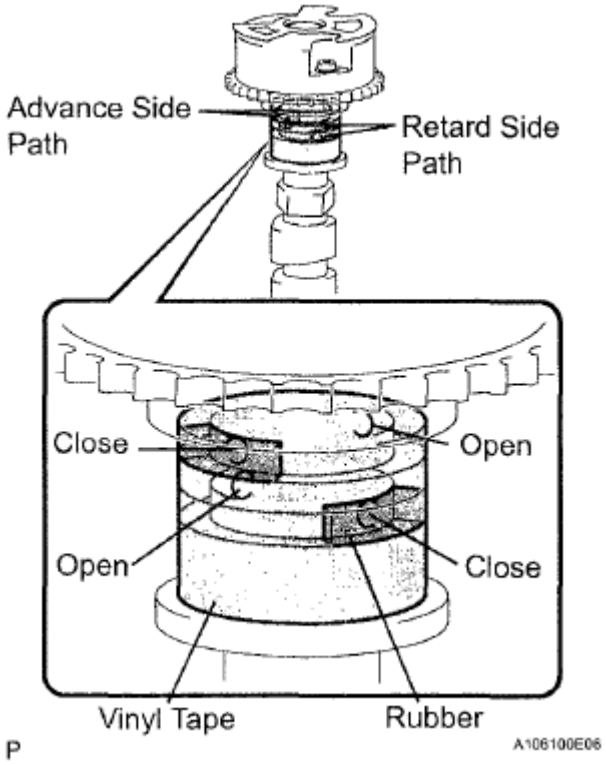

Fig. 73: Releasing Lock Pin
Courtesy of TOYOTA MOTOR SALES, U.S.A., INC.

3. Apply approximately 200 kPa (2.0 kgf/cm^2 , 28 psi) of air pressure to the 2 opened paths.

CAUTION: Cover the paths with a piece of cloth when applying pressure to prevent oil from spraying.

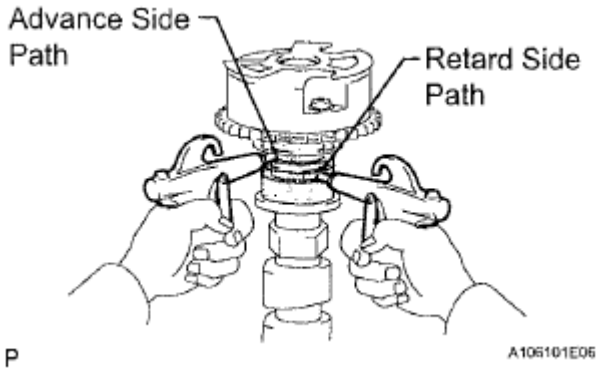

Fig. 74: Applying Air Pressure To Advance Side Path And Retard Side Path
Courtesy of TOYOTA MOTOR SALES, U.S.A., INC.

4. Check that the camshaft timing gear assembly revolves in the advance direction when reducing the air pressure applied to the retard side path.

HINT:

This operation releases the lock pin at the most retarded position.

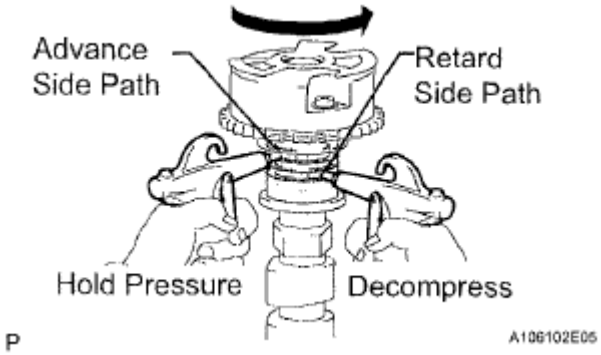

Fig. 75: Identifying Flange Bolt And Straight Pin
Courtesy of TOYOTA MOTOR SALES, U.S.A., INC.

5. When the camshaft timing gear assembly reaches the most advanced position, release the air pressure first from the retard side path and then from advance side path.

NOTE: **Do not release the air pressure from the advance side path first. The gear may abruptly shift in the retard direction and break the lock pin.**

h. Check for smooth rotation.
   1. Turn the camshaft timing gear assembly within its movable range (21°) 2 or 3 times, but do not turn it to the most retarded position. Make sure that the gear turns smoothly.

NOTE: **Do not use air pressure to perform the smooth operation check.**

i. Check the lock in the most retarded position.
   1. Confirm that the camshaft timing gear assembly locks at the most retarded position.

j. Remove the flange bolt and camshaft timing gear assembly.

NOTE:
- **Do not remove the other 3 bolts.**
- **If planning to reuse the camshaft timing gear, be sure to release the straight pin lock before installing the camshaft timing gear.**

48. **INSPECT CAMSHAFT TIMING EXHAUST GEAR ASSEMBLY LH**
   a. Clamp the camshaft in a vise.

 © 2011 Mitchell Repair Information Company, LLC.

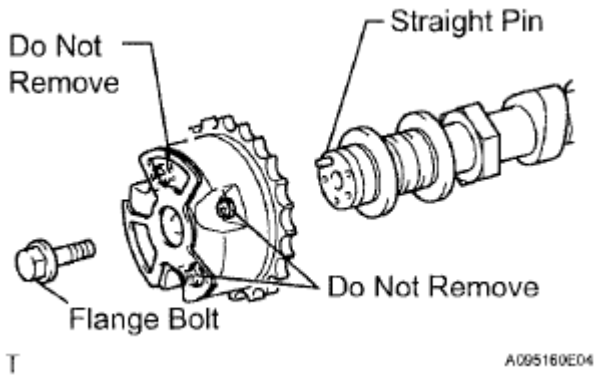

Fig. 76: Aligning Key Groove And Straight Pin
Courtesy of TOYOTA MOTOR SALES, U.S.A., INC.

NOTE: Be careful not to damage the camshaft in the vise.

b. Put the camshaft timing exhaust gear assembly LH and camshaft together by aligning the key groove and straight pin.
c. Lightly press and turn the camshaft timing gear against the camshaft, and press harder after the pin enters the groove.

NOTE: Be sure not to turn the camshaft timing exhaust gear in the retard direction.

d. Check that there is no clearance between the gear's flange and the camshaft.

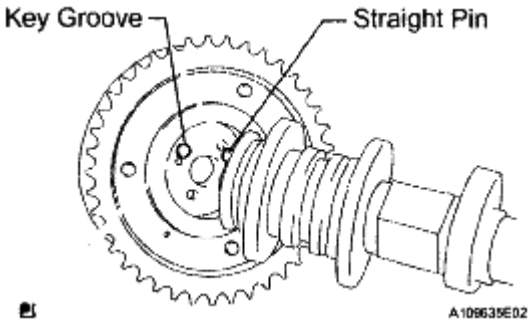

Fig. 77: Aligning Key Groove And Straight Pin
Courtesy of TOYOTA MOTOR SALES, U.S.A., INC.

e. Tighten the flange bolt with the camshaft timing exhaust gear assembly LH fixed.

Torque: 100 N*m (1020 kgf*cm, 74 ft.*lbf)

f. Check the camshaft timing exhaust gear lock.
   1. Make sure that the camshaft timing exhaust gear assembly LH locks.

 © 2011 Mitchell Repair Information Company, LLC.

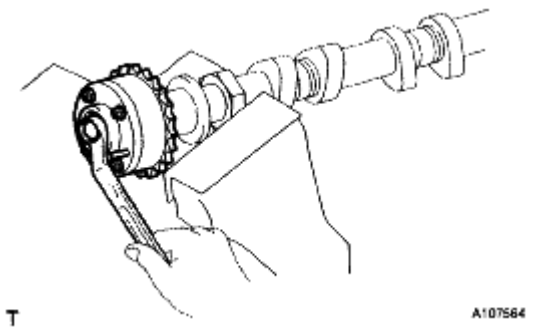

Fig. 78: Checking Camshaft Timing Exhaust Gear Lock
Courtesy of TOYOTA MOTOR SALES, U.S.A., INC.

g. Release the lock pin.
   1. Cover the 4 oil paths of the cam journal with vinyl tape as shown in the illustration.

      HINT:

      The 2 advance side paths are located in the camshaft grove. Plug one of the paths with a rubber piece.

   2. Break through the tape on the advance side path and the retard side path on the opposite side of the hole of the advance side path, as shown in the illustration.

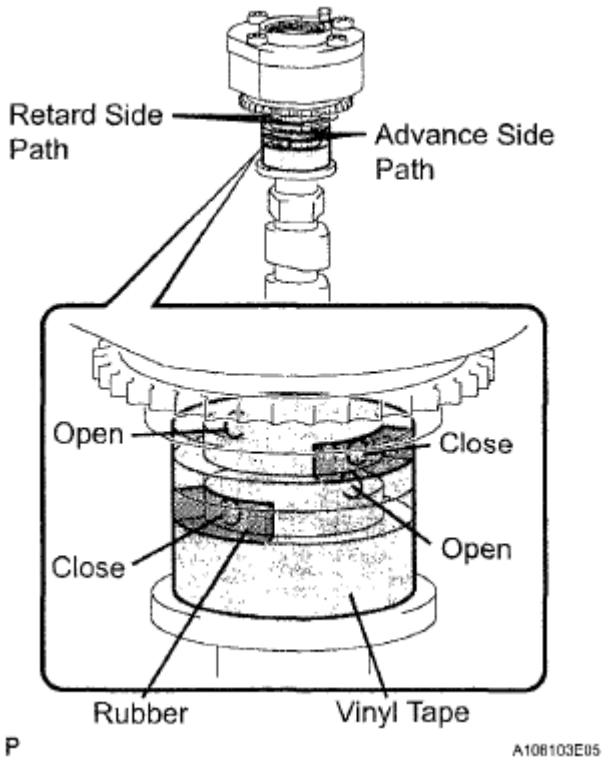

Fig. 79: Releasing Lock Pin

 © 2011 Mitchell Repair Information Company, LLC.

Courtesy of TOYOTA MOTOR SALES, U.S.A., INC.

3. Apply approximately 200 kPa (2.0 kgf/cm^2 , 28 psi) of air pressure to the 2 opened paths (the advance side path and the retard side path).

CAUTION: Cover the paths with a piece of cloth when applying pressure to prevent oil from spraying.

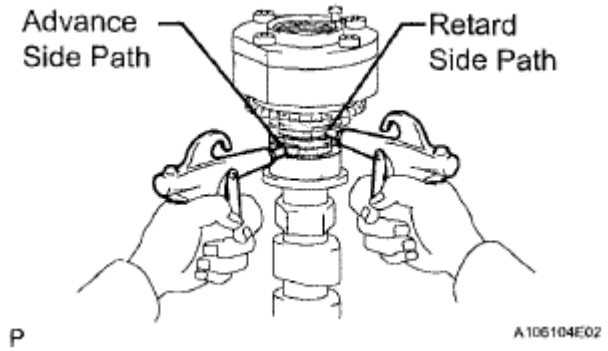

Fig. 80: Applying Air Pressure To Camshaft Advance Side Path And Retard Side Path
Courtesy of TOYOTA MOTOR SALES, U.S.A., INC.

4. Make sure that the camshaft timing exhaust gear assembly LH rotates in the retard direction when reducing the air pressure applied to the advance side path.

HINT:

The lock pin is released and the camshaft timing exhaust gear assembly LH turns in the retard direction.

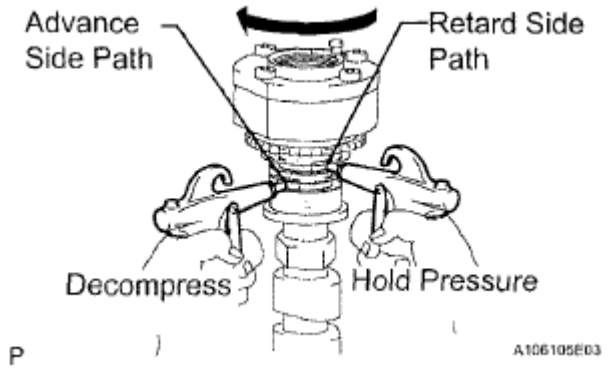

Fig. 81: Applying Air Pressure To Camshaft Advance Side Path And Retard Side Path
Courtesy of TOYOTA MOTOR SALES, U.S.A., INC.

5. When the camshaft timing exhaust gear assembly LH moves to the most retarded position, release the air pressure from the advance side path, and then release the air pressure from the retard side path.

NOTE: **Be sure to release the air pressure from the advance side path first. If the air pressure of the retard side path is released first, the camshaft timing exhaust gear assembly LH may abruptly shift in the advance direction and break the lock pin or other parts.**

h. Check for smooth rotation.
   1. Turn the camshaft timing exhaust gear assembly LH within its movable range (18.5°) 2 or 3 times, but do not turn it to the most advanced position. Make sure that the gear assembly turns smoothly.

NOTE: **When the air pressure is released from the advance side path and then from the retard side path, the gear assembly automatically returns to the most advanced position due to the advance assist spring operation and locks. Gradually release the air pressure from the retard side path before performing the smooth rotation check.**

i. Check the lock at the most advanced position.
   1. Make sure that the camshaft timing exhaust gear assembly LH locks at the most advanced position.

j. Remove the flange bolt and camshaft timing exhaust gear assembly LH.

NOTE:
- **Be sure not to remove the other 4 bolts.**
- **If planning to reuse the gear, be sure to release the straight pin lock before installing the gear.**

INSTALLATION

1. **INSTALL CAMSHAFT BEARING CAP**

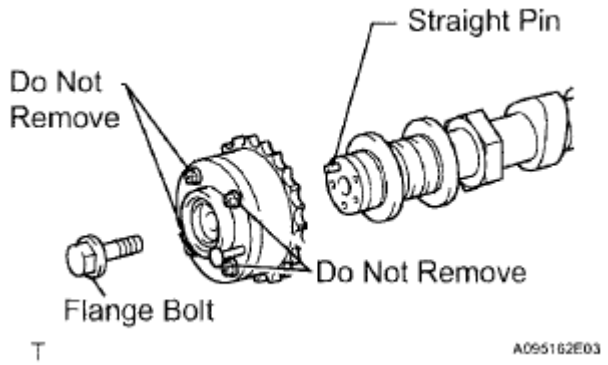

Fig. 82: Identifying Flange Bolt And Straight Pin
Courtesy of TOYOTA MOTOR SALES, U.S.A., INC.

 © 2011 Mitchell Repair Information Company, LLC.

a. Apply engine oil to the camshaft journals, camshaft housing sub-assembly LH and camshaft bearing caps.
b. Install the No. 3 camshaft and No. 4 camshaft to the camshaft housing sub-assembly LH.
c. Make sure of the marks and numbers on the camshaft bearing caps and place them in each proper position and direction.

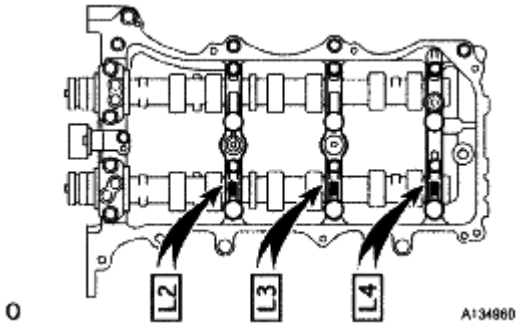

Fig. 83: Identifying Marks And Numbers On Camshaft Bearing Caps
Courtesy of TOYOTA MOTOR SALES, U.S.A., INC.

d. Temporarily tighten the 8 bolts in the order shown in the illustration.

Torque: 10 N*m (102 kgf*cm, 7 ft.*lbf)

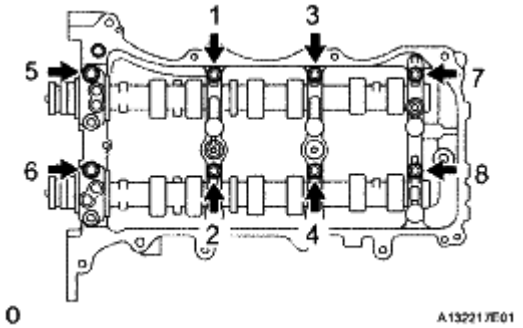

Fig. 84: Identifying Camshaft Bearing Bolts Tighten Sequence
Courtesy of TOYOTA MOTOR SALES, U.S.A., INC.

2. **INSTALL CAMSHAFT HOUSING SUB-ASSEMBLY LH**
   a. Make sure that the valve rocker arm is installed as shown in the illustration.

 © 2011 Mitchell Repair Information Company, LLC.

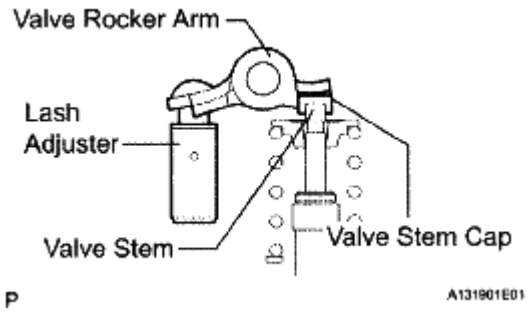

Fig. 85: Identifying Valve Rocker Arm
Courtesy of TOYOTA MOTOR SALES, U.S.A., INC.

b. Apply seal packing in a continuous line as shown in the illustration.

Seal packing:

Toyota Genuine Seal Packing Black, Three Bond 1207B or equivalent

Seal diameter:

3.5 to 4.5 mm (0.138 to 0.177 in.)

NOTE:

- **Remove any oil from the contact surface.**
- **Install the camshaft housing sub-assembly LH within 3 minutes.**
- **Do not start the engine for at least 2 hours after installing.**

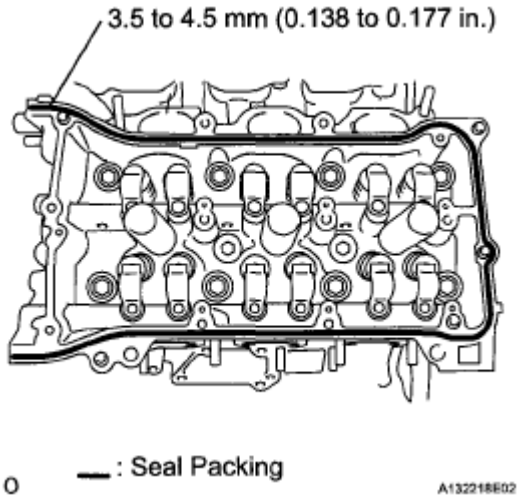

Fig. 86: Identifying Camshaft Housing Seal Packing Area
Courtesy of TOYOTA MOTOR SALES, U.S.A., INC.

c. Install the camshaft housing sub-assembly LH and tighten the 13 bolts in the order shown in the illustration.

Torque: 28 N*m (286 kgf*cm, 21 ft.*lbf)

NOTE:

- **When installing the camshaft housing LH, it is necessary to correctly position the camshafts as shown in the illustration. Failure to correctly position these parts may result in damage due to contact between the pistons and valves. If a camshaft is rotated with a piston at TDC, valve contact will occur.**
- **If any of the bolts are loosened during installation, remove the camshaft housing, clean the installation surfaces, and reapply seal packing.**
- **If the camshaft housing is removed because any of the bolts are loosened during installation, make sure that the previously applied seal packing does not enter any oil passages.**

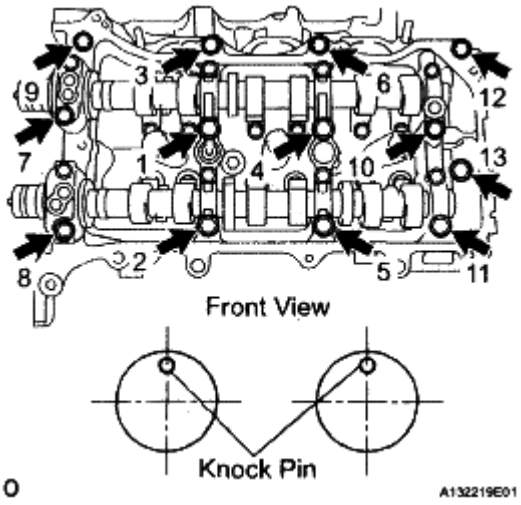

Fig. 87: Identifying Camshaft Housing Bolt Tighten Sequence
Courtesy of TOYOTA MOTOR SALES, U.S.A., INC.

d. Tighten the 8 bolts in the order shown in the illustration.

Torque: 16 N*m (163 kgf*cm, 12 ft.*lbf)

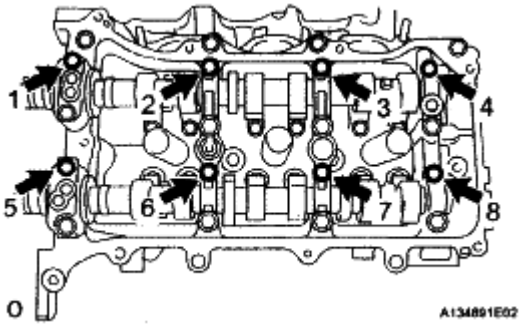

Fig. 88: Locating Camshaft Housing Bolts
Courtesy of TOYOTA MOTOR SALES, U.S.A., INC.

3. **INSTALL NO. 3 CHAIN TENSIONER ASSEMBLY**
   a. Install the No. 3 chain tensioner assembly with the bolt.

      Torque: 21 N*m (214 kgf*cm, 15 ft.*lbf)

   b. While pushing in the tensioner, insert a pin of 1.0 mm (0.0394 in.) diameter into the hole to hold it.

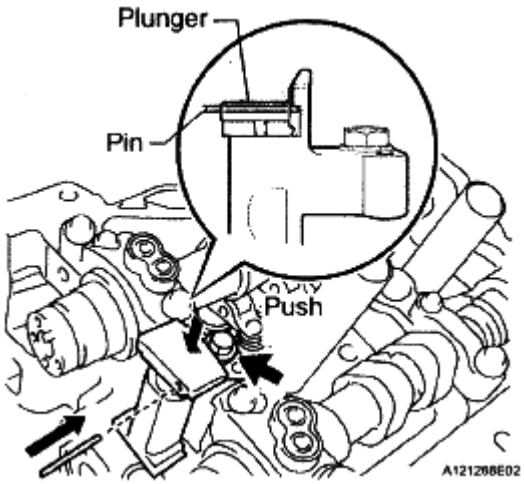

Fig. 89: Installing No 3 Chain Tensioner
Courtesy of TOYOTA MOTOR SALES, U.S.A., INC.

4. **INSTALL CAMSHAFT TIMING GEARS AND NO. 2 CHAIN (for Bank 2)**
   a. Align the mark plates (yellow) with the timing marks of the camshaft timing gear assemblies as shown in the illustration.
   b. Apply a light coat of engine oil to the bolt threads and bolt-seating surface.
   c. Align the knock pin of the camshaft with the pin hole of the camshaft timing gear assembly. Install the camshaft timing gear assembly and camshaft timing exhaust gear LH with the No. 2 chain sub-assembly installed.

 © 2011 Mitchell Repair Information Company, LLC.

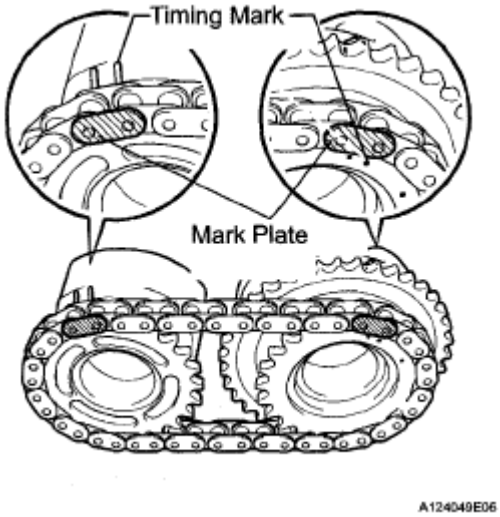

Fig. 90: Identifying Camshaft Timing Mark
Courtesy of TOYOTA MOTOR SALES, U.S.A., INC.

d. Using SST to hold the hexagonal portion of each camshaft, tighten the flange bolts of the camshaft timing gear assembly and the camshaft timing exhaust gear assembly LH.

SST 09922-10010

Torque: 100 N*m (1020 kgf*cm, 74 ft.*lbf)

e. Remove the pin from the No. 3 chain tensioner assembly.

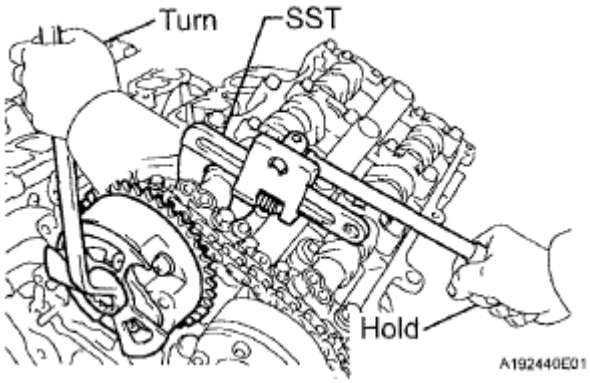

Fig. 91: Tightening Flange Bolts Of Camshaft Timing Gear Assembly
Courtesy of TOYOTA MOTOR SALES, U.S.A., INC.

5. **INSTALL IDLE SPROCKET ASSEMBLY** (See **REASSEMBLY**)
6. **INSTALL CHAIN SUB-ASSEMBLY** (See **REASSEMBLY**)
7. **INSTALL CHAIN TENSIONER SLIPPER** (See **REASSEMBLY**)
8. **INSTALL NO. 1 CHAIN TENSIONER ASSEMBLY** (See **REASSEMBLY**)
9. **INSTALL TIMING CHAIN CASE OIL SEAL** (See **REASSEMBLY**)

 © 2011 Mitchell Repair Information Company, LLC.

10. **INSTALL TIMING CHAIN COVER SUB-ASSEMBLY** (See **REASSEMBLY**)
11. **INSTALL OIL PAN SUB-ASSEMBLY** (See **REASSEMBLY**)
12. **INSTALL OIL STRAINER SUB-ASSEMBLY** (See **REASSEMBLY**)
13. **INSTALL NO. 2 OIL PAN SUB-ASSEMBLY** (See **REASSEMBLY**)
14. **INSTALL CYLINDER HEAD COVER SUB-ASSEMBLY (for Bank 1)** (See **REASSEMBLY**)
15. **INSTALL CYLINDER HEAD COVER SUB-ASSEMBLY (for Bank 2)** (See **REASSEMBLY**)
16. **INSTALL WATER OUTLET** (See **REASSEMBLY**)
17. **INSTALL WATER INLET HOUSING** (See **REASSEMBLY**)
18. **INSTALL NO. 1 OIL COOLER BRACKET (w/ Oil Cooler)** (See **REASSEMBLY**)
19. **INSTALL OIL COOLER ASSEMBLY (w/ Oil Cooler)** (See **REASSEMBLY**)
20. **INSTALL CRANKSHAFT PULLEY** (See **REASSEMBLY**)
21. **INSTALL OIL PIPE** (See **REASSEMBLY**)
22. **INSTALL NO. 1 OIL PIPE** (See **REASSEMBLY**)
23. **INSTALL CRANKSHAFT POSITION SENSOR** (See **REASSEMBLY**)
24. **INSTALL KNOCK CONTROL SENSOR** (See **INSPECTION**)
25. **INSTALL KNOCK CONTROL SENSOR WIRE** (See **INSTALLATION**)
26. **INSTALL NO. 1 VACUUM SWITCHING VALVE** (See **INSTALLATION**)
27. **INSTALL RADIO SETTING CONDENSER** (See **INSTALLATION**)
28. **INSTALL NO. 1 ENGINE FRONT MOUNTING BRACKET LH** (See **INSTALLATION**)
29. **INSTALL NO. 2 IDLER PULLEY SUB-ASSEMBLY** (See **INSTALLATION**)
30. **INSTALL NO. 2 TIMING GEAR COVER** (See **INSTALLATION**)
31. **INSTALL V-RIBBED BELT TENSIONER ASSEMBLY** (See **INSTALLATION**)
32. **INSTALL GENERATOR ASSEMBLY** (See **INSTALLATION**)
33. **INSTALL TRANSVERSE ENGINE MOUNTING BRACKET** (See **INSTALLATION**)
34. **INSTALL EXHAUST MANIFOLD SUB-ASSEMBLY LH** (See **INSTALLATION**)
35. **INSTALL NO. 2 EXHAUST MANIFOLD HEAT INSULATOR** (See **INSTALLATION**)
36. **INSTALL NO. 2 MANIFOLD STAY** (See **INSTALLATION**)
37. **INSTALL NO. 2 ENGINE OIL LEVEL DIPSTICK GUIDE** (See **INSTALLATION**)
38. **INSTALL EXHAUST MANIFOLD SUB-ASSEMBLY RH** (See **INSTALLATION**)
39. **INSTALL INTAKE MANIFOLD** (See **INSTALLATION**)
40. **INSTALL NO. 2 ENGINE MOUNTING STAY RH** (See **INSTALLATION**)
41. **INSTALL IGNITION COIL ASSEMBLY** (See **INSTALLATION**)
42. **REMOVE ENGINE STAND**
43. **INSTALL ENGINE ASSEMBLY**

HINT:

See **INSTALLATION** .

 © 2011 Mitchell Repair Information Company, LLC.

CYLINDER HEAD GASKET (FOR BANK 1)

COMPONENTS

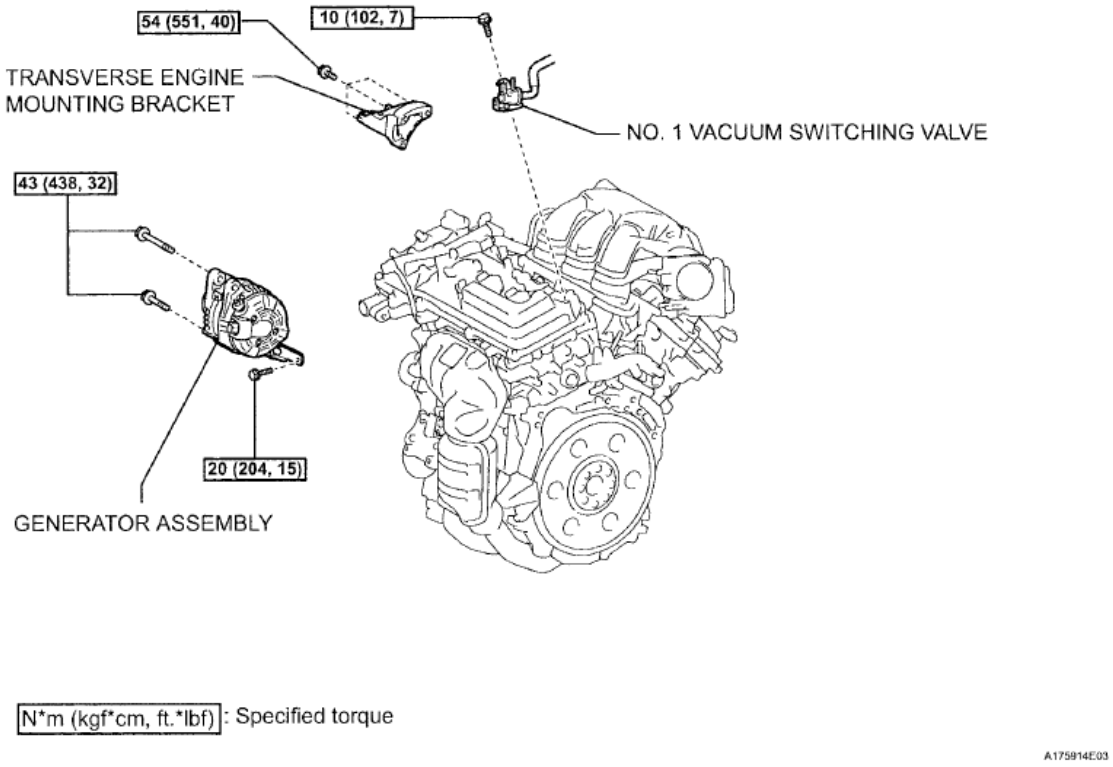

Fig. 92: Identifying Cylinder Head Gasket Components With Torque Specification (1 Of 9)
Courtesy of TOYOTA MOTOR SALES, U.S.A., INC.

 © 2011 Mitchell Repair Information Company, LLC.

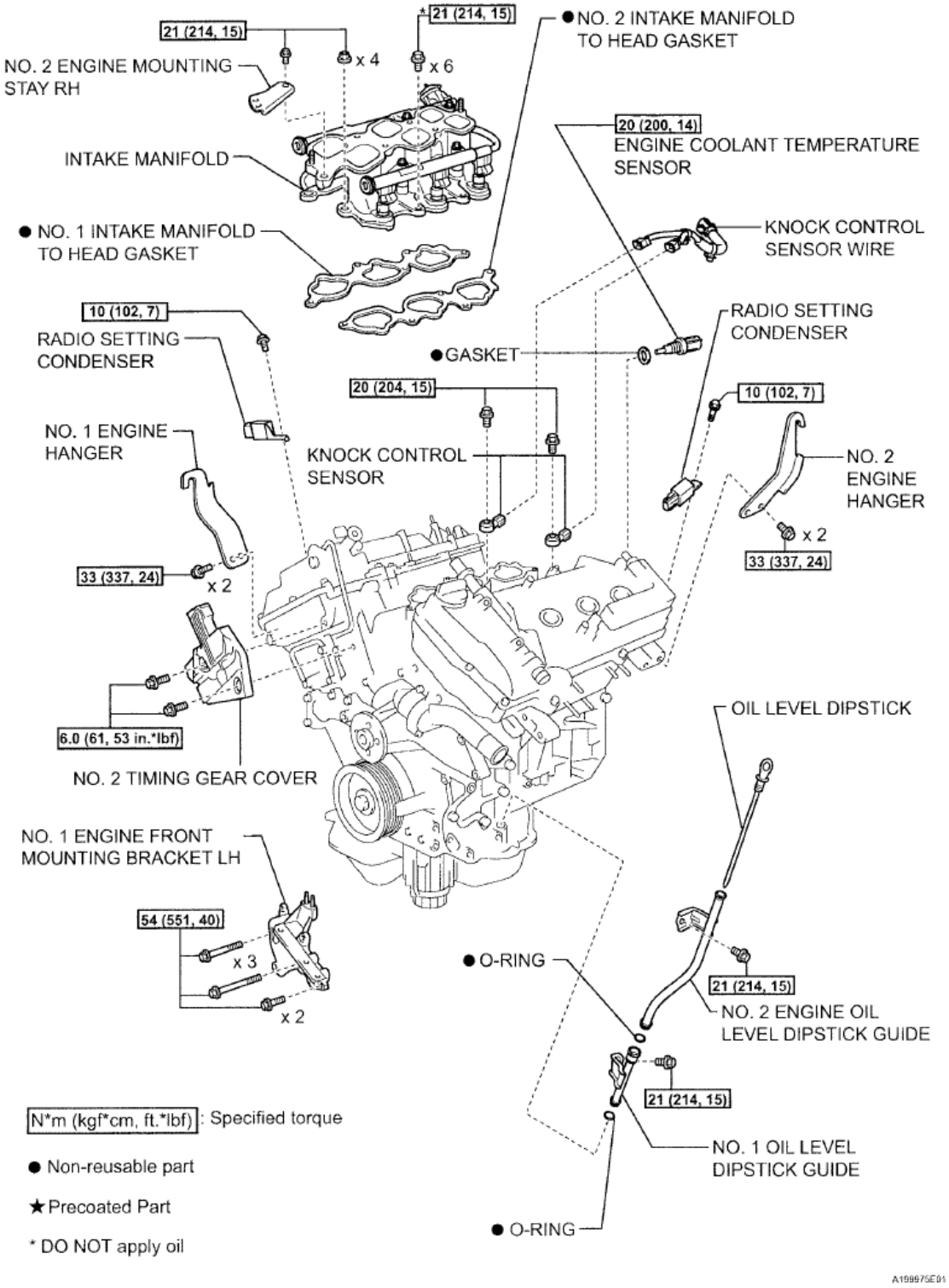

Fig. 93: Identifying Cylinder Head Gasket Components With Torque Specification (2 Of 9)
Courtesy of TOYOTA MOTOR SALES, U.S.A., INC.

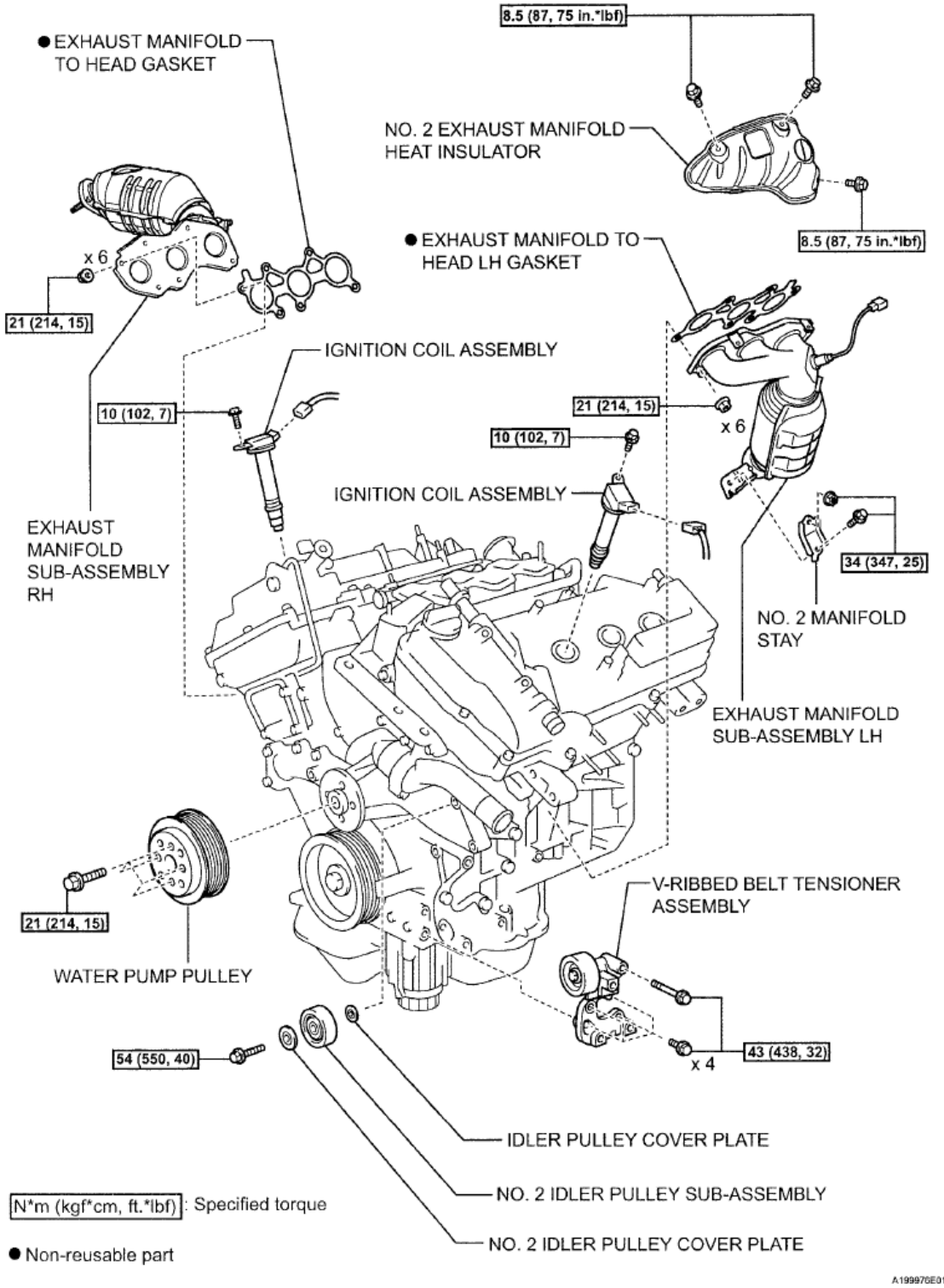

Fig. 94: Identifying Cylinder Head Gasket Components With Torque Specification (3 Of 9)
Courtesy of TOYOTA MOTOR SALES, U.S.A., INC.

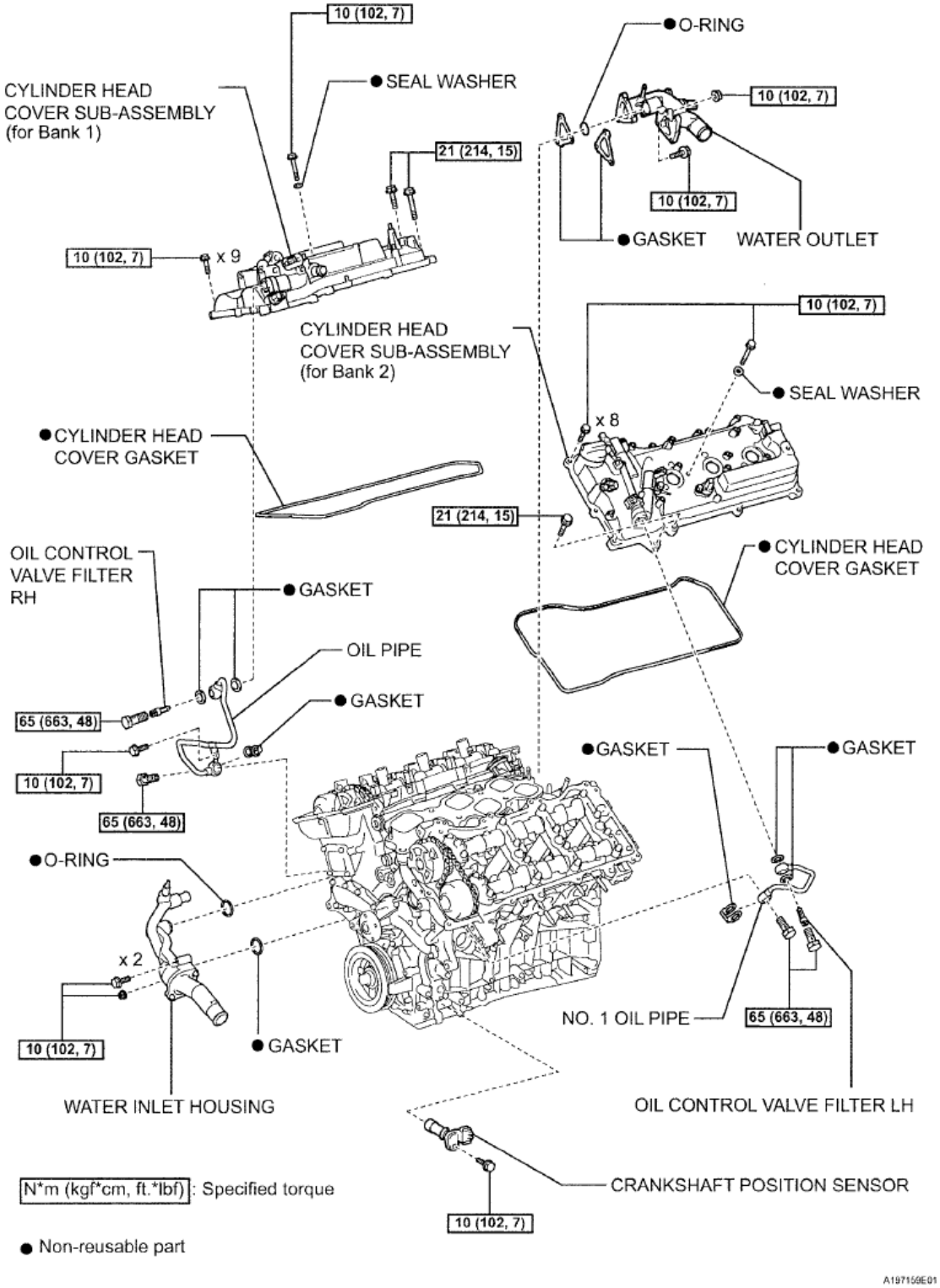

Fig. 95: Identifying Cylinder Head Gasket Components With Torque Specification (4 Of 9)
Courtesy of TOYOTA MOTOR SALES, U.S.A., INC.

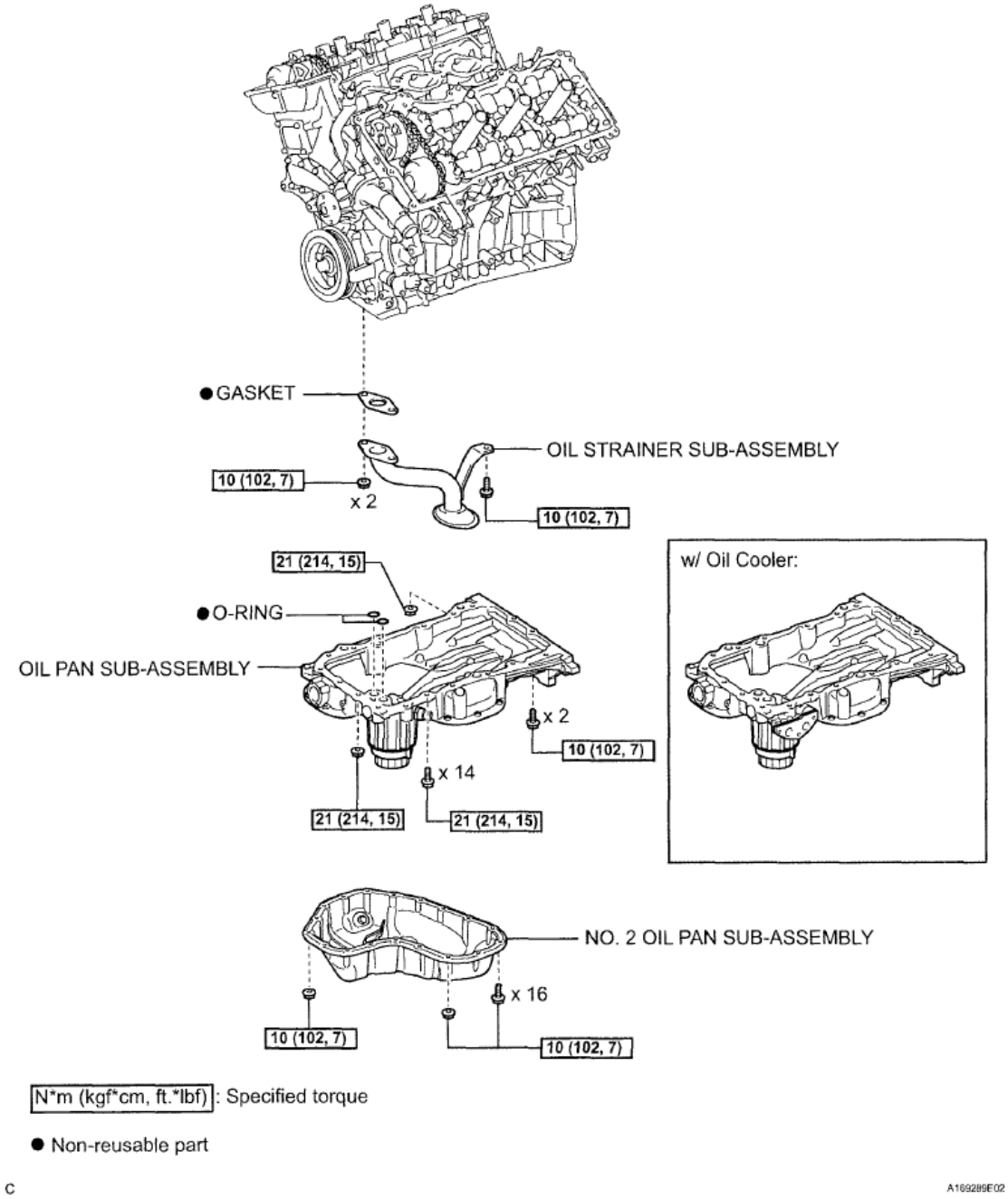

Fig. 96: Identifying Cylinder Head Gasket Components With Torque Specification (5 Of 9)
Courtesy of TOYOTA MOTOR SALES, U.S.A., INC.

w/ Oil Cooler:

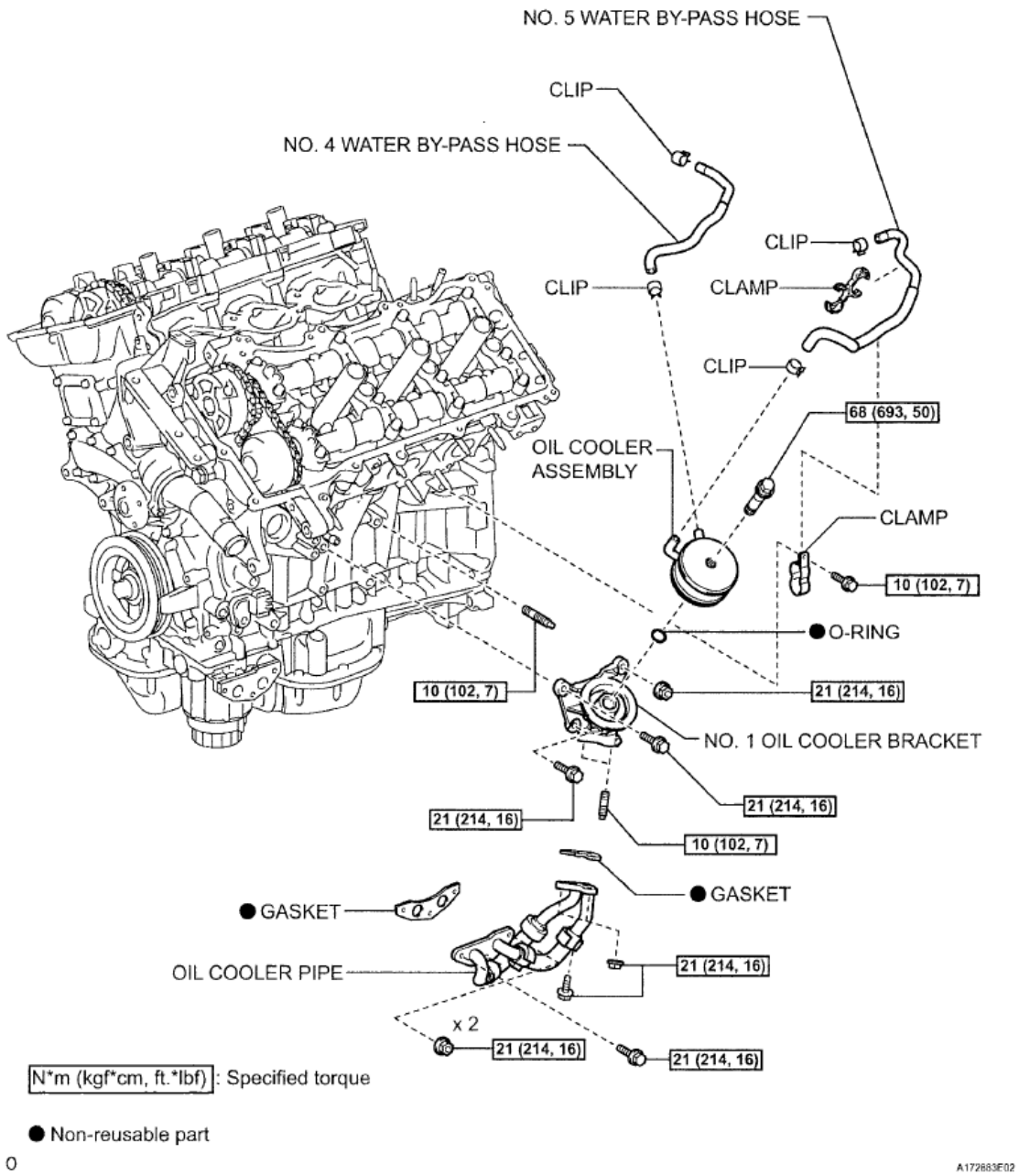

Fig. 97: Identifying Cylinder Head Gasket Components With Torque Specification (6 Of 9)
Courtesy of TOYOTA MOTOR SALES, U.S.A., INC.

 © 2011 Mitchell Repair Information Company, LLC.

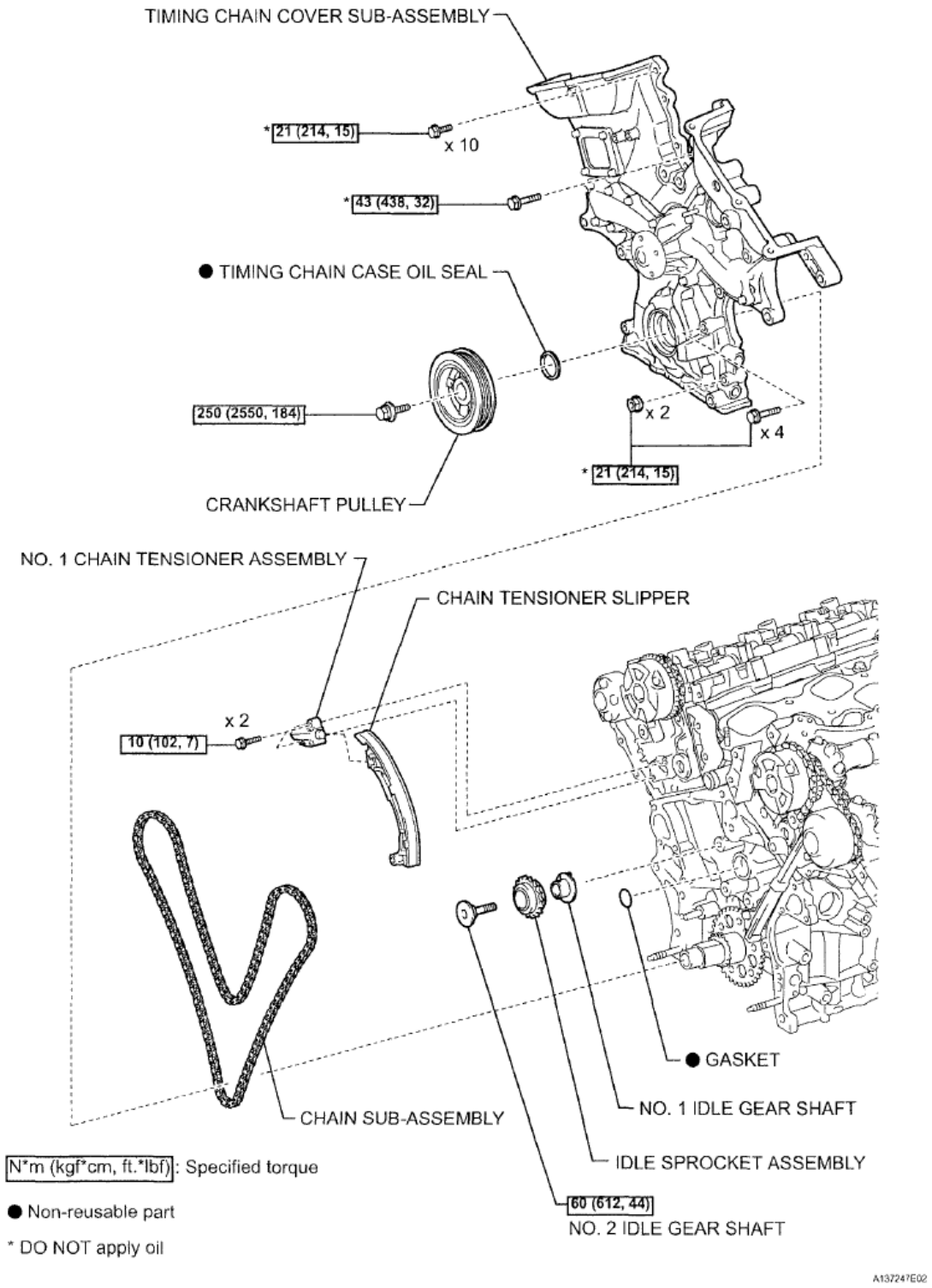

Fig. 98: Identifying Cylinder Head Gasket Components With Torque Specification (7 Of 9)
Courtesy of TOYOTA MOTOR SALES, U.S.A., INC.

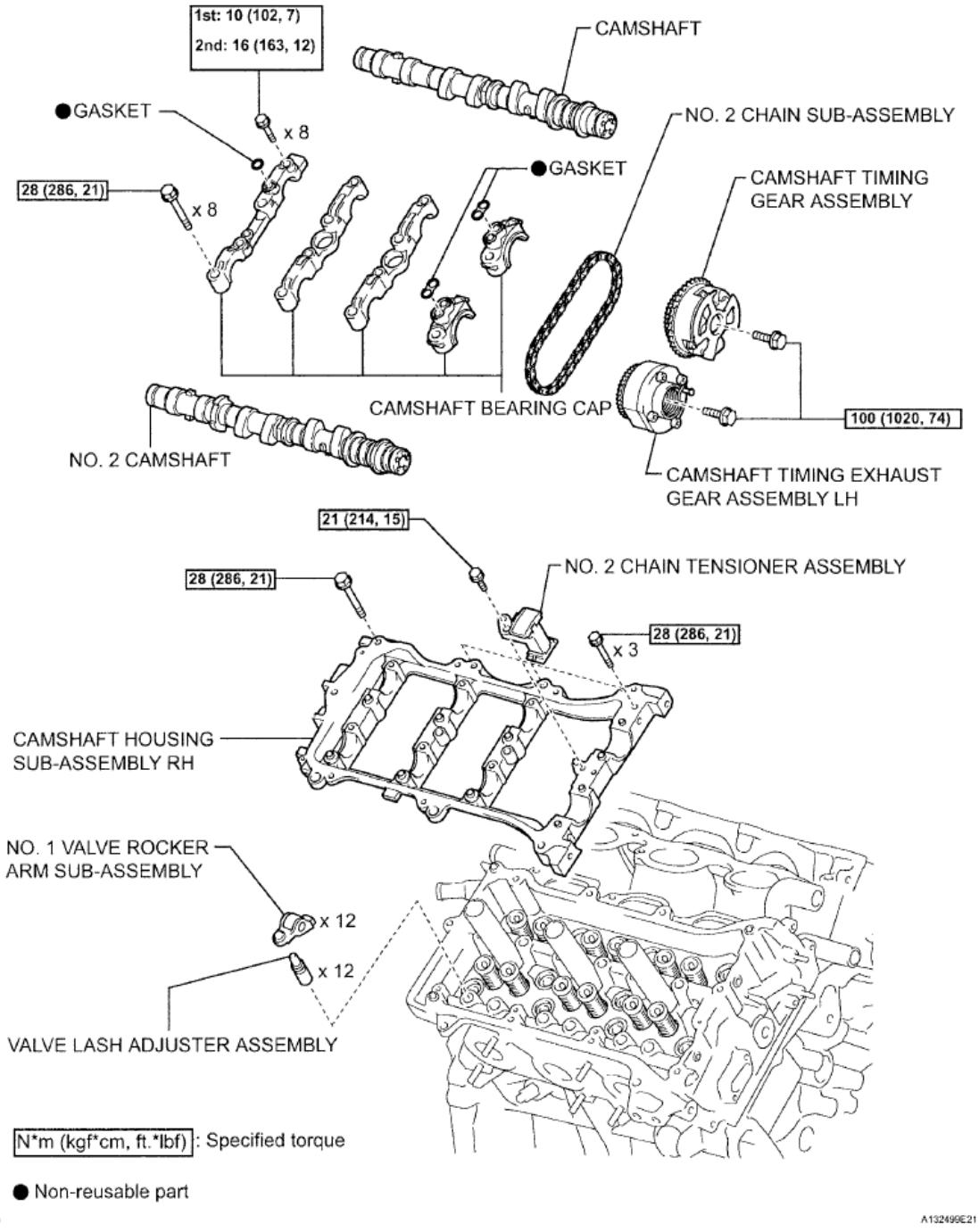

Fig. 99: Identifying Cylinder Head Gasket Components With Torque Specification (8 Of 9)
Courtesy of TOYOTA MOTOR SALES, U.S.A., INC.

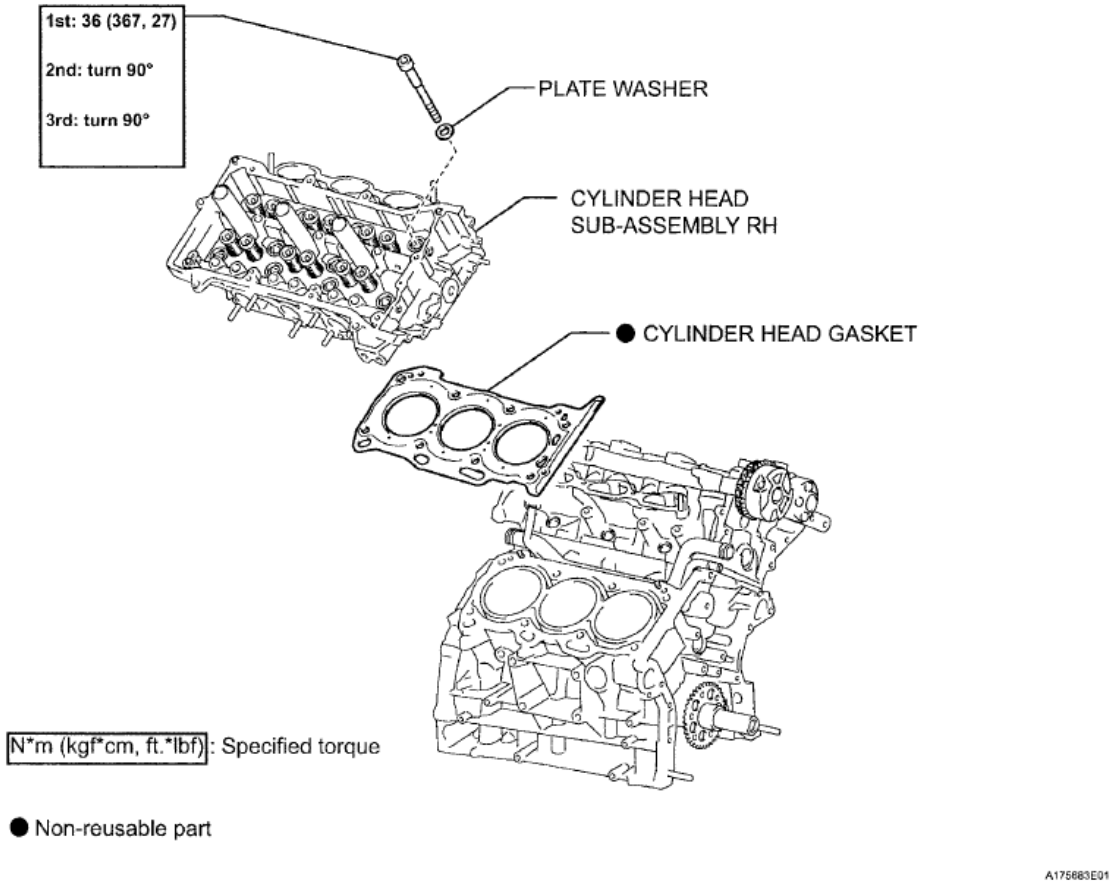

Fig. 100: Identifying Cylinder Head Gasket Components With Torque Specification (9 Of 9)
Courtesy of TOYOTA MOTOR SALES, U.S.A., INC.

REMOVAL

1. **REMOVE ENGINE ASSEMBLY**

   HINT:

   See **REMOVAL** .

2. **INSTALL ENGINE STAND**
3. **REMOVE IGNITION COIL ASSEMBLY** (See **REMOVAL**)
4. **REMOVE NO. 2 ENGINE MOUNTING STAY RH** (See **REMOVAL**)
5. **REMOVE INTAKE MANIFOLD** (See **REMOVAL**)
6. **REMOVE EXHAUST MANIFOLD SUB-ASSEMBLY RH** (See **REMOVAL**)
7. **REMOVE NO. 2 ENGINE OIL LEVEL DIPSTICK GUIDE** (See **REMOVAL**)
8. **REMOVE NO. 2 MANIFOLD STAY** (See **REMOVAL**)
9. **REMOVE NO. 2 EXHAUST MANIFOLD HEAT INSULATOR** (See **REMOVAL**)
10. **REMOVE EXHAUST MANIFOLD SUB-ASSEMBLY LH** (See **REMOVAL**)

 © 2011 Mitchell Repair Information Company, LLC.

11. **REMOVE TRANSVERSE ENGINE MOUNTING BRACKET** (See **REMOVAL**)
12. **REMOVE GENERATOR ASSEMBLY** (See **REMOVAL**)
13. **REMOVE V-RIBBED BELT TENSIONER ASSEMBLY** (See **REMOVAL**)
14. **REMOVE NO. 2 TIMING GEAR COVER** (See **REMOVAL**)
15. **REMOVE NO. 2 IDLER PULLEY SUB-ASSEMBLY** (See **REMOVAL**)
16. **REMOVE NO. 1 ENGINE FRONT MOUNTING BRACKET LH** (See **REMOVAL**)
17. **REMOVE RADIO SETTING CONDENSER** (See **REMOVAL**)
18. **REMOVE NO. 1 VACUUM SWITCHING VALVE** (See **REMOVAL**)
19. **REMOVE KNOCK CONTROL SENSOR WIRE** (See **REMOVAL**)
20. **REMOVE KNOCK CONTROL SENSOR** (See **REMOVAL**)
21. **REMOVE CRANKSHAFT POSITION SENSOR** (See **DISASSEMBLY**)
22. **REMOVE NO. 1 OIL PIPE** (See **DISASSEMBLY**)
23. **REMOVE OIL PIPE** (See **DISASSEMBLY**)
24. **REMOVE CRANKSHAFT PULLEY** (See **DISASSEMBLY**)
25. **REMOVE OIL COOLER ASSEMBLY (w/ Oil Cooler)** (See **DISASSEMBLY**)
26. **REMOVE NO. 1 OIL COOLER BRACKET (w/ Oil Cooler)** (See **DISASSEMBLY**)
27. **REMOVE WATER INLET HOUSING** (See **DISASSEMBLY**)
28. **REMOVE WATER OUTLET** (See **DISASSEMBLY**)
29. **REMOVE CYLINDER HEAD COVER SUB-ASSEMBLY (for Bank 1)** (See **DISASSEMBLY**)
30. **REMOVE CYLINDER HEAD COVER SUB-ASSEMBLY (for Bank 2)** (See **DISASSEMBLY**)
31. **REMOVE NO. 2 OIL PAN SUB-ASSEMBLY** (See **DISASSEMBLY**)
32. **REMOVE OIL STRAINER SUB-ASSEMBLY** (See **DISASSEMBLY**)
33. **REMOVE OIL PAN SUB-ASSEMBLY** (See **DISASSEMBLY**)
34. **REMOVE TIMING CHAIN COVER SUB-ASSEMBLY** (See **DISASSEMBLY**)
35. **REMOVE TIMING CHAIN CASE OIL SEAL** (See **DISASSEMBLY**)
36. **SET NO. 1 CYLINDER TO TDC/COMPRESSION** (See **DISASSEMBLY**)
37. **REMOVE NO. 1 CHAIN TENSIONER ASSEMBLY** (See **DISASSEMBLY**)
38. **REMOVE CHAIN TENSIONER SLIPPER** (See **DISASSEMBLY**)
39. **REMOVE CHAIN SUB-ASSEMBLY** (See **DISASSEMBLY**)
40. **REMOVE IDLE SPROCKET ASSEMBLY** (See **DISASSEMBLY**)
41. **REMOVE NO. 2 CHAIN VIBRATION DAMPER** (See **DISASSEMBLY**)
42. **REMOVE CAMSHAFT TIMING GEARS AND NO. 2 CHAIN** (See **DISASSEMBLY**)
43. **REMOVE NO. 2 CHAIN TENSIONER ASSEMBLY** (See **DISASSEMBLY**)
44. **REMOVE CAMSHAFT BEARING CAP** (See **DISASSEMBLY**)
45. **REMOVE CAMSHAFT** (See **DISASSEMBLY**)
46. **REMOVE NO. 2 CAMSHAFT** (See **DISASSEMBLY**)
47. **REMOVE CAMSHAFT HOUSING SUB-ASSEMBLY RH** (See **DISASSEMBLY**)
48. **INSPECT CAMSHAFT TIMING GEAR ASSEMBLY** (See **REMOVAL**)

 © 2011 Mitchell Repair Information Company, LLC.

49. **INSPECT CAMSHAFT TIMING EXHAUST GEAR ASSEMBLY LH** (See **REMOVAL**)
50. **REMOVE VALVE LASH ADJUSTER ASSEMBLY**
    a. Remove the 24 valve lash adjuster assemblies from the cylinder head.

    HINT:

    Arrange the removed parts in the correct order.

51. **REMOVE VALVE STEM CAP**
    a. Remove the 12 valve stem caps.
52. **REMOVE CYLINDER HEAD SUB-ASSEMBLY RH**
    a. Using a 10 mm bi-hexagon wrench, uniformly loosen the 8 cylinder head bolts in the sequence shown in the illustration. Remove the 8 cylinder head bolts and plate washers.

NOTE:

- **Be careful not to drop washers into the cylinder head.**
- **Cylinder head warpage or cracking could result from removing bolts in an incorrect order.**

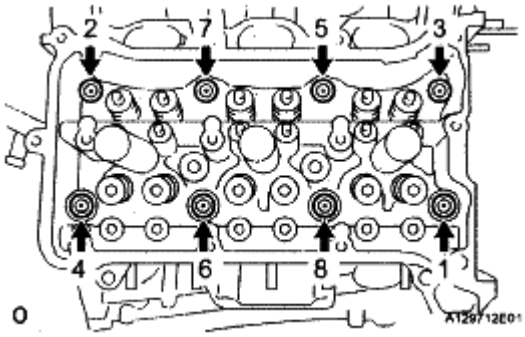

Fig. 101: Locating Cylinder Head Bolts And Plate Washers
Courtesy of TOYOTA MOTOR SALES, U.S.A., INC.

HINT:

Be sure to keep separate the removed parts for each installation position.

b. Remove the cylinder head sub-assembly RH.

53. **REMOVE CYLINDER HEAD GASKET**
    a. Remove the cylinder head gasket.

INSTALLATION

1. **INSTALL CYLINDER HEAD GASKET**
    a. Place the cylinder head gasket on the cylinder block surface with the Lot No. stamp upward.

 © 2011 Mitchell Repair Information Company, LLC.

NOTE:

- **Be careful of the installation direction.**
- **Gently lower the cylinder head in order not to damage the gasket with the bottom part of the head.**

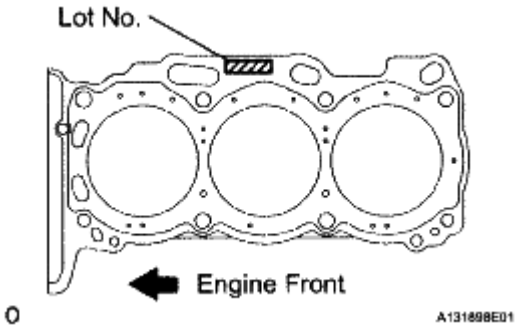

Fig. 102: Placing Cylinder Head Gasket On Cylinder Block Surface With Front Face
Courtesy of TOYOTA MOTOR SALES, U.S.A., INC.

2. **INSTALL CYLINDER HEAD SUB-ASSEMBLY RH**
   a. Place the cylinder head on the cylinder block.

NOTE: **Be careful not to allow oil to adhere to the bottom part of the cylinder head.**

HINT:

The cylinder head bolts are tightened in 3 progressive steps.

   b. Apply a light coat of engine oil to the threads and under the heads of the cylinder head bolts.
   c. Step 1
      1. Using a 10 mm bi-hexagon wrench, install and uniformly tighten the 8 cylinder head bolts with the plate washers in several steps and in the sequence shown in the illustration.

Torque: 36 N*m (367 kgf*cm, 27 ft.*lbf)

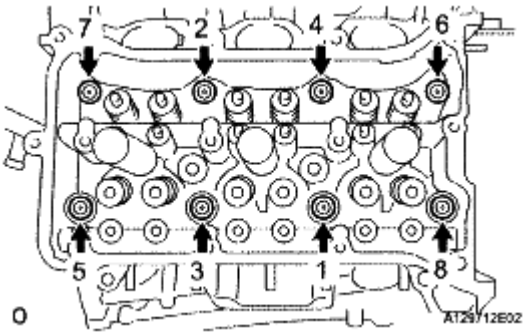

Fig. 103: Installing Cylinder Head Bolts
Courtesy of TOYOTA MOTOR SALES, U.S.A., INC.

d. Step 2
   1. Mark the cylinder head bolt head with paint as shown in the illustration.
   2. Tighten the cylinder head bolts another 90°.
e. Step 3
   1. Tighten the cylinder head bolts an additional 90°.
   2. Check that the painted mark is now facing rearward.

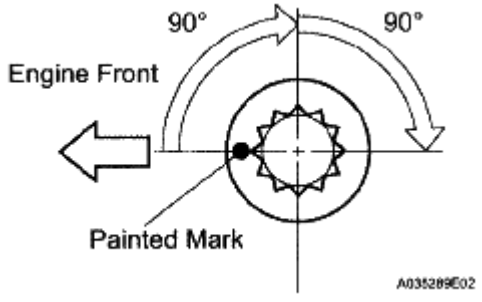

Fig. 104: Tightening Cylinder Head Bolts
Courtesy of TOYOTA MOTOR SALES, U.S.A., INC.

3. **INSTALL VALVE STEM CAP**
   a. Install the 12 valve stem caps.
4. **INSTALL VALVE LASH ADJUSTER ASSEMBLY**

NOTE:
- **Keep the lash adjuster free of dirt and foreign objects.**
- **Only use clean engine oil.**

a. Place the lash adjuster into a container filled with engine oil.
b. Insert the tip of SST into the lash adjuster's plunger and use the tip to press down on the check ball inside the plunger.

SST 09276-75010

c. Squeeze SST and lash adjuster together to move the plunger up and down 5 to 6 times.
d. Check the movement of the plunger and bleed the air.

OK: Plunger moves up and down.

NOTE: **When bleeding air from the high-pressure chamber, make sure that the tip of SST is actually pressing the check ball as shown in the illustration. If the check ball is not pressed, air will not bleed.**

 © 2011 Mitchell Repair Information Company, LLC.

e. After bleeding the air, remove SST. Then, try to press the plunger quickly and firmly with by hand.

OK: Plunger is very difficult to move.

If the result is not as specified, replace the lash adjuster.

f. Install the lash adjusters.

NOTE: Install the lash adjuster to the same place where it was removed from.

5. **INSTALL CAMSHAFT BEARING CAP** (See **REASSEMBLY**)
6. **INSTALL CAMSHAFT HOUSING SUB-ASSEMBLY RH** (See **REASSEMBLY**)
7. **INSTALL NO. 2 CHAIN TENSIONER ASSEMBLY** (See **REASSEMBLY**)

 © 2011 Mitchell Repair Information Company, LLC.

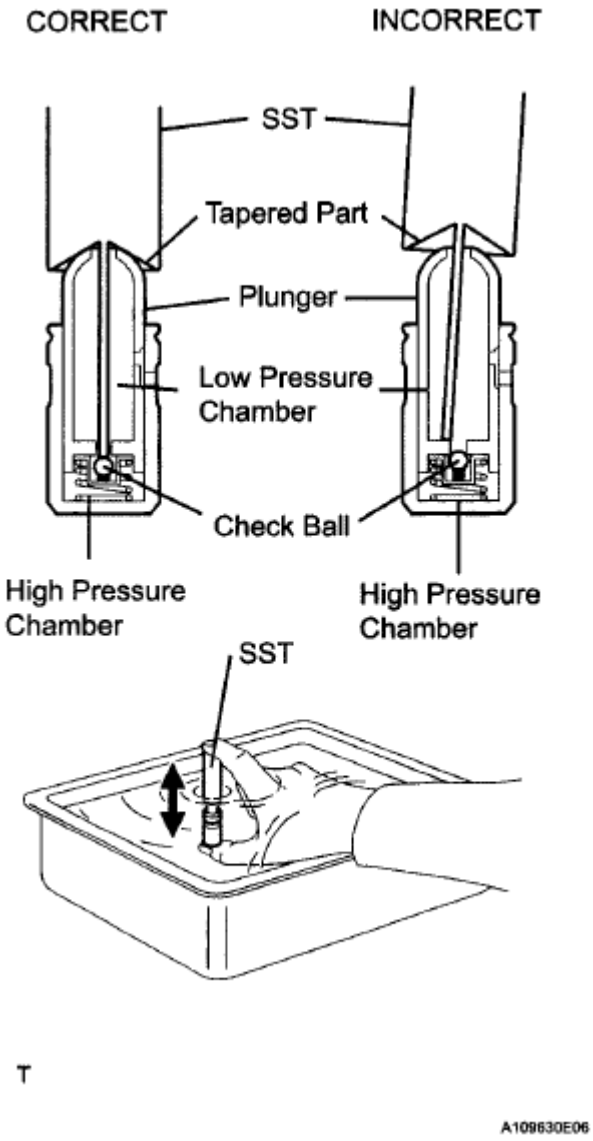

Fig. 105: Inserting Tip Of SST Into Lash Adjuster's Plunger
Courtesy of TOYOTA MOTOR SALES, U.S.A., INC.

8. **INSTALL CAMSHAFT TIMING GEARS AND NO. 2 CHAIN (for Bank 2)** (See **REASSEMBLY**)
9. **INSTALL NO. 2 CHAIN VIBRATION DAMPER** (See **REASSEMBLY**)
10. **INSTALL IDLE SPROCKET ASSEMBLY** (See **REASSEMBLY**)
11. **INSTALL CHAIN SUB-ASSEMBLY** (See **REASSEMBLY**)
12. **INSTALL CHAIN TENSIONER SLIPPER** (See **REASSEMBLY**)
13. **INSTALL NO. 1 CHAIN TENSIONER ASSEMBLY** (See **REASSEMBLY**)
14. **INSTALL TIMING CHAIN CASE OIL SEAL** (See **REASSEMBLY**)
15. **INSTALL TIMING CHAIN COVER SUB-ASSEMBLY** (See **REASSEMBLY**)
16. **INSTALL OIL PAN SUB-ASSEMBLY** (See **REASSEMBLY**)
17. **INSTALL OIL STRAINER SUB-ASSEMBLY** (See **REASSEMBLY**)

 © 2011 Mitchell Repair Information Company, LLC.

18. **INSTALL NO. 2 OIL PAN SUB-ASSEMBLY** (See **REASSEMBLY**)
19. **INSTALL CYLINDER HEAD COVER SUB-ASSEMBLY (for Bank 1)** (See **REASSEMBLY**)
20. **INSTALL CYLINDER HEAD COVER SUB-ASSEMBLY (for Bank 2)** (See **REASSEMBLY**)
21. **INSTALL WATER OUTLET** (See **REASSEMBLY**)
22. **INSTALL WATER INLET HOUSING** (See **REASSEMBLY**)
23. **INSTALL NO. 1 OIL COOLER BRACKET (w/ Oil Cooler)** (See **REASSEMBLY**)
24. **INSTALL OIL COOLER ASSEMBLY (w/ Oil Cooler)** (See **REASSEMBLY**)
25. **INSTALL CRANKSHAFT PULLEY** (See **REASSEMBLY**)
26. **INSTALL OIL PIPE** (See **REASSEMBLY**)
27. **INSTALL NO. 1 OIL PIPE** (See **REASSEMBLY**)
28. **INSTALL CRANKSHAFT POSITION SENSOR** (See **REASSEMBLY**)
29. **INSTALL KNOCK CONTROL SENSOR** (See **INSPECTION**)
30. **INSTALL KNOCK CONTROL SENSOR WIRE** (See **INSTALLATION**)
31. **INSTALL NO. 1 VACUUM SWITCHING VALVE** (See **INSTALLATION**)
32. **INSTALL RADIO SETTING CONDENSER** (See **INSTALLATION**)
33. **INSTALL NO. 1 ENGINE FRONT MOUNTING BRACKET LH** (See **INSTALLATION**)
34. **INSTALL NO. 2 IDLER PULLEY SUB-ASSEMBLY** (See **INSTALLATION**)
35. **INSTALL NO. 2 TIMING GEAR COVER** (See **INSTALLATION**)
36. **INSTALL V-RIBBED BELT TENSIONER ASSEMBLY** (See **INSTALLATION**)
37. **INSTALL GENERATOR ASSEMBLY** (See **INSTALLATION**)
38. **INSTALL TRANSVERSE ENGINE MOUNTING BRACKET** (See **INSTALLATION**)
39. **INSTALL EXHAUST MANIFOLD SUB-ASSEMBLY LH** (See **INSTALLATION**)
40. **INSTALL NO. 2 EXHAUST MANIFOLD HEAT INSULATOR** (See **INSTALLATION**)
41. **INSTALL NO. 2 MANIFOLD STAY** (See **INSTALLATION**)
42. **INSTALL NO. 2 ENGINE OIL LEVEL DIPSTICK GUIDE** (See **INSTALLATION**)
43. **INSTALL EXHAUST MANIFOLD SUB-ASSEMBLY RH** (See **INSTALLATION**)
44. **INSTALL INTAKE MANIFOLD** (See **INSTALLATION**)
45. **INSTALL NO. 2 ENGINE MOUNTING STAY RH** (See **INSTALLATION**)
46. **INSTALL IGNITION COIL ASSEMBLY** (See **INSTALLATION**)
47. **REMOVE ENGINE STAND**
48. **INSTALL ENGINE ASSEMBLY**

HINT:

See **INSTALLATION** .

CYLINDER HEAD GASKET (FOR BANK 2)

COMPONENTS

 © 2011 Mitchell Repair Information Company, LLC.

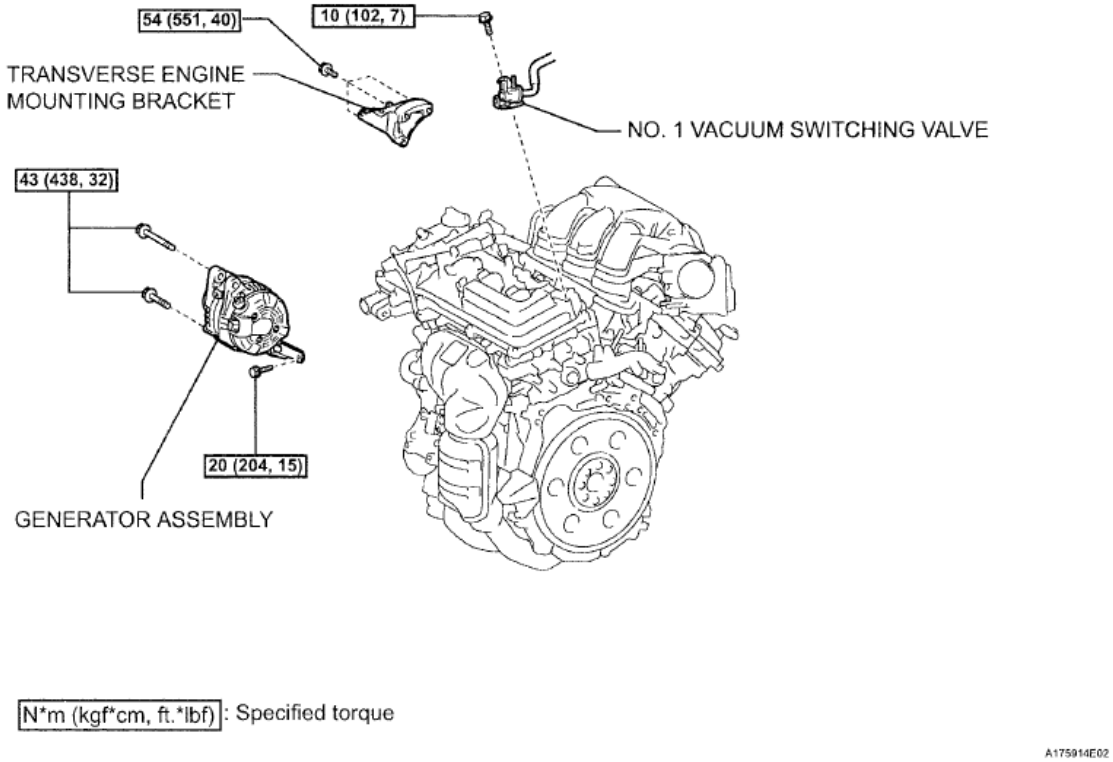

Fig. 106: Identifying Cylinder Head Gasket Components With Torque Specification (1 Of 9)
Courtesy of TOYOTA MOTOR SALES, U.S.A., INC.

 © 2011 Mitchell Repair Information Company, LLC.

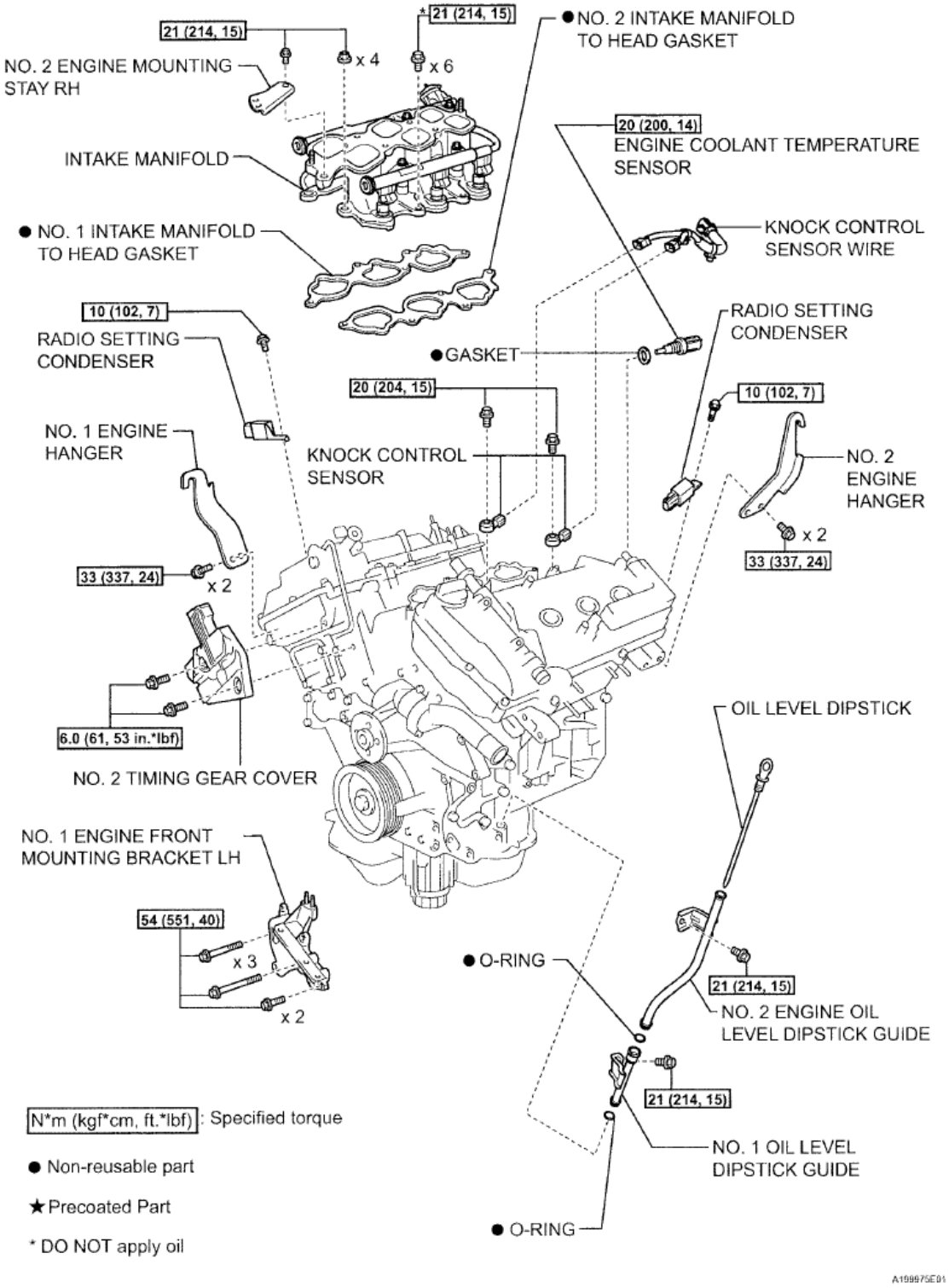

Fig. 107: Identifying Cylinder Head Gasket Components With Torque Specification (2 Of 9)
Courtesy of TOYOTA MOTOR SALES, U.S.A., INC.

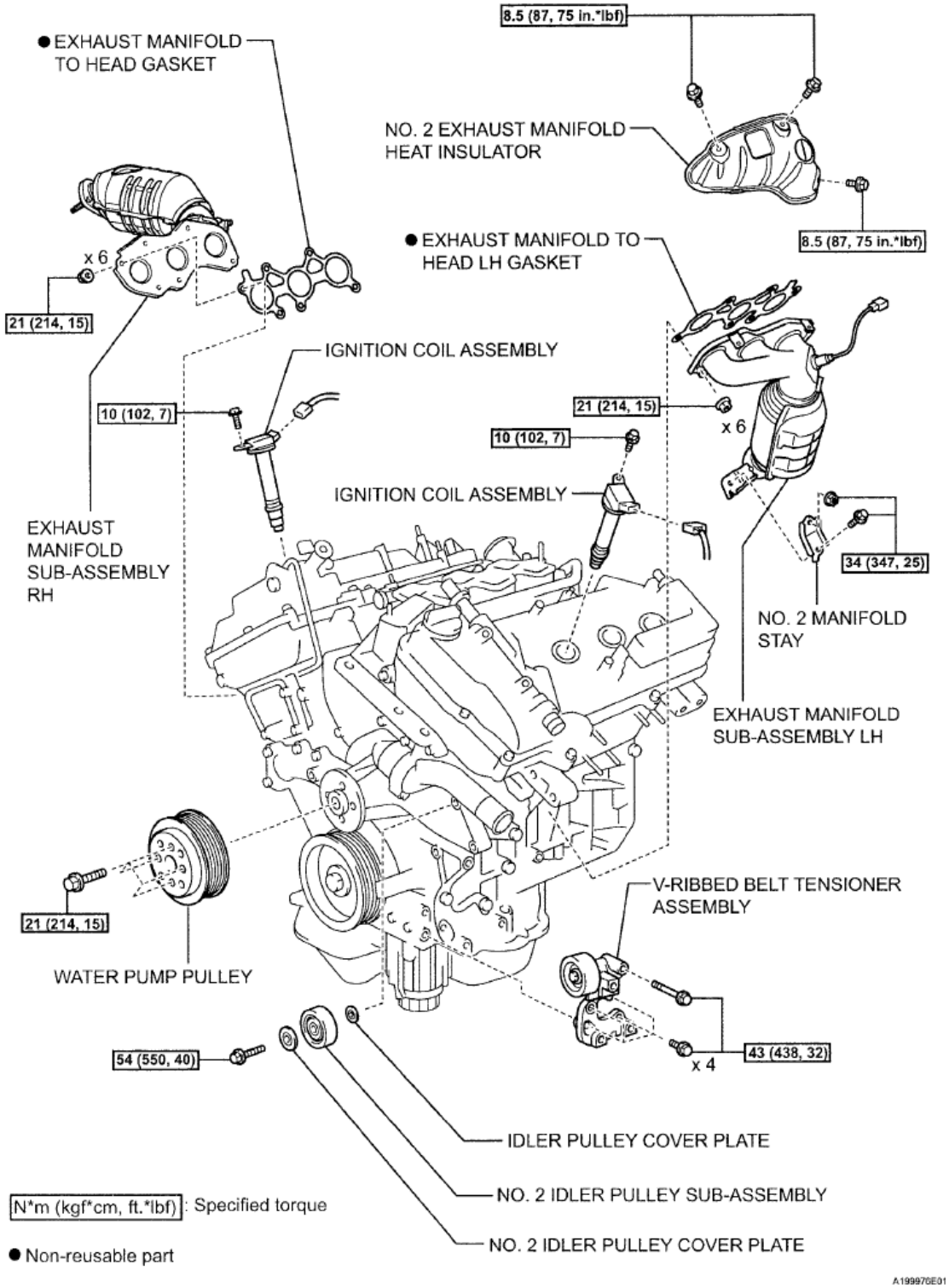

Fig. 108: Identifying Cylinder Head Gasket Components With Torque Specification (3 Of 9)
Courtesy of TOYOTA MOTOR SALES, U.S.A., INC.

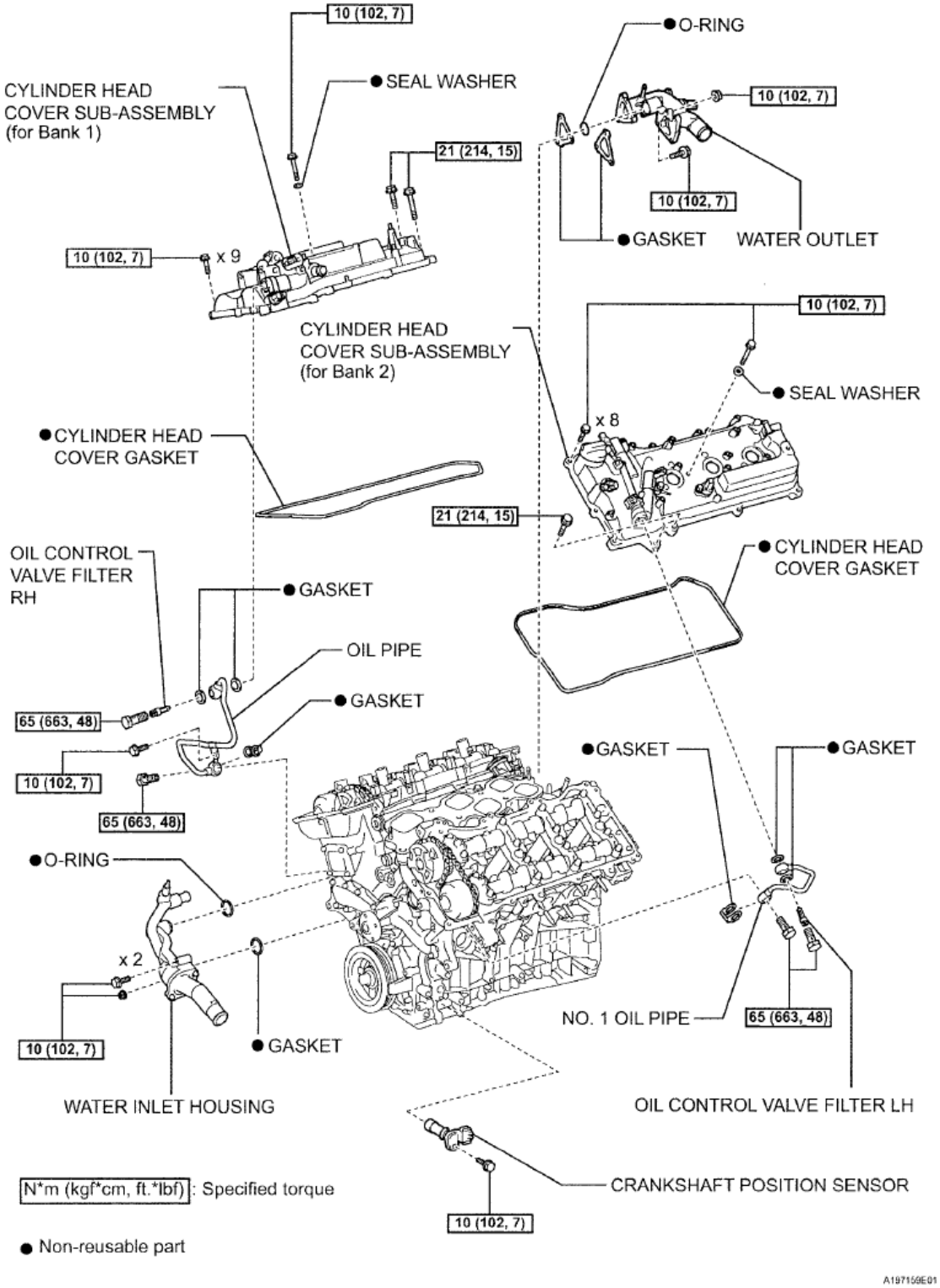

Fig. 109: Identifying Cylinder Head Gasket Components With Torque Specification (4 Of 9)
Courtesy of TOYOTA MOTOR SALES, U.S.A., INC.

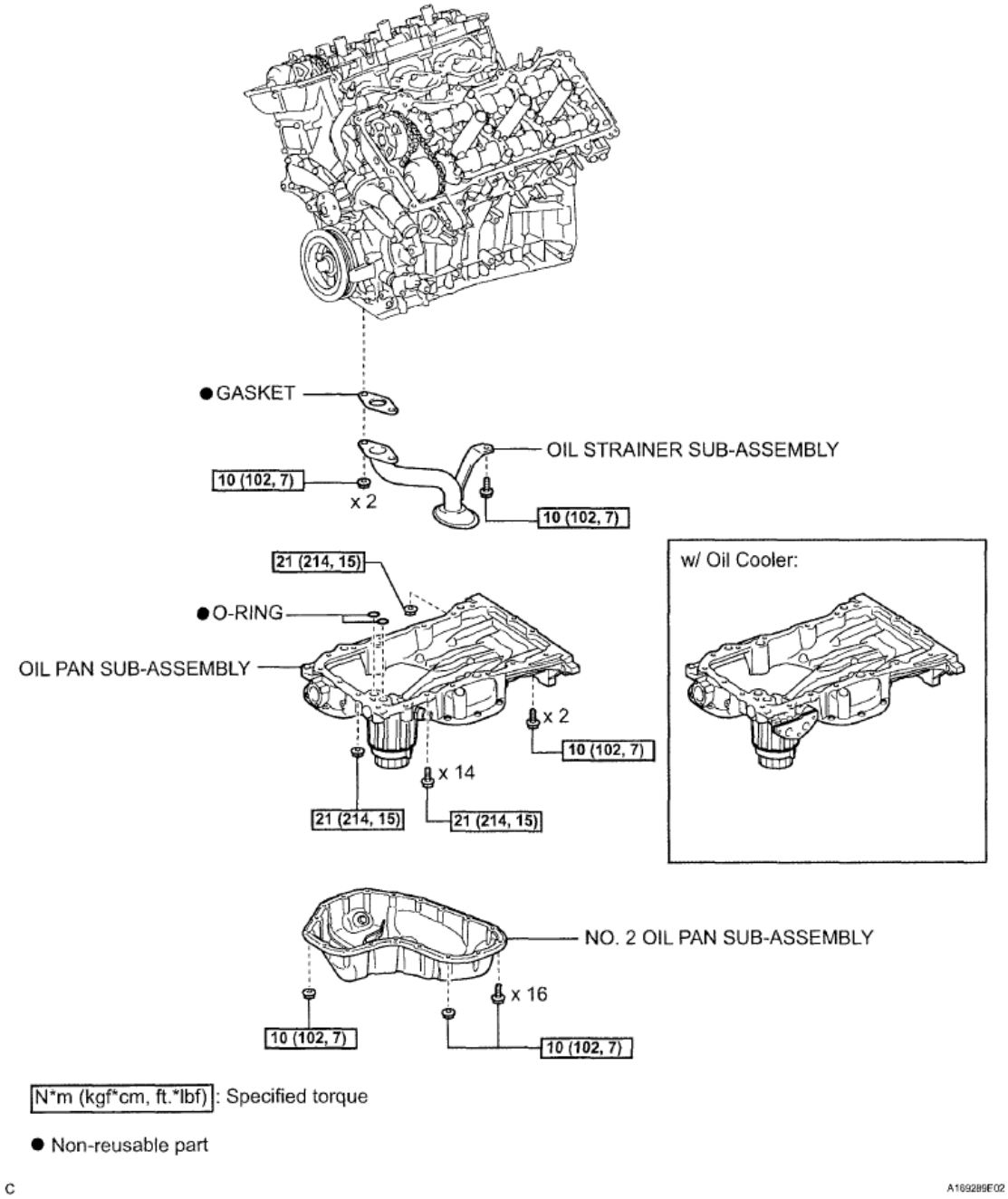

Fig. 110: Identifying Cylinder Head Gasket Components With Torque Specification (5 Of 9)
Courtesy of TOYOTA MOTOR SALES, U.S.A., INC.

 © 2011 Mitchell Repair Information Company, LLC.

w/ Oil Cooler:

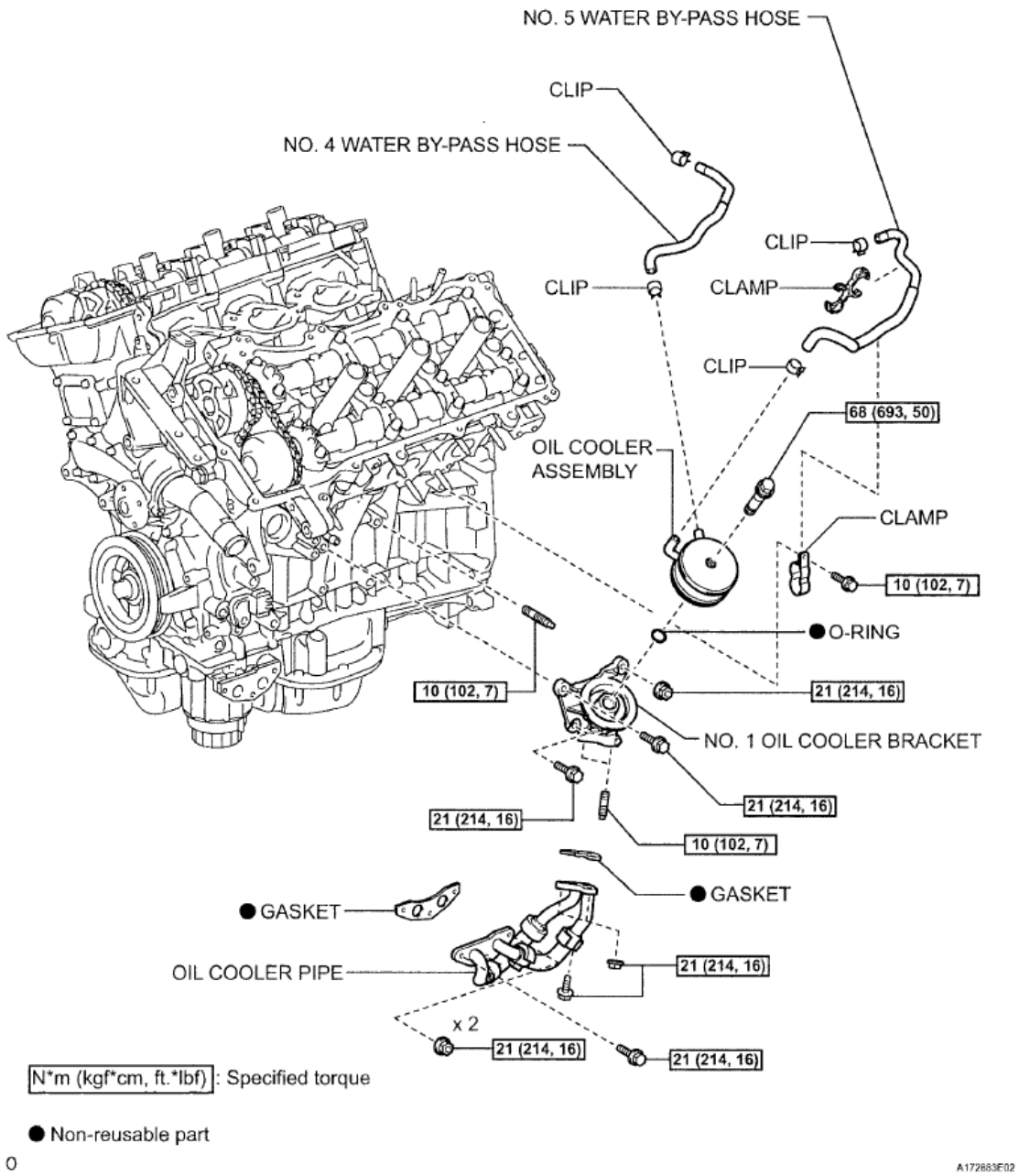

Fig. 111: Identifying Cylinder Head Gasket Components With Torque Specification (6 Of 9)
Courtesy of TOYOTA MOTOR SALES, U.S.A., INC.

 © 2011 Mitchell Repair Information Company, LLC.

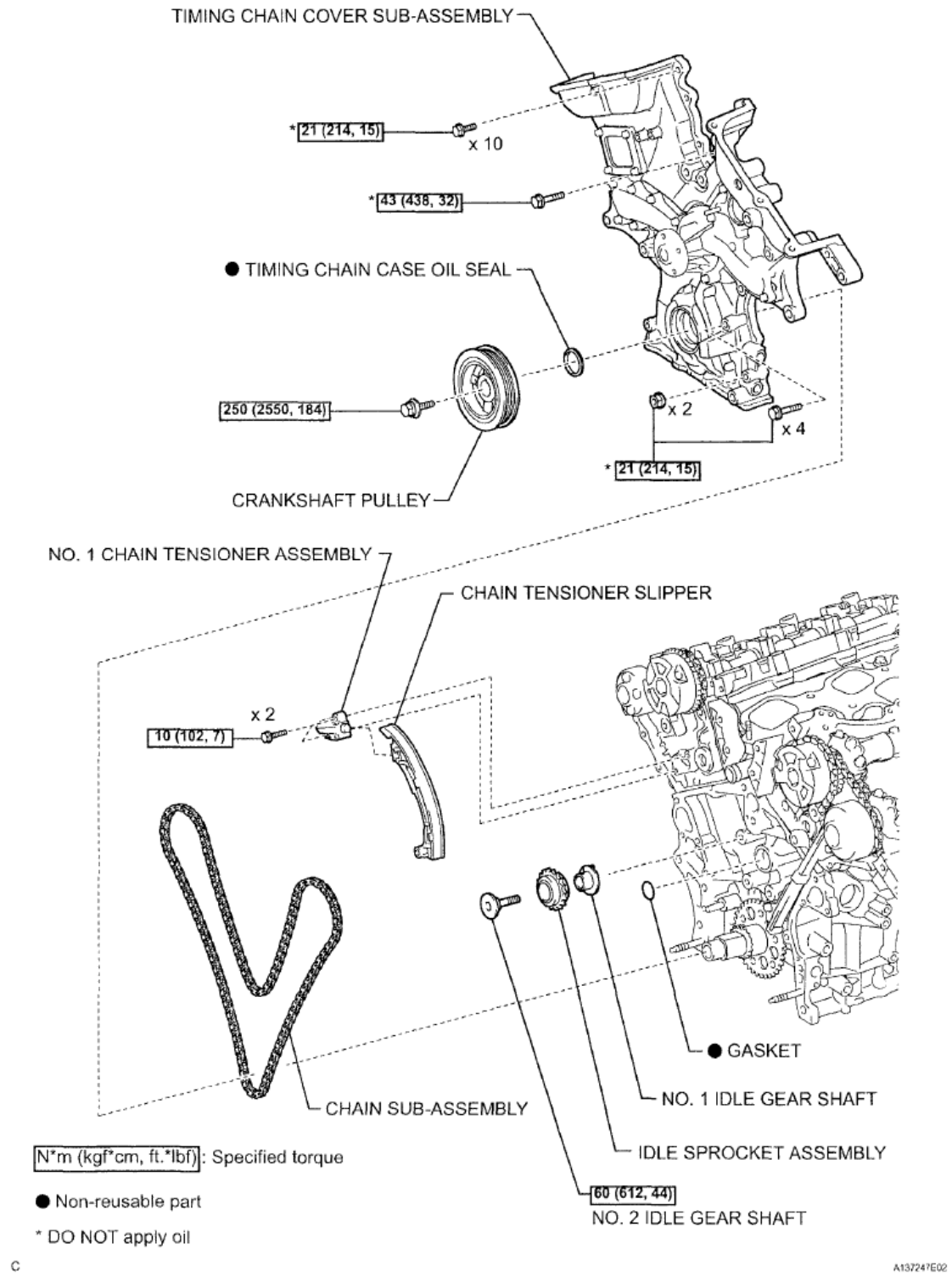

Fig. 112: Identifying Cylinder Head Gasket Components With Torque Specification (7 Of 9)
Courtesy of TOYOTA MOTOR SALES, U.S.A., INC.

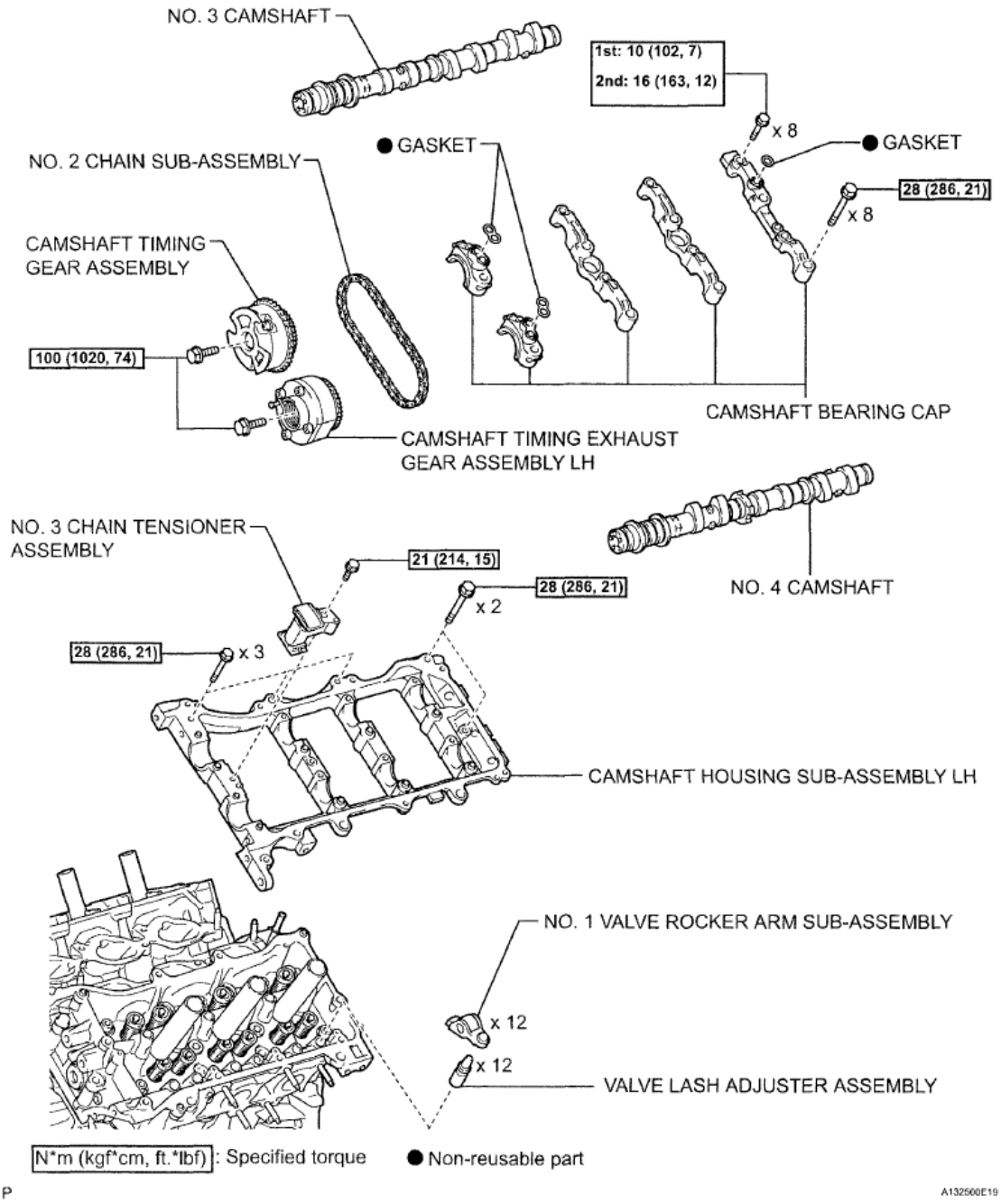

Fig. 113: Identifying Cylinder Head Gasket Components With Torque Specification (8 Of 9)
Courtesy of TOYOTA MOTOR SALES, U.S.A., INC.

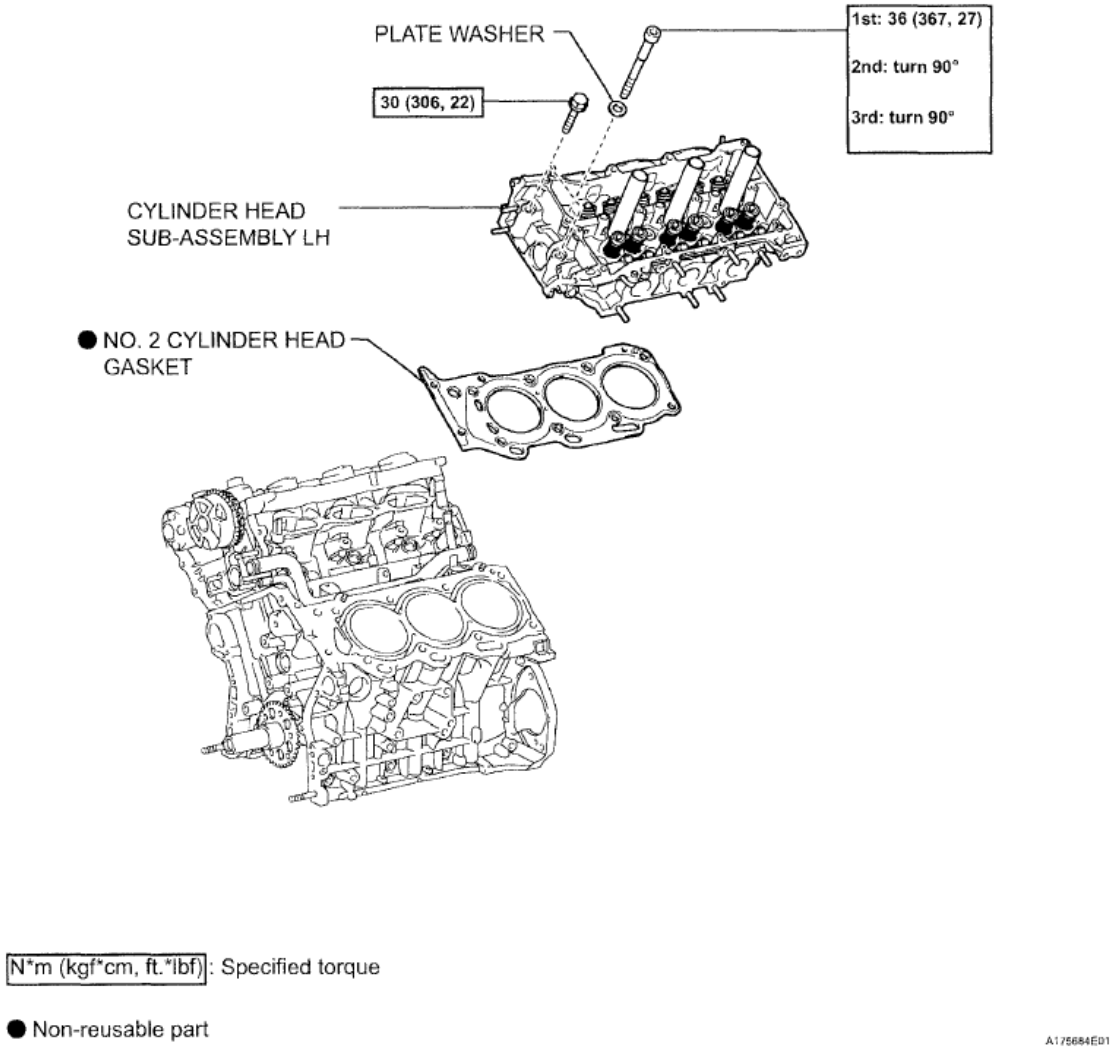

Fig. 114: Identifying Cylinder Head Gasket Components With Torque Specification (9 Of 9)
Courtesy of TOYOTA MOTOR SALES, U.S.A., INC.

REMOVAL

1. **REMOVE ENGINE ASSEMBLY**

   HINT:

   See **REMOVAL** .

2. **INSTALL ENGINE STAND**
3. **REMOVE IGNITION COIL ASSEMBLY** (See **REMOVAL**)
4. **REMOVE NO. 2 ENGINE MOUNTING STAY RH** (See **REMOVAL**)
5. **REMOVE INTAKE MANIFOLD** (See **REMOVAL**)
6. **REMOVE EXHAUST MANIFOLD SUB-ASSEMBLY RH** (See **REMOVAL**)

 © 2011 Mitchell Repair Information Company, LLC.

7. **REMOVE NO. 2 ENGINE OIL LEVEL DIPSTICK GUIDE** (See **REMOVAL**)
8. **REMOVE NO. 2 MANIFOLD STAY** (See **REMOVAL**)
9. **REMOVE NO. 2 EXHAUST MANIFOLD HEAT INSULATOR** (See **REMOVAL**)
10. **REMOVE EXHAUST MANIFOLD SUB-ASSEMBLY LH** (See **REMOVAL**)
11. **REMOVE TRANSVERSE ENGINE MOUNTING BRACKET** (See **REMOVAL**)
12. **REMOVE GENERATOR ASSEMBLY** (See **REMOVAL**)
13. **REMOVE V-RIBBED BELT TENSIONER ASSEMBLY** (See **REMOVAL**)
14. **REMOVE NO. 2 TIMING GEAR COVER** (See **REMOVAL**)
15. **REMOVE NO. 2 IDLER PULLEY SUB-ASSEMBLY** (See **REMOVAL**)
16. **REMOVE NO. 1 ENGINE FRONT MOUNTING BRACKET LH** (See **REMOVAL**)
17. **REMOVE RADIO SETTING CONDENSER** (See **REMOVAL**)
18. **REMOVE NO. 1 VACUUM SWITCHING VALVE** (See **REMOVAL**)
19. **REMOVE KNOCK CONTROL SENSOR WIRE** (See **REMOVAL**)
20. **REMOVE KNOCK CONTROL SENSOR** (See **REMOVAL**)
21. **REMOVE CRANKSHAFT POSITION SENSOR** (See **DISASSEMBLY**)
22. **REMOVE NO. 1 OIL PIPE** (See **DISASSEMBLY**)
23. **REMOVE OIL PIPE** (See **DISASSEMBLY**)
24. **REMOVE CRANKSHAFT PULLEY** (See **DISASSEMBLY**)
25. **REMOVE OIL COOLER ASSEMBLY (w/ Oil Cooler)** (See **DISASSEMBLY**)
26. **REMOVE NO. 1 OIL COOLER BRACKET (w/ Oil Cooler)** (See **DISASSEMBLY**)
27. **REMOVE WATER INLET HOUSING** (See **DISASSEMBLY**)
28. **REMOVE WATER OUTLET** (See **DISASSEMBLY**)
29. **REMOVE CYLINDER HEAD COVER SUB-ASSEMBLY (for Bank 1)** (See **DISASSEMBLY**)
30. **REMOVE CYLINDER HEAD COVER SUB-ASSEMBLY (for Bank 2)** (See **DISASSEMBLY**)
31. **REMOVE NO. 2 OIL PAN SUB-ASSEMBLY** (See **DISASSEMBLY**)
32. **REMOVE OIL STRAINER SUB-ASSEMBLY** (See **DISASSEMBLY**)
33. **REMOVE OIL PAN SUB-ASSEMBLY** (See **DISASSEMBLY**)
34. **REMOVE TIMING CHAIN COVER SUB-ASSEMBLY** (See **DISASSEMBLY**)
35. **REMOVE TIMING CHAIN CASE OIL SEAL** (See **DISASSEMBLY**)
36. **SET NO. 1 CYLINDER TO TDC/COMPRESSION** (See **DISASSEMBLY**)
37. **REMOVE NO. 1 CHAIN TENSIONER ASSEMBLY** (See **DISASSEMBLY**)
38. **REMOVE CHAIN TENSIONER SLIPPER** (See **DISASSEMBLY**)
39. **REMOVE CHAIN SUB-ASSEMBLY** (See **DISASSEMBLY**)
40. **REMOVE IDLE SPROCKET ASSEMBLY** (See **DISASSEMBLY**)
41. **REMOVE NO. 2 CHAIN VIBRATION DAMPER** (See **DISASSEMBLY**)
42. **REMOVE CAMSHAFT TIMING GEARS AND NO. 2 CHAIN (for Bank 2)** (See **DISASSEMBLY**)
43. **REMOVE NO. 3 CHAIN TENSIONER ASSEMBLY** (See **DISASSEMBLY**)

 © 2011 Mitchell Repair Information Company, LLC.

44. **REMOVE CAMSHAFT BEARING CAP** (See **DISASSEMBLY**)
45. **REMOVE NO. 3 CAMSHAFT** (See **DISASSEMBLY**)
46. **REMOVE NO. 4 CAMSHAFT** (See **DISASSEMBLY**)
47. **REMOVE CAMSHAFT HOUSING SUB-ASSEMBLY LH** (See **DISASSEMBLY**)
48. **INSPECT CAMSHAFT TIMING GEAR ASSEMBLY** (See **REMOVAL**)
49. **INSPECT CAMSHAFT TIMING EXHAUST GEAR ASSEMBLY LH** (See **REMOVAL**)
50. **REMOVE VALVE LASH ADJUSTER ASSEMBLY**
    a. Remove the 24 valve lash adjuster assemblies from the cylinder head.

    HINT:

    Arrange the removed parts in the correct order.

51. **REMOVE VALVE STEM CAP**
    a. Install the 12 valve stem caps.
52. **REMOVE CYLINDER HEAD SUB-ASSEMBLY LH**
    a. Uniformly loosen and remove the 2 cylinder head set bolts in several steps and in the sequence shown in the illustration.

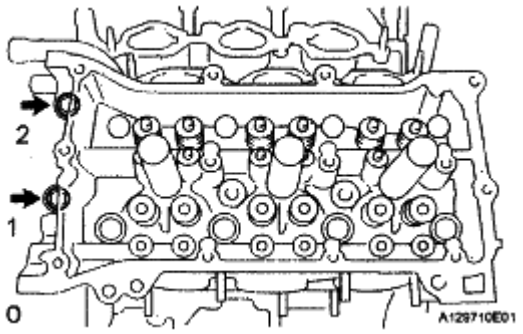

Fig. 115: Identifying Cylinder Head Set Bolts Tighten Sequence
Courtesy of TOYOTA MOTOR SALES, U.S.A., INC.

    b. Using a 10 mm bi-hexagon wrench, uniformly loosen the 8 bolts in the sequence shown in the illustration. Remove the 8 cylinder head bolts and plate washers.

NOTE:

- **Be careful not to drop washers into the cylinder head.**
- **Cylinder head warpage or cracking could result from removing bolts in an incorrect order.**

HINT:

Be sure to keep separate the removed parts for each installation position.

 © 2011 Mitchell Repair Information Company, LLC.

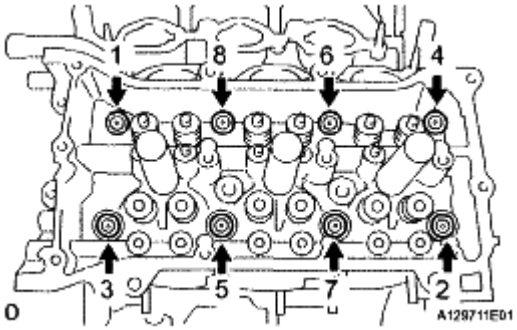

Fig. 116: Locating Cylinder Head Bolts And Plate Washers
Courtesy of TOYOTA MOTOR SALES, U.S.A., INC.

c. Remove the cylinder head sub-assembly LH.

53. **REMOVE NO. 2 CYLINDER HEAD GASKET**
    a. Remove the No. 2 cylinder head gasket.

INSTALLATION

1. **INSTALL NO. 2 CYLINDER HEAD GASKET**
    a. Place the No. 2 cylinder head gasket on the cylinder block surface with the Lot No. stamp upward.

NOTE:
- **Be careful of the installation direction.**
- **Gently lower the cylinder head in order not to damage the gasket with the bottom part of the head.**

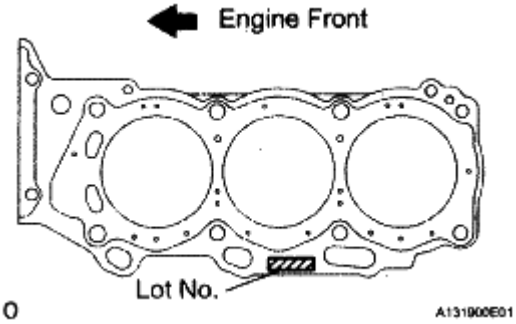

Fig. 117: Placing Cylinder Head Gasket On Cylinder Block Surface With Front Face
Courtesy of TOYOTA MOTOR SALES, U.S.A., INC.

2. **INSTALL CYLINDER HEAD SUB-ASSEMBLY LH**
    a. Place the cylinder head on the cylinder block.

NOTE: **Be careful not to allow oil to adhere to the bottom part of the cylinder head.**

 © 2011 Mitchell Repair Information Company, LLC.

HINT:

The cylinder head bolts are tightened in 3 progressive steps.

b. Apply a light coat of engine oil to the threads and under the heads of the cylinder head bolts.
c. Step 1
   1. Using a 10 mm bi-hexagon wrench, install and uniformly tighten the 8 cylinder head bolts with the plate washers in several steps in the sequence shown in the illustration.

      Torque: 36 N*m (367 kgf*cm, 27 ft.*lbf)

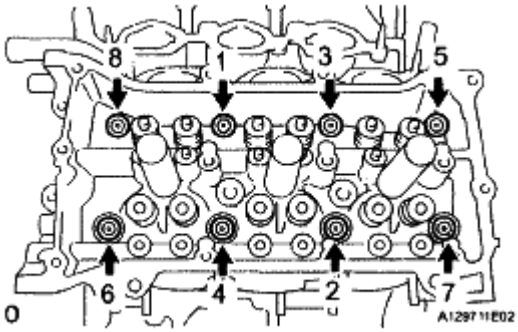

Fig. 118: Locating Cylinder Head Bolts
Courtesy of TOYOTA MOTOR SALES, U.S.A., INC.

d. Step 2
   1. Mark the cylinder head bolt head with paint as shown in the illustration.
   2. Tighten the cylinder head bolts another 90°.
e. Step 3
   1. Tighten the cylinder head bolts an additional 90°.
   2. Check that the painted mark is now facing rearward.

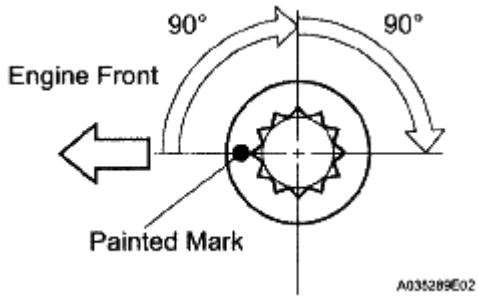

Fig. 119: Tightening Cylinder Head Bolts
Courtesy of TOYOTA MOTOR SALES, U.S.A., INC.

f. Tighten the 2 bolts in the order shown in the illustration.

 © 2011 Mitchell Repair Information Company, LLC.

Torque: 30 N*m (306 kgf*cm, 22 ft.*lbf)

3. **INSTALL VALVE STEM CAP**
   a. Install the 12 valve stem caps.
4. **INSTALL VALVE LASH ADJUSTER ASSEMBLY**

NOTE:
- **Keep the lash adjuster free of dirt and foreign objects.**
- **Only use clean engine oil.**

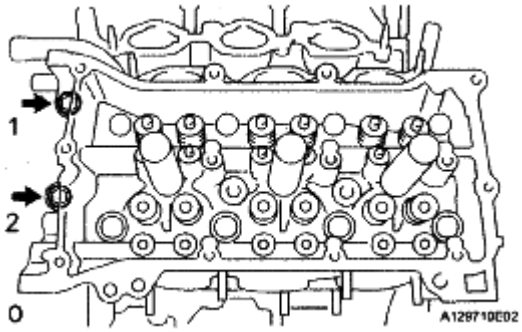

Fig. 120: Locating Cylinder Head Bolt
Courtesy of TOYOTA MOTOR SALES, U.S.A., INC.

a. Place the lash adjuster into a container filled with engine oil.
b. Insert the tip of SST into the lash adjuster's plunger and use the tip to press down on the check ball inside the plunger.

   SST 09276-75010

c. Squeeze SST and lash adjuster together to move the plunger up and down 5 to 6 times.
d. Check the movement of the plunger and bleed the air.

   OK: Plunger moves up and down.

   NOTE: **When bleeding air from the high-pressure chamber, make sure that the tip of SST is actually pressing the check ball as shown in the illustration. If the check ball is not pressed, air will not bleed.**

e. After bleeding the air, remove SST. Then, try to press the plunger quickly and firmly with by hand.

   OK: Plunger is very difficult to move.

   If the result is not as specified, replace the lash adjuster.

f. Install the lash adjusters.

 © 2011 Mitchell Repair Information Company, LLC.

NOTE: **Install the lash adjuster to the same place where it was removed from.**

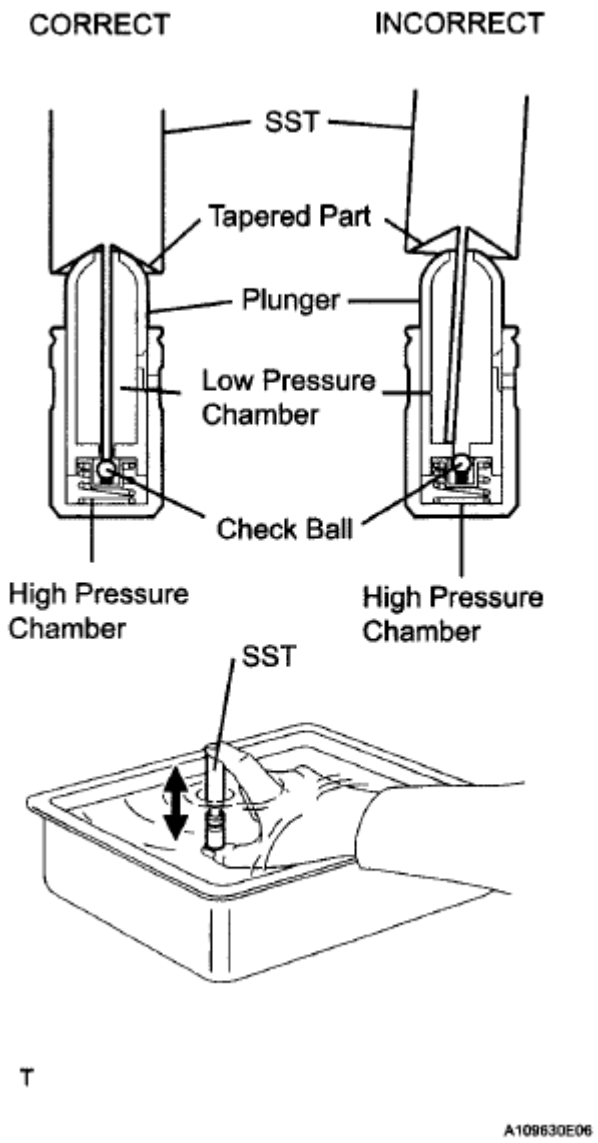

Fig. 121: Inserting Tip Of SST Into Lash Adjuster's Plunger
Courtesy of TOYOTA MOTOR SALES, U.S.A., INC.

5. **INSTALL CAMSHAFT BEARING CAP** (See **REASSEMBLY**)
6. **INSTALL CAMSHAFT HOUSING SUB-ASSEMBLY LH** (See **REASSEMBLY**)
7. **INSTALL NO. 3 CHAIN TENSIONER ASSEMBLY** (See **REASSEMBLY**)
8. **INSTALL CAMSHAFT TIMING GEARS AND NO. 2 CHAIN (for Bank 2)** (See **REASSEMBLY**)
9. **INSTALL NO. 2 CHAIN VIBRATION DAMPER** (See **REASSEMBLY**)
10. **INSTALL IDLE SPROCKET ASSEMBLY** (See **REASSEMBLY**)
11. **INSTALL CHAIN SUB-ASSEMBLY** (See **REASSEMBLY**)

 © 2011 Mitchell Repair Information Company, LLC.

12. **INSTALL CHAIN TENSIONER SLIPPER** (See **REASSEMBLY**)
13. **INSTALL NO. 1 CHAIN TENSIONER ASSEMBLY** (See **REASSEMBLY**)
14. **INSTALL TIMING CHAIN CASE OIL SEAL** (See **REASSEMBLY**)
15. **INSTALL TIMING CHAIN COVER SUB-ASSEMBLY** (See **REASSEMBLY**)
16. **INSTALL OIL PAN SUB-ASSEMBLY** (See **REASSEMBLY**)
17. **INSTALL OIL STRAINER SUB-ASSEMBLY** (See **REASSEMBLY**)
18. **INSTALL NO. 2 OIL PAN SUB-ASSEMBLY** (See **REASSEMBLY**)
19. **INSTALL CYLINDER HEAD COVER SUB-ASSEMBLY (for Bank 1)** (See **REASSEMBLY**)
20. **INSTALL CYLINDER HEAD COVER SUB-ASSEMBLY (for Bank 2)** (See **REASSEMBLY**)
21. **INSTALL WATER OUTLET** (See **REASSEMBLY**)
22. **INSTALL WATER INLET HOUSING** (See **REASSEMBLY**)
23. **INSTALL NO. 1 OIL COOLER BRACKET (w/ Oil Cooler)** (See **REASSEMBLY**)
24. **INSTALL OIL COOLER ASSEMBLY (w/ Oil Cooler)** (See **REASSEMBLY**)
25. **INSTALL CRANKSHAFT PULLEY** (See **REASSEMBLY**)
26. **INSTALL OIL PIPE** (See **REASSEMBLY**)
27. **INSTALL NO. 1 OIL PIPE** (See **REASSEMBLY**)
28. **INSTALL CRANKSHAFT POSITION SENSOR** (See **REASSEMBLY**)
29. **INSTALL KNOCK CONTROL SENSOR** (See **INSPECTION**)
30. **INSTALL KNOCK CONTROL SENSOR WIRE** (See **INSTALLATION**)
31. **INSTALL NO. 1 VACUUM SWITCHING VALVE** (See **INSTALLATION**)
32. **INSTALL RADIO SETTING CONDENSER** (See **INSTALLATION**)
33. **INSTALL NO. 1 ENGINE FRONT MOUNTING BRACKET LH** (See **INSTALLATION**)
34. **INSTALL NO. 2 IDLER PULLEY SUB-ASSEMBLY** (See **INSTALLATION**)
35. **INSTALL NO. 2 TIMING GEAR COVER** (See **INSTALLATION**)
36. **INSTALL V-RIBBED BELT TENSIONER ASSEMBLY** (See **INSTALLATION**)
37. **INSTALL GENERATOR ASSEMBLY** (See **INSTALLATION**)
38. **INSTALL TRANSVERSE ENGINE MOUNTING BRACKET** (See **INSTALLATION**)
39. **INSTALL EXHAUST MANIFOLD SUB-ASSEMBLY LH** (See **INSTALLATION**)
40. **INSTALL NO. 2 EXHAUST MANIFOLD HEAT INSULATOR** (See **INSTALLATION**)
41. **INSTALL NO. 2 MANIFOLD STAY** (See **INSTALLATION**)
42. **INSTALL NO. 2 ENGINE OIL LEVEL DIPSTICK GUIDE** (See **INSTALLATION**)
43. **INSTALL EXHAUST MANIFOLD SUB-ASSEMBLY RH** (See **INSTALLATION**)
44. **INSTALL INTAKE MANIFOLD** (See **INSTALLATION**)
45. **INSTALL NO. 2 ENGINE MOUNTING STAY RH** (See **INSTALLATION**)
46. **INSTALL IGNITION COIL ASSEMBLY** (See **INSTALLATION**)
47. **REMOVE ENGINE STAND**
48. **INSTALL ENGINE ASSEMBLY**

 © 2011 Mitchell Repair Information Company, LLC.

HINT:

See **INSTALLATION** .

CYLINDER HEAD

COMPONENTS

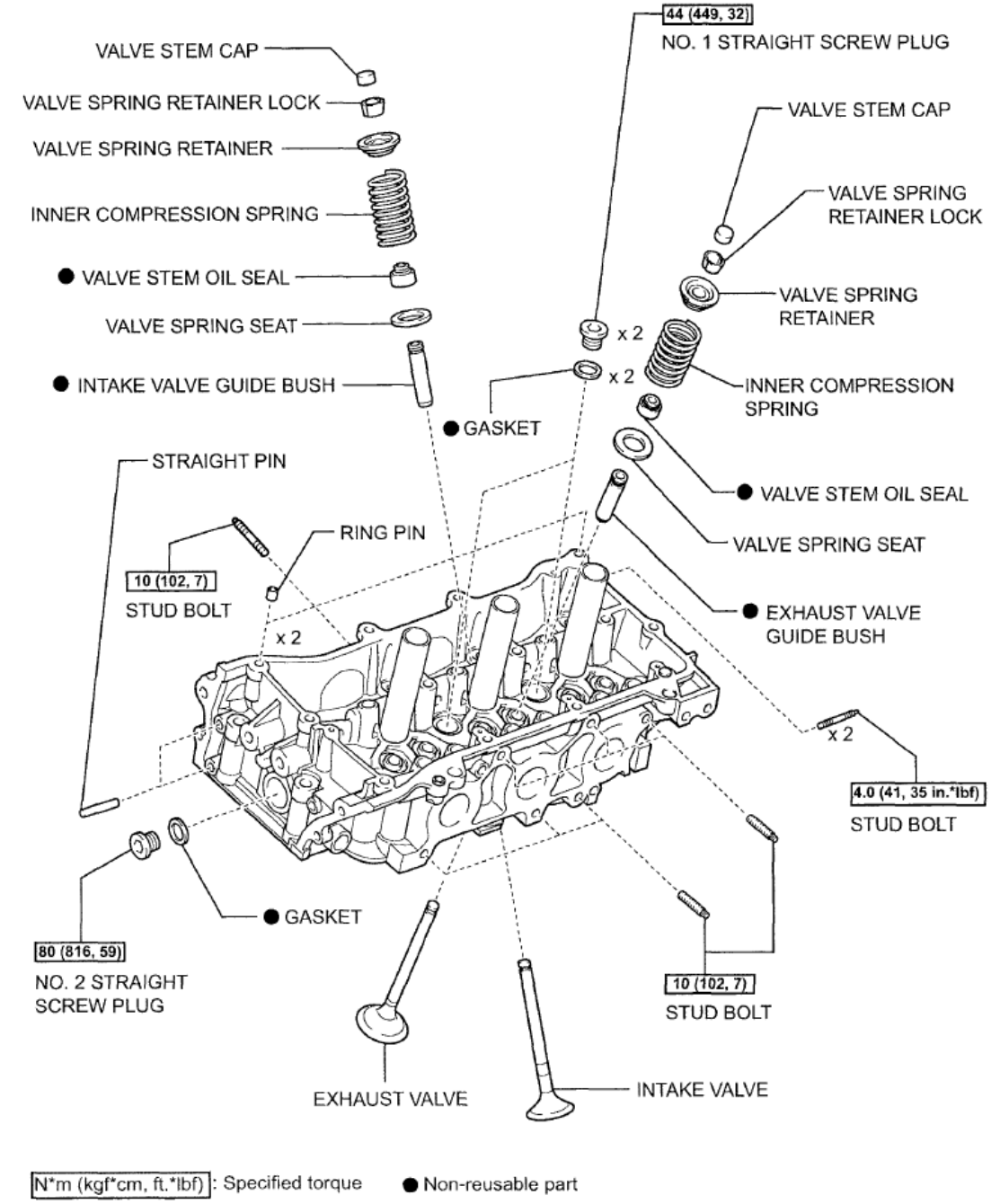

Fig. 122: Identifying Cylinder Head Components With Torque Specification
Courtesy of TOYOTA MOTOR SALES, U.S.A., INC.

DISASSEMBLY

1. **REMOVE VALVE STEM CAP**
   a. Remove the valve stem caps from the cylinder heads.

      HINT:

      Arrange the removed parts in the correct order.

2. **REMOVE INTAKE VALVE**
   a. Using SST, compress the inner compression spring and remove the valve spring retainer locks.

      SST 09202-70020 (09202-00010)

   b. Remove the valve spring retainer, inner compression spring and intake valve.

      HINT:

      Arrange the removed parts in the correct order.

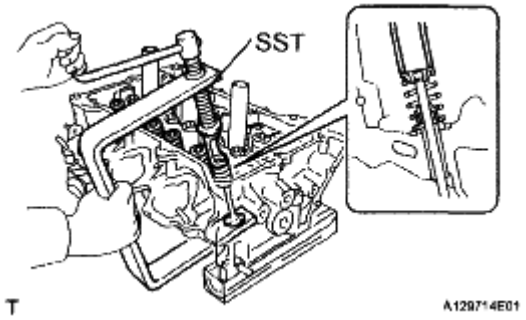

Fig. 123: Compressing Compression Spring
Courtesy of TOYOTA MOTOR SALES, U.S.A., INC.

3. **REMOVE EXHAUST VALVE**
   a. Using SST, compress the inner compression spring and remove the valve spring retainer locks.

      SST 09202-70020 (09202-00010)

   b. Remove the valve spring retainer, inner compression spring and exhaust valve.

      HINT:

      Arrange the removed parts in the correct order.

 © 2011 Mitchell Repair Information Company, LLC.

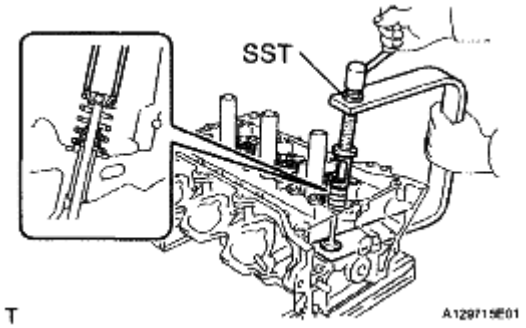

Fig. 124: Compressing Compression Spring
Courtesy of TOYOTA MOTOR SALES, U.S.A., INC.

4. **REMOVE VALVE STEM OIL SEAL**
   a. Using needle-nose pliers, remove the valve stem oil seals.

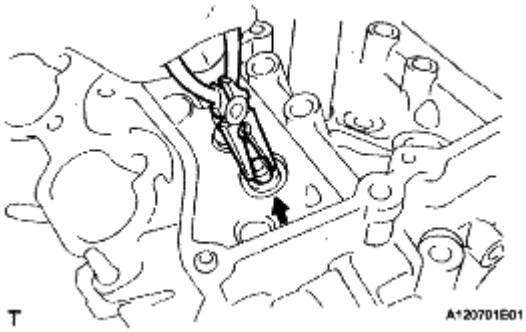

Fig. 125: Removing Valve Stem Oil Seal Using Needle-Nose Pliers
Courtesy of TOYOTA MOTOR SALES, U.S.A., INC.

5. **REMOVE VALVE SPRING SEAT**
   a. Using compressed air and a magnetic finger, remove the valve spring seats by blowing air onto them.

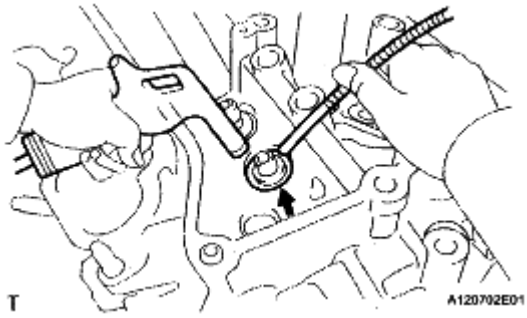

Fig. 126: Removing Valve Spring Seat
Courtesy of TOYOTA MOTOR SALES, U.S.A., INC.

6. **REMOVE NO. 1 STRAIGHT SCREW PLUG**

 © 2011 Mitchell Repair Information Company, LLC.

a. Using a 10 mm hexagon wrench, remove the 4 No. 1 straight screw plugs and 4 gaskets.

NOTE: If water leaks from a straight screw plug or the plug is corroded, replace it.

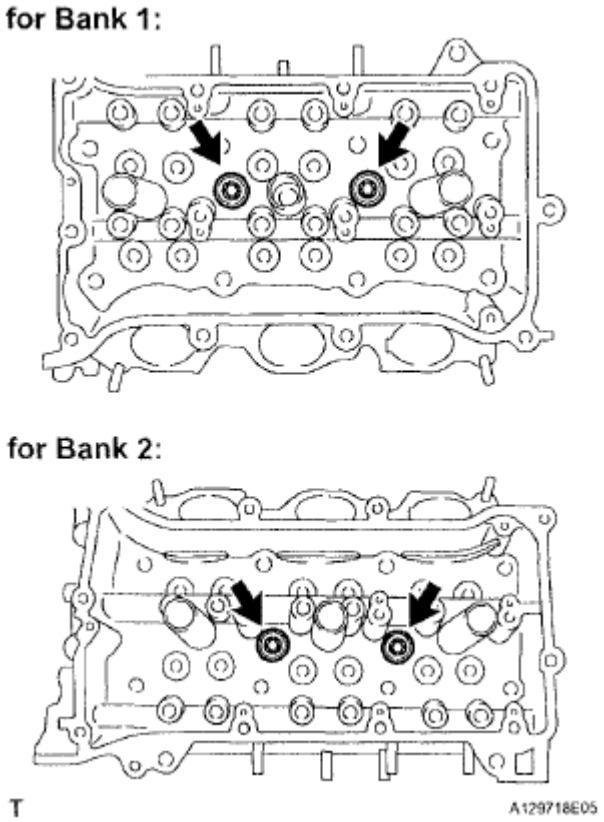

Fig. 127: Locating No. 1 Straight Screw Plugs
Courtesy of TOYOTA MOTOR SALES, U.S.A., INC.

7. **REMOVE NO. 2 STRAIGHT SCREW PLUG**

a. Using a 14 mm hexagon wrench, remove the 2 No. 2 straight screw plugs and 2 gaskets.

NOTE: If water leaks from a straight screw plug or the plug is corroded, replace it.

 © 2011 Mitchell Repair Information Company, LLC.

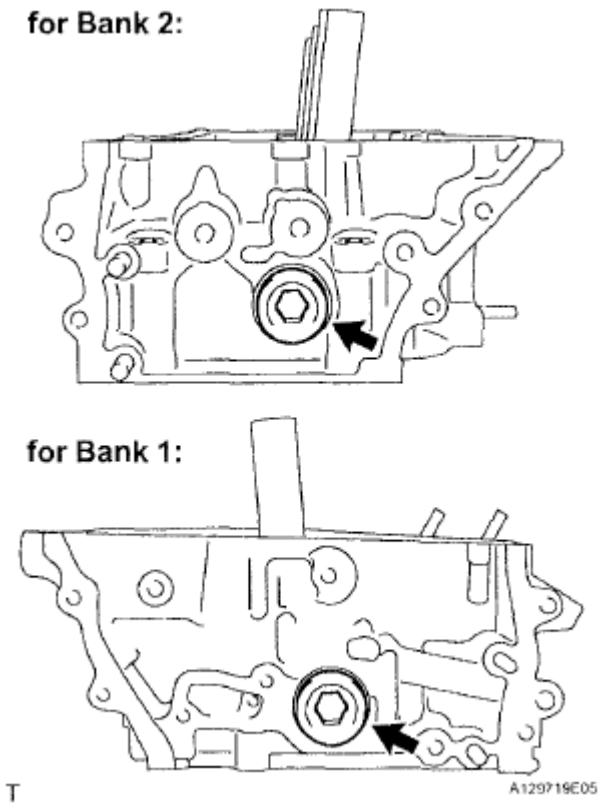

Fig. 128: Locating No. 2 Straight Screw Plugs
Courtesy of TOYOTA MOTOR SALES, U.S.A., INC.

INSPECTION

1. **INSPECT CYLINDER HEAD SUB-ASSEMBLY**
   a. Using a precision straight edge and feeler gauge, measure the warpage of the contact surface of the cylinder block sub-assembly and manifolds.

Standard warpage

ITEM WARPAGE CHART

Item	Warpage
Cylinder head lower	0.05 mm (0.0020 in.)
Intake	0.08 mm (0.0031 in.)
Exhaust	0.08 mm (0.0031 in.)

Maximum warpage

ITEM WARPAGE CHART

Item	Warpage
Cylinder head lower	0.10 mm (0.0039 in.)
Intake	0.10 mm (0.0039 in.)

 © 2011 Mitchell Repair Information Company, LLC.

Exhaust	0.10 mm (0.0039 in.)

If the warpage is greater than the maximum, replace the cylinder head sub-assembly.

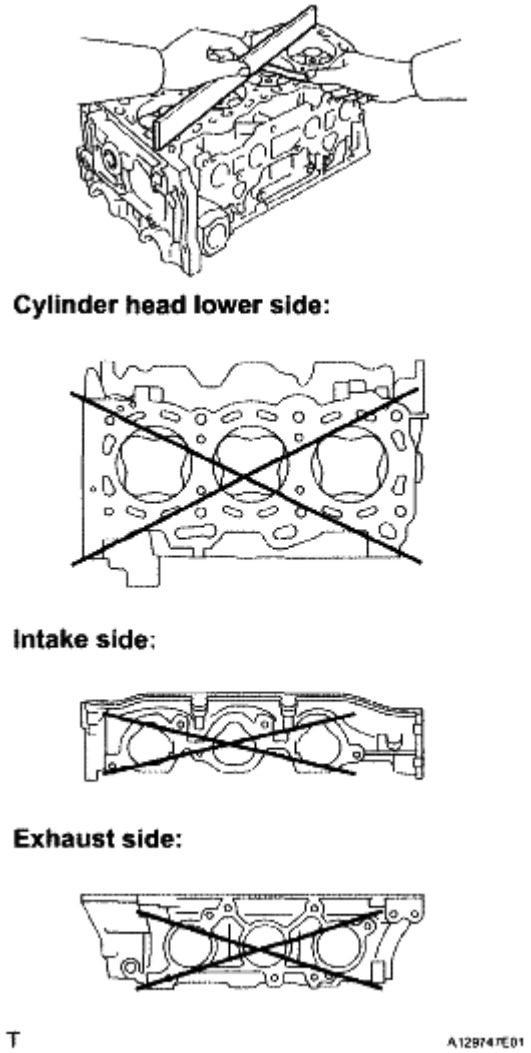

Fig. 129: Measuring Warpage Of Contact Surface Of Cylinder Block And Manifolds
Courtesy of TOYOTA MOTOR SALES, U.S.A., INC.

2. **INSPECT CYLINDER HEAD FOR CRACKS**
   a. Using a dye penetrant, check the intake ports, exhaust ports and cylinder surface for cracks. If cracked, replace the cylinder head sub-assembly.

 © 2011 Mitchell Repair Information Company, LLC.

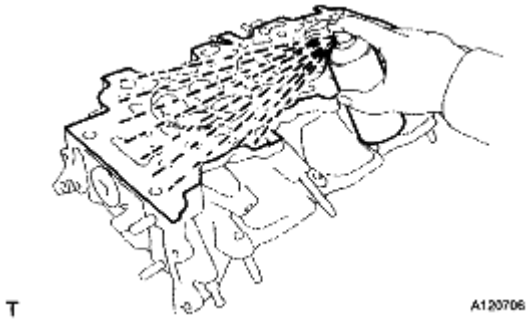

Fig. 130: Checking Intake Ports, Exhaust Ports And Cylinder Surface For Cracks
Courtesy of TOYOTA MOTOR SALES, U.S.A., INC.

3. **INSPECT INTAKE VALVE**
   a. Using a micrometer, measure the diameter of the valve stem.

      Valve stem diameter: 5.470 to 5.485 mm (0.2154 to 0.2159 in.)

      If the valve stem is not as specified, check the oil clearance.

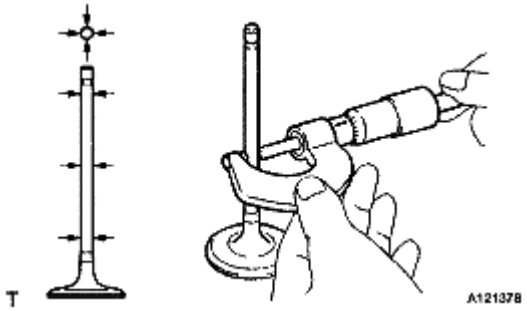

Fig. 131: Checking Diameter Of Valve Stem
Courtesy of TOYOTA MOTOR SALES, U.S.A., INC.

   b. Using vernier calipers, measure the valve head margin thickness.

      Standard margin thickness:

      1.0 mm (0.039 in.)

      Minimum margin thickness:

      0.5 mm (0.0197 in.)

      If the margin thickness is less than the minimum, replace the intake valve.

 © 2011 Mitchell Repair Information Company, LLC.

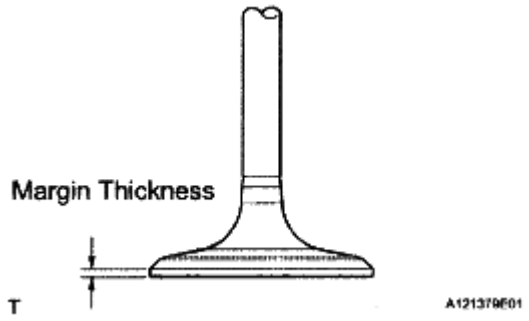

Fig. 132: Identifying Valve Head Margin Thickness
Courtesy of TOYOTA MOTOR SALES, U.S.A., INC.

c. Using vernier calipers, measure the valve's overall length.

Standard overall length:

105.85 mm (4.1673 in.)

Minimum overall length:

105.35 mm (4.1476 in.)

If the overall length is less than the minimum, replace the intake valve.

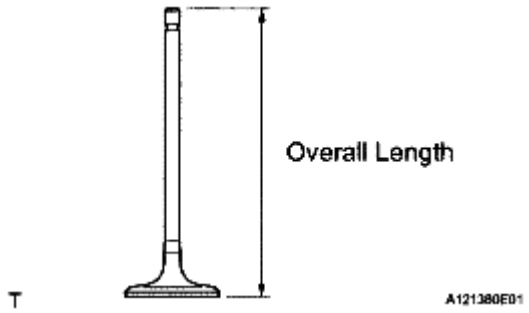

Fig. 133: Identifying Valve's Overall Length
Courtesy of TOYOTA MOTOR SALES, U.S.A., INC.

4. **INSPECT EXHAUST VALVE**

a. Using a micrometer, measure the diameter of the valve stem.

Valve stem diameter: 5.465 to 5.480 mm (0.2151 to 0.2157 in.)

If the valve stem is not as specified, check the oil clearance.

 © 2011 Mitchell Repair Information Company, LLC.

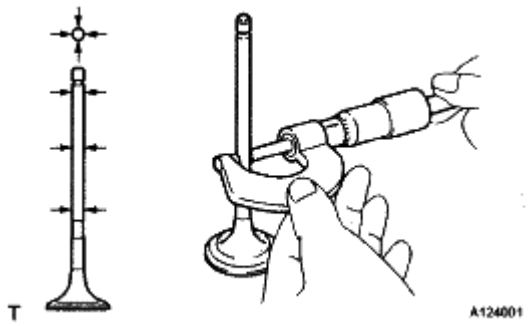

Fig. 134: Checking Diameter Of Exhaust Valve Stem
Courtesy of TOYOTA MOTOR SALES, U.S.A., INC.

b. Using vernier calipers, measure the valve head margin thickness.

Standard margin thickness:

1.0 mm (0.039 in.)

Minimum margin thickness:

0.5 mm (0.0197 in.)

If the margin thickness is less than the minimum, replace the exhaust valve.

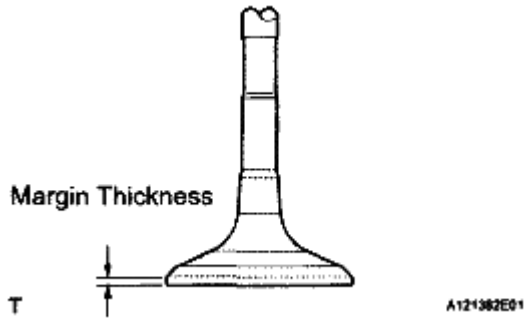

Fig. 135: Identifying Valve Head Margin Thickness
Courtesy of TOYOTA MOTOR SALES, U.S.A., INC.

c. Using vernier calipers, measure the valve's overall length.

Standard overall length:

110.40 mm (4.3464 in.)

Minimum overall length:

109.90 mm (4.3268 in.)

 © 2011 Mitchell Repair Information Company, LLC.

If the overall length is less than the minimum, replace the exhaust valve.

5. **INSPECT INTAKE VALVE SEAT**

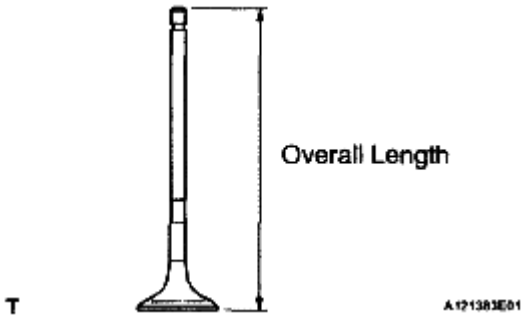

Fig. 136: Identifying Valve Overall Length
Courtesy of TOYOTA MOTOR SALES, U.S.A., INC.

a. Apply a light coat of Prussian blue to the valve face.
b. Lightly press the valve face against the valve seat.
c. Check the valve face and valve spring seat by using the following procedure:
    1. If Prussian blue appears around the entire valve face, the valve face is concentric. If not, replace the valve.
    2. If Prussian blue appears around the entire valve seat, the guide and valve face are concentric. If not, resurface the valve spring seat.
    3. Check that the valve spring seat contacts in the middle of the valve face with the width between 1.1 and 1.5 mm (0.043 and 0.059 in.).

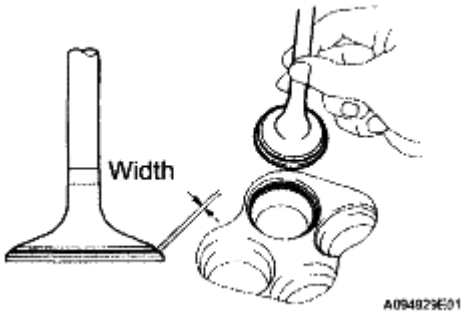

Fig. 137: Applying Light Coat Of Prussian Blue (Or White Lead) To Valve Face
Courtesy of TOYOTA MOTOR SALES, U.S.A., INC.

6. **INSPECT EXHAUST VALVE SEAT**
    a. Apply a light coat of Prussian blue to the valve face.
    b. Lightly press the valve face against the valve spring seat.
    c. Check the valve face and valve spring seat by using the following procedure:
        1. If Prussian blue appears around the entire valve face, the valve face is concentric. If not, replace the valve.

 © 2011 Mitchell Repair Information Company, LLC.

2. If Prussian blue appears around the entire valve seat, the guide and valve face are concentric. If not, resurface the valve spring seat.
3. Check that the valve spring seat contacts in the middle of the valve face with the width between 1.1 and 1.5 mm (0.043 and 0.059 in.).

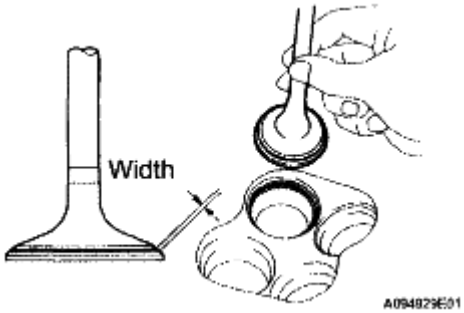

Fig. 138: Applying Light Coat Of Prussian Blue (Or White Lead) To Valve Face
Courtesy of TOYOTA MOTOR SALES, U.S.A., INC.

7. **INSPECT INNER COMPRESSION SPRING**
   a. Using vernier calipers, measure the free length of the inner compression spring.

   Free length: 45.91 mm (1.8075 in.)

   If the free length is not as specified, replace the inner compression spring.

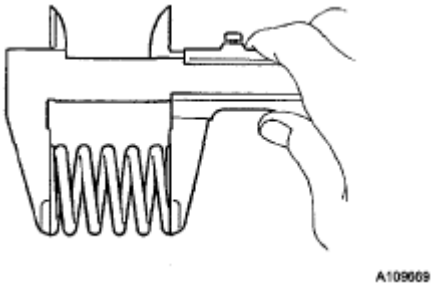

Fig. 139: Checking Free Length Of Inner Compression Spring
Courtesy of TOYOTA MOTOR SALES, U.S.A., INC.

   b. Using a steel square, measure the deviation of the inner compression spring.

   Maximum deviation:

   1.0 mm (0.039 in.)

   Maximum angle (reference):

   2°

 © 2011 Mitchell Repair Information Company, LLC.

If the deviation is greater than the maximum, replace the inner compression spring.

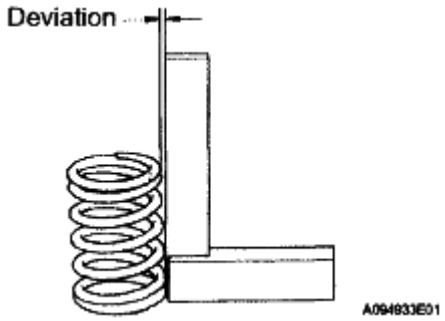

Fig. 140: Measuring Deviation Of Inner Compression Spring
Courtesy of TOYOTA MOTOR SALES, U.S.A., INC.

8. **INSPECT VALVE GUIDE BUSH OIL CLEARANCE**
   a. Using a caliper gauge, measure the inside diameter of the valve guide bush.

      Bush inside diameter: 5.510 to 5.530 mm (0.2169 to 0.2177 in.)

   b. Subtract the valve stem diameter measurement from the valve guide bush inside diameter measurement.

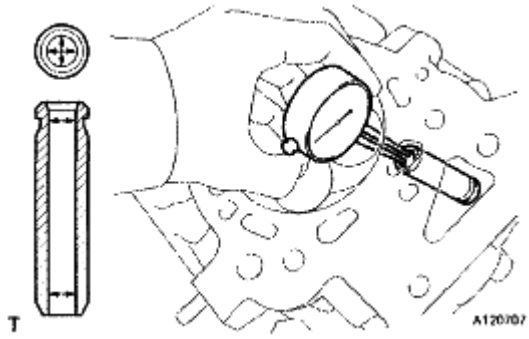

Fig. 141: Checking Inside Diameter Of Guide Bush
Courtesy of TOYOTA MOTOR SALES, U.S.A., INC.

Standard clearance

ITEM CLEARANCE REFERENCE

Item	Clearance
Intake	0.025 to 0.060 mm (0.0010 to 0.0024 in.)
Exhaust	0.030 to 0.065 mm (0.0012 to 0.0026 in.)

Maximum oil clearance

ITEM CLEARANCE REFERENCE

 © 2011 Mitchell Repair Information Company, LLC.

Item	Clearance
Intake	0.08 mm (0.0032 in.)
Exhaust	0.10 mm (0.0039 in.)

For intake side:

If the clearance is greater than the maximum, replace the intake valve and intake valve guide bush.

For exhaust side:

If the clearance is greater than the maximum, replace the exhaust valve and exhaust valve guide bush.

REPLACEMENT

1. **REPLACE INTAKE VALVE GUIDE BUSH**
   a. Heat the cylinder head to 80 to 100°C (176 to 212°F).
   b. Place the cylinder head on wooden blocks.
   c. Using SST and a hammer, tap out the intake valve guide bushes.

   SST 09201 -10000 (09201 -01050), 09950-70010 (09951-07100)

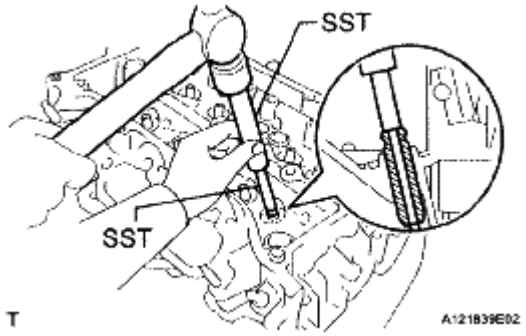

Fig. 142: Removing Intake Valve Guide Bush
Courtesy of TOYOTA MOTOR SALES, U.S.A., INC.

   d. Using a caliper gauge, measure the intake valve guide bush bore diameter of the cylinder head.

   Cylinder bore diameter:

   10.285 to 10.306 mm (0.4049 to 0.4057 in.)

   Select a new guide bush (STD or O/S 0.05)

   BUSH BORE DIAMETER CHART

Bush size	Bush bore diameter

 © 2011 Mitchell Repair Information Company, LLC.

STD	10.285 to 10.306 mm (0.4049 to 0.4057 in.)
O/S 0.05	10.335 to 10.356 mm (0.4069 to 0.4077 in.)

Fig. 143: Checking Bush Bore Diameter Of Cylinder Head
Courtesy of TOYOTA MOTOR SALES, U.S.A., INC.

If the bush bore diameter of the cylinder head is greater than 10.306 mm (0.4057 in.), machine the bush bore to the dimension of 10.335 to 10.356 mm (0.4069 to 0.4077 in.) to install an O/S 0.05 valve guide bush.

If the bush bore diameter of the cylinder head is greater than 10.356 mm (0.4077 in.), replace the cylinder head.

e. Heat the cylinder head to 80 to 100°C (176 to 212°F).
f. Place the cylinder head on wooden blocks.
g. Using SST, tap in new intake valve guide bushes to the specified protrusion height.

SST 09201 -10000 (09201 -01050), 09950-70010 (09951-07100)

Protrusion height: 9.30 to 9.70 mm (0.3661 to 0.3819 in.)

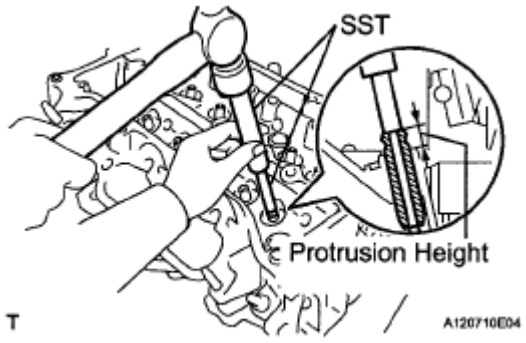

Fig. 144: Tapping In Intake Valve Guide Bushes
Courtesy of TOYOTA MOTOR SALES, U.S.A., INC.

h. Using a sharp 5.5 mm reamer, ream the valve guide bushings to obtain the specified clearance.

 © 2011 Mitchell Repair Information Company, LLC.

Standard oil clearance: 0.025 to 0.060 mm (0.0010 to 0.0023 in.)

2. **REPLACE EXHAUST VALVE GUIDE BUSH**
   a. Heat the cylinder head to 80 to 100°C (176 to 212°F).
   b. Place the cylinder head on wooden blocks.
   c. Using SST and hammer, tap out the exhaust valve guide bushes.

   SST 09201-10000 (09201 -01050), 09950-70010 (09951-07100)

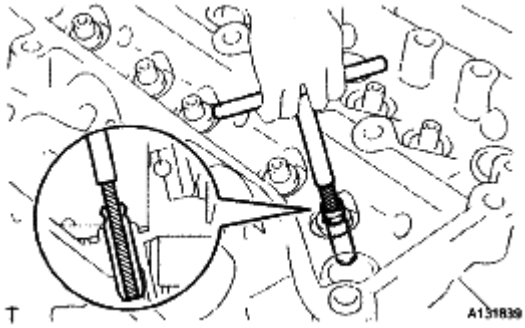

Fig. 145: Reaming Valve Guide Bush
Courtesy of TOYOTA MOTOR SALES, U.S.A., INC.

   d. Using a caliper gauge, measure the exhaust valve guide bush bore diameter of the cylinder head.

   Cylinder bore diameter:

   10.285 to 10.306 mm (0.4049 to 0.4057 in.)

   Select a new guide bush (STD or O/S 0.05)

   BUSH BORE DIAMETER CHART

Bush size	Bush bore diameter
STD	10.285 to 10.306 mm (0.4049 to 0.4057 in.)
O/S 0.05	10.335 to 10.356 mm (0.4069 to 0.4077 in.)

Fig. 146: Checking Bush Bore Diameter Of Cylinder Head

 © 2011 Mitchell Repair Information Company, LLC.

Courtesy of TOYOTA MOTOR SALES, U.S.A., INC.

If the bush bore diameter of the cylinder head is greater than 10.306 mm (0.4057 in.), machine the bush bore to the dimension of 10.335 to 10.356 mm (0.4069 to 0.4077 in.) to install an O/S 0.05 valve guide bush.

If the bush bore diameter of the cylinder head is greater than 10.356 mm (0.4077 in.), replace the cylinder head.

e. Heat the cylinder head to 80 to 100°C (176 to 212°F).
f. Place the cylinder head on wooden blocks.
g. Using SST, tap in new exhaust valve guide bushes to the specified protrusion height.

SST 09201 -10000 (09201 -01050), 09950-70010 (09951-07100)

Protrusion height: 9.30 to 9.70 mm (0.3661 to 0.3819 in.)

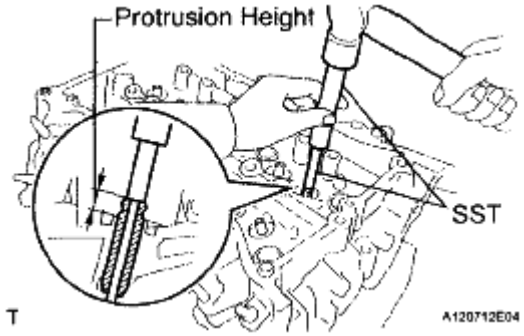

Fig. 147: Installing Valve Guide Bushes
Courtesy of TOYOTA MOTOR SALES, U.S.A., INC.

h. Using a sharp 5.5 mm reamer, ream the valve guide bushings to obtain the specified clearance.

Standard oil clearance: 0.030 to 0.065 mm (0.0012 to 0.0026 in.)

3. **REPLACE RING PIN**

NOTE: It is not necessary to remove the ring pin unless it is being replaced.

 © 2011 Mitchell Repair Information Company, LLC.

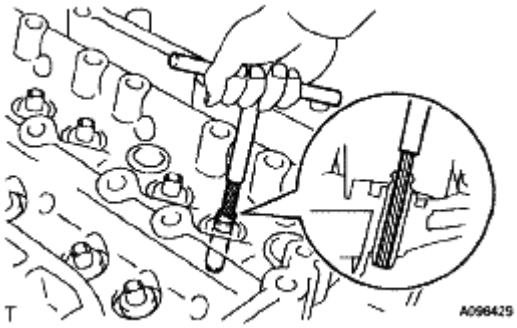

Fig. 148: Reaming Valve Guide Bushing
Courtesy of TOYOTA MOTOR SALES, U.S.A., INC.

a. Using a plastic hammer, tap in new ring pins to the specified protrusion height.

Specified protrusion height: 2.5 to 3.5 mm (0.098 to 0.138 in.)

4. **REPLACE STUD BOLT**

NOTE: If the stud bolt is deformed or the threads are damaged, replace it.

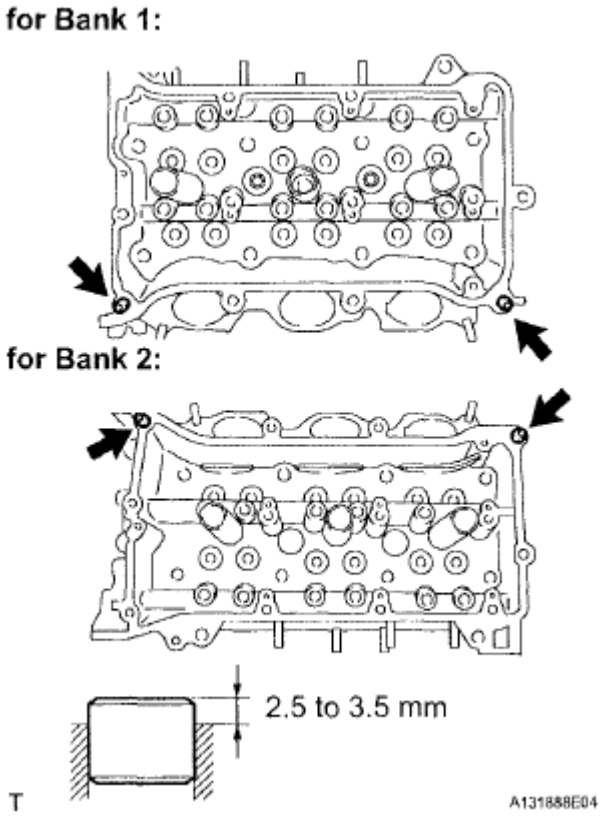

Fig. 149: Locating Ring Pins
Courtesy of TOYOTA MOTOR SALES, U.S.A., INC.

 © 2011 Mitchell Repair Information Company, LLC.

a. Using E6 and E8 "TORX" sockets, install the stud bolts.

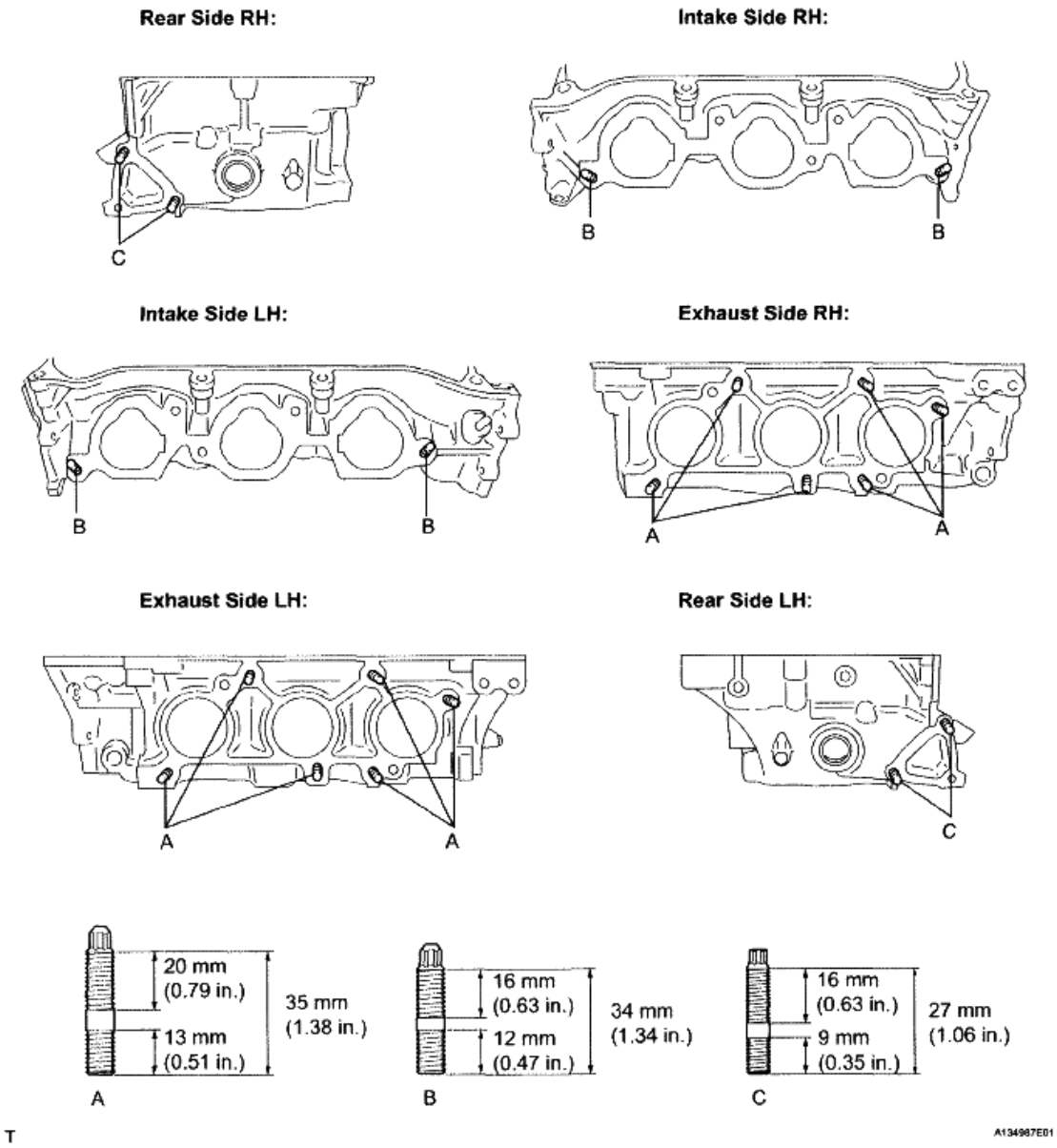

Fig. 150: Identifying Stud Bolts Installation Position
Courtesy of TOYOTA MOTOR SALES, U.S.A., INC.

Torque: 10 N*m (102 kgf*cm, 7 ft.*lbf) for bolts A and B

4.0 N*m (41 kgf*cm, 35 in.*lbf) for bolt C

5. **REPLACE STRAIGHT PIN**

NOTE: If the straight pin is deformed, replace it.

 © 2011 Mitchell Repair Information Company, LLC.

a. Using a plastic hammer, tap in new straight pins as shown in the illustration.

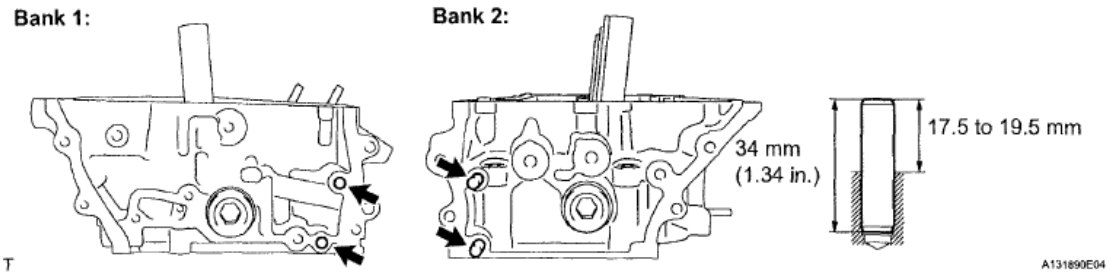

Fig. 151: Identifying Straight Pins Height
Courtesy of TOYOTA MOTOR SALES, U.S.A., INC.

Protrusion height: 17.5 to 19.5 mm (0.689 to 0.768 in.)

REASSEMBLY

1. **INSTALL NO. 1 STRAIGHT SCREW PLUG**
   a. Using a 10 mm hexagon wrench, install 4 new gaskets and the 4 No. 1 straight screw plugs.

   Torque: 44 N*m (449 kgf*cm, 32 ft.*lbf)

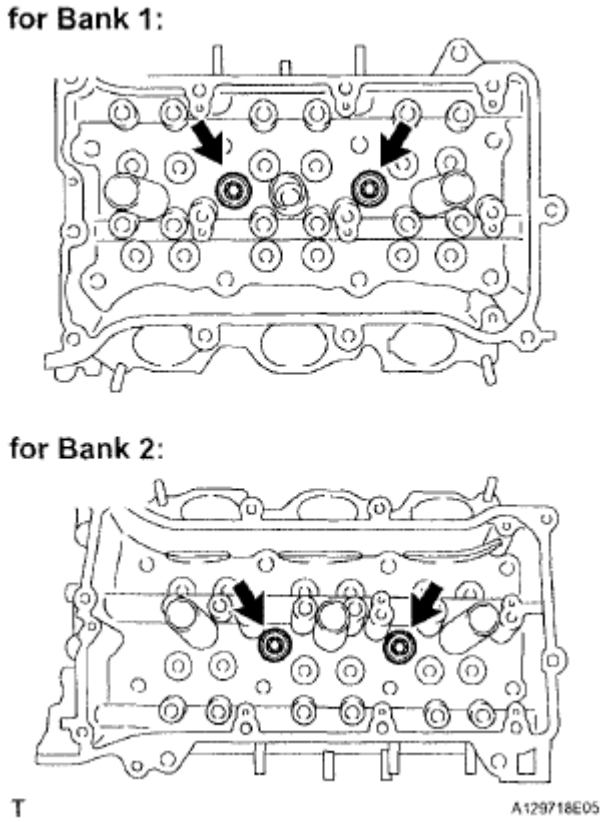

Fig. 152: Locating No. 1 Straight Screw Plugs

 © 2011 Mitchell Repair Information Company, LLC.

Courtesy of TOYOTA MOTOR SALES, U.S.A., INC.

2. **INSTALL NO. 2 STRAIGHT SCREW PLUG**
   a. Using a 14 mm hexagon wrench, install 2 new gaskets and the 2 No. 2 straight screw plugs.

   Torque: 80 N*m (816 kgf*cm, 59 ft.*lbf)

3. **INSTALL VALVE SPRING SEAT**
   a. Install the valve spring seats to the cylinder head.

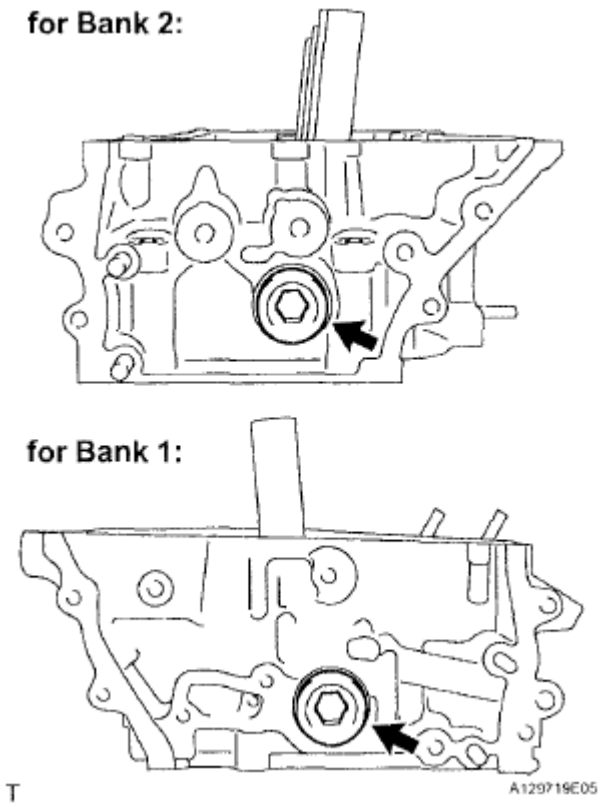

Fig. 153: Locating No. 2 Straight Screw Plugs
Courtesy of TOYOTA MOTOR SALES, U.S.A., INC.

4. **INSTALL VALVE STEM OIL SEAL**
   a. Apply a light coat of engine oil to new valve stem oil seals.

NOTE: **Pay attention when installing the intake and exhaust valve stem oil seals. For example, installing the intake valve stem oil seal into the exhaust side or installing the exhaust valve stem oil seal to the intake side can cause installation problems later.**

 © 2011 Mitchell Repair Information Company, LLC.

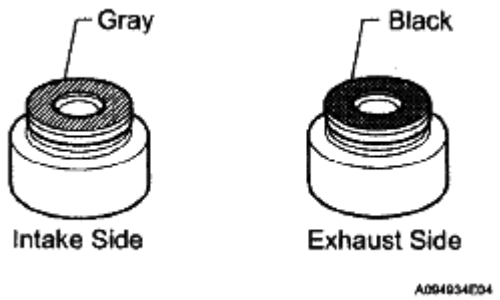

Fig. 154: Identifying Intake And Exhaust Valve Oil Seals
Courtesy of TOYOTA MOTOR SALES, U.S.A., INC.

HINT:

The intake valve oil seals are gray and the exhaust valve oil seals are black.

b. Using SST, push in the oil seals.

SST 09201-41020

NOTE: Failure to use SST will cause the seal to be damaged or improperly seated.

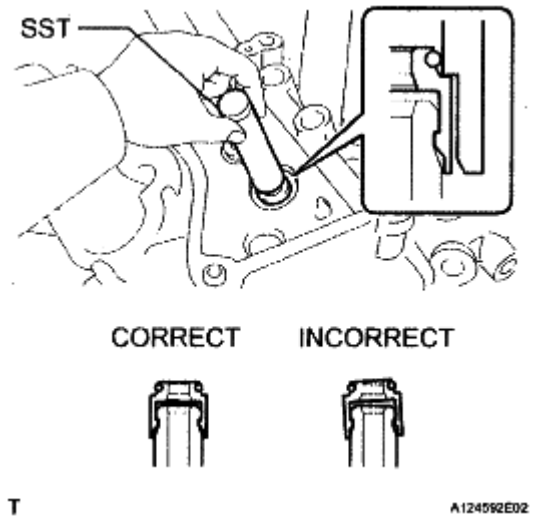

Fig. 155: Pushing In Oil Seals Using SST
Courtesy of TOYOTA MOTOR SALES, U.S.A., INC.

5. **INSTALL EXHAUST VALVE**
   a. Apply a sufficient coat of engine oil to the tip area of the exhaust valve shown in the illustration.
   b. Install the exhaust valve, inner compression spring and valve spring retainer to the cylinder head.

NOTE: Install the same parts in the same combination to the original

 © 2011 Mitchell Repair Information Company, LLC.

locations.

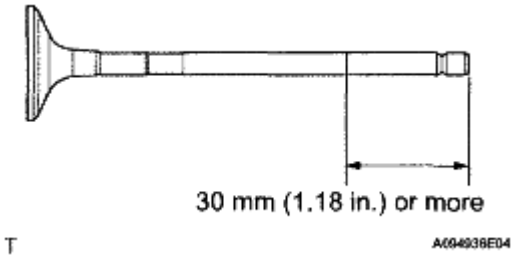

Fig. 156: Identifying Intake Valve Tip Area Length
Courtesy of TOYOTA MOTOR SALES, U.S.A., INC.

c. Using SST, compress the inner compression spring and install the 2 valve spring retainer locks.

SST 09202-70020 (09202-00010)

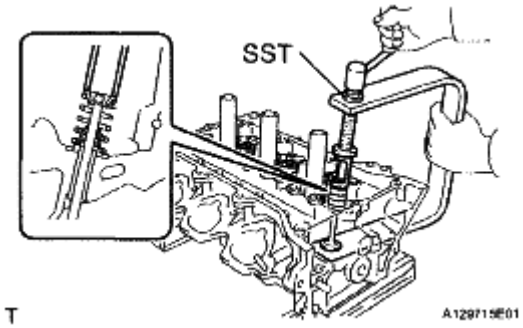

Fig. 157: Compressing Compression Spring
Courtesy of TOYOTA MOTOR SALES, U.S.A., INC.

d. Using a plastic hammer, lightly tap the valve stem tip to ensure a proper fit.

NOTE: Be careful not to damage the retainer.

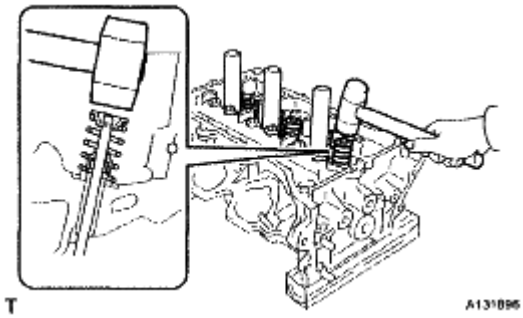

Fig. 158: Tapping Valve Stem Tip To Ensure Proper Fit
Courtesy of TOYOTA MOTOR SALES, U.S.A., INC.

6. **INSTALL INTAKE VALVE**
   a. Apply a sufficient coat of engine oil to the tip area of the intake valve shown in the illustration.
   b. Install the intake valve, inner compression spring and valve spring retainer to the cylinder head.

NOTE: Install the same parts in the same combination to their original locations.

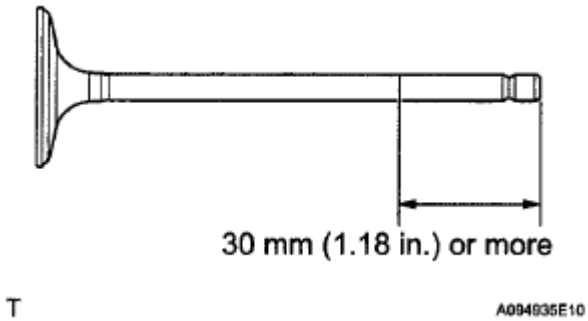

Fig. 159: Identifying Tip Area Of Intake Valve
Courtesy of TOYOTA MOTOR SALES, U.S.A., INC.

   c. Using SST, compress the inner compression spring and install the 2 valve spring retainer locks.

SST 09202-70020(09202-00010)

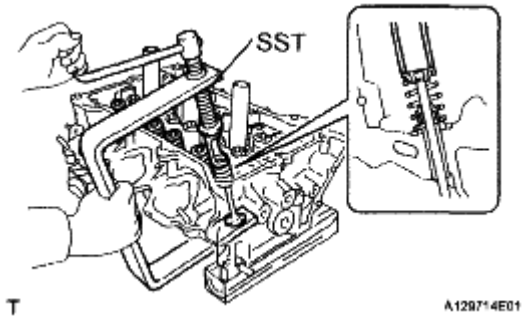

Fig. 160: Compressing Compression Spring
Courtesy of TOYOTA MOTOR SALES, U.S.A., INC.

   d. Using a plastic hammer, lightly tap the valve stem tip to ensure a proper fit.

NOTE: Be careful not to damage the retainer.

7. **INSTALL VALVE STEM CAP**
   a. Apply a light coat of engine oil to the valve stem caps.
   b. Install the valve stem caps on the valves.

 © 2011 Mitchell Repair Information Company, LLC.

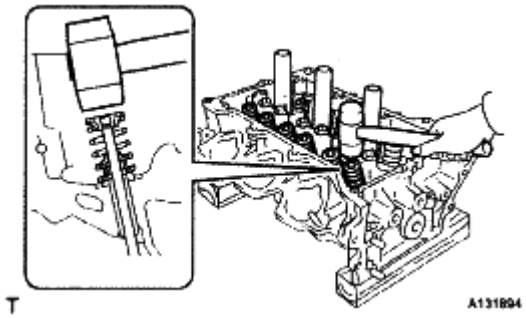

Fig. 161: Tapping Valve Stem Tip To Ensure Proper Fit
Courtesy of TOYOTA MOTOR SALES, U.S.A., INC.

REPAIR

1. **REPAIR INTAKE VALVE SEAT**

NOTE:

- **Repair the intake valve seat while checking the seating position.**
- **Keep the lip free of foreign matter.**

a. Using a 45° cutter, resurface the valve seat so that the valve seat width is greater than the specification.

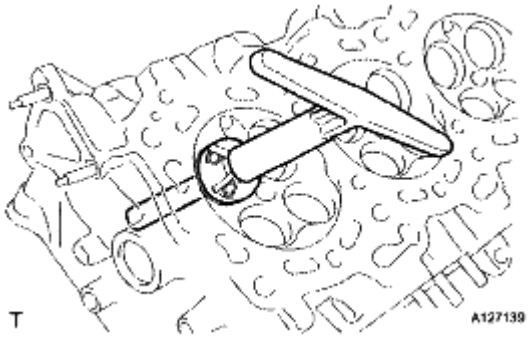

Fig. 162: Resurfacing Valve Seat
Courtesy of TOYOTA MOTOR SALES, U.S.A., INC.

b. Using 30° and 60° cutters, correct the valve seat so that the intake valve contacts the entire circumference of the seat. The contact should be in the center of the intake valve seat, and the intake valve seat width should be maintained within the specified range around the entire circumference of the intake valve seat.

Width: 1.1 to 1.5 mm (0.043 to 0.059 in.)

c. Handrub the intake valve and intake valve seat with an abrasive compound.
d. Check the intake valve seating position.

 © 2011 Mitchell Repair Information Company, LLC.

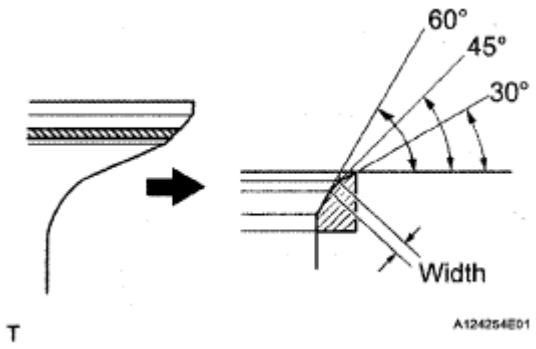

Fig. 163: Identifying Intake Valve Seat Angle
Courtesy of TOYOTA MOTOR SALES, U.S.A., INC.

2. **REPAIR EXHAUST VALVE SEAT**

NOTE:

- **Repair the seat while checking the seating position.**
- **Keep the lip free of foreign matter.**

a. Using a 45° cutter, resurface the valve seat so that the valve seat width is greater than the specification.

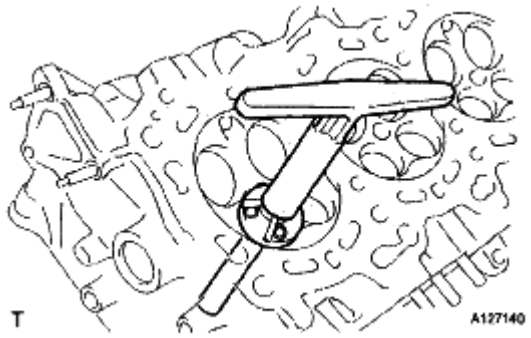

Fig. 164: Resurfacing Valve Seat
Courtesy of TOYOTA MOTOR SALES, U.S.A., INC.

b. Using 30° and 75° cutters, correct the exhaust valve seat so that the exhaust valve contacts the entire circumference of the seat. The contact should be in the center of the exhaust valve seat, and the exhaust valve seat width should be maintained within the specified range around the entire circumference of the exhaust valve seat.

Width: 1.1 to 1.5 mm (0.043 to 0.059 in.)

 © 2011 Mitchell Repair Information Company, LLC.

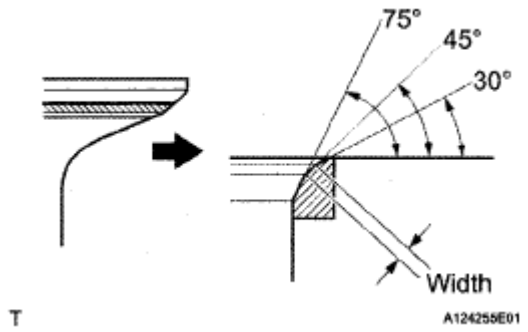

Fig. 165: Identifying Valve Seat Angle
Courtesy of TOYOTA MOTOR SALES, U.S.A., INC.

c. Handrub the exhaust valve and exhaust valve seat with an abrasive compound.
d. Check the exhaust valve seating position.

CYLINDER BLOCK

COMPONENTS

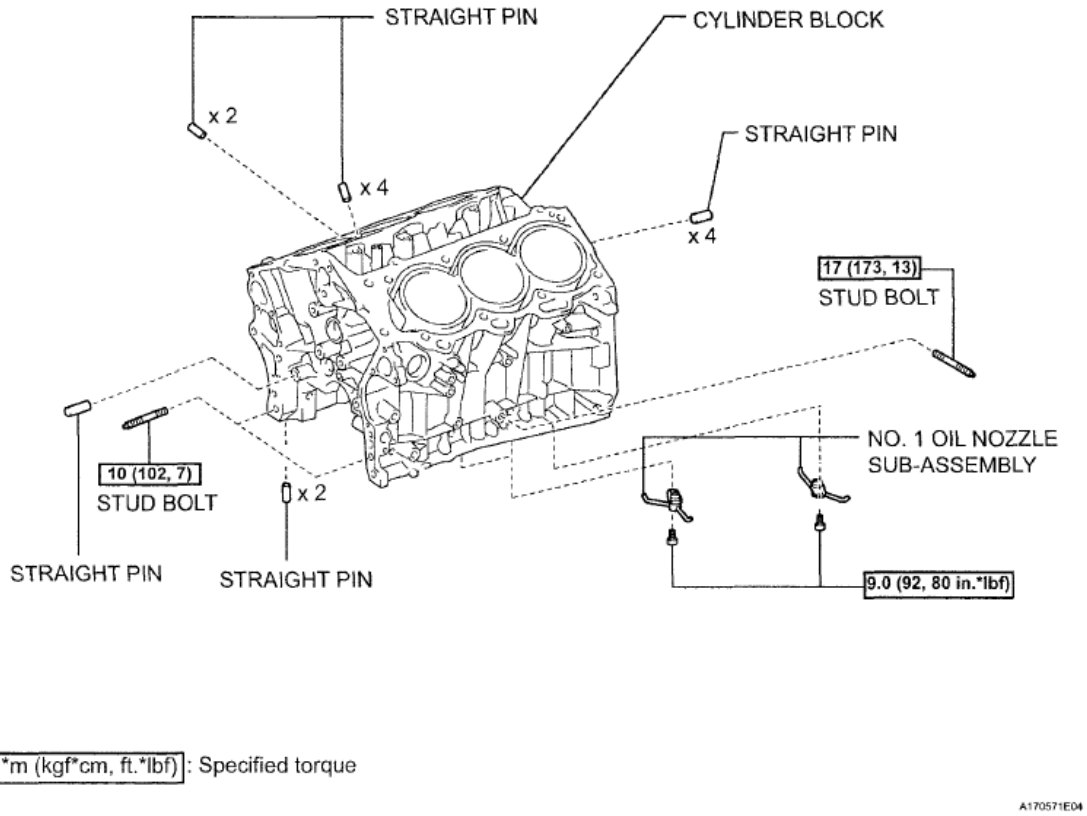

Fig. 166: Identifying Cylinder Block Components With Torque Specification (1 Of 2)
Courtesy of TOYOTA MOTOR SALES, U.S.A., INC.

 © 2011 Mitchell Repair Information Company, LLC.

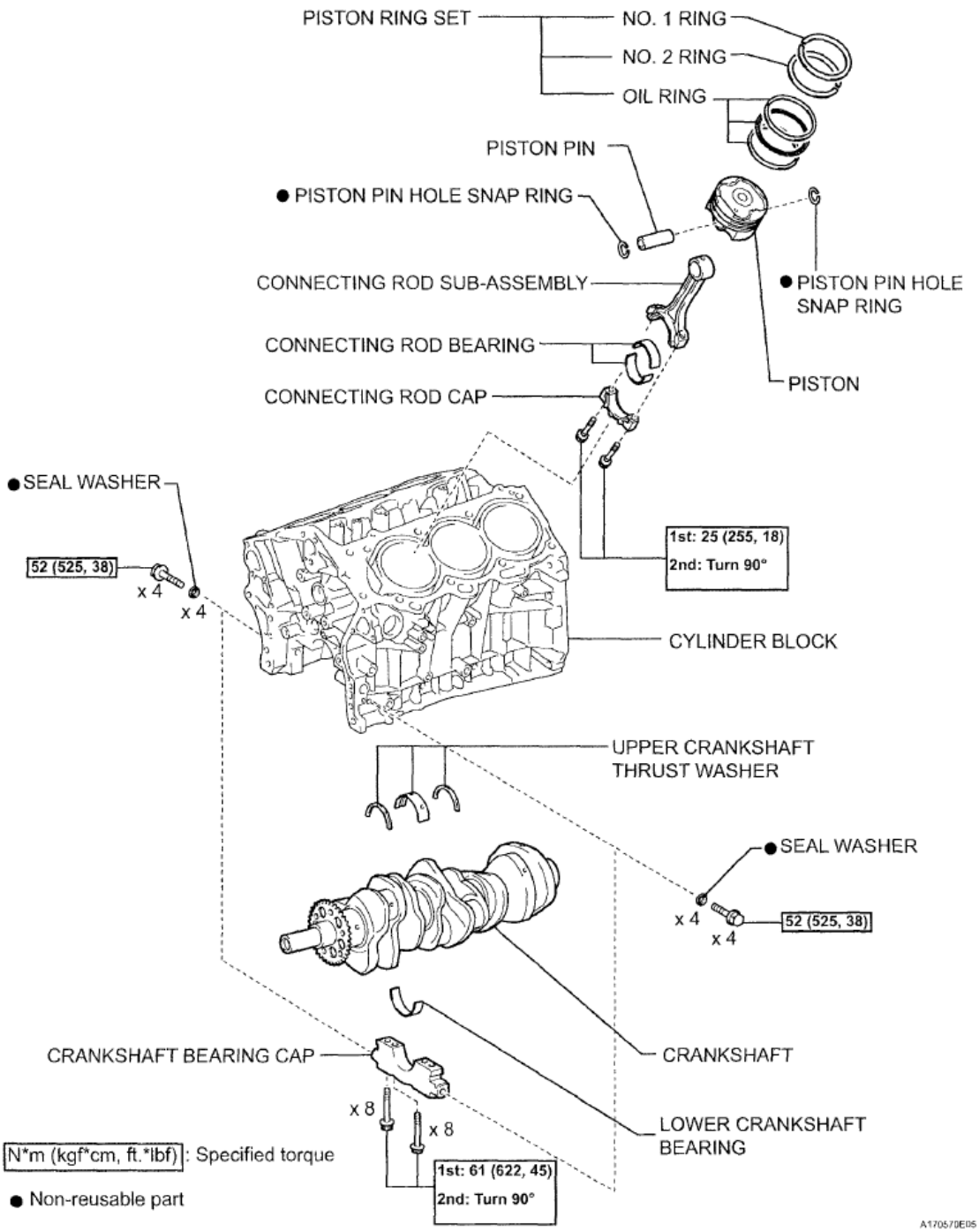

Fig. 167: Identifying Cylinder Block Components With Torque Specification (2 Of 2)
Courtesy of TOYOTA MOTOR SALES, U.S.A., INC.

DISASSEMBLY

1. **REMOVE PISTON SUB-ASSEMBLY WITH CONNECTING ROD**
   a. Check that the matchmarks on the connecting rod sub-assembly and connecting rod cap are aligned.

HINT:

The matchmarks on the connecting rod sub-assembly and connecting rod cap are guides for the correct reassembly.

b. Remove the 2 connecting rod cap bolts.

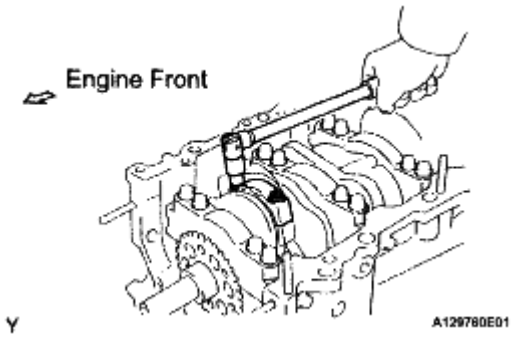

Fig. 168: Removing Connecting Rod Cap Bolts
Courtesy of TOYOTA MOTOR SALES, U.S.A., INC.

c. Using the 2 removed connecting rod cap bolts, remove the connecting rod cap and lower bearing by wiggling the connecting rod cap right and left.

HINT:

Keep the lower bearing inserted to the connecting rod cap.

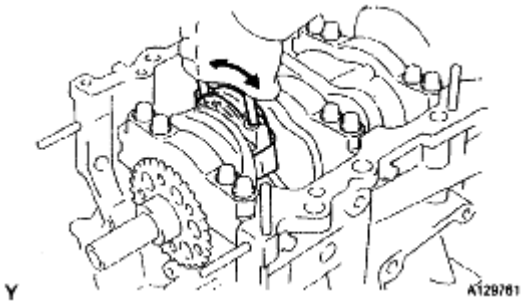

Fig. 169: Removing Connecting Rod Cap
Courtesy of TOYOTA MOTOR SALES, U.S.A., INC.

d. Using a ridge reamer, remove all the carbon from the top of the cylinder.
e. Push the piston, connecting rod assembly and upper bearing through the top of the cylinder block.

HINT:

- Keep the bearing, connecting rod and cap together.
- Arrange the piston and connecting rod assemblies in the correct order.

 © 2011 Mitchell Repair Information Company, LLC.

2. **REMOVE CONNECTING ROD BEARING**

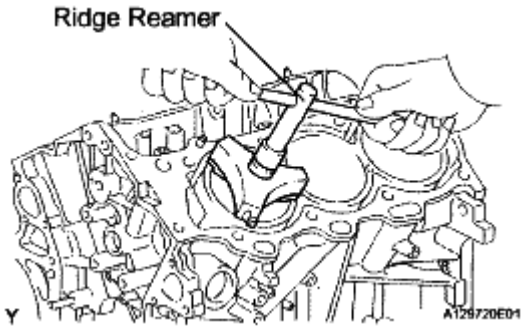

Fig. 170: Identifying Carbon From Top Of Cylinder
Courtesy of TOYOTA MOTOR SALES, U.S.A., INC.

HINT:

Arrange the removed parts in the correct order.

3. **REMOVE PISTON RING SET**
   a. Using a piston ring expander, remove the 2 compression rings.
   b. Remove the oil ring expander and 2 side rails by hand.

      HINT:

      Arrange the removed parts in the correct order.

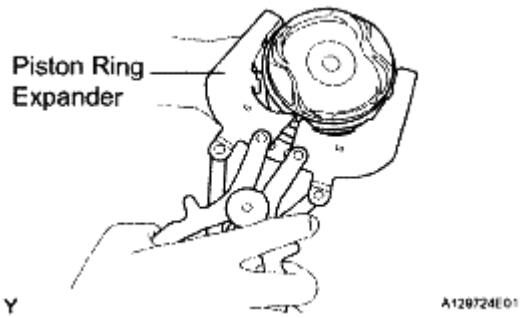

Fig. 171: Identifying Compression Rings
Courtesy of TOYOTA MOTOR SALES, U.S.A., INC.

4. **REMOVE PISTON SUB-ASSEMBLY WITH PIN**
   a. Check the fitting condition between the piston and piston pin.
      1. Try to move the piston back and forth on the piston pin.

         If any movement is felt, replace the piston and pin as a set.

 © 2011 Mitchell Repair Information Company, LLC.

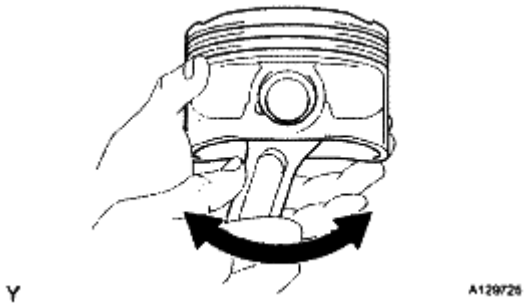

Fig. 172: Locating Fitting Condition Between Piston And Piston Pin
Courtesy of TOYOTA MOTOR SALES, U.S.A., INC.

b. Disconnect the connecting rod from the piston.
   1. Using a screwdriver, pry off the piston pin hole snap rings from the piston.

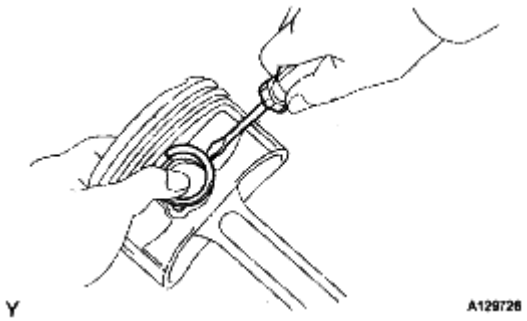

Fig. 173: Prying Snap Rings From Piston
Courtesy of TOYOTA MOTOR SALES, U.S.A., INC.

   2. Gradually heat the piston to approximately 80°C(176°F).

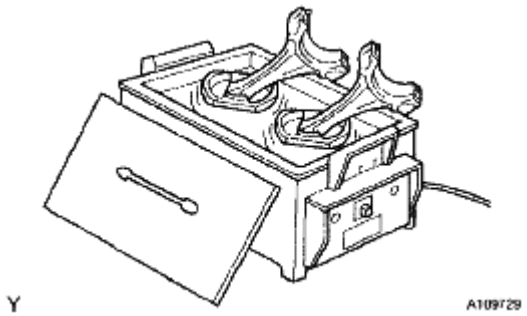

Fig. 174: Identifying Gradually Heat Piston
Courtesy of TOYOTA MOTOR SALES, U.S.A., INC.

   3. Using a brass bar and plastic hammer, lightly tap out the piston pin and remove the connecting rod sub-assembly.

      HINT:

 © 2011 Mitchell Repair Information Company, LLC.

- The piston and piston pin are a matched set.
- Arrange the pistons, piston pins, piston pin hole snap rings, connecting rods and connecting rod bearings in the correct order.

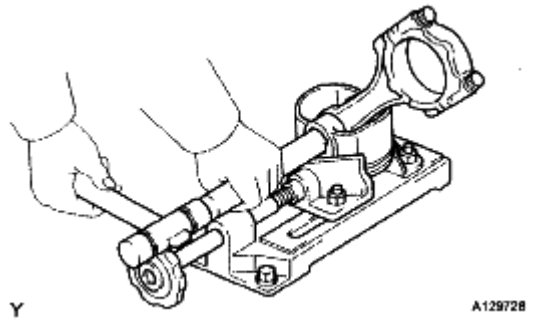

Fig. 175: Removing Connecting Rod
Courtesy of TOYOTA MOTOR SALES, U.S.A., INC.

c. Using a gasket scraper, remove the carbon from the piston top.

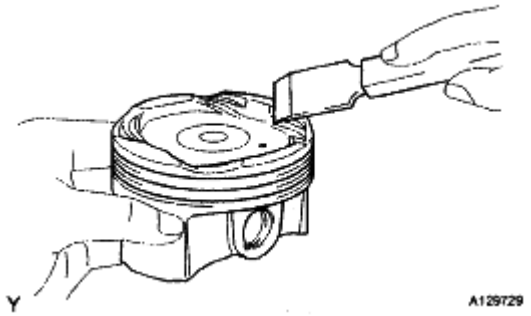

Fig. 176: Removing Carbon From Piston Top
Courtesy of TOYOTA MOTOR SALES, U.S.A., INC.

d. Using a groove cleaning tool or broken ring, clean the piston ring grooves.

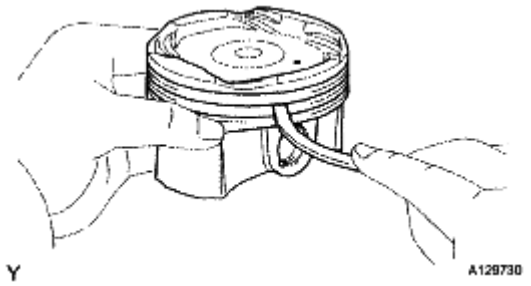

Fig. 177: Cleaning Piston Ring Grooves
Courtesy of TOYOTA MOTOR SALES, U.S.A., INC.

e. Using solvent and a brush, thoroughly clean the piston.

 © 2011 Mitchell Repair Information Company, LLC.

NOTE: Do not use a wire brush.

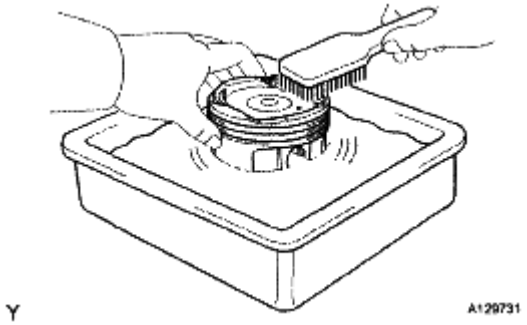

Fig. 178: Cleaning Piston Using Solvent And Brush
Courtesy of TOYOTA MOTOR SALES, U.S.A., INC.

5. **REMOVE CRANKSHAFT**
   a. Uniformly loosen and remove the 8 crankshaft bearing cap bolts and the 8 seal washers in several steps and in the sequence shown in the illustration.

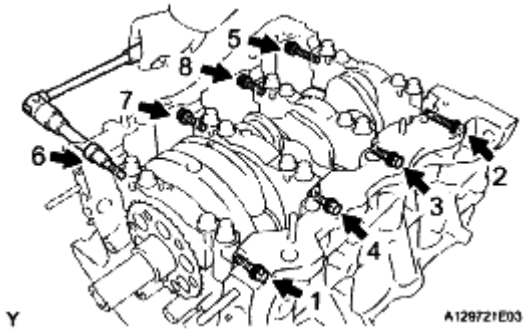

Fig. 179: Removing Connecting Rod Bearing
Courtesy of TOYOTA MOTOR SALES, U.S.A., INC.

   b. Uniformly loosen the 16 crankshaft bearing cap bolts, in several steps and in the sequence shown in the illustration.

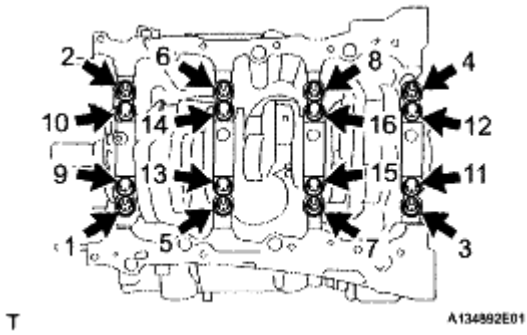

Fig. 180: Identifying Bearing Cap Bolts Loosening Sequence

 © 2011 Mitchell Repair Information Company, LLC.

Courtesy of TOYOTA MOTOR SALES, U.S.A., INC.

c. Using a screwdriver, pry out the crankshaft bearing caps. Remove the 4 crankshaft bearing caps and lower crankshaft bearings.

NOTE:

- **Push up on the cap slowly and evenly, alternating from the right and left side so that the bearing cap can be removed.**
- **Be careful not to damage the joint surface of the cylinder block and the crankshaft bearing cap.**

d. Remove the crankshaft.

6. **REMOVE CRANKSHAFT BEARING**

a. Remove the upper crankshaft bearing and lower crankshaft bearing.

HINT:

Arrange the removed parts in the correct order.

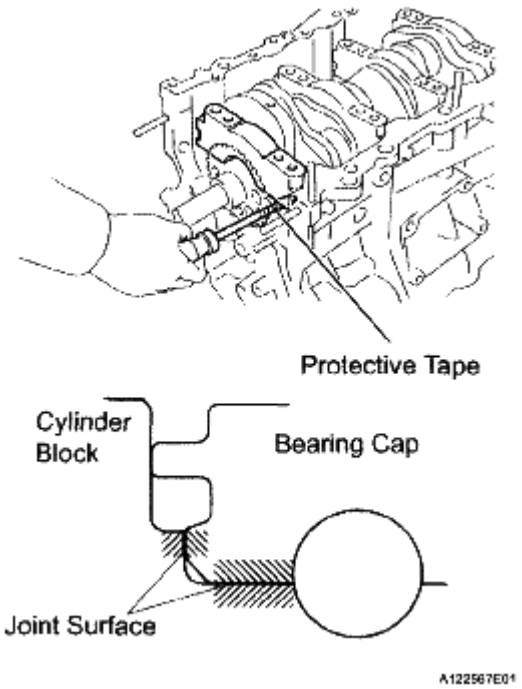

Fig. 181: Removing Bearing Caps And Lower Bearings
Courtesy of TOYOTA MOTOR SALES, U.S.A., INC.

7. **REMOVE CRANKSHAFT THRUST WASHER SET**

a. Remove the upper crankshaft bearings and upper crankshaft thrust washers from the cylinder block sub-assembly.

 © 2011 Mitchell Repair Information Company, LLC.

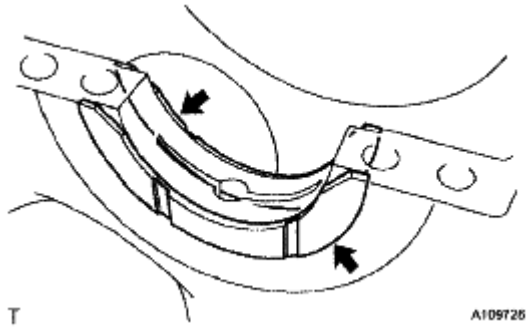

Fig. 182: Identifying Upper Bearings And Upper Thrust Washers
Courtesy of TOYOTA MOTOR SALES, U.S.A., INC.

8. **REMOVE NO. 1 OIL NOZZLE SUB-ASSEMBLY**
   a. Using a 5 mm hexagon wrench, remove the bolts and No. 1 oil nozzle sub-assembly.
   b. Check the 3 oil nozzles for damage or clogging. If necessary, replace the No. 1 oil nozzle sub-assembly.
9. **CLEAN CYLINDER BLOCK**

INSPECTION

1. **INSPECT CONNECTING ROD THRUST CLEARANCE**

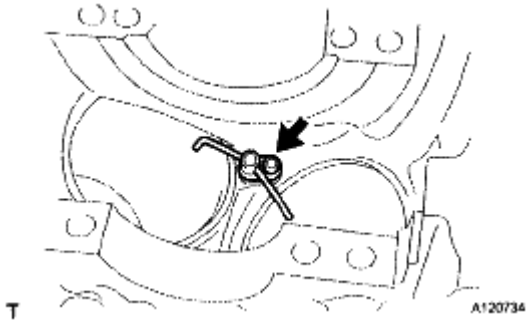

Fig. 183: Locating No. 1 Oil Nozzle Sub-Assembly
Courtesy of TOYOTA MOTOR SALES, U.S.A., INC.

   a. Install the connecting rod cap (See **REASSEMBLY**).
   b. Using a dial indicator, measure the thrust clearance while moving the connecting rod back and forth.

      Standard thrust clearance:

      0.15 to 0.40 mm (0.0059 to 0.0157 in.)

      Maximum thrust clearance:

 © 2011 Mitchell Repair Information Company, LLC.

0.50 mm (0.020 in.)

If the thrust clearance is greater than the maximum, replace the connecting rod assembly, if necessary, replace the crankshaft.

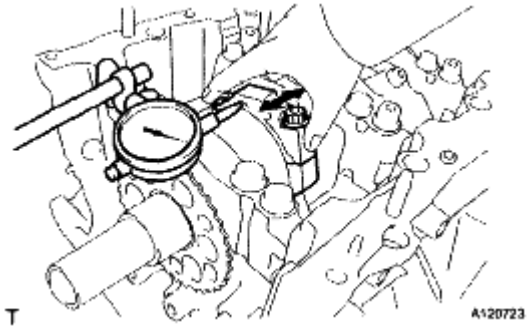

Fig. 184: Checking Thrust Clearance
Courtesy of TOYOTA MOTOR SALES, U.S.A., INC.

2. **INSPECT CONNECTING ROD OIL CLEARANCE**
   a. Clean the crank pin and bearing.
   b. Check the crank pin and bearing for pitting and scratches.
   c. Lay a strip of Plastigage on the crank pin.

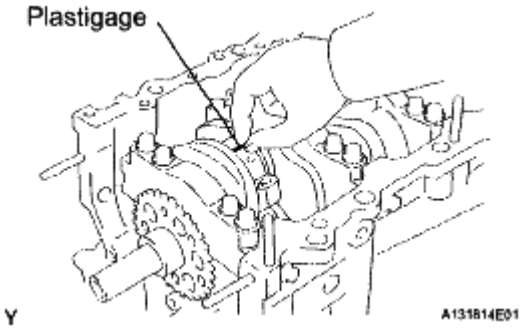

Fig. 185: Laying Strip Of Plastigage On Crank Pin
Courtesy of TOYOTA MOTOR SALES, U.S.A., INC.

   d. Ensure that the front mark of the connecting rod cap is facing forward.
   e. Install the connecting rod cap (See **REASSEMBLY**).

NOTE: Do not turn the crankshaft.

   f. Remove the 2 bolts and connecting rod cap (See **DISASSEMBLY**).

 © 2011 Mitchell Repair Information Company, LLC.

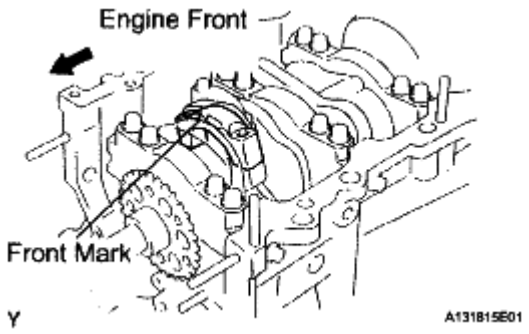

Fig. 186: Checking Front Mark Of Connecting Rod Cap
Courtesy of TOYOTA MOTOR SALES, U.S.A., INC.

g. Measure the Plastigage at its widest point.

Standard oil clearance:

0.045 to 0.067 mm (0.0018 to 0.0026 in.)

Maximum oil clearance:

0.070 mm (0.0028 in.)

If the oil clearance is greater than the maximum, replace the connecting rod bearings. If necessary, inspect the crankshaft.

HINT:

If replacing a bearing, replace it with one that has the same number as its respective connecting rod cap. Each bearing's standard thickness is indicated by a number (1,2,3 or 4) marked on its surface.

Connecting rod diameter

CONNECTING ROD DIAMETER CHART

Mark	Diameter
1	56.000 to 56.006 mm (2.2047 to 2.2050 in.)
2	56.007 to 56.012 mm (2.2050 to 2.2052 in.)
3	56.013 to 56.018 mm (2.2052 to 2.2054 in.)
4	56.019 to 56.024 mm (2.2055 to 2.2057 in.)

 © 2011 Mitchell Repair Information Company, LLC.

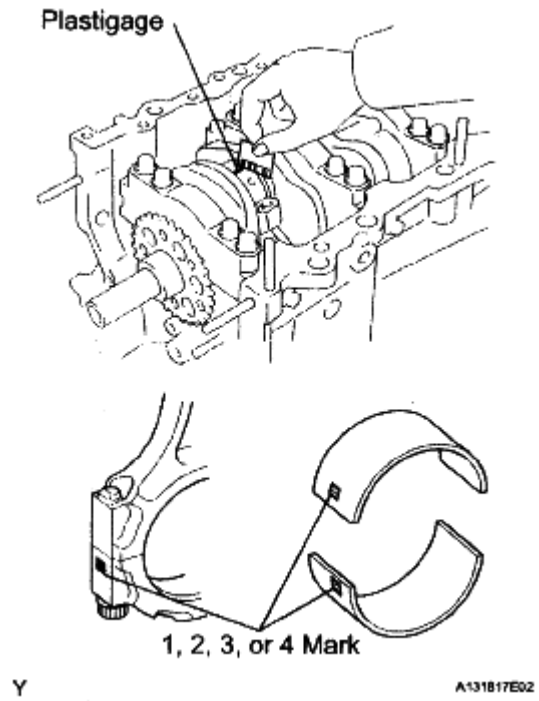

Fig. 187: Checking Crankshaft Pin Diameter
Courtesy of TOYOTA MOTOR SALES, U.S.A., INC.

Connecting rod bearing center wall thickness

CONNECTING ROD BEARING CENTER WALL THICKNESS CHART

Mark	Thickness
1	1.481 to 1.484 mm (0.0583 to 0.0584 in.)
2	1.484 to 1.487 mm (0.0584 to 0.0585 in.)
3	1.487 to 1.490 mm (0.0585 to 0.0587 in.)
4	1.490 to 1.493 mm (0.0587 to 0.0588 in.)

Standard crankshaft pin diameter:

52.992 to 53.000 mm (2.0863 to 2.0866 in.)

NOTE: Completely remove the Plastigage after the measurement.

3. **INSPECT CYLINDER BLOCK FOR WARPAGE**
   a. Using a precision straight edge and feeler gauge, measure the warpage of the contact surface of the cylinder head gasket.

   Maximum warpage:

   0.07 mm (0.0028 in.)

 © 2011 Mitchell Repair Information Company, LLC.

If the warpage is greater than the maximum, replace the cylinder block sub-assembly.

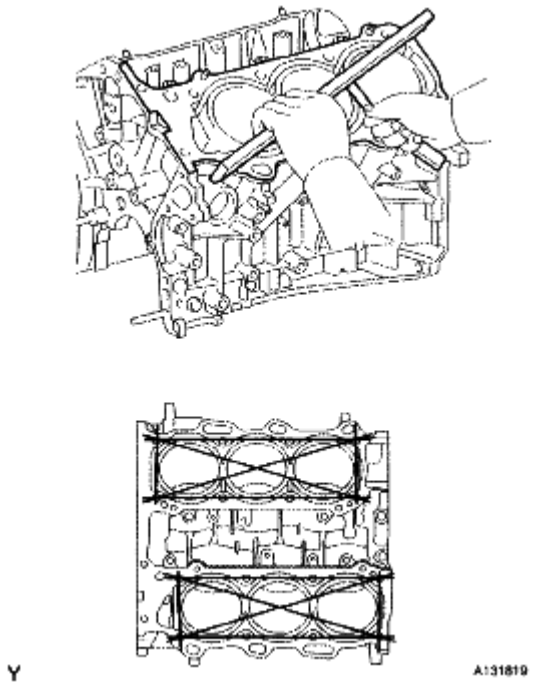

Fig. 188: Measuring Warpage Of Contact Surface Of Cylinder Head Gasket
Courtesy of TOYOTA MOTOR SALES, U.S.A., INC.

4. **INSPECT CYLINDER BORE**
   a. Visually check the cylinder for vertical scratches. If deep scratches are present, rebore all the 6 cylinders. If necessary, replace the cylinder block.

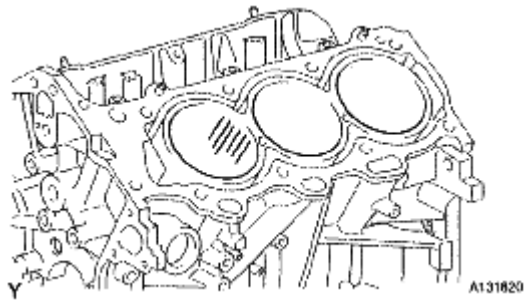

Fig. 189: Identifying Cylinder Block
Courtesy of TOYOTA MOTOR SALES, U.S.A., INC.

   b. Using a cylinder gauge, measure the cylinder bore diameter at positions A and B in the thrust and axial directions.

Standard diameter:

94.000 to 94.012 mm (3.7008 to 3.7013 in.)

 © 2011 Mitchell Repair Information Company, LLC.

Maximum diameter:

94.200 mm (3.7087 in.)

If the average diameter of 4 positions is greater than the maximum, replace the cylinder block sub-assembly.

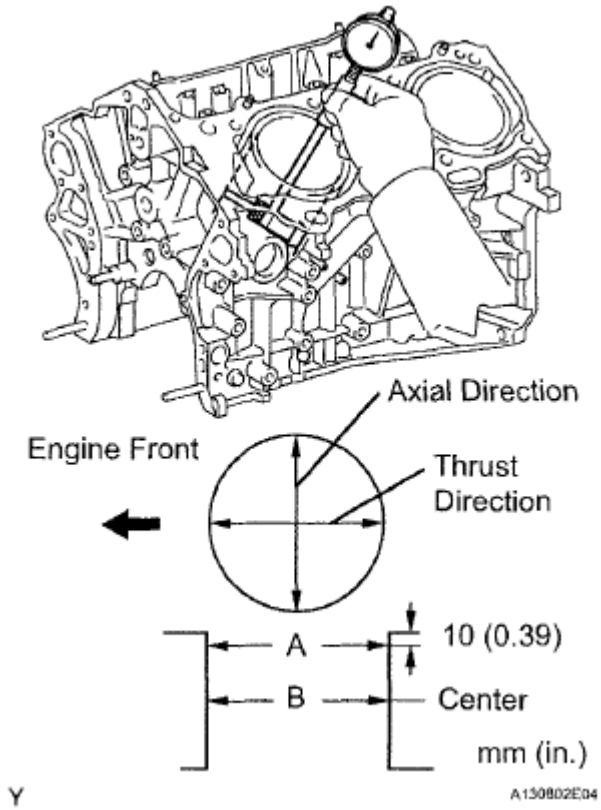

Fig. 190: Measuring Cylinder Bore Diameter Positions A And B
Courtesy of TOYOTA MOTOR SALES, U.S.A., INC.

5. **INSPECT PISTON SUB-ASSEMBLY WITH PIN**
   a. Using a micrometer, measure the piston diameter at right angles to the piston center line where the distance from the piston end is as specified.

Distance:

8.9 mm (0.3504 in.)

Standard diameter:

93.960 to 93.980 mm (3.6992 to 3.7000 in.)

Maximum diameter:

 © 2011 Mitchell Repair Information Company, LLC.

93.830 mm (3.6941 in.)

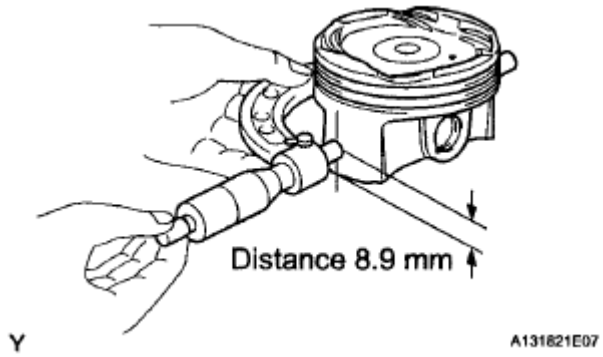

Fig. 191: Measuring Piston Diameter Right Angles To Piston Center Line
Courtesy of TOYOTA MOTOR SALES, U.S.A., INC.

6. **INSPECT PISTON OIL CLEARANCE**
   a. Measure the cylinder bore diameter in the thrust directions.
   b. Subtract the piston diameter measurement from the cylinder bore diameter measurement.

   Standard oil clearance:

   0.020 to 0.052 mm (0.0008 to 0.0020 in.)

   Maximum oil clearance:

   0.060 mm (0.0024 in.)

   If the oil clearance is greater than the maximum, replace all the pistons. If necessary, replace the cylinder block sub-assembly.

7. **INSPECT RING GROOVE CLEARANCE**
   a. Using a feeler gauge, measure the clearance between a new piston ring and the wall of the ring groove.

   Ring groove clearance

   ITEM CLEARANCE REFERENCE

Item	Clearance
No. 1	0.020 to 0.070 mm (0.0008 to 0.0028 in.)
No. 2	0.020 to 0.060 mm (0.0003 to 0.0024 in.)
Oil	0.070 to 0.150 mm (0.0028 to 0.0059 in.)

   If the clearance is not as specified, replace the piston.

 © 2011 Mitchell Repair Information Company, LLC.

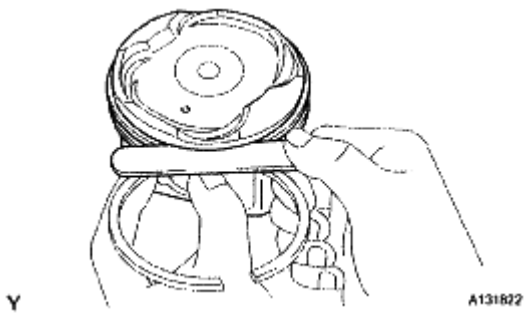

Fig. 192: Measuring Cylinder Bore Diameter
Courtesy of TOYOTA MOTOR SALES, U.S.A., INC.

8. **INSPECT PISTON PIN OIL CLEARANCE**
   a. Using a caliper gauge, measure the inside diameter of the piston pin hole.

   Piston pin hole inside diameter

   PISTON PIN HOLE INSIDE DIAMETER CHART

Mark	Diameter
A	22.001 to 22.004 mm (0.8662 to 0.8663 in.)
B	22.004 to 22.007 mm (0.8663 to 0.8664 in.)
C	22.007 to 22.010 mm (0.8664 to 0.8665 in.)

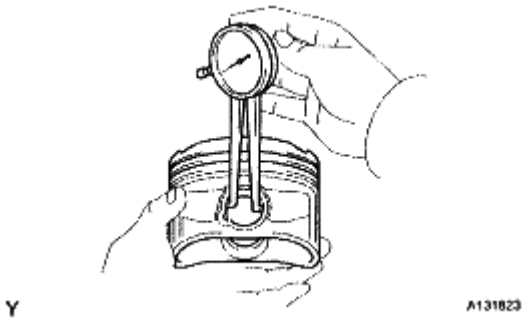

Fig. 193: Measuring Inside Diameter Of Piston Pin Hole
Courtesy of TOYOTA MOTOR SALES, U.S.A., INC.

   b. Using a micrometer, measure the piston pin diameter.

   Piston pin diameter

   PISTON PIN DIAMETER CHART

Mark	Diameter
A	21.997 to 22.000 mm (0.8660 to 0.8661 in.)
B	22.000 to 22.003 mm (0.8661 to 0.8663 in.)
C	22.003 to 22.006 mm (0.8663 to 0.8664 in.)

 © 2011 Mitchell Repair Information Company, LLC.

c. Subtract the piston pin diameter measurement from the piston pin hole diameter measurement.

Standard oil clearance:

0.001 to 0.007 mm (0.00004 to 0.00028 in.)

Maximum oil clearance:

0.015 mm (0.0006 in.)

If the oil clearance is greater than the maximum, replace the piston and piston pin as a set.

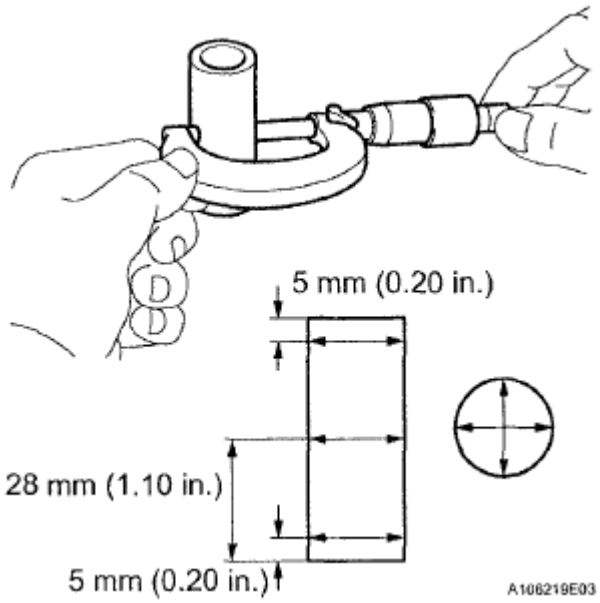

Fig. 194: Measuring Piston Pin Diameter
Courtesy of TOYOTA MOTOR SALES, U.S.A., INC.

d. Using a caliper gauge, measure the inside diameter of the connecting rod bushing.

Bushing inside diameter

BUSHING INSIDE DIAMETER CHART

Mark	Diameter
A	22.005 to 22.008 mm (0.8663 to 0.8665 in.)
B	22.009 to 22.011 mm (0.8665 to 0.8666 in.)
C	22.012 to 22.014 mm (0.8666 to 0.8667 in.)

 © 2011 Mitchell Repair Information Company, LLC.

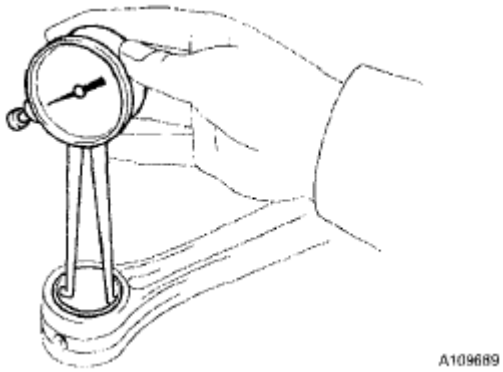

Fig. 195: Checking Inside Diameter Of Connecting Rod Bushing
Courtesy of TOYOTA MOTOR SALES, U.S.A., INC.

e. Subtract the piston pin diameter measurement from the bushing inside diameter measurement.

Standard oil clearance:

0.005 to 0.011 mm (0.0002 to 0.0004 in.)

Maximum oil clearance:

0.030 mm (0.0012 in.)

If the oil clearance is greater than the maximum, replace the bushing. If necessary, replace the connecting rod and piston pin as a set.

9. **INSPECT PISTON RING END GAP**
   a. Insert the piston ring into the cylinder bore.

 © 2011 Mitchell Repair Information Company, LLC.

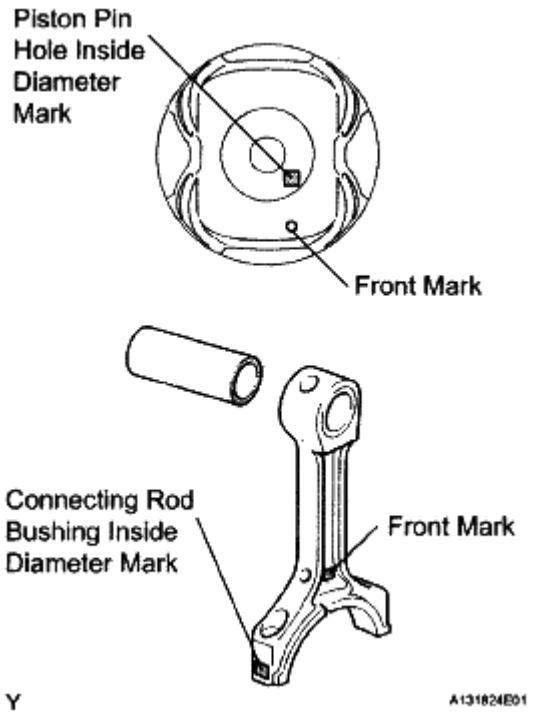

Fig. 196: Identifying Front Mark Of Piston Pin
Courtesy of TOYOTA MOTOR SALES, U.S.A., INC.

b. Using a piston, push the piston ring slightly beyond the bottom of the ring travel, 110 mm (4.33 in.) from the top of the cylinder block sub-assembly.

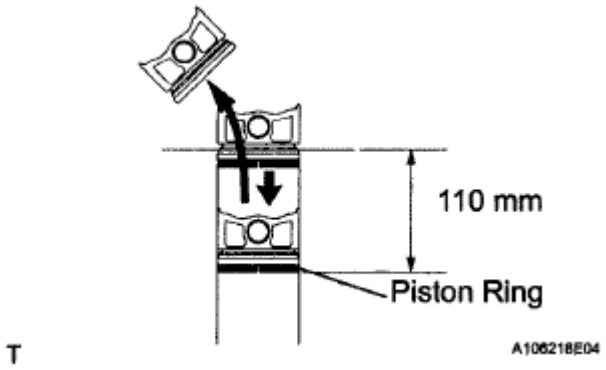

Fig. 197: Pushing Piston Ring Bottom Of Ring Travel
Courtesy of TOYOTA MOTOR SALES, U.S.A., INC.

c. Using a feeler gauge, measure the end gap.

Standard end gap

STANDARD END GAP CHART

Item	End Gap

 © 2011 Mitchell Repair Information Company, LLC.

No. 1	0.25 to 0.35 mm (0.0098 to 0.0138 in.)
No. 2	0.50 to 0.60 mm (0.0197 to 0.0236 in.)
Oil	0.10 to 0.40 mm (0.0039 to 0.0157 in.)

Maximum end gap

END GAP REFERENCE

Item	End Gap
No. 1	0.50 mm (0.0197 in.)
No. 2	0.85 mm (0.0335 in.)
Oil	0.60 mm (0.0236 in.)

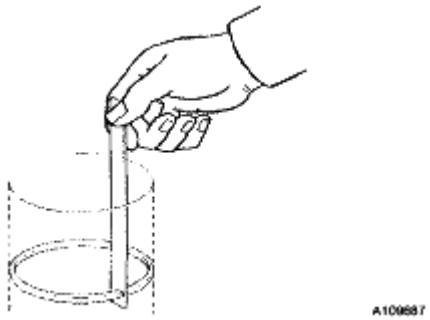

Fig. 198: Checking Ring End Gap
Courtesy of TOYOTA MOTOR SALES, U.S.A., INC.

If the end gap is greater than the maximum, replace the piston ring. If the end gap is greater than the maximum even with a new piston ring, rebore all the 6 cylinders or replace the cylinder block sub-assembly.

10. **INSPECT CRANKSHAFT THRUST CLEARANCE**
    a. Install the crankshaft bearing cap (See **REASSEMBLY**).
    b. Using a dial indicator, measure the thrust clearance while prying the crankshaft back and forth with a screwdriver.

    Standard thrust clearance:

    0.04 to 0.24 mm (0.0016 to 0.0094 in.)

    Maximum thrust clearance:

    0.30 mm (0.0118 in.)

    If the thrust clearance is greater than the maximum, replace the thrust washers as a set. If necessary, replace the crankshaft.

 © 2011 Mitchell Repair Information Company, LLC.

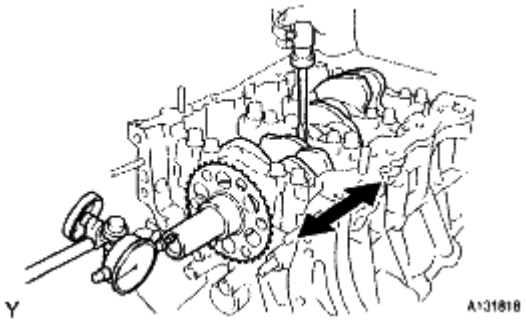

Fig. 199: Measuring Crankshaft Thrust Clearance
Courtesy of TOYOTA MOTOR SALES, U.S.A., INC.

Thrust washer thickness:

2.43 to 2.48 mm (0.0957 to 0.0976 in.)

11. **INSPECT CONNECTING ROD SUB-ASSEMBLY**
    a. Using a rod aligner and feeler gauge, check the connecting rod alignment.
        1. Check for out-of-alignment.

           Maximum out-of-alignment:

           0.05 mm (0.0020 in.) per 100 mm (3.94 in.)

           If the out-of-alignment is greater than the maximum, replace the connecting rod sub-assembly.

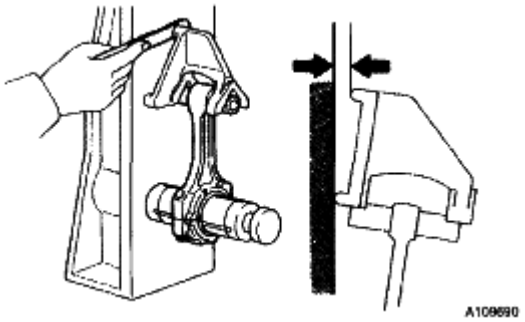

Fig. 200: Checking Connecting Rod
Courtesy of TOYOTA MOTOR SALES, U.S.A., INC.

        2. Check for twist.

           Maximum twist:

           0.15 mm (0.0059 in.) per 100 mm (3.94 in.)

 © 2011 Mitchell Repair Information Company, LLC.

If the twist is greater than the maximum, replace the connecting rod sub-assembly.

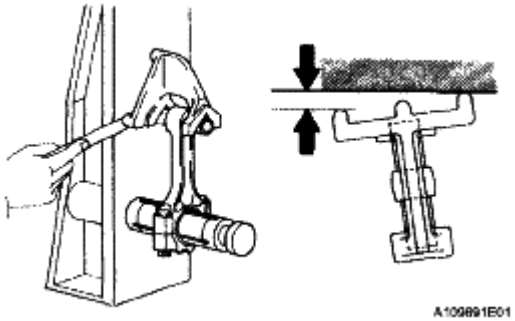

Fig. 201: Checking Connecting Rod For Twist
Courtesy of TOYOTA MOTOR SALES, U.S.A., INC.

12. **INSPECT CONNECTING ROD BOLT**
    a. Using vernier calipers, measure the tension portion diameter of the bolt.

    Standard diameter:

    7.2 to 7.3 mm (0.284 to 0.287 in.)

    Minimum diameter:

    7.0 mm (0.276 in.)

    If the diameter is less than the minimum, replace the bolt.

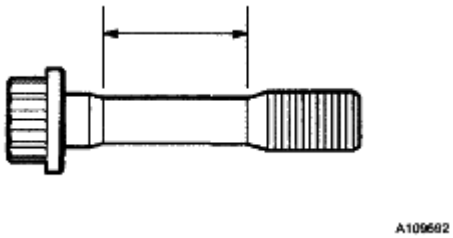

Fig. 202: Identifying Tension Portion Diameter Of Bolt
Courtesy of TOYOTA MOTOR SALES, U.S.A., INC.

13. **INSPECT CRANKSHAFT**
    a. Inspect for runout.
        1. Clean the crank journal.
        2. Place the crankshaft on V-blocks.
        3. Using a dial indicator, measure the runout at the center journal.

        Maximum runout:

 © 2011 Mitchell Repair Information Company, LLC.

0.06 mm (0.0024 in.)

If the runout is greater than the maximum, replace the crankshaft.

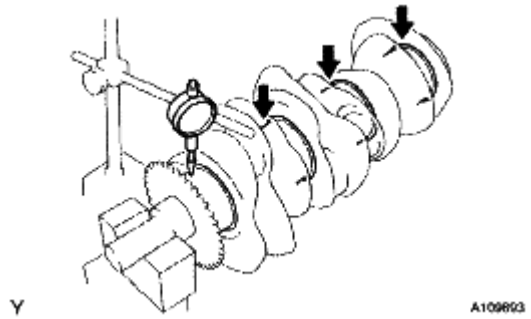

Fig. 203: Checking Circle Runout At Center Journal
Courtesy of TOYOTA MOTOR SALES, U.S.A., INC.

b. Inspect the main journals.
   1. Using a micrometer, measure the diameter of each main journal.

      Standard journal diameter:

      60.988 to 61.000 mm (2.4011 to 2.4016 in.)

      If the diameter is not as specified, check the oil clearance. If necessary, replace the crankshaft.

   2. Check each main journal for taper and out-of-round as shown in the illustration.

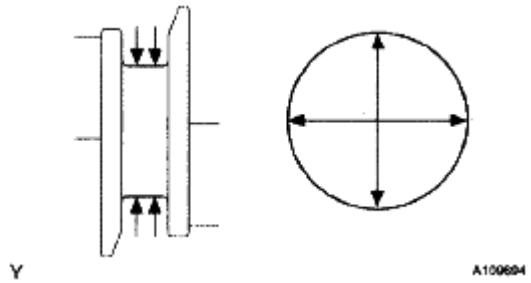

Fig. 204: Checking Main Journal For Taper And Out-Of Round
Courtesy of TOYOTA MOTOR SALES, U.S.A., INC.

Maximum taper and out-of-round:

0.02 mm (0.0008 in.)

If the taper and out-of-round is greater than the maximum, replace the crankshaft.

 © 2011 Mitchell Repair Information Company, LLC.

c. Inspect the crank pin.
   1. Using a micrometer, measure the diameter of each crank pin.

      Crank pin diameter:

      52.992 to 53.000 mm (2.0863 to 2.0866 in.)

      If the diameter is not as specified, check the oil clearance. If necessary, replace the crankshaft.

   2. Check each crank pin for taper and out-of-round as shown in the illustration.

      Maximum taper and out-of-round:

      0.02 mm (0.0008 in.)

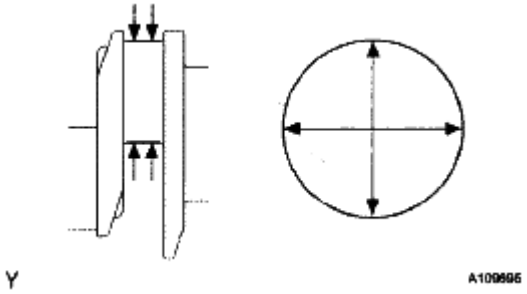

Fig. 205: Checking Crank Pin For Taper And Out-Of Round
Courtesy of TOYOTA MOTOR SALES, U.S.A., INC.

If the taper and out-of-round is greater than the maximum, replace the crankshaft.

14. **INSPECT CRANKSHAFT OIL CLEARANCE**
   a. Check the crank journal and crankshaft bearing for pitting and scratches.
   b. Install the crankshaft bearing (See **REASSEMBLY**).
   c. Place the crankshaft on the cylinder block.
   d. Lay a strip of Plastigage across each journal.
   e. Examine the front marks and numbers to install the crankshaft bearing caps on the cylinder block.

      HINT:

      A number is marked on each main bearing cap to indicate the installation position.

   f. Install the main bearing cap (See **REASSEMBLY**).

      NOTE: Do not turn the crankshaft.

 © 2011 Mitchell Repair Information Company, LLC.

g. Remove the main bearing caps (See **DISASSEMBLY**).

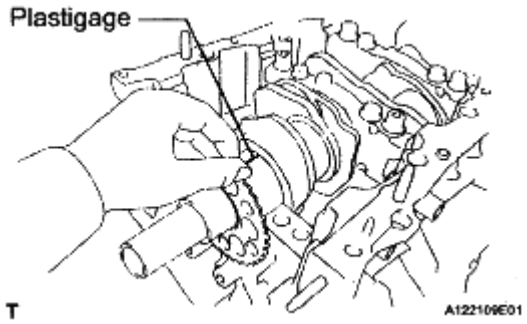

Fig. 206: Laying Strip Of Plastigage Across Each Journal
Courtesy of TOYOTA MOTOR SALES, U.S.A., INC.

h. Measure the Plastigage at its widest point.

Standard oil clearance:

0.026 to 0.047 mm (0.0010 to 0.0019 in.)

Maximum oil clearance:

0.050 mm (0.0020 in.)

If the oil clearance is greater than the maximum, replace the bearings. If necessary, replace the crankshaft.

NOTE: Completely remove the Plastigage after the measurement.

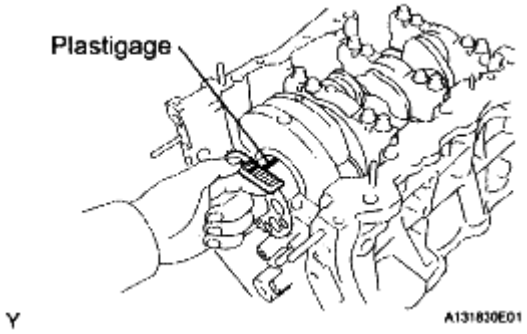

Fig. 207: Measuring Plastigage Widest Point
Courtesy of TOYOTA MOTOR SALES, U.S.A., INC.

i. If replacing a bearing, replace it with one having the same number. If the number of the bearing cannot be determined, select the correct bearing by adding together the numbers imprinted on the cylinder block and crankshaft, then refer to the table below for the appropriate bearing number. There are 5 sizes of standard bearings, marked "1", "2", "3", "4" and "5" accordingly.

 © 2011 Mitchell Repair Information Company, LLC.

Journal bearings:

BEARING SPECIFICATION

Cylinder block + Crankshaft	0-5	6-11	12-17	18-23	24-28
Bearing to be used	"1"	"2"	"3"	"4"	"5"

HINT:

EXAMPLE: Cylinder block "11" + Crankshaft "06" Total number 17 (Use bearing "3")

Crankshaft main journal diameter

CRANKSHAFT MAIN JOURNAL DIAMETER CHART

Mark	Diameter
"00"	60.999 to 61.000 mm (2.4015 to 2.4016 in.)
"01"	60.998 to 60.999 mm (2.4015 to 2.4015 in.)
"02"	60.997 to 60.998 mm (2.4015 to 2.4015 in.)
"03"	60.996 to 60.997 mm (2.4014 to 2.4015 in.)
"04"	60.995 to 60.996 mm (2.4014 to 2.4014 in.)
"05"	60.994 to 60.995 mm (2.4013 to 2.4014 in.)
"06"	60.993 to 60.994 mm (2.4013 to 2.4013 in.)
"07"	60.992 to 60.993 mm (2.4013 to 2.4013 in.)
"08"	60.991 to 60.992 mm (2.4012 to 2.4013 in.)
"09"	60.990 to 60.991 mm (2.4012 to 2.4012 in.)
"10"	60.989 to 60.990 mm (2.4011 to 2.4012 in.)
"11"	60.988 to 60.989 mm (2.4011 to 2.4011 in.)

 © 2011 Mitchell Repair Information Company, LLC.

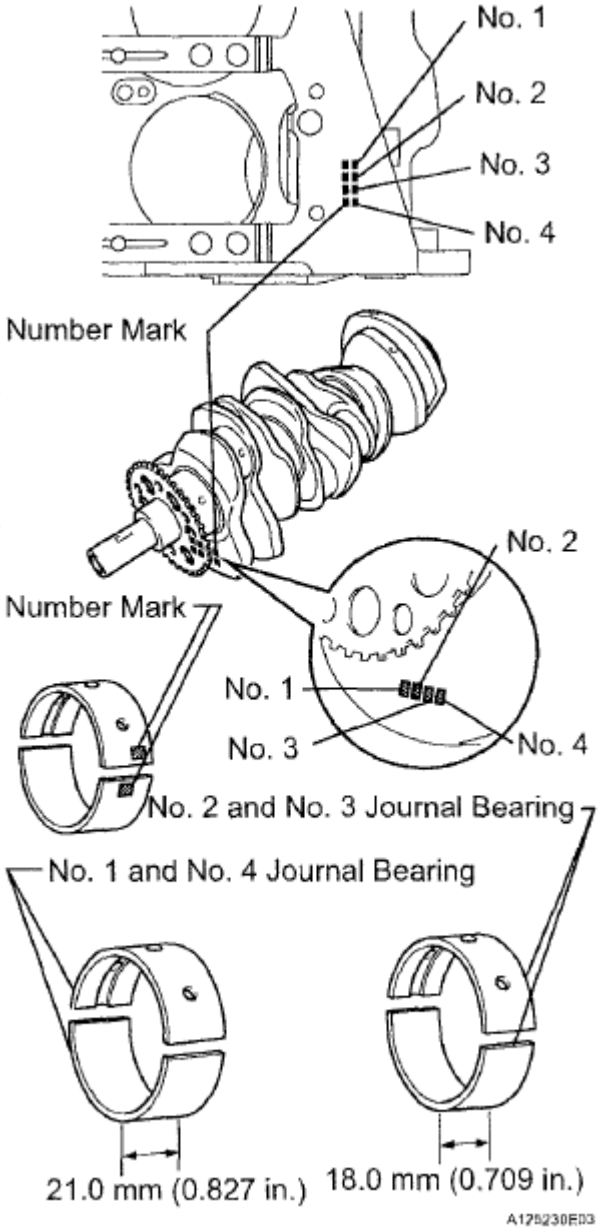

Fig. 208: Identifying No.1 And No.4 Journal Bearing
Courtesy of TOYOTA MOTOR SALES, U.S.A., INC.

Standard upper bearing center wall thickness (No. 1 and No. 4 journal)

BEARING THICKNESS CHART

Mark	Thickness
"1"	2.500 to 2.503 mm (0.0984 to 0.0985 in.)
"2"	2.503 to 2.506 mm (0.0985 to 0.0987 in.)
"3"	2.506 to 2.509 mm (0.0987 to 0.0988 in.)
"4"	2.509 to 2.512 mm (0.0988 to 0.0989 in.)

 © 2011 Mitchell Repair Information Company, LLC.

"5"	2.512 to 2.515 mm (0.0989 to 0.0990 in.)

Standard lower bearing center wall thickness (No. 1 and No. 4 journal)

STANDARD LOWER BEARING CENTER WALL THICKNESS

Mark	Thickness
"1"	2.478 to 2.481 mm (0.0976 to 0.0977 in.)
"2"	2.481 to 2.484 mm (0.0977 to 0.0978 in.)
"3"	2.484 to 2.487 mm (0.0978 to 0.0979 in.)
"4"	2.487 to 2.490 mm (0.0979 to 0.0980 in.)
"5"	2.490 to 2.493 mm (0.0980 to 0.0981 in.)

Standard upper bearing center wall thickness (No. 2 and No. 3 journal)

STANDARD UPPER BEARING CENTER WALL THICKNESS CHART

Mark	Thickness
"1"	2.478 to 2.481 mm (0.0976 to 0.0977 in.)
"2"	2.481 to 2.484 mm (0.0977 to 0.0978 in.)
"3"	2.484 to 2.487 mm (0.0978 to 0.0979 in.)
"4"	2.487 to 2.490 mm (0.0979 to 0.0980 in.)
"5"	2.490 to 2.493 mm (0.0980 to 0.0981 in.)

Standard lower bearing center wall thickness (No. 2 and No. 3 journal)

STANDARD LOWER BEARING CENTER WALL THICKNESS CHART

Mark	Thickness
"1"	2.500 to 2.503 mm (0.0984 to 0.0985 in.)
"2"	2.503 to 2.506 mm (0.0985 to 0.0987 in.)
"3"	2.506 to 2.509 mm (0.0987 to 0.0988 in.)
"4"	2.509 to 2.512 mm (0.0988 to 0.0989 in.)
"5"	2.512 to 2.515 mm (0.0989 to 0.0990 in.)

15. **INSPECT CRANKSHAFT BEARING CAP SET BOLT**
    a. Using vernier calipers, measure the minimum diameter of the compressed thread at the measuring point.

Standard diameter:

10.8 to 11.0 mm (0.4252 to 0.4331 in.)

Minimum diameter:

10.7 mm (0.4213 in.)

 © 2011 Mitchell Repair Information Company, LLC.

Measuring Point:

40 mm (1.57 in.)

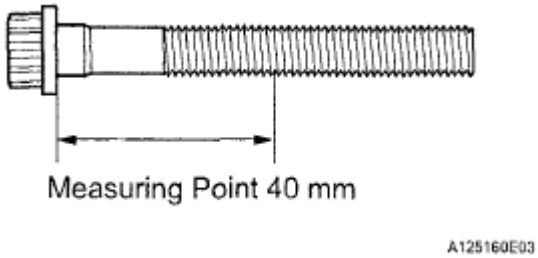

Fig. 209: Identifying Crankshaft Bearing Cap Set Bolt Measuring Point
Courtesy of TOYOTA MOTOR SALES, U.S.A., INC.

If the diameter is less than the minimum, replace the bolt.

16. **INSPECT NO. 1 OIL NOZZLE SUB-ASSEMBLY**
    a. Check the oil nozzles for damage or clogs.

    HINT:

    If there is damage or clogs, replace the oil nozzle.

REPLACEMENT

1. **REPLACE STRAIGHT PIN**

 © 2011 Mitchell Repair Information Company, LLC.

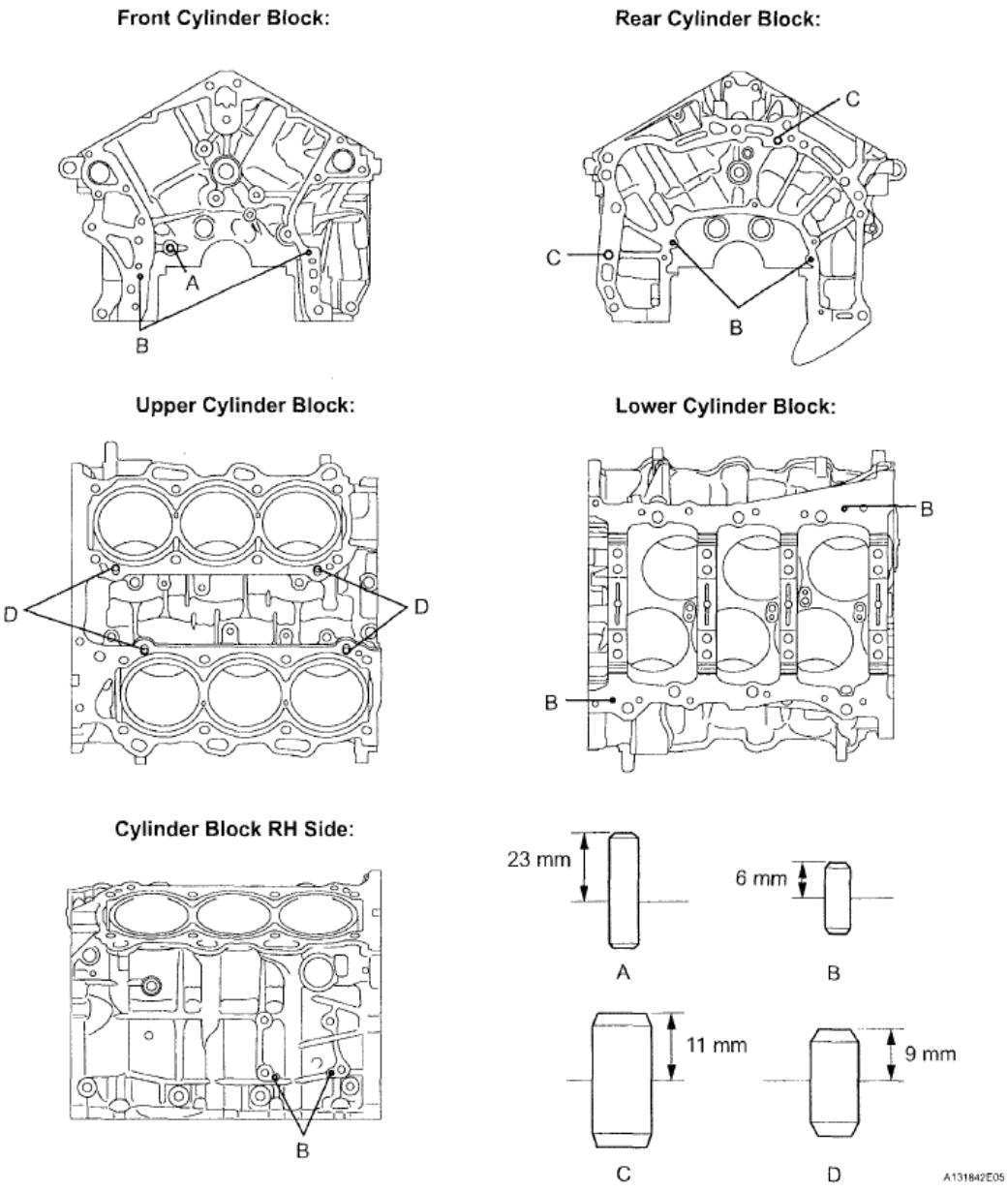

a. Y

Fig. 210: Identifying Cylinder Block Straight Pin Location
Courtesy of TOYOTA MOTOR SALES, U.S.A., INC.

Standard protrusion

ITEM PROTRUSION CHART

Item	Protrusion
Pin A	23 mm (0.906 in.)
Pin B	6 mm (0.236 in.)
Pin C	11 mm (0.433 in.)
Pin D	9 mm (0.354 in.)

 © 2011 Mitchell Repair Information Company, LLC.

2. **REPLACE STUD BOLT**
   a. Using E8 and E10 "TORX" sockets, install the stud bolts.

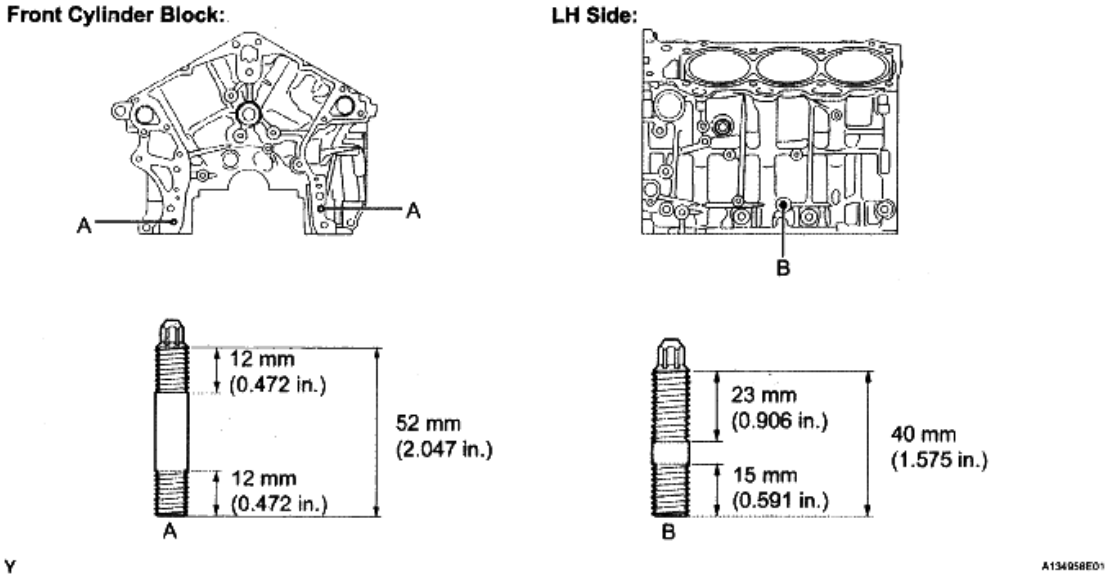

Fig. 211: Identifying Stud Bolt Installation Position
Courtesy of TOYOTA MOTOR SALES, U.S.A., INC.

Torque: 10 N*m (102 kgf*cm, 7 ft.*lbf) for bolt A

17 N*m (173 kgf*cm, 13 ft.*lbf) for bolt B

REASSEMBLY

1. **INSTALL NO. 1 OIL NOZZLE SUB-ASSEMBLY**
   a. Using a 5 mm hexagon wrench, install the No. 1 oil nozzle sub-assembly.

Torque: 9.0 N*m (92 kgf*cm, 80 in.*lbf)

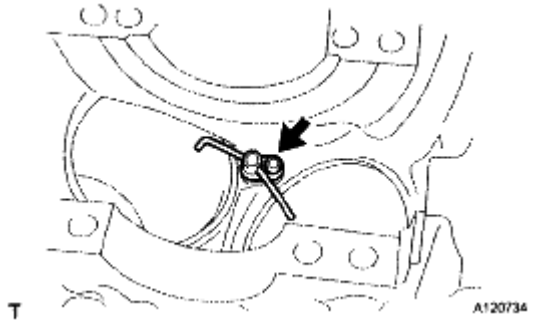

Fig. 212: Identifying No. 1 Oil Nozzle Sub-Assembly
Courtesy of TOYOTA MOTOR SALES, U.S.A., INC.

2. **INSTALL PISTON SUB-ASSEMBLY WITH PIN**
   a. Using a screwdriver, install a new piston pin hole snap ring at one end of the piston pin hole.

      HINT:

      Confirm that the end gap of the snap ring is not aligned with the pin hole cutout portion of the piston.

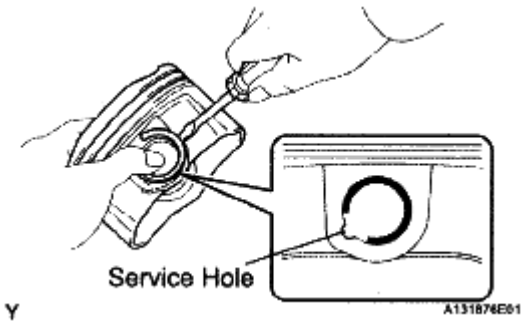

Fig. 213: Installing Snap Ring
Courtesy of TOYOTA MOTOR SALES, U.S.A., INC.

   b. Gradually heat the piston to approximately 80°C (176°F).
   c. Coat the piston pin with engine oil.

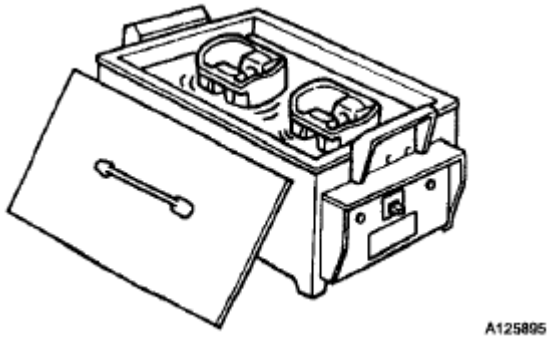

Fig. 214: Heating Piston
Courtesy of TOYOTA MOTOR SALES, U.S.A., INC.

   d. Align the front marks of the piston and connecting rod, and push in the piston pin with your thumb.

      HINT:

      The piston and pin are a matched set.

 © 2011 Mitchell Repair Information Company, LLC.

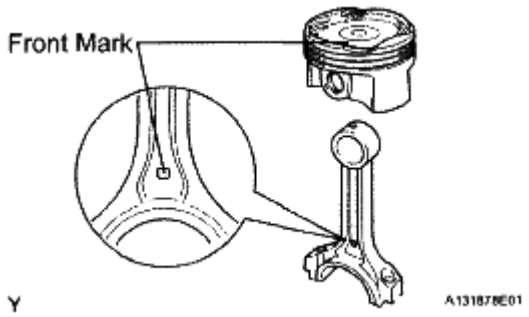

Fig. 215: Aligning Front Marks Of Piston And Connecting Rod
Courtesy of TOYOTA MOTOR SALES, U.S.A., INC.

e. Check the fitting condition between the piston and piston pin by trying to move the piston back and forth on the piston pin.

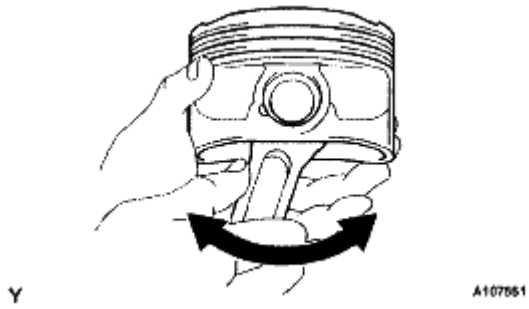

Fig. 216: Checking Fitting Condition Between Piston And Piston Pin
Courtesy of TOYOTA MOTOR SALES, U.S.A., INC.

f. Using a screwdriver, install a new piston pin hole snap ring at the other end of the piston pin hole.

HINT:

Confirm that the end gap of the snap ring is not aligned with the pin hole cutout portion of the piston.

3. **INSTALL PISTON RING SET**
   a. Install the oil ring expander and 2 side rails by hand.

 © 2011 Mitchell Repair Information Company, LLC.

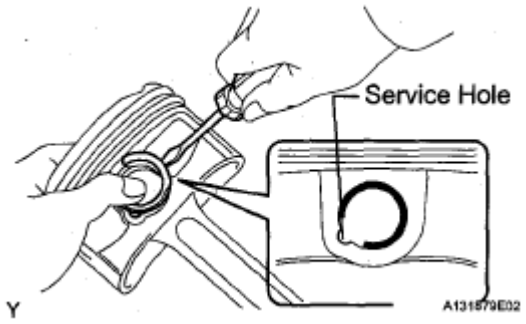

Fig. 217: Installing Piston Pin Hole Snap Ring
Courtesy of TOYOTA MOTOR SALES, U.S.A., INC.

b. Using a piston ring expander, install the compression ring as shown in the illustration.

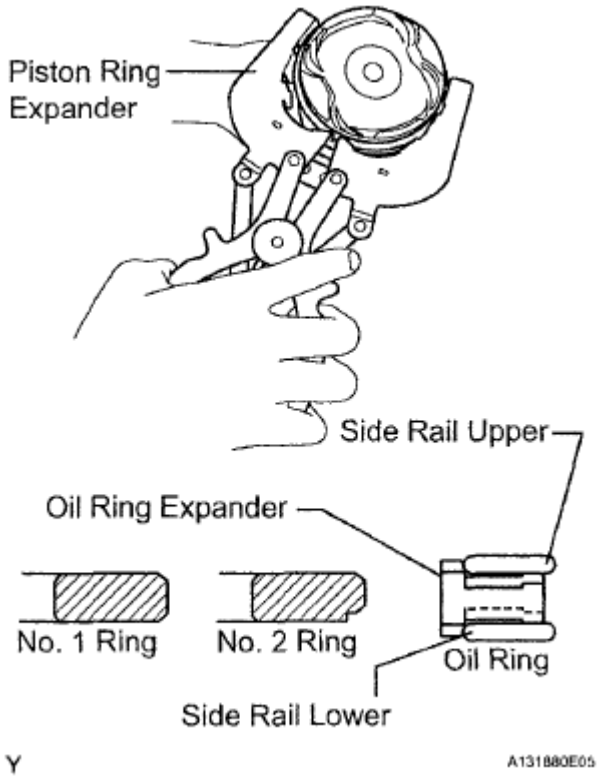

Fig. 218: Installing Compression Ring
Courtesy of TOYOTA MOTOR SALES, U.S.A., INC.

c. Position the piston rings so that the ring ends are as shown in the illustration.

NOTE: Do not align the ring ends.

 © 2011 Mitchell Repair Information Company, LLC.

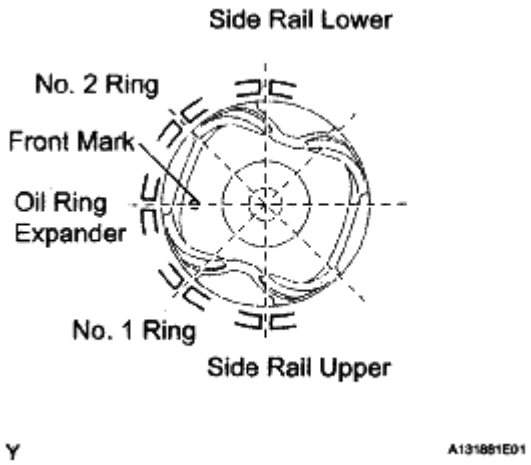

Fig. 219: Identifying Piston Rings Gap Position
Courtesy of TOYOTA MOTOR SALES, U.S.A., INC.

4. **INSTALL CRANKSHAFT BEARING**
   a. Clean the main journal and both surfaces of the bearing.

NOTE: **Main bearings come in widths between 18.0 mm (0.709 in.) and 21.0 mm (0.827 in.). Install the 21.0 mm (0.827 in.) bearings in the No. 1 and No. 4 cylinder block journal positions with the main bearing cap. Install the 18.0 mm (0.709 in.) bearings in the No. 2 and No. 3 positions.**

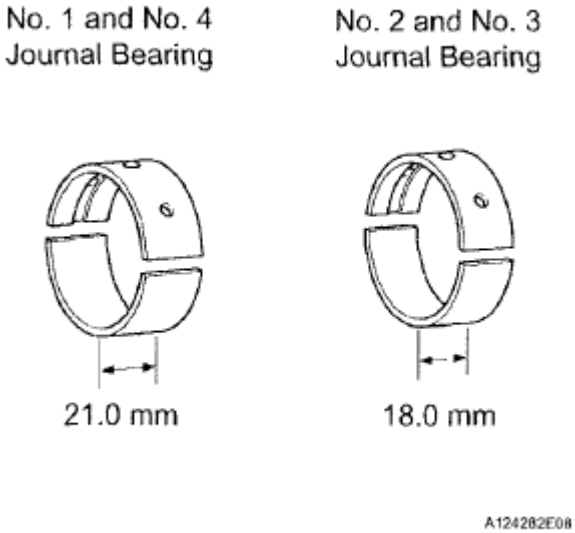

Fig. 220: Identifying Journal Bearing
Courtesy of TOYOTA MOTOR SALES, U.S.A., INC.

   b. Install the upper crankshaft bearing.
      1. Install the upper crankshaft bearings to the cylinder block as shown in the illustration.

 © 2011 Mitchell Repair Information Company, LLC.

NOTE:

- **Do not apply engine oil to the bearings and the contact surfaces.**
- **Both sides of the oil groove in the cylinder block should be visible through the oil feed holes in the bearing. The amount visible on each side of the holes should be equal.**

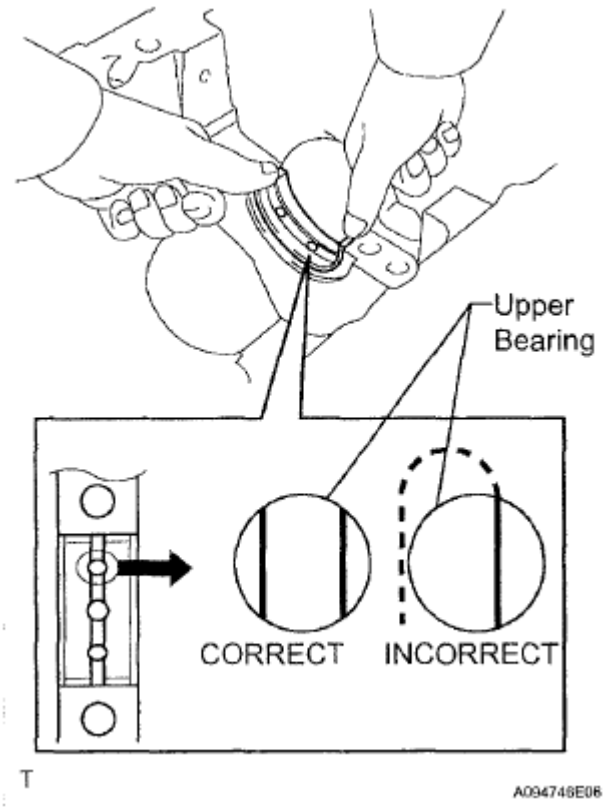

Fig. 221: Installing Upper Crankshaft Bearing
Courtesy of TOYOTA MOTOR SALES, U.S.A., INC.

c. Install the lower crankshaft bearing.
   1. Install the lower crankshaft bearings to the crankshaft bearing caps.
   2. Using vernier calipers, measure the distance between the crankshaft bearing cap's edge and the lower crankshaft bearing's edge.

      Dimension (A - B):

      0.7 mm (0.0276 in.) or less

      NOTE: **Do not apply engine oil to the crankshaft bearings and the contact surfaces.**

5. **INSTALL CRANKSHAFT THRUST WASHER SET**

a. Apply engine oil to the crankshaft thrust washer.

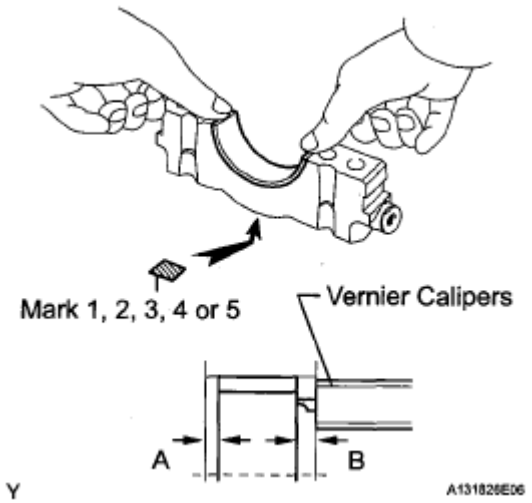

Fig. 222: Installing Lower Crankshaft Bearing
Courtesy of TOYOTA MOTOR SALES, U.S.A., INC.

b. Install the 2 upper crankshaft thrust washers under the No. 2 journal position of the cylinder block sub-assembly with the oil grooves facing outward.

6. **INSTALL CRANKSHAFT**

a. Apply engine oil to the upper bearing, then place the crankshaft on the cylinder block.

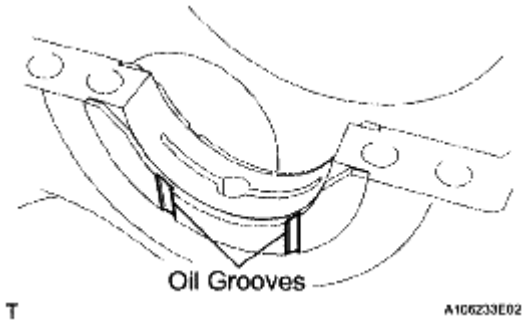

Fig. 223: Identifying Oil Grooves
Courtesy of TOYOTA MOTOR SALES, U.S.A., INC.

b. Confirm the projections and numbers on the main bearing caps and install the crankshaft bearing caps on the cylinder block.

HINT:

A number is marked on each main bearing cap to indicate the installation position.

c. Apply a light coat of engine oil to the threads and under the heads of the crankshaft bearing cap bolts.

d. Temporarily install the 8 crankshaft bearing cap bolts to the inside positions.

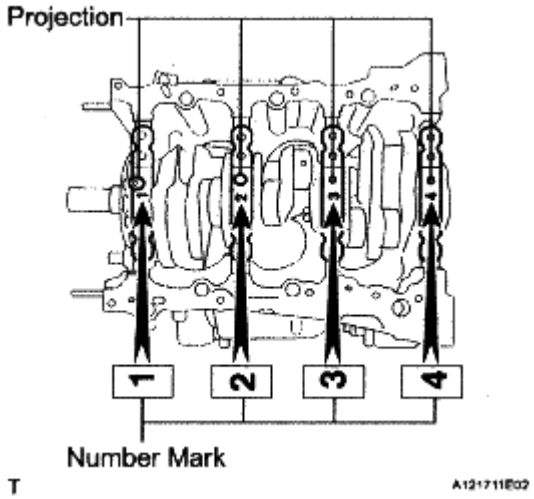

Fig. 224: Identifying Projection And Numbers Of Main Bearing Caps
Courtesy of TOYOTA MOTOR SALES, U.S.A., INC.

e. Insert the crankshaft bearing cap with your hand until the clearance between the crankshaft bearing cap and the cylinder block is less than 6 mm (0.23 in.) by marking the 2 internal crankshaft bearing cap bolts as a guide.

Bolt length: 100 to 102 mm (3.94 to 4.02 in.)

 © 2011 Mitchell Repair Information Company, LLC.

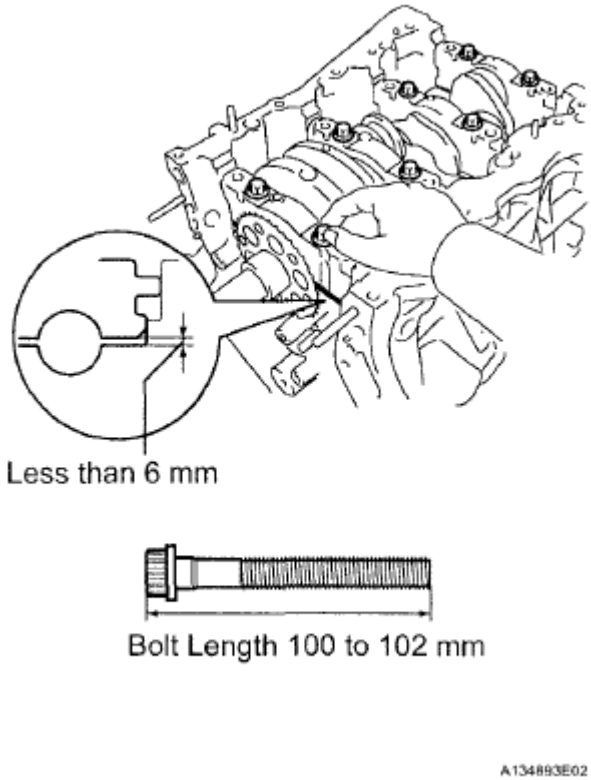

Fig. 225: Inserting Crankshaft Bearing Cap
Courtesy of TOYOTA MOTOR SALES, U.S.A., INC.

f. Using a plastic hammer, lightly tap the crankshaft bearing cap to ensure a proper fit.
g. Apply a light coat of engine oil to the threads and under the heads of the 8 crankshaft bearing cap bolts.

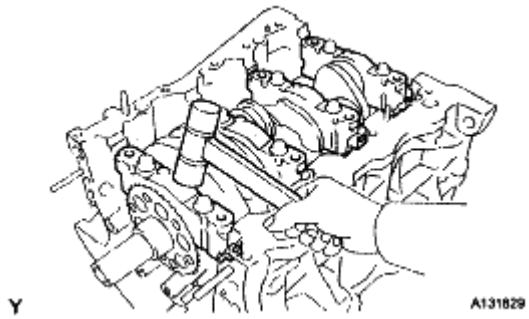

Fig. 226: Tapping Bearing Cap To Ensure Proper Fit
Courtesy of TOYOTA MOTOR SALES, U.S.A., INC.

h. Install the 8 crankshaft bearing cap bolts to the outside positions.
i. Install the crankshaft bearing cap bolts.

HINT:

 © 2011 Mitchell Repair Information Company, LLC.

The crankshaft bearing cap bolts are tightened in 2 progressive steps.

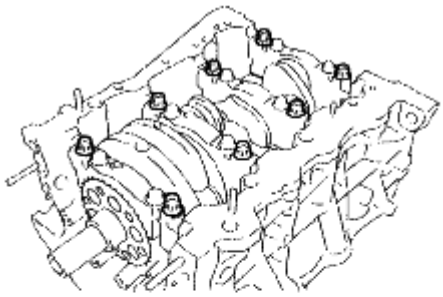

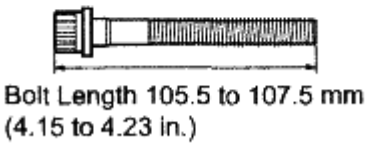

Fig. 227: Identifying Main Bearing Cap Bolt Length
Courtesy of TOYOTA MOTOR SALES, U.S.A., INC.

j. Step 1
   1. Install and uniformly tighten the 16 crankshaft bearing cap bolts in several steps and in the sequence shown in the illustration.

      Torque: 61 N*m (622 kgf*cm, 45 ft.*lbf)

      If any of the crankshaft bearing cap bolts does not meet the torque specified, replace it.

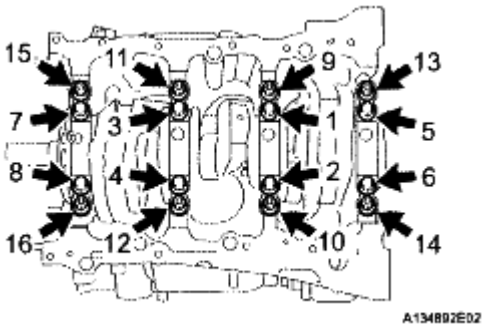

Fig. 228: Locating Main Bearing Cap Bolts Loosening Sequence
Courtesy of TOYOTA MOTOR SALES, U.S.A., INC.

k. Step 2

 © 2011 Mitchell Repair Information Company, LLC.

1. Mark the front of the bearing cap bolts with paint.
2. Retighten the bearing cap bolts 90° in the sequence shown in the preceding illustration.
3. Check that the painted mark is now at a 90° angle to the front of the engine.

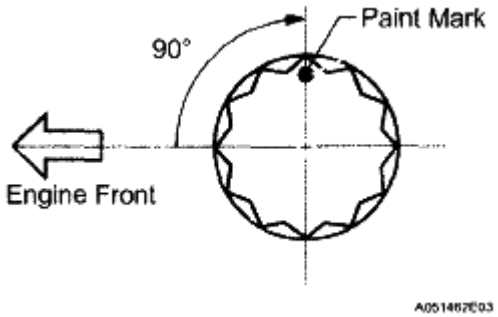

Fig. 229: Tightening Bearing Cap Bolts
Courtesy of TOYOTA MOTOR SALES, U.S.A., INC.

l. Install 8 new seal washers and uniformly tighten the 8 crankshaft bearing cap bolts in several steps and in the sequence shown in the illustration.

Torque: 52 N*m (525 kgf*cm, 38 ft.*lbf)

Bolt length

BOLT LENGTH SPECIFICATION

Item	Length
Bolt A	45 mm (1.77 in.)
Except bolt A	30 mm (1.18 in.)

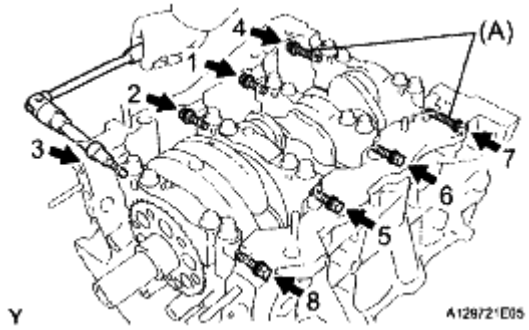

Fig. 230: Locating Main Bearing Cap Tightening Sequence
Courtesy of TOYOTA MOTOR SALES, U.S.A., INC.

m. Check that the crankshaft turns smoothly.
n. Check the crankshaft thrust clearance (See **INSPECTION**).

7. **INSTALL CONNECTING ROD BEARING**

a. Install the connecting rod bearing to the connecting rod and connecting rod cap.
b. Using vernier calipers, measure the distance between the connecting rod's and bearing cap's edges and the connecting rod bearing's edge.

Dimension (A - B):

0.7 mm (0.0276 in.) or less

NOTE: Do not apply engine oil to the bearings and the contact surfaces.

8. **INSTALL PISTON SUB-ASSEMBLY WITH CONNECTING ROD**
   a. Apply engine oil to the cylinder walls, the pistons, and the surfaces of the connecting rod bearings.

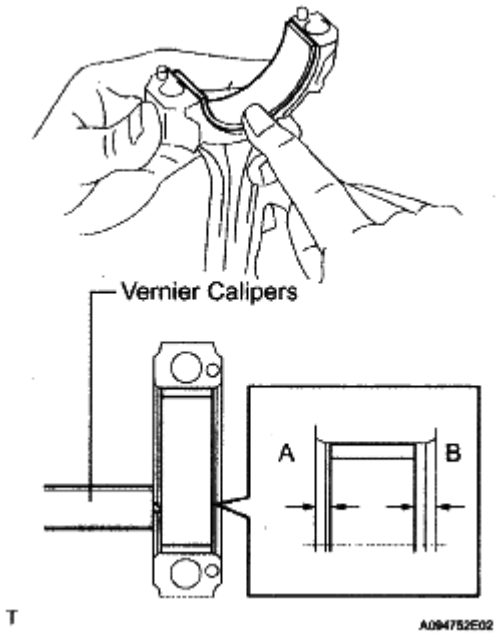

Fig. 231: Measuring Distance Between Connecting Rod's And Bearing Cap's Edges And Connecting Rod Bearing's Edge
Courtesy of TOYOTA MOTOR SALES, U.S.A., INC.

b. Position the piston rings so that the ring ends are as shown in the illustration.

NOTE: Do not align the ring ends.

 © 2011 Mitchell Repair Information Company, LLC.

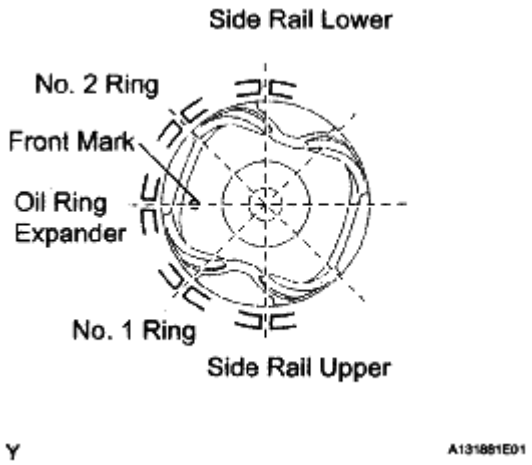

Fig. 232: Identifying Piston Rings Gap Position
Courtesy of TOYOTA MOTOR SALES, U.S.A., INC.

c. Using a piston ring compressor, push the correctly numbered piston and connecting rod assembly into the cylinder with the front mark of the piston facing forward.

NOTE: Match the numbered connecting rod cap with the connecting rod.

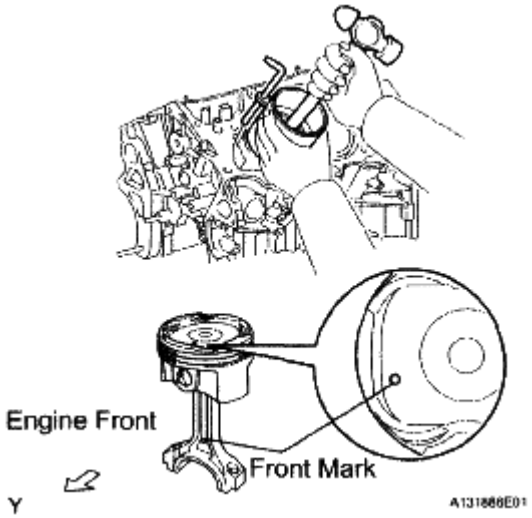

Fig. 233: Pushing Piston And Connecting Rod Assembly Into Cylinder
Courtesy of TOYOTA MOTOR SALES, U.S.A., INC.

d. Check that the front mark of the connecting rod cap is facing forward.
e. Apply a light coat of engine oil to the threads and under the heads of the connecting rod cap bolts.
f. Install the connecting cap bolts.

HINT:

The connecting cap bolts are tightened in 2 progressive steps.

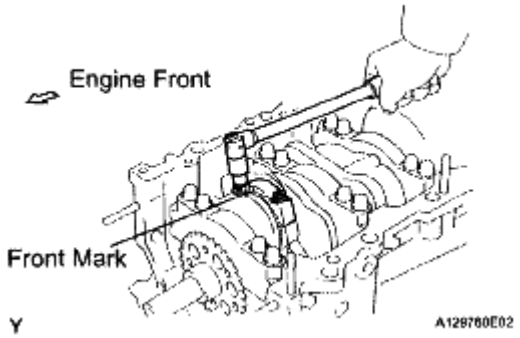

Fig. 234: Identifying Front Mark Of Connecting Rod Cap
Courtesy of TOYOTA MOTOR SALES, U.S.A., INC.

g. Step 1
   1. Install and alternately tighten the bolts of the connecting rod cap in several steps.

      Torque: 25 N*m (255 kgf*cm, 18 ft.*lbf)

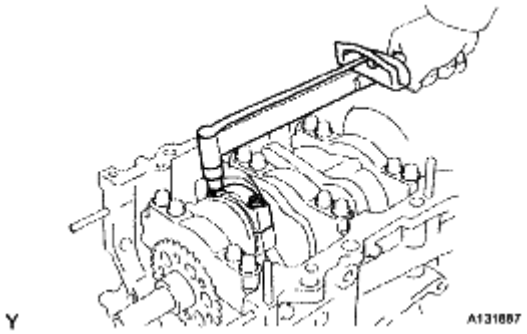

Fig. 235: Tightening Connecting Rod Cap Bolts
Courtesy of TOYOTA MOTOR SALES, U.S.A., INC.

h. Step 2
   1. Mark the front side of each connecting cap bolt with paint.
   2. Retighten the cap bolts 90° as shown in the illustration.
   3. Check the painted mark is now at a 90° angle to the front.
i. Confirm that the crankshaft turns smoothly.
j. Check the connecting rod thrust clearance (See **INSPECTION**).

 © 2011 Mitchell Repair Information Company, LLC.

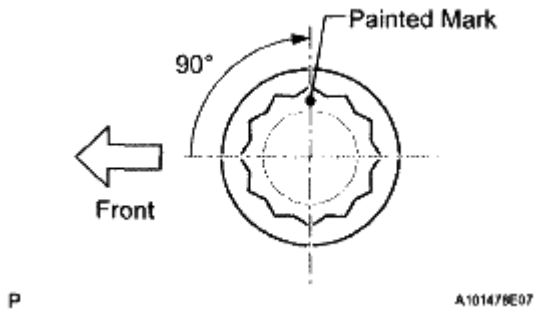

Fig. 236: Identifying Connecting Rod Cap Bolt Tighten Angle
Courtesy of TOYOTA MOTOR SALES, U.S.A., INC.

FRONT CRANKSHAFT OIL SEAL

COMPONENTS

 © 2011 Mitchell Repair Information Company, LLC.

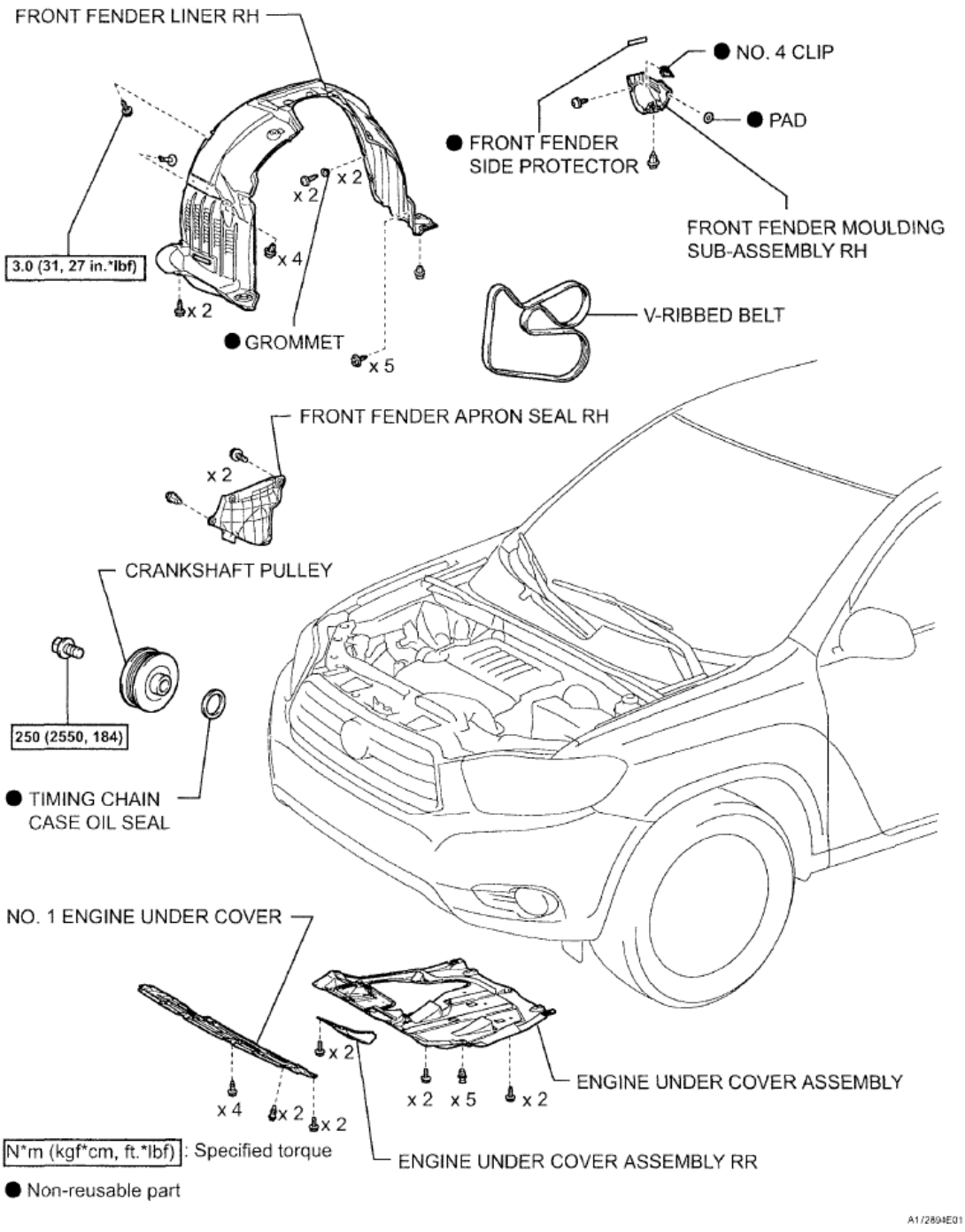

Fig. 237: Identifying Front Crankshaft Oil Seal Components With Torque Specification
Courtesy of TOYOTA MOTOR SALES, U.S.A., INC.

REMOVAL

1. **REMOVE FRONT WHEEL RH**
2. **REMOVE ENGINE UNDER COVER ASSEMBLY** (See **REMOVAL**)
3. **REMOVE NO. 1 ENGINE UNDER COVER** (See **REMOVAL**)

4. **REMOVE FRONT FENDER MOULDING SUB-ASSEMBLY RH** (See **REMOVAL**)
5. **REMOVE FRONT FENDER LINER RH** (See **REMOVAL**)
6. **REMOVE FRONT FENDER APRON SEAL RH** (See **REMOVAL**)
7. **REMOVE V-RIBBED BELT** (See **REMOVAL**)
8. **REMOVE CRANKSHAFT PULLEY**
   a. Using SST, loosen the crankshaft pulley bolt.

      SST 09213-70011 (09213-70020), 09330-00021

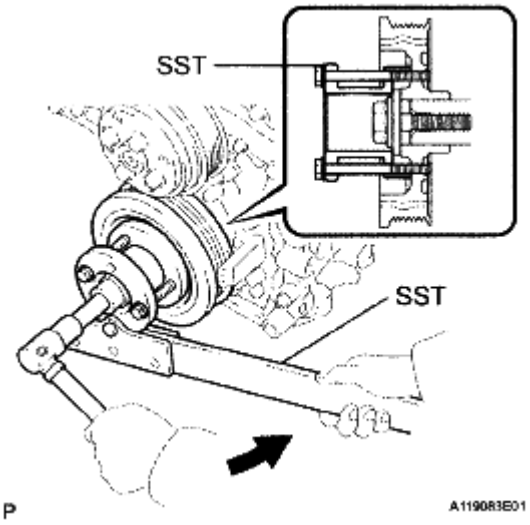

Fig. 238: Loosening Crankshaft Pulley Bolt Using SST
Courtesy of TOYOTA MOTOR SALES, U.S.A., INC.

   b. Using SST, remove the crankshaft pulley bolt and crankshaft pulley.

      SST 09950-50013 (09951-05010, 09952-05010, 09953-05020, 09954-05021)

 © 2011 Mitchell Repair Information Company, LLC.

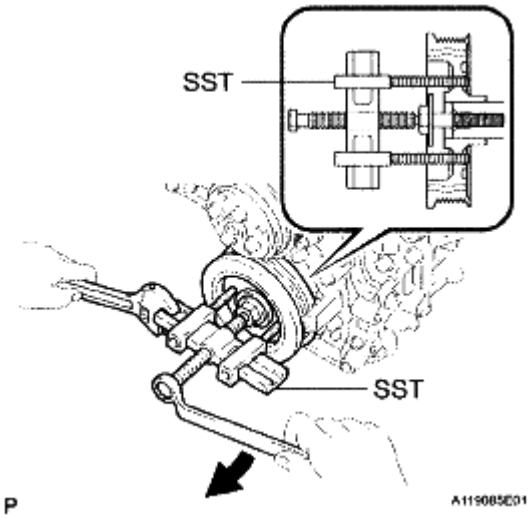

Fig. 239: Removing Pulley Bolt And Pulley
Courtesy of TOYOTA MOTOR SALES, U.S.A., INC.

9. **REMOVE TIMING CHAIN CASE OIL SEAL**
   a. Using a screwdriver, pry out the oil seal.

   HINT:

   Tape the screwdriver tip before use.

   NOTE: After the removal, check the crankshaft for damage. If it is damaged, smooth the surface with 400-grit sandpaper.

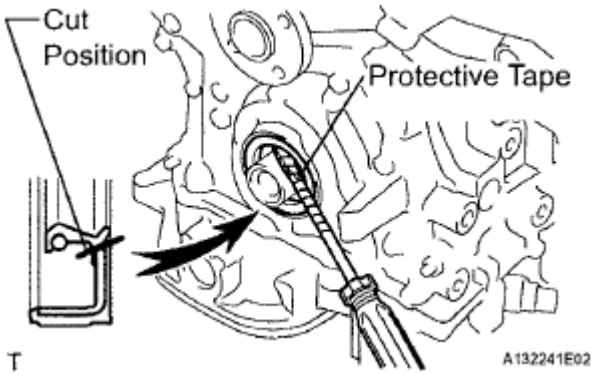

Fig. 240: Prying Oil Seal
Courtesy of TOYOTA MOTOR SALES, U.S.A., INC.

INSTALLATION

1. **INSTALL TIMING CHAIN CASE OIL SEAL**
   a. Apply MP grease to a new oil seal lip.

b. Using SST and a hammer, tap in the oil seal until its surface is flush with the timing chain cover edge.

SST 09223-22010,09506-35010

NOTE:
- **Keep the lip free of foreign matter.**
- **Do not tap the oil seal at an angle.**

2. **INSTALL CRANKSHAFT PULLEY**
   a. Align the pulley set key with the key groove of the pulley, and slide on the pulley.

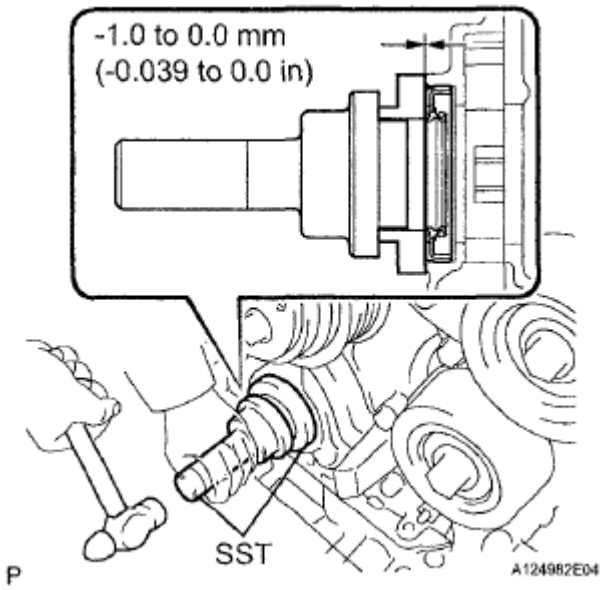

Fig. 241: Tapping Oil Seal
Courtesy of TOYOTA MOTOR SALES, U.S.A., INC.

   b. Using SST, install the pulley bolt.

SST 09213-70011 (09213-70020), 09330-00021

Torque: 250 N*m (2550 kgf*cm, 184 ft.*lbf)

3. **INSTALL V-RIBBED BELT** (See **INSTALLATION**)
4. **INSTALL FRONT FENDER APRON SEAL RH** (See **INSTALLATION**)
5. **INSTALL FRONT FENDER LINER RH** (See **INSTALLATION**)
6. **INSTALL FRONT FENDER MOULDING SUB-ASSEMBLY RH** (See **INSTALLATION**)
7. **INSTALL NO. 1 ENGINE UNDER COVER** (See **INSTALLATION**)
8. **INSTALL ENGINE UNDER COVER ASSEMBLY** (See **INSTALLATION**)
9. **INSTALL FRONT WHEEL RH**

 © 2011 Mitchell Repair Information Company, LLC.

Torque: 103 N*m (1050 kgf*cm, 76 ft.*lbf)

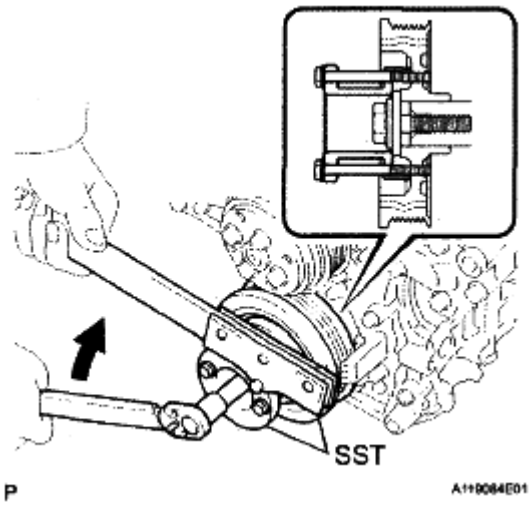

Fig. 242: Installing Crankshaft Pulley Bolt
Courtesy of TOYOTA MOTOR SALES, U.S.A., INC.

REAR CRANKSHAFT OIL SEAL

COMPONENTS

 © 2011 Mitchell Repair Information Company, LLC.

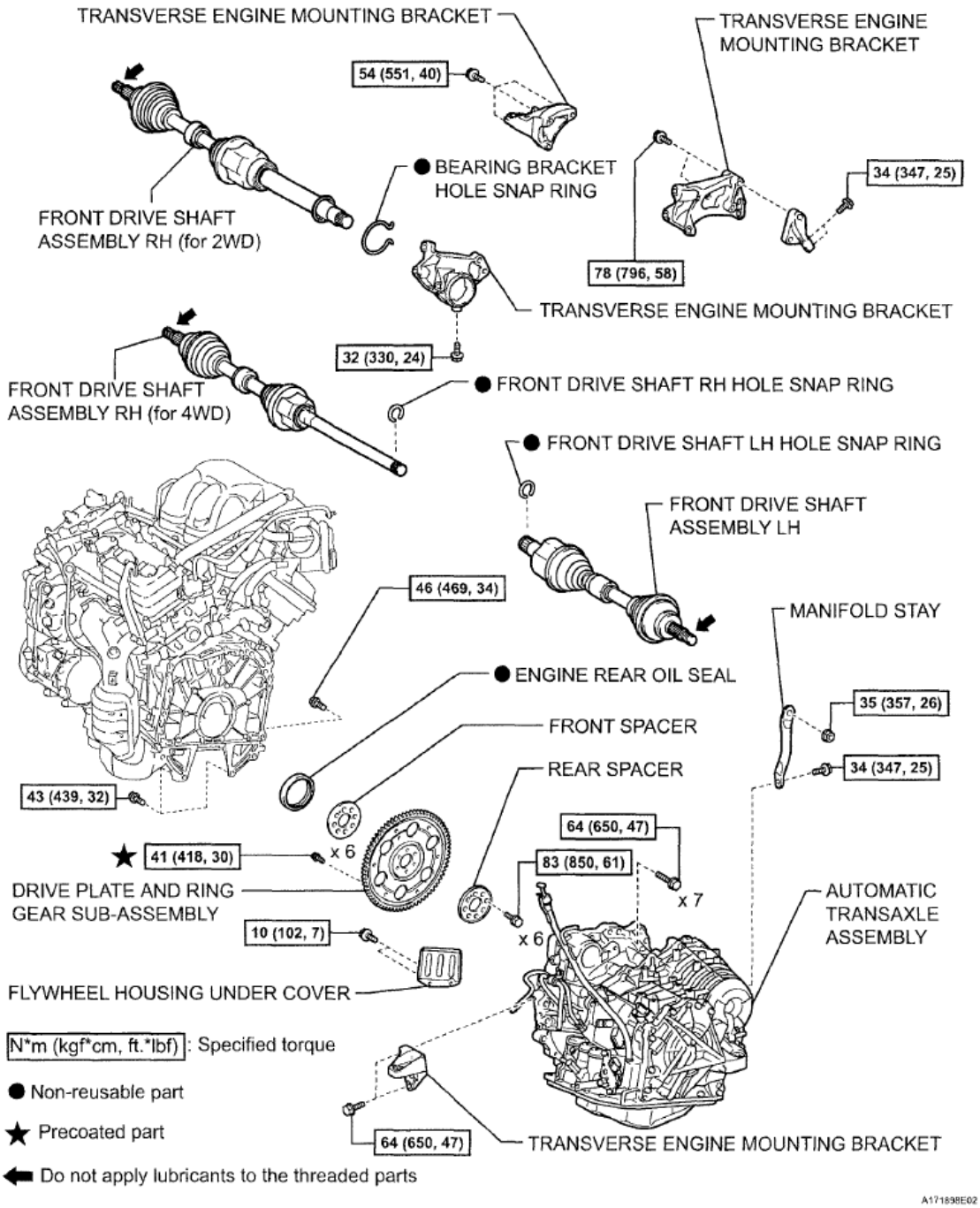

Fig. 243: Identifying Rear Crankshaft Oil Seal Components With Torque Specification
Courtesy of TOYOTA MOTOR SALES, U.S.A., INC.

REMOVAL

1. **REMOVE AUTOMATIC TRANSAXLE ASSEMBLY (for 2WD)**

   HINT:

See **REMOVAL** .

2. **REMOVE AUTOMATIC TRANSAXLE ASSEMBLY (for 4WD)**

   HINT:

   See **REMOVAL** .

3. **REMOVE DRIVE PLATE AND RING GEAR SUB-ASSEMBLY**
   a. Using SST, hold the crankshaft.

      SST 09213-70011 (09213-70020), 09330-00021

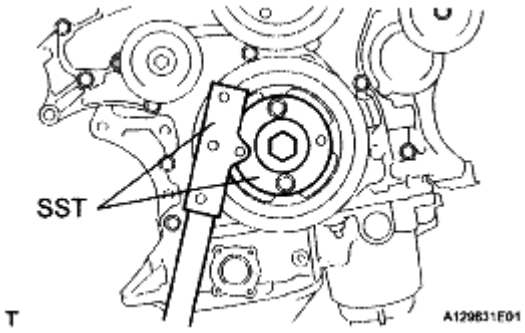

Fig. 244: Identifying Crankshaft Using SST
Courtesy of TOYOTA MOTOR SALES, U.S.A., INC.

   b. Remove the 8 bolts, front spacer, drive plate and rear spacer.

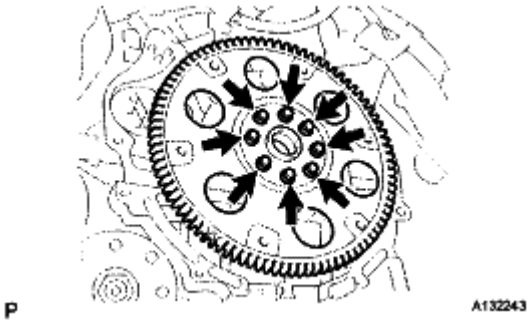

Fig. 245: Locating Bolts, Front Spacer, Drive Plate And Rear Spacer
Courtesy of TOYOTA MOTOR SALES, U.S.A., INC.

4. **REMOVE ENGINE REAR OIL SEAL**
   a. Using a knife, cut off the oil seal lip.
   b. Using a screwdriver, pry out the oil seal.

NOTE: Be careful not to damage the crankshaft. Tape the screwdriver tip

 © 2011 Mitchell Repair Information Company, LLC.

before use.

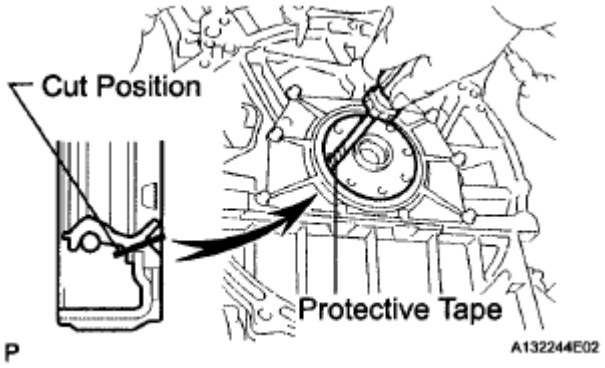

Fig. 246: Prying Oil Seal
Courtesy of TOYOTA MOTOR SALES, U.S.A., INC.

INSTALLATION

1. **INSTALL ENGINE REAR OIL SEAL**
   a. Apply MP grease to a new oil seal lip.
   b. Using SST and a hammer, tap in the oil seal.

   SST 09223-15030, 09950-70010 (09951-07150)

   Oil seal tap in depth:

   -0.5 to 0.5 mm (-0.020 to 0.020 in.)

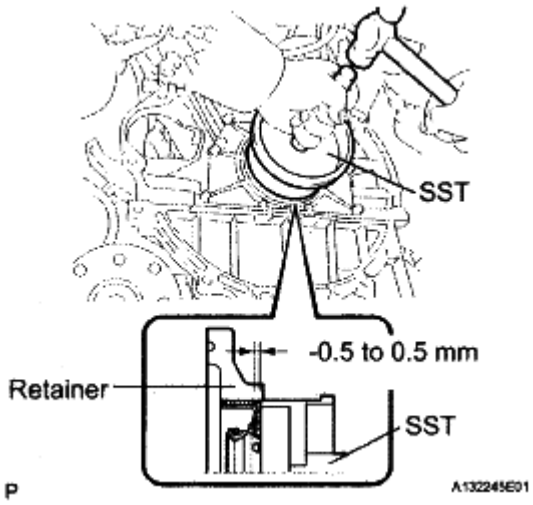

Fig. 247: Tapping In Oil Seal
Courtesy of TOYOTA MOTOR SALES, U.S.A., INC.

 © 2011 Mitchell Repair Information Company, LLC.

2. **INSTALL DRIVE PLATE AND RING GEAR SUB-ASSEMBLY**
   a. Using SST, hold the crankshaft.

      SST 09213-70011 (09213-70020), 09330-00021

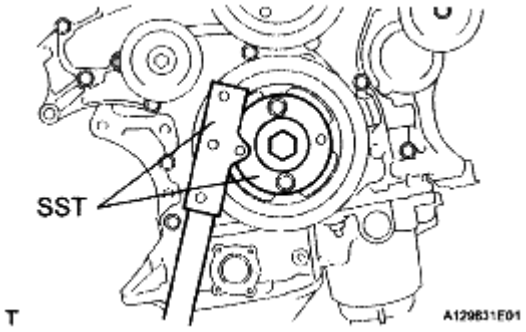

Fig. 248: Identifying Crankshaft Using SST
Courtesy of TOYOTA MOTOR SALES, U.S.A., INC.

   b. Apply adhesive to 2 or 3 threads of the mounting bolt end.

      Adhesive:

      Part No. 08833-00070, Three Bond 1324 or equivalent

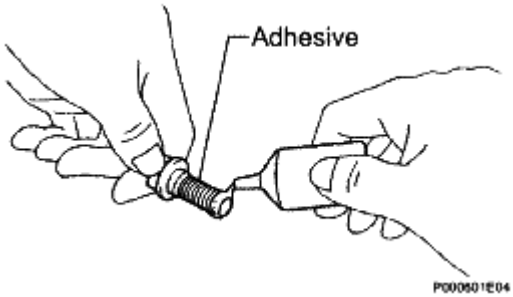

Fig. 249: Applying Adhesive To 2 Or 3 Threads Of Mounting Bolt End
Courtesy of TOYOTA MOTOR SALES, U.S.A., INC.

      1. Install the front spacer, drive plate and rear spacer on the crankshaft.
      2. Install and tighten the 8 mounting bolts uniformly in several steps.

         Torque: 83 N*m (850 kgf*cm, 61 ft.*lbf)

3. **INSTALL AUTOMATIC TRANSAXLE ASSEMBLY (for 2WD)**

   HINT:

   See **INSTALLATION** .

 © 2011 Mitchell Repair Information Company, LLC.

Fig. 250: Locating Mounting Bolts
Courtesy of TOYOTA MOTOR SALES, U.S.A., INC.

4. **INSTALL AUTOMATIC TRANSAXLE ASSEMBLY (for 4WD)**

   HINT:

   See **INSTALLATION** .

ENGINE ASSEMBLY

COMPONENTS

 © 2011 Mitchell Repair Information Company, LLC.

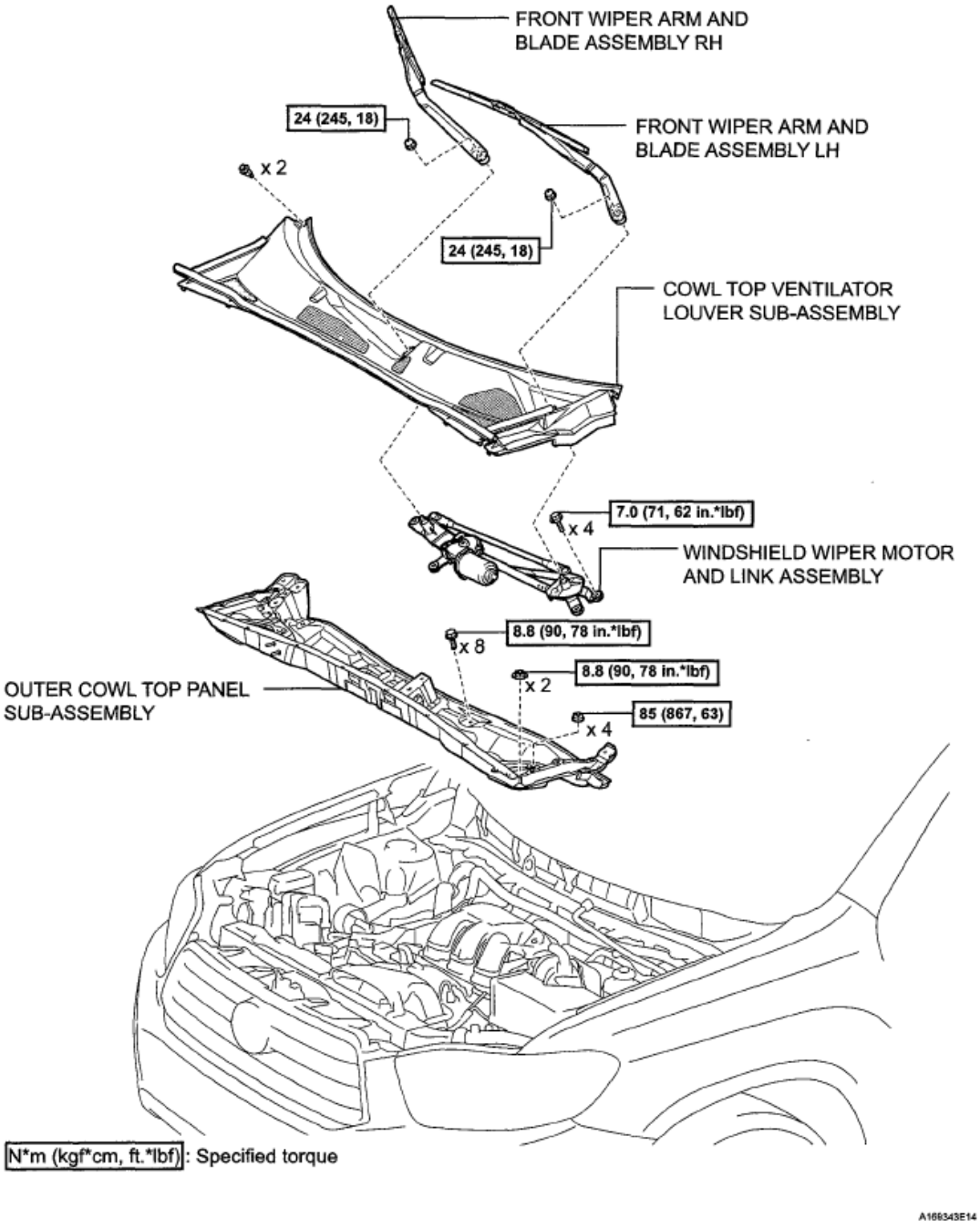

Fig. 251: Identifying Engine Assembly Components With Torque Specification (1 Of 10)
Courtesy of TOYOTA MOTOR SALES, U.S.A., INC.

 © 2011 Mitchell Repair Information Company, LLC.

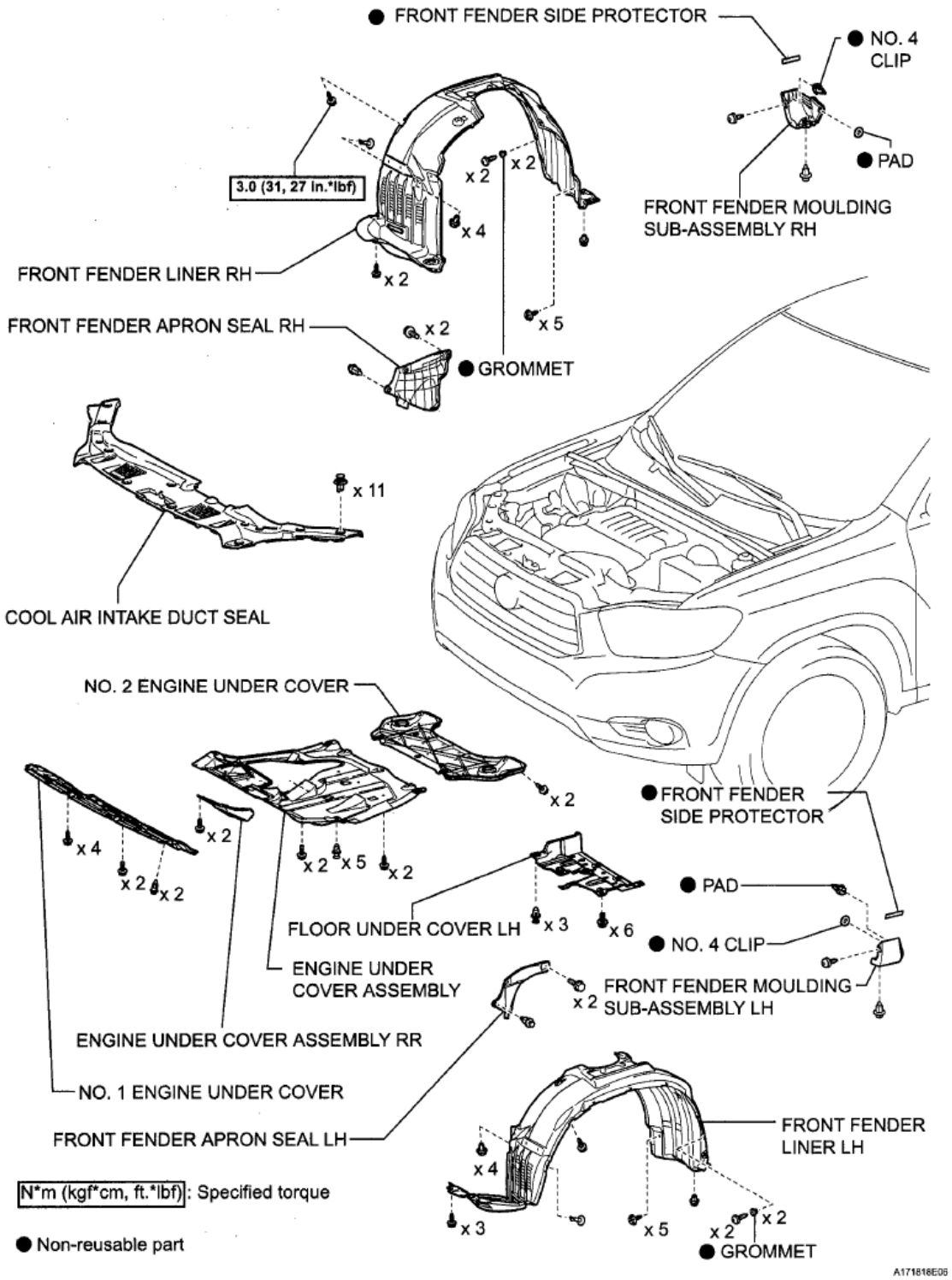

Fig. 252: Identifying Engine Assembly Components With Torque Specification (2 Of 10)
Courtesy of TOYOTA MOTOR SALES, U.S.A., INC.

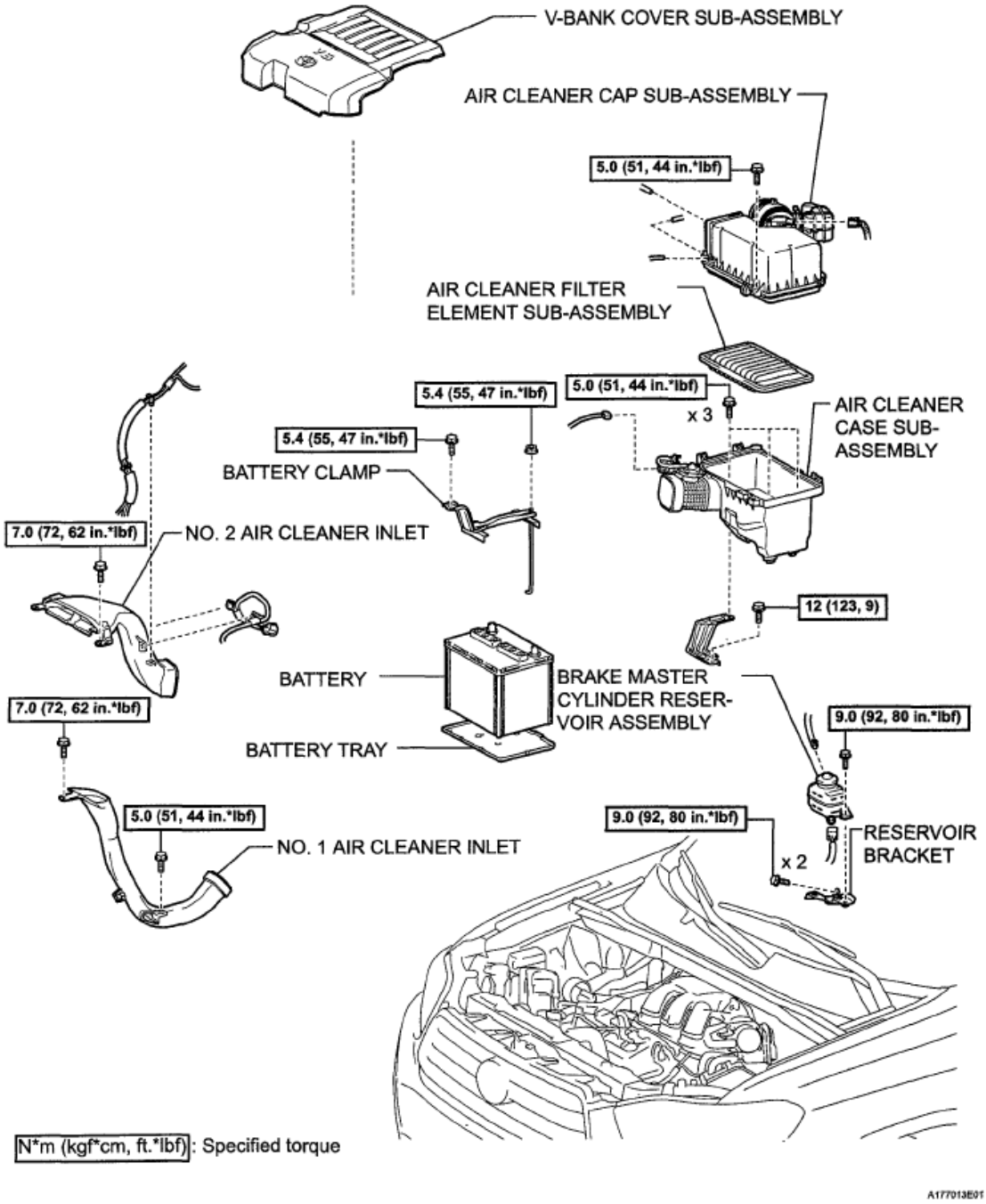

Fig. 253: Identifying Engine Assembly Components With Torque Specification (3 Of 10)
Courtesy of TOYOTA MOTOR SALES, U.S.A., INC.

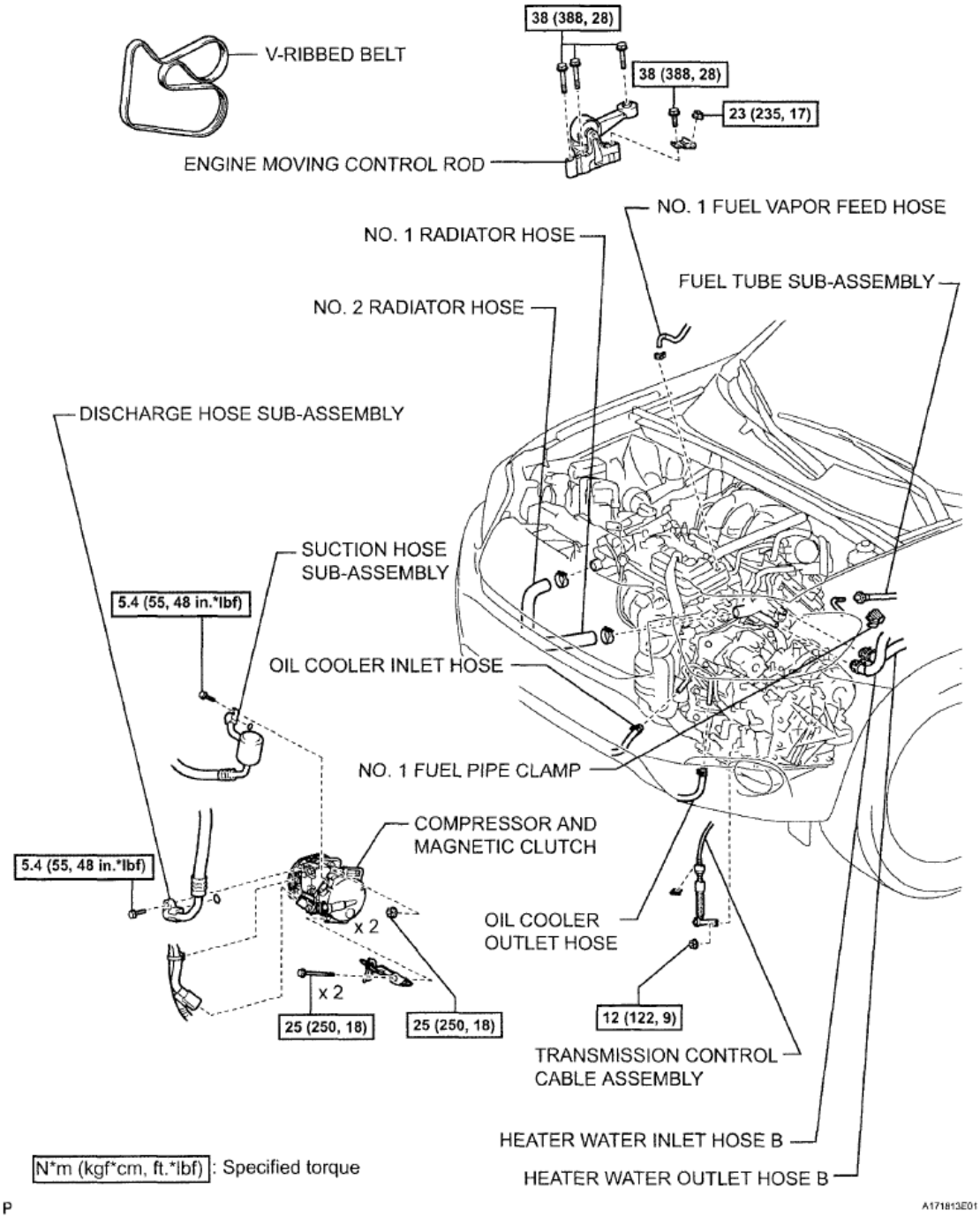

Fig. 254: Identifying Engine Assembly Components With Torque Specification (4 Of 10)
Courtesy of TOYOTA MOTOR SALES, U.S.A., INC.

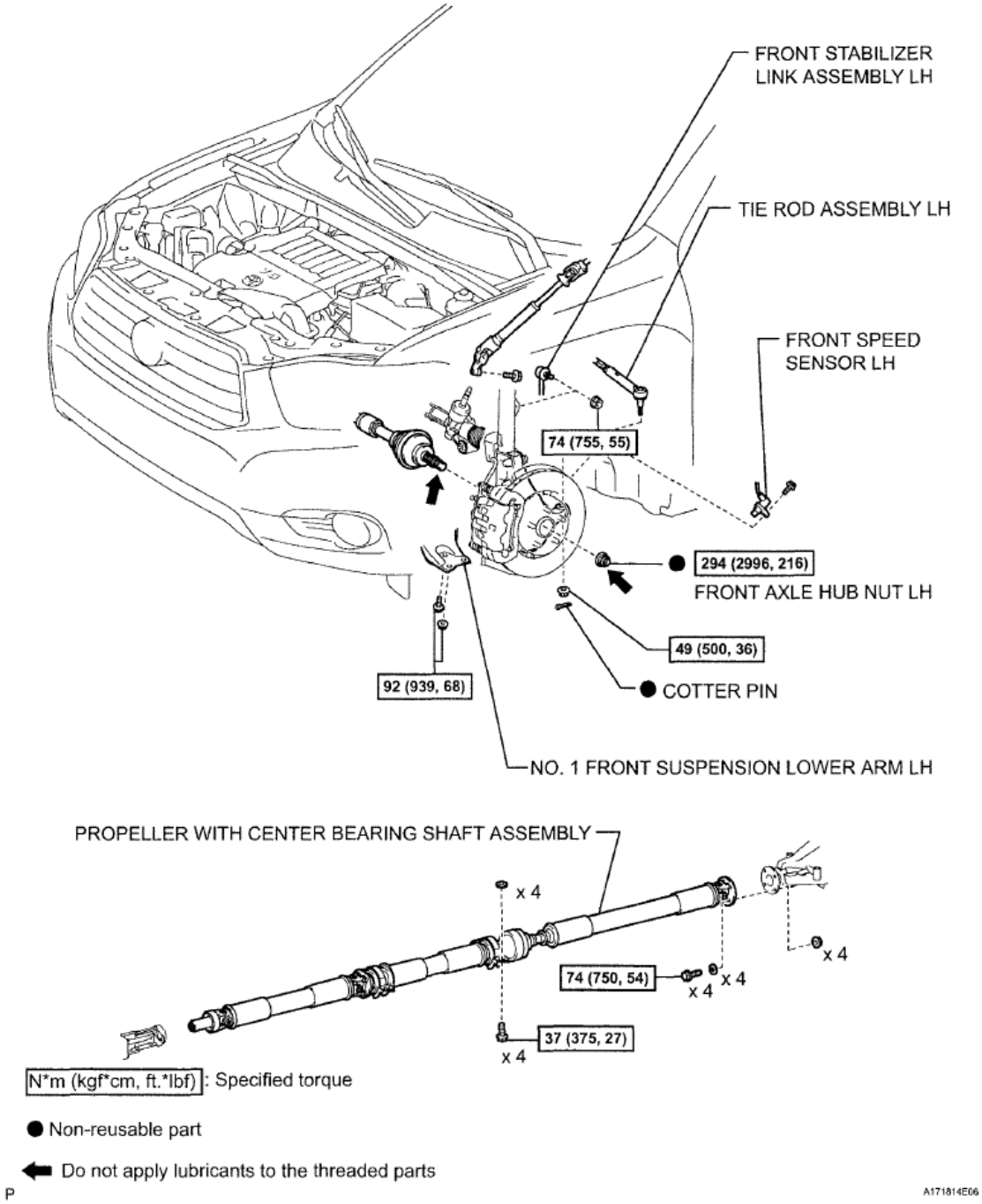

Fig. 255: Identifying Engine Assembly Components With Torque Specification (5 Of 10)
Courtesy of TOYOTA MOTOR SALES, U.S.A., INC.

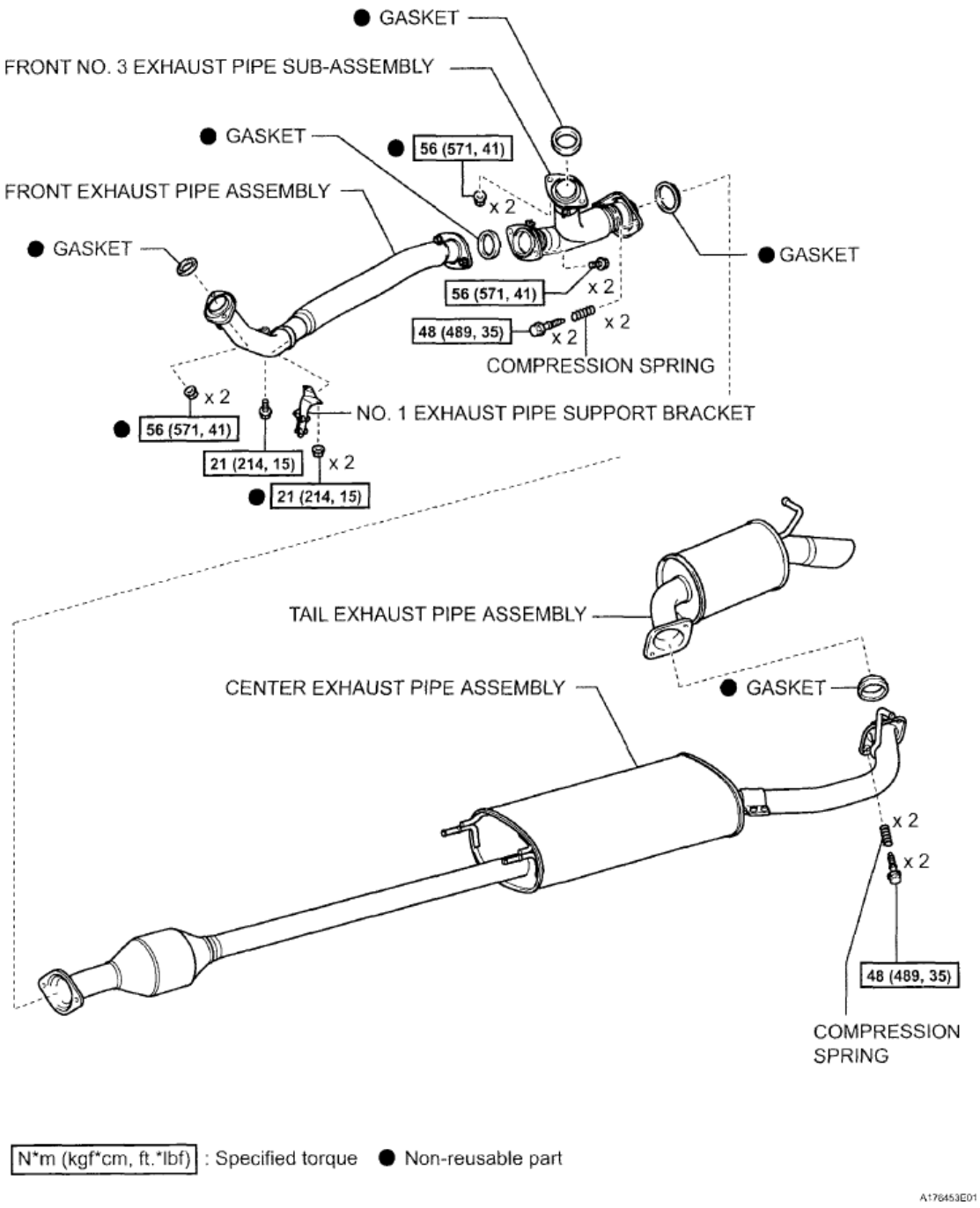

Fig. 256: Identifying Engine Assembly Components With Torque Specification (6 Of 10)
Courtesy of TOYOTA MOTOR SALES, U.S.A., INC.

 © 2011 Mitchell Repair Information Company, LLC.

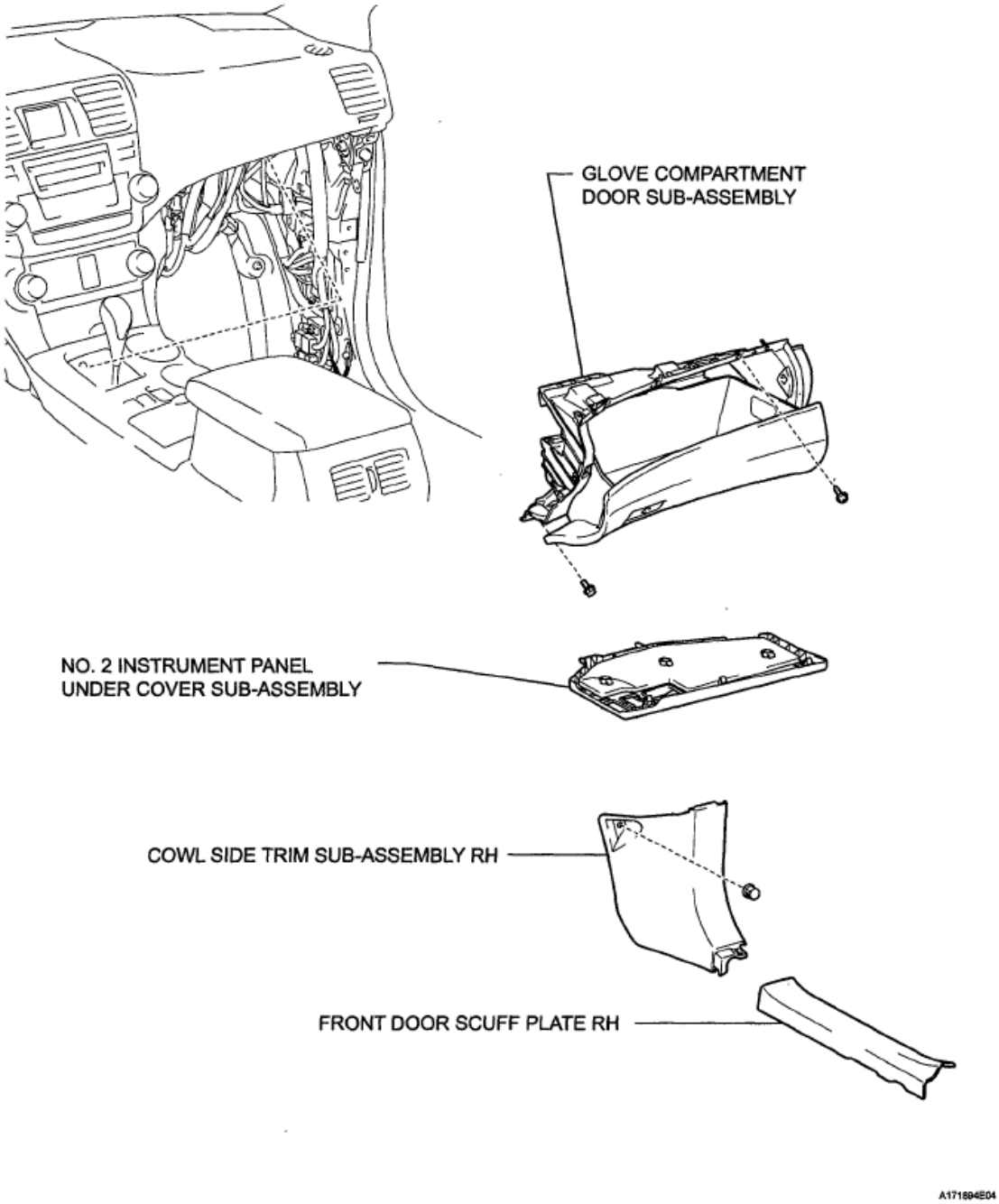

Fig. 257: Identifying Engine Assembly Components With Torque Specification (7 Of 10)
Courtesy of TOYOTA MOTOR SALES, U.S.A., INC.

 © 2011 Mitchell Repair Information Company, LLC.

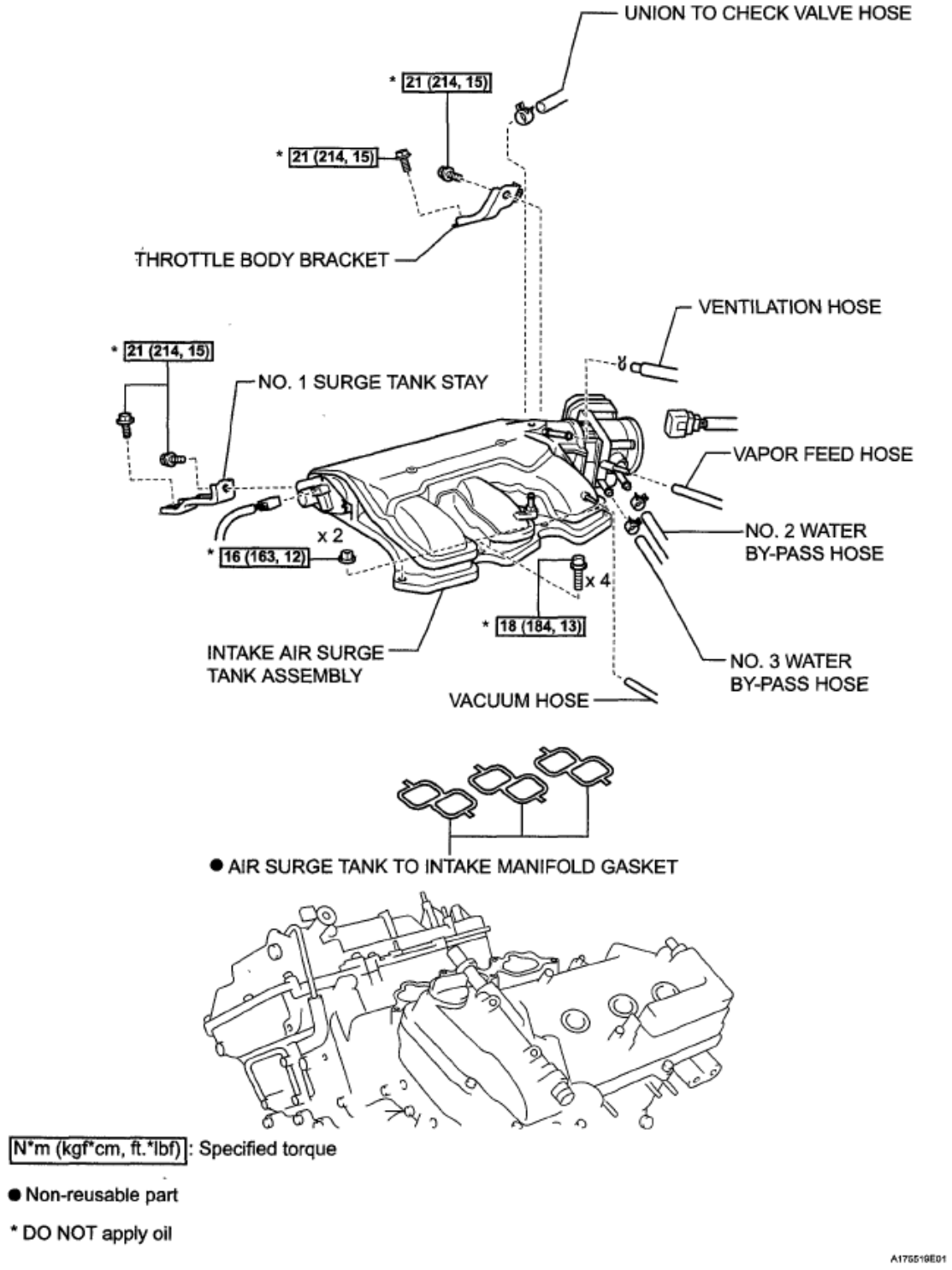

Fig. 258: Identifying Engine Assembly Components With Torque Specification (8 Of 10)
Courtesy of TOYOTA MOTOR SALES, U.S.A., INC.

 © 2011 Mitchell Repair Information Company, LLC.

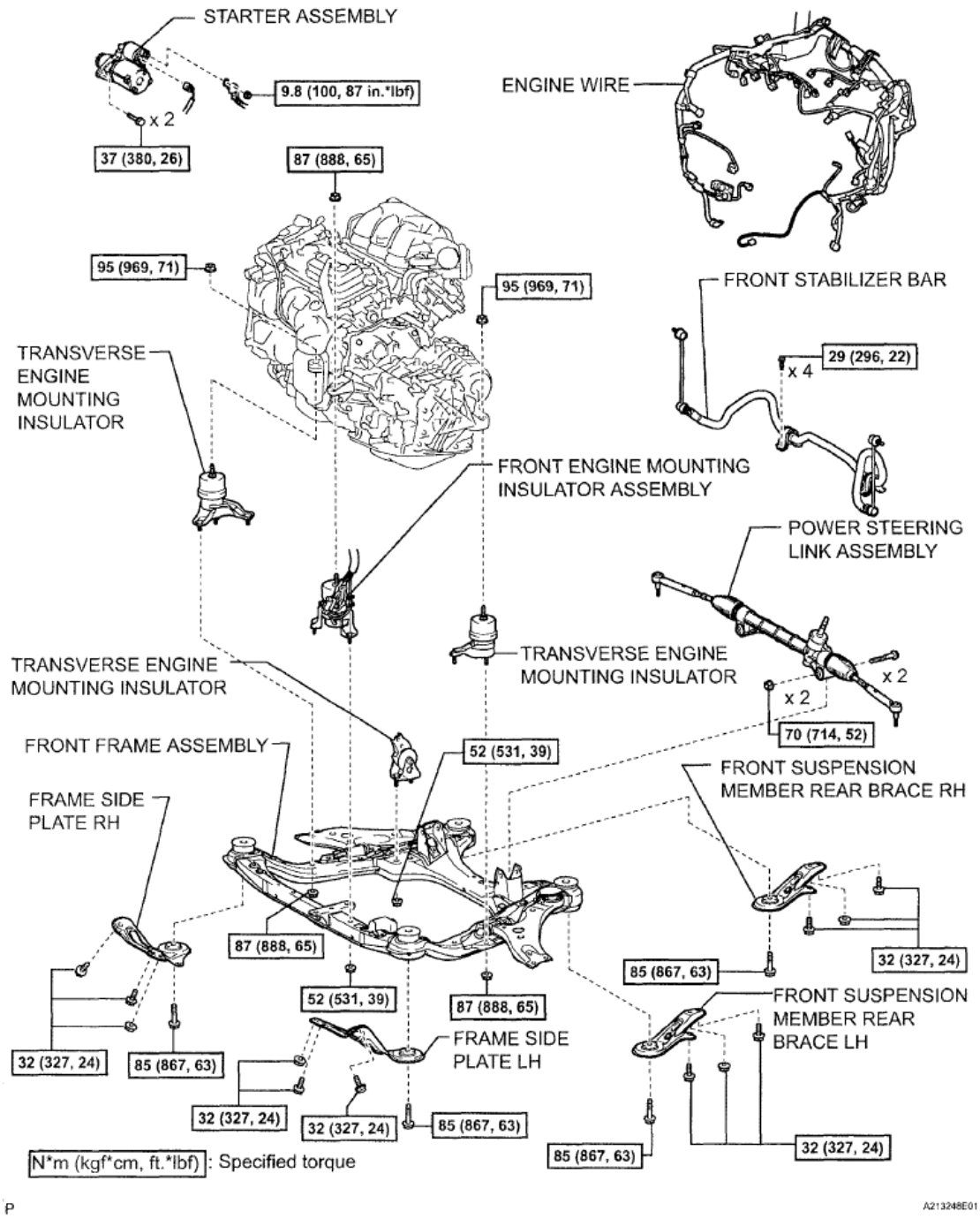

Fig. 259: Identifying Engine Assembly Components With Torque Specification (9 Of 10)
Courtesy of TOYOTA MOTOR SALES, U.S.A., INC.

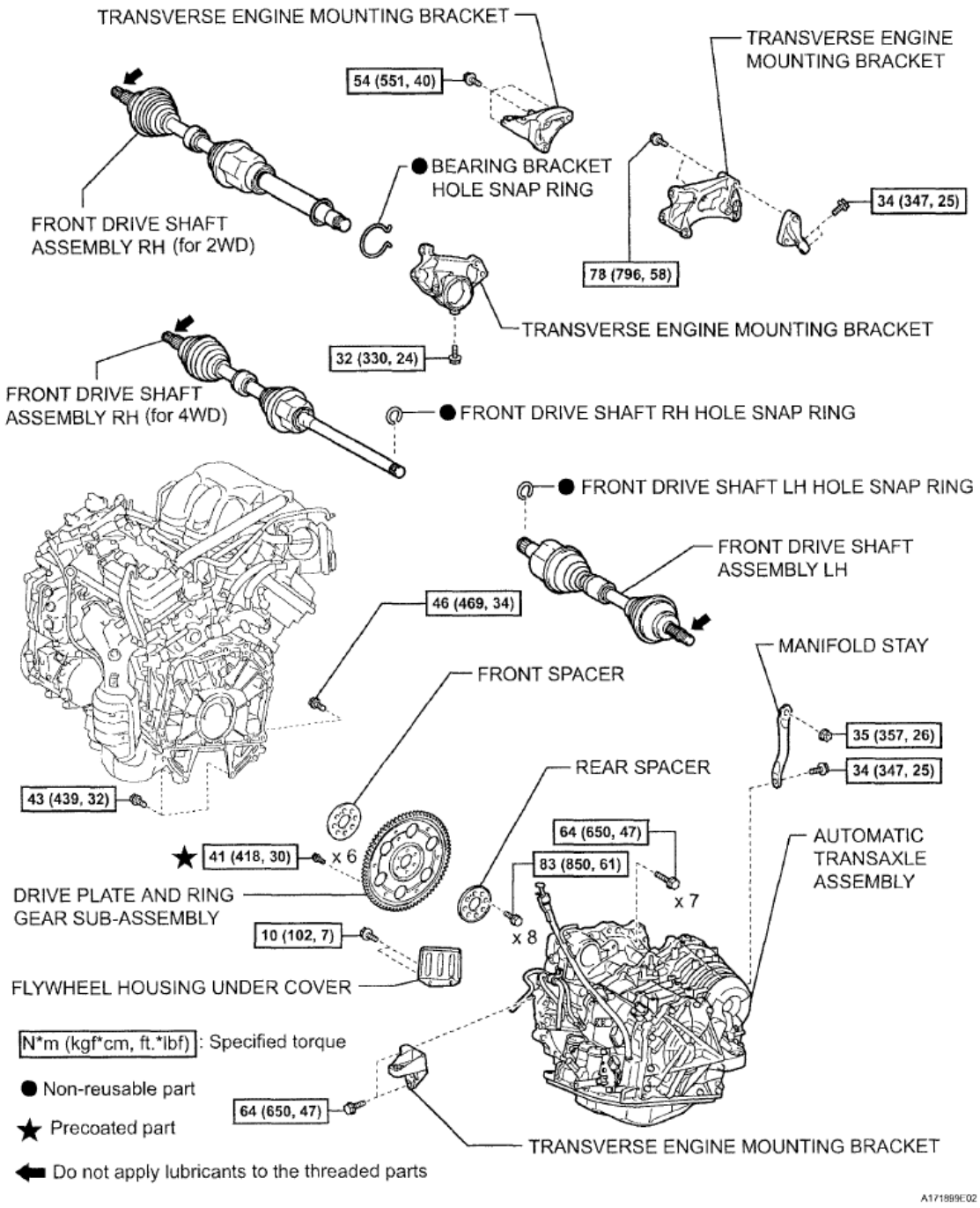

Fig. 260: Identifying Engine Assembly Components With Torque Specification (10 Of 10)
Courtesy of TOYOTA MOTOR SALES, U.S.A., INC.

REMOVAL

1. **DISCHARGE FUEL SYSTEM PRESSURE** (See **REMOVAL**)
2. **RECOVER REFRIGERANT FROM REFRIGERATION SYSTEM** (See **REPLACEMENT**)
3. **REMOVE COOL AIR INTAKE DUCT SEAL** (See **REMOVAL**)

 © 2011 Mitchell Repair Information Company, LLC.

4. **REMOVE BATTERY**
   a. Loosen the nut, and disconnect the negative battery terminal.

CAUTION: Wait for 90 seconds after disconnecting the cable to prevent the airbag working.

NOTE: When disconnecting the cable, some systems need to be initialized after the cable is reconnected (See INITIALIZATION).

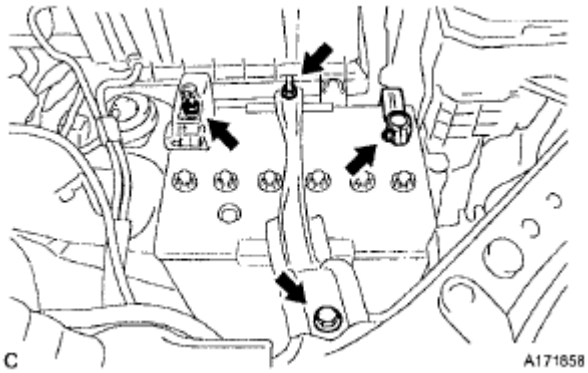

Fig. 261: Locating Battery Bolt
Courtesy of TOYOTA MOTOR SALES, U.S.A., INC.

   b. Remove the nut, and separate the positive battery terminal cable.
   c. Loosen the nut, and remove the bolt and battery clamp.
   d. Remove the battery and battery tray.
5. **PLACE FRONT WHEELS FACING STRAIGHT AHEAD**
6. **REMOVE FRONT WHEELS**
7. **REMOVE ENGINE UNDER COVER ASSEMBLY**
   a. Remove the 2 bolts and engine under cover assembly RR.

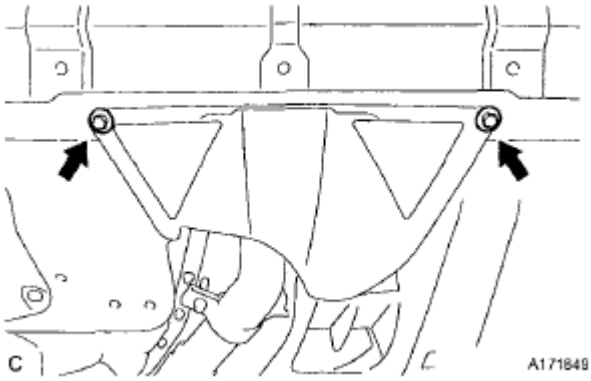

Fig. 262: Locating Engine Under Cover Assembly RR And Bolts

 © 2011 Mitchell Repair Information Company, LLC.

Courtesy of TOYOTA MOTOR SALES, U.S.A., INC.

b. Remove the 2 bolts, 2 screws, 5 clips and engine under cover assembly.

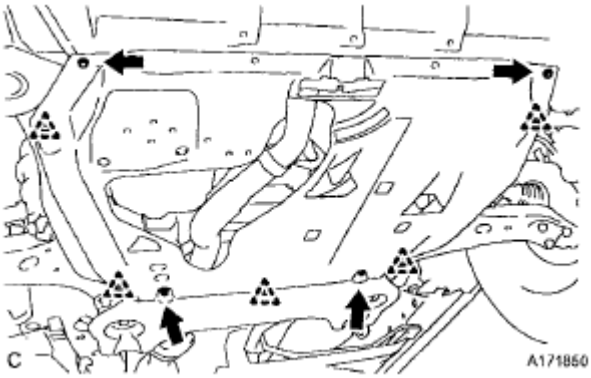

Fig. 263: Locating Engine Under Cover Assembly, Bolt And Screw
Courtesy of TOYOTA MOTOR SALES, U.S.A., INC.

8. **REMOVE NO. 1 ENGINE UNDER COVER**
   a. Remove the 6 bolts, 2 clips and No. 1 engine under cover.

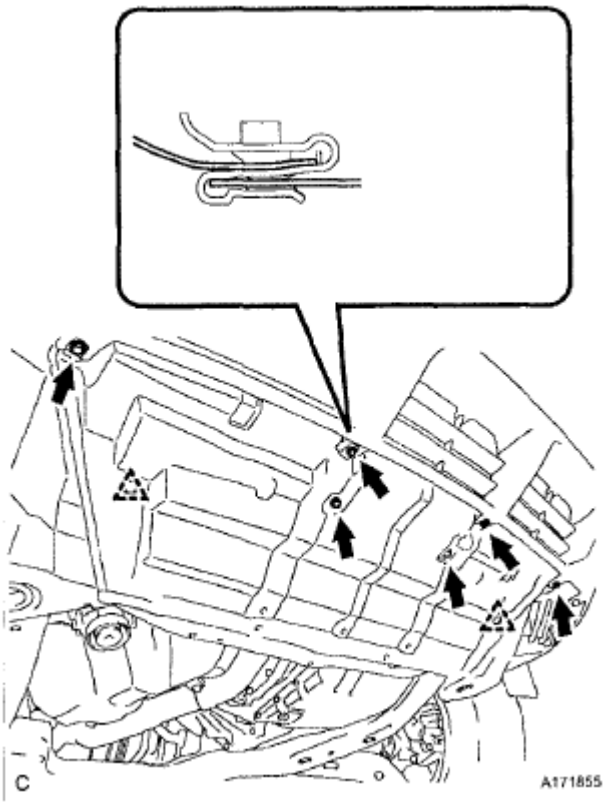

Fig. 264: Locating No. 1 Engine Under Cover, Bolt And Clips
Courtesy of TOYOTA MOTOR SALES, U.S.A., INC.

 © 2011 Mitchell Repair Information Company, LLC.

9. **REMOVE NO. 2 ENGINE UNDER COVER**
   a. Remove the 2 bolts and No. 2 engine under cover.
10. **REMOVE FLOOR UNDER COVER LH** (See **REMOVAL**)
11. **REMOVE FRONT FENDER MOULDING SUB-ASSEMBLY LH** (See **REMOVAL**)
12. **REMOVE FRONT FENDER MOULDING SUB-ASSEMBLY RH** (See **REMOVAL**)
13. **REMOVE FRONT FENDER LINER LH** (See **REMOVAL**)
14. **REMOVE FRONT FENDER LINER RH** (See **REMOVAL**)

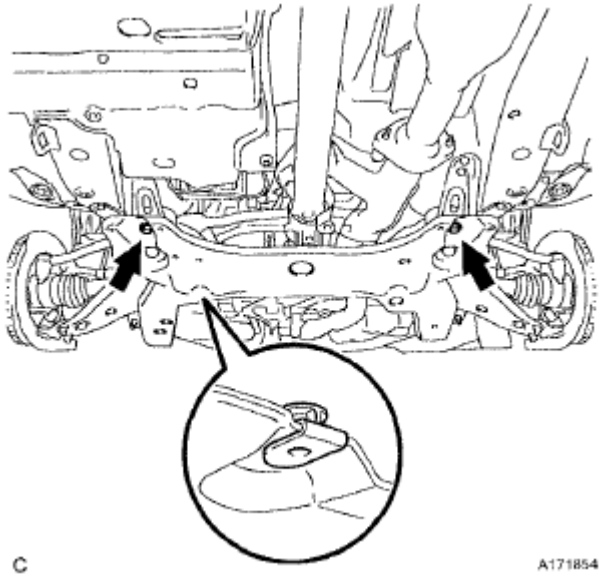

Fig. 265: Locating No. 2 Engine Under Cover And Bolts
Courtesy of TOYOTA MOTOR SALES, U.S.A., INC.

15. **REMOVE FRONT FENDER APRON SEAL LH**
   a. Remove the 2 bolts, clip and front fender apron seal LH.

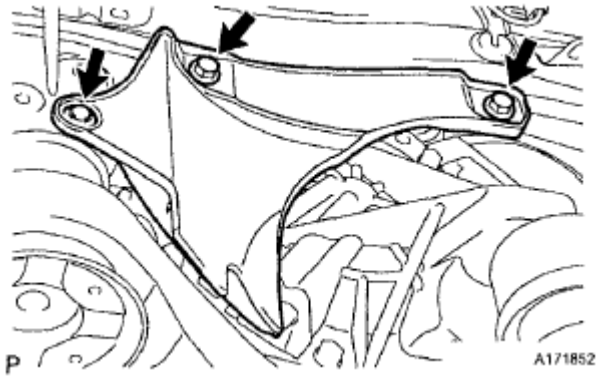

Fig. 266: Locating Front Fender Apron Seal LH, Clip And Bolts
Courtesy of TOYOTA MOTOR SALES, U.S.A., INC.

 © 2011 Mitchell Repair Information Company, LLC.

16. **REMOVE FRONT FENDER APRON SEAL RH**
    a. Remove the 2 bolts, clip and front fender apron seal RH.
17. **DRAIN ENGINE OIL** (See **REPLACEMENT**)
18. **DRAIN ENGINE COOLANT** (See **COOLANT**)
19. **DRAIN AUTOMATIC TRANSAXLE FLUID** (See **REMOVAL**)

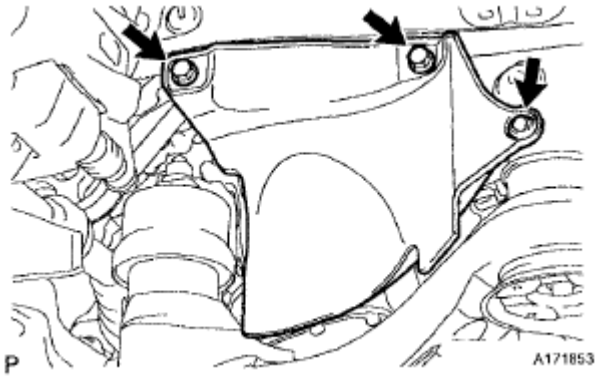

Fig. 267: Locating Front Fender Apron Seal RH, Clip And Bolts
Courtesy of TOYOTA MOTOR SALES, U.S.A., INC.

20. **REMOVE FRONT WIPER ARM AND BLADE ASSEMBLY LH** (See **REMOVAL**)
21. **REMOVE FRONT WIPER ARM AND BLADE ASSEMBLY RH** (See **REMOVAL**)
22. **REMOVE COWL TOP VENTILATOR LOUVER SUB-ASSEMBLY** (See **REMOVAL**)
23. **REMOVE WINDSHIELD WIPER MOTOR AND LINK ASSEMBLY** (See **REMOVAL**)
24. **REMOVE OUTER COWL TOP PANEL SUB-ASSEMBLY**
    a. Remove the 4 clips, and separate the engine wire.
    b. Remove the 8 bolts, 6 nuts and front outer cowl top panel sub-assembly.

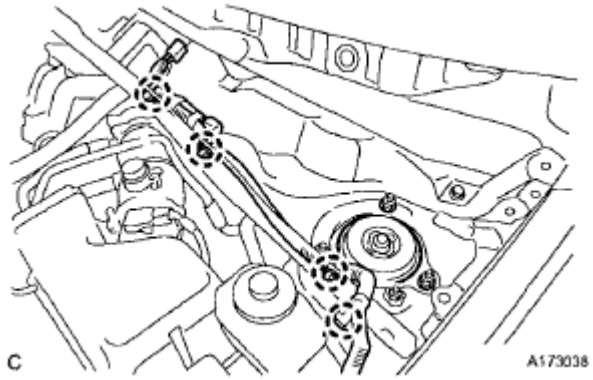

Fig. 268: Identifying Engine Wire Clips
Courtesy of TOYOTA MOTOR SALES, U.S.A., INC.

 © 2011 Mitchell Repair Information Company, LLC.

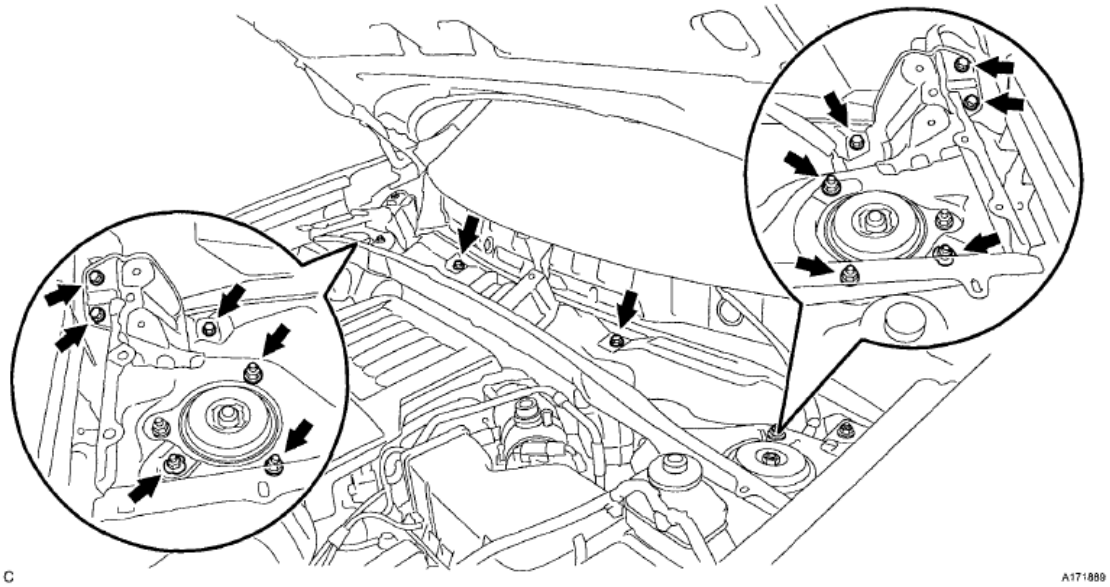

Fig. 269: Identifying Front Outer Cowl Top Panel Sub-Assembly, Bolt And Nuts
Courtesy of TOYOTA MOTOR SALES, U.S.A., INC.

25. **REMOVE V-BANK COVER SUB-ASSEMBLY**
    a. Hold the front of the V-bank cover and raise it to disengage the 2 clips on the front of the V-bank cover sub-assembly. Continue rising the V-bank cover sub-assembly to disengage the clip on the rear of the V-bank cover sub-assembly and remove the cover.

NOTE: **Attempting to disengage both front and rear clips at the same time may cause the V-bank cover sub-assembly to break.**

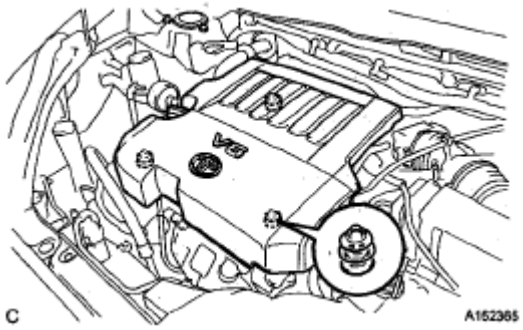

Fig. 270: Identifying Clip On Rear Of Cover
Courtesy of TOYOTA MOTOR SALES, U.S.A., INC.

26. **REMOVE NO. 2 AIR CLEANER INLET** (See **REMOVAL**)
27. **REMOVE NO. 1 AIR CLEANER INLET** (See **REMOVAL**)
28. **REMOVE AIR CLEANER CAP SUB-ASSEMBLY** (See **REMOVAL**)
29. **REMOVE AIR CLEANER FILTER ELEMENT SUB-ASSEMBLY**
    a. Remove the air cleaner filter element sub-assembly.

30. **REMOVE AIR CLEANER CASE SUB-ASSEMBLY** (See **REMOVAL**)
31. **REMOVE AIR CLEANER BRACKET**
    a. Remove the 2 bolts and air cleaner bracket.

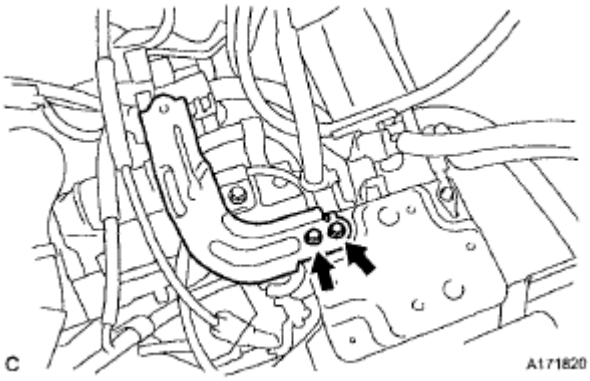

Fig. 271: Locating Air Cleaner Bracket And Bolt
Courtesy of TOYOTA MOTOR SALES, U.S.A., INC.

32. **SEPARATE BRAKE MASTER CYLINDER RESERVOIR ASSEMBLY**
    a. Disconnect the level warning switch connector.
    b. Remove the bolt, and separate the brake master cylinder reservoir assembly.

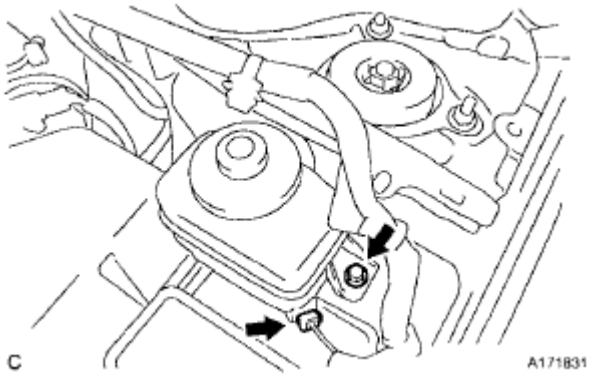

Fig. 272: Locating Brake Master Cylinder Reservoir Assembly And Bolt
Courtesy of TOYOTA MOTOR SALES, U.S.A., INC.

33. **REMOVE RESERVOIR BRACKET**
    a. Remove the 2 bolts and reservoir bracket.

 © 2011 Mitchell Repair Information Company, LLC.

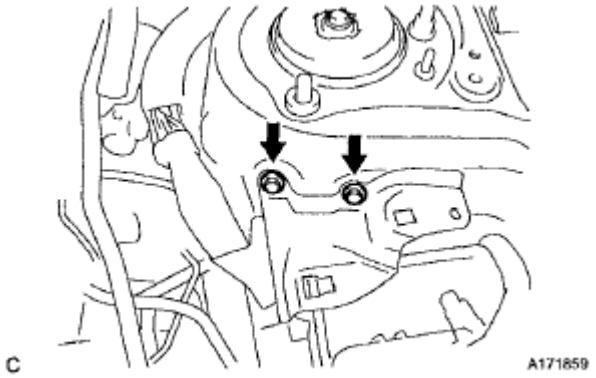

Fig. 273: Locating Reservoir Bracket And Bolt
Courtesy of TOYOTA MOTOR SALES, U.S.A., INC.

34. **REMOVE NO. 2 ENGINE MOUNTING STAY RH**
    a. Remove the bolt, 2 nuts and No. 2 engine mounting stay RH.

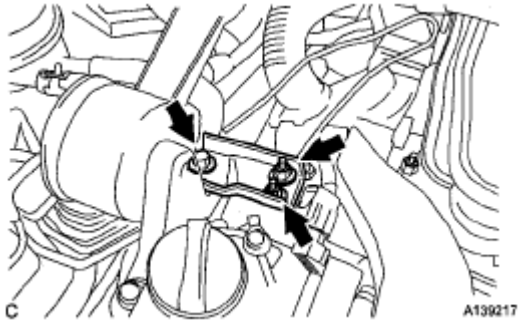

Fig. 274: Locating Nuts On No. 2 Engine Mounting Stay RH
Courtesy of TOYOTA MOTOR SALES, U.S.A., INC.

35. **REMOVE ENGINE MOVING CONTROL ROD**
    a. Remove the 3 bolts and engine moving control rod.

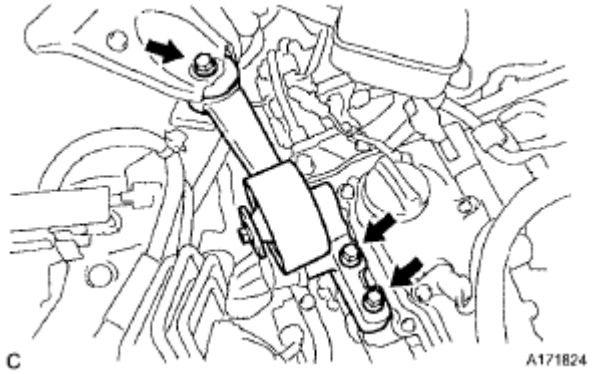

Fig. 275: Locating Engine Moving Control Rod Bolt
Courtesy of TOYOTA MOTOR SALES, U.S.A., INC.

 © 2011 Mitchell Repair Information Company, LLC.

36. **DISCONNECT NO. 1 FUEL VAPOR FEED HOSE**
    a. Slide the clamp and disconnect the No. 1 fuel vapor feed hose.

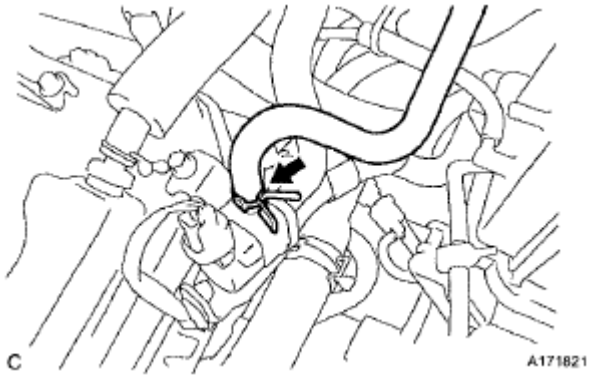

Fig. 276: Locating No. 1 Fuel Vapor Feed Hose And Clamp
Courtesy of TOYOTA MOTOR SALES, U.S.A., INC.

37. **DISCONNECT NO. 1 RADIATOR HOSE**
    a. Disconnect the clamp.
    b. Using pliers, grip the claws of the clip and slide the clip to disconnect the No. 1 radiator hose from the water outlet.

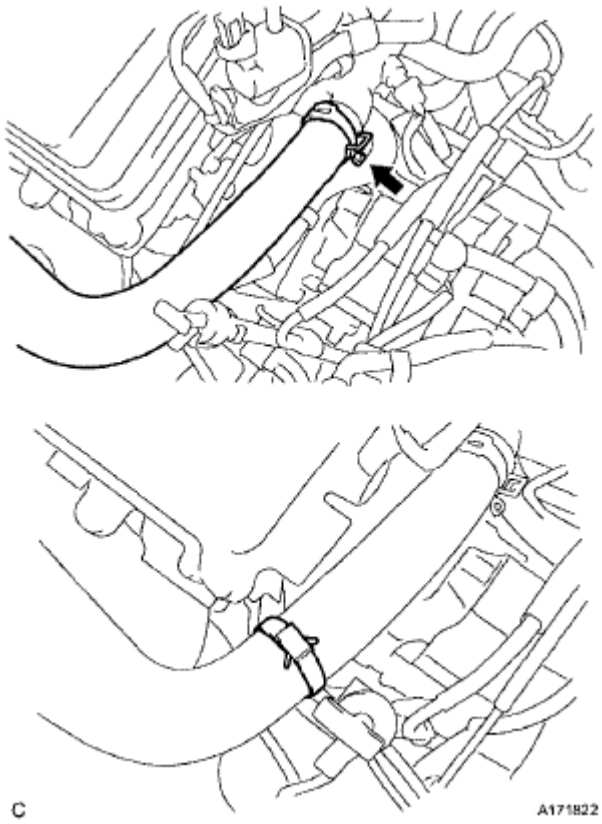

 © 2011 Mitchell Repair Information Company, LLC.

Fig. 277: Locating No. 1 Radiator Hose And Clamp
Courtesy of TOYOTA MOTOR SALES, U.S.A., INC.

38. **DISCONNECT NO. 2 RADIATOR HOSE**
    a. Using pliers, grip the claws of the clip and slide the clip to disconnect the No. 2 radiator hose from the water inlet.

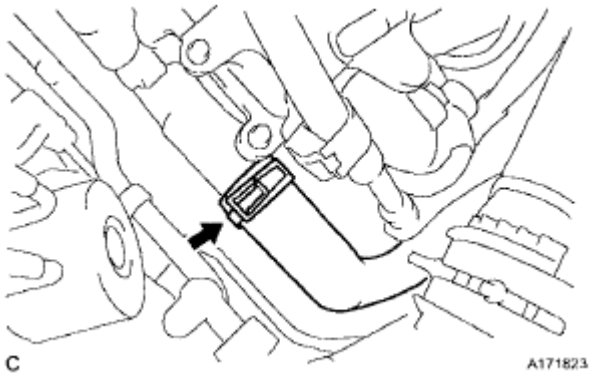

Fig. 278: Locating No. 2 Radiator Hose And Clip
Courtesy of TOYOTA MOTOR SALES, U.S.A., INC.

39. **DISCONNECT HEATER WATER HOSE OUTLET B**
    a. Using pliers, grip the claws of the clip and slide the clip to disconnect heater water outlet hose B from the water inlet.

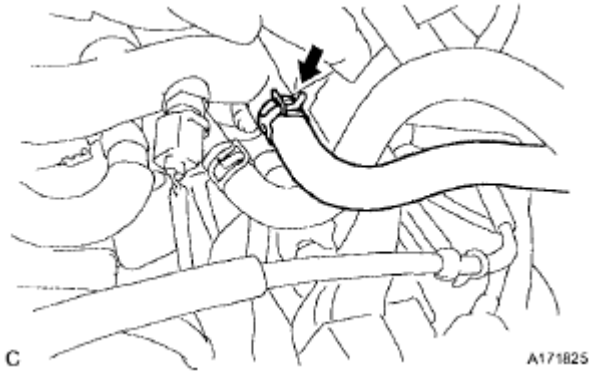

Fig. 279: Locating Heater Water Outlet Hose And Claws
Courtesy of TOYOTA MOTOR SALES, U.S.A., INC.

40. **DISCONNECT HEATER WATER HOSE INLET B**
    a. Using pliers, grip the claws of the clip and slide the clip to disconnect heater water inlet hose B from the water outlet.

 © 2011 Mitchell Repair Information Company, LLC.

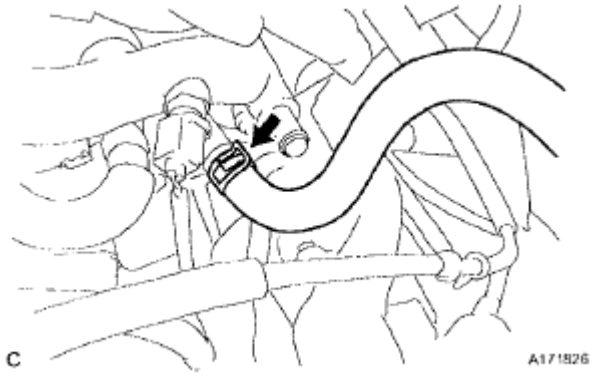

Fig. 280: Locating Heater Water Inlet Hose Clip
Courtesy of TOYOTA MOTOR SALES, U.S.A., INC.

41. **DISCONNECT FUEL TUBE SUB-ASSEMBLY**
    a. Remove the No. 1 fuel pipe clamp.

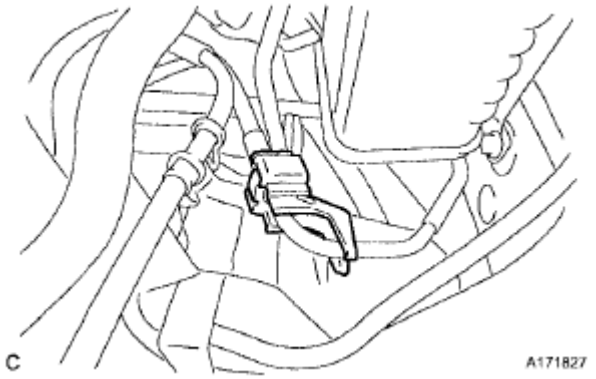

Fig. 281: Identifying No. 1 Fuel Pipe Clamp
Courtesy of TOYOTA MOTOR SALES, U.S.A., INC.

    b. Disconnect the fuel tube from the fuel pipe pinching part A with your fingers as shown in the illustration.

NOTE:

- **Check for dirt and foreign objects the pipe and around the connector. Clean if necessary and then disconnect the connector.**
- **Disconnect the connector by hand.**
- **Do not bend, fold or rotate the nylon tube.**
- **If the pipe and connector are stuck together, push and pull the connector until it becomes free.**
- **Put the pipe and connector ends in vinyl bags to prevent damage and contamination.**

 © 2011 Mitchell Repair Information Company, LLC.

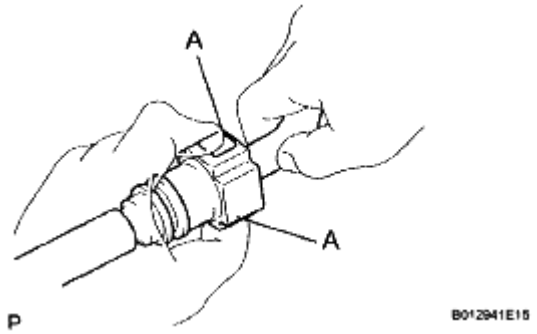

Fig. 282: Identifying Connector From Tube
Courtesy of TOYOTA MOTOR SALES, U.S.A., INC.

42. **DISCONNECT OIL COOLER INLET HOSE**
    a. Using pliers, grip the claws of the clip and slide the clip to disconnect the No. 2 oil cooler hose.

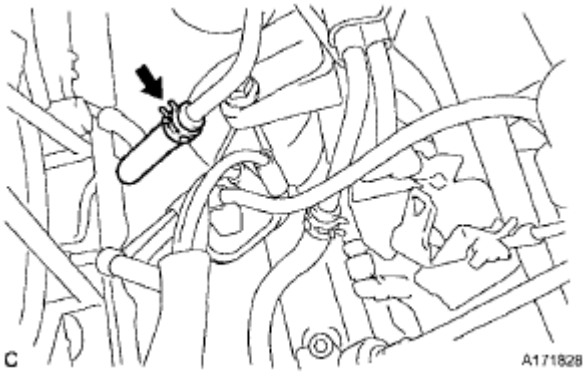

Fig. 283: Locating No. 2 Oil Cooler Hose And Claws
Courtesy of TOYOTA MOTOR SALES, U.S.A., INC.

43. **DISCONNECT OIL COOLER OUTLET HOSE**
    a. Using pliers, grip the claws of the clip and slide the clip to disconnect the oil cooler outlet hose.

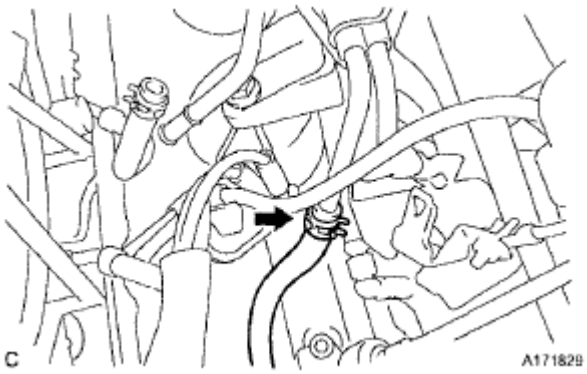

Fig. 284: Locating Oil Cooler Outlet Hose And Claws
Courtesy of TOYOTA MOTOR SALES, U.S.A., INC.

 © 2011 Mitchell Repair Information Company, LLC.

44. **DISCONNECT TRANSMISSION CONTROL CABLE ASSEMBLY**
    a. Remove the nut from the control shaft lever.
    b. Disconnect the transmission control cable assembly from the control shaft lever.

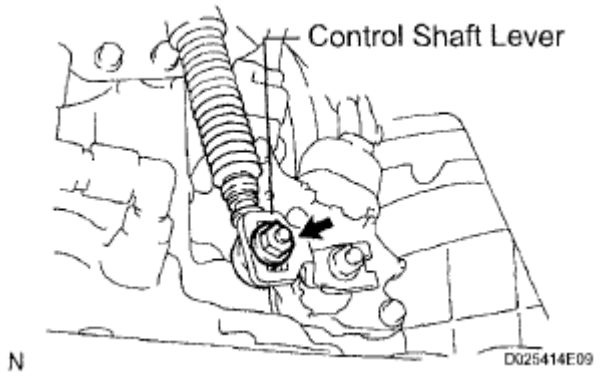

Fig. 285: Locating Control Shaft Lever
Courtesy of TOYOTA MOTOR SALES, U.S.A., INC.

    c. Remove the clip and disconnect the transmission control cable assembly from the control cable bracket.

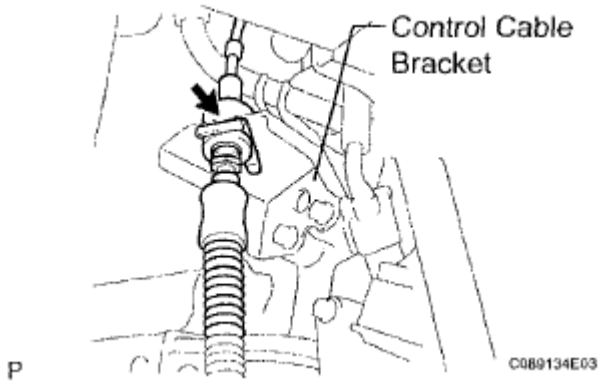

Fig. 286: Identifying Control Cable Bracket
Courtesy of TOYOTA MOTOR SALES, U.S.A., INC.

    d. Disconnect the transmission control cable assembly from the control cable clamp.
45. **DISCONNECT ENGINE WIRE**
    a. Disconnect the engine wire from the engine room relay block.
        1. Remove the No. 1 relay block cover.

 © 2011 Mitchell Repair Information Company, LLC.

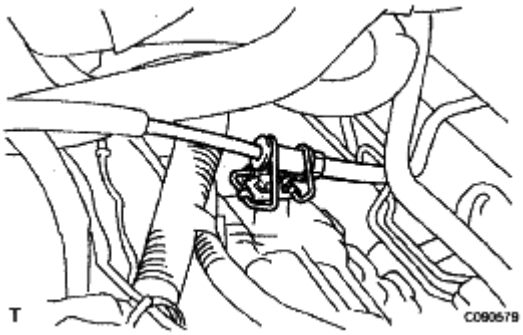

Fig. 287: Identifying Control Cable And Control Cable Clamp
Courtesy of TOYOTA MOTOR SALES, U.S.A., INC.

2. Remove the nut.
3. Disconnect the engine wire connector from the engine room relay block.
4. Unlock the engine wire. Pull the engine room wire.

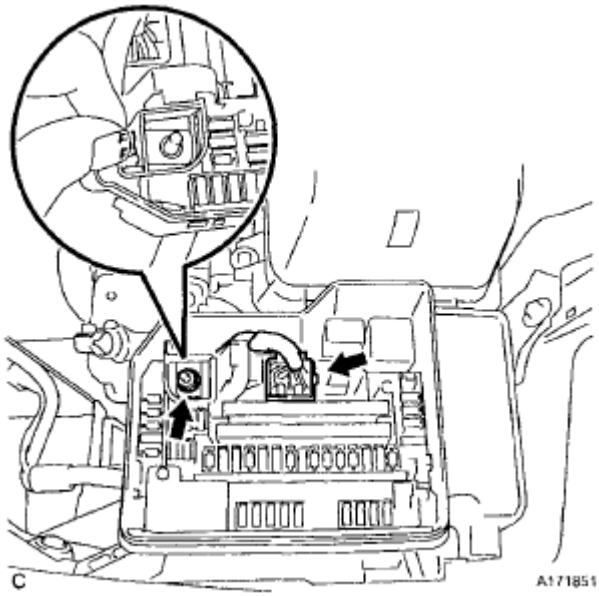

Fig. 288: Locating Engine Room Relay Block
Courtesy of TOYOTA MOTOR SALES, U.S.A., INC.

b. Disconnect the engine wire clamp.

 © 2011 Mitchell Repair Information Company, LLC.

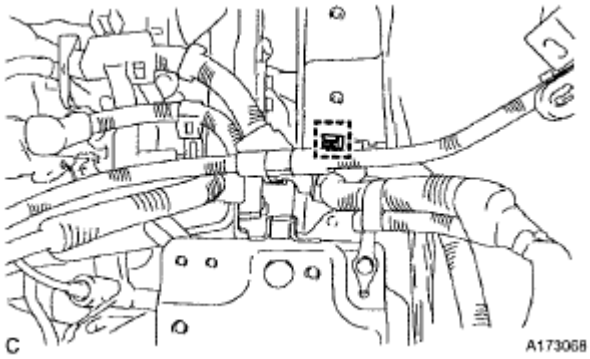

Fig. 289: Identifying Engine Wire Clamp
Courtesy of TOYOTA MOTOR SALES, U.S.A., INC.

c. Remove the bolt, and separate the ground cables.

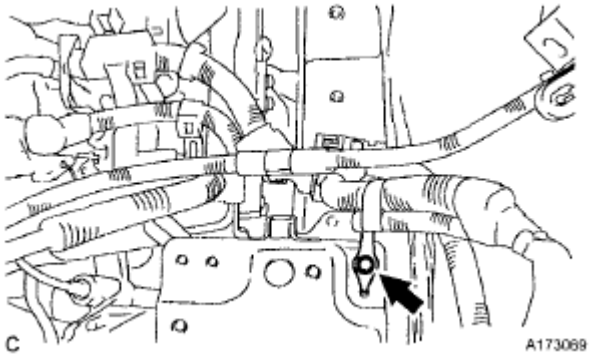

Fig. 290: Locating Ground Cables Bolt
Courtesy of TOYOTA MOTOR SALES, U.S.A., INC.

d. Disconnect the heated oxygen sensor connector and clamp.

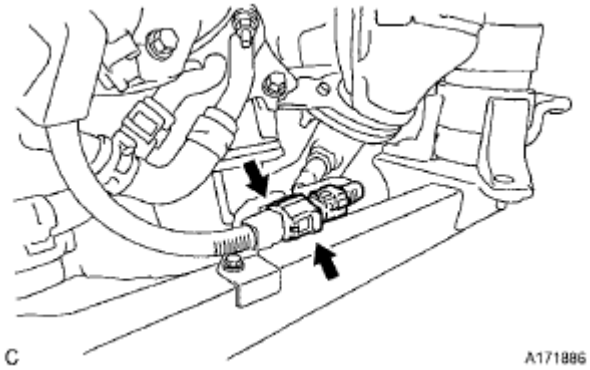

Fig. 291: Locating Heated Oxygen Sensor Connector And Clamp
Courtesy of TOYOTA MOTOR SALES, U.S.A., INC.

e. Remove the 2 bolts, clip and 2 ground cables.

 © 2011 Mitchell Repair Information Company, LLC.

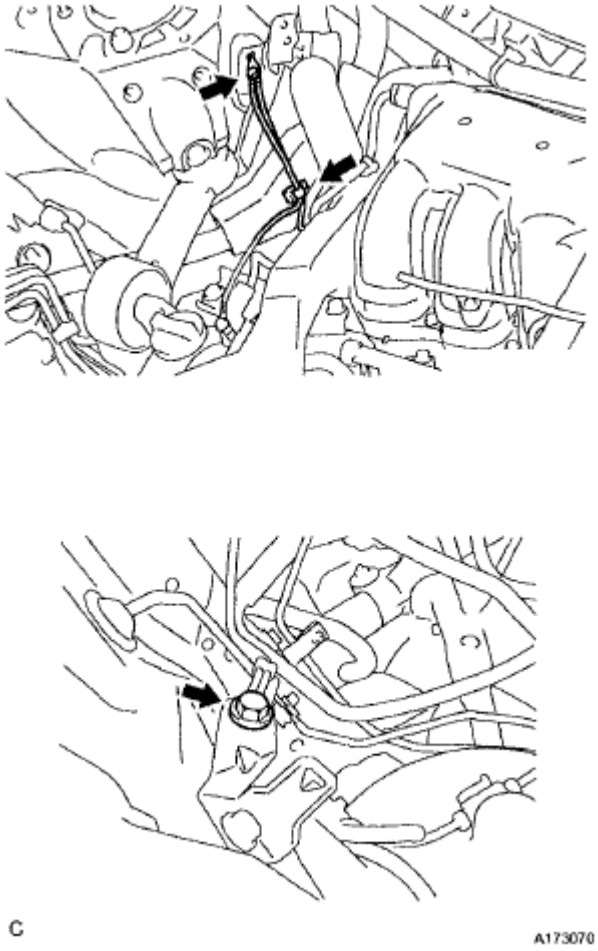

Fig. 292: Locating Ground Cables, Clip And Bolts
Courtesy of TOYOTA MOTOR SALES, U.S.A., INC.

f. Disconnect the 3 ECM connectors, 2 junction block connectors and clamp.

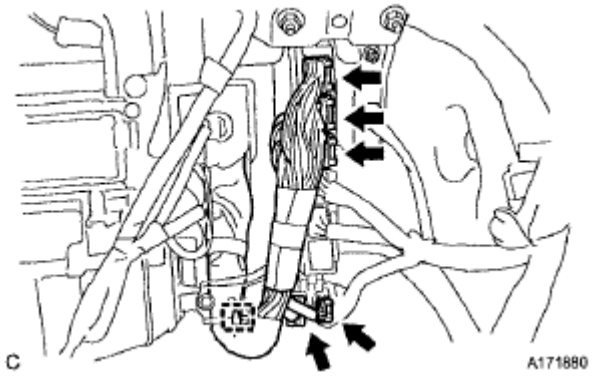

Fig. 293: Identifying Junction Block Connectors And Clamp
Courtesy of TOYOTA MOTOR SALES, U.S.A., INC.

g. Remove the 2 nuts and clamp, and separate the engine wire from the body.

 © 2011 Mitchell Repair Information Company, LLC.

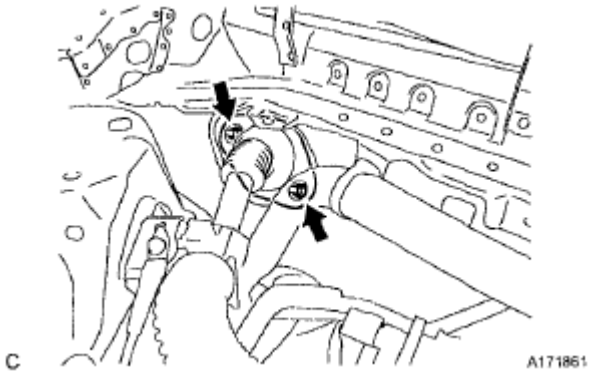

Fig. 294: Identifying Engine Wire, Clamp And Nuts
Courtesy of TOYOTA MOTOR SALES, U.S.A., INC.

46. **DISCONNECT UNION TO CHECK VALVE HOSE**
    a. Using pliers, grip the claws of the clip and slide the clip to disconnect the union to check valve hose.
47. **REMOVE PROPELLER WITH CENTER BEARING SHAFT ASSEMBLY (for 4WD)** (See **REMOVAL**)
48. **REMOVE TAIL EXHAUST PIPE ASSEMBLY** (See **REMOVAL**)
49. **REMOVE CENTER EXHAUST PIPE ASSEMBLY** (See **REMOVAL**)

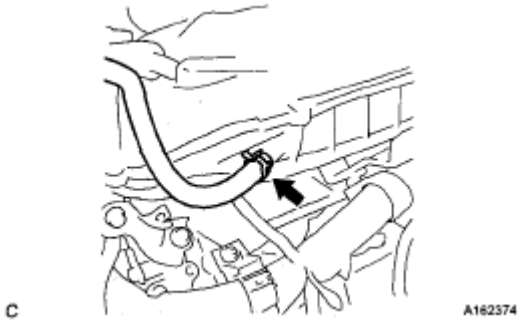

Fig. 295: Locating Front Exhaust Pipe Clip
Courtesy of TOYOTA MOTOR SALES, U.S.A., INC.

50. **REMOVE FRONT NO. 3 EXHAUST PIPE SUB-ASSEMBLY** (See **REMOVAL**)
51. **REMOVE FRONT EXHAUST PIPE ASSEMBLY** (See **INSTALLATION**)
52. **DISCONNECT FRONT STABILIZER LINK ASSEMBLY LH** (See **REMOVAL**)
53. **DISCONNECT FRONT STABILIZER LINK ASSEMBLY RH**

    HINT:

    Use the same procedure described for the LH side.

54. **REMOVE FRONT AXLE HUB NUT LH** (See **REMOVAL**)

 © 2011 Mitchell Repair Information Company, LLC.

55. **REMOVE FRONT AXLE HUB NUT RH**

    HINT:

    Use the same procedure described for the LH side.

56. **DISCONNECT FRONT SPEED SENSOR LH** (See **REMOVAL**)
57. **DISCONNECT FRONT SPEED SENSOR RH**

    HINT:

    Use the same procedure described for the LH side.

58. **DISCONNECT TIE ROD ASSEMBLY LH** (See **REMOVAL**)
59. **DISCONNECT TIE ROD ASSEMBLY RH**

    HINT:

    Use the same procedure described for the LH side.

60. **SEPARATE NO. 1 FRONT SUSPENSION LOWER ARM LH** (See **REMOVAL**)
61. **SEPARATE NO. 1 FRONT SUSPENSION LOWER ARM RH**

    HINT:

    Use the same procedure described for the LH side.

62. **SEPARATE FRONT AXLE ASSEMBLY LH** (See **REMOVAL**)
63. **SEPARATE FRONT AXLE ASSEMBLY RH**

    HINT:

    Use the same procedure described for the LH side.

64. **DISCONNECT STEERING INTERMEDIATE SHAFT SUB-ASSEMBLY**
65. **DISCONNECT DISCHARGE HOSE SUB-ASSEMBLY** (See **REMOVAL**)
66. **DISCONNECT SUCTION HOSE SUB-ASSEMBLY** (See **REMOVAL**)
67. **REMOVE ENGINE ASSEMBLY WITH TRANSAXLE**
    a. Set the engine lifter.
    b. Remove the 6 bolts, 2 nuts, and frame side rail plates RH and LH.

 © 2011 Mitchell Repair Information Company, LLC.

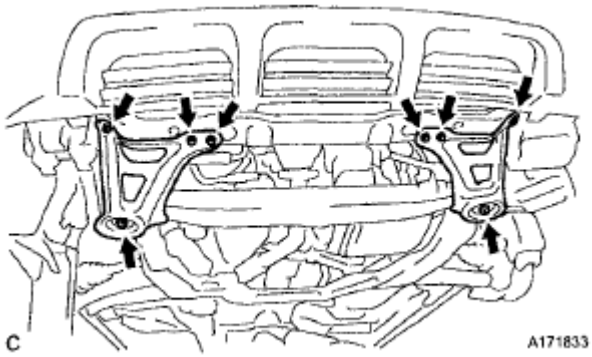

Fig. 296: Locating Frame Side Rail Plates, Bolts And Nuts
Courtesy of TOYOTA MOTOR SALES, U.S.A., INC.

c. Remove the 6 bolts, 2 nuts, and front suspension member rear braces RH and LH.
d. Operate the engine lifter, then remove the engine assembly from the vehicle.

NOTE: Make sure that the engine is clear of all wiring and hoses.

68. **REMOVE V-RIBBED BELT** (See **REMOVAL**)
69. **REMOVE FRONT STABILIZER BAR (for 4WD)**

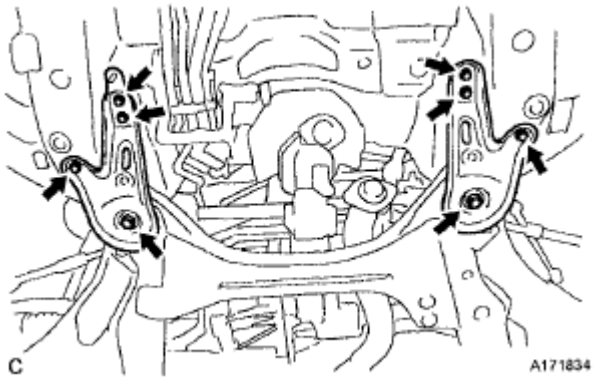

Fig. 297: Locating Front Suspension Member Rear Braces, Bolt And Nuts
Courtesy of TOYOTA MOTOR SALES, U.S.A., INC.

HINT:

See **REMOVAL** .

70. **REMOVE POWER STEERING LINK ASSEMBLY (for 4WD)** (See **REMOVAL**)
71. **REMOVE COMPRESSOR AND MAGNETIC CLUTCH**
    a. Disengage the clamp.
    b. Disconnect the connector.

 © 2011 Mitchell Repair Information Company, LLC.

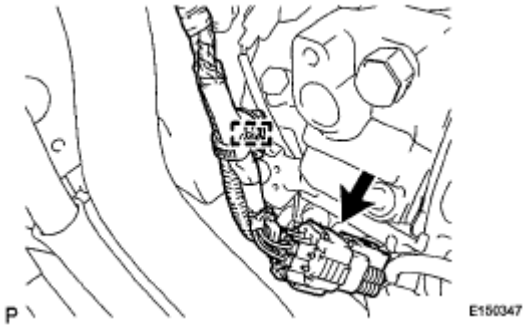

Fig. 298: Locating Compressor And Magnetic Clutch
Courtesy of TOYOTA MOTOR SALES, U.S.A., INC.

c. Disengage each clamp.

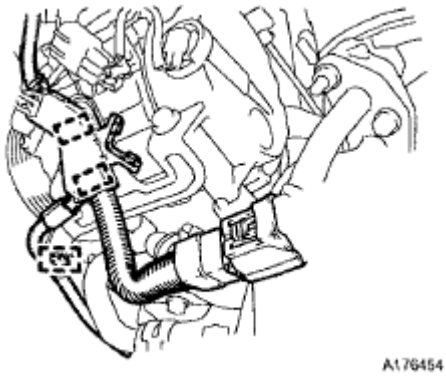

Fig. 299: Identifying Compressor Clamp
Courtesy of TOYOTA MOTOR SALES, U.S.A., INC.

d. Remove the 4 bolts and the compressor and magnetic clutch.

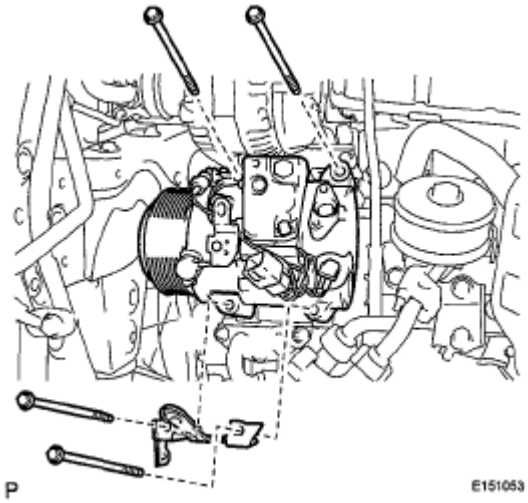

Fig. 300: Identifying Compressor, Magnetic Clutch And Bolt

 © 2011 Mitchell Repair Information Company, LLC.

Courtesy of TOYOTA MOTOR SALES, U.S.A., INC.

72. **REMOVE VENTILATION HOSE**
    a. Using pliers, grip the claws of the 2 clips and slide the 2 clips to remove the ventilation hose.

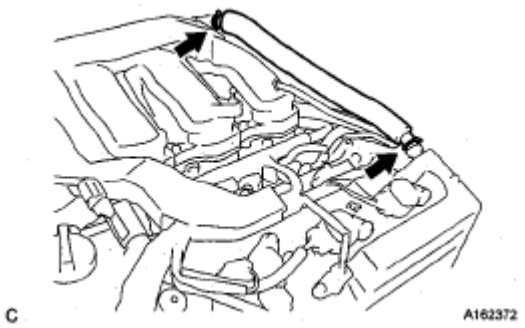

Fig. 301: Removing Ventilation Hose
Courtesy of TOYOTA MOTOR SALES, U.S.A., INC.

73. **REMOVE INTAKE AIR SURGE TANK ASSEMBLY**
    a. Disconnect the 2 water by-pass hoses from the throttle with motor body assembly (*1).
    b. Disconnect the vapor feed hose (*2).
    c. Disconnect the throttle with motor body assembly connector and clamp (*3).
    d. Disconnect the No. 1 ventilation hose.

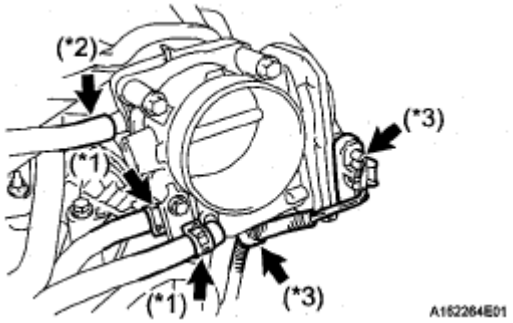

Fig. 302: Disconnecting No. 1 Ventilation Hose
Courtesy of TOYOTA MOTOR SALES, U.S.A., INC.

    e. Disconnect the connector.
    f. Remove the 4 bolts, No. 1 surge tank stay and throttle body bracket.

 © 2011 Mitchell Repair Information Company, LLC.

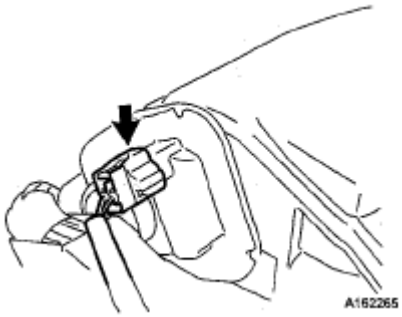

Fig. 303: Removing Bolts, No. 1 Surge Tank Stay And Throttle Body Bracket
Courtesy of TOYOTA MOTOR SALES, U.S.A., INC.

g. Using a 5 mm socket hexagon wrench, remove the 4 bolts (*4).
h. Remove the 2 nuts and intake air surge tank (*5).
i. Remove the gasket from the intake air surge tank.

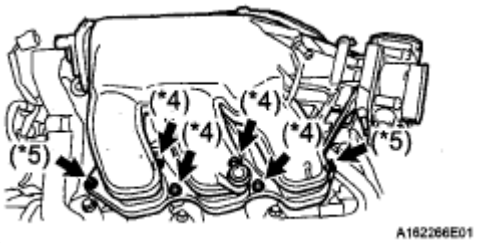

Fig. 304: Removing Bolts And Ignition Coils
Courtesy of TOYOTA MOTOR SALES, U.S.A., INC.

74. **REMOVE ENGINE WIRE**
    a. Disconnect the oil pressure switch cover and clamp.

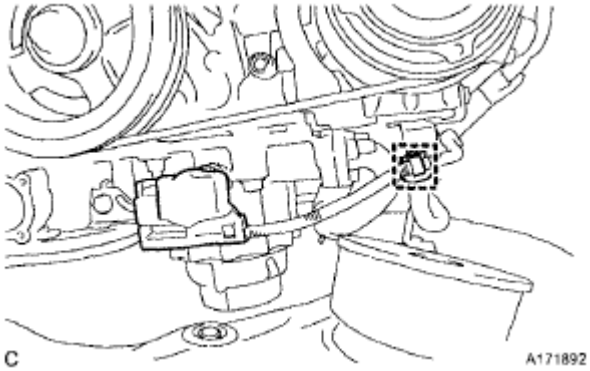

Fig. 305: Identifying Oil Pressure Switch Cover And Clamp
Courtesy of TOYOTA MOTOR SALES, U.S.A., INC.

b. Disconnect the oil pressure switch assembly connector.

 © 2011 Mitchell Repair Information Company, LLC.

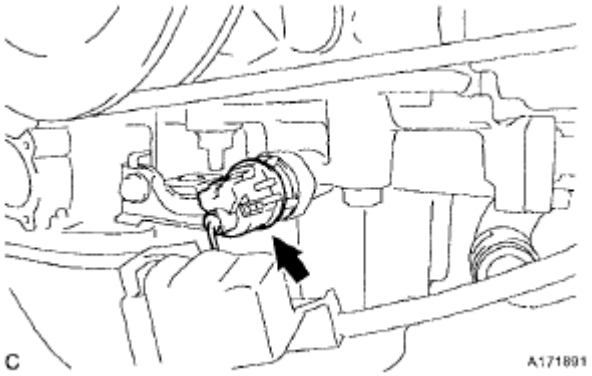

Fig. 306: Locating Oil Pressure Switch Assembly Connector
Courtesy of TOYOTA MOTOR SALES, U.S.A., INC.

c. Disconnect the crankshaft position sensor connector and clamp.

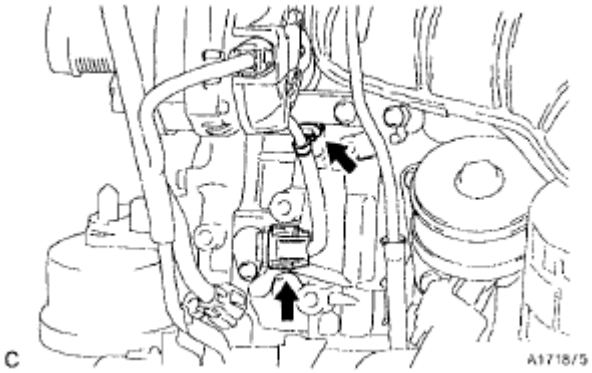

Fig. 307: Locating Crankshaft Position Sensor Connector And Clamp
Courtesy of TOYOTA MOTOR SALES, U.S.A., INC.

d. Disconnect the generator assembly connector and clamp.
e. Remove the nut and separate the engine wire from the generator assembly.

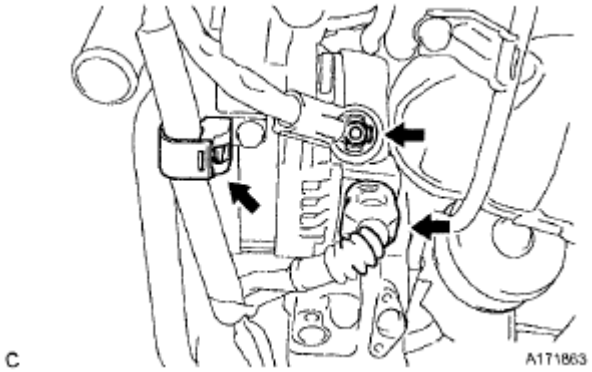

Fig. 308: Locating Generator Assembly Connector And Clamp
Courtesy of TOYOTA MOTOR SALES, U.S.A., INC.

 © 2011 Mitchell Repair Information Company, LLC.

f. Disconnect the purge VSV connector, air fuel ratio sensor connector and 2 clamps.

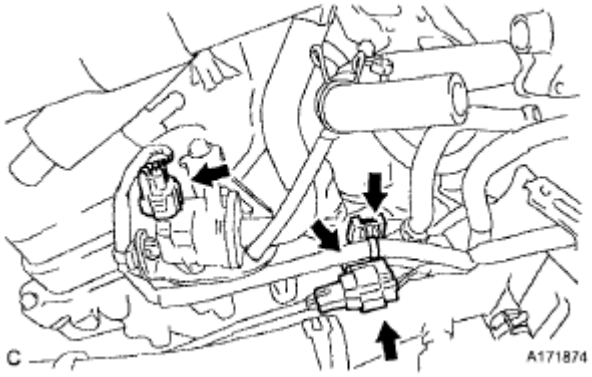

Fig. 309: Locating Purge VSV Connector, Air Fuel Ratio Sensor Connector And Clamps
Courtesy of TOYOTA MOTOR SALES, U.S.A., INC.

g. Remove the bolt.
h. Disconnect the engine coolant temperature sensor connector, knock control sensor wire connector and 2 clamps.
i. Disconnect the air fuel ratio sensor connector and clamp.
j. Remove the bolt and 2 nuts.

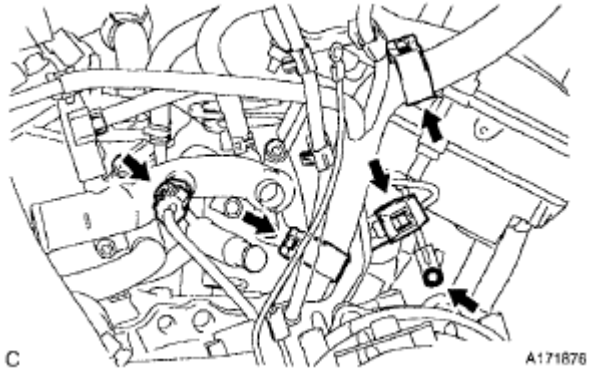

Fig. 310: Locating Engine Coolant Temperature Sensor Connector And Bolt
Courtesy of TOYOTA MOTOR SALES, U.S.A., INC.

 © 2011 Mitchell Repair Information Company, LLC.

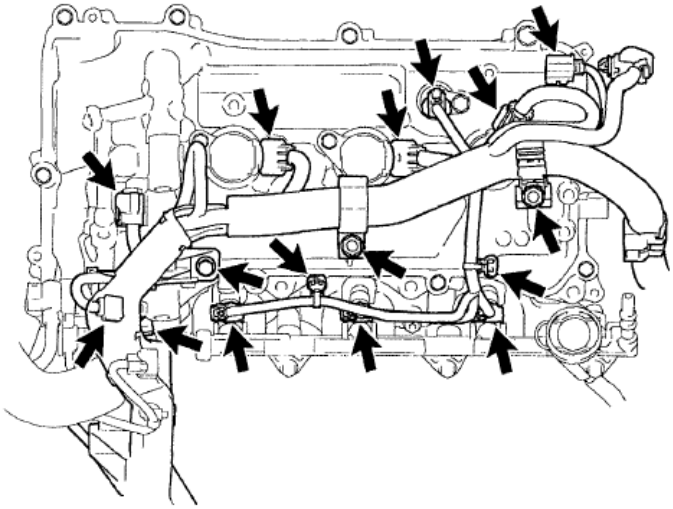

P A171856

Fig. 311: Locating Air Fuel Ratio Sensor Connector And Clamp
Courtesy of TOYOTA MOTOR SALES, U.S.A., INC.

k. Disconnect the 2 clamps, radio setting condenser connector, 3 ignition coil assembly connectors, 2 camshaft timing oil control valve assembly connectors, 2 VVT sensor connectors and 3 injector assembly connectors, and separate the engine wire from the cylinder head cover sub-assembly RH.

l. Remove the 3 bolts.

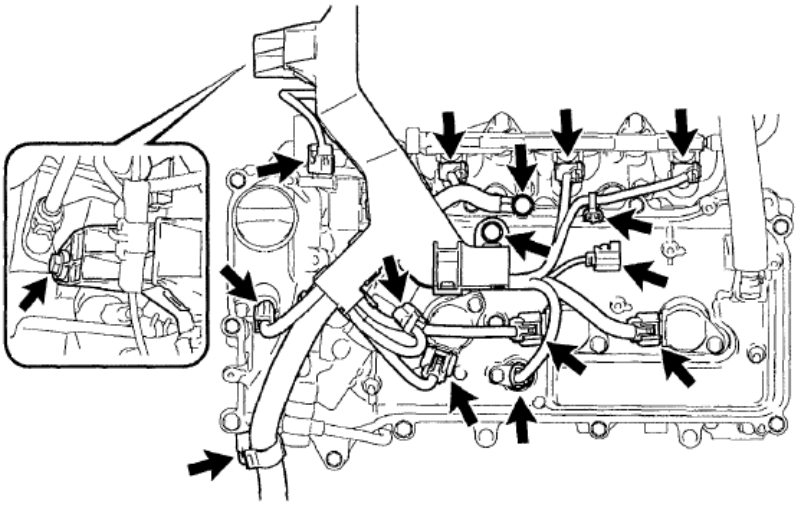

P A171857

Fig. 312: Locating Cylinder Head Cover Sub-Assembly RH And Bolt
Courtesy of TOYOTA MOTOR SALES, U.S.A., INC.

m. Disconnect the 2 clamps, radio setting condenser connector, 3 ignition coil assembly connectors, 2 camshaft timing oil control valve assembly connectors, 2 VVT sensor connectors and 3 injector assembly connectors, and separate the engine wire from the engine assembly.

75. **REMOVE STARTER ASSEMBLY** (See **REMOVAL**)

 © 2011 Mitchell Repair Information Company, LLC.

76. **REMOVE TRANSVERSE ENGINE MOUNTING BRACKET**
    a. Remove the 3 bolts and transverse engine mounting bracket.

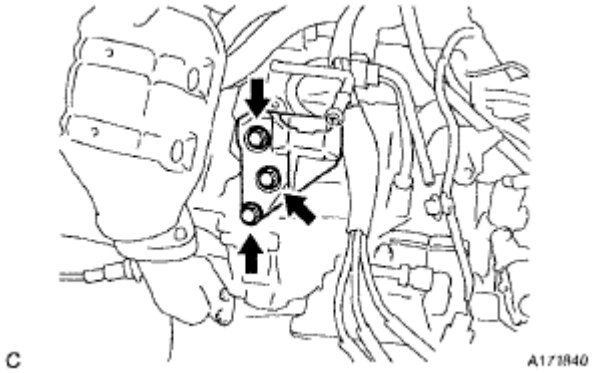

Fig. 313: Locating Transverse Engine Mounting Bracket Bolt
Courtesy of TOYOTA MOTOR SALES, U.S.A., INC.

77. **REMOVE MANIFOLD STAY**
    a. Remove the bolt, nut, and manifold stay.

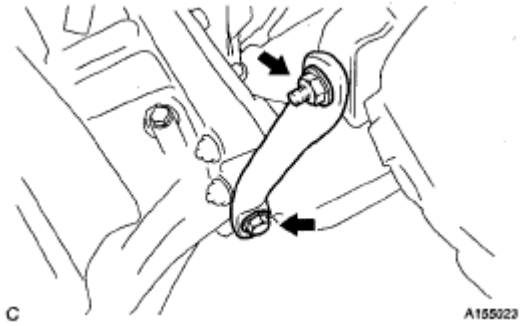

Fig. 314: Removing Bolt, Nut, And Manifold Stay
Courtesy of TOYOTA MOTOR SALES, U.S.A., INC.

78. **INSTALL ENGINE HANGERS**
    a. Install the 2 engine hangers with the 4 bolts as shown in the illustration.

    Part No.:

    No. 1 engine hanger 12281-31120

    No. 2 engine hanger 12282-31100

    Bolts 91671-10825

    Torque: 33 N*m (337 kgf*cm, 24 ft.*lbf)

 © 2011 Mitchell Repair Information Company, LLC.

b. Attach the engine sling device and hang the engine with the chain block.

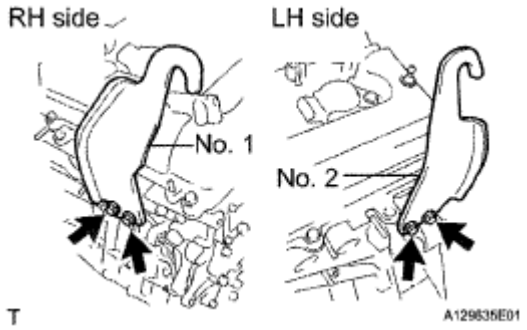

Fig. 315: Locating Engine Hangers With Bolts
Courtesy of TOYOTA MOTOR SALES, U.S.A., INC.

79. **REMOVE FRONT FRAME ASSEMBLY**
    a. Disconnect the active mount VSV connector and harness clamp.
    b. Loosen the 3 nuts.

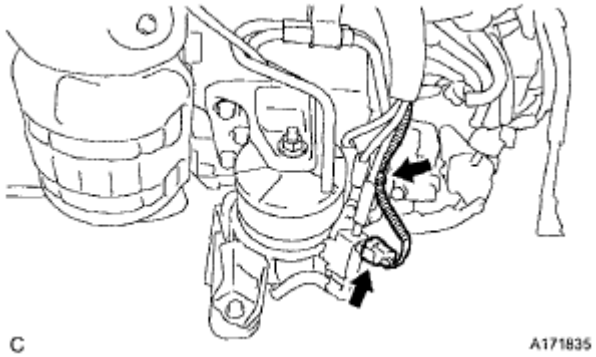

Fig. 316: Locating Active Mount VSV Connector And Nut
Courtesy of TOYOTA MOTOR SALES, U.S.A., INC.

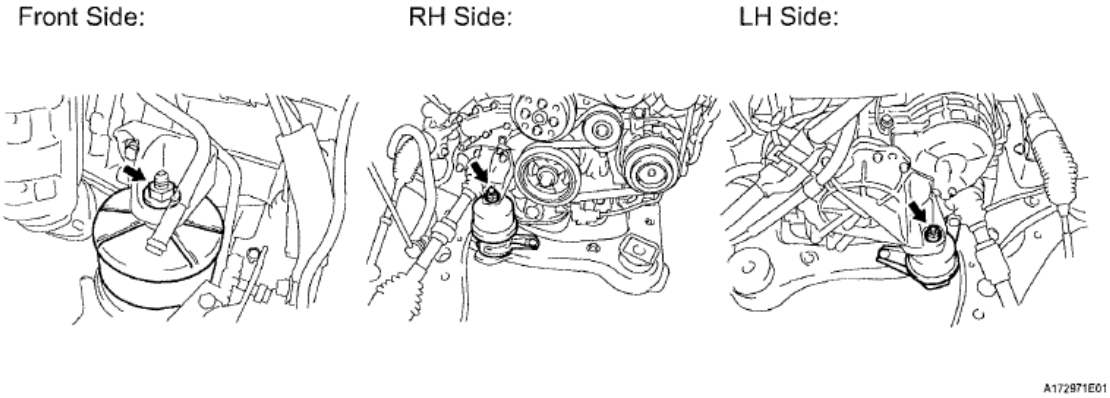

Fig. 317: Locating Active Mount VSV Connector And Harness Clamp
Courtesy of TOYOTA MOTOR SALES, U.S.A., INC.

 © 2011 Mitchell Repair Information Company, LLC.

c. Remove the 5 hole plugs.

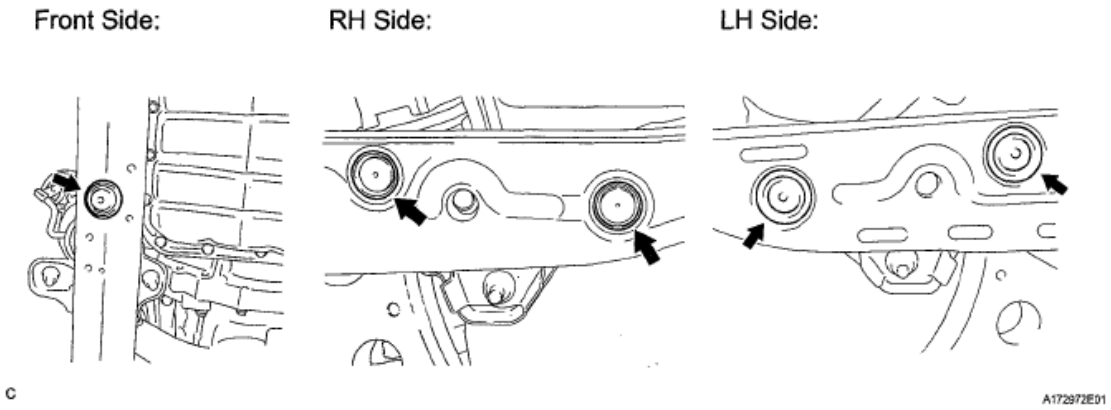

Fig. 318: Locating Hole Plugs
Courtesy of TOYOTA MOTOR SALES, U.S.A., INC.

d. Remove the 9 nuts.

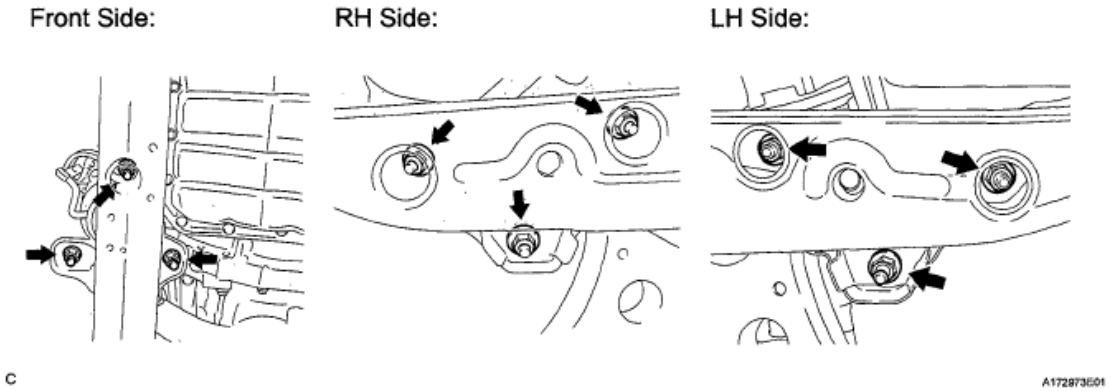

Fig. 319: Locating Front Frame Assembly And Nut
Courtesy of TOYOTA MOTOR SALES, U.S.A., INC.

e. Remove the 2 bolts and separate the engine with transaxle from the front frame assembly.

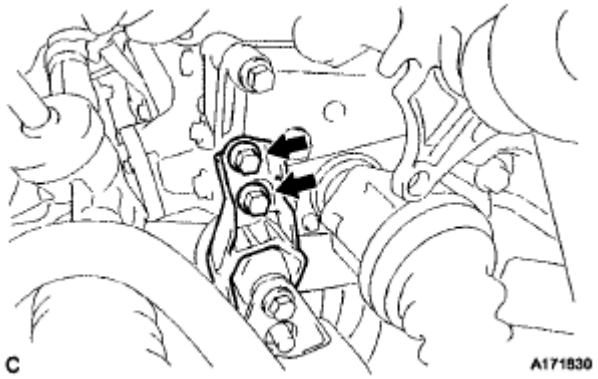

 © 2011 Mitchell Repair Information Company, LLC.

Fig. 320: Locating Front Frame Assembly And Bolts
Courtesy of TOYOTA MOTOR SALES, U.S.A., INC.

80. **REMOVE FRONT ENGINE MOUNTING INSULATOR ASSEMBLY**
    a. Remove the nut and front engine mounting insulator assembly.

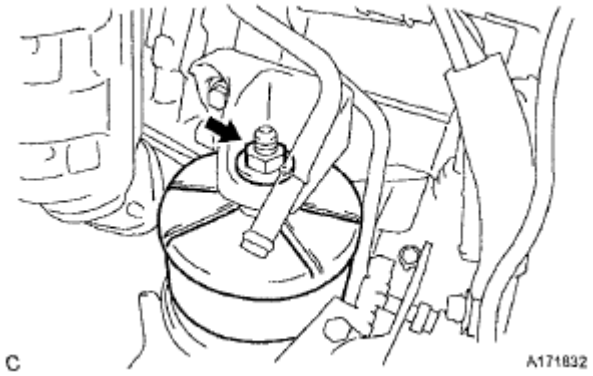

Fig. 321: Locating Front Engine Mounting Insulator Assembly And Nut
Courtesy of TOYOTA MOTOR SALES, U.S.A., INC.

81. **REMOVE TRANSVERSE ENGINE MOUNTING INSULATOR**
    a. Remove the nut and transverse engine mounting insulator.

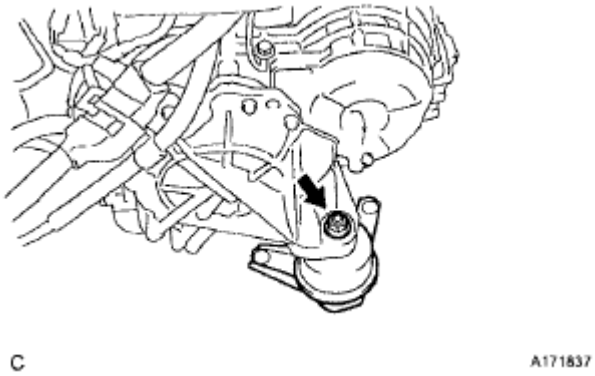

Fig. 322: Locating Transverse Engine Mounting Insulator And Nut
Courtesy of TOYOTA MOTOR SALES, U.S.A., INC.

82. **REMOVE TRANSVERSE ENGINE MOUNTING INSULATOR**
    a. Remove the nut and transverse engine mounting insulator.
83. **REMOVE FRONT DRIVE SHAFT ASSEMBLY LH** (See **REMOVAL**)
84. **REMOVE FRONT DRIVE SHAFT ASSEMBLY RH (for 2WD)** (See **DISASSEMBLY**)

 © 2011 Mitchell Repair Information Company, LLC.

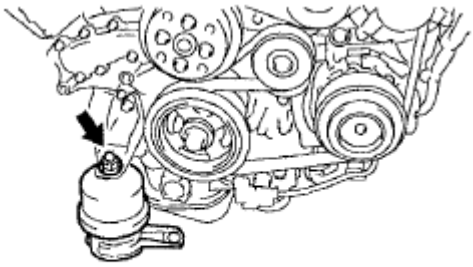

Fig. 323: Locating Transverse Engine Mounting Insulator And Nut
Courtesy of TOYOTA MOTOR SALES, U.S.A., INC.

85. **REMOVE FRONT DRIVE SHAFT ASSEMBLY RH (for 4WD)** (See **DISASSEMBLY**)
86. **REMOVE TRANSFER STIFFENER PLATE RH (for 4WD)** (See **REMOVAL**)
87. **REMOVE AUTOMATIC TRANSAXLE ASSEMBLY (for 2WD)** (See **REMOVAL**)
88. **REMOVE AUTOMATIC TRANSAXLE ASSEMBLY (for 4WD)** (See **INSTALLATION**)
89. **REMOVE DRIVE PLATE AND RING GEAR SUB-ASSEMBLY** (See **REMOVAL**)
90. **SECURE ENGINE**
    a. Secure the engine onto an engine stand with the bolts.
    b. Remove the engine hangers.

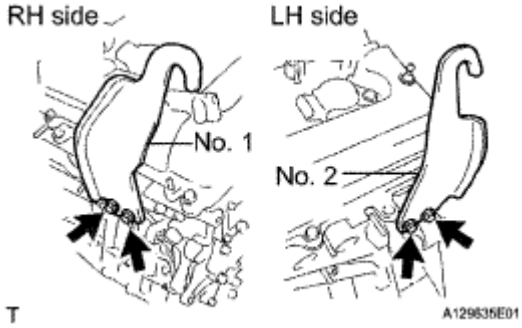

Fig. 324: Locating Engine Hangers With Bolts
Courtesy of TOYOTA MOTOR SALES, U.S.A., INC.

91. **REMOVE TRANSVERSE ENGINE MOUNTING INSULATOR**
    a. Remove the 2 hole plugs.

 © 2011 Mitchell Repair Information Company, LLC.

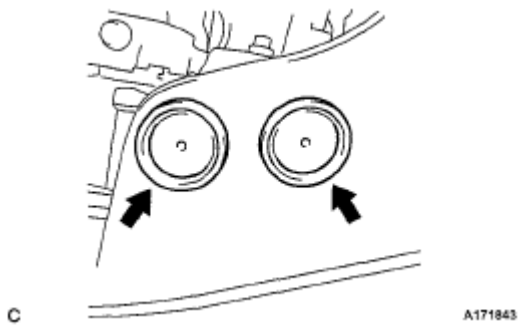

Fig. 325: Locating Hole Plugs
Courtesy of TOYOTA MOTOR SALES, U.S.A., INC.

b. Remove the 2 nuts and transverse engine mounting insulator.

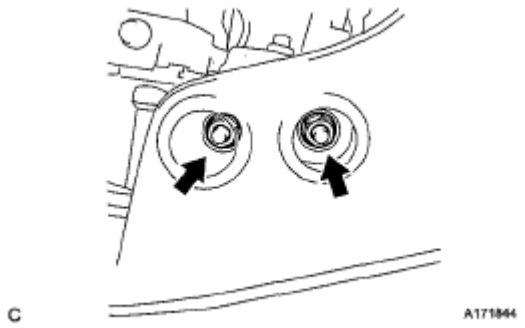

Fig. 326: Locating Transverse Engine Mounting Insulator And Nuts
Courtesy of TOYOTA MOTOR SALES, U.S.A., INC.

INSPECTION

1. **INSPECT EXHAUST MANIFOLD SUB-ASSEMBLY LH**
   a. Using a precision straightedge and feeler gauge, measure the warpage on the contact surface of the cylinder head.

      Maximum warpage: 0.7 mm (0.028 in.)

      HINT:

      The maximum allowable warpage of each installation surface is 0.3 mm (0.012 in.). If the warpage is greater than the maximum, replace the manifold.

 © 2011 Mitchell Repair Information Company, LLC.

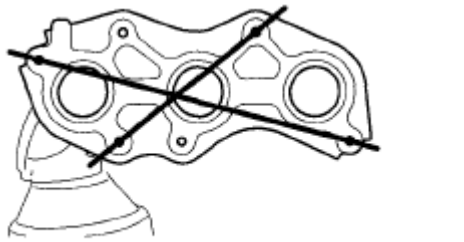

Fig. 327: Inspecting Exhaust Manifold Sub-Assembly LH
Courtesy of TOYOTA MOTOR SALES, U.S.A., INC.

2. **INSPECT EXHAUST MANIFOLD SUB-ASSEMBLY RH**
   a. Using a precision straightedge and feeler gauge, measure the warpage on the contact surface of the cylinder head.

      Maximum warpage: 0.7 mm (0.028 in.)

      HINT:

      The maximum allowable warpage of each installation surface is 0.3 mm (0.012 in.). If the warpage is greater than the maximum, replace the manifold.

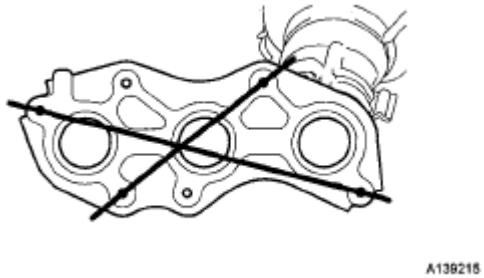

Fig. 328: Inspecting Exhaust Manifold Sub-Assembly RH
Courtesy of TOYOTA MOTOR SALES, U.S.A., INC.

3. **INSPECT INTAKE AIR SURGE TANK ASSEMBLY**
   a. Using a precision straightedge and feeler gauge, measure the warpage on the contact surface of the intake manifold.

      Maximum warpage:

      2.5 mm (0.098 in.)

      If the warpage is greater than the maximum, replace the surge tank.

 © 2011 Mitchell Repair Information Company, LLC.

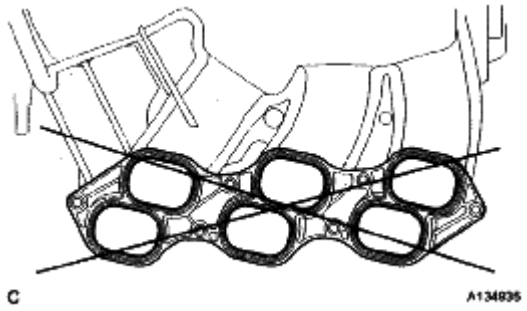

Fig. 329: Inspecting Intake Air Surge Tank Assembly
Courtesy of TOYOTA MOTOR SALES, U.S.A., INC.

4. **INSPECT INTAKE MANIFOLD**
   a. Cylinder head side:
      1. Using a precision straightedge and feeler gauge, measure the surface contacting the cylinder head for warpage.

         Maximum warpage:

         0.1 mm (0.003 in.)

         If the warpage is greater than the maximum, replace the intake manifold.

   b. Surge tank side:
      1. Using a precision straightedge and feeler gauge, measure the surface contacting the surge tank for warpage.

         Maximum warpage:

         0.1 mm (0.003 in.)

         If the warpage is greater than the maximum, replace the intake manifold.

 © 2011 Mitchell Repair Information Company, LLC.

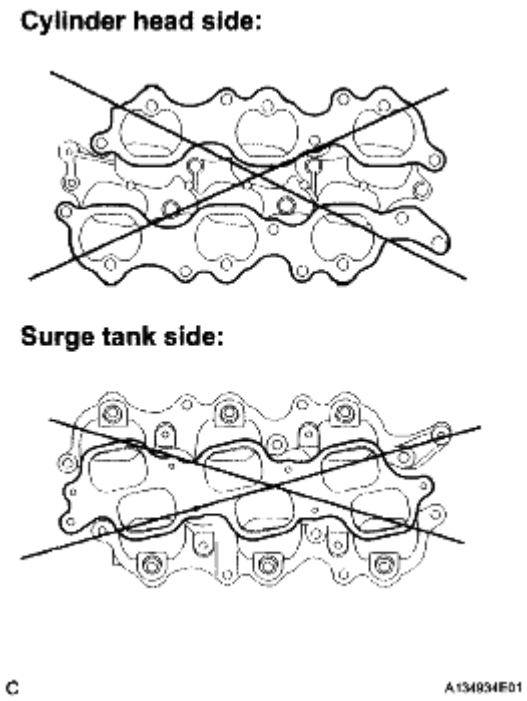

Fig. 330: Inspecting Intake Manifold
Courtesy of TOYOTA MOTOR SALES, U.S.A., INC.

INSTALLATION

1. **INSTALL TRANSVERSE ENGINE MOUNTING INSULATOR**
   a. Install the transverse engine mounting insulator with the 2 nuts.

   Torque: 52 N*m (525 kgf*cm, 38 ft.*lbf)

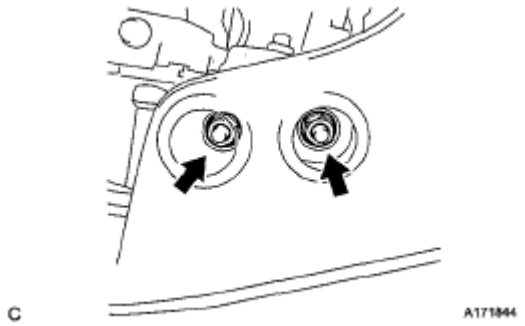

Fig. 331: Locating Transverse Engine Mounting Insulator And Nuts
Courtesy of TOYOTA MOTOR SALES, U.S.A., INC.

   b. Install the 2 hole plugs.

 © 2011 Mitchell Repair Information Company, LLC.

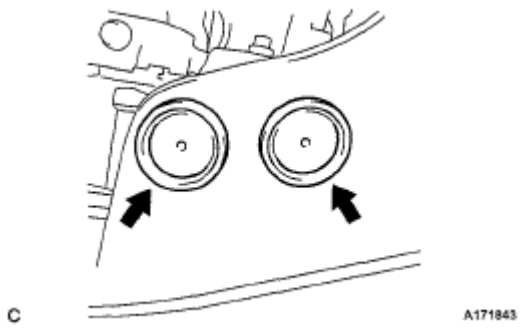

Fig. 332: Locating Hole Plugs
Courtesy of TOYOTA MOTOR SALES, U.S.A., INC.

2. **INSTALL ENGINE HANGERS**
   a. Install the 2 engine hangers with the 4 bolts as shown in the illustration.

      Part No.:

      No. 1 Engine hanger 12281-31120

      No. 2 Engine hanger 12282-31100

      Bolts 91671-10825

      Torque: 33 N*m (337 kgf*cm, 24 ft.*lbf)

   b. Attach the engine sling device and hang the engine with the chain block.

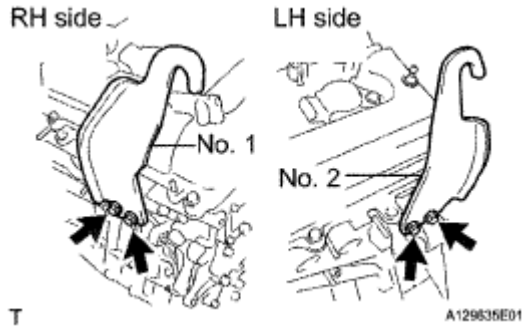

Fig. 333: Locating Engine Hangers With Bolts
Courtesy of TOYOTA MOTOR SALES, U.S.A., INC.

3. **REMOVE ENGINE STAND**
4. **INSTALL DRIVE PLATE AND RING GEAR SUB-ASSEMBLY** (See **INSTALLATION**)
5. **INSTALL AUTOMATIC TRANSAXLE ASSEMBLY (for 2WD)** (See **INSTALLATION**)
6. **INSTALL AUTOMATIC TRANSAXLE ASSEMBLY (for 4WD)** (See **INSTALLATION**)
7. **INSTALL TRANSFER STIFFENER PLATE RH (for 4WD)** (See **INSTALLATION**)

 © 2011 Mitchell Repair Information Company, LLC.

8. **INSTALL FRONT DRIVE SHAFT ASSEMBLY LH** (See **INSTALLATION**)
9. **INSTALL FRONT DRIVE SHAFT ASSEMBLY RH (for 2WD)** (See **INSTALLATION**)
10. **INSTALL FRONT DRIVE SHAFT ASSEMBLY RH (for 4WD)** (See **INSTALLATION**)
11. **INSTALL TRANSVERSE ENGINE MOUNTING BRACKET**
    a. Install the transverse engine mount bracket with the 3 bolts.

    Torque: 64 N*m (650 kgf*cm, 47 ft.*lbf)

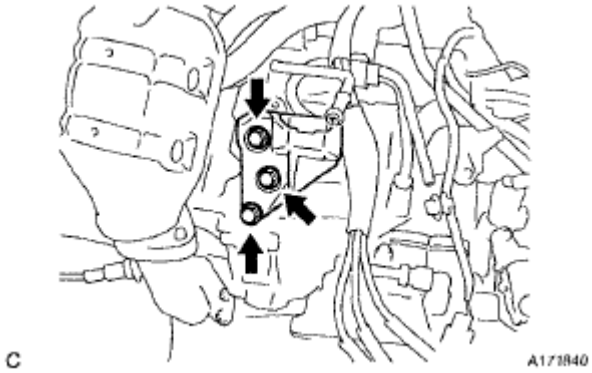

Fig. 334: Locating Transverse Engine Mounting Bracket Bolt
Courtesy of TOYOTA MOTOR SALES, U.S.A., INC.

12. **INSTALL FRONT ENGINE MOUNTING INSULATOR ASSEMBLY**
    a. Temporarily install the front engine mounting insulator assembly with the nut.

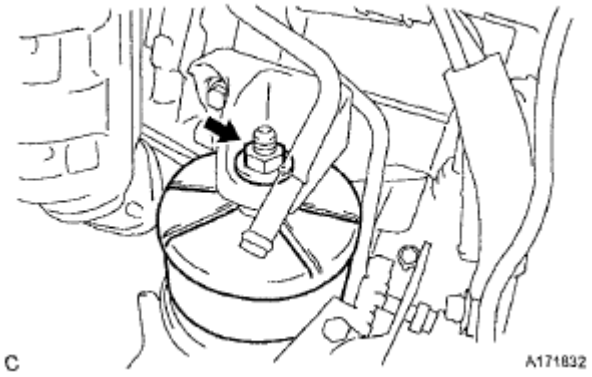

Fig. 335: Locating Front Engine Mounting Insulator Assembly And Nut
Courtesy of TOYOTA MOTOR SALES, U.S.A., INC.

13. **INSTALL TRANSVERSE ENGINE MOUNTING INSULATOR**
    a. Temporarily install the transverse engine mounting insulator with the nut.

 © 2011 Mitchell Repair Information Company, LLC.

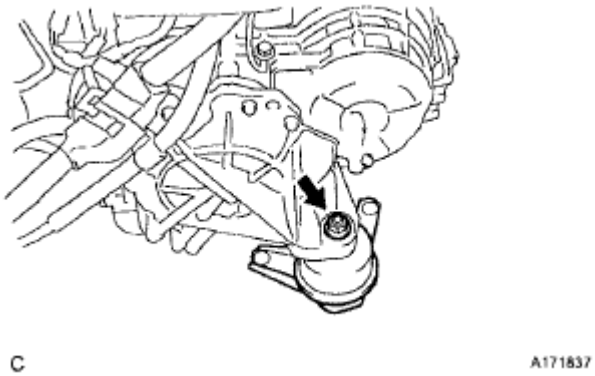

Fig. 336: Locating Transverse Engine Mounting Insulator And Nut
Courtesy of TOYOTA MOTOR SALES, U.S.A., INC.

14. **INSTALL TRANSVERSE ENGINE MOUNTING INSULATOR**
    a. Temporarily install the transverse mounting insulator with the nut.

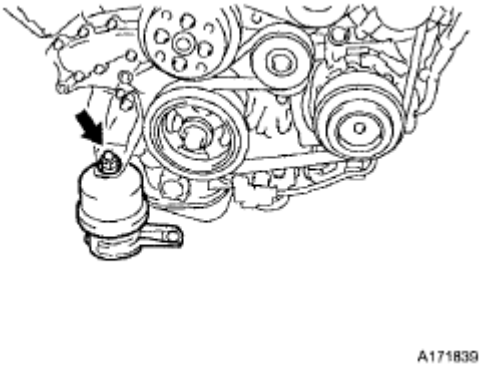

Fig. 337: Locating Transverse Engine Mounting Insulator And Nut
Courtesy of TOYOTA MOTOR SALES, U.S.A., INC.

15. **INSTALL FRONT FRAME ASSEMBLY**
    a. Temporarily install the engine assembly with transaxle with the 9 nuts and 2 bolts.

 © 2011 Mitchell Repair Information Company, LLC.

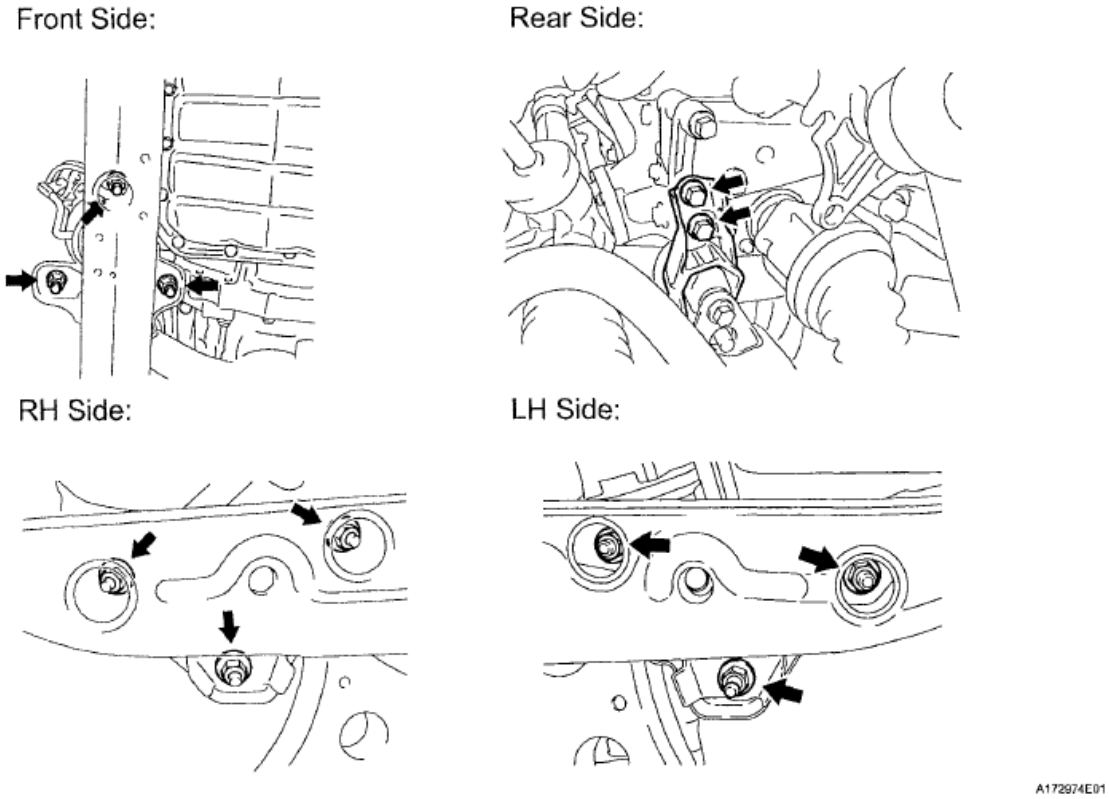

Fig. 338: Locating Engine Assembly, Transaxle Nuts And Bolts
Courtesy of TOYOTA MOTOR SALES, U.S.A., INC.

b. Tighten the 4 nuts.

Torque: A

87 N*m (887 kgf*cm, 64 ft.*lbf)

B

52 N*m (525 kgf*cm, 38 ft.*lbf)

 © 2011 Mitchell Repair Information Company, LLC.

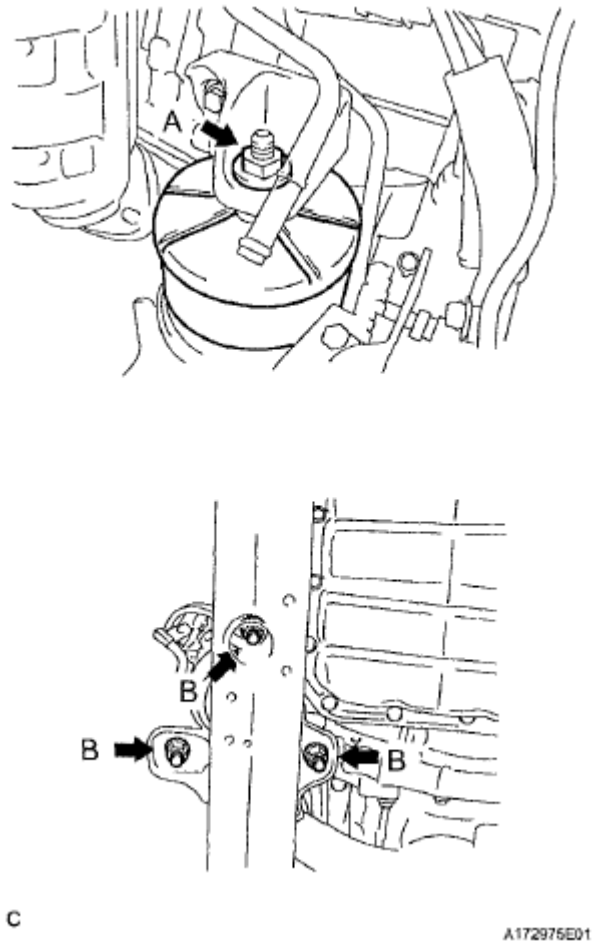

Fig. 339: Locating Transaxle Nuts
Courtesy of TOYOTA MOTOR SALES, U.S.A., INC.

c. Tighten the 4 nuts.

Torque: A

95 N*m (969 kgf*cm, 70 ft.*lbf)

B

87 N*m (887 kgf*cm, 64 ft.*lbf)

 © 2011 Mitchell Repair Information Company, LLC.

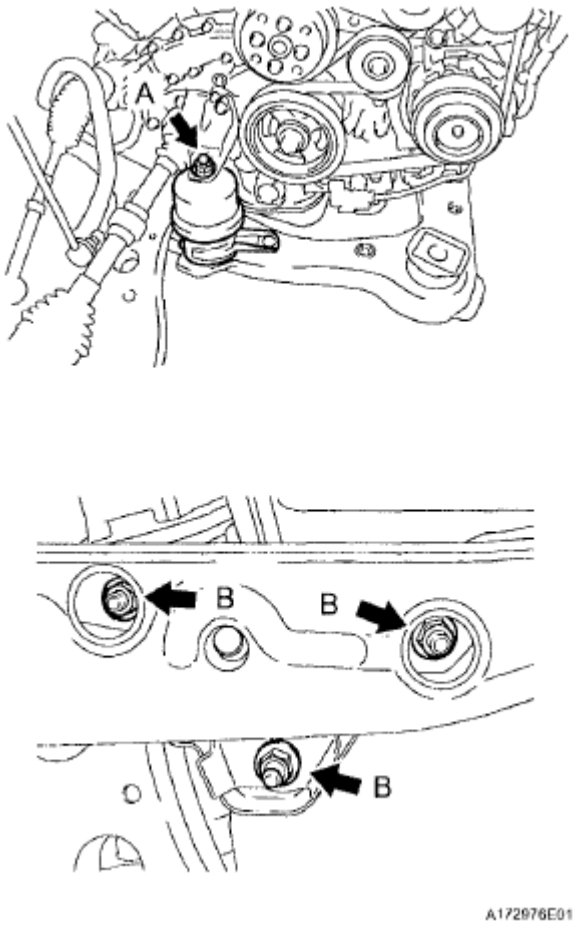

Fig. 340: Locating Transaxle Nuts
Courtesy of TOYOTA MOTOR SALES, U.S.A., INC.

d. Tighten the 4 nuts.

Torque: A

95 N*m (969 kgf*cm, 70 ft.*lbf)

B

87 N*m (887 kgf*cm, 64 ft.*lbf)

 © 2011 Mitchell Repair Information Company, LLC.

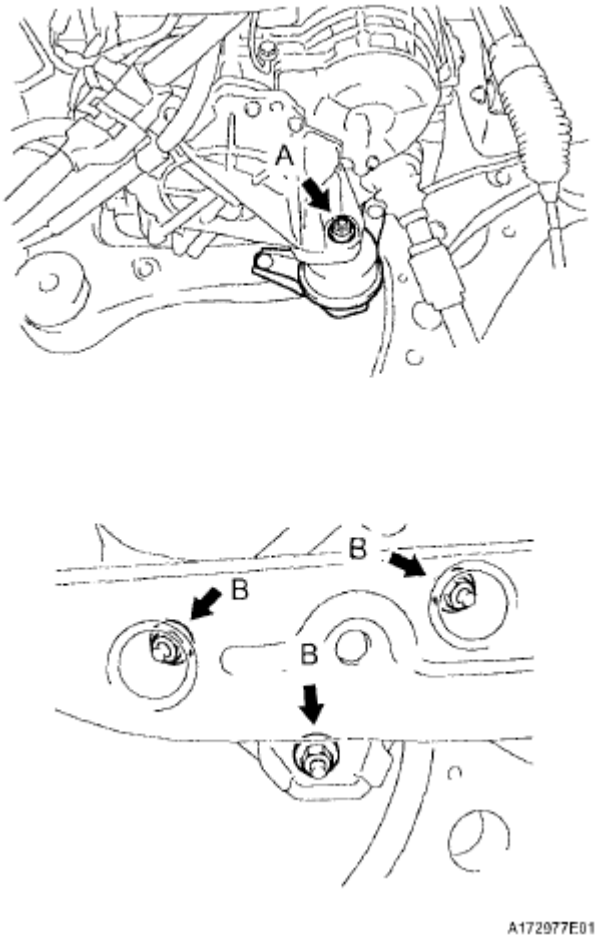

Fig. 341: Locating Transaxle Nuts
Courtesy of TOYOTA MOTOR SALES, U.S.A., INC.

e. Tighten the 2 bolts.

Torque: 78 N*m (795 kgf*cm, 58 ft.*lbf)

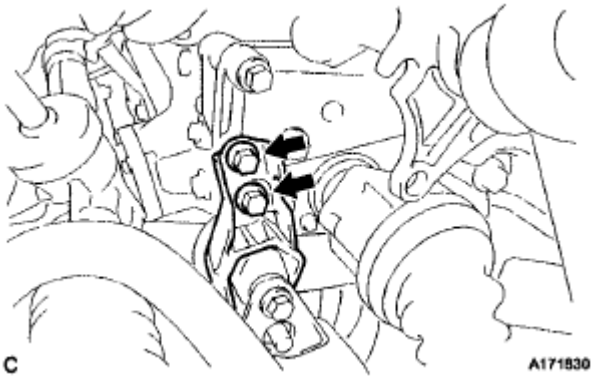

Fig. 342: Locating Transaxle Bolts
Courtesy of TOYOTA MOTOR SALES, U.S.A., INC.

f. Connect the duty vacuum switching valve connector and clamp.

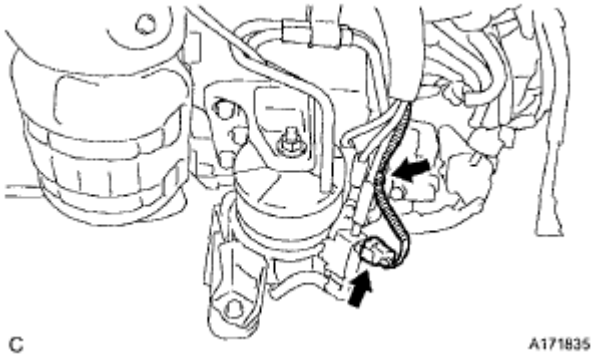

Fig. 343: Locating Duty Vacuum Switching Valve Connector And Clamp
Courtesy of TOYOTA MOTOR SALES, U.S.A., INC.

g. Install the 5 hole plugs.

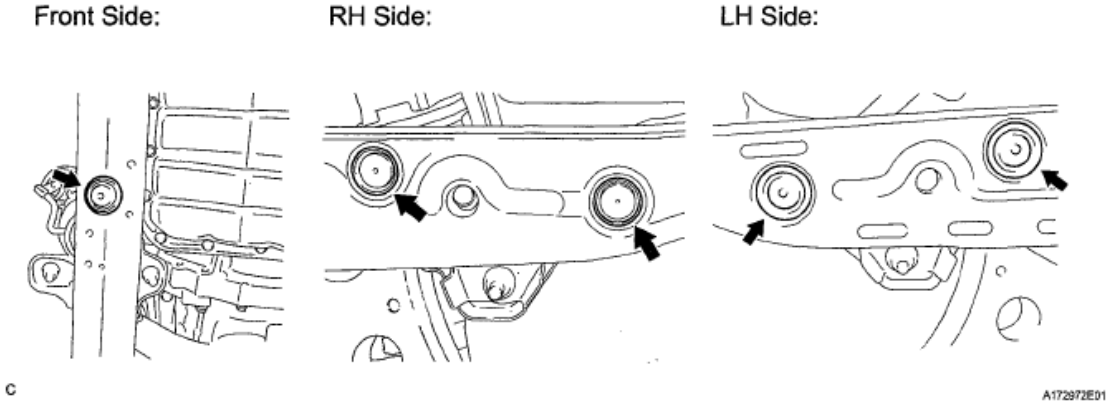

Fig. 344: Locating Hole Plugs
Courtesy of TOYOTA MOTOR SALES, U.S.A., INC.

16. **INSTALL POWER STEERING LINK ASSEMBLY (for 4WD)** (See **INSTALLATION**)
17. **INSTALL FRONT STABILIZER BAR**

    HINT:

    (See **INSTALLATION**).

18. **REMOVE ENGINE HANGERS**
    a. Remove the 4 bolts and 2 engine hangers.

 © 2011 Mitchell Repair Information Company, LLC.

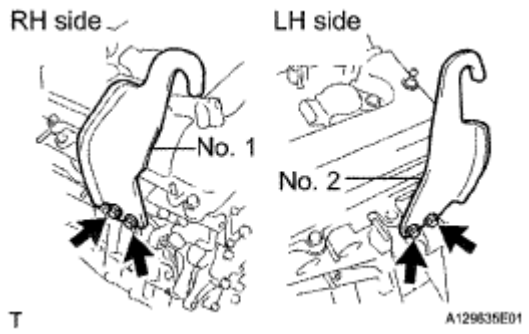

Fig. 345: Locating Engine Hangers With Bolts
Courtesy of TOYOTA MOTOR SALES, U.S.A., INC.

19. **INSTALL MANIFOLD STAY**
    a. Install the bolt, nut and manifold stay.

    Torque: 34 N*m (347 kgf*cm, 25 ft.*lbf)

20. **INSTALL STARTER ASSEMBLY** (See **INSTALLATION**)

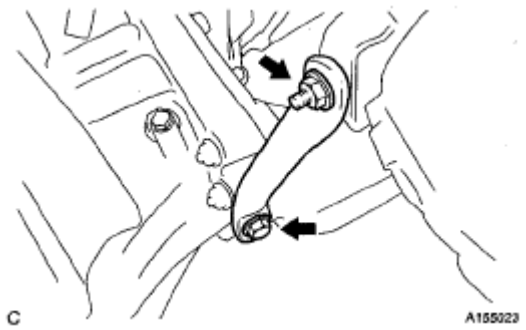

Fig. 346: Removing Bolt, Nut, And Manifold Stay
Courtesy of TOYOTA MOTOR SALES, U.S.A., INC.

21. **INSTALL ENGINE WIRE**
    a. Install the 3 bolts.

 © 2011 Mitchell Repair Information Company, LLC.

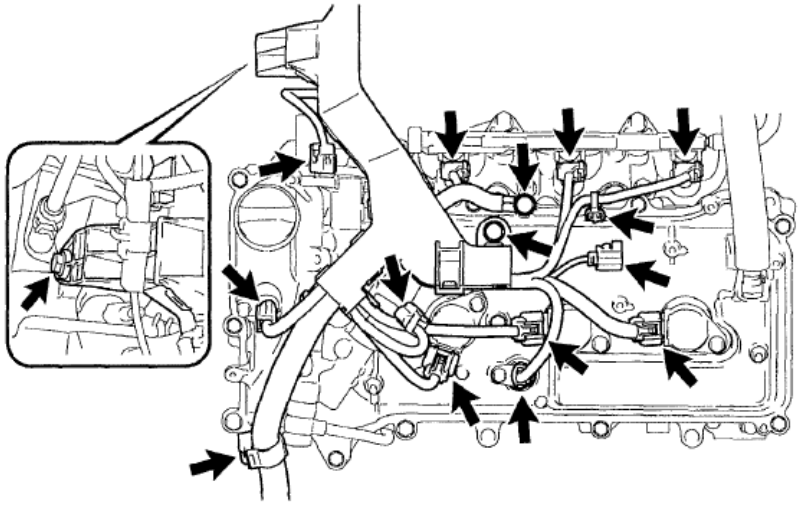

P A171857

Fig. 347: Locating Engine Wire Bolts
Courtesy of TOYOTA MOTOR SALES, U.S.A., INC.

Torque: 8.3 N*m (85 kgf*cm, 74 in.*lbf)

b. Connect the 2 clamps, 3 ignition coil assembly connectors, 2 camshaft timing oil control valve assembly connectors, 2 VVT sensor connectors, 3 injector assembly connectors and radio setting condenser connector.
c. Install the bolt and 2 nuts.

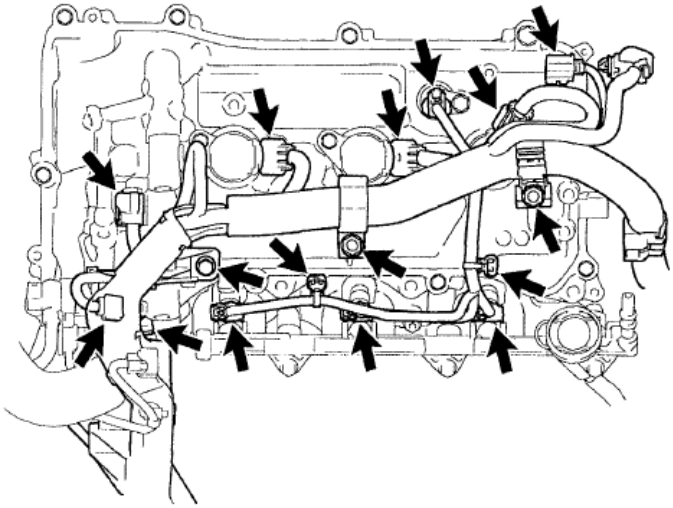

P A171856

Fig. 348: Locating Air Fuel Ratio Sensor Connector And Clamp
Courtesy of TOYOTA MOTOR SALES, U.S.A., INC.

Torque: 8.3 N*m (85 kgf*cm, 74 in.*lbf)

 © 2011 Mitchell Repair Information Company, LLC.

d. Connect the 2 clamps, 3 ignition coil assembly connectors, 2 camshaft timing oil control valve assembly connectors, 2 VVT sensor connectors and 3 injector connectors.
e. Connect the air fuel ratio sensor connector.
f. Connect the 2 clamps, engine coolant temperature sensor connector and knock control sensor wire connector.
g. Install the ground cable bolt.

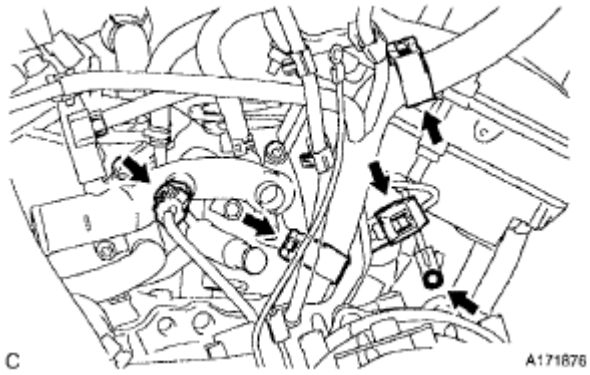

Fig. 349: Locating Engine Coolant Temperature Sensor Connector And Bolt
Courtesy of TOYOTA MOTOR SALES, U.S.A., INC.

h. Connect the purge VSV connector, air fuel ratio sensor connector and 2 clamps.

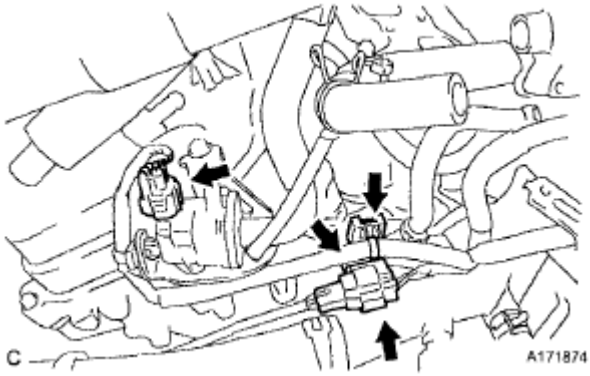

Fig. 350: Locating Purge VSV Connector, Air Fuel Ratio Sensor Connector And Clamps
Courtesy of TOYOTA MOTOR SALES, U.S.A., INC.

i. Install the nut.

Torque: 9.8 N*m (100 kgf*cm, 87 in.*lbf)

j. Connect the generator assembly connector and clamp.

 © 2011 Mitchell Repair Information Company, LLC.

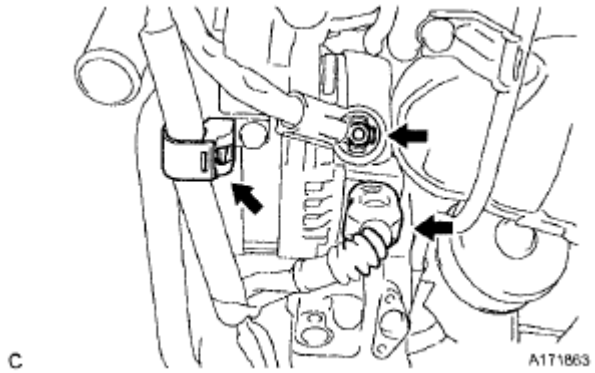

Fig. 351: Locating Generator Assembly Connector And Clamp
Courtesy of TOYOTA MOTOR SALES, U.S.A., INC.

k. Connect the crankshaft position sensor connector and clamp.

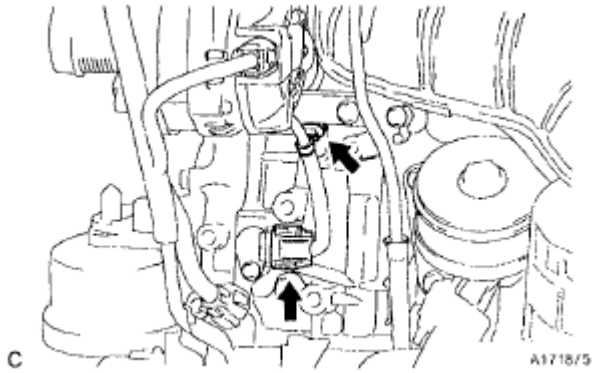

Fig. 352: Locating Crankshaft Position Sensor Connector And Clamp
Courtesy of TOYOTA MOTOR SALES, U.S.A., INC.

l. Connect the oil pressure switch assembly connector.

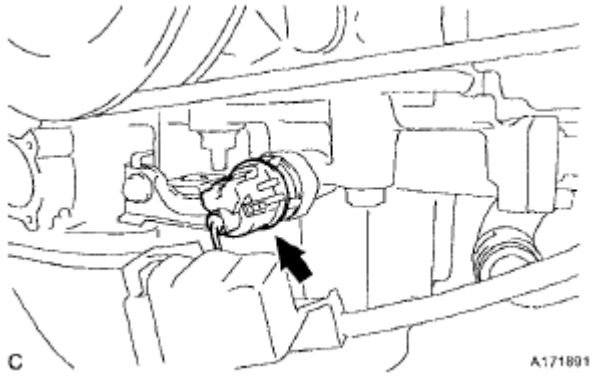

Fig. 353: Locating Oil Pressure Switch Assembly Connector
Courtesy of TOYOTA MOTOR SALES, U.S.A., INC.

 © 2011 Mitchell Repair Information Company, LLC.

m. Connect the oil pressure switch assembly cover.

22. **INSTALL INTAKE AIR SURGE TANK ASSEMBLY**

NOTE: Do not apply oil to the bolts as listed below:

BOLT SPECIFICATION

Oil Application Prohibited Bolt
Bolt for surge tank and intake manifold
Bolt for surge tank stay No. 1 and surge tank
Bolt for surge tank stay No. 1 and cylinder head cover
Bolt for throttle body bracket and surge tank
Bolt for throttle body bracket and cylinder head cover

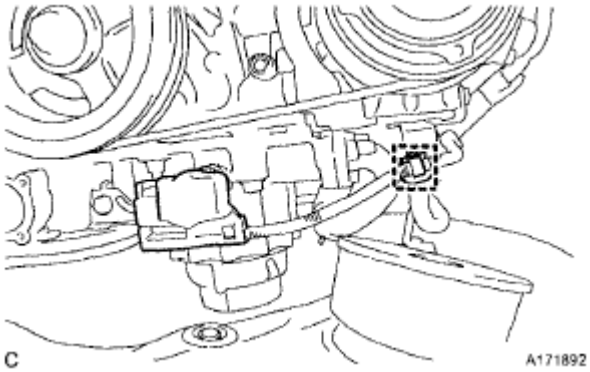

Fig. 354: Identifying Oil Pressure Switch Cover And Clamp
Courtesy of TOYOTA MOTOR SALES, U.S.A., INC.

a. Install a new gasket to the intake air surge tank.
b. Using a 5 mm hexagon socket wrench, install the 4 bolts and 2 nuts.

Torque: Bolt

18 N*m (184 kgf*cm, 13 ft.*lbf)

Nut

16 N*m (163 kgf*cm, 12 ft.*lbf)

c. Install the throttle body bracket, No. 1 surge tank stay and 4 bolts.

Torque: 21 N*m (214 kgf*cm, 15 ft.*lbf)

 © 2011 Mitchell Repair Information Company, LLC.

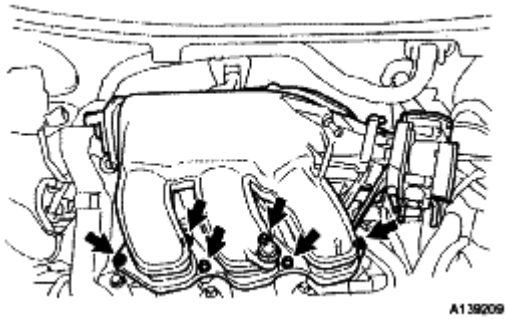

Fig. 355: Installing Throttle Body Bracket, No. 1 Surge Tank Stay And Bolts
Courtesy of TOYOTA MOTOR SALES, U.S.A., INC.

d. Connect the connector.
e. Connect the No. 1 ventilation hose.

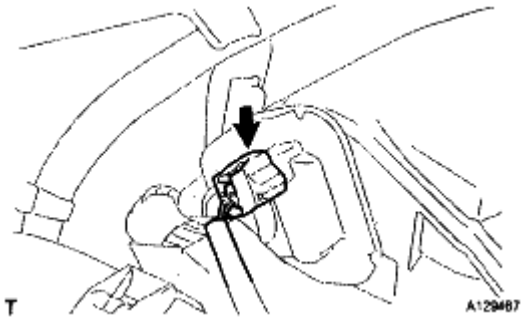

Fig. 356: Identifying No. 1 Ventilation Hose
Courtesy of TOYOTA MOTOR SALES, U.S.A., INC.

f. Install the clamp and connect the throttle with motor body assembly connector.
g. Connect the vapor feed hose.
h. Connect the 2 water by-pass hoses to the throttle with motor body assembly.

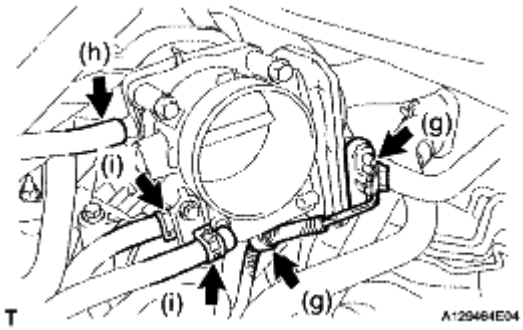

Fig. 357: Connecting Water By-Pass Hoses To Throttle With Motor Body Assembly
Courtesy of TOYOTA MOTOR SALES, U.S.A., INC.

23. **INSTALL VENTILATION HOSE**

 © 2011 Mitchell Repair Information Company, LLC.

a. Using pliers, grip the claws of the 2 clips and slide the 2 clips to the intake air surge tank assembly and ventilation valve.

24. **TEMPORARILY TIGHTEN COMPRESSOR AND MAGNETIC CLUTCH** (See **INSTALLATION**)

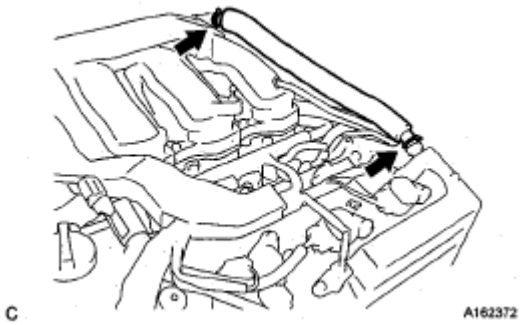

Fig. 358: Removing Ventilation Hose
Courtesy of TOYOTA MOTOR SALES, U.S.A., INC.

25. **INSTALL COMPRESSOR AND MAGNETIC CLUTCH**
    a. Install the compressor and magnetic clutch with the 4 bolts.

    Torque: 25 N*m (255 kgf*cm, 18 ft.*lbf)

    NOTE: Tighten the bolts in the order shown in the illustration to install the compressor and magnetic clutch.

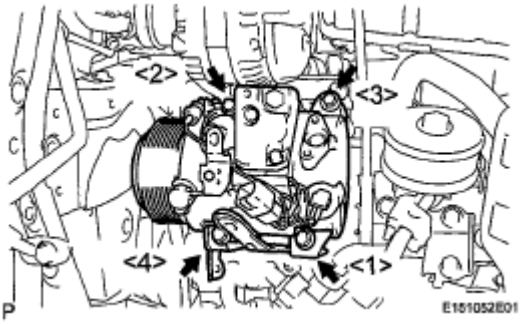

Fig. 359: Locating Magnetic Clutch And Bolts
Courtesy of TOYOTA MOTOR SALES, U.S.A., INC.

    b. Engage each clamp.
    c. Engage the clamp.
    d. Connect the connector.

26. **INSTALL ENGINE ASSEMBLY WITH TRANSAXLE**
    a. Set the engine assembly with transaxle on the engine lifter.
    b. Install the engine assembly to the vehicle.

 © 2011 Mitchell Repair Information Company, LLC.

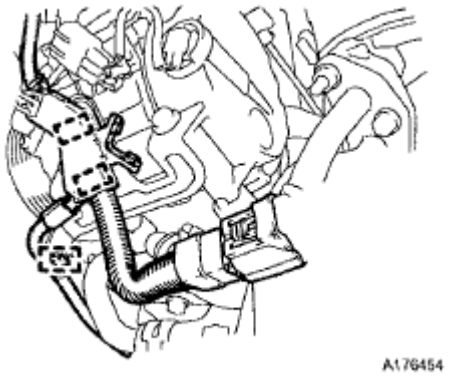

Fig. 360: Identifying Compressor Clamp
Courtesy of TOYOTA MOTOR SALES, U.S.A., INC.

c. Install the frame side rail plates RH and LH with the 6 bolts and 2 nuts.

Torque: A

85 N*m (867 kgf*cm, 63 ft.*lbf)

B

32 N*m (327 kgf*cm, 24 ft.*lbf)

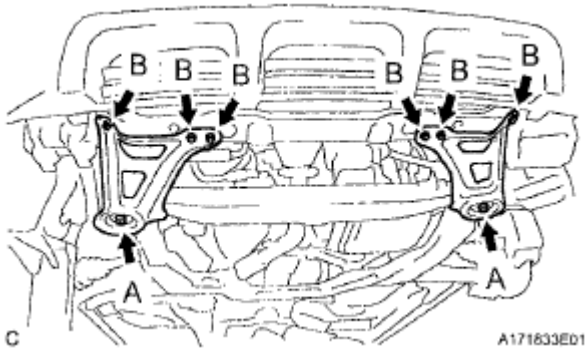

Fig. 361: Locating Frame Side Rail Plates, Bolts And Nuts
Courtesy of TOYOTA MOTOR SALES, U.S.A., INC.

d. Install the front suspension member rear braces RH and LH with the 6 bolts and 2 nuts.

Torque: A

85 N*m (867 kgf*cm, 63 ft.*lbf)

B

32 N*m (327 kgf*cm, 24 ft.*lbf)

 © 2011 Mitchell Repair Information Company, LLC.

27. **RECONNECT SUCTION HOSE SUB-ASSEMBLY** (See **INSTALLATION**)

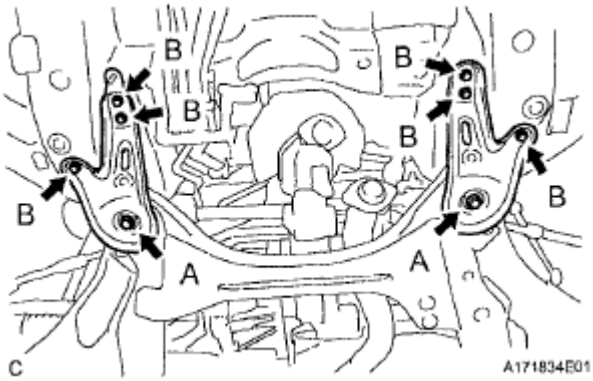

Fig. 362: Locating Front Suspension Member Rear Braces, Bolt And Nut
Courtesy of TOYOTA MOTOR SALES, U.S.A., INC.

28. **RECONNECT DISCHARGE HOSE SUB-ASSEMBLY** (See **INSTALLATION**)
29. **INSTALL STEERING INTERMEDIATE SHAFT SUB-ASSEMBLY** (See **INSTALLATION**)
30. **INSTALL FRONT AXLE ASSEMBLY LH** (See **INSTALLATION**)
31. **INSTALL FRONT AXLE ASSEMBLY RH**

    HINT:

    Use the same procedure described for the LH side.

32. **INSTALL NO. 1 FRONT SUSPENSION LOWER ARM LH** (See **INSTALLATION**)
33. **INSTALL NO. 1 FRONT SUSPENSION LOWER ARM RH**

    HINT:

    Use the same procedure described for the LH side.

34. **INSTALL TIE ROD ASSEMBLY LH** (See **INSTALLATION**)
35. **INSTALL TIE ROD ASSEMBLY RH**

    HINT:

    Use the same procedure described for the LH side.

36. **INSTALL FRONT SPEED SENSOR LH** (See **INSTALLATION**)
37. **INSTALL FRONT SPEED SENSOR RH**

    HINT:

    Use the same procedure described for the LH side.

 © 2011 Mitchell Repair Information Company, LLC.

38. **INSTALL FRONT AXLE HUB NUT LH** (See **INSTALLATION**)
39. **INSTALL FRONT AXLE HUB NUT RH**

    HINT:

    Use the same procedure described for the LH side.

40. **INSTALL FRONT STABILIZER LINK ASSEMBLY LH** (See **INSTALLATION**)
41. **INSTALL FRONT STABILIZER LINK ASSEMBLY RH**

    HINT:

    Use the same procedure described for the LH side.

42. **INSTALL FRONT EXHAUST PIPE ASSEMBLY** (See **INSTALLATION**)
43. **INSTALL FRONT NO. 3 EXHAUST PIPE SUB-ASSEMBLY** (See **INSTALLATION**)
44. **INSTALL CENTER EXHAUST PIPE ASSEMBLY** (See **INSTALLATION**)
45. **INSTALL TAIL EXHAUST PIPE ASSEMBLY** (See **INSTALLATION**)
46. **TEMPORARILY TIGHTEN PROPELLER WITH CENTER BEARING SHAFT ASSEMBLY** (See **INSTALLATION**)
47. **FULLY TIGHTEN PROPELLER WITH CENTER BEARING SHAFT ASSEMBLY** (See **INSTALLATION**)
48. **CONNECT ENGINE WIRE**
    a. Connect the 3 ECM connectors, 2 junction block connectors and clamp.

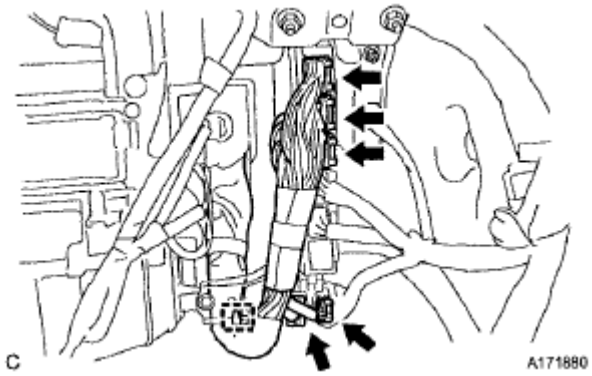

Fig. 363: Identifying Junction Block Connectors And Clamp
Courtesy of TOYOTA MOTOR SALES, U.S.A., INC.

    b. Install the engine wire with the 2 nuts.

    Torque: 8.3 N*m (84 kgf*cm, 73 in.*lbf)

 © 2011 Mitchell Repair Information Company, LLC.

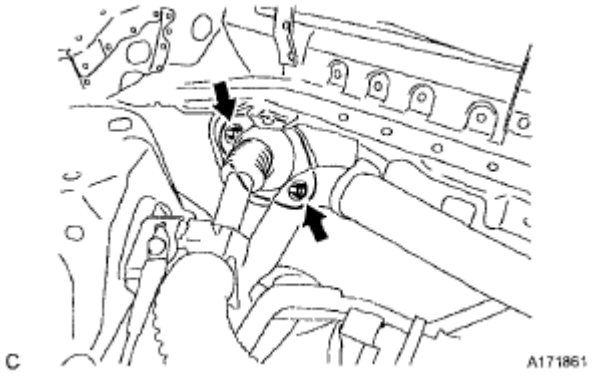

Fig. 364: Identifying Engine Wire, Clamp And Nuts
Courtesy of TOYOTA MOTOR SALES, U.S.A., INC.

c. Install the clip and 2 ground cables with the 2 bolts.

Torque: 8.3 N*m (84 kgf*cm, 73 in.*lbf)

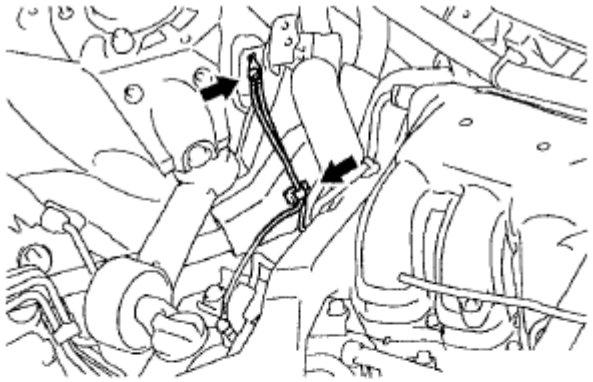

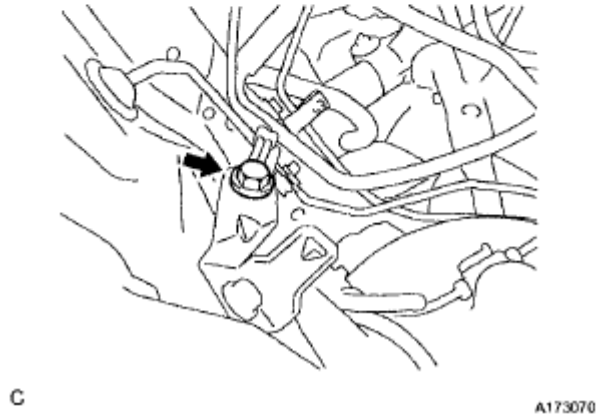

Fig. 365: Locating Ground Cables, Clip And Bolts
Courtesy of TOYOTA MOTOR SALES, U.S.A., INC.

 © 2011 Mitchell Repair Information Company, LLC.

d. Connect the heated oxygen sensor clamp and connector.

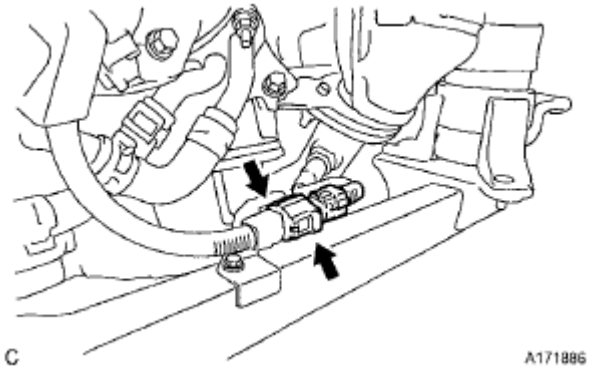

Fig. 366: Locating Heated Oxygen Sensor Connector And Clamp
Courtesy of TOYOTA MOTOR SALES, U.S.A., INC.

e. Connect the engine wire clamp.

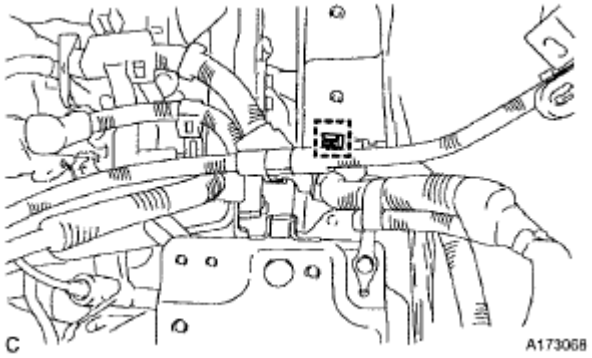

Fig. 367: Identifying Engine Wire Clamp
Courtesy of TOYOTA MOTOR SALES, U.S.A., INC.

f. Install the ground cable with the bolt.

Torque: 8.3 N*m (84 kgf*cm, 73 in.*lbf)

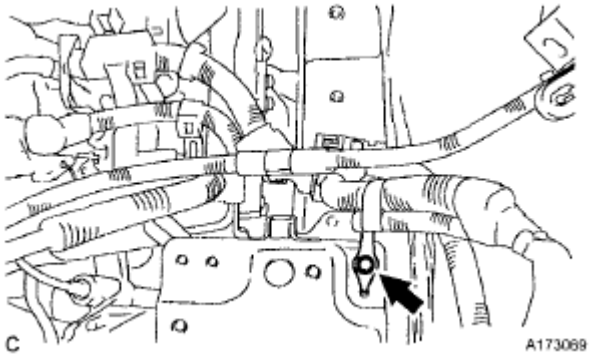

 © 2011 Mitchell Repair Information Company, LLC.

Fig. 368: Locating Ground Cables Bolt
Courtesy of TOYOTA MOTOR SALES, U.S.A., INC.

g. Connect the engine wire to the engine room relay block. Then, install it with the nut.

Torque: 8.3 N*m (84 kgf*cm, 73 in.*lbf)

h. Connect the engine wire connector.
i. Install the No. 1 relay block cover.

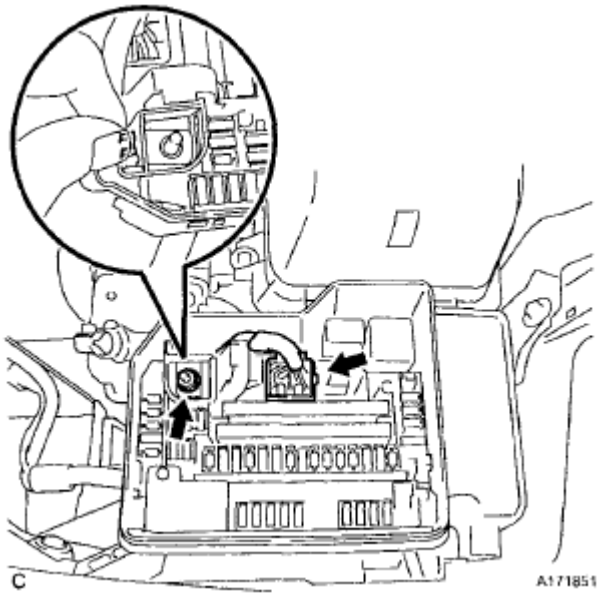

Fig. 369: Locating Engine Room Relay Block
Courtesy of TOYOTA MOTOR SALES, U.S.A., INC.

49. **CONNECT TRANSMISSION CONTROL CABLE ASSEMBLY**
    a. Connect the control cable to the control cable clamp.

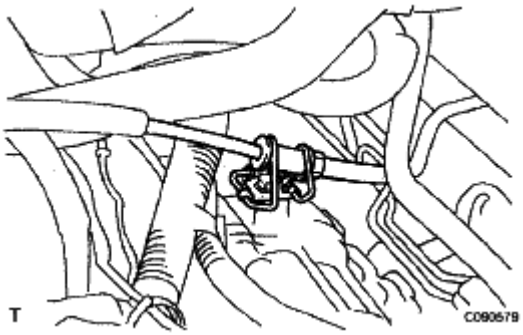

Fig. 370: Identifying Control Cable And Control Cable Clamp
Courtesy of TOYOTA MOTOR SALES, U.S.A., INC.

 © 2011 Mitchell Repair Information Company, LLC.

b. Install the transmission control cable assembly to the control shaft lever with the nut.

Torque: 12 N*m (122 kgf*cm, 9 ft.*lbf)

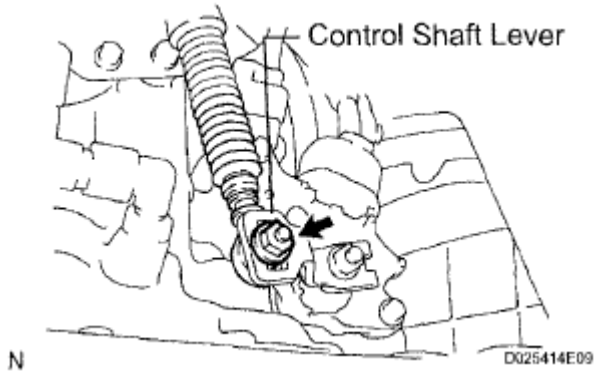

Fig. 371: Locating Control Shaft Lever
Courtesy of TOYOTA MOTOR SALES, U.S.A., INC.

c. Connect the transmission control cable assembly to the bracket with a new clip.

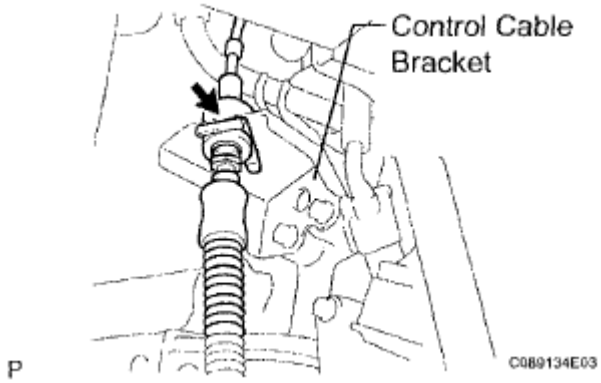

Fig. 372: Identifying Control Cable Bracket
Courtesy of TOYOTA MOTOR SALES, U.S.A., INC.

50. **CONNECT FUEL TUBE SUB-ASSEMBLY**

a. Push in the fuel tube connector to the fuel pipe until the fuel tube makes a "click" sound.

NOTE:

- **Check for damage or dirt and foreign objects on the connected part of the pipe.**
- **Check if the pipe and the connector are securely connected by trying to pull them apart.**

 © 2011 Mitchell Repair Information Company, LLC.

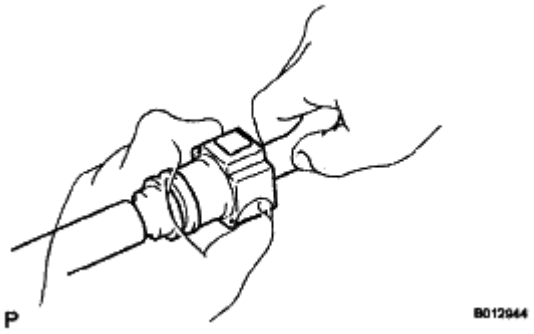

Fig. 373: Pushing Fuel Tube Connector To Fuel Pipe
Courtesy of TOYOTA MOTOR SALES, U.S.A., INC.

b. Install the No. 1 fuel pipe clamp.

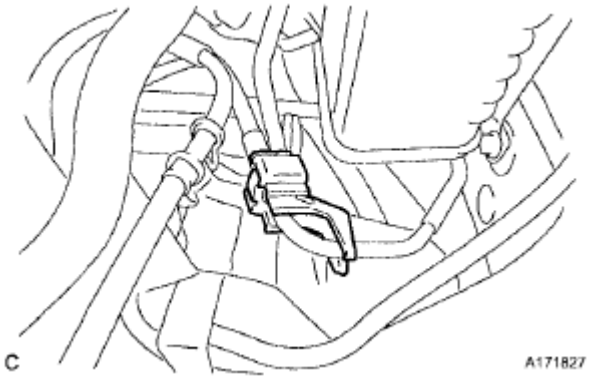

Fig. 374: Identifying No. 1 Fuel Pipe Clamp
Courtesy of TOYOTA MOTOR SALES, U.S.A., INC.

51. **CONNECT OIL COOLER OUTLET HOSE**
    a. Using pliers, grip the claws of the clip and slide the clip to connect the oil cooler outlet hose.

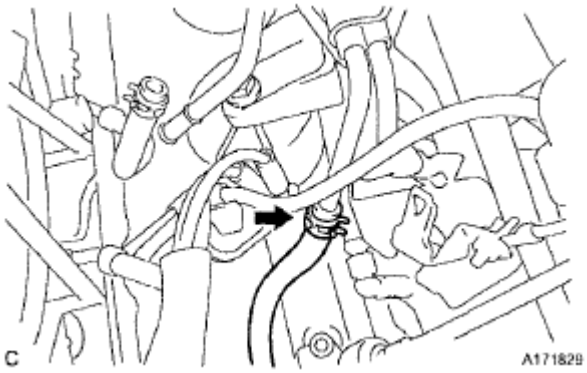

Fig. 375: Locating Oil Cooler Outlet Hose And Claws
Courtesy of TOYOTA MOTOR SALES, U.S.A., INC.

 © 2011 Mitchell Repair Information Company, LLC.

52. **CONNECT OIL COOLER INLET HOSE**
    a. Using pliers, grip the claws of the clip and slide the clip to connect the No. 2 oil cooler hose.

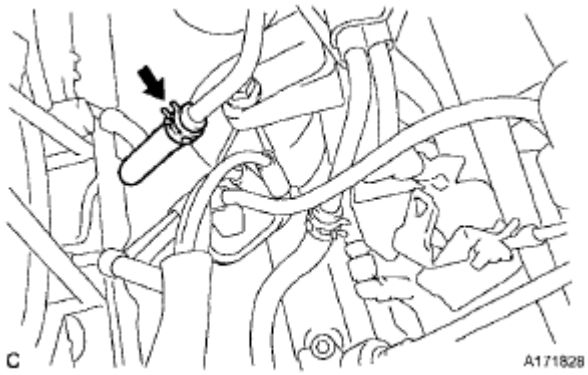

Fig. 376: Locating No. 2 Oil Cooler Hose And Claws
Courtesy of TOYOTA MOTOR SALES, U.S.A., INC.

53. **CONNECT HEATER WATER HOSE INLET B**
    a. Using pliers, grip the claws of the clip and slide the clip to connect the heater water inlet hose B to water outlet.

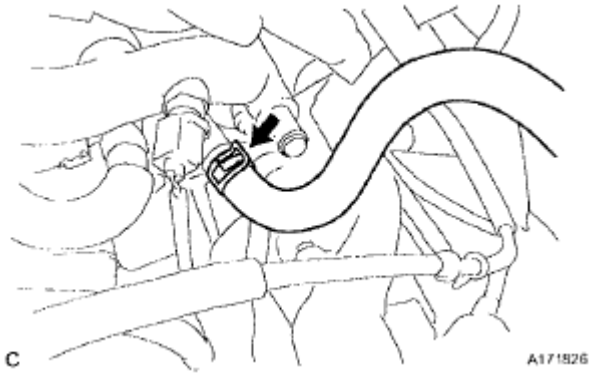

Fig. 377: Locating Heater Water Inlet Hose Clip
Courtesy of TOYOTA MOTOR SALES, U.S.A., INC.

54. **CONNECT HEATER WATER HOSE OUTLET B**
    a. Using pliers, grip the claws of the clip and slide the clip to connect the heater water outlet hose B to water inlet.

 © 2011 Mitchell Repair Information Company, LLC.

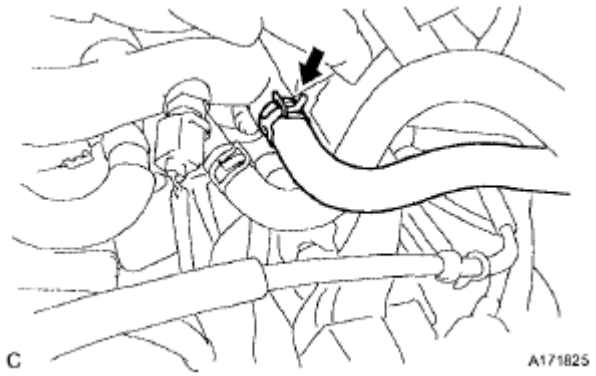

Fig. 378: Locating Heater Water Outlet Hose And Claws
Courtesy of TOYOTA MOTOR SALES, U.S.A., INC.

55. **INSTALL NO. 1 RADIATOR HOSE**
    a. Using pliers, grip the claws of the clip and slide the clip to connect the No. 1 radiator hose to the water outlet.
    b. Install the clamp with the air fuel ratio sensor connector.

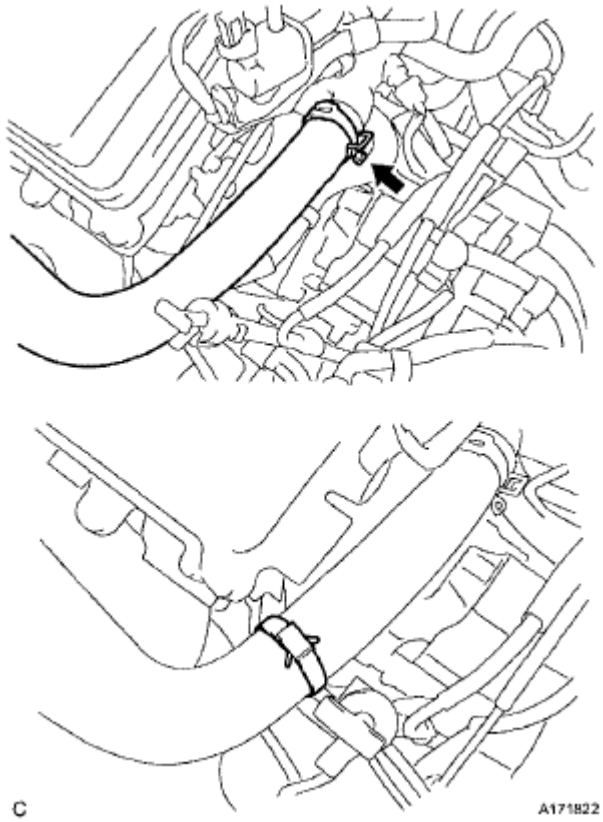

Fig. 379: Locating No. 1 Radiator Hose And Clamp
Courtesy of TOYOTA MOTOR SALES, U.S.A., INC.

56. **INSTALL NO. 2 RADIATOR HOSE**

 © 2011 Mitchell Repair Information Company, LLC.

a. Using pliers, grip the claws of the clip and slide the clip to connect the No. 2 radiator outlet hose to the water inlet.

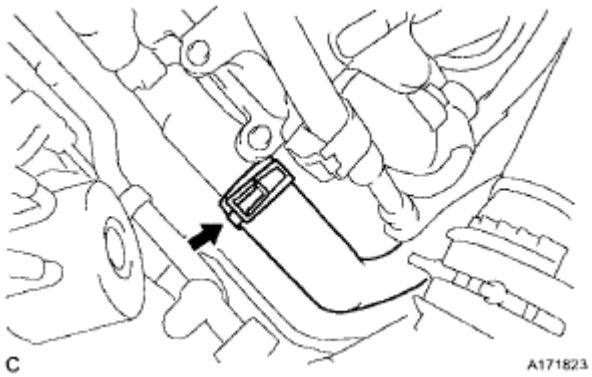

Fig. 380: Locating No. 2 Radiator Hose And Clip
Courtesy of TOYOTA MOTOR SALES, U.S.A., INC.

57. **CONNECT UNION TO CHECK VALVE HOSE**
    a. Using pliers, grip the claws of the clip and slide the clip to connect the union to check valve hose to the intake air surge tank assembly.

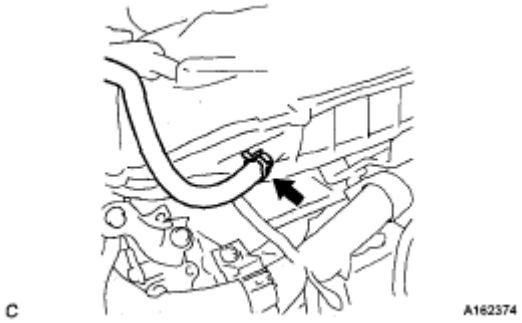

Fig. 381: Locating Front Exhaust Pipe Clip
Courtesy of TOYOTA MOTOR SALES, U.S.A., INC.

58. **CONNECT NO. 1 FUEL VAPOR FEED HOSE**
    a. Install the clamp and connect the No. 1 fuel vapor feed hose.

 © 2011 Mitchell Repair Information Company, LLC.

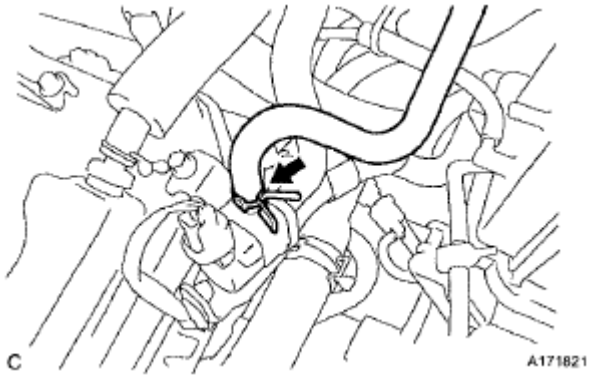

Fig. 382: Locating No. 1 Fuel Vapor Feed Hose And Clamp
Courtesy of TOYOTA MOTOR SALES, U.S.A., INC.

59. **INSTALL ENGINE MOVING CONTROL ROD**
    a. Temporarily install the engine moving control rod with the 3 bolts.
    b. First install bolts A, and then bolt B.

    Torque: 38 N*m (388 kgf*cm, 28 ft.*lbf)

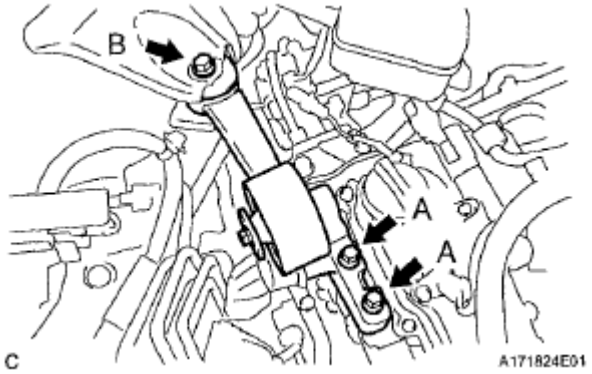

Fig. 383: Locating Engine Moving Control Rod And Bolts
Courtesy of TOYOTA MOTOR SALES, U.S.A., INC.

60. **INSTALL NO. 2 ENGINE MOUNTING STAY RH**
    a. Temporarily install the No. 2 engine mounting stay RH with the bolt.

    Torque: 38 N*m (388 kgf*cm, 28 ft.*lbf)

    b. Tighten the 2 nuts.

    Torque: 23 N*m (235 kgf*cm, 17 ft.*lbf)

 © 2011 Mitchell Repair Information Company, LLC.

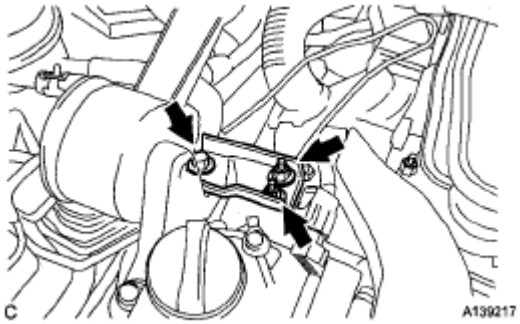

Fig. 384: Locating Nuts On No. 2 Engine Mounting Stay RH
Courtesy of TOYOTA MOTOR SALES, U.S.A., INC.

61. **INSTALL RESERVOIR BRACKET**
    a. Install the reservoir bracket with the 2 bolts.

    Torque: 9.0 N*m (92 kgf*cm, 80 in.*lbf)

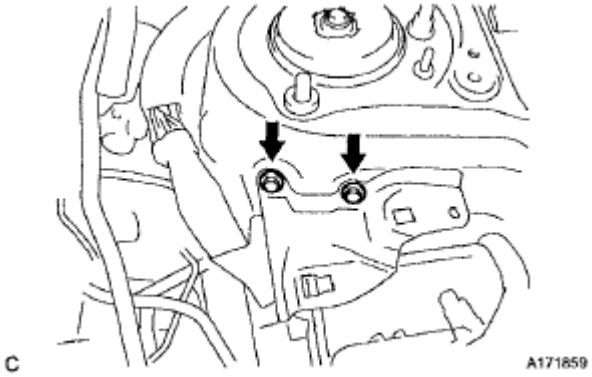

Fig. 385: Locating Reservoir Bracket And Bolt
Courtesy of TOYOTA MOTOR SALES, U.S.A., INC.

62. **INSTALL BRAKE MASTER CYLINDER RESERVOIR ASSEMBLY**
    a. Install the brake master cylinder reservoir assembly with the bolt.

    Torque: 9.0 N*m (92 kgf*cm, 80 in.*lbf)

    b. Connect the level warning switch connector.

 © 2011 Mitchell Repair Information Company, LLC.

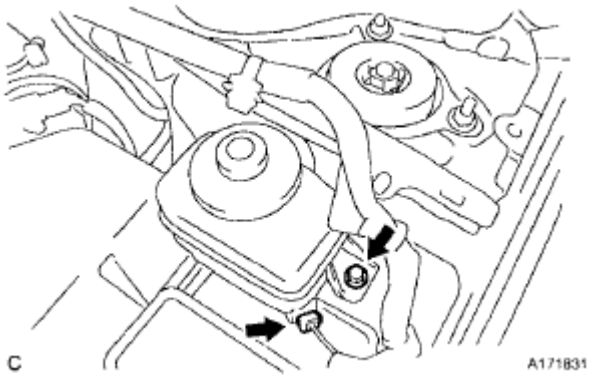

Fig. 386: Locating Brake Master Cylinder Reservoir Assembly And Bolt
Courtesy of TOYOTA MOTOR SALES, U.S.A., INC.

63. **INSTALL AIR CLEANER BRACKET**
    a. Install the 2 bolts and air cleaner bracket.

    Torque: 12 N*m (123 kgf*cm, 9 ft.*lbf)

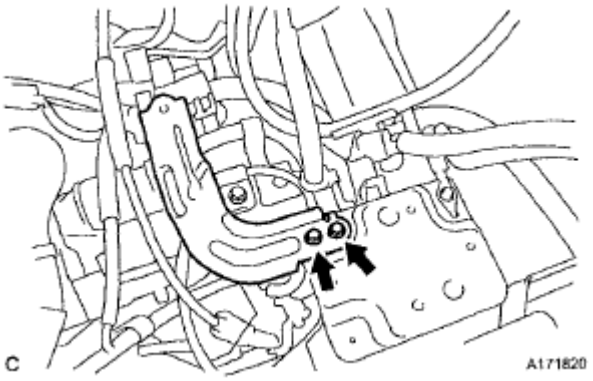

Fig. 387: Locating Air Cleaner Bracket And Bolt
Courtesy of TOYOTA MOTOR SALES, U.S.A., INC.

64. **INSTALL BATTERY**
    a. Install the battery tray and battery.
    b. Install the battery clamp with the bolt and nut.

    Torque: Bolt

    5.4 N*m (55 kgf*cm, 48 in.*lbf)

    Nut A

    5.4 N*m (55 kgf*cm, 48 in.*lbf)

    Nut B

 © 2011 Mitchell Repair Information Company, LLC.

13 N*m (131 kgf*cm, 9 ft.*lbf)

Nut C

6.4 N*m (64 kgf*cm, 57 in.*lbf)

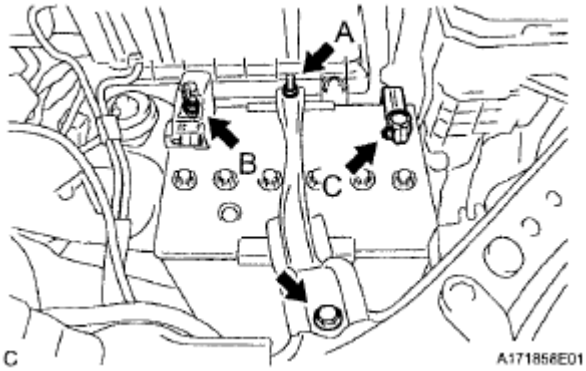

Fig. 388: Locating Battery Clamp Bolt And Nut
Courtesy of TOYOTA MOTOR SALES, U.S.A., INC.

c. Install the positive battery terminal and nut.
d. Connect the negative battery terminal, and tighten the nut.

65. **INSTALL AIR CLEANER CASE SUB-ASSEMBLY** (See **INSTALLATION**)
66. **INSTALL AIR CLEANER FILTER ELEMENT SUB-ASSEMBLY**
    a. Install the air cleaner filter element sub-assembly.
67. **INSTALL AIR CLEANER CAP SUB-ASSEMBLY** (See **INSTALLATION**)
68. **INSTALL NO. 1 AIR CLEANER INLET** (See **INSTALLATION**)
69. **INSTALL NO. 2 AIR CLEANER INLET** (See **INSTALLATION**)
70. **CONNECT VACUUM HOSES**

 © 2011 Mitchell Repair Information Company, LLC.

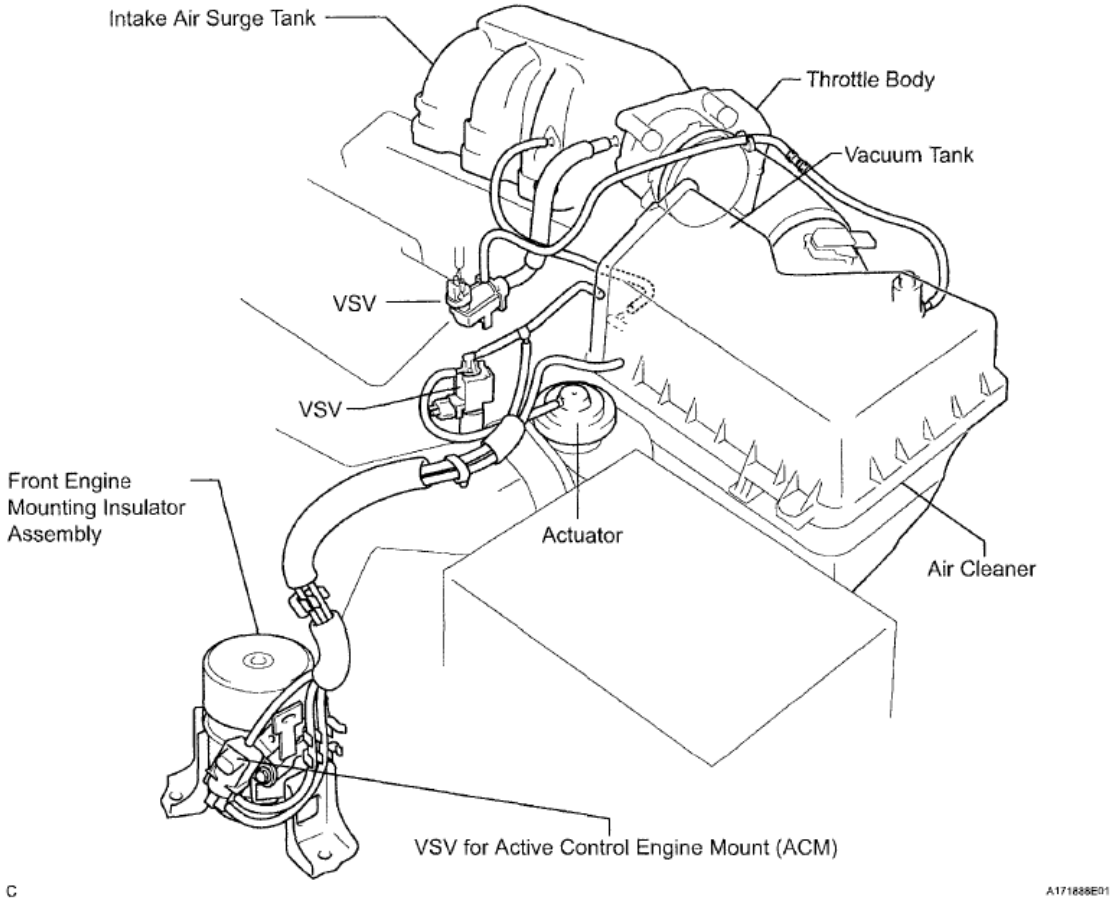

Fig. 389: Identifying Vacuum Hoses Components Location
Courtesy of TOYOTA MOTOR SALES, U.S.A., INC.

71. **INSTALL V-RIBBED BELT** (See **INSTALLATION**)
72. **INSTALL OUTER COWL TOP PANEL SUB-ASSEMBLY**
    a. Install the front outer cowl top panel sub-assembly with the 8 bolts and 6 nuts.

 © 2011 Mitchell Repair Information Company, LLC.

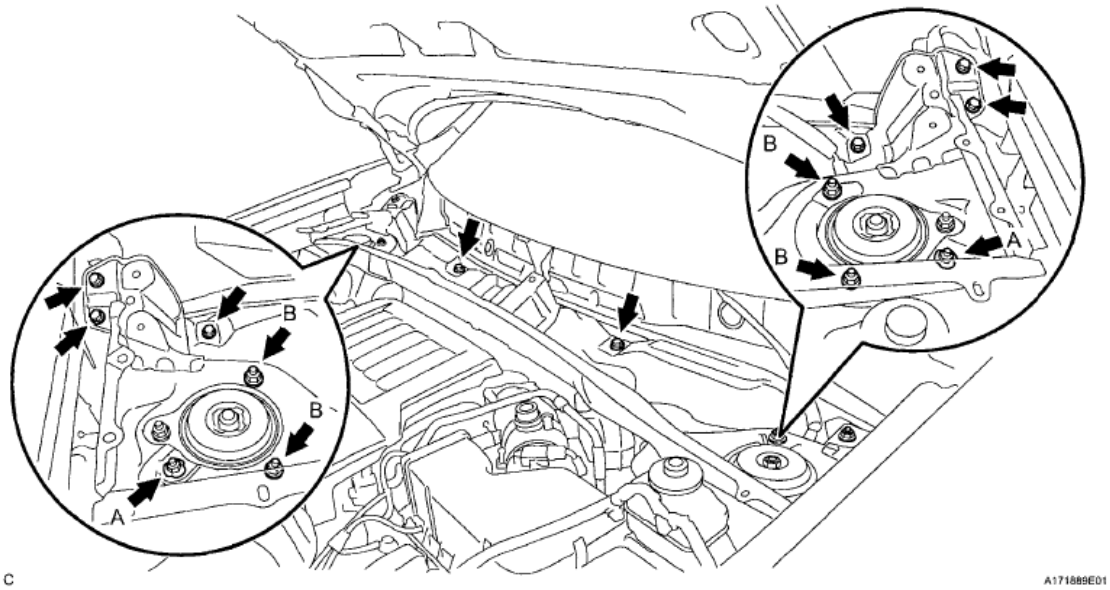

Fig. 390: Identifying Front Outer Cowl Top Panel Sub-Assembly, Bolts And Nuts
Courtesy of TOYOTA MOTOR SALES, U.S.A., INC.

Torque: Bolt

8.8 N*m (90 kgf*cm, 78 in.*lbf)

Nut A

8.8 N*m (90 kgf*cm, 78 in.*lbf)

Nut B

85 N*m (867 kgf*cm, 63 ft.*lbf)

b. Install the 4 clips.

73. **INSTALL WINDSHIELD WIPER MOTOR AND LINK ASSEMBLY** (See **INSTALLATION**)
74. **INSTALL COWL TOP VENTILATOR LOUVER SUB-ASSEMBLY**
75. **INSTALL FRONT WIPER ARM AND BLADE ASSEMBLY LH** (See **INSTALLATION**)
76. **INSTALL FRONT WIPER ARM AND BLADE ASSEMBLY RH** (See **INSTALLATION**)

 © 2011 Mitchell Repair Information Company, LLC.

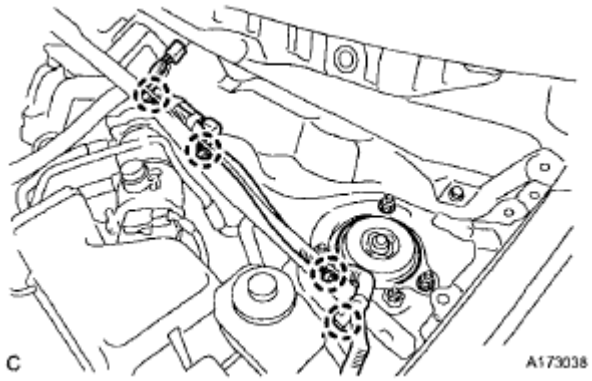

Fig. 391: Identifying Engine Wire Clips
Courtesy of TOYOTA MOTOR SALES, U.S.A., INC.

77. **INSTALL FRONT WHEELS**

    Torque: 103 N*m (1050 kgf*cm, 76 ft.*lbf)

78. **ADD ENGINE OIL** (See **REPLACEMENT**)
79. **ADD ENGINE COOLANT** (See **REPLACEMENT**)
80. **ADD AUTOMATIC TRANSAXLE FLUID**
81. **CHECK AUTOMATIC TRANSAXLE FLUID** (See **AUTOMATIC TRANSAXLE FLUID**)
82. **INSPECT FOR FUEL LEAK** (See **ON-VEHICLE INSPECTION**)
83. **INSPECT FOR ENGINE OIL LEAK** (See **REPLACEMENT**)
84. **INSPECT FOR COOLANT LEAK** (See **COOLING SYSTEM**)
85. **INSPECT FOR EXHAUST GAS LEAK** (See **INSTALLATION**)
86. **CHECK SHIFT LEVER POSITION** (See **ON-VEHICLE INSPECTION**)
87. **CHECK AND ADJUST FRONT WHEEL ALIGNMENT**

    HINT:

    (See **FRONT WHEEL ALIGNMENT**).

88. **CHECK IGNITION TIMING** (See **ON-VEHICLE INSPECTION**)
89. **CHECK ENGINE IDLE SPEED** (See **ON-VEHICLE INSPECTION**)
90. **CHECK CO/HC** (See **ON-VEHICLE INSPECTION**)
91. **CHECK FUNCTION OF THROTTLE BODY ASSEMBLY** (See **ON-VEHICLE INSPECTION**)
92. **INSTALL FRONT FENDER APRON SEAL RH**
    a. Install the front fender apron seal RH with the 2 bolts and clip.

 © 2011 Mitchell Repair Information Company, LLC.

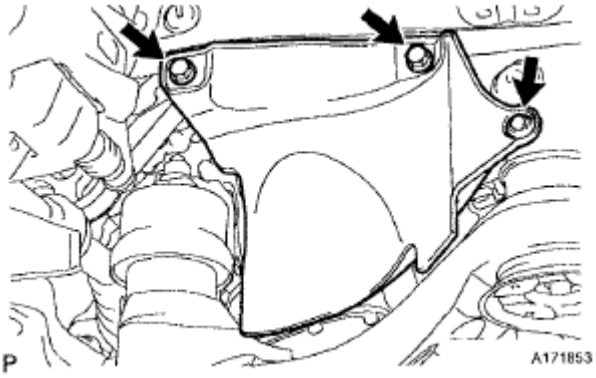

Fig. 392: Locating Front Fender Apron Seal RH, Clip And Bolts
Courtesy of TOYOTA MOTOR SALES, U.S.A., INC.

93. **INSTALL FRONT FENDER APRON SEAL LH**
    a. Install the front fender apron seal LH with the 2 bolts and clip.
94. **INSTALL FRONT FENDER LINER LH** (See **INSTALLATION**)
95. **INSTALL FRONT FENDER LINER RH** (See **INSTALLATION**)
96. **INSTALL FRONT FENDER MOULDING SUB-ASSEMBLY LH** (See **INSTALLATION**)

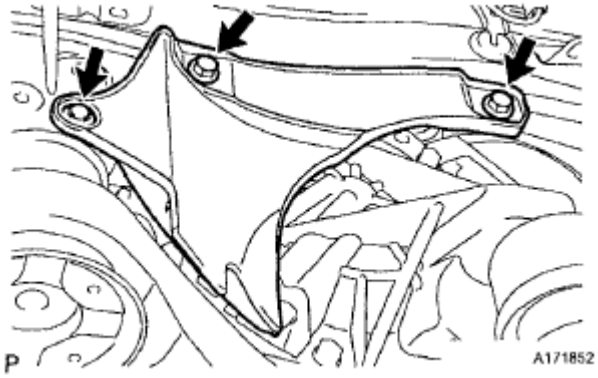

Fig. 393: Locating Front Fender Apron Seal LH, Clip And Bolts
Courtesy of TOYOTA MOTOR SALES, U.S.A., INC.

97. **INSTALL FRONT FENDER MOULDING SUB-ASSEMBLY RH** (See **INSTALLATION**)
98. **INSTALL FLOOR UNDER COVER LH**
99. **INSTALL NO. 2 ENGINE UNDER COVER**
    a. Install the No. 2 engine under cover with the 2 bolts.

 © 2011 Mitchell Repair Information Company, LLC.

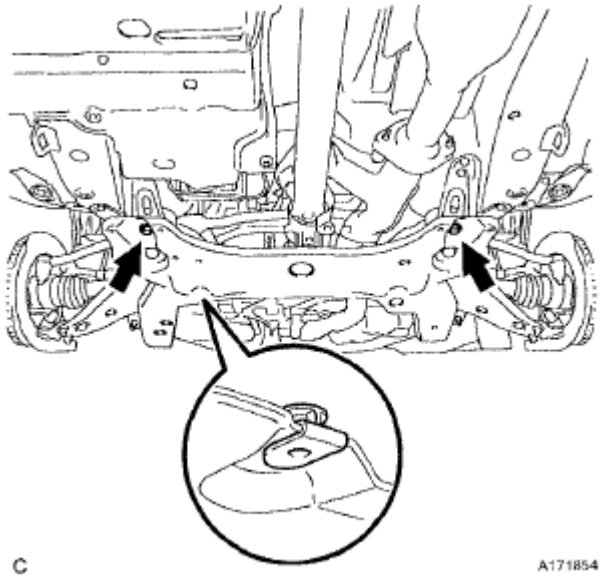

Fig. 394: Locating No. 2 Engine Under Cover And Bolts
Courtesy of TOYOTA MOTOR SALES, U.S.A., INC.

100. **INSTALL NO. 1 ENGINE UNDER COVER**
    a. Install the No. 1 engine under cover with the 6 bolts and 2 clips.

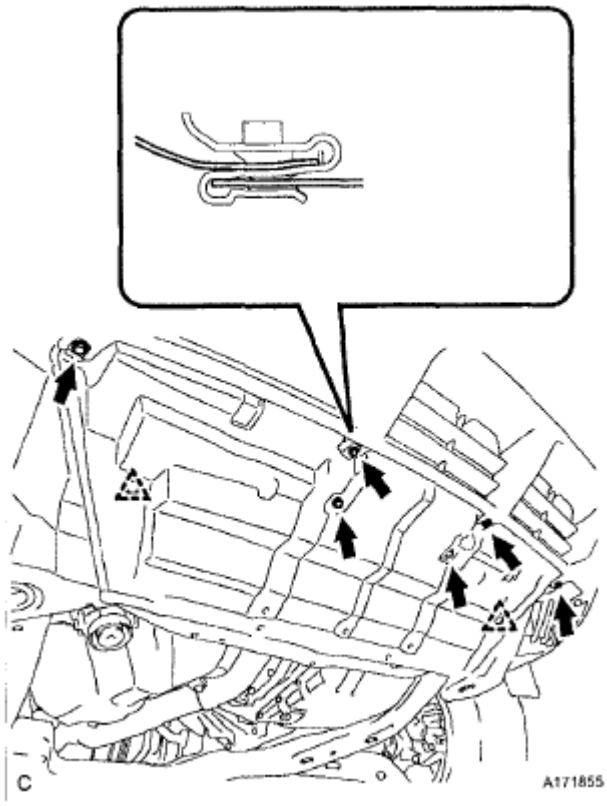

Fig. 395: Locating No. 1 Engine Under Cover, Bolt And Clips

 © 2011 Mitchell Repair Information Company, LLC.

Courtesy of TOYOTA MOTOR SALES, U.S.A., INC.

101. **INSTALL ENGINE UNDER COVER ASSEMBLY**
    a. Install the engine under cover assembly with the 4 bolts and 5 clips.

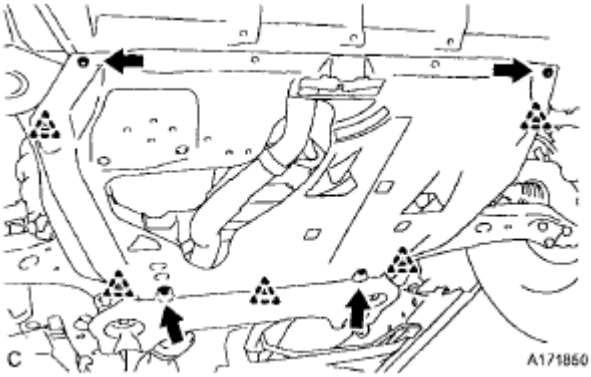

Fig. 396: Locating Engine Under Cover Assembly, Bolt And Screw
Courtesy of TOYOTA MOTOR SALES, U.S.A., INC.

    b. Install the engine under cover assembly RR with the 2 bolts.

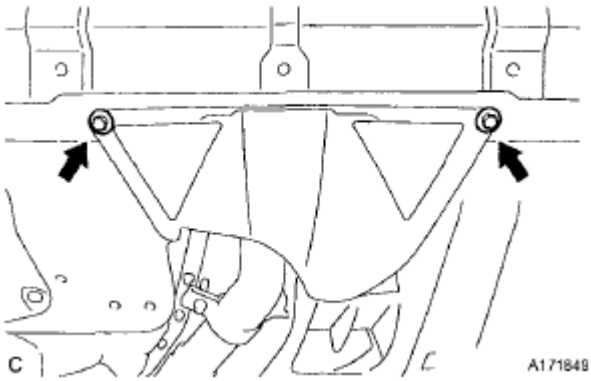

Fig. 397: Locating Engine Under Cover Assembly RR And Bolts
Courtesy of TOYOTA MOTOR SALES, U.S.A., INC.

102. **INSTALL V-BANK COVER SUB-ASSEMBLY**
    a. Fit the 3 retainers and install the V-bank cover.
103. **CHECK ABS SPEED SENSOR SIGNAL**

TEST MODE PROCEDURE

104. **RESET MEMORY**

HINT:

See **INITIALIZATION** .

 © 2011 Mitchell Repair Information Company, LLC.

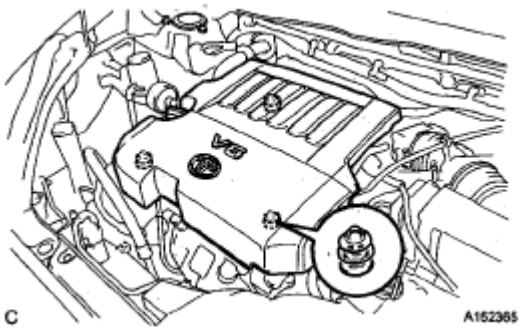

Fig. 398: Identifying Clip On Rear Of Cover
Courtesy of TOYOTA MOTOR SALES, U.S.A., INC.

ENGINE UNIT

COMPONENTS

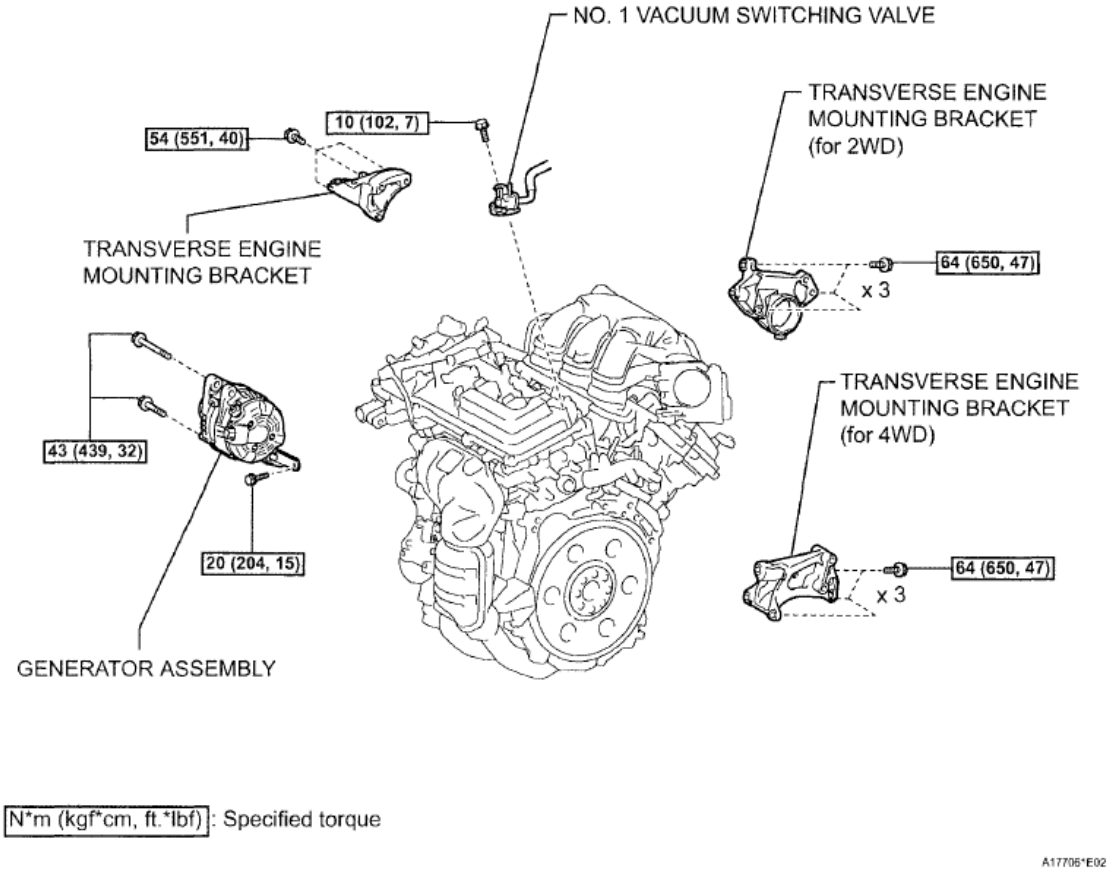

Fig. 399: Identifying Engine Unit Components With Torque Specification With Torque Specification (1 Of 13)
Courtesy of TOYOTA MOTOR SALES, U.S.A., INC.

 © 2011 Mitchell Repair Information Company, LLC.

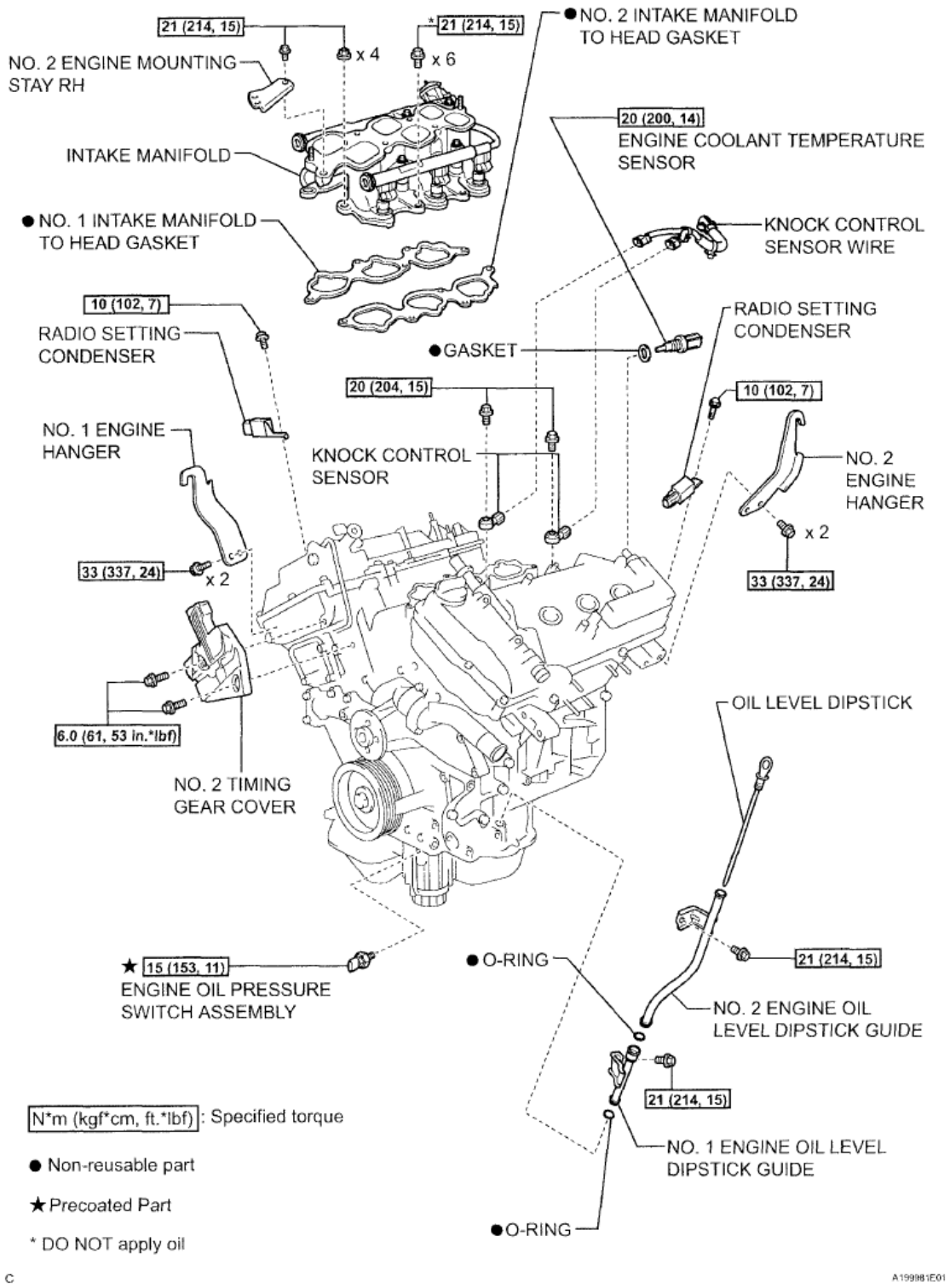

Fig. 400: Identifying Engine Unit Components With Torque Specification With Torque Specification (2 Of 13)
Courtesy of TOYOTA MOTOR SALES, U.S.A., INC.

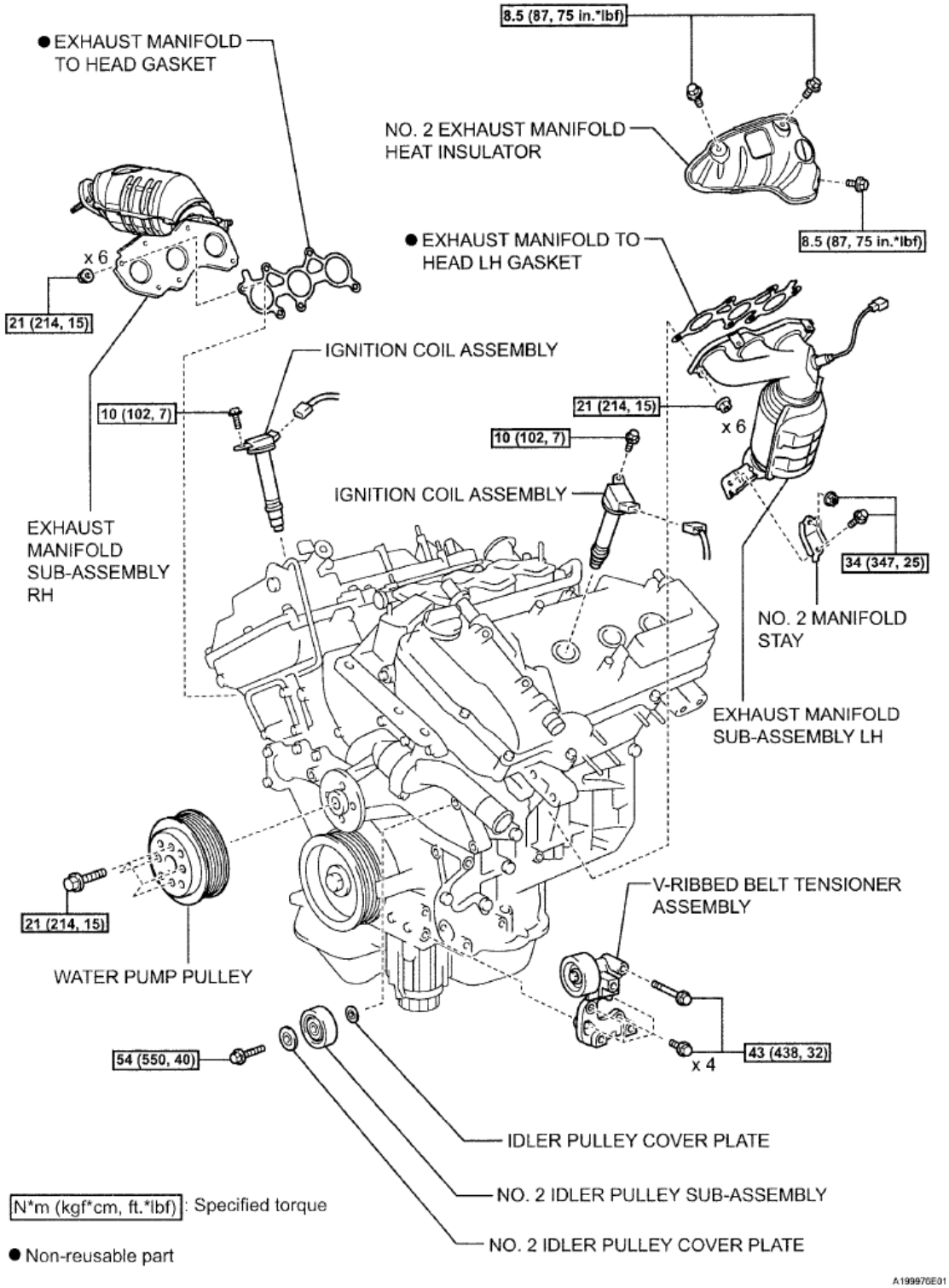

Fig. 401: Identifying Engine Unit Components With Torque Specification With Torque Specification (3 Of 13)
Courtesy of TOYOTA MOTOR SALES, U.S.A., INC.

 © 2011 Mitchell Repair Information Company, LLC.

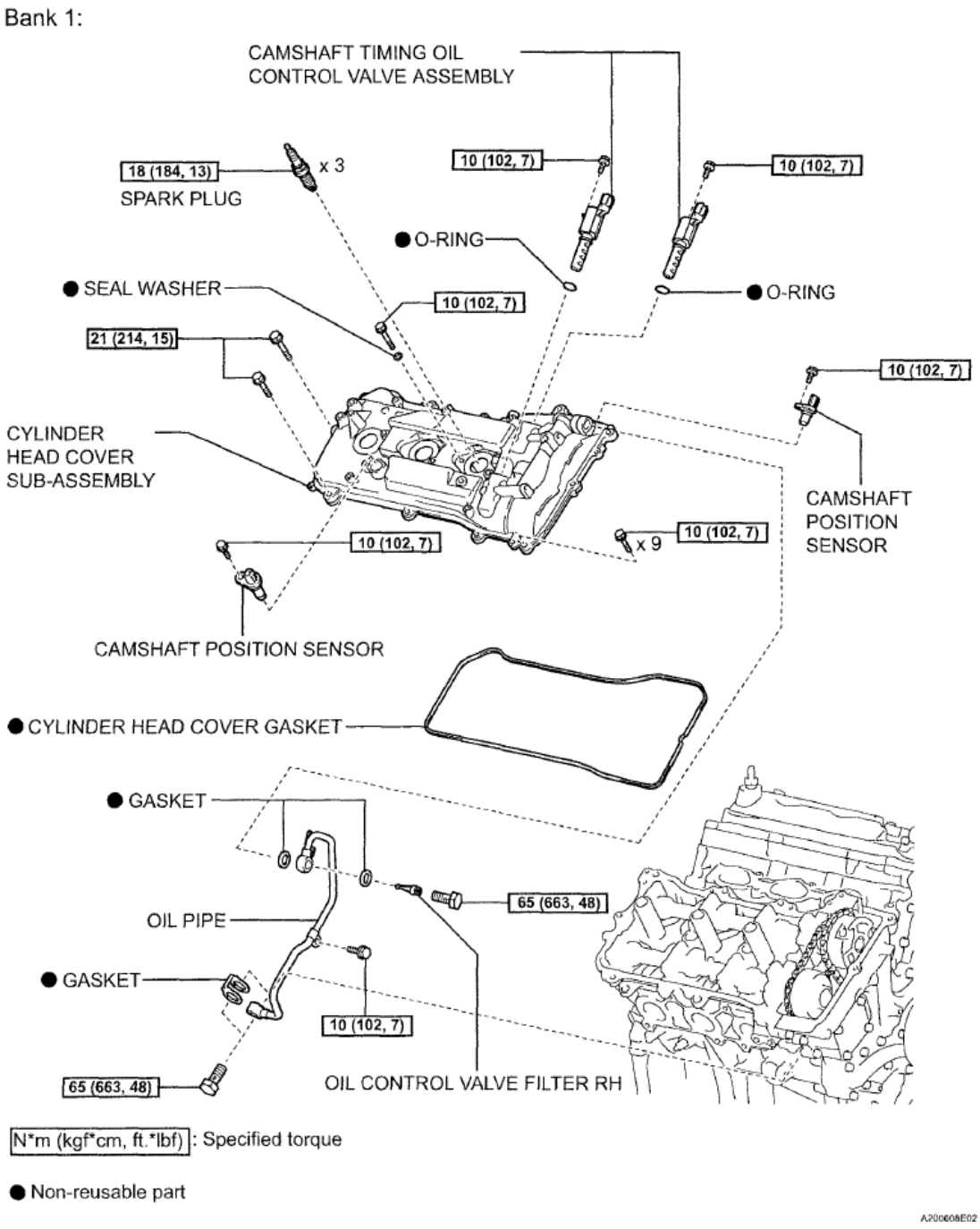

Fig. 402: Identifying Engine Unit Components With Torque Specification With Torque Specification (4 Of 13)
Courtesy of TOYOTA MOTOR SALES, U.S.A., INC.

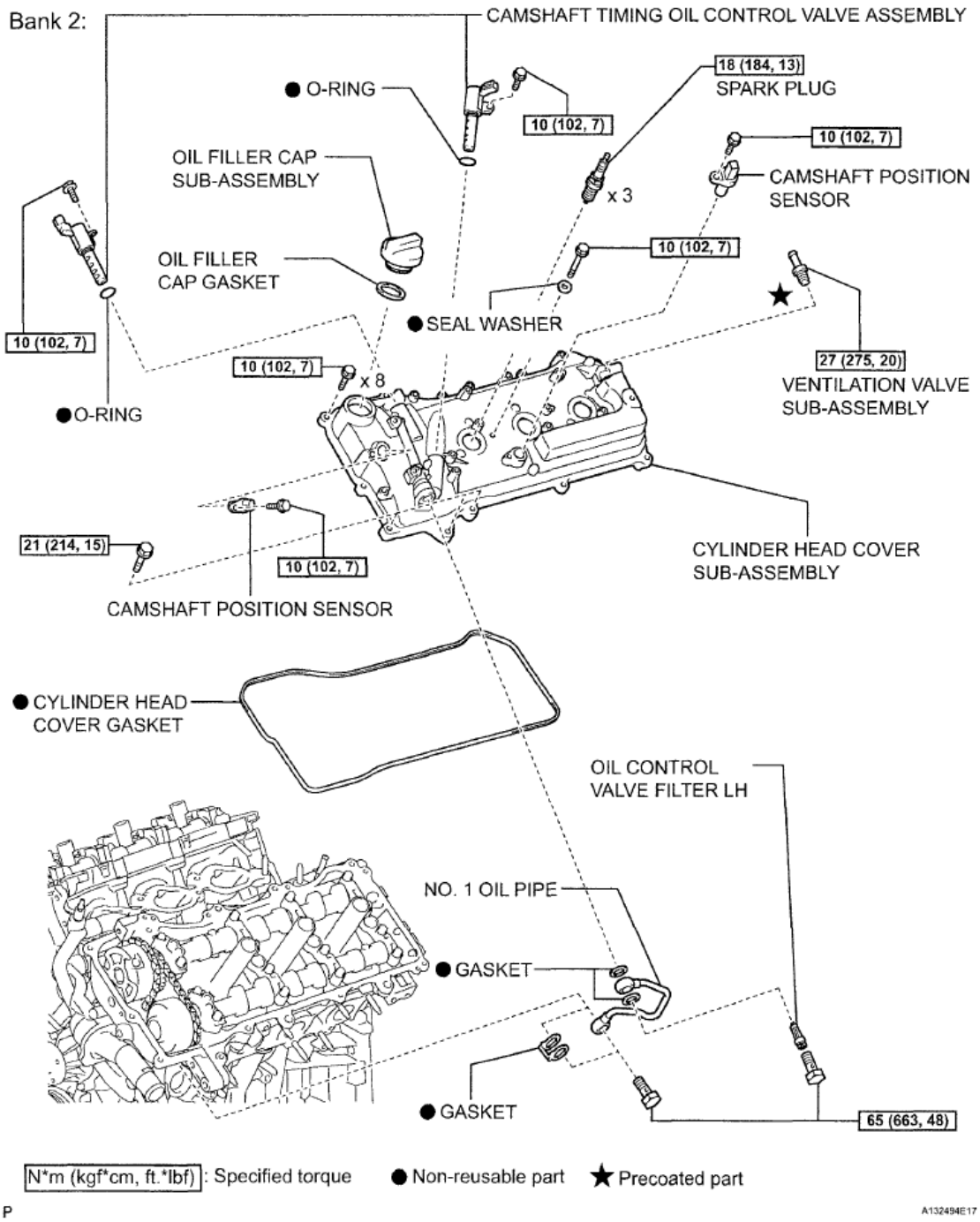

Fig. 403: Identifying Engine Unit Components With Torque Specification With Torque Specification (5 Of 13)
Courtesy of TOYOTA MOTOR SALES, U.S.A., INC.

 © 2011 Mitchell Repair Information Company, LLC.

w/ Oil Cooler:

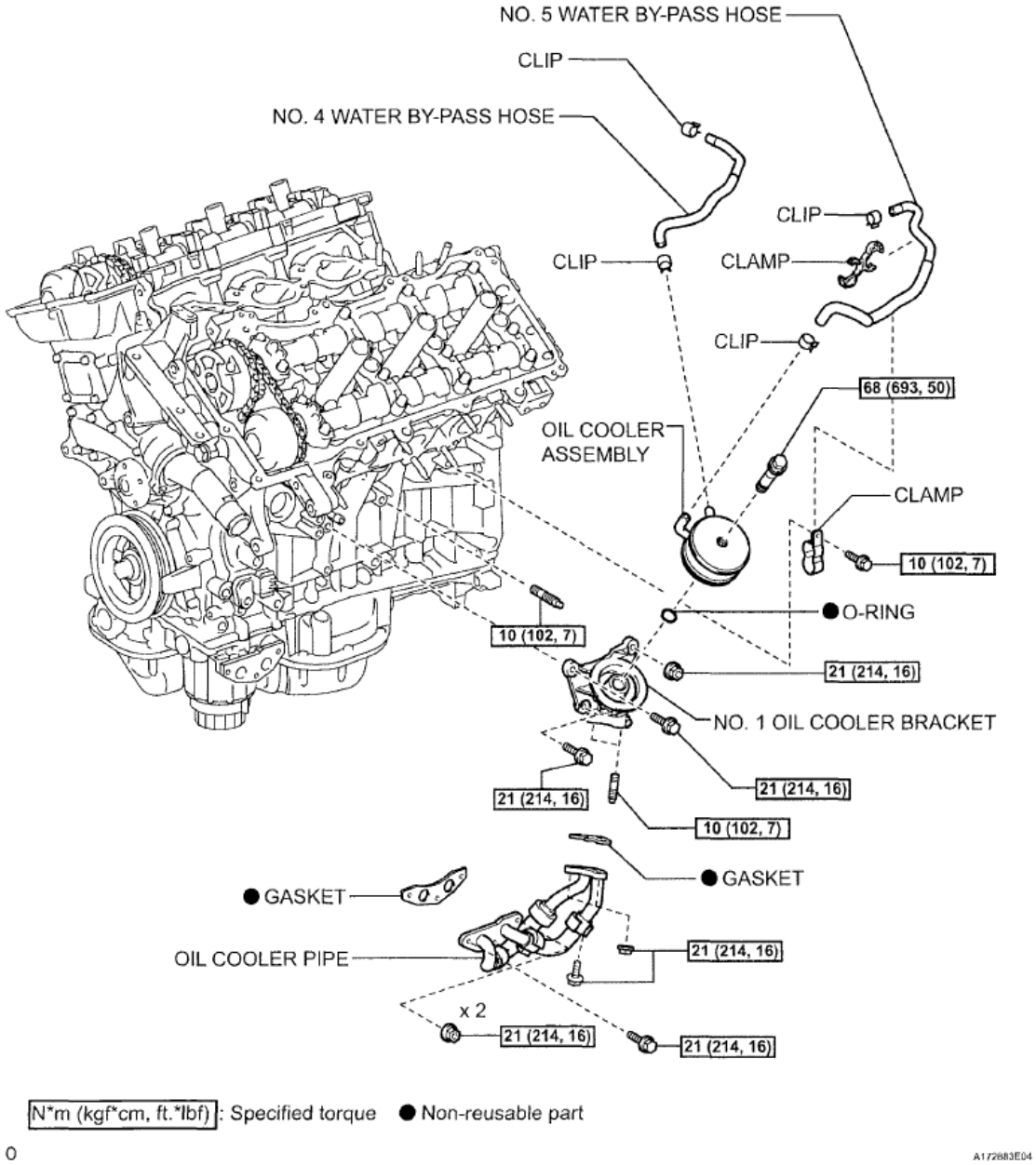

Fig. 404: Identifying Engine Unit Components With Torque Specification With Torque Specification (6 Of 13)
Courtesy of TOYOTA MOTOR SALES, U.S.A., INC.

 © 2011 Mitchell Repair Information Company, LLC.

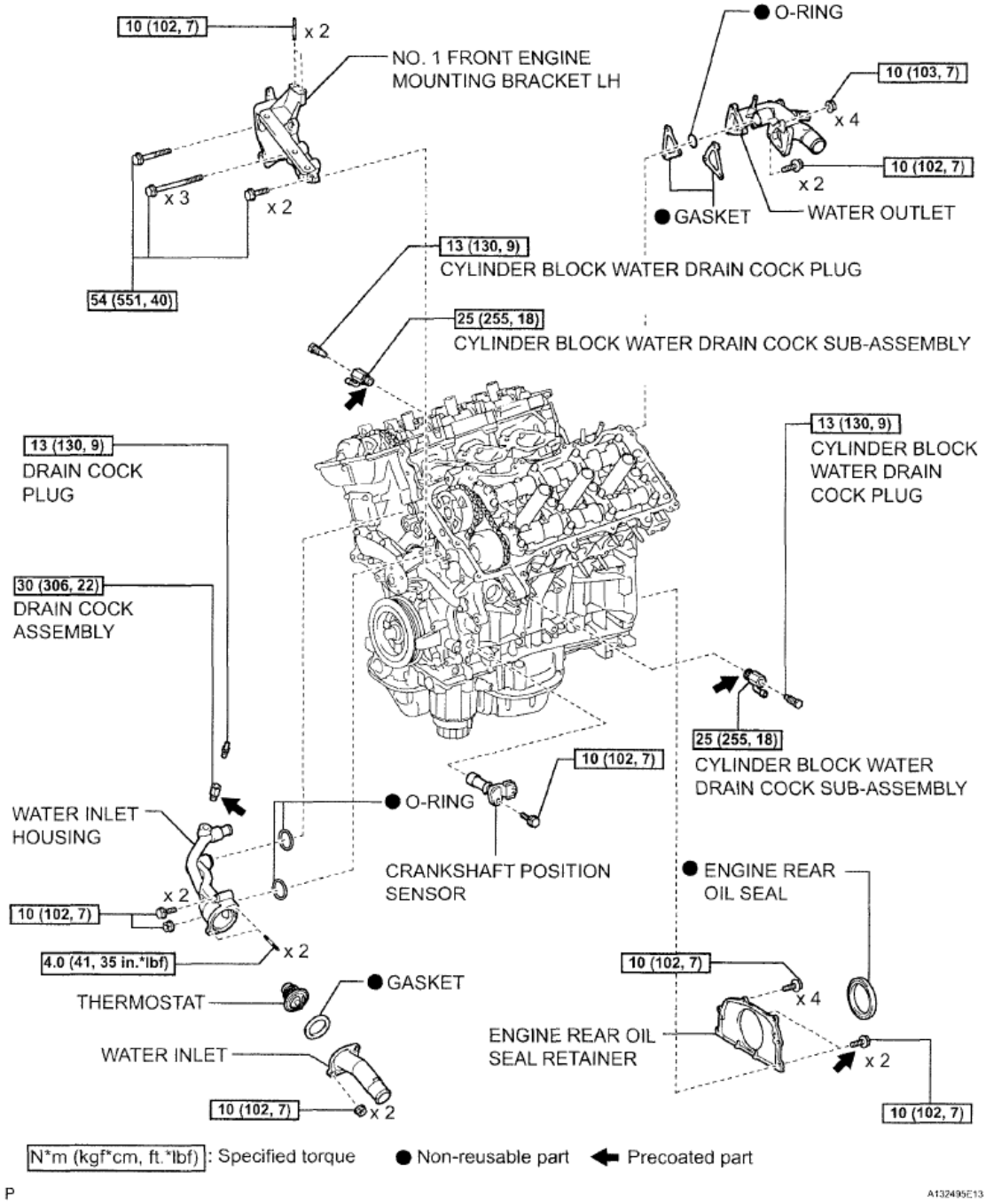

Fig. 405: Identifying Engine Unit Components With Torque Specification With Torque Specification (7 Of 13)
Courtesy of TOYOTA MOTOR SALES, U.S.A., INC.

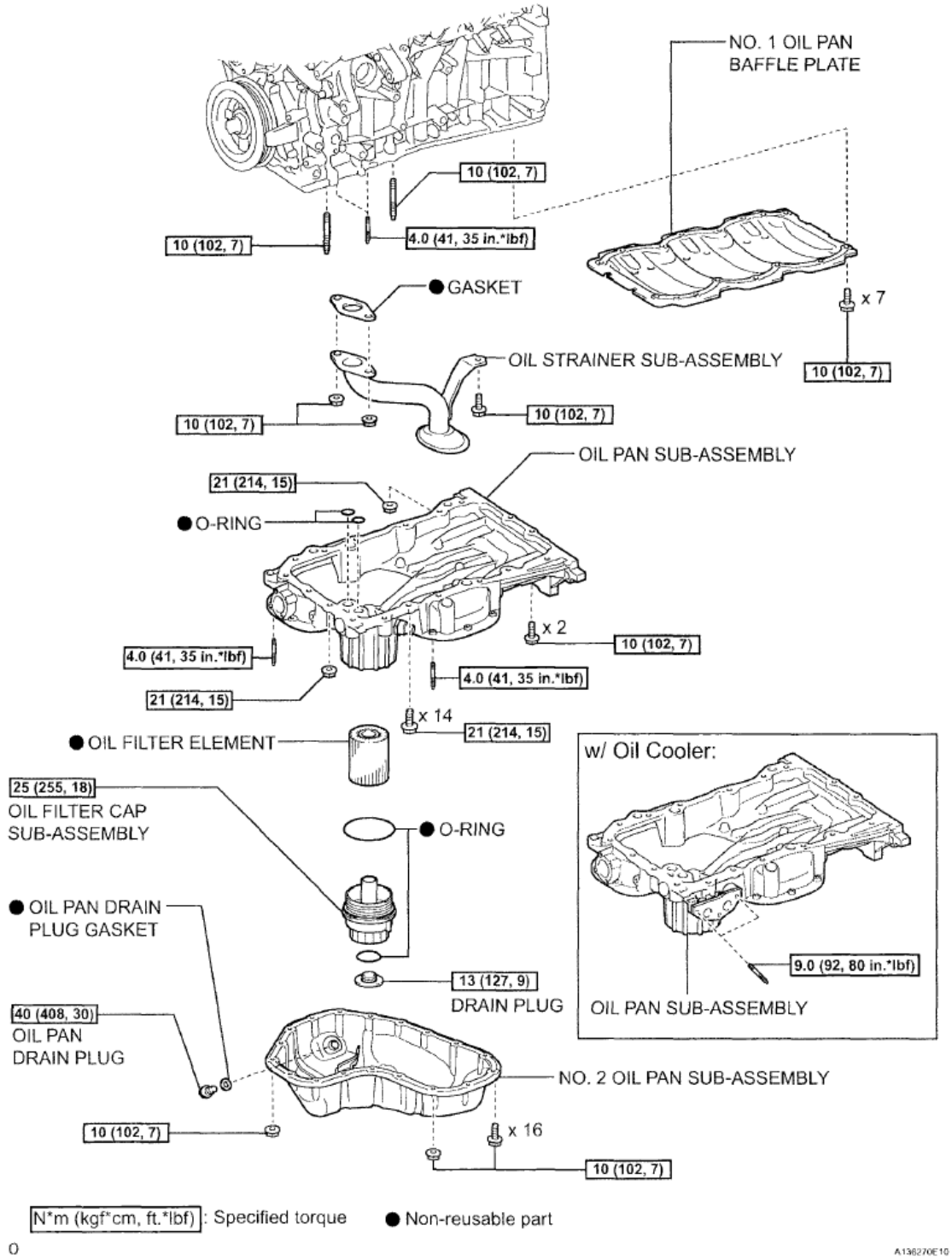

Fig. 406: Identifying Engine Unit Components With Torque Specification With Torque Specification (8 Of 13)
Courtesy of TOYOTA MOTOR SALES, U.S.A., INC.

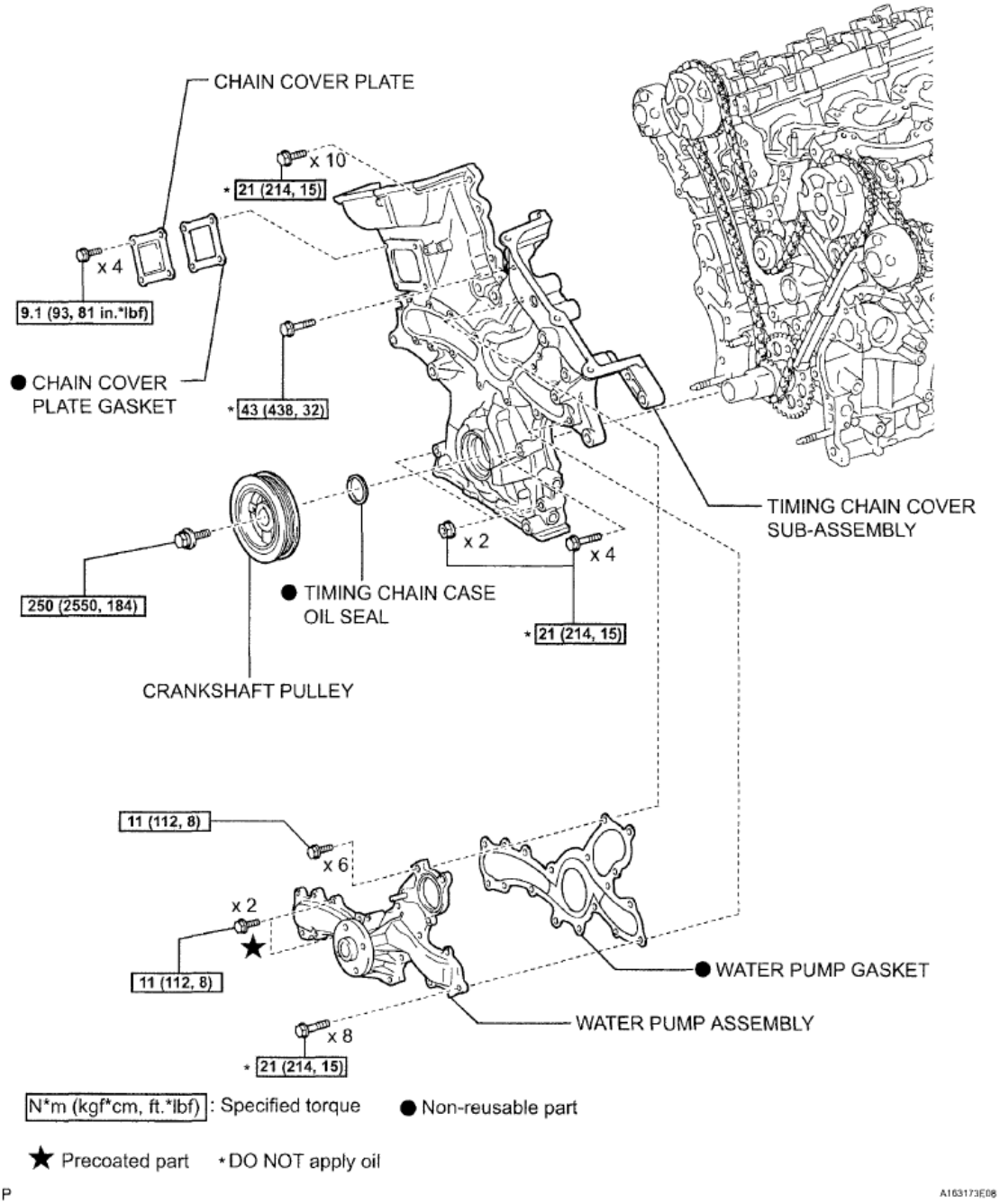

Fig. 407: Identifying Engine Unit Components With Torque Specification With Torque Specification (9 Of 13)
Courtesy of TOYOTA MOTOR SALES, U.S.A., INC.

 © 2011 Mitchell Repair Information Company, LLC.

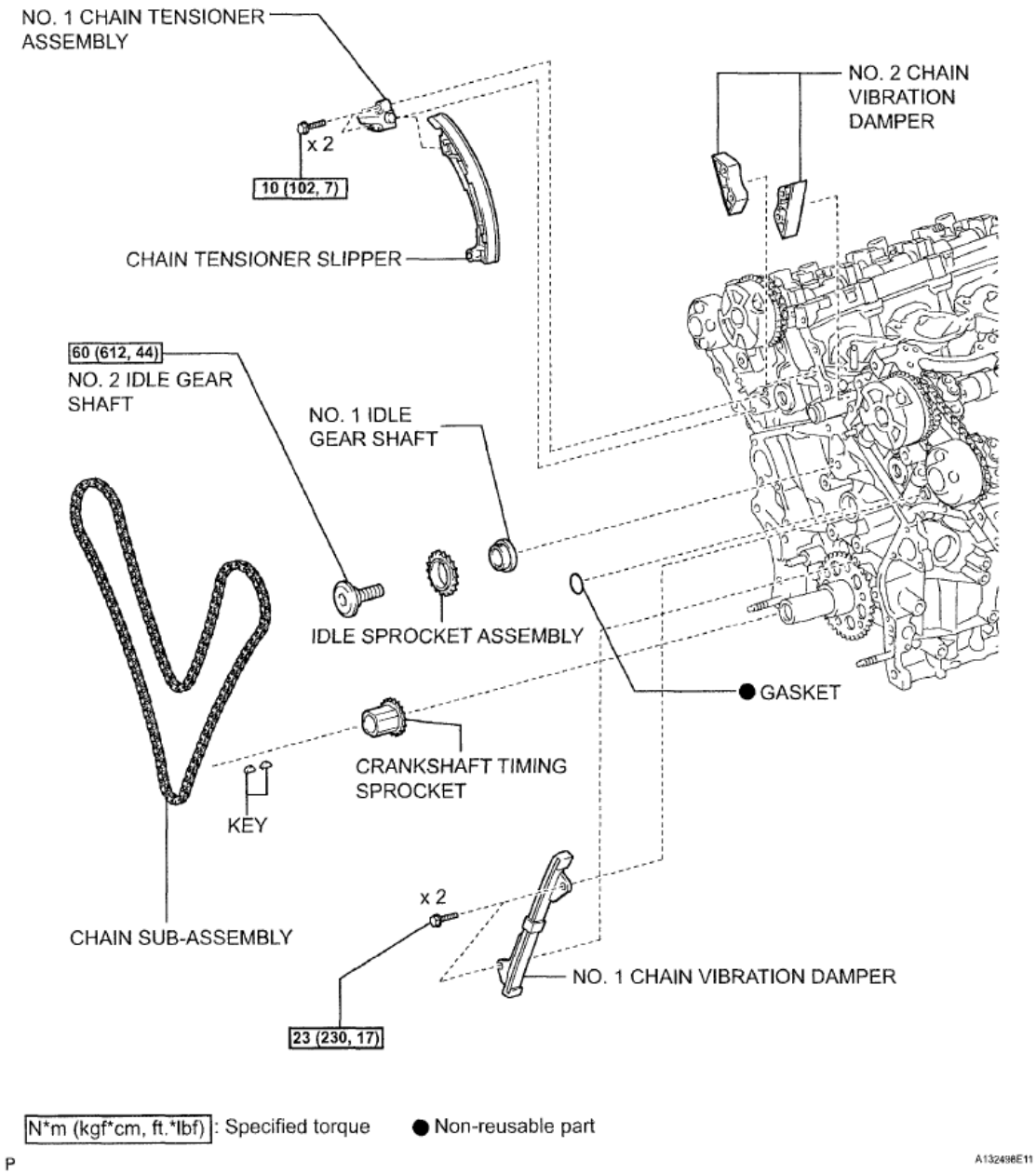

Fig. 408: Identifying Engine Unit Components With Torque Specification With Torque Specification (10 Of 13)
Courtesy of TOYOTA MOTOR SALES, U.S.A., INC.

 © 2011 Mitchell Repair Information Company, LLC.

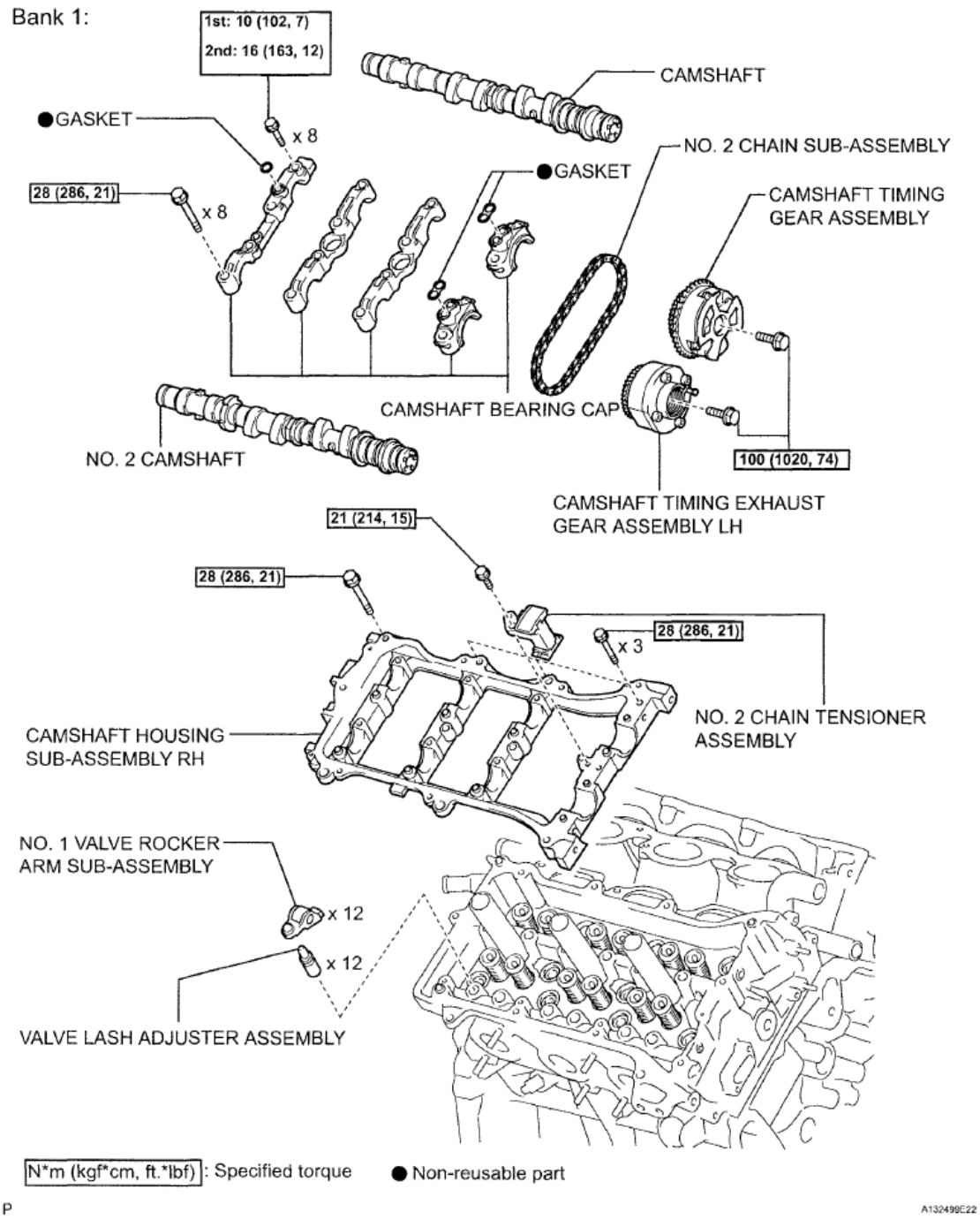

Fig. 409: Identifying Engine Unit Components With Torque Specification With Torque Specification (11 Of 13)
Courtesy of TOYOTA MOTOR SALES, U.S.A., INC.

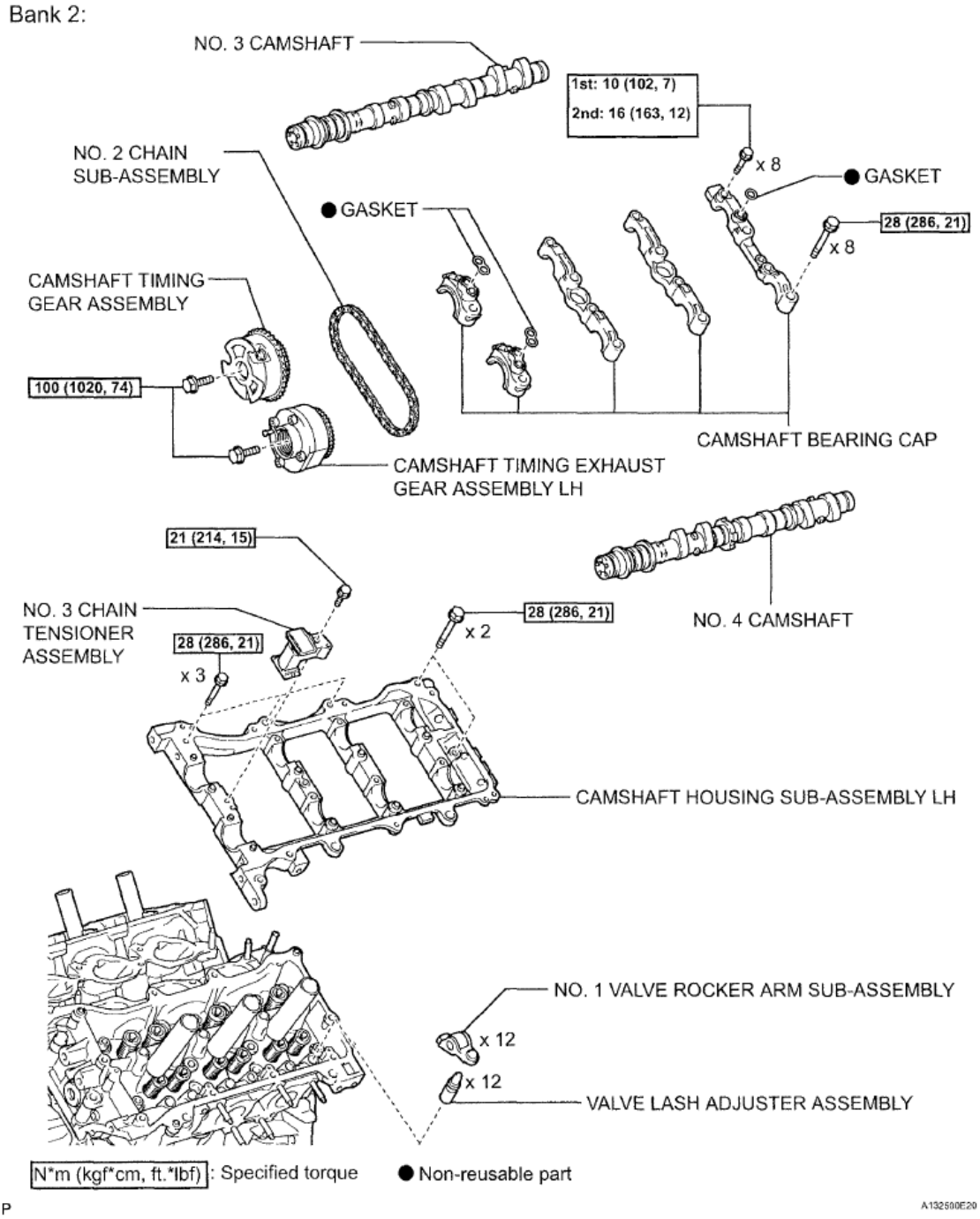

Fig. 410: Identifying Engine Unit Components With Torque Specification With Torque Specification (12 Of 13)
Courtesy of TOYOTA MOTOR SALES, U.S.A., INC.

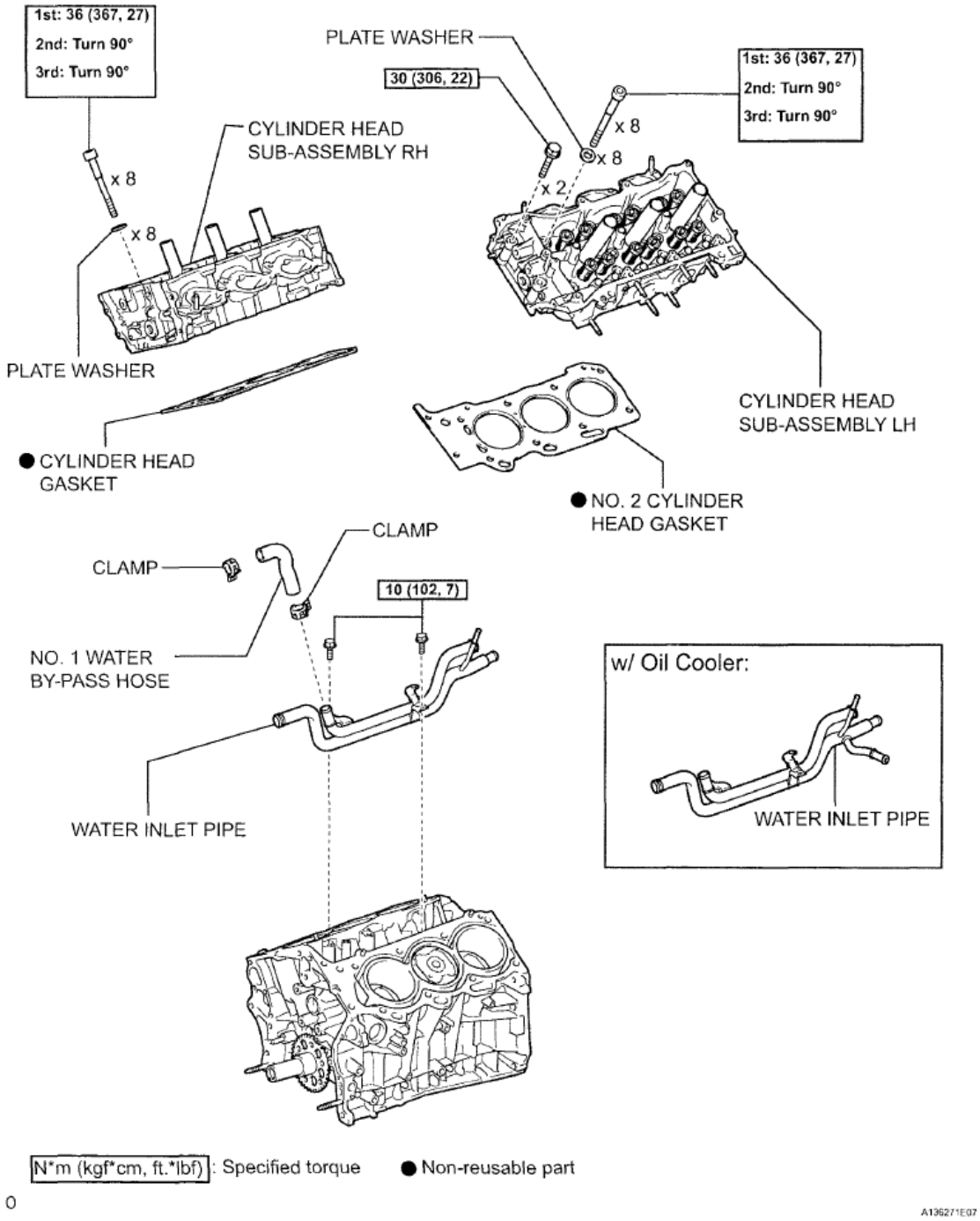

Fig. 411: Identifying Engine Unit Components With Torque Specification With Torque Specification (13 Of 13)
Courtesy of TOYOTA MOTOR SALES, U.S.A., INC.

REMOVAL

1. **INSTALL ENGINE STAND**
   a. Secure the engine onto an engine stand with the bolts.

 © 2011 Mitchell Repair Information Company, LLC.

b. Remove the engine hangers.

2. **REMOVE IGNITION COIL ASSEMBLY**
   a. Remove the 6 bolts and 6 ignition coils.

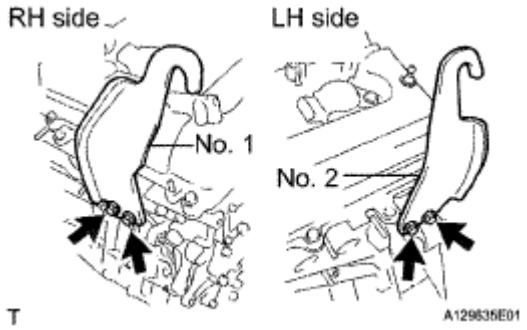

Fig. 412: Locating Engine Hangers With Bolts
Courtesy of TOYOTA MOTOR SALES, U.S.A., INC.

3. **REMOVE NO. 2 ENGINE MOUNTING STAY RH**
   a. Remove the bolt and No. 2 engine mounting stay RH.

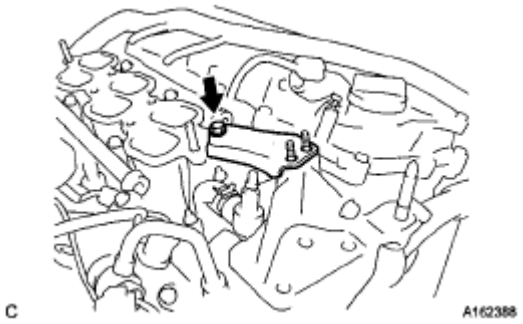

Fig. 413: Removing Bolt And No. 2 Engine Mounting Stay RH
Courtesy of TOYOTA MOTOR SALES, U.S.A., INC.

4. **REMOVE INTAKE MANIFOLD**
   a. Uniformly loosen and remove the 6 bolts and 4 nuts.
   b. Remove the intake manifold and 2 gaskets.

 © 2011 Mitchell Repair Information Company, LLC.

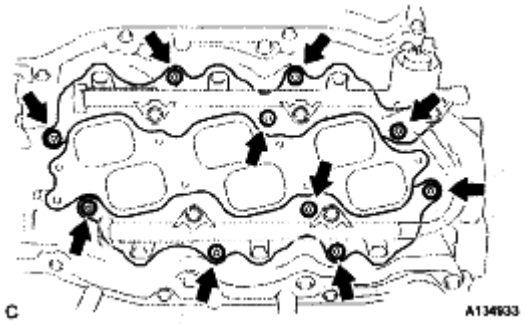

Fig. 414: Disconnecting A/F Sensor Connector Clamp
Courtesy of TOYOTA MOTOR SALES, U.S.A., INC.

5. **REMOVE EXHAUST MANIFOLD SUB-ASSEMBLY RH**
   a. Uniformly loosen and remove the 6 nuts.
   b. Remove the exhaust manifold sub-assembly and gasket.

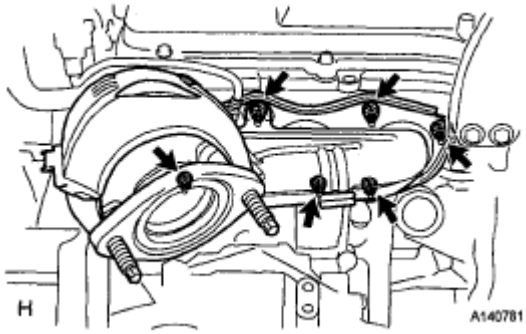

Fig. 415: Removing Manifold And Gasket
Courtesy of TOYOTA MOTOR SALES, U.S.A., INC.

6. **REMOVE NO. 2 ENGINE OIL LEVEL DIPSTICK GUIDE**
   a. Remove the oil level dipstick.
   b. Remove the bolt and No. 2 engine oil level dipstick guide.

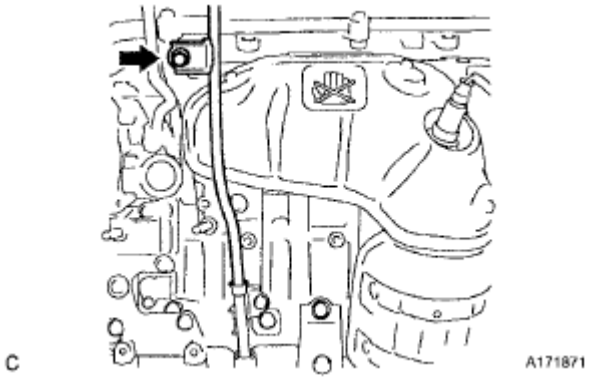

Fig. 416: Locating No. 2 Engine Oil Level Dipstick Guide And Bolt

 © 2011 Mitchell Repair Information Company, LLC.

Courtesy of TOYOTA MOTOR SALES, U.S.A., INC.

c. Remove the O-rings from the No. 2 engine oil level dipstick guide.

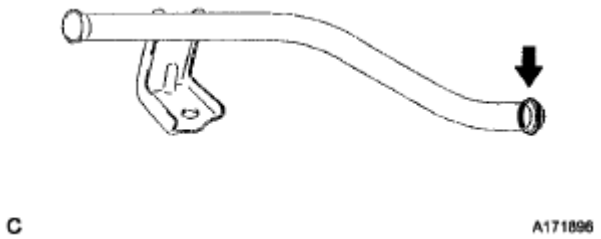

Fig. 417: Locating No. 2 Engine Oil Level Dipstick Guide And O-Rings
Courtesy of TOYOTA MOTOR SALES, U.S.A., INC.

7. **REMOVE NO. 2 MANIFOLD STAY**
   a. Remove the bolt, nut and No. 2 manifold stay.

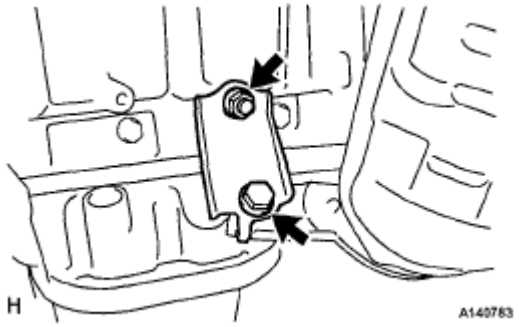

Fig. 418: Removing No. 2 Manifold Stay
Courtesy of TOYOTA MOTOR SALES, U.S.A., INC.

8. **REMOVE NO. 2 EXHAUST MANIFOLD HEAT INSULATOR**
   a. Remove the 3 bolts and No. 2 exhaust manifold heat insulator.

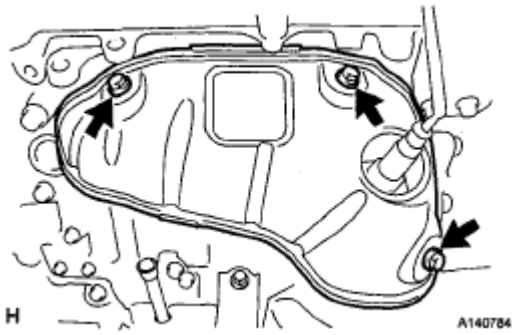

Fig. 419: Removing No. 2 Exhaust Manifold Heat Insulator
Courtesy of TOYOTA MOTOR SALES, U.S.A., INC.

 © 2011 Mitchell Repair Information Company, LLC.

9. **REMOVE EXHAUST MANIFOLD SUB-ASSEMBLY LH**
   a. Uniformly loosen and remove the 6 nuts.
   b. Remove the exhaust manifold assembly and gasket.

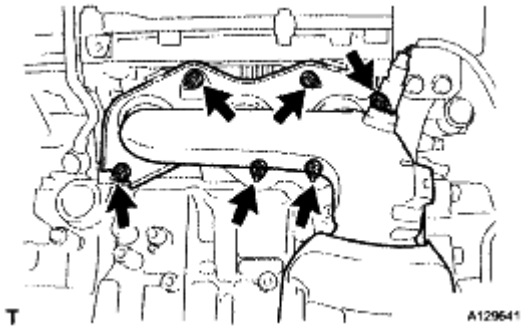

Fig. 420: Locating Exhaust Manifold Sub-Assembly Nuts
Courtesy of TOYOTA MOTOR SALES, U.S.A., INC.

10. **REMOVE TRANSVERSE ENGINE MOUNTING BRACKET**
   a. Remove the 3 bolts and transverse engine mounting bracket.

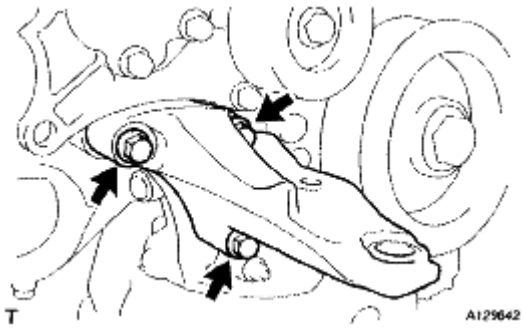

Fig. 421: Locating Engine Mounting Bracket RH With Bolts
Courtesy of TOYOTA MOTOR SALES, U.S.A., INC.

11. **REMOVE TRANSVERSE ENGINE MOUNTING BRACKET (for 2WD)**
   a. Remove the 3 bolts and transverse engine mounting bracket.

 © 2011 Mitchell Repair Information Company, LLC.

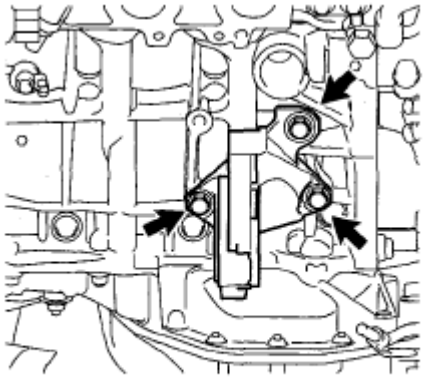

Fig. 422: Removing Drive Shaft Bearing Bracket (For 2WD)
Courtesy of TOYOTA MOTOR SALES, U.S.A., INC.

12. **REMOVE TRANSVERSE ENGINE MOUNTING BRACKET (for 4WD)**
    a. Remove the 3 bolts and transverse engine mounting bracket.
13. **REMOVE GENERATOR ASSEMBLY** (See **REMOVAL**)

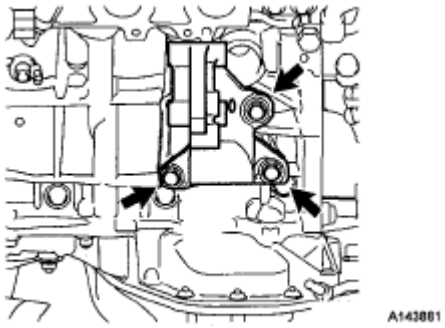

Fig. 423: Removing Bolts And Engine Mounting Bracket RR
Courtesy of TOYOTA MOTOR SALES, U.S.A., INC.

14. **REMOVE V-RIBBED BELT TENSIONER ASSEMBLY**
    a. Remove the 5 bolts and V-ribbed belt tensioner assembly.

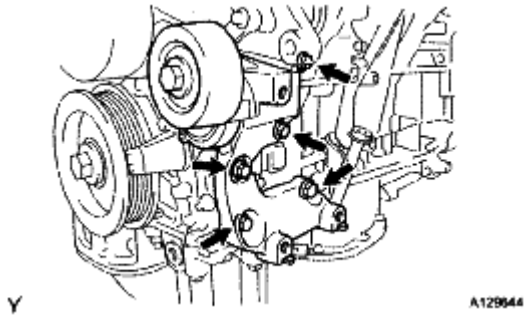

 © 2011 Mitchell Repair Information Company, LLC.

Fig. 424: Locating Bolts And Timing Gear Cover
Courtesy of TOYOTA MOTOR SALES, U.S.A., INC.

15. **REMOVE NO. 2 TIMING GEAR COVER**
    a. Remove the 2 bolts and No. 2 timing gear cover.

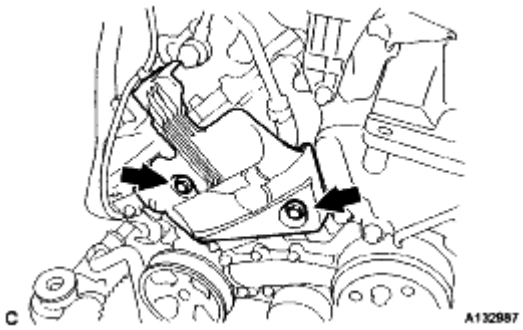

Fig. 425: Removing No. 2 Timing Gear Cover And Bolts
Courtesy of TOYOTA MOTOR SALES, U.S.A., INC.

16. **REMOVE NO. 2 IDLER PULLEY SUB-ASSEMBLY**
    a. Remove the bolt, No. 2 idler pulley cover plate, No. 2 idler pulley sub-assembly and idler pulley cover plate.
17. **REMOVE WATER PUMP PULLEY** (See **REMOVAL**)

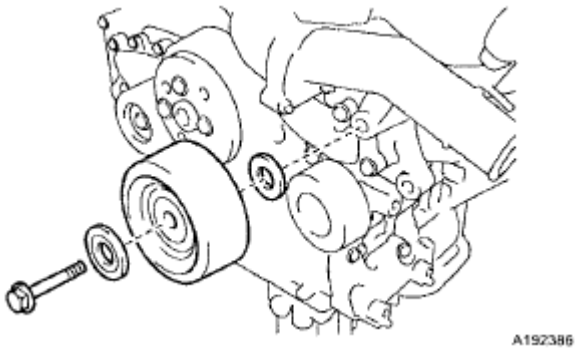

Fig. 426: Identifying No. 2 Idler Pulley Cover Plate And No. 2 Idler Pulley Sub-Assembly
Courtesy of TOYOTA MOTOR SALES, U.S.A., INC.

18. **REMOVE RADIO SETTING CONDENSER**
    a. Remove the 2 bolts and 2 radio setting condensers.

 © 2011 Mitchell Repair Information Company, LLC.

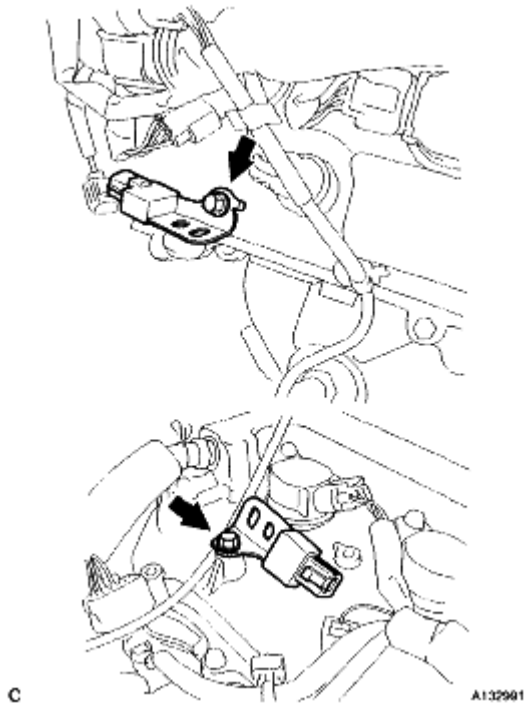

Fig. 427: Removing Radio Setting Condensers And Bolts
Courtesy of TOYOTA MOTOR SALES, U.S.A., INC.

19. **REMOVE NO. 1 VACUUM SWITCHING VALVE**
    a. Remove the bolt and No. 1 vacuum switching valve.

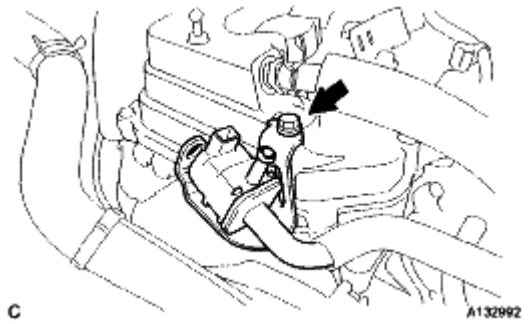

Fig. 428: Removing Bolt And No. 1 Vacuum Switching Valve
Courtesy of TOYOTA MOTOR SALES, U.S.A., INC.

20. **REMOVE ENGINE OIL PRESSURE SWITCH ASSEMBLY**
    a. Using a 24 mm deep socket wrench, remove the engine oil pressure switch assembly.

 © 2011 Mitchell Repair Information Company, LLC.

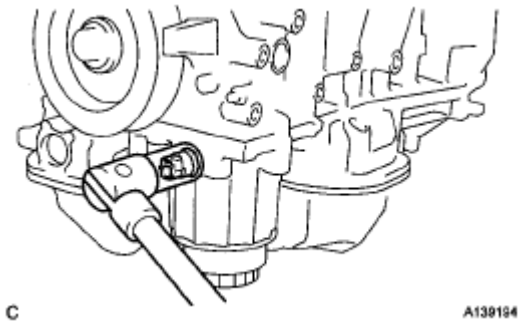

Fig. 429: Removing Engine Oil Pressure Switch Assembly
Courtesy of TOYOTA MOTOR SALES, U.S.A., INC.

21. **REMOVE KNOCK CONTROL SENSOR WIRE**
    a. Disconnect the 2 knock control sensor connectors and 3 clamps, and remove the knock control sensor wire from the engine assembly.
22. **REMOVE KNOCK CONTROL SENSOR** (See **REMOVAL**)

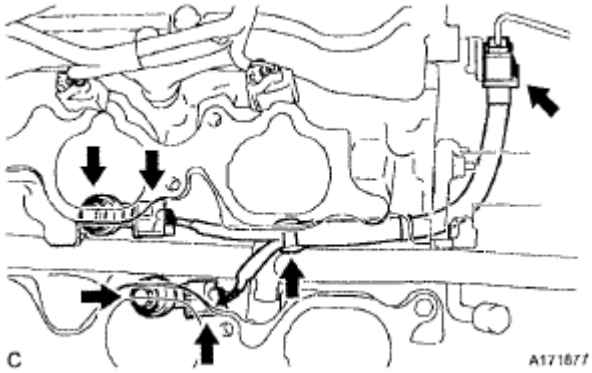

Fig. 430: Locating Knock Control Sensor Connectors And Clamps
Courtesy of TOYOTA MOTOR SALES, U.S.A., INC.

23. **REMOVE ENGINE COOLANT TEMPERATURE SENSOR**
    a. Using a 19 mm deep socket wrench, remove the engine coolant temperature sensor and gasket.

DISASSEMBLY

CAUTION: For additional information on timing chain/gear removal guidelines, installtion and camshaft timing gear alignment, see 2GR-FE VALVE TIMING PROCEDURE .

1. **REMOVE OIL FILLER CAP SUB-ASSEMBLY**
    a. Remove the oil filler cap sub-assembly and oil filler gasket.

 © 2011 Mitchell Repair Information Company, LLC.

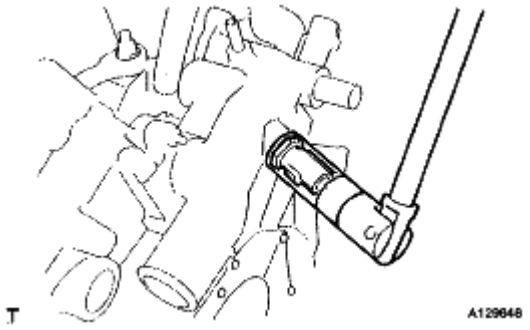

Fig. 431: Identifying EFI Engine Coolant Temperature Sensor
Courtesy of TOYOTA MOTOR SALES, U.S.A., INC.

2. **REMOVE SPARK PLUG**
   a. Remove the 6 spark plugs.

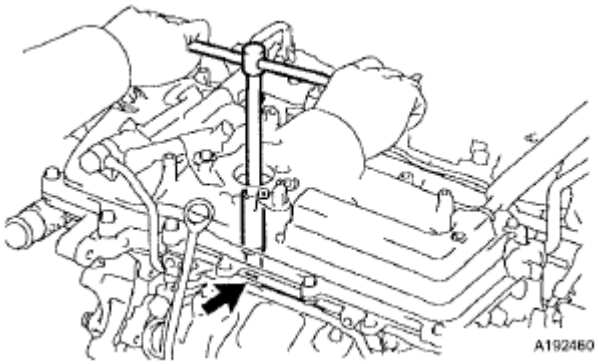

Fig. 432: Locating Spark Plugs
Courtesy of TOYOTA MOTOR SALES, U.S.A., INC.

3. **REMOVE OIL PAN DRAIN PLUG**
   a. Remove the oil pan drain plug and oil pan drain plug gasket.

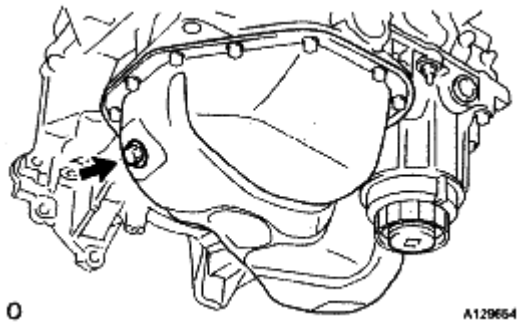

Fig. 433: Locating Oil Pan Drain Plug
Courtesy of TOYOTA MOTOR SALES, U.S.A., INC.

4. **REMOVE VENTILATION VALVE SUB-ASSEMBLY**

 © 2011 Mitchell Repair Information Company, LLC.

a. Remove the ventilation valve sub-assembly.

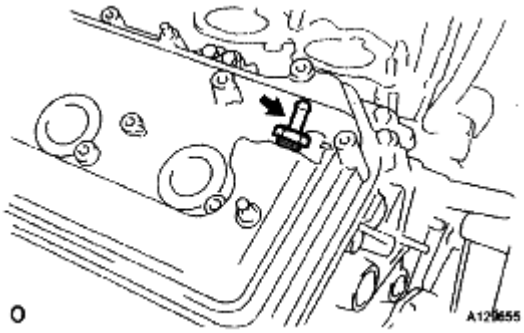

Fig. 434: Identifying Ventilation Valve Sub-Assembly
Courtesy of TOYOTA MOTOR SALES, U.S.A., INC.

5. **REMOVE CAMSHAFT POSITION SENSOR**
   a. Remove the 4 bolts and 4 camshaft position sensors.

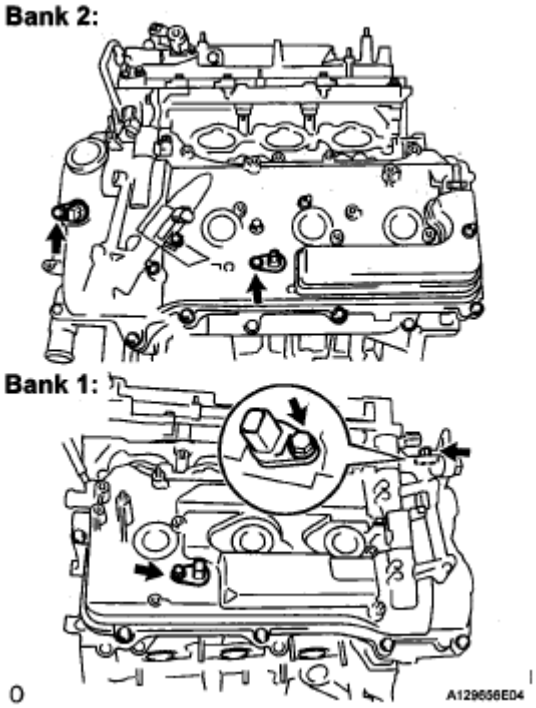

Fig. 435: Removing Camshaft Position Sensors And Bolts
Courtesy of TOYOTA MOTOR SALES, U.S.A., INC.

6. **REMOVE CAMSHAFT TIMING OIL CONTROL VALVE ASSEMBLY**
   a. Remove the 4 bolts and 4 camshaft timing oil control valves.

 © 2011 Mitchell Repair Information Company, LLC.

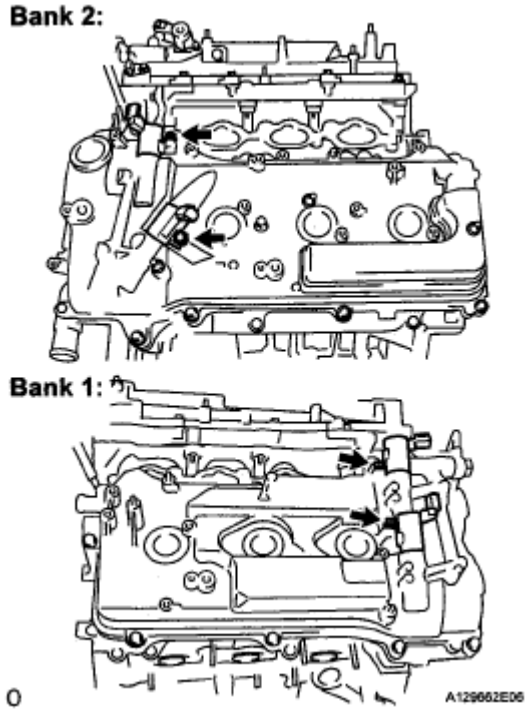

Fig. 436: Removing Bolts And Camshaft Oil Control Valves
Courtesy of TOYOTA MOTOR SALES, U.S.A., INC.

7. **REMOVE CRANKSHAFT POSITION SENSOR**
   a. Remove the bolt and crankshaft position sensor.

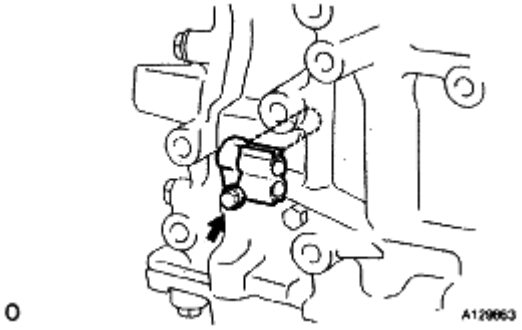

Fig. 437: Locating Crankshaft Position Sensor
Courtesy of TOYOTA MOTOR SALES, U.S.A., INC.

8. **REMOVE NO. 1 OIL PIPE**
   a. Remove the 2 oil pipe unions, gaskets and No. 1 oil pipe.
   b. Remove the oil control valve filter LH and gaskets.

 © 2011 Mitchell Repair Information Company, LLC.

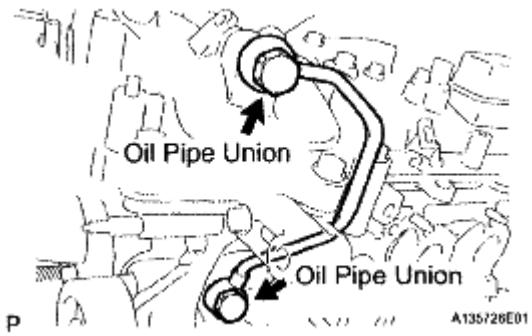

Fig. 438: Removing Oil Control Valve Filter LH And Gaskets
Courtesy of TOYOTA MOTOR SALES, U.S.A., INC.

9. **REMOVE OIL PIPE**
   a. Remove the bolt.
   b. Remove the 2 oil pipe unions and oil pipe.
   c. Remove the oil control valve filter RH and gaskets.

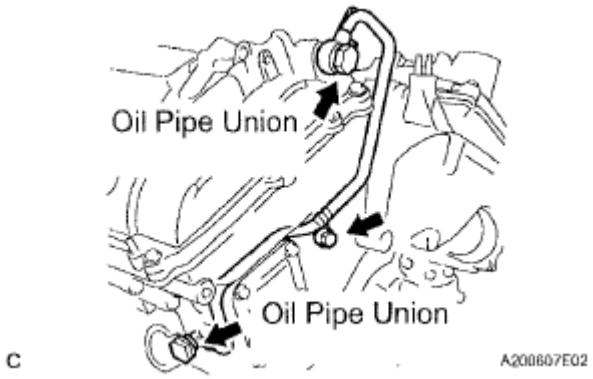

Fig. 439: Locating Oil Pipe Unions And Oil Pipe
Courtesy of TOYOTA MOTOR SALES, U.S.A., INC.

10. **REMOVE CYLINDER BLOCK WATER DRAIN COCK SUB-ASSEMBLY**
   a. Remove the cylinder block water drain cock sub-assemblies from the cylinder block.
   b. Remove the cylinder block water drain cock plugs from the water drain cock sub-assemblies.

 © 2011 Mitchell Repair Information Company, LLC.

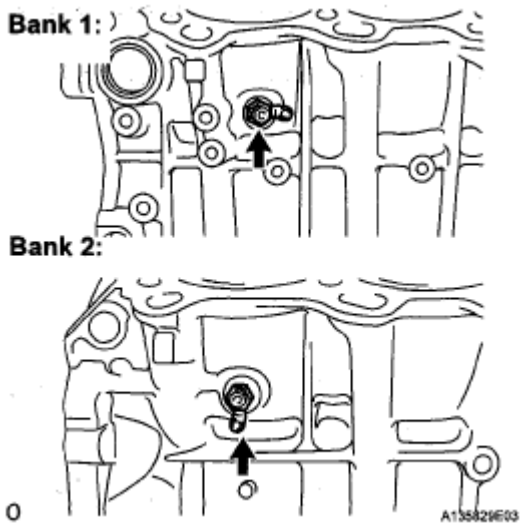

Fig. 440: Removing Drain Plug
Courtesy of TOYOTA MOTOR SALES, U.S.A., INC.

11. **REMOVE OIL FILTER ELEMENT**
    a. Remove the drain plug.

NOTE: Do not remove the O-ring from the oil filter cap.

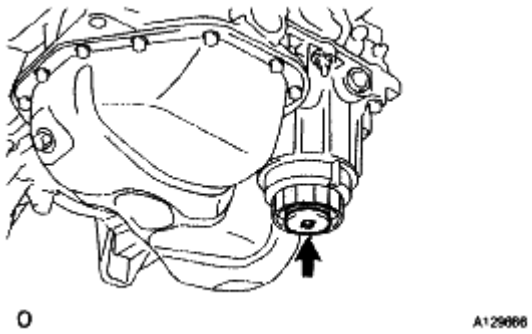

Fig. 441: Locating Drain Plug
Courtesy of TOYOTA MOTOR SALES, U.S.A., INC.

    b. Connect the hose to the pipe.
    c. Insert the pipe with the hose into the oil filter cap.
    d. Make sure that the oil is completely drained and remove the pipe and O-ring.

 © 2011 Mitchell Repair Information Company, LLC.

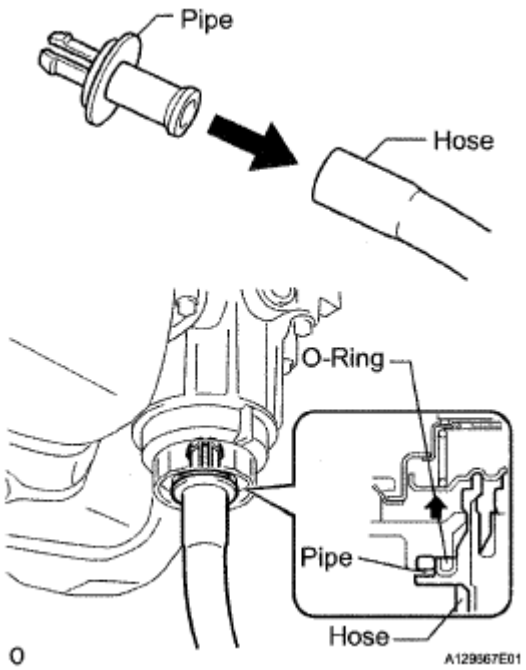

Fig. 442: Connecting Hose To Pipe
Courtesy of TOYOTA MOTOR SALES, U.S.A., INC.

e. Using SST, remove the oil filter cap sub-assembly.

SST 09228-06501

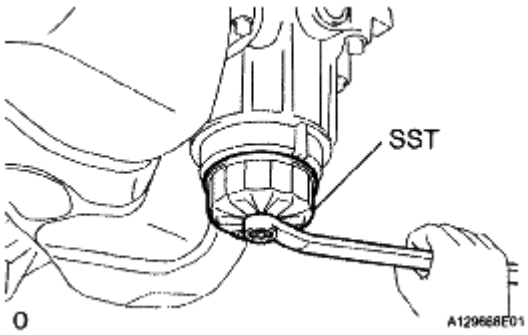

Fig. 443: Removing Oil Filter Cap
Courtesy of TOYOTA MOTOR SALES, U.S.A., INC.

f. Remove the oil filter element and O-ring from the oil filter cap sub-assembly.

NOTE: Do not use any tools when removing the O-ring to prevent the O-ring groove from being damaged.

 © 2011 Mitchell Repair Information Company, LLC.

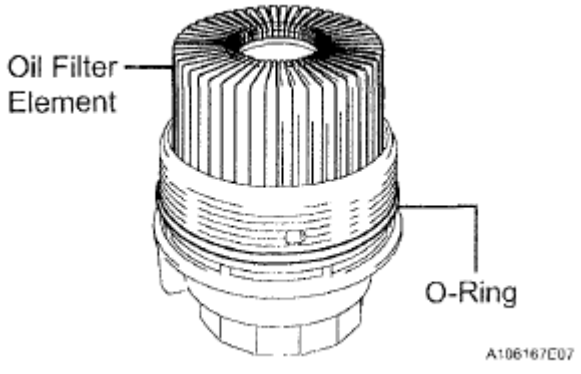

Fig. 444: Identifying Oil Filter Element And O-Ring
Courtesy of TOYOTA MOTOR SALES, U.S.A., INC.

12. **REMOVE CRANKSHAFT PULLEY**
    a. Using SST, loosen the crankshaft pulley bolt.

    SST 09213-70011 (09213-70020), 09330-00021

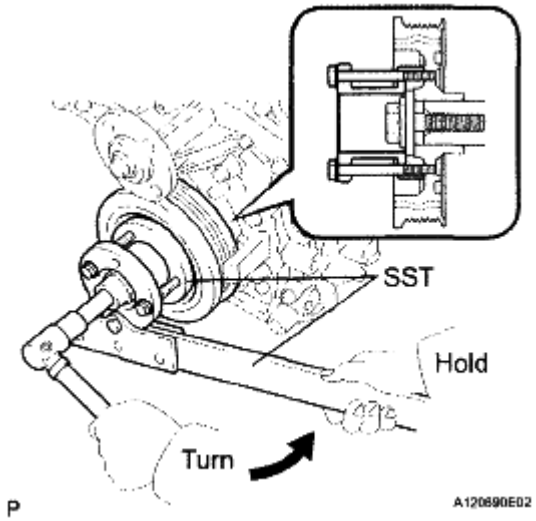

Fig. 445: Loosening Crankshaft Pulley Bolt
Courtesy of TOYOTA MOTOR SALES, U.S.A., INC.

    b. Using SST, remove the crankshaft pulley bolt and crankshaft pulley.

    SST 09950-50013 (09951 -05010, 09952-05010, 09953-05020, 09954-05021)

 © 2011 Mitchell Repair Information Company, LLC.

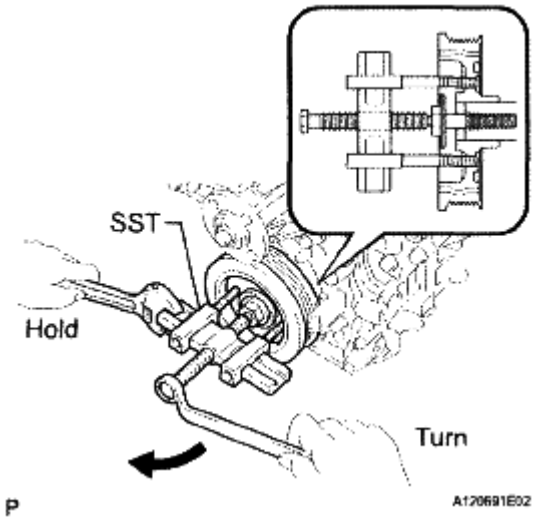

Fig. 446: Removing Crankshaft Pulley
Courtesy of TOYOTA MOTOR SALES, U.S.A., INC.

13. **REMOVE OIL COOLER ASSEMBLY (w/ OIL COOLER)**
    a. Remove the bolt, 2 clamps, and 4 clips and disconnect the 2 water by-pass hoses.

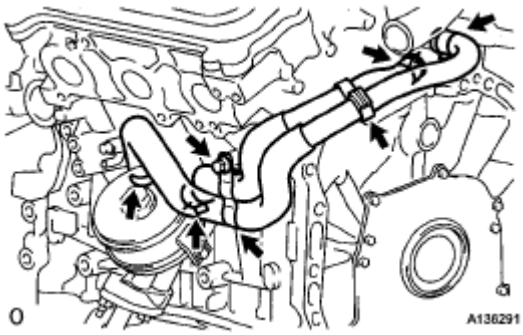

Fig. 447: Removing Bolt, Clamps, And Clips
Courtesy of TOYOTA MOTOR SALES, U.S.A., INC.

    b. Remove the union bolt, oil cooler assembly, and O-ring.

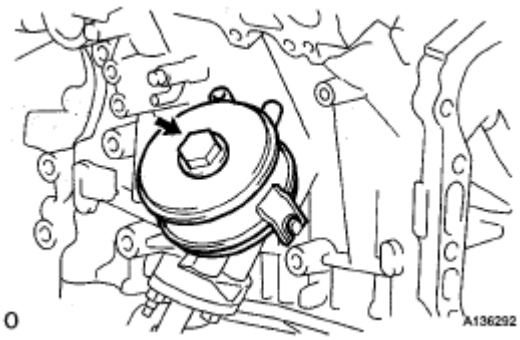

 © 2011 Mitchell Repair Information Company, LLC.

Fig. 448: Removing Union Bolt, Oil Cooler Assembly, And O-Ring
Courtesy of TOYOTA MOTOR SALES, U.S.A., INC.

14. **REMOVE NO. 1 OIL COOLER BRACKET (w/ OIL COOLER)**
    a. Remove the 3 bolts, 3 nuts, and oil cooler pipe with No. 1 oil cooler bracket.

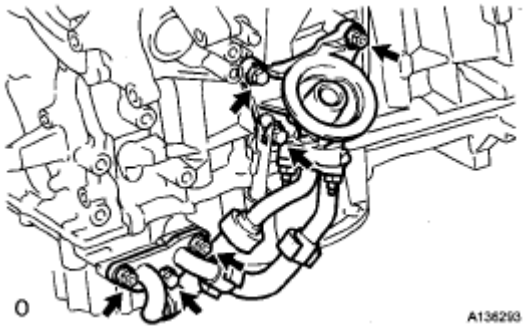

Fig. 449: Removing Oil Cooler Pipe, Bolts And Nuts
Courtesy of TOYOTA MOTOR SALES, U.S.A., INC.

    b. Remove the bolt, 2 nuts, No. 1 oil cooler bracket, and gasket.
    c. Using a "TORX" socket wrench E8, remove the 2 stud bolts.
15. **REMOVE NO. 1 ENGINE OIL LEVEL DIPSTICK GUIDE**
    a. Remove the bolt and No. 1 engine oil level dipstick guide.

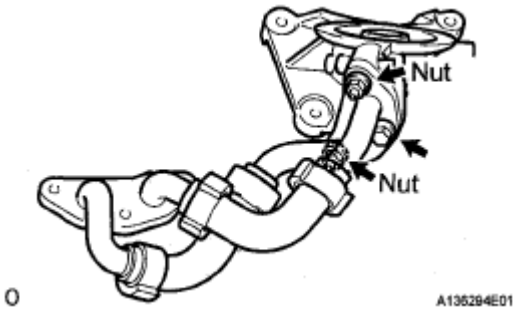

Fig. 450: Removing No. 1 Oil Cooler Bracket, Bolt And Nuts
Courtesy of TOYOTA MOTOR SALES, U.S.A., INC.

    b. Remove the O-ring.

 © 2011 Mitchell Repair Information Company, LLC.

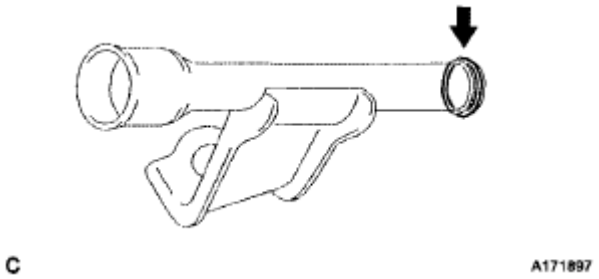

Fig. 451: Locating O-ring
Courtesy of TOYOTA MOTOR SALES, U.S.A., INC.

16. **REMOVE NO. 1 FRONT ENGINE MOUNTING BRACKET LH**
    a. Remove the 6 bolts and No. 1 front engine mounting bracket LH.
    b. Using a "TORX" socket wrench E8, remove the 2 stud bolts.

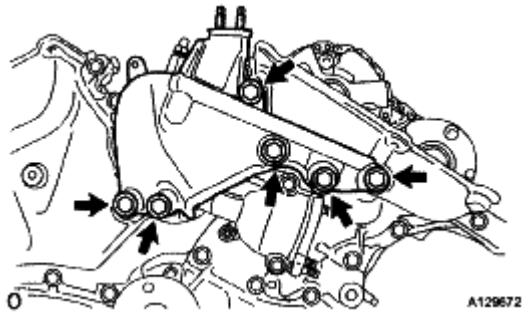

Fig. 452: Locating Engine Mounting Bracket Front And Bolts
Courtesy of TOYOTA MOTOR SALES, U.S.A., INC.

17. **REMOVE WATER INLET HOUSING**
    a. Remove the 2 nuts, water inlet and thermostat.
    b. Remove the gasket.
    c. Remove the drain cock plug.
    d. Remove the drain cock assembly.
    e. Remove the 2 stud bolts.
    f. Separate the No. 1 water by-pass hose.

 © 2011 Mitchell Repair Information Company, LLC.

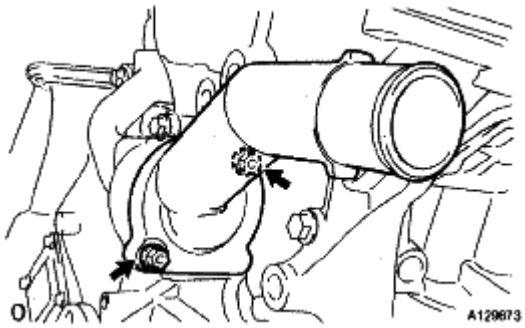

Fig. 453: Locating Water Inlet With Nuts
Courtesy of TOYOTA MOTOR SALES, U.S.A., INC.

g. Remove the 2 bolts, nut and water inlet housing.

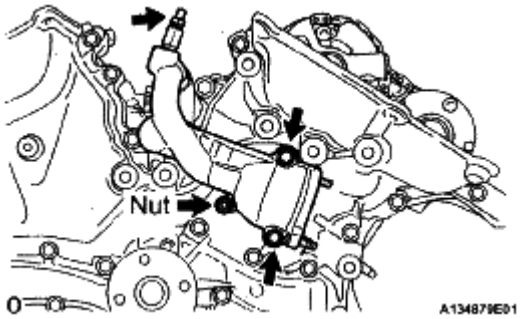

Fig. 454: Removing Water Inlet Housing, Bolt And Nuts
Courtesy of TOYOTA MOTOR SALES, U.S.A., INC.

h. Remove the 2 O-rings.

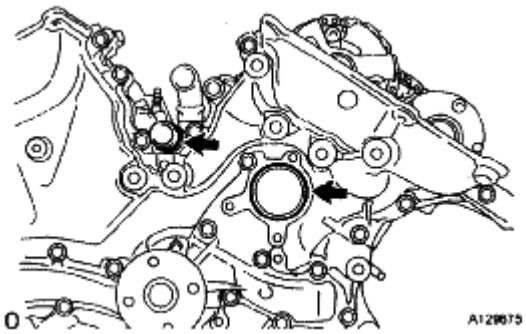

Fig. 455: Locating O-Rings
Courtesy of TOYOTA MOTOR SALES, U.S.A., INC.

18. **REMOVE WATER OUTLET**
    a. Remove the 2 bolts, 4 nuts and water outlet.

 © 2011 Mitchell Repair Information Company, LLC.

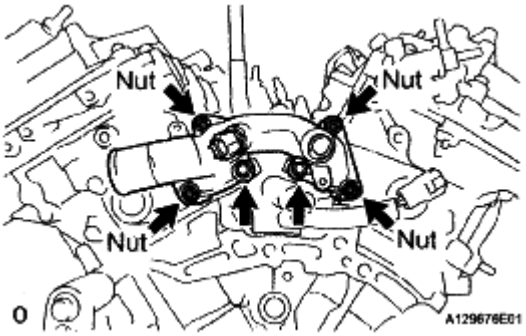

Fig. 456: Removing Water Outlet, Bolt And Nuts
Courtesy of TOYOTA MOTOR SALES, U.S.A., INC.

b. Remove the 2 gaskets and O-ring.

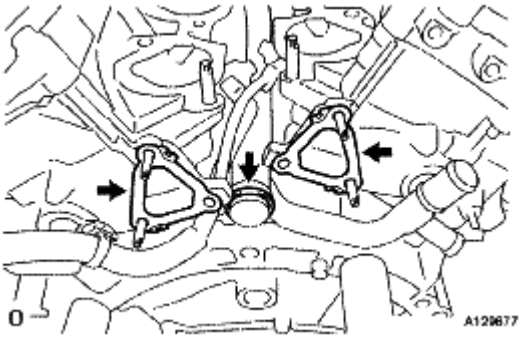

Fig. 457: Locating Gaskets And O-Ring
Courtesy of TOYOTA MOTOR SALES, U.S.A., INC.

19. **REMOVE CYLINDER HEAD COVER SUB-ASSEMBLY (for Bank 1)**
    a. Remove the 12 bolts, seal washer, cylinder head cover sub-assembly and cylinder head cover gasket.

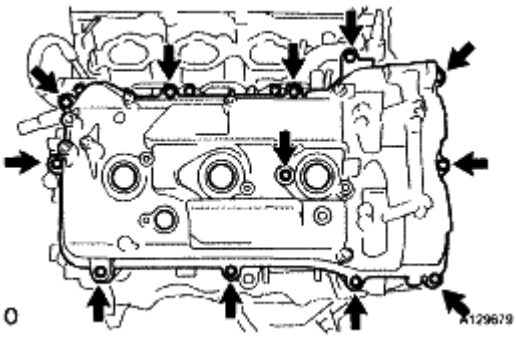

Fig. 458: Locating Head Cover And Bolt
Courtesy of TOYOTA MOTOR SALES, U.S.A., INC.

b. Remove the 3 gaskets.

 © 2011 Mitchell Repair Information Company, LLC.

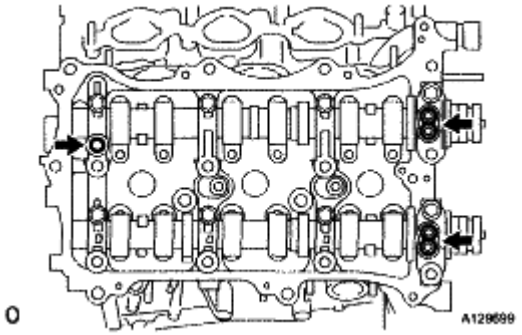

Fig. 459: Identifying Cylinder Head Cover Gasket
Courtesy of TOYOTA MOTOR SALES, U.S.A., INC.

20. **REMOVE CYLINDER HEAD COVER SUB-ASSEMBLY (for Bank 2)**
    a. Remove the 12 bolts, seal washer, cylinder head cover sub-assembly and cylinder head cover gasket.

NOTE: **The baffle plate is located on the back of the portion shown in the illustration. Do not damage the baffle plate when removing the cylinder head cover sub-assembly.**

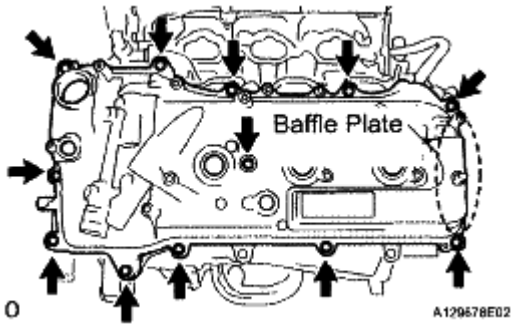

Fig. 460: Removing Bolts, Seal Washer, Head Cover And Gasket
Courtesy of TOYOTA MOTOR SALES, U.S.A., INC.

    b. Remove the 3 gaskets.

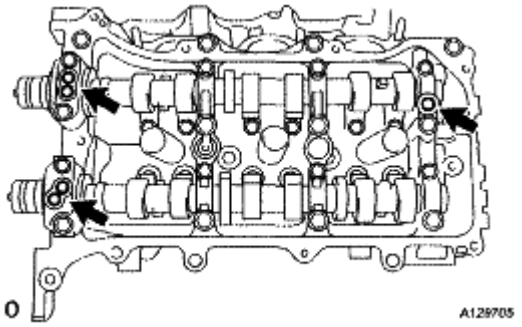

Fig. 461: Identifying Cylinder Head Cover Gasket

 © 2011 Mitchell Repair Information Company, LLC.

Courtesy of TOYOTA MOTOR SALES, U.S.A., INC.

21. **REMOVE NO. 2 OIL PAN SUB-ASSEMBLY**
    a. Remove the 16 bolts and 2 nuts.

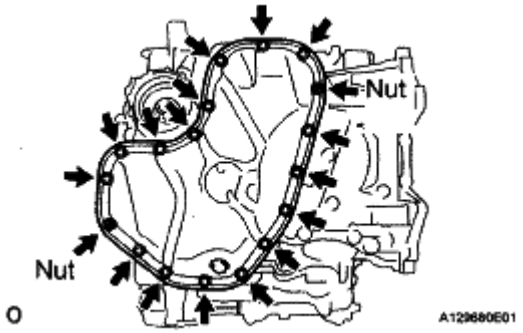

Fig. 462: Identifying Oil Pan With Bolts And Nuts
Courtesy of TOYOTA MOTOR SALES, U.S.A., INC.

    b. Insert the blade of oil pan seal cutter between the oil pans. Cut through the applied sealer and remove the No. 2 oil pan sub-assembly.

NOTE: Be careful not to damage the contact surfaces of the oil pans.

    c. Using a "TORX" socket wrench E6, remove the 2 stud bolts.

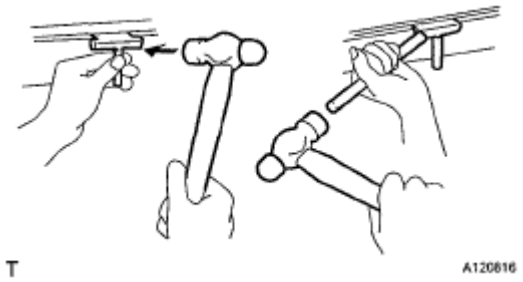

Fig. 463: Inserting Blade Of Oil Pan Seal Cutter Between Crankcase And Oil Pan
Courtesy of TOYOTA MOTOR SALES, U.S.A., INC.

22. **REMOVE OIL STRAINER SUB-ASSEMBLY**
    a. Remove the bolt, 2 nuts, oil strainer sub-assembly and gasket.
    b. Using a "TORX" socket wrench E6, remove the 2 stud bolts.

 © 2011 Mitchell Repair Information Company, LLC.

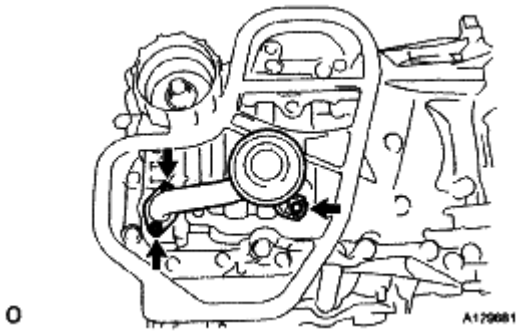

Fig. 464: Locating Oil Strainer With Bolt And Nuts
Courtesy of TOYOTA MOTOR SALES, U.S.A., INC.

23. **REMOVE OIL PAN SUB-ASSEMBLY**
    a. Remove the 16 bolts and 2 nuts.

    HINT:

    Be sure to clean the bolts and stud bolts and check the threads for cracks or other damage.

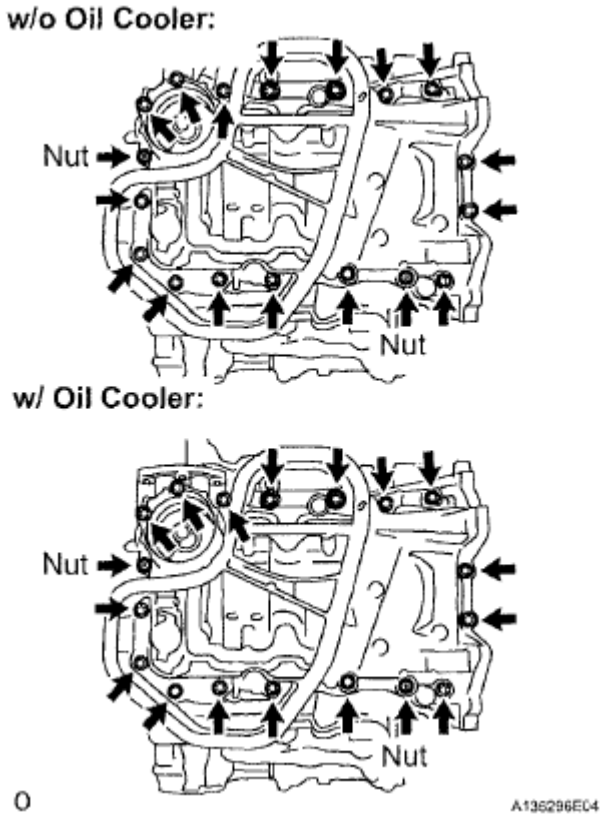

Fig. 465: Locating Oil Pan Bolt And Nuts
Courtesy of TOYOTA MOTOR SALES, U.S.A., INC.

 © 2011 Mitchell Repair Information Company, LLC.

b. Remove the oil pan sub-assembly by prying between the oil pan sub-assembly and cylinder block sub-assembly with a screwdriver.

NOTE: Be careful not to damage the contact surfaces of the cylinder block and oil pan.

HINT:

Tape the screwdriver tip before use.

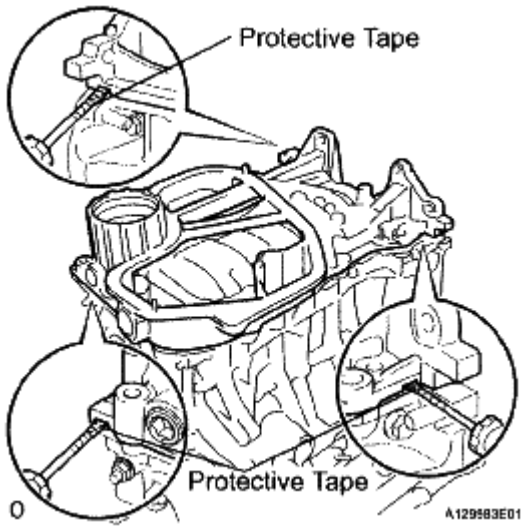

Fig. 466: Prying Between Oil Pan Sub-Assembly And Cylinder Block Sub-Assembly
Courtesy of TOYOTA MOTOR SALES, U.S.A., INC.

c. Remove the 2 O-rings.
d. Using a "TORX" socket wrench E8, remove the 2 stud bolts.

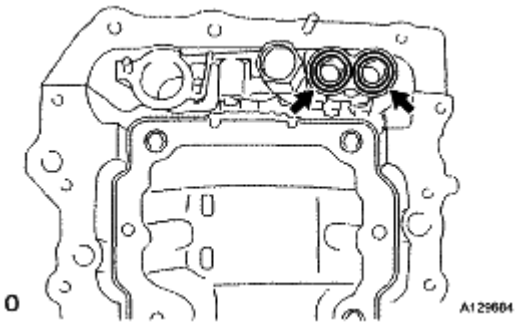

Fig. 467: Locating O-Rings
Courtesy of TOYOTA MOTOR SALES, U.S.A., INC.

24. **REMOVE NO. 1 OIL PAN BAFFLE PLATE**
    a. Remove the 7 bolts and No. 1 oil pan baffle plate.

 © 2011 Mitchell Repair Information Company, LLC.

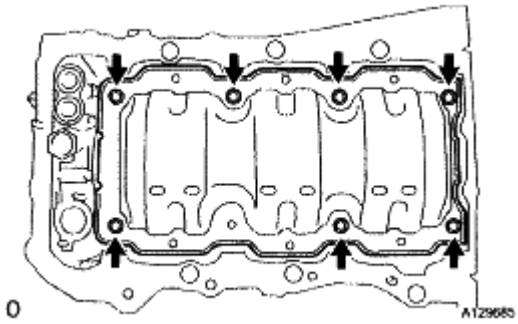

Fig. 468: Locating Oil Pan Baffle Plate
Courtesy of TOYOTA MOTOR SALES, U.S.A., INC.

25. **REMOVE ENGINE REAR OIL SEAL RETAINER**
    a. Remove the 6 bolts.

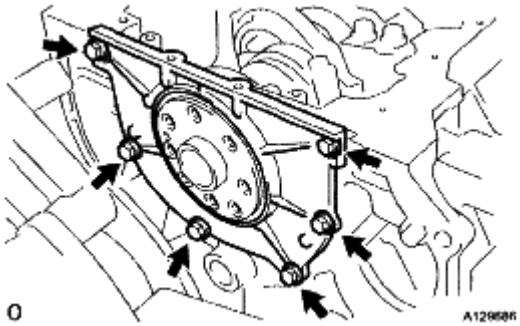

Fig. 469: Locating Engine Rear Oil Seal Retainer And Bolts
Courtesy of TOYOTA MOTOR SALES, U.S.A., INC.

    b. Using a screwdriver, pry out the engine rear oil seal retainer.

NOTE: Be careful not to damage the engine rear oil seal retainer.

HINT:

Tape the screwdriver tip before use.

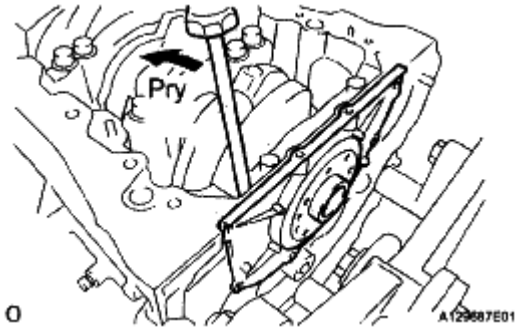

Fig. 470: Prying Out Oil Seal Retainer
Courtesy of TOYOTA MOTOR SALES, U.S.A., INC.

26. **REMOVE ENGINE REAR OIL SEAL**
    a. Place the engine rear oil seal retainer on wooden blocks.

NOTE: Be careful not to damage the engine rear oil seal retainer.

    b. Using a screwdriver and a hammer, tap out the oil seal.

    HINT:

    Tape the screwdriver tip before use.

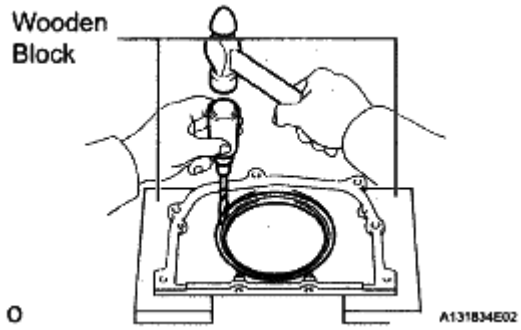

Fig. 471: Taping Out Oil Seal
Courtesy of TOYOTA MOTOR SALES, U.S.A., INC.

27. **REMOVE WATER PUMP ASSEMBLY**
    a. Remove the 16 bolts, water pump assembly and water pump gasket.

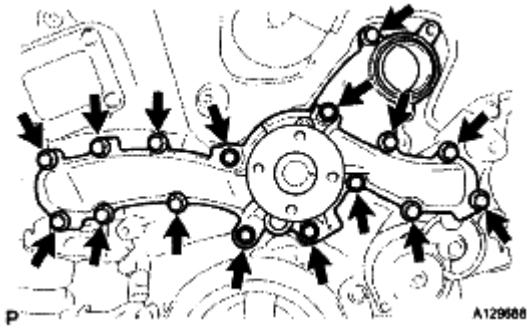

Fig. 472: Locating Bolts, Water Pump And Gasket
Courtesy of TOYOTA MOTOR SALES, U.S.A., INC.

28. **REMOVE TIMING CHAIN COVER SUB-ASSEMBLY**
    a. Remove the 15 bolts and 2 nuts as shown in the illustration.

 © 2011 Mitchell Repair Information Company, LLC.

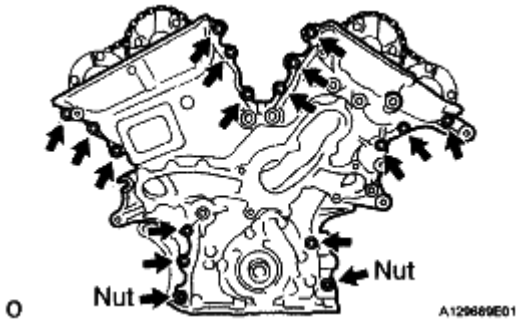

Fig. 473: Removing Bolts And Nuts
Courtesy of TOYOTA MOTOR SALES, U.S.A., INC.

b. Remove the timing chain cover sub-assembly by prying between the timing chain cover and cylinder head sub-assembly or cylinder block sub-assembly with a screwdriver.

NOTE: Be careful not to damage the contact surfaces of the cylinder head, cylinder block and chain cover.

HINT:

Tape the screwdriver tip before use.

c. Remove the 4 bolts, chain cover plate and chain cover plate gasket.

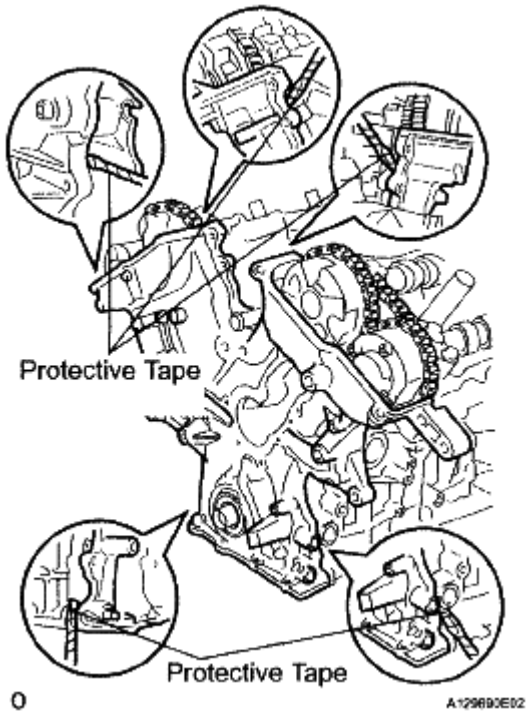

Fig. 474: Removing Chain Cover Plate And Bolt

 © 2011 Mitchell Repair Information Company, LLC.

Courtesy of TOYOTA MOTOR SALES, U.S.A., INC.

d. Remove the gasket.

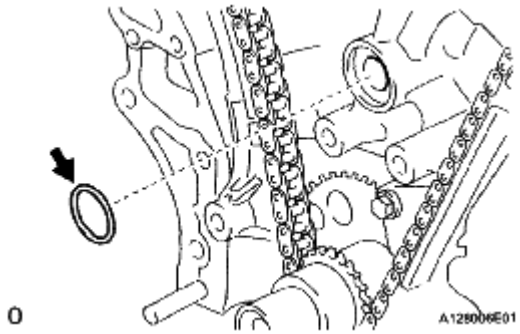

Fig. 475: Removing Chain Cover Plate Gasket
Courtesy of TOYOTA MOTOR SALES, U.S.A., INC.

29. **REMOVE TIMING CHAIN CASE OIL SEAL**
    a. Using a screwdriver, pry out the timing chain case oil seal.

    HINT:

    Tape the screwdriver tip before use.

30. **SET NO. 1 CYLINDER TO TDC/COMPRESSION**

CAUTION: For additional information on timing chain/gear removal guidelines, installtion and camshaft timing gear alignment, see 2GR-FE VALVE TIMING PROCEDURE .

a. Temporarily tighten the pulley set bolt.

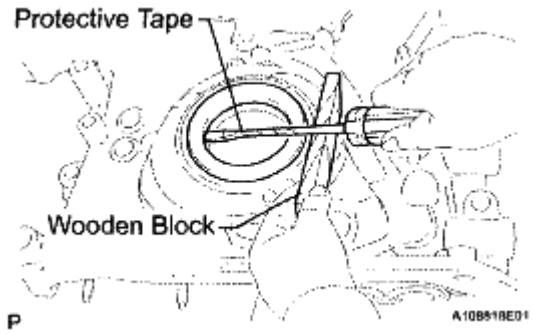

Fig. 476: Prying Timing Chain Case Oil Seal
Courtesy of TOYOTA MOTOR SALES, U.S.A., INC.

b. Set the timing mark on the crank angle sensor plate to the RH block bore center line

 © 2011 Mitchell Repair Information Company, LLC.

(TDC/compression).

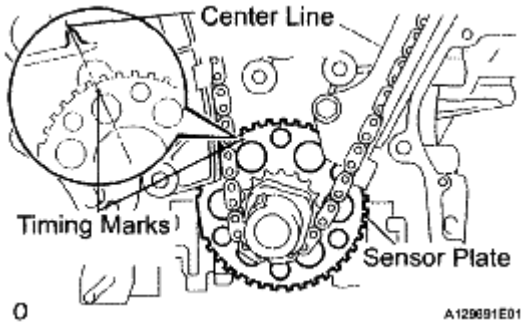

Fig. 477: Identifying Timing Mark On Crank Angle Sensor Plate
Courtesy of TOYOTA MOTOR SALES, U.S.A., INC.

c. Check that the timing marks of the camshaft timing gears are aligned with those of the bearing cap as shown in the illustration.

If not, turn the crankshaft 1 revolution (360°) and align the timing marks as shown in the illustration.

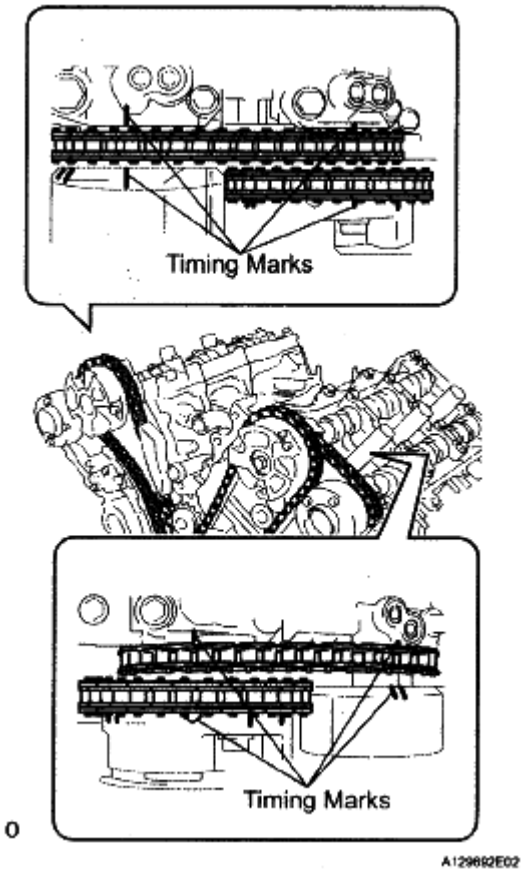

Fig. 478: Identifying Bearing Cap Timing Marks

 © 2011 Mitchell Repair Information Company, LLC.

Courtesy of TOYOTA MOTOR SALES, U.S.A., INC.

31. **REMOVE NO. 1 CHAIN TENSIONER ASSEMBLY**
    a. Move the stopper plate upward to release the lock, and push the plunger deep into the tensioner.
    b. Move the stopper plate downward to set the lock, and insert a pin of 1.27 mm diameter (0.05 in.) into the stopper plate's hole.

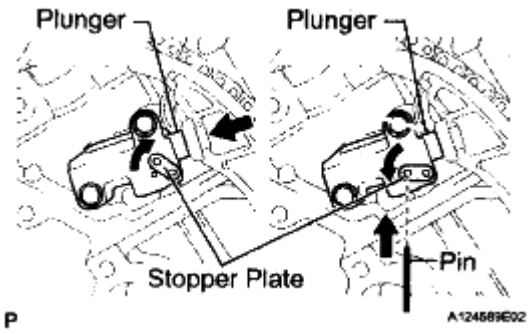

Fig. 479: Removing No.1 Chain Tensioner Assembly
Courtesy of TOYOTA MOTOR SALES, U.S.A., INC.

    c. Remove the 2 bolts and No. 1 chain tensioner assembly.

32. **REMOVE CHAIN TENSIONER SLIPPER**
    a. Remove the chain tensioner slipper.

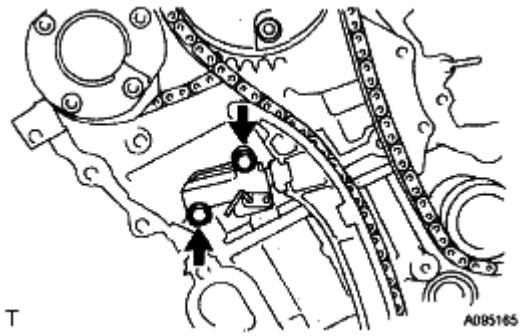

Fig. 480: Installing Chain Tensioner With Bolts
Courtesy of TOYOTA MOTOR SALES, U.S.A., INC.

33. **REMOVE CHAIN SUB-ASSEMBLY**
    a. Turn the crankshaft counterclockwise 10° to loosen the chain sub-assembly.
    b. Remove the pulley set bolt.

 © 2011 Mitchell Repair Information Company, LLC.

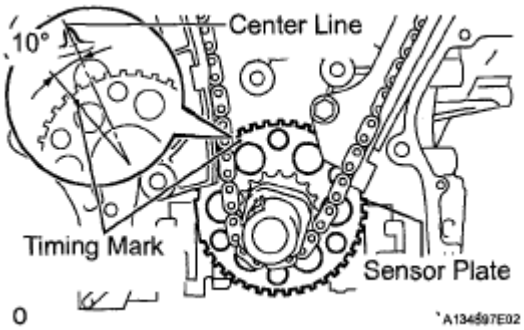

Fig. 481: Identifying Timing Mark On Crankshaft Timing Sprocket
Courtesy of TOYOTA MOTOR SALES, U.S.A., INC.

c. Remove the chain sub-assembly from the crankshaft timing sprocket and place it on the crankshaft.

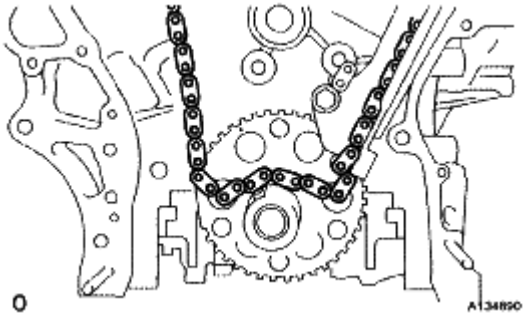

Fig. 482: Identifying Chain Set
Courtesy of TOYOTA MOTOR SALES, U.S.A., INC.

d. Turn the camshaft timing gear assembly on the bank 1 clockwise (approximately 60°) and set it as shown in the illustration. Be sure to loosen the chain sub-assembly between the banks.
e. Remove the chain sub-assembly.

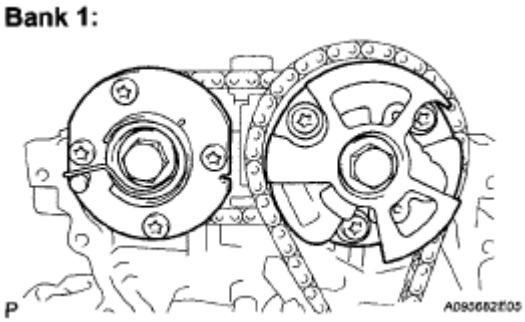

Fig. 483: Identifying Camshaft Timing Gear Assembly Position
Courtesy of TOYOTA MOTOR SALES, U.S.A., INC.

34. **REMOVE IDLE SPROCKET ASSEMBLY**
    a. Using a 10 mm hexagon wrench, remove the No. 2 idle gear shaft, idle sprocket assembly and No.

1 idle gear shaft.

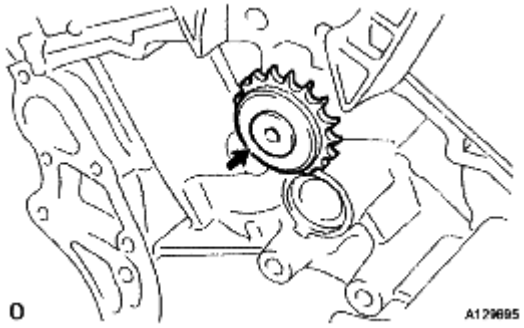

Fig. 484: Locating Idle Gear Shaft No. 2, Idle Sprocket And Idle Gear Shaft
Courtesy of TOYOTA MOTOR SALES, U.S.A., INC.

35. **REMOVE NO. 1 CHAIN VIBRATION DAMPER**
    a. Remove the 2 bolts and No. 1 chain vibration damper.
36. **REMOVE NO. 2 CHAIN VIBRATION DAMPER**
    a. Remove the 2 No. 2 chain vibration dampers.

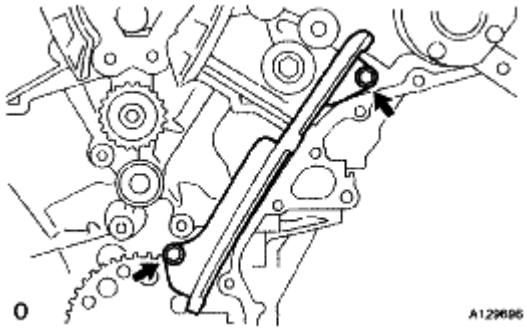

Fig. 485: Locating Chain Vibration Damper With Bolts
Courtesy of TOYOTA MOTOR SALES, U.S.A., INC.

37. **REMOVE CRANKSHAFT TIMING SPROCKET**
    a. Remove the crankshaft timing sprocket from the crankshaft.
    b. Remove the 2 keys from the crankshaft.

 © 2011 Mitchell Repair Information Company, LLC.

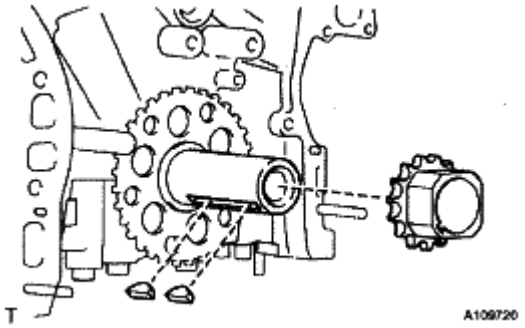

Fig. 486: Installing Crankshaft Timing Sprocket
Courtesy of TOYOTA MOTOR SALES, U.S.A., INC.

38. **REMOVE CAMSHAFT TIMING GEARS AND NO. 2 CHAIN (for Bank 1)**
    a. While raising the No. 2 chain tensioner assembly, insert a pin of 1.0 mm diameter (0.0394 in.) into the hole to fix the No. 2 chain tensioner assembly.

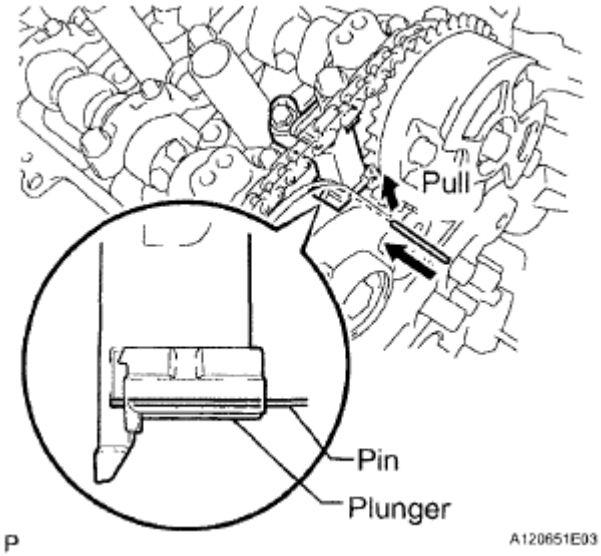

Fig. 487: Identifying Pin Plunger
Courtesy of TOYOTA MOTOR SALES, U.S.A., INC.

    b. Using SST to hold the hexagonal portion of each camshaft, loosen the flange bolts of the camshaft timing gear assembly and the camshaft timing exhaust gear assembly LH.

    SST 09922-10010

    NOTE: Do not loosen the other bolts. If any of the bolts is loosened, replace the camshaft timing gear assembly and/or the camshaft timing exhaust gear assembly LH with a new one.

    c. Remove the 2 flange bolts and the camshaft timing gear assembly together with the No. 2 chain.

 © 2011 Mitchell Repair Information Company, LLC.

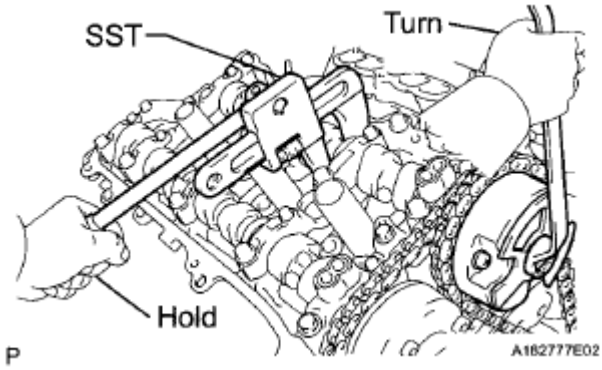

Fig. 488: Loosening Flange Bolts Of Camshaft Timing Gear Assembly
Courtesy of TOYOTA MOTOR SALES, U.S.A., INC.

39. **REMOVE NO. 2 CHAIN TENSIONER ASSEMBLY**
    a. Remove the bolt and No. 2 chain tensioner assembly.

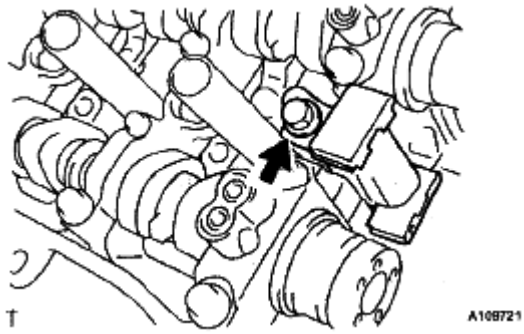

Fig. 489: Identifying No.2 Chain Tensioner Bolt
Courtesy of TOYOTA MOTOR SALES, U.S.A., INC.

40. **REMOVE CAMSHAFT BEARING CAP (for Bank 1)**
    a. Check that the camshafts are positioned as shown in the illustration.

 © 2011 Mitchell Repair Information Company, LLC.

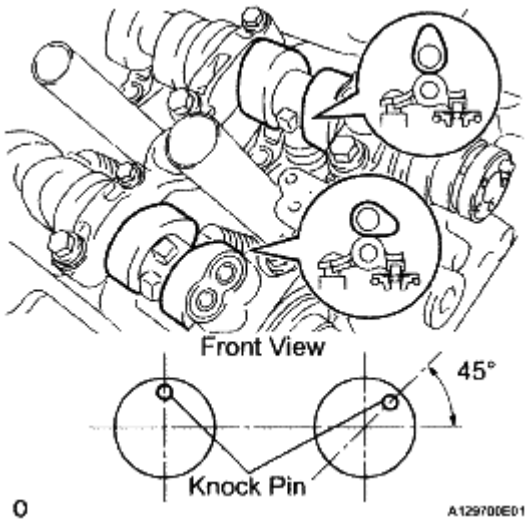

Fig. 490: Identifying Knock Pin Of Camshaft
Courtesy of TOYOTA MOTOR SALES, U.S.A., INC.

b. Uniformly loosen and remove the 8 bearing cap bolts in several steps and in the sequence shown in the illustration.

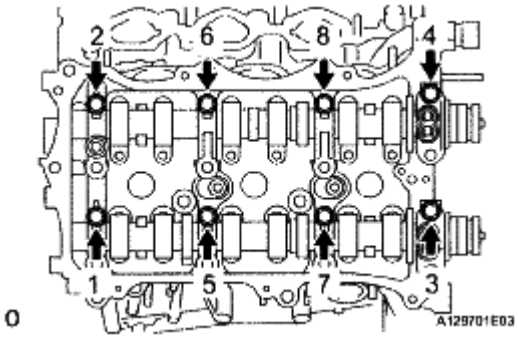

Fig. 491: Identifying Bearing Cap Bolts Loosening Sequence
Courtesy of TOYOTA MOTOR SALES, U.S.A., INC.

c. Uniformly loosen and remove the 12 bearing cap bolts in several steps in the sequence shown in the illustration.

NOTE: Uniformly loosen the bolts while keeping the camshafts level.

d. Remove the 5 camshaft bearing caps.

41. **REMOVE CAMSHAFT**
    a. Remove the camshaft.

 © 2011 Mitchell Repair Information Company, LLC.

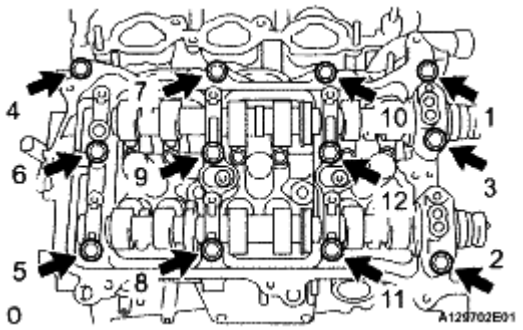

Fig. 492: Locating Bearing Cap Bolts In Sequence
Courtesy of TOYOTA MOTOR SALES, U.S.A., INC.

42. **REMOVE NO. 2 CAMSHAFT**
    a. Remove the No. 2 camshaft.
43. **REMOVE CAMSHAFT HOUSING SUB-ASSEMBLY RH**
    a. Remove the camshaft housing sub-assembly RH by prying between the cylinder head and camshaft housing sub-assembly RH with a screwdriver.

NOTE: Be careful not to damage the contact surfaces of the cylinder head and camshaft housing sub-assembly RH.

HINT:

Tape the screwdriver tip before use.

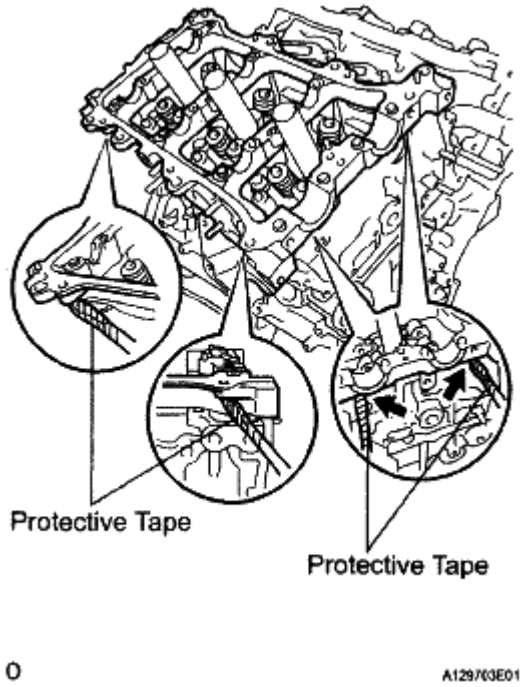

Fig. 493: Prying Between Cylinder Head And Camshaft Housing Sub-Assembly RH
Courtesy of TOYOTA MOTOR SALES, U.S.A., INC.

44. **REMOVE CAMSHAFT TIMING GEARS AND NO. 2 CHAIN (for Bank 2)**
    a. While pushing down the No. 3 chain tensioner assembly, insert a pin of 1.0 mm diameter (0.0394 in.) into the hole to fix the No. 3 chain tensioner assembly.

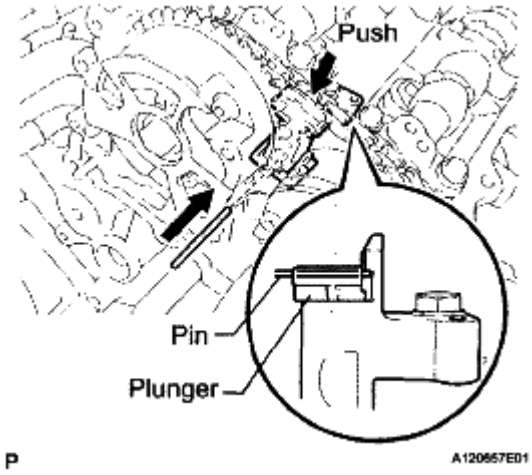

Fig. 494: Pushing No. 3 Chain Tensioner Assembly
Courtesy of TOYOTA MOTOR SALES, U.S.A., INC.

    b. Using SST to hold the hexagonal portion of each camshaft, loosen the flange bolts of the camshaft timing gear assembly and the camshaft timing exhaust gear assembly LH.

    SST 09922-10010

    NOTE: Do not loosen the other bolts. If any of the bolts is loosened, replace the camshaft timing gear assembly and/or the camshaft timing exhaust gear assembly LH with a new one.

    c. Remove the 2 flange bolts and the camshaft timing gear together with the No. 2 chain.

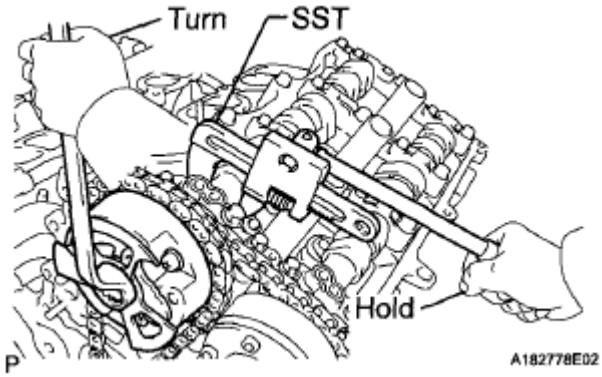

 © 2011 Mitchell Repair Information Company, LLC.

Fig. 495: Loosening Flange Bolts Of Camshaft Timing Gear Assembly
Courtesy of TOYOTA MOTOR SALES, U.S.A., INC.

45. **REMOVE NO. 3 CHAIN TENSIONER ASSEMBLY**
    a. Remove the bolt and No. 3 chain tensioner assembly.

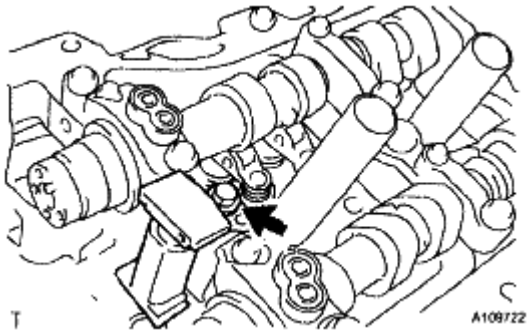

Fig. 496: Identifying No.3 Chain Tensioner Bolt
Courtesy of TOYOTA MOTOR SALES, U.S.A., INC.

46. **REMOVE CAMSHAFT BEARING CAP (for Bank 2)**
    a. Check that the camshafts are positioned as shown in the illustration.

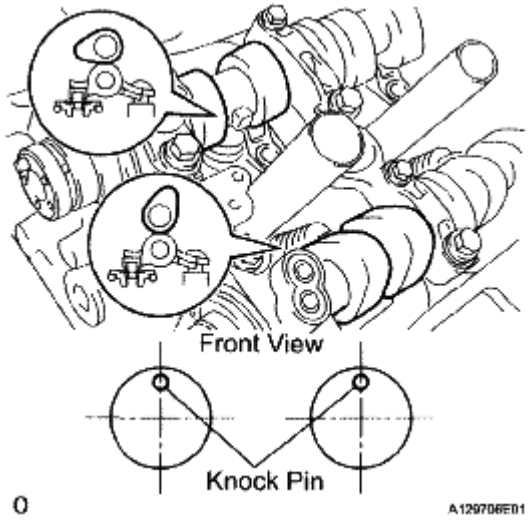

Fig. 497: Identifying Knock Pin Of Camshaft
Courtesy of TOYOTA MOTOR SALES, U.S.A., INC.

    b. Uniformly loosen and remove the 8 bearing cap bolts in several steps and in the sequence shown in the illustration.

 © 2011 Mitchell Repair Information Company, LLC.

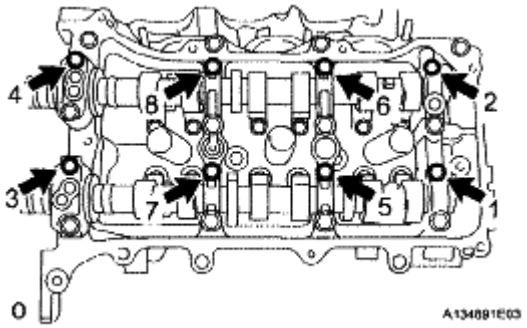

Fig. 498: Identifying Bearing Cap Bolts Loosening Sequence
Courtesy of TOYOTA MOTOR SALES, U.S.A., INC.

c. Uniformly loosen and remove the 13 bearing cap bolts in several steps and in the sequence shown in the illustration.

NOTE: Uniformly loosen the bolts while keeping the camshafts level.

d. Remove the 5 camshaft bearing caps.

47. **REMOVE NO. 3 CAMSHAFT**

a. Remove the No. 3 camshaft.

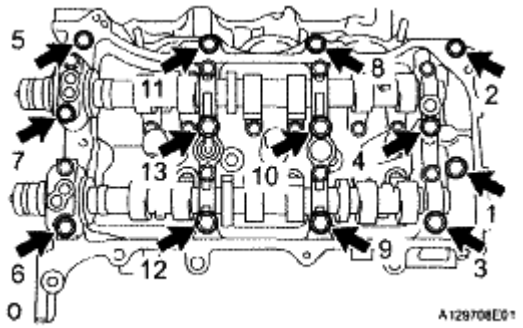

Fig. 499: Locating Bearing Cap Bolts In Sequence
Courtesy of TOYOTA MOTOR SALES, U.S.A., INC.

48. **REMOVE NO. 4 CAMSHAFT**

a. Remove the No. 4 camshaft.

49. **REMOVE CAMSHAFT HOUSING SUB-ASSEMBLY LH**

a. Remove the camshaft housing sub-assembly LH by prying between the cylinder head and camshaft housing sub-assembly LH with a screwdriver.

NOTE: Be careful not to damage the contact surfaces of the cylinder head and camshaft housing sub-assembly LH.

HINT:

Tape the screwdriver tip before use.

50. **REMOVE NO. 1 VALVE ROCKER ARM SUB-ASSEMBLY**
    a. Remove the 24 No. 1 valve rocker arm sub-assemblies.

    HINT:

    Arrange the removed parts in the correct order.

51. **REMOVE VALVE LASH ADJUSTER ASSEMBLY**
    a. Remove the 24 valve lash adjuster assemblies from the cylinder head.

    HINT:

    Arrange the removed parts in the correct order.

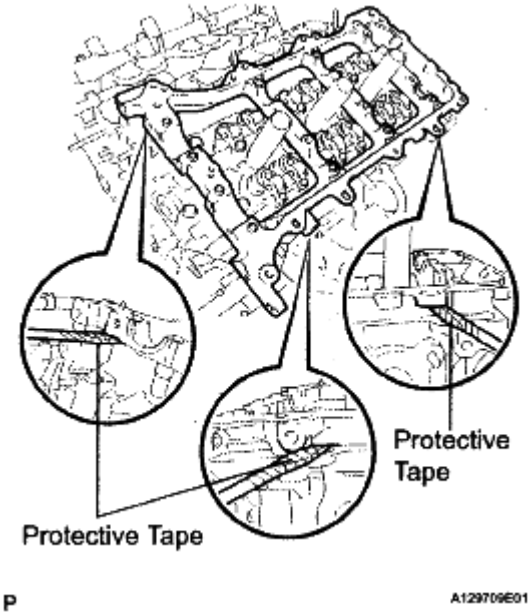

Fig. 500: Prying Between Cylinder Head And Camshaft Housing Sub-Assembly LH
Courtesy of TOYOTA MOTOR SALES, U.S.A., INC.

52. **REMOVE CYLINDER HEAD SUB-ASSEMBLY RH**
    a. Using a 10 mm bi-hexagon wrench, uniformly loosen the 8 cylinder head bolts in the sequence shown in the illustration. Remove the 8 cylinder head bolts and plate washers.

NOTE:

- **Be careful not to drop washers into the cylinder head.**
- **Cylinder head warpage or cracking could result from removing bolts in an incorrect order.**

 © 2011 Mitchell Repair Information Company, LLC.

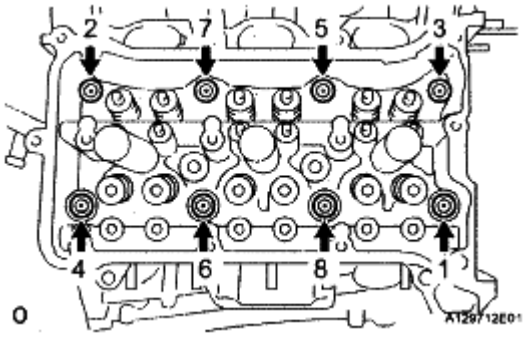

Fig. 501: Locating Cylinder Head Bolts And Plate Washers
Courtesy of TOYOTA MOTOR SALES, U.S.A., INC.

HINT:

Be sure to keep separate the removed parts for each installation position.

b. Remove the cylinder head sub-assembly RH and cylinder head gasket.

53. **REMOVE CYLINDER HEAD SUB-ASSEMBLY LH**

a. Uniformly loosen and remove the 2 cylinder head set bolts in several steps and in the sequence shown in the illustration.

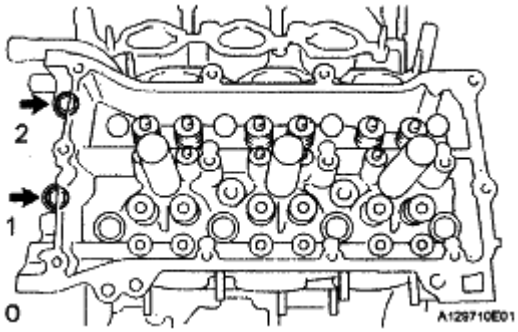

Fig. 502: Identifying Cylinder Head Bolts Tighten Sequence
Courtesy of TOYOTA MOTOR SALES, U.S.A., INC.

b. Using a 10 mm bi-hexagon wrench, uniformly loosen the 8 bolts in the sequence shown in the illustration. Remove the 8 cylinder head bolts and plate washers.

NOTE:

- **Be careful not to drop washers into the cylinder head.**
- **Cylinder head warpage or cracking could result from removing bolts in an incorrect order.**

 © 2011 Mitchell Repair Information Company, LLC.

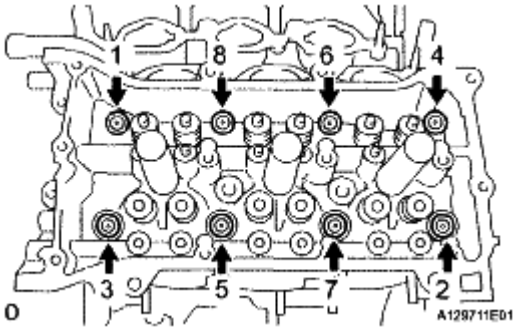

Fig. 503: Locating Cylinder Head Bolts And Plate Washers
Courtesy of TOYOTA MOTOR SALES, U.S.A., INC.

HINT:

Be sure to keep separate the removed parts for each installation position.

c. Remove the cylinder head sub-assembly LH and No. 2 cylinder head gasket.

54. **REMOVE WATER INLET PIPE**

a. Remove 2 clamps and separate the No. 1 water bypass hose.

b. Remove the 2 bolts and water inlet pipe.

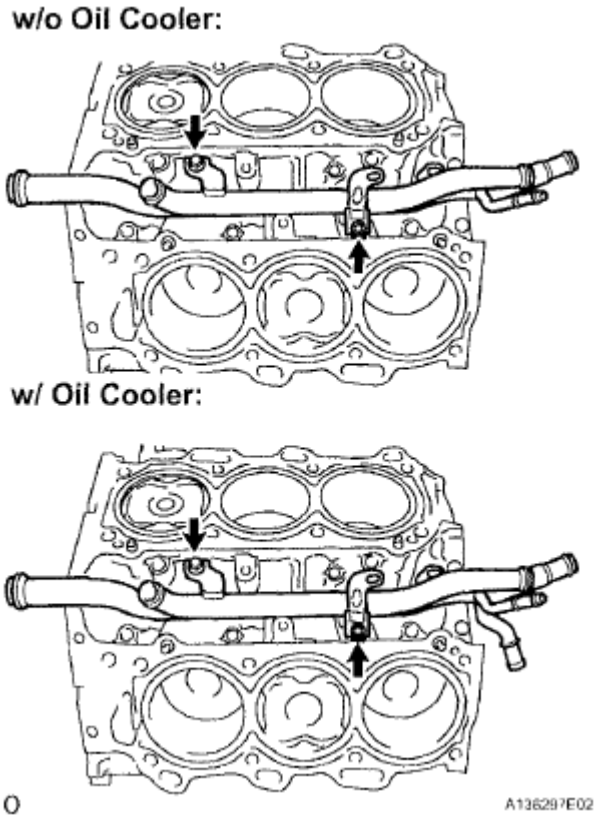

Fig. 504: Locating Water Inlet Pipe Bolts

 © 2011 Mitchell Repair Information Company, LLC.

Courtesy of TOYOTA MOTOR SALES, U.S.A., INC.

INSPECTION

1. **INSPECT NO. 1 VALVE ROCKER ARM SUB-ASSEMBLY**
   a. Turn the roller by hand to check that it turns smoothly.

   HINT:

   If the roller does not turn smoothly, replace the No. 1 valve rocker arm sub-assembly.

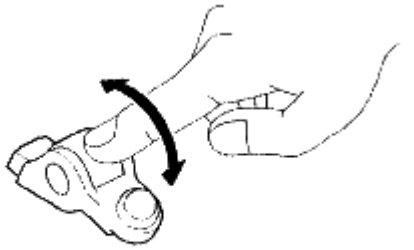

T A125485

Fig. 505: Turning Roller By Hand For Checking Smoothly Turns
Courtesy of TOYOTA MOTOR SALES, U.S.A., INC.

2. **INSPECT VALVE LASH ADJUSTER ASSEMBLY**

NOTE:
- **Keep the valve lash adjuster assembly free of dirt and foreign objects.**
- **Only use clean engine oil.**

   a. Place the valve lash adjuster assembly into a container filled with engine oil.
   b. Insert the tip of SST into the valve lash adjuster assembly's plunger and use the tip to press down on the check ball inside the plunger.

   SST 09276-75010

   c. Squeeze SST and valve lash adjuster assembly together to move the plunger up and down 5 to 6 times.
   d. Check the movement of the plunger and bleed the air.

   OK: Plunger moves up and down.

NOTE: **When bleeding air from the high-pressure chamber, make sure that the tip of SST is actually pressing the check ball as shown in the illustration. If the check ball is not pressed, air will not bleed.**

 © 2011 Mitchell Repair Information Company, LLC.

e. After bleeding the air, remove SST. Then try to quickly and firmly press the plunger with by hand.

OK: Plunger is very difficult to move.

If the result is not as specified, replace the valve lash adjuster assembly.

3. **INSPECT CAMSHAFT**
   a. Inspect the camshaft for runout.
      1. Place the camshaft on V-blocks.

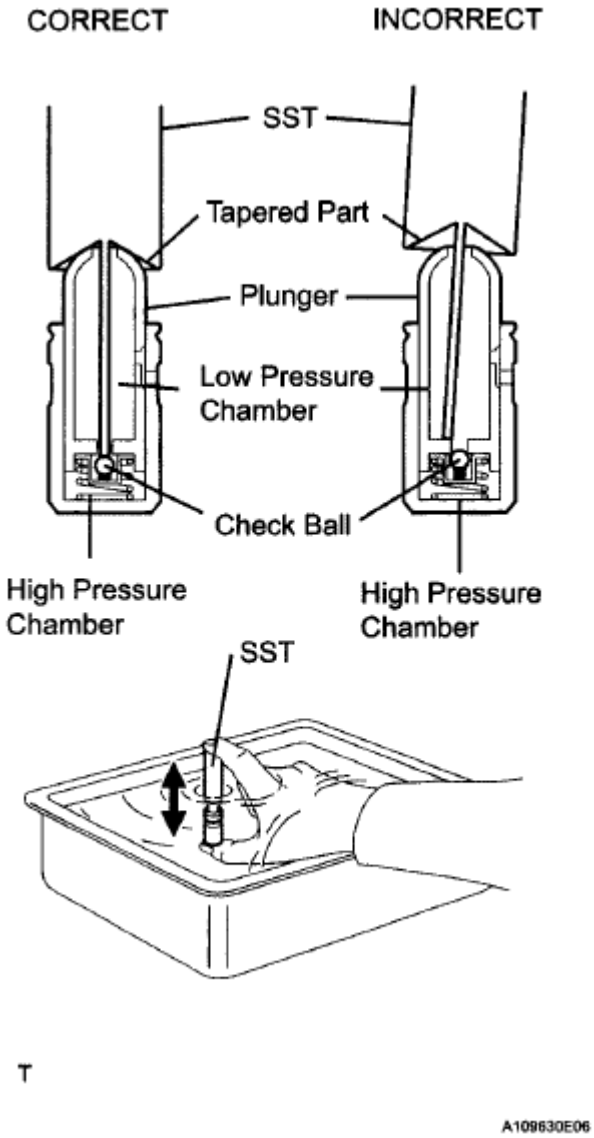

Fig. 506: Inserting Tip Of SST Into Lash Adjuster's Plunger
Courtesy of TOYOTA MOTOR SALES, U.S.A., INC.

      2. Using a dial indicator, measure the circle runout at the center journal.

 © 2011 Mitchell Repair Information Company, LLC.

Maximum runout: 0.04 mm (0.0016 in.)

If the runout is greater than the maximum, replace the camshaft.

HINT:

Check the oil clearance after replacing the camshaft.

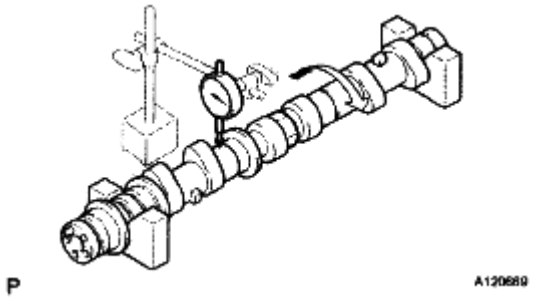

Fig. 507: Measuring Circle Runout Of Center Journal
Courtesy of TOYOTA MOTOR SALES, U.S.A., INC.

b. Using a micrometer, measure the cam lobe height.

Standard cam lobe height

STANDARD CAM LOBE HEIGHT CHART

Item	Specification
Intake camshaft	44.316 to 44.416 mm (1.7447 to 1.7487 in.)
Exhaust camshaft	44.262 to 44.362 mm (1.7426 to 1.7465 in.)

Maximum cam lobe height

ITEM SPECIFICATION

Item	Specification
Intake camshaft	44.166 mm (1.7388 in.)
Exhaust camshaft	44.112 mm (1.7367 in.)

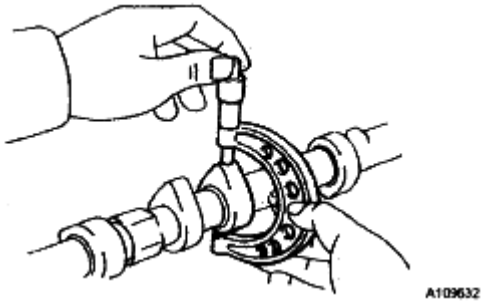

 © 2011 Mitchell Repair Information Company, LLC.

Fig. 508: Checking Cam Lobe Height
Courtesy of TOYOTA MOTOR SALES, U.S.A., INC.

c. Using a micrometer, measure the journal diameter.

Standard journal diameter

ITEM SPECIFICATION

Item	Specification
No. 1 journal	35.946 to 35.960 mm (1.4152 to 1.4157 in.)
Other journals	25.959 to 25.975 mm (1.0220 to 1.0226 in.)

If the journal diameter is not as specified, check the oil clearance.

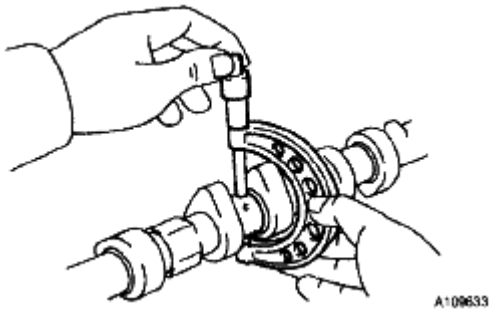

Fig. 509: Checking Journal Diameter
Courtesy of TOYOTA MOTOR SALES, U.S.A., INC.

4. **INSPECT CAMSHAFT TIMING GEAR ASSEMBLY**
   a. Clamp the camshaft in a vise.

   NOTE: Be careful not to damage the camshaft in the vise.

   b. Put the camshaft timing gear assembly and camshaft together by aligning the key groove and straight pin.
   c. Lightly press and turn the camshaft timing gear assembly against the camshaft, and then press harder after the pin enters the groove.

   NOTE: Be sure not to turn the camshaft timing gear assembly in the retard direction.

   d. Check that there is no clearance between the camshaft timing gear assembly's flange and the camshaft.

 © 2011 Mitchell Repair Information Company, LLC.

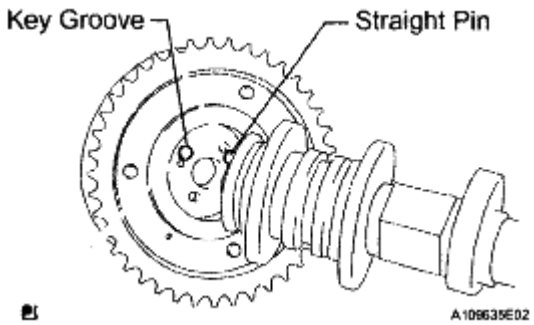

Fig. 510: Aligning Key Groove And Straight Pin
Courtesy of TOYOTA MOTOR SALES, U.S.A., INC.

e. Tighten the flange bolt with the camshaft timing gear assembly fixed.

Torque: 100 N*m (1020 kgf*cm, 74 ft.*lbf)

f. Check the lock of the camshaft timing gear assembly.
   1. Clamp the camshaft in a vise, and confirm that the camshaft timing gear assembly is locked.

NOTE: Be careful not to damage the camshaft.

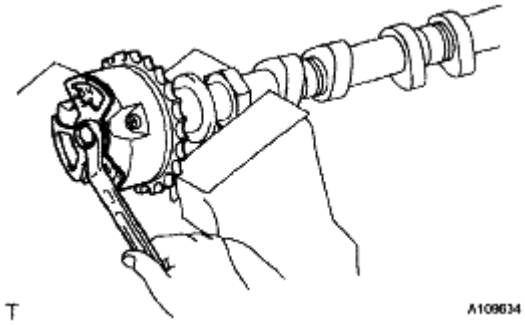

Fig. 511: Checking Lock Of Camshaft Timing Gear
Courtesy of TOYOTA MOTOR SALES, U.S.A., INC.

g. Release the lock pin.
   1. Cover the 4 oil paths of the cam journal with vinyl tape as shown in the illustration.

      HINT:

      The 2 advance side paths are located in the camshaft grove. Plug one of the paths with a rubber piece.

   2. Break through the tape on the advance side path and the retard side path on the opposite side of the hole of the advance side path, as shown in the illustration.

 © 2011 Mitchell Repair Information Company, LLC.

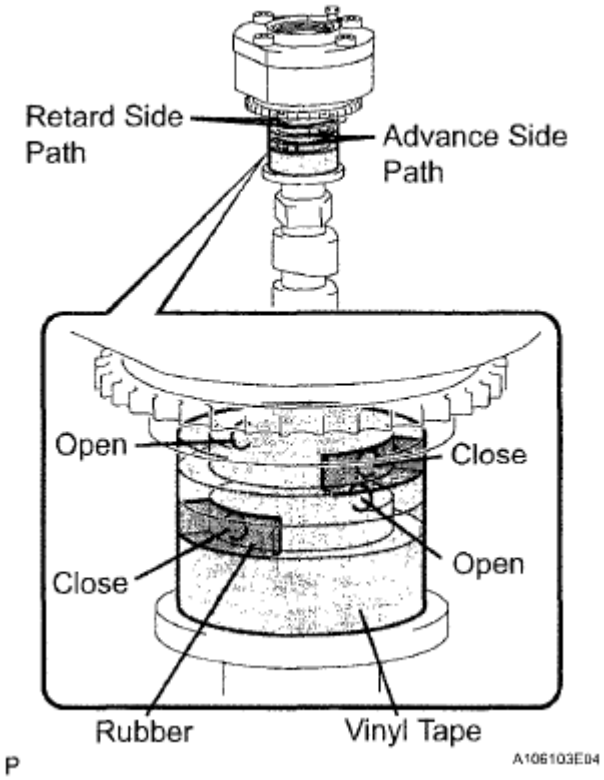

Fig. 512: Identifying Cam Shaft Retard Side Path And Advance Side Path
Courtesy of TOYOTA MOTOR SALES, U.S.A., INC.

3. Apply approximately 200 kPa (2.0 kgf/cm^2 , 28 psi) of air pressure to the 2 opened paths.

CAUTION: Cover the paths with a piece of cloth when applying pressure to prevent oil from spraying.

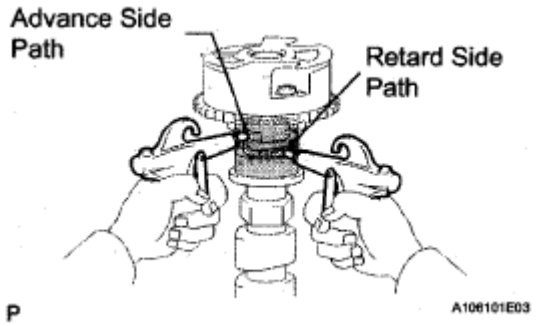

Fig. 513: Applying Air Pressure To Two Broken Paths
Courtesy of TOYOTA MOTOR SALES, U.S.A., INC.

4. Check that the camshaft timing gear assembly rotates in the advance direction when reducing the air pressure applied to the retard side path.

 © 2011 Mitchell Repair Information Company, LLC.

HINT:

This operation releases the lock pin for the most retarded position.

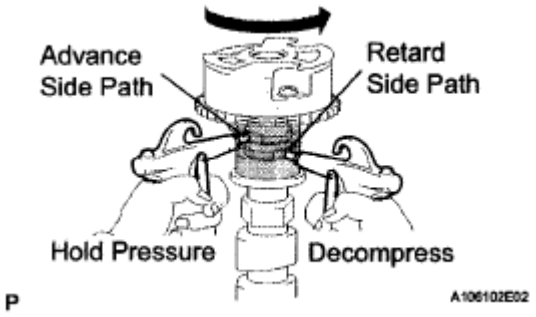

Fig. 514: Checking Camshaft Timing Gear Revolves In Advance Direction
Courtesy of TOYOTA MOTOR SALES, U.S.A., INC.

5. When the camshaft timing gear assembly reaches the most advanced position, release the air pressure first from the retard side path and next from advance side path.

NOTE: **Do not release the air pressure from the advance side path first. The gear may abruptly shift in the retard direction and break the lock pin.**

h. Check for smooth rotation.
   1. Turn the camshaft timing gear assembly within its movable range (21°) 2 or 3 times, but do not turn it to the most retarded position. Make sure that the gear turns smoothly.

NOTE: **Do not use air pressure to perform the smooth operation check.**

i. Check the lock in the most retarded position.
   1. Confirm that the camshaft timing gear assembly locks at the most retarded position.
j. Remove the flange bolt and camshaft timing gear assembly.

NOTE:
- **Do not remove the other 3 bolts.**
- **If planning to reuse the camshaft timing gear, be sure to release the straight pin lock before installing the camshaft timing gear.**

5. **INSPECT CAMSHAFT TIMING EXHAUST GEAR ASSEMBLY LH**

 © 2011 Mitchell Repair Information Company, LLC.

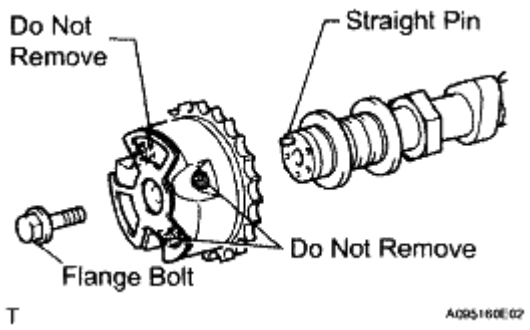

Fig. 515: Removing Flange Bolt And Camshaft Timing Gear
Courtesy of TOYOTA MOTOR SALES, U.S.A., INC.

a. Clamp the camshaft in a vise.

NOTE: Be careful not to damage the camshaft in the vise.

b. Put the camshaft timing exhaust gear assembly LH and camshaft together by aligning the key groove and straight pin.
c. Lightly press and turn the camshaft timing gear assembly LH against the camshaft, press harder after the pin enters the groove.

NOTE: Be sure not to turn the camshaft timing exhaust gear in the retard direction.

d. Check that there is no clearance between the gear's flange and the camshaft.

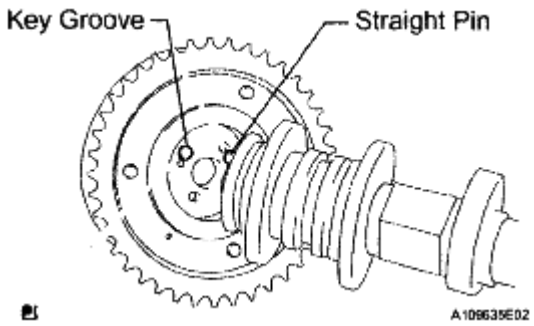

Fig. 516: Aligning Key Groove And Straight Pin
Courtesy of TOYOTA MOTOR SALES, U.S.A., INC.

e. Tighten the flange bolt with the camshaft timing exhaust gear assembly LH fixed.

Torque: 100 N*m (1020 kgf*cm, 74 ft.*lbf)

f. Check the camshaft timing exhaust gear lock.
   1. Make sure that the camshaft timing exhaust gear assembly LH locks.

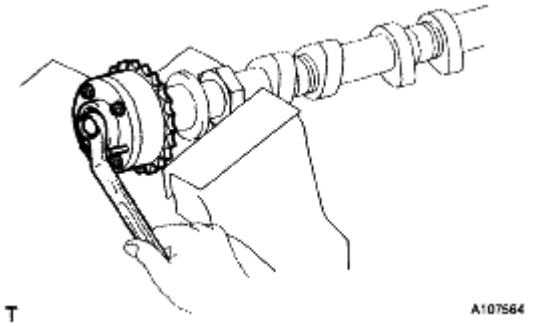

Fig. 517: Checking Camshaft Timing Exhaust Gear Lock
Courtesy of TOYOTA MOTOR SALES, U.S.A., INC.

g. Release the lock pin.
   1. Cover the 4 oil paths of the cam journal with vinyl tape as shown in the illustration.

      HINT:

      The 2 advance side paths are located in the camshaft groove. Plug one of the paths with a rubber piece.

   2. Break through the tape on the advance side path and the retard side path on the opposite side of the hole of the advance side path, as shown in the illustration.

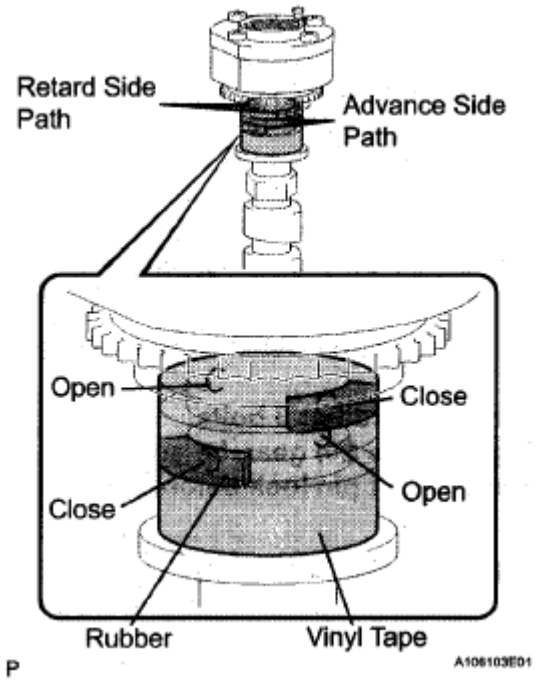

Fig. 518: Covering Oil Paths Of Cam Journal With Vinyl Tape
Courtesy of TOYOTA MOTOR SALES, U.S.A., INC.

 © 2011 Mitchell Repair Information Company, LLC.

3. Apply approximately 200 kPa (2.0 kgf/cm^2 , 28 psi) of air pressure to the 2 opened paths (the advance side path and the retard side path).

CAUTION: Cover the paths with a piece of cloth when applying pressure to prevent oil from spraying.

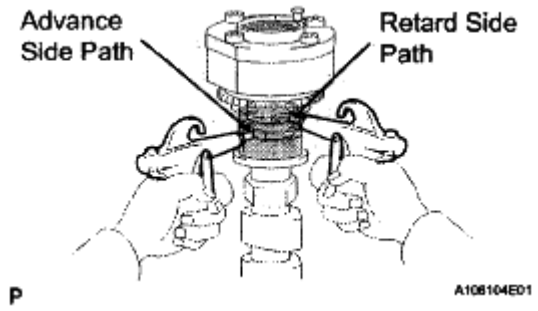

Fig. 519: Applying Air Pressure To Two Broken Paths
Courtesy of TOYOTA MOTOR SALES, U.S.A., INC.

4. Make sure that the camshaft timing exhaust gear assembly LH turns in the retard direction when reducing the air pressure applied to the advance side path.

HINT:

The lock pin is released and the camshaft timing exhaust gear assembly LH turns in the retard direction.

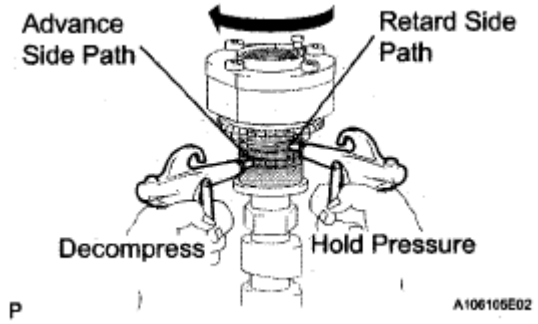

Fig. 520: Checking Camshaft Timing Exhaust Gear Turns In Retard Direction
Courtesy of TOYOTA MOTOR SALES, U.S.A., INC.

5. When the camshaft timing exhaust gear assembly LH moves to the most retarded position, release the air pressure first from the advance side path, and then release the air pressure from the retard side path.

NOTE: Be sure to release the air pressure from the advance side path first. If the air pressure of the retard side path is released first,

 © 2011 Mitchell Repair Information Company, LLC.

the camshaft timing exhaust gear assembly LH may abruptly shift in the advance direction and break the lock pin or other parts.

h. Check for smooth rotation.
   1. Turn the camshaft timing exhaust gear assembly LH within its movable range (18.5°) 2 or 3 times, but do not turn it to the most advanced position. Make sure that the gear assembly turns smoothly.

NOTE: **When the air pressure is released from the advance side path and then from the retard side path, the gear assembly automatically returns to the most advanced position due to the advance assist spring operation and locks. Gradually release the air pressure from the retard side path before performing the smooth rotation check.**

i. Check the lock at the most advanced position.
   1. Make sure that the camshaft timing exhaust gear assembly LH locks at the most advanced position.

j. Remove the flange bolt and camshaft timing exhaust gear assembly LH.

NOTE:
- **Be sure not to remove the other 4 bolts.**
- **If planning to reuse the gear, be sure to release the straight pin lock before installing the gear.**

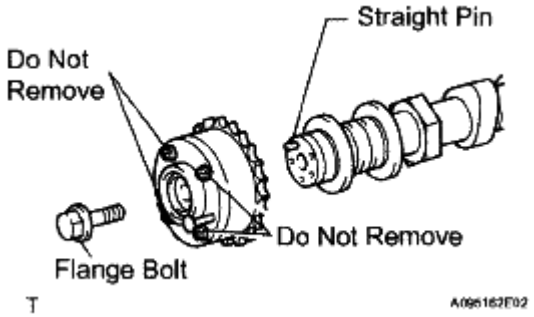

Fig. 521: Identifying Flange And Do Not Remove Bolts
Courtesy of TOYOTA MOTOR SALES, U.S.A., INC.

6. **INSPECT CYLINDER HEAD SET BOLT**
   a. Using a vernier caliper, measure the minimum diameter of the elongated thread at the measuring point.

   Standard outside diameter:

   10.85 to 11.00 mm (0.4272 to 0.4331 in.)

 © 2011 Mitchell Repair Information Company, LLC.

Minimum outside diameter:

10.70 mm (0.4213 in.)

Measuring point:

103 mm (4.06 in.)

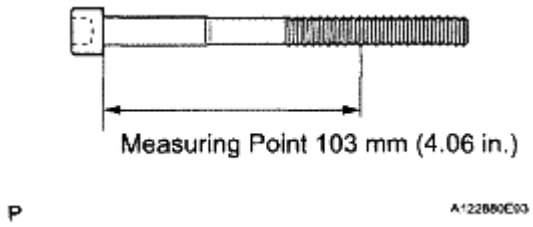

Fig. 522: Measuring Cylinder Head Bolt Dimension
Courtesy of TOYOTA MOTOR SALES, U.S.A., INC.

HINT:

If a visual check reveals no excessively thin areas, check the center of the bolt and find the area that has the lowest diameter.

If the diameter is less than the minimum, replace the cylinder head set bolt.

7. **INSPECT CHAIN SUB-ASSEMBLY**
   a. Pull the chain sub-assembly with a force of 147 N (15 kgf, 33 lbf) as shown in the illustration.
   b. Using a vernier caliper, measure the length of 15 links.

   Maximum chain elongation:

   136.9 mm (5.390 in.)

   NOTE: Perform the measurement at 3 random places. Use the average of the measurements.

   If the average elongation is greater than the maximum, replace the chain sub-assembly.

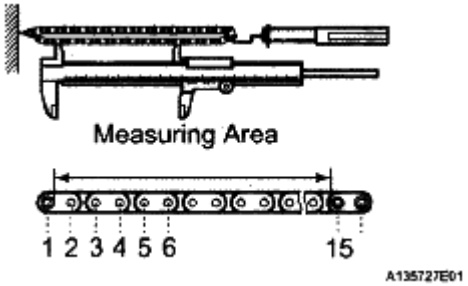

 © 2011 Mitchell Repair Information Company, LLC.

Fig. 523: Measuring Chain Sub-Assembly
Courtesy of TOYOTA MOTOR SALES, U.S.A., INC.

8. **INSPECT NO. 2 CHAIN SUB-ASSEMBLY**
   a. Pull the chain with a force of 147 N (15 kgf, 33 lbf) as shown in the illustration.
   b. Using a vernier caliper, measure the length of 15 links.

   Maximum chain elongation:

   137.6 mm (5.417 in.)

   NOTE: Perform the measurement at 3 random places. Use the average of the measurements.

   If the average elongation is greater than the maximum, replace the chain sub-assembly.

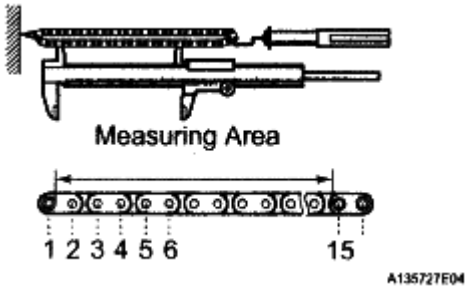

Fig. 524: Measuring No. 2 Chain Sub-Assembly Links Length
Courtesy of TOYOTA MOTOR SALES, U.S.A., INC.

9. **INSPECT CRANKSHAFT TIMING SPROCKET**
   a. Wrap the chain around the sprocket.
   b. Using a vernier caliper, measure the sprocket diameter with the chain sub-assembly.

   Minimum sprocket diameter (with chain):

   61.4 mm (2.417 in.)

   HINT:

   The vernier caliper must contact the chain rollers for the measurement.

   If the diameter is less than the minimum, replace the chain and sprocket.

 © 2011 Mitchell Repair Information Company, LLC.

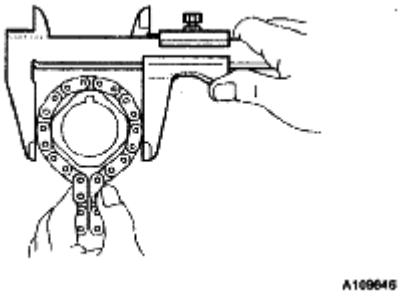

Fig. 525: Checking Crankshaft Timing Sprocket Diameter With Chain
Courtesy of TOYOTA MOTOR SALES, U.S.A., INC.

10. **INSPECT IDLE SPROCKET ASSEMBLY**
    a. Wrap the chain around the sprocket.
    b. Using a vernier caliper, measure the sprocket diameter with the chain.

    Minimum sprocket diameter (with chain): 61.4 mm (2.417 in.)

    HINT:

    The vernier caliper must contact the chain rollers for the measurement.

    If the diameter is less than the minimum, replace the chain and sprocket.

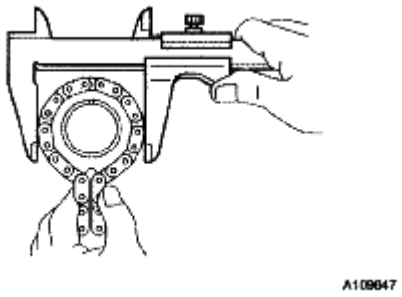

Fig. 526: Checking Idle Sprocket Diameter With Chain
Courtesy of TOYOTA MOTOR SALES, U.S.A., INC.

11. **INSPECT IDLE GEAR SHAFT OIL CLEARANCE**
    a. Using a micrometer, measure the idle gear shaft diameter.

    Idle gear shaft diameter: 22.987 to 23.000 mm (0.9050 to 0.9055 in.)

 © 2011 Mitchell Repair Information Company, LLC.

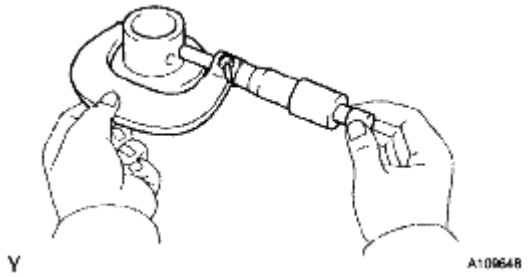

Fig. 527: Checking Idle Gear Shaft Diameter
Courtesy of TOYOTA MOTOR SALES, U.S.A., INC.

b. Using a caliper gauge, measure the inside diameter of the idle sprocket assembly.

Idle gear inside diameter: 23.020 to 23.030 mm (0.9063 to 0.9067 in.)

c. Subtract the idle gear shaft diameter measurement from the idle sprocket inside diameter measurement.

Standard oil clearance:

0.020 to 0.043 mm (0.0008 to 0.0017 in.)

Maximum oil clearance:

0.093 mm (0.0037 in.)

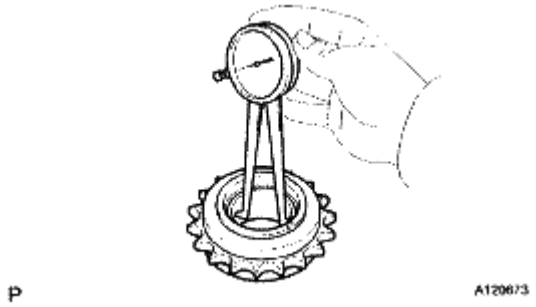

Fig. 528: Checking Inside Diameter Of Idle Gear
Courtesy of TOYOTA MOTOR SALES, U.S.A., INC.

If the thrust oil clearance is greater than the maximum, replace the idle gear shaft and idle sprocket assembly.

12. **INSPECT NO. 1 CHAIN TENSIONER ASSEMBLY**
    a. Move the stopper plate upward to release the lock. Push the plunger and check that it moves smoothly. If necessary, replace the No. 1 chain tensioner assembly.

 © 2011 Mitchell Repair Information Company, LLC.

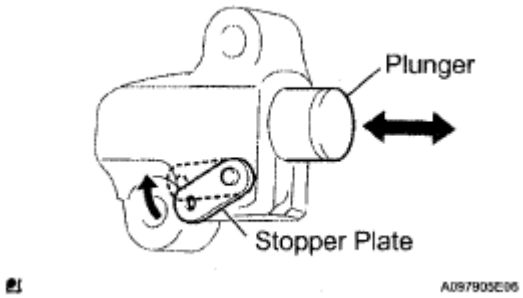

Fig. 529: Moving Stopper Plate Upward To Release Lock
Courtesy of TOYOTA MOTOR SALES, U.S.A., INC.

13. **INSPECT NO. 2 CHAIN TENSIONER ASSEMBLY**
    a. Check that the plunger moves smoothly.
    b. Measure the worn depth of the No. 2 chain tensioner assembly.

    Maximum depth:

    0.9 mm (0.035 in.)

    If the depth is greater than the maximum, replace the No. 2 chain tensioner assembly.

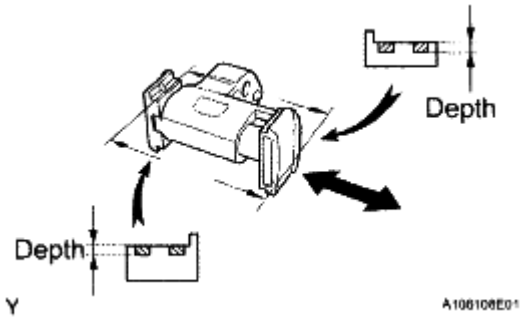

Fig. 530: Checking No 2 Chain Tensioner Assembly
Courtesy of TOYOTA MOTOR SALES, U.S.A., INC.

14. **INSPECT NO. 3 CHAIN TENSIONER ASSEMBLY**
    a. Check that the plunger moves smoothly.
    b. Measure the worn depth of the No. 3 chain tensioner assembly.

    Maximum depth:

    0.9 mm (0.035 in.)

    If the depth is greater than the maximum, replace the No. 3 chain tensioner assembly.

 © 2011 Mitchell Repair Information Company, LLC.

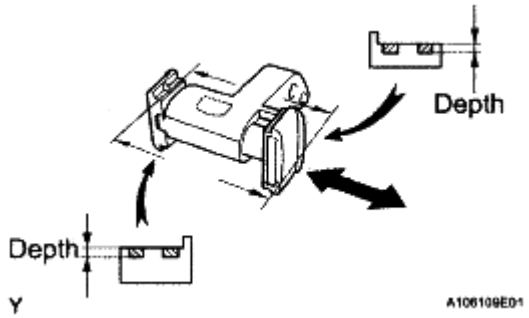

Fig. 531: Checking No 3 Chain Tensioner Assembly
Courtesy of TOYOTA MOTOR SALES, U.S.A., INC.

15. **INSPECT CHAIN TENSIONER SLIPPER**
    a. Measure the worn depth of the chain tensioner slipper.

    Maximum depth: 1.0 mm (0.039 in.)

    If the depth is greater than the maximum, replace the chain tensioner slipper.

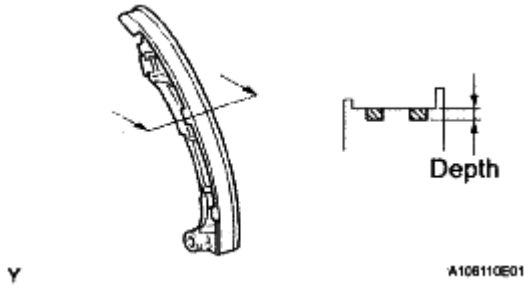

Fig. 532: Identifying Worn Depth Of Chain Tensioner Slipper
Courtesy of TOYOTA MOTOR SALES, U.S.A., INC.

16. **INSPECT NO. 1 CHAIN VIBRATION DAMPER**
    a. Measure the worn depth of the No. 1 chain vibration damper.

    Maximum depth: 1.0 mm (0.039 in.)

    If the depth is greater than the maximum, replace the No. 1 chain vibration damper.

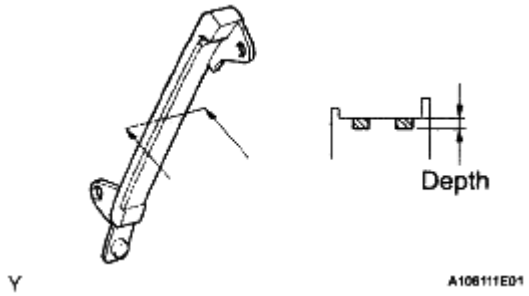

Fig. 533: Identifying Worn Depth Of Chain Vibration Damper
Courtesy of TOYOTA MOTOR SALES, U.S.A., INC.

17. **INSPECT NO. 2 CHAIN VIBRATION DAMPER**
    a. Measure the worn depth of the No. 2 chain vibration damper.

    Maximum depth: 1.0 mm (0.039 in.)

    If the depth is greater than the maximum, replace the No. 2 chain vibration damper.

18. **INSPECT CAMSHAFT THRUST CLEARANCE**
    a. Inspect the bank 1 camshaft thrust clearance.
        1. Install the bank 1 camshaft (See **INSTALLATION**).

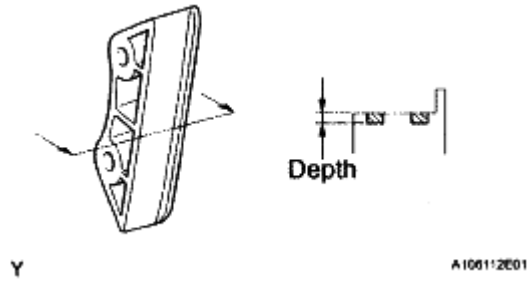

Fig. 534: Identifying Worn Depth Of No 2 Chain Vibration Damper
Courtesy of TOYOTA MOTOR SALES, U.S.A., INC.

        2. Using a dial indicator, measure the thrust clearance while moving the camshaft back and forth.

        Standard thrust clearance:

        0.08 to 0.13 mm (0.0031 to 0.0051 in.)

        Maximum thrust clearance:

        0.15 mm (0.006 in.)

        If the thrust clearance is greater than the maximum, replace the cylinder head. If the thrust

 © 2011 Mitchell Repair Information Company, LLC.

surface is damaged, replace the camshaft.

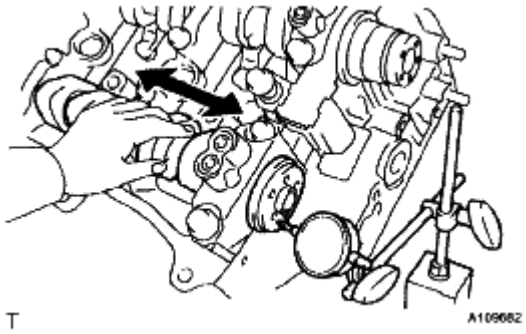

Fig. 535: Checking Camshaft Thrust Clearance
Courtesy of TOYOTA MOTOR SALES, U.S.A., INC.

b. Inspect the bank 2 camshaft thrust clearance.
   1. Install the bank 2 camshaft (See **INSTALLATION**).
   2. Using a dial indicator, measure the thrust clearance while moving the camshaft back and forth.

      Standard thrust clearance:

      0.08 to 0.13 mm (0.0031 to 0.0051 in.)

      Maximum thrust clearance:

      0.15 mm (0.006 in.)

      If the thrust clearance is greater than the maximum, replace the cylinder head. If the thrust surface is damaged, replace the camshaft.

19. **INSPECT CAMSHAFT OIL CLEARANCE**
    a. Clean the camshaft bearing caps, camshaft housing and camshaft journals.
    b. Place the camshafts on the camshaft housing.
    c. Lay a strip of Plastigage across each of the camshaft journals.
    d. Install the camshaft bearing caps (See **REASSEMBLY** for Bank 1, **REASSEMBLY** for Bank 2).

       NOTE: Do not turn the camshaft.

    e. Remove the camshaft bearing caps (See **DISASSEMBLY** for Bank 1, **DISASSEMBLY** for Bank 2).

 © 2011 Mitchell Repair Information Company, LLC.

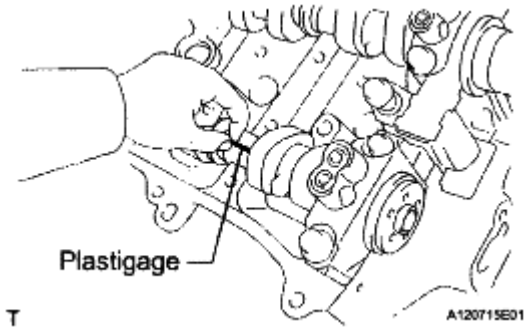

Fig. 536: Checking Camshaft Oil Clearance
Courtesy of TOYOTA MOTOR SALES, U.S.A., INC.

f. Measure the Plastigage at its widest point.

Standard oil clearance

OIL CLEARANCE REFERENCE

Item	Oil Clearance
No. 1 journal	0.040 to 0.079 mm (0.0016 to 0.0031 in.)
Other journals	0.025 to 0.062 mm (0.00098 to 0.0024 in.)

Maximum oil clearance

OIL CLEARANCE REFERENCE

Item	Oil Clearance
No. 1 journal	0.10 mm (0.0039 in.)
Other journals	0.09 mm (0.0035 in.)

If the oil clearance is greater than the maximum, replace the camshaft. If necessary, replace the camshaft housing.

g. Clean the camshaft bearing caps, camshaft housing and camshaft journals.
h. Place the camshafts on the camshaft housing.

 © 2011 Mitchell Repair Information Company, LLC.

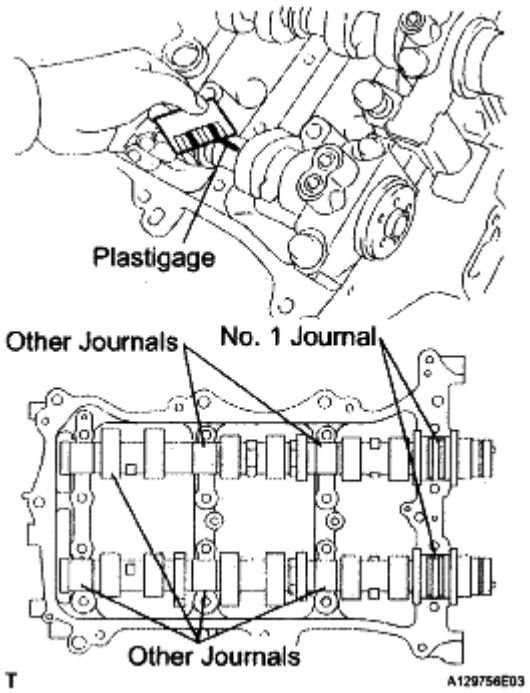

Fig. 537: Measuring Plastigage At Camshaft Widest Point
Courtesy of TOYOTA MOTOR SALES, U.S.A., INC.

i. Lay a strip of Plastigage across each camshaft journal.
j. Install the camshaft bearing caps (See **INSTALLATION** for Bank 1, See **REASSEMBLY** for Bank 2).

NOTE: Do not turn the camshaft.

k. Remove the camshaft bearing caps (See **DISASSEMBLY** for Bank 1, See **DISASSEMBLY** for Bank 2).

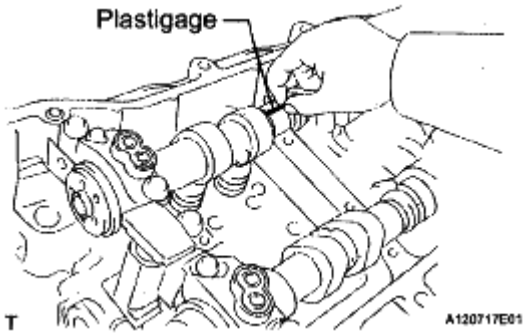

Fig. 538: Laying Strip Of Plastigage
Courtesy of TOYOTA MOTOR SALES, U.S.A., INC.

l. Measure the Plastigage at its widest point.

 © 2011 Mitchell Repair Information Company, LLC.

Standard oil clearance

OIL CLEARANCE REFERENCE

Item	Oil Clearance
No. 1 journal	0.040 to 0.079 mm (0.0016 to 0.0031 in.)
Other journals	0.025 to 0.062 mm (0.00098 to 0.0024 in.)

Maximum oil clearance

OIL CLEARANCE REFERENCE

Item	Oil Clearance
No. 1 journal	0.10 mm (0.0039 in.)
Other journals	0.09 mm (0.0035 in.)

If the oil clearance is greater than the maximum, replace the camshaft. If necessary, replace the camshaft housing sub-assembly.

REASSEMBLY

CAUTION: For additional information on timing chain/gear removal guidelines, installtion and camshaft timing gear alignment, see 2GR-FE VALVE TIMING PROCEDURE .

1. **INSTALL ENGINE REAR OIL SEAL**
   a. Place the oil seal retainer on wooden blocks.

 © 2011 Mitchell Repair Information Company, LLC.

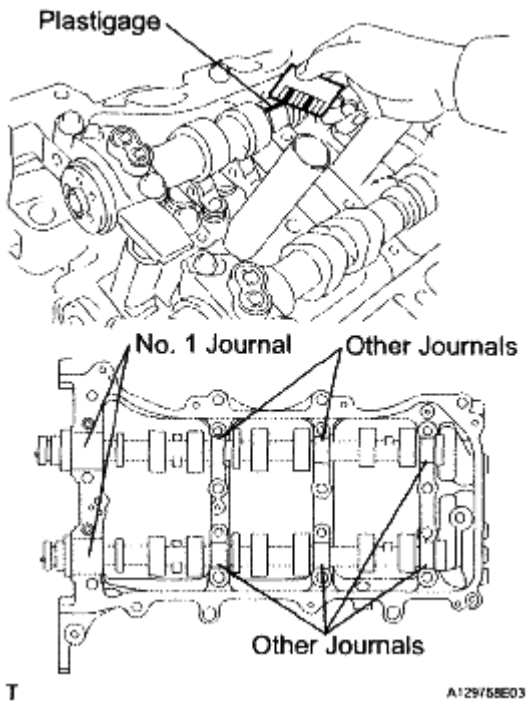

Fig. 539: Measuring Plastigage At Camshaft Widest Point
Courtesy of TOYOTA MOTOR SALES, U.S.A., INC.

b. Using SST, tap in a new engine rear oil seal until its surface is flush with the engine rear oil seal retainer edge.

SST 09223-15030, 09950-70010 (09951 -07100)

NOTE:

- **Keep the lip free of foreign matter.**
- **Do not tap on the engine rear oil seal at an angle.**

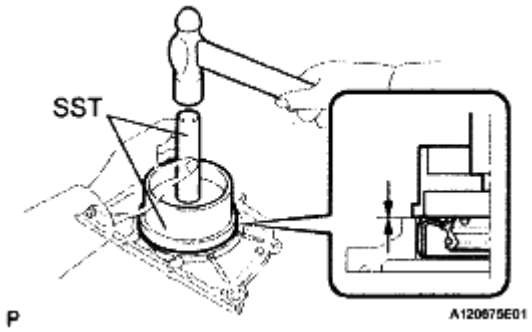

Fig. 540: Installing Engine Rear Oil Seal
Courtesy of TOYOTA MOTOR SALES, U.S.A., INC.

2. **INSTALL ENGINE REAR OIL SEAL RETAINER**
   a. Apply seal packing in a continuous line as shown in the illustration.

Seal packing:

Toyota Genuine Seal Packing Black, Three Bond 1207B or equivalent

Seal diameter:

2.0 to 3.0 mm (0.079 to 0.118 in.)

NOTE:

- **Remove any oil from the contact surfaces.**
- **Install the oil seal retainer within 3 minutes after applying seal packing.**
- **Do not start the engine for at least 2 hours after installation.**

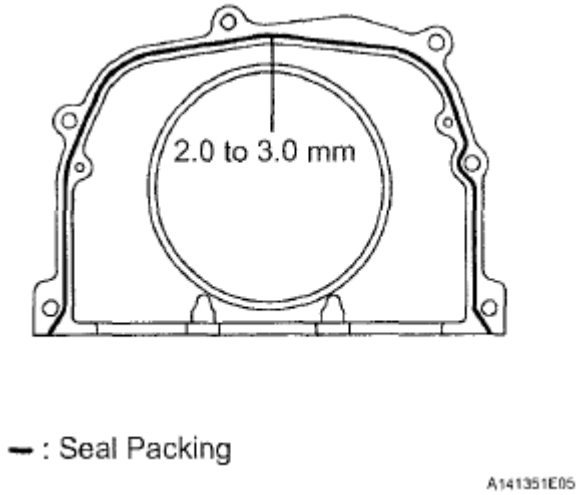

Fig. 541: Identifying Engine Rear Oil Seal Retainer
Courtesy of TOYOTA MOTOR SALES, U.S.A., INC.

b. Install the engine rear oil seal retainer with the 6 bolts.

Torque: 10 N*m (102 kgf*cm, 7 ft.*lbf)

NOTE: **Be sure to apply adhesive 1324 to the bolts in the places indicated by A before installing them.**

Adhesive:

Toyota Genuine Adhesive 1324, Three Bond 1324 or equivalent

 © 2011 Mitchell Repair Information Company, LLC.

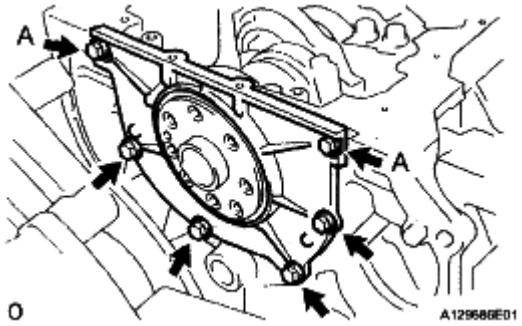

Fig. 542: Installing Oil Seal Retainer
Courtesy of TOYOTA MOTOR SALES, U.S.A., INC.

3. **INSTALL WATER INLET PIPE**
   a. Install the water inlet pipe with the 2 bolts.

      Torque: 10 N*m (102 kgf*cm, 7 ft.*lbf)

   b. Install the No. 1 water by-pass hose.

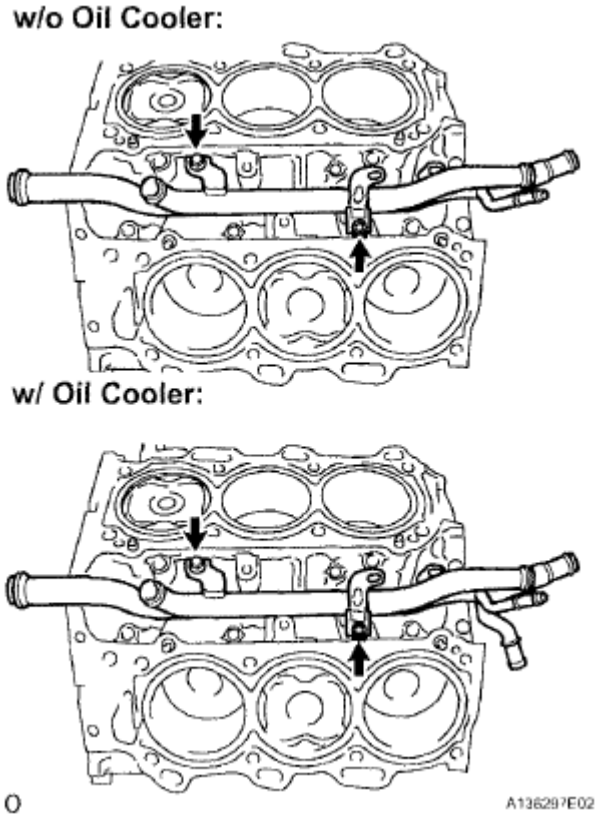

Fig. 543: Locating Water Inlet Pipe Bolts
Courtesy of TOYOTA MOTOR SALES, U.S.A., INC.

4. **INSTALL CYLINDER HEAD SUB-ASSEMBLY RH**

 © 2011 Mitchell Repair Information Company, LLC.

a. Place the cylinder head gasket on the cylinder block surface with the Lot No. stamp upward.

NOTE:

- **Be careful of the installation direction.**
- **Gently lower the cylinder head in order not to damage the gasket with the bottom part of the head.**

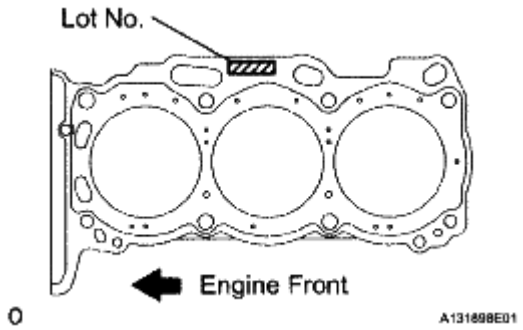

Fig. 544: Placing Cylinder Head Gasket On Cylinder Block Surface With Front Face
Courtesy of TOYOTA MOTOR SALES, U.S.A., INC.

b. Place the cylinder head on the cylinder block.

NOTE: **Be careful not to allow oil to adhere to the bottom part of the cylinder head.**

HINT:

The cylinder head bolts are tightened in 3 progressive steps.

c. Apply a light coat of engine oil to the threads and under the heads of the cylinder head bolts.
d. Step 1
   1. Using a 10 mm bi-hexagon wrench, install and uniformly tighten the 8 cylinder head bolts with the plate washers in several steps and in the sequence shown in the illustration.

      Torque: 36 N*m (367 kgf*cm, 27 ft.*lbf)

 © 2011 Mitchell Repair Information Company, LLC.

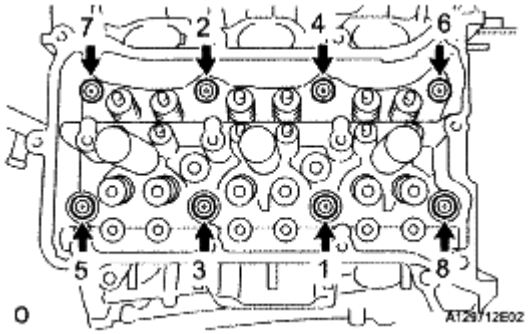

Fig. 545: Installing Cylinder Head Bolts
Courtesy of TOYOTA MOTOR SALES, U.S.A., INC.

e. Step 2
   1. Mark the cylinder head bolt head with paint as shown in the illustration.
   2. Tighten the cylinder head bolts another 90°.

f. Step 3
   1. Tighten the cylinder head bolts an additional 90°.
   2. Check that the painted mark is now facing rearward.

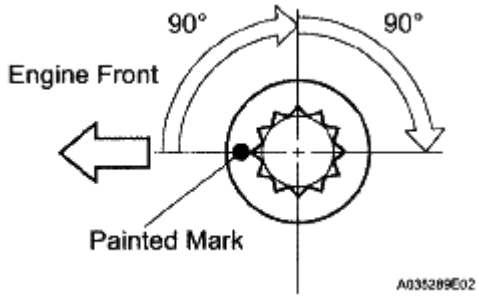

Fig. 546: Tightening Cylinder Head Bolts
Courtesy of TOYOTA MOTOR SALES, U.S.A., INC.

5. **INSTALL CYLINDER HEAD SUB-ASSEMBLY LH**
   a. Place the cylinder head gasket on the cylinder block surface with the Lot No. stamp upward.

NOTE:

- **Be careful of the installation direction.**
- **Gently lower the cylinder head in order not to damage the gasket with the bottom part of the head.**

 © 2011 Mitchell Repair Information Company, LLC.

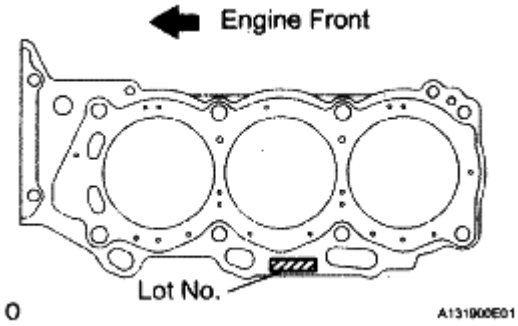

Fig. 547: Placing Cylinder Head Gasket On Cylinder Block Surface With Front Face
Courtesy of TOYOTA MOTOR SALES, U.S.A., INC.

b. Place the cylinder head on the cylinder block.

NOTE: Be careful not to allow oil to adhere to the bottom part of the cylinder head.

HINT:

The cylinder head bolts are tightened in 3 progressive steps.

c. Apply a light coat of engine oil to the threads and under the heads of the cylinder head bolts.
d. Step 1
   1. Using a 10 mm bi-hexagon wrench, install and uniformly tighten the 8 cylinder head bolts with the plate washers in several steps in the sequence shown in the illustration.

      Torque: 36 N*m (367 kgf*cm, 27 ft.*lbf)

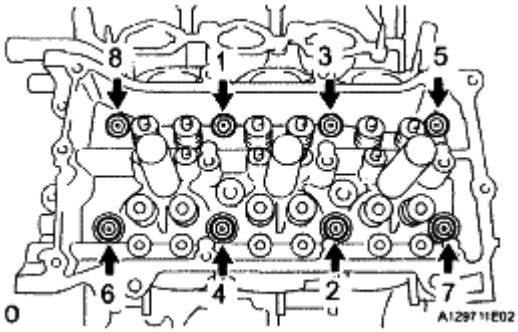

Fig. 548: Installing Cylinder Head Bolts
Courtesy of TOYOTA MOTOR SALES, U.S.A., INC.

e. Step 2
   1. Mark the cylinder head bolt head with paint as shown in the illustration.
   2. Tighten the cylinder head bolts another 90°.

f. Step 3
   1. Tighten the cylinder head bolts an additional 90°.
   2. Check that the painted mark is now facing rearward.

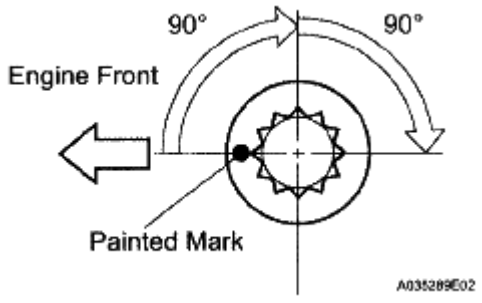

Fig. 549: Tightening Cylinder Head Bolts
Courtesy of TOYOTA MOTOR SALES, U.S.A., INC.

g. Tighten the 2 bolts in the order shown in the illustration.

Torque: 30 N*m (306 kgf*cm, 22 ft.*lbf)

6. **INSTALL VALVE LASH ADJUSTER ASSEMBLY**

NOTE:
- **Keep the lash adjuster free of dirt and foreign objects.**
- **Only use clean engine oil.**

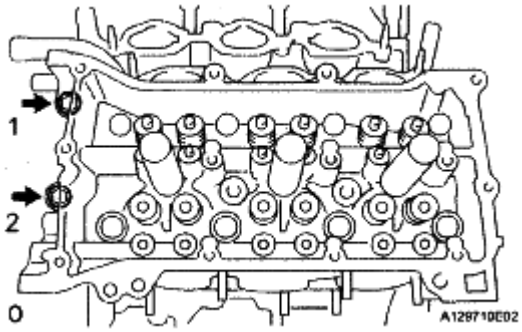

Fig. 550: Tightening 2 Bolts
Courtesy of TOYOTA MOTOR SALES, U.S.A., INC.

a. Place the lash adjuster into a container filled with engine oil.
b. Insert the tip of SST into the lash adjuster's plunger and use the tip to press down on the check ball inside the plunger.

SST 09276-75010

c. Squeeze SST and lash adjuster together to move the plunger up and down 5 to 6 times.

 © 2011 Mitchell Repair Information Company, LLC.

d. Check the movement of the plunger and bleed the air.

OK: Plunger moves up and down.

NOTE: When bleeding air from the high-pressure chamber, make sure that the tip of SST is actually pressing the check ball as shown in the illustration. If the check ball is not pressed, air will not bleed.

e. After bleeding the air, remove SST. Then, try to press the plunger quickly and firmly with by hand.

OK: Plunger is very difficult to move.

If the result is not as specified, replace the lash adjuster.

f. Install the lash adjusters.

NOTE: Install the lash adjuster to the same place where it was removed from.

7. **INSTALL NO. 1 VALVE ROCKER ARM SUB-ASSEMBLY**

a. Apply engine oil to the lash adjuster tip and valve stem cap end.

 © 2011 Mitchell Repair Information Company, LLC.

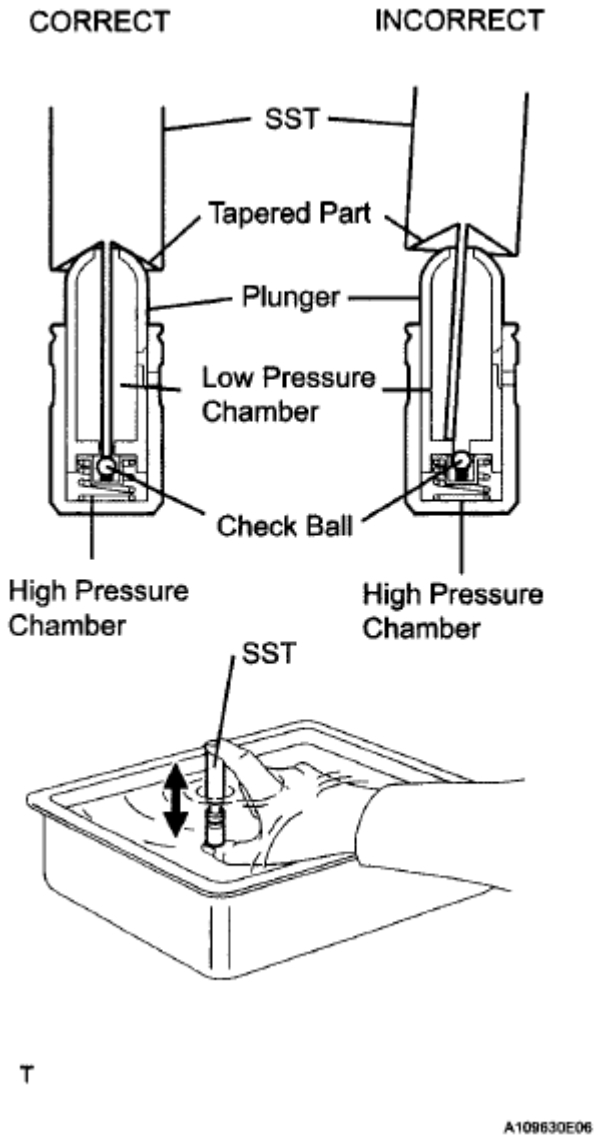

Fig. 551: Inserting Tip Of SST Into Lash Adjuster's Plunger
Courtesy of TOYOTA MOTOR SALES, U.S.A., INC.

b. Make sure that the 24 No. 1 valve rocker arms are installed as shown in the illustration.

8. **INSTALL CAMSHAFT BEARING CAP (for Bank 1)**
   a. Apply engine oil to the camshaft journals, camshaft housing sub-assembly RH and camshaft bearing caps.
   b. Install the camshaft and No. 2 camshaft to the camshaft housing sub-assembly RH.

 © 2011 Mitchell Repair Information Company, LLC.

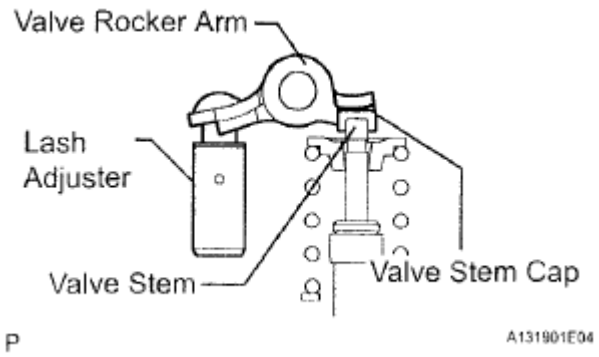

Fig. 552: Identifying Valve Rocker Arm, Lash Adjuster And Valve Stem
Courtesy of TOYOTA MOTOR SALES, U.S.A., INC.

c. Make sure to install camshaft bearing caps in each proper position and direction according to the painted marks and numbers.

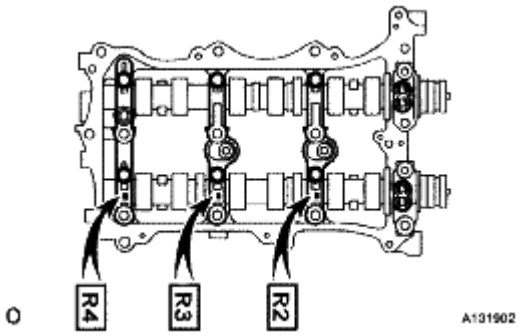

Fig. 553: Identifying Marks And Numbers On Camshaft Bearing Caps
Courtesy of TOYOTA MOTOR SALES, U.S.A., INC.

d. Temporarily tighten the 8 bearing cap bolts in the order shown in the illustration.

Torque: 10 N*m (102 kgf*cm, 7 ft.*lbf)

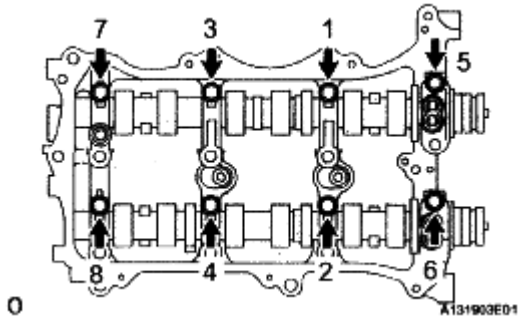

Fig. 554: Tightening Bolts In Sequence
Courtesy of TOYOTA MOTOR SALES, U.S.A., INC.

9. **INSTALL CAMSHAFT HOUSING SUB-ASSEMBLY RH**

a. Make sure that the No. 1 valve rocker arm sub-assembly is installed as shown in the illustration.

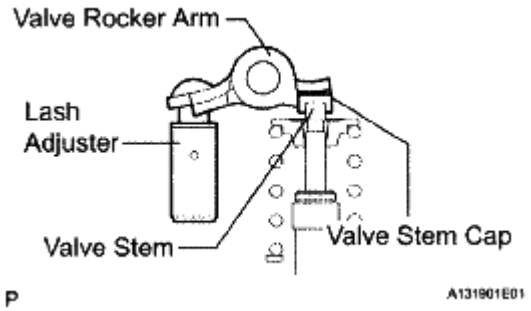

Fig. 555: Applying Engine Oil To Lash Adjuster Tips And Valve Stem Cap Ends
Courtesy of TOYOTA MOTOR SALES, U.S.A., INC.

b. Apply seal packing in a continuous line as shown in the illustration.

Seal packing:

Toyota Genuine Seal Packing Black, Three Bond 1207B or equivalent

Seal diameter:

3.5 to 4.5 mm (0.138 to 0.177 in.)

NOTE:

- **Remove any oil from the contact surfaces.**
- **Install the camshaft housing sub-assembly RH within 3 minutes.**
- **Do not start the engine for at least 2 hours after installing.**

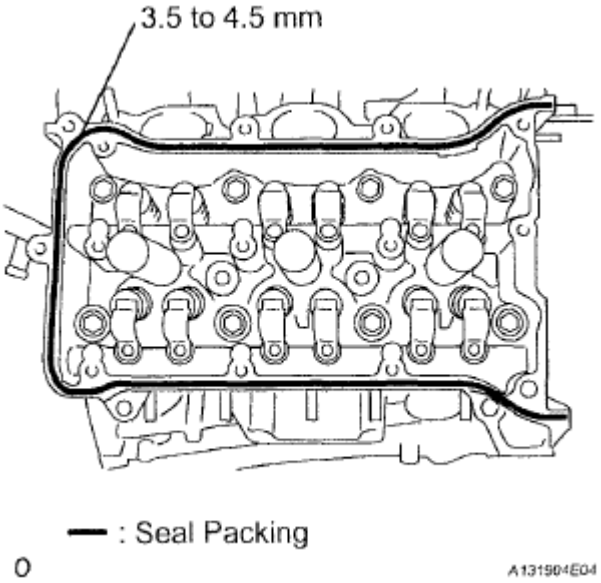

Fig. 556: Identifying Camshaft Housing Seal Area
Courtesy of TOYOTA MOTOR SALES, U.S.A., INC.

c. Install the camshaft housing sub-assembly RH and tighten the 12 bolts in the order shown in the illustration.

Torque: 28 N*m (286 kgf*cm, 21 ft.*lbf)

NOTE:

- **When installing the camshaft housing RH, it is necessary to correctly position the camshafts as shown in the illustration. Failure to correctly position these parts may result in damage due to contact between the pistons and valves. If a camshaft is rotated with a piston at TDC, valve contact will occur.**
- **If any of the bolts are loosened during installation, remove the camshaft housing, clean the installation surfaces, and reapply seal packing.**
- **If the camshaft housing sub-assembly is removed because any of the bolts are loosened during installation, make sure that the previously applied seal packing does not enter any oil passages.**

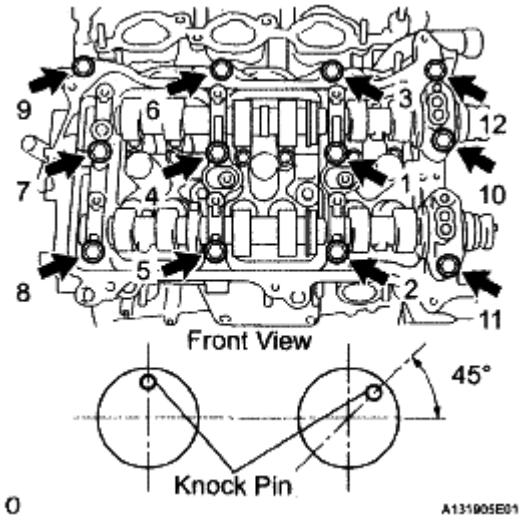

Fig. 557: Tightening Bolts In Sequence
Courtesy of TOYOTA MOTOR SALES, U.S.A., INC.

d. Tighten the 8 bolts in the order shown in the illustration.

Torque: 16 N*m (163 kgf*cm, 12 ft.*lbf)

10. **INSTALL CAMSHAFT BEARING CAP (for Bank 2)**
    a. Apply engine oil to the camshaft journals, camshaft housing sub-assembly LH and camshaft

 © 2011 Mitchell Repair Information Company, LLC.

bearing caps.

b. Install the No. 3 camshaft and No. 4 camshaft to the camshaft housing sub-assembly LH.

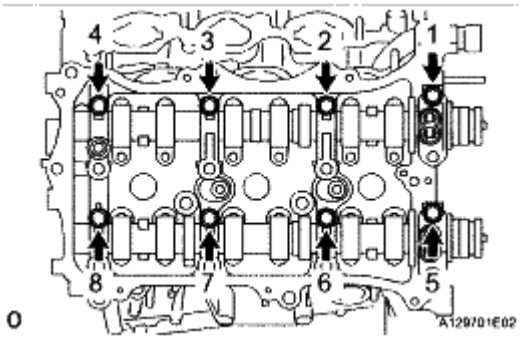

Fig. 558: Tightening Bolts In Sequence
Courtesy of TOYOTA MOTOR SALES, U.S.A., INC.

c. Make sure to install camshaft bearing caps in each proper position and direction according to the painted marks and numbers.

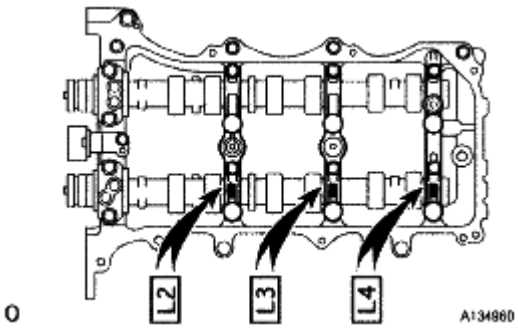

Fig. 559: Identifying Marks And Numbers On Camshaft Bearing Caps
Courtesy of TOYOTA MOTOR SALES, U.S.A., INC.

d. Temporarily tighten the 8 bolts in the order shown in the illustration.

Torque: 10 N*m (102 kgf*cm, 7 ft.*lbf)

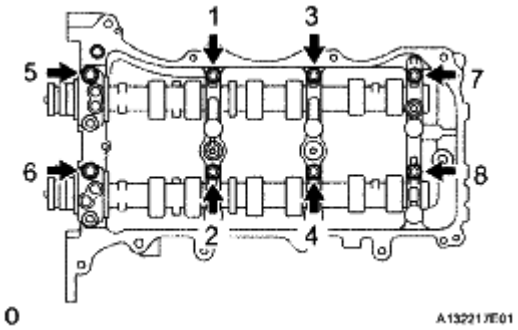

Fig. 560: Tightening Bolts In Sequence

 © 2011 Mitchell Repair Information Company, LLC.

Courtesy of TOYOTA MOTOR SALES, U.S.A., INC.

11. **INSTALL CAMSHAFT HOUSING SUB-ASSEMBLY LH**
    a. Make sure that the valve rocker arm is installed as shown in the illustration.

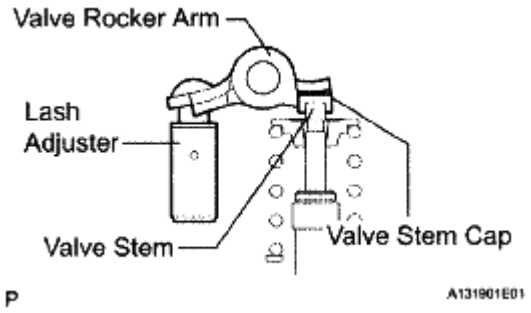

Fig. 561: Applying Engine Oil To Lash Adjuster Tips And Valve Stem Cap Ends
Courtesy of TOYOTA MOTOR SALES, U.S.A., INC.

    b. Apply seal packing in a continuous line as shown in the illustration.

Seal packing:

Toyota Genuine Seal Packing Black, Three Bond 1207B or equivalent

Seal diameter:

3.5 to 4.5 mm (0.138 to 0.177 in.)

NOTE:

- **Remove any oil from the contact surface.**
- **Install the camshaft housing sub-assembly LH within 3 minutes.**
- **Do not start the engine for at least 2 hours after installing.**

 © 2011 Mitchell Repair Information Company, LLC.

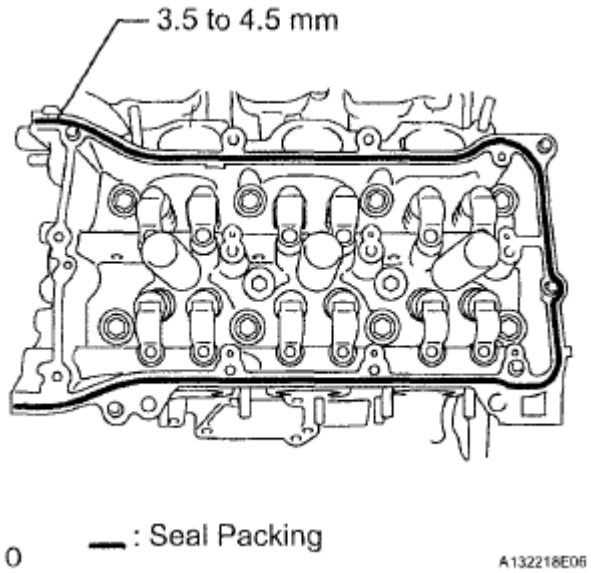

Fig. 562: Identifying Camshaft Housing Seal Area
Courtesy of TOYOTA MOTOR SALES, U.S.A., INC.

c. Install the camshaft housing sub-assembly LH and tighten the 13 bolts in the order shown in the illustration.

Torque: 28 N*m (286 kgf*cm, 21 ft.*lbf)

NOTE:

- **When installing the camshaft housing LH, it is necessary to correctly position the camshafts as shown in the illustration. Failure to correctly position these parts may result in damage due to contact between the pistons and valves. If a camshaft is rotated with a piston at TDC, valve contact will occur.**
- **If any of the bolts are loosened during installation, remove the camshaft housing, clean the installation surfaces, and reapply seal packing.**
- **If the camshaft housing is removed because any of the bolts are loosened during installation, make sure that the previously applied seal packing does not enter any oil passages.**

 © 2011 Mitchell Repair Information Company, LLC.

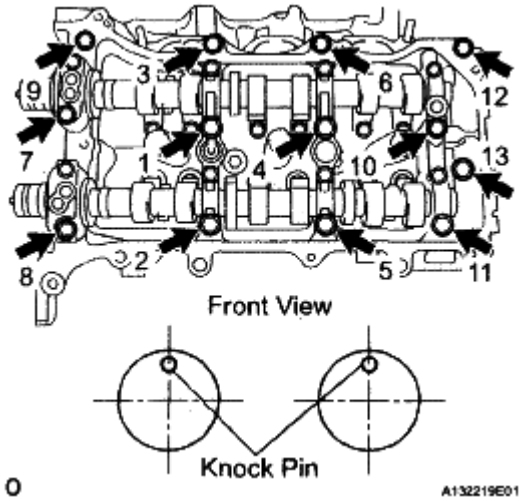

Fig. 563: Tightening Bolts In Sequence
Courtesy of TOYOTA MOTOR SALES, U.S.A., INC.

d. Tighten the 8 bolts in the order shown in the illustration.

Torque: 16 N*m (163 kgf*cm, 12 ft.*lbf)

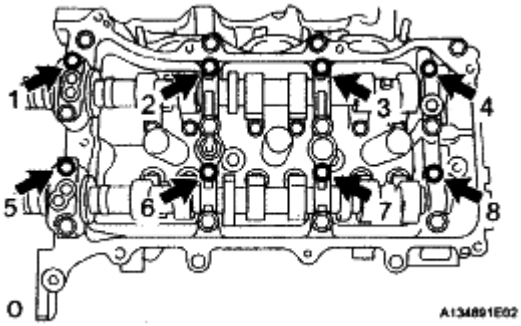

Fig. 564: Locating Bolts
Courtesy of TOYOTA MOTOR SALES, U.S.A., INC.

12. **INSTALL NO. 2 CHAIN TENSIONER ASSEMBLY**
    a. Install the No. 2 chain tensioner assembly with the bolt.

    Torque: 21 N*m (214 kgf*cm, 15 ft.*lbf)

    b. While pushing in the tensioner, insert a pin of 1.0 mm (0.0394 in.) diameter into the hole to fix it.

 © 2011 Mitchell Repair Information Company, LLC.

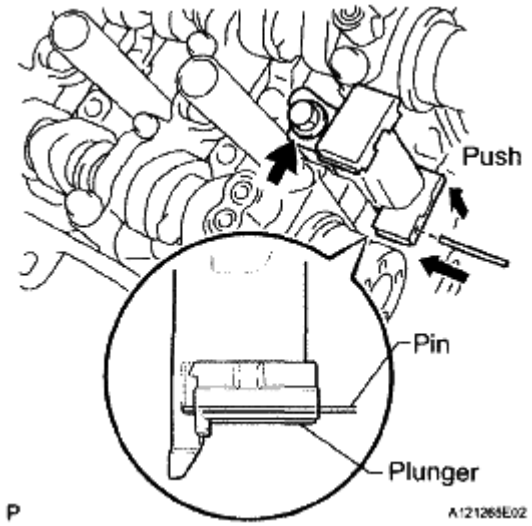

Fig. 565: Installing No 2 Chain Tensioner
Courtesy of TOYOTA MOTOR SALES, U.S.A., INC.

13. **INSTALL CAMSHAFT TIMING GEARS AND NO. 2 CHAIN (for Bank 1)**

CAUTION: For additional information on timing chain/gear removal guidelines, installtion and camshaft timing gear alignment, see 2GR-FE VALVE TIMING PROCEDURE .

a. Align the mark plates (yellow) with the timing marks of the camshaft timing gear assemblies as shown in the illustration.
b. Apply a light coat of engine oil to the bolt threads and bolt-seating surface.
c. Align the knock pin of the camshaft with the pin hole of the camshaft timing gear assembly. Install the camshaft timing gear assembly and camshaft timing exhaust gear assembly LH with the No. 2 chain subassembly installed.

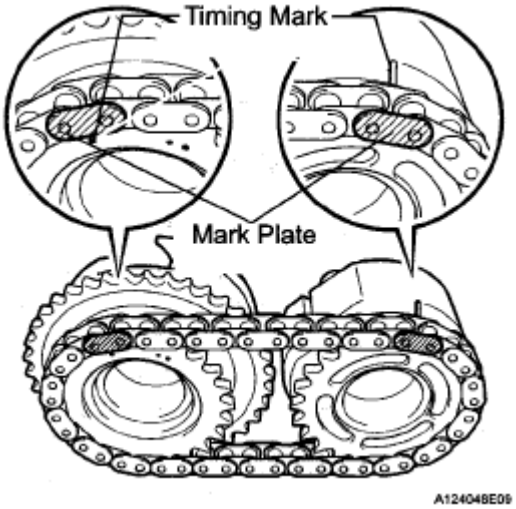

Fig. 566: Identifying Timing Mark
Courtesy of TOYOTA MOTOR SALES, U.S.A., INC.

d. Using SST to hold the hexagonal portion of each camshaft, tighten the flange bolts of the camshaft timing gear assembly and the camshaft timing exhaust gear assembly LH.

SST 09922-10010

Torque: 100 N*m (1020 kgf*cm, 74 ft.*lbf)

e. Remove the pin from the No. 2 chain tensioner assembly.

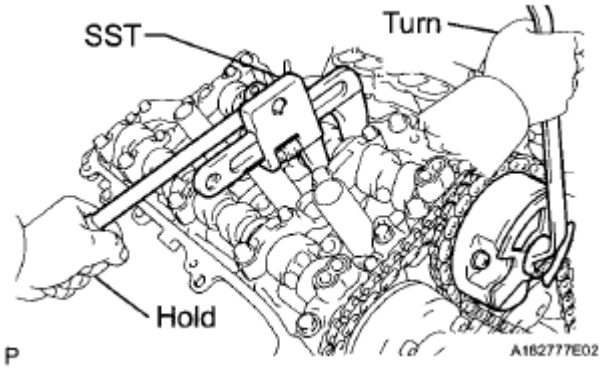

Fig. 567: Loosening Flange Bolts Of Camshaft Timing Gear Assembly
Courtesy of TOYOTA MOTOR SALES, U.S.A., INC.

14. **INSTALL NO. 3 CHAIN TENSIONER ASSEMBLY**

a. Install the No. 3 chain tensioner assembly with the bolt.

Torque: 21 N*m (214 kgf*cm, 15 ft.*lbf)

b. While pushing in the tensioner, insert a pin of 1.0 mm diameter (0.0394 in.) into the hole to hold it.

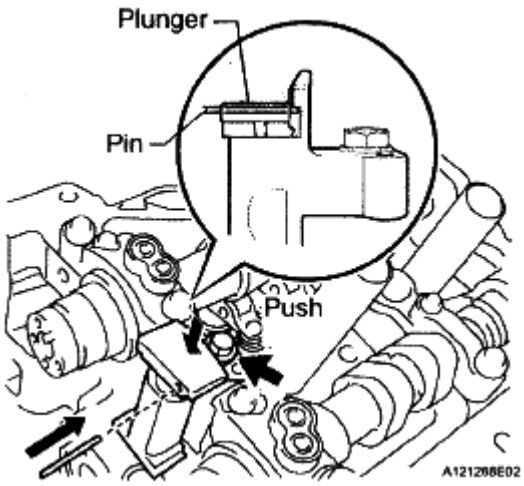

 © 2011 Mitchell Repair Information Company, LLC.

Fig. 568: Installing No 3 Chain Tensioner
Courtesy of TOYOTA MOTOR SALES, U.S.A., INC.

15. **INSTALL CAMSHAFT TIMING GEARS AND NO. 2 CHAIN (for Bank 2)**
    a. Align the mark plates (yellow) with the timing marks of the camshaft timing gear assemblies as shown in the illustration.
    b. Apply a light coat of engine oil to the bolt threads and bolt-seating surface.
    c. Align the knock pin of the camshaft with the pin hole of the camshaft timing gear assembly. Install the camshaft timing gear assembly and camshaft timing exhaust gear LH with the No. 2 chain sub-assembly installed.

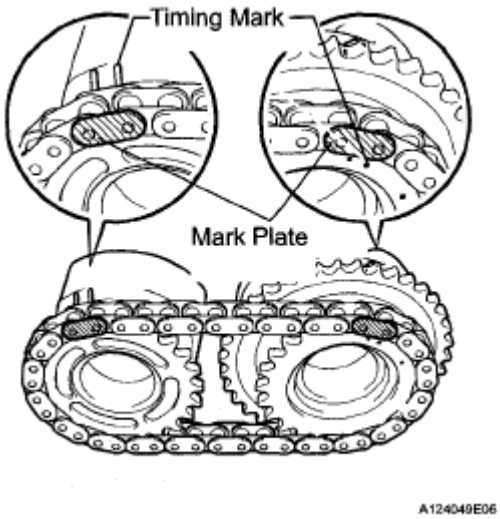

Fig. 569: Identifying Timing Mark
Courtesy of TOYOTA MOTOR SALES, U.S.A., INC.

    d. Using SST to hold the hexagonal portion of each camshaft, tighten the flange bolts of the camshaft timing gear assembly and the camshaft timing exhaust gear assembly LH.

    SST 09922-10010

    Torque: 100 N*m (1020 kgf*cm, 74 ft.*lbf)

    e. Remove the pin from the No. 3 chain tensioner assembly.

 © 2011 Mitchell Repair Information Company, LLC.

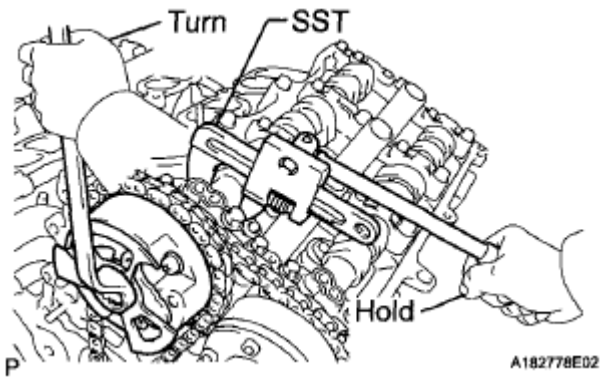

Fig. 570: Tightening Flange Bolts Of Camshaft Timing Gear Assembly
Courtesy of TOYOTA MOTOR SALES, U.S.A., INC.

16. **INSTALL NO. 1 CHAIN VIBRATION DAMPER**
    a. Install the No. 1 chain vibration damper with the 2 bolts.

    Torque: 23 N*m (230 kgf*cm, 17 ft.*lbf)

17. **INSTALL NO. 2 CHAIN VIBRATION DAMPER**
    a. Install the 2 No. 2 chain vibration dampers.

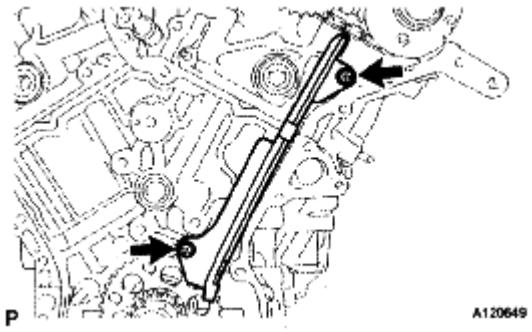

Fig. 571: Identifying No.1 Chain Vibration Damper Bolts
Courtesy of TOYOTA MOTOR SALES, U.S.A., INC.

18. **INSTALL CRANKSHAFT TIMING SPROCKET**
    a. Install the 2 keys and crankshaft timing sprocket as shown in the illustration.

 © 2011 Mitchell Repair Information Company, LLC.

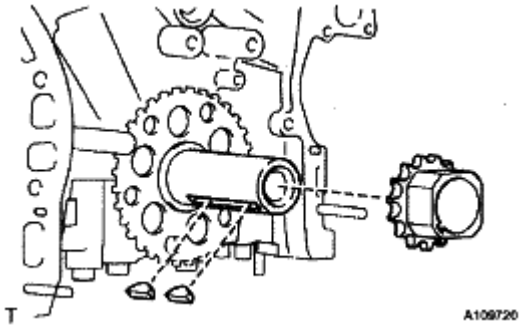

Fig. 572: Installing Crankshaft Timing Sprocket
Courtesy of TOYOTA MOTOR SALES, U.S.A., INC.

19. **INSTALL IDLE SPROCKET ASSEMBLY**
    a. Apply a light coat of engine oil to the rotating surface of the No. 1 idle gear shaft.
    b. Temporarily install the No. 1 idle gear shaft and idle sprocket with the No. 2 idle gear shaft while aligning the knock pin of the No. 1 idle gear shaft with the knock pin groove of the cylinder block.

NOTE: Be careful of the idle gear installation position.

HINT:

Check that no foreign objects are on the No. 1 and No. 2 idle gear shafts.

    c. Using a 10 mm hexagon wrench, tighten the No. 2 idle gear shaft.

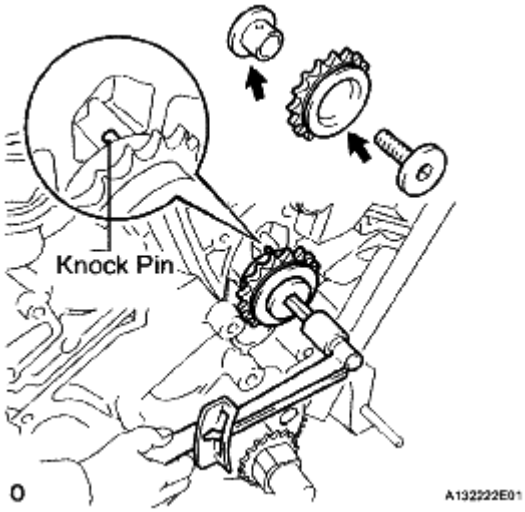

Fig. 573: Locating Idle Sprocket Assembly
Courtesy of TOYOTA MOTOR SALES, U.S.A., INC.

Torque: 60 N*m (612 kgf*cm, 44 ft.*lbf)

 © 2011 Mitchell Repair Information Company, LLC.

HINT:

After installing the idle sprocket assembly, check that the idle sprocket turns smoothly.

20. **INSTALL CHAIN SUB-ASSEMBLY**
    a. Align the mark plate and timing marks as shown in the illustration and install the chain.

    HINT:

    The camshaft mark plates are orange.

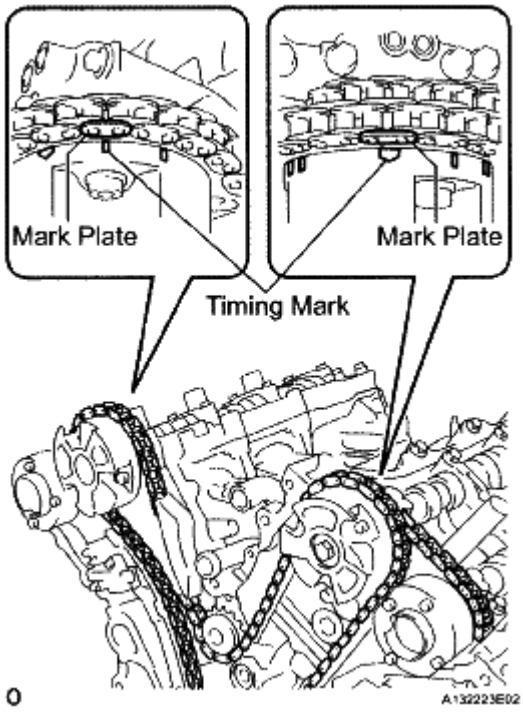

Fig. 574: Identifying Timing Mark On Marking Plate
Courtesy of TOYOTA MOTOR SALES, U.S.A., INC.

    b. Do not pass the chain over the crankshaft, just temporarily place it on the crankshaft.

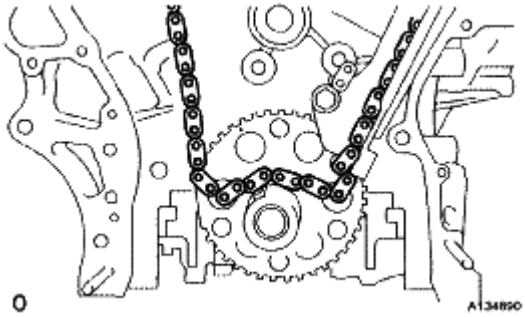

Fig. 575: Identifying Chain Set

 © 2011 Mitchell Repair Information Company, LLC.

Courtesy of TOYOTA MOTOR SALES, U.S.A., INC.

c. Turn the camshaft timing gear assembly on bank 1 counterclockwise to tighten the chain between the banks.

NOTE: When the idle sprocket assembly is reused, align the chain plate with the mark where the plate had been in order to tighten the chain between the banks.

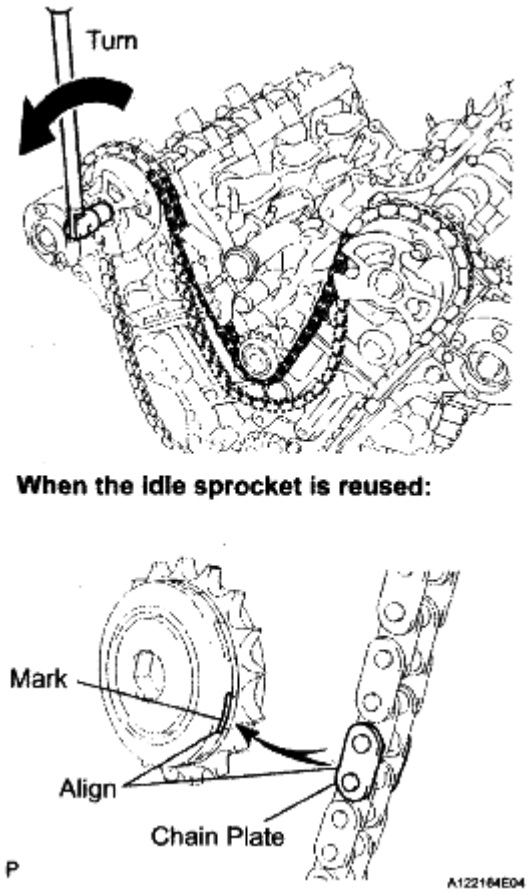

Fig. 576: Turning Camshaft Timing Gear Assembly
Courtesy of TOYOTA MOTOR SALES, U.S.A., INC.

d. Align the mark plate and timing marks as shown in the illustration and install the chain onto the crankshaft timing sprocket.

HINT:

The crankshaft mark plate is yellow.

e. Temporarily tighten the pulley set bolt.

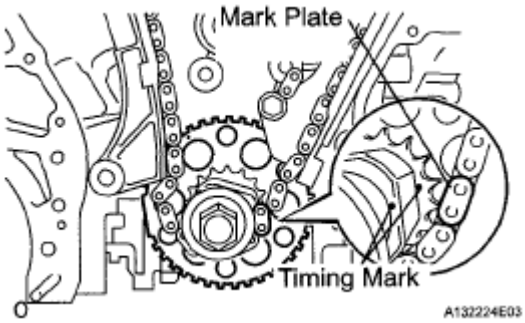

Fig. 577: Identifying Timing Mark
Courtesy of TOYOTA MOTOR SALES, U.S.A., INC.

f. Turn the crankshaft clockwise to set it to the RH block bore center line (TDC/compression).

21. **INSTALL CHAIN TENSIONER SLIPPER**
    a. Install the chain tensioner slipper.

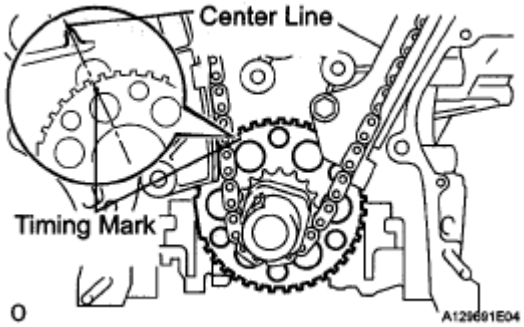

Fig. 578: Identifying Timing Mark
Courtesy of TOYOTA MOTOR SALES, U.S.A., INC.

22. **INSTALL NO. 1 CHAIN TENSIONER ASSEMBLY**
    a. Move the stopper plate upward to release the lock, and push the plunger deep into the tensioner.
    b. Move the stopper plate downward to set the lock, and insert a hexagon wrench into the hole of the stopper plate.

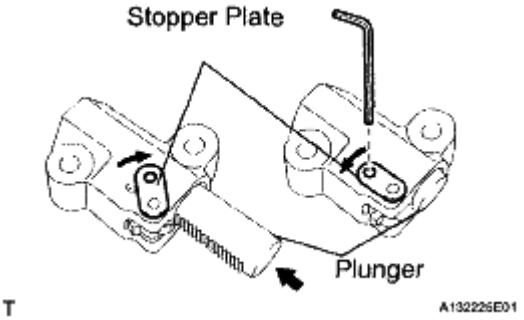

Fig. 579: Moving Stopper Plate Upward To Release Lock
Courtesy of TOYOTA MOTOR SALES, U.S.A., INC.

 © 2011 Mitchell Repair Information Company, LLC.

c. Install the No. 1 chain tensioner assembly with the 2 bolts.

Torque: 10 N*m (102 kgf*cm, 7 ft.*lbf)

d. Remove the hexagon wrench from the No. 1 chain tensioner assembly.
e. Check the camshaft timing marks.

NOTE:

- **Check each timing mark from a viewpoint directly inline with the center of the camshaft and the timing mark on each camshaft timing gear.**
- **If the timing marks are checked from any other viewpoint, the valve timing may appear misaligned.**

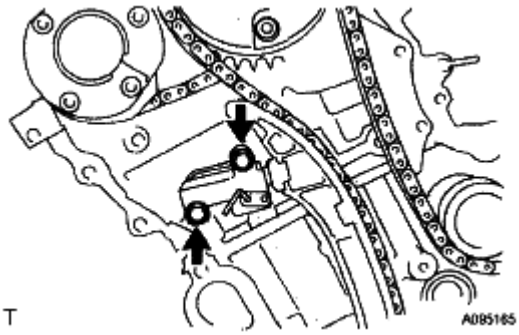

Fig. 580: Installing Chain Tensioner With Bolts
Courtesy of TOYOTA MOTOR SALES, U.S.A., INC.

f. Check that each camshaft timing mark is positioned as shown in the illustration.

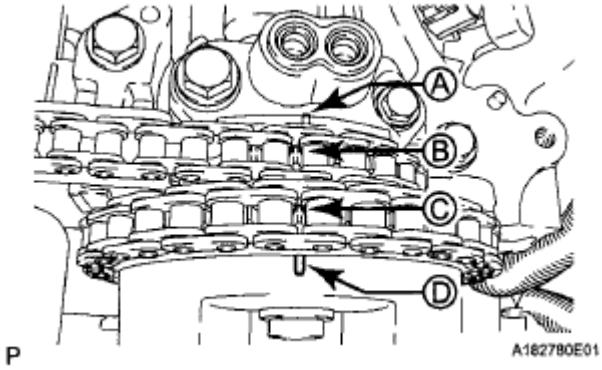

Fig. 581: Identifying Camshaft Timing Mark Position
Courtesy of TOYOTA MOTOR SALES, U.S.A., INC.

 © 2011 Mitchell Repair Information Company, LLC.

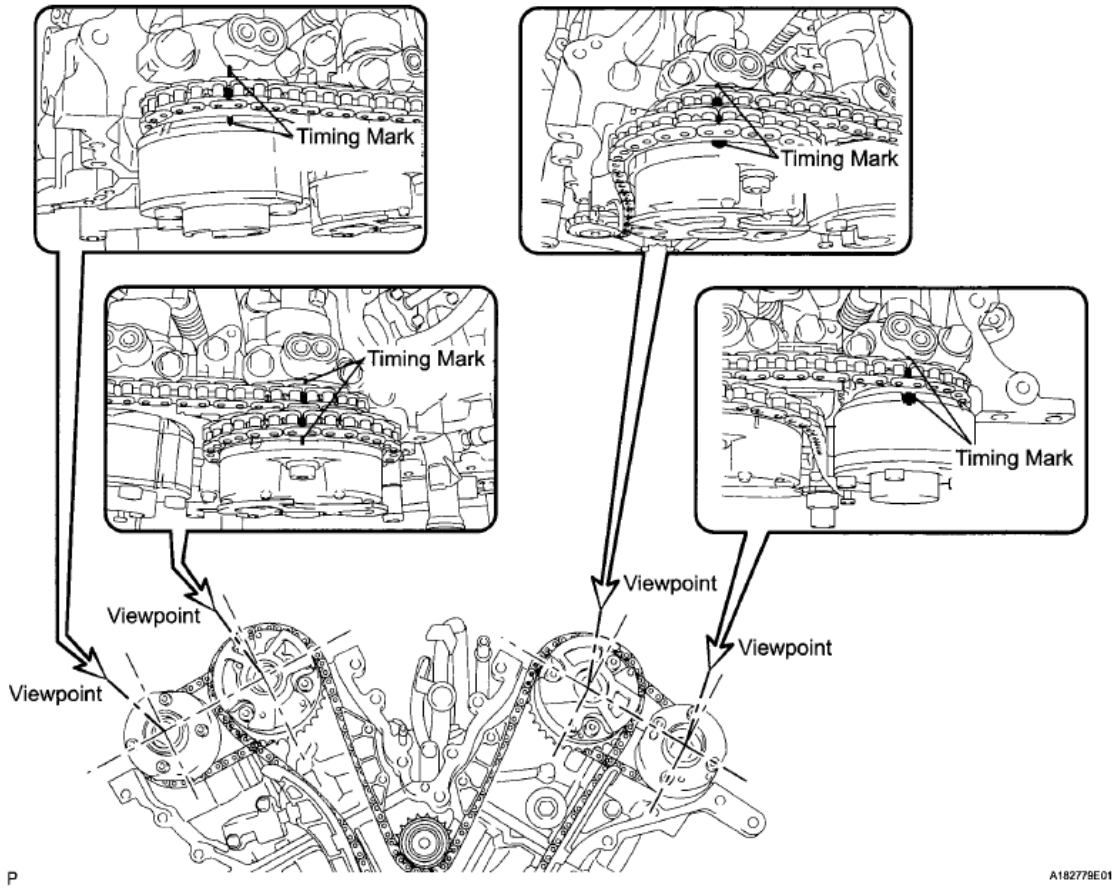

Fig. 582: Identifying Timing Mark Of Camshaft Position
Courtesy of TOYOTA MOTOR SALES, U.S.A., INC.

HINT:

For the intake camshaft:

Be sure to check mark A at the point when marks B, C, and D are positioned in line. If the marks are checked from any other viewpoint, they cannot be checked correctly.

g. If the valve timing is misaligned, reinstall the timing chain.
h. Remove the pulley set bolt.

23. **INSTALL TIMING CHAIN CASE OIL SEAL**
    a. Using SST, tap in a new timing chain case oil seal until its surface is flush with the timing gear case edge.

    SST 09223-22010, 09506-35010

NOTE:

- **Keep the lip free of foreign matter.**
- **Do not tap on the oil seal at an angle.**

 © 2011 Mitchell Repair Information Company, LLC.

- **Make sure that the oil seal edge does not stick out of the timing chain case.**

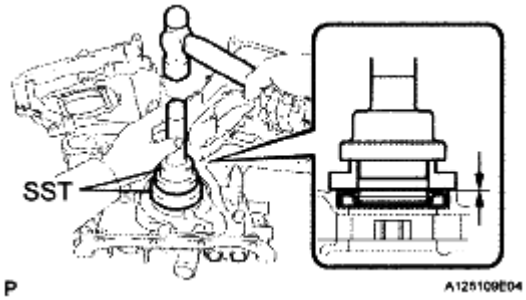

Fig. 583: Installing Timing Chain Case Oil Seal
Courtesy of TOYOTA MOTOR SALES, U.S.A., INC.

24. **INSTALL WATER PUMP ASSEMBLY**
    a. Install a new water pump gasket and the water pump assembly with the 8 bolts.

    Torque: 11 N*m (112 kgf*cm, 8 ft.*lbf)

    NOTE: Be sure to replace the bolts indicated by A with new ones or reuse them after applying adhesive 1344.

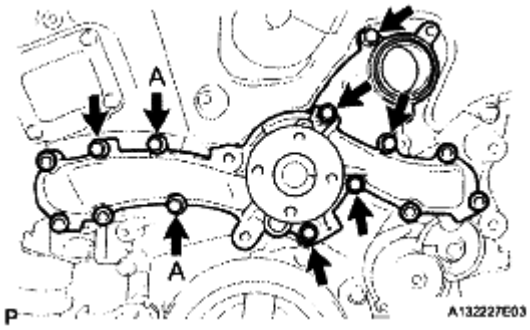

Fig. 584: Locating Water Pump With Bolts
Courtesy of TOYOTA MOTOR SALES, U.S.A., INC.

25. **INSTALL TIMING CHAIN COVER SUB-ASSEMBLY**
    a. Apply seal packing in a continuous line to the engine unit as shown in the following illustration.

 © 2011 Mitchell Repair Information Company, LLC.

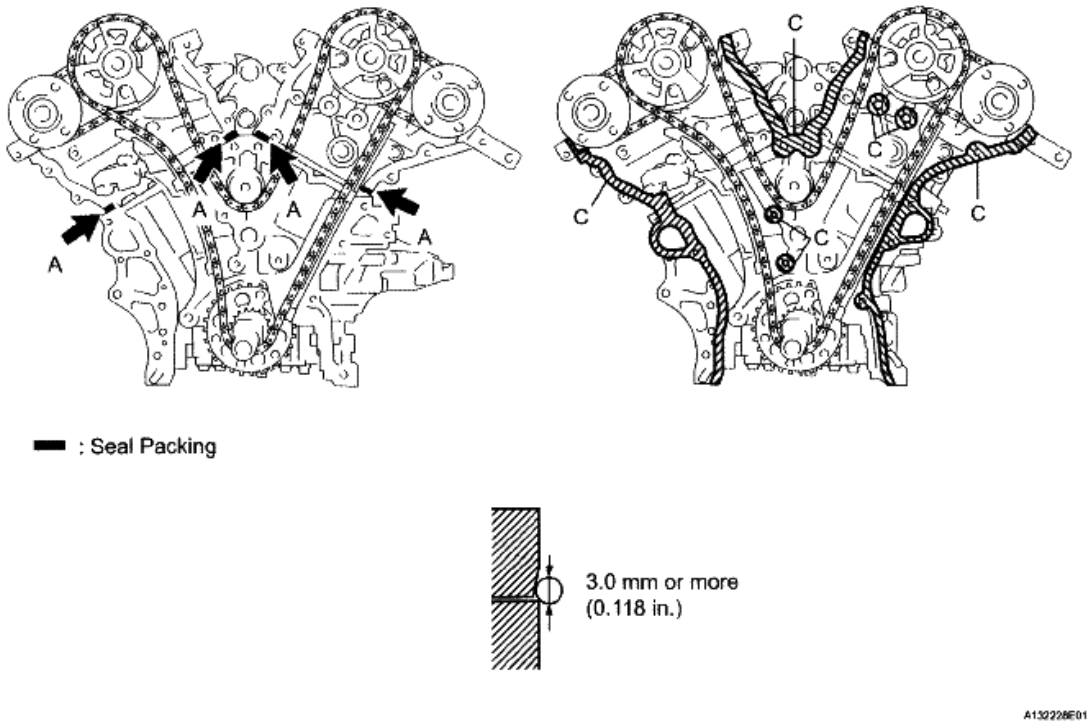

Fig. 585: Applying Seal Packing
Courtesy of TOYOTA MOTOR SALES, U.S.A., INC.

Seal packing:

Toyota Genuine Seal Packing Black, Three Bond 1207B or equivalent

Seal diameter:

3.0 mm (0.118 in.)

NOTE:

- **Be sure to clean and degrease the contact surfaces, especially the surfaces indicated by C in the illustration.**
- **If the contact surfaces are wet, wipe them with an oil-free cloth before applying seal packing.**
- **Install the chain cover within 3 minutes.**
- **Do not start the engine for at least 2 hours after installing.**

b. Apply seal packing in a continuous line to the timing chain cover as shown in the following illustration.

 © 2011 Mitchell Repair Information Company, LLC.

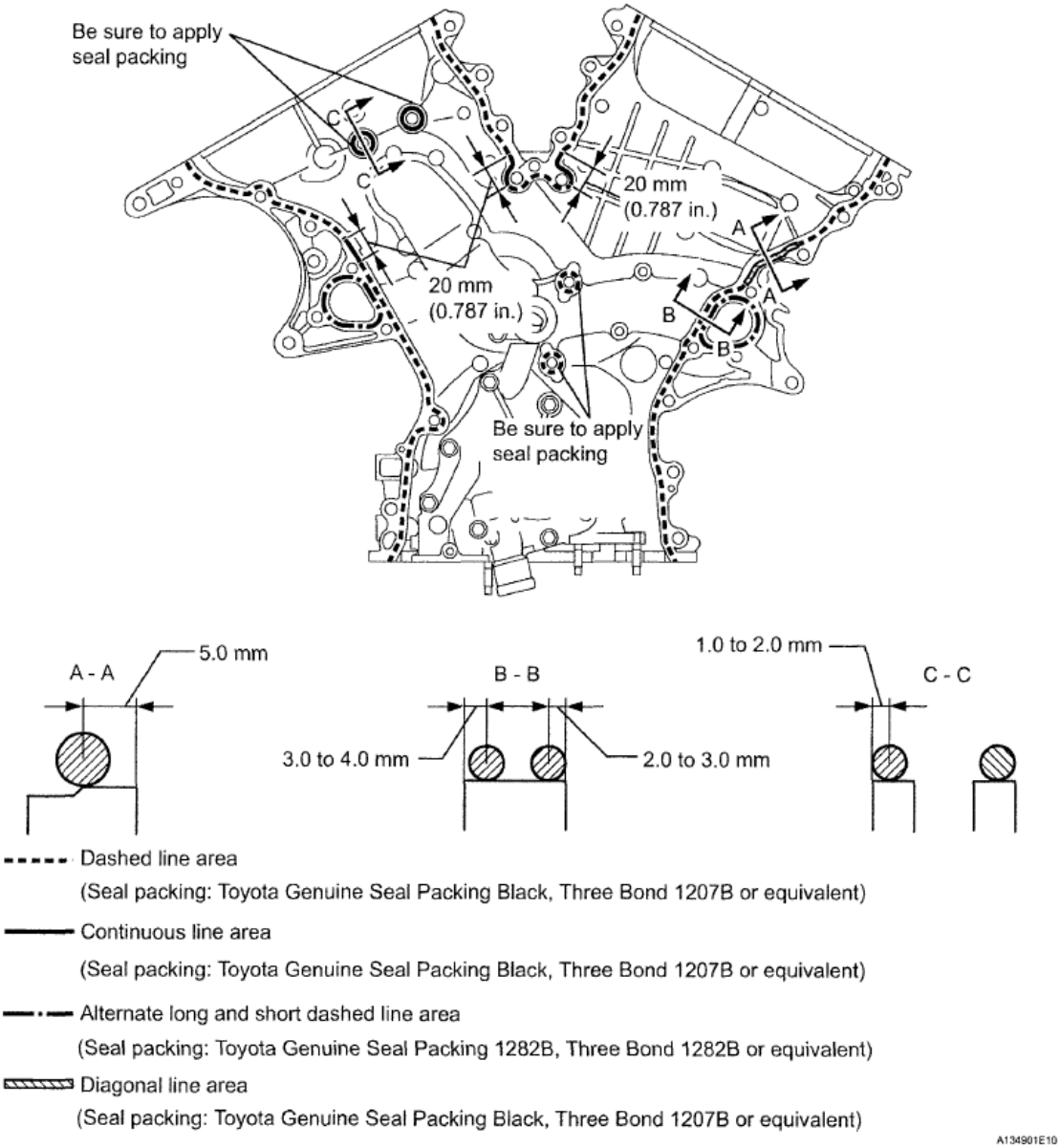

Fig. 586: Identifying Timing Chain Cover Seal Packing Area
Courtesy of TOYOTA MOTOR SALES, U.S.A., INC.

Seal packing:

Toyota Genuine Seal Packing Black, Three Bond 1207B or equivalent

Toyota Genuine Seal Packing 1282B, Three Bond 1282B or equivalent

NOTE:

- **If the contact surfaces are wet, wipe them with an oil-free cloth before applying seal packing.**
- **Install the chain cover within 3 minutes and tighten the bolts within 15 minutes after applying seal packing.**

 © 2011 Mitchell Repair Information Company, LLC.

- **Do not start the engine for at least 2 hours after installing.**

Apply seal packing as follows

SEAL PACKING DIAMETER CHART

Area	Seal Packing Diameter	Application Position from Inside Seal Line
Continuous Line Area	4.5 mm or more (0.177 in.)	3.0 to 4.0 mm (0.118 to 0.157 in.)
Alternate Long and Dashed Line Area	3.5 mm or more (0.138 in.)	2.0 to 3.0 mm (0.079 to 0.118 in.)
Dashed Line Area	3.5 mm or more (0.138 in.)	3.0 to 4.0 mm (0.118 to 0.157 in.)
Diagonal Line Area	6.0 mm or more (0.236 in.)	5.0 mm (0.197 in.)

c. Install a new gasket.

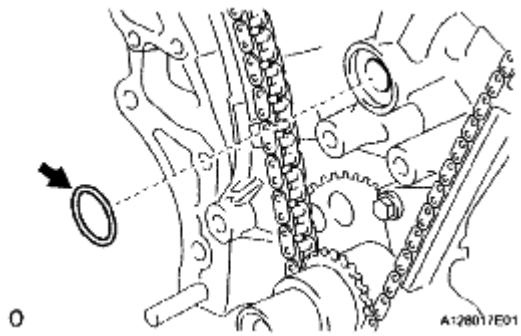

Fig. 587: Installing Gasket
Courtesy of TOYOTA MOTOR SALES, U.S.A., INC.

d. Align the oil pump's drive rotor spline and the crankshaft as shown in the illustration. Install the spline and chain cover to the crankshaft.
e. Temporarily tighten the timing chain cover with the 23 bolts and 2 nuts.

 © 2011 Mitchell Repair Information Company, LLC.

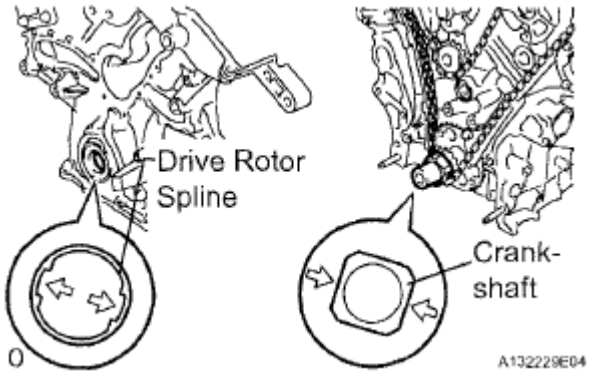

Fig. 588: Identifying Drive Rotor Spline And Crankshaft
Courtesy of TOYOTA MOTOR SALES, U.S.A., INC.

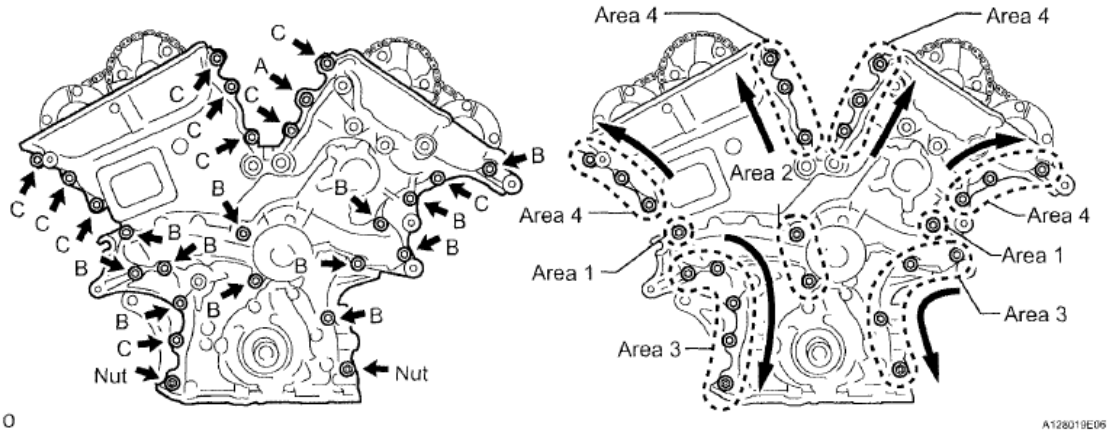

Fig. 589: Locating Timing Chain Cover Bolts And Nuts
Courtesy of TOYOTA MOTOR SALES, U.S.A., INC.

Bolt length

BOLT LENGTH SPECIFICATION

Item	Length
Bolt A	40 mm (1.57 in.)
Bolt B	55 mm (2.17 in.)
Bolt C	25 mm (0.98 in.)

NOTE: Make sure that there is no oil on the bolt and nut threads.

f. Fully tighten the bolts in this order: Area 1 and Area 2.

Torque: 21 N*m (214 kgf*cm, 15 ft.*lbf)

g. Fully tighten the bolts in Area 3.

 © 2011 Mitchell Repair Information Company, LLC.

Torque: 21 N*m (214 kgf*cm, 15 ft.*lbf)

HINT:

First tighten the upper bolts and nuts followed by lower bolts and nuts as shown in the illustration.

h. Fully tighten the bolts in Area 4.

Torque: 43 N*m (438 kgf*cm, 32 ft.*lbf) for bolt A

21 N*m (214 kgf*cm, 15 ft.*lbf) for bolts except bolt A

HINT:

Tighten the bolts in the order of lower to upper as shown in the illustration.

i. Install a new chain cover plate gasket and the chain cover plate with the 4 bolts.

Torque: 9.1 N*m (93 kgf*cm, 81 in.*lbf)

26. **INSTALL WATER INLET HOUSING**

a. Install 2 new O-rings.

HINT:

Apply a small amount of water or soapy water to CD-ring (A) in the illustration before installation.

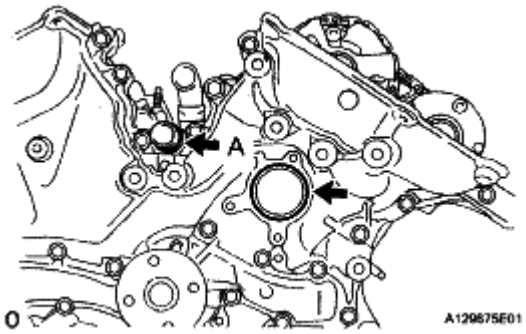

Fig. 590: Locating O-Ring
Courtesy of TOYOTA MOTOR SALES, U.S.A., INC.

b. Install the 2 stud bolts.

Torque: 4.0 N*m (41 kgf*cm, 35 in.*lbf)

 © 2011 Mitchell Repair Information Company, LLC.

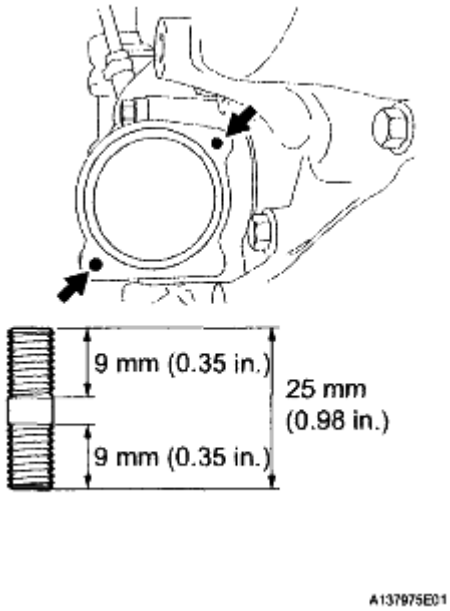

Fig. 591: Identifying Stud Bolt Length
Courtesy of TOYOTA MOTOR SALES, U.S.A., INC.

c. Install the water inlet housing with the 2 bolts and nut.

Torque: 10 N*m (102 kgf*cm, 7 ft.*lbf)

NOTE: Be careful that the O-ring does not get caught between the parts.

d. Connect the No. 1 water by-pass hose.
e. Apply adhesive around the drain cock.

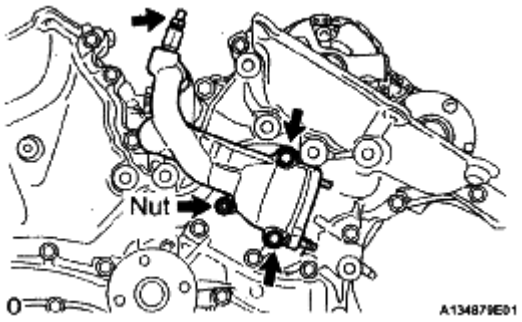

Fig. 592: Removing Bolts, Nut, And Water Inlet Housing
Courtesy of TOYOTA MOTOR SALES, U.S.A., INC.

Adhesive:

Toyota Genuine Adhesive 1324, Three Bond 1324 or equivalent

 © 2011 Mitchell Repair Information Company, LLC.

f. Install the drain cock assembly to the water inlet housing.

Torque: 30 N*m (306 kgf*cm, 22 ft.*lbf)

g. Install the drain cock plug to the drain cock assembly.

Torque: 13 N*m (130 kgf*cm, 9 ft.*lbf)

h. Install a new gasket to the thermostat.

i. Align the thermostat jiggle valve with the upper stud bolt, and insert the thermostat in the water inlet housing.

HINT:

The jiggle valve may be set within 10° of either side of the prescribed position.

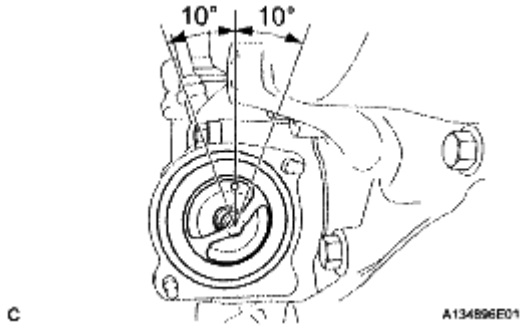

Fig. 593: Identifying Jiggle Valve Angles
Courtesy of TOYOTA MOTOR SALES, U.S.A., INC.

j. Install the water inlet with the 2 nuts.

Torque: 10 N*m (102 kgf*cm, 7 ft.*lbf)

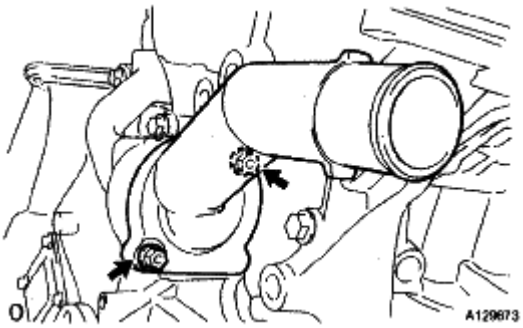

Fig. 594: Locating Water Inlet With Nuts
Courtesy of TOYOTA MOTOR SALES, U.S.A., INC.

27. **INSTALL NO. 1 FRONT ENGINE MOUNTING BRACKET LH**

a. Install the No. 1 front engine mounting bracket LH with the 6 bolts.

Torque: 54 N*m (551 kgf*cm, 40 ft.*lbf)

NOTE:

- **Install the water inlet and mounting bracket within 15 minutes after installing the chain cover.**
- **Do not start the engine for at least 2 hours after installation.**

b. When replacing a stud bolt, install it by using an E8 "TORX" socket wrench.

Torque: 10 N*m (102 kgf*cm, 7 ft.*lbf)

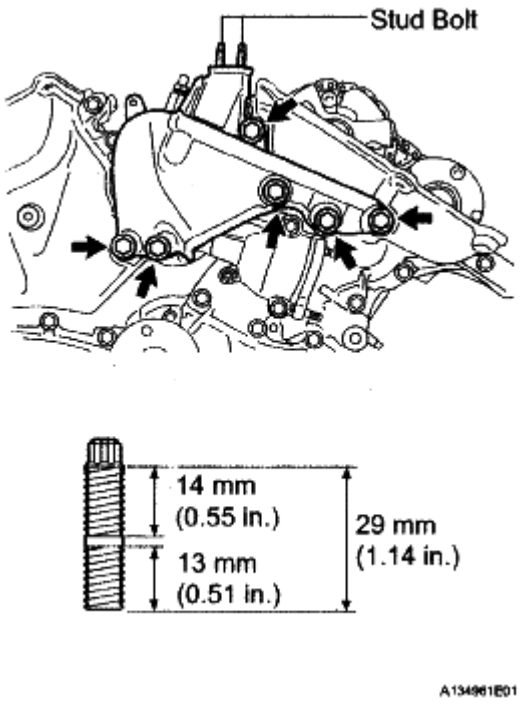

Fig. 595: Identifying Stud Bolt Length
Courtesy of TOYOTA MOTOR SALES, U.S.A., INC.

28. **INSTALL NO. 1 OIL PAN BAFFLE PLATE**

a. Install the No. 1 oil pan baffle plate with the 7 bolts.

Torque: 10 N*m (102 kgf*cm, 7 ft.*lbf)

HINT:

Temporarily tighten the 7 bolts. Fully tighten 2 bolts (A) as shown in the illustration before tightening the other bolts.

 © 2011 Mitchell Repair Information Company, LLC.

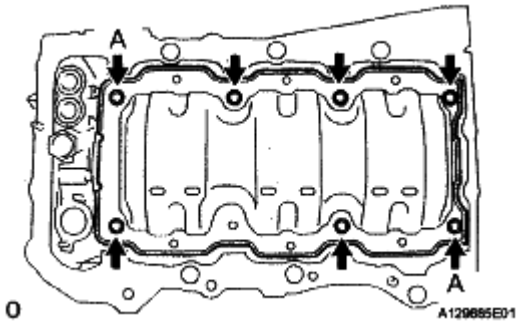

Fig. 596: Locating Oil Pan Baffle Plate Bolts
Courtesy of TOYOTA MOTOR SALES, U.S.A., INC.

29. **INSTALL OIL PAN SUB-ASSEMBLY**
    a. When replacing a stud bolt, install it by using an E8 "TORX" socket wrench.

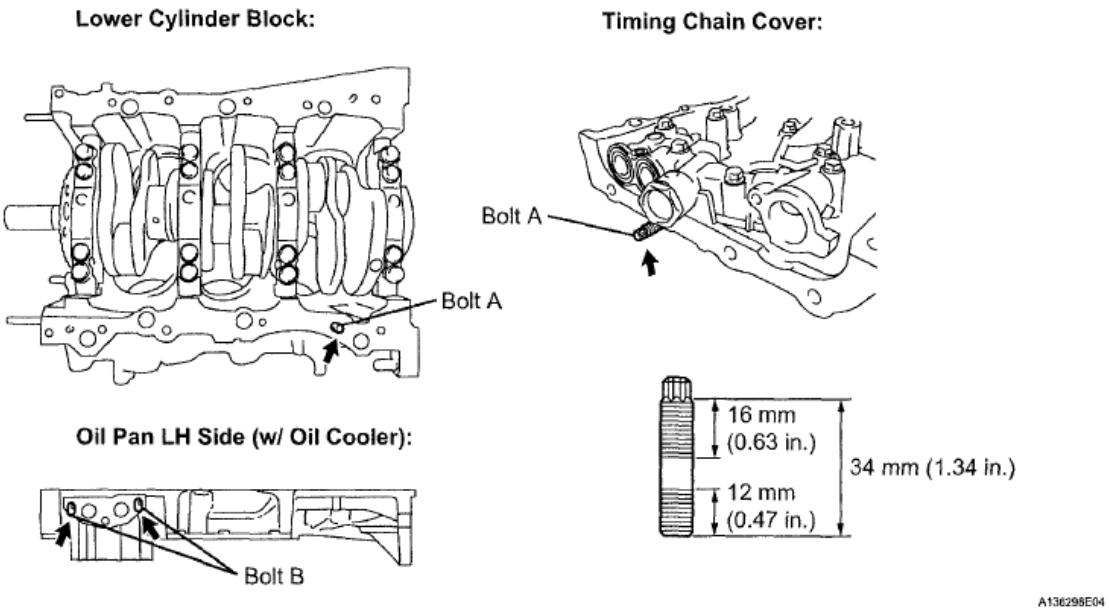

Fig. 597: Locating Stud Bolt
Courtesy of TOYOTA MOTOR SALES, U.S.A., INC.

Torque: 10 N*m (102 kgf*cm, 7 ft.*lbf) for bolt A

9.0 N*m (92 kgf*cm, 80 in.*lbf) for bolt B

    b. Install 2 new O-rings.

 © 2011 Mitchell Repair Information Company, LLC.

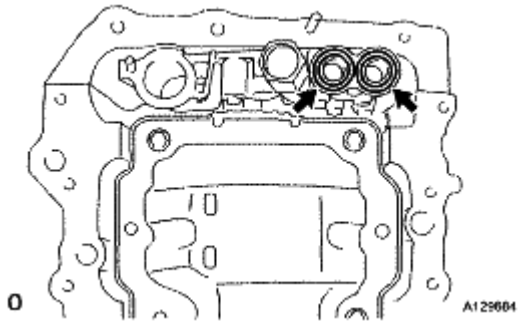

Fig. 598: Locating O-Rings
Courtesy of TOYOTA MOTOR SALES, U.S.A., INC.

c. Apply seal packing in a continuous line as shown in the illustration.

Seal packing:

Toyota Genuine Seal Packing Black, Three Bond 1207B or equivalent

Seal diameter:

3.0 to 4.0 mm (0.118 to 0.157 in.)

NOTE:

- **Remove any oil from the contact surface.**
- **Install the oil pan within 3 minutes after applying seal packing.**
- **Do not start the engine for at least 2 hours after installing.**

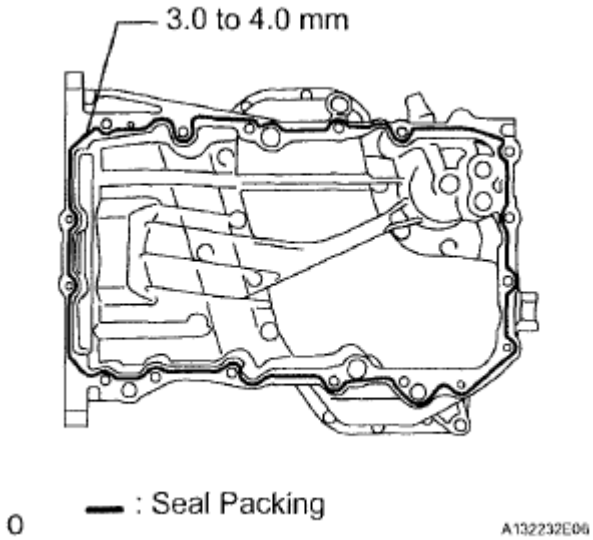

Fig. 599: Identifying Oil Pan Seal Packing Area
Courtesy of TOYOTA MOTOR SALES, U.S.A., INC.

 © 2011 Mitchell Repair Information Company, LLC.

d. Install the oil pan with the 16 bolts and 2 nuts.

Torque: 10 N*m (102 kgf*cm, 7 ft.*lbf) for bolt A

21 N*m (214 kgf*cm, 15 ft.*lbf) for except bolt A

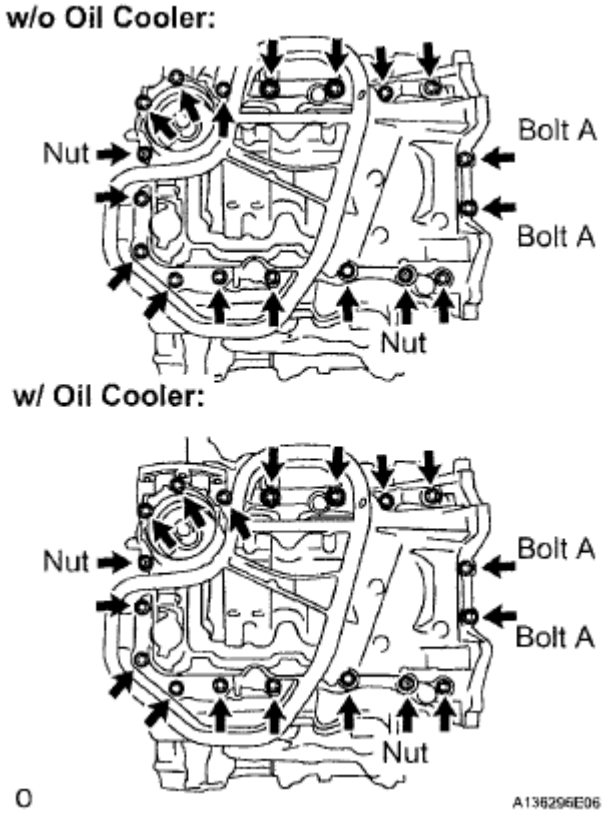

Fig. 600: Locating Oil Pan Bolts And Nuts
Courtesy of TOYOTA MOTOR SALES, U.S.A., INC.

30. **INSTALL OIL STRAINER SUB-ASSEMBLY**

a. Using an E6 "TORX" socket, install the stud bolts as shown in the illustration.

Torque: 4.0 N*m (41 kgf*cm, 35 in.*lbf)

 © 2011 Mitchell Repair Information Company, LLC.

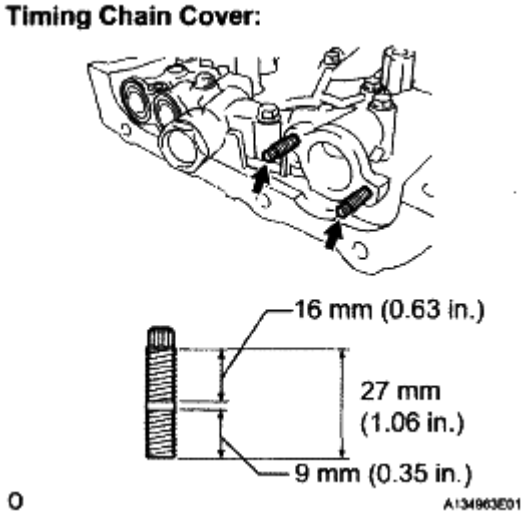

Fig. 601: Locating Stud Bolts And Length
Courtesy of TOYOTA MOTOR SALES, U.S.A., INC.

b. Install a new gasket and the oil strainer sub-assembly with the bolt and 2 nuts.

Torque: 10 N*m (102 kgf*cm, 7 ft.*lbf)

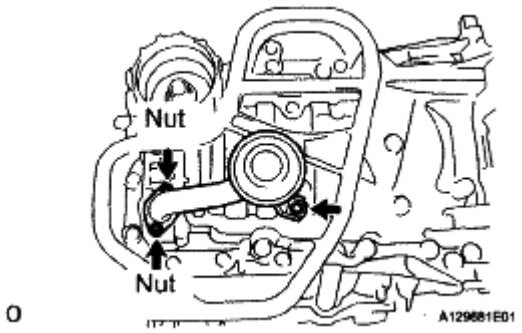

Fig. 602: Installing Gasket And Oil Strainer With Bolt And Nuts
Courtesy of TOYOTA MOTOR SALES, U.S.A., INC.

31. **INSTALL NO. 2 OIL PAN SUB-ASSEMBLY**
    a. Using an E6 "TORX" socket, install the stud bolts as shown in the illustration.

    Torque: 4.0 N*m (41 kgf*cm, 35 in.*lbf)

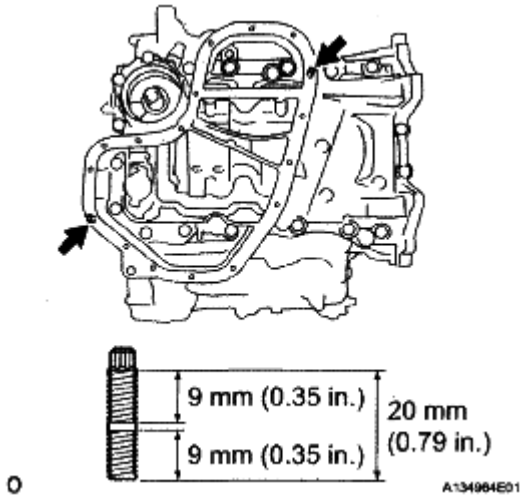

Fig. 603: Installing No. 2 Oil Pan Sub-Assembly
Courtesy of TOYOTA MOTOR SALES, U.S.A., INC.

b. Apply seal packing in a continuous line as shown in the illustration.

Seal packing:

Toyota Genuine Seal Packing Black, Three Bond 1207B or equivalent

Seal diameter:

3.0 to 4.0 mm (0.118 to 0.157 in.)

NOTE:

- **Remove any oil from the contact surface.**
- **Install the No. 2 oil pan sub-assembly within 3 minutes after applying seal packing.**
- **Do not start the engine for at least 2 hours after installing.**

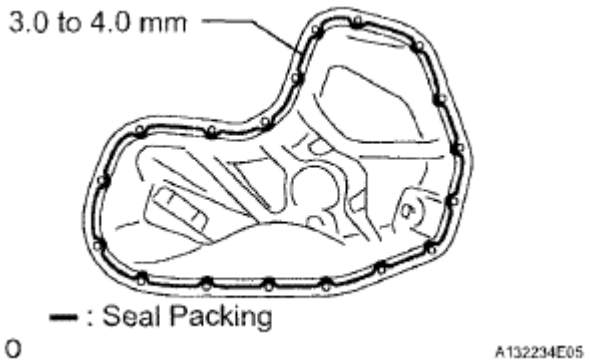

Fig. 604: Identifying No. 2 Oil Pan Sub-Assembly Seal Packing Area
Courtesy of TOYOTA MOTOR SALES, U.S.A., INC.

c. Install the No. 2 oil pan sub-assembly with the 16 bolts and 2 nuts.

Torque: 10 N*m (102 kgf*cm, 7 ft.*lbf)

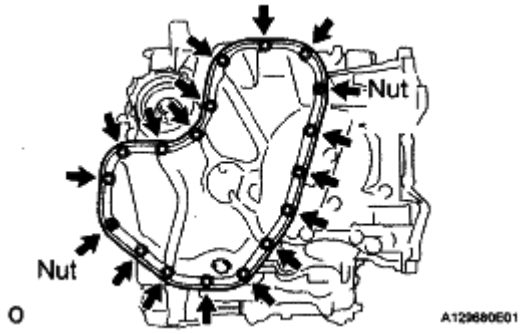

Fig. 605: Identifying Oil Pan With Bolts And Nuts
Courtesy of TOYOTA MOTOR SALES, U.S.A., INC.

32. **INSTALL OIL PAN DRAIN PLUG**
    a. Install a new oil pan drain plug gasket and the oil pan drain plug.

Torque: 40 N*m (408 kgf*cm, 30 ft.*lbf)

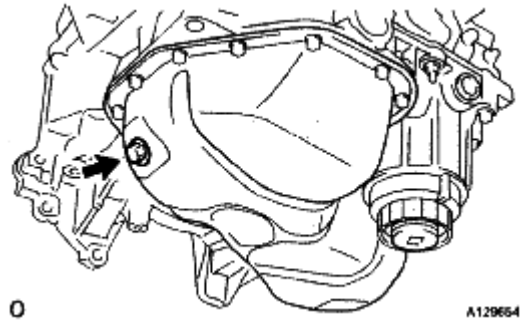

Fig. 606: Locating Oil Pan Drain Plug
Courtesy of TOYOTA MOTOR SALES, U.S.A., INC.

33. **INSTALL CYLINDER HEAD COVER SUB-ASSEMBLY (for Bank 1)**
    a. Apply seal packing as shown in the illustration.

Seal packing:

Toyota Genuine Seal Packing Black, Three Bond 1207B or equivalent

NOTE:

- **Remove any oil from the contact surface.**
- **Install the head cover within 3 minutes after applying seal packing.**

 © 2011 Mitchell Repair Information Company, LLC.

- **Do not start the engine for at least 2 hours after installing.**

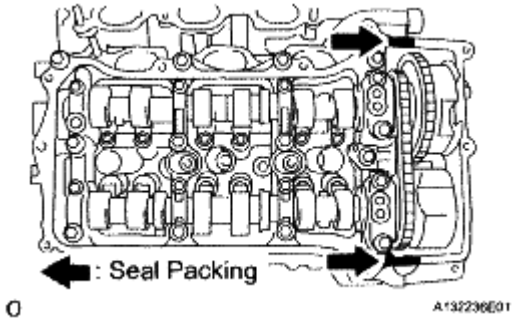

Fig. 607: Applying Seal Packing
Courtesy of TOYOTA MOTOR SALES, U.S.A., INC.

b. Install 3 new gaskets as shown in the illustration.
c. Install a new gasket to the head cover.

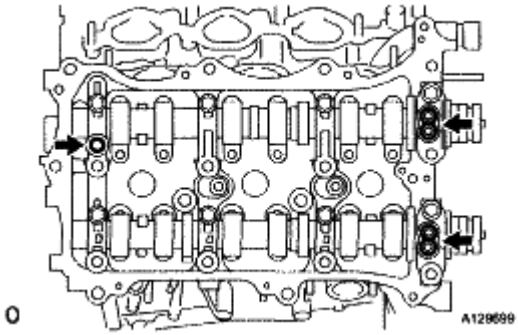

Fig. 608: Identifying Gaskets
Courtesy of TOYOTA MOTOR SALES, U.S.A., INC.

d. Install a head cover with the 12 bolts and a new seal washer.

Torque: 21 N*m (214 kgf*cm, 15 ft.*lbf) for bolt A

10 N*m (102 kgf*cm, 7 ft.*lbf) for except bolt A

HINT:

After tightening all bolts, check the tightening torque of 1 and 11. Retighten the bolt if necessary.

 © 2011 Mitchell Repair Information Company, LLC.

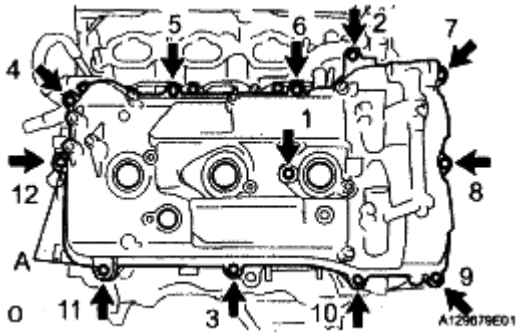

Fig. 609: Identifying Head Cover With Bolts
Courtesy of TOYOTA MOTOR SALES, U.S.A., INC.

34. **INSTALL CYLINDER HEAD COVER SUB-ASSEMBLY (for Bank 2)**
    a. Apply seal packing as shown in the illustration.

    Seal packing:

    Toyota Genuine Seal Packing Black, Three Bond 1207B or equivalent

    NOTE:
    - **Remove any oil from the contact surfaces.**
    - **Install the cylinder head cover sub-assembly within 3 minutes after applying seal packing.**
    - **Do not start the engine for at least 2 hours after installing.**

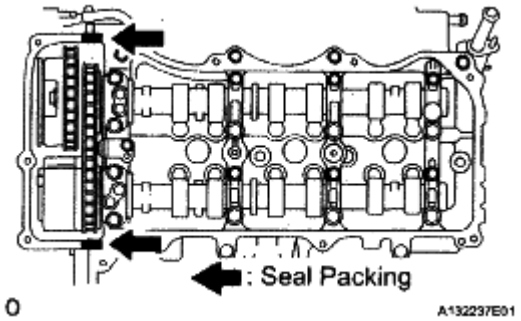

Fig. 610: Applying Seal Packing
Courtesy of TOYOTA MOTOR SALES, U.S.A., INC.

    b. Install 3 new gaskets as shown in the illustration.
    c. Install a new cylinder head cover gasket to the cylinder head cover sub-assembly.

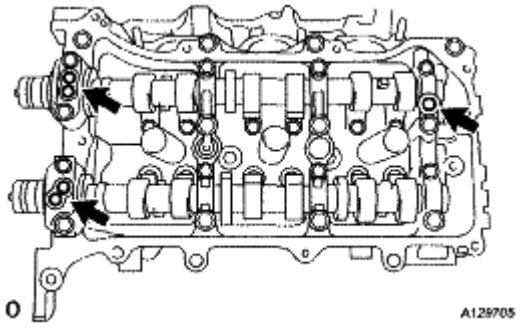

Fig. 611: Identifying Gaskets
Courtesy of TOYOTA MOTOR SALES, U.S.A., INC.

d. Install the cylinder head cover sub-assembly with the 12 bolts and a new seal washer.

Torque: 21 N*m (214 kgf*cm, 15 ft.*lbf) for bolt A

10 N*m (102 kgf*cm, 7 ft.*lbf) for except bolt A

HINT:

After tightening all bolts, check the tightening torque of 1 and 10. Retighten the bolt if necessary.

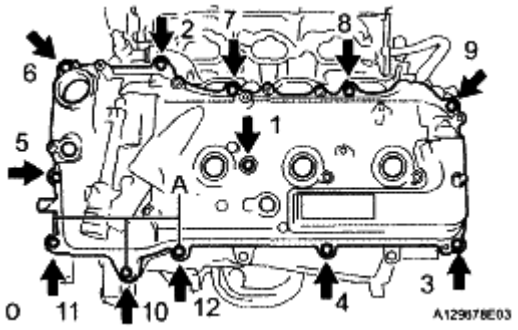

Fig. 612: Installing Head Cover With Bolts And Washer
Courtesy of TOYOTA MOTOR SALES, U.S.A., INC.

35. **INSTALL WATER OUTLET**

a. Install 2 new gaskets and a new O-ring.

HINT:

Apply soapy water to the O-ring.

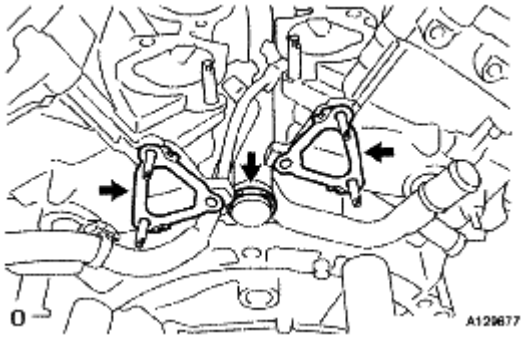

Fig. 613: Locating Gaskets And O-Ring
Courtesy of TOYOTA MOTOR SALES, U.S.A., INC.

b. Install the water outlet with the 2 bolts and 4 nuts.

Torque: 10 N*m (102 kgf*cm, 7 ft.*lbf) for bolts

10 N*m (102 kgf*cm, 7 ft.*lbf) for nuts

NOTE: Be careful that the O-ring does not get caught between the parts.

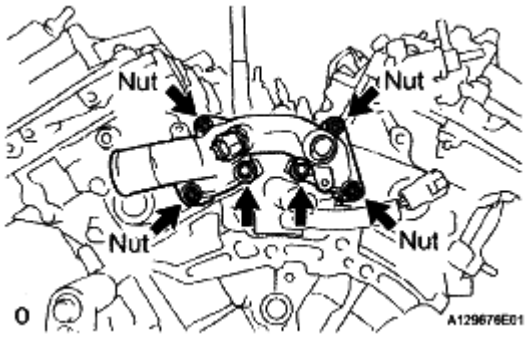

Fig. 614: Removing Bolts, Nuts And Water Outlet
Courtesy of TOYOTA MOTOR SALES, U.S.A., INC.

36. **INSTALL NO. 1 ENGINE OIL LEVEL DIPSTICK GUIDE**
    a. Apply a light coat of engine oil to a new O-ring and install it to the No. 1 engine oil level dipstick guide.

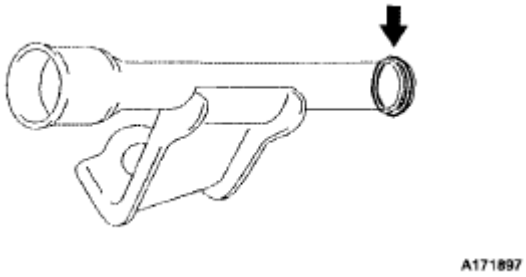

Fig. 615: Locating No. 1 Engine Oil Level Dipstick Guide
Courtesy of TOYOTA MOTOR SALES, U.S.A., INC.

b. Install the bolt and No. 2 dipstick guide.

Torque: 21 N*m (214 kgf*cm, 15 ft.*lbf)

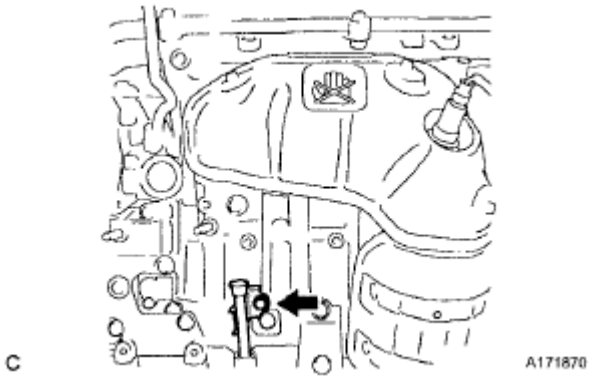

Fig. 616: Locating No. 2 Dipstick Guide And Bolt
Courtesy of TOYOTA MOTOR SALES, U.S.A., INC.

37. **INSTALL NO. 1 OIL COOLER BRACKET (w/ OIL COOLER)**
    a. Using an E8 "TORX" socket, install the 2 stud bolts as shown in the illustration.

Torque: 10 N*m (102 kgf*cm, 7 ft.*lbf)

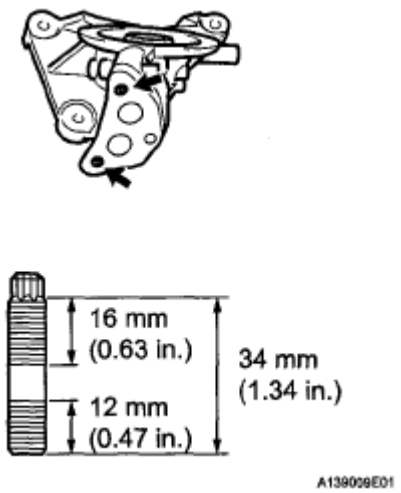

Fig. 617: Installing Stud Bolts
Courtesy of TOYOTA MOTOR SALES, U.S.A., INC.

b. Install a new gasket to the No. 1 oil cooler bracket.
c. Install the oil cooler pipe with the bolt and 2 nuts.

 © 2011 Mitchell Repair Information Company, LLC.

Torque: 21 N*m (214 kgf*cm, 16 ft.*lbf)

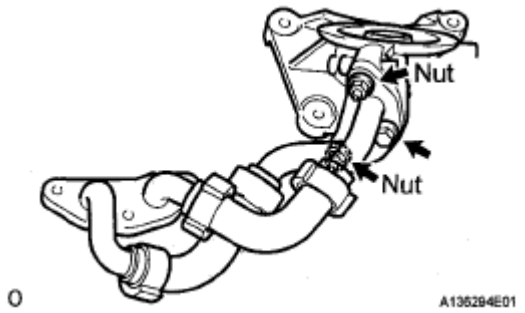

Fig. 618: Removing Bolt, Nuts, No. 1 Oil Cooler Bracket, And Gasket
Courtesy of TOYOTA MOTOR SALES, U.S.A., INC.

d. Install a new gasket to the No. 1 oil pan.
e. Install the No. 1 oil cooler bracket with oil cooler pipe with the 3 bolts and 3 nuts.

Torque: 21 N*m (214 kgf*cm, 16 ft.*lbf)

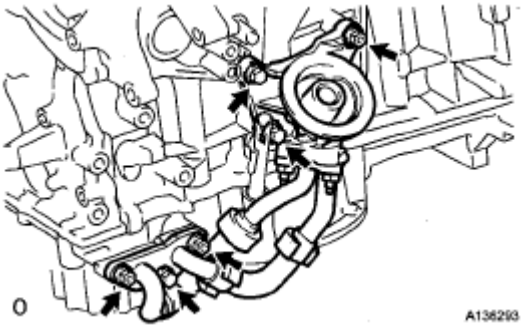

Fig. 619: Removing Bolts, Nuts, And Oil Cooler Pipe With No. 1 Oil Cooler Bracket
Courtesy of TOYOTA MOTOR SALES, U.S.A., INC.

38. **INSTALL OIL COOLER ASSEMBLY (w/ OIL COOLER)**
    a. Install a new O-ring.
    b. Install the oil cooler assembly with the union bolt.

    Torque: 68 N*m (693 kgf*cm, 50 ft.*lbf)

 © 2011 Mitchell Repair Information Company, LLC.

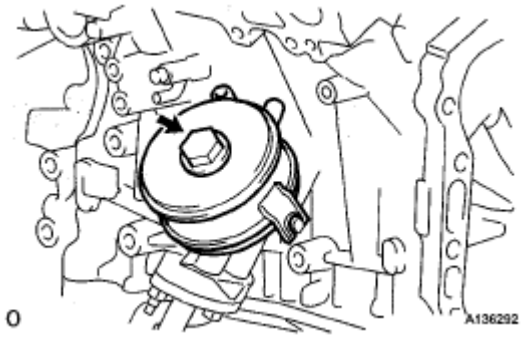

Fig. 620: Removing Union Bolt, Oil Cooler Assembly, And O-Ring
Courtesy of TOYOTA MOTOR SALES, U.S.A., INC.

c. Install the 2 water by-pass hoses with the bolt, 2 clamps, and 4 clips.

Torque: 10 N*m (102 kgf*cm, 7 ft.*lbf)

39. **INSTALL CRANKSHAFT PULLEY**

a. Align the pulley set key with the key groove of the pulley, and slide on the pulley.

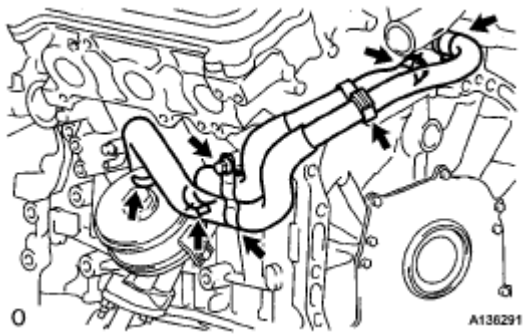

Fig. 621: Removing Bolt, Clamps, And Clips
Courtesy of TOYOTA MOTOR SALES, U.S.A., INC.

b. Using SST, install the pulley bolt.

SST 09213-70011 (09213-70020), 09330-00021

Torque: 250 N*m (2550 kgf*cm, 184 ft.*lbf)

 © 2011 Mitchell Repair Information Company, LLC.

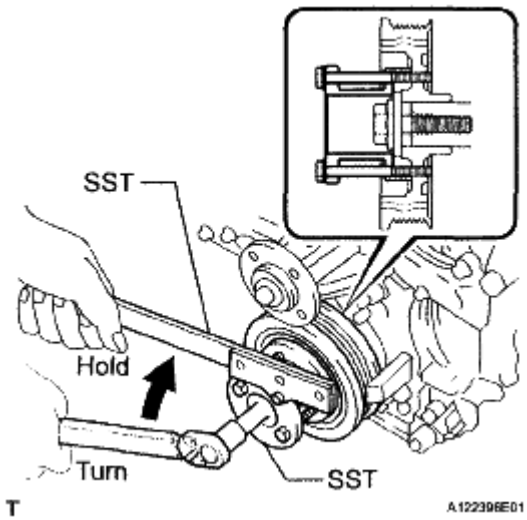

Fig. 622: Installing Crankshaft Pulley Bolt Using SST
Courtesy of TOYOTA MOTOR SALES, U.S.A., INC.

40. **INSTALL OIL FILTER ELEMENT**
    a. Clean the inside of the oil filter cap sub-assembly, the threads and O-ring groove.
    b. Apply a light coat of engine oil to a new O-ring and install it to the oil filter cap sub-assembly.
    c. Set a new oil filter element to the oil filter cap sub-assembly.
    d. Remove dirt and foreign matter from the installation surface of the engine.
    e. Apply a light coat of engine oil to the O-ring again and install the oil filter cap sub-assembly.

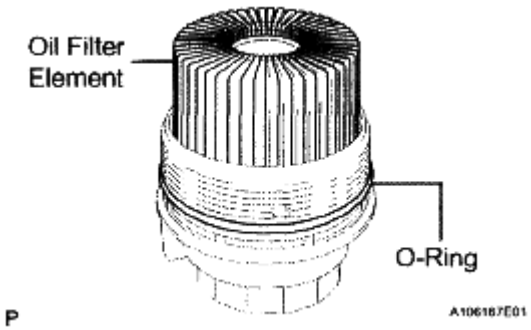

Fig. 623: Applying Light Coat Of Engine Oil To O-Ring
Courtesy of TOYOTA MOTOR SALES, U.S.A., INC.

NOTE:
- **Be careful that the O-ring does not get caught between any parts.**
- **The O-ring must not be twisted on the groove.**

f. Using SST, tighten the oil filter cap sub-assembly.

SST 09228-06501

Torque: 25 N*m (255 kgf*cm, 18 ft.*lbf)

NOTE: Make sure that the oil filter is installed securely as shown in the illustration.

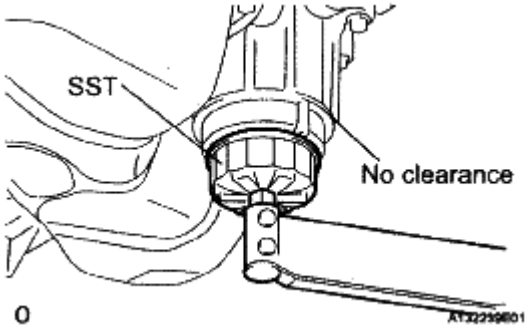

Fig. 624: Tightening Oil Filter Cap
Courtesy of TOYOTA MOTOR SALES, U.S.A., INC.

g. Apply a light coat of engine oil to a new O-ring and install it to the oil filter cap.

NOTE: Remove all dirt and foreign matter from the installation surfaces.

h. Install the oil filter drain plug to the oil filter cap sub-assembly.

Torque: 13 N*m (127 kgf*cm, 9 ft.*lbf)

NOTE: Make sure that the O-ring does not get caught between the parts.

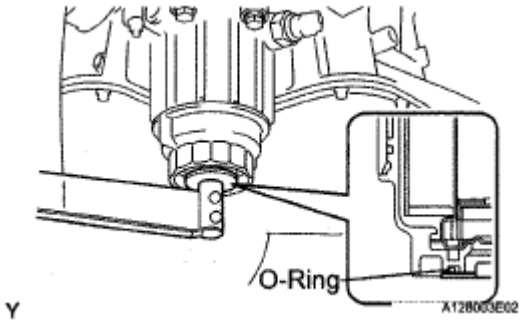

Fig. 625: Locating Oil Filter Drain Plug To Oil Filter Cap
Courtesy of TOYOTA MOTOR SALES, U.S.A., INC.

41. **INSTALL CYLINDER BLOCK WATER DRAIN COCK SUB-ASSEMBLY**
    a. Apply adhesive around the drain cock sub-assembly.

Adhesive:

 © 2011 Mitchell Repair Information Company, LLC.

Toyota Genuine Adhesive 1324, Three Bond 1324 or equivalent

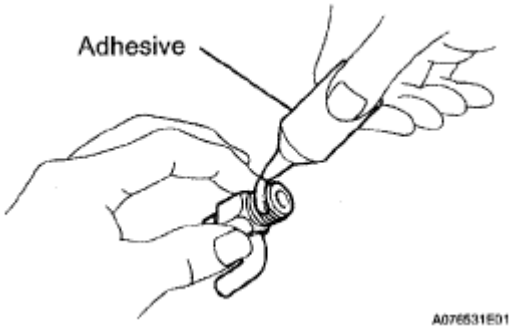

Fig. 626: Applying Adhesive To 2 Or 3 Threads Of Drain Cocks
Courtesy of TOYOTA MOTOR SALES, U.S.A., INC.

b. Install the water drain cocks as shown in the illustration.

Torque: 25 N*m (255 kgf*cm, 18 ft.*lbf)

NOTE: Do not rotate the drain cocks more than 1 revolution (360°) after tightening the drain cocks with the specified torque.

c. Install the water drain cock plugs to the water drain cocks.

Torque: 13 N*m (130 kgf*cm, 9 ft.*lbf)

42. **INSTALL NO. 1 OIL PIPE**

a. Make sure that there is no foreign matter on the mesh of the oil control valve filter LH.

NOTE: Do not touch the mesh when installing the oil control valve filter.

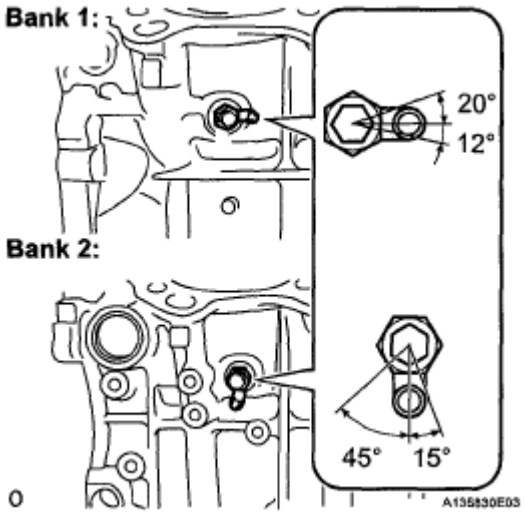

Fig. 627: Installing Water Drain Cocks
Courtesy of TOYOTA MOTOR SALES, U.S.A., INC.

b. Install a new gasket and temporarily install the oil pipe (on the cylinder head side) with the oil pipe union bolt.
c. Install the oil control valve filter LH to the oil pipe union. Install new gaskets and temporarily install the oil pipe (on the head cover side).
d. Tighten the oil pipe union (on the cylinder head side).

Torque: 65 N*m (663 kgf*cm, 48 ft.*lbf)

NOTE: If the link that connects the gaskets is broken, remove the connecting link by using side cutters or a similar tool.

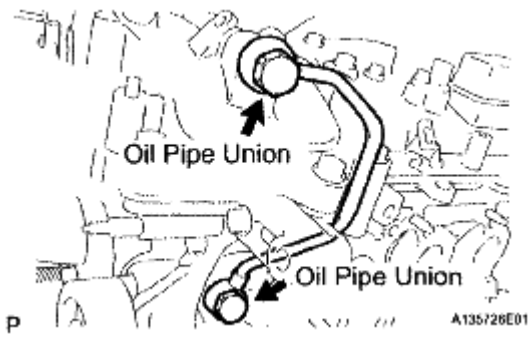

Fig. 628: Removing Oil Control Valve Filter LH And Gaskets
Courtesy of TOYOTA MOTOR SALES, U.S.A., INC.

e. Tighten the oil pipe union (on the head cover side).

Torque: 65 N*m (663 kgf*cm, 48 ft.*lbf)

43. **INSTALL OIL PIPE**
a. Make sure that there is no foreign matter on the mesh of the oil control valve filter RH.

NOTE: Do not touch the mesh when installing the oil control valve filter.

b. Install a new gasket and temporarily install the oil pipe (on the cylinder head side) with the oil pipe union bolt.
c. Install the oil control valve filter RH to the oil pipe union. Install new gaskets and temporarily install the oil pipe (on the head cover side).
d. Tighten the oil pipe union (on the cylinder head side).

Torque: 65 N*m (663 kgf*cm, 48 ft.*lbf)

 © 2011 Mitchell Repair Information Company, LLC.

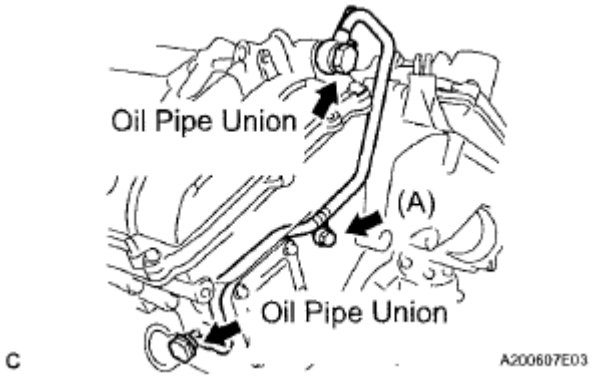

Fig. 629: Locating Oil Pipe Union
Courtesy of TOYOTA MOTOR SALES, U.S.A., INC.

NOTE: If the link that connects the gaskets is broken, remove the connecting link by using side cutters or a similar tool.

e. Tighten the oil pipe union (on the head cover side).

Torque: 65 N*m (663 kgf*cm, 48 ft.*lbf)

f. Install the bolt (A) to the cylinder head.

Torque: 10 N*m (102 kgf*cm, 7 ft.*lbf)

44. **INSTALL CRANKSHAFT POSITION SENSOR**
    a. Install the crankshaft position sensor with the bolt.

Torque: 10 N*m (102 kgf*cm, 7 ft.*lbf)

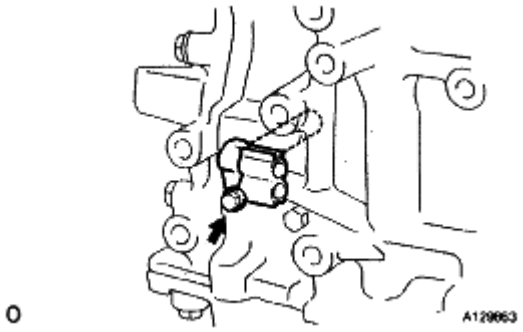

Fig. 630: Locating Crankshaft Position Sensor
Courtesy of TOYOTA MOTOR SALES, U.S.A., INC.

45. **INSTALL CAMSHAFT TIMING OIL CONTROL VALVE ASSEMBLY**
    a. Install the 4 camshaft timing oil control valves with the 4 bolts.

 © 2011 Mitchell Repair Information Company, LLC.

Torque: 10 N*m (102 kgf*cm, 7 ft.*lbf)

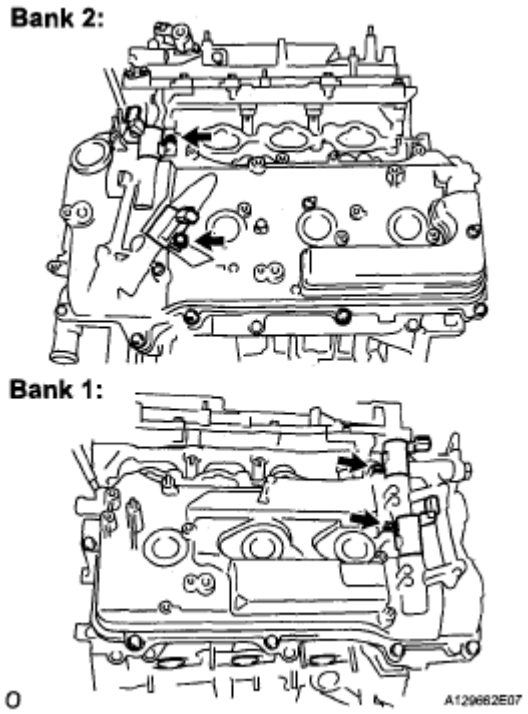

Fig. 631: Installing Camshaft Timing Oil Control Valves With Bolts
Courtesy of TOYOTA MOTOR SALES, U.S.A., INC.

46. **INSTALL CAMSHAFT POSITION SENSOR**
    a. Install the 4 camshaft position sensors with the 4 bolts.

    Torque: 10 N*m (102 kgf*cm, 7 ft.*lbf)

47. **INSTALL VENTILATION VALVE SUB-ASSEMBLY**
    a. Apply adhesive around the ventilation valve sub-assembly.

    Adhesive:

    Toyota Genuine Adhesive 1324, Three Bond 1324 or equivalent

 © 2011 Mitchell Repair Information Company, LLC.

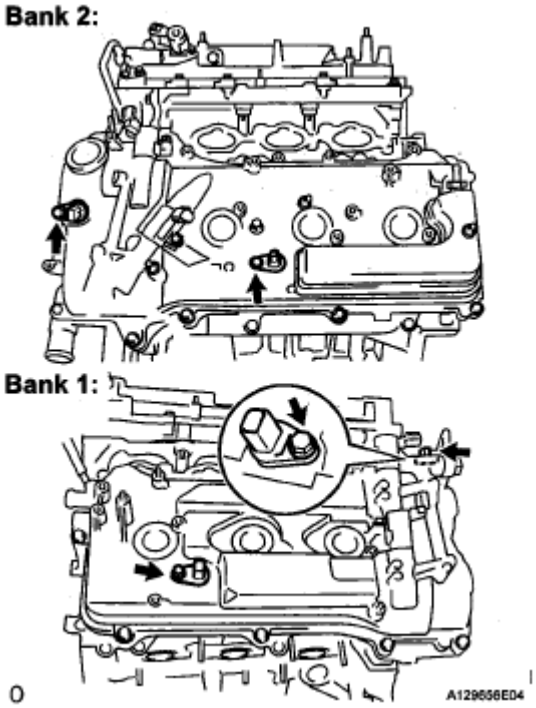

Fig. 632: Removing Bolts And Camshaft Position Sensors
Courtesy of TOYOTA MOTOR SALES, U.S.A., INC.

b. Install the ventilation valve sub-assembly.

Torque: 27 N*m (275 kgf*cm, 20 ft.*lbf)

48. **INSTALL SPARK PLUG**
    a. Install the 6 spark plugs.

    Torque: 18 N*m (184 kgf*cm, 13 ft.*lbf)

49. **INSTALL OIL FILLER CAP SUB-ASSEMBLY**
    a. Install the oil filler gasket.
    b. Install the oil filler cap sub-assembly.

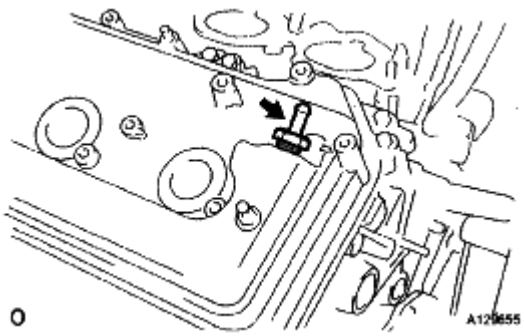

Fig. 633: Identifying Ventilation Valve Sub-Assembly
Courtesy of TOYOTA MOTOR SALES, U.S.A., INC.

INSTALLATION

1. **INSTALL ENGINE COOLANT TEMPERATURE SENSOR**
   a. Using a 19 mm deep socket wrench, install the engine coolant temperature sensor and a new gasket.

      Torque: 20 N*m (200 kgf*cm, 14 ft.*lbf)

2. **INSTALL KNOCK CONTROL SENSOR** (See **INSPECTION**)

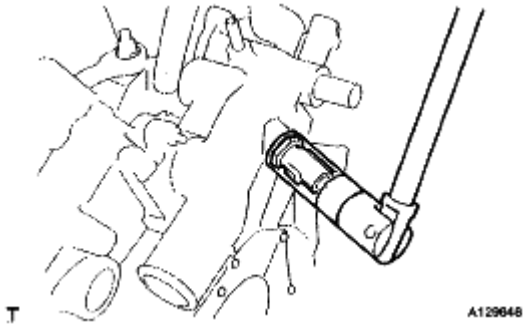

Fig. 634: Identifying EFI Engine Coolant Temperature Sensor
Courtesy of TOYOTA MOTOR SALES, U.S.A., INC.

3. **INSTALL KNOCK CONTROL SENSOR WIRE**
   a. Connect the 2 knock control sensor connectors and 3 clamps.

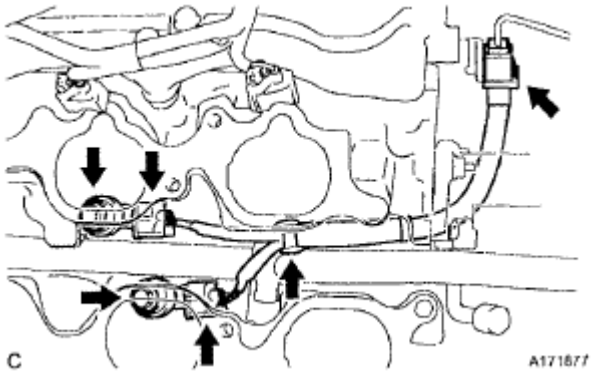

Fig. 635: Locating Knock Control Sensor Connectors And Clamps
Courtesy of TOYOTA MOTOR SALES, U.S.A., INC.

4. **INSTALL ENGINE OIL PRESSURE SWITCH ASSEMBLY**
   a. Clean the threads of the oil pressure switch. Apply adhesive to 2 or 3 threads of the oil pressure switch assembly.

 © 2011 Mitchell Repair Information Company, LLC.

Adhesive:

Toyota Genuine Adhesive 1344, Three Bond 1344 or equivalent

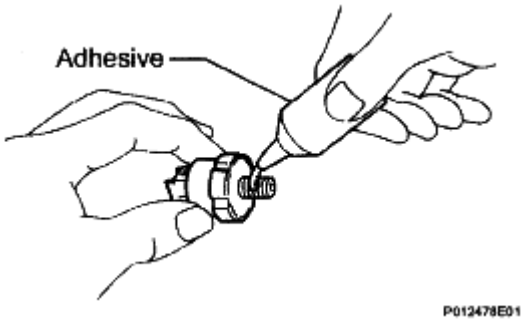

Fig. 636: Cleaning Threads Of Oil Pressure Switch
Courtesy of TOYOTA MOTOR SALES, U.S.A., INC.

b. Using a 24 mm deep socket wrench, install the oil pressure switch.

Torque: 15 N*m (153 kgf*cm, 11 ft.*lbf)

NOTE: Do not start the engine within 1 hour after installation to prevent oil leaks.

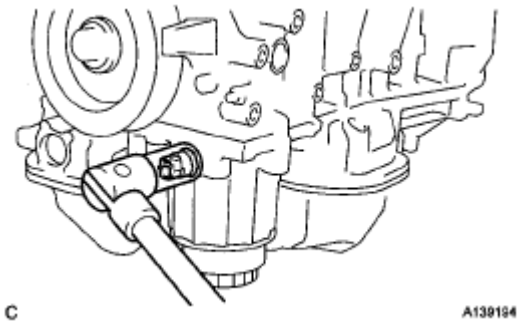

Fig. 637: Removing Engine Oil Pressure Switch Assembly
Courtesy of TOYOTA MOTOR SALES, U.S.A., INC.

5. **INSTALL NO. 1 VACUUM SWITCHING VALVE**
   a. Install the bolt and No. 1 vacuum switching valve.

   Torque: 10 N*m (102 kgf*cm, 7 ft.*lbf)

 © 2011 Mitchell Repair Information Company, LLC.

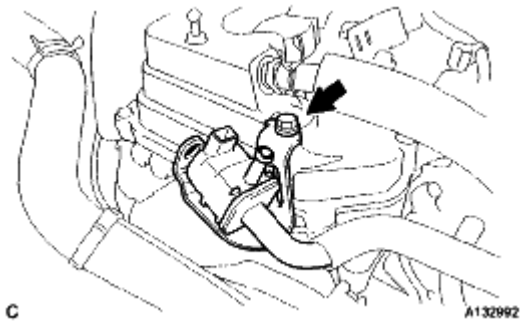

Fig. 638: Removing Bolt And No. 1 Vacuum Switching Valve
Courtesy of TOYOTA MOTOR SALES, U.S.A., INC.

6. **INSTALL RADIO SETTING CONDENSER**
   a. Install the 2 bolts and 2 radio setting condensers.

      Torque: 10 N*m (102 kgf*cm, 7 ft.*lbf)

7. **INSTALL WATER PUMP PULLEY** (See **INSTALLATION**)

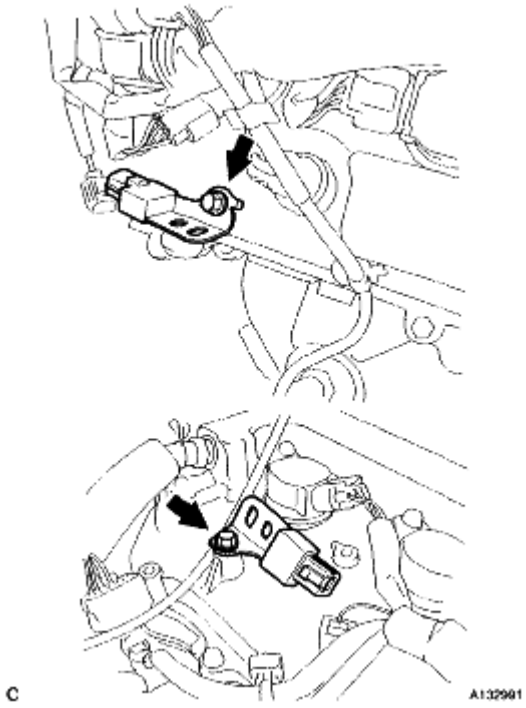

Fig. 639: Removing Bolts And Radio Setting Condensers
Courtesy of TOYOTA MOTOR SALES, U.S.A., INC.

8. **INSTALL NO. 2 IDLER PULLEY SUB-ASSEMBLY**
   a. Install the idler pulley cover plate, No. 2 idler pulley sub-assembly and No. 2 idler pulley cover plate with the bolt.

 © 2011 Mitchell Repair Information Company, LLC.

Torque: 54 N*m (550 kgf*cm, 40 ft.*lbf)

HINT:

Plate diameter:

Idler pulley cover plate: 33.6 mm (1.32 in.)

No. 2 idler pulley cover plate: 37.8 mm (1.49 in.)

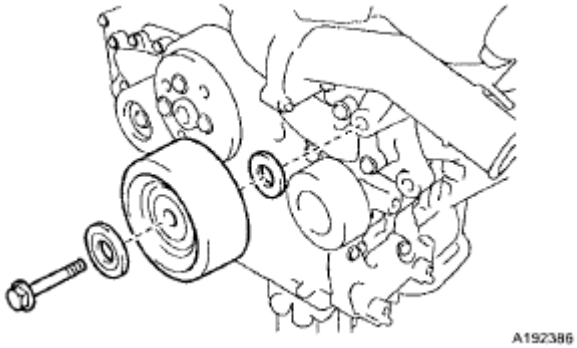

Fig. 640: Identifying No. 2 Idler Pulley Cover Plate And No. 2 Idler Pulley Sub-Assembly
Courtesy of TOYOTA MOTOR SALES, U.S.A., INC.

9. **INSTALL NO. 2 TIMING GEAR COVER**
   a. Install the No. 2 timing gear cover with the 2 bolts.

   Torque: 6.0 N*m (61 kgf*cm, 53 in.*lbf)

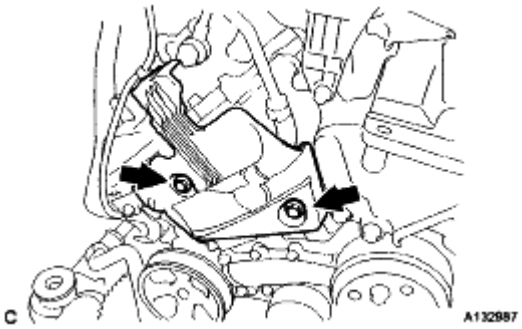

Fig. 641: Removing Bolts And No. 2 Timing Gear Cover
Courtesy of TOYOTA MOTOR SALES, U.S.A., INC.

10. **INSTALL V-RIBBED BELT TENSIONER ASSEMBLY**
   a. Temporarily install the V-ribbed belt tensioner assembly with the 5 bolts.

   HINT:

 © 2011 Mitchell Repair Information Company, LLC.

Each bolt length is as follows:

A: 70 mm (2.76 in.)

B: 33 mm (1.30 in.)

b. Install the V-ribbed belt tensioner assembly by tightening the bolt 1 and bolt 2 in the order shown in the illustration.

Torque: 43 N*m (438 kgf*cm, 32 ft.*lbf)

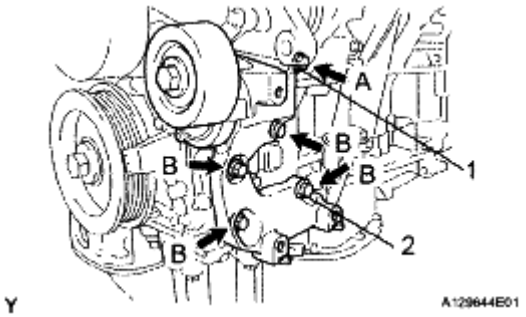

Fig. 642: Identifying V-Ribbed Belt Tensioner
Courtesy of TOYOTA MOTOR SALES, U.S.A., INC.

c. Tighten the other bolts.

Torque: 43 N*m (438 kgf*cm, 32 ft.*lbf)

11. **INSTALL GENERATOR ASSEMBLY** (See **INSTALLATION**)
12. **INSTALL TRANSVERSE ENGINE MOUNTING BRACKET (for 4WD)**
    a. Install the transverse engine mounting bracket with the 3 bolts.

Torque: 64 N*m (650 kgf*cm, 47 ft.*lbf)

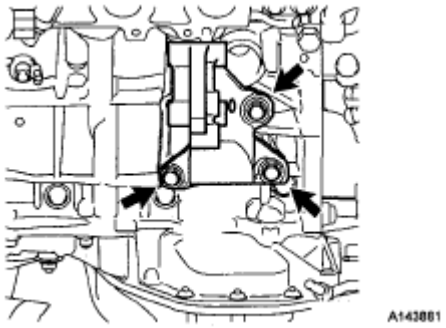

Fig. 643: Removing Bolts And Engine Mounting Bracket RR
Courtesy of TOYOTA MOTOR SALES, U.S.A., INC.

 © 2011 Mitchell Repair Information Company, LLC.

13. **INSTALL TRANSVERSE ENGINE MOUNTING BRACKET (for 2WD)**
    a. Install the transverse engine mounting bracket with the 3 bolts.

    Torque: 64 N*m (650 kgf*cm, 47 ft.*lbf)

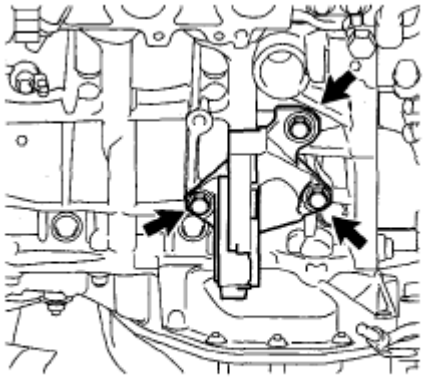

Fig. 644: Removing Drive Shaft Bearing Bracket (For 2WD)
Courtesy of TOYOTA MOTOR SALES, U.S.A., INC.

14. **INSTALL TRANSVERSE ENGINE MOUNTING BRACKET**
    a. Install the transverse engine mounting bracket with the 3 bolts.

    Torque: 54 N*m (551 kgf*cm, 40 ft.*lbf)

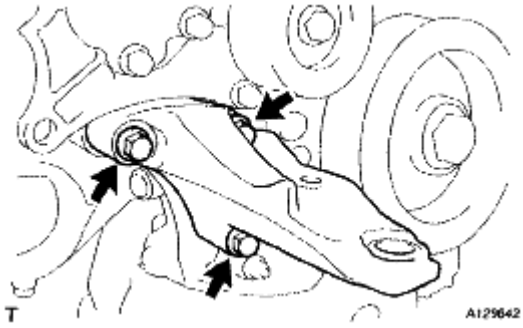

Fig. 645: Locating Engine Mounting Bracket RH With Bolts
Courtesy of TOYOTA MOTOR SALES, U.S.A., INC.

15. **INSTALL EXHAUST MANIFOLD SUB-ASSEMBLY LH**
    a. Install a new gasket as shown in the illustration.

 © 2011 Mitchell Repair Information Company, LLC.

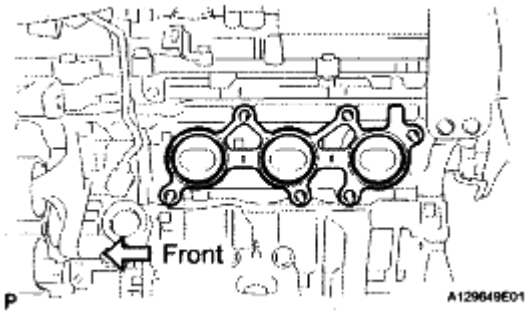

Fig. 646: Locating Exhaust Manifold Sub-Assembly RH With Nuts
Courtesy of TOYOTA MOTOR SALES, U.S.A., INC.

b. Install the exhaust manifold sub-assembly LH with the 6 nuts in the order shown in the illustration.

Torque: 21 N*m (214 kgf*cm, 15 ft.*lbf)

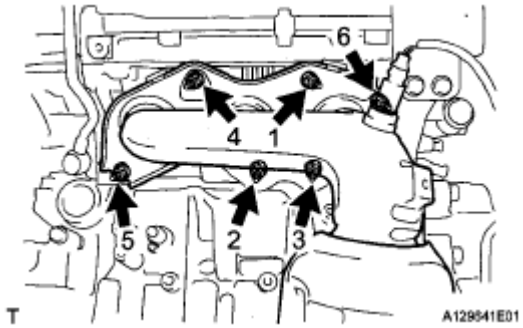

Fig. 647: Installing Exhaust Manifold Sub-Assembly LH With Nuts
Courtesy of TOYOTA MOTOR SALES, U.S.A., INC.

16. **INSTALL NO. 2 EXHAUST MANIFOLD HEAT INSULATOR**
    a. Install the No. 2 exhaust manifold heat insulator with the 3 bolts.

Torque: 8.5 N*m (87 kgf*cm, 75 in.*lbf)

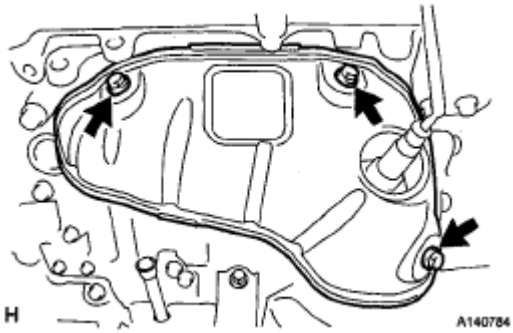

Fig. 648: Removing No. 2 Exhaust Manifold Heat Insulator
Courtesy of TOYOTA MOTOR SALES, U.S.A., INC.

 © 2011 Mitchell Repair Information Company, LLC.

17. **INSTALL NO. 2 MANIFOLD STAY**
    a. Install the No. 2 manifold stay with the bolt and nut in the order shown in the illustration.

    Torque: 34 N*m (347 kgf*cm, 25 ft.*lbf)

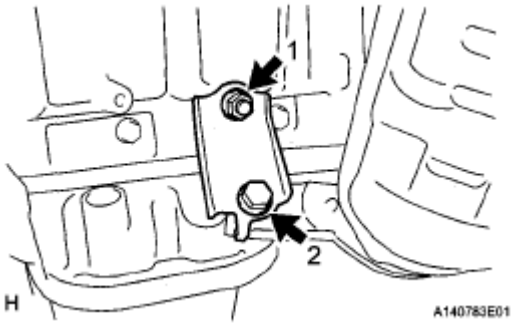

Fig. 649: Installing No. 2 Manifold Stay With Bolt And Nut
Courtesy of TOYOTA MOTOR SALES, U.S.A., INC.

18. **INSTALL NO. 2 ENGINE OIL LEVEL DIPSTICK GUIDE**
    a. Install a new O-ring to the No. 2 engine oil level dipstick guide.
    b. Apply a light coat of engine oil to the O-rings.
    c. Push in the No. 2 engine oil level dipstick guide end into the No. 1 engine oil level dipstick guide.

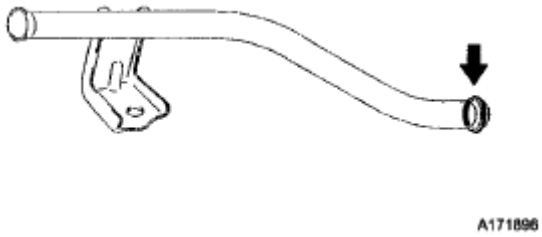

Fig. 650: Locating No. 2 Engine Oil Level Dipstick Guide And O-Rings
Courtesy of TOYOTA MOTOR SALES, U.S.A., INC.

    d. Install the No. 2 engine oil level dipstick guide with the bolt.

    Torque: 21 N*m (214 kgf*cm, 15 ft.*lbf)

    e. Install the engine oil level dipstick.

 © 2011 Mitchell Repair Information Company, LLC.

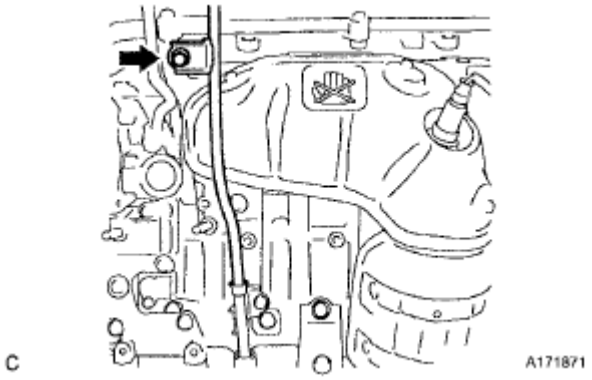

Fig. 651: Locating No. 2 Engine Oil Level Dipstick Guide And Bolt
Courtesy of TOYOTA MOTOR SALES, U.S.A., INC.

19. **INSTALL EXHAUST MANIFOLD SUB-ASSEMBLY RH**
    a. Install a new gasket as shown in the illustration.

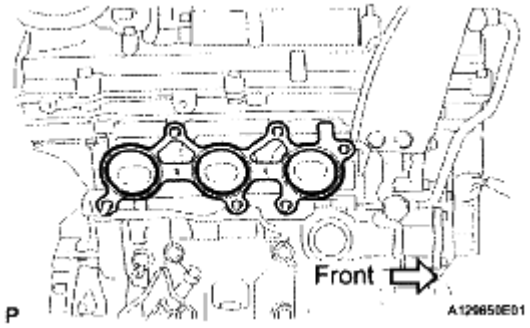

Fig. 652: Locating Exhaust Manifold Sub-Assembly RH
Courtesy of TOYOTA MOTOR SALES, U.S.A., INC.

    b. Install the exhaust manifold sub-assembly RH with the 6 nuts in the order shown in the illustration.

    Torque: 21 N*m (214 kgf*cm, 15 ft.*lbf)

20. **INSTALL INTAKE MANIFOLD**

NOTE: DO NOT apply oil to the bolts listed below:

TIGHTENING PART SPECIFICATION

Tightening Parts
Intake Manifold and Cylinder Head Sub-assembly RH
Intake Manifold and Cylinder Head Sub-assembly LH

 © 2011 Mitchell Repair Information Company, LLC.

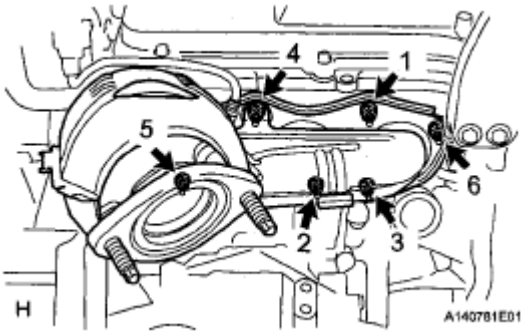

Fig. 653: Installing Exhaust Manifold Sub-Assembly RH With Nuts
Courtesy of TOYOTA MOTOR SALES, U.S.A., INC.

a. Set a new gasket on each cylinder head.

NOTE:
- **Align the port holes of the gasket and cylinder head.**
- **Make sure that the gasket is installed in the correct direction.**

b. Set the intake manifold on the cylinder heads.
c. Install and tighten the 6 bolts and 4 nuts uniformly in several steps.

Torque: 21 N*m (214 kgf*cm, 15 ft.*lbf)

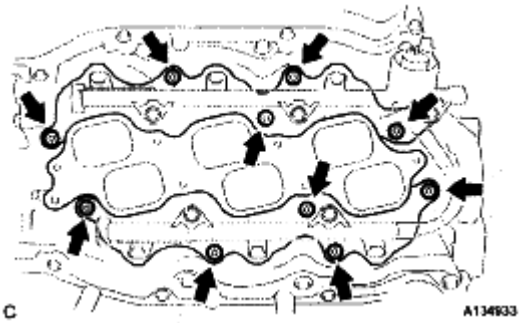

Fig. 654: Disconnecting A/F Sensor Connector Clamp
Courtesy of TOYOTA MOTOR SALES, U.S.A., INC.

21. **INSTALL NO. 2 ENGINE MOUNTING STAY RH**
    a. Install the No. 2 mounting stay RH with the bolt.

    Torque: 21 N*m (214 kgf*cm, 15 ft.*lbf)

22. **INSTALL IGNITION COIL ASSEMBLY** (See **INSTALLATION**)
23. **INSTALL ENGINE HANGERS**
    a. Install the 2 engine hangers with the 4 bolts as shown in the illustration.

 © 2011 Mitchell Repair Information Company, LLC.

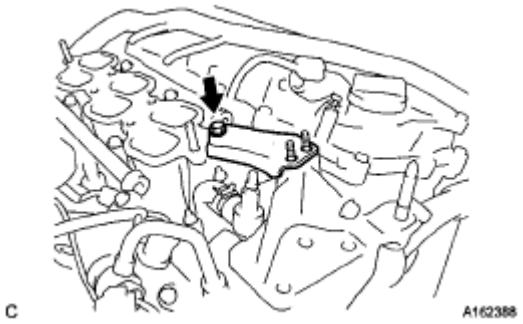

Fig. 655: Removing Bolt And No. 2 Engine Mounting Stay RH
Courtesy of TOYOTA MOTOR SALES, U.S.A., INC.

Part No.:

No. 1 Engine hanger 12281-31120

No. 2 Engine hanger 12282-31100

Bolts 91671-10825

Torque: 33 N*m (337 kgf*cm, 24 ft.*lbf)

b. Attach the engine sling device and hang the engine with the chain block.

24. **REMOVE ENGINE STAND**

 © 2011 Mitchell Repair Information Company, LLC.