## 2008 ENGINE

## Engine Mechanical (VK45DE) - M45

# PRECAUTIONS

### PRECAUTIONS FOR PROCEDURES WITHOUT COWL TOP COVER

When performing the procedure after removing cowl top cover, cover the lower end of windshield with urethane, etc.

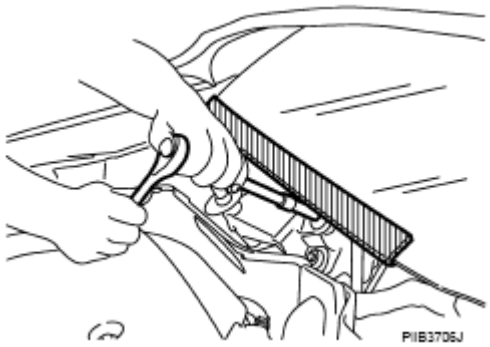


**Fig. 1: Identifying Windshield Precaution**
**Courtesy of NISSAN MOTOR CO., U.S.A.**

### PRECAUTIONS NECESSARY FOR STEERING WHEEL ROTATION AFTER BATTERY DISCONNECT

**NOTE:**

- **This Procedure is applied only to models with Intelligent Key system and NVIS/IVIS (NISSAN/INFINITI VEHICLE IMMOBILIZER SYSTEM - NATS).**
- **Remove and install all control units after disconnecting both battery cables with the ignition knob in the "LOCK" position.**
- **Always use CONSULT-III to perform self-diagnosis as a part of each function inspection after finishing work. If DTC is detected, perform trouble diagnosis according to self-diagnostic results.**

This vehicle is equipped with a push-button ignition switch and a steering lock unit.

If the battery is disconnected or discharged, the steering wheel will lock and cannot be turned.

If turning the steering wheel is required with the battery disconnected or discharged, follow the procedure below before starting the repair operation.

#### OPERATION PROCEDURE

1. Connect both battery cables.

 © 2011 Mitchell Repair Information Company, LLC.

**NOTE: Supply power using jumper cables if battery is discharged.**

2. Use the Intelligent Key or mechanical key to turn the ignition switch to the "ACC" position. At this time, the steering lock will be released.
3. Disconnect both battery cables. The steering lock will remain released and the steering wheel can be rotated.
4. Perform the necessary repair operation.
5. When the repair work is completed, return the ignition switch to the "LOCK" position before connecting the battery cables. (At this time, the steering lock mechanism will engage.)
6. Perform a self-diagnosis check of all control units using CONSULT-III.

**PRECAUTION FOR SUPPLEMENTAL RESTRAINT SYSTEM (SRS) "AIR BAG" AND "SEAT BELT PRE-TENSIONER"**

The Supplemental Restraint System such as "AIR BAG" and "SEAT BELT PRE-TENSIONER", used along with a front seat belt, helps to reduce the risk or severity of injury to the driver and front passenger for certain types of collision. This system includes seat belt switch inputs and dual stage front air bag modules. The SRS system uses the seat belt switches to determine the front air bag deployment, and may only deploy one front air bag, depending on the severity of a collision and whether the front occupants are belted or unbelted. Information necessary to service the system safely is included in the "SUPPLEMENTAL RESTRAINT SYSTEM" and "SEAT BELTS" of this Service Information.

**WARNING:**

- **To avoid rendering the SRS inoperative, which could increase the risk of personal injury or death in the event of a collision which would result in air bag inflation, all maintenance must be performed by an authorized NISSAN/INFINITI dealer.**
- **Improper maintenance, including incorrect removal and installation of the SRS, can lead to personal injury caused by unintentional activation of the system. For removal of Spiral Cable and Air Bag Module, see the "SUPPLEMENTAL RESTRAINT SYSTEM".**
- **Do not use electrical test equipment on any circuit related to the SRS unless instructed to in this Service Manual. SRS wiring harnesses can be identified by yellow and/or orange harnesses or harness connectors.**

**PRECAUTION FOR DRAIN ENGINE COOLANT AND ENGINE OIL**

Drain engine coolant and engine oil when engine is cooled.

**PRECAUTION FOR DISCONNECTING FUEL PIPING**

- Before starting work, check no fire or spark producing items are in the work area.
- Release fuel pressure before disconnecting and disassembly.
- After disconnecting pipes, plug openings to stop fuel leakage.

 © 2011 Mitchell Repair Information Company, LLC.

## PRECAUTIONS FOR REMOVAL AND DISASSEMBLY

- When instructed to use SST, use specified tools. Always be careful to work safely, avoid forceful or uninstructed operations.
- Exercise maximum care to avoid damage to mating or sliding surfaces.
- Cover openings of engine system with tape or the equivalent, if necessary, to seal out foreign materials.
- Mark and arrange disassembly parts in an organized way for easy troubleshooting and assembly.
- When loosening nuts and bolts, as a basic rule, start with the one furthest outside, then the one diagonally opposite, and so on. If the order of loosening is specified, do exactly as specified. Power tools may be used where noted in the step.

## PRECAUTIONS FOR INSPECTION, REPAIR AND REPLACEMENT

Before repairing or replacing, thoroughly inspect parts. Inspect new replacement parts in the same way, and replace if necessary.

## PRECAUTIONS FOR ASSEMBLY AND INSTALLATION

- Use torque wrench to tighten bolts or nuts to specification.
- When tightening nuts and bolts, as a basic rule, equally tighten in several different steps starting with the ones in center, then ones on inside and outside diagonally in this order. If the order of tightening is specified, do exactly as specified.
- Replace with new gasket, packing, oil seal or O-ring.
- Thoroughly wash, clean, and air-blow each part. Carefully check engine oil or engine coolant passages for any restriction and blockage.
- Guide pins are used for several parts alignment. When replacing and reassembling parts with guide pins, make sure that guide pins are installed in the original position.
- Avoid damaging sliding or mating surfaces. Completely remove foreign materials such as cloth lint or dust. Before assembly, oil sliding surfaces well.
- Release air within route when refilling after draining engine coolant.
- After repairing, start engine and increase engine speed to check engine coolant, fuel, engine oil, and exhaust gases for leakage.

## PARTS REQUIRING ANGLE TIGHTENING

- Use angle wrench [SST: KV10112100 (BT8653-A)] for the final tightening of the following engine parts:
  - Cylinder head bolts
  - Main bearing cap bolts
  - Connecting rod cap nuts
  - Crankshaft pulley bolt (No angle wrench is required as the bolt flange is provided with notches for angle tightening)
- Do not use a torque value for final tightening.
- The torque value for these parts are for a preliminary step.

 © 2011 Mitchell Repair Information Company, LLC.

- Ensure thread and seat surfaces are clean and coated with engine oil.

## PRECAUTIONS FOR LIQUID GASKET

### REMOVAL OF LIQUID GASKET SEALING

- After removing mounting nuts and bolts, separate the mating surface using seal cutter (SST) and remove old liquid gasket sealing.

**CAUTION: Be careful not to damage the mating surfaces.**

- Tap seal cutter to insert it (1), and then slide it (2) by tapping on the side as shown in the figure.
- In areas where seal cutter (SST) is difficult to use, use plastic hammer to lightly tap the parts, to remove it.

**CAUTION: If for some unavoidable reason tool such as screwdriver is used, be careful not to damage the mating surfaces.**

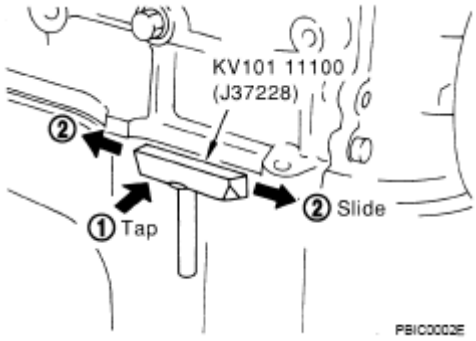


**Fig. 2: Inserting Tap Seal Cutter And Slide By Tapping On Side**
**Courtesy of NISSAN MOTOR CO., U.S.A.**

### LIQUID GASKET APPLICATION PROCEDURE

1. Using scraper, remove old liquid gasket adhering to the liquid gasket application surface and the mating surface.
   - Remove liquid gasket completely from the groove of the liquid gasket application surface, mounting bolts, and bolt holes.
2. Wipe the liquid gasket application surface and the mating surface with white gasoline (lighting and heating use) to remove adhering moisture, grease and foreign materials.

 © 2011 Mitchell Repair Information Company, LLC.

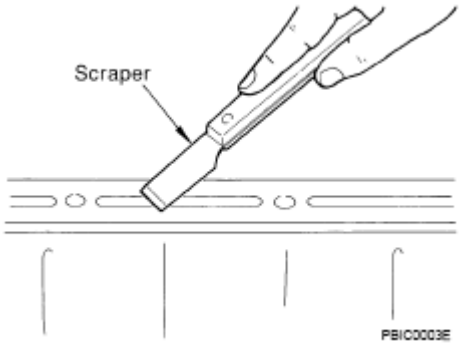


**Fig. 3: Removing Liquid Gasket**
**Courtesy of NISSAN MOTOR CO., U.S.A.**

3. Attach liquid gasket tube to tube presser [SST: WS39930000 ( - )].

   **Use Genuine RTV Silicone Sealant or equivalent.** Refer to "**RECOMMENDED CHEMICAL PRODUCTS AND SEALANTS** ".

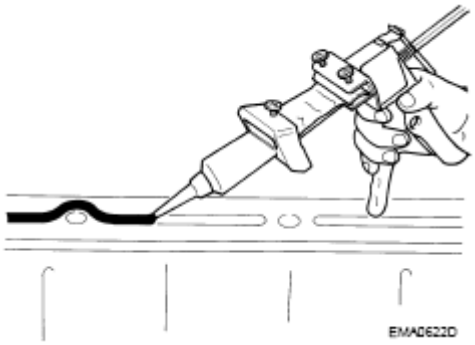


**Fig. 4: Applying Liquid Gasket**
**Courtesy of NISSAN MOTOR CO., U.S.A.**

4. Apply liquid gasket without breaks to the specified location with the specified dimensions.
   - If there is a groove for the liquid gasket application, apply liquid gasket to the groove.
   - As for the bolt holes, normally apply liquid gasket inside the holes. Occasionally, it should be applied outside the holes. Make sure to read the text of this manual.
   - Within five minutes of liquid gasket application, install the mating component.
   - If liquid gasket protrudes, wipe it off immediately.
   - Do not retighten mounting bolts and nuts after the installation.
   - Wait 30 minutes or more after installation before refilling engine with engine oil and engine coolant.

 © 2011 Mitchell Repair Information Company, LLC.

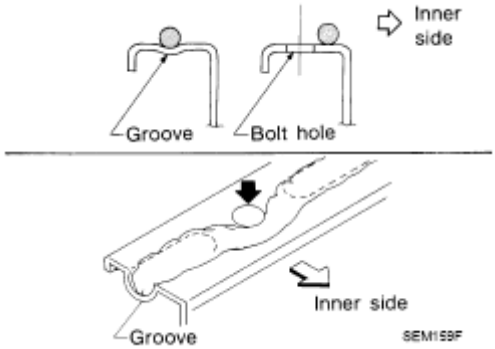


**Fig. 5: Applying Bead Of Sealant To Bolt Holes**
**Courtesy of NISSAN MOTOR CO., U.S.A.**

**CAUTION: If there are specific instructions in this manual, observe them.**

# PREPARATION

## SPECIAL SERVICE TOOLS

## SPECIAL SERVICE TOOLS CHART

| Tool number<br>(SPX-North America No.)<br>Tool name | Description |
|---|---|
| KV10111100<br>(J-37228)<br>Seal cutter 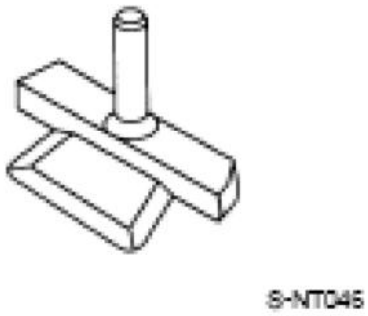  | Removing steel oil pan and front cover |
| KV10114400<br>(J-38365)<br>Heated oxygen sensor wrench 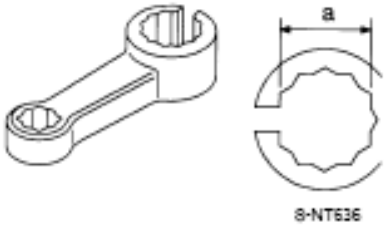  | Loosening or tightening heated oxygen sensors<br>a. **a: 22 mm (0.87 in)** |
| EG15050500<br>(J-45402)<br>Compression gauge adapter | Inspecting of compression pressure |

 © 2011 Mitchell Repair Information Company, LLC.

| | | |
|---|---|---|
| | 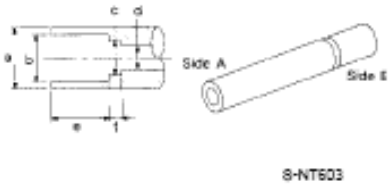 | |
| KV10116200<br>(J-26336-A)<br>Valve spring compressor<br><br>1. KV10115900 (J-26336-20) Attachment<br>2. KV10109220 ( - ) Adapter | 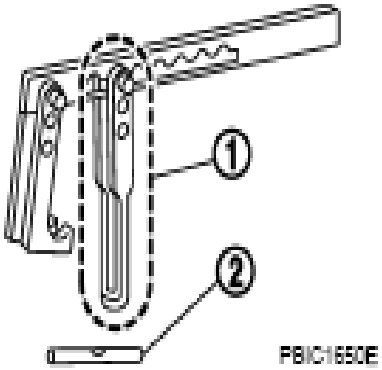 | Disassembling valve mechanism<br>Part (1) is a component of KV10116200 (J26336-A), but part (2) is not so. |
| KV101151S0<br>(J-38972)<br>Lifter stopper set<br><br>1. KV10115110 (J-38972-1) Camshaft pliers<br>2. KV10115120 (J-38972-2) Lifter stopper | 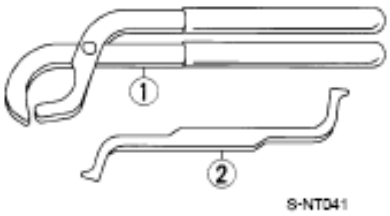 | Changing valve lifter shims |
| KV10112100<br>(BT8653-A)<br>Angle wrench | 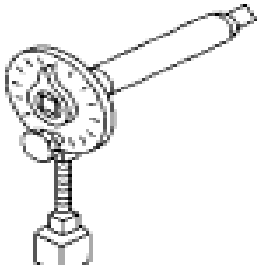 | Tightening bolts for bearing cap, cylinder head, etc. |
| KV10114700<br>(J-38139)<br>Main bearing cap remover | 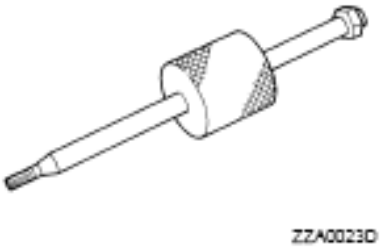 | Removing crankshaft main bearing cap |
| KV10107902<br>(J-38959)<br>Valve oil seal puller | | Removing valve oil seal |

 © 2011 Mitchell Repair Information Company, LLC.

| | | |
|---|---|---|
| | 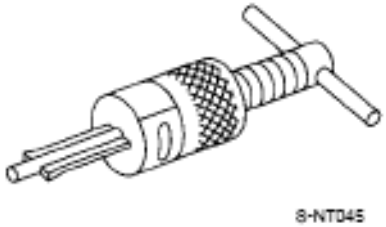 | |
| KV10115600<br>(J-38958)<br>Valve oil seal drift | 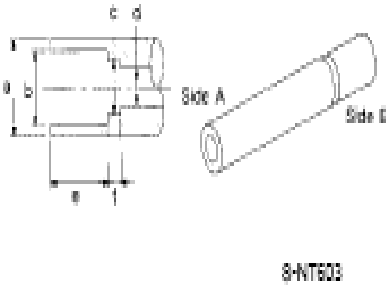 | Installing valve oil seal<br>**Use side A** .<br>a. **a: 20 (0.79) dia** .<br>b. **b: 13 (0.51) dia** .<br>c. **c: 10.3 (0.406) dia** .<br>d. **d: 8 (0.31) dia** .<br>e. **e: 10.7 (0.421)**<br>f. **f: 5 (0.20)**<br>Unit: mm (in) |
| EM03470000<br>(J-8037)<br>Piston ring compressor | 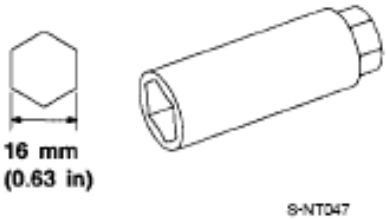 | Installing piston assembly into cylinder bore |
| ST16610001<br>(J-23907)<br>Pilot bushing puller | 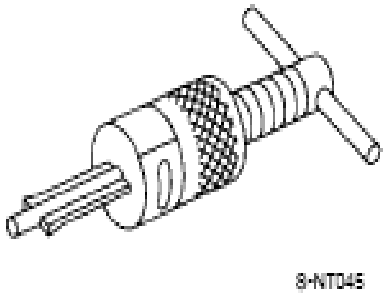 | Removing crankshaft pilot converter |
| WS39930000<br>( - )<br>Tube presser | 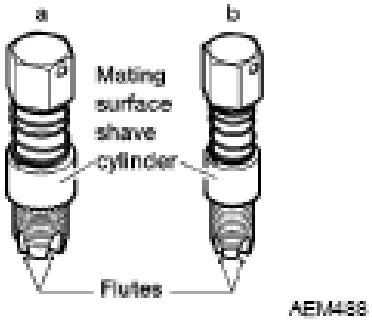 | Pressing the tube of liquid gasket |

 © 2011 Mitchell Repair Information Company, LLC.

| | | |
|---|---|---|
| -<br>(J-45476)<br>Ring gear stopper | 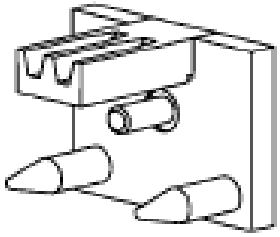 | Removing and installing crankshaft pulley |
| -<br>(J-45488)<br>Quick connector release | 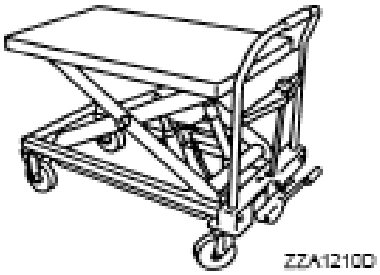 | Removing fuel tube quick connectors in engine room (Available in SEC.164 of PARTS CATALOG: Part No. 16441 6N210) |

**COMMERCIAL SERVICE TOOLS**

**COMMERCIAL SERVICE TOOLS CHART**

| **(Kent-Moore No.)<br>Tool name** | | **Description** |
|---|---|---|
| ( - )<br>Tube presser | 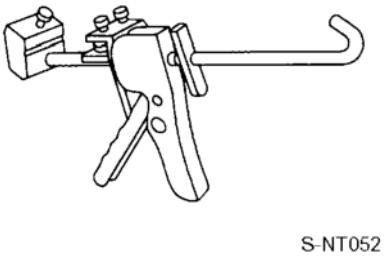 | Pressing the tube of liquid gasket |
| ( - )<br>Power tool | 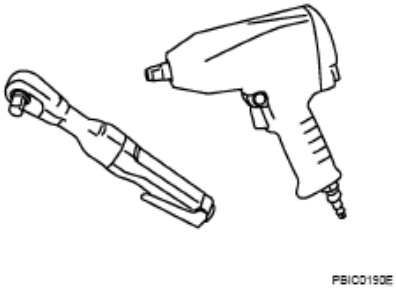 | Loosening nuts and bolts |
| ( - )<br>Spark plug wrench | | Removing and installing spark plug |

 © 2011 Mitchell Repair Information Company, LLC.

| | | |
|---|---|---|
| | 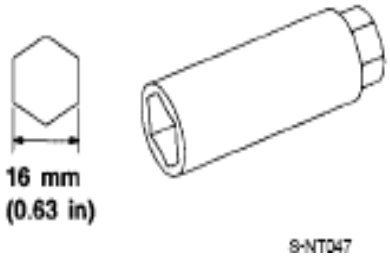 | |
| ( - )<br>Manual lift table caddy | | Removing and installing engine |
| ( - )<br><br>1. Compression gauge<br>2. Adapter | 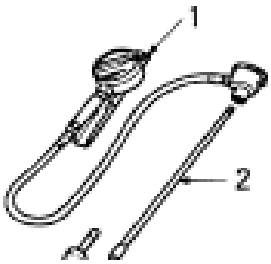 | Checking compression pressure |
| (J-24239-01)<br>Cylinder head bolt wrench | 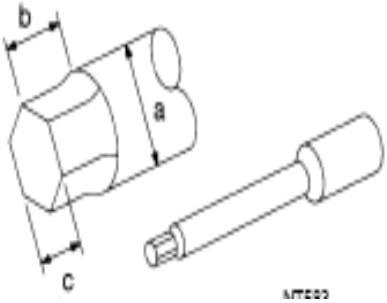 | Loosening and tightening cylinder head bolt, and use with angle wrench [SST: KV10112100 (BT-8653-A)]<br><br>a. **a: 13 (0.51) dia** .<br>b. **b: 12 (0.47)**<br>c. **c: 10 (0.39)**<br><br>Unit: mm (in) |
| ( - )<br>Valve seat cutter set | 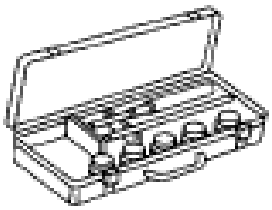 | Finishing valve seat dimensions |
| | | |

 © 2011 Mitchell Repair Information Company, LLC.

| | | |
|---|---|---|
| ( - )<br>Piston ring expander | 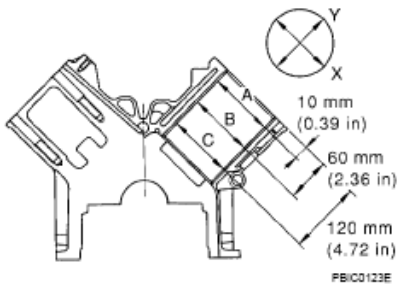 | Removing and installing piston ring |
| ( - )<br>Valve guide drift | 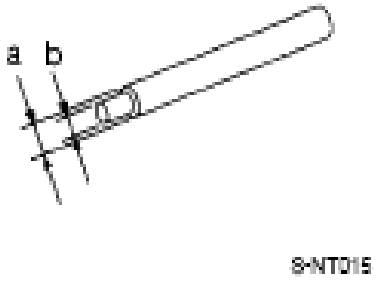 | Removing and installing valve guide<br>**Intake and Exhaust:**<br>a. **a: 9.5 mm (0.374 in) dia** .<br>b. **b: 5.5 mm (0.217 in) dia** . |
| ( - )<br>Valve guide reamer | 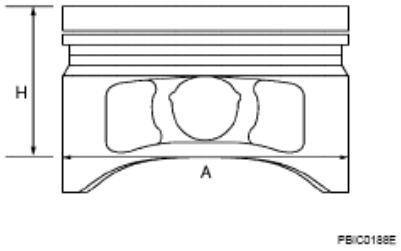 | 1. Reaming valve guide inner hole<br>2. Reaming hole for oversize valve guide<br>**Intake and Exhaust:**<br>**d1 : 6.0 mm (0.236 in) dia** .<br>**d2 : 10.2 mm (0.402 in) dia** . |
| (J-43897-18)<br>(J-43897-12)<br>Oxygen sensor thread cleaner | 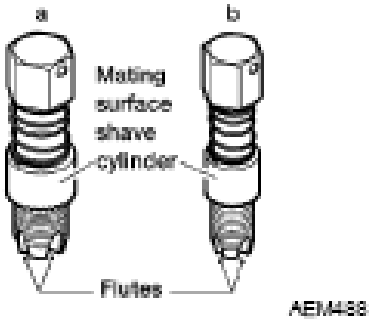 | Reconditioning the exhaust system threads before installing a new heated oxygen sensor (Use with anti-seize lubricant shown below.)<br>a. **a: J-43897-18 (18 mm dia.) for zirconia heated oxygen sensor and air fuel ratio sensor**<br>b. **b: J-43897-12 (12 mm dia.) for Titania heated oxygen sensor and air fuel ratio sensor** |
| ( - )<br>Anti-seize lubricant (Permatex 133AR or equivalent meeting MIL specification MIL-A-907) | | Lubricating oxygen sensor thread cleaning tool when reconditioning exhaust system threads |

 © 2011 Mitchell Repair Information Company, LLC.

| | | |
|---|---|---|
| | | |

# NOISE, VIBRATION AND HARSHNESS (NVH) TROUBLESHOOTING

## NVH TROUBLESHOOTING - ENGINE NOISE

 © 2011 Mitchell Repair Information Company, LLC.

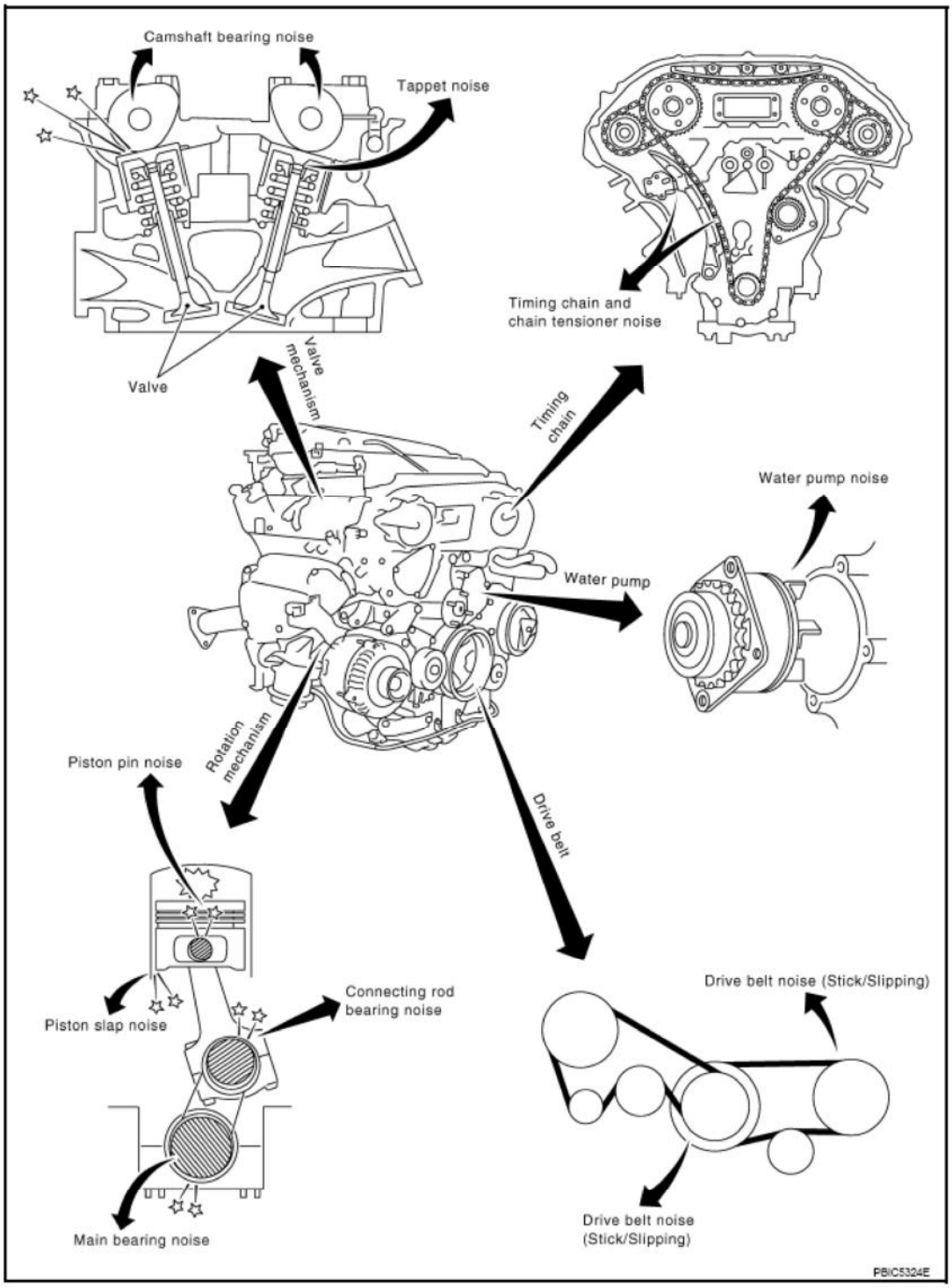


**Fig. 6: NVH Troubleshooting - Engine Noise**
**Courtesy of NISSAN MOTOR CO., U.S.A.**

**USE THE CHART BELOW TO HELP YOU FIND THE CAUSE OF THE SYMPTOM**

1. Locate the area where noise occurs.

 © 2011 Mitchell Repair Information Company, LLC.

2. Confirm the type of noise.
3. Specify the operating condition of engine.
4. Check specified noise source.

If necessary, repair or replace these parts.

**NVH TROUBLESHOOTING CHART**

| Location of noise | Type of noise | Operating condition of engine | | | | | | Source of noise | Check item | Reference |
|---|---|---|---|---|---|---|---|---|---|---|
| | | Before warm-up | After warm-up | When starting | When idling | When racing | While driving | | | |
| Top of engine Rocker cover Cylinder head | Ticking or clicking | C | A | - | A | B | - | Tappet noise | Valve clearance | VALVE CLEARANCE |
| | Rattle | C | A | - | A | B | C | Camshaft bearing noise | Camshaft journal oil clearance Camshaft runout | CAMSHAFT CAM HEIGHT INSPECTION AFTER REMOVAL |
| Crankshaft pulley Cylinder block (Side of engine) Oil pan | Slap or knock | - | A | - | B | B | - | Piston pin noise | Piston to piston pin oil clearance Connecting rod bushing oil clearance | PISTON TO PISTON PIN OIL CLEARANCE CONNECTING ROD BUSHING OIL CLEARANCE |
| | Slap or rap | A | - | - | B | B | A | Piston slap noise | Piston to cylinder bore clearance Piston ring side clearance Piston ring end gap Connecting rod bend and torsion | PISTON TO CYLINDER BORE CLEARANCE PISTON RING SIDE CLEARANCE PISTON RING END GAP CONNECTING ROD BEND AND TORSION |
| | Knock | A | B | C | B | B | B | Connecting rod bearing noise | Connecting rod bushing oil clearance Connecting rod bearing oil | CONNECTING ROD BUSHING OIL CLEARANCE CONNECTING ROD BEARING OIL |

 © 2011 Mitchell Repair Information Company, LLC.

| | | | | | | | | | | |
|---|---|---|---|---|---|---|---|---|---|---|
| | | | | | | | | | clearance | **CLEARANCE** |
| | Knock | A | B | - | A | B | C | Main bearing noise | Main bearing oil clearance Crankshaft runout | **MAIN BEARING OIL CLEARANCE CRANKSHAFT RUNOUT** |
| Front of engine front cover | Tapping or ticking | A | A | - | B | B | B | Timing chain and chain tensioner noise | Timing chain cracks and wear Timing chain tensioner operation | **TIMING CHAIN TIMING CHAIN** |
| Front of engine | Squeaking or fizzing | A | B | - | B | - | C | Drive belts (Sticking or slipping) | Drive belts deflection | **DRIVE BELTS** |
| | Creaking | A | B | A | B | A | B | Drive belts (Slipping) | Idler pulley bearing operation | |
| | Squall Creak | A | B | - | B | A | B | Water pump noise | Water pump operation | "**WATER PUMP** " |
| A: Closely related B: Related C: Sometimes related -: Not related | | | | | | | | | | |

# ENGINE ROOM COVER

## COMPONENTS

 © 2011 Mitchell Repair Information Company, LLC.

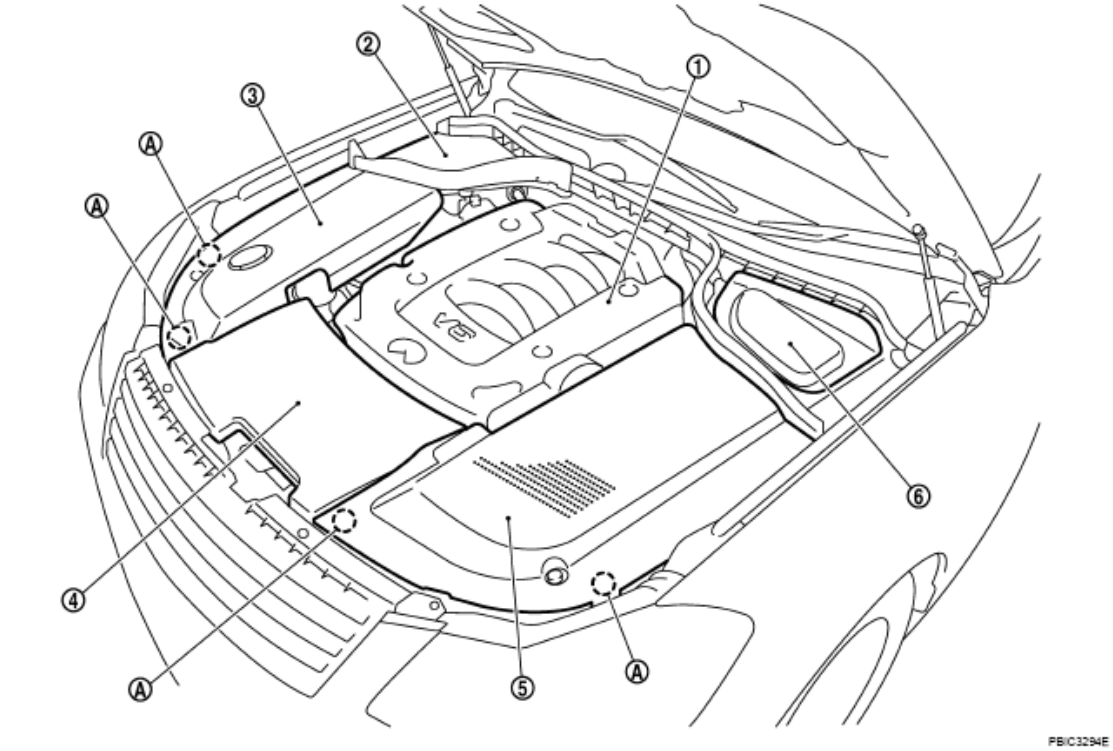


1. Engine cover
2. Battery cover
3. Engine room cover (RH)
4. Air duct (inlet)
5. Engine room cover (LH)
6. Brake master cylinder cover

A. Clip (secure at back surface)

**Fig. 7: Identifying Engine Room Cover Components**
**Courtesy of NISSAN MOTOR CO., U.S.A.**

## REMOVAL AND INSTALLATION

### REMOVAL

**CAUTION: Do not damage or scratch cover when installing or removing.**

- Refer to "**INTAKE MANIFOLD**" for removal and installation of engine cover.
- Refer to "**AIR CLEANER AND AIR DUCT**" for removal and installation of air duct (inlet).
- Remove the washer tank cap before removing the engine room cover (RH).
- Remove the engine room covers (RH and LH) by lifting the clipped point using a clip driver.
- Major parts and inspection points under each cover are as follows; (numbered as in the figure)

1. Upper side of engine assembly
2. Battery, relay box
3. Power steering fluid reservoir tank, engine coolant reservoir tank, relay box
4. Engine assembly front side, drive belts, cooling fan

 © 2011 Mitchell Repair Information Company, LLC.

5. Mass air flow sensor, air cleaner case
6. Brake master cylinder, brake booster

**INSTALLATION**

Installation is the reverse order of removal.

# DRIVE BELTS

**COMPONENT**

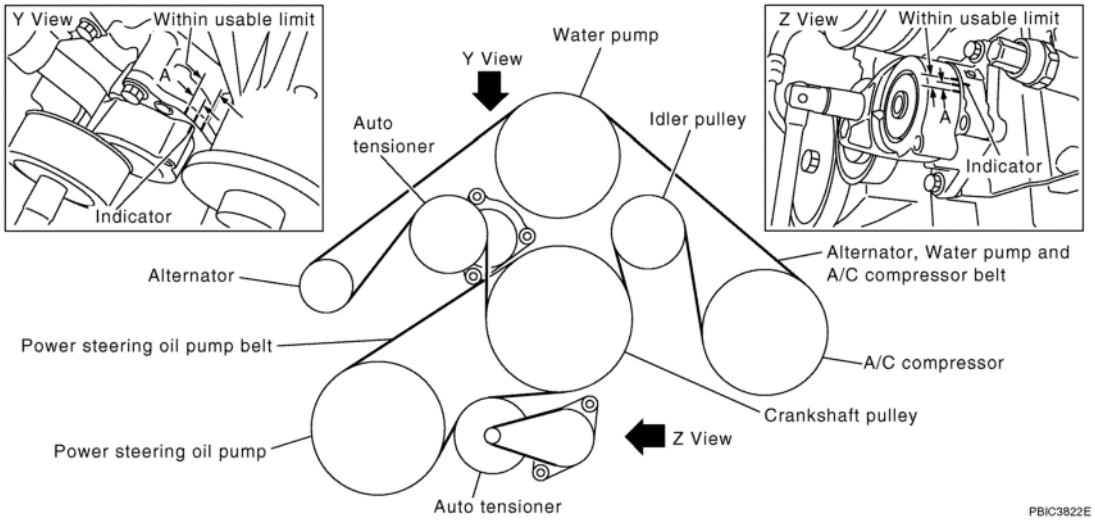


**Fig. 8: Identifying Drive Belts Components**
**Courtesy of NISSAN MOTOR CO., U.S.A.**

**CHECKING DRIVE BELTS**

**WARNING: Be sure to perform when engine is stopped.**

- Remove air duct (inlet) when inspecting drive belt for alternator, water pump and A/C compressor.
- Remove front engine undercover with power tool when inspecting power steering oil pump belt.
- Make sure that indicator (single line notch) of each auto tensioner is within the allowable working range (between three line notches).

**NOTE:**

- **Check auto tensioner indication when engine is cold.**
- **When new drive belt is installed, the range should be "A".**
- **The indicator notch is located on the moving side of auto tensioner**

 © 2011 Mitchell Repair Information Company, LLC.

**for alternator, water pump and A/C compressor belt, while it is found on the fixed side for power steering oil pump belt.**

- Visually check entire belt for wear, damage or cracks.
- If the indicator is out of allowable working range or belt is damaged, replace belt.

## TENSION ADJUSTMENT

Belt tensioning is not necessary, as it is automatically adjusted by auto tensioner.

## REMOVAL AND INSTALLATION

### REMOVAL

#### Alternator, Water Pump and A/C Compressor Belt

1. Remove air duct (inlet). Refer to "**AIR CLEANER AND AIR DUCT**".
2. With box wrench, and while securely holding the hexagonal part in pulley center of auto tensioner, move wrench handle in the direction of arrow (loosening direction of tensioner).

**CAUTION:**

- **Avoid placing hand in a location where pinching may occur if the holding tool accidentally comes off.**
- **Do not loosen the hexagonal part in center of drive belt auto tensioner pulley (Do not turn it clockwise). If turned clockwise, the complete drive belt auto tensioner must be replaced as a unit, including the pulley.**

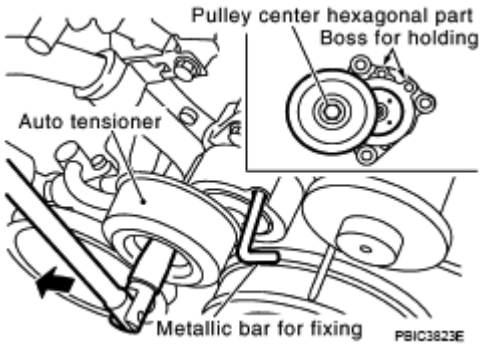


**Fig. 9: Holding Hexagonal Part In Pulley Center Of Auto Tensioner**
**Courtesy of NISSAN MOTOR CO., U.S.A.**

3. Under the above condition, insert a metallic bar of approximately 6 mm (0.24 in) in diameter (hexagonal bar wrench shown as example in the figure) through the holding boss to lock auto tensioner pulley arm.
   - Leave auto tensioner pulley arm locked until belt is installed again.
4. Remove alternator, water pump and A/C compressor belt.

 © 2011 Mitchell Repair Information Company, LLC.

**Power Steering Oil Pump Belt**

1. Remove air duct (inlet). Refer to "**AIR CLEANER AND AIR DUCT**".
2. Remove front engine undercover with power tool.
3. Remove alternator, water pump and A/C compressor belt. Refer to "**ALTERNATOR, WATER PUMP AND A/C COMPRESSOR BELT**".
4. While securely holding the hexagonal protrusion part of auto tensioner pulley with box wrench, move wrench handle in the direction of arrow (loosening direction of tensioner).

**CAUTION: Avoid placing hand in a location where pinching may occur if holding tool accidentally comes off.**

5. Under the above condition, insert a metallic bar of approximately 6 mm (0.24 in) in diameter (hexagonal bar wrench shown as example in the figure) through the holding boss to lock auto tensioner pulley arm.
   - Leave auto tensioner pulley arm locked until belt is installed again.

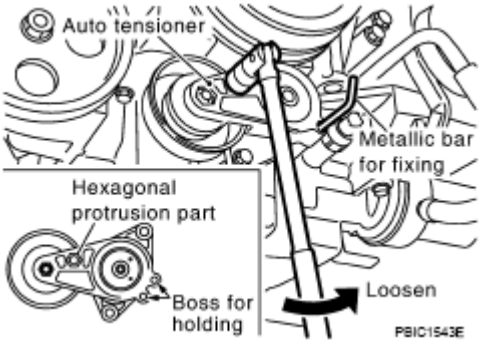


**Fig. 10: Identifying Loosening Direction Of Tensioner**
**Courtesy of NISSAN MOTOR CO., U.S.A.**

6. Remove power steering oil pump belt.

**INSTALLATION**

Note the following, and install in the reverse order of removal.

**CAUTION:**
- **Make sure belt is securely installed around all pulleys.**
- **Make sure belt is correctly engaged with the pulley groove.**
- **Check for engine oil and engine coolant are not adhered belt and pulley groove.**
- **Make sure that belt tension is within the allowable working range, using indicator notch on auto tensioner. Refer to "CHECKING DRIVE BELTS".**

**COMPONENTS**

 © 2011 Mitchell Repair Information Company, LLC.

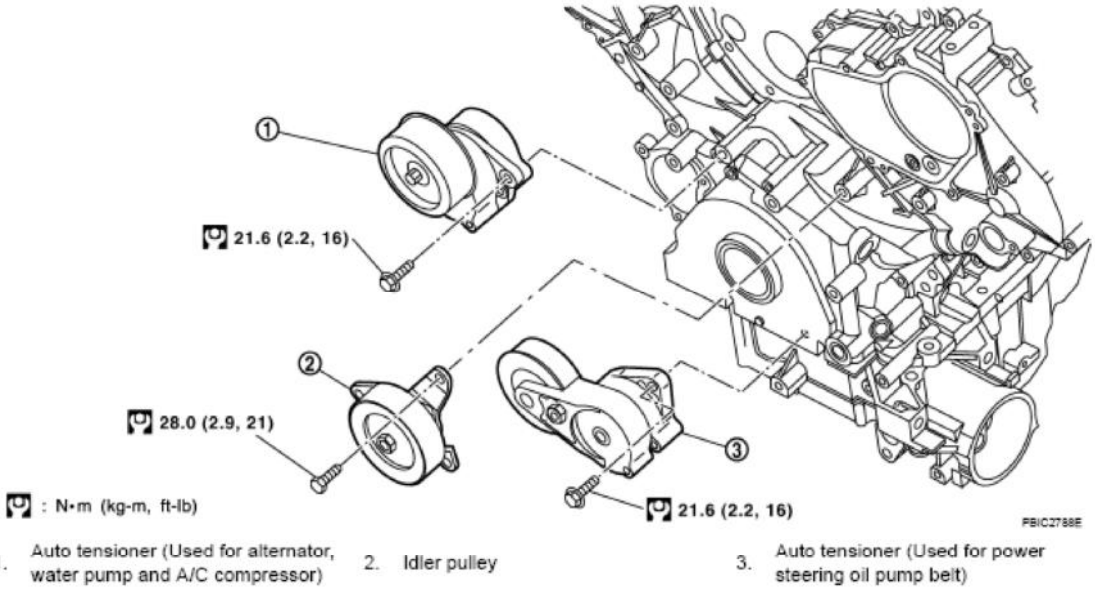


**Fig. 11: Identifying Belt Tensioner Components With Torque Specifications**
**Courtesy of NISSAN MOTOR CO., U.S.A.**

**CAUTION: The complete drive belt auto tensioner must be replaced as a unit, including the pulley.**

## DRIVE BELT AUTO TENSIONER AND IDLER PULLEY

### REMOVAL

1. Remove air duct (inlet). Refer to "**AIR CLEANER AND AIR DUCT**".
2. Remove front engine undercover with power tool.
3. Remove drive belts. Refer to "**REMOVAL AND INSTALLATION**".
   - Keep auto tensioner pulley arm locked after belt is removed.
4. Remove auto tensioner and idler pulley with power tool.
   - Keep auto tensioner pulley arm locked to install or remove auto tensioner.

**CAUTION: Do not loosen the hexagonal part in center of drive belt auto tensioner pulley (Do not turn it clockwise). If turned clockwise, the complete drive belt auto tensioner must be replaced as a unit, including the pulley.**

### INSTALLATION

Installation is the reverse order of removal.

**CAUTION: Do not swap the pulley between new and old drive belt auto tensioner.**

 © 2011 Mitchell Repair Information Company, LLC.

# AIR CLEANER AND AIR DUCT

## COMPONENTS

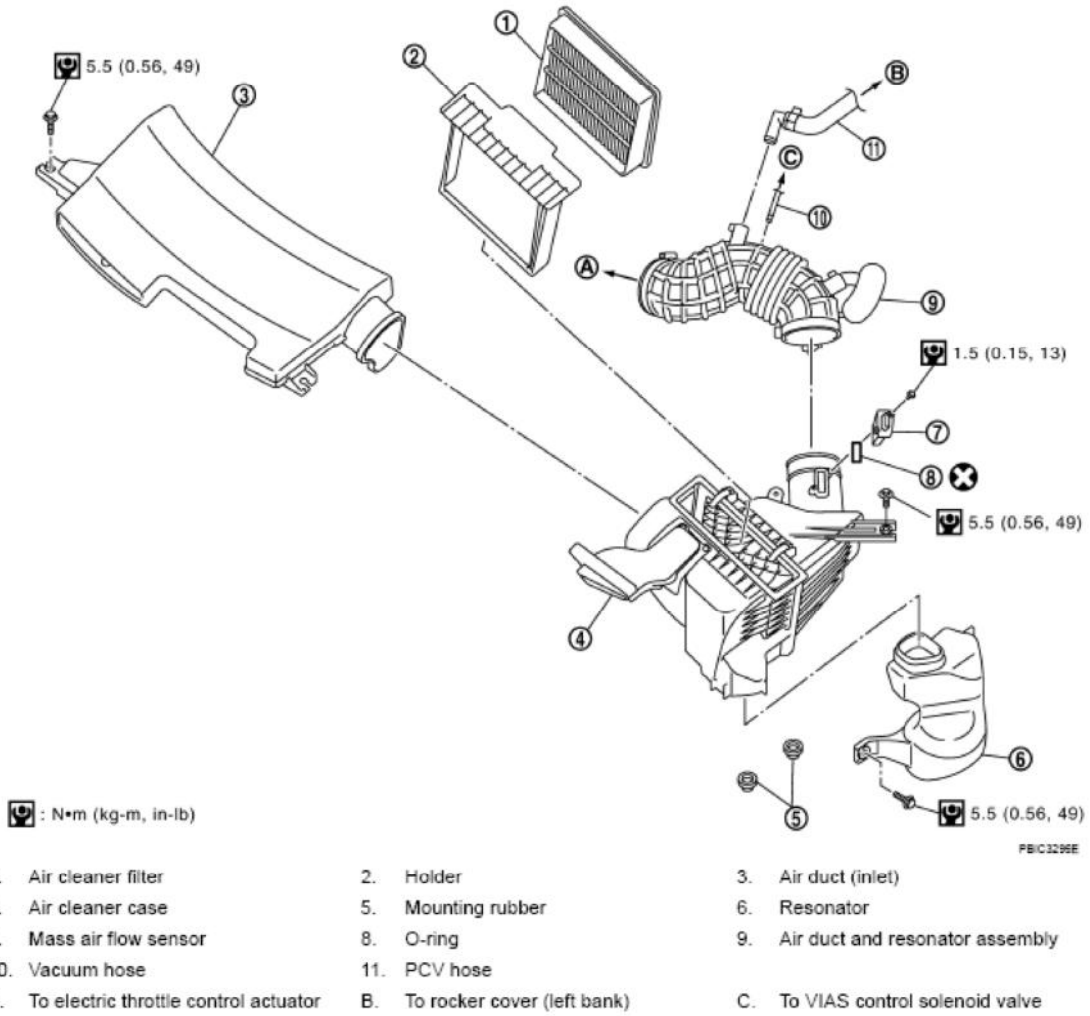


**Fig. 12: Identifying Air Cleaner And Air Duct Components With Torque Specifications**
**Courtesy of NISSAN MOTOR CO., U.S.A.**

- Refer to "**COMPONENTS** " for symbol marks in the figure.

## REMOVAL AND INSTALLATION

### REMOVAL

1. Remove engine room cover (RH and LH). Refer to "**ENGINE ROOM COVER**".
2. Disconnect harness connector from mass air flow sensor.
3. Disconnect vacuum hose and PCV hose.

 © 2011 Mitchell Repair Information Company, LLC.

4. Remove air duct (inlet), air cleaner case and mass air flow sensor assembly, air duct and resonator assembly disconnecting their joints.
   - Add marks as necessary for easier installation.
5. Remove mass air flow sensor from air cleaner case, as necessary.

**CAUTION: Handle mass air flow sensor with following cares.**

- **Never shock mass air flow sensor.**
- **Never disassemble mass air flow sensor.**
- **Never touch mass air flow sensor.**

6. Remove resonator in fender lifting front fender protector (LH). Refer to "**FENDER PROTECTOR** ".

**INSPECTION AFTER REMOVAL**

Inspect air duct and resonator assembly for crack or tear.

- If anything found, replace air duct and resonator assembly.

**INSTALLATION**

Note the following, and install in the reverse order of removal.

- Align marks. Attach each joint. Screw clamps firmly.

## CHANGING AIR CLEANER FILTER

**REMOVAL**

1. Remove engine room cover (LH). Refer to "**ENGINE ROOM COVER**".
2. Unhook clips (1) and remove holder (3) from air cleaner case (2).

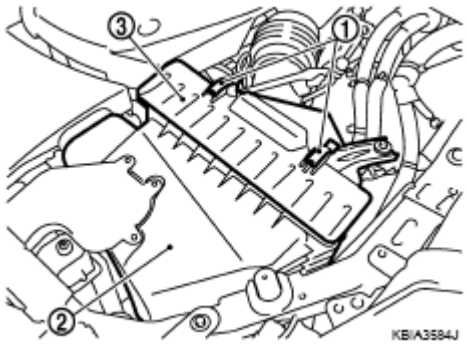


**Fig. 13: Identifying Air Cleaner Case Holder Clips**
**Courtesy of NISSAN MOTOR CO., U.S.A.**

 © 2011 Mitchell Repair Information Company, LLC.

3. Remove air cleaner filter (2) from air cleaner case (1).

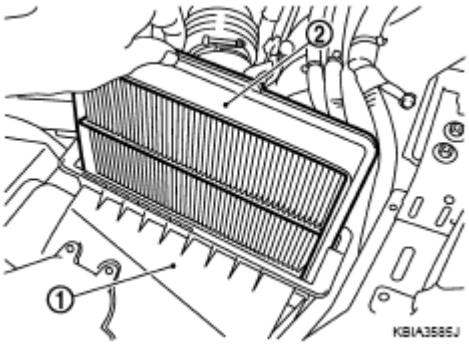


**Fig. 14: Identifying Air Cleaner Filter**
**Courtesy of NISSAN MOTOR CO., U.S.A.**

**INSTALLATION**

Note the following, and install in the reverse order of removal.

- Install the air cleaner filter by aligning the seal with the notch of air cleaner case.

# INTAKE MANIFOLD

**COMPONENTS**

 © 2011 Mitchell Repair Information Company, LLC.

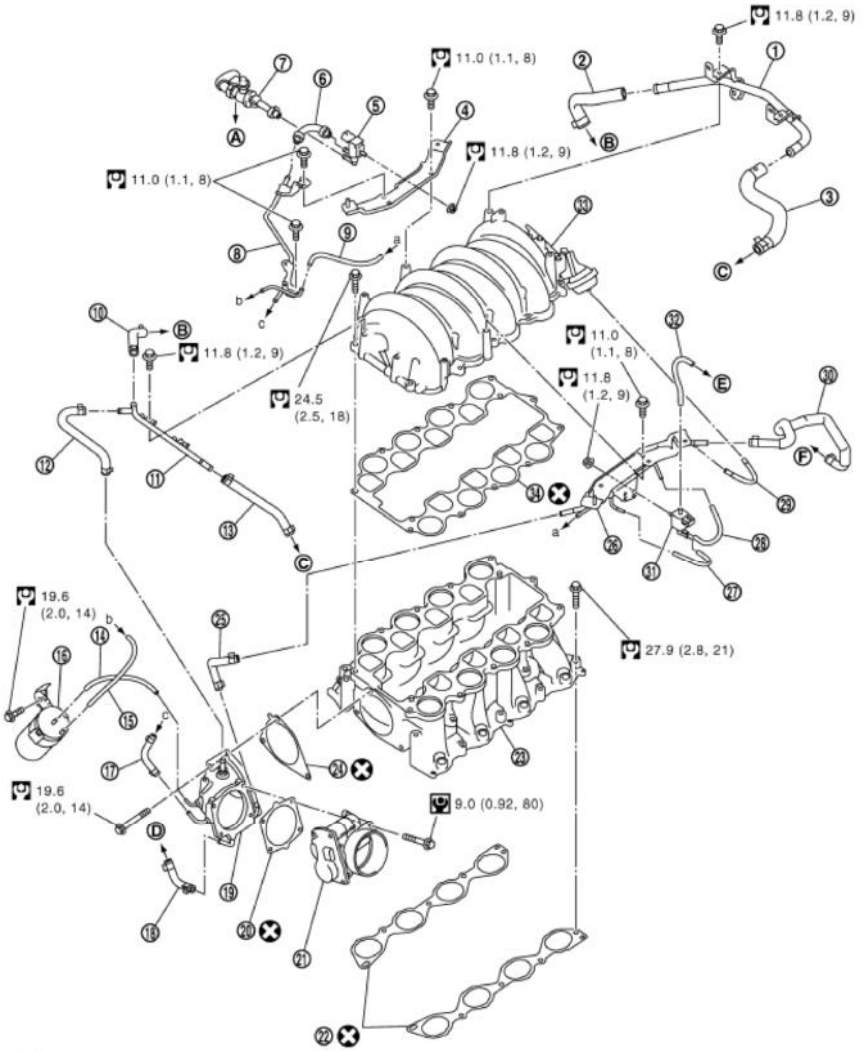


| | | | | | |
|---|---|---|---|---|---|
| 1. | PCV tube | 2. | PCV hose | 3. | PCV hose |
| 4. | Engine cover bracket (RH) | 5. | EVAP canister purge control solenoid valve | 6. | EVAP hose |
| 7. | EVAP service port | 8. | EVAP tube | 9. | Vacuum hose |
| 10. | PCV hose | 11. | PCV tube | 12. | PCV hose |
| 13. | PCV hose | 14. | Vacuum hose | 15. | Vacuum hose |
| 16. | Vacuum tank | 17. | EVAP hose | 18. | Water hose |
| 19. | Intake manifold adapter | 20. | Gasket | 21. | Electric throttle control actuator |
| 22. | Gasket | 23. | Intake manifold (lower) | 24. | Gasket |
| 25. | Water hose | 26. | Engine cover bracket (LH) | 27. | Vacuum hose |
| 28. | Vacuum hose | 29. | Vacuum hose | 30. | Water hose |
| 31. | VIAS control solenoid valve | 32. | Vacuum hose | 33. | Intake manifold (upper) |
| 34. | Gasket | | | | |
| A. | To centralized under-floor piping | B. | To rocker cover (right bank) | C. | To rocker cover (left bank) |
| D. | To thermostat housing | E. | To air duct and resonator assembly | F. | To heater pipe |

**Fig. 15: Identifying Intake Manifold Components With Torque Specifications**
**Courtesy of NISSAN MOTOR CO., U.S.A.**

- Refer to "**COMPONENTS** " for symbol marks in the figure.

 © 2011 Mitchell Repair Information Company, LLC.

## REMOVAL AND INSTALLATION

### REMOVAL

**WARNING: To avoid the danger of being scalded, never drain the engine coolant when the engine is hot.**

1. Remove engine room cover (RH and LH). Refer to "**ENGINE ROOM COVER**".
2. Remove engine cover with power tool.

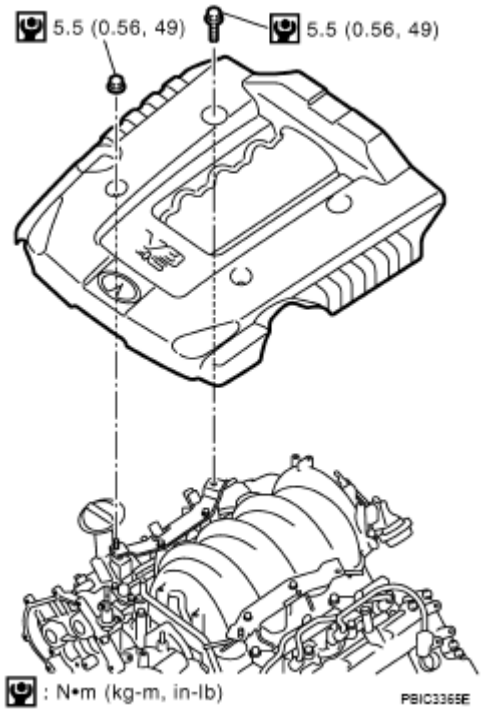


**Fig. 16: Removing Engine Room Cover With Torque Specifications**
**Courtesy of NISSAN MOTOR CO., U.S.A.**

3. Release fuel pressure. Refer to "**FUEL PRESSURE RELEASE** ".
4. Remove air duct (inlet), air cleaner case and air duct and resonator assembly. Refer to "**AIR CLEANER AND AIR DUCT**".
5. Drain engine coolant from radiator. Refer to "**DRAINING ENGINE COOLANT** ".

**CAUTION:**
- **Perform this step when the engine is cold.**
- **Do not spill engine coolant on drive belts.**

6. Disconnect fuel feed hose quick connector on engine side. Refer to "**FUEL INJECTOR AND FUEL TUBE**".

 © 2011 Mitchell Repair Information Company, LLC.

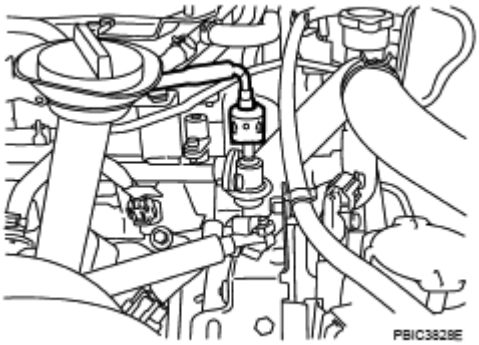


**Fig. 17: Identifying Fuel Feed Hose Quick Connector**
**Courtesy of NISSAN MOTOR CO., U.S.A.**

7. Remove fuel damper and fuel hose assembly. Refer to "**FUEL INJECTOR AND FUEL TUBE**".

**CAUTION:**
- **While hoses are disconnected, plug them to prevent fuel from draining.**
- **Do not separate fuel damper and fuel hose.**

8. Remove or disconnect harnesses, engine cover bracket (RH and LH), vacuum hose, EVAP tube and hose and PCV hose and tube from intake manifold (upper).
9. Loosen mounting bolts in reverse order as shown in the figure to remove intake manifold (upper) with power tool.

<-- : Engine front

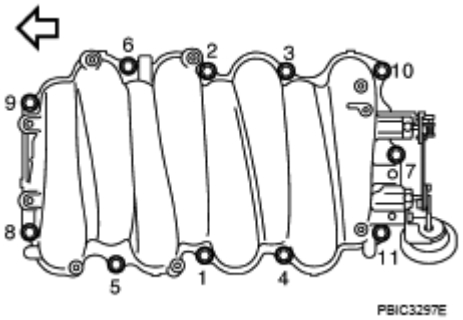


**Fig. 18: Identifying Intake Manifold (Upper) Mounting Bolts Loosening Sequence**
**Courtesy of NISSAN MOTOR CO., U.S.A.**

10. Remove electric throttle control actuator as follows:
    a. Disconnect harness connector.
    b. Loosen mounting bolts diagonally.

**CAUTION:**
- **Handle carefully to avoid any shock to electric throttle control actuator.**

 © 2011 Mitchell Repair Information Company, LLC.

- **Never disassemble.**

11. Remove fuel injector and fuel tube assembly. Refer to "**FUEL INJECTOR AND FUEL TUBE**".
12. Disconnect water hoses from intake manifold adaptor.
13. Loosen mounting bolts in reverse order as shown in the figure to remove intake manifold (lower) with power tool.

    <= : Engine front

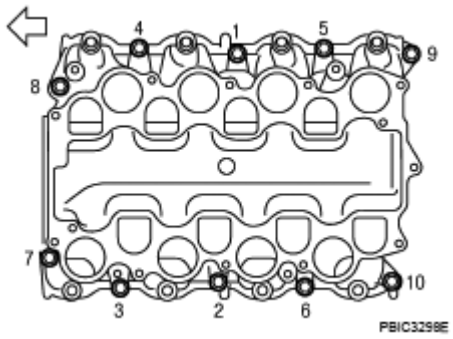


**Fig. 19: Identifying Intake Manifold (Lower) Mounting Bolts Loosening Sequence**
**Courtesy of NISSAN MOTOR CO., U.S.A.**

14. Remove intake manifold adaptor from intake manifold (lower).
15. Remove vacuum tank.
16. Remove intake manifold gaskets.

**CAUTION: Cover engine openings to avoid entry of foreign materials.**

**INSPECTION AFTER REMOVAL**

**Surface Distortion**

- Check the surface distortion of both the intake manifold (upper and lower) mating surfaces with straightedge and feeler gauge.

  **Limit : 0.1 mm (0.004 in)**

- If it exceeds the limit, replace intake manifolds (lower and/or upper).

 © 2011 Mitchell Repair Information Company, LLC.

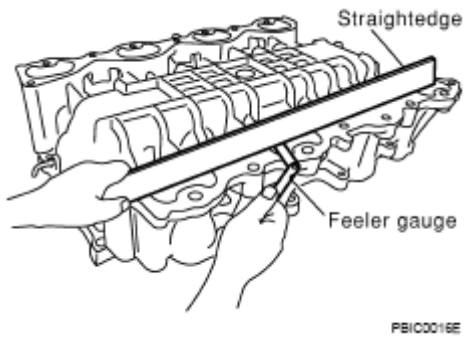


**Fig. 20: Checking Surface Distortion Of Intake Manifold**
**Courtesy of NISSAN MOTOR CO., U.S.A.**

**INSTALLATION**

Note the following, and install in the reverse order of removal.

**Intake Manifold (Lower)**

Tighten in numerical order as shown in the figure.

<-- : Engine front

- There are two types of mounting bolts. Refer to the following for locating bolts.

**M8 x 90 mm (3.54 in) : 7, 8**

**M8 x 35 mm (1.38 in) : Except the above**

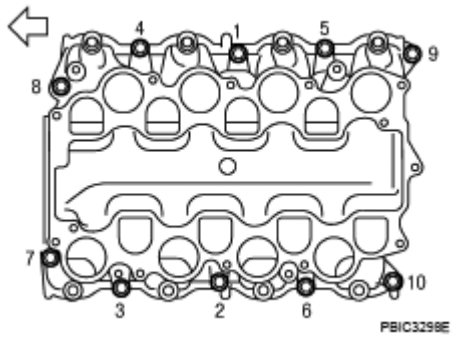


**Fig. 21: Identifying Intake Manifold (Lower) Mounting Bolts Tightening Sequence**
**Courtesy of NISSAN MOTOR CO., U.S.A.**

**Intake Manifold (Upper)**

Tighten in numerical order as shown in the figure.

<-- : Engine front

 © 2011 Mitchell Repair Information Company, LLC.

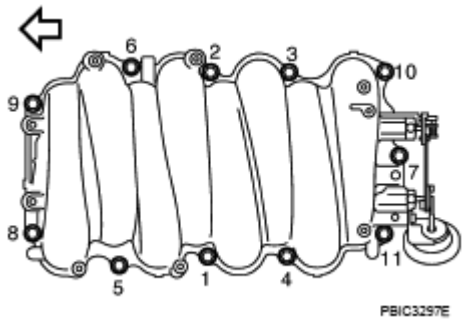


**Fig. 22: Identifying Intake Manifold (Upper) Mounting Bolts Tightening Sequence**
**Courtesy of NISSAN MOTOR CO., U.S.A.**

**Electric Throttle Control Actuator**

- Install gasket with its directional protrusion set up/downward.
- Tighten mounting bolts of electric throttle control actuator equally and diagonally in several steps.
- After installation perform procedure in "**INSPECTION AFTER INSTALLATION**".

**Water Hose**

Insert hose by 27 to 32 mm (1.06 to 1.26 in) from connector end.

**Vacuum Hose**

Refer to "**VACUUM HOSE DRAWING** ".

**INSPECTION AFTER INSTALLATION**

- Perform the "Throttle Valve Closed Position Learning" when harness connector of electric throttle control actuator is disconnected. Refer to "**THROTTLE VALVE CLOSED POSITION LEARNING** ".
- Perform the "Idle Air Volume Learning" and "Throttle Valve Closed Position Learning" when electric throttle control actuator is replaced. Refer to "**IDLE AIR VOLUME LEARNING** ".

# EXHAUST MANIFOLD AND THREE WAY CATALYST

## COMPONENTS

 © 2011 Mitchell Repair Information Company, LLC.

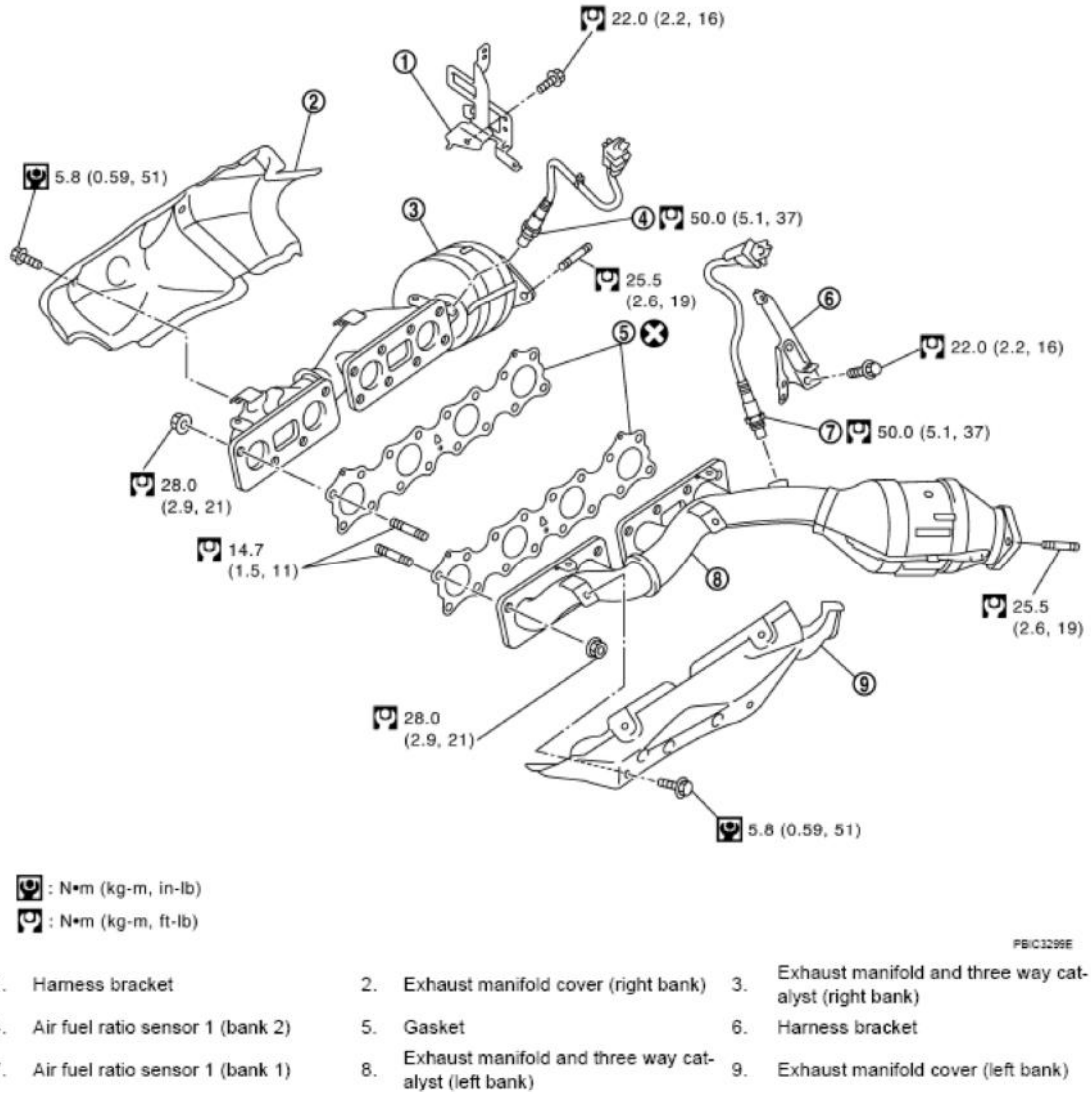


| | | | | | |
|---|---|---|---|---|---|
| 1. | Harness bracket | 2. | Exhaust manifold cover (right bank) | 3. | Exhaust manifold and three way catalyst (right bank) |
| 4. | Air fuel ratio sensor 1 (bank 2) | 5. | Gasket | 6. | Harness bracket |
| 7. | Air fuel ratio sensor 1 (bank 1) | 8. | Exhaust manifold and three way catalyst (left bank) | 9. | Exhaust manifold cover (left bank) |

**Fig. 23: Identifying Exhaust Manifold And Three Way Catalyst Components With Torque Specifications Courtesy of NISSAN MOTOR CO., U.S.A.**

- Refer to "**COMPONENTS** " for symbol marks in the figure.

## REMOVAL AND INSTALLATION

### REMOVAL

**WARNING: Perform the work when the exhaust and cooling system have completely cooled down.**

1. Remove engine room cover (RH and LH). Refer to "**ENGINE ROOM COVER**".
2. Remove engine cover with power tool. Refer to "**INTAKE MANIFOLD**".
3. Remove air duct (inlet), air cleaner case and air duct and resonator assembly. Refer to "**AIR CLEANER AND AIR DUCT**".

4. Remove front and rear engine undercovers with power tool.
5. Drain engine coolant from radiator. Refer to "**CHANGING ENGINE COOLANT** ".

**CAUTION:**
- **Perform this step when engine is cold.**
- **Never spill engine coolant on drive belts.**

6. Remove radiator. Refer to "**RADIATOR** ".
7. Remove drive belts. Refer to "**DRIVE BELTS**".
8. Remove exhaust front tube with power tool. Refer to "**EXHAUST SYSTEM** ".
9. Remove air fuel ratio sensor 1 as follows:
   a. Disconnect harness connector of each air fuel ratio sensor 1.
   b. Remove air fuel ratio sensor 1 on both bank with heated oxygen sensor wrench (SST).

**CAUTION:**
- **Be careful not to damage air fuel ratio sensor 1.**
- **Discard any air fuel ratio sensor 1 which has been dropped onto a hard surface such as a concrete floor; replace with a new one.**

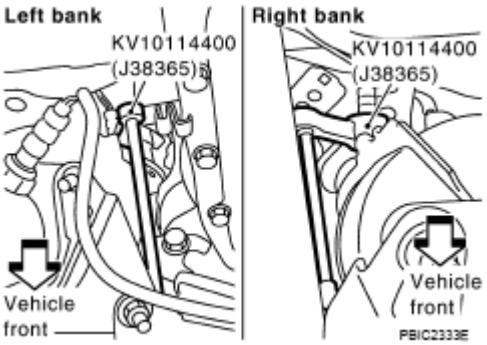


**Fig. 24: Identifying Air Fuel Ratio Sensor**
**Courtesy of NISSAN MOTOR CO., U.S.A.**

10. Remove exhaust manifold and three way catalyst (left bank) as follows:
    a. Disconnect A/C piping from A/C compressor, then remove A/C compressor with power tool. Refer to "**REFRIGERANT LINES** ".
    b. Remove steering lower joint to enable steering shaft to move freely. Refer to "**STEERING COLUMN** ".
    c. Remove starter motor. Refer to "**STARTING SYSTEM** ".
    d. Remove nuts on bottom of engine mounting insulator (LH), and lift up left side of engine approximately 3 cm (1.18 in) with transmission jack. Refer to "**ENGINE ASSEMBLY**".
    e. Remove exhaust manifold cover (left bank).
    f. Loosen nuts in the reverse order of figure to remove exhaust manifold and three way catalyst (left bank) with power tool.

 © 2011 Mitchell Repair Information Company, LLC.

**NOTE: Disregard No. 9 to No. 12 when loosening.**

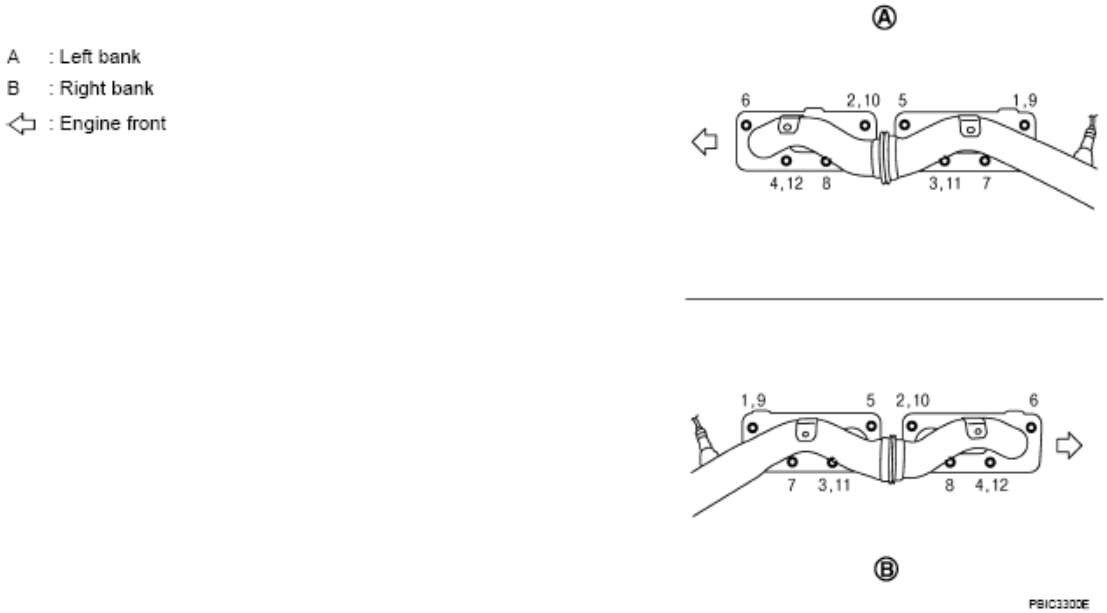


**Fig. 25: Identifying Exhaust Manifold And Three Way Catalyst (Left Bank) Nuts Loosening Sequence**
**Courtesy of NISSAN MOTOR CO., U.S.A.**

11. Remove exhaust manifold and three way catalyst (right bank) as follows:
    a. Remove alternator and bracket. Refer to "**CHARGING SYSTEM** ".
    b. Remove nuts on bottom of engine mounting insulator (RH), and lift up right side of engine approximately 3 cm (1.18 in) with transmission jack. Refer to "**ENGINE ASSEMBLY**".
    c. Remove exhaust manifold cover (right bank).
    d. Loosen nuts in the reverse order of figure to remove exhaust manifold and three way catalyst (right bank) with power tool.

**NOTE: Disregard No. 9 to No. 12 when loosening.**

 © 2011 Mitchell Repair Information Company, LLC.

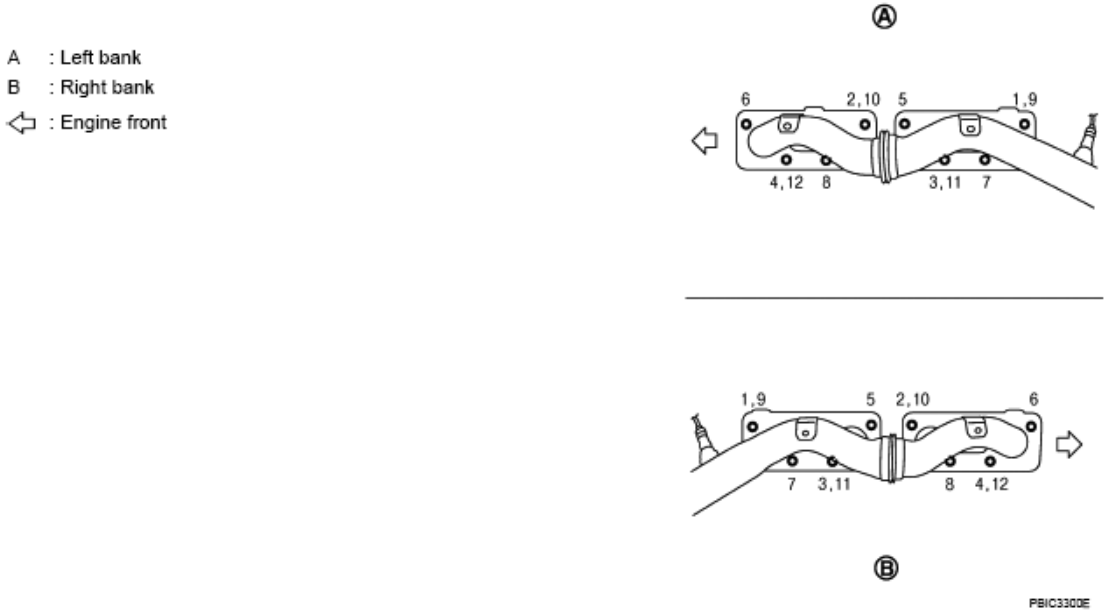


**Fig. 26: Identifying Exhaust Manifold And Three Way Catalyst (Right Bank) Nuts Loosening Sequence**
**Courtesy of NISSAN MOTOR CO., U.S.A.**

12. Remove exhaust manifold gaskets.

**CAUTION: Cover engine openings to avoid entry of foreign materials.**

**INSPECTION AFTER REMOVAL**

**Surface Distortion**

- Check the surface distortion of the each exhaust manifold flange mating surface with straightedge and feeler gauge.

  **Limit : 0.3 mm (0.012 in)**

- If it exceeds the limit, replace exhaust manifold and three way catalyst.

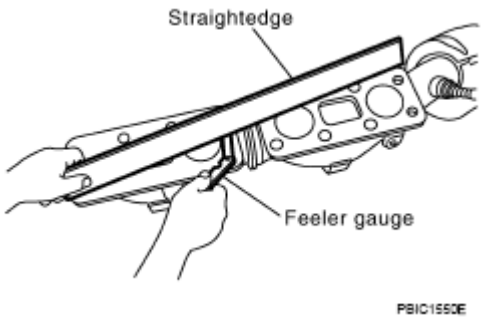

**Fig. 27: Checking Surface Distortion Of Exhaust Manifold Flange Mating Surface**
**Courtesy of NISSAN MOTOR CO., U.S.A.**

**INSTALLATION**

Note the following, and install in the reverse order of removal.

**Exhaust Manifold Gasket**

Install exhaust manifold gasket with its directional protrusion set upward.

A : Protrusion for confirming installation
⇦ : Above

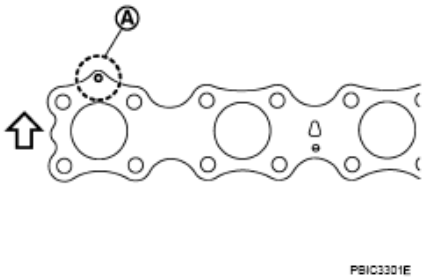


**Fig. 28: Identifying Exhaust Manifold Gasket Protrusion**
**Courtesy of NISSAN MOTOR CO., U.S.A.**

**Exhaust Manifold**

- Install exhaust manifold and tighten mounting nuts in numerical order as shown in the figure.

**NOTE: Tighten mounting nuts No. 1 to 4 in two steps. The numerical order No. 9 to 12 shown second steps.**

A : Left bank
B : Right bank
⇦ : Engine front

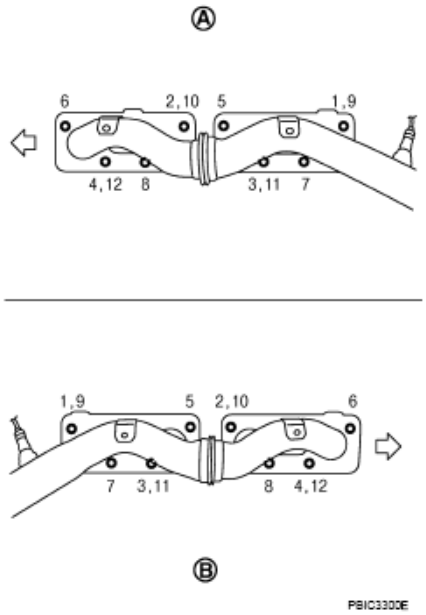


 © 2011 Mitchell Repair Information Company, LLC.

**Fig. 29: Identifying Exhaust Manifold Mounting Nuts Tightening Sequence**
**Courtesy of NISSAN MOTOR CO., U.S.A.**

**Air Fuel Ratio Sensor**

**CAUTION:**

- **Before installing a new air fuel ratio sensor 1, clean exhaust system threads using oxygen sensor thread cleaner (commercial service tool: J-43897-18 or J-43897-12), and apply anti-seize lubricant (commercial service tool).**
- **Never over torque air fuel ratio sensor. Doing so may cause damage to the air fuel ratio sensor 1, resulting in "MIL" coming on.**

# OIL PAN AND OIL STRAINER

## COMPONENTS

 © 2011 Mitchell Repair Information Company, LLC.

| Symbol | Description |
|---|---|
| | N·m (kg-m, ft-lb) |
| | N·m (kg-m, in-lb) |
| | Always replace after disassembly. |

2WD models

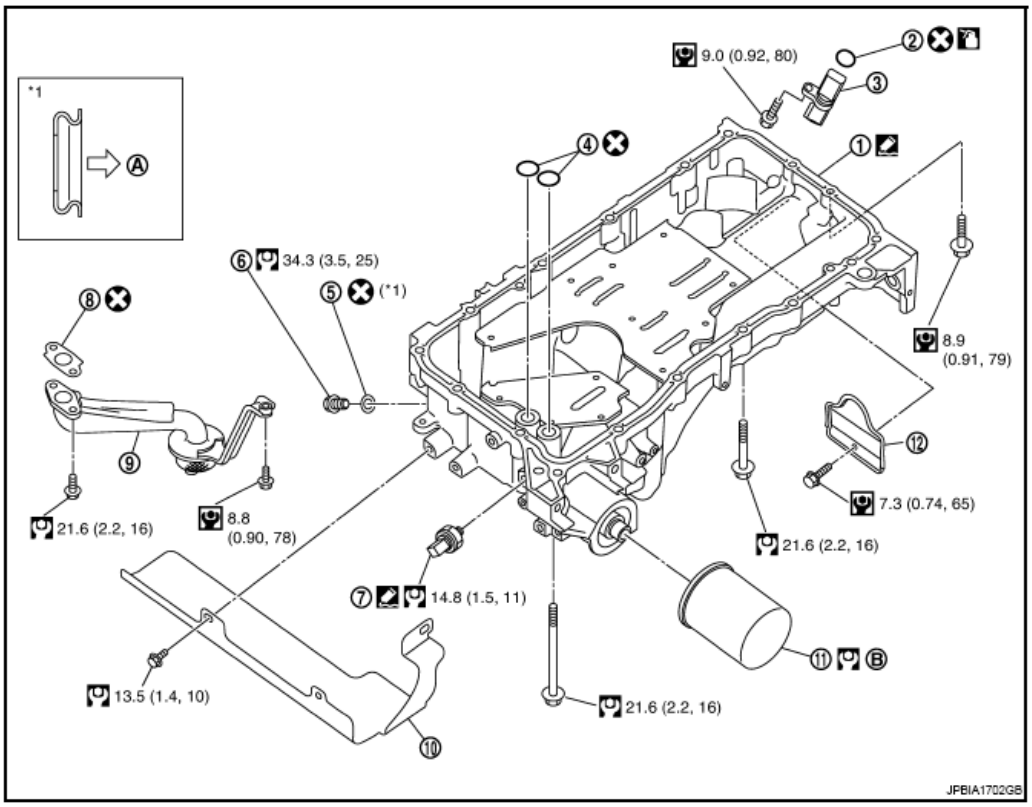


| | | | | | |
|---|---|---|---|---|---|
| 1. | Oil pan | 2. | O-ring | 3. | Crankshaft position sensor (POS) |
| 4. | O-ring | 5. | Drain plug washer | 6. | Drain plug |
| 7. | Oil pressure switch | 8. | Gasket | 9. | Oil strainer |
| 10. | Harness bracket | 11. | Oil filter | 12. | Rear plate cover |
| A. | Oil pan side | B. | Refer to Oil filter | | |

**Fig. 30: Identifying Oil Pan And Oil Strainer Components With Torque Specifications (2WD Models)**
**Courtesy of NISSAN MOTOR CO., U.S.A.**

 © 2011 Mitchell Repair Information Company, LLC.

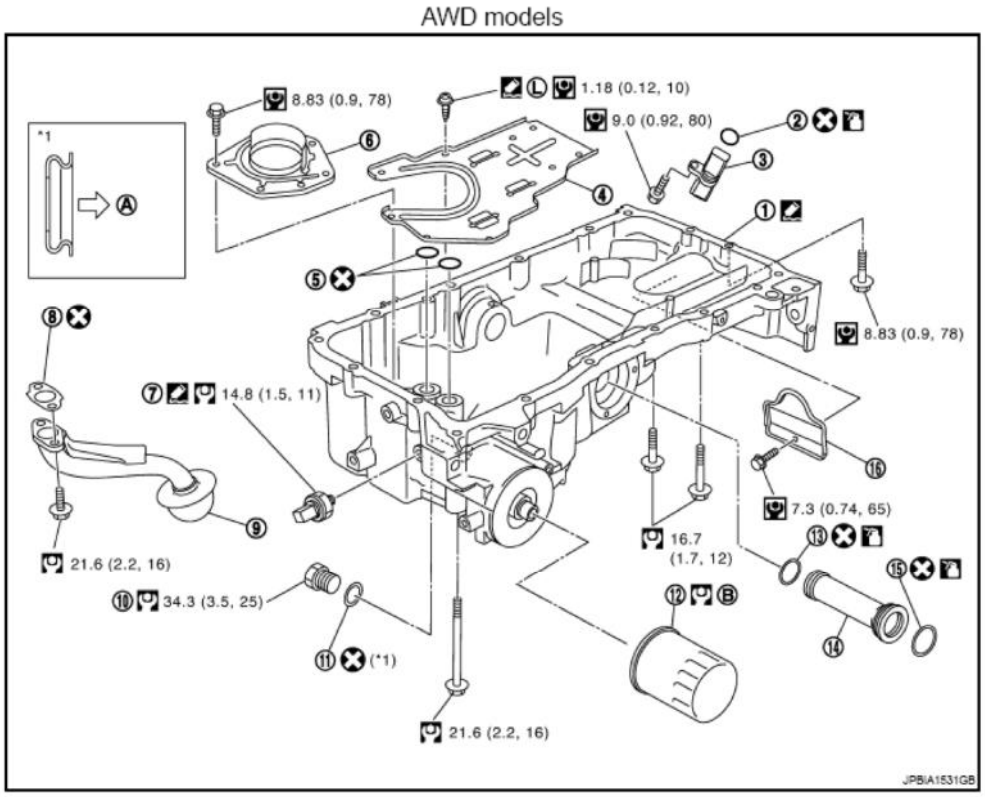


| | | | | | |
|---|---|---|---|---|---|
| 1. | Oil pan | 2. | O-ring | 3. | Crankshaft position sensor (POS) |
| 4. | Baffle plate | 5. | O-ring | 6. | Baffle plate |
| 7. | Oil pressure switch | 8. | Gasket | 9. | Oil strainer |
| 10. | Drain plug | 11. | Drain plug washer | 12. | Oil filter |
| 13. | O-ring | 14. | Axle pipe | 15. | O-ring |
| 16. | Rear plate cover | | | | |
| A. | Oil pan side | B. | Refer to Oil filter | | |

: Apply Genuine High Strength Thread Locking Sealant or equivalent.

**Fig. 31: Identifying Oil Pan And Oil Strainer Components With Torque Specifications (AWD Models)**
**Courtesy of NISSAN MOTOR CO., U.S.A.**

- Refer to "**COMPONENTS** " for symbol marks in the figure.

## REMOVAL AND INSTALLATION

### REMOVAL

**WARNING: To avoid the danger of being scalded, do not drain engine oil when engine is hot.**

1. Remove front and rear engine undercovers with power tool.
2. Drain engine oil. Refer to "**CHANGING ENGINE OIL** ".

**CAUTION:**
- **Perform this step when engine is cold.**

 © 2011 Mitchell Repair Information Company, LLC.

- **Do not spill engine oil on drive belts.**

3. Remove engine assembly from vehicle. Refer to "**ENGINE ASSEMBLY**".
4. Install engine slingers into front of cylinder head (left bank) and front of cylinder head (right bank).

   **Slinger bolts:**

   **:33.4 N.m (3.4 kg-m, 25 ft-lb)**

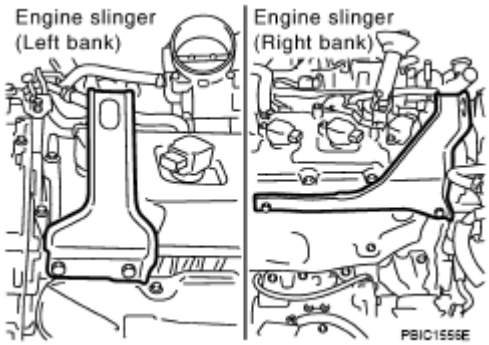


**Fig. 32: Identifying Engine Slingers**
**Courtesy of NISSAN MOTOR CO., U.S.A.**

5. Remove engine mounting insulators (RH and LH) under side nut with power tool.
6. Lift with hoist and separate engine and transmission assembly from front suspension member.

**CAUTION: Avoid damage to and oil/grease smearing or spills onto engine mounting insulator.**

7. Remove harness bracket from oil pan.
8. Remove oil filter. Refer to "**OIL FILTER** ".
9. Remove oil pan as the follows:
   a. Remove rear plate cover.
   b. Remove transmission joint bolts which pierce oil pan. Refer to "**TRANSMISSION ASSEMBLY** ".
   c. Loosen mounting bolts with power tool in reverse order as shown in the figure.

**NOTE: Disregard the numerical order No. 11 and 17 in removal.**

 © 2011 Mitchell Repair Information Company, LLC.

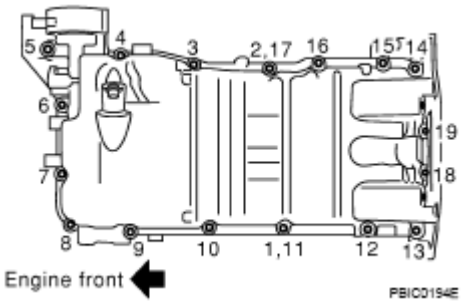


**Fig. 33: Identifying Oil Pan Mounting Bolts Loosening Sequence**
**Courtesy of NISSAN MOTOR CO., U.S.A.**

d. Insert seal cutter (SST) between oil pan and cylinder block. Slide seal cutter by tapping on the side of seal cutter with hammer. Remove oil pan.

**CAUTION:**
- **Be careful not to damage the mating surfaces.**
- **Do not insert screwdriver, this will damage the mating surface.**

e. Remove O-rings from bottom of oil pump and front cover.

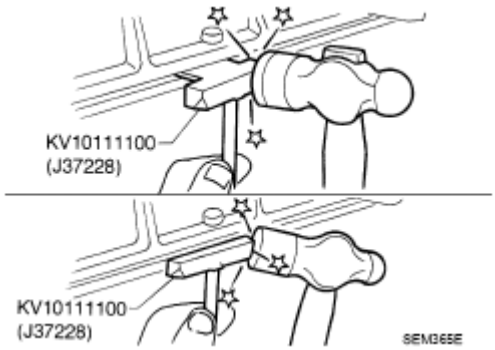


**Fig. 34: Inserting Seal Cutter Between Oil Pan (Upper) And Oil Pan (Lower)**
**Courtesy of NISSAN MOTOR CO., U.S.A.**

10. Remove oil pressure switch, as necessary. Refer to "**OIL PRESSURE CHECK** ".
11. As necessary, pull axle pipe from oil pan. (AWD models)
    - Hold pipes and pull them out to front drive shaft (left) installing side.
12. Remove oil strainer.

**INSPECTION AFTER REMOVAL**

Clean oil strainer if any object attached.

**INSTALLATION**

 © 2011 Mitchell Repair Information Company, LLC.

1. Install oil strainer.
2. Install axle pipe to oil pan, if removed. (AWD models)
   - Lubricate O-ring groove of axle pip, O-ring, and O-ring joint of oil pan with new engine oil.
   - Right/left O-ring diameters differ from each other. O-ring with identification paint mark is installed on front drive shaft (left) installing side.
   - Install axle pipe to oil pan from left side.

**CAUTION: Insert it with care to prevent O-ring from sliding.**

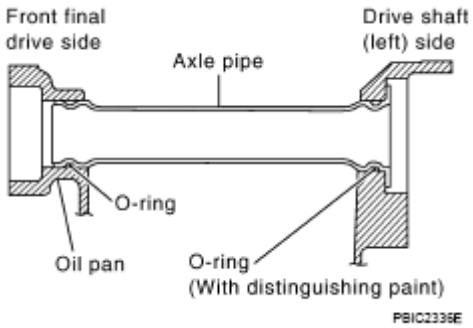


**Fig. 35: Oil Pan Sectional View**
**Courtesy of NISSAN MOTOR CO., U.S.A.**

3. Install oil pan as follows:
   a. Use scraper to remove old liquid gasket from mating surfaces.
      - Also remove the old liquid gasket from mating surface of cylinder block.
      - Remove old liquid gasket from the bolt holes and threads.

**CAUTION: Do not scratch or damage the mating surfaces when cleaning off old liquid gasket.**

   b. Install new O-rings to oil pump and front cover side.
   c. Apply a continuous bead of liquid gasket with tube presser [SST: WS39930000 ( - )] to the cylinder block mating surfaces of oil pan to a limited portion as shown in the figure.

      **Use Genuine RTV Silicone Sealant or equivalent.** Refer to "**RECOMMENDED CHEMICAL PRODUCTS AND SEALANTS** ".

**CAUTION: Attaching should be done within 5 minutes after coating.**

 © 2011 Mitchell Repair Information Company, LLC.

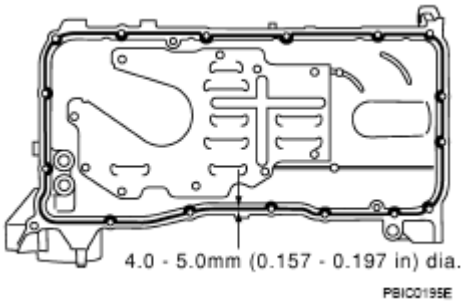


**Fig. 36: Applying Liquid Gasket To Cylinder Block Mating Surfaces Of Oil Pan**
**Courtesy of NISSAN MOTOR CO., U.S.A.**

d. Install oil pan.

**CAUTION: Install avoiding misalignment of O-rings.**

- Tighten mounting bolts in numerical order as shown in the figure.

**NOTE: Tighten mounting bolts No. 1 and 2 in two steps. The numerical order No. 11 and 17 shown second steps.**

- There are three types of mounting bolts. Refer to the following for locating bolts.

**M6 x 30 mm. (1.18 in) : 18, 19**

**M8 x 100 mm (3.94 in) : 5, 9**

**M8 x 45 mm (1.77 in) : Except the above**

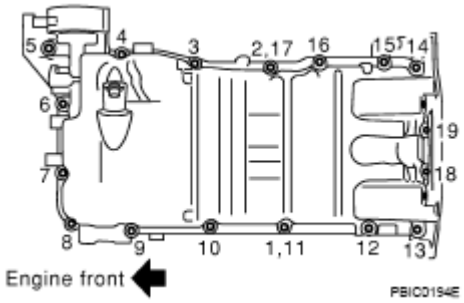


**Fig. 37: Identifying Oil Pan Mounting Bolts Tightening Sequence**
**Courtesy of NISSAN MOTOR CO., U.S.A.**

e. Tighten transmission joint bolts. Refer to "**TRANSMISSION ASSEMBLY** ".
f. Install rear plate cover.

4. Install oil pan drain plug with new drain plug washer.

 © 2011 Mitchell Repair Information Company, LLC.

- Refer to the figure of components of former page for installation direction of drain plug washer. Refer to "**REMOVAL AND INSTALLATION**".

5. Install in the reverse order of removal after this step.

**NOTE: At least 30 minutes after oil pan is installed, pour engine oil.**

**INSPECTION AFTER INSTALLATION**

1. Check engine oil level and adjust engine oil. Refer to "**ENGINE OIL** ".
2. Start engine, and check there is no leak of engine oil.
3. Stop engine and wait for 15 minutes.
4. Check engine oil level again. Refer to "**ENGINE OIL** ".

# IGNITION COIL

## COMPONENTS

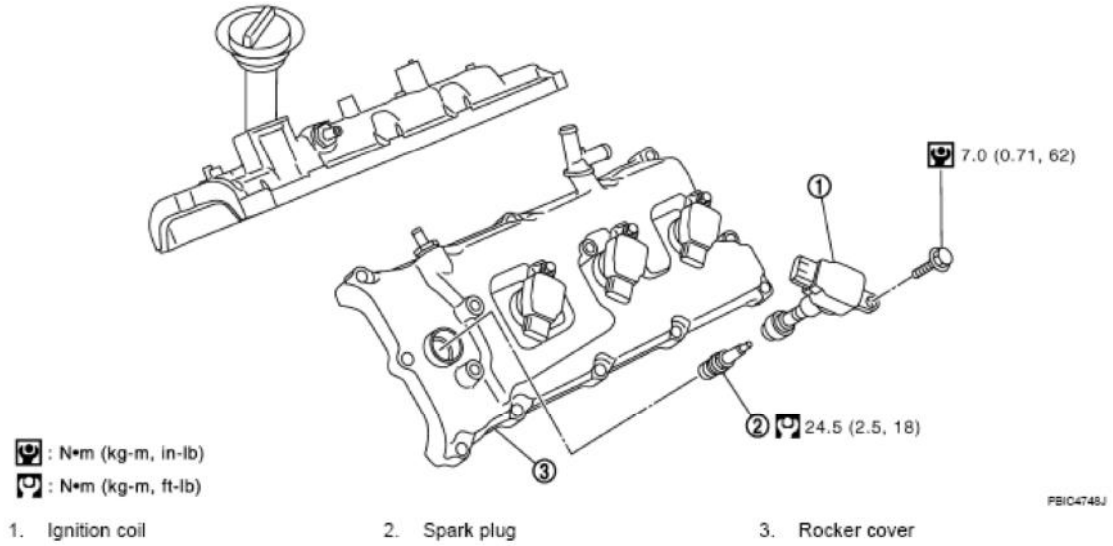


**Fig. 38: Identifying Ignition Coil Components With Torque Specifications**
**Courtesy of NISSAN MOTOR CO., U.S.A.**

## REMOVAL AND INSTALLATION

**REMOVAL**

1. Remove engine room cover (RH and LH). Refer to "**ENGINE ROOM COVER**".
2. Remove engine cover with power tool. Refer to "**INTAKE MANIFOLD**".
3. Remove air duct (inlet), air cleaner case and air duct and resonator assembly. Refer to "**AIR CLEANER AND AIR DUCT**".
4. Disconnect harness connector from ignition coil.

 © 2011 Mitchell Repair Information Company, LLC.

5. Remove ignition coil.

**CAUTION: Do not shock it.**

**INSTALLATION**

Installation is the reverse order of removal.

# SPARK PLUG (PLATINUM-TIPPED TYPE)

**COMPONENTS**

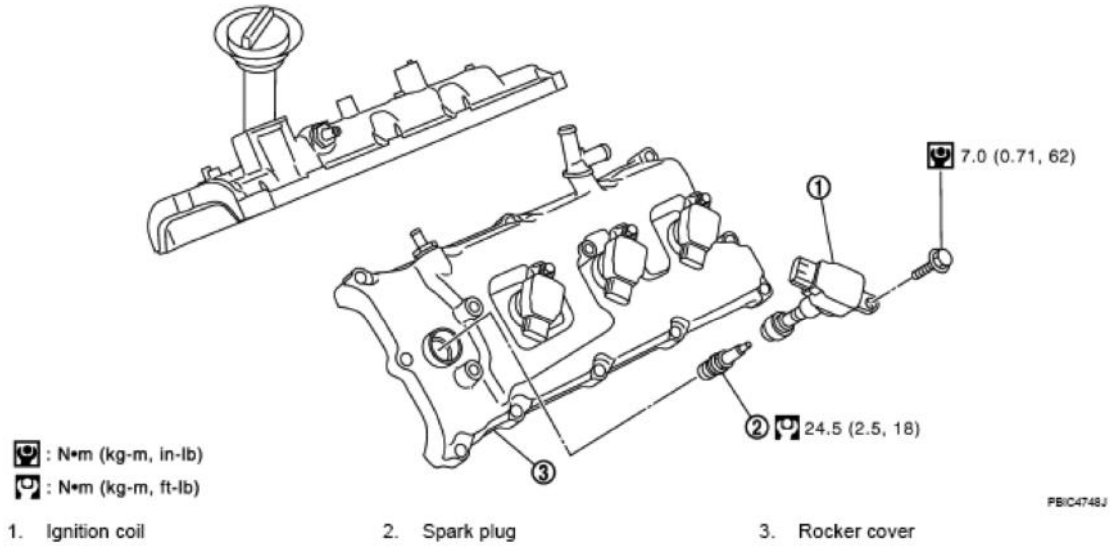


**Fig. 39: Identifying Spark Plug (Platinum-Tipped Type) Components With Torque Specifications**
**Courtesy of NISSAN MOTOR CO., U.S.A.**

**REMOVAL AND INSTALLATION**

**REMOVAL**

1. Remove ignition coil. Refer to "**IGNITION COIL**".
2. Remove spark plug with spark plug wrench (commercial service tool).

**CAUTION: Do not drop or shock it.**

 © 2011 Mitchell Repair Information Company, LLC.

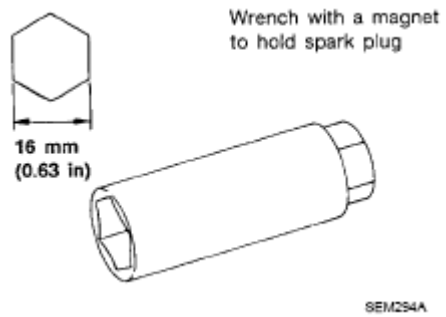


**Fig. 40: Identifying Spark Plug Tool**
**Courtesy of NISSAN MOTOR CO., U.S.A.**

**INSPECTION AFTER REMOVAL**

**Use standard type spark plug for normal condition** .

Hot type spark plug is suitable when fouling occurs with standard type spark plug under conditions such as:

- Frequent engine starts
- Low ambient temperatures

Cold type spark plug is suitable when spark plug knock occurs with standard type spark plug under conditions such as:

- Extended highway driving
- Frequent high engine revolution

**SPARK PLUG TOOL SPECIFICATION**

| | |
|---|---|
| Make | NGK |
| Standard type | PLFR5A-11 |
| Hot type | PLFR4A-11 |
| Cold type | PLFR6A-11 |

**Gap (Nominal) : 1.1 mm (0.043 in)**

**CAUTION:**

- **Do not drop or shock spark plug.**
- **Do not use wire brush for cleaning.**
- **If plug tip is covered with carbon, spark plug cleaner may be used.**

**Cleaner air pressure:**

**Less than 588 kPa (6 kg/cm$^2$ , 85 psi)**

**Cleaning time:**

 © 2011 Mitchell Repair Information Company, LLC.

**Less than 20 seconds**

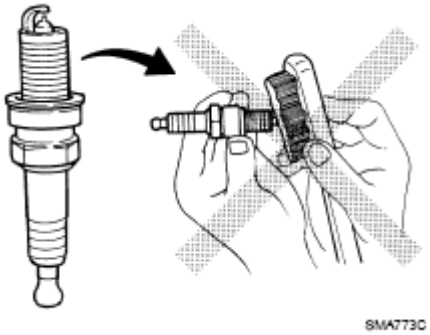


**Fig. 41: Precaution For - Never Use Wire Brush For Cleaning Spark Plug**
**Courtesy of NISSAN MOTOR CO., U.S.A.**

- **Checking and adjusting plug gap is not required between change intervals.**

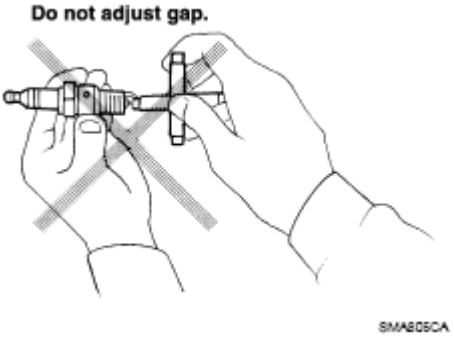


**Fig. 42: Precaution For - Do Not Adjusting Spark Plug Gap**
**Courtesy of NISSAN MOTOR CO., U.S.A.**

**INSTALLATION**

Installation is the reverse order of removal.

# FUEL INJECTOR AND FUEL TUBE

**COMPONENTS**

 © 2011 Mitchell Repair Information Company, LLC.

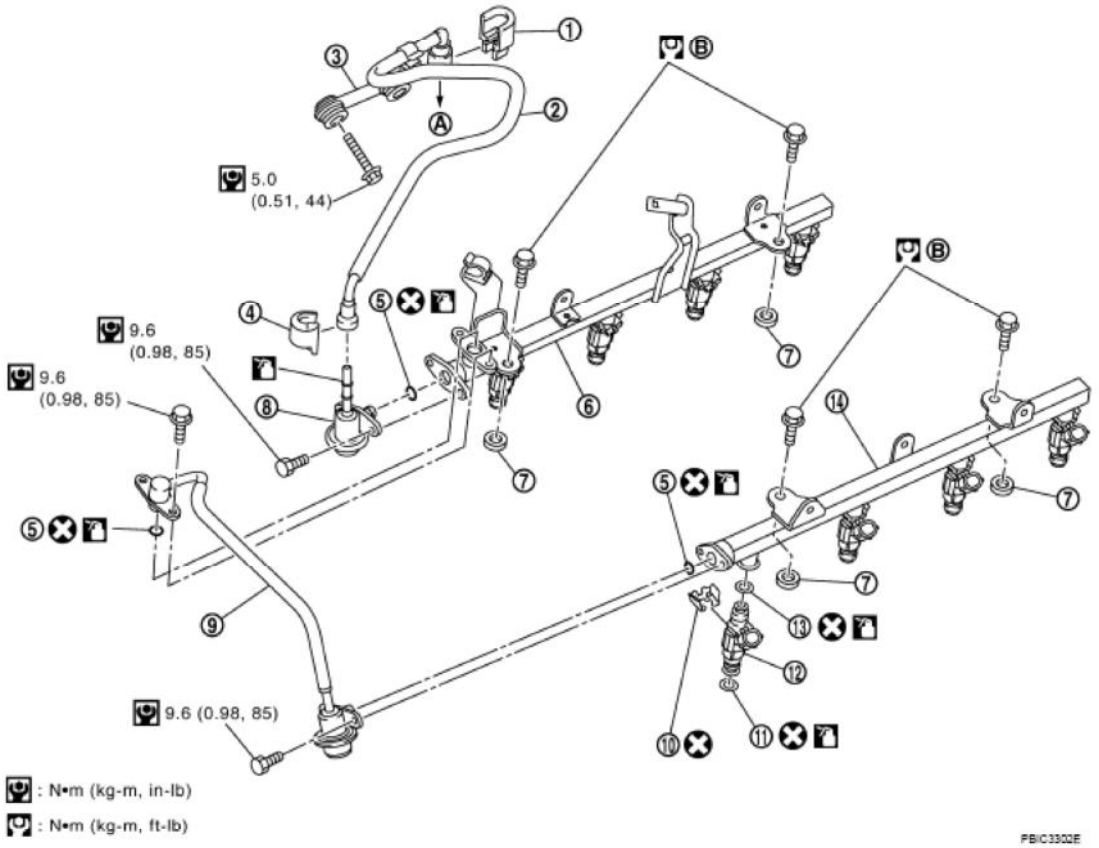


| | | |
|---|---|---|
| 1. Quick connector cap | 2. Fuel feed hose | 3. Fuel feed hose bracket |
| 4. Quick connector cap | 5. O-ring | 6. Fuel tube (RH) |
| 7. Spacer | 8. Fuel feed damper | 9. Fuel damper and fuel hose assembly |
| 10. Clip | 11. O-ring (Green) | 12. Fuel injector |
| 13. O-ring (Black) | 14. Fuel tube (LH) | |
| A. To centralized under-floor piping | B. Refer to Installation | |

**Fig. 43: Identifying Fuel Injector And Fuel Tube Components With Torque Specifications**
**Courtesy of NISSAN MOTOR CO., U.S.A.**

**CAUTION: Do not remove or disassemble parts unless instructed as shown in the figure.**

- Refer to "**COMPONENTS** " for symbol marks in the figure.

## REMOVAL AND INSTALLATION

### REMOVAL

**WARNING:**

- **Put a "CAUTION: FLAMMABLE" sign in the workshop.**
- **Be sure to work in a well ventilated area and furnish workshop with a CO2 fire extinguisher.**
- **Do not smoke while servicing fuel system. Keep open flames and sparks away from the work area.**

 © 2011 Mitchell Repair Information Company, LLC.

- **To avoid the danger of being scalded, do not drain engine coolant when engine is hot.**

1. Remove engine room cover (RH and LH). Refer to "**ENGINE ROOM COVER**".
2. Remove engine cover with power tool. Refer to "**INTAKE MANIFOLD**".
3. Release fuel pressure. Refer to "**FUEL PRESSURE RELEASE** ".
4. Disconnect fuel feed hose on engine side as follows: (Perform same procedure for the side of centralized under-floor piping as well.)

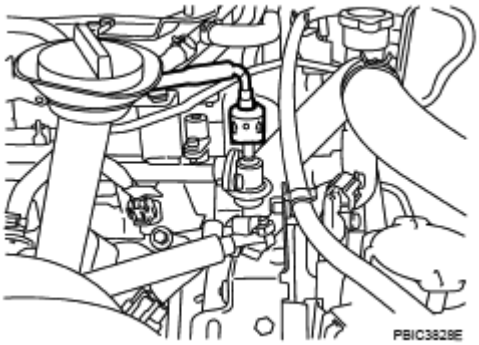


**Fig. 44: Identifying Fuel Feed Hose**
**Courtesy of NISSAN MOTOR CO., U.S.A.**

a. Remove quick connector cap from quick connector connection.

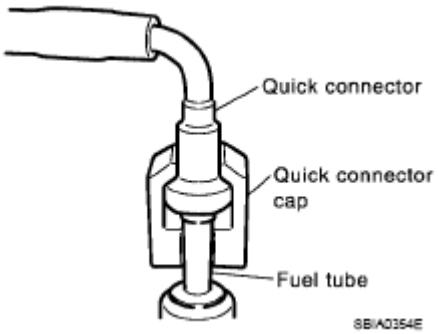


**Fig. 45: Identifying Quick Connector Cap On Quick Connector Joint**
**Courtesy of NISSAN MOTOR CO., U.S.A.**

b. Disconnect quick connector from fuel feed damper as follows:

**CAUTION: Disconnect quick connector by using quick connector release [SST: J-45488], not by picking out retainer tabs (centralized under-floor piping side).**

I. With the sleeve side of quick connector release facing to quick connector, install quick connector release onto fuel tube.

 © 2011 Mitchell Repair Information Company, LLC.

II. Insert quick connector release into quick connector until sleeve contacts and goes no further. Hold quick connector release on that position.

**CAUTION: Inserting quick connector release hard will not disconnect quick connector. Hold quick connector release where it contacts and goes no further.**

III. Draw and pull out quick connector straight from fuel feed damper.

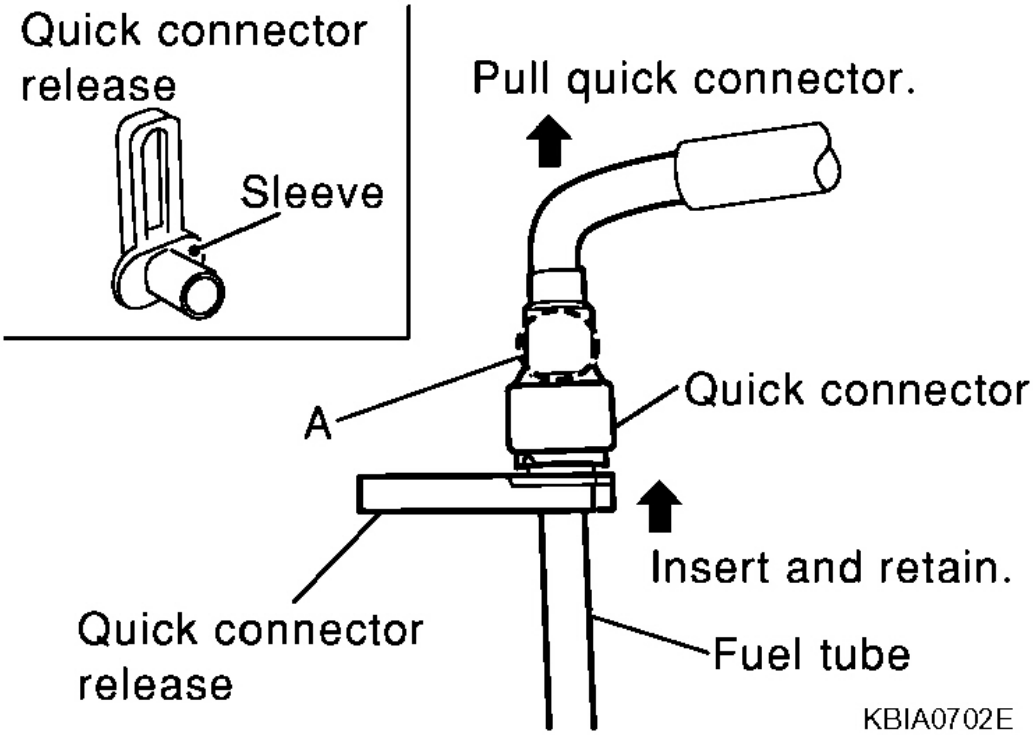


**Fig. 46: Pulling Out Quick Connector Straight From Fuel Tube**
**Courtesy of NISSAN MOTOR CO., U.S.A.**

**CAUTION:**

- **Pull quick connector holding "A" position as shown in the figure.**
- **Do not pull with lateral force applied. O-ring inside quick connector may be damaged.**
- **Prepare container and cloth beforehand as fuel will leak out.**
- **Avoid fire and sparks.**

 © 2011 Mitchell Repair Information Company, LLC.

- **Keep parts away from heat source. Especially, be careful when welding is performed around them.**
- **Do not expose parts to battery electrolyte or other acids.**
- **Do not bend or twist connection between quick connector and fuel feed hose during installation/removal.**
- **To keep clean the connecting portion and to avoid damage and foreign materials, cover them completely with plastic bags or something similar.**

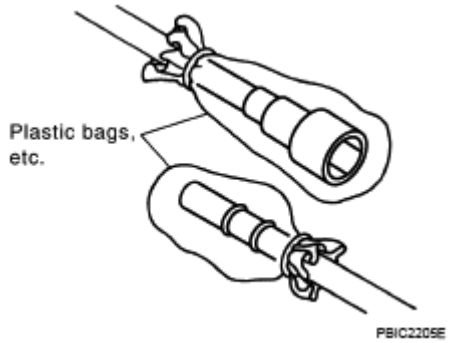


**Fig. 47: Covering Quick Connector In Plastic Bags**
**Courtesy of NISSAN MOTOR CO., U.S.A.**

5. Disconnect fuel damper and fuel hose assembly from fuel tubes (RH and LH).

**CAUTION:**
- **While hoses are disconnected, plug them to prevent fuel from draining.**
- **Do not separate fuel damper and fuel hose.**

6. Disconnect harness connector from fuel injector.
7. Loosen mounting bolts in reverse order as shown in the figure, and remove fuel tube and fuel injector assembly.

**CAUTION: Never tilt it, or remaining fuel in pipes may flow out from pipes**

 © 2011 Mitchell Repair Information Company, LLC.

**Fig. 48: Identifying Fuel Damper And Fuel Hose**
**Courtesy of NISSAN MOTOR CO., U.S.A.**

8. Remove spacers on intake manifold (lower).
9. Remove fuel injector from fuel tube as follows:
   a. Open and remove clip.
   b. Remove fuel injector from fuel tube by pulling straight.

**CAUTION:**

- **Be careful with remaining fuel that may go out from fuel tube.**
- **Be careful not to damage injector nozzles during removal.**
- **Do not bump or drop fuel injector.**
- **Do not disassemble fuel injector.**

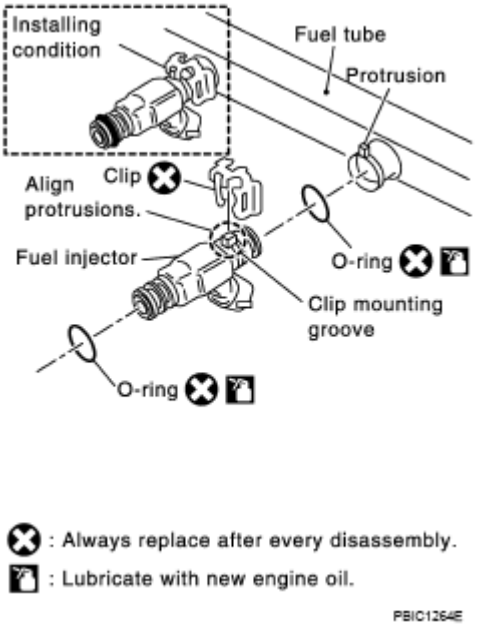


**Fig. 49: Identifying Fuel Injector Components**
**Courtesy of NISSAN MOTOR CO., U.S.A.**

10. Remove fuel feed damper.

 © 2011 Mitchell Repair Information Company, LLC.

**INSTALLATION**

1. Install fuel feed damper.
   - When handling new O-rings, be careful of the following caution.

**CAUTION:**

- **Handle O-ring with bare hands. Do not wear gloves.**
- **Lubricate O-ring with new engine oil.**
- **Do not clean O-ring with solvent.**
- **Make sure that O-ring and its mating part are free of foreign material.**
- **When installing O-ring, be careful not to scratch it with tool or fingernails. Also be careful not to twist or stretch O-ring. If O-ring was stretched while it was being attached, do not insert it quickly into fuel tube.**
- **Insert new O-ring straight into fuel tube. Do not decenter or twist it.**

   - Insert fuel feed damper straight into fuel tube (RH).
   - Tighten mounting bolts evenly in turn.
   - After tightening mounting bolts, make sure that there is no gap between flange and fuel tube (RH).
2. Install new O-rings to fuel injector paying attention to the following caution.

**CAUTION:**

- **Upper and lower O-ring are different. Be careful not to confuse them.**

  **Fuel tube side : Black**

  **Nozzle side : Green**

- **Handle O-ring with bare hands. Never wear gloves.**
- **Lubricate O-ring with new engine oil.**
- **Do not clean O-ring with solvent.**
- **Make sure that O-ring and its mating part are free of foreign material.**
- **When installing O-ring, be careful not to scratch it with tool or fingernails. Also be careful not to twist or stretch O-ring. If O-ring was stretched while it was being attached, do not insert it quickly into fuel tube.**
- **Insert O-ring straight into fuel injector. Do not decenter or twist it.**

3. Install fuel injector to fuel tube as follows:

 © 2011 Mitchell Repair Information Company, LLC.

a. Insert clip into clip mounting groove on fuel injector.
   - Insert clip so that "protrusion A" of fuel injector matches "cutout A" of clip.

**CAUTION:**
- **Do not reuse clip. Replace it with a new one.**
- **Be careful to keep clip from interfering with O-ring. If interference occurs, replace O-ring.**

b. Insert fuel injector into fuel tube with clip attached.
   - Insert it while matching it to the axial center.
   - Insert fuel injector so that "protrusion B" of fuel tube matches "cutout B" of clip.
   - Make sure that fuel tube flange is securely fixed in flange fixing groove on clip.
c. Make sure that installation is complete by checking that fuel injector does not rotate or come off.
   - Make sure that protrusions of fuel injectors are aligned with cutouts of clips after installation.

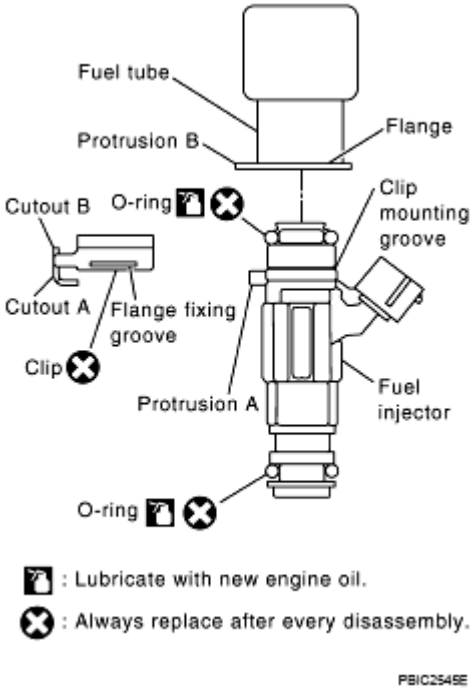


**Fig. 50: Checking Fuel Injector**
**Courtesy of NISSAN MOTOR CO., U.S.A.**

4. Install spacers on intake manifold (lower).
5. Install fuel tube and fuel injector assembly to intake manifold (lower).

**CAUTION: Be careful not to let tip of injector nozzle come in contact with other parts.**

- Tighten mounting bolts in two steps in numerical order as shown in the figure.

 © 2011 Mitchell Repair Information Company, LLC.

**1st step : 10.1 N.m (1.0 kg-m, 7 ft-lb)**

**2nd step : 23.5 N.m (2.4 kg-m, 17 ft-lb)**

**Fig. 51: Identifying Fuel Tube**
**Courtesy of NISSAN MOTOR CO., U.S.A.**

6. Connect fuel feed hose on engine side as follows: (Unless otherwise indicated, the installation to the engine side and centralized under-floor piping side is exactly alike.)
   a. Make sure no foreign substances are deposited in and around fuel tube and quick connector, and no damage on them.
   b. Thinly apply new engine oil around fuel tube from tip end to spool end.
   c. Align center to insert quick connector straightly into fuel tube.

   Engine side:

   - Insert fuel tube into quick connector until top spool is completely inside quick connector, and 2nd level spool exposes right below quick connector.

**CAUTION:**

- **Hold "A" position as shown in the figure when inserting fuel tube into quick connector.**
- **Carefully align center to avoid inclined insertion to prevent damage to O-ring inside quick connector.**
- **Insert until you hear a "click" sound and actually feel the engagement.**

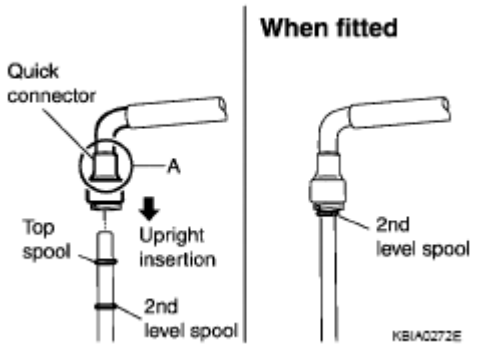


 © 2011 Mitchell Repair Information Company, LLC.

**Fig. 52: Inserting Fuel Tube Into Quick Connector**
**Courtesy of NISSAN MOTOR CO., U.S.A.**

- **To avoid mis-identification of engagement with a similar sound, be sure to perform the next step.**

Centralized under-floor piping side:

- Visually confirm that the two retainer tabs are connected to the connector.

**CAUTION:**
- **Carefully align center to avoid inclined insertion to prevent damage to O-ring inside quick connector.**
- **Insert until you hear a "click" sound and actually feel the engagement.**
- **To avoid mis-identification of engagement with a similar sound, be sure to perform the next step.**

d. Pull quick connector by hand holding position. Make sure it is completely engaged (connected) so that it does not come out from fuel tube.
e. Install quick connector cap on quick connector connection.

**CAUTION: If cap cannot be installed smoothly, quick connector may have not been installed correctly. Check connection again.**

f. Install fuel feed hose to hose clamps.

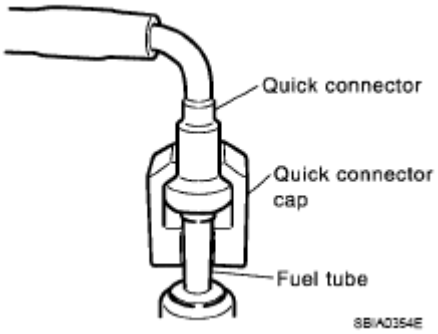


**Fig. 53: Identifying Quick Connector Cap On Quick Connector Joint**
**Courtesy of NISSAN MOTOR CO., U.S.A.**

7. Install in the reverse order of removal after this step.

**INSPECTION AFTER INSTALLATION**

**Check on Fuel Leakage**

 © 2011 Mitchell Repair Information Company, LLC.

1. Turn ignition switch "ON" (with engine stopped). With fuel pressure applied to fuel piping, check for fuel leakage at connection points.

**NOTE: Use mirrors for checking at points out of clear sight.**

2. Start engine. With engine speed increased, check again for fuel leakage at connection points.

**CAUTION: Do not touch engine immediately after stopped, as engine becomes extremely hot.**

# ROCKER COVER

## COMPONENTS

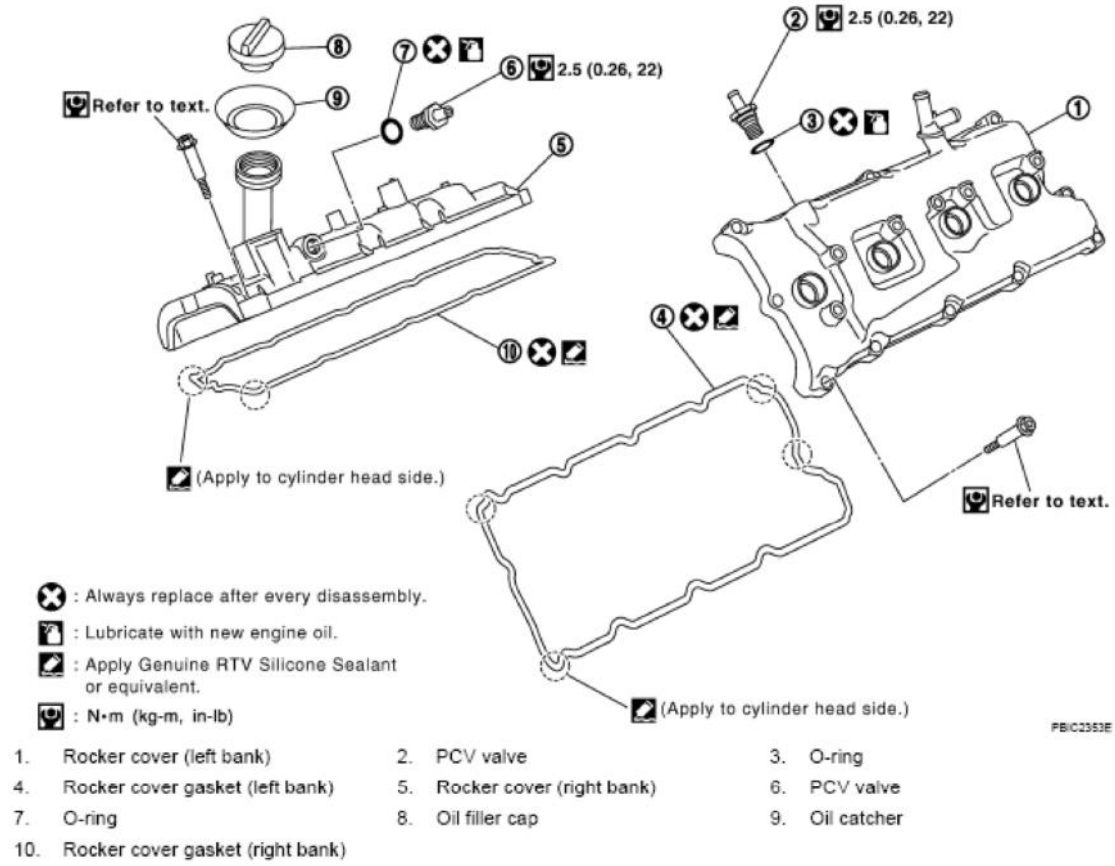


**Fig. 54: Identifying Rocker Cover Components With Torque Specifications**
**Courtesy of NISSAN MOTOR CO., U.S.A.**

## REMOVAL AND INSTALLATION

### REMOVAL

 © 2011 Mitchell Repair Information Company, LLC.

1. Remove engine room cover (RH and LH). Refer to "**ENGINE ROOM COVER**".
2. Remove engine cover with power tool. Refer to "**INTAKE MANIFOLD**".
3. Refer to the following for incidental works related to left bank.
   a. Remove air duct (inlet), air cleaner case and air duct and resonator assembly. Refer to "**AIR CLEANER AND AIR DUCT**".
   b. Move harness on upper rocker cover and its peripheral aside.
   c. Remove harness bracket from camshaft bracket (No. 6). Refer to "**CAMSHAFT**".
   d. Remove ignition coil. Refer to "**IGNITION COIL**".
   e. Remove PCV hose from PCV valve.
4. Refer to the following for incidental works related to right bank.
   a. Move harness on upper rocker cover and its peripheral aside.
   b. Remove ignition coil. Refer to "**IGNITION COIL**".
   c. Remove PCV hose from PCV valve.
5. Remove PCV valves and O-rings from rocker covers (right and left bank), if necessary.
6. Remove oil filler cap and oil catcher from rocker cover (right bank), if necessary.
7. Remove rocker cover (right bank) as follows:
   a. Remove battery cover. Refer to "**ENGINE ROOM COVER**".
   b. Remove battery and battery tray. Refer to "**BATTERY** ".
   c. Remove grommet (2) from cowl top panel hole (RH).

1 : Relay box
⇦ : Engine front

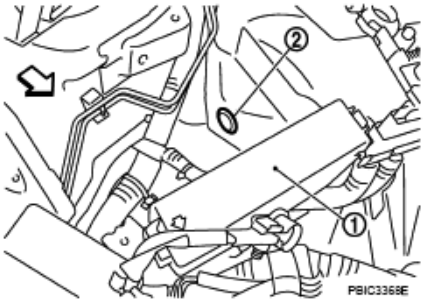


**Fig. 55: Identifying Relay Box And Grommet**
**Courtesy of NISSAN MOTOR CO., U.S.A.**

   d. Loosen mounting bolts in reverse order as that shown in the figure.

**CAUTION: Do not hold oil filler neck (right bank) so as not to damage it.**

**NOTE: Loosen No. 10 bolt of right bank from cowl top panel hole using tool.**

 © 2011 Mitchell Repair Information Company, LLC.

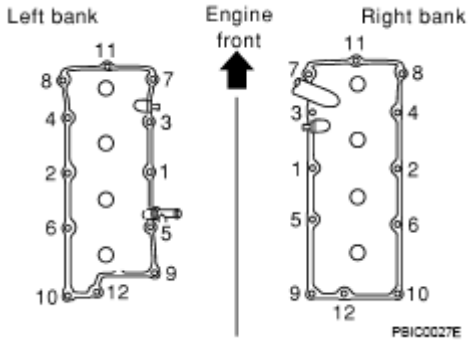


**Fig. 56: Identifying Rocker Cover (Right Bank) Mounting Bolts Loosening Sequence**
**Courtesy of NISSAN MOTOR CO., U.S.A.**

8. Remove rocker cover (left bank) as follows:
   a. Remove brake master cylinder cover. Refer to "**ENGINE ROOM COVER**".
   b. Remove two grommets (1) from cowl top panel hole (LH).

2 : Brake master cylinder
⇦ : Engine front

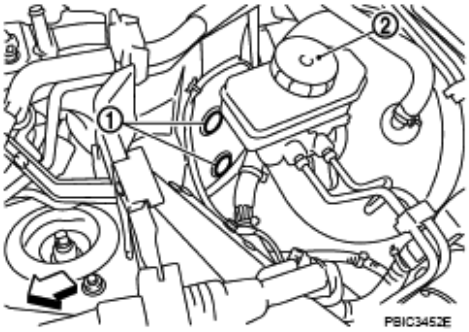


**Fig. 57: Identifying Brake Master Cylinder Cover And Grommets**
**Courtesy of NISSAN MOTOR CO., U.S.A.**

   c. Loosen mounting bolts in reverse order as that shown in the figure.

**NOTE: Loosen No. 10 and 12 bolts of the left bank from cowl top panel hole using tool.**

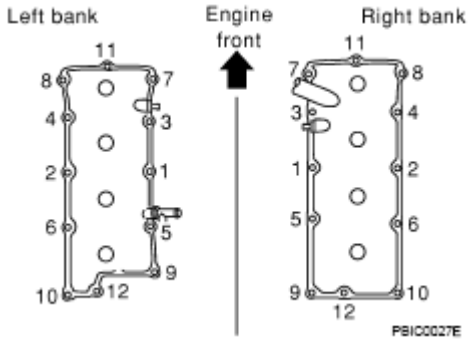


**Fig. 58: Identifying Rocker Cover (Left Bank) Mounting Bolts Loosening Sequence**

 © 2011 Mitchell Repair Information Company, LLC.

**Courtesy of NISSAN MOTOR CO., U.S.A.**

- Refer to the following procedure for removal of mounting bolts No. 10 and 12. (For ICC models)

**CAUTION: Do not bend or damage brake piping by tools.**

- No. 10 bolt. See the figure and remove them using a 300 mm expansion bar.

A : Cowl top panel hole
⇦ : Engine front

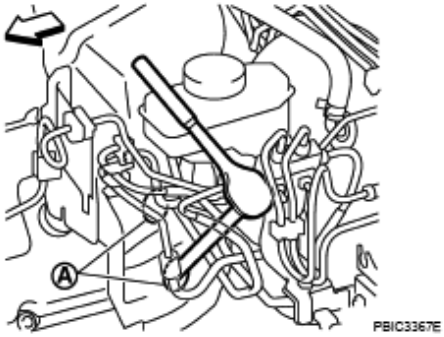


**Fig. 59: Identifying Cowl Top Panel Hole**
**Courtesy of NISSAN MOTOR CO., U.S.A.**

- No. 12 bolt. See the figure and remove them using a 300 mm expansion bar.

**NOTE: Slide the brake piping frontward to obtain working space.**

A : Cowl top panel hole
⇦ : Engine front

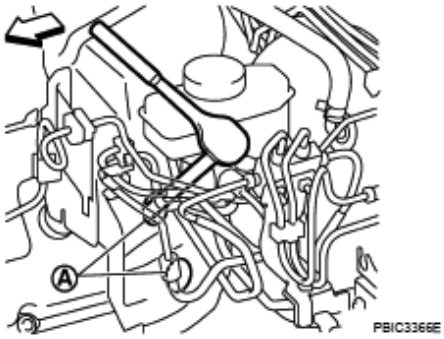


**Fig. 60: Identifying Cowl Top Panel Hole**
**Courtesy of NISSAN MOTOR CO., U.S.A.**

9. Remove rocker cover gaskets from rocker covers.
10. Use scraper to remove all traces of liquid gasket from cylinder head and camshaft bracket (No. 1 and 6).

**CAUTION: Do not scratch or damage the mating surface when cleaning off oil liquid gasket.**

 © 2011 Mitchell Repair Information Company, LLC.

**INSTALLATION**

1. Apply liquid gasket with tube presser [SST: WS39930000 ( - )] to joint among rocker cover, cylinder head and camshaft bracket (No. 1 and 6) as follows:

   **Use Genuine RTV Silicone Sealant or equivalent.** Refer to "**RECOMMENDED CHEMICAL PRODUCTS AND SEALANTS** ".

   **NOTE: The figure shows an example of left bank side [zoomed in shows camshaft bracket (No. 1)]. Apply only to camshaft bracket (No. 1) for right bank side.**

   a. Refer to the figure "a" to apply liquid gasket to joint part of camshaft bracket (both No. 1 and 6) and cylinder head.
   b. Refer to the figure "b" to apply liquid gasket to the figure "a" squarely.

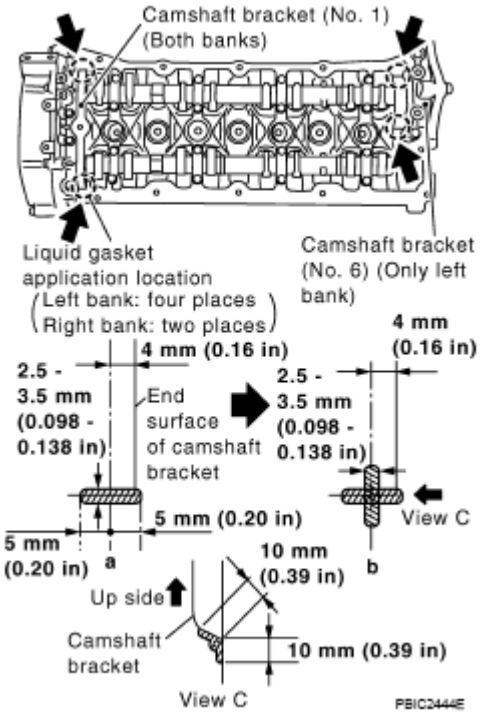


**Fig. 61: Identifying Liquid Gasket Applying Location**
**Courtesy of NISSAN MOTOR CO., U.S.A.**

2. Install new rocker cover gaskets to rocker covers.
3. Install rocker cover.
   - Check if rocker cover gasket is not dropped from installation groove of rocker cover.
4. Tighten mounting bolts in two steps separately in numerical order as shown in the figure.

**CAUTION:**
- **Do not hold oil filler neck (right bank) so as not to damage it.**
- **Do not bend or damage brake piping by tools. (ICC models)**

 © 2011 Mitchell Repair Information Company, LLC.

**NOTE:** **Tighten No. 10 bolt of the right bank and No. 10 and 12 bolts of the left bank from cowl top panel hole with using tool.**
**1st step : 2.0 N.m (0.2 kg-m, 18 in-lb)**
**2nd step : 8.3 N.m (0.85 kg-m, 73 in-lb)**

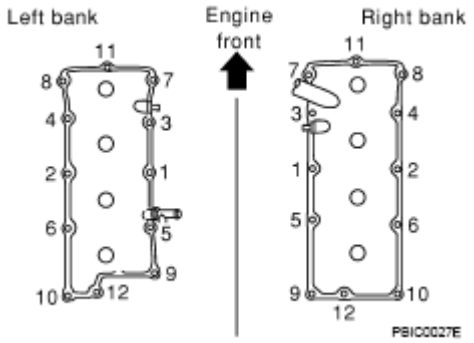


**Fig. 62: Identifying Rocker Cover (Right Bank) Mounting Bolts Loosening Sequence**
**Courtesy of NISSAN MOTOR CO., U.S.A.**

5. Install oil filler cap and oil catcher to rocker cover (right bank), if removed.
6. Install new O-rings and PCV valves to rocker covers (right and left bank), if removed.
7. Install in the reverse order of removal.

# TIMING CHAIN

## COMPONENTS

 © 2011 Mitchell Repair Information Company, LLC.

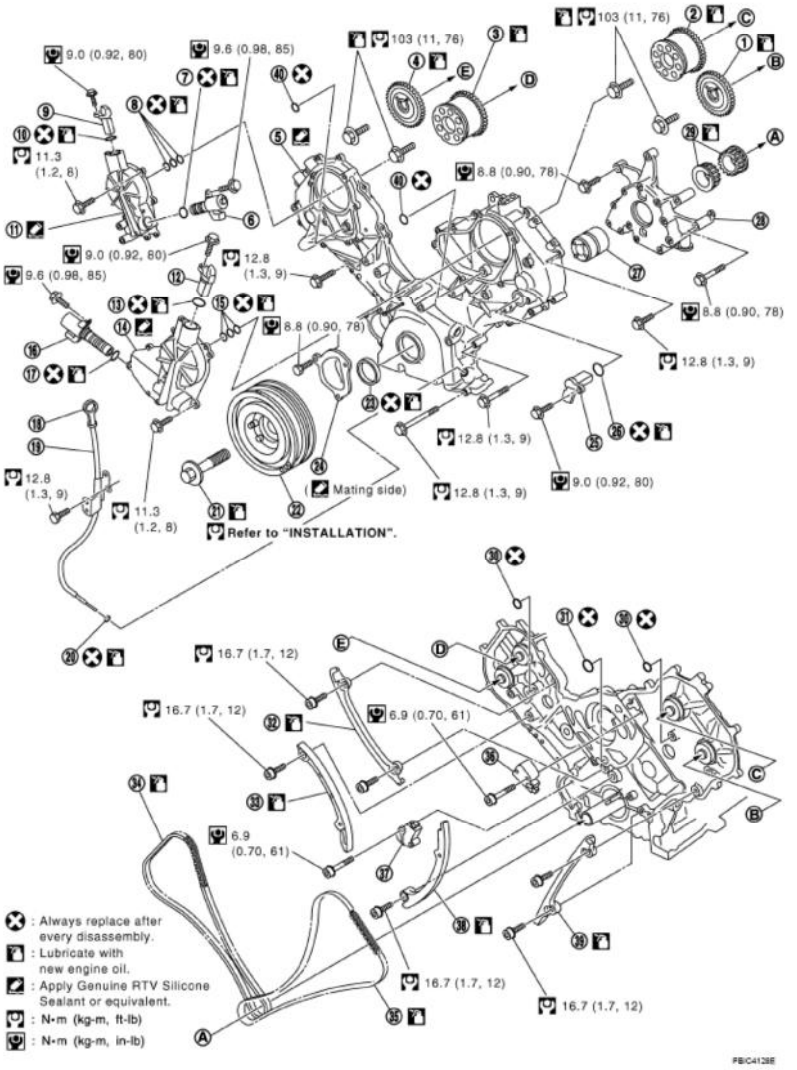


| | | | | | |
|---|---|---|---|---|---|
| 1. | Camshaft sprocket (EXH) | 2. | Camshaft sprocket (INT) | 3. | Camshaft sprocket (INT) |
| 4. | Camshaft sprocket (EXH) | 5. | Front cover | 6. | Intake valve timing control solenoid valve (right bank) |
| 7. | O-ring | 8. | Seal ring | 9. | Intake valve timing control position sensor (right bank) |
| 10. | O-ring | 11. | Intake valve timing control cover (right bank) | 12. | Intake valve timing control position sensor (left bank) |
| 13. | O-ring | 14. | Intake valve timing control cover (left bank) | 15. | Seal ring |
| 16. | Intake valve timing control solenoid valve (left bank) | 17. | O-ring | 18. | Oil level gauge |
| 19. | Oil level gauge guide | 20. | O-ring | 21. | Crankshaft pulley bolt |
| 22. | Crankshaft pulley | 23. | Front oil seal | 24. | Chain tensioner cover |
| 25. | Camshaft position sensor (PHASE) | 26. | O-ring | 27. | Oil pump drive spacer |
| 28. | Oil pump assembly | 29. | Crankshaft sprocket | 30. | O-ring |
| 31. | O-ring | 32. | Timing chain tension guide (right bank) | 33. | Timing chain slack guide (right bank) |
| 34. | Timing chain (right bank) | 35. | Timing chain (left bank) | 36. | Chain tensioner (left bank) |
| 37. | Chain tensioner (right bank) | 38. | Timing chain slack guide (left bank) | 39. | Timing chain tension guide (left bank) |
| 40. | O-ring | | | | |

**Fig. 63: Identifying Timing Chain Components With Torque Specifications**
**Courtesy of NISSAN MOTOR CO., U.S.A.**

Refer to **CONTENTS** for symbols in the figure.

 © 2011 Mitchell Repair Information Company, LLC.

## REMOVAL AND INSTALLATION

### REMOVAL

1. Remove engine assembly from vehicle. Refer to "**ENGINE ASSEMBLY**".
2. Remove the following components and related parts:
   - Drive belt auto tensioner and idler pulley; Refer to "**DRIVE BELT AUTO TENSIONER AND IDLER PULLEY**".
   - Thermostat housing and hoses; Refer to "**THERMOSTAT AND WATER CONTROL VALVE** ".
   - Ignition coil; Refer to "**IGNITION COIL**".
   - Rocker cover; Refer to "**ROCKER COVER**".
3. If necessary, remove intake valve timing control position sensor (right and left bank) and camshaft position sensor (PHASE) from intake valve timing control cover and front cover.

**CAUTION:**
- **Handle carefully to avoid dropping and shocks.**
- **Never disassemble.**

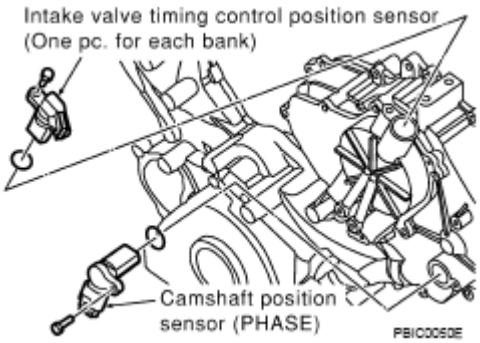


**Fig. 64: Identifying Intake Valve Timing Control Position Sensor**
**Courtesy of NISSAN MOTOR CO., U.S.A.**

4. If necessary, remove intake valve timing control solenoid valve from intake valve timing control cover.

**CAUTION:**
- **Handle components and parts carefully to avoid dropping and shocks.**
- **Never disassemble.**
- **Never allow metal powder to adhere to magnetic part at sensor tip.**
- **Never place sensors in a location where they are exposed to magnetism.**

5. Remove intake valve timing control cover as follows:
   a. Loosen and remove mounting bolts in the reverse order as shown in the figure.

 © 2011 Mitchell Repair Information Company, LLC.

b. Use seal cutter [SST: KV10111100 (J37228)] to cut liquid gasket for removal.

**CAUTION:**

- **Exercise care not to damage mating surfaces.**
- **Pull out cover keeping levelness without an angle, as inner part of cover is engaged with the center of camshaft sprocket (INT).**

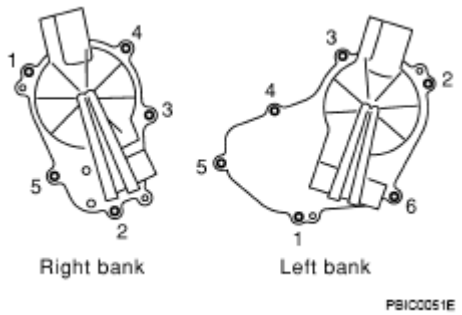


**Fig. 65: Identifying Intake Valve Timing Control Cover Mounting Bolts Loosening Sequence**
**Courtesy of NISSAN MOTOR CO., U.S.A.**

6. Remove O-rings from front cover.

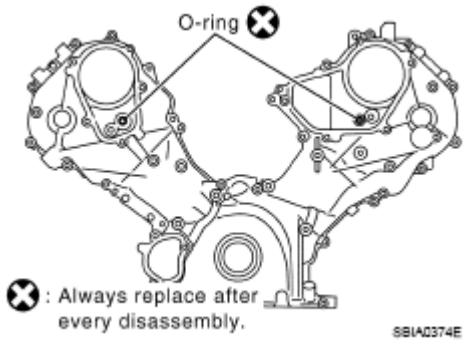


**Fig. 66: Identifying O-Rings**
**Courtesy of NISSAN MOTOR CO., U.S.A.**

7. Obtain No. 1 cylinder at TDC of its compression stroke as follows:
   a. Rotate crankshaft pulley clockwise to align the TDC identification notch (without paint mark) with timing indicator on front cover.

 © 2011 Mitchell Repair Information Company, LLC.

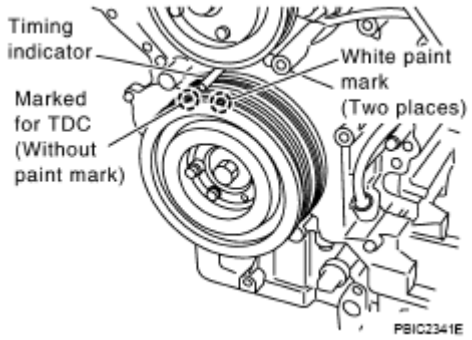


**Fig. 67: Aligning TDC Identification Notch**
**Courtesy of NISSAN MOTOR CO., U.S.A.**

b. Make sure that both intake and exhaust cam noses of No. 1 cylinder (engine front side of left bank) are located as shown in the figure.
   - If not, turn crankshaft one revolution (360 degrees) and align as shown in the figure.

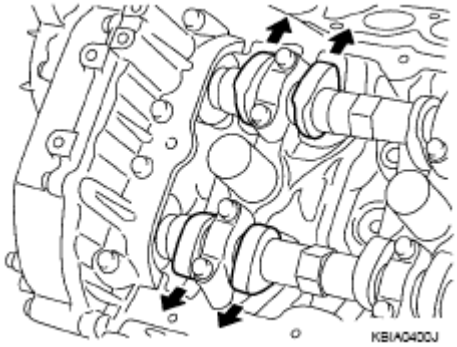


**Fig. 68: Checking Intake And Exhaust Cam Lobes Of No. 1 Cylinder**
**Courtesy of NISSAN MOTOR CO., U.S.A.**

8. Remove crankshaft pulley as follows:
   a. Remove rear plate cover, and set ring gear stopper (SST).
   b. Loosen crankshaft pulley bolt, and then pull crankshaft pulley with both hands to remove it.

**CAUTION:**
- **Do not remove crankshaft pulley bolt. Keep loosened crankshaft pulley bolt in place to protect removed crankshaft pulley from dropping.**
- **Do not remove balance weight (inner hexagon bolt) at the front of crankshaft pulley.**

 © 2011 Mitchell Repair Information Company, LLC.

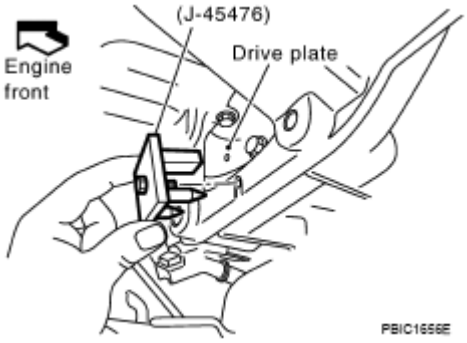


**Fig. 69: Identifying Set Ring Gear Stopper**
**Courtesy of NISSAN MOTOR CO., U.S.A.**

9. Remove oil pan and oil strainer. Refer to "**OIL PAN AND OIL STRAINER**".
10. Remove front cover as follows:
    a. Loosen mounting bolts in reverse order as shown in the figure.
    b. Use seal cutter [SST: KV10111100 (J37228)] to cut liquid gasket for removal.

**CAUTION:**
- **Exercise care not to damage mating surfaces.**
- **After removal, handle front cover carefully so it does not tilt, cant, or warp under a load.**

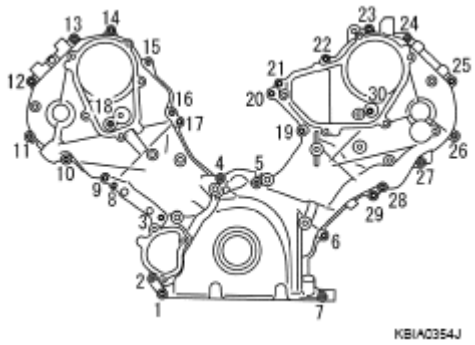


**Fig. 70: Identifying Mounting Bolts Loosening Sequence**
**Courtesy of NISSAN MOTOR CO., U.S.A.**

11. Remove front oil seal from front cover using suitable tool.
    - Use screwdriver for removal.

**CAUTION: Be careful not to damage front cover.**

12. Remove O-rings from cylinder heads (right and left bank) and cylinder block.

 © 2011 Mitchell Repair Information Company, LLC.

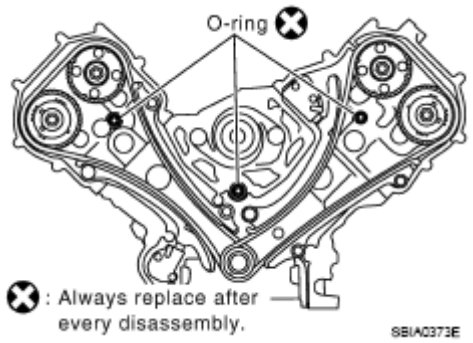


**Fig. 71: Identifying O-Rings Location**
**Courtesy of NISSAN MOTOR CO., U.S.A.**

13. Remove chain tensioner cover from front cover.
    - Use seal cutter [SST: KV10111100 (J37228)] to cut liquid gasket for remove.
14. Remove oil pump drive spacer.
    - Set bolts in the two bolt holes [M6 x pitch 1.0 mm (0.04 in)] on front surface. Using suitable puller, pull oil pump drive spacer off from crankshaft.

**NOTE:** **The dimension between the centers of the two bolt holes is 33 mm (1.30 in).**
**In the figure, a commercial steering puller is used.**

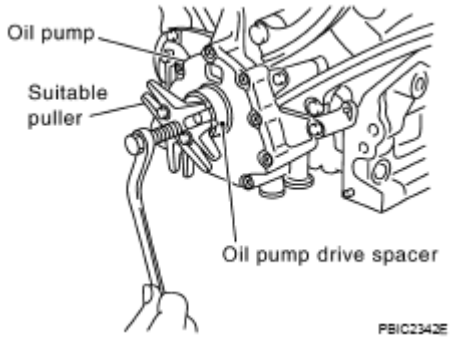


**Fig. 72: Removing Oil Pump Drive Spacer**
**Courtesy of NISSAN MOTOR CO., U.S.A.**

15. Remove oil pump. Refer to "**OIL PUMP** ".
16. Remove chain tensioner (left bank) as follows:

**NOTE:** **To remove timing chain and related parts, start with those on left bank. The procedure for removing parts on right bank is omitted because it is the same as that for left bank.**

a. Press tab in the direction of arrow (or turn lever in the direction of arrow) to unlock the locking with the groove that stops tensioner plunger from returning.

 © 2011 Mitchell Repair Information Company, LLC.

- Lightly press tensioner plunger to release the tension of spring for this operation.

b. Push in tensioner plunger to align the hole on lever and that on pump main body.
   - Pushing in tensioner too far does not allow the holes to align. Therefore, push in plunger to the degree at which the start of stopper groove and tab engages.

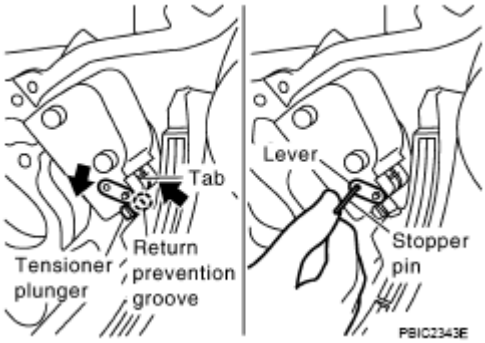


**Fig. 73: Inserting Stopper Pin**
**Courtesy of NISSAN MOTOR CO., U.S.A.**

c. Insert stopper pin [hard wire with approx. 0.5 mm (0.020 in) diameter or similar tool] to fix plunger. With plunger fixed, remove chain tensioner.

17. Remove chain tension guide and timing chain slack guide.
18. Remove timing chain and crankshaft sprocket.

**CAUTION: After removing timing chain, do not turn crankshaft and camshaft separately, or valves will strike the piston head.**

19. With hexagonal part of camshaft locked with wrench, loosen mounting bolts securing camshaft sprocket to remove camshaft sprocket.

**CAUTION: Do not loosen mounting bolts with securing anything other than the camshaft hexagonal portion or with tensioning the timing chain.**

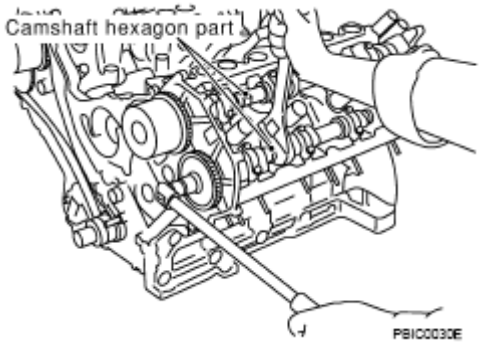


**Fig. 74: Loosening Mounting Bolts**
**Courtesy of NISSAN MOTOR CO., U.S.A.**

 © 2011 Mitchell Repair Information Company, LLC.

20. Perform same procedure as for left bank, remove timing chain and related parts on right side.
21. Use scraper to remove all traces of old liquid gasket from front cover and opposite mating surfaces.
    - Remove oil liquid gasket from bolt hole and thread.

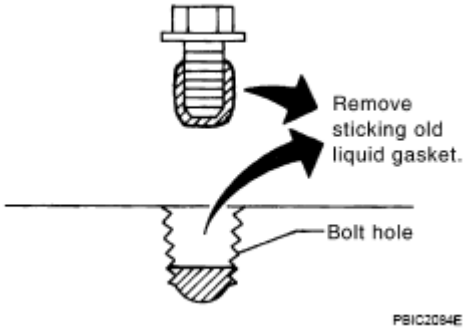


**Fig. 75: Removing Liquid Gasket From Bolt Hole And Thread**
**Courtesy of NISSAN MOTOR CO., U.S.A.**

22. Use scraper to remove all trace of liquid gasket from chain tensioner cover and intake valve timing control covers.

**INSPECTION AFTER REMOVAL**

**Timing Chain**

Check for cracks and any excessive wear at link plates and roller links of timing chain. Replace timing chain as necessary.

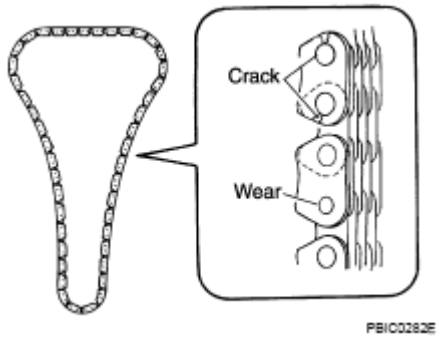


**Fig. 76: Checking Cracks And Any Excessive Wear At Link Plates**
**Courtesy of NISSAN MOTOR CO., U.S.A.**

**INSTALLATION**

 © 2011 Mitchell Repair Information Company, LLC.

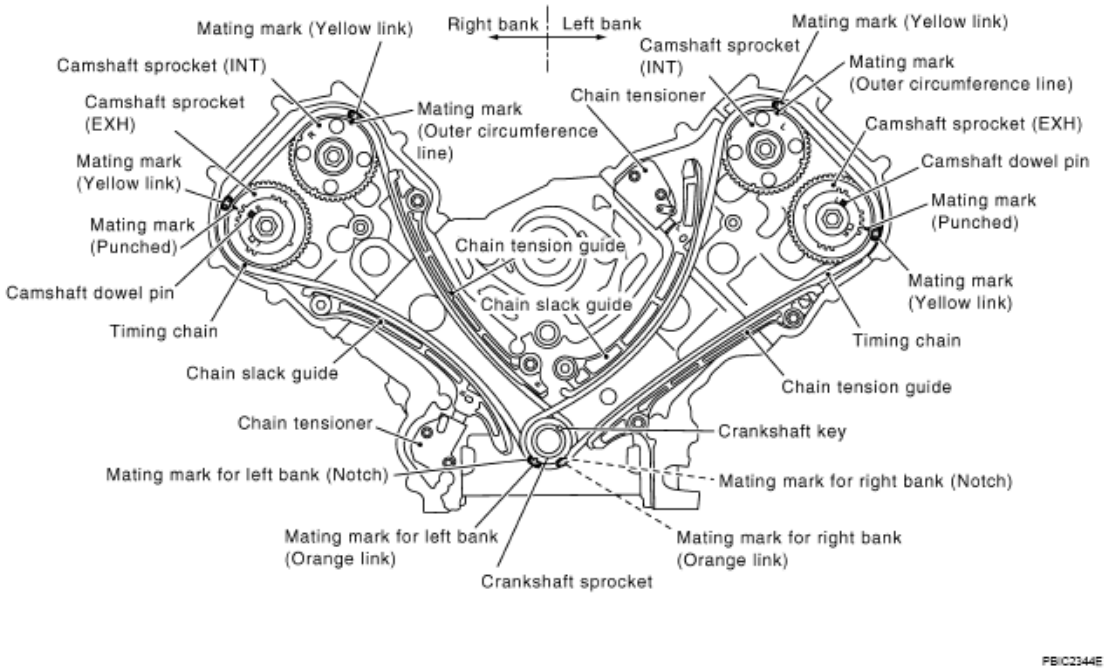


**Fig. 77: Identifying Timing Chain Components**
**Courtesy of NISSAN MOTOR CO., U.S.A.**

**NOTE:**

- **The above figure shows the relationship between the mating mark on each timing chain and that on the corresponding sprocket, with the components installed.**
- **Parts with an identification mark (R or L) should be installed on the corresponding bank according to the mark.**

Parts with an identification mark:

- Camshaft sprocket (INT)
- Dowel pin groove of camshaft sprocket (EXH) (camshaft sprocket is same part both banks)
- Chain tension guide
- Chain slack guide

- To install timing chain and related parts, start with those on right bank. The procedure for installing parts on left bank is omitted because it is the same as that for installation on right bank.

1. Make sure that crankshaft key and dowel pin of each camshaft are located as shown in the figure. (No. 1 cylinder at compression TDC)

**NOTE:** **Though camshaft does not stop at the position as shown in the figure, for the placement of cam nose, it is generally accepted camshaft is placed for the same direction of the figure.**

 © 2011 Mitchell Repair Information Company, LLC.

**Camshaft dowel pin : At cylinder head upper face side in each bank**

**Crankshaft key : At cylinder head side of left bank**

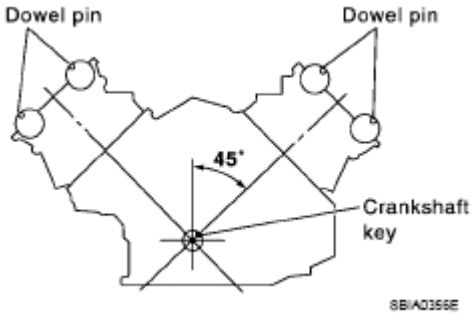


**Fig. 78: Identifying Crankshaft Key And RH Bank Camshaft Dowel Pin And LH Bank Camshaft Dowel Pin**
**Courtesy of NISSAN MOTOR CO., U.S.A.**

2. Install camshaft sprockets.
   - Install onto correct side by checking with identification mark on surface.
   - Install camshaft sprocket (EXH) by selectively using the groove of dowel pin according to the bank. (Common part used for both banks.)
   - Lock the hexagonal part of camshaft in the same procedure as for removal, and tighten mounting bolts.

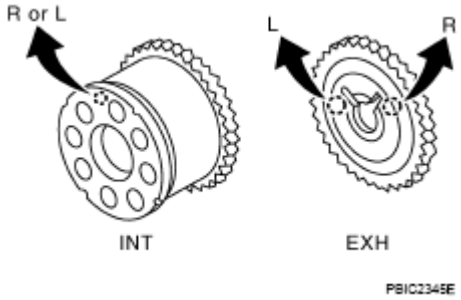


**Fig. 79: Identifying Camshaft Sprockets**
**Courtesy of NISSAN MOTOR CO., U.S.A.**

3. Install crankshaft sprockets for both banks.
   - Install each crankshaft sprocket so that its flange side (the larger diameter side without teeth) faces in the direction shown in the figure.

**NOTE: The same parts are used but facing directions are different.**

 © 2011 Mitchell Repair Information Company, LLC.

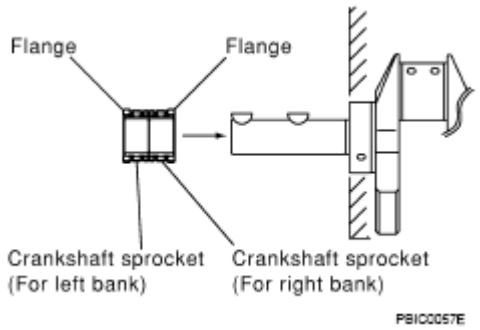


**Fig. 80: Identifying Crankshaft Sprockets**
**Courtesy of NISSAN MOTOR CO., U.S.A.**

4. Install timing chains and related parts.

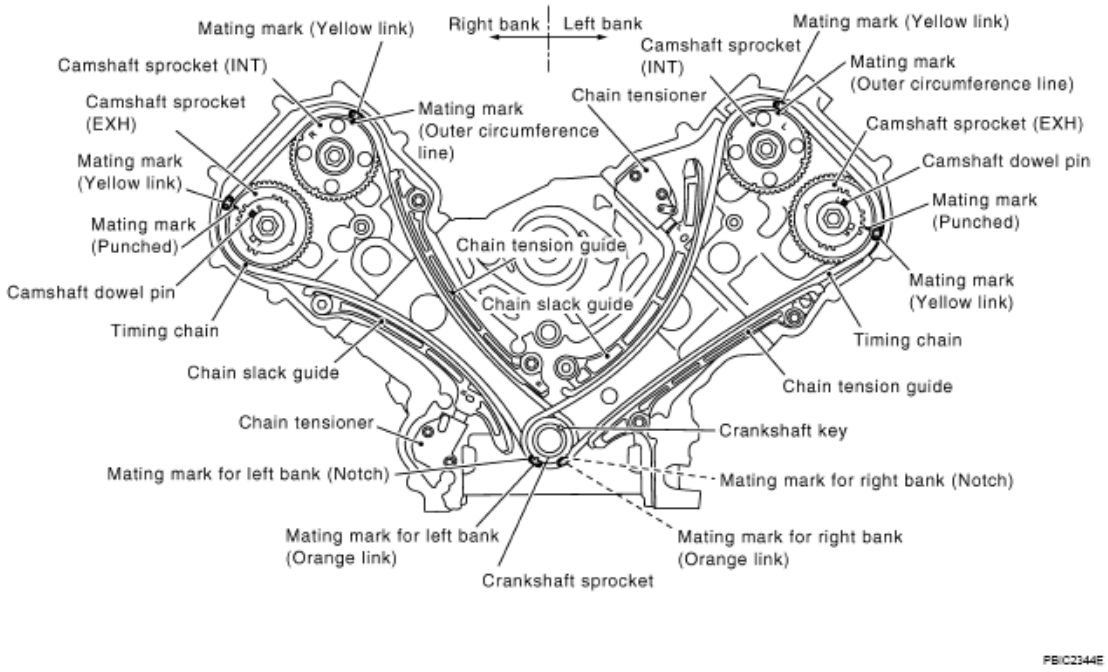


**Fig. 81: Identifying Timing Chains And Related Parts**
**Courtesy of NISSAN MOTOR CO., U.S.A.**

- Align the mating mark on each sprocket and timing chain for installation.

**NOTE:** **Before installing chain tensioner, it is possible to change the position of mating mark on timing chain for that on each sprocket for alignment.**

**CAUTION:** **For the above reason, after the mating marks are aligned, keep them aligned by holding them with a hand.**

 © 2011 Mitchell Repair Information Company, LLC.

- Install slack guides and tension guides onto correct side by checking with identification mark on surface.
- Install chain tensioner with plunger fixed as described in its removal.

**CAUTION:**
- **Before and after the installation of chain tensioner, make sure that the mating mark on timing chain is not out of alignment.**
- **After installing chain tensioner, remove stopper pin to release tensioner. Make sure tensioner is released.**
- **To avoid chain-link skipping of timing chain, do not move crankshaft or camshafts until front cover is installed.**

5. Perform the same procedure as for right bank, install timing chain and related parts on left side.
6. Install oil pump. Refer to "**OIL PUMP** ".
7. Install oil pump drive spacer as follows:
   a. Insert oil pump drive spacer according to the directions of crankshaft key and the two flat surfaces of oil pump inner rotor.
      - If the positional relationship does not allow the insertion, rotate oil pump inner rotor with a finger to allow spacer.
   b. After confirming that the position of each part is in correct condition to allow for spacer, force fit spacer by lightly tapping with plastic hammer until it contacts and does not go further.

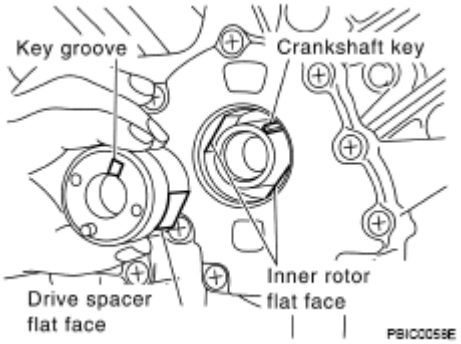


**Fig. 82: Identifying Oil Pump Drive Spacer**
**Courtesy of NISSAN MOTOR CO., U.S.A.**

8. Install front oil seal on front cover.
   - Apply new engine oil to both oil seal lip and dust seal lip.
   - Install it so that each seal lip is oriented as shown in the figure.

**CAUTION: Be careful not to scratch or make burrs on circumference of oil seal.**

 © 2011 Mitchell Repair Information Company, LLC.

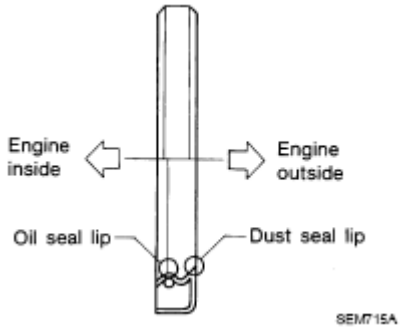


**Fig. 83: Applying Engine Oil To Both Oil Seal Lip And Dust Seal Lip**
**Courtesy of NISSAN MOTOR CO., U.S.A.**

- Using front oil seal drift (commercial service tool), press fit until the height of front oil seal is level with the mounting surface.

  **Front oil seal drift**

  **Outer diameter : 56 mm (2.20 in)**

  **Inner diameter : 49 mm (1.93 in)**

- Make sure the garter spring is in position and seal lips not inverted.

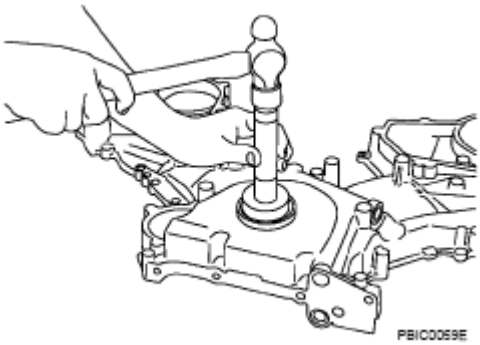


**Fig. 84: Installing Oil Seal**
**Courtesy of NISSAN MOTOR CO., U.S.A.**

9. Install chain tensioner cover to front cover.
   - Apply a continuous bead of liquid gasket with tube presser [SST: WS39930000 ( - )] to front cover as shown in the figure.

     **Use Genuine RTV Silicone Sealant or equivalent.** Refer to "**RECOMMENDED CHEMICAL PRODUCTS AND SEALANTS** ".

 © 2011 Mitchell Repair Information Company, LLC.

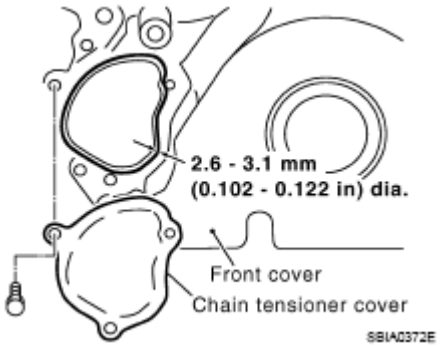


**Fig. 85: Identifying Chain Tensioner Cover**
**Courtesy of NISSAN MOTOR CO., U.S.A.**

10. Install front cover as follows:
    a. Install new O-rings onto cylinder heads (right and left bank) and cylinder block.

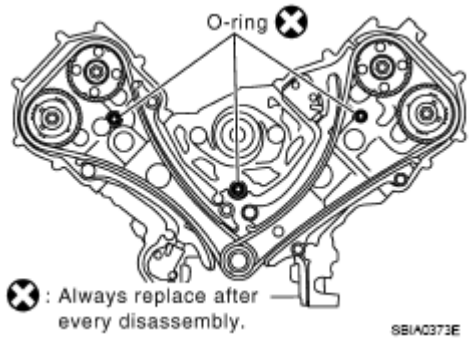


**Fig. 86: Identifying O-Rings Location**
**Courtesy of NISSAN MOTOR CO., U.S.A.**

    b. Apply a continuous bead of liquid gasket with tube presser [SST: WS39930000 ( - )] to front cover as shown in the figure.

    **Use Genuine RTV Silicone Sealant or equivalent.** Refer to "**RECOMMENDED CHEMICAL PRODUCTS AND SEALANTS** ".

    c. Make sure again that the mating marks on timing chain and that on each sprocket are aligned. Then, install front cover.

**CAUTION: Be careful to avoid interference with the front end of oil pump drive spacer. Such interference may damage front oil seal.**

 © 2011 Mitchell Repair Information Company, LLC.

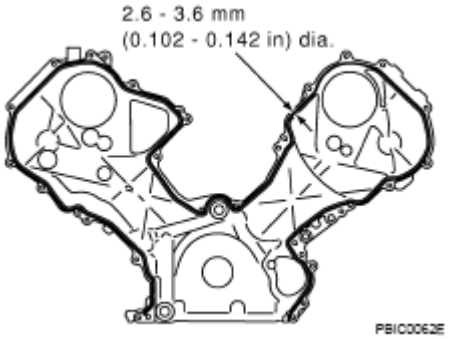


**Fig. 87: Identifying Liquid Gasket Applying Area**
**Courtesy of NISSAN MOTOR CO., U.S.A.**

d. Tighten mounting bolts in numerical order as shown in the figure.

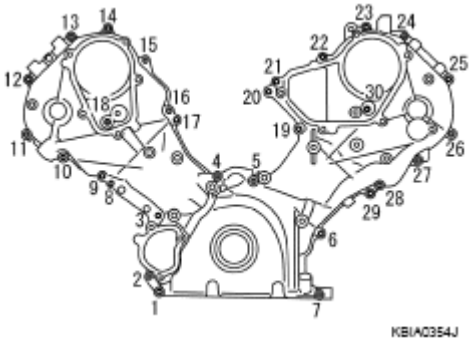


**Fig. 88: Identifying Mounting Bolts Tightening Sequence**
**Courtesy of NISSAN MOTOR CO., U.S.A.**

- There are four type mounting bolts.

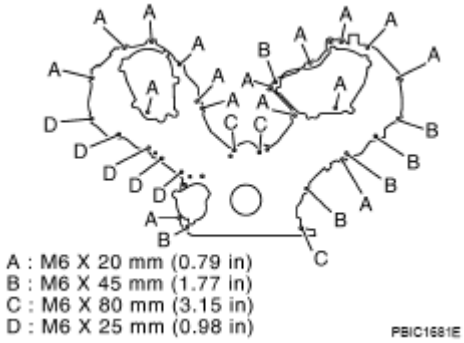


**Fig. 89: Identifying Mounting Bolts Type**
**Courtesy of NISSAN MOTOR CO., U.S.A.**

e. After all mounting bolts are tightened, retighten them in numerical order as shown in the figure.

**CAUTION: Be sure to wipe off any excessive liquid gasket leaking onto**

 © 2011 Mitchell Repair Information Company, LLC.

**surface mating with oil pan.**

11. Install intake valve timing control cover as follows:
    a. At the back of intake valve timing control cover, install new seal rings (three for each bank) to the area to be inserted into camshaft sprocket (INT).

**CAUTION: Do not spread seal ring excessively to avoid breaks and deformation.**

    b. Install new O-rings on front cover.

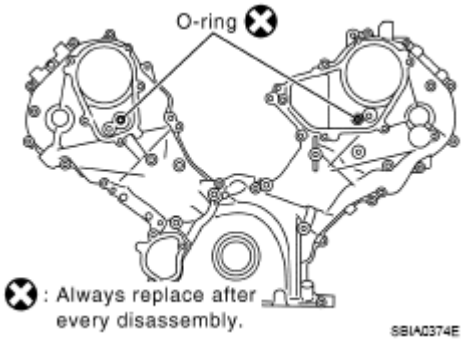


**Fig. 90: Identifying O-Rings Location**
**Courtesy of NISSAN MOTOR CO., U.S.A.**

    c. Apply a continuous bead of liquid gasket with tube presser [SST: WS3930000 ( - )] to intake valve timing control covers as shown in the figure.

**Use Genuine RTV Silicone Sealant or equivalent.** Refer to "**RECOMMENDED CHEMICAL PRODUCTS AND SEALANTS** ".

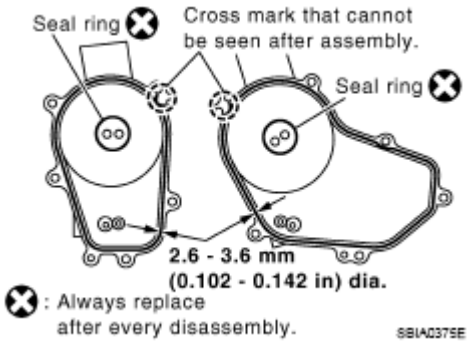


**Fig. 91: Identifying Liquid Gasket Applying Area**
**Courtesy of NISSAN MOTOR CO., U.S.A.**

    d. Tighten mounting bolts in numerical order as shown in the figure.

 © 2011 Mitchell Repair Information Company, LLC.

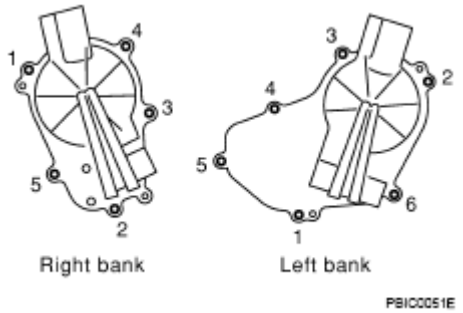


**Fig. 92: Identifying Intake Valve Timing Control Cover Mounting Bolts Tighten Sequence**
**Courtesy of NISSAN MOTOR CO., U.S.A.**

12. Install intake valve timing control position sensor, intake valve timing control solenoid valve and camshaft position sensor (PHASE) to intake valve timing control cover and front cover if removed.
    - Be sure to tighten mounting bolts with flanges completely seated.
13. Install oil pan and oil strainer. Refer to "**OIL PAN AND OIL STRAINER**".
14. Install crankshaft pulley as follows:
    a. Fix crankshaft with ring gear stopper [SST: J-45476].
    b. Install crankshaft pulley, taking care not to damage front oil seal.
        - Install according to dowel pin of oil pump drive spacer.
        - Lightly tapping its center with plastic hammer, insert pulley.

**CAUTION: Do not tap pulley on the side surface where belt is installed (outer circumference).**

    c. Apply engine oil onto threaded parts of crankshaft pulley bolt and seating area.
    d. Tighten crankshaft pulley bolt.

**: 93.1 N.m (9.5 kg-m, 69 ft-lb)**

    e. Put a paint mark on crankshaft pulley aligning with angle mark on crankshaft pulley bolt.
    f. Further tighten by 90 degrees. (Angle tightening)
        - Check the tightening angle by referencing to the notches. The angle between two notches is 90 degrees.

 © 2011 Mitchell Repair Information Company, LLC.

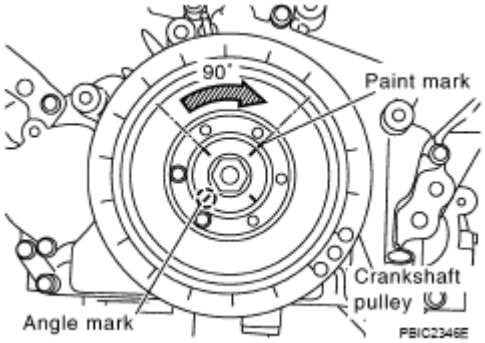


**Fig. 93: Checking Tightening Angle**
**Courtesy of NISSAN MOTOR CO., U.S.A.**

15. Rotate crankshaft pulley in normal direction (clockwise when viewed from engine front) to confirm it turns smoothly.
16. Install in the reverse order of removal after this step.

**INSPECTION AFTER INSTALLATION**

**Inspection for Leaks**

The following are procedures for checking fluids leak, lubricates leak and exhaust gases leak.

- Before starting engine, check oil/fluid levels including engine coolant and engine oil. If less than required quantity, fill to the specified level. Refer to "**RECOMMENDED FLUIDS AND LUBRICANTS** ".
- Use procedure below to check for fuel leakage.
  - Turn ignition switch "ON" (with engine stopped). With fuel pressure applied to fuel piping, check for fuel leakage at connection points.
  - Start engine. With engine speed increased, check again for fuel leakage at connection points.
- Run engine to check for unusual noise and vibration.

**NOTE:** **If hydraulic pressure inside timing chain tensioner drops after removal/installation, slack in guide may generate a pounding noise during and just after engine start. However, this does not indicate an unusualness. Noise will stop after hydraulic pressure rises.**

- Warm up engine thoroughly to make sure there is no leakage of fuel, exhaust gases, or any oil/fluids including engine oil and engine coolant.
- Bleed air from lines and hoses of applicable lines, such as in cooling system.
- After cooling down engine, again check oil/fluid levels including engine oil and engine coolant. Refill to the specified level, if necessary.

**Summary of the inspection items:**

**SUMMARY OF INSPECTION ITEMS**

| Item | Before starting engine | Engine running | After engine stopped |
|---|---|---|---|
| Engine coolant | Level | Leakage | Level |
| Engine oil | Level | Leakage | Level |
| Other oils and fluid(1) | Level | Leakage | Level |
| Fuel | Leakage | Leakage | Leakage |
| Exhaust gases | - | Leakage | - |
| (1) Transmission/transaxle/CVT fluid, power steering fluid, brake fluid, etc. | | | |

# CAMSHAFT

## COMPONENTS

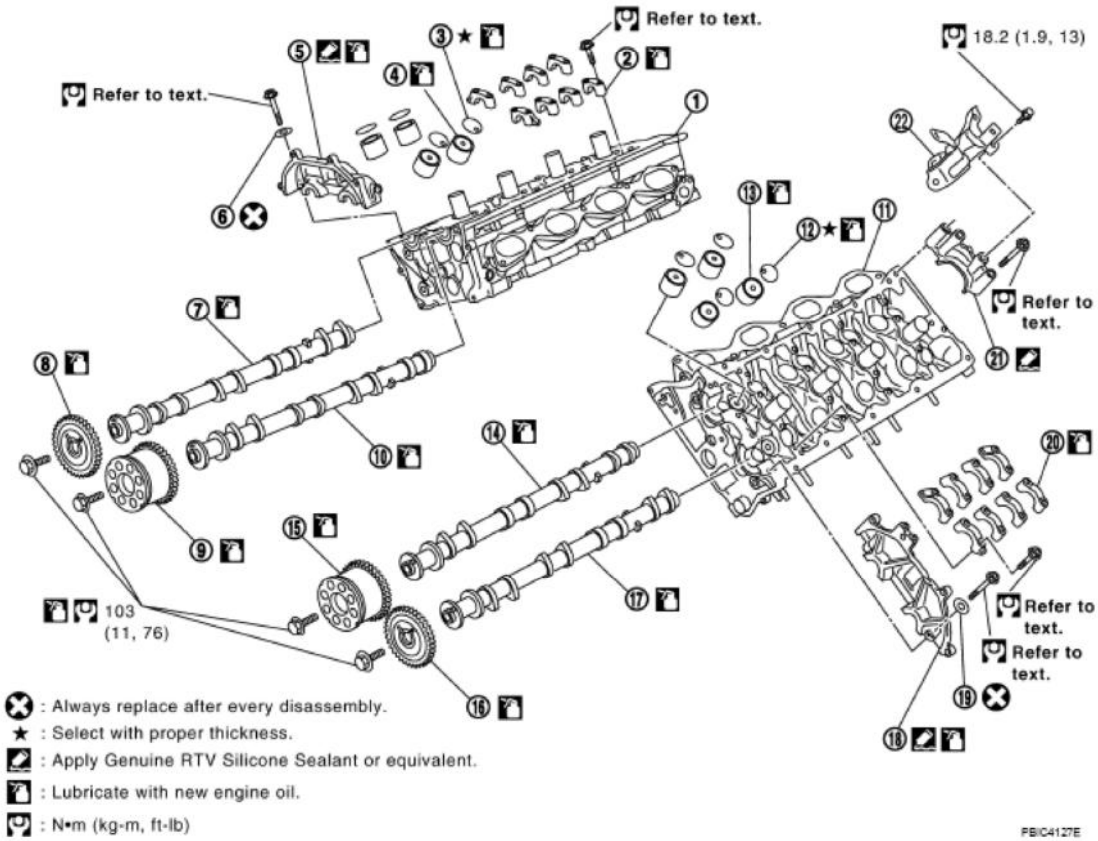


1. Cylinder head (right bank)
2. Camshaft bracket (No. 2 to 5)
3. Adjusting shim
4. Valve lifter
5. Camshaft bracket (No. 1)
6. Seal washer
7. Camshaft (EXH)
8. Camshaft sprocket (EXH)
9. Camshaft sprocket (INT)
10. Camshaft (INT)
11. Cylinder head (left bank)
12. Adjusting shim
13. Valve lifter
14. Camshaft (INT)
15. Camshaft sprocket (INT)
16. Camshaft sprocket (EXH)
17. Camshaft (EXH)
18. Camshaft bracket (No. 1)
19. Seal washer
20. Camshaft bracket (No. 2 to 5)
21. Camshaft bracket (No. 6)
22. Harness bracket

**Fig. 94: Identifying Camshaft Components With Torque Specifications**
**Courtesy of NISSAN MOTOR CO., U.S.A.**

 © 2011 Mitchell Repair Information Company, LLC.

## REMOVAL AND INSTALLATION

### REMOVAL

1. Remove engine assembly from vehicle. Refer to "**2WD: COMPONENTS**" or **AWD: Components**.
2. Remove timing chain. Refer to "**TIMING CHAIN**".
3. With hexagonal part of camshaft locked with wrench, loosen bolts securing camshaft sprocket to remove camshaft sprocket.

**CAUTION:**

- **Do not loosen mounting bolts with securing anything other than the camshaft hexagonal portion or with tensioning the timing chain.**
- **After removing timing chain, do not turn crankshaft and camshaft separately, or valves will strike the piston head.**

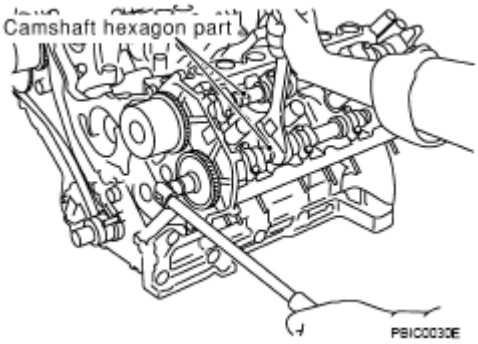


**Fig. 95: Removing Camshaft Sprocket Bolt**
**Courtesy of NISSAN MOTOR CO., U.S.A.**

4. Remove intake and exhaust camshaft brackets.
   - Mark camshafts, camshaft brackets and bolts so placed in the same position and direction for installation.
   - Equally loosen camshaft brackets and bolts in several steps in reverse order as shown in the figure.
   - Lightly tapping with plastic hammer, remove camshaft bracket (No. 1) and camshaft bracket (No. 6).

**NOTE:** **The bottom surface of each bracket will be stuck to cylinder head because of liquid gasket.**

 © 2011 Mitchell Repair Information Company, LLC.

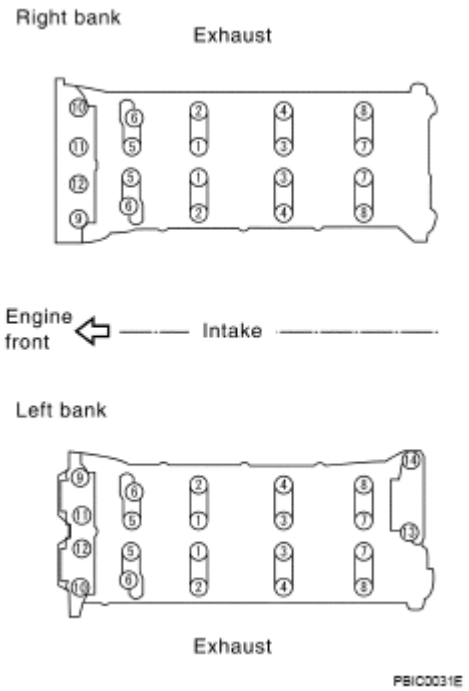


**Fig. 96: Identifying Intake And Exhaust Camshaft Brackets**
**Courtesy of NISSAN MOTOR CO., U.S.A.**

5. Remove camshaft.
6. Remove adjusting shim and valve lifter if necessary.
   - Identify installation positions, and store them without mixing them up.

**INSPECTION AFTER REMOVAL**

**Camshaft Runout**

1. Put V-block on precise flat table, and support No. 2 and 5 journal of camshaft.

**CAUTION: Do not support journal No. 1 (on the side of camshaft sprocket) because it has a different diameter from the other four locations.**

2. Set dial indicator vertically to No. 3 journal.
3. Turn camshaft to one direction with hands, and measure the camshaft runout on dial indicator (total indicator reading).

 © 2011 Mitchell Repair Information Company, LLC.

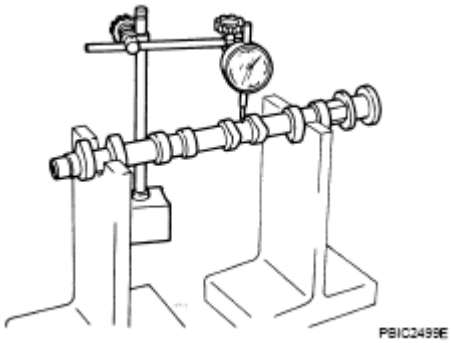


**Fig. 97: Measuring Camshaft Runout On Dial Indicator**
**Courtesy of NISSAN MOTOR CO., U.S.A.**

**Standard: 0.02 mm (0.001 in)**

**Limit: 0.05 mm (0.002 in)**

4. If it exceeds the limit, replace camshaft.

**Camshaft Cam Height**

1. Measure the camshaft cam height with micrometer.

   **Standard cam height**

   **Intake : 44.865 - 45.055 mm (1.7663 - 1.7738 in)**

   **Exhaust : 43.925 - 44.115 mm (1.7293 - 1.7368 in)**

   **Cam wear limit : 0.2 mm (0.008 in)**

2. If wear exceeds the limit, replace camshaft.

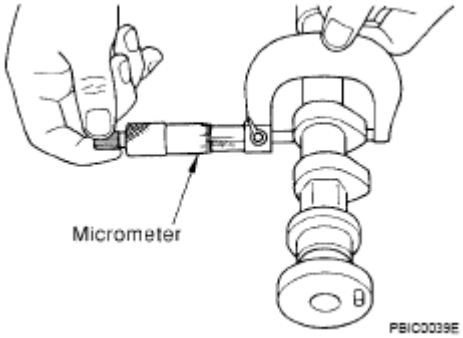


**Fig. 98: Checking Camshaft Cam Height**
**Courtesy of NISSAN MOTOR CO., U.S.A.**

**Camshaft Journal Oil Clearance**

 © 2011 Mitchell Repair Information Company, LLC.

**CAMSHAFT JOURNAL DIAMETER**

- Measure the outer diameter of camshaft journal with micrometer.

  **Standard:**

  **No. 1 : 25.938 - 25.955 mm (1.0212 - 1.0218 in)**

  **No. 2, 3, 4, 5 : 25.953 - 25.970 mm (1.0218 - 1.0224 in)**

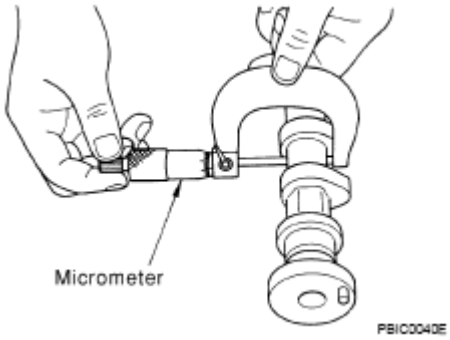


**Fig. 99: Checking Outer Diameter Of Camshaft Journal**
**Courtesy of NISSAN MOTOR CO., U.S.A.**

**CAMSHAFT BRACKET INNER DIAMETER**

- Tighten camshaft bracket bolt with the specified torque. Refer to "**INSTALLATION**" for the tightening procedure.
- Measure the inner diameter "A" of camshaft bracket with bore gauge.

  **Standard:**

  **26.000 - 26.021 mm (1.0236 - 1.0244 in)**

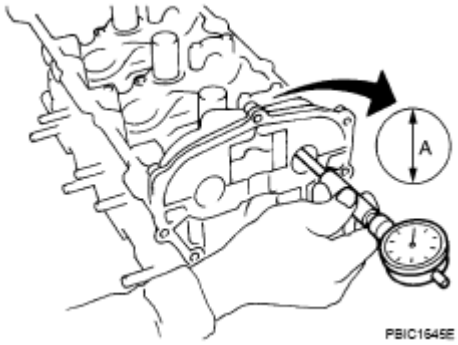


**Fig. 100: Checking Inner Diameter A Of Camshaft Bracket With Bore Gauge**
**Courtesy of NISSAN MOTOR CO., U.S.A.**

**CAMSHAFT JOURNAL OIL CLEARANCE**

 © 2011 Mitchell Repair Information Company, LLC.

- (Oil clearance) = (Camshaft bracket inner diameter) - (Camshaft journal diameter).

  **Standard:**

  **No. 1 : 0.045 - 0.083 mm (0.0018 - 0.0033 in)**

  **No. 2, 3, 4, 5 : 0.030 - 0.068 mm (0.0012 - 0.0027 in)**

- If the calculated value out of the standard, replace either or both camshaft and cylinder head.

**NOTE:** **Camshaft bracket cannot be replaced as a single part, because it is machined together with cylinder head. Replace whole cylinder head assembly.**

**Camshaft End Play**

- Install dial indicator in thrust direction on front end of camshaft. Measure the end play of dial indicator when camshaft is moved forward/backward (in direction to axis).

  **Standard: 0.115 - 0.188 mm (0.0045 - 0.0074 in)**

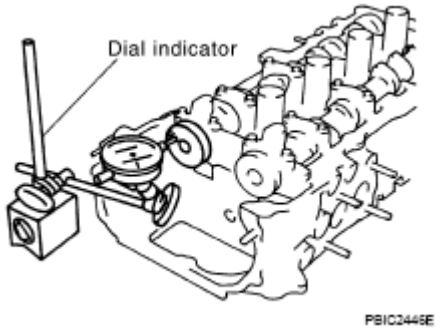


**Fig. 101: Measuring Camshaft End Play**
**Courtesy of NISSAN MOTOR CO., U.S.A.**

- Measure the following parts if out of the standard.
  - Dimension "A" for camshaft No. 1 journal

    **Standard : 30.500 - 30.548 mm (1.2008 - 1.2027 in)**

  - Dimension "B" for cylinder head No. 1 journal bearing

    **Standard : 30.360 - 30.385 mm (1.1953 - 1.1963 in)**

- Refer to the standards above, and then replace camshaft and/or cylinder head.

 © 2011 Mitchell Repair Information Company, LLC.

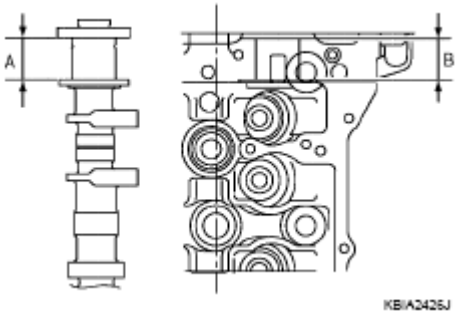


**Fig. 102: Identifying Camshaft Dimension**
**Courtesy of NISSAN MOTOR CO., U.S.A.**

**Camshaft Sprocket Runout**

1. Put V-block on precise flat table, and support No. 2 and 5 journal of camshaft.

   **CAUTION: Do not support journal No. 1 (on the side of camshaft sprocket) because it has a different diameter from the other four locations.**

2. Measure the camshaft sprocket runout with dial indicator. (Total indicator reading)

   **Limit : 0.15 mm (0.0059 in)**

   - If it exceeds the limit, replace camshaft sprocket.

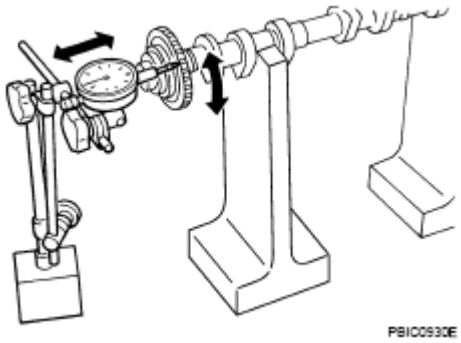


**Fig. 103: Measuring Camshaft Sprocket Runout With Dial Indicator**
**Courtesy of NISSAN MOTOR CO., U.S.A.**

**Valve Lifter**

Check if surface of valve lifter and adjusting shim has any wear or cracks.

- If anything above is found, replace valve lifter. Refer to **VALVE CLEARANCE**.

 © 2011 Mitchell Repair Information Company, LLC.

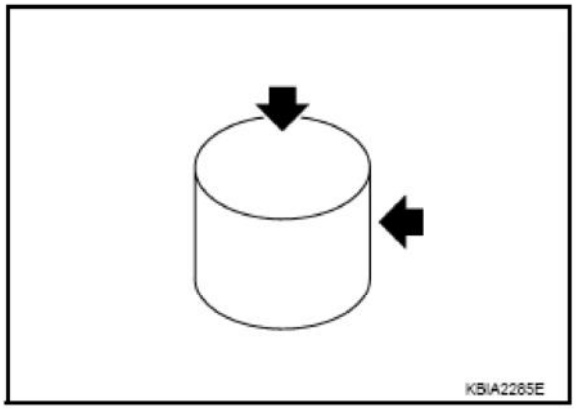


**Fig. 104: Identifying Valve Lifter Surface**
**Courtesy of NISSAN MOTOR CO., U.S.A.**

**Valve Lifter Clearance**

**VALVE LIFTER OUTER DIAMETER**

- Measure the outer diameter of valve lifter with micrometer.

**Standard : 33.965 - 33.975 mm (1.3372 - 1.3376 in)**

 © 2011 Mitchell Repair Information Company, LLC.

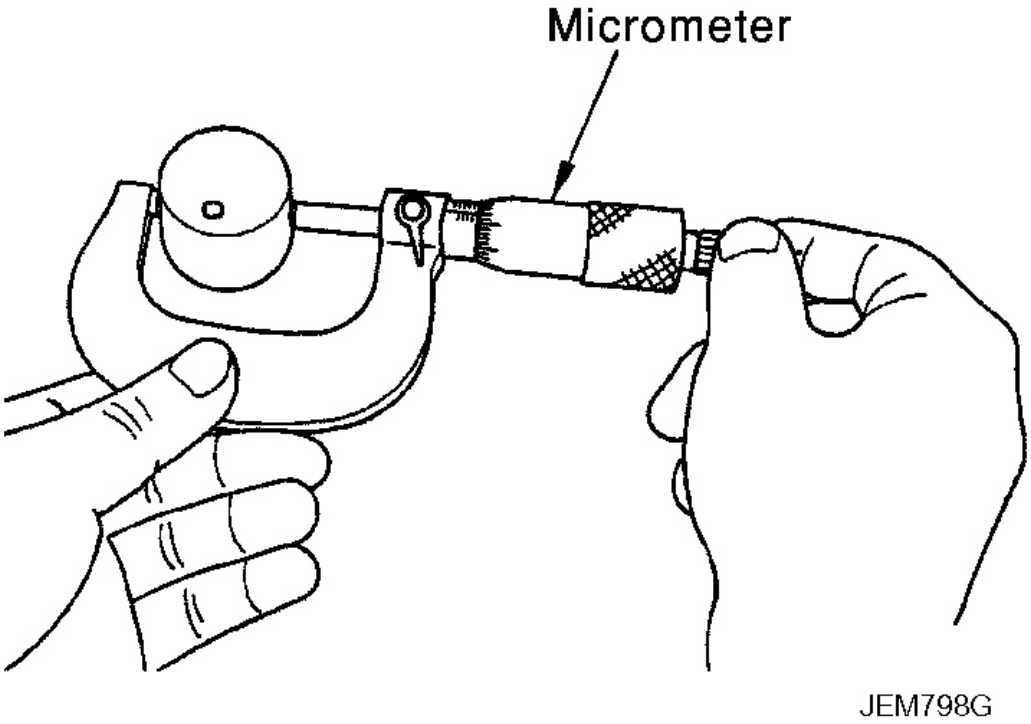


**Fig. 105: Measuring Outer Diameter Of Valve Lifter**
**Courtesy of NISSAN MOTOR CO., U.S.A.**

**VALVE LIFTER HOLE DIAMETER**

- Measure the inner diameter of valve lifter hole of cylinder head with inside micrometer.

  **Standard : 34.000 - 34.016 mm (1.3386 - 1.3392 in)**

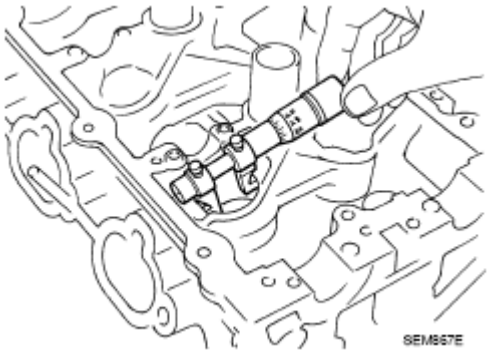


**Fig. 106: Measuring Inner Diameter Of Valve Lifter Hole Of Cylinder Head**
**Courtesy of NISSAN MOTOR CO., U.S.A.**

 © 2011 Mitchell Repair Information Company, LLC.

**VALVE LIFTER CLEARANCE**

- (Valve lifter clearance) = (Valve lifter hole diameter) - (Valve lifter outer diameter)

  **Standard : 0.025 - 0.051 mm (0.0010 - 0.0020 in)**

- If the calculated value is out of the standard, referring to each standard of valve lifter outer diameter and valve lifter hole diameter, replace either or both valve lifter and cylinder head.

**INSTALLATION**

1. Install valve lifters and adjusting shims if removed.
   - Install it in the original position.
2. Install camshafts.
   - Follow your identification marks made during removal, or follow the identification marks that are present on new camshafts for proper placement and direction.

**CAMSHAFTS REFERENCE CHART**

| Bank | INT/EXH | Identification rib | Paint marks | | Identification mark |
|---|---|---|---|---|---|
| | | | M1 | M2 | |
| RH | INT | Yes | White | No | RH |
| | EXH | Yes | No | White | RH |
| LH | INT | No | White | No | LH |
| | EXH | No | No | White | LH |

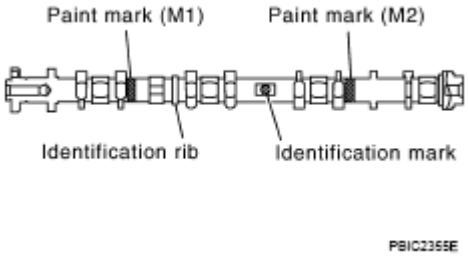


**Fig. 107: Identifying Camshafts Identification Marks**
**Courtesy of NISSAN MOTOR CO., U.S.A.**

- Install camshaft so that dowel pin on front end face are positioned as shown in the figure. (No. 1 cylinder TDC on its compression stroke)

**NOTE:** **Though camshaft does not stop at the position as shown in the figure, for the placement of cam nose, it is generally accepted camshaft is placed for the same direction of the figure.**

**Camshaft dowel pin : At cylinder head upper face side in each bank**

 © 2011 Mitchell Repair Information Company, LLC.

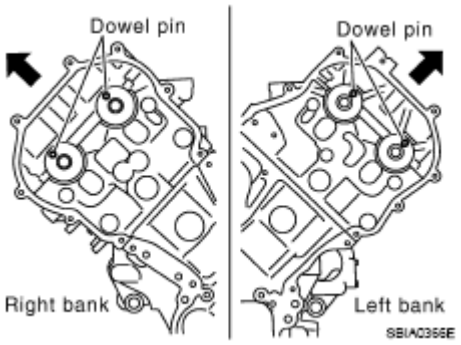


**Fig. 108: Identifying Camshaft Dowel Pin**
**Courtesy of NISSAN MOTOR CO., U.S.A.**

3. Install camshaft brackets.
   - Remove foreign material completely from camshaft bracket backside and from cylinder head installation face.
   - Install by referring to installation location mark on upper surface and front mark.
   - Install so that installation location mark can be correctly read when viewed from the side of left exhaust bank.

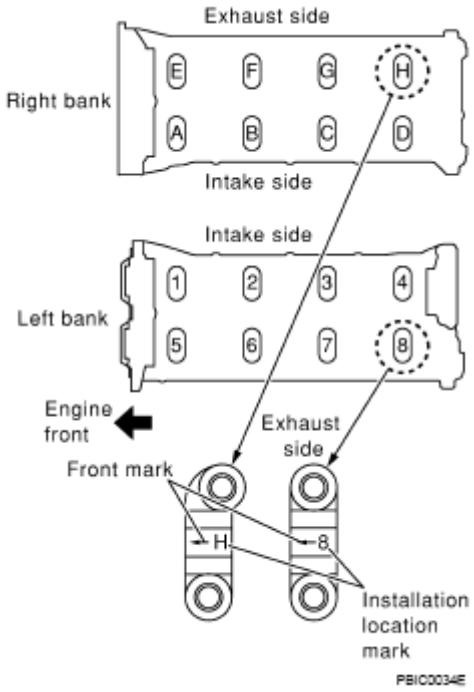


**Fig. 109: Identifying Camshaft Brackets**
**Courtesy of NISSAN MOTOR CO., U.S.A.**

- Apply liquid gasket to mating surface of camshaft bracket (No. 1) as shown in the figure.

  **Use Genuine RTV Silicone Sealant or equivalent.** Refer to "**RECOMMENDED CHEMICAL**

**PRODUCTS AND SEALANTS** ".

**CAUTION:**

- **After installation, be sure to wipe off any excessive liquid gasket leaking from part "A" and "B" (both on right and left sides).**
- **Remove completely any excess of liquid gasket inside bracket.**

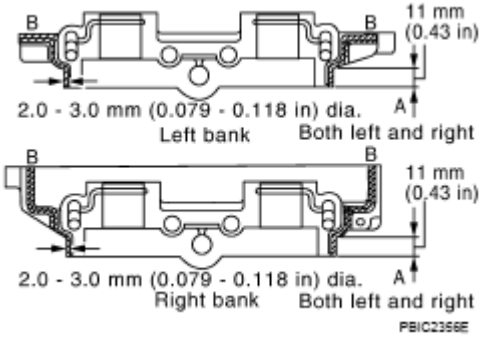


**Fig. 110: Identifying Liquid Gasket Applying Area**
**Courtesy of NISSAN MOTOR CO., U.S.A.**

- Apply liquid gasket to mating surface of camshaft bracket (No. 6) on left bank intake as shown in the figure.

**Use Genuine RTV Silicone Sealant or equivalent.** Refer to "**RECOMMENDED CHEMICAL PRODUCTS AND SEALANTS** ".

**CAUTION:**

- **After installation, be sure to wipe off any excessive liquid gasket leaking from part "A" and "B" (both on right and left sides).**
- **Remove completely any excess of liquid gasket inside bracket.**

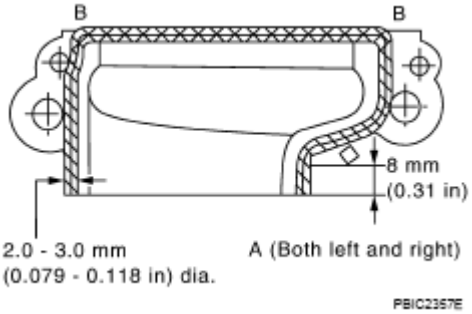


**Fig. 111: Identifying Liquid Gasket Applying Area**
**Courtesy of NISSAN MOTOR CO., U.S.A.**

 © 2011 Mitchell Repair Information Company, LLC.

4. Tighten camshaft bracket bolts in the following steps, in numerical order as shown in the figure.
   a. Tighten No. 9 to 12 in numerical order as shown.

      **: 1.96 N.m (0.2 kg-m, 1 ft-lb)**

   b. Tighten No. 1 to 8 in numerical order as shown.

      **: 1.96 N.m (0.2 kg-m, 1 ft-lb)**

   c. Tighten No. 13 to 14 in numerical order as shown. (Left bank only)

      **: 1.96 N.m (0.2 kg-m, 1 ft-lb)**

   d. Tighten all bolts in numerical order as shown.

      **: 5.88 N.m (0.6 kg-m, 4 ft-lb)**

   e. Tighten No. 1 to 12 in numerical order as shown.

      **: 10.41 N.m (1.1 kg-m, 8 ft-lb)**

   f. Tighten No. 13 to 14 in numerical order as shown. (Left bank only)

      **: 31.35 N.m (3.2 kg-m, 23 ft-lb)**

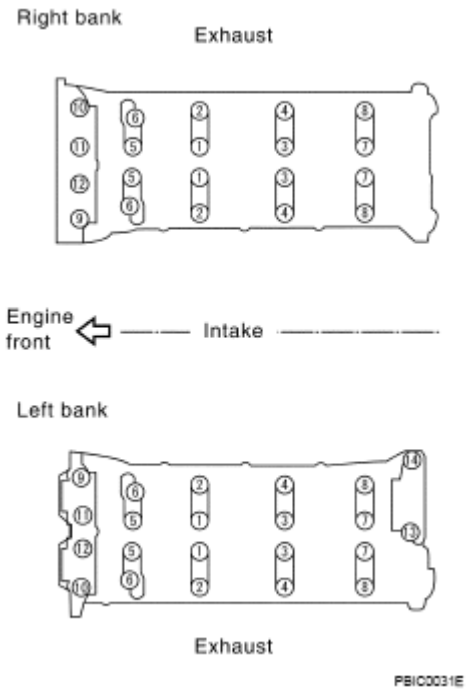


**Fig. 112: Identifying Camshaft Bracket Bolts Tightening Sequence**
**Courtesy of NISSAN MOTOR CO., U.S.A.**

 © 2011 Mitchell Repair Information Company, LLC.

**CAUTION: After tightening mounting bolts of camshaft brackets, be sure to wipe off excessive liquid gasket from the parts listed below.**

- **Mating surface of rocker cover**
- **Mating surface of front cover**

5. Install camshaft sprockets.
   - Install by checking with identification mark on surface.
   - Install camshaft sprocket (EXH) by selectively using the groove of dowel pin according to the bank. (Common part used for both banks.)
   - Lock the hexagonal part of camshaft in the same way as for removal, and tighten mounting bolts.

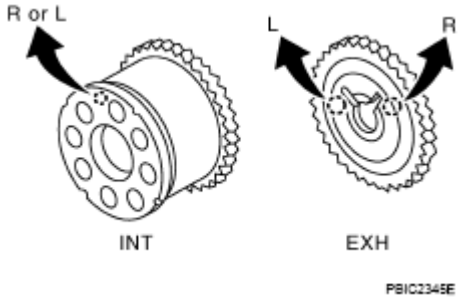


**Fig. 113: Identifying Camshaft Sprockets**
**Courtesy of NISSAN MOTOR CO., U.S.A.**

6. Check and adjust the valve clearance. Refer to "**VALVE CLEARANCE**".
7. Install in the reverse order of removal after this step.

**INSPECTION AFTER INSTALLATION**

**Inspection of Camshaft Sprocket (INT) Oil Groove**

**CAUTION:**
- **Perform this inspection only when DTC P0011 and/or P0021 are detected in self-diagnostic results of CONSULT-III and it is directed according to inspection procedure of EC section. Refer to "SELF-DIAG RESULTS MODE ".**
- **Check when the engine is cold so as to prevent burns from any splashing engine oil.**

1. Check the engine oil level. Refer to "**ENGINE OIL** ".
2. Perform the following procedure so as to prevent the engine from being unintentionally started while checking.
   a. Release fuel pressure. Refer to "**FUEL PRESSURE RELEASE** ".
   b. Disconnect ignition coil and injector harness connectors.
3. Remove intake valve timing control solenoid valve. Refer to "**TIMING CHAIN**".

 © 2011 Mitchell Repair Information Company, LLC.

4. Crank the engine, and then make sure that engine oil comes out from intake valve timing control cover oil hole. End crank after checking.

**WARNING: Be careful not to touch rotating parts (drive belt, idler pulley, and crankshaft pulley, etc.).**

**CAUTION: Engine oil may squirt from intake valve timing control solenoid valve installation hole during cranking. Use a shop cloth to prevent the engine components and the vehicle. Do not allow engine oil to get on rubber components such as drive belt or engine mount insulators. Immediately wipe off any splashed engine oil.**

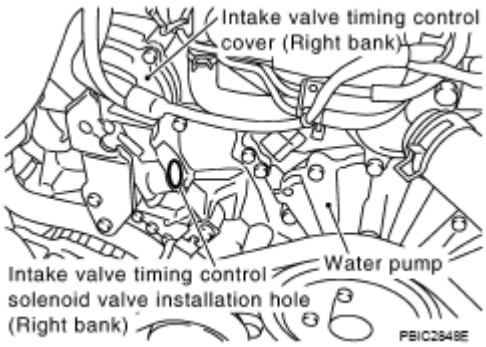


**Fig. 114: Identifying Intake Valve Timing Control Cover Water Pump**
**Courtesy of NISSAN MOTOR CO., U.S.A.**

- Clean oil groove between oil strainer and intake valve timing control solenoid valve if engine oil does not come out from intake valve timing control cover oil hole. Refer to "**LUBRICATION SYSTEM** ".

5. Remove components between intake valve timing control solenoid valve and camshaft sprocket (INT), and then check each oil groove for clogging.
   - Clean oil groove if necessary. Refer to "**LUBRICATION SYSTEM** ".
6. After inspection, install removed parts.

**INSPECTION AFTER INSTALLATION**

**Inspection for Leaks**

The following are procedures for checking fluids leak, lubricates leak and exhaust gases leak.

- Before starting engine, check oil/fluid levels including engine coolant and engine oil. If less than required quantity, fill to the specified level. Refer to "**RECOMMENDED FLUIDS AND LUBRICANTS** ".
- Use procedure below to check for fuel leakage.
  - Turn ignition switch "ON" (with engine stopped). With fuel pressure applied to fuel piping, check for fuel leakage at connection points.

 © 2011 Mitchell Repair Information Company, LLC.

- Start engine. With engine speed increased, check again for fuel leakage at connection points.

- Run engine to check for unusual noise and vibration.

**NOTE:** **If hydraulic pressure inside timing chain tensioner drops after removal/installation, slack in guide may generate a pounding noise during and just after engine start. However, this does not indicate an unusualness. Noise will stop after hydraulic pressure rises.**

- Warm up engine thoroughly to make sure there is no leakage of fuel, exhaust gases, or any oil/fluids including engine oil and engine coolant.
- Bleed air from lines and hoses of applicable lines, such as in cooling system.
- After cooling down engine, again check oil/fluid levels including engine oil and engine coolant. Refill to the specified level, if necessary.

**Summary of the inspection items:**

**SUMMARY OF INSPECTION ITEMS**

| Item | Before starting engine | Engine running | After engine stopped |
|---|---|---|---|
| Engine coolant | Level | Leakage | Level |
| Engine oil | Level | Leakage | Level |
| Other oils and fluid(1) | Level | Leakage | Level |
| Fuel | Leakage | Leakage | Leakage |
| Exhaust gases | - | Leakage | - |
| (1) Transmission/transaxle/CVT fluid, power steering fluid, brake fluid, etc. | | | |

## VALVE CLEARANCE

### INSPECTION

In cases of removing/installing or replacing camshaft and valve-related parts, or of unusual engine conditions due to changes in valve clearance (found malfunctions during starting, idling or causing noise), perform inspection as follows:

1. Remove rocker covers (right and left bank). Refer to "**ROCKER COVER**".
2. Measure the valve clearance as follows:
   a. Set No. 1 cylinder at TDC of its compression stroke.
      - Rotate crankshaft pulley in clockwise to align TDC identification notch (without paint mark) with timing indicator on front cover.

 © 2011 Mitchell Repair Information Company, LLC.

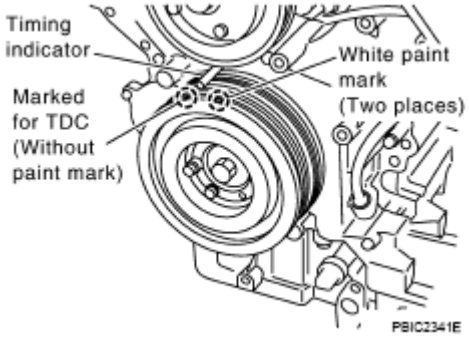


**Fig. 115: Identifying Timing Indicator**
**Courtesy of NISSAN MOTOR CO., U.S.A.**

- Make sure that both intake and exhaust cam noses of No. 1 cylinder (engine front side of left bank) are located as shown in the figure.
- If not, turn crankshaft one revolution (360 degrees) and align as shown in the figure.

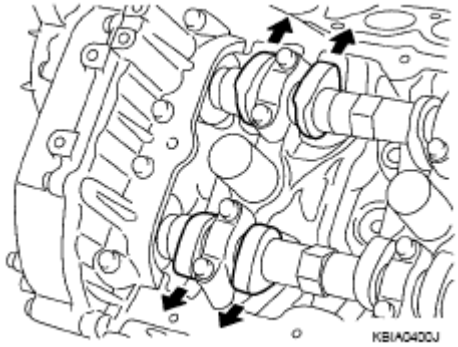


**Fig. 116: Checking Intake And Exhaust Cam Lobes Of No. 1 Cylinder**
**Courtesy of NISSAN MOTOR CO., U.S.A.**

b. Use feeler gauge, measure the clearance between valve lifter and camshaft.

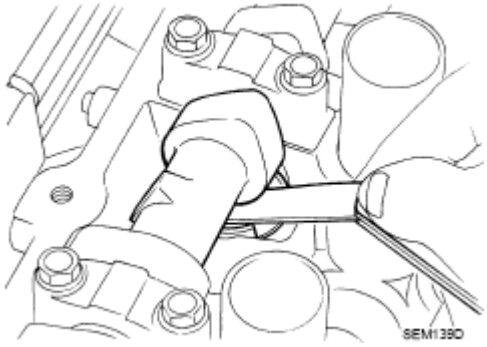


**Fig. 117: Checking Clearance Between Valve Lifter And Camshaft**
**Courtesy of NISSAN MOTOR CO., U.S.A.**

**Valve clearance:**

## VALVE CLEARANCE SPECIFICATION

| | | Unit: mm (in) |
|---|---|---|
| | **Cold** | **Hot (1) (reference data)** |
| Intake | 0.26 - 0.34 (0.010 - 0.013) | 0.304 - 0.416 (0.012 - 0.016) |
| Exhaust | 0.29 - 0.37 (0.011 - 0.015) | 0.308 - 0.432 (0.012 - 0.017) |
| (1) Approximately 80°C (176°F) | | |

- By referring to the figure, measure the valve clearances at locations marked "x" as shown in the table below (locations indicated with black arrow in figure).

**NOTE: Firing order 1-8-7-3-6-5-4-2**

- No.1 cylinder at compression TDC

## VALVE CLEARANCES LOCATION REFERENCE

| Measuring position (right bank) | | No. 2 CYL. | No. 4 CYL. | No. 6 CYL. | No. 8 CYL. |
|---|---|---|---|---|---|
| No. 1 cylinder at compression TDC | EXH | | | | x |
| | INT | x | x | | |
| Measuring position (left bank) | | No. 1 CYL. | No. 3 CYL. | No. 5 CYL. | No. 7 CYL. |
| No. 1 cylinder at compression TDC | INT | x | | x | |
| | EXH | x | | | x |

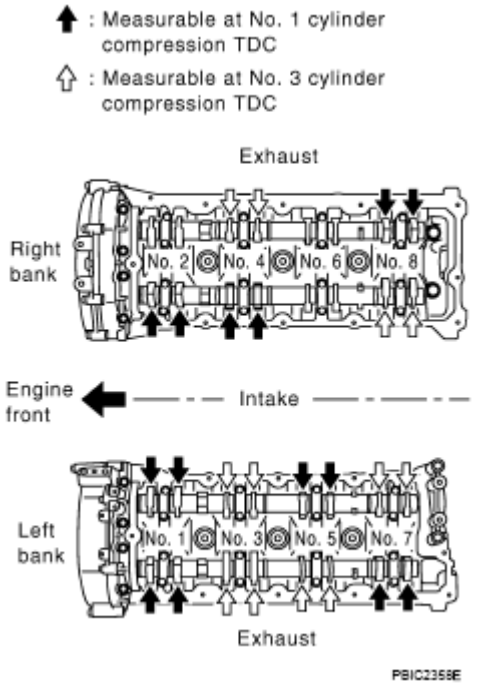


 © 2011 Mitchell Repair Information Company, LLC.

**Fig. 118: Identifying Valve Clearances Checking Locations**
**Courtesy of NISSAN MOTOR CO., U.S.A.**

c. Rotate crankshaft pulley clockwise (when view from engine front) by 270 degrees from the position of No. 1 cylinder compression TDC to align No. 3 cylinder at TDC of its compression stroke.

**NOTE: Crankshaft pulley mounting bolt flange has a angle mark every 90 degrees. They can be used as a guide to rotation angle.**

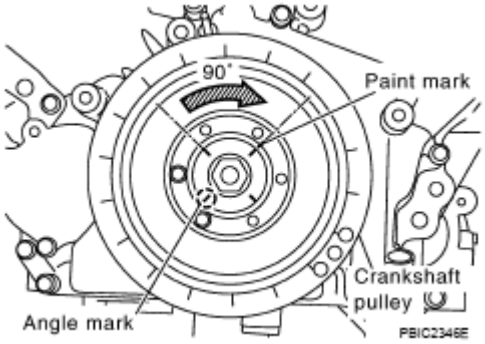


**Fig. 119: Rotating Crankshaft Pulley**
**Courtesy of NISSAN MOTOR CO., U.S.A.**

- By referring to the figure, measure the valve clearances at locations marked "x" as shown in the table below (locations indicated with white arrow in figure).
- No. 3 cylinder at compression TDC

**VALVE CLEARANCES LOCATION REFERENCE**

| Measuring position (right bank) | | No. 2 CYL. | No. 4 CYL. | No. 6 CYL. | No. 8 CYL. |
|---|---|---|---|---|---|
| No. 3 cylinder at compression TDC | EXH | | x | | |
| | INT | | | | x |
| Measuring position (left bank) | | No. 1 CYL. | No. 3 CYL. | No. 5 CYL. | No. 7 CYL. |
| No. 3 cylinder at compression TDC | INT | | x | | x |
| | EXH | | x | x | |

 © 2011 Mitchell Repair Information Company, LLC.

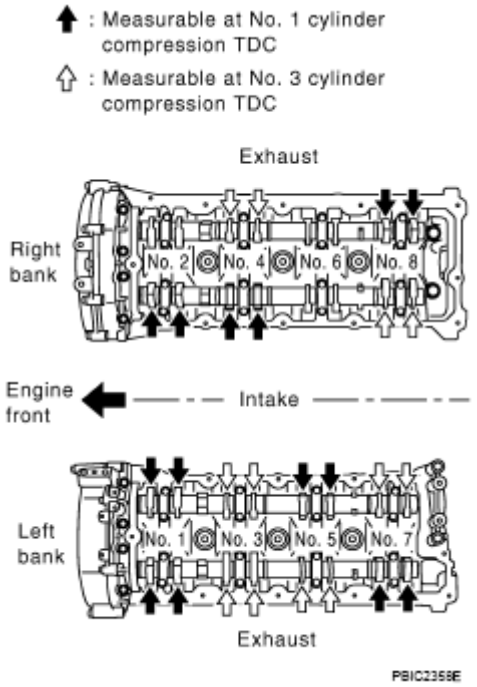


**Fig. 120: Identifying Valve Clearances Checking Locations At No.1 Cylinder**
**Courtesy of NISSAN MOTOR CO., U.S.A.**

d. Rotate crankshaft pulley clockwise (when view from engine front) by 90 degrees from the position of No. 3 cylinder compression TDC to align No. 6 cylinder at TDC of its compression stroke.

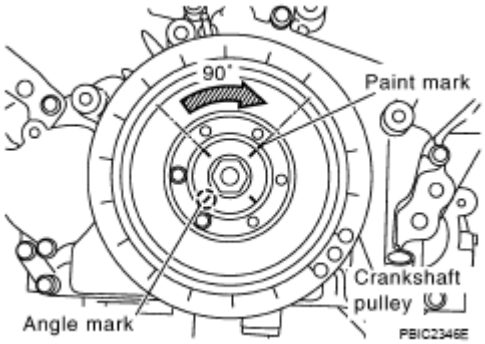


**Fig. 121: Rotating Crankshaft Pulley**
**Courtesy of NISSAN MOTOR CO., U.S.A.**

- By referring to the figure, measure the valve clearances at locations marked "x" as shown in the table below.
- No. 6 cylinder at compression TDC

**VALVE CLEARANCES LOCATION REFERENCE**

| Measuring position (right bank) | | No. 2 CYL. | No. 4 CYL. | No. 6 CYL. | No. 8 CYL. |
|---|---|---|---|---|---|
| | | | | | |

 © 2011 Mitchell Repair Information Company, LLC.

| | | | | | |
|---|---|---|---|---|---|
| No. 6 cylinder at compression TDC | EXH | x | | x | |
| | INT | | | x | |

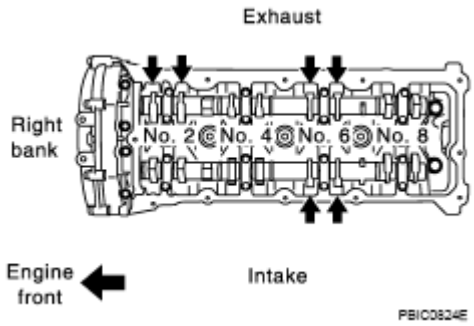


**Fig. 122: Identifying Valve Clearances Checking Locations At No.6 Cylinder**
**Courtesy of NISSAN MOTOR CO., U.S.A.**

3. Perform adjustment if the measured value is out of the standard. Refer to "**ADJUSTMENT**".

**ADJUSTMENT**

- Perform adjustment depending on selected head thickness of valve lifter.

1. Measure the valve clearance. Refer to **VALVE CLEARANCE**.
2. Remove camshaft. Refer to **REMOVAL AND INSTALLATION**.
3. Remove valve lifters at the locations that are out of the standard.
4. Measure the center thickness of removed valve lifters with a micrometer.

 © 2011 Mitchell Repair Information Company, LLC.

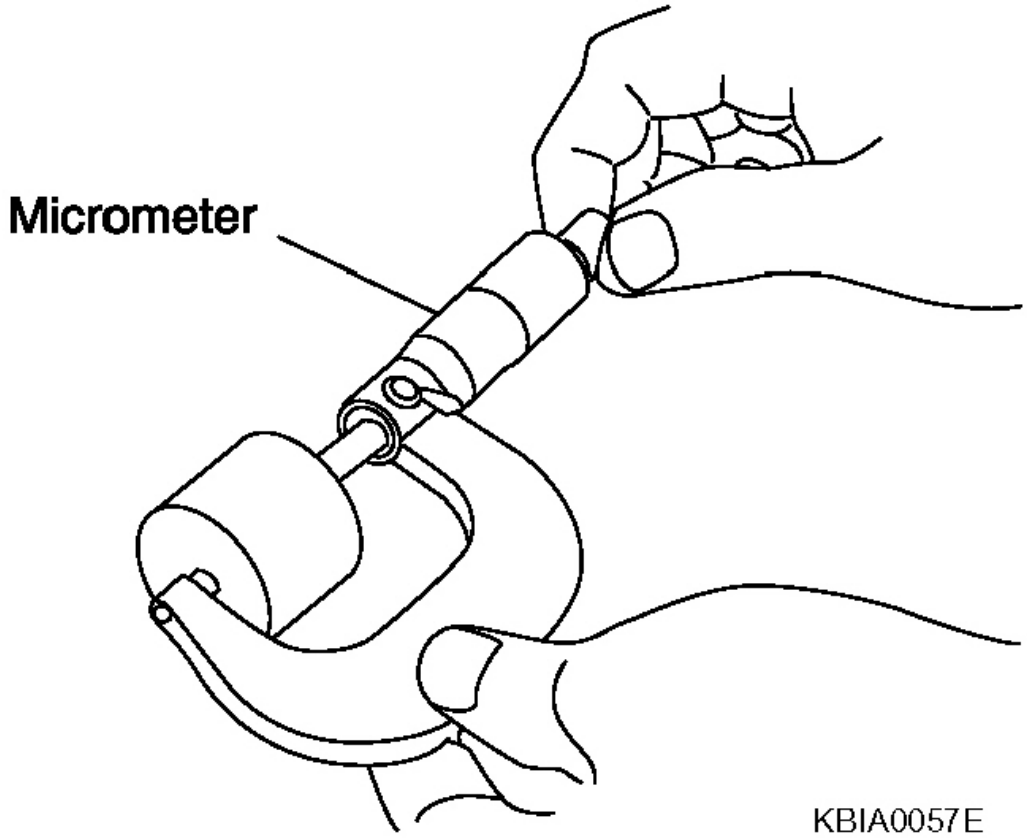


**Fig. 123: Measuring Center Thickness Of Valve Lifters With Micrometer**
**Courtesy of NISSAN MOTOR CO., U.S.A.**

5. Use the equation below to calculate adjusting shim thickness for replacement.

   **Valve lifter thickness calculation: t = t1 + (C1 - C2)**

   **t = Valve lifter thickness to be replaced**

   **t1 = Removed valve lifter thickness**

   **C1 = Measured valve clearance**

   **C2 = Standard valve clearance:**

   **Intake : 0.30 mm (0.012 in)**

   **Exhaust : 0.33 mm (0.013 in)**

 © 2011 Mitchell Repair Information Company, LLC.

- Thickness of new adjusting shim can be identified by stamp marks on the reverse side (inside the cylinder).

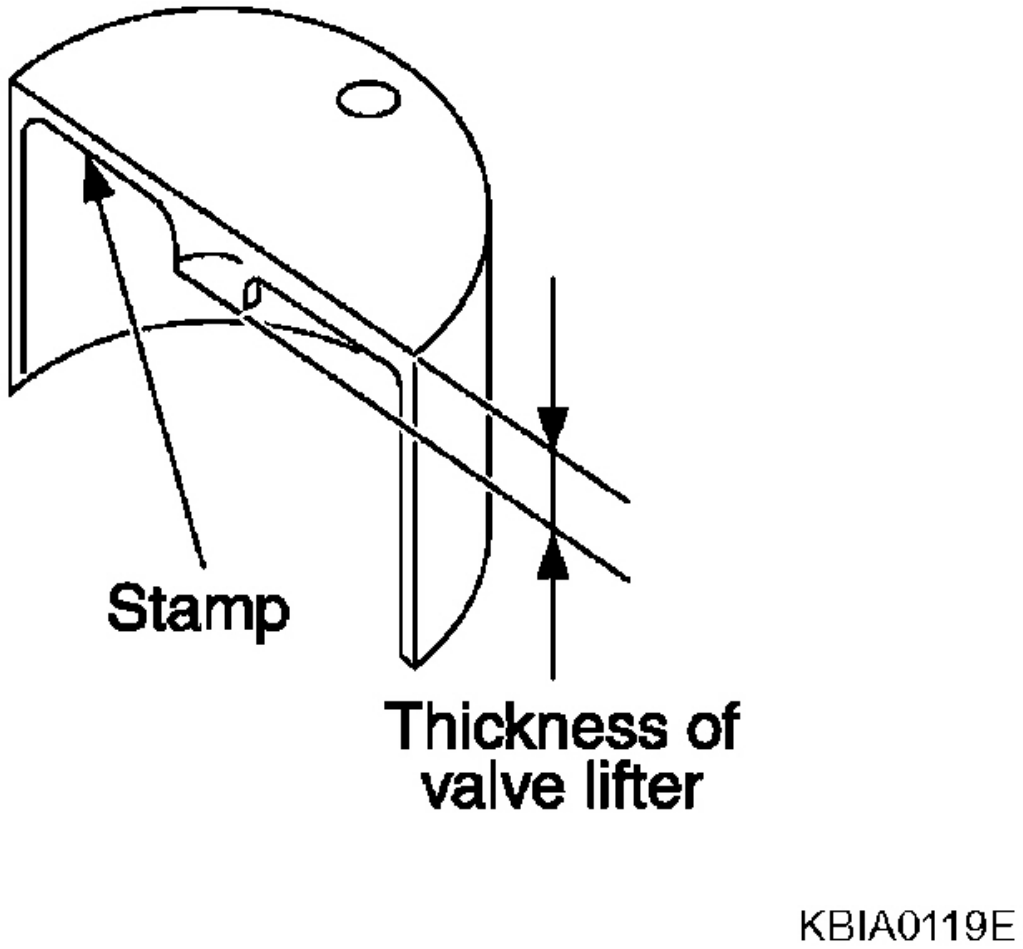


**Fig. 124: Identifying Stamp Mark On Valve Lifter**
**Courtesy of NISSAN MOTOR CO., U.S.A.**

**Adjusting Shim Thickness**

| Stamp mark | Thickness |
|---|---|
| 788U | 7.88 mm |
| 789U | 7.89 mm |
| - | - |
| - | - |
| 840U | 8.40 mm |

 © 2011 Mitchell Repair Information Company, LLC.

**NOTE: Available thickness of valve lifter: 53 sizes with range 7.88 to 8.40 mm (0.3102 to 0.3307 in) in steps of 0.01 mm (0.0004 in) (when manufactured at factory). Refer to STANDARD AND LIMIT.**

6. Install selected valve lifter.
7. Install camshaft. Refer to **REMOVAL AND INSTALLATION**.
8. Manually turn crankshaft pulley a few turns.
9. Check that the valve clearances for cold engine are within the specifications by referring to the specified values. Refer to **VALVE CLEARANCE**.
10. Install all removed parts in the reverse order of removal. Refer to "**REMOVAL AND INSTALLATION**".
11. Warm up the engine, and check for unusual noise and vibration.

# OIL SEAL

## REMOVAL AND INSTALLATION OF VALVE OIL SEAL

### REMOVAL

1. Remove engine assembly from vehicle. Refer to "**2WD: COMPONENTS**" or **AWD: COMPONENTS**.
2. Remove camshaft relating to valve oil seal to be removed. Refer to "**CAMSHAFT**".
3. Remove adjusting shims and valve lifters. Refer to "**CAMSHAFT**".
   - Identify installation positions, and store them without mixing them up.
4. Turn crankshaft until the cylinder requiring new oil seals is at TDC. This will prevent valve from dropping into cylinder.
5. Remove valve collet.
   - Compress valve spring with valve spring compressor, attachment and adapter (SST). Remove valve collet with magnetic hand.

**CAUTION: When working, take care not to damage valve lifter holes.**

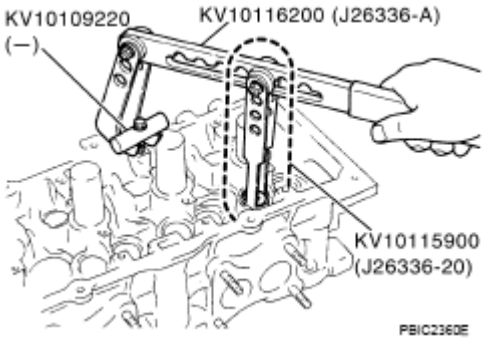


**Fig. 125: Removing Valve Collet Using Valve Spring Compressor**

 © 2011 Mitchell Repair Information Company, LLC.

**Courtesy of NISSAN MOTOR CO., U.S.A.**

6. Remove valve spring retainer and valve spring (with valve spring seat).

**CAUTION: Do not remove valve spring seat from valve spring.**

7. Remove valve oil seal using valve oil seal puller (SST).

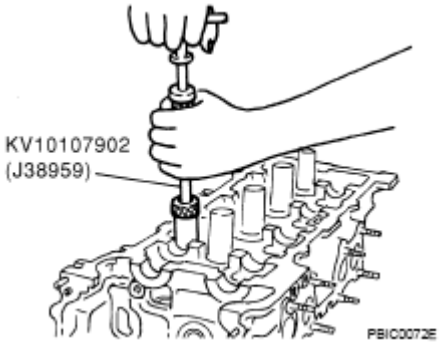


**Fig. 126: Removing Valve Oil Seal**
**Courtesy of NISSAN MOTOR CO., U.S.A.**

**INSTALLATION**

1. Apply new engine oil on new valve oil seal joint and seal lip.
2. Install valve oil seal.
   - Install with valve oil seal drift (SST) to match dimension in the figure.

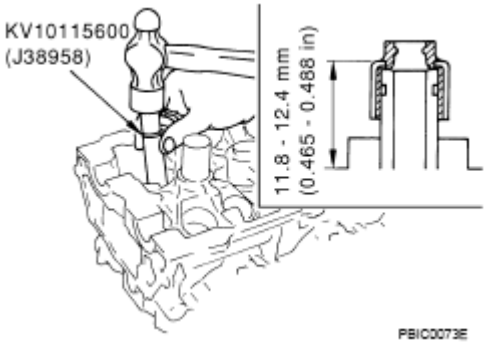


**Fig. 127: Installing Valve Oil Seal**
**Courtesy of NISSAN MOTOR CO., U.S.A.**

3. Install in the reverse order of removal.

**REMOVAL AND INSTALLATION OF FRONT OIL SEAL**

 © 2011 Mitchell Repair Information Company, LLC.

**REMOVAL**

1. Remove the following parts:
   - Front engine undercover (power tool)
   - Radiator; Refer to "**RADIATOR** ".
   - Drive belt; Refer to "**DRIVE BELTS**".
   - Rear plate cover; Refer to "**OIL PAN AND OIL STRAINER**".
2. Remove crankshaft pulley as follows:
   a. Set ring gear stopper (SST).

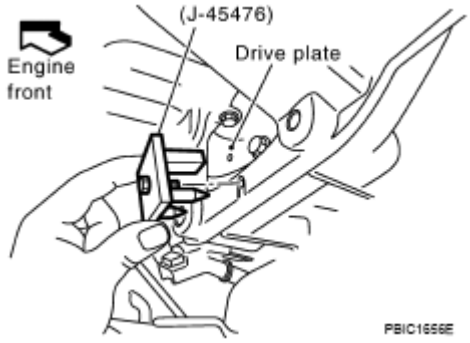


**Fig. 128: Identifying Set Ring Gear Stopper**
**Courtesy of NISSAN MOTOR CO., U.S.A.**

   b. Loosen crankshaft pulley bolt, and then pull crankshaft pulley with both hands to remove it.

**CAUTION:**
- **Do not remove crankshaft pulley bolt. Keep loosened crankshaft pulley bolt in place to protect removed crankshaft pulley from dropping.**
- **Do not remove balance weight (inner hexagon bolt) at the front of crankshaft pulley.**

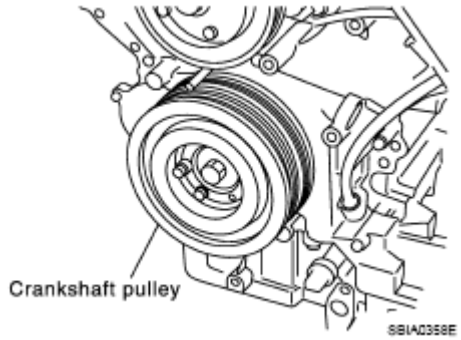


**Fig. 129: Identifying Crankshaft Pulley Bolt**
**Courtesy of NISSAN MOTOR CO., U.S.A.**

 © 2011 Mitchell Repair Information Company, LLC.

3. Remove front oil seal using suitable tool.

**CAUTION: Be careful not to damage front cover and oil pump drive spacer.**

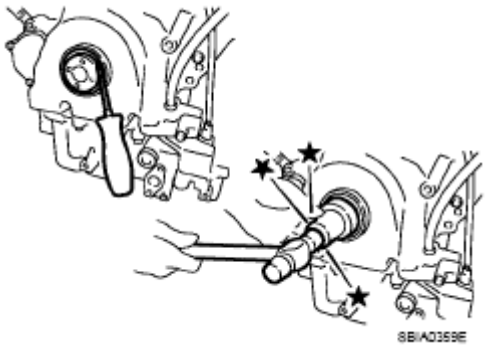


**Fig. 130: Removing Front Oil Seal**
**Courtesy of NISSAN MOTOR CO., U.S.A.**

**INSTALLATION**

1. Apply new engine oil to both oil seal lip and dust seal lip of new front oil seal.
2. Install front oil seal.
   - Install front oil seal so that each seal lip is oriented as shown in the figure.

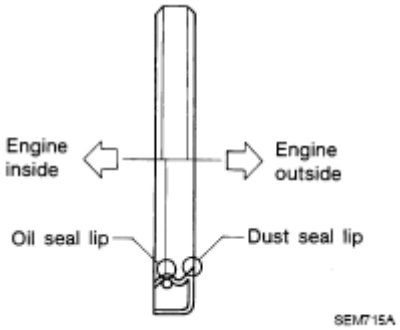


**Fig. 131: Applying Engine Oil To Both Oil Seal Lip And Dust Seal Lip**
**Courtesy of NISSAN MOTOR CO., U.S.A.**

   - Using front oil seal drift, press fit until the height of front oil seal is level with the mounting surface.

     **Front oil seal drift**

     **Outer diameter : 56 mm (2.20 in)**

     **Inner diameter : 49 mm (1.93 in)**

 © 2011 Mitchell Repair Information Company, LLC.

- Make sure the garter spring is in position and seal lips not inverted.

**CAUTION:**
- **Be careful not to damage front cover and oil pump drive spacer.**
- **Press fit straight and avoid causing burrs or tilting oil seal.**

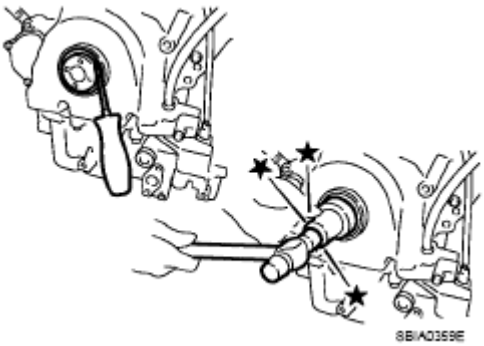


**Fig. 132: Pressing Front Oil Seal**
**Courtesy of NISSAN MOTOR CO., U.S.A.**

3. Install in the reverse order of removal.

## REMOVAL AND INSTALLATION OF REAR OIL SEAL

### REMOVAL

1. Remove transmission assembly. Refer to "**TRANSMISSION ASSEMBLY** ".
   a. Remove drive plate. Refer to "**CYLINDER BLOCK**".
   b. Remove rear plate. Refer to "**CYLINDER BLOCK**".
2. Remove rear oil seal using suitable tool.

**CAUTION: Be careful not to damage crankshaft and oil seal retainer surface.**

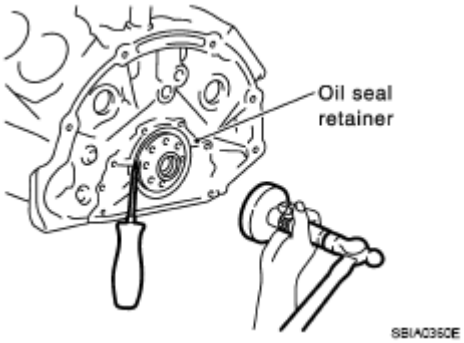


**Fig. 133: Removing Rear Oil Seal**

 © 2011 Mitchell Repair Information Company, LLC.

**Courtesy of NISSAN MOTOR CO., U.S.A.**

**INSTALLATION**

1. Apply new engine oil to both oil seal lip and dust seal lip of new rear oil seal.
2. Install rear oil seal.
   - Install rear oil seal so that each seal lip is oriented as shown in the figure.

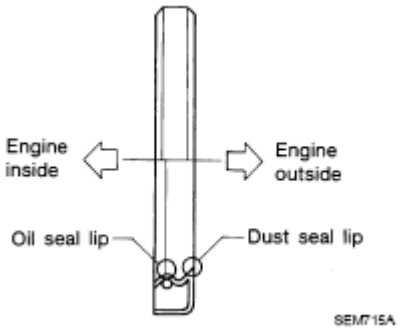


**Fig. 134: Applying Engine Oil To Both Oil Seal Lip And Dust Seal Lip**
**Courtesy of NISSAN MOTOR CO., U.S.A.**

- Using rear oil seal drift (commercial service tool), press fit until the height of front oil seal is level with the mounting surface.

  **Rear oil seal drift**

  **Outer diameter : 102 mm (4.02 in)**

  **Inner diameter : 86 mm (3.39 in)**

- Make sure the garter spring is in position and seal lips not inverted.

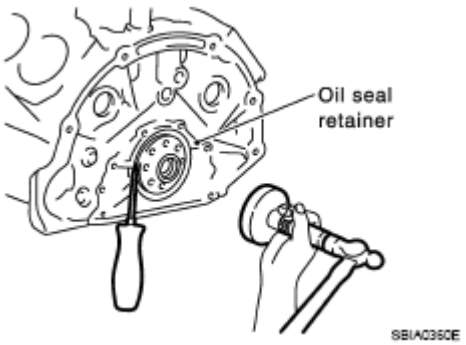


**Fig. 135: Installing Oil Seal**
**Courtesy of NISSAN MOTOR CO., U.S.A.**

**CAUTION:**
- **Be careful not to damage crankshaft and rear oil seal**

 © 2011 Mitchell Repair Information Company, LLC.

**retainer.**

- **Press fit straight and avoid causing burrs or tilting oil seal.**

3. Install in the reverse order of removal.

# CYLINDER HEAD

## ON-VEHICLE SERVICE

### CHECKING COMPRESSION PRESSURE

1. Warm up engine thoroughly. Then, stop it.
2. Release fuel pressure. Refer to "**FUEL PRESSURE RELEASE** ".
   a. Remove fuel pump fuse to avoid fuel injection during measurement.

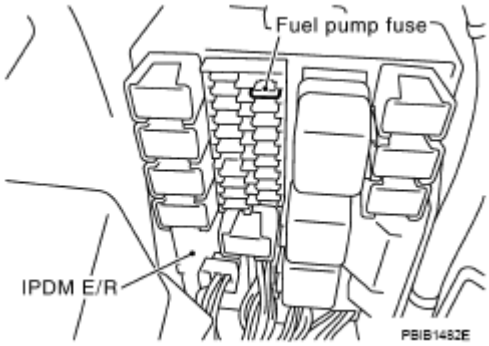


**Fig. 136: Identifying Fuel Pump Fuse**
**Courtesy of NISSAN MOTOR CO., U.S.A.**

3. Remove engine cover with power tool. Refer to "**ENGINE ROOM COVER**".
4. Remove ignition coil and spark plug from each cylinder. Refer to "**IGNITION COIL**" and "**SPARK PLUG (PLATINUM-TIPPED TYPE)**".
5. Connect engine tachometer (not required in use of CONSULT-III).
6. Install compression gauge with adapter (SST or commercial service tool) onto spark plug hole.
   - Use compression gauge adapter (SST) which is required on No. 7 and 8 cylinders.

 © 2011 Mitchell Repair Information Company, LLC.

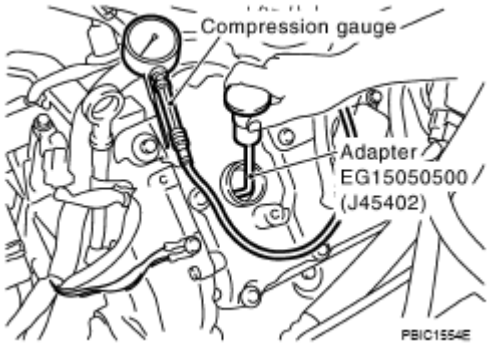


**Fig. 137: Installing Compression Gauge With Adapter**
**Courtesy of NISSAN MOTOR CO., U.S.A.**

- Use compression gauge adapter (if no SST is used) whose picking up end inserted to spark plug hole is smaller than 20 mm (0.79 in) in diameter. Otherwise, it may be caught by cylinder head during removal.

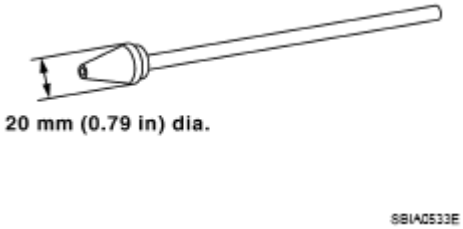


**Fig. 138: Identifying Adapter Diameter**
**Courtesy of NISSAN MOTOR CO., U.S.A.**

7. With accelerator pedal fully depressed, turn ignition switch to "START" for cranking. When the gauge pointer stabilizes, read the compression pressure and engine rpm. Perform these steps to check each cylinder.

**Compression pressure:**

**COMPRESSION PRESSURE SPECIFICATION**

| | | Unit: kPa (kg/cm$^2$ , psi)/rpm |
|---|---|---|
| **Standard** | **Minimum** | **Deferential limit between cylinders** |
| 1,320 (13.5, 191)/300 | 1,130 (11.5, 164)/300 | 98 (1.0, 14)/300 |

**CAUTION: Always use a fully changed battery to obtain the specified engine speed.**

- If the engine speed is out of specified range, check battery liquid for proper gravity. Check engine speed again with normal battery gravity.
- If compression pressure is below minimum value, check valve clearances and parts associated with

 © 2011 Mitchell Repair Information Company, LLC.

combustion chamber (valve, valve seat, piston, piston ring, cylinder bore, cylinder head, cylinder head gasket). After the checking, measure compression pressure again.

- If some cylinders have low compression pressure, pour small amount of engine oil into the spark plug hole of the cylinder to re-check it for compression.
  - If the added engine oil improves the compression, piston rings may be worn out or damaged. Check the piston rings and replace if necessary.
  - If the compression pressure remains at low level despite the addition of engine oil, valves may be malfunctioning. Check valves for damage. Replace valve or valve seat accordingly.
- If two adjacent cylinders have respectively low compression pressure and their compression remains low even after the addition of engine oil, cylinder head gaskets are leaking. In such a case, replace cylinder head gaskets.

8. After inspection is completed, install removed parts in the reverse order of removal.
9. Start engine, and make sure that engine runs smoothly.
10. Perform trouble diagnosis. If DTC appears, erase it. Refer to "**TROUBLE DIAGNOSIS** ".

## COMPONENTS

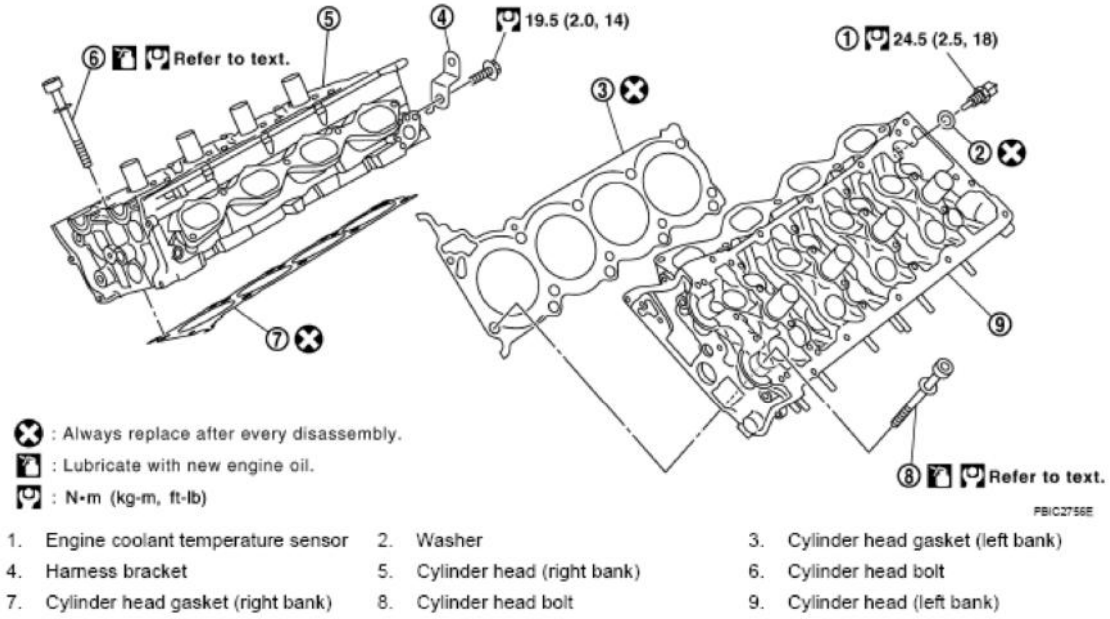


**Fig. 139: Identifying Cylinder Head Components With Torque Specifications**
**Courtesy of NISSAN MOTOR CO., U.S.A.**

## REMOVAL AND INSTALLATION

### REMOVAL

1. Remove engine assembly from vehicle. Refer to "**ENGINE ASSEMBLY**".
2. Remove exhaust manifold. Refer to "**EXHAUST MANIFOLD AND THREE WAY CATALYST**".
3. Remove camshaft. Refer to "**CAMSHAFT**".

 © 2011 Mitchell Repair Information Company, LLC.

4. Remove cylinder head bolts in reverse order as shown in the figure with cylinder head bolt wrench (commercial service tool) to remove cylinder heads (right and left banks).

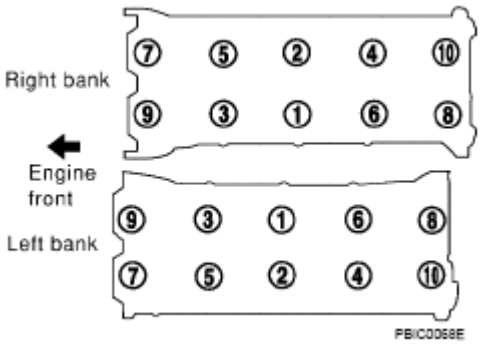


**Fig. 140: Identifying Cylinder Head Bolts Removing Sequence**
**Courtesy of NISSAN MOTOR CO., U.S.A.**

5. Remove cylinder head gaskets.

**INSPECTION AFTER REMOVAL**

**Cylinder Head Bolts Outer Diameter**

- Cylinder head bolts are tightened by plastic zone tightening method. Whenever the size difference between "d1" and "d2" exceeds the limit, replace them with new one.

  **Limit ("d1" - "d2") : 0.18 mm (0.0071 in)**

- If reduction of outer diameter appears in a position other than "d2", use it as "d2" point.

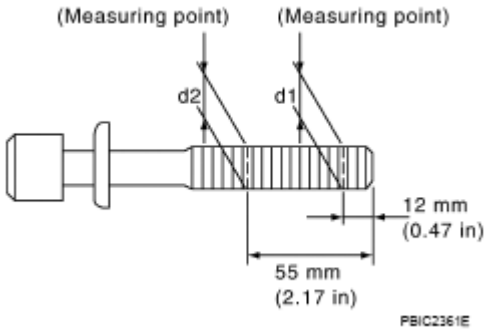


**Fig. 141: Identifying Cylinder Head Bolts Outer Diameter**
**Courtesy of NISSAN MOTOR CO., U.S.A.**

**Cylinder Head Distortion**

**NOTE: When performing this inspection, cylinder block distortion should be also checking. Refer to "CYLINDER BLOCK DISTORTION".**

 © 2011 Mitchell Repair Information Company, LLC.

1. Using scraper, wipe off oil, scale, gasket, sealant and carbon deposits from surface of cylinder head.

**CAUTION: Do not allow gasket fragments to enter engine oil or engine coolant passages.**

2. At each of several locations on bottom surface of cylinder head, measure the distortion in six directions.

**Limit : 0.1 mm (0.004 in)**

- If it exceeds the limit, replace cylinder head.

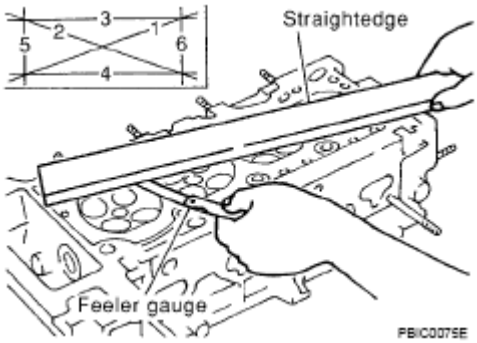


**Fig. 142: Checking Cylinder Head Distortion**
**Courtesy of NISSAN MOTOR CO., U.S.A.**

**INSTALLATION**

1. Install new cylinder head gasket.
2. Turn crankshaft until No. 1 piston is set at TDC.
   - Crankshaft key should line up with the left bank cylinder center line as shown in the figure.

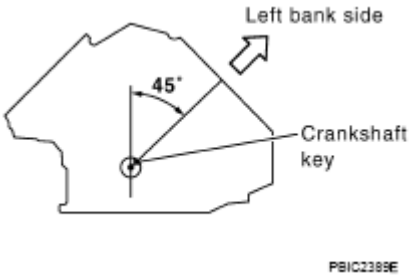


**Fig. 143: Identifying Crankshaft Key Line**
**Courtesy of NISSAN MOTOR CO., U.S.A.**

3. Install cylinder head follow the steps below to tighten cylinder head bolts in numerical order as shown in the figure with cylinder head bolt wrench (commercial service tool).

 © 2011 Mitchell Repair Information Company, LLC.

**CAUTION: If cylinder head bolts are re-used, check their outer diameters before installation. Refer to "CYLINDER HEAD BOLTS OUTER DIAMETER".**

a. Apply new engine oil to threads and seating surface of cylinder head bolts.
b. Tighten all cylinder head bolts.

**: 98.1 N.m (10 kg-m, 72 ft-lb)**

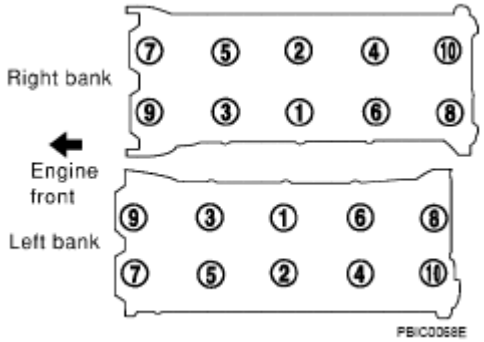


**Fig. 144: Identifying Cylinder Head Bolts Tightening Sequence**
**Courtesy of NISSAN MOTOR CO., U.S.A.**

c. Completely loosen all cylinder head bolts.

**: 0 N.m (0 kg-m, 0 ft-lb)**

**CAUTION: In step "c", loosen cylinder head bolts in reverse order of that indicated in the figure.**

d. Tighten all cylinder head bolts.

**: 44 N.m (4.5 kg-m, 33 ft-lb)**

e. Turn all cylinder head bolts 60 degrees clockwise. (Angle tightening)

**CAUTION: Check the tightening angle by using angle wrench (SST). Avoid judgment by visual inspection without SST.**

- Check tightening angle indicated on angle wrench indicator plate.

f. Turn all cylinder head bolts 60 degrees clockwise again. (Angle tightening)

 © 2011 Mitchell Repair Information Company, LLC.

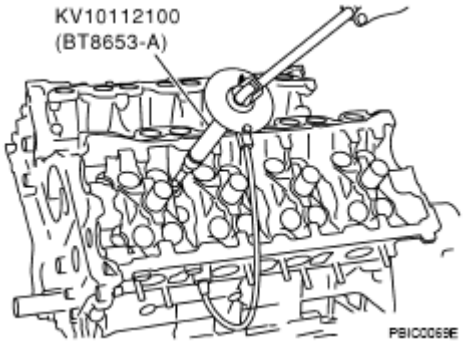


**Fig. 145: Checking Tightening Angle**
**Courtesy of NISSAN MOTOR CO., U.S.A.**

4. Install in the reverse order of removal.

## DISASSEMBLY AND ASSEMBLY

### COMPONENTS

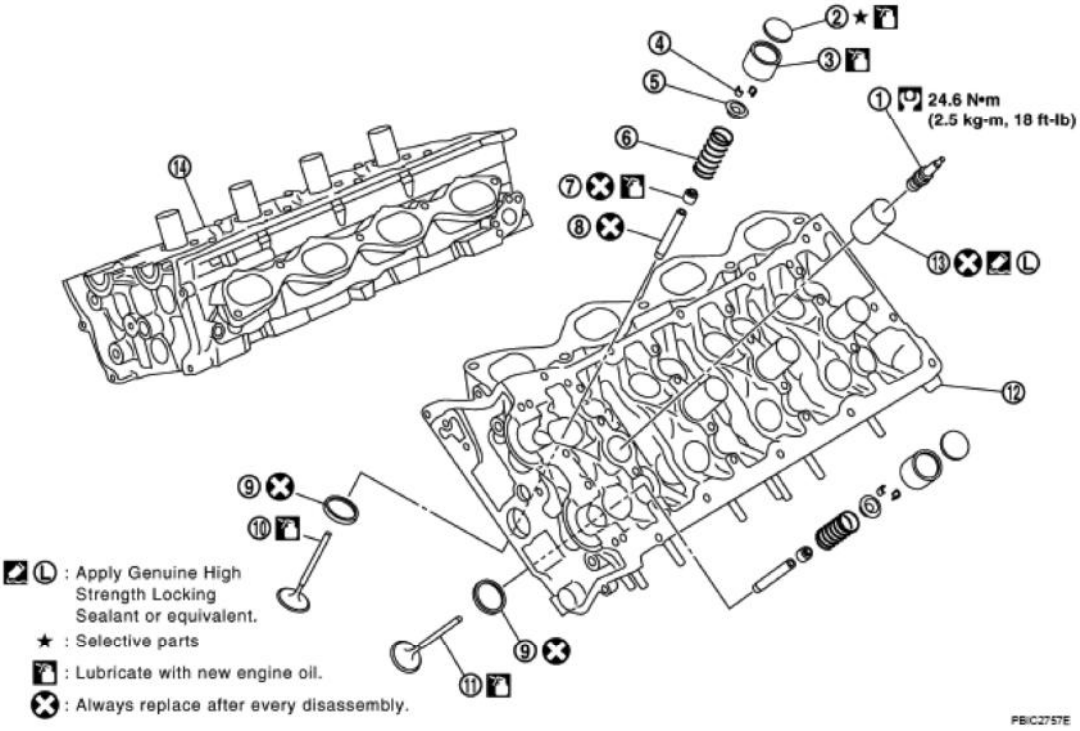


| | | | | | |
|---|---|---|---|---|---|
| 1. | Spark plug | 2. | Adjusting shim | 3. | Valve lifter |
| 4. | Valve collet | 5. | Valve spring retainer | 6. | Valve spring (with valve spring seat) |
| 7. | Valve oil seal | 8. | Valve guide | 9. | Valve seat |
| 10. | Valve (INT) | 11. | Valve (EXH) | 12. | Cylinder head (left bank) |
| 13. | Spark plug tube | 14. | Cylinder head (right bank) | | |

**Fig. 146: Identifying Cylinder Head Components And Torque Specification**
**Courtesy of NISSAN MOTOR CO., U.S.A.**

 © 2011 Mitchell Repair Information Company, LLC.

Refer to **CONTENTS** for symbols in the figure.

**DISASSEMBLY**

1. Remove spark plug with spark plug wrench (commercial service tool).
2. Remove adjusting shim and valve lifter.
   - Identify installation positions, and store them without mixing them up.
3. Remove valve collet.
   - Compress valve spring with valve spring compressor, attachment and adapter (SST). Remove valve collet with magnetic hand.

**CAUTION: When working, take care not to damage valve lifter holes.**

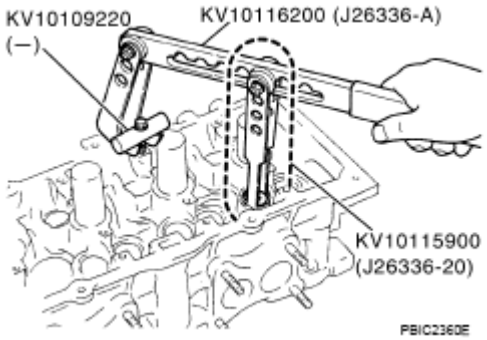


**Fig. 147: Removing Valve Collet With Valve Spring Compressor**
**Courtesy of NISSAN MOTOR CO., U.S.A.**

4. Remove valve spring retainer and valve spring (with valve spring seat).

**CAUTION: Do not remove valve spring seat from valve spring.**

5. Push valve stem to combustion chamber side, and remove valve.
   - Identify installation positions, and store them without mixing them up.
6. Remove valve oil seal with valve oil seal puller (SST).

 © 2011 Mitchell Repair Information Company, LLC.

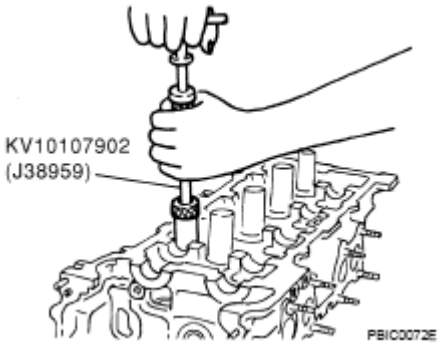


**Fig. 148: Removing Valve Oil Seal**
**Courtesy of NISSAN MOTOR CO., U.S.A.**

7. If valve seat must be replaced, refer to "**VALVE SEAT REPLACEMENT**".
8. If valve guide must be replaced, refer to "**VALVE GUIDE REPLACEMENT**".
9. Remove spark plug tube, as necessary.
   - Using pair of pliers, pull spark plug tube out of cylinder head.

**CAUTION:**
- **Take care not to damage cylinder head.**
- **Once removed, spark plug tube will be deformed and cannot be reused. Do not remove it unless absolutely necessary.**

**ASSEMBLY**

1. When valve guide is removed, install it. Refer to "**VALVE GUIDE REPLACEMENT**".
2. When valve seat is removed, install it. Refer to "**VALVE SEAT REPLACEMENT**".
3. Install new valve oil seal as follows:
   a. Apply new engine oil on valve oil seal joint and seal lip.
   b. Install with valve oil seal drift (SST) to match dimension in the figure.

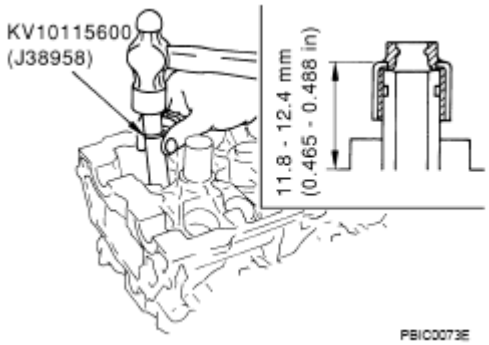


**Fig. 149: Installing Valve Oil Seal**
**Courtesy of NISSAN MOTOR CO., U.S.A.**

 © 2011 Mitchell Repair Information Company, LLC.

4. Install valve.
   - Install in the original position.

**NOTE: Larger diameter valves are for intake side.**

5. Install valve spring (with valve spring seat).
   - Install smaller pitch (valve spring seat side) to cylinder head side.

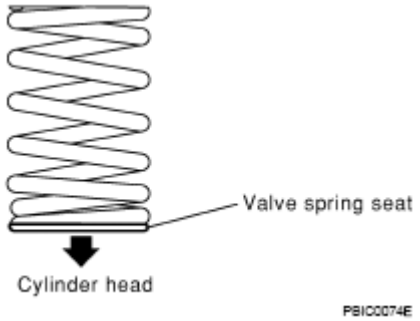


**Fig. 150: Identifying Valve Spring Seat**
**Courtesy of NISSAN MOTOR CO., U.S.A.**

6. Install valve spring retainer.
7. Install valve collet.
   - Compress valve spring with valve spring compressor, attachment and adapter (SST). Install valve collet with magnetic hand.

**CAUTION: When working, take care not to damage valve lifter holes.**

   - Tap stem edge lightly with plastic hammer after installation to check its installed condition.

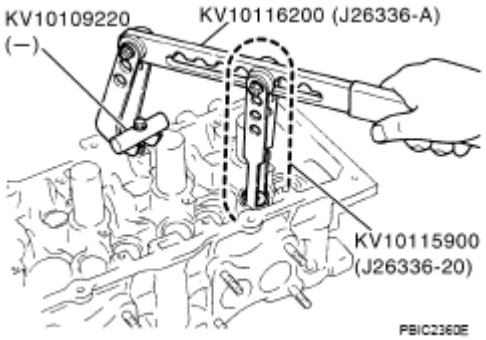


**Fig. 151: Installing Valve Collet With Valve Spring Compressor**
**Courtesy of NISSAN MOTOR CO., U.S.A.**

8. Install valve lifter and adjusting shim.

 © 2011 Mitchell Repair Information Company, LLC.

- Install it in the original position.

9. Install spark plug tube.
   - Press-fit spark plug tube as follows:
   a. Remove old liquid gasket adhering to cylinder-head mounting hole.
   b. Apply sealant to area within approximately 12 mm (0.47 in) from edge of spark plug tube press-fit side.

      **Use Genuine High Strength Locking Sealant or equivalent.** Refer to "**RECOMMENDED CHEMICAL PRODUCTS AND SEALANTS** ".

   c. Using drift, press-fit spark plug tube so that its height "H" is as specified in the figure.

      **Standard press-fit height "H" :**

      **: 38.4 - 39.4 mm (1.512 - 1.551 in)**

**CAUTION:**
- **When press-fitting, take care not to deform spark plug tube.**
- **After press-fitting, wipe off liquid gasket protruding onto cylinder head upper face.**

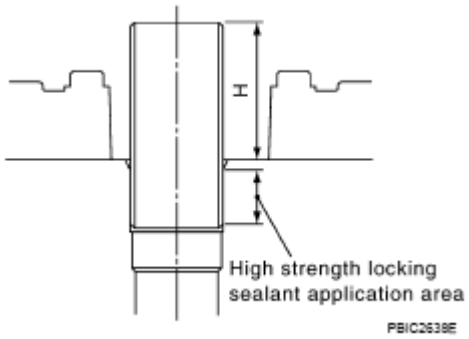


**Fig. 152: Identifying High Strength Locking Sealant Application Area**
**Courtesy of NISSAN MOTOR CO., U.S.A.**

10. Install spark plug with spark plug wrench (commercial service tool).

## INSPECTION AFTER DISASSEMBLY

### VALVE DIMENSIONS

- Check the dimensions of each valve. For the dimensions, refer to "**VALVE DIMENSIONS**".
- If the dimensions are out of the standard, replace valve and check the valve seat contact. Refer to "**VALVE SEAT CONTACT**".

 © 2011 Mitchell Repair Information Company, LLC.

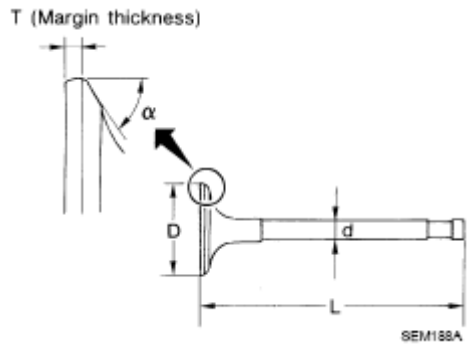


**Fig. 153: Checking Dimensions Of Valve**
**Courtesy of NISSAN MOTOR CO., U.S.A.**

**VALVE GUIDE CLEARANCE**

**Valve Stem Diameter**

Measure the diameter of valve stem with micrometer.

**Standard**

**Intake : 5.972 - 5.980 mm (0.2351 - 0.2354 in)**

**Exhaust : 5.962 - 5.970 mm (0.2347 - 0.2350 in)**

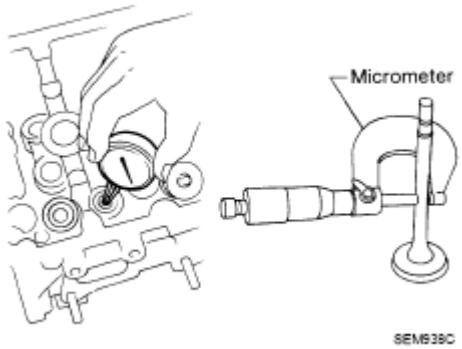


**Fig. 154: Measuring Diameter Of Valve Stem With Micrometer**
**Courtesy of NISSAN MOTOR CO., U.S.A.**

**Valve Guide Inner Diameter**

Measure the inner diameter of valve guide with bore gauge.

**Standard**

**Intake and Exhaust : 6.000 - 6.018 mm (0.2362 - 0.2369 in)**

**Valve Guide Clearance**

 © 2011 Mitchell Repair Information Company, LLC.

(Valve guide clearance) = (Valve guide inner diameter) - (Valve stem diameter).

**Valve guide clearance:**

**Standard**

**Intake : 0.020 - 0.046 mm (0.0008 - 0.0018 in)**

**Exhaust : 0.030 - 0.056 mm (0.0012 - 0.0022 in)**

**Limit**

**Intake : 0.08 mm (0.003 in)**

**Exhaust : 0.1 mm (0.004 in)**

- If the calculated value exceeds the limit, replace valve and/or valve guide. When valve guide must be replaced, refer to "**VALVE GUIDE REPLACEMENT**".

**VALVE GUIDE REPLACEMENT**

When valve guide is removed, replace with oversized [0.2 mm (0.008 in)] valve guide.

1. To remove valve guide, heat cylinder head to 110 to 130°C (230 to 266°F) by soaking in heated oil.

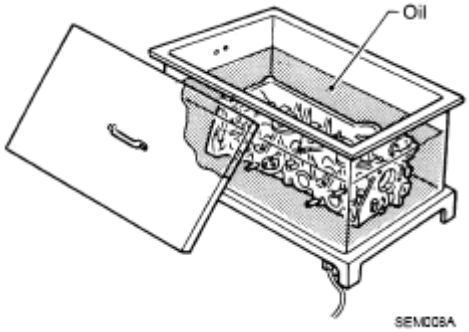


**Fig. 155: Heating Cylinder Head**
**Courtesy of NISSAN MOTOR CO., U.S.A.**

2. Drive out valve guide with a press [under a 20 kN (2 ton, 2.2 US ton, 2.0 lmp ton) pressure] or hammer and valve guide drift (commercial service tool).

**WARNING: Cylinder head contains heat. When working, wear protective equipment to avoid getting burned.**

 © 2011 Mitchell Repair Information Company, LLC.

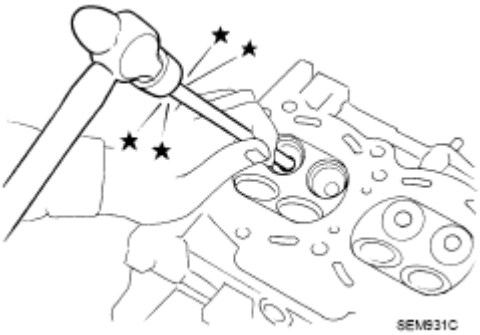


**Fig. 156: Driving Out Valve Guide**
**Courtesy of NISSAN MOTOR CO., U.S.A.**

3. Using valve guide reamer (commercial service tool), ream cylinder head valve guide hole.

   **Valve guide hole diameter (for service parts):**

   **Intake and exhaust : 10.175 - 10.196 mm (0.4006 - 0.4014 in)**

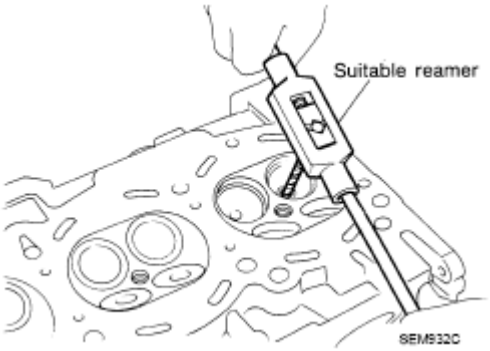


**Fig. 157: Applying Reamer Finish To Valve Guide**
**Courtesy of NISSAN MOTOR CO., U.S.A.**

4. Heat cylinder head to 110 to 130°C (230 to 266°F) by soaking in heated oil.

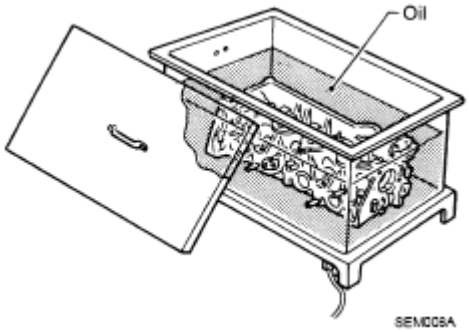


**Fig. 158: Heating Cylinder Head**
**Courtesy of NISSAN MOTOR CO., U.S.A.**

 © 2011 Mitchell Repair Information Company, LLC.

5. Using valve guide drift (commercial service tool), press valve guide from camshaft side to the dimensions as in the figure.

**WARNING: Cylinder head contains heat. When working, wear protective equipment to avoid getting burned.**

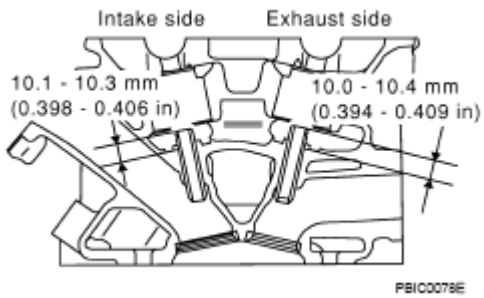


**Fig. 159: Identifying Valve Guide Dimension**
**Courtesy of NISSAN MOTOR CO., U.S.A.**

6. Using valve guide reamer (commercial service tool), apply reamer finish to valve guide.

**Standard:**

**Intake and exhaust : 6.000 - 6.018 mm (0.2362 - 0.2369 in)**

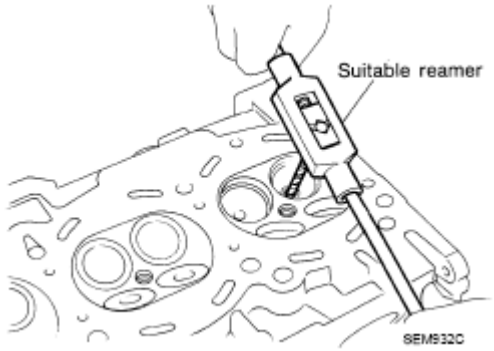


**Fig. 160: Applying Reamer Finish To Valve Guide**
**Courtesy of NISSAN MOTOR CO., U.S.A.**

**VALVE SEAT CONTACT**

- After confirming that the dimensions of valve guides and valves are within the specifications, perform this procedure.
- Apply Prussian blue (or white lead) onto contacting surface of valve seat to check the condition of the valve contact on the surface.
- Check if the contact area band is continuous all around the circumference.
- If not, grind to adjust valve fitting and check again. If the contacting surface still has "NG" conditions

 © 2011 Mitchell Repair Information Company, LLC.

even after the re-check, replace valve seat. Refer to "**VALVE SEAT REPLACEMENT**".

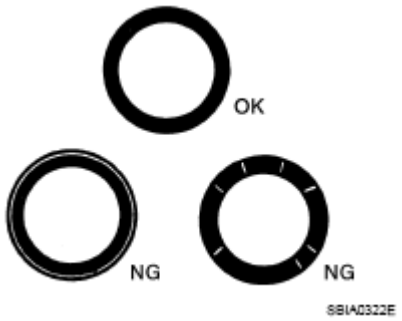


**Fig. 161: Identifying Valve Seat Contact**
**Courtesy of NISSAN MOTOR CO., U.S.A.**

**VALVE SEAT REPLACEMENT**

When valve seat is removed, replace with oversized [0.5 mm (0.020 in)] valve seat.

1. Bore out old seat until it collapses. Boring should not continue beyond the bottom face of the seat recess in cylinder head. Set the machine depth stop to ensure this. Refer to "**VALVE SEAT**".

**CAUTION: Prevent to scratch cylinder head by excessive boring.**

2. Ream cylinder head recess diameter for service valve seat.

   **Oversize [0.5 mm (0.020 in)]**

   **Intake : 37.500 - 37.516 mm (1.4764 - 1.4770 in)**

   **Exhaust : 32.700 - 32.716 mm (1.2874 - 1.2880 in)**

   - Be sure to ream in circles concentric to valve guide center. This will enable valve to fit correctly.

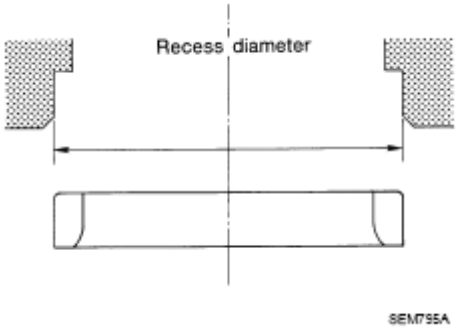


**Fig. 162: Identifying Cylinder Head Recess Diameter**
**Courtesy of NISSAN MOTOR CO., U.S.A.**

 © 2011 Mitchell Repair Information Company, LLC.

3. Heat cylinder head to 110 to 130°C (230 to 266°F) by soaking in heated oil.

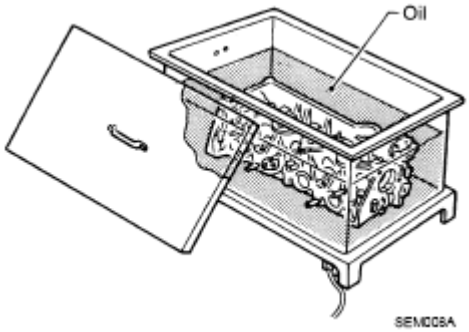


**Fig. 163: Heating Cylinder Head**
**Courtesy of NISSAN MOTOR CO., U.S.A.**

4. Provide valve seats cooled well with dry ice. Force fit valve seat into cylinder head.

**WARNING: Cylinder head contains heat. When working, wear protective equipment to avoid getting burned.**

**CAUTION: Avoid directly touching cold valve seats.**

5. Using valve seat cutter set (commercial service tool) or valve seat grinder, finish seat to the specified dimensions. Refer to "**VALVE SEAT**".

**CAUTION: When using valve seat cutter, firmly grip cutter handle with both hands. Then, press on the contacting surface all around the circumference to cut in a single drive. Improper pressure on with cutter or cutting many different times may result in stage valve seat.**

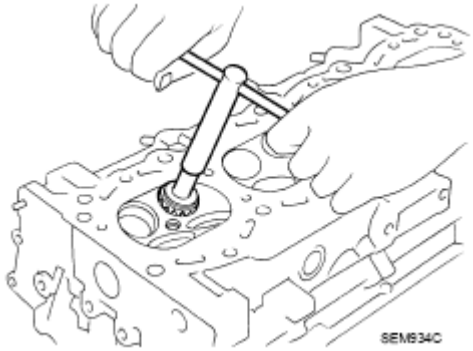


**Fig. 164: Cutting Valve Seat**
**Courtesy of NISSAN MOTOR CO., U.S.A.**

 © 2011 Mitchell Repair Information Company, LLC.

6. Using compound, grind to adjust valve fitting.
7. Check again for normal contact. Refer to "**VALVE SEAT CONTACT**".

**VALVE SPRING SQUARENESS**

- Set try square along the side of valve spring and rotate spring. Measure the maximum clearance between the top face of spring and try square.

  **Limit : 2.0 mm (0.079 in)**

- If it exceeds the limit, replace valve spring.

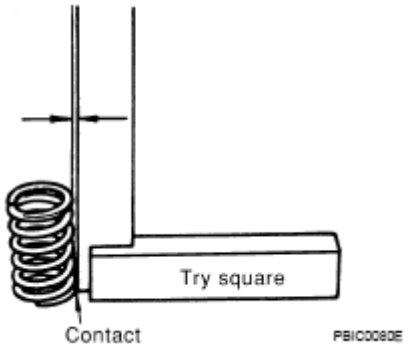


**Fig. 165: Measuring Clearance Between Top Of Valve Spring And Try Square**
**Courtesy of NISSAN MOTOR CO., U.S.A.**

**VALVE SPRING DIMENSIONS AND VALVE SPRING PRESSURE LOAD**

- Check valve spring pressure at the specified spring height.

  **Standard:**

  **Intake and exhaust**

  **Free height : 46.35 - 46.85 mm (1.8247 - 1.8444 in)**

  **Installation height : 33.8 mm (1.331 in)**

  **Installation load : 165 - 189 N (16.8 - 19.3 kg, 37 - 42 lb)**

  **Height during valve open : 24.4 mm (0.961 in)**

  **Load with valve open : 290 - 330 N (29.6 - 33.7 kg, 65 - 74 lb)**

- If the installation load or load with valve open is out of the standard, replace valve spring.

 © 2011 Mitchell Repair Information Company, LLC.

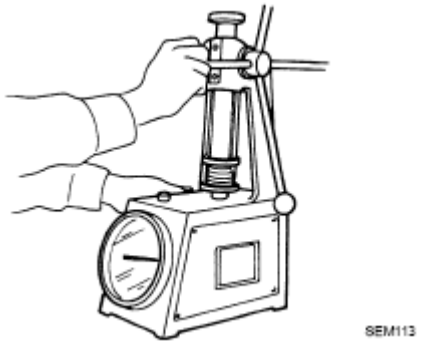


**Fig. 166: Checking Valve Spring Pressure**
**Courtesy of NISSAN MOTOR CO., U.S.A.**

# ENGINE ASSEMBLY

## 2WD

### 2WD: Components

 © 2011 Mitchell Repair Information Company, LLC.

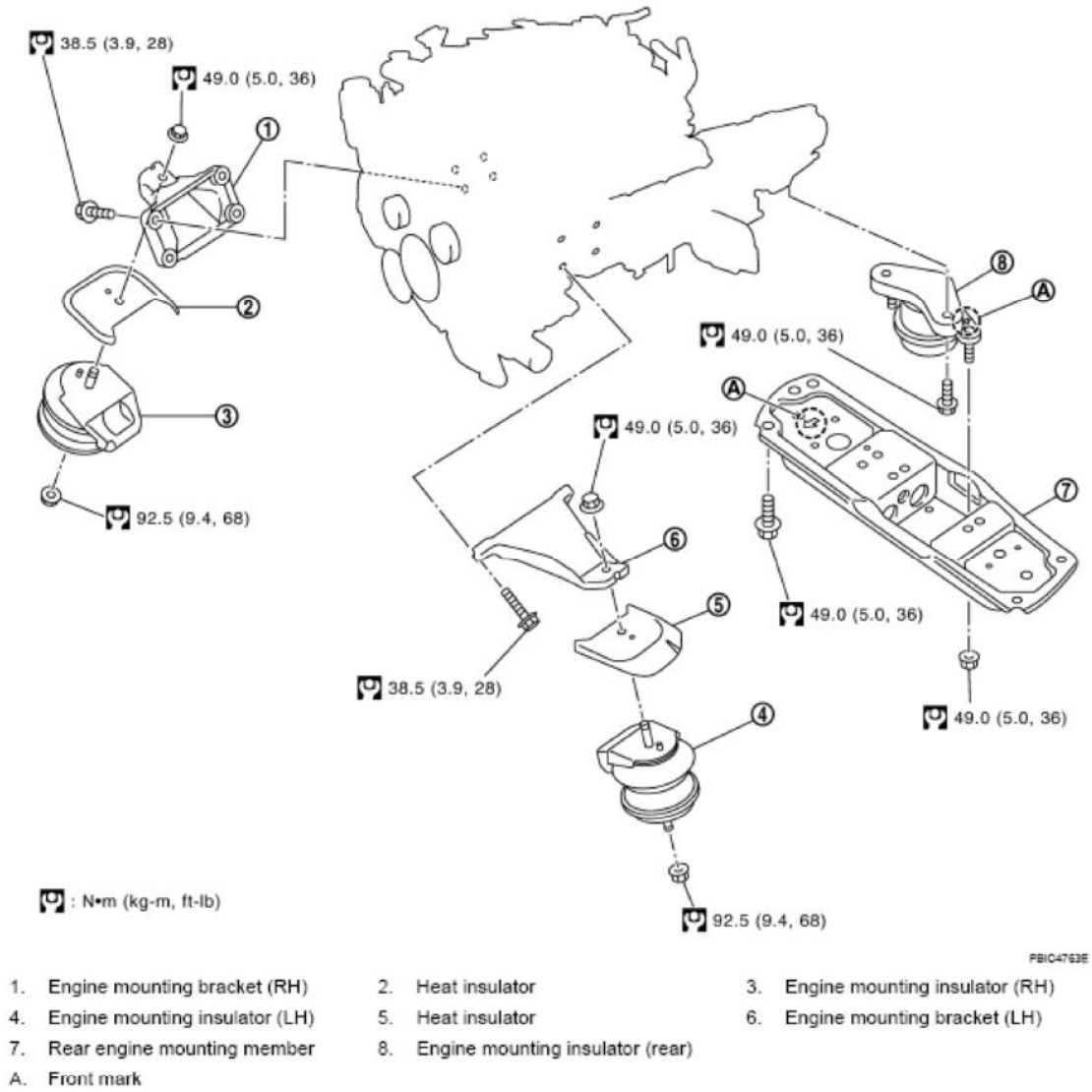


**Fig. 167: Identifying Engine Assembly Components With Torque Specifications (2WD)**
**Courtesy of NISSAN MOTOR CO., U.S.A.**

**2WD : Removal and Installation**

**WARNING:**

- **Situate vehicle on a flat and solid surface.**
- **Place chocks at front and back of rear wheels.**
- **For engines not equipped with engine slingers, attach proper slingers and bolts described .**

**CAUTION:**

- **Always be careful to work safely, avoid forceful or uninstructed operations.**
- **Do not start working until exhaust system and engine coolant are cool enough.**

 © 2011 Mitchell Repair Information Company, LLC.

- **If items or work required are not covered by the engine section, refer to the applicable sections.**
- **Always use the support point specified for lifting.**
- **Use either 2-pole lift type or separate type lift as best you can. If board-on type is used for unavoidable reasons, support at the rear axle jacking point with transmission jack or similar tool before starting work, in preparation for the backward shift of center of gravity.**
- **For supporting points for lifting and jacking point at rear axle, refer to "GARAGE JACK AND SAFETY STAND AND 2-POLE LIFT ".**

**REMOVAL**

**Outline**

At first, remove engine, transmission assembly with front suspension member from vehicle downward. Then separate engine from transmission.

**Preparation**

1. Release fuel pressure. Refer to "**FUEL PRESSURE RELEASE** ".
2. Drain engine coolant from radiator. Refer to "**CHANGING ENGINE COOLANT** ".

**CAUTION:**
- **Perform this step when engine is cold.**
- **Never spill engine coolant on drive belts.**

3. Disconnect both battery cables. Refer to "**BATTERY** ".
4. Remove crankshaft position sensor (POS) from transmission.

**CAUTION:**
- **Handle carefully to avoid dropping and shocks.**
- **Never disassemble.**
- **Never allow metal powder to adhere to magnetic part at sensor tip.**
- **Never place sensors in a location where they are exposed to magnetism.**

5. Remove the following parts:
   - Front and rear engine undercover (power tool)
   - Air duct (inlet), air duct and air cleaner case assembly; Refer to "**AIR CLEANER AND AIR DUCT**".
   - Front road wheels and tires (power tool)

**Engine Room LH**

 © 2011 Mitchell Repair Information Company, LLC.

1. Disconnect heater hoses, and install plugs to avoid leakage of engine coolant.
2. Disconnect wire bonding from exhaust manifold cover to vehicle.
3. Disconnect vacuum hose between vehicle and engine and set it aside.
4. Discharge refrigerant from A/C circuit. Refer to "**REFRIGERANT LINES** ".
5. Remove A/C piping from A/C compressor, and temporarily fasten it on vehicle with a rope. Refer to "**REFRIGERANT LINES** ".

**Engine Room RH**

1. Disconnect fuel feed hose and EVAP hose. Refer to "**FUEL INJECTOR AND FUEL TUBE**".

**CAUTION: Fit plugs onto disconnected hose to prevent fuel leak.**

2. Disconnect ground cable (between vehicle and right bank cylinder head).
3. Disconnect vacuum hose between vehicle and engine and set it aside.
4. Disconnect reservoir tank of power steering oil pump from engine, and move it aside for easier work.

**CAUTION: When temporarily securing, keep reservoir tank upright to avoid a fluid leak.**

**Vehicle inside**

Follow procedure below to disconnect engine room harness connectors at passenger room side, and temporarily secure them on engine.

1. Remove passenger-side kicking plate, dash side finisher, and glove box. Refer to "**BODY SIDE TRIM** " and "**INSTRUMENT PANEL ASSEMBLY** ".
2. Disconnect engine room harness connectors at unit sides TCM, ECM and other.
3. Disengage intermediate fixing point. Pull out engine room harnesses to engine room side, and temporarily secure them on engine.

**CAUTION:**

- **When pulling out harnesses, take care not to damage harnesses and connectors.**
- **After temporarily securing, cover connectors with vinyl or similar material to protect against foreign material adhesion.**

**Vehicle Underbody**

1. Remove A/T fluid cooler hoses and power steering oil pump oil cooler hoses.
   - Install plug to avoid leakage of A/T fluid and power steering fluid.
2. Disconnect heated oxygen sensor 2 harness. Refer to "**EXHAUST SYSTEM** ".

 © 2011 Mitchell Repair Information Company, LLC.

3. Remove exhaust front tube with power tool. Refer to "**EXHAUST SYSTEM** ".
4. Disconnect steering lower joint at power steering gear assembly side, and release steering lower shaft. Refer to "**STEERING COLUMN** ".
5. Separate steering outer sockets from steering knuckle. Refer to "**POWER STEERING GEAR AND LINKAGE** ".
6. Remove A/T control rod at control device assembly side. Then temporarily secure it on transmission, so that it does not sag. Refer to "**SHIFT CONTROL SYSTEM** ".
7. Remove rear plate cover from oil pan. Then remove bolts fixing drive plate to torque converter. Refer to "**OIL PAN AND OIL STRAINER**" and "**TRANSMISSION ASSEMBLY** ".
8. Remove transmission joint bolts which pierce at oil pan lower rear side. Refer to "**TRANSMISSION ASSEMBLY** ".
9. Remove lower ends of left and right strut from transverse link. Refer to "**FRONT SUSPENSION ASSEMBLY** ".
10. Remove transverse link mounting bolts at knuckle side. Refer to "**TRANSVERSE LINK** ".
11. Remove front stabilizer at transverse link side. Refer to "**FRONT SUSPENSION ASSEMBLY** ".
12. Remove rear propeller shaft. Refer to "**REAR PROPELLER SHAFT** ".

**Removal Work**

1. Use manual lift table caddy (commercial service tool) or equivalently rigid tool such as transmission jack. Securely support bottom of suspension member and transmission assembly.

**CAUTION: Put a piece of wood or something similar as the supporting surface, secure a completely stable condition.**

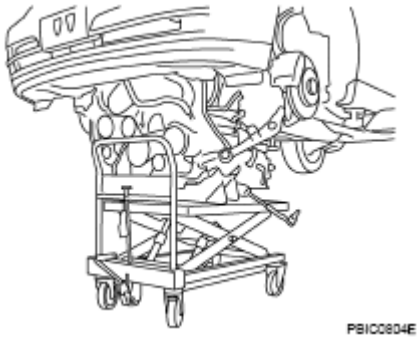


**Fig. 168: Applying Manual Lift Table Caddy**
**Courtesy of NISSAN MOTOR CO., U.S.A.**

2. Remove engine rear member mounting bolts.
3. Remove front suspension member mounting nuts and bolts with power tool. Refer to "**FRONT SUSPENSION ASSEMBLY** ".
4. Carefully lower jack, or raise lift to remove engine, transmission and front suspension member assembly. When performing work, observe the following caution:

 © 2011 Mitchell Repair Information Company, LLC.

**CAUTION:**

- **Confirm there is no interference with vehicle.**
- **Make sure that all connection points have been disconnected.**
- **Keep in mind the center of vehicle gravity changes. If necessary, use jack(s) to support vehicle at rear jacking point(s) to prevent it from falling it off the lift.**

**Separation Work**

1. Install engine slingers into front of cylinder head (left bank) and front of cylinder head (right bank).

   **Slinger bolts:**

   **:33.4 N.m (3.4 kg-m, 25 ft-lb)**

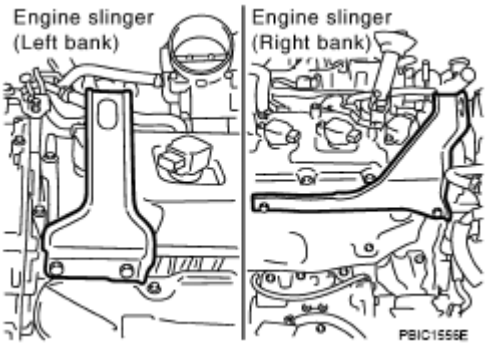


   **Fig. 169: Identifying Engine Slingers**
   **Courtesy of NISSAN MOTOR CO., U.S.A.**

2. Remove engine mounting insulators (RH and LH) under side nut with power tool.
3. Lift with hoist and separate engine and transmission assembly from front suspension member.

**CAUTION: Avoid damage to and oil/grease smearing or spills onto engine mounting insulator.**

4. Remove alternator. Refer to "**CHARGING SYSTEM** ".
5. Remove starter motor. Refer to "**STARTING SYSTEM** ".
6. Separate engine from transmission assembly. Refer to "**TRANSMISSION ASSEMBLY** ".
7. Remove engine mounting insulators (RH and LH) and brackets (RH and LH) from engine with power tool.
8. Remove rear engine mounting member and engine mounting insulator (rear) from transmission.

**INSTALLATION**

Note the following, and install in the reverse order of removal.

 © 2011 Mitchell Repair Information Company, LLC.

- Do not allow engine mounting insulator to be damage and careful no engine oil gets on it.
- For a location with a positioning pin, insert it securely into hole of mating part.
- For a part with a specified installation orientation, refer to component figure in "**COMPONENTS**".
- When installing engine mounting brackets (RH and LH) on cylinder block, tighten two upper bolts (shown as "A" in the figure) first. Then tighten two lower bolts (shown as "B" in the figure).

**NOTE: Figure shows LH bank.**

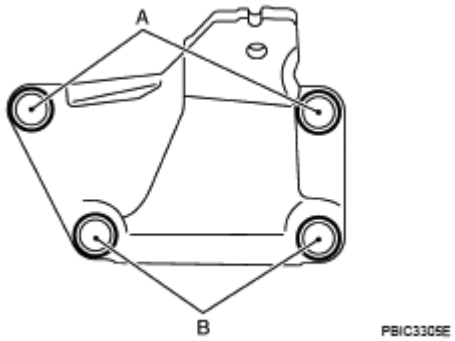


**Fig. 170: Identifying Engine Mounting Brackets Bolts**
**Courtesy of NISSAN MOTOR CO., U.S.A.**

**INSPECTION AFTER INSTALLATION**

**Inspection for Leaks**

The following are procedure for checking fluids leak, lubricates leak and exhaust gases leak.

- Before starting engine, check oil/fluid levels including engine coolant and engine oil. If less than required quantity, fill to the specified level. Refer to "**RECOMMENDED FLUIDS AND LUBRICANTS** ".
- Use procedure below to check for fuel leakage.
  - Turn ignition switch "ON" (with engine stopped). With fuel pressure applied to fuel piping, check for fuel leakage at connection points.
  - Start engine. With engine speed increased, check again for fuel leakage at connection points.
- Run engine to check for unusual noise and vibration.
- Warm up engine thoroughly to make sure there is no leakage of fuel, exhaust gases, or any oil/fluids including engine oil and engine coolant.
- Bleed air from lines and hoses of applicable lines, such as in cooling system.
- After cooling down engine, again check oil/fluid levels including engine oil and engine coolant. Refill to the specified level, if necessary.

**Summary of the inspection items:**

**SUMMARY OF INSPECTION ITEMS**

| Item | Before starting engine | Engine running | After engine stopped |
|---|---|---|---|

 © 2011 Mitchell Repair Information Company, LLC.

| | | | |
|---|---|---|---|
| Engine coolant | Level | Leakage | Level |
| Engine oil | Level | Leakage | Level |
| Other oils and fluid(1) | Level | Leakage | Level |
| Fuel | Leakage | Leakage | Leakage |
| Exhaust gases | - | Leakage | - |
| (1) Transmission/transaxle/CVT fluid, power steering fluid, brake fluid, etc. | | | |

## AWD

### AWD: Components

| Symbol | Description |
|---|---|
| | N·m (kg-m, ft-lb) |
| | N·m (kg-m, in-lb) |
| | Always replace after disassembly. |

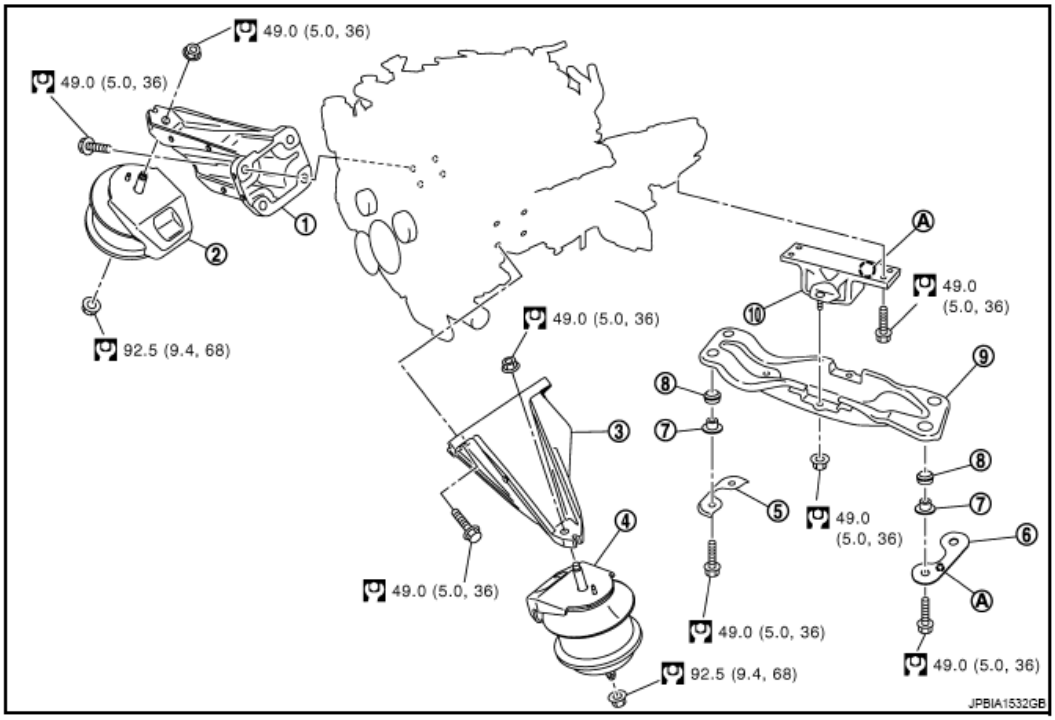


1. Engine mounting bracket (RH)
2. Engine mounting insulator (RH)
3. Engine mounting bracket (LH)
4. Engine mounting insulator (LH)
5. Plate (RH)
6. Plate (LH)
7. Spacer
8. Pad
9. Rear engine mounting member
10. Engine mounting insulator (rear)

A. Front mark

**Fig. 171: Identifying Engine Assembly Components With Torque Specifications (AWD)**
**Courtesy of NISSAN MOTOR CO., U.S.A.**

Refer to **CONTENTS** for symbols in the figure.

 © 2011 Mitchell Repair Information Company, LLC.

**AWD : Removal and Installation**

**WARNING:**

- **Situate vehicle on a flat and solid surface.**
- **Place chocks at front and back of rear wheels.**
- **For engines not equipped with engine slingers, attach proper slingers and bolts described .**

**CAUTION:**

- **Always be careful to work safely, avoid forceful or uninstructed operations.**
- **Do not start working until exhaust system and engine coolant are cool enough.**
- **If items or work required are not covered by the engine section, refer to the applicable sections.**
- **Always use the support point specified for lifting.**
- **Use either 2-pole lift type or separate type lift as best you can. If board-on type is used for unavoidable reasons, support at the rear axle jacking point with transmission jack or similar tool before starting work, in preparation for the backward shift of center of gravity.**
- **For supporting points for lifting and jacking point at rear axle, refer to "GARAGE JACK AND SAFETY STAND AND 2-POLE LIFT ".**

**REMOVAL**

**Outline**

At first, remove engine, transmission assembly with front suspension member from vehicle downward. Then separate engine from transmission.

**Preparation**

1. Release fuel pressure. Refer to "**FUEL PRESSURE RELEASE** ".
2. Drain engine coolant from radiator. Refer to "**CHANGING ENGINE COOLANT** ".

**CAUTION:**

- **Perform this step when engine is cold.**
- **Never spill engine coolant on drive belts.**

3. Disconnect both battery cables. Refer to "**BATTERY** ".
4. Remove crankshaft position sensor (POS) from transmission.

**CAUTION:**

- **Handle carefully to avoid dropping and shocks.**
- **Never disassemble.**

 © 2011 Mitchell Repair Information Company, LLC.

- **Never allow metal powder to adhere to magnetic part at sensor tip.**
- **Never place sensors in a location where they are exposed to magnetism.**

5. Remove the following parts:
   - Front and rear engine undercover (power tool)
   - Air duct (inlet), air duct and air cleaner case assembly; Refer to "**AIR CLEANER AND AIR DUCT**".
   - Front road wheels and tires (power tool)
   - Front cross bar: Refer to **COMPONENTS** .

**Engine Room LH**

1. Disconnect heater hoses, and install plugs to avoid leakage of engine coolant.
2. Disconnect wire bonding from exhaust manifold cover to vehicle.
3. Disconnect vacuum hose between vehicle and engine and set it aside.
4. Discharge refrigerant from A/C circuit. Refer to "**REFRIGERANT LINES** ".
5. Remove A/C piping from A/C compressor, and temporarily fasten it on vehicle with a rope. Refer to "**REFRIGERANT LINES** ".

**Engine Room RH**

1. Disconnect fuel feed hose and EVAP hose. Refer to "**FUEL INJECTOR AND FUEL TUBE**".

**CAUTION: Fit plugs onto disconnected hose to prevent fuel leak.**

2. Disconnect ground cable (between vehicle and right bank cylinder head).
3. Disconnect vacuum hose between vehicle and engine and set it aside.
4. Disconnect reservoir tank of power steering oil pump from engine, and move it aside for easier work.

**CAUTION: When temporarily securing, keep reservoir tank upright to avoid a fluid leak.**

**Vehicle inside**

Follow procedure below to disconnect engine room harness connectors at passenger room side, and temporarily secure them on engine.

1. Remove passenger-side kicking plate, dash side finisher, and glove box. Refer to "**BODY SIDE TRIM** " and "**INSTRUMENT PANEL ASSEMBLY** ".
2. Disconnect engine room harness connectors at unit sides TCM, ECM and other.

 © 2011 Mitchell Repair Information Company, LLC.

3. Disengage intermediate fixing point. Pull out engine room harnesses to engine room side, and temporarily secure them on engine.

**CAUTION:**
- **When pulling out harnesses, take care not to damage harnesses and connectors.**
- **After temporarily securing, cover connectors with vinyl or similar material to protect against foreign material adhesion.**

**Vehicle Underbody**

1. Remove A/T fluid cooler hoses and power steering oil pump oil cooler hoses.
   - Install plug to avoid leakage of A/T fluid and power steering fluid.
2. Disconnect heated oxygen sensor 2 harness. Refer to "**EXHAUST SYSTEM** ".
3. Remove exhaust front tube with power tool. Refer to "**EXHAUST SYSTEM** ".
4. Disconnect steering lower joint at power steering gear assembly side, and release steering lower shaft. Refer to "**STEERING COLUMN** ".
5. Separate steering outer sockets from steering knuckle. Refer to "**POWER STEERING GEAR AND LINKAGE** ".
6. Remove A/T control rod at control device assembly side. Then temporarily secure it on transmission, so that it does not sag. Refer to "**SHIFT CONTROL SYSTEM** ".
7. Remove rear plate cover from oil pan. Then remove bolts fixing drive plate to torque converter. Refer to "**OIL PAN AND OIL STRAINER**" and "**TRANSMISSION ASSEMBLY** ".
8. Remove transmission joint bolts which pierce at oil pan lower rear side. Refer to "**TRANSMISSION ASSEMBLY** ".
9. Remove lower ends of left and right strut from transverse link. Refer to "**FRONT SUSPENSION ASSEMBLY** ".
10. Remove transverse link mounting bolts at knuckle side. Refer to "**TRANSVERSE LINK** ".
11. Remove front stabilizer at transverse link side. Refer to "**FRONT SUSPENSION ASSEMBLY** ".
12. Remove rear propeller shaft. Refer to "**REAR PROPELLER SHAFT** ".
13. Remove front drive shaft (both side). Refer to **REMOVAL AND INSTALLATION** .

**Removal Work**

1. Use manual lift table caddy (commercial service tool) or equivalently rigid tool such as transmission jack. Securely support bottom of suspension member and transmission assembly.

**CAUTION: Put a piece of wood or something similar as the supporting surface, secure a completely stable condition.**

 © 2011 Mitchell Repair Information Company, LLC.

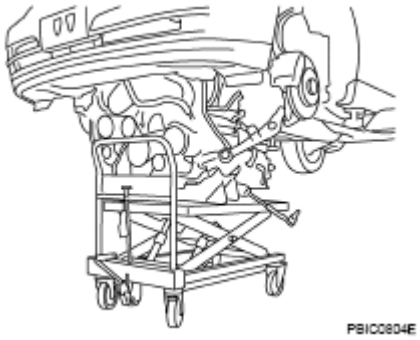


**Fig. 172: Applying Manual Lift Table Caddy**
**Courtesy of NISSAN MOTOR CO., U.S.A.**

2. Remove engine rear member mounting bolts.
3. Remove front suspension member mounting nuts and bolts with power tool. Refer to "**FRONT SUSPENSION ASSEMBLY** ".
4. Carefully lower jack, or raise lift to remove engine, transmission and front suspension member assembly. When performing work, observe the following caution:

**CAUTION:**

- **Confirm there is no interference with vehicle.**
- **Make sure that all connection points have been disconnected.**
- **Keep in mind the center of vehicle gravity changes. If necessary, use jack(s) to support vehicle at rear jacking point(s) to prevent it from falling it off the lift.**

**Separation Work**

1. Install engine slingers into front of cylinder head (left bank) and front of cylinder head (right bank).

   **Slinger bolts:**

   **:33.4 N.m (3.4 kg-m, 25 ft-lb)**

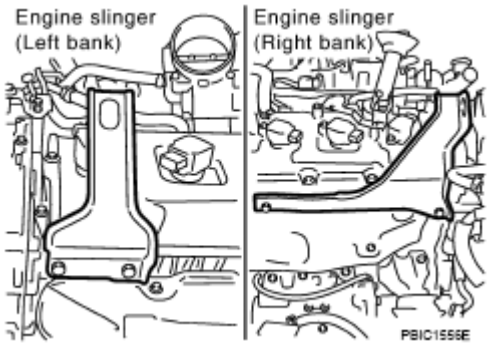


**Fig. 173: Identifying Engine Slingers**
**Courtesy of NISSAN MOTOR CO., U.S.A.**

 © 2011 Mitchell Repair Information Company, LLC.

2. Remove engine mounting insulators (RH and LH) under side nut with power tool.
3. Lift with hoist and separate engine and transmission assembly from front suspension member.

**CAUTION: Avoid damage to and oil/grease smearing or spills onto engine mounting insulator.**

4. Remove alternator. Refer to "**CHARGING SYSTEM** ".
5. Remove starter motor. Refer to "**STARTING SYSTEM** ".
6. Remove front propeller shaft from the front final drive assembly. Refer to "**TRANSMISSION ASSEMBLY** ".
7. Separate engine from transmission assembly. Refer to **TRANSMISSION ASSEMBLY** .
8. Remove the front final drive assembly from oil pan. Refer to **REMOVAL AND INSTALLATION (VK45DE)** .
9. Remove engine mounting insulators (RH and LH) and brackets (RH and LH) from engine with power tool.
10. Remove rear engine mounting member and engine mounting insulator (rear) from transmission.

**INSTALLATION**

Note the following, and install in the reverse order of removal.

- Do not allow engine mounting insulator to be damage and careful no engine oil gets on it.
- For a location with a positioning pin, insert it securely into hole of mating part.
- For a part with a specified installation orientation, refer to component figure in "**COMPONENTS**".
- When installing engine mounting brackets (RH and LH) on cylinder block, tighten two upper bolts (shown as "A" in the figure) first. Then tighten two lower bolts (shown as "B" in the figure).

**NOTE: Figure shows LH bank.**

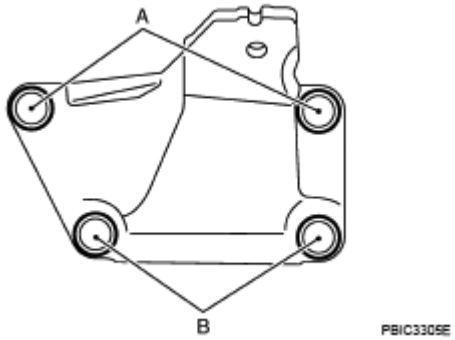


**Fig. 174: Identifying Engine Mounting Brackets Bolts**
**Courtesy of NISSAN MOTOR CO., U.S.A.**

**INSPECTION AFTER INSTALLATION**

 © 2011 Mitchell Repair Information Company, LLC.

**Inspection for Leaks**

The following are procedure for checking fluids leak, lubricates leak and exhaust gases leak.

- Before starting engine, check oil/fluid levels including engine coolant and engine oil. If less than required quantity, fill to the specified level. Refer to "**RECOMMENDED FLUIDS AND LUBRICANTS** ".
- Use procedure below to check for fuel leakage.
  - Turn ignition switch "ON" (with engine stopped). With fuel pressure applied to fuel piping, check for fuel leakage at connection points.
  - Start engine. With engine speed increased, check again for fuel leakage at connection points.
- Run engine to check for unusual noise and vibration.
- Warm up engine thoroughly to make sure there is no leakage of fuel, exhaust gases, or any oil/fluids including engine oil and engine coolant.
- Bleed air from lines and hoses of applicable lines, such as in cooling system.
- After cooling down engine, again check oil/fluid levels including engine oil and engine coolant. Refill to the specified level, if necessary.

**Summary of the inspection items:**

**SUMMARY OF INSPECTION ITEMS**

| Item | Before starting engine | Engine running | After engine stopped |
|---|---|---|---|
| Engine coolant | Level | Leakage | Level |
| Engine oil | Level | Leakage | Level |
| Other oils and fluid() | Level | Leakage | Level |
| Fuel | Leakage | Leakage | Leakage |
| Exhaust gases | - | Leakage | - |
| (1) Transmission/transaxle/CVT fluid, power steering fluid, brake fluid, etc. | | | |

# CYLINDER BLOCK

**COMPONENTS**

 © 2011 Mitchell Repair Information Company, LLC.

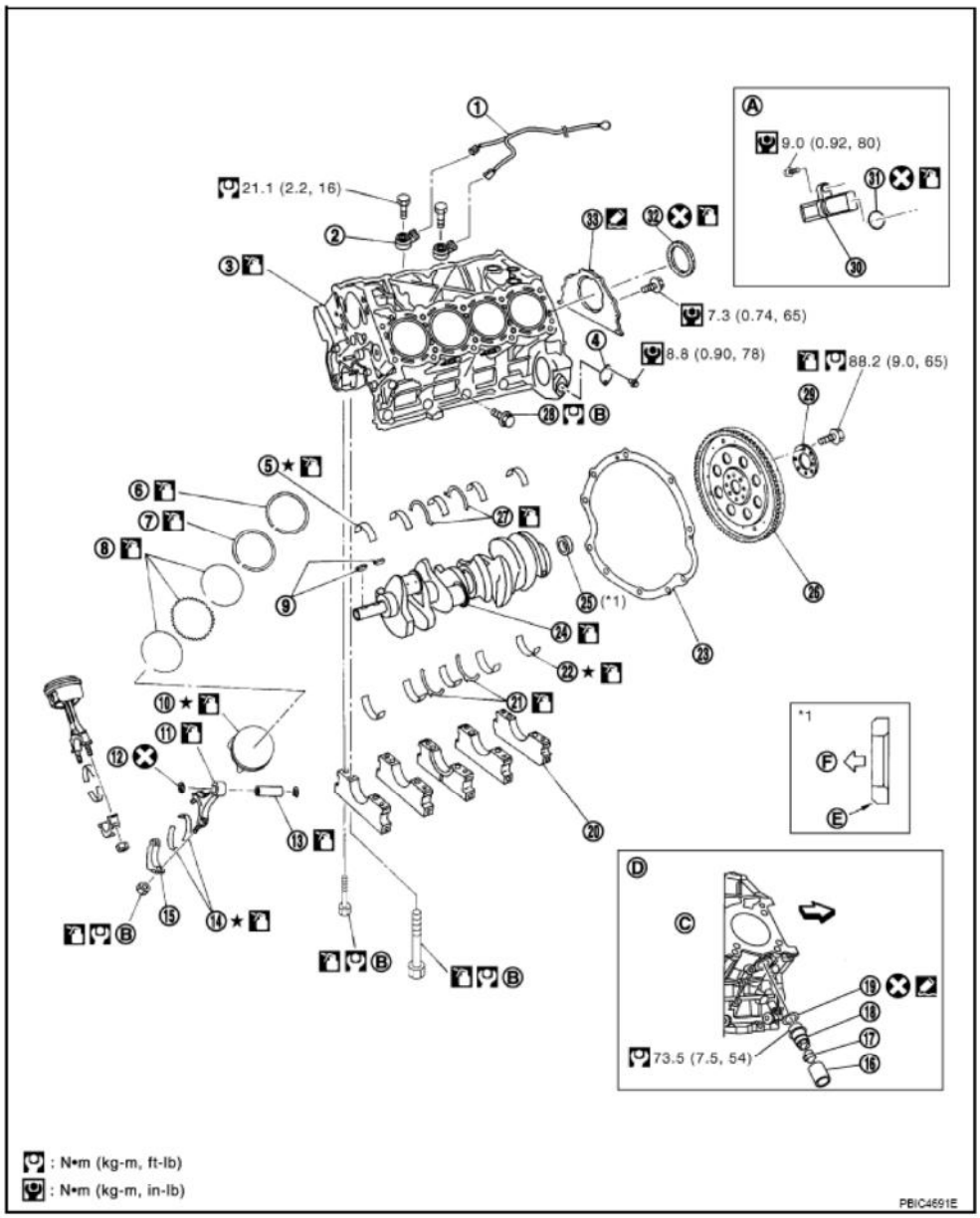


| | | | | | |
|---|---|---|---|---|---|
| 1. | Knock sensor sub harness | 2. | Knock sensor | 3. | Cylinder block |
| 4. | Cover | 5. | Main bearing | 6. | Top ring |
| 7. | Second ring | 8. | Oil ring | 9. | Crankshaft key |
| 10. | Piston | 11. | Connecting rod | 12. | Snap ring |
| 13. | Piston pin | 14. | Connecting rod bearing | 15. | Connecting rod bearing cap |
| 16. | Cylinder block heater protector | 17. | Connector cap | 18. | Cylinder block heater |
| 19. | Gasket | 20. | Main bearing cap | 21. | Thrust bearing |
| 22. | Main bearing | 23. | Rear plate | 24. | Crankshaft |
| 25. | Pilot converter | 26. | Drive plate | 27. | Thrust bearing |
| 28. | Side bolt | 29. | Reinforcement plate | 30. | Crankshaft position sensor (POS) |
| 31. | O-ring | 32. | Rear oil seal | 33. | Rear oil seal retainer |
| A. | Reference: Installed on transmission | B. | Refer to Disassembly and Assembly | C. | left bank |
| D. | Cylinder block heater (for Canada) | E. | Chamfered | F. | Crankshaft side |

**Fig. 175: Identifying Cylinder Block Components With Torque Specifications**

 © 2011 Mitchell Repair Information Company, LLC.

**Courtesy of NISSAN MOTOR CO., U.S.A.**

Refer to **CONTENTS** for symbols in the figure.

## DISASSEMBLY AND ASSEMBLY

### DISASSEMBLY

**NOTE: Explained here is how to disassemble with engine stand supporting transmission surface. When using different type of engine stand, note with difference in steps and etc.**

1. Remove engine assembly from vehicle, and separate front suspension member, transmission from engine. Refer to "**2WD: COMPONENTS**" or "**AWD: COMPONENTS**".
2. Remove the parts that may restrict installation of engine to widely use engine stand.

**NOTE: The procedure is described assuming that you use widely use engine holding the surface, to which transmission is installed.**

a. Remove drive plate.
   - Holding ring gear with ring gear stopper (SST).
   - Loosen mounting bolts diagonally order.

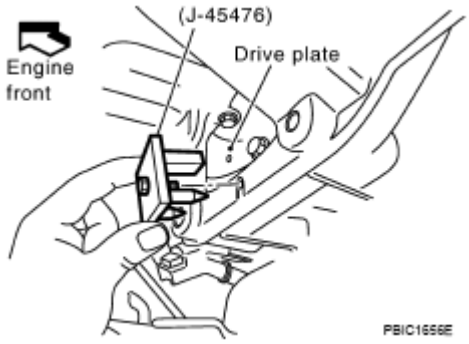


**Fig. 176: Removing Drive Plate**
**Courtesy of NISSAN MOTOR CO., U.S.A.**

**CAUTION:**
- **Never disassemble drive plate.**
- **Never place drive plate with signal plate facing down.**
- **When handling signal plate, take care not to damage or scratch it.**
- **Handle signal plate in a manner that prevents it from becoming magnetized.**

 © 2011 Mitchell Repair Information Company, LLC.

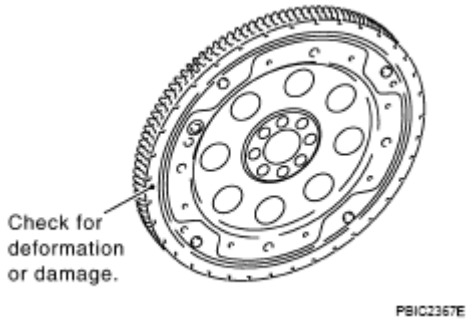


**Fig. 177: Identifying Drive Plate**
**Courtesy of NISSAN MOTOR CO., U.S.A.**

b. Remove rear plate.

3. Lift engine with hoist to install it onto widely use engine stand.

**CAUTION: Use engine stand that has a load capacity [approximately 240kg (529 lb) or more] large enough for supporting the engine weight.**

- If the load capacity of stand is not adequate, remove the following parts beforehand to reduce the potential risk of overturning stand.
  - Intake manifolds (upper and lower); Refer to "**INTAKE MANIFOLD**".
  - Exhaust manifold and three way catalyst; Refer to "**EXHAUST MANIFOLD AND THREE WAY CATALYST**".
  - Fuel tube and fuel injector assembly; Refer to "**FUEL INJECTOR AND FUEL TUBE**".
  - Ignition coil; Refer to "**IGNITION COIL**".
  - Rocker cover; Refer to "**ROCKER COVER**".
  - Other removable brackets

**NOTE: The figure shows an example of widely use engine stand that can hold mating surface of transmission with drive plate and rear plate removed.**

**CAUTION: Before removing the hanging chains, make sure the engine stand is stable and there is no risk of overturning.**

 © 2011 Mitchell Repair Information Company, LLC.

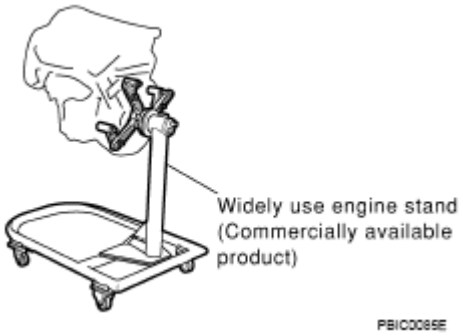


**Fig. 178: Identifying Engine Stand**
**Courtesy of NISSAN MOTOR CO., U.S.A.**

4. Drain engine oil. Refer to "**CHANGING ENGINE OIL** ".
5. Drain engine coolant from inside engine by removing water drain plugs "B" as shown in the figure.

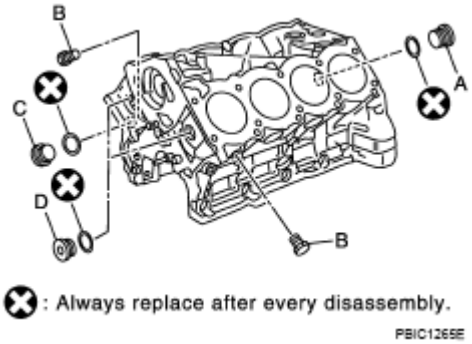


**Fig. 179: Identifying Water Drain Plugs**
**Courtesy of NISSAN MOTOR CO., U.S.A.**

A : Plug

C : Plug (except for Canada models)

Block heater (for Canada models)

D : Plug

6. Remove oil pan and oil strainer. Refer to "**OIL PAN AND OIL STRAINER**".
7. Remove crankshaft pulley as follows:
   a. Lock crankshaft with a hammer handle or similar tool to loosen crankshaft bolt.
   b. Pull crankshaft pulley with both hands to remove it.

**CAUTION:**

- **Never remove crankshaft pulley bolt. Keep loosened crankshaft pulley bolt in place to protect removed crankshaft pulley from dropping.**

 © 2011 Mitchell Repair Information Company, LLC.

- **Never remove balance weight (inner hexagon bolt) at the front of crankshaft pulley.**

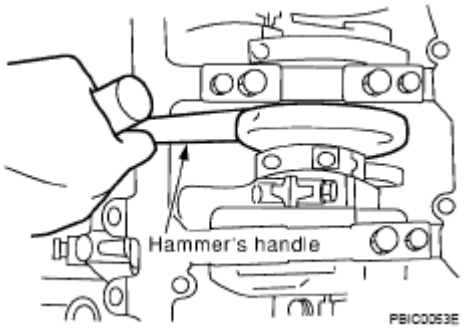


**Fig. 180: Identifying Crankshaft Pulley Bolts Using Hammer**
**Courtesy of NISSAN MOTOR CO., U.S.A.**

8. Remove the following parts and related parts (The parts listed in step 3 are not included here).
   - Front cover and timing chain; Refer to "**TIMING CHAIN**".
   - Camshaft; Refer to "**CAMSHAFT**".
   - Cylinder head; Refer to "**CYLINDER HEAD**".
9. Remove knock sensor.

**CAUTION: Carefully handle sensor, avoiding shocks.**

10. Remove piston and connecting rod assembly as follows:
    - Before removing piston and connecting rod assembly, check the connecting rod side clearance. Refer to "**CONNECTING ROD SIDE CLEARANCE**".

    a. Position crankshaft pin corresponding to connecting rod to be removed onto the bottom dead center.
    b. Remove connecting rod bearing cap.
    c. Using hammer handle or similar tool, push piston and connecting rod assembly out to the cylinder head side.

**CAUTION: Be careful not to damage the cylinder wall and crankshaft pin, resulting from an interference of the connecting rod big end.**

 © 2011 Mitchell Repair Information Company, LLC.

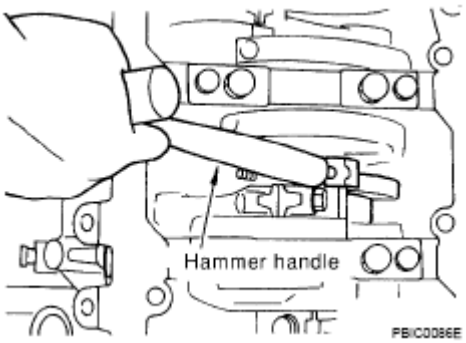


**Fig. 181: Pushing Connecting Rod Assembly Out To Cylinder Head**
**Courtesy of NISSAN MOTOR CO., U.S.A.**

11. Remove connecting rod bearings from connecting rod and connecting rod bearing cap.

**CAUTION: Identify installation positions, and store them without mixing them up.**

12. Remove piston rings from piston.
    - Before removing the piston rings, check the piston ring side clearance. Refer to "**PISTON RING SIDE CLEARANCE**".
    - Use piston ring expander (commercial service tool).

**CAUTION:**
- **When removing piston rings, be careful not to damage piston.**
- **Be careful not to damage piston rings by expanding them excessively.**

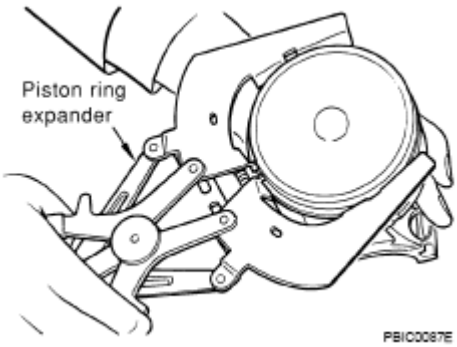


**Fig. 182: Identifying Piston Rings Expander**
**Courtesy of NISSAN MOTOR CO., U.S.A.**

13. Remove piston from connecting rod as follows:
    a. Using snap ring pliers, remove the snap rings.

 © 2011 Mitchell Repair Information Company, LLC.

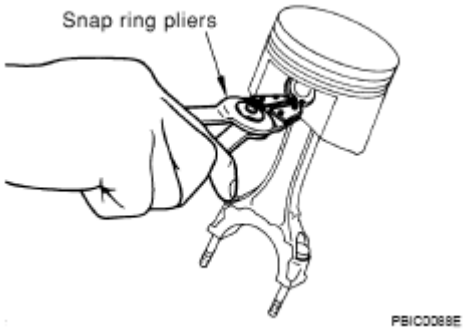


**Fig. 183: Removing Snap Ring**
**Courtesy of NISSAN MOTOR CO., U.S.A.**

b. Heat piston to 60 to 70°C (140 to 158°F) with industrial use drier or equivalent.

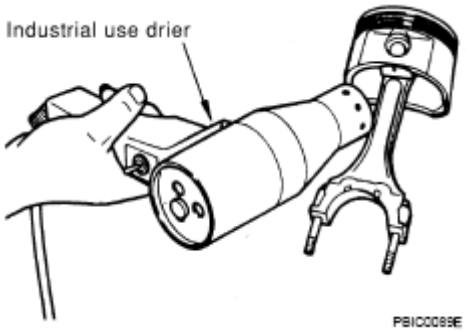


**Fig. 184: Heating Piston**
**Courtesy of NISSAN MOTOR CO., U.S.A.**

c. Push out piston pin with stick of outer diameter approximately 20 mm (0.8 in).

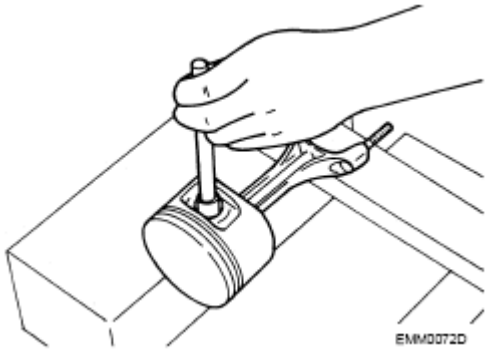


**Fig. 185: Pushing Out Piston Pin**
**Courtesy of NISSAN MOTOR CO., U.S.A.**

14. Remove rear oil seal retainer from cylinder block.
    - Insert screwdriver or similar tool between rear end of crankshaft counter weight and rear oil seal retainer, and separate liquid gasket to remove.

 © 2011 Mitchell Repair Information Company, LLC.

**CAUTION: Be careful not to damage the mating surfaces.**

15. Using screwdriver or similar tool, and lever off rear oil seal from rear oil seal retainer.
16. Remove main bearing cap as follows:
    - Before loosening main bearing cap bolts, measure the crankshaft end play. Refer to "**CRANKSHAFT END PLAY**".
    - Loosen main bearing cap bolts in several different steps.

    a. Remove cover attached to the rear left side of cylinder block (next to the starter motor housing).

    **NOTE: Bolts (No. 27 shown in the figure) are installed on the inside of cover.**

    b. Loosen side bolts (M10) starting from 30 to 21 to remove.
    c. Loosen main bearing cap sub bolts (M9) starting from 20 to 11 to remove.
    d. Loosen main bearing cap bolts (M12) starting from 10 to 1 to remove.

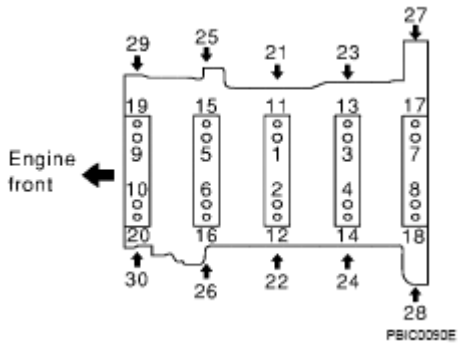


**Fig. 186: Identifying Main Bearing Caps**
**Courtesy of NISSAN MOTOR CO., U.S.A.**

e. Using main bearing cap remover (SST), remove main bearing cap.

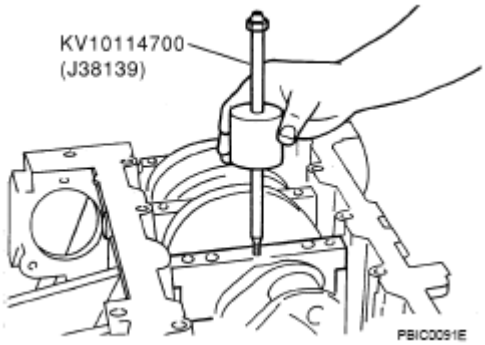


**Fig. 187: Removing Main Bearing Cap**
**Courtesy of NISSAN MOTOR CO., U.S.A.**

 © 2011 Mitchell Repair Information Company, LLC.

17. Remove crankshaft.
18. Remove main bearings and thrust bearings from cylinder block and main bearing caps.

**CAUTION: Identify installation positions, and store them without mixing them up.**

19. If pilot converter must be removed, remove it from the rear end of the crankshaft using pilot bushing puller (SST).

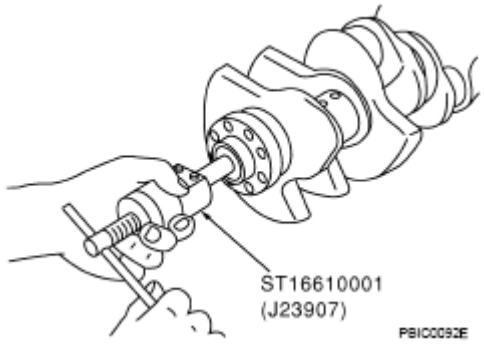


**Fig. 188: Removing Pilot Converter**
**Courtesy of NISSAN MOTOR CO., U.S.A.**

**ASSEMBLY**

1. Fully air-blow engine coolant and engine oil passages in cylinder block, cylinder bore and crankcase to remove any foreign material.

**CAUTION: Use a goggles to protect your eye.**

2. Install each plug to the cylinder block. (Only screwed-type plugs are shown in the figure.)
   - Apply sealant to the thread of each plug "A" and "D".

     **Use Genuine High Strength Locking Sealant or equivalent.** Refer to "**RECOMMENDED CHEMICAL PRODUCTS AND SEALANTS** ".

   - Apply sealant to the thread of each plug "B" and "C".

     **Use Anaerobic Liquid Gasket or equivalent.** Refer to "**RECOMMENDED CHEMICAL PRODUCTS AND SEALANTS** ".

   - Replace copper washers with new ones.

 © 2011 Mitchell Repair Information Company, LLC.

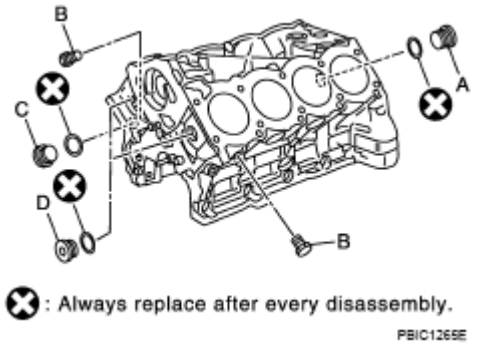


**Fig. 189: Identifying Water Drain Plugs**
**Courtesy of NISSAN MOTOR CO., U.S.A.**

- Tighten each plug as specified below.

**WATER DRAIN PLUGS TIGHTENING SPECIFICATION**

| Part | Washer | Tightening torque |
|---|---|---|
| A | Yes | 53.9 N.m (5.5 kg-m, 40 ft-lb) |
| B | No | 19.6 N.m (2.0 kg-m, 15 ft-lb) |
| C | Yes | 62.7 N.m (6.4 kg-m, 46 ft-lb) |
| D | Yes | 62.7 N.m (6.4 kg-m, 46 ft-lb) |

3. Install main bearings and thrust bearings as follows:
   a. Remove dust, dirt and oil on the bearing mating surfaces of cylinder block and main bearing caps.
   b. Install thrust bearings to the both sides of the No. 3 journal housing on cylinder block and main bearing cap.
      - Install thrust bearings with the oil groove facing the crankshaft arm (outside).
      - Install thrust bearing with a protrusion on one end on cylinder block, and thrust bearing with a protrusion at center on main bearing cap. Align each protrusion with mating notch.

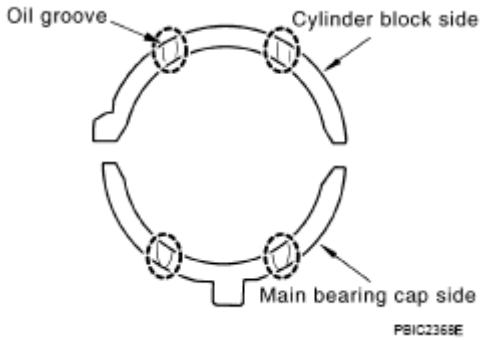


**Fig. 190: Identifying Oil Groove**
**Courtesy of NISSAN MOTOR CO., U.S.A.**

   c. Install main bearings paying attention to the direction.

 © 2011 Mitchell Repair Information Company, LLC.

- Main bearing with oil hole and groove goes on cylinder block. The one without them goes on main bearing cap.
- Before installing main bearings, apply engine oil to the bearing surface (inside). Do not apply engine oil to the back surface, but thoroughly clean it.
- When installing, align main bearing stopper protrusion to cutout of cylinder block and main bearing caps.
- Ensure the oil holes on cylinder block and those on the corresponding bearing are aligned.

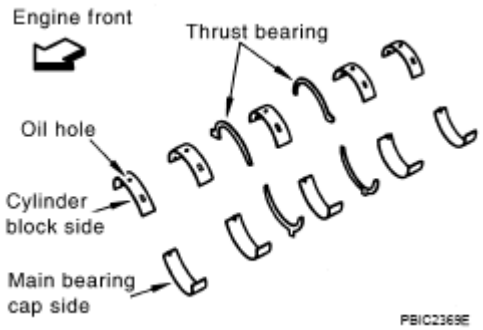


**Fig. 191: Identifying Main Bearing**
**Courtesy of NISSAN MOTOR CO., U.S.A.**

4. Install pilot converter to crankshaft, if removed.
   - With drift [outer diameter: approx. 35 mm (1.38 in)], press-fit as far as it will go.

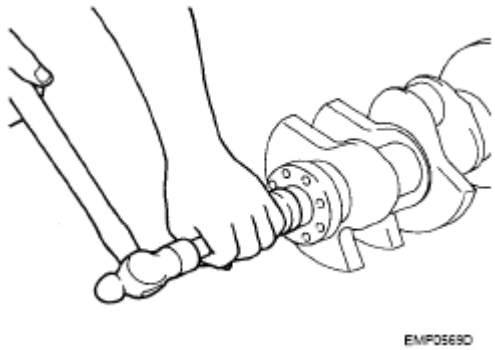


**Fig. 192: Installing Pilot Converter**
**Courtesy of NISSAN MOTOR CO., U.S.A.**

- Press-fit pilot converter with its chamfering side facing crankshaft as shown in the figure.
- It is possible to remove pilot converter without hoisting engine with engine stand.

 © 2011 Mitchell Repair Information Company, LLC.

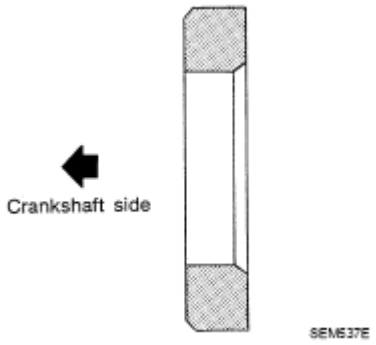


**Fig. 193: Identifying Pilot Converter Chamfer Face**
**Courtesy of NISSAN MOTOR CO., U.S.A.**

5. Install crankshaft to cylinder block.
   - While turning crankshaft by hand, make sure it turns smoothly.
6. Install main bearing caps.
   - Align the identification number to the journal position to install.
   - Install the upper side of the identification number facing the front of engine. (The number shall be read correctly from the rear of engine.)
   - Using plastic hammer or similar tool, tap them lightly to seat them on the installation position.

**NOTE: Main bearing cap cannot be replaced as a single parts, because it is machined together with cylinder block.**

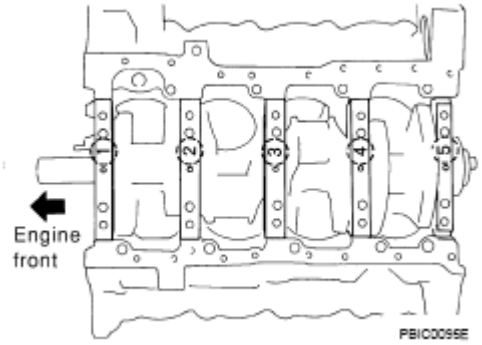


**Fig. 194: Identifying Main Bearing Caps Identification Number**
**Courtesy of NISSAN MOTOR CO., U.S.A.**

7. Install each main bearing cap bolt as follows:
   a. Apply new engine oil to threads and seating surface of main bearing cap bolts, and tighten all bolts temporarily.
   b. Tighten main bearing cap bolt (M12) in order of 1 to 10.

      **: 39.2 N.m (4.0 kg-m, 29 ft-lb)**

 © 2011 Mitchell Repair Information Company, LLC.

c. Tighten main bearing cap sub bolt (M9) in order of 11 to 20.

**: 29.4 N.m (3.0 kg-m, 22 ft-lb)**

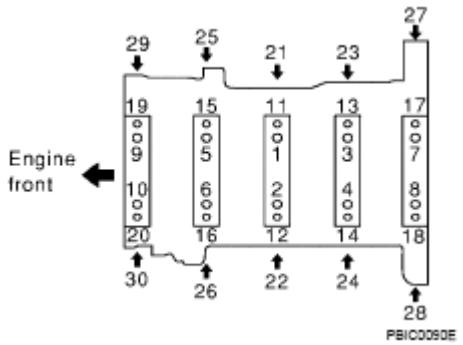


**Fig. 195: Identifying Main Bearing Caps Bolt Tightening Sequence**
**Courtesy of NISSAN MOTOR CO., U.S.A.**

d. Tighten main bearing cap bolt (M12) to 40 degrees clockwise in order of 1 to 10. (Angle tightening)

**CAUTION: Use angle wrench (SST) to check tightening angle in step "d" and "e". Do not make judgment by visual inspection.**

e. Tighten main bearing cap sub bolt (M9) to 30 degrees clockwise in order of 11 to 20. (Angle tightening)

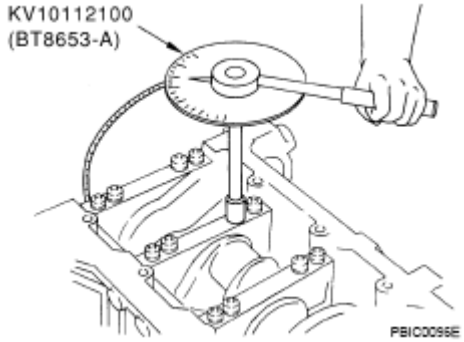


**Fig. 196: Checking Tighten Angle Of Main Bearing Cap Bolts**
**Courtesy of NISSAN MOTOR CO., U.S.A.**

f. Tighten side bolt (M10) in order of 21 to 30.

**: 49 N.m (5.0 kg-m, 36 ft-lb)**

- After installing main bearing cap bolts, make sure that crankshaft can be rotated smoothly.
- Check the crankshaft end play. Refer to "**CRANKSHAFT END PLAY**".

 © 2011 Mitchell Repair Information Company, LLC.

g. Install cover of cylinder block rear left side (next to the starter motor housing).

8. Install new rear oil seal on rear oil seal retainer.
   - Install new rear oil seal so that each seal lip is oriented as shown in the figure.

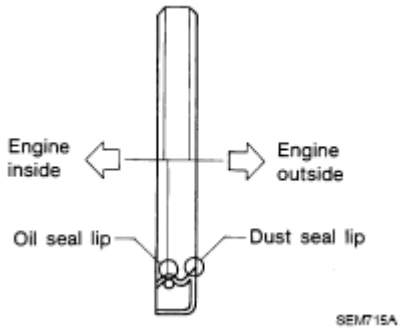


**Fig. 197: Applying Engine Oil To Both Oil Seal Lip And Dust Seal Lip**
**Courtesy of NISSAN MOTOR CO., U.S.A.**

   - Install rear oil seal to rear oil seal retainer with rear oil seal drift (commercial service tool).

     **Rear oil seal drift**

     **Outer diameter : 102 mm (4.02 in)**

     **Inner diameter : 86 mm (3.39 in)**

   - Tap until flattened with front edge of rear oil seal retainer. Do not damage or scratch outer circumference of oil seal.
   - Make sure the garter spring is in position and seal lips not inverted.

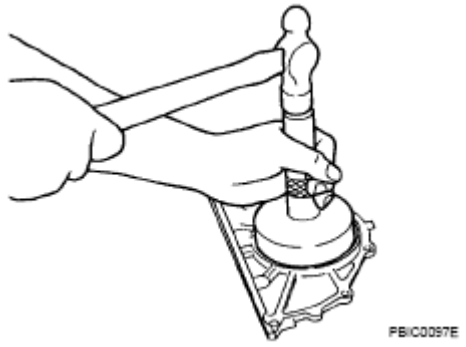


**Fig. 198: Fitting Rear Oil Seal**
**Courtesy of NISSAN MOTOR CO., U.S.A.**

9. Install rear oil seal retainer.
   - Apply new engine oil to both oil seal lip and dust seal lip.
   - Apply a continuous bead of liquid gasket with tube presser [SST: WS39930000 ( - )] to rear oil seal

 © 2011 Mitchell Repair Information Company, LLC.

retainer as shown in the figure.

**Use Genuine RTV Silicone Sealant or equivalent.** Refer to "**RECOMMENDED CHEMICAL PRODUCTS AND SEALANTS** ".

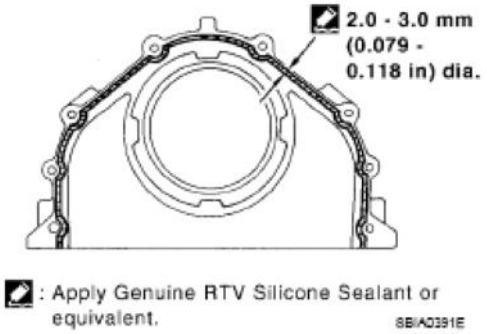


**Fig. 199: Applying Liquid Gasket Thoroughly To Rear Oil Seal Retainer**
**Courtesy of NISSAN MOTOR CO., U.S.A.**

10. Install piston to connecting rod.
    a. Using snap ring pliers, install new snap ring to the groove of the piston rear side.
        - Insert it fully into groove to install.
    b. Install piston to connecting rod.
        - Using industrial use drier or similar tool, heat piston until piston pin can be pushed in by hand without excess force [approx. 60 to 70°C (140 to 158°F)]. From the front to the rear, insert piston pin into piston and connecting rod.
        - Assemble so that the front mark on the piston head and the oil holes and the cylinder No. on connecting rod are positioned as shown in the figure.
    c. Using snap ring pliers, install new snap rings to the groove of the piston front side.
        - Insert it fully into groove to install.
        - After installing, make sure that connecting rod moves smoothly.

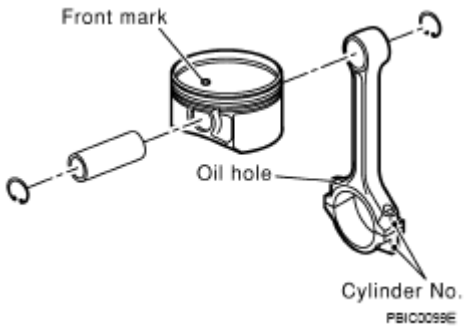


**Fig. 200: Identifying Piston Pin Snap Ring Into Front Of Piston**
**Courtesy of NISSAN MOTOR CO., U.S.A.**

11. Using piston ring expander (commercial service tool), install piston rings.

 © 2011 Mitchell Repair Information Company, LLC.

**CAUTION:**

- **When installing piston rings, be careful not to damage piston.**
- **Be careful not to damage piston rings by expending them excessively.**

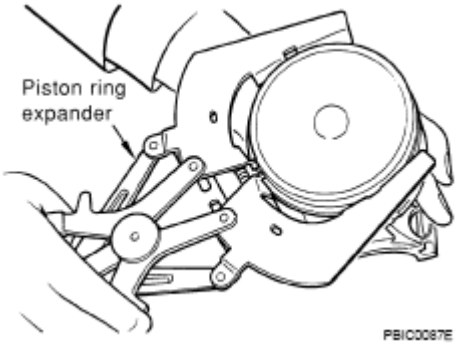


**Fig. 201: Installing Piston Rings**
**Courtesy of NISSAN MOTOR CO., U.S.A.**

- Position each ring with the gap as shown in the figure, referring to the piston front mark.
- Install top ring and second ring with the stamped surface facing upward.

**Stamped mark**

**Top ring : R**

**Second ring : 2R**

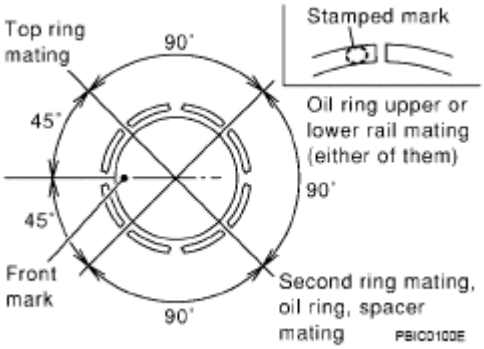


**Fig. 202: Identifying Piston Ring Gap**
**Courtesy of NISSAN MOTOR CO., U.S.A.**

12. Install connecting rod bearings to connecting rod and connecting rod bearing cap.
    - Before installing connecting rod bearings, apply engine oil to the bearing surface (inside). Do not apply engine oil to the back surface, but thoroughly clean it.
    - When installing, align the connecting rod bearing stopper protrusion with the cutout of connecting rod and connecting rod bearing cap to install.

 © 2011 Mitchell Repair Information Company, LLC.

- Ensure the oil holes on connecting rod and that on the corresponding bearing are aligned.

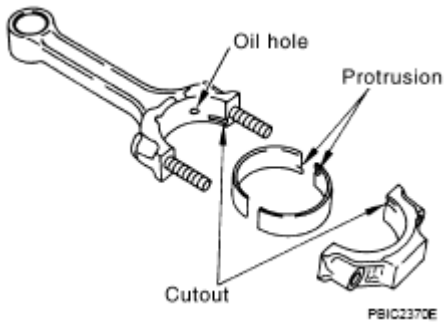


**Fig. 203: Identifying Connecting Rod Bearings**
**Courtesy of NISSAN MOTOR CO., U.S.A.**

13. Install piston and connecting rod assembly to crankshaft.
    - Position the crankshaft pin corresponding to connecting rod to be installed onto the bottom dead center.
    - Apply engine oil sufficiently to the cylinder bore, piston and crankshaft pin journal.
    - Match the cylinder position with the cylinder No. on connecting rod to install.
    - Be sure that front mark on piston head is facing front of engine.
    - Using piston ring compressor [SST: EM03470000 (J8037)], install piston with the front mark on the piston head facing the front of engine.

**CAUTION: Be careful not to damage cylinder wall and crankshaft pin, resulting from an interference of the connecting rod big end.**

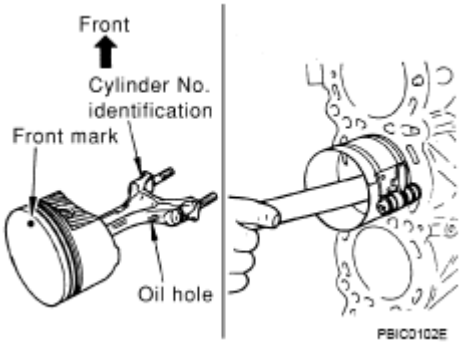


**Fig. 204: Installing Piston And Connecting Rod**
**Courtesy of NISSAN MOTOR CO., U.S.A.**

14. Install connecting rod bearing cap.
    - Match the stamped cylinder number marks on connecting rod with those on cap to install.

 © 2011 Mitchell Repair Information Company, LLC.

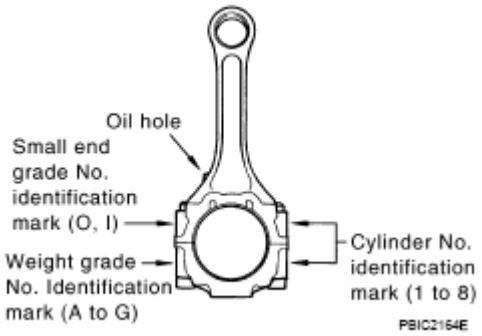


**Fig. 205: Identifying Cylinder Number Marks On Connecting Rod**
**Courtesy of NISSAN MOTOR CO., U.S.A.**

15. Tighten connecting rod nuts as follows:
    a. Apply new engine oil to the threads and seats of connecting rod bolts and nuts.
    b. Tighten connecting rod nuts.

       **: 14.7 N.m (1.5 kg-m, 11 ft-lb)**

    c. Then tighten all connecting rod nuts 60 degrees clockwise. (Angle tightening)

       **CAUTION: Use angle wrench (SST) to check tightening angle. Do not make judgment by visual inspection.**

       - After tightening connecting rod nuts, make sure that crankshaft rotates smoothly.
       - Check the connecting rod side clearance. Refer to "**CONNECTING ROD SIDE CLEARANCE**".

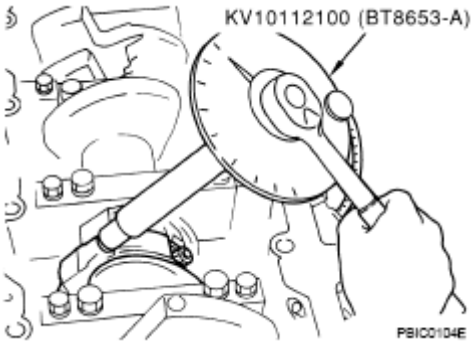


**Fig. 206: Tightening Connecting Rod Nuts**
**Courtesy of NISSAN MOTOR CO., U.S.A.**

16. Install knock sensor.
    - Install it with its connector facing the rear of engine.
    - Install the sub-harness with its shorter branch line to the right bank.

 © 2011 Mitchell Repair Information Company, LLC.

**CAUTION:**

- **Do not tighten mounting bolts while holding connector.**
- **If any impact by dropping is applied to knock sensor, replace it with new one.**

**NOTE:**

- **Make sure that there is no foreign material on the cylinder block mating surface and the back surface of knock sensor.**
- **Make sure that knock sensor does not interfere with other parts.**

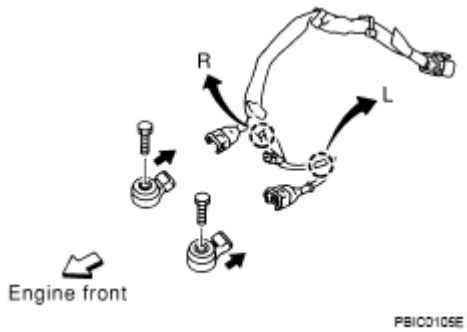


**Fig. 207: Identifying Knock Sensor And Sub-Harness**
**Courtesy of NISSAN MOTOR CO., U.S.A.**

17. Note the following, and assemble in the reverse order of disassembly after this step.

**Drive plate**

- When installing drive plate to crankshaft, be sure to correctly align crankshaft side guide pin and drive plate side guide pin hole.

**CAUTION: If these are not aligned correctly, engine runs roughly and "MIL" turns on.**

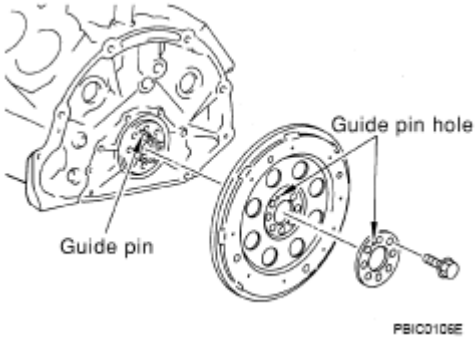


**Fig. 208: Identifying Guide Pin Hole And Guide Pin**
**Courtesy of NISSAN MOTOR CO., U.S.A.**

 © 2011 Mitchell Repair Information Company, LLC.

- Install drive plate, reinforcement plate and pilot converter (if not installed in step 4) as shown in the figure.
- Face chamfered or rounded edge side to crankshaft.
- Holding ring gear with ring gear stopper [SST: J-45476].
- Tighten mounting bolts crosswise over several times.
- When install pilot converter, using drift [outer diameter: approx. 35 mm (1.38 in)]. Press-fit as far as it will go.

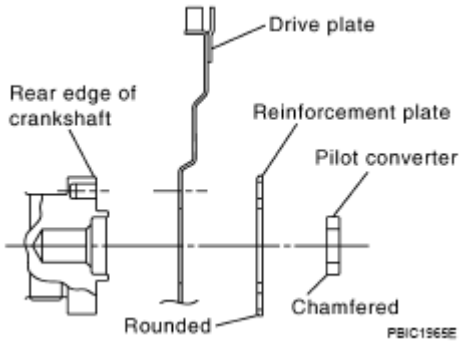


**Fig. 209: Identifying Drive Plate, Reinforcement Plate And Pilot Converter**
**Courtesy of NISSAN MOTOR CO., U.S.A.**

## HOW TO SELECT PISTON AND BEARING

### DESCRIPTION

### PISTON AND BEARING DESCRIPTION CHART

| Selection points | Selection parts | Selection items | Selection methods |
|---|---|---|---|
| Between cylinder block and crankshaft | Main bearing | Main bearing grade (bearing thickness) | Determined by match of cylinder block bearing housing grade (inner diameter of housing) and crankshaft journal grade (outer diameter of journal) |
| Between crankshaft and connecting rod | Connecting rod bearing | Connecting rod bearing grade (bearing thickness) | Combining service grades for connecting rod big end diameter and crankshaft pin outer diameter determine connecting rod bearing selection. |
| Between cylinder block and piston | Piston and piston pin assembly (Piston is available together with piston pin as assembly.) | Piston grade (piston skirt diameter) | Piston grade = cylinder bore grade (inner diameter of bore) |
| | | | |

 © 2011 Mitchell Repair Information Company, LLC.

| | | | |
|---|---|---|---|
| Between piston and connecting rod(1) | - | - | - |
| (1) For the service parts, the grade for fitting cannot be selected between piston pin and connecting rod. (Only "0" grade is available.) The information at the shipment from the plant is described as a reference. | | | |

- The identification grade stamped on each part is the grade for the dimension measured in new condition. This grade cannot apply to reused parts.
- For reused or repaired parts, measure the dimension accurately. Determine the grade by comparing the measurement with the values of each selection table.
- For details of the measurement method of each part, the reuse standards, and the selection method of the selective fitting parts, refer to the text.

**HOW TO SELECT PISTON**

**When New Cylinder Block is Used**

Check the cylinder bore grade ("1", "2" or "3") on the rear upper side between cylinder block banks, and select piston of the same grade.

**NOTE: Piston is available with piston pin as a set for the service part. (Only "0" grade piston pin is available.)**

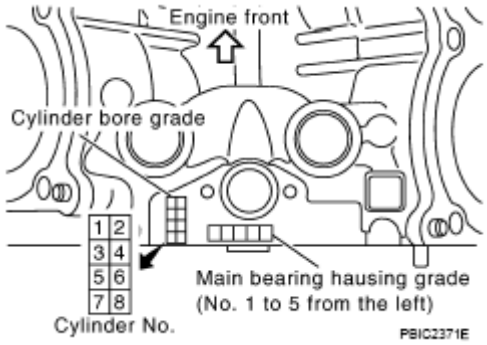


**Fig. 210: Identifying Cylinder Bore Grade**
**Courtesy of NISSAN MOTOR CO., U.S.A.**

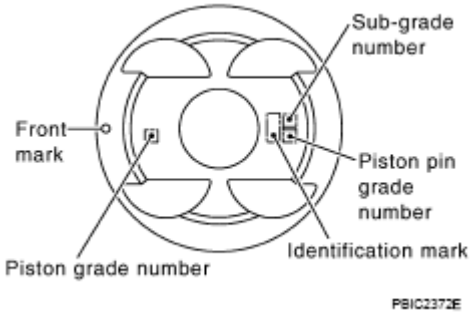


 © 2011 Mitchell Repair Information Company, LLC.

**Fig. 211: Identifying Piston Pin Grade Number**
**Courtesy of NISSAN MOTOR CO., U.S.A.**

**When Cylinder Block is Reused**

1. Measure the cylinder bore inner diameter. Refer to "**CYLINDER BORE INNER DIAMETER**".
2. Determine the bore grade by comparing the measurement with the values the "Cylinder bore inner diameter" of the "Piston Selection Table". Select piston of the same grade.

**Piston Selection Table**

**PISTON SELECTION CHART**

| | | | Unit: mm (in) |
|---|---|---|---|
| **Grade** | **1** | **2 (or no mark)** | **3** |
| Cylinder bore inner diameter | 93.000 - 93.010 (3.6614 - 3.6618) | 93.010 - 93.020 (3.6618 - 3.6622) | 93.020 - 93.030 (3.6622 - 3.6626) |
| Piston skirt diameter | 92.980 - 92.990 (3.6606 - 3.6610) | 92.990 - 93.000 (3.6610 - 3.6614) | 93.000 - 93.010 (3.6614 - 3.6618) |

**NOTE:**

- **Piston is available together with piston pin as assembly.**
- **Piston pin (piston pin hole) grade is provided only for the parts installed at the plant. For service parts, no piston pin grades can be selected. (Only "0" grade is available.)**
- **No second grade mark is available on piston.**

**HOW TO SELECT CONNECTING ROD BEARING**

**When New Connecting Rod and Crankshaft are Used**

Check pin diameter grade ("0", "1" or "2") on front of crankshaft, and select connecting rod bearing of the same grade.

**NOTE:** **There is no grading for connecting rod big end diameter.**

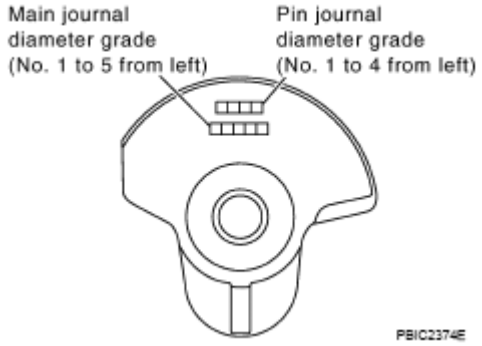


**Fig. 212: Identifying Main And Pin Journal Diameter Grade**

 © 2011 Mitchell Repair Information Company, LLC.

**Courtesy of NISSAN MOTOR CO., U.S.A.**

**When Crankshaft and Connecting Rod are Reused**

1. Measure the connecting rod big end diameter. Refer to "**CONNECTING ROD BIG END DIAMETER**".
2. Make sure that the connecting rod big end diameter is within the standard value.
3. Measure the crankshaft pin journal diameter. Refer to "**CRANKSHAFT PIN JOURNAL DIAMETER**".
4. Determine the grade of crankshaft pin diameter grade by corresponding to the measured dimension in "Crankshaft pin journal diameter" column of "Connecting Rod Bearing Selection Table".
5. Select connecting rod bearing of the same grade.

**Connecting Rod Bearing Selection Table**

## CONNECTING ROD BEARING SELECTION CHART

| | Unit: mm (in) |
|---|---|
| Connecting rod big end diameter | 55.000 - 55.013 (2.1654 - 2.1659) |

## CONNECTING ROD BEARING SELECTION CHART

| | | | | Unit: mm (in) |
|---|---|---|---|---|
| **Crankshaft** | | **Connecting rod bearing** | | |
| **Crankshaft pin journal diameter** | **Grade (Mark)** | **Dimension (Bearing thickness range)** | **Bearing grade No.** | **Color** |
| 51.968 - 51.974 (2.0460 - 2.0462) | 0 | 1.500 - 1.503 (0.0591 - 0.0592) | STD 0 | No color |
| 51.962 - 51.968 (2.0457 - 2.0460) | 1 | 1.503 - 1.506 (0.0592 - 0.0593) | STD 1 | Brown |
| 51.956 - 51.962 (2.0455 - 2.0457) | 2 | 1.506 - 1.509 (0.0593 - 0.0594) | STD 2 | Green |

**Under Size Bearings Usage Guide**

- When the specified connecting rod bearing oil clearance is not obtained with standard size connecting rod bearings, use undersize (US) bearings.
- When using undersize (US) bearing, measure the connecting rod bearing inner diameter with bearing installed, and grind crankshaft pin so that the connecting rod bearing oil clearance satisfies the standard.

**CAUTION: In grinding crankshaft pin to use undersize bearings, keep the fillet R [1.5 mm (0.059 in)].**

 © 2011 Mitchell Repair Information Company, LLC.

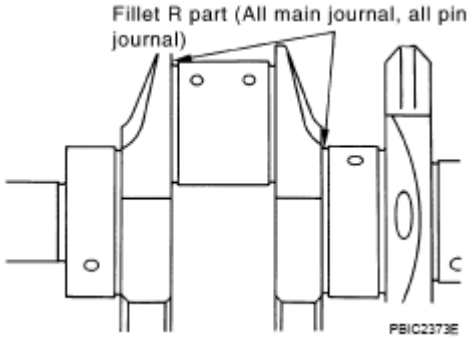


**Fig. 213: Identifying Undersize Bearing**
**Courtesy of NISSAN MOTOR CO., U.S.A.**

**Bearing undersize table**

## BEARING UNDERSIZE SPECIFICATION

| Unit: mm (in) | |
|---|---|
| **Size** | **Thickness** |
| US 0.25 (0.0098) | 1.626 - 1.634 (0.0640 - 0.0643) |

**HOW TO SELECT MAIN BEARING**

**When New Cylinder Block and Crankshaft are Used**

1. "Main Bearing Selection Table" rows correspond to main bearing housing grade on rear upper side between cylinder block banks.

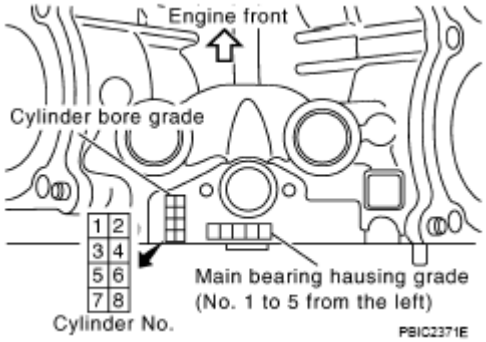


**Fig. 214: Identifying Main Bearing Housing Grade And Cylinder Bore Grade**
**Courtesy of NISSAN MOTOR CO., U.S.A.**

2. "Main Bearing Selection Table" columns correspond to main journal diameter grade on front side of crankshaft.

 © 2011 Mitchell Repair Information Company, LLC.

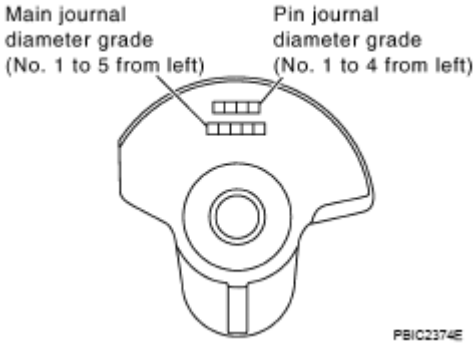


**Fig. 215: Identifying Main Journal Diameter Grade**
**Courtesy of NISSAN MOTOR CO., U.S.A.**

3. Select main bearing grade at the point where selected row and column meat in "Main Bearing Selection Table".

**CAUTION:**
- **Initial clearance for No. 1, 5 journal and No. 2, 3, 4 journal is different. Use two different selection table for each part.**
- **No. 1, 5 journal and No. 2, 3, 4 journal have the same signs but different measures. Do not confuse.**

4. Apply sign at crossing in above step 3 to "Main Bearing Grade Table".

**NOTE:**
- **"Main Bearing Grade Table" applies to all journals.**
- **Service parts is available as a set of both upper and lower.**

**When Cylinder Block and Crankshaft are Reused**

1. Measure the cylinder block main bearing housing inner diameter and the crankshaft main journal diameter. Refer to "**MAIN BEARING HOUSING INNER DIAMETER**" and "**CRANKSHAFT MAIN JOURNAL DIAMETER**".
2. Correspond the measured dimension in "Cylinder block main bearing housing inner diameter" row of "Main Bearing Selection Table".
3. Correspond the measured dimension in "Crankshaft main journal diameter" column of "Main Bearing Selection Table".
4. Follow step 3 and later in "When New Cylinder Block and Crankshaft are Used".

**Main Bearing Selection Table (No. 1 and 5 Journal)**

 © 2011 Mitchell Repair Information Company, LLC.

| Cylinder block main bearing housing inner diameter / Crankshaft main journal diameter | I.D. mark | A | B | C | D | E | F | G | H | J | K | L | M | N | P | R | S | T | U | V | W | X | Y | 1 | 2 |
|---|---|---|---|---|---|---|---|---|---|---|---|---|---|---|---|---|---|---|---|---|---|---|---|---|---|
| Hole diameter Unit: mm (in) | | 68.944 - 68.945 (2.7143 - 2.7144) | 68.945 - 68.946 (2.7144 - 2.7144) | 68.946 - 68.947 (2.7144 - 2.7144) | 68.947 - 68.948 (2.7144 - 2.7145) | 68.948 - 68.949 (2.7145 - 2.7145) | 68.949 - 68.950 (2.7145 - 2.7146) | 68.950 - 68.951 (2.7146 - 2.7146) | 68.951 - 68.952 (2.7146 - 2.7146) | 68.952 - 68.953 (2.7146 - 2.7147) | 68.953 - 68.954 (2.7147 - 2.7147) | 68.954 - 68.955 (2.7147 - 2.7148) | 68.955 - 68.956 (2.7148 - 2.7148) | 68.956 - 68.957 (2.7148 - 2.7148) | 68.957 - 68.958 (2.7148 - 2.7149) | 68.958 - 68.959 (2.7149 - 2.7149) | 68.959 - 68.960 (2.7149 - 2.7150) | 68.960 - 68.961 (2.7150 - 2.7150) | 68.961 - 68.962 (2.7150 - 2.7150) | 68.962 - 68.963 (2.7150 - 2.7151) | 68.963 - 68.964 (2.7151 - 2.7151) | 68.964 - 68.965 (2.7151 - 2.7152) | 68.965 - 68.966 (2.7152 - 2.7152) | 68.966 - 68.967 (2.7152 - 2.7152) | 68.967 - 68.968 (2.7152 - 2.7153) |
| I.D. mark | Axle diameter Unit: mm (in) | | | | | | | | | | | | | | | | | | | | | | | | |
| G | 63.964 - 63.963 (2.5183 - 2.5182) | 1 | 1 | 12 | 12 | 12 | 2 | 2 | 2 | 23 | 23 | 23 | 3 | 3 | 3 | 34 | 34 | 34 | 4 | 4 | 4 | 45 | 45 | 45 | 5 |
| H | 63.963 - 63.962 (2.5182 - 2.5182) | 1 | 12 | 12 | 12 | 2 | 2 | 2 | 23 | 23 | 23 | 3 | 3 | 3 | 34 | 34 | 34 | 4 | 4 | 4 | 45 | 45 | 45 | 5 | 5 |
| J | 63.962 - 63.961 (2.5182 - 2.5181) | 12 | 12 | 12 | 2 | 2 | 2 | 23 | 23 | 23 | 3 | 3 | 3 | 34 | 34 | 34 | 4 | 4 | 4 | 45 | 45 | 45 | 5 | 5 | 5 |
| K | 63.961 - 63.960 (2.5181 - 2.5181) | 12 | 12 | 2 | 2 | 2 | 23 | 23 | 23 | 3 | 3 | 3 | 34 | 34 | 34 | 4 | 4 | 4 | 45 | 45 | 45 | 5 | 5 | 5 | 56 |
| L | 63.960 - 63.959 (2.5181 - 2.5181) | 12 | 2 | 2 | 2 | 23 | 23 | 23 | 3 | 3 | 3 | 34 | 34 | 34 | 4 | 4 | 4 | 45 | 45 | 45 | 5 | 5 | 5 | 56 | 56 |
| M | 63.959 - 63.958 (2.5181 - 2.5180) | 2 | 2 | 2 | 23 | 23 | 23 | 3 | 3 | 3 | 34 | 34 | 34 | 4 | 4 | 4 | 45 | 45 | 45 | 5 | 5 | 5 | 56 | 56 | 56 |
| N | 63.958 - 63.957 (2.5180 - 2.5180) | 2 | 2 | 23 | 23 | 23 | 3 | 3 | 3 | 34 | 34 | 34 | 4 | 4 | 4 | 45 | 45 | 45 | 5 | 5 | 5 | 56 | 56 | 56 | 6 |
| P | 63.957 - 63.956 (2.5180 - 2.5179) | 2 | 23 | 23 | 23 | 3 | 3 | 3 | 34 | 34 | 34 | 4 | 4 | 4 | 45 | 45 | 45 | 5 | 5 | 5 | 56 | 56 | 56 | 6 | 6 |
| R | 63.956 - 63.955 (2.5179 - 2.5179) | 23 | 23 | 23 | 3 | 3 | 3 | 34 | 34 | 34 | 4 | 4 | 4 | 45 | 45 | 45 | 5 | 5 | 5 | 56 | 56 | 56 | 6 | 6 | 6 |
| S | 63.955 - 63.954 (2.5179 - 2.5179) | 23 | 23 | 3 | 3 | 3 | 34 | 34 | 34 | 4 | 4 | 4 | 45 | 45 | 45 | 5 | 5 | 5 | 56 | 56 | 56 | 6 | 6 | 6 | 67 |
| T | 63.954 - 63.953 (2.5179 - 2.5178) | 23 | 3 | 3 | 3 | 34 | 34 | 34 | 4 | 4 | 4 | 45 | 45 | 45 | 5 | 5 | 5 | 56 | 56 | 56 | 6 | 6 | 6 | 67 | 67 |
| U | 63.953 - 63.952 (2.5178 - 2.5178) | 3 | 3 | 3 | 34 | 34 | 34 | 4 | 4 | 4 | 45 | 45 | 45 | 5 | 5 | 5 | 56 | 56 | 56 | 6 | 6 | 6 | 67 | 67 | 67 |
| V | 63.952 - 63.951 (2.5178 - 2.5178) | 3 | 3 | 34 | 34 | 34 | 4 | 4 | 4 | 45 | 45 | 45 | 5 | 5 | 5 | 56 | 56 | 56 | 6 | 6 | 6 | 67 | 67 | 67 | 7 |
| W | 63.951 - 63.950 (2.5178 - 2.5177) | 3 | 34 | 34 | 34 | 4 | 4 | 4 | 45 | 45 | 45 | 5 | 5 | 5 | 56 | 56 | 56 | 6 | 6 | 6 | 67 | 67 | 67 | 7 | 7 |
| X | 63.950 - 63.949 (2.5177 - 2.5177) | 34 | 34 | 34 | 4 | 4 | 4 | 45 | 45 | 45 | 5 | 5 | 5 | 56 | 56 | 56 | 6 | 6 | 6 | 67 | 67 | 67 | 7 | 7 | 7 |
| Y | 63.949 - 63.948 (2.5177 - 2.5176) | 34 | 34 | 4 | 4 | 4 | 45 | 45 | 45 | 5 | 5 | 5 | 56 | 56 | 56 | 6 | 6 | 6 | 67 | 67 | 67 | 7 | 7 | 7 | 78 |
| 1 | 63.948 - 63.947 (2.5176 - 2.5176) | 34 | 4 | 4 | 4 | 45 | 45 | 45 | 5 | 5 | 5 | 56 | 56 | 56 | 6 | 6 | 6 | 67 | 67 | 67 | 7 | 7 | 7 | 78 | 78 |
| 2 | 63.947 - 63.946 (2.5176 - 2.5176) | 4 | 4 | 4 | 45 | 45 | 45 | 5 | 5 | 5 | 56 | 56 | 56 | 6 | 6 | 6 | 67 | 67 | 67 | 7 | 7 | 7 | 78 | 78 | 78 |
| 3 | 63.946 - 63.945 (2.5176 - 2.5175) | 4 | 4 | 45 | 45 | 45 | 5 | 5 | 5 | 56 | 56 | 56 | 6 | 6 | 6 | 67 | 67 | 67 | 7 | 7 | 7 | 78 | 78 | 78 | 8 |
| 4 | 63.945 - 63.944 (2.5175 - 2.5175) | 4 | 45 | 45 | 45 | 5 | 5 | 5 | 56 | 56 | 56 | 6 | 6 | 6 | 67 | 67 | 67 | 7 | 7 | 7 | 78 | 78 | 78 | 8 | 8 |
| 5 | 63.944 - 63.943 (2.5175 - 2.5174) | 45 | 45 | 45 | 5 | 5 | 5 | 56 | 56 | 56 | 6 | 6 | 6 | 67 | 67 | 67 | 7 | 7 | 7 | 78 | 78 | 78 | 8 | 8 | 8 |
| 6 | 63.943 - 63.942 (2.5174 - 2.5174) | 45 | 45 | 5 | 5 | 5 | 56 | 56 | 56 | 6 | 6 | 6 | 67 | 67 | 67 | 7 | 7 | 7 | 78 | 78 | 78 | 8 | 8 | 8 | 8 |
| 7 | 63.942 - 63.941 (2.5174 - 2.5174) | 45 | 5 | 5 | 5 | 56 | 56 | 56 | 6 | 6 | 6 | 67 | 67 | 67 | 7 | 7 | 7 | 78 | 78 | 78 | 8 | 8 | 8 | 8 | 8 |
| 9 | 63.941 - 63.940 (2.5174 - 2.5173) | 5 | 5 | 5 | 56 | 56 | 56 | 6 | 6 | 6 | 67 | 67 | 67 | 7 | 7 | 7 | 78 | 78 | 78 | 8 | 8 | 8 | 8 | 8 | 8 |

PBIC2375E

**Fig. 216: Main Bearing Selection Chart (No. 1 And 5 Journal)**
**Courtesy of NISSAN MOTOR CO., U.S.A.**

**Main Bearing Selection Table (No. 2, 3 and 4 Journal)**

 © 2011 Mitchell Repair Information Company, LLC.

| Cylinder block main bearing housing inner diameter / Crankshaft main journal diameter | I.D. mark | A | B | C | D | E | F | G | H | J | K | L | M | N | P | R | S | T | U | V | W | X | Y | 1 | 2 |
|---|---|---|---|---|---|---|---|---|---|---|---|---|---|---|---|---|---|---|---|---|---|---|---|---|---|
| Hole diameter Unit: mm (in) | | 68.944 - 68.945 (2.7143 - 2.7144) | 68.945 - 68.946 (2.7144 - 2.7144) | 68.946 - 68.947 (2.7144 - 2.7144) | 68.947 - 68.948 (2.7144 - 2.7145) | 68.948 - 68.949 (2.7145 - 2.7145) | 68.949 - 68.950 (2.7145 - 2.7146) | 68.950 - 68.951 (2.7146 - 2.7146) | 68.951 - 68.952 (2.7146 - 2.7146) | 68.952 - 68.953 (2.7146 - 2.7147) | 68.953 - 68.954 (2.7147 - 2.7147) | 68.954 - 68.955 (2.7147 - 2.7148) | 68.955 - 68.956 (2.7148 - 2.7148) | 68.956 - 68.957 (2.7148 - 2.7148) | 68.957 - 68.958 (2.7148 - 2.7149) | 68.958 - 68.959 (2.7149 - 2.7149) | 68.959 - 68.960 (2.7149 - 2.7150) | 68.960 - 68.961 (2.7150 - 2.7150) | 68.961 - 68.962 (2.7150 - 2.7150) | 68.962 - 68.963 (2.7150 - 2.7151) | 68.963 - 68.964 (2.7151 - 2.7151) | 68.964 - 68.965 (2.7151 - 2.7152) | 68.965 - 68.966 (2.7152 - 2.7152) | 68.966 - 68.967 (2.7152 - 2.7152) | 68.967 - 68.968 (2.7152 - 2.7153) |
| I.D. mark | Axle diameter Unit: mm (in) | | | | | | | | | | | | | | | | | | | | | | | | |
| A | 63.964 - 63.963 (2.5183 - 2.5182) | 0 | 0 | 01 | 01 | 01 | 1 | 1 | 1 | 12 | 12 | 12 | 2 | 2 | 2 | 23 | 23 | 23 | 3 | 3 | 3 | 34 | 34 | 34 | 4 |
| B | 63.963 - 63.962 (2.5182 - 2.5182) | 0 | 01 | 01 | 01 | 1 | 1 | 1 | 12 | 12 | 12 | 2 | 2 | 2 | 23 | 23 | 23 | 3 | 3 | 3 | 34 | 34 | 34 | 4 | 4 |
| C | 63.962 - 63.961 (2.5182 - 2.5181) | 01 | 01 | 01 | 1 | 1 | 1 | 12 | 12 | 12 | 2 | 2 | 2 | 23 | 23 | 23 | 3 | 3 | 3 | 34 | 34 | 34 | 4 | 4 | 4 |
| D | 63.961 - 63.960 (2.5181 - 2.5181) | 01 | 01 | 1 | 1 | 1 | 12 | 12 | 12 | 2 | 2 | 2 | 23 | 23 | 23 | 3 | 3 | 3 | 34 | 34 | 34 | 4 | 4 | 4 | 45 |
| E | 63.960 - 63.959 (2.5181 - 2.5181) | 01 | 1 | 1 | 1 | 12 | 12 | 12 | 2 | 2 | 2 | 23 | 23 | 23 | 3 | 3 | 3 | 34 | 34 | 34 | 4 | 4 | 4 | 45 | 45 |
| F | 63.959 - 63.958 (2.5181 - 2.5180) | 1 | 1 | 1 | 12 | 12 | 12 | 2 | 2 | 2 | 23 | 23 | 23 | 3 | 3 | 3 | 34 | 34 | 34 | 4 | 4 | 4 | 45 | 45 | 45 |
| G | 63.958 - 63.957 (2.5180 - 2.5180) | 1 | 1 | 12 | 12 | 12 | 2 | 2 | 2 | 23 | 23 | 23 | 3 | 3 | 3 | 34 | 34 | 34 | 4 | 4 | 4 | 45 | 45 | 45 | 5 |
| H | 63.957 - 63.956 (2.5180 - 2.5179) | 1 | 12 | 12 | 12 | 2 | 2 | 2 | 23 | 23 | 23 | 3 | 3 | 3 | 34 | 34 | 34 | 4 | 4 | 4 | 45 | 45 | 45 | 5 | 5 |
| J | 63.956 - 63.955 (2.5179 - 2.5179) | 12 | 12 | 12 | 2 | 2 | 2 | 23 | 23 | 23 | 3 | 3 | 3 | 34 | 34 | 34 | 4 | 4 | 4 | 45 | 45 | 45 | 5 | 5 | 5 |
| K | 63.955 - 63.954 (2.5179 - 2.5179) | 12 | 12 | 2 | 2 | 2 | 23 | 23 | 23 | 3 | 3 | 3 | 34 | 34 | 34 | 4 | 4 | 4 | 45 | 45 | 45 | 5 | 5 | 5 | 56 |
| L | 63.954 - 63.953 (2.5179 - 2.5178) | 12 | 2 | 2 | 2 | 23 | 23 | 23 | 3 | 3 | 3 | 34 | 34 | 34 | 4 | 4 | 4 | 45 | 45 | 45 | 5 | 5 | 5 | 56 | 56 |
| M | 63.953 - 63.952 (2.5178 - 2.5178) | 2 | 2 | 2 | 23 | 23 | 23 | 3 | 3 | 3 | 34 | 34 | 34 | 4 | 4 | 4 | 45 | 45 | 45 | 5 | 5 | 5 | 56 | 56 | 56 |
| N | 63.952 - 63.951 (2.5178 - 2.5178) | 2 | 2 | 23 | 23 | 23 | 3 | 3 | 3 | 34 | 34 | 34 | 4 | 4 | 4 | 45 | 45 | 45 | 5 | 5 | 5 | 56 | 56 | 56 | 6 |
| P | 63.951 - 63.950 (2.5178 - 2.5177) | 2 | 23 | 23 | 23 | 3 | 3 | 3 | 34 | 34 | 34 | 4 | 4 | 4 | 45 | 45 | 45 | 5 | 5 | 5 | 56 | 56 | 56 | 6 | 6 |
| R | 63.950 - 63.949 (2.5177 - 2.5177) | 23 | 23 | 23 | 3 | 3 | 3 | 34 | 34 | 34 | 4 | 4 | 4 | 45 | 45 | 45 | 5 | 5 | 5 | 56 | 56 | 56 | 6 | 6 | 6 |
| S | 63.949 - 63.948 (2.5177 - 2.5176) | 23 | 23 | 3 | 3 | 3 | 34 | 34 | 34 | 4 | 4 | 4 | 45 | 45 | 45 | 5 | 5 | 5 | 56 | 56 | 56 | 6 | 6 | 6 | 67 |
| T | 63.948 - 63.947 (2.5176 - 2.5176) | 23 | 3 | 3 | 3 | 34 | 34 | 34 | 4 | 4 | 4 | 45 | 45 | 45 | 5 | 5 | 5 | 56 | 56 | 56 | 6 | 6 | 6 | 67 | 67 |
| U | 63.947 - 63.946 (2.5176 - 2.5176) | 3 | 3 | 3 | 34 | 34 | 34 | 4 | 4 | 4 | 45 | 45 | 45 | 5 | 5 | 5 | 56 | 56 | 56 | 6 | 6 | 6 | 67 | 67 | 67 |
| V | 63.946 - 63.945 (2.5176 - 2.5175) | 3 | 3 | 34 | 34 | 34 | 4 | 4 | 4 | 45 | 45 | 45 | 5 | 5 | 5 | 56 | 56 | 56 | 6 | 6 | 6 | 67 | 67 | 67 | 7 |
| W | 63.945 - 63.944 (2.5175 - 2.5175) | 3 | 34 | 34 | 34 | 4 | 4 | 4 | 45 | 45 | 45 | 5 | 5 | 5 | 56 | 56 | 56 | 6 | 6 | 6 | 67 | 67 | 67 | 7 | 7 |
| X | 63.944 - 63.943 (2.5175 - 2.5174) | 34 | 34 | 34 | 4 | 4 | 4 | 45 | 45 | 45 | 5 | 5 | 5 | 56 | 56 | 56 | 6 | 6 | 6 | 67 | 67 | 67 | 7 | 7 | 7 |
| Y | 63.943 - 63.942 (2.5174 - 2.5174) | 34 | 34 | 4 | 4 | 4 | 45 | 45 | 45 | 5 | 5 | 5 | 56 | 56 | 56 | 6 | 6 | 6 | 67 | 67 | 67 | 7 | 7 | 7 | 78 |
| 1 | 63.942 - 63.941 (2.5174 - 2.5174) | 34 | 4 | 4 | 4 | 45 | 45 | 45 | 5 | 5 | 5 | 56 | 56 | 56 | 6 | 6 | 6 | 67 | 67 | 67 | 7 | 7 | 7 | 78 | 78 |
| 2 | 63.941 - 63.940 (2.5174 - 2.5173) | 4 | 4 | 4 | 45 | 45 | 45 | 5 | 5 | 5 | 56 | 56 | 56 | 6 | 6 | 6 | 67 | 67 | 67 | 7 | 7 | 7 | 78 | 78 | 78 |

PBIC2376E

**Fig. 217: Main Bearing Selection Chart (No. 2, 3 And 4 Journal)**
**Courtesy of NISSAN MOTOR CO., U.S.A.**

**Main Bearing Grade Table (All Journals)**

## MAIN BEARING GRADE CHART

| | | | Unit: mm (in) |
|---|---|---|---|
| **Grade number** | **Thickness** | **Identification color** | **Remarks** |
| 0 | 2.483 - 2.486 (0.0978 - 0.0979) | Black | |
| 1 | 2.486 - 2.489 (0.0979 - 0.0980) | Brown | |
| 2 | 2.489 - 2.492 (0.0980 - 0.0981) | Green | |
| 3 | 2.492 - 2.495 (0.0981 - | Yellow | |

 © 2011 Mitchell Repair Information Company, LLC.

| | | | | |
|---|---|---|---|---|
| | | 0.0982) | | Grade and color are the same for upper and lower bearings. |
| 4 | | 2.495 - 2.498 (0.0982 - 0.0983) | Blue | |
| 5 | | 2.498 - 2.501 (0.0983 - 0.0985) | Pink | |
| 6 | | 2.501 - 2.504 (0.0985 - 0.0986) | Purple | |
| 7 | | 2.504 - 2.507 (0.0986 - 0.0987) | White | |
| 8 | | 2.507 - 2.510 (0.0987 - 0.0988) | Red | |
| 01 | UPR | 2.483 - 2.486 (0.0978 - 0.0979) | Black | Grade and color are different for upper and lower bearings. |
| | LWR | 2.486 - 2.489 (0.0979 - 0.0980) | Brown | |
| 12 | UPR | 2.486 - 2.489 (0.0979 - 0.0980) | Brown | |
| | LWR | 2.489 - 2.492 (0.0980 - 0.0981) | Green | |
| 23 | UPR | 2.489 - 2.492 (0.0980 - 0.0981) | Green | |
| | LWR | 2.492 - 2.495 (0.0981 - 0.0982) | Yellow | |
| 34 | UPR | 2.492 - 2.495 (0.0981 - 0.0982) | Yellow | |
| | LWR | 2.495 - 2.498 (0.0982 - 0.0983) | Blue | |
| 45 | UPR | 2.495 - 2.498 (0.0982 - 0.0983) | Blue | |
| | LWR | 2.498 - 2.501 (0.0983 - 0.0985) | Pink | |
| 56 | UPR | 2.498 - 2.501 (0.0983 - 0.0985) | Pink | |
| | LWR | 2.501 - 2.504 (0.0985 - 0.0986) | Purple | |
| 67 | UPR | 2.501 - 2.504 (0.0985 - 0.0986) | Purple | |
| | LWR | 2.504 - 2.507 (0.0986 - 0.0987) | White | |
| 78 | UPR | 2.504 - 2.507 (0.0986 - 0.0987) | White | |
| | LWR | 2.507 - 2.510 (0.0987 - 0.0988) | Red | |

**Use Undersize Bearing Usage Guide**

 © 2011 Mitchell Repair Information Company, LLC.

- When the specified main bearing oil clearance is not obtained with standard size main bearings, use underside (US) bearing.
- When using undersize (US) bearing, measure the main bearing inner diameter with bearing installed, and grind main journal so that the main bearing oil clearance satisfies the standard.

**CAUTION: In grinding crankshaft main journal to use undersize bearings, keep the fillet R [1.5 mm (0.059 in)].**

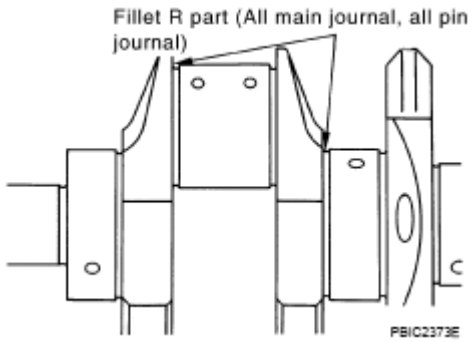


**Fig. 218: Identifying Undersize Bearing**
**Courtesy of NISSAN MOTOR CO., U.S.A.**

**Bearing undersize table**

**BEARING UNDERSIZE CHART**

| Unit: mm (in) | |
|---|---|
| **Size** | **Thickness** |
| US 0.25 (0.0098) | 2.618 - 2.626 (0.1031 - 0.1034) |

## INSPECTION AFTER DISASSEMBLY

### CRANKSHAFT END PLAY

- Measure the clearance between thrust bearings and crankshaft arm when crankshaft is moved fully forward or backward with dial indicator.

  **Standard : 0.10 - 0.25 mm (0.0039 - 0.0098 in)**

  **Limit : 0.30 mm (0.012 in)**

- If the measured value exceeds the limit, replace thrust bearings, and measure again. If it still exceeds the limit, replace crankshaft also.

 © 2011 Mitchell Repair Information Company, LLC.

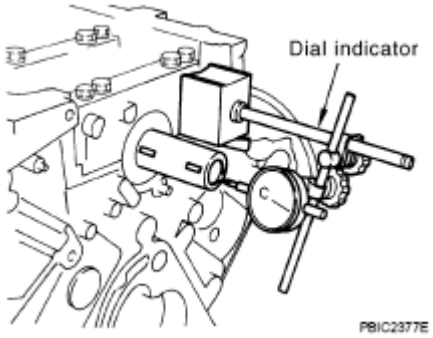


**Fig. 219: Measuring Clearance Between Thrust Bearings And Crankshaft Arm**
**Courtesy of NISSAN MOTOR CO., U.S.A.**

**CONNECTING ROD SIDE CLEARANCE**

- Measure the side clearance between connecting rod and crankshaft arm with feeler gauge.

  **Standard : 0.20 - 0.35 mm (0.0079 - 0.0138 in)**

  **Limit : 0.40 mm (0.016 in)**

- If the measured value exceeds the limit, replace connecting rod, and measure again. If it still exceeds the limit, replace crankshaft also.

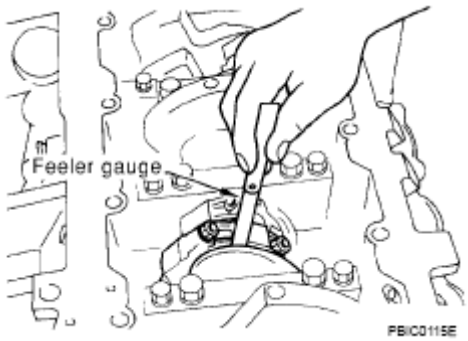


**Fig. 220: Measuring Connecting Rod Side Clearance**
**Courtesy of NISSAN MOTOR CO., U.S.A.**

**PISTON TO PISTON PIN OIL CLEARANCE**

**Piston Pin Hole Diameter**

Measure the inner diameter of piston pin hole with inside micrometer.

**Standard : 21.993 - 22.005 mm (0.8659 - 0.8663 in)**

 © 2011 Mitchell Repair Information Company, LLC.

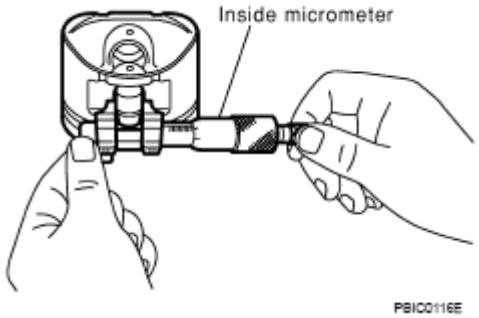


**Fig. 221: Measuring Inner Diameter Of Piston Pin Hole**
**Courtesy of NISSAN MOTOR CO., U.S.A.**

**Piston Pin Outer Diameter**

Measure the outer diameter of piston pin with micrometer.

**Standard : 21.989 - 22.001 mm (0.8657 - 0.8662 in)**

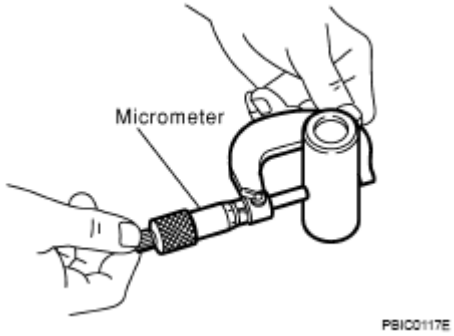


**Fig. 222: Measuring Outer Diameter Of Piston Pin With Micrometer**
**Courtesy of NISSAN MOTOR CO., U.S.A.**

**Piston to Piston Pin Oil Clearance**

(Piston to piston pin oil clearance) = (Piston pin hole diameter) - (Piston pin outer diameter)

**Standard : 0.002 - 0.006 mm (0.0001 - 0.0002 in)**

- If the calculated value is out of the standard, replace piston and piston pin assembly.
- When replacing piston and piston pin assembly, refer to "**HOW TO SELECT PISTON**".

**NOTE:**

- **Piston is available together with piston pin as assembly.**
- **Piston pin (piston pin hole) grade is provided only for the parts installed at the plant. For service parts, no piston pin grades can be selected. (Only "0" grade is available.)**

**PISTON RING SIDE CLEARANCE**

 © 2011 Mitchell Repair Information Company, LLC.

- Measure the side clearance of piston ring and piston ring groove with feeler gauge.

  **Standard:**

  **Top ring : 0.045 - 0.080 mm (0.0018 - 0.0031 in)**

  **2nd ring : 0.030 - 0.070 mm (0.0012 - 0.0028 in)**

  **Oil ring : 0.065 - 0.135 mm (0.0026 - 0.0053 in)**

  **Limit:**

  **Top ring : 0.11 mm (0.0043 in)**

  **2nd ring : 0.10 mm (0.004 in)**

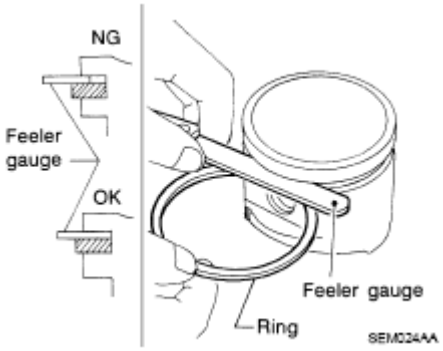


**Fig. 223: Measuring Side Clearance Of Piston Ring And Piston Ring Groove**
**Courtesy of NISSAN MOTOR CO., U.S.A.**

- If the measured value exceeds the limit, replace piston ring, and measure again. If it still exceeds the limit, replace piston also.

**PISTON RING END GAP**

- Make sure that the cylinder bore inner diameter is within the specification. Refer to "**CYLINDER BORE INNER DIAMETER**".
- Lubricate with new engine oil to piston and piston ring, and then insert piston ring until middle of cylinder with piston, and measure the piston ring end gap with feeler gauge.

  **Standard:**

  **Top ring : 0.22 - 0.32 mm (0.0087 - 0.0126 in)**

  **2nd ring : 0.22 - 0.32 mm (0.0087 - 0.0126 in)**

  **Oil ring : 0.20 - 0.50 mm (0.008 - 0.020 in)**

 © 2011 Mitchell Repair Information Company, LLC.

**Limit:**

**Top ring : 0.56 mm (0.0220 in)**

**2nd ring : 0.56 mm (0.0220 in)**

**Oil ring : 0.96 mm (0.0378 in)**

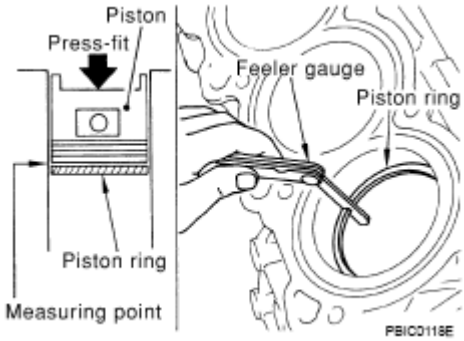


**Fig. 224: Checking Piston Ring End Gap**
**Courtesy of NISSAN MOTOR CO., U.S.A.**

- If the measured value exceeds the limit, replace piston ring, and measure again. If it still exceeds the limit, re-bore cylinder and use oversize piston and piston rings.

**CONNECTING ROD BEND AND TORSION**

- Check with connecting rod aligner.

  **Bend:**

  **Limit : 0.15 mm (0.0059 in) per 100 mm (3.94 in) length**

  **Torsion:**

  **Limit : 0.30 mm (0.012 in) per 100 mm (3.94 in) length**

- If it exceeds the limit, replace connecting rod assembly.

 © 2011 Mitchell Repair Information Company, LLC.

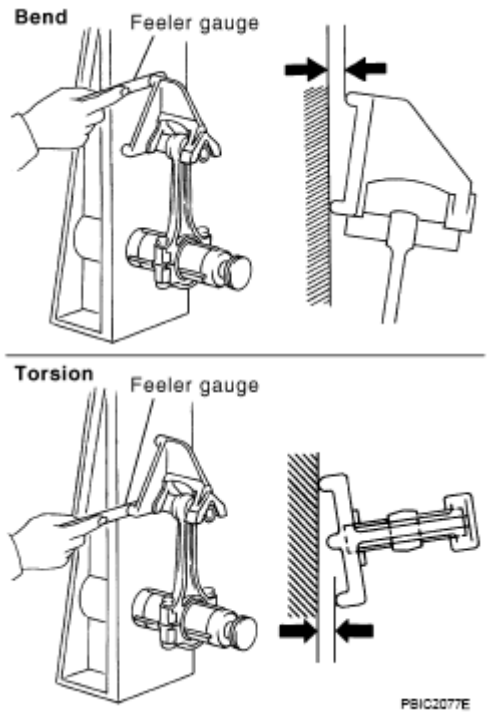


**Fig. 225: Checking Connecting Rod Bend And Torsion**
**Courtesy of NISSAN MOTOR CO., U.S.A.**

**CONNECTING ROD BIG END DIAMETER**

- Install connecting rod bearing cap without installing connecting rod bearing, and tightening connecting rod bolts to the specified torque. Refer to "**ASSEMBLY**" for the tightening procedure.
- Measure the inner diameter of connecting rod big end with inside micrometer.

  **Standard : 55.000 - 55.013 mm (2.1654 - 2.1659 in)**

- If out of the standard, replace connecting rod assembly.

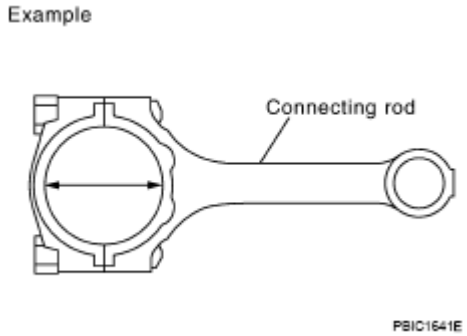


**Fig. 226: Measuring Inner Diameter Of Connecting Rod Big End With Inside Micrometer**
**Courtesy of NISSAN MOTOR CO., U.S.A.**

 © 2011 Mitchell Repair Information Company, LLC.

**CONNECTING ROD BUSHING OIL CLEARANCE**

**Connecting Rod Bushing Inner Diameter**

Measure the inner diameter of connecting rod bushing with inside micrometer.

**Standard : 22.000 - 22.012 mm (0.8661 - 0.8666 in)**

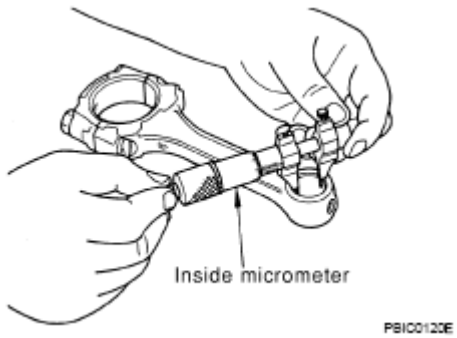


**Fig. 227: Measuring Inner Diameter Of Connecting Rod Bushing With Inside Micrometer**
**Courtesy of NISSAN MOTOR CO., U.S.A.**

**Piston Pin Outer Diameter**

Measure the outer diameter of piston pin with micrometer.

**Standard : 21.989 - 22.001 mm (0.8657 - 0.8662 in)**

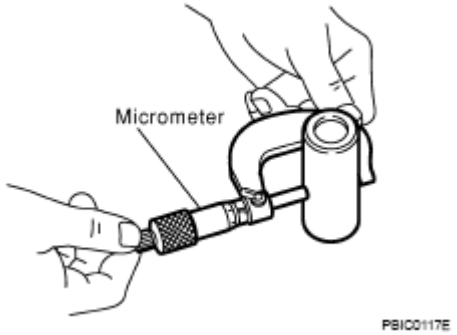


**Fig. 228: Measuring Outer Diameter Of Piston Pin With Micrometer**
**Courtesy of NISSAN MOTOR CO., U.S.A.**

**Connecting Rod Bushing Oil Clearance**

(Connecting rod bushing oil clearance) = (Connecting rod bushing inner diameter) - (Piston pin outer diameter)

**Standard : 0.005 - 0.017 mm (0.0002 - 0.0007 in)**

**Limit : 0.030 mm (0.0012 in)**

 © 2011 Mitchell Repair Information Company, LLC.

- If the calculated value exceeds the limit, replace connecting rod assembly and/or piston and piston pin assembly.
- If replacing piston and piston pin assembly, refer to "**HOW TO SELECT PISTON**".
- If replacing connecting rod assembly, refer to "**CONNECTING ROD BEARING OIL CLEARANCE**" to select the connecting rod bearing.

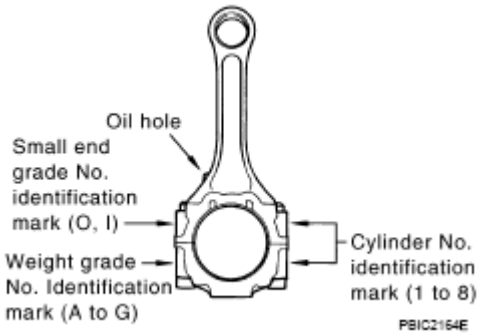


**Fig. 229: Identifying Cylinder No. Identification Mark**
**Courtesy of NISSAN MOTOR CO., U.S.A.**

**Factory installed parts grading:**

- Service parts apply only to grade "0".

**PARTS GRADE SPECIFICATION**

| | | Unit: mm (in) |
|---|---|---|
| **Grade** | **0** | **1** |
| Connecting rod bushing inner diameter (1) | 22.000 - 22.006 (0.8661 - 0.8664) | 22.006 - 22.012 (0.8664 - 0.8666) |
| Piston pin hole diameter | 21.993 - 21.999 (0.8659 - 0.8661) | 21.999 - 22.005 (0.8661 - 0.8663) |
| Piston pin outer diameter | 21.989 - 21.995 (0.8657 - 0.8659) | 21.995 - 22. 001 (0.8659 - 0.8662) |
| (1) After installing in connecting rod | | |

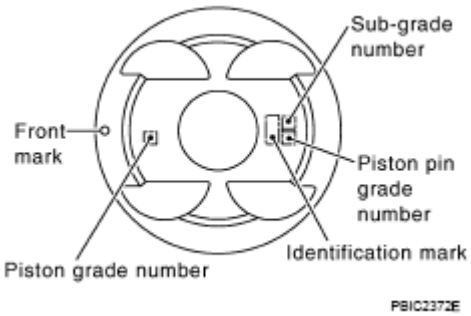


**Fig. 230: Identifying Piston Pin Grade Number**

 © 2011 Mitchell Repair Information Company, LLC.

**Courtesy of NISSAN MOTOR CO., U.S.A.**

**CYLINDER BLOCK DISTORTION**

- Using scraper, remove gasket on the cylinder block surface, and also remove engine oil, scale, carbon, or other contamination.

**CAUTION: Be careful not to allow gasket flakes to enter engine oil or engine coolant passages.**

- Measure the distortion on the cylinder block upper face at some different points in six directions with straightedge and feeler gauge.

**Limit : 0.1 mm (0.004 in)**

- If it exceeds the limit, replace cylinder block.

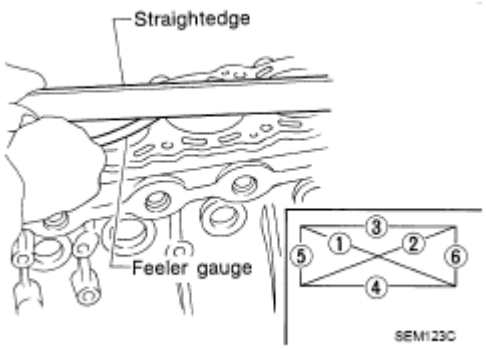


**Fig. 231: Checking Distortion Of Cylinder Block Upper Face**
**Courtesy of NISSAN MOTOR CO., U.S.A.**

**MAIN BEARING HOUSING INNER DIAMETER**

- Install main bearing caps and main bearing without installing main bearings, and tighten main bearing cap bolts to the specified torque. Refer to "**ASSEMBLY**" for the tightening procedure.
- Measure the inner diameter of main bearing housing with bore gauge.

**Standard : 68.944 - 68.968 mm (2.7143 - 2.7153 in)**

- If out of the standard, replace cylinder block and main bearing caps as assembly.

**NOTE: Cylinder block cannot be replaced as a single part, because it is machined together with main bearing caps.**

 © 2011 Mitchell Repair Information Company, LLC.

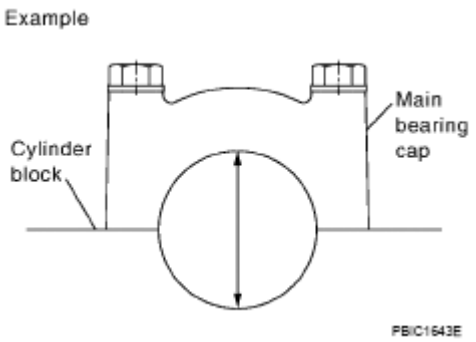


**Fig. 232: Measuring Cylinder Bore Diameter**
**Courtesy of NISSAN MOTOR CO., U.S.A.**

**PISTON TO CYLINDER BORE CLEARANCE**

**Cylinder Bore Inner Diameter**

- Using bore gauge, measure cylinder bore for wear, out-of-round and taper at six different points on each cylinder. ("X" and "Y" directions at "A", "B" and "C") ("X" is in longitudinal direction of engine)

  **Standard inner diameter: 93.000 - 93.030 mm (3.6614 - 3.6626 in)**

  **Wear limit: 0.2 mm (0.008 in)**

  **Out-of-round (Difference between "X" and "Y"): 0.015 mm (0.0006 in)**

  **Taper limit (Difference between "A" and "C"): 0.01 mm (0.0004 in)**

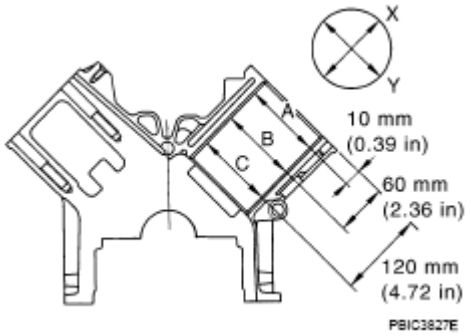


**Fig. 233: Identifying Cylinder Bore Inner Diameter**
**Courtesy of NISSAN MOTOR CO., U.S.A.**

- If the measured value exceeds the limit, or if there are scratches and/or seizure on the cylinder inner wall, hone or re-bore the inner wall.
- Oversize piston is provided. When using oversize piston, rebore cylinder so that the clearance of the piston-to-cylinder bore satisfies the standard.

 © 2011 Mitchell Repair Information Company, LLC.

**CAUTION: When using oversize piston, use oversize pistons for all cylinders with oversize piston rings.**

**Oversize (OS) : 0.2 mm (0.008 in)**

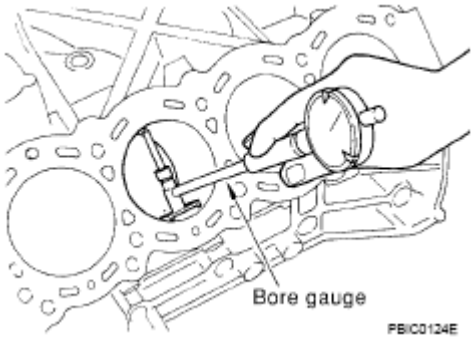


**Fig. 234: Measuring Cylinder Bore Inner Diameter**
**Courtesy of NISSAN MOTOR CO., U.S.A.**

**Piston Skirt Diameter**

- Measure the outer diameter of piston skirt with micrometer.

**Standard : 92.980 - 93.010 mm (3.6606 - 3.6618 in)**

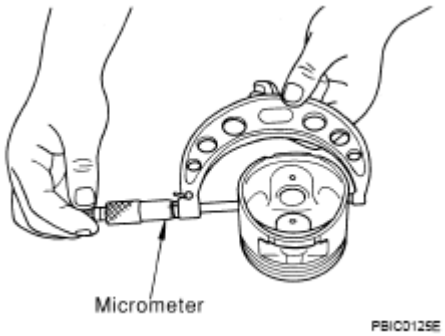


**Fig. 235: Checking Outer Diameter Of Piston**
**Courtesy of NISSAN MOTOR CO., U.S.A.**

- Measure point "H" (Distance from the top): 42 mm (1.65 in)

 © 2011 Mitchell Repair Information Company, LLC.

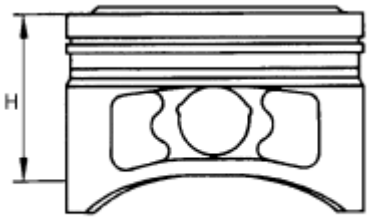


PBIC0126E

**Fig. 236: Measuring Piston Height**
**Courtesy of NISSAN MOTOR CO., U.S.A.**

**Piston to Cylinder Bore Clearance**

Calculate by piston skirt diameter and cylinder bore inner diameter (direction "Y", position "B").

(Clearance) = (Cylinder bore inner diameter) - (Piston skirt diameter).

**Standard : 0.010 - 0.030 mm (0.0004 - 0.0012 in)**

**Limit : 0.08 mm (0.0031 in)**

- If the calculated value exceeds the limit, replace piston and piston pin assembly. Refer to "**HOW TO SELECT PISTON**".

**Re-boring Cylinder Bore**

1. Cylinder bore size is determined by adding piston to cylinder bore clearance to piston skirt diameter.

   **Re-bored size calculation: D = A + B - C**

   **Where,**

   **D: Bored diameter**

   **A: Piston skirt diameter as measured**

   **B: Piston to cylinder bore clearance (standard value)**

   **C: Honing allowance 0.02 mm (0.0008 in)**

2. Install main bearing caps and main bearing, and tighten to the specified torque. Otherwise, cylinder bores may be distorted in final assembly.
3. Cut cylinder bores.

**NOTE:**

- **When any cylinder needs boring, all other cylinders must also be bored.**

 © 2011 Mitchell Repair Information Company, LLC.

- **Do not cut too much out of cylinder bore at a time. Cut only 0.05 mm (0.0020 in) or so in diameter at a time.**

4. Hone cylinders to obtain the specified piston to cylinder bore clearance.
5. Measure finished cylinder bore for the out-of-round and taper.

**NOTE: Measurement should be done after cylinder bore cools down.**

**CRANKSHAFT MAIN JOURNAL DIAMETER**

- Measure the outer diameter of crankshaft main journals with micrometer.

  **Standard : 63.940 - 63.964 mm (2.5173 - 2.5183 in) dia** .

- If out of the standard, measure the main bearing oil clearance. Then use undersize bearing. Refer to "**MAIN BEARING OIL CLEARANCE**".

**CRANKSHAFT PIN JOURNAL DIAMETER**

- Measure the outer diameter of crankshaft pin journal with micrometer.

  **Standard : 51.956 - 51.974 mm (2.0455 - 2.0462 in) dia** .

- If out of the standard, measure the connecting rod bearing oil clearance. Then use undersize bearing. Refer to "**CONNECTING ROD BEARING OIL CLEARANCE**".

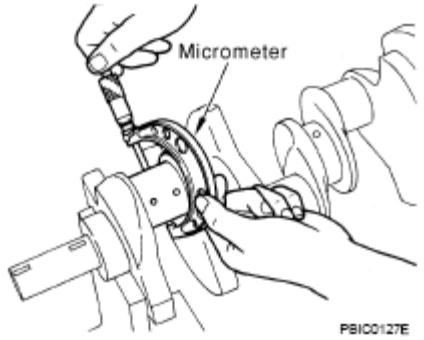


**Fig. 237: Measuring Outer Diameter Of Crankshaft Pin Journal**
**Courtesy of NISSAN MOTOR CO., U.S.A.**

**CRANKSHAFT OUT-OF-ROUND AND TAPER**

- Measure the dimensions at four different points as shown in the figure on each main journal and pin journal with micrometer.
- Out-of-round is indicated by the difference in the dimensions between "X" and "Y" at "A" and "B".
- Taper is indicated by the difference in the dimensions between "A" and "B" at "X" and "Y".

 © 2011 Mitchell Repair Information Company, LLC.

**Limit:**

**Out-of-round (Difference between "X" and "Y") : 0.015 mm (0.0006 in)**

**Taper (Difference between "A" and "B") : 0.010 mm (0.0004 in)**

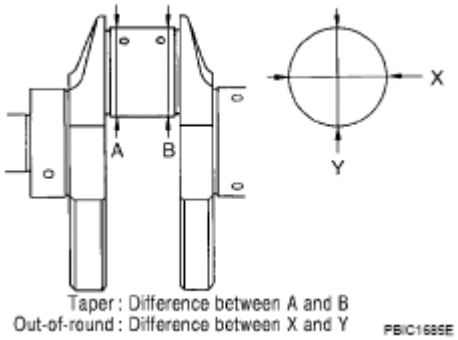


**Fig. 238: Identifying Main Journal Measuring Point**
**Courtesy of NISSAN MOTOR CO., U.S.A.**

- If the measured value exceeds the limit, correct or replace crankshaft.
- If corrected, measure the bearing oil clearance of the corrected main journal and/or pin journal. Then select the main bearing and/or connecting rod bearing. Refer to "**MAIN BEARING OIL CLEARANCE**" and/or "**CONNECTING ROD BEARING OIL CLEARANCE**".

**CRANKSHAFT RUNOUT**

- Place V-block on precise flat table, and support the journals on the both end of crankshaft.
- Place dial indicator straight up on the No. 3 journal.
- While rotating crankshaft, read the movement of the pointer on dial indicator (total indicator reading).

**Standard : Less than 0.05 mm (0.002 in)**

**Limit : 0.10 mm (0.004 in)**

- If it exceeds the limit, replace crankshaft.

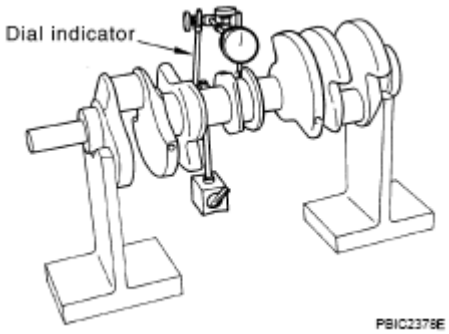


 © 2011 Mitchell Repair Information Company, LLC.

**Fig. 239: Measuring Crankshaft Runout**
**Courtesy of NISSAN MOTOR CO., U.S.A.**

**CONNECTING ROD BEARING OIL CLEARANCE**

**Method by Calculation**

- Install connecting rod bearings to connecting rod and cap, and tighten connecting rod bolts to the specified torque. Refer to "**ASSEMBLY**" for the tightening procedure.
- Measure the inner diameter of connecting rod bearing with inside micrometer.

  (Bearing oil clearance) = (Connecting rod bearing inner diameter) - (Crankshaft pin journal diameter)

  **Standard : 0.020 - 0.045 mm (0.0008 - 0.0018 in) (actual clearance)**

  **Limit : 0.055 mm (0.0022 in)**

- If the calculated value exceeds the limit, select proper connecting rod bearing according to connecting rod big end diameter and crankshaft pin journal diameter to obtain the specified bearing oil clearance. Refer to "**HOW TO SELECT CONNECTING ROD BEARING**".

**Method of Using Plastigage**

- Remove oil and dust on crankshaft pin journal and the surfaces of each bearing completely.
- Cut plastigage slightly shorter than the bearing width, and place it in crankshaft axial direction, avoiding oil holes.
- Install connecting rod bearings to connecting rod and cap, and tighten connecting rod bolts to the specified torque. Refer to "**ASSEMBLY**" for the tightening procedure.

  **CAUTION: Do not rotate crankshaft.**

- Remove connecting rod bearing cap and bearing, and using scale on plastigage bag, measure the plastigage width.

**NOTE:** **The procedure when the measured value exceeds the limit is same as that described in the "Method by Calculation".**

 © 2011 Mitchell Repair Information Company, LLC.

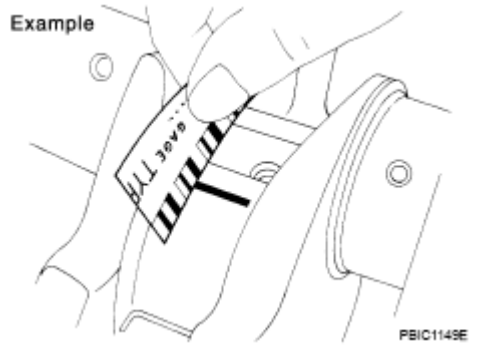


**Fig. 240: Measuring Plastigage Width**
**Courtesy of NISSAN MOTOR CO., U.S.A.**

**MAIN BEARING OIL CLEARANCE**

**Method by Calculation**

- Install main bearings to cylinder block and main bearing caps, and tighten main bearing cap bolts with main bearing to the specified torque. Refer to "**ASSEMBLY**" for the tightening procedure.
- Measure the inner diameter of main bearing with bore gauge.

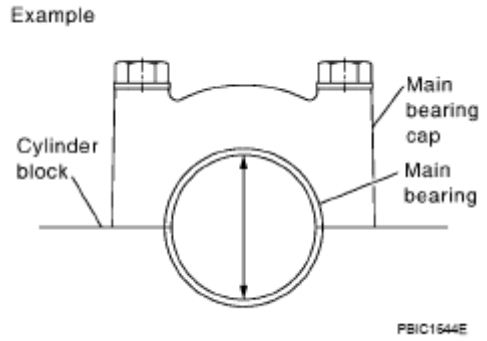


**Fig. 241: Measuring Inner Diameter Of Main Bearing**
**Courtesy of NISSAN MOTOR CO., U.S.A.**

(Bearing clearance) = (Main bearing inner diameter) - (Crankshaft main journal diameter)

**Standard**

**No. 1 and 5 journal : 0.001 - 0.011 mm (0.00004 - 0.0004 in)**

**No. 2, 3 and 4 journal : 0.007 - 0.017 mm (0.0003 - 0.0007 in)**

**Limit**

**No. 1 and 5 journal : 0.021 mm (0.0008 in)**

 © 2011 Mitchell Repair Information Company, LLC.

**No. 2, 3 and 4 journal : 0.027 mm (0.0011 in)**

- If the calculated value exceeds the limit, select proper main bearing according to main bearing inner diameter and crankshaft main journal diameter to obtain the specified bearing oil clearance. Refer to "**HOW TO SELECT MAIN BEARING**".

**Method of Using Plastigage**

- Remove oil and dust on crankshaft main journal and the surfaces of each bearing completely.
- Cut plastigage slightly shorter than the bearing width, and place it in crankshaft axial direction, avoiding oil holes.
- Install main bearings to cylinder block and main bearing caps, and tighten main bearing bolts with main bearing to the specified torque. Refer to "**ASSEMBLY**" for the tightening procedure.

**CAUTION: Do not rotate crankshaft.**

- Remove main bearing caps and bearings, and using scale on plastigage bag, measure the plastigage width.

**NOTE: The procedure when the measured value exceeds the limit is same as that described in the "Method by Calculation".**

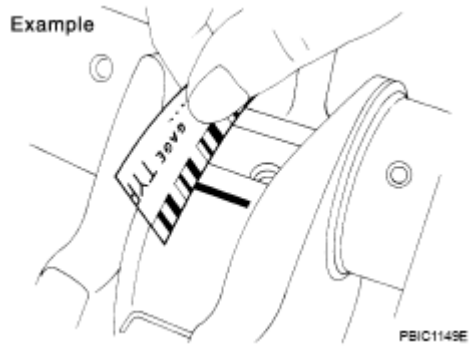


**Fig. 242: Measuring Plastigage Width**
**Courtesy of NISSAN MOTOR CO., U.S.A.**

**CRUSH HEIGHT OF MAIN BEARING**

- When main bearing cap is removed after being tightened to the specified torque with main bearings installed, the tip end of bearing must protrude. Refer to "**ASSEMBLY**" for the tightening procedure.

**Standard : There must be crush height** .

- If the standard is not met, replace main bearings.

 © 2011 Mitchell Repair Information Company, LLC.

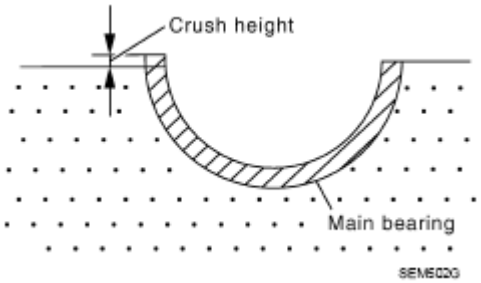


**Fig. 243: Identifying Crush Height Of Main Bearing**
**Courtesy of NISSAN MOTOR CO., U.S.A.**

**CRUSH HEIGHT OF CONNECTING ROD BEARING**

- When connecting rod bearing cap is removed after being tightened to the specified torque with connecting rod bearings installed, the tip end of bearing must protrude. Refer to "**ASSEMBLY**" for the tightening procedure.

  **Standard : There must be crush height** .

- If the standard is not met, replace connecting rod bearings.

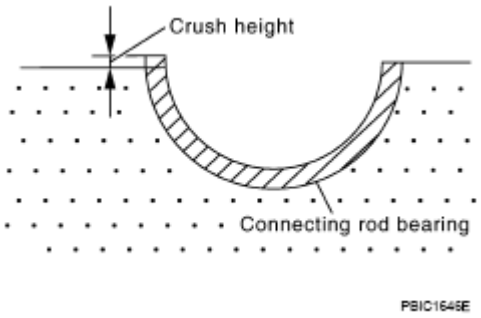


**Fig. 244: Identifying Crush Height Of Connecting Rod Bearing**
**Courtesy of NISSAN MOTOR CO., U.S.A.**

**DRIVE PLATE**

- Check drive plate and signal plate for deformation or cracks.

**CAUTION:**
- **Never disassemble drive plate.**
- **Never place drive plate with signal plate facing down.**
- **When handling signal plate, take care not to damage or scratch it.**
- **Handle signal plate in a manner that prevents it from becoming magnetized.**

- If anything is found, replace drive plate.

 © 2011 Mitchell Repair Information Company, LLC.

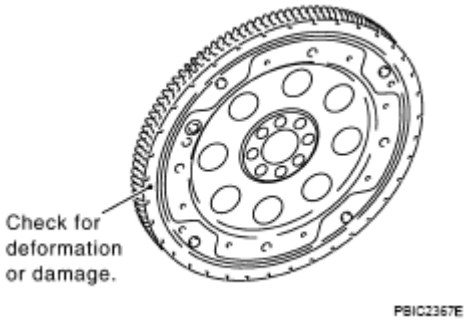


**Fig. 245: Identifying Drive Plate**
**Courtesy of NISSAN MOTOR CO., U.S.A.**

# SERVICE DATA AND SPECIFICATIONS (SDS)

## STANDARD AND LIMIT

### GENERAL SPECIFICATIONS

### GENERAL SPECIFICATIONS

| | | |
|---|---|---|
| Cylinder arrangement | | V-8 |
| Displacement $cm^3$ (cu in) | | 4,494 (274.22) |
| Bore and stroke mm (in) | | 93 x 82.7 (3.66 x 3.256) |
| Valve arrangement | | DOHC |
| Firing order | | 1-8-7-3-6-5-4-2 |
| Number of piston rings | Compression | 2 |
| | Oil | 1 |
| Number of main bearings | | 5 |
| Compression ratio | | 10.5 |
| Compression pressure kPa ($kg/cm^2$ , psi)/300 rpm | Standard | 1,320 (13.5, 191) |
| | Minimum | 1,130 (11.5, 164) |
| | Differential limit between cylinders | 98 (1.0, 14) |
| Cylinder number | | |

 © 2011 Mitchell Repair Information Company, LLC.

| | |
|---|---|
| | 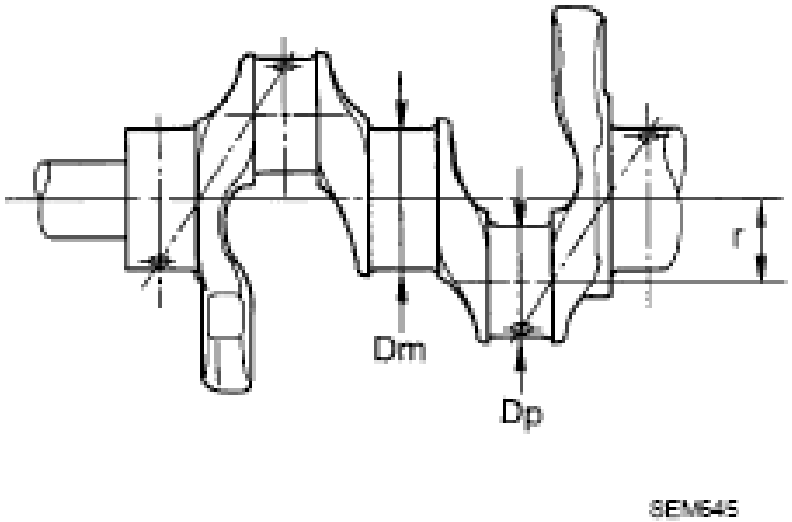 |
| Valve timing | 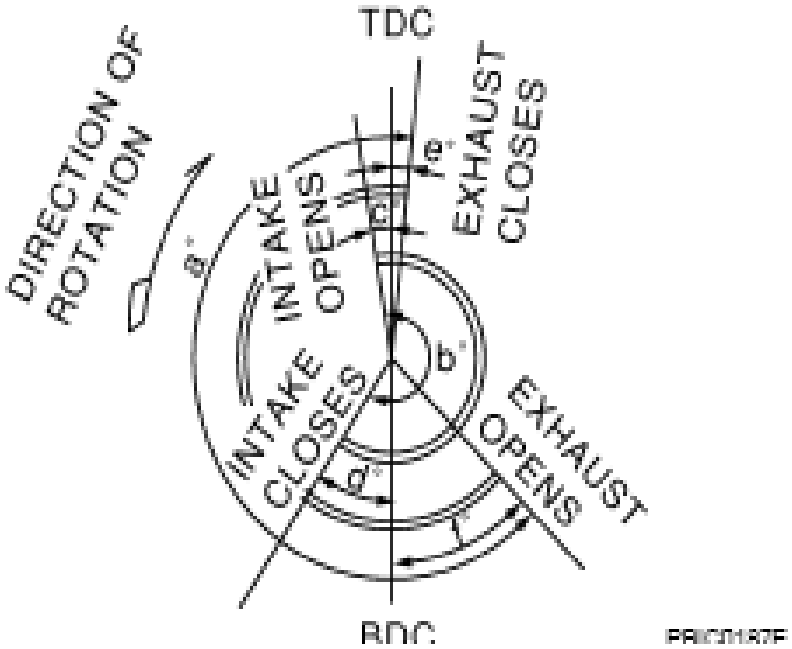 |

## GENERAL SPECIFICATIONS

Unit: degree

| a | b | c | d | e | f |
|---|---|---|---|---|---|
| 228 | 240 | -2 | 62 | 4 | 44 |

### DRIVE BELTS

## DRIVE BELTS SPECIFICATION

| | |
|---|---|
| Tension of drive belts | Auto adjustment by auto tensioner |

 © 2011 Mitchell Repair Information Company, LLC.

### INTAKE MANIFOLD AND EXHAUST MANIFOLD

## INTAKE MANIFOLD AND EXHAUST MANIFOLD SPECIFICATION

Unit: mm (in)

| Items | | Limit |
|---|---|---|
| Surface distortion | Intake manifold (upper) | .1 (0.004) |
| | Intake manifold (lower) | 0.1 (0.004) |
| | Exhaust manifold | 0.3 (0.012) |

### SPARK PLUG

## SPARK PLUG SPECIFICATION

Unit: mm (in)

| Make | NGK |
|---|---|
| Standard type | PLFR5A-11 |
| Hot type | PLFR4A-11 |
| Cold type | PLFR6A-11 |
| Gap (Nominal) | 1.1 (0.043) |

### CAMSHAFT AND CAMSHAFT BEARING

## CAMSHAFT AND CAMSHAFT BEARING SPECIFICATION

Unit: mm (in)

| Items | | Standard | Limit |
|---|---|---|---|
| Camshaft journal clearance | No. 1 | 0.045 - 0.083 (0.0018 - 0.0033) | - |
| | No. 2, 3, 4, 5 | 0.030 - 0.068 (0.0012 - 0.0027) | - |
| Camshaft journal diameter | No. 1 | 25.938 - 25.955 (1.0212 - 1.0218) | - |
| | No. 2, 3, 4, 5 | 25.953 - 25.970 (1.0218 - 1.0224) | - |
| Camshaft bracket inner diameter | | 26.000 - 26.021 (1.0236 - 1.0244) | - |
| Camshaft end play | | 0.115 - 0.188 (0.0045 - 0.0074) | - |
| Cam height "A" | Intake | 44.865 - 45.055 (1.7663 - 1.7738) | 0.2 (0.008) |
| | Exhaust | 43.925 - 44.115 (1.7293 - 1.7368) | 0.2 (0.008) |
| Camshaft runout [TIR(1) | | 0.02 (0.001) | 0.05 (0.002) |
| Camshaft sprocket runout [TIR(1) | | - | 0.15 (0.059) |

 © 2011 Mitchell Repair Information Company, LLC.

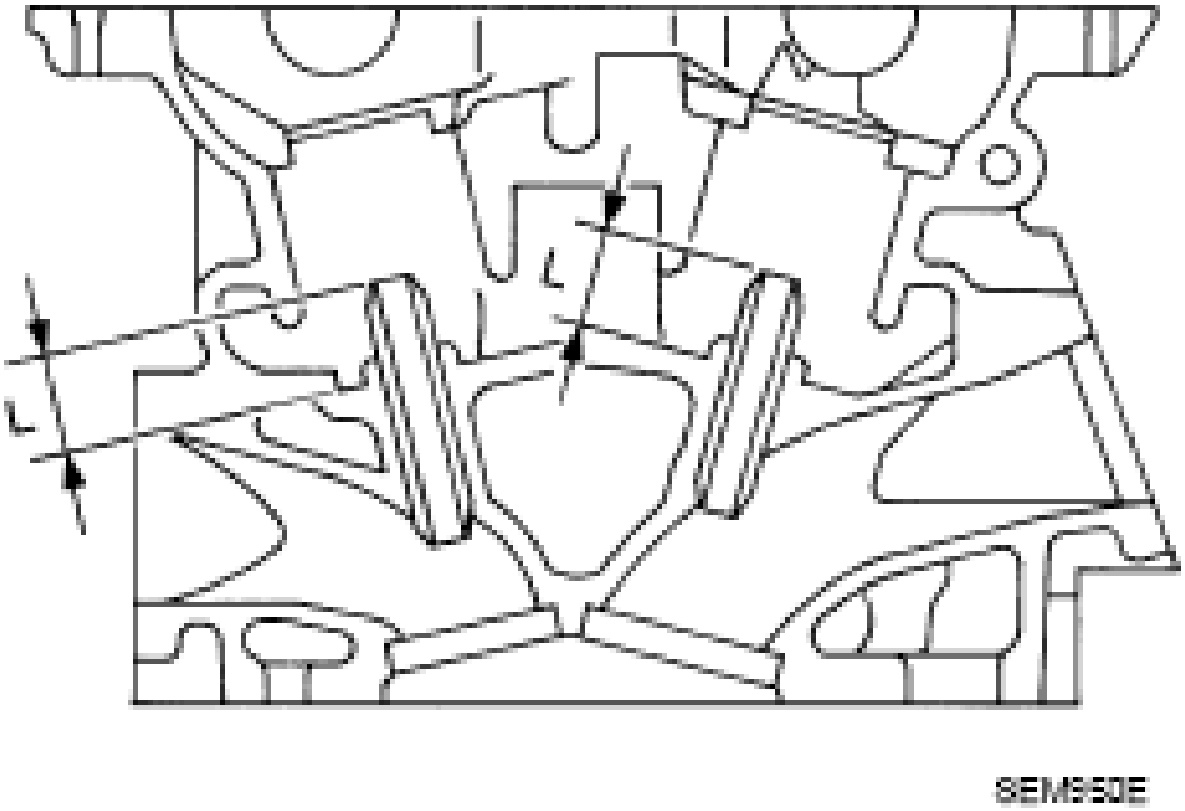


(1) Total indicator reading

**Valve Clearance**

## VALVE CLEARANCE SPECIFICATION

Unit: mm (in)

| Items | Cold | Hot(1) (reference data) |
|---|---|---|
| Intake | 0.26 - 0.34 (0.010 - 0.013) | 0.304 - 0.416 (0.012 - 0.016) |
| Exhaust | 0.29 - 0.37 (0.011 - 0.015) | 0.308 - 0.432 (0.012 - 0.017) |

(1) Approximately 80°C (176°F)

**Available Valve Lifter**

## VALVE LIFTER THICKNESS

Unit: mm (in)

| Identification (stamped) mark | |
|---|---|
| 788U | 7.88 (0.3102) |
| 789U | 7.89 (0.3106) |
| 790U | 7.90 (0.3110) |

 © 2011 Mitchell Repair Information Company, LLC.

| | |
|---|---|
| 791U | 7.91 (0.3114) |
| 792U | 7.92 (0.3118) |
| 793U | 7.93 (0.3122) |
| 794U | 7.94 (0.3126) |
| 795U | 7.95 (0.3130) |
| 796U | 7.96 (0.3134) |
| 797U | 7.97 (0.3138) |
| 798U | 7.98 (0.3142) |
| 799U | 7.99 (0.3146) |
| 800U | 8.00 (0.3150) |
| 801U | 8.01 (0.3154) |
| 802U | 8.02 (0.3157) |
| 803U | 8.03 (0.3161) |
| 804U | 8.04 (0.3165) |
| 805U | 8.05 (0.3169) |
| 806U | 8.06 (0.3173) |
| 807U | 8.07 (0.3177) |
| 808U | 8.08 (0.3181) |
| 809U | 8.09 (0.3185) |
| 810U | 8.10 (0.3189) |
| 811U | 8.11 (0.3193) |
| 812U | 8.12 (0.3197) |
| 813U | 8.13 (0.3201) |
| 814U | 8.14 (0.3205) |
| 815U | 8.15 (0.3209) |
| 816U | 8.16 (0.3213) |
| 817U | 8.17 (0.3217) |
| 818U | 8.18 (0.3220) |
| 819U | 8.19 (0.3224) |
| 820U | 8.20 (0.3228) |
| 821U | 8.21 (0.3232) |
| 822U | 8.22 (0.3236) |
| 823U | 8.23 (0.3240) |
| 824U | 8.24 (0.3244) |
| 825U | 8.25 (0.3248) |
| 826U | 8.26 (0.3252) |
| 827U | 8.27 (0.3256) |
| 828U | 8.28 (0.3260) |
| 829U | 8.29 (0.3264) |
| 830U | 8.30 (0.3268) |
| 831U | 8.31 (0.3272) |
| 832U | |

 © 2011 Mitchell Repair Information Company, LLC.

| | |
|---|---|
| | 8.32 (0.3276) |
| 833U | 8.33 (0.3280) |
| 834U | 8.34 (0.3283) |
| 835U | 8.35 (0.3287) |
| 836U | 8.36 (0.3291) |
| 837U | 8.37 (0.3295) |
| 838U | 8.38 (0.3299) |
| 839U | 8.39 (0.3303) |
| 840U | 8.40 (0.3307) |

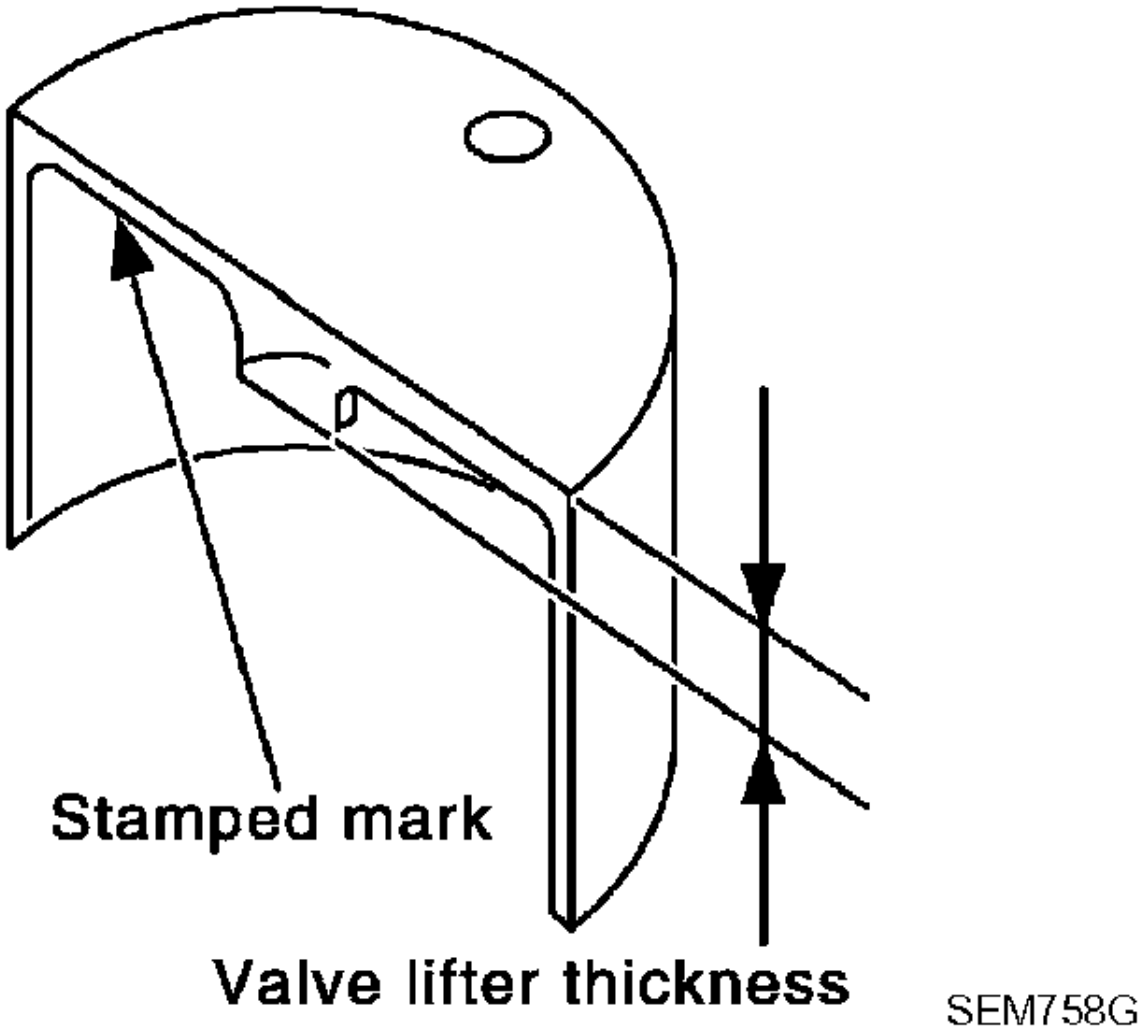


 © 2011 Mitchell Repair Information Company, LLC.

**Valve Lifter**

## VALVE LIFTER SPECIFICATION

| | Unit: mm (in) |
|---|---|
| **Items** | **Standard** |
| Valve lifter outer diameter | 33.965 - 33.975 (1.3372 - 1.3776) |
| Valve lifter hole diameter | 34.000 - 34.016 (1.3386 - 1.3392) |
| Valve lifter clearance | 0.013 - 0.039 (0.0005 - 0.0015) |

**CYLINDER HEAD**

## CYLINDER HEAD SPECIFICATION

| | | Unit: mm (in) |
|---|---|---|
| **Items** | **Standard** | **Limit** |
| Surface distortion | Less than 0.03 (0.0012) | 0.1 (0.004) |

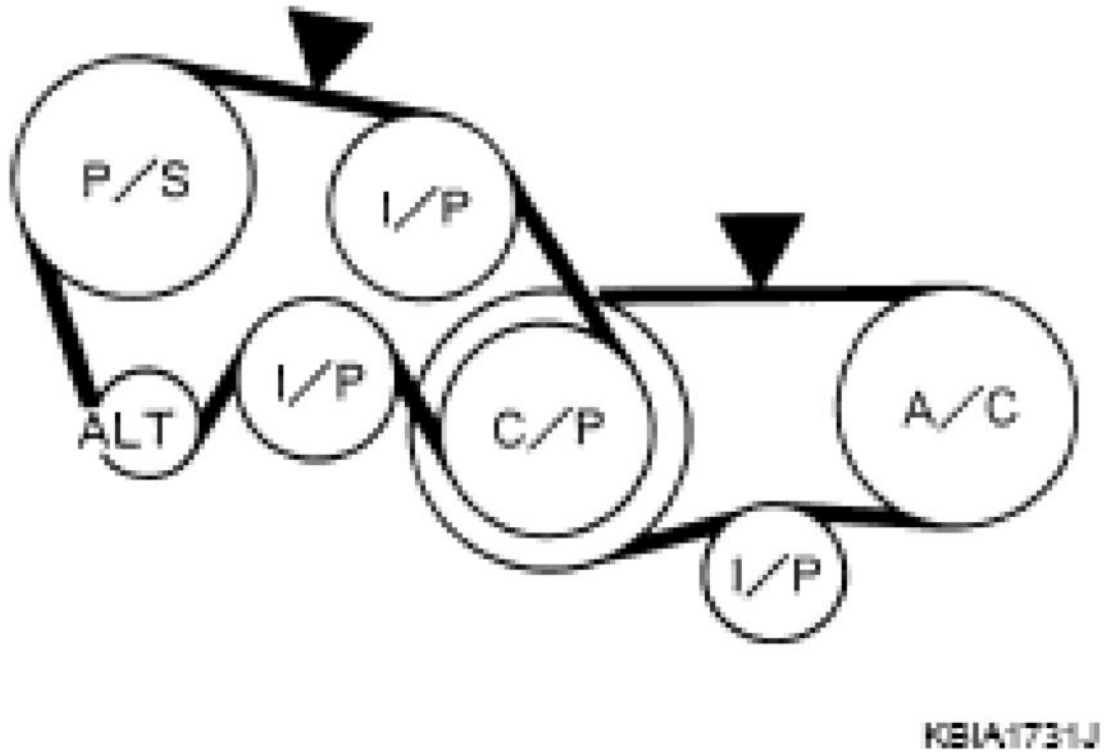


**Valve Dimensions**

## VALVE DIMENSIONS SPECIFICATION

| | | Unit: mm (in) |
|---|---|---|
| **Items** | | **Standard** |
| Valve head diameter "D" | Intake | 36.0 - 36.3 (1.417 - 1.429) |
| | | |

 © 2011 Mitchell Repair Information Company, LLC.

| | | |
|---|---|---|
| | Exhaust | 31.2 - 31.5 (1.228 - 1.240) |
| Valve length "L" | Intake | 96.57 (3.8020) |
| | Exhaust | 94.50 (3.720) |
| Valve stem diameter "d" | Intake | 5.972 - 5.980 (0.2351 - 0.2354) |
| | Exhaust | 5.962 - 5.970 (0.2347 - 0.2350) |
| Valve seat angle "a" | Intake | 45°15' - 45°45' |
| | Exhaust | |
| Valve margin "T" | Intake | 1.15 - 1.45 (0.0453 - 0.0571) |
| | Exhaust | 1.85 - 2.15 (0.0728 - 0.0846) |

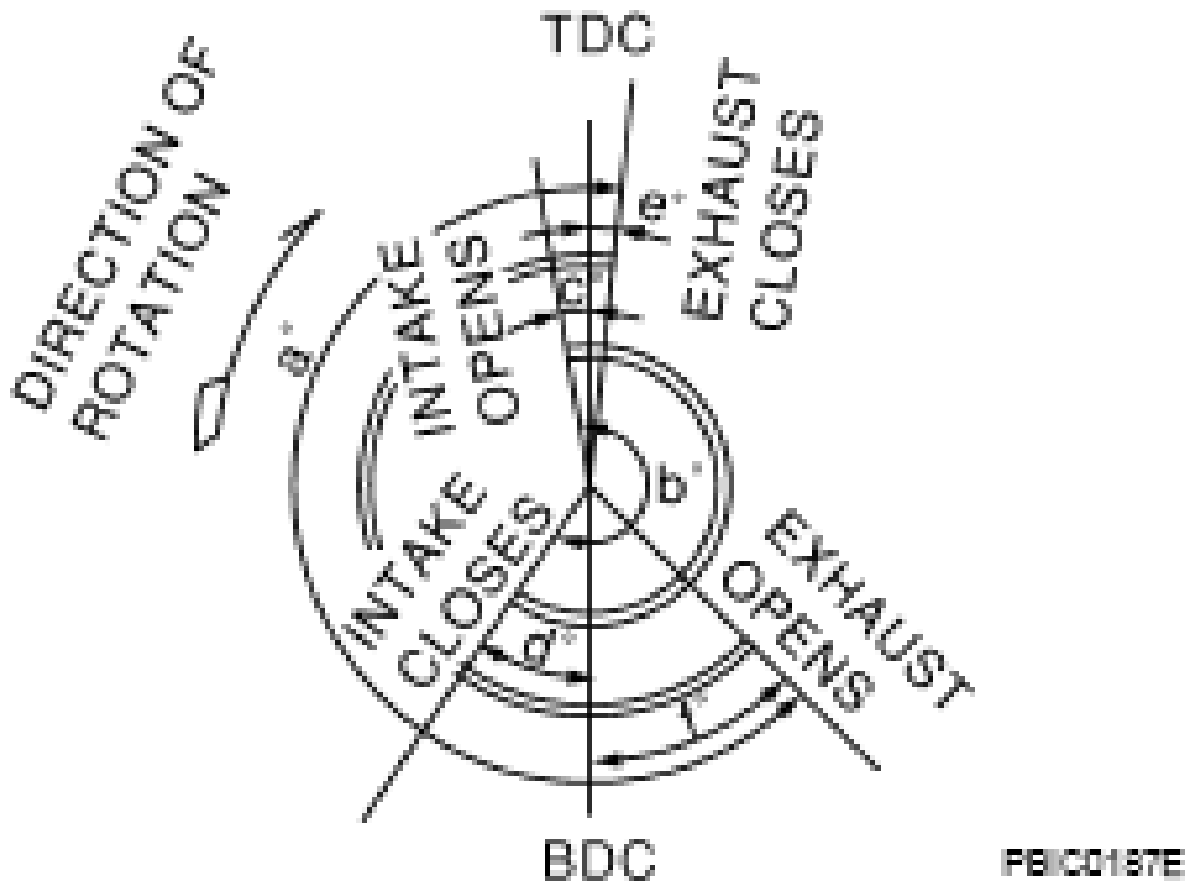


**Valve Guide**

## VALVE GUIDE SPECIFICATION

| | | | Unit: mm (in) |
|---|---|---|---|
| Items | | Standard | Oversize (Service) [0.2 (0.008)] |
| Valve guide | Outer diameter | 10.023 - 10.034 (0.3946 - 0.3950) | 10.223 - 10.234 (0.4025 - 0.4029) |
| | | | |

 © 2011 Mitchell Repair Information Company, LLC.

| | | | |
|---|---|---|---|
| | Inner diameter (Finished size) | 6.000 - 6.018 (0.2362 - 0.2369) | |
| Cylinder head valve guide hole diameter | | 9.975 - 9.996 (0.3927 - 0.3935) | 10.175 - 10.196 (0.4006 - 0.4014) |
| Interference fit of valve guide | | 0.027 - 0.059 (0.0011 - 0.0023) | |
| Items | | Standard | Limit |
| Valve guide clearance | Intake | 0.020 - 0.046 (0.0008 - 0.0018) | 0.08 (0.003) |
| | Exhaust | 0.030 - 0.056 (0.0012 - 0.0022) | 0.1 (0.004) |
| Projection length "L" | Intake | 10.1 - 10.3 (0.398 - 0.406) | - |
| | Exhaust | 10.0 - 10.4 (0.394 - 0.409) | - |

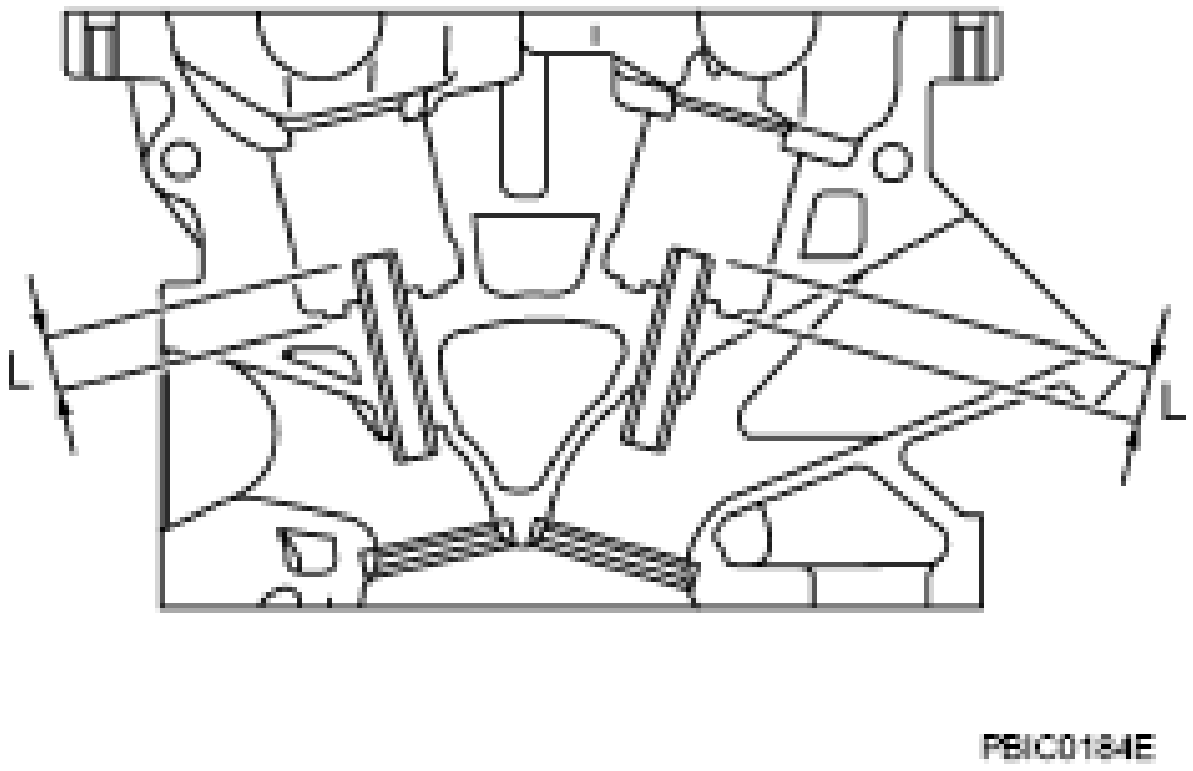


**Valve Seat**

## VALVE SEAT SPECIFICATION

| Unit: mm (in) |
|---|
| |

 © 2011 Mitchell Repair Information Company, LLC.

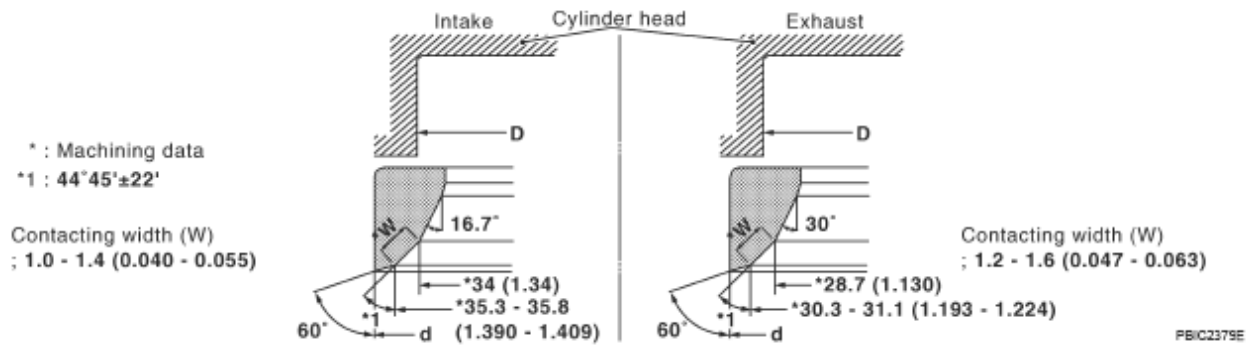


| Items | | Standard | Service |
|---|---|---|---|
| Cylinder head seat recess diameter "D" | Intake | 37.000 - 37.016 (1.4567 - 1.4573) | 37.500 - 37.516 (1.4764 - 1.4770) |
| | Exhaust | 32.200 - 32.216 (1.2677 - 1.2683) | 32.700 - 32.716 (1.2874 - 1.2880) |
| Valve seat interference fit | Intake | 0.081 - 0.113 (0.0032 - 0.0044) | |
| | Exhaust | 0.064 - 0.096 (0.0025 - 0.0038) | |
| Valve seat outer diameter "d" | Intake | 37.097 - 37.113 (1.4605 - 1.4611) | 37.597 - 37.613 (1.4802 - 1.4808) |
| | Exhaust | 32.280 - 32.296 (1.2709 - 1.2715) | 32.780 - 32.796 (1.2905 - 1.2912) |

**Valve Spring**

## VALVE SPRING SPECIFICATION

| | | |
|---|---|---|
| Free height mm (in) | | 46.35 - 46.85 (1.8247 - 1.8444) |
| Pressure N (kg, lb) at height mm (in) | Installation | 165 - 189 (16.8 - 19.3, 37 - 42) at 33.8 (1.331) |
| | Valve open | 290 - 330 (29.6 - 33.7, 65 - 74) at 24.4 (0.961) |
| Out-of-square mm (in) | Limit | 2.0 (0.079) |

**CYLINDER BLOCK**

## CYLINDER BLOCK SPECIFICATION

Unit: mm (in)

 © 2011 Mitchell Repair Information Company, LLC.

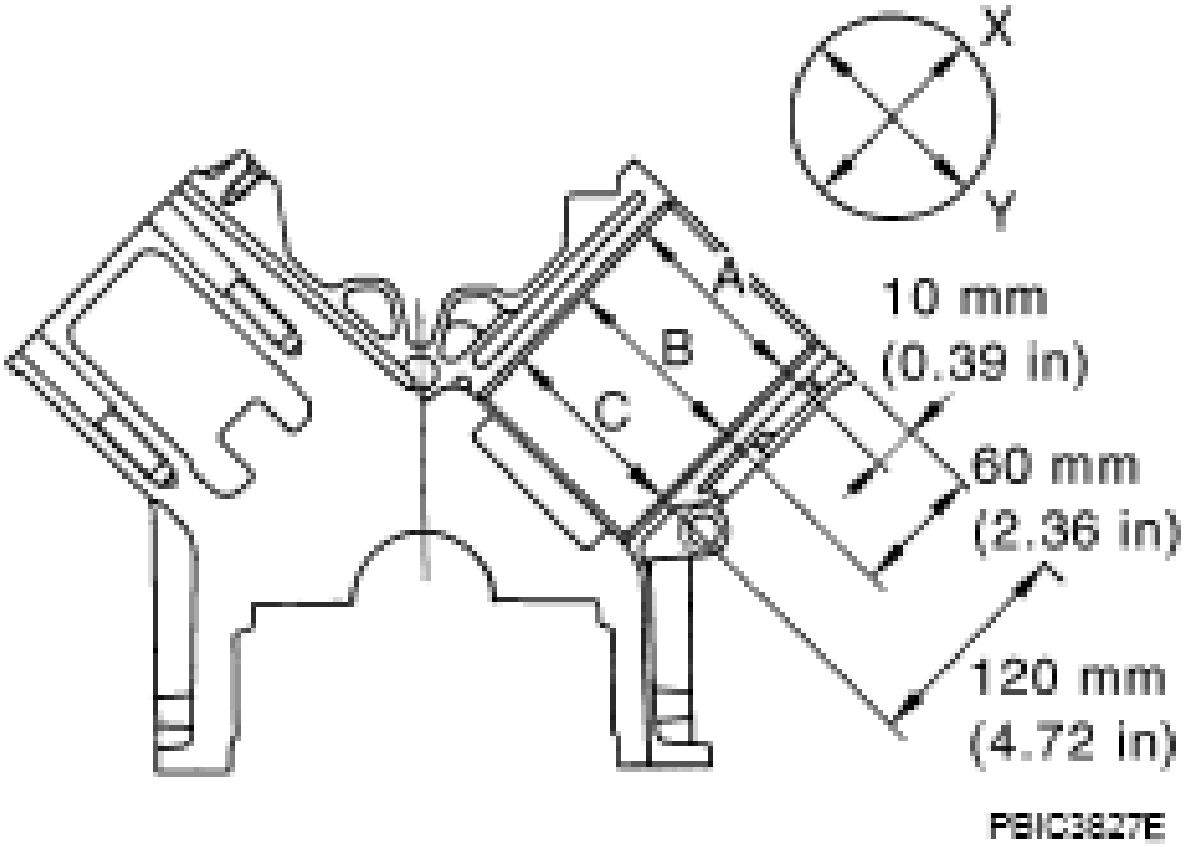


| | | | |
|---|---|---|---|
| Surface distortion | Standard | | Less than 0.03 (0.0012) |
| | Limit | | 0.1 (0.004) |
| Main bearing housing inner diameter | Standard | | 68.944 - 68.968 (2.7143 - 2.7153) |
| Cylinder bore inner diameter | Standard | Grade No. 1 | 93.000 - 93.010 (3.6614 - 3.6618) |
| | | Grade No. 2 | 93.010 - 93.020 (3.6618 - 3.6622) |
| | | Grade No. 3 | 93.020 - 93.030 (3.6622 - 3.6626) |
| | Wear limit | | 0.2 (0.008) |
| Out-of-round (Difference between "X" and "Y") | Limit | | 0.015 (0.0006) |
| Taper (Difference between "A" and "C") | | | 0.01 (0.0004) |
| | | Grade No. A | 68.944 - 68.945 (2.7143 - 2.7144) |
| | | Grade No. B | 68.945 - 68.946 (2.7144 - 2.7144) |
| | | Grade No. C | 68.946 - 68.947 (2.7144 - |

 © 2011 Mitchell Repair Information Company, LLC.

| | | |
|---|---|---|
| Main bearing housing inner diameter (Without bearing) | | 2.7144) |
| | Grade No. D | 68.947 - 68.948 (2.7144 - 2.7145) |
| | Grade No. E | 68.948 - 68.949 (2.7145 - 2.7145) |
| | Grade No. F | 68.949 - 68.950 (2.7145 - 2.7146) |
| | Grade No. G | 68.950 - 68.951 (2.7146 - 2.7146) |
| | Grade No. H | 68.951 - 68.952 (2.7146 - 2.7146) |
| | Grade No. J | 68.952 - 68.953 (2.7146 - 2.7147) |
| | Grade No. K | 68.953 - 68.954 (2.7147 - 2.7147) |
| | Grade No. L | 68.954 - 68.955 (2.7147 - 2.7148) |
| | Grade No. M | 68.955 - 68.956 (2.7148 - 2.7148) |
| | Grade No. N | 68.956 - 68.957 (2.7148 - 2.7148) |
| | Grade No. P | 68.957 - 68.958 (2.7148 - 2.7149) |
| | Grade No. R | 68.958 - 68.959 (2.7149 - 2.7149) |
| | Grade No. S | 68.959 - 68.960 (2.7149 - 2.7150) |
| | Grade No. T | 68.960 - 68.961 (2.7150 - 2.7150) |
| | Grade No. U | 68.961 - 68.962 (2.7150 - 2.7150) |
| | Grade No. V | 68.962 - 68.963 (2.7150 - 2.7151) |
| | Grade No. W | 68.963 - 68.964 (2.7151 - 2.7151) |
| | Grade No. X | 68.964 - 68.965 (2.7151 - 2.7152) |
| | Grade No. Y | 68.965 - 68.966 (2.7152 - 2.7152) |
| | Grade No. 1 | 68.966 - 68.967 (2.7152 - 2.7152) |
| | Grade No. 2 | 68.967 - 68.968 (2.7152 - 2.7153) |
| Difference in inner diameter between | Standard | Less than 0.03 (0.0012) |

 © 2011 Mitchell Repair Information Company, LLC.

| | | |
|---|---|---|
| cylinders | | |

**PISTON, PISTON RING AND PISTON PIN**

**Available Piston**

## PISTON SPECIFICATION

**Unit: mm (in)**

Out-of-round : Difference between X and Y.
Taper : Difference between A and B.

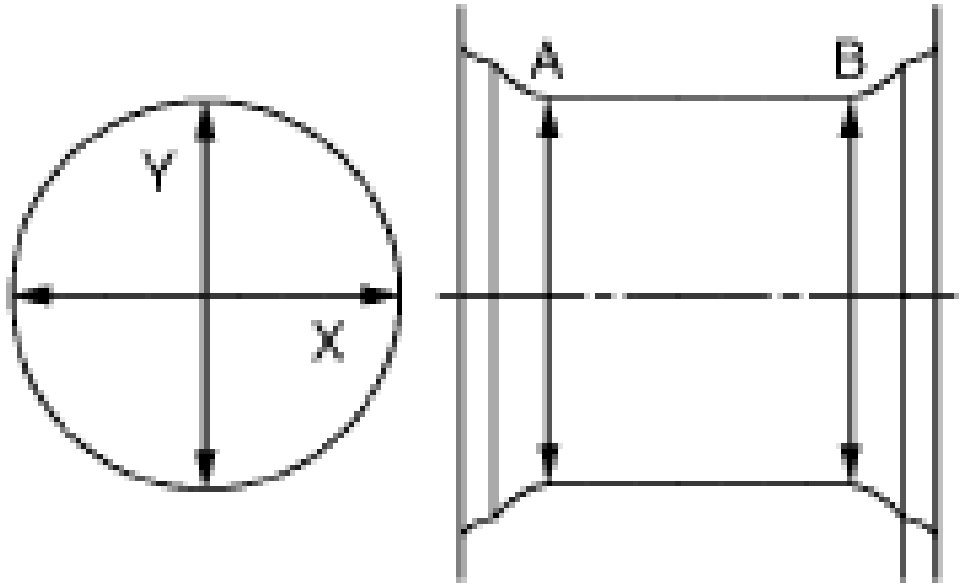


PBIC1695E

| Items | | Standard | Oversize [0.2 (0.008)] |
|---|---|---|---|
| Piston skirt diameter "A" | Grade No. 1 | 92.980 - 92.990 (3.6606 - 3.6610) | - |
| | Grade No. | 2 92.990 - 93.000 (3.6610 - 3.6614) | - |
| | Grade No. 3 | 93.000 - 93.010 (3.6614 - 3.6618) | - |
| | Service | - | 93.180 - 93.210 (3.6685 - 3.6697) |
| "H" dimension | | 42 (1.65) | |
| Piston pin hole diameter | Grade No. 0 | 21.993 - 21.999 (0.8659 - 0.8661) | |
| | | | |

 © 2011 Mitchell Repair Information Company, LLC.

| | | |
|---|---|---|
| | Grade No. 1 | 21.999 - 22.005 (0.8661 - 0.8663) |
| Piston to cylinder bore clearance | Standard | 0.010 - 0.030 (0.0004 - 0.0012) |
| | Limit | 0.08 (0.0031) |

**Piston Ring**

## PISTON RING SPECIFICATION

| | | | Unit: mm (in) |
|---|---|---|---|
| | | **Standard** | **Limit** |
| Side clearance | Top | 0.045 - 0.080 (0.0018 - 0.0031) | 0.11 (0.0043) |
| | 2nd | 0.030 - 0.070 (0.0012 - 0.0028) | 0.1 (0.004) |
| | Oil ring | 0.065 - 0.135 (0.0026 - 0.0053) | - |
| End gap | Top | 0.22 - 0.32 (0.0087 - 0.0126) | 0.56 (0.0220) |
| | 2nd | 0.22 - 0.32 (0.0087 - 0.0126) | 0.56 (0.0220) |
| | Oil (rail ring) | 0.20 - 0.50 (0.0079 - 0.0197) | 0.96 (0.0378) |

**Piston Pin**

## PISTON PIN SPECIFICATION

| | | | Unit: mm (in) |
|---|---|---|---|
| **Items** | | **Standard** | **Limit** |
| Piston pin outer diameter | Grade No. 0 | 21.989 - 21.995 (0.8657 - 0.8659) | - |
| | Grade No. 1 | 21.995 - 22.001 (0.8659 - 0.8662) | - |
| Piston to piston pin oil clearance | | 0.002 - 0.006 (0.0001 - 0.0002) | - |
| Connecting rod bushing oil clearance | | 0.005 - 0.017 (0.0002 - 0.0007) | 0.030 (0.0012) |

**CONNECTING ROD**

## CONNECTING ROD SPECIFICATION

| | | Unit: mm (in) |
|---|---|---|
| **Items** | **Standard** | **Limit** |
| Center distance | 146.95 - 147.05 (5.79 - 5.79) | - |
| Bend [per 100 (3.94)] | - | 0.15 (0.0059) |

 © 2011 Mitchell Repair Information Company, LLC.

| | | | |
|---|---|---|---|
| Torsion [per 100 (3.94)] | | - | 0.30 (0.012) |
| Connecting rod bushing inner diameter(1) | Grade No. 0 | 22.000 - 22.006 (0.8661 - 0.8664) | - |
| | Grade No. 1 | 22.006 - 22.012 (0.8664 - 0.8666) | - |
| Connecting rod big end diameter (without bearing) | | 55.000 - 55.013 (2.1654 - 2.1659) | - |
| Side clearance | | 0.20 - 0.35 (0.008 - 0.0138) | 0.40 (0.016) |
| (1) After installing in connecting rod | | | |

**CRANKSHAFT**

## CRANKSHAFT SPECIFICATION

Unit: mm (in)

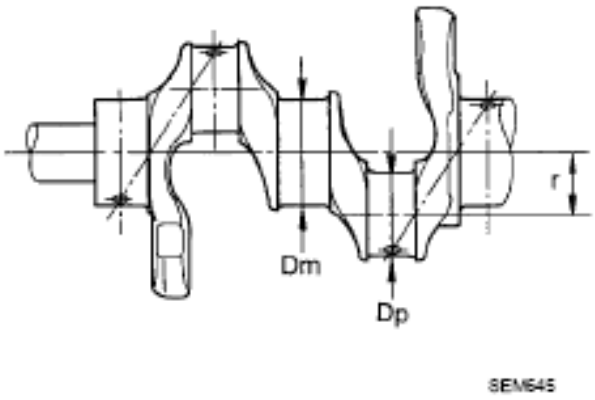


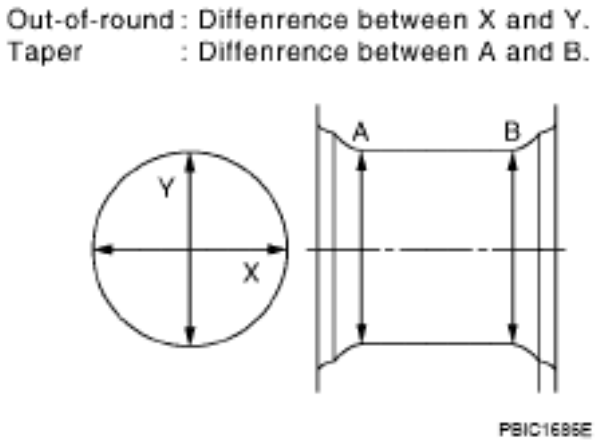


| | | | |
|---|---|---|---|
| | | Grade No. G | 63.963 - 63.964 (2.5182 - 2.5183) |
| | | Grade No. H | 63.962 - 63.963 (2.5182 - 2.5182) |
| | | Grade No. J | 63.961 - 63.962 (2.5181 - 2.5182) |
| | | Grade No. K | 63.960 - 63.961 (2.5181 - 2.5181) |
| | | Grade No. L | 63.959 - 63.960 (2.5181 - 2.5181) |
| | | Grade No. M | 63.958 - 63.959 (2.5180 - 2.5181) |
| | | Grade No. N | 63.957 - 63.958 (2.5180 - 2.5180) |
| | | Grade No. P | 63.956 - 63.957 (2.5179 - 2.5180) |
| | | Grade No. R | 63.955 - 63.956 (2.5179 - |

 © 2011 Mitchell Repair Information Company, LLC.

| | | | |
|---|---|---|---|
| | | | 2.5179) |
| | | Grade No. S | 63.954 - 63.955 (2.5179 - 2.5179) |
| | | Grade No. T | 63.953 - 63.954 (2.5178 - 2.5179) |
| | | Grade No. U | 63.952 - 63.953 (2.5178 - 2.5178) |
| | | Grade No. V | 63.951 - 63.952 (2.5178 - 2.5178) |
| | | Grade No. W | 63.950 - 63.951 (2.5177 - 2.5178) |
| | | Grade No. X | 63.949 - 63.950 (2.5177 - 2.5177) |
| | | Grade No. Y | 63.948 - 63.949 (2.5176 - 2.5177) |
| Main journal diameter "DM" (No. 1 and 5 journal) | | Grade No. 1 | 63.947 - 63.948 (2.5176 - 2.5176) |
| | | Grade No. 2 | 63.946 - 63.947 (2.5176 - 2.5176) |
| | | Grade No. 3 | 63.945 - 63.946 (2.5175 - 2.5176) |
| | | Grade No. 4 | 63.944 - 63.945 (2.5175 - 2.5175) |
| | | Grade No. 5 | 63.943 - 63.944 (2.5174 - 2.5175) |
| | | Grade No. 6 | 63.942 - 63.943 (2.5174 - 2.5174) |
| | | Grade No. 7 | 63.941 - 63.942 (2.5174 - 2.5174) |
| | | Grade No. 9 | 63.940 - 63.941 (2.5173 - 2.5174) |
| | | Grade No. A | 63.963 - 63.964 (2.5182 - 2.5183) |
| | | Grade No. B | 63.962 - 63.963 (2.5182 - 2.5182) |
| | | Grade No. C | 63.961 - 63.962 (2.5181 - 2.5182) |
| | | Grade No. D | 63.960 - 63.961 (2.5181 - 2.5181) |
| | | Grade No. E | 63.959 - 63.960 (2.5181 - 2.5181) |
| | | Grade No. F | 63.958 - 63.959 (2.5180 - 2.5181) |
| | | Grade No. G | 63.957 - 63.958 (2.5180 - 2.5180) |

 © 2011 Mitchell Repair Information Company, LLC.

| | | | |
|---|---|---|---|
| Main journal diameter "DM" (No. 2, 3 and 4 journal) | | Grade No. H | 63.956 - 63.957 (2.5179 - 2.5180) |
| | | Grade No. J | 63.955 - 63.956 (2.5179 - 2.5179) |
| | | Grade No. K | 63.954 - 63.955 (2.5179 - 2.5179) |
| | | Grade No. L | 63.953 - 63.954 (2.5178 - 2.5179) |
| | | Grade No. M | 63.952 - 63.953 (2.5178 - 2.5178) |
| | | Grade No. N | 63.951 - 63.952 (2.5178 - 2.5178) |
| | | Grade No. P | 63.950 - 63.951 (2.5177 - 2.5178) |
| | | Grade No. R | 63.949 - 63.950 (2.5177 - 2.5177) |
| | | Grade No. S | 63.948 - 63.949 (2.5176 - 2.5177) |
| | | Grade No. T | 63.947 - 63.948 (2.5176 - 2.5176) |
| | | Grade No. U | 63.946 - 63.947 (2.5176 - 2.5176) |
| | | Grade No. V | 63.945 - 63.946 (2.5175 - 2.5176) |
| | | Grade No. W | 63.944 - 63.945 (2.5175 - 2.5175) |
| | | Grade No. X | 63.943 - 63.944 (2.5174 - 2.5175) |
| | | Grade No. Y | 63.942 - 63.943 (2.5174 - 2.5174) |
| | | Grade No. 1 | 63.941 - 63.942 (2.5174 - 2.5174) |
| | | Grade No. 2 | 63.940 - 63.941 (2.5173 - 2.5174) |

 © 2011 Mitchell Repair Information Company, LLC.

| | | |
|---|---|---|
| | Standard | |
| Pin journal diameter "DP" | Grade No. 0 | 51.968 - 51.974 (2.0460 - 2.0462) |
| | Grade No. 1 | 51.962 - 51.968 (2.0457 - 2.0460) |
| | Grade No. 2 | 51.956 - 51.962 (2.0455 - 2.0457) |
| Center distance "r" | | 41.31 - 41.39 (1.6264 - 1.6295) |
| Out-of-round (Difference between "X" and "Y") | Limit | 0.015 (0.0006) |
| Taper (Difference between "A" and "B") | Limit | 0.010 (0.0004) |
| Runout [TIR(1) | Standard | Less than 0.05 (0.002) |
| | Limit | 0.10 (0.004) |
| Crankshaft end play | Standard | 0.10 - 0.25 (0.0039 - 0.0098) |
| | Limit | 0.30 (0.012) |
| (1) Total indicator reading | | |

**MAIN BEARING**

## MAIN BEARING SPECIFICATION

| Unit: mm (in) |
|---|
| |

 © 2011 Mitchell Repair Information Company, LLC.

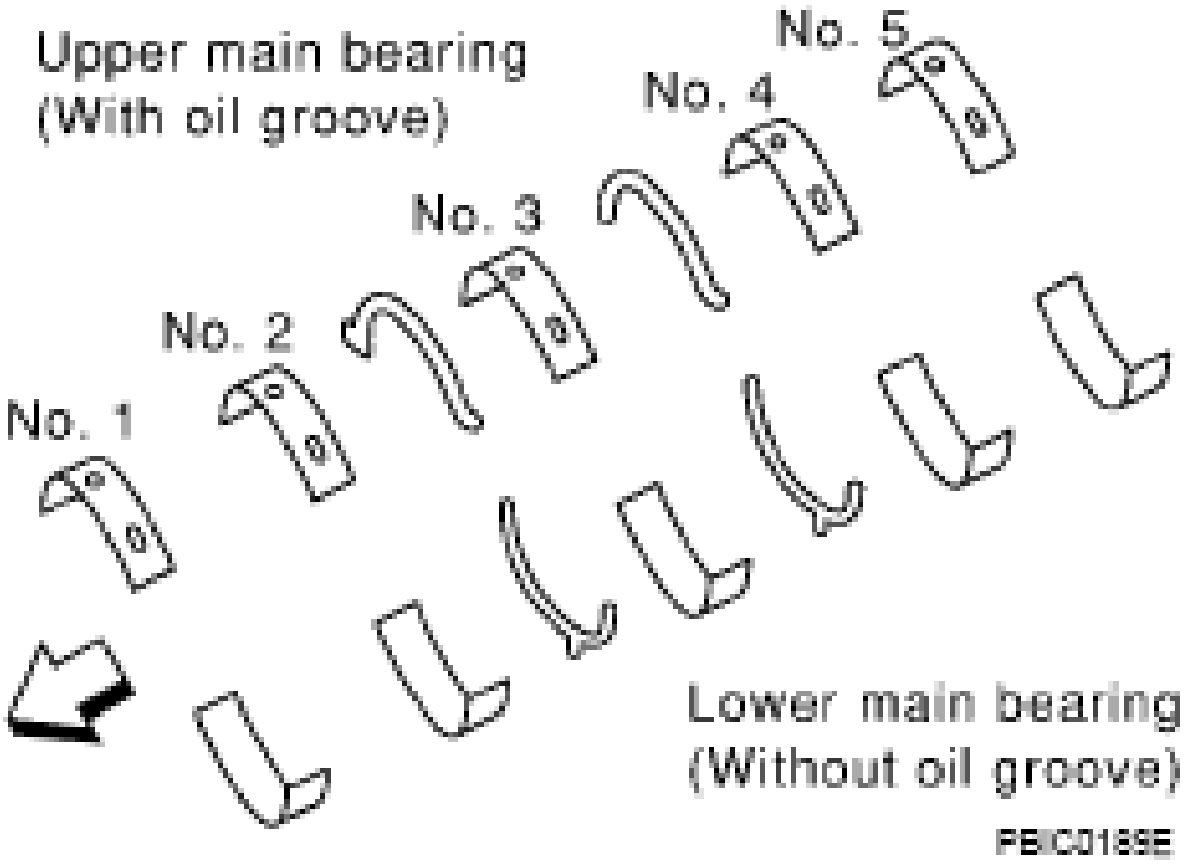


| Grade number | Thickness | Identification color | Remarks |
|---|---|---|---|
| 0 | 2.483 - 2.486 (0.0978 - 0.0979) | Black | Grade and color are the same for upper and lower bearings. |
| 1 | 2.486 - 2.489 (0.0979 - 0.0980) | Brown | |
| 2 | 2.489 - 2.492 (0.0980 - 0.0981) | Green | |
| 3 | 2.492 - 2.495 (0.0981 - 0.0982) | Yellow | |
| 4 | 2.495 - 2.498 (0.0982 - 0.0983) | Blue | |
| 5 | 2.498 - 2.501 (0.0983 - 0.0985) | Pink | |
| 6 | 2.501 - 2.504 (0.0985 - 0.0986) | Purple | |
| 7 | 2.504 - 2.507 (0.0986 - 0.0987) | White | |
| 8 | 2.507 - 2.510 (0.0987 - 0.0988) | Red | |
| | | | |

 © 2011 Mitchell Repair Information Company, LLC.

| | | | | |
|---|---|---|---|---|
| 01 | UPR | 2.483 - 2.486 (0.0978 - 0.0979) | Black | Grade and color are different for upper and lower bearings. |
| | LWR | 2.486 - 2.489 (0.0979 - 0.0980) | Brown | |
| 12 | UPR | 2.486 - 2.489 (0.0979 - 0.0980) | Brown | |
| | LWR | 2.489 - 2.492 (0.0980 - 0.0981) | Green | |
| 23 | UPR | 2.489 - 2.492 (0.0980 - 0.0981) | Green | |
| | LWR | 2.492 - 2.495 (0.0981 - 0.0982) | Yellow | |
| 34 | UPR | 2.492 - 2.495 (0.0981 - 0.0982) | Yellow | |
| | LWR | 2.495 - 2.498 (0.0982 - 0.0983) | Blue | |
| 45 | UPR | 2.495 - 2.498 (0.0982 - 0.0983) | Blue | |
| | LWR | 2.498 - 2.501 (0.0983 - 0.0985) | Pink | |
| 56 | UPR | 2.498 - 2.501 (0.0983 - 0.0985) | Pink | |
| | LWR | 2.501 - 2.504 (0.0985 - 0.0986) | Purple | |
| 67 | UPR | 2.501 - 2.504 (0.0985 - 0.0986) | Purple | |
| | LWR | 2.504 - 2.507 (0.0986 - 0.0987) | White | |
| 78 | UPR | 2.504 - 2.507 (0.0986 - 0.0987) | White | |
| | LWR | 2.507 - 2.510 (0.0987 - 0.0988) | Red | |

**Undersize**

## MAIN BEARING UNDERSIZE SPECIFICATION

| Unit: mm (in) | | |
|---|---|---|
| **Undersize** | **Thickness** | **Main journal diameter** |
| 0.25 (0.0098) | 2.618 - 2.626 (0.1031 - 0.1034) | Grind so that bearing clearance is the specified value. |

**Main Bearing Oil Clearance**

## MAIN BEARING OIL CLEARANCE SPECIFICATION

| Unit: mm (in) | | | |
|---|---|---|---|

 © 2011 Mitchell Repair Information Company, LLC.

| | | | |
|---|---|---|---|
| Main bearing oil clearance | Standard | No.1 and 5 | 0.001 - 0.011 (0.00004 - 0.0004) |
| | | No.2, 3 and 4 | 0.007 - 0.017 (0.0003 - 0.0007) |
| | Limit | No.1 and 5 | 0.021 (0.0008) |
| | | No.2, 3 and 4 | 0.027 (0.0011) |

**CONNECTING ROD BEARING**

## CONNECTING ROD BEARING SPECIFICATION

| Unit: mm (in) | | |
|---|---|---|
| **Grade number** | **Thickness** | **Identification color (mark)** |
| 0 | 1.500 - 1.503 (0.0591 - 0.0592) | No color |
| 1 | 1.503 - 1.506 (0.0592 - 0.0593) | Brown |
| 2 | 1.506 - 1.509 (0.0593 - 0.0594) | Green |

**Undersize**

## CONNECTING ROD BEARING UNDERSIZE SPECIFICATION

| Unit: mm (in) | | |
|---|---|---|
| **Undersize** | **Thickness** | **Pin journal diameter** |
| 0.25 (0.0098) | 1.626 - 1.634 (0.0640 - 0.0643) | Grind so that bearing clearance is the specified value. |

**Connecting Rod Bearing Oil Clearance**

## CONNECTING ROD BEARING OIL CLEARANCE SPECIFICATION

| Unit: mm (in) | | |
|---|---|---|
| Connecting rod bearing oil clearance | Standard | 0.020 - 0.045 (0.0008 - 0.0018) |
| | Limit | 0.055 (0.0022) |

 © 2011 Mitchell Repair Information Company, LLC.