2014 ENGINE

Engine Mechanical - Q60 Coupe

SYMPTOM DIAGNOSIS

NOISE, VIBRATION AND HARSHNESS (NVH) TROUBLESHOOTING

NVH Troubleshooting - Engine Noise

 © 2011 Mitchell Repair Information Company, LLC.

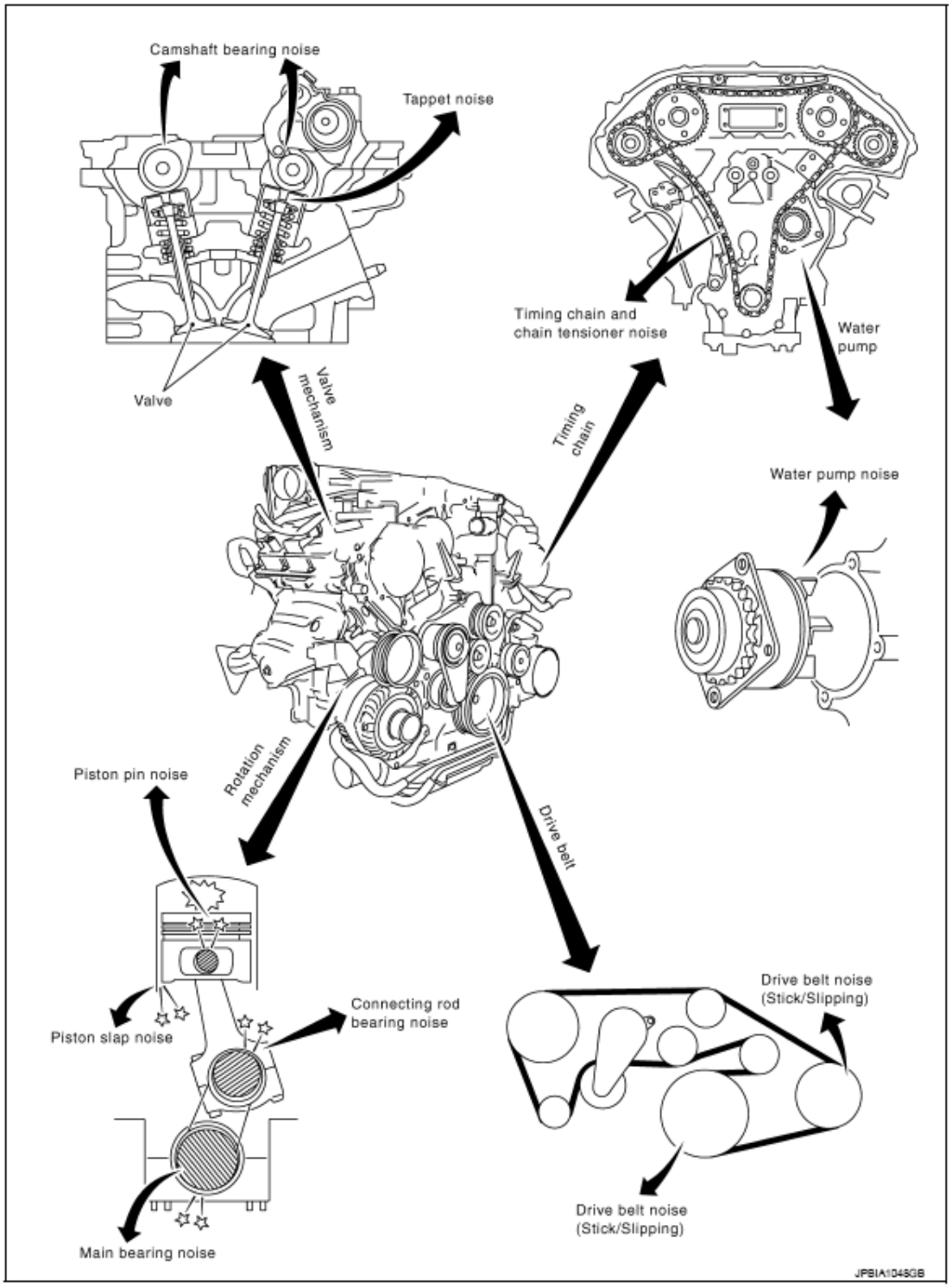

Fig. 1: Identifying NVH Troubleshooting Components
Courtesy of NISSAN NORTH AMERICA, INC.

Use the Chart Below to Help You Find the Cause of the Symptom

 © 2011 Mitchell Repair Information Company, LLC.

1. Locate the area where noise occurs.
2. Confirm the type of noise.
3. Specify the operating condition of the engine.
4. Check specified noise source.

If necessary, repair or replace these parts.

Location of noise	Type of noise	Operating condition of engine						Source of noise	Check item	Refer to
		Before warm-up	After warm-up	When starting	When idling	When racing	While driving			
Top of engine Rocker cover Cylinder head	Ticking or clicking	C	A	-	A	B	-	Tappet noise	VALVE CLEARANCE	
	Rattle	C	A	-	A	B	C	Camshaft bearing noise	CAMSHAFT RUNOUT CAMSHAFT JOURNAL OIL CLEARANCE	
Crankshaft pulley Cylinder block (Side of engine) Oil pan	Slap or knock	-	A	-	B	B	-	Piston pin noise	PISTON TO PISTON PIN OIL CLEARANCE CONNECTING ROD BUSHING OIL CLEARANCE	
	Slap or rap	A	-	-	B	B	A	Piston slap noise	PISTON TO CYLINDER BORE CLEARANCE PISTON RING SIDE CLEARANCE PISTON RING END GAP CONNECTING ROD BEND AND TORSION	
	Knock	A	B	C	B	B	B	Connecting rod bearing noise	CONNECTING ROD BUSHING OIL CLEARANCE CONNECTING ROD BEARING OIL	

 © 2011 Mitchell Repair Information Company, LLC.

									CLEARANCE	
	Knock	A	B	-	A	B	C	Main bearing noise	**MAIN BEARING OIL CLEARANCE CRANKSHAFT RUNOUT**	
Front of engine Timing chain case	Tapping or ticking	A	A	-	B	B	B	Timing chain and timing chain tensioner noise	**TIMING CHAIN CRACKS AND WEAR TIMING CHAIN TENSIONER OPERATION**	
Front of engine	Squeaking or fizzing	A	B	-	B	-	C	Drive belt (Sticking or slipping)	**DRIVE BELT DEFLECTION**	
	Creaking	A	B	A	B	A	B	Drive belt (Slipping)	Idler pulley bearing operation	
	Squall Creak	A	B	-	B	A	B	Water pump noise	Water pump operation	"**EXPLODE VIEW** "
A: Closely related B: Related C: Sometimes related -: Not related										

PRECAUTION

PRECAUTIONS

Precaution for Procedure without Cowl Top Cover

When performing the procedure after removing cowl top cover, cover the lower end of windshield with urethane, etc. to prevent damage to windshield.

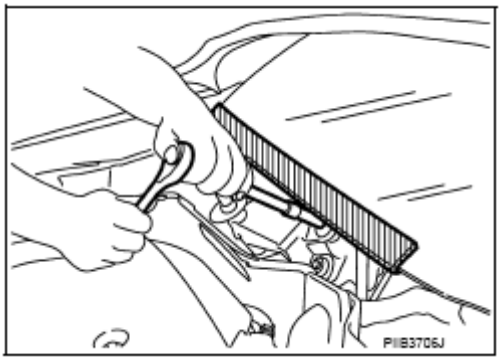

 © 2011 Mitchell Repair Information Company, LLC.

Fig. 2: Identifying Windshield Precaution When Removing Cowl Top Cover
Courtesy of NISSAN NORTH AMERICA, INC.

Precaution for Supplemental Restraint System (SRS) "AIR BAG" and "SEAT BELT PRE-TENSIONER"

The Supplemental Restraint System such as "AIR BAG" and "SEAT BELT PRE-TENSIONER", used along with a front seat belt, helps to reduce the risk or severity of injury to the driver and front passenger for certain types of collision. Information necessary to service the system safely is included in the "**SRS AIRBAG (COUPE)** " and "**SEAT BELTS (COUPE)** " articles of this Service Information.

WARNING: **Always observe the following items to prevent accidental activation.**

- **To avoid rendering the SRS inoperative, which could increase the risk of personal injury or death in the event of a collision that would result in air bag inflation, all maintenance must be performed by an authorized NISSAN/INFINITI dealer.**
- **Improper maintenance, including incorrect removal and installation of the SRS, can lead to personal injury caused by unintentional activation of the system. For removal of Spiral Cable and Air Bag Module, see "SRS AIRBAG (COUPE) ".**
- **Never use electrical test equipment on any circuit related to the SRS unless instructed to in this Service Information. SRS wiring harnesses can be identified by yellow and/or orange harnesses or harness connectors.**
- **The vehicle may be equipped with a passenger air bag deactivation switch which can be operated by the customer. When the passenger air bag is switched OFF, the passenger air bag is disabled and will not inflate. When the passenger air bag is switched ON, the passenger air bag is enabled and could inflate for certain types of collision. After SRS maintenance or repair, make sure the passenger air bag deactivation switch is in the same position (ON or OFF) as when the vehicle arrived for service.**

PRECAUTIONS WHEN USING POWER TOOLS (AIR OR ELECTRIC) AND HAMMERS

WARNING: **Always observe the following items for preventing accidental activation.**

- **When working near the Air Bag Diagnosis Sensor Unit or other Air Bag System sensors with the ignition ON or engine running, never use air or electric power tools or strike near the sensor(s) with a hammer. Heavy vibration could activate the sensor(s) and deploy the air bag(s), possibly causing serious injury.**
- **When using air or electric power tools or hammers, always switch the ignition OFF, disconnect the battery, and wait at least 3 minutes before performing any service.**

 © 2011 Mitchell Repair Information Company, LLC.

Precaution for Battery Service

Before disconnecting the battery, lower both the driver and passenger windows. This will prevent any interference between the window edge and the vehicle when the door is opened/closed. During normal operation, the window slightly raises and lowers automatically to prevent any window to vehicle interference. The automatic window function will not work with the battery disconnected.

Precautions For Engine Service

DISCONNECTING FUEL PIPING

- Before starting work, check no fire or spark producing items are in the work area.
- Release fuel pressure before disconnecting and disassembly.
- After disconnecting pipes, plug openings to stop fuel leakage.

DRAINING ENGINE COOLANT

Drain engine coolant and engine oil when the engine is cooled.

INSPECTION, REPAIR AND REPLACEMENT

Before repairing or replacing, thoroughly inspect parts. Inspect new replacement parts in the same way, and replace if necessary.

REMOVAL AND DISASSEMBLY

- When instructed to use SST, use specified tools. Always be careful to work safely, avoid forceful or uninstructed operations.
- Exercise maximum care to avoid damage to mating or sliding surfaces.
- Dowel pins are used for several parts alignment. When replacing and reassembling parts with dowel pins, check that dowel pins are installed in the original position.
- Must cover openings of engine system with a tape or equivalent, to seal out foreign materials.
- Mark and arrange disassembly parts in an organized way for easy troubleshooting and reassembly.
- When loosening nuts and bolts, as a basic rule, start with the one furthest outside, then the one diagonally opposite, and so on. If the order of loosening is specified, do exactly as specified. Power tools may be used in the step.

ASSEMBLY AND INSTALLATION

- Use torque wrench to tighten bolts or nuts to specification.
- When tightening nuts and bolts, as a basic rule, equally tighten in several different steps starting with the ones in center, then ones on inside and outside diagonally in this order. If the order of tightening is specified, do exactly as specified.
- Replace with new gasket, packing, oil seal or O-ring.
- Thoroughly wash, clean, and air-blow each part. Carefully check engine oil or engine coolant passages for any restriction and blockage.

 © 2011 Mitchell Repair Information Company, LLC.

- Avoid damaging sliding or mating surfaces. Completely remove foreign materials such as cloth lint or dust. Before assembly, oil sliding surfaces well.
- After disassembling, or exposing any internal engine parts, change engine oil and replace oil filter with a new one.
- Release air within route when refilling after draining engine coolant.
- After repairing, start the engine and increase engine speed to check engine coolant, fuel, engine oil, and exhaust gases for leakage.

Parts Requiring Angle Tightening

- Use the angle wrench [SST: KV10112100 (BT8653-A)] for the final tightening of the following engine parts:
  - Cylinder head bolts
  - Lower cylinder block bolts
  - Connecting rod cap bolts
- Do not use a torque value for final tightening.
- The torque value for these parts are for a preliminary step.
- Ensure thread and seat surfaces are clean and coated with engine oil.

Liquid Gasket

REMOVAL OF LIQUID GASKET SEALING

- After removing mounting nuts and bolts, separate the mating surface using the seal cutter [SST: KV10111100 (J-37228)] (A) and remove old liquid gasket sealing.

CAUTION: Be careful not to damage the mating surfaces.

- Tap the seal cutter [SST: KV10111100 (J-37228)] to insert it (B), and then slide it (C) by tapping on the side as shown in the figure below.
- In areas where the seal cutter [SST: KV10111100 (J-37228)] is difficult to use, lightly tap the parts using a plastic hammer to remove it.

CAUTION: If for some unavoidable reason a tool such as a screwdriver is used, be careful not to damage the mating surfaces.

 © 2011 Mitchell Repair Information Company, LLC.

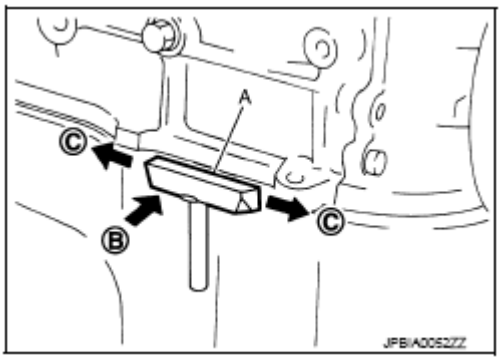

Fig. 3: Separating Mating Surface Using Tool
Courtesy of NISSAN NORTH AMERICA, INC.

LIQUID GASKET APPLICATION PROCEDURE

1. Using a scraper (A), remove old liquid gasket from gasket application surface and the mating surface.
   - Remove liquid gasket completely from the groove of the liquid gasket application surface, mounting bolts and bolt holes.
2. Wipe the liquid gasket application surface and the mating surface with white gasoline (lighting and heating use) to remove moisture, grease and foreign materials.

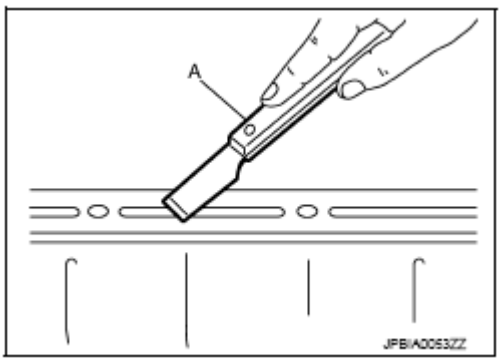

Fig. 4: Removing Liquid Gasket Using Scraper
Courtesy of NISSAN NORTH AMERICA, INC.

3. Attach liquid gasket tube to the tube presser (commercial service tool).

   Use Genuine RTV Silicone Sealant or equivalent. Refer to "RECOMMENDED CHEMICAL PRODUCTS AND SEALANTS ".

4. Apply liquid gasket without gaps to the specified location according to the specified dimensions.
   - If there is a groove for liquid gasket application, apply liquid gasket to the groove.

 © 2011 Mitchell Repair Information Company, LLC.

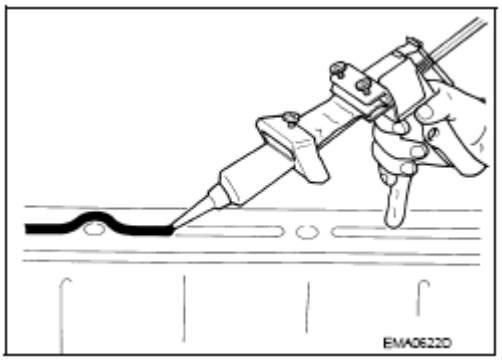

Fig. 5: Applying Liquid Gasket To Groove Using Tool
Courtesy of NISSAN NORTH AMERICA, INC.

- As for bolt holes (B), normally apply liquid gasket inside the holes. Occasionally, it should be applied outside the holes. Make sure to read the text of this article.

A : Groove
⇦ : Inside

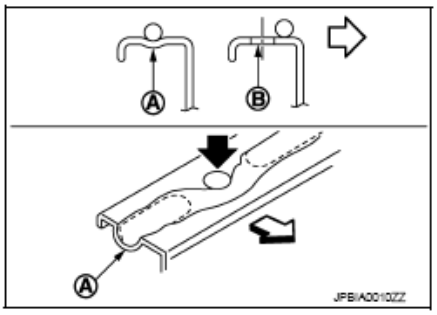

Fig. 6: Locating Bolt Holes And Groove
Courtesy of NISSAN NORTH AMERICA, INC.

- Within five minutes of liquid gasket application, install the mating component.
- If liquid gasket protrudes, wipe it off immediately.
- Do not retighten mounting bolts or nuts after the installation.
- After 30 minutes or more have passed from the installation, fill engine oil and engine coolant.

CAUTION: If there are specific instructions in this article, observe them.

Definitions of Bank Names

- In this article, each bank name is defined as follows:

 © 2011 Mitchell Repair Information Company, LLC.

A : Bank 1 (The conventional right bank)
B : Bank 2 (The conventional left bank)
⇦ : Engine front

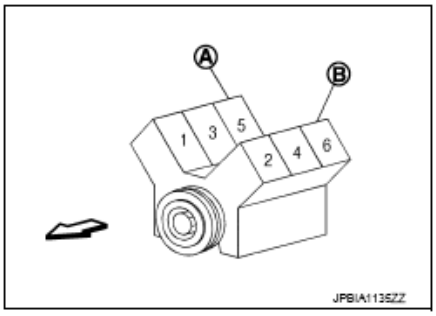

Fig. 7: Cylinder Numbers And Bank Layout
Courtesy of NISSAN NORTH AMERICA, INC.

- For cylinder numbers and bank layout, refer to the illustration.

  Bank 1: The bank side including cylinder No. 1 (odd-numbered cylinder side)

  Bank 2: The other bank side of the above (even-numbered cylinder side)

PREPARATION

PREPARATION

Special Service Tools

The actual shapes of Kent-Moore tools may differ from those of special service tools illustrated here.

Tool number (Kent-Moore No.) Tool name	Description
KV10116200 (J-26336-A) Valve spring compressor 1. KV10115900 (J-26336-20) Attachment 2. KV10109220 (-) Adapter 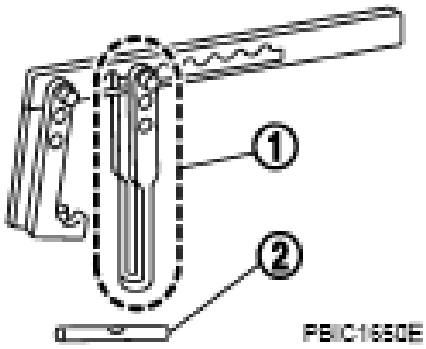	Disassembling valve mechanism Part (1) is a component of KV10116200 (J-26336-A), but Part (2) is not so.

 © 2011 Mitchell Repair Information Company, LLC.

KV10107902 (J-38959) Valve oil seal puller	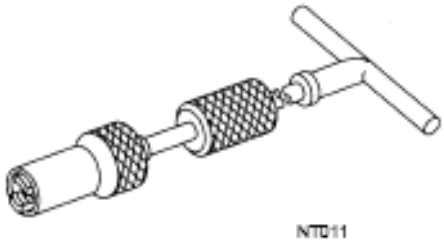	Replacing valve oil seal
KV10115600 (J-38958) Valve oil seal drift	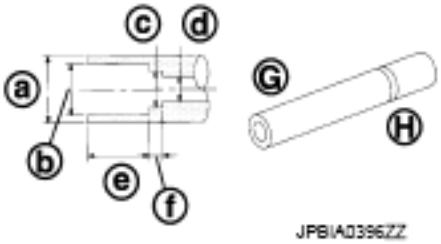	Installing valve oil seal **Use side A (G).** a. **20 (0.79) dia.** b. **13 (0.51) dia.** c. **10.3 (0.406) dia.** d. **8 (0.31) dia.** e. **10.7 (0.421)** f. **5 (0.20)** **H: side B** Unit: mm (in)
EM03470000 (J-8037) Piston ring compressor	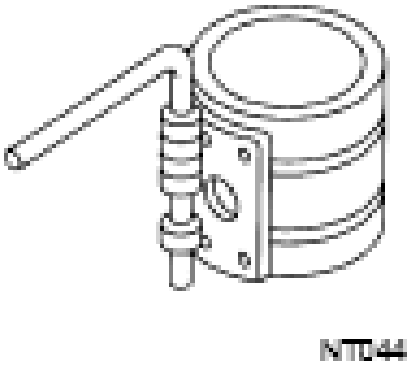	Installing piston assembly into cylinder bore
ST16610001 (J-23907) Pilot bushing puller	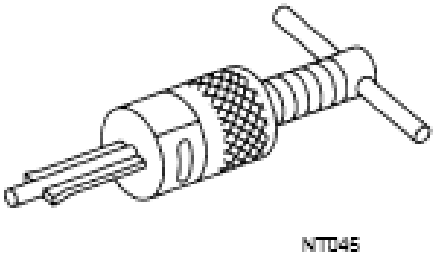	Removing pilot converter

 © 2011 Mitchell Repair Information Company, LLC.

KV10111100 (J-37228) Seal cutter	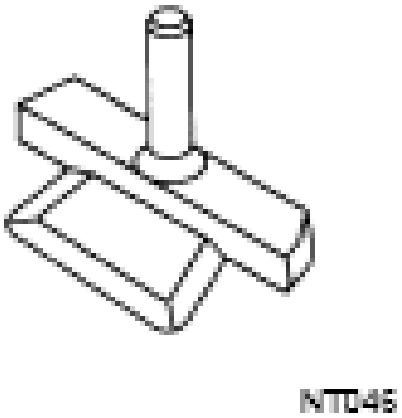	Removing oil pan (lower and upper), front and rear timing chain case, etc.
KV10112100 (BT8653-A) Angle wrench	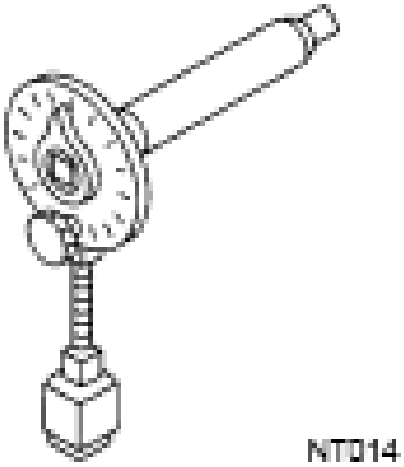	Tightening bolts for connecting rod bearing cap, cylinder head, etc. at an angle
KV10114400 (J-38365) Heated oxygen sensor wrench	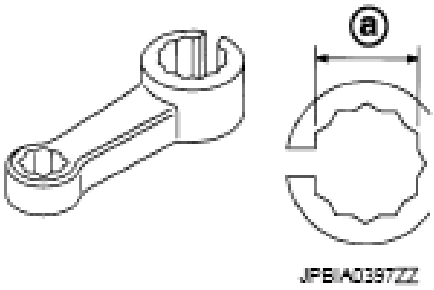	Loosening or tightening air fuel ratio sensor 1 a. **22 mm (0.87 in)**
KV10118600 (J-48641) Ring gear stopper		Removing and installing crankshaft pulley

 © 2011 Mitchell Repair Information Company, LLC.

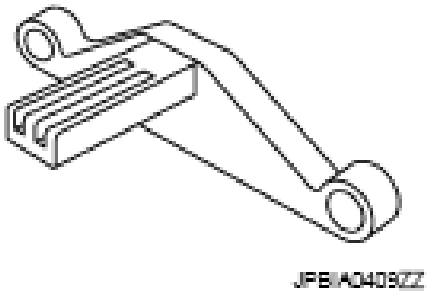 JPBIA0409ZZ	

Commercial Service Tools

(Kent-Moore No.) Tool name	Description
(-) Tube presser 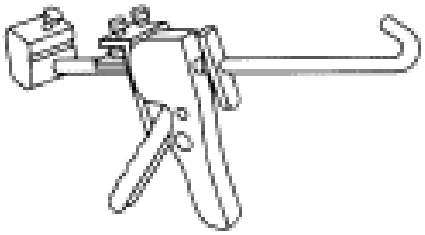 NT052	Pressing the tube of liquid gasket
(-) Power tool 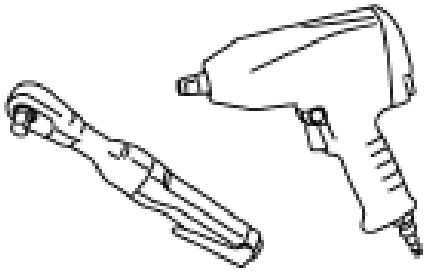 PBIC0190E	Loosening nuts and bolts
(-) TORX socket 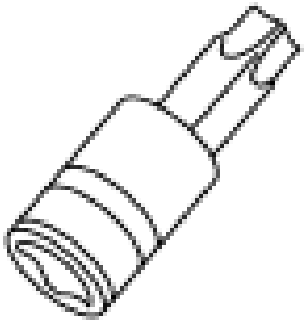 PBIC1113E	Removing and installing drive plate

 © 2011 Mitchell Repair Information Company, LLC.

(-) Manual lift table caddy	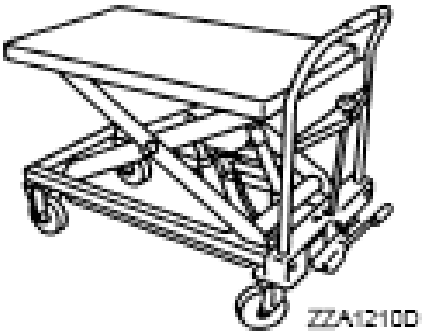	Removing and installing engine
(J-24239-01) Cylinder head bolt wrench	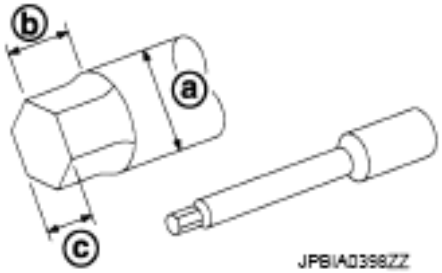	Loosening and tightening cylinder head bolt, and used with the angle wrench [SST: KV10112100 (BT8653-A)] a. **13 (0.51) dia.** b. **12 (0.47)** c. **10 (0.39)** Unit: mm (in)
(-) 1. Compression gauge 2. Adapter	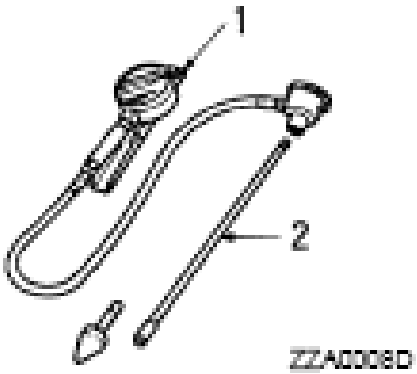	Checking compression pressure
(-) Spark plug wrench	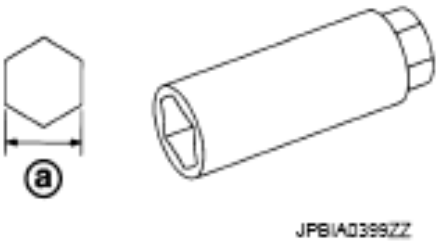	Removing and installing spark plug a. **14 mm (0.55 in)**

 © 2011 Mitchell Repair Information Company, LLC.

(-) Valve seat cutter set	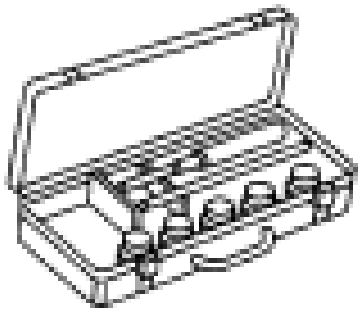 NT048	Finishing valve seat (EXH) dimensions
(-) Piston ring expander	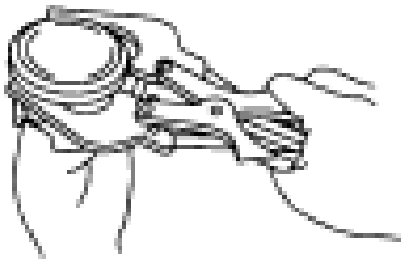 NT030	Removing and installing piston ring
(-) Valve guide drift	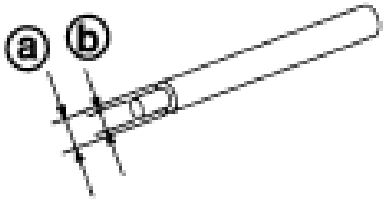 JPBIA0400ZZ	Removing and installing valve guide (EXH) **Exhaust:** a. **9.5 mm (0.374 in) dia.** b. **5.5 mm (0.217 in) dia.**
(-) Valve guide reamer	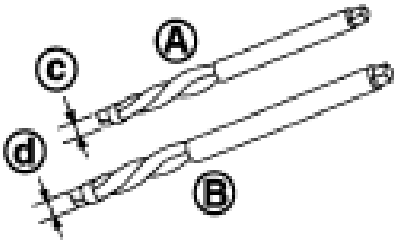 JPBIA0401ZZ	A. Reaming valve guide (EXH) inner hole B. Reaming hole for oversize valve guide (EXH) **Exhaust:** **c: 6.0 mm (0.236 in) dia.** **d: 10.2 mm (0.402 in) dia.**
		Reconditioning the exhaust system threads before installing a new air fuel ratio sensor and heated oxygen

 © 2011 Mitchell Repair Information Company, LLC.

(J-43897-18) (J-43897-12) Oxygen sensor thread cleaner	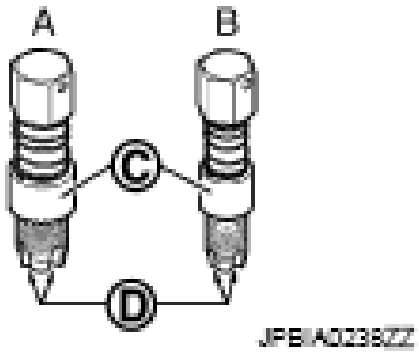	sensor (Use with anti-seize lubricant shown below.) A. **J-43897-18 [18 mm (0.71 in) dia.] for zirconia heated oxygen sensor and air fuel ratio sensor** B. **J-43897-12 [12 mm (0.47 in) dia.] for titania heated oxygen sensor** C. Mating surface shave cylinder D. Flutes
(-) Anti-seize lubricant (Permatex 133AR or equivalent meeting MIL specification MIL-A-907)	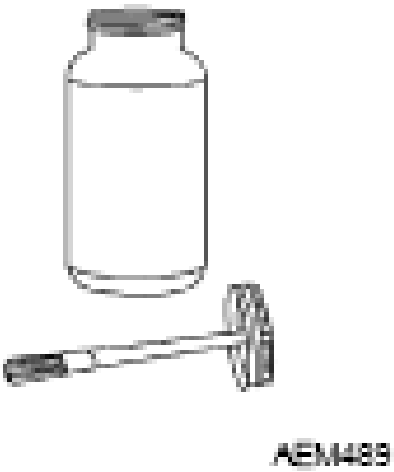	Lubricating oxygen sensor thread cleaning tool when reconditioning exhaust system threads
(-) Feeler gauge	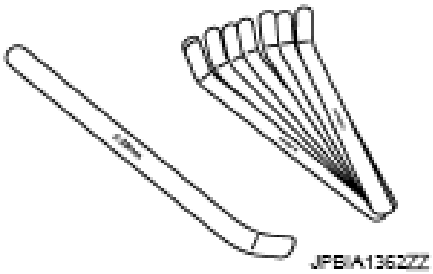	Inspection valve clearance (Use a curved-tip gauge)

PERIODIC MAINTENANCE

DRIVE BELT

Exploded View

 © 2011 Mitchell Repair Information Company, LLC.

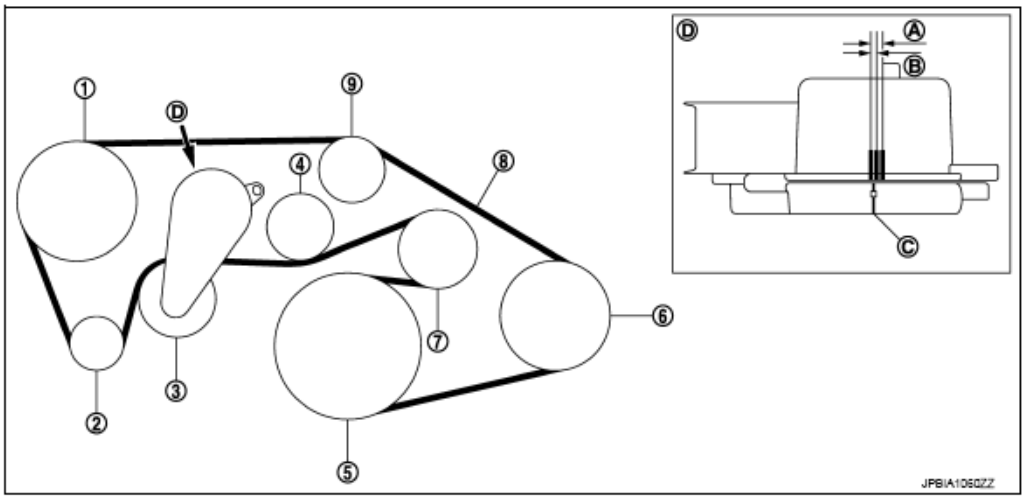

1. Power steering oil pump
2. Alternator
3. Drive belt auto-tensioner
4. Idler pulley
5. Crankshaft pulley
6. A/C compressor
7. Idler pulley
8. Drive belt
9. Idler pulley
A. Possible use range
B. Range when new drive belt is installed
C. Indicator
D. View D

Fig. 8: Drive Belt Routing Diagram
Courtesy of NISSAN NORTH AMERICA, INC.

Checking

WARNING: Be sure to perform the this step when engine is stopped.

- Check that the indicator (C) (notch on fixed side) of drive belt auto-tensioner is within the possible use range (A).

NOTE:

- **Check the drive belt auto-tensioner indication when the engine is cold.**
- **When new drive belt is installed, the indicator (notch on fixed side) should be within the range (B) in the figure.**

- Visually check the entire drive belt for wear, damage or crack.
- If the indicator (notch on fixed side) is out of the possible use range or belt is damaged, replace drive belt.

Tension Adjustment

Refer to "**DRIVE BELT**".

Removal and Installation

REMOVAL

 © 2011 Mitchell Repair Information Company, LLC.

1. Remove engine undercover with power tool.
2. While securely holding the square hole (A) in pulley center of auto tensioner (1) with a spinner handle, move spinner handle in the direction of arrow (loosening direction of drive belt).

CAUTION: Never place hand in a location where pinching may occur if the holding tool accidentally comes off.

: Loosening direction of drive belt

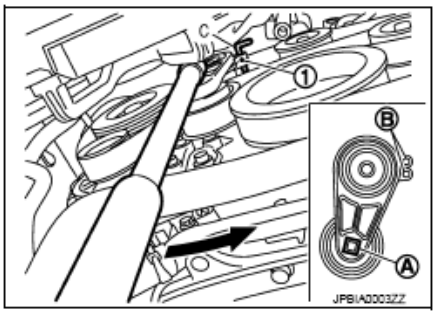

Fig. 9: Loosening Drive Belt
Courtesy of NISSAN NORTH AMERICA, INC.

3. Under the above condition, insert a metallic bar of approximately 6 mm (0.24 in) in diameter [hexagonal wrench (C) shown as example in the figure above] through the holding boss (B) to lock auto-tensioner pulley arm.
4. Remove drive belt.

INSTALLATION

Note the following, and install in the reverse order of removal.

CAUTION:
- **Check drive belt is securely installed around all pulleys.**
- **Check drive belt is correctly engaged with the pulley groove.**
- **Check for engine oil and engine coolant on drive belt and pulley groove.**

Inspection

INSPECTION AFTER INSTALLATION

- Turn crankshaft pulley clockwise several times to equalize tension between each pulley, and then confirm tension of drive belt at indicator (notch on fixed side) is within the possible use range. Refer to "**EXPLODED VIEW**".

AIR CLEANER FILTER

Removal and Installation

 © 2011 Mitchell Repair Information Company, LLC.

REMOVAL

1. Unhook clips (A).

1 : Holder
2 : Air cleaner case

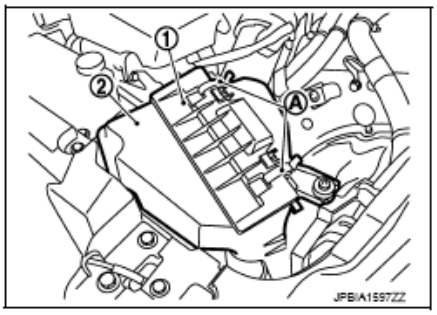

Fig. 10: Identifying Air Cleaner Case, Holder And Clips
Courtesy of NISSAN NORTH AMERICA, INC.

2. Remove holder (3) from air cleaner case (2), and then remove air cleaner filter (1) from holder.

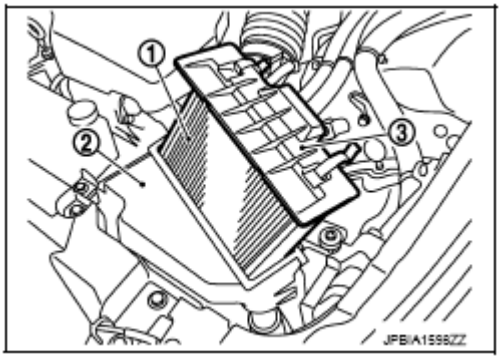

Fig. 11: Identifying Air Cleaner Filter, Case And Holder
Courtesy of NISSAN NORTH AMERICA, INC.

INSTALLATION

Note the following, and install in the reverse order of removal.

- Install the air cleaner filter by aligning the seal with the notch of air cleaner case.

Inspection (Viscous Paper Type)

INSPECTION AFTER REMOVAL

Examine with eyes that there is no stain, clogging, or damage on air cleaner element.

- Remove dusts (such as dead leafs) on air cleaner element surface and inside cleaner case.
- If clogging or damage is observed, replace the air cleaner element.

 © 2011 Mitchell Repair Information Company, LLC.

CAUTION: Never clean the viscous paper type air cleaner element by blowing as there is a risk of deterioration of its performance

MAINTENANCE INTERVAL

Refer to "**FOR NORTH AMERICA: INTRODUCTION OF PERIODIC MAINTENANCE** " (For USA AND CANADA) or "**FOR MEXICO: PERIODIC MAINTENANCE** " (For MEXICO).

SPARK PLUG

Exploded View

Symbol	Description
	N·m (kg-m, ft-lb)
	N·m (kg-m, in-lb)
	Always replace after disassembly.

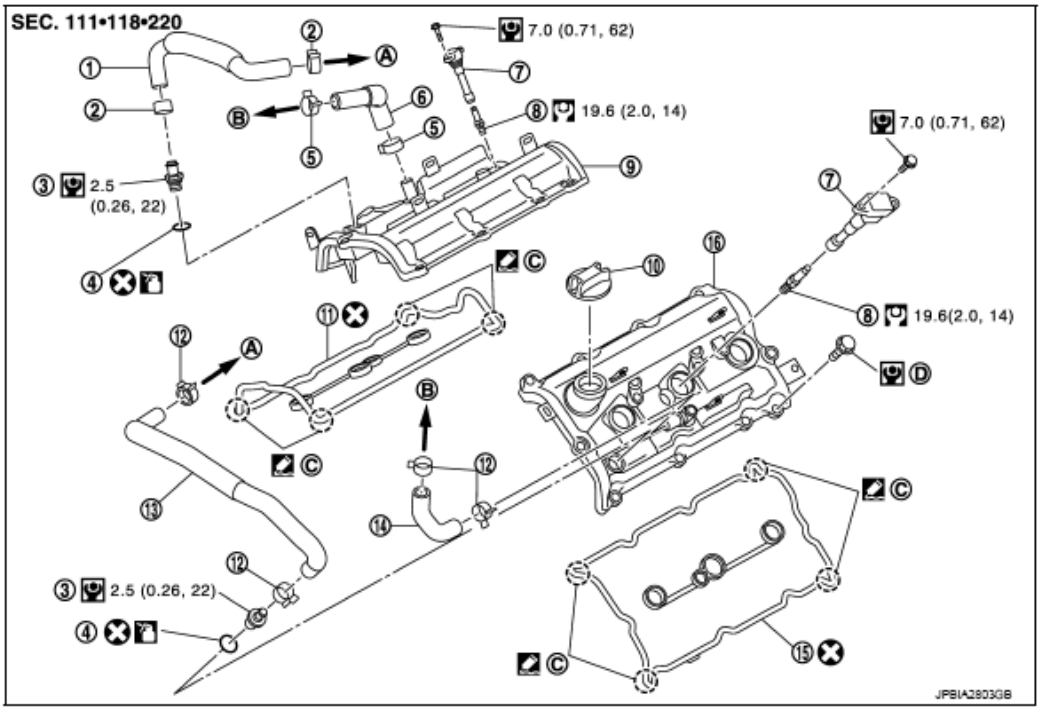

1.	PCV hose	2.	Clamp	3.	PCV valve
4.	O-ring	5.	Clamp	6.	PCV hose
7.	Ignition coil	8.	Spark plug	9.	Rocker cover (bank 1)
10.	Oil filler cap	11.	Rocker cover gasket (bank 1)	12.	Clamp
13.	PCV hose	14.	PCV hose	15.	Rocker cover gasket (bank 2)
16.	Rocker cover (bank 2)				
A.	To intake manifold collector	B.	To air duct	C.	VVEL ladder assembly side
D.	Comply with the installation procedure when tightening.				

Fig. 12: Exploded View Of Spark Plug With Torque Specifications

 © 2011 Mitchell Repair Information Company, LLC.

Courtesy of NISSAN NORTH AMERICA, INC.

Refer to "**COMPONENTS** " for symbols in the figure.

Removal and Installation

REMOVAL

1. Remove engine cover with power tool. Refer to "**EXPLODED VIEW**".
2. Remove air cleaner case and air duct (RH and LH). Refer to "**EXPLODED VIEW**".
3. Remove electric throttle control actuator. Refer to "**EXPLODED VIEW**".
4. Remove ignition coil. Refer to "**REMOVAL AND INSTALLATION**".
5. Remove spark plug with a spark plug wrench (commercial service tool).

a : 14 mm (0.55 in)

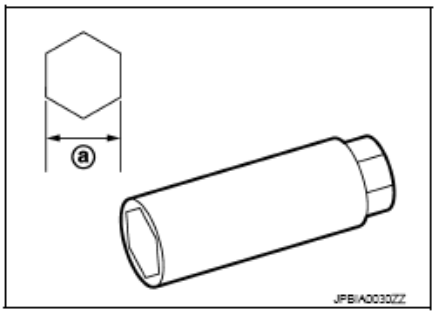

Fig. 13: Identifying Spark Plug Wrench Dimension
Courtesy of NISSAN NORTH AMERICA, INC.

INSTALLATION

Installation is the reverse order of removal.

Inspection

INSPECTION AFTER REMOVAL

Use the standard type spark plug for normal condition.

Spark plug (Standard type): Refer to "SPARK PLUG".

CAUTION:

- **Never drop or shock spark plug.**
- **Never use a wire brush for cleaning.**
- **If plug tip is covered with carbon, use spark plug cleaner to clean.**

  Cleaner air pressure: Less than 588 kPa (6 kg/cm^2 , 85 psi)

  Cleaning time: Less than 20 seconds

 © 2011 Mitchell Repair Information Company, LLC.

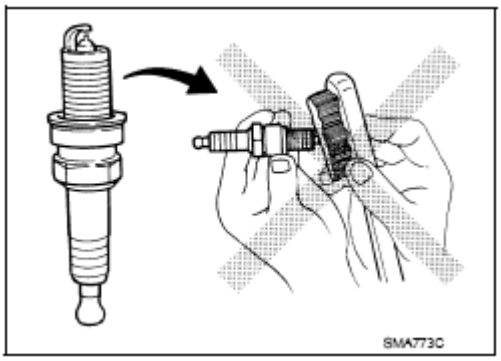

Fig. 14: Caution For Cleaning Spark Plug
Courtesy of NISSAN NORTH AMERICA, INC.

- **Check and adjustment of plug gap is not required between change intervals.**

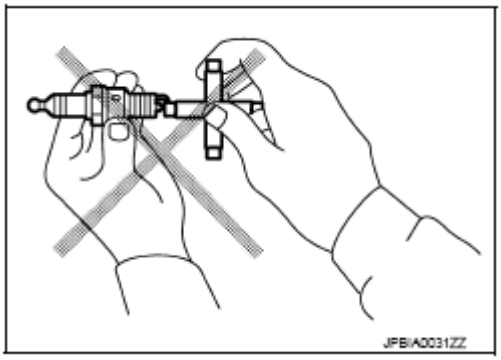

Fig. 15: Caution For Adjusting Spark Plug Gap
Courtesy of NISSAN NORTH AMERICA, INC.

CAMSHAFT VALVE CLEARANCE

Inspection and Adjustment

INSPECTION

Check valve clearance if applicable to the following cases:

Intake side:

- At the removal and installation of VVEL ladder assembly or valve-related parts, or at the occurrence of malfunction (poor starting, idle malfunction, unusual noise) due to aged deterioration in valve clearance.

CAUTION: Valve clearance check on the intake side is not required after replacing the VVEL ladder assembly and cylinder head assembly with a new one. (Install new VVEL ladder assembly and cylinder head assembly in factory-shipped

 © 2011 Mitchell Repair Information Company, LLC.

condition because it is factory-adjusted and inspected.)

NOTE: VVEL ladder assembly cannot be replaced as a single part, because it is machined together with cylinder head assembly.

Exhaust side:

- At the removal, installation, and replacement of camshaft (EXH) or valve-related parts, or at the occurrence of malfunction (poor starting, idle malfunction, unusual noise) due to aged deterioration in valve clearance.

1. Remove rocker covers (bank 1 and bank 2). Refer to "**REMOVAL AND INSTALLATION**".
2. Measure the valve clearance as follows:
   - Use the feeler gauge (commercial service tool) of curved-tip. This allows the feeler gauge to access the clearance between camshaft and valve lifter with ease.

     Valve clearance: Refer to "CAMSHAFT".

     NOTE: Be sure to note the following points when measuring valve clearance on the intake side.

   - Before measuring, check that the position of drive shaft nose is within the angle shown in the figure below.

A : Bank 1
B : Feeler gauge (commercial service tool)
D : View D
c : 45 degrees (drive shaft nose angle)
⇦ : Insertion direction of feeler gauge on the bank 1
⬅ : Insertion direction of feeler gauge on the bank 2

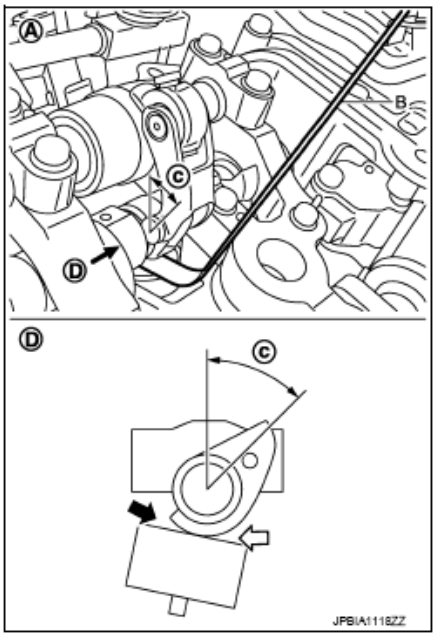

Fig. 16: Measuring Valve Clearance Using Feeler Gauge
Courtesy of NISSAN NORTH AMERICA, INC.

 © 2011 Mitchell Repair Information Company, LLC.

- Refer to the illustration for the insertion direction of the feeler gauge since the direction depends on the bank.

a. Set No. 1 cylinder at TDC of its compression stroke.
   - Rotate crankshaft pulley clockwise to align timing mark (grooved line without color) with timing indicator.

⬅ : Timing mark (grooved line without color)

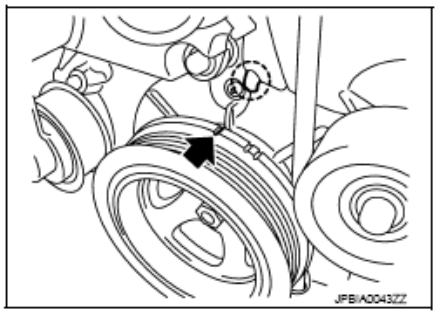

Fig. 17: Locating Crankshaft Pulley Timing Mark
Courtesy of NISSAN NORTH AMERICA, INC.

   - Check that exhaust cam nose on No. 1 cylinder (engine front side of bank 1) is located as shown in the figure below.

1 : Camshaft (EXH) (bank 1)
⇦ : Engine front

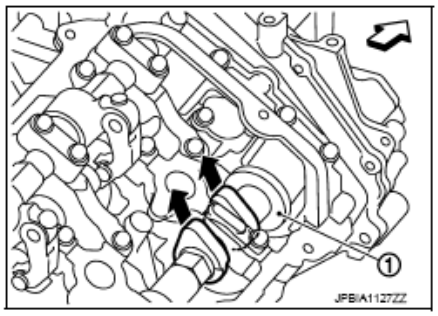

Fig. 18: Locating Exhaust Cam Nose On No. 1 Cylinder
Courtesy of NISSAN NORTH AMERICA, INC.

   - If not, turn crankshaft one revolution (360 degrees) and align as shown in the figure below.
   - By referring to the figure, measure the valve clearances at locations marked "x" as shown in the table below (locations indicated in the figure).

 © 2011 Mitchell Repair Information Company, LLC.

⇦ : Engine front

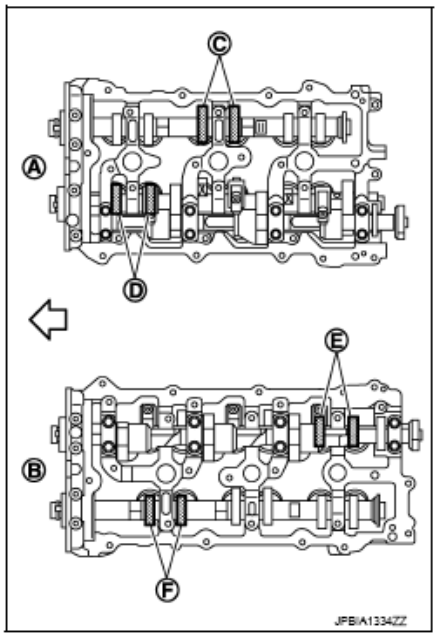

Fig. 19: Identifying Valve Clearance Measurement Areas
Courtesy of NISSAN NORTH AMERICA, INC.

- No. 1 cylinder at compression TDC

Measuring position [bank 1 (A)]		No. 1 CYL.	No. 3 CYL.	No. 5 CYL.
No. 1 cylinder at compression TDC	EXH		x (C)	
	INT	x (D)		
Measuring position [bank 2 (B)]		No. 2 CYL.	No. 4 CYL.	No. 6 CYL.
No. 1 cylinder at compression TDC	INT			x (E)
	EXH	x (F)		

b. Rotate crankshaft 240 degrees clockwise (when viewed from engine front) to align No. 3 cylinder at TDC its compression stroke.

NOTE: **Mark a position 240 degrees (b) from a corner of the hexagonal part of crankshaft pulley mounting bolt as shown in the figure below. Use the hexagonal part as a guide.**

 © 2011 Mitchell Repair Information Company, LLC.

1 : Crankshaft pulley
A : Paint mark

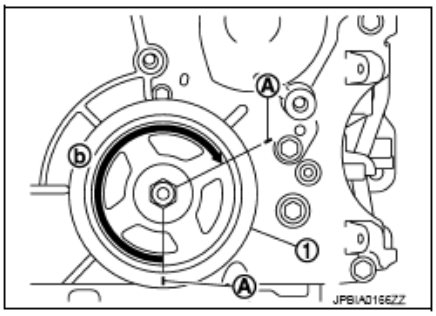

Fig. 20: Tightening Crankshaft Pulley Mounting Bolt
Courtesy of NISSAN NORTH AMERICA, INC.

- By referring to the figure, measure the valve clearances at locations marked "x" as shown in the table below (locations indicated in the figure).

⇦ : Engine front

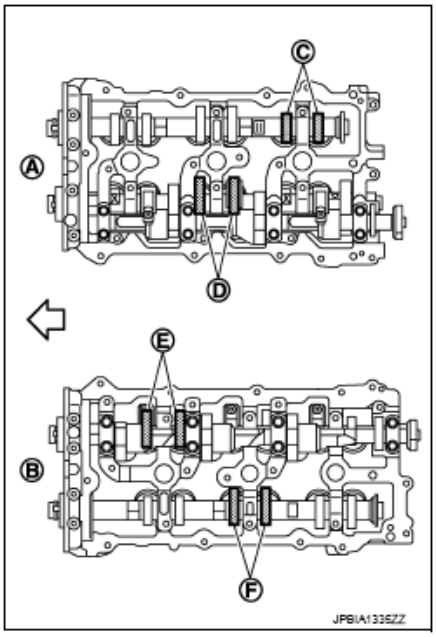

Fig. 21: Identifying Valve Clearance Measurement Areas
Courtesy of NISSAN NORTH AMERICA, INC.

- No. 3 cylinder at compression TDC

Measuring position [bank 1 (A)]		No. 1 CYL.	No. 3 CYL.	No. 5 CYL.
No. 3 cylinder at compression TDC	EXH			x (C)
	INT		x (D)	
Measuring position [bank 2 (B)]		No. 2 CYL.	No. 4 CYL.	No. 6 CYL.
No. 3 cylinder at compression TDC	INT	x (E)		
	EXH		x (F)	

 © 2011 Mitchell Repair Information Company, LLC.

c. Rotate crankshaft 240 degrees clockwise (when viewed from engine front) to align No. 5 cylinder at TDC of compression stroke.

NOTE: Mark a position 240 degrees (b) from a corner of the hexagonal part of crankshaft pulley mounting bolt as shown in the figure below. Use the hexagonal part as a guide.

1 : Crankshaft pulley
A : Paint mark

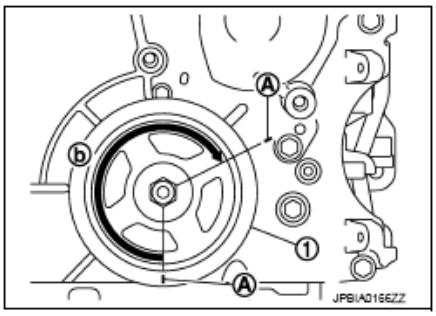

Fig. 22: Rotating Crankshaft
Courtesy of NISSAN NORTH AMERICA, INC.

- By referring to the figure, measure the valve clearances at locations marked "x" as shown in the table below (locations indicated in the figure).

⇦ : Engine front

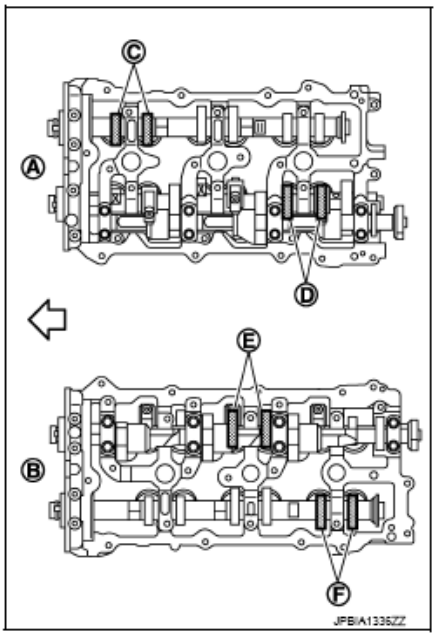

Fig. 23: Identifying Valve Clearance Measurement Areas
Courtesy of NISSAN NORTH AMERICA, INC.

- No. 5 cylinder at compression TDC

Measuring position [bank 1 (A)]		No. 1 CYL.	No. 3 CYL.	No. 5 CYL.
No. 5 cylinder at compression TDC	EXH	x (C)		
	INT			x (D)
Measuring position [bank 2 (B)]		No. 2 CYL.	No. 4 CYL.	No. 6 CYL.
No. 5 cylinder at compression TDC	INT		x (E)	
	EXH			x (F)

3. Perform adjustment or replacement if the measured value is out of the standard.
   - If a valve clearance on the exhaust side is out of specification, adjust the valve clearance.
   - If a valve clearance on the intake side is out of specification, replace VVEL ladder assembly and cylinder head assembly. Refer to "**EXPLODED VIEW**".

CAUTION: Never adjust valve clearance on the intake side.

NOTE: Since the valve lifter (INT) cannot be replaced by the piece, VVEL ladder assembly and cylinder head assembly replacement are required.

CAMSHAFT (EXH) VALVE CLEARANCE ADJUSTMENT

- Perform adjustment depending on selected head thickness of valve lifter (EXH).

1. Measure the valve clearance. Refer to "**INSPECTION**".
2. Remove VVEL ladder assembly and camshaft (EXH). Refer to "**DISASSEMBLY AND ASSEMBLY**".

CAUTION: Never loosen adjusting bolts and mounting bolts (black color) of VVEL ladder assembly.

3. Remove valve lifter (EXH) at the locations that are out of the standard.
4. Measure the center thickness of the removed valve lifters (EXH) with a micrometer (A).

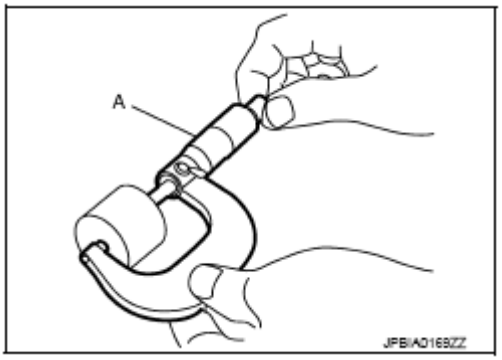

Fig. 24: Measuring Center Thickness Of Removed Valve Lifters (EXH) Using Micrometer

 © 2011 Mitchell Repair Information Company, LLC.

Courtesy of NISSAN NORTH AMERICA, INC.

5. Use the equation below to calculate valve lifter (EXH) thickness for replacement.

   Valve lifter (EXH) thickness calculation: t = t1 + (C1 - C2)

   t = Valve lifter (EXH) thickness to be replaced

   t1 = Removed valve lifter (EXH) thickness

   C1 = Measured valve clearance

   C2 = Standard valve clearance:

   Exhaust: 0.33 mm (0.013 in)

   - Thickness of new valve lifter (EXH) can be identified by stamp marks on the reverse side (inside the cylinder).

     Stamp mark 788 indicates 7.88 mm (0.3102 in) in thickness.

A : Stamp
B : Thickness of valve lifter (EXH)

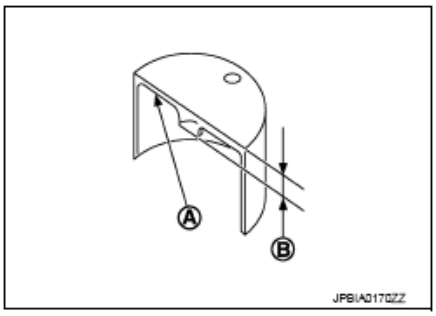

Fig. 25: Identifying Valve Lifter Thickness Stamp
Courtesy of NISSAN NORTH AMERICA, INC.

Available thickness of valve lifter (EXH): 27 sizes with range 7.88 to 8.40 mm (0.3102 to 0.3307 in) in steps of 0.02 mm (0.0008 in) (when manufactured at factory). Refer to "**CAMSHAFT**".

6. Install selected valve lifter (EXH).
7. Install VVEL ladder assembly and camshaft (EXH). Refer to "**DISASSEMBLY AND ASSEMBLY**".
8. Manually turn crankshaft pulley a few turns.
9. Check that the valve clearances for cold engine are within the specifications by referring to the specified values. Refer to "**CAMSHAFT**".
10. Install all removed parts in the reverse order of removal.
11. Warm up the engine, and check for unusual noise and vibration.

COMPRESSION PRESSURE

 © 2011 Mitchell Repair Information Company, LLC.

Inspection

1. Warm up engine thoroughly. Then, stop it.
2. Release fuel pressure. Refer to "**INSPECTION** " (For USA AND CANADA) or "**INSPECTION** " (For MEXICO).
3. Disconnect fuel pump fuse (1) from IPDM E/R (2) to avoid fuel injection during measurement.

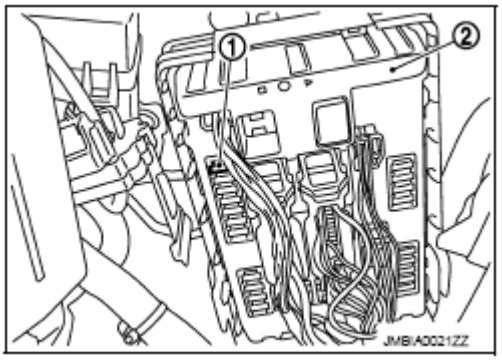

Fig. 26: Identifying Fuel Pump Fuse And IPDM E/R
Courtesy of NISSAN NORTH AMERICA, INC.

4. Remove engine cover with power tool. Refer to "**EXPLODED VIEW**".
5. Remove ignition coil and spark plug from each cylinder. Refer to "**EXPLODED VIEW**".
6. Connect engine tachometer (not required in use of CONSULT).
7. Install compression gauge with an adapter (commercial service tool) onto spark plug hole.

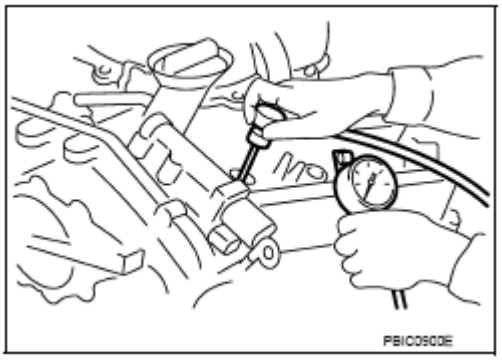

Fig. 27: Installing Compression Tester With Adapter Onto Spark Plug Hole
Courtesy of NISSAN NORTH AMERICA, INC.

- Use the adapter whose picking up end inserted to spark plug hole is smaller than 20 mm (0.79 in) in diameter. Otherwise, it may be caught by cylinder head during removal.

 © 2011 Mitchell Repair Information Company, LLC.

a : 20 mm (0.79 in)

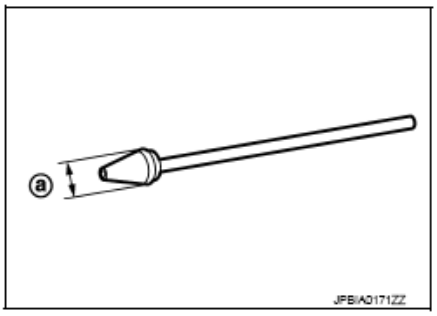

Fig. 28: Identifying Adapter Picking Up End Dimension
Courtesy of NISSAN NORTH AMERICA, INC.

8. With accelerator pedal fully depressed, turn ignition switch to "START" for cranking. When the gauge pointer stabilizes, read the compression pressure and the engine RPM. Perform these steps to check each cylinder.

   Compression pressure: Refer to "GENERAL SPECIFICATION".

   CAUTION:
   - **Measure a six-cylinder under the same conditions since a measurement depends on measurement conditions (engine water temperature, etc.).**
   - **Always use a fully changed battery to obtain the specified engine speed.**

   - If the engine speed is out of the specified range, check battery liquid for proper gravity. Check the engine speed again with normal battery gravity.
   - If compression pressure is below the minimum value, check valve clearances and parts associated with combustion chamber (valve, valve seat, piston, piston ring, cylinder bore, cylinder head, cylinder head gasket). After checking, measure compression pressure again.
   - If a cylinder has low compression pressure, pour a small amount of engine oil into the spark plug hole of the cylinder to recheck it for compression.
     - If the added engine oil improves the compression, piston rings may be worn out or damaged. Check piston rings and replace if necessary.
     - If the compression pressure remains at low level despite the addition of engine oil, valves may be malfunctioning. Check valves for damage. Replace valve or valve seat accordingly.
   - If two adjacent cylinders have respectively low compression pressure and their compression remains low even after the addition of engine oil, cylinder head gaskets are leaking. In such a case, replace cylinder head gaskets.
9. After inspection is completed, install removed parts.
10. Start the engine, and check that the engine runs smoothly.
11. Perform trouble diagnosis. If DTC appears, erase it. Refer to "**DESCRIPTION** " (For USA and CANADA) or "**DESCRIPTION** " (For MEXICO).

REMOVAL AND INSTALLATION

 © 2011 Mitchell Repair Information Company, LLC.

ENGINE COVER

Exploded View

Symbol	Description
	N·m (kg-m, ft-lb)
	N·m (kg-m, in-lb)
	Always replace after disassembly.

1 : Engine cover

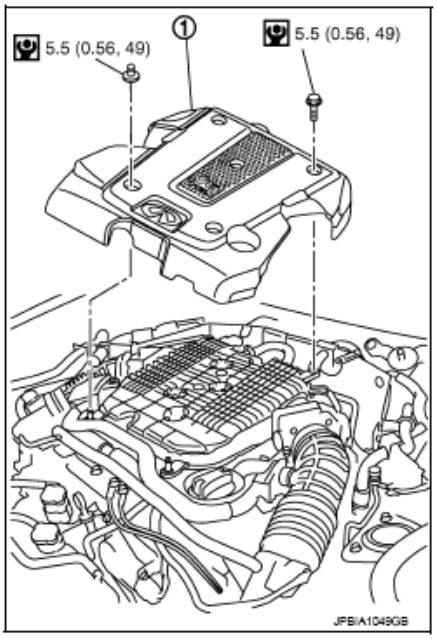

Fig. 29: Exploded View Of Engine Cover With Torque Specifications
Courtesy of NISSAN NORTH AMERICA, INC.

Refer to "**COMPONENTS** " for symbols in the figure.

Removal and Installation

REMOVAL

Loosen mounting bolts and nuts in the reverse of the order shown in the figure below, and then remove engine cover.

CAUTION: Never damage or scratch engine cover when installing or removing.

 © 2011 Mitchell Repair Information Company, LLC.

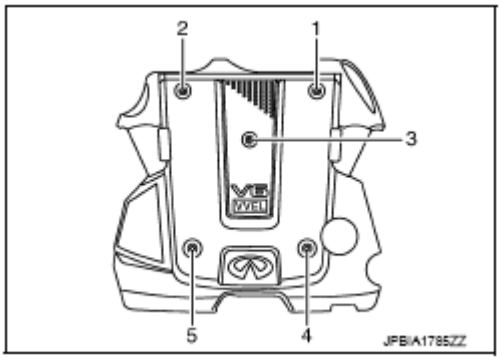

Fig. 30: Engine Cover Mounting Bolt And Nut Tightening Sequence
Courtesy of NISSAN NORTH AMERICA, INC.

INSTALLATION

Install engine cover, and then tighten mounting bolts and nuts in numerical order as shown in the figure below.

CAUTION: Never damage or scratch engine cover when installing or removing.

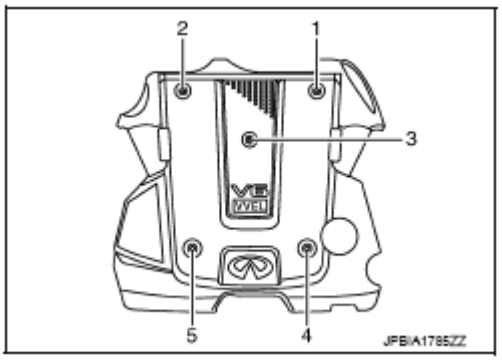

Fig. 31: Engine Cover Mounting Bolt And Nut Tightening Sequence
Courtesy of NISSAN NORTH AMERICA, INC.

DRIVE BELT AUTO TENSIONER AND IDLER PULLEY

Exploded View

 © 2011 Mitchell Repair Information Company, LLC.

Symbol	Description
	N·m (kg-m, ft-lb)
	N·m (kg-m, in-lb)
	Always replace after disassembly.

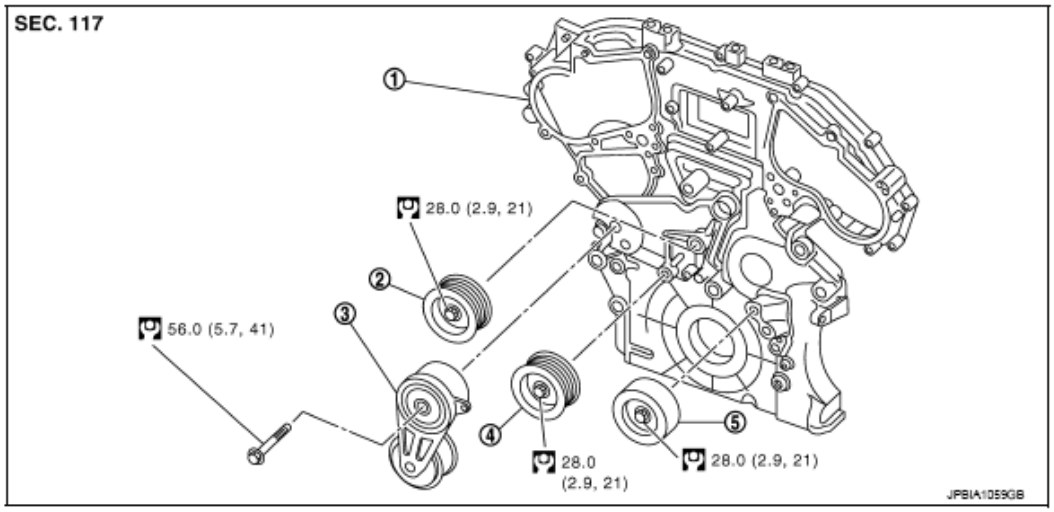

1. Front timing chain case
2. Idler pulley
3. Drive belt auto-tensioner
4. Idler pulley
5. Idler pulley

Fig. 32: Exploded View Of Drive Belt Auto Tensioner And Idler Pulley With Torque Specifications
Courtesy of NISSAN NORTH AMERICA, INC.

Refer to "**COMPONENTS** " for symbols in the figure.

Removal and Installation

REMOVAL

1. Remove drive belt. Refer to "**EXPLODED VIEW**".
   - Keep auto-tensioner pulley arm locked after drive belt is removed.
2. Remove auto-tensioner and idler pulley.
   - Keep auto-tensioner pulley arm locked to install or remove auto-tensioner.

INSTALLATION

Installation is the reverse order of removal.

CAUTION: If there is damage greater than peeled paint, replace drive belt auto-tensioner.

AIR CLEANER AND AIR DUCT

Exploded View

 © 2011 Mitchell Repair Information Company, LLC.

Symbol	Description
	N·m (kg-m, ft-lb)
	N·m (kg-m, in-lb)
	Always replace after disassembly.

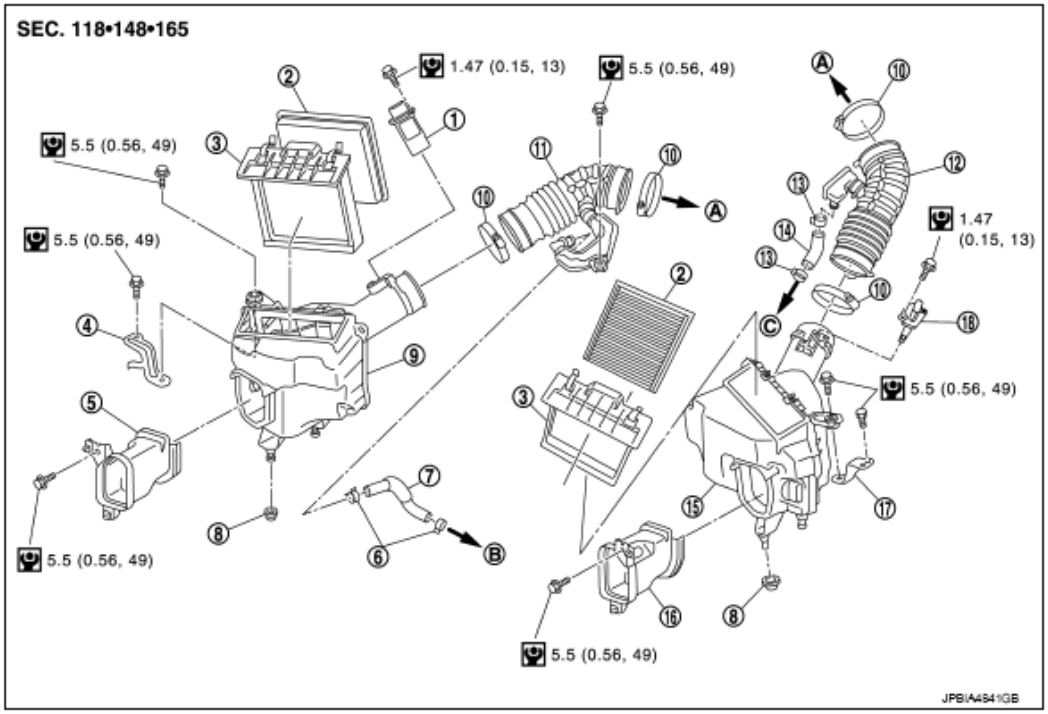

1.	Mass air flow sensor (bank 1)	2.	Air cleaner filter	3.	Holder
4.	Bracket	5.	Air dust side duct (RH)	6.	Clamp
7.	PCV hose	8.	Grommet	9.	Air cleaner case (RH)
10.	Clamp	11.	Air duct (RH)	12.	Air duct (LH)
13.	Clamp	14.	PCV hose	15.	Air cleaner case (LH)
16.	Air dust side duct (LH)	17.	Bracket	18.	Mass air flow sensor (bank 2)
A.	To electric throttle control actuator	B.	To rocker cover (bank 1)	C.	To rocker cover (bank 2)

Fig. 33: Exploded View Of Air Cleaner And Air Duct With Torque Specifications
Courtesy of NISSAN NORTH AMERICA, INC.

Refer to "**COMPONENTS** " for symbols in the figure.

Removal and Installation

REMOVAL

NOTE: Mass air flow sensor is removable under the car-mounted condition.

1. Disconnect mass air flow sensor harness connector.
2. Disconnect PCV hose.
3. Remove air cleaner case & mass air flow sensor assembly and air duct & air hose by disconnecting their joints.

 © 2011 Mitchell Repair Information Company, LLC.

- Add marks if necessary for easier installation.

4. Remove mass air flow sensor from air cleaner case, if necessary.

CAUTION: Handle mass air flow sensor according to the following instructions.

- **Never shock the mass air flow sensor.**
- **Never disassemble the mass air flow sensor.**
- **Never touch the sensor of the mass air flow sensor.**

INSTALLATION

Note the following, and install in the reverse order of removal.

- Align marks. Attach each joint. Screw clamps firmly.

Inspection

INSPECTION AFTER REMOVAL

Inspect air duct and resonator assembly for crack or tear.

- If anything is found, replace air duct and resonator assembly

INTAKE MANIFOLD COLLECTOR

Exploded View

 © 2011 Mitchell Repair Information Company, LLC.

Symbol	Description
	N·m (kg-m, ft-lb)
	N·m (kg-m, in-lb)
	Always replace after disassembly.

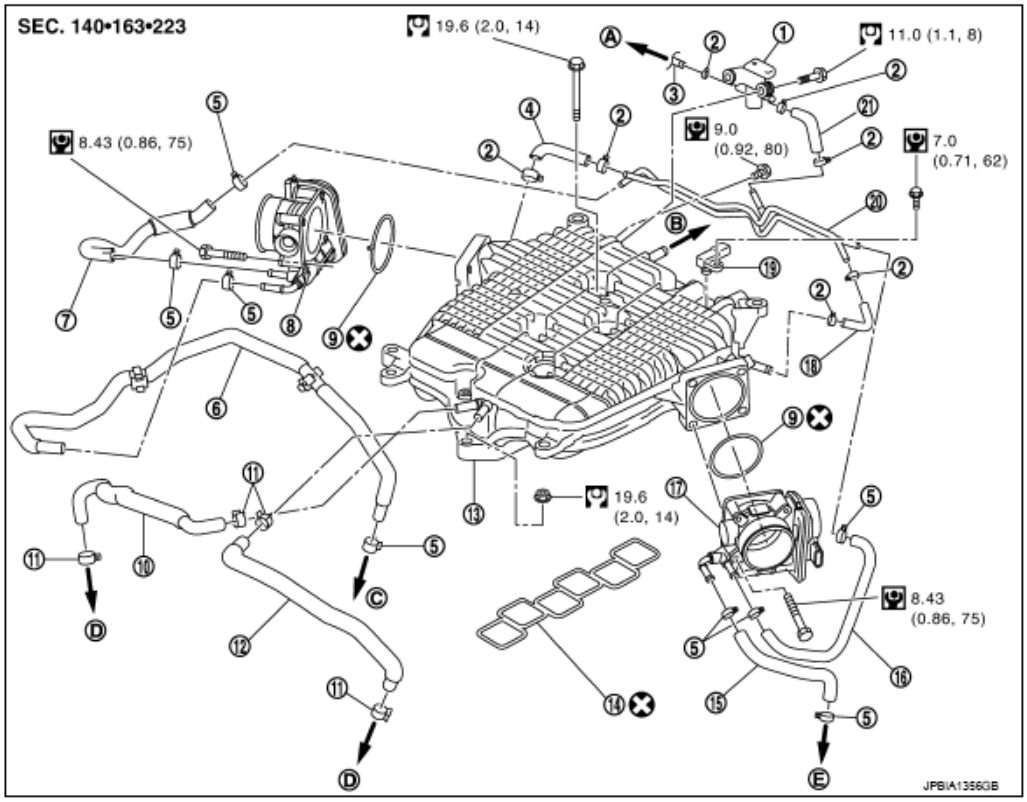

1.	EVAP canister purge control solenoid valve	2.	Clamp	3.	EVAP hose
4.	EVAP hose	5.	Clamp	6.	Water hose
7.	Water hose	8.	Electric throttle control actuator (bank 1)	9.	Gasket
10.	PCV hose	11.	Clamp	12.	PCV hose
13.	Intake manifold collector	14.	Gasket	15.	Water hose
16.	Water hose	17.	Electric throttle control actuator (bank 2)	18.	EVAP hose
19.	Manifold absolute Pressure (MAP) sensor	20.	EVAP tube assembly	21.	EVAP hose
A.	To vacuum pipe	B.	To brake booster	C.	To water outlet (rear)
D.	To PCV valve	E.	To heater pipe		

Fig. 34: Exploded View Of Intake Manifold Collector With Torque Specifications
Courtesy of NISSAN NORTH AMERICA, INC.

Refer to "**COMPONENTS** " for symbols in the figure.

Removal and Installation

REMOVAL

WARNING: Never drain engine coolant when the engine is hot to avoid the danger of

 © 2011 Mitchell Repair Information Company, LLC.

being scalded.

1. Remove engine cover with power tool. Refer to "**EXPLODED VIEW**".
2. Remove air cleaner case and air duct (RH and LH). Refer to "**EXPLODED VIEW**".
3. Remove electric throttle control actuator as follows:
   a. Drain engine coolant. When water hoses are disconnected, attach plug to prevent engine coolant leakage.

CAUTION:
- **Perform this step when engine is cold.**
- **Never spill engine coolant on drive belt.**

   b. Disconnect water hoses from electric throttle control actuator. When engine coolant is not drained from radiator, attach plug to water hoses to prevent engine coolant leakage.
   c. Disconnect harness connector.
   d. Loosen mounting bolts in reverse of the order shown in the figure below.

NOTE:
- **When removing only intake manifold collector, move electric throttle control actuator without disconnecting the water hose.**
- **The figure shows the electric throttle control actuator (bank 1) viewed from the air duct side.**
- **Viewed from the air duct side, the order of loosening mounting bolts of electric throttle control actuator (bank 2) is the same as that of the electric throttle control actuator (bank 1).**

CAUTION: Handle carefully to avoid any shock to electric throttle control actuator.

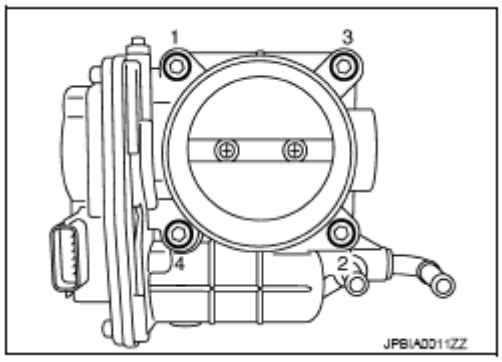

Fig. 35: Electric Throttle Control Actuator Mounting Bolt Tightening Sequence
Courtesy of NISSAN NORTH AMERICA, INC.

4. Disconnect vacuum hose, PCV hose and EVAP hose from intake manifold collector.
5. Remove EVAP canister purge volume control solenoid valve and EVAP tube assembly from intake

 © 2011 Mitchell Repair Information Company, LLC.

manifold collector.

6. Loosen mounting bolts and nuts with power tool in reverse of the order shown in the figure below to remove intake manifold collector.

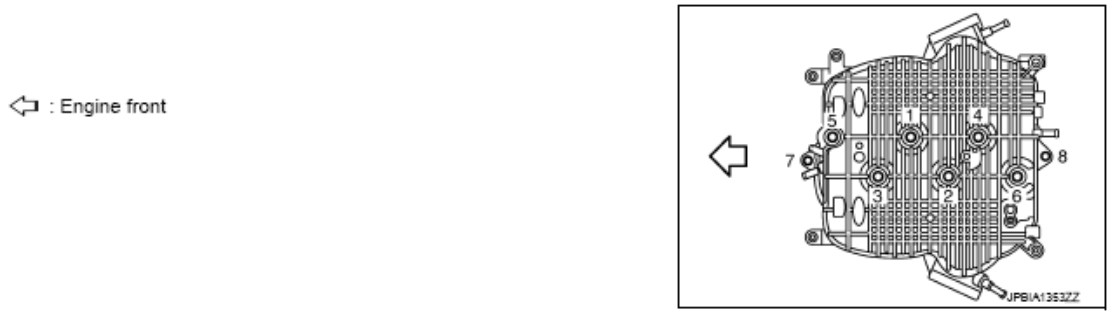

Fig. 36: Intake Manifold Collector Mounting Bolt Tightening Sequence
Courtesy of NISSAN NORTH AMERICA, INC.

INSTALLATION

Note the following, and install in the reverse order of removal.

INTAKE MANIFOLD COLLECTOR

- If stud bolts were removed, install them and tighten to the torque specified below.

  Torque: 10.8 N.m (1.1 kg-m, 8 ft-lb)

- Tighten mounting bolts and nuts in numerical order as shown in the figure below.

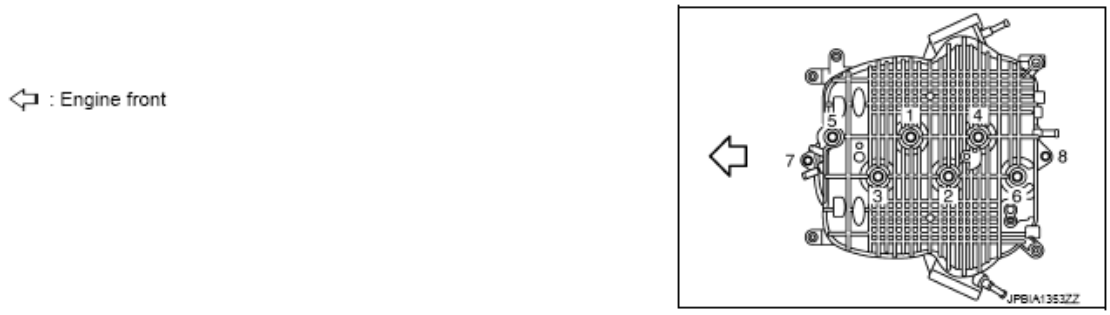

Fig. 37: Intake Manifold Collector Mounting Bolt Tightening Sequence
Courtesy of NISSAN NORTH AMERICA, INC.

WATER HOSE

- Insert hose by 27 to 32 mm (1.06 to 1.26 in) from connector end.
- Clamp hose at location of 3 to 7 mm (0.12 to 0.28 in) from hose end.

ELECTRIC THROTTLE CONTROL ACTUATOR (BANK 1 AND BANK 2)

 © 2011 Mitchell Repair Information Company, LLC.

- Tighten in numerical order as shown in the figure below.

NOTE:

- **The figure shows the electric throttle control actuator (bank 1) viewed from the air duct side.**
- **Viewed from the air duct side, the order of tightening mounting bolts of electric throttle control actuator (bank 2) is the same as that of the electric throttle control actuator (bank 1).**

- Perform the "Throttle Valve Closed Position Learning" when harness connector of electric throttle control actuator is disconnected. Refer to "**THROTTLE VALVE CLOSED POSITION LEARNING: DESCRIPTION** " (USA AND CANADA) or "**THROTTLE VALVE CLOSED POSITION LEARNING: DESCRIPTION** " (MEXICO).

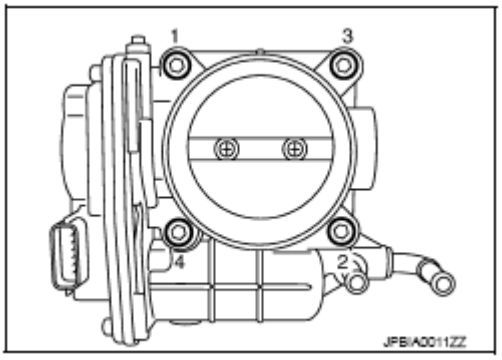

Fig. 38: Electric Throttle Control Actuator Mounting Bolt Tightening Sequence
Courtesy of NISSAN NORTH AMERICA, INC.

- Perform the "Idle Air Volume Learning" and "Throttle Valve Closed Position Learning" when electric throttle control actuator is replaced. Refer to "**IDLE AIR VOLUME LEARNING: DESCRIPTION** " (USA AND CANADA) or "**IDLE AIR VOLUME LEARNING: DESCRIPTION** " (MEXICO) and "**THROTTLE VALVE CLOSED POSITION LEARNING: DESCRIPTION** " (USA AND CANADA) or "**THROTTLE VALVE CLOSED POSITION LEARNING: DESCRIPTION** " (MEXICO).

INTAKE MANIFOLD

Exploded View

 © 2011 Mitchell Repair Information Company, LLC.

Symbol	Description
	N·m (kg-m, ft-lb)
	N·m (kg-m, in-lb)
	Always replace after disassembly.

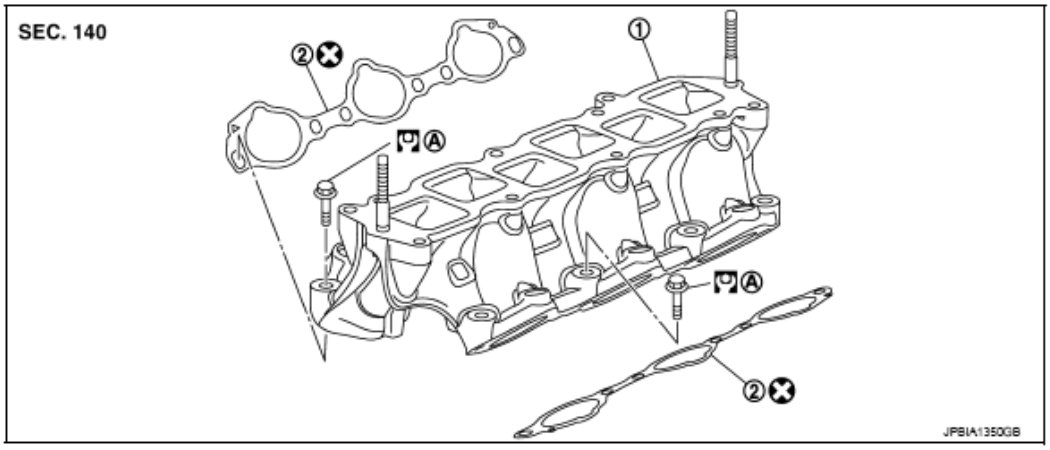

1. Intake manifold
2. Gasket

A. Comply with the installation procedure

Fig. 39: Exploded View Of Intake Manifold
Courtesy of NISSAN NORTH AMERICA, INC.

Refer to "**COMPONENTS** " for symbols in the figure.

Removal and Installation

REMOVAL

1. Release fuel pressure. Refer to "**INSPECTION** " (USA AND CANADA) or "**INSPECTION** " (MEXICO).
2. Remove intake manifold collector. Refer to "**EXPLODED VIEW**".
3. Remove fuel tube and fuel injector assembly. Refer to "**EXPLODED VIEW**".
4. Loosen mounting bolts in reverse order as shown in the figure below to remove intake manifold with power tool.

: Engine front

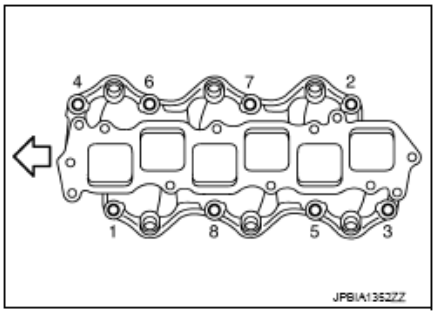

 © 2011 Mitchell Repair Information Company, LLC.

Fig. 40: Intake Manifold Mounting Bolts Loosening Sequence
Courtesy of NISSAN NORTH AMERICA, INC.

CAUTION:
- **Cover engine openings to avoid entry of foreign materials.**
- **Put a mark on the intake manifold and the cylinder head with paint before removal because they need to be installed in the specified direction.**

5. Remove gaskets.

INSTALLATION

Note the following, and install in the reverse order of removal.

INTAKE MANIFOLD

- If stud bolts were removed, install them and tighten to the torque specified below.

  Torque: 10.8 N.m (1.1 kg-m, 8 ft-lb)

- Tighten all mounting bolts to the specified torque in two or more steps in numerical order as shown in the figure below.

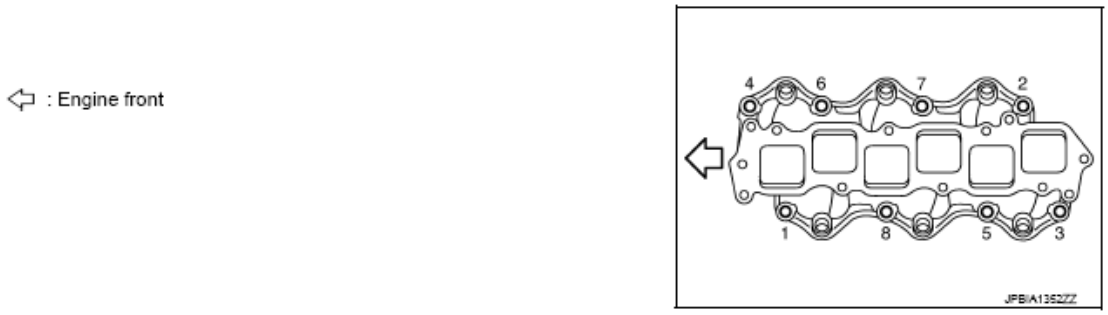

Fig. 41: Intake Manifold Mounting Bolt Tightening Sequence
Courtesy of NISSAN NORTH AMERICA, INC.

CAUTION:
- **Install intake manifold with the marks (put on the intake manifold and the cylinder head before removal) aligned.**

1st step:

Torque: 7.4 N.m (0.75 kg-m, 5 ft-lb)

2nd step and after:

Torque: 25.5 N.m (2.6 kg-m, 19 ft-lb)

 © 2011 Mitchell Repair Information Company, LLC.

Inspection

INSPECTION AFTER REMOVAL

Surface Distortion

- Check the surface distortion of the intake manifold mating surface with a straightedge (A) and a feeler gauge (B).

  Limit: Refer to "INTAKE MANIFOLD".

- If it exceeds the limit, replace intake manifold.

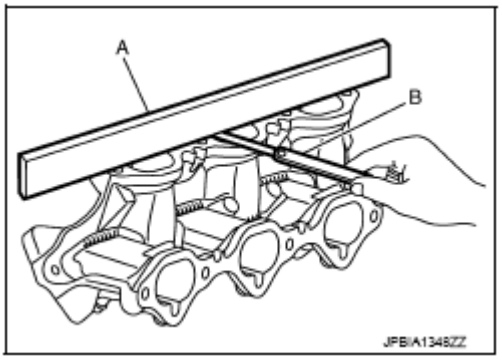

Fig. 42: Checking Surface Distortion Of Intake Manifold Mating Surface Using Straightedge And Feeler Gauge
Courtesy of NISSAN NORTH AMERICA, INC.

EXHAUST MANIFOLD

Exploded View

 © 2011 Mitchell Repair Information Company, LLC.

Symbol	Description
	N·m (kg-m, ft-lb)
	N·m (kg-m, in-lb)
	Always replace after disassembly.

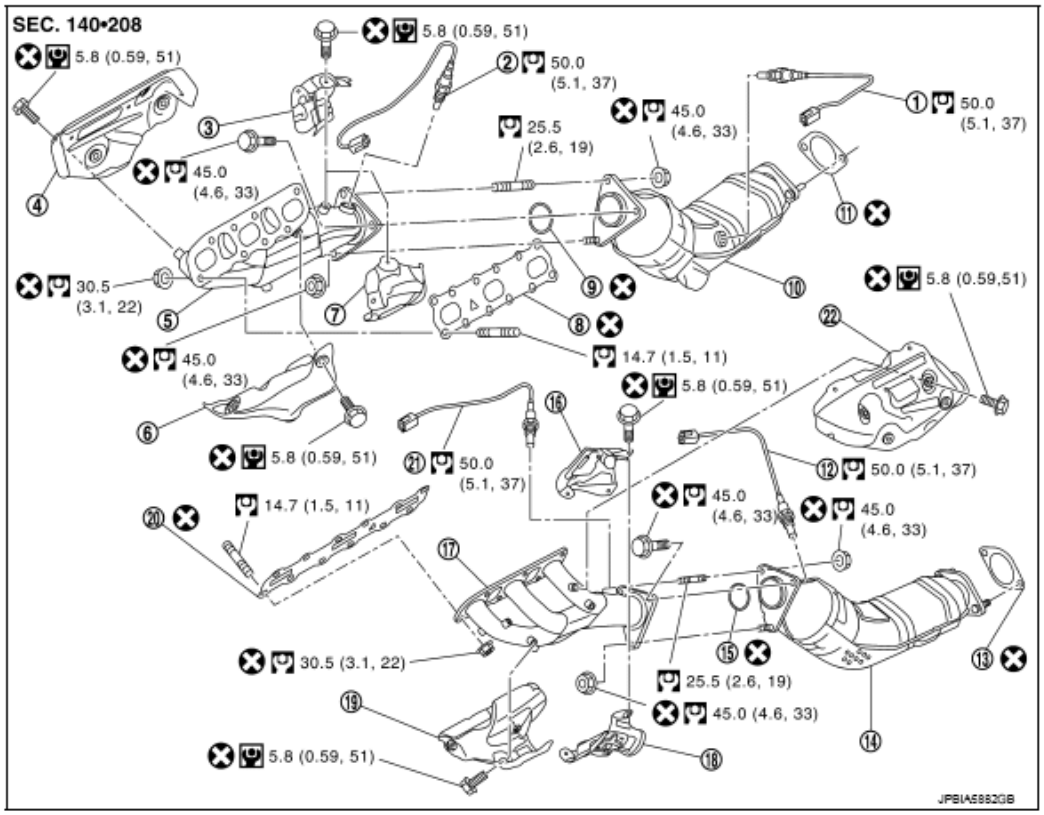

1.	Heated oxygen sensor 2 (bank 1)	2.	Air fuel ratio sensor 1 (bank 1)	3.	Exhaust manifold cover (upper rear) (bank 1)
4.	Exhaust manifold cover (upper) (bank 1)	5.	Exhaust manifold (bank 1)	6.	Exhaust manifold cover (lower) (bank 1)
7.	Exhaust manifold cover (lower rear) (bank 1)	8.	Gasket	9.	Ring gasket
10.	Three way catalyst (bank 1)	11.	Gasket	12.	Heated oxygen sensor 2 (bank 2)
13.	Gasket	14.	Three way catalyst (bank 2)	15.	Ring gasket
16.	Exhaust manifold cover (upper rear) (bank 2)	17.	Exhaust manifold (bank 2)	18.	Exhaust manifold cover (lower rear) (bank 2)
19.	Exhaust manifold cover (lower) (bank 2)	20.	Gasket	21.	Air fuel ratio sensor 1 (bank 2)
22.	Exhaust manifold cover (upper) (bank 2)				

Fig. 43: Exploded View Of Exhaust Manifold With Torque Specifications
Courtesy of NISSAN NORTH AMERICA, INC.

Refer to "**COMPONENTS** " for symbols in the figure.

Removal and Installation

REMOVAL

 © 2011 Mitchell Repair Information Company, LLC.

WARNING: Perform the work when the exhaust and cooling system have completely cooled down.

NOTE: When removing bank 1 side parts only, steps 1, 4 and 7 are unnecessary.

1. Drain engine coolant. Refer to "**DRAINING** ".
2. Remove engine cover with power tool. Refer to "**EXPLODED VIEW**".
3. Remove air cleaner case and air duct (RH and LH). Refer to "**EXPLODED VIEW**".
4. Remove water pipe and water hose. Refer to "**EXPLODED VIEW** ".
5. Remove engine undercover with power tool.
6. Remove exhaust front tube and three way catalysts (bank 1 and bank 2). Refer to "**EXPLODED VIEW** ".
7. Disconnect steering lower joint at power steering gear assembly side, and release steering lower shaft.
8. Disconnect air fuel ratio sensor 1 (bank 1 and bank 2) harness connectors and remove harness clip.
9. Using the heated oxygen sensor wrench [SST: KV10114400 (J-38365)] (C), remove air fuel ratio sensor 1 (bank 1 and bank 2).

A : Bank 1
B : Bank 2

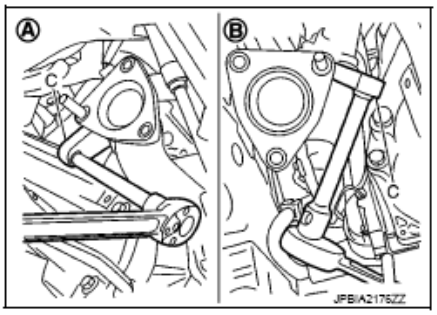

Fig. 44: Removing Air Fuel Ratio Sensor 1 Using Heated Oxygen Sensor Wrench
Courtesy of NISSAN NORTH AMERICA, INC.

CAUTION:
- **Discard air fuel ratio sensor 1 which has been dropped from a height of more than 0.5 m (19.7 in) onto a hard surface such as a concrete floor; use a new one.**
- **Before installing new air fuel ratio sensor 1, clean exhaust system threads using oxygen sensor thread cleaner (commercial service tool) and approved Antiseize lubricant (commercial service tool).**
- **Be careful not to damage air fuel ratio sensor 1.**
- **Discard any air fuel ratio sensor 1 that has been dropped onto a hard surface such as a concrete floor. Replace with a new sensor.**

10. Remove exhaust manifold cover (upper) (bank 1 and bank 2).
11. Loosen mounting nuts in reverse of the order shown in the figure below to remove exhaust manifold.

 © 2011 Mitchell Repair Information Company, LLC.

A : Bank 1
B : Bank 2
⇦ : Engine front

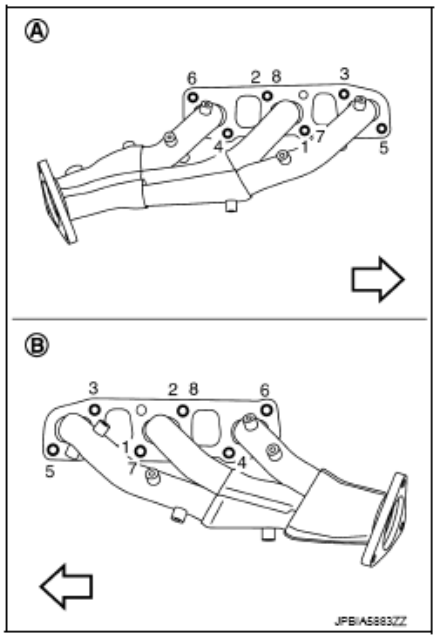

Fig. 45: Exhaust Manifold Mounting Nut Tightening Sequence
Courtesy of NISSAN NORTH AMERICA, INC.

NOTE: Disregard the numerical order No. 7 and 8 in removal.

12. Remove gaskets.

CAUTION: Cover engine openings to avoid entry of foreign materials.

INSTALLATION

Note the following, and install in the reverse order of removal.

EXHAUST MANIFOLD GASKET

- Install exhaust manifold gasket in direction shown in the figure below. (Follow the same procedure for both banks.)

A : Bank 1
B : Triangle press
C : Bank 2
⇦ : Engine front

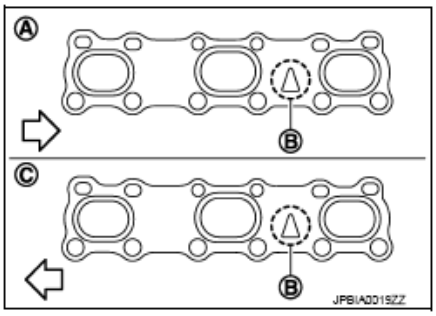

Fig. 46: Identifying Exhaust Manifold Gasket Installation Position
Courtesy of NISSAN NORTH AMERICA, INC.

EXHAUST MANIFOLD

- If stud bolts were removed, install them and tighten to the torque specified below.

  Tightening torque: Refer to "EXPLODED VIEW".

- Install exhaust manifold and tighten mounting bolts in numerical order as shown in the figure below.

A : Bank 1
B : Bank 2
⇦ : Engine front

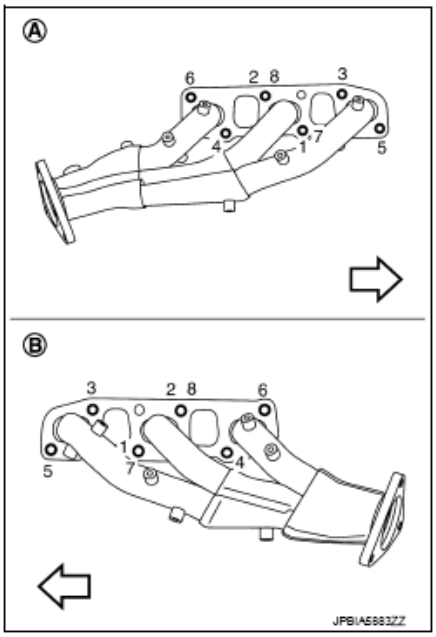

Fig. 47: Exhaust Manifold Mounting Bolt Tightening Sequence
Courtesy of NISSAN NORTH AMERICA, INC.

NOTE: **Tighten nuts the No. 1 and 2 in two steps. The numerical order No. 7 and 8 shows the second step.**

AIR FUEL RATIO SENSOR 1

CAUTION:

- **Before installing a new air fuel ratio sensor 1, clean exhaust system threads using heated oxygen sensor thread cleaner tool (Commercial Service Tool: J-43897-18 or J-43897-12) and apply anti-seize lubricant.**
- **Never apply excessive torque to air fuel ratio sensor 1. Doing so may cause damage to air fuel ratio sensor 1, resulting in the "MIL" illuminating.**
- **Prevent rust inhibitors from contacting the sensor body.**

 © 2011 Mitchell Repair Information Company, LLC.

Inspection

INSPECTION AFTER REMOVAL

Surface Distortion

- Check the surface distortion of the exhaust manifold mating surface with a straightedge (A) and a feeler gauge (B).

  Limit: Refer to "EXHAUST MANIFOLD".

- If it exceeds the limit, replace exhaust manifold.

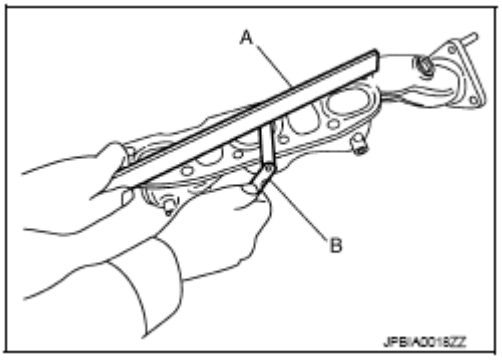

Fig. 48: Checking Surface Distortion Of Exhaust Manifold Mating Surface Using Straightedge And Feeler Gauge
Courtesy of NISSAN NORTH AMERICA, INC.

FUEL INJECTOR AND FUEL TUBE

Exploded View

 © 2011 Mitchell Repair Information Company, LLC.

Symbol	Description
	N·m (kg-m, ft-lb)
	N·m (kg-m, in-lb)
	Always replace after disassembly.

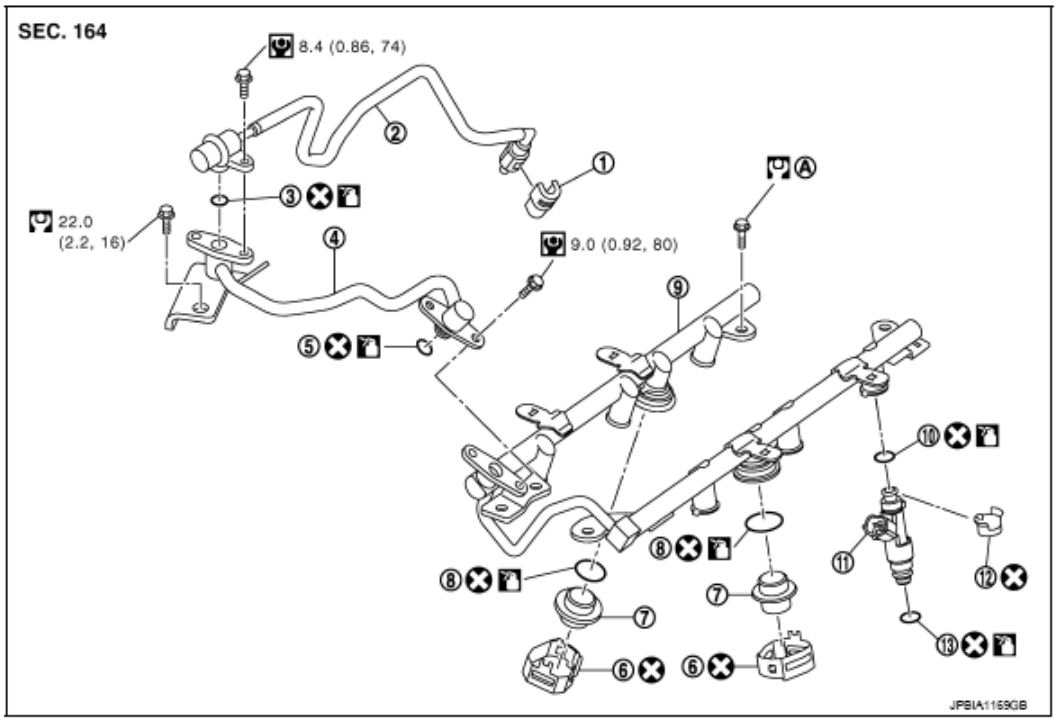

1. Quick connector cap
2. Fuel feed hose (with damper)
3. O-ring
4. Fuel sub tube
5. O-ring
6. Clip
7. Fuel damper
8. O-ring
9. Fuel tube
10. O-ring (black)
11. Fuel injector
12. Clip
13. O-ring (green)

A. Comply with the installation procedure when tightening.

Fig. 49: Exploded View Of Fuel Injector And Fuel Tube With Torque Specifications
Courtesy of NISSAN NORTH AMERICA, INC.

Refer to "**COMPONENTS** " for symbols in the figure.

CAUTION: Never remove or disassemble parts unless instructed as shown in the figure below.

Removal and Installation

REMOVAL

WARNING:

- **Put a "CAUTION: FLAMMABLE" sign in the workshop.**

 © 2011 Mitchell Repair Information Company, LLC.

- **Be sure to work in a well ventilated area and furnish workshop with a CO2 fire extinguisher.**
- **Never smoke while servicing fuel system. Keep open flames and sparks away from the work area.**
- **Never drain engine coolant when the engine is hot to avoid the danger of being scalded.**

1. Release fuel pressure. Refer to "**INSPECTION** " (For USA AND CANADA) or "**INSPECTION** " (For MEXICO).
2. Disconnect battery cable from the negative terminal. Refer to "**EXPLODED VIEW** ".
3. Remove engine cover with power tool. Refer to "**EXPLODED VIEW**".
4. Remove air cleaner case and air duct (RH and LH). Refer to "**EXPLODED VIEW**".
5. Remove intake manifold collector. Refer to "**EXPLODED VIEW**".
6. Remove fuel feed hose (with damper) (1) from fuel sub-tube (2) and remove harness bracket (3).

⇦ : Engine front

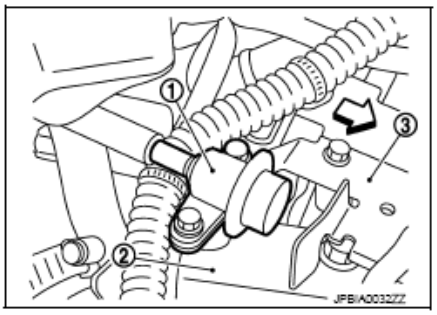

Fig. 50: Identifying Fuel Feed Hose, Fuel Sub-Tube And Harness Bracket
Courtesy of NISSAN NORTH AMERICA, INC.

NOTE: **There is no fuel return route.**

CAUTION:
- **While hoses are disconnected, plug them to prevent fuel from draining.**
- **Never separate damper and hose.**

7. When separating fuel feed hose (with damper) and centralized under-floor piping connection, disconnect quick connector as follows:
   a. Remove quick connector cap (2) from quick connector connection on right member side.
   b. Disconnect fuel feed hose (with damper) (1) from bracket hose clamp.

 © 2011 Mitchell Repair Information Company, LLC.

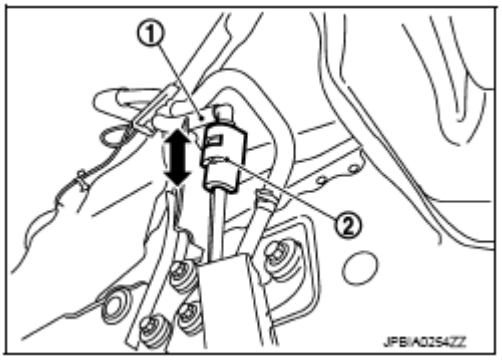

Fig. 51: Disconnecting Fuel Feed Hose From Bracket Hose Clamp
Courtesy of NISSAN NORTH AMERICA, INC.

c. Push in retainer tabs (2).
d. Draw and pull out quick connector (1) straight from centralized under-floor piping (3).

CAUTION:

- **Pull quick connector holding (A) position as shown in the figure below.**
- **Never pull with lateral force applied. O-ring inside quick connector may be damaged.**
- **Prepare container and cloth beforehand because fuel will leak out.**
- **Avoid fire and sparks.**
- **Keep parts away from heat source. Especially, be careful when welding is performed around them.**

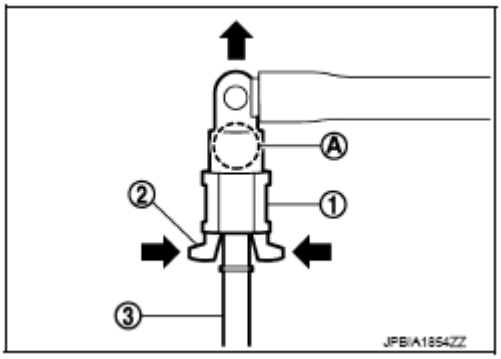

Fig. 52: Pulling Out Quick Connector
Courtesy of NISSAN NORTH AMERICA, INC.

- **Never expose parts to battery electrolyte or other acids.**
- **Never bend or twist connection between quick connector and fuel feed hose (with damper) during installation/removal.**

 © 2011 Mitchell Repair Information Company, LLC.

- **To keep the connecting portion clean and to avoid damage and foreign materials, cover them completely with plastic bags, etc. (A) or a similar item.**

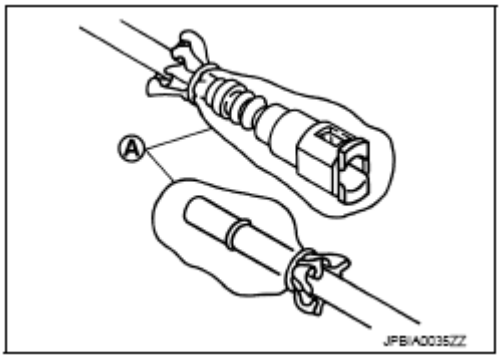

Fig. 53: Securing Quick Connector
Courtesy of NISSAN NORTH AMERICA, INC.

8. Remove fuel sub tube mounting bolt.
9. Disconnect harness connector from fuel injector.
10. Loosen mounting bolts in reverse of the order shown in the figure below, and remove fuel tube and fuel injector assembly.

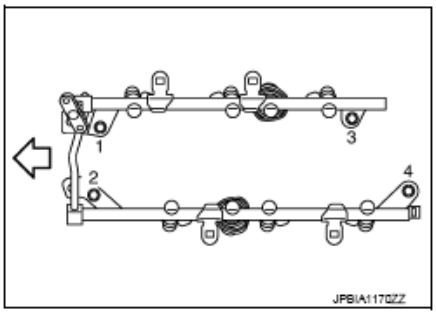

Fig. 54: Fuel Tube And Fuel Injector Assembly Mounting Bolt Tightening Sequence
Courtesy of NISSAN NORTH AMERICA, INC.

CAUTION: Never tilt it, or remaining fuel in pipes may flow out from pipes.

11. Remove fuel injector (2) from fuel tube (4) as follows:

 © 2011 Mitchell Repair Information Company, LLC.

Symbol	Description
	N·m (kg-m, ft-lb)
	N·m (kg-m, in-lb)
	Always replace after disassembly.

3 : O-ring
A : Installed condition
B : Clip mounting groove

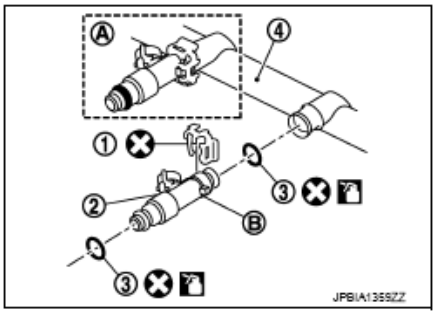

Fig. 55: Identifying Fuel Injector, Fuel Tube And O-Ring
Courtesy of NISSAN NORTH AMERICA, INC.

a. Open and remove clip (1).
b. Remove fuel injector from fuel tube by pulling straight.

CAUTION:
- **Be careful with remaining fuel that may go out from fuel tube.**
- **Be careful not to damage injector nozzles during removal.**
- **Never bump or drop fuel injector.**
- **Never disassemble fuel injector.**

12. Remove fuel sub-tube and fuel damper, if necessary.

INSTALLATION

CAUTION: Do not reuse O-rings.

1. Install fuel damper (4) as follows:

 © 2011 Mitchell Repair Information Company, LLC.

2 : Cup
5 : Clip
C : Cut-out

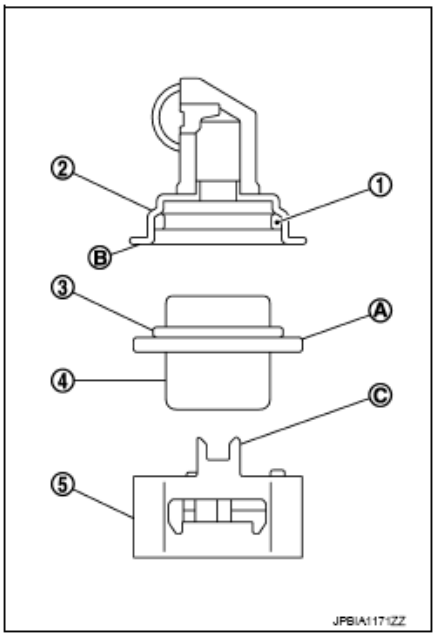

Fig. 56: Identifying Fuel Damper Related Components
Courtesy of NISSAN NORTH AMERICA, INC.

a. Install new O-ring (1) to fuel tube as shown below. When handling new O-ring, pay attention to the following caution items:

CAUTION:

- **Do not reuse O-rings.**
- **Handle O-ring with bare hands. Never wear gloves.**
- **Lubricate O-ring with new engine oil.**
- **Never clean O-ring with solvent.**
- **Check that O-ring and its mating part are free of foreign material.**
- **When installing O-ring, be careful not to scratch it with tool or fingernails. Also be careful not to twist or stretch O-ring. If O-ring was stretched while it was being attached, do not insert it quickly into fuel tube.**
- **Insert new O-ring straight into fuel tube. Never twist it.**

b. Install spacer (3) to fuel damper.
c. Insert fuel damper straight into fuel tube.

CAUTION:

- **Insert straight, checking that the axis is lined up.**
- **Never pressure-fit with excessive force.**

Reference value: 130 N (13.3 kg, 29.2 lb)

 © 2011 Mitchell Repair Information Company, LLC.

- **Insert fuel damper until (A) is touching (B) of fuel tube.**

d. Install the cut-out (A) of the clip (2) to the projection (B), which ensures that the fuel tube does not move or rotate.

1 : Fuel tube

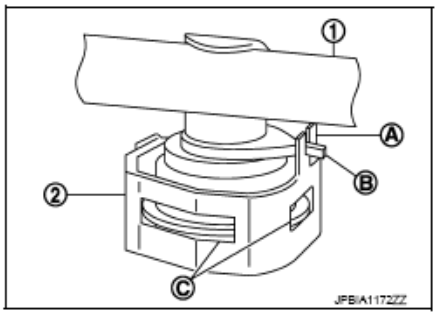

Fig. 57: Identifying Fuel Tube, Cut-Out, Clip And Protrusion
Courtesy of NISSAN NORTH AMERICA, INC.

e. Unlock the clip after making sure that the rib of the cup and the brim of the fuel damper are mated each other and positioned in the holes (C) of the clip.
f. Check that the opening (B) and the slit (C) of the clip are positioned and fixed properly so it does not rotate or pull out.

A : Under view

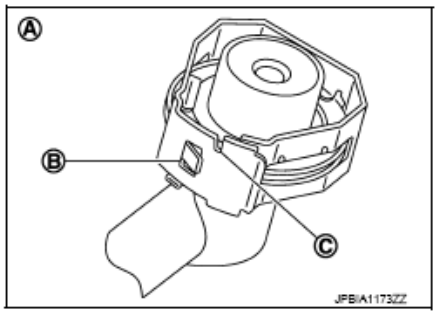

Fig. 58: Identifying Clip Opening And Slit
Courtesy of NISSAN NORTH AMERICA, INC.

2. Install fuel sub-tube.
   - When handling new O-rings, be careful of the following caution items:

CAUTION:
- **Do not reuse O-rings.**
- **Handle O-ring with bare hands. Never wear gloves.**
- **Lubricate O-ring with new engine oil.**
- **Never clean O-ring with solvent.**
- **Check that O-ring and its mating part are free of foreign material.**

 © 2011 Mitchell Repair Information Company, LLC.

- **When installing O-ring, be careful not to scratch it with tool or fingernails. Also be careful not to twist or stretch O-ring. If O-ring was stretched while it was being attached, never insert it quickly into fuel tube.**
- **Insert new O-ring straight into fuel tube. Never decenter or twist it.**

- Insert fuel sub-tube straight into fuel tube.
- Tighten mounting bolts evenly in turn.
- After tightening mounting bolts, Check that there is no gap between flange and fuel tube.

3. Install new O-rings to fuel injector, paying attention to the following items.

CAUTION:

- **Do not reuse O-rings.**
- **Upper and lower O-ring are different. Be careful not to confuse them.**

  Fuel tube side: Black

  Nozzle side: Green

- **Handle O-ring with bare hands. Never wear gloves.**
- **Lubricate O-ring with new engine oil.**
- **Never clean O-ring with solvent.**
- **Check that O-ring and its mating part are free of foreign material.**
- **When installing O-ring, be careful not to scratch it with tool or fingernails. Also be careful not to twist or stretch O-ring. If O-ring was stretched while it was being attached, never insert it quickly into fuel tube.**
- **Insert O-ring straight into fuel injector. Never decenter or twist it.**

4. Install fuel injector to fuel tube as follows:

 © 2011 Mitchell Repair Information Company, LLC.

Symbol	Description
	N·m (kg-m, ft-lb)
	N·m (kg-m, in-lb)
	Always replace after disassembly.

2 : O-ring (Black)
4 : O-ring (Green)

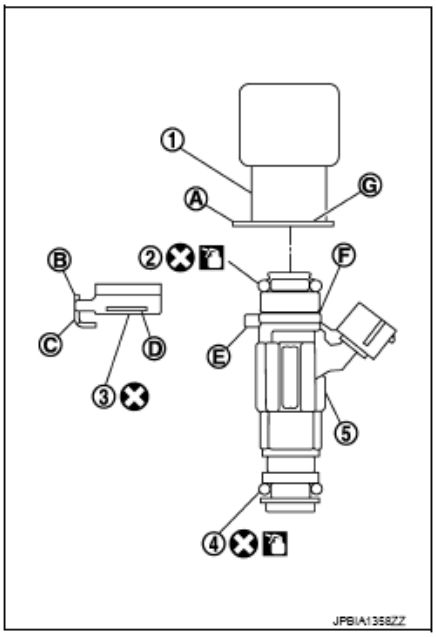

Fig. 59: Identifying Fuel Injector Related Components
Courtesy of NISSAN NORTH AMERICA, INC.

a. Insert clip (3) into clip mounting groove (F) on fuel injector (5).

CAUTION:
- **Never reuse clip. Replace it with a new one.**
- **Be careful to keep clip from interfering with O-ring. If interference occurs, replace O-ring.**
- **Insert clip so that protrusion (E) of fuel injector matches cut-out (C) of clip.**

b. Insert fuel injector into fuel tube (1) with clip attached.
   - Insert it while matching it to the axial center.
   - Insert fuel injector so that protrusion (A) of fuel tube matches cutout (B) of clip.
   - Check that fuel tube flange (G) is securely fixed in flange fixing groove (D) on clip.

c. Check that installation is complete by checking that fuel injector does not rotate or come off.
   - Check that protrusions of fuel injectors and fuel tube are aligned with cutouts of clips after installation.

5. Install fuel tube and fuel injector assembly to intake manifold.

CAUTION: Be careful not to let tip of injector nozzle come in contact with other

 © 2011 Mitchell Repair Information Company, LLC.

parts.

- Tighten mounting bolts in two steps in numerical order as shown in the figure below.

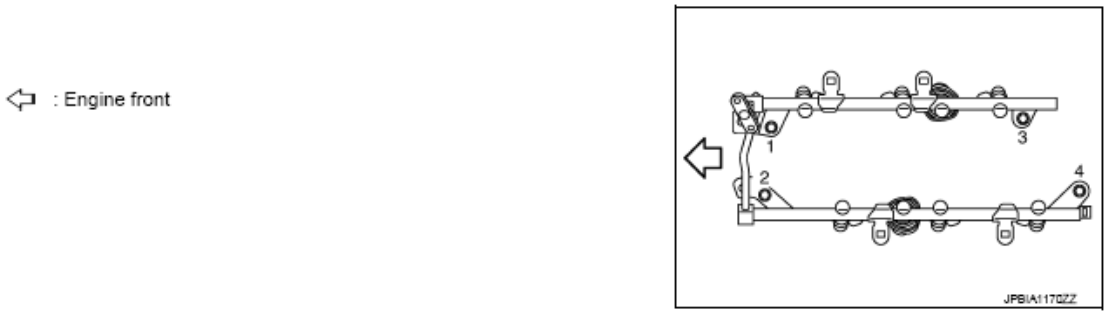

Fig. 60: Fuel Tube And Fuel Injector Assembly To Intake Manifold Mounting Bolt Tightening Sequence
Courtesy of NISSAN NORTH AMERICA, INC.

Torque 1st step: 10.1 N.m (1.0 kg-m, 7 ft-lb)

Torque 2nd step: 23.6 N.m (2.4 kg-m, 17 ft-lb)

6. Connect injector sub-harness.
7. Install fuel sub tube mounting bolt.
8. Connect fuel feed hose (with damper).
   - Handling procedure of O-ring is the same as that of fuel damper and fuel sub-tube.
   - Insert fuel damper straight into fuel sub-tube.
   - Tighten mounting bolts evenly in turn.
   - After tightening mounting bolts, check that there is no gap between flange and fuel sub-tube.
9. Connect quick connector between fuel feed hose (with damper) and centralized under-floor piping connection as follows:
   a. Check that no foreign substances are deposited in and around centralized under-floor piping and quick connector, and that there is no damage to them.
   b. Thinly apply new engine oil around centralized under-floor piping from tip end to spool end.
   c. Align center to insert quick connector straightly into centralized under-floor piping.
      - Insert quick connector to centralized under-floor piping until top spool is completely inside quick connector and 2nd level spool exposes right below quick connector.

CAUTION:
- **Hold align center to avoid inclined insertion to prevent damage to O-ring inside quick connector.**
- **Insert until you hear a "click" sound and actually feel the engagement.**
- **To avoid misidentification of engagement with a similar sound, be sure to perform the next step.**

 © 2011 Mitchell Repair Information Company, LLC.

d. Pull quick connector by hand holding position (A). Check it is completely engaged (connected) so that it does not come out from centralized under-floor piping (1).

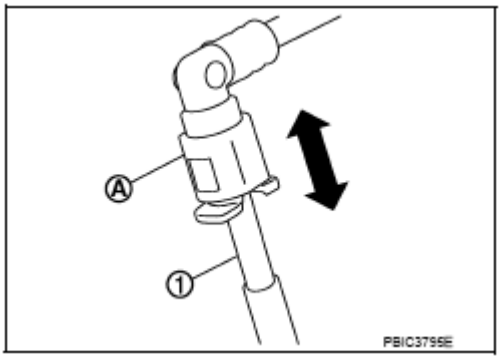

Fig. 61: Pulling Quick Connector
Courtesy of NISSAN NORTH AMERICA, INC.

e. Install quick connector cap (3) to quick connector connection.

1 : Centralized under-floor piping
2 : Fuel feed hose
B : Under view

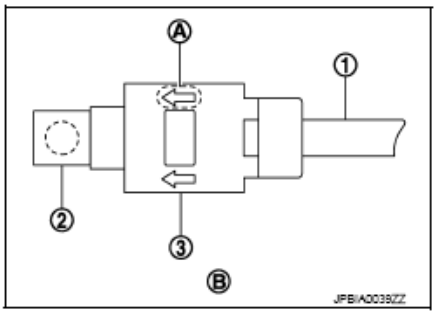

Fig. 62: Identifying Quick Connector Cap Installation Position
Courtesy of NISSAN NORTH AMERICA, INC.

- Install quick connector cap with arrow (A) on surface facing in direction of quick connector (fuel feed hose side).

CAUTION: If quick connector cap cannot be installed smoothly, quick connector may have not been installed correctly. Check the connection again.

10. Install in the reverse order of removal after this step.

Inspection

INSPECTION AFTER INSTALLATION

Check for Fuel Leakage

1. Turn ignition switch "ON" (with the engine stopped). With fuel pressure applied to fuel piping, check that

 © 2011 Mitchell Repair Information Company, LLC.

there is no fuel leakage at connection points.

NOTE: Use mirrors for checking at points out of clear sight.

2. Start the engine. With engine speed increased, check that again that there is no fuel leakage at connection points.

CAUTION: Never touch the engine immediately after it is stopped because the engine is extremely hot.

OIL PAN (LOWER)

Exploded View (2WD)

 © 2011 Mitchell Repair Information Company, LLC.

Symbol	Description
	N·m (kg-m, ft-lb)
	N·m (kg-m, in-lb)
	Always replace after disassembly.

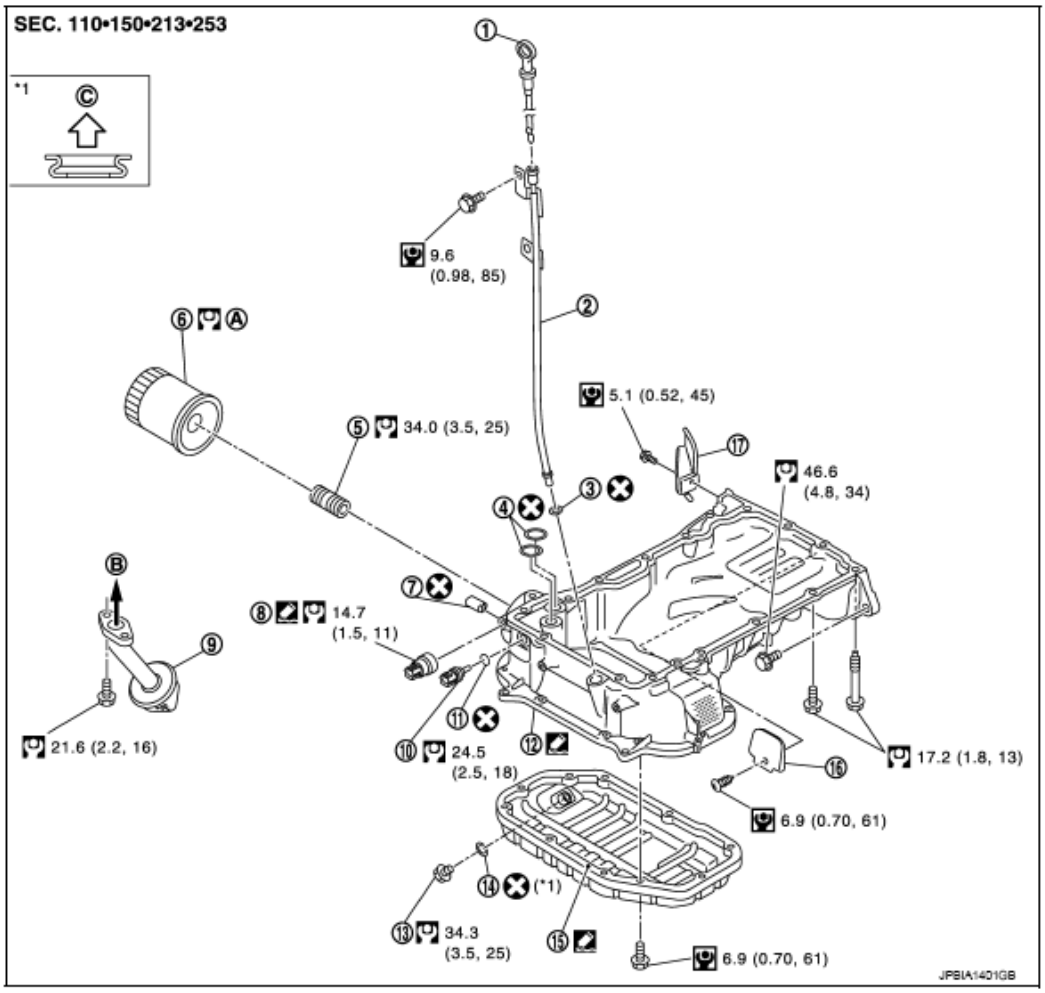

1.	Oil level gauge	2.	Oil level gauge guide	3.	O-ring
4.	O-ring	5.	Connector bolt	6.	Oil filter
7.	Relief valve	8.	Oil pressure switch	9.	Oil strainer
10.	Oil temperature sensor	11.	Washer	12.	Oil pan (upper)
13.	Drain plug	14.	Drain plug washer	15.	Oil pan (lower)
16.	Rear plate cover	17.	Rear cover plate (M/T models)		
A.	Comply with the installation procedure when tightening.	B.	To oil pump	C.	Oil pan side

Fig. 63: Exploded View Of Lower Oil Pan With Torque Specifications (2WD)
Courtesy of NISSAN NORTH AMERICA, INC.

Refer to "**COMPONENTS** " for symbols in the figure.

Exploded View (AWD)

 © 2011 Mitchell Repair Information Company, LLC.

Symbol	Description
	N·m (kg-m, ft-lb)
	N·m (kg-m, in-lb)
	Always replace after disassembly.

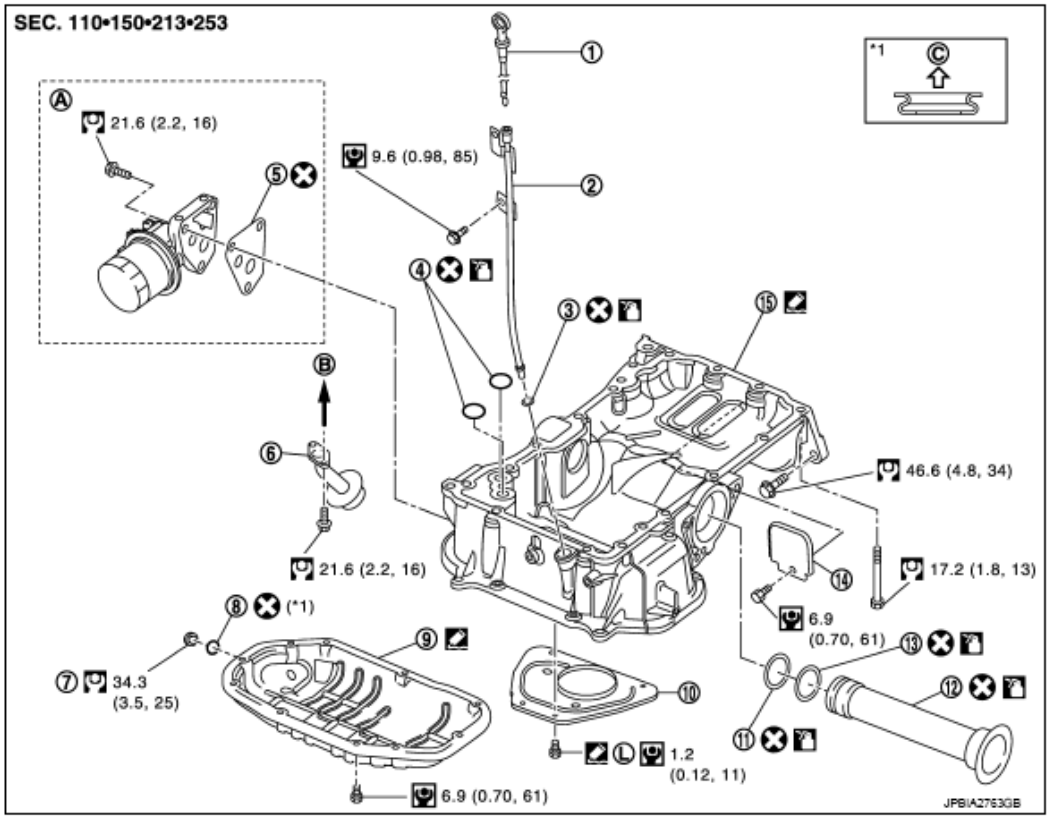

1.	Oil level gauge	2.	Oil level gauge guide	3.	O-ring
4.	O-ring	5.	Gasket	6.	Oil strainer
7.	Drain plug	8.	Drain plug washer	9.	Oil pan (lower)
10.	Baffle plate	11.	O-ring (small)	12.	Axle pipe
13.	O-ring (large)	14.	Rear plate cover	15	Oil pan (upper)
A.	Comply with the installation procedure when tightening.	B.	To oil pump	C.	Oil pan side

Fig. 64: Exploded View Of Lower Oil Pan With Torque Specifications (AWD)
Courtesy of NISSAN NORTH AMERICA, INC.

Refer to "**COMPONENTS** " for symbols in the figure.

Removal and Installation

REMOVAL

CAUTION: Never drain engine oil when the engine is hot to avoid the danger of being scalded.

 © 2011 Mitchell Repair Information Company, LLC.

1. Remove engine undercover with power tool.
2. Remove oil pan (lower) as follows:
   a. Loosen mounting bolts in reverse of the order shown in the figure below to remove.

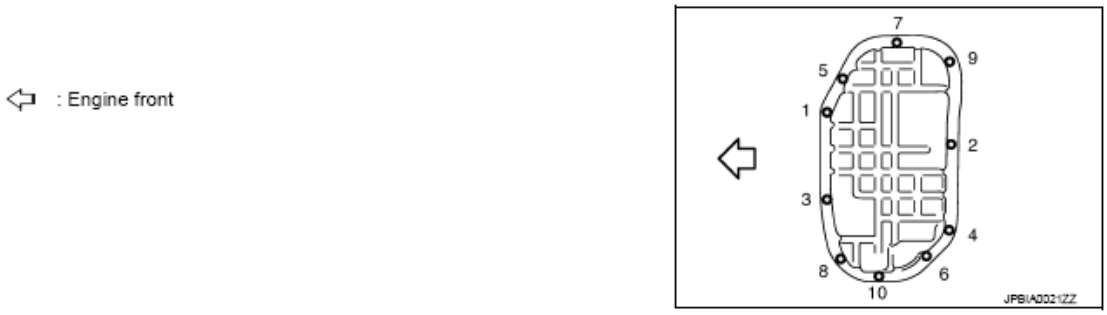

Fig. 65: Lower Oil Pan Mounting Bolt Tightening Sequence
Courtesy of NISSAN NORTH AMERICA, INC.

   b. Insert the seal cutter [SST: KV10111100 (J-37228)] (A) between oil pan (upper) and oil pan (lower).

CAUTION:
- **Be careful not to damage the mating surfaces.**
- **Never insert a screwdriver. This damages the mating surfaces.**

   c. Slide the seal cutter by tapping on the side of tool with a hammer. Remove oil pan (lower).

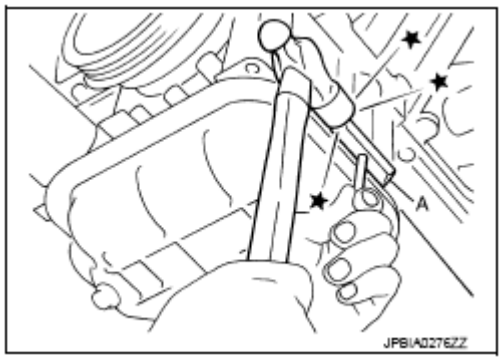

Fig. 66: Inserting Seal Cutter Between Oil Pan (Upper And Lower)
Courtesy of NISSAN NORTH AMERICA, INC.

INSTALLATION

CAUTION: Do not reuse drain plug washer.

1. Install oil pan (lower) as follows:

 © 2011 Mitchell Repair Information Company, LLC.

a. Use scraper (A) to remove old liquid gasket from mating surfaces.
   - Remove old liquid gasket from the bolt holes and thread.

CAUTION: Never scratch or damage the mating surfaces when cleaning off old liquid gasket.

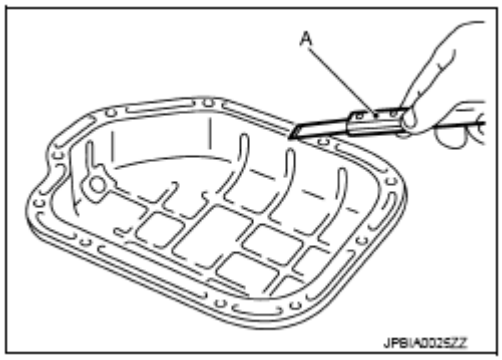

Fig. 67: Removing Liquid Gasket From Mating Surfaces Using Scraper
Courtesy of NISSAN NORTH AMERICA, INC.

b. Apply a continuous bead of liquid gasket with the tube presser (commercial service tool) to the oil pan (lower) as shown in the figure below.

a : ϕ4.0 - 5.0 mm (0.157 - 0.197 in)
⇦ : Engine front

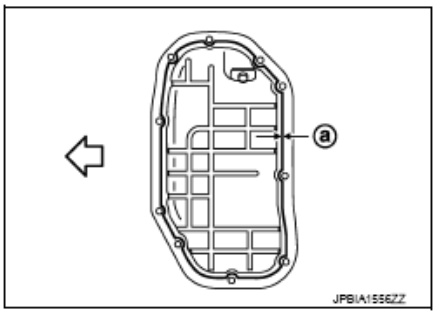

Fig. 68: Identifying Liquid Gasket Applying Area On Oil Pan (Lower)
Courtesy of NISSAN NORTH AMERICA, INC.

Use Genuine RTV Silicone Sealant or equivalent. Refer to "RECOMMENDED CHEMICAL PRODUCTS AND SEALANTS ".

CAUTION: Attaching should be done within 5 minutes after coating.

c. Install oil pan (lower).
   - Tighten mounting bolts in numerical order as shown in the figure below.

 © 2011 Mitchell Repair Information Company, LLC.

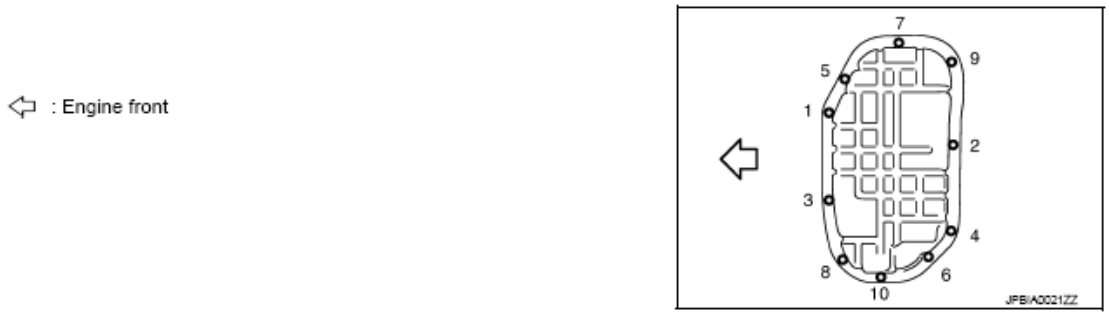

Fig. 69: Lower Oil Pan Mounting Bolt Tightening Sequence
Courtesy of NISSAN NORTH AMERICA, INC.

2. Install oil pan drain plug.

CAUTION: Do not reuse drain plug washer.

- Refer to the figure of the components above for installation direction of drain plug washer. Refer to "**EXPLODED VIEW (2WD)**".

3. Install in the reverse order of removal after this step.

NOTE: Wait at least 30 minutes after oil pan is installed before pouring engine oil.

Inspection

INSPECTION AFTER REMOVAL

Clean oil strainer if any object is attached.

INSPECTION AFTER INSTALLATION

1. Check the engine oil level and adjust engine oil. Refer to "**INSPECTION** ".
2. Start engine, and check there is no leakage of engine oil.
3. Stop engine and wait for 10 minutes.
4. Check the engine oil level again. Refer to "**INSPECTION** ".

IGNITION COIL, SPARK PLUG AND ROCKER COVER

Exploded View

 © 2011 Mitchell Repair Information Company, LLC.

Symbol	Description
	N·m (kg-m, ft-lb)
	N·m (kg-m, in-lb)
	Always replace after disassembly.

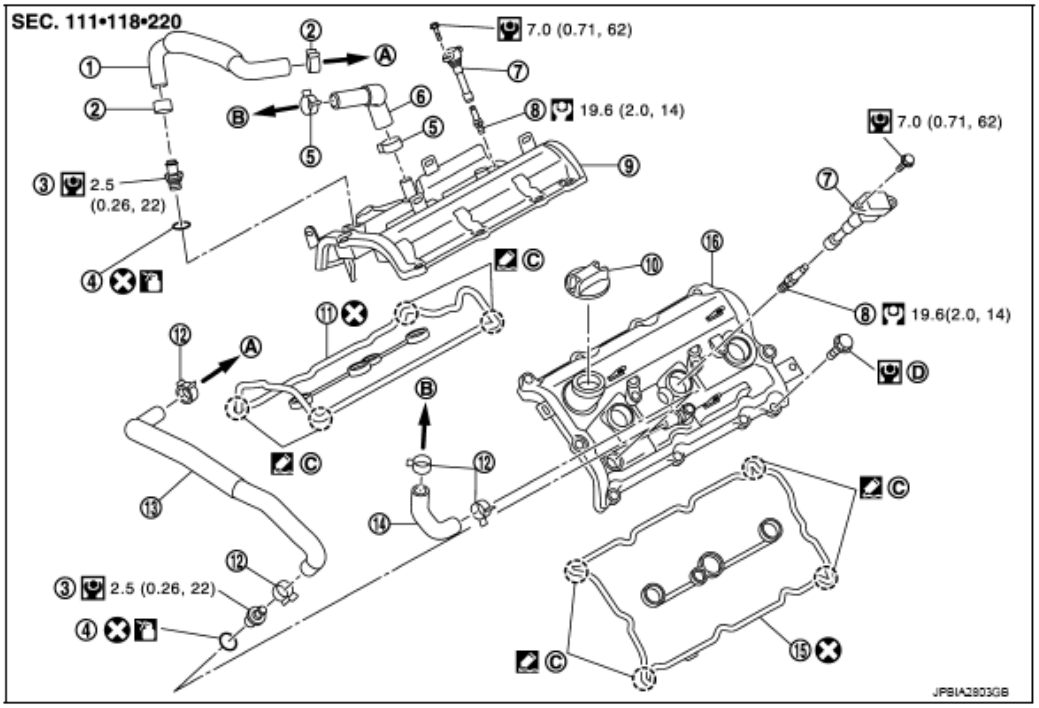

1.	PCV hose	2.	Clamp	3.	PCV valve
4.	O-ring	5.	Clamp	6.	PCV hose
7.	Ignition coil	8.	Spark plug	9.	Rocker cover (bank 1)
10.	Oil filler cap	11.	Rocker cover gasket (bank 1)	12.	Clamp
13.	PCV hose	14.	PCV hose	15.	Rocker cover gasket (bank 2)
16.	Rocker cover (bank 2)				
A.	To intake manifold collector	B.	To air duct	C.	VVEL ladder assembly side
D.	Comply with the installation procedure when tightening.				

Fig. 70: Exploded View Of Ignition Coil, Spark Plug And Rocker Cover With Torque Specifications
Courtesy of NISSAN NORTH AMERICA, INC.

Refer to "**COMPONENTS** " for symbols in the figure.

Removal and Installation

REMOVAL

1. Remove the following parts:
   - Engine cover: Refer to "**EXPLODED VIEW**".
   - Air cleaner case and air duct (RH and LH): Refer to "**EXPLODED VIEW**".
   - Intake manifold collector: Refer to "**EXPLODED VIEW**".

 © 2011 Mitchell Repair Information Company, LLC.

2. Disconnect PCV hose from rocker cover.
3. Remove PCV valve and O-ring from rocker cover, if necessary.
4. Remove oil filler cap from rocker cover, if necessary.
5. Remove ignition coil.

CAUTION: Never shock ignition coil.

6. Remove harness clips on the rocker cover.
7. Loosen mounting bolts with power tool in reverse of the order shown in the figure below.

A : Bank 1
B : Bank 2
⇦ : Engine front

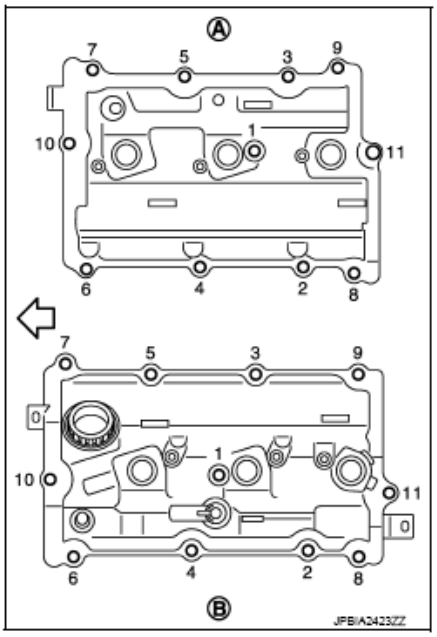

Fig. 71: Rocker Cover Mounting Bolts Tightening Sequence
Courtesy of NISSAN NORTH AMERICA, INC.

8. Remove rocker cover gasket from rocker cover.
9. Use scraper to remove all traces of liquid gasket from cylinder head and VVEL ladder assembly.

CAUTION: Never scratch or damage the mating surface when cleaning off old liquid gasket.

INSTALLATION

CAUTION: Do not reuse O-rings.

 © 2011 Mitchell Repair Information Company, LLC.

1. Apply liquid gasket to the position shown in the figure below with the following procedure:

2 : Actuator bracket (rear)
3 : VVEL actuator sub assembly
A : Liquid gasket application point
F : View F
I : End surface of VVEL ladder assembly
b : 4 mm (0.16 in)
c : ϕ2.5 - 3.5 mm (0.098 - 0.138 in)
d : 5 mm (0.20 in)
g : 10 mm (0.39 in)
⇦ : Engine front

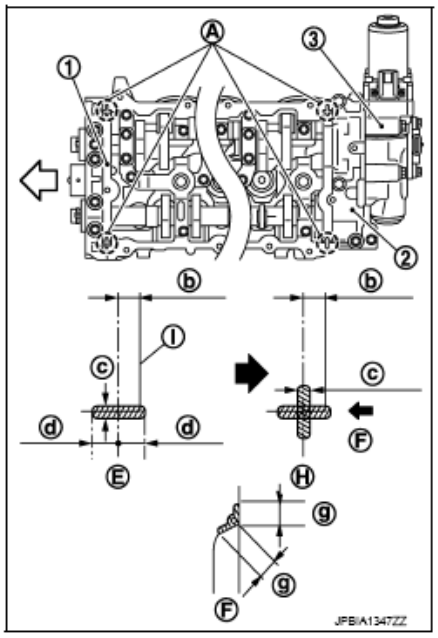

Fig. 72: Identifying Liquid Gasket Applying Area On VVEL Ladder Assembly
Courtesy of NISSAN NORTH AMERICA, INC.

a. Refer to figure (E) to apply liquid gasket to joint part of VVEL ladder assembly (1) and cylinder head.
b. Refer to figure (H) to apply liquid gasket in 90 degrees to figure.

Use Genuine RTV Silicone Sealant or equivalent. Refer to "RECOMMENDED CHEMICAL PRODUCTS AND SEALANTS ".

2. Install rocker cover gasket to rocker cover.
3. Install rocker cover.
   - Check that rocker cover gasket does not drop from the installation groove of rocker cover.
4. Tighten bolts in two steps separately in numerical order as shown in the figure below.

 © 2011 Mitchell Repair Information Company, LLC.

A : Bank 1
B : Bank 2
⇦ : Engine front

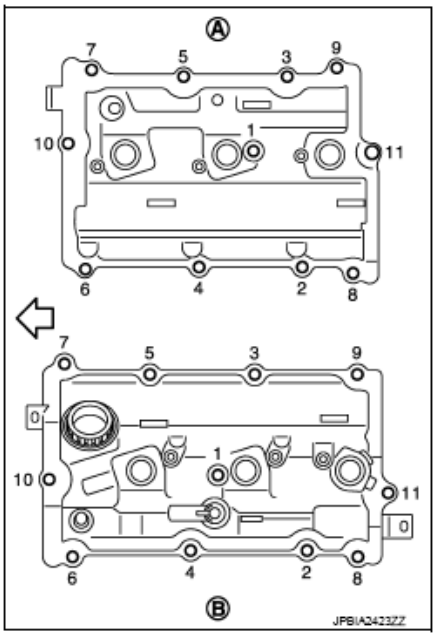

Fig. 73: Identifying Rocker Cover Mounting Bolts Tightening Sequence
Courtesy of NISSAN NORTH AMERICA, INC.

Torque 1st step: 2.0 N.m (0.2 kg-m, 18 in-lb)

Torque 2nd step: 8.3 N.m (0.85 kg-m, 73 in-lb)

5. Install in the reverse order of removal after this step.

TIMING CHAIN

Exploded View

 © 2011 Mitchell Repair Information Company, LLC.

Symbol	Description
	N·m (kg-m, ft-lb)
	N·m (kg-m, in-lb)
	Always replace after disassembly.

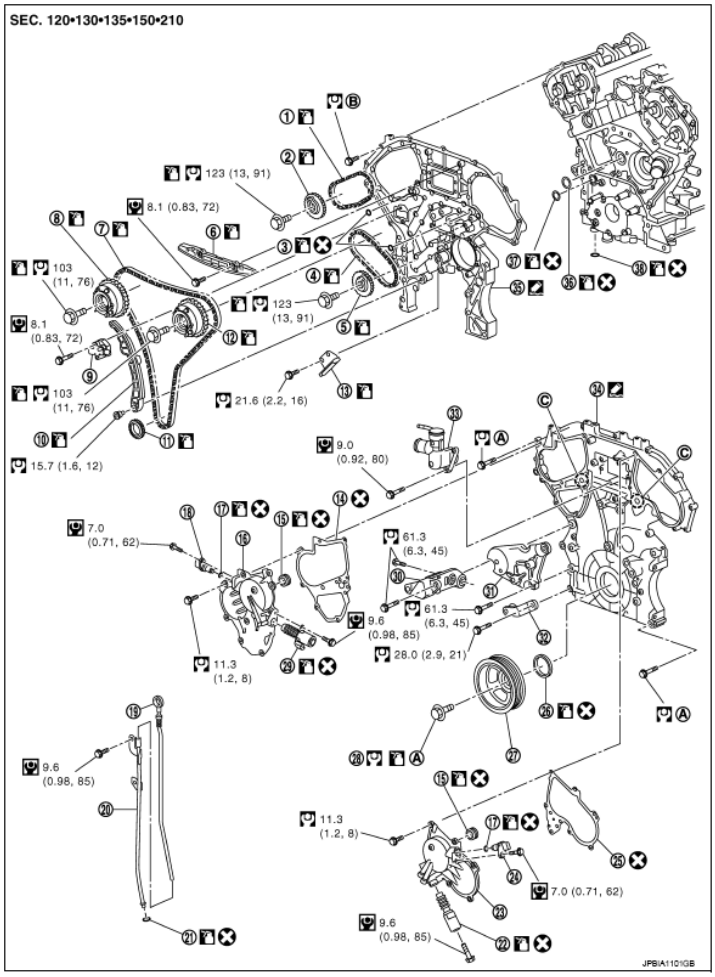

1.	Timing chain (secondary)	2.	Camshaft sprocket (EXH)	3.	O-ring
4.	Timing chain (secondary)	5.	Camshaft sprocket (EXH)	6.	Internal chain guide
7.	Timing chain (primary)	8.	Camshaft sprocket (INT) (bank 1)	9.	Timing chain tensioner (primary)
10.	Slack guide	11.	Crankshaft sprocket	12.	Camshaft sprocket (INT) (bank 2)
13.	Tension guide	14.	Intake valve timing control cover gasket (bank 1)	15.	Seal ring
16.	Intake valve timing control cover (bank 1)	17.	O-ring	18.	Camshaft position sensor (PHASE) (bank 1)
19.	Oil level gauge	20.	Oil level gauge guide	21.	O-ring
22.	Intake valve timing control solenoid valve (bank 2)	23.	Intake valve timing control cover (bank 2)	24.	Camshaft position sensor (PHASE) (bank 2)
25.	Intake valve timing control cover gasket (bank 2)	26.	Front oil seal	27.	Crankshaft pulley
28.	Crankshaft pulley bolt	29.	Intake valve timing control solenoid valve (bank 1)	30.	Power steering oil pump bracket
31.	Idler pulley bracket	32.	Alternator bracket	33.	Water outlet (front)
34.	Front timing chain case	35.	Rear timing chain case	36.	O-ring
37.	O-ring	38.	O-ring		
A.	Comply with the installation procedure when tightening.	B.	Comply with the installation procedure when tightening.	C.	Oil filter

Fig. 74: Exploded View Of Timing Chain With Torque Specifications
Courtesy of NISSAN NORTH AMERICA, INC.

Refer to "**COMPONENTS** " for symbol marks in the figure.

 © 2011 Mitchell Repair Information Company, LLC.

Removal and Installation

REMOVAL

1. Release the fuel pressure. Refer to "**INSPECTION** " (For USA AND CANADA) or "**INSPECTION** " (For MEXICO).
2. Disconnect the battery cable from the negative terminal.
3. Remove engine cover with power tool. Refer to "**EXPLODED VIEW**".
4. Remove radiator reservoir tank. Refer to "**EXPLODED VIEW** ".
5. Remove air duct and air cleaner case assembly (RH and LH). Refer to "**EXPLODED VIEW**".
6. Remove engine undercover with power tool.
7. Drain engine coolant from radiator. Refer to "**DRAINING** ".

CAUTION:
- **Perform this step when the engine is cold.**
- **Never spill engine coolant on drive belt.**

8. Remove radiator hose (upper and lower). Refer to "**EXPLODED VIEW** ".
9. Drain engine oil. Refer to "**DRAINING** ".

CAUTION: Perform this step when the engine is cold.

10. Remove radiator cooling fan assembly. Refer to "**EXPLODED VIEW** ".
11. Remove drive belt. Refer to "**REMOVAL AND INSTALLATION**".
12. Separate engine harnesses by removing their brackets from front timing chain case.
13. Remove intake manifold collector. Refer to "**EXPLODED VIEW**".
14. Remove fuel sub tube mounting bolt. Refer to "**EXPLODED VIEW**".
15. Remove oil level gauge and oil level gauge guide.
16. Remove A/C compressor from bracket with piping connected, and temporarily secure it aside. Refer to "**EXPLODED VIEW** ".
17. Remove power steering oil pump from bracket with piping connected, and temporarily secure it aside. Refer to "**EXCEPT 2WD SPORT MODELS FOR NORTH AMERICA: EXPLODED VIEW** " or "**2WD SPORT MODELS FOR NORTH AMERICA: EXPLODED VIEW** ".
18. Remove power steering oil pump bracket.
19. Remove idler pulley, drive belt auto-tensioner and bracket. Refer to "**EXPLODED VIEW**".
20. Remove alternator and alternator bracket. Refer to "**2WD: EXPLODED VIEW** " (2WD models) or "**AWD: EXPLODED VIEW** " (AWD models).
21. Remove water pipe. Refer to "**EXPLODED VIEW** ".
22. Remove camshaft position sensor (PHASE).

 © 2011 Mitchell Repair Information Company, LLC.

A : Keep free from magnetic materials

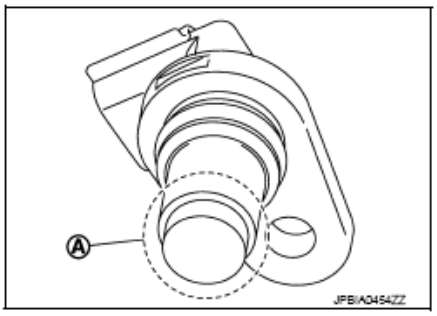

Fig. 75: Identifying Camshaft Position Sensor Inspection Area
Courtesy of NISSAN NORTH AMERICA, INC.

CAUTION:
- **Handle carefully to avoid dropping and shocks.**
- **Never disassemble.**
- **Never allow metal powder to contact magnetic part at sensor tip.**
- **Never place sensors in a location where they are exposed to magnetism.**

23. Remove intake valve timing control covers and gasket as follows:
    a. Disconnect intake valve timing control solenoid valve harness connector.
    b. Loosen mounting bolts in reverse of the order shown in the figure below.

A : Bank 1
B : Bank 2
C : Dowel pin hole

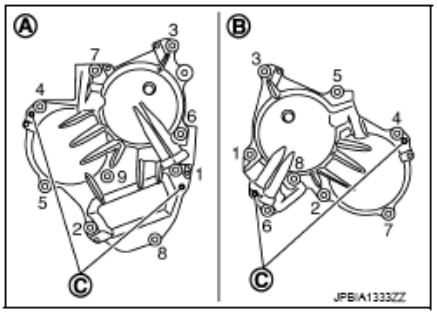

Fig. 76: Intake Valve Timing Control Cover Mounting Bolt Tightening Sequence
Courtesy of NISSAN NORTH AMERICA, INC.

CAUTION: Shaft is internally jointed with camshaft sprocket (INT) center hole. When removing, keep it horizontal until it is completely disconnected.

    c. Shaft is engaged with camshaft sprocket (INT) center hole on inside. Pull straight out so that it does not tilt until the joint is disengaged.
24. Remove intake valve timing control solenoid valve, if necessary.

 © 2011 Mitchell Repair Information Company, LLC.

CAUTION: Intake valve timing control solenoid valve is nonreusable. Never remove it unless required.

25. Remove rocker covers (bank 1 and bank 2). Refer to "**EXPLODED VIEW**".
26. Obtain No. 1 cylinder at TDC of its compression stroke as follows:
    a. Rotate crankshaft pulley clockwise to align timing mark (grooved line without color) with timing indicator.

: Timing mark (grooved line without color)

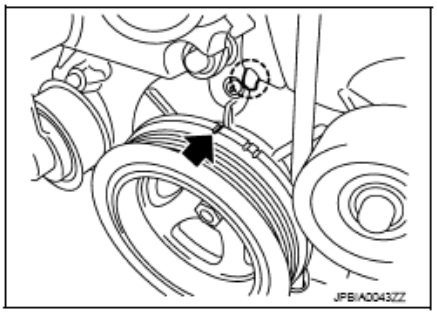

Fig. 77: Locating Crankshaft Pulley Timing Mark
Courtesy of NISSAN NORTH AMERICA, INC.

    b. Check that exhaust cam noses on No. 1 cylinder (engine front side of bank 1) is located as shown in the figure below.

1 : Camshaft (EXH) (bank 1)
: Engine front

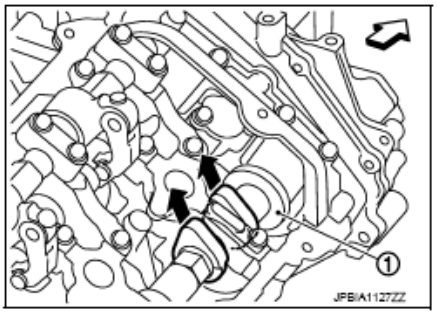

Fig. 78: Locating Exhaust Cam Noses On No. 1 Cylinder
Courtesy of NISSAN NORTH AMERICA, INC.

- If not, turn crankshaft one revolution (360 degrees) and align as shown in the figure below.

27. Remove crankshaft pulley as follows:
    a. Remove rear cover plate and set the ring gear stopper [SST: KV10118600 (J-48641)] (A) as shown in the figure below.

 © 2011 Mitchell Repair Information Company, LLC.

1 : Oil pan (upper)
2 : Flywheel (M/T models) or drive plate (A/T models)
⇦ : Vehicle front

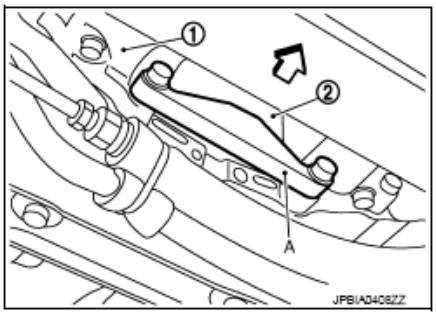

Fig. 79: Removing Rear Cover Plate
Courtesy of NISSAN NORTH AMERICA, INC.

b. Loosen crankshaft pulley bolt and rotate bolt seating surface at 10 mm (0.39 in) from its original position.

1 : Crankshaft pulley

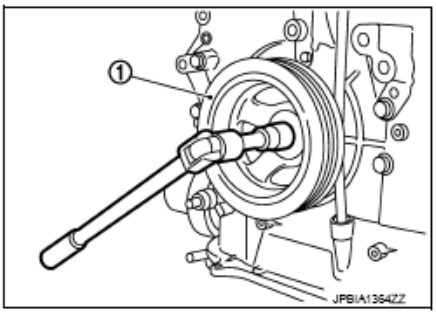

Fig. 80: Loosening Crankshaft Pulley Mounting Bolt Using Tool
Courtesy of NISSAN NORTH AMERICA, INC.

CAUTION: Never remove crankshaft pulley bolt because it is used as a supporting point for suitable puller.

c. Place suitable puller tab on holes of crankshaft pulley, and pull crankshaft pulley through.

CAUTION: Never put suitable puller tab on crankshaft pulley periphery, because this damages internal damper.

 © 2011 Mitchell Repair Information Company, LLC.

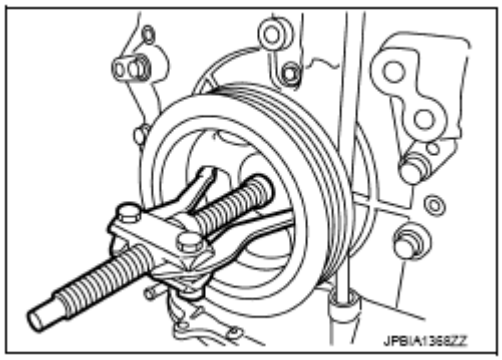

Fig. 81: Pulling Crankshaft Pulley Using Puller
Courtesy of NISSAN NORTH AMERICA, INC.

28. Remove oil pan (lower). Refer to "**EXPLODED VIEW (2WD)**" (2WD models) or "**EXPLODED VIEW (AWD)**" (AWD models).
29. Loosen two mounting bolts in front of oil pan (upper) with power tool in reverse of the order shown in the figure below.

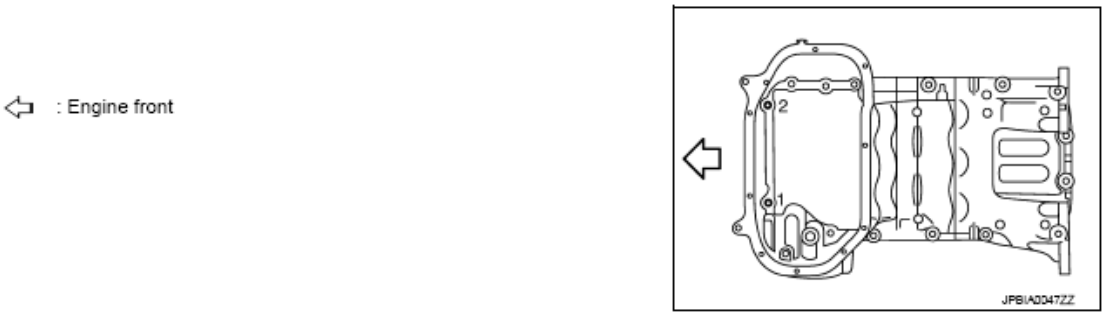

Fig. 82: Upper Oil Pan Mounting Bolt Tightening Sequence
Courtesy of NISSAN NORTH AMERICA, INC.

30. Remove front timing chain case as follows:
    a. Loosen mounting bolts in reverse order as shown in the figure below.

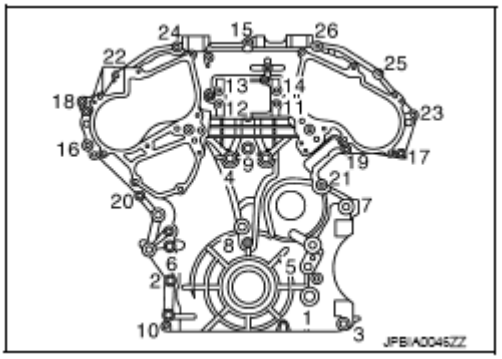

Fig. 83: Front Timing Chain Case Mounting Bolt Tightening Sequence
Courtesy of NISSAN NORTH AMERICA, INC.

 © 2011 Mitchell Repair Information Company, LLC.

b. Insert a suitable tool (A) into the notch at the top of front timing chain case as shown below.
c. Pry off case by moving the suitable tool as shown below.
   - Use the seal cutter [SST: KV10111100 (J-37228)] to cut liquid gasket for removal.

CAUTION:
- **Never use a screwdriver or a similar item.**
- **After removal, handle front timing chain case carefully so it does not tilt, cant, or warp under a load.**

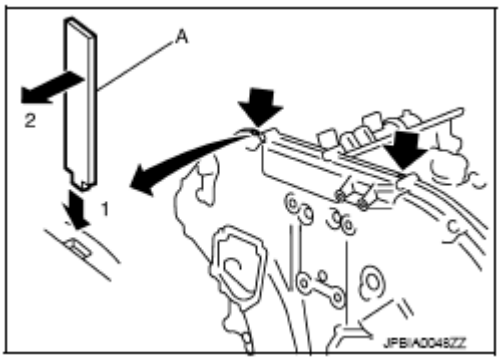

Fig. 84: Prying Off Timing Chain Case Using Suitable Tool
Courtesy of NISSAN NORTH AMERICA, INC.

31. Remove front oil seal from front timing chain case using a suitable tool.
   - Use a screwdriver for removal.

CAUTION: Be careful not to damage front timing chain case.

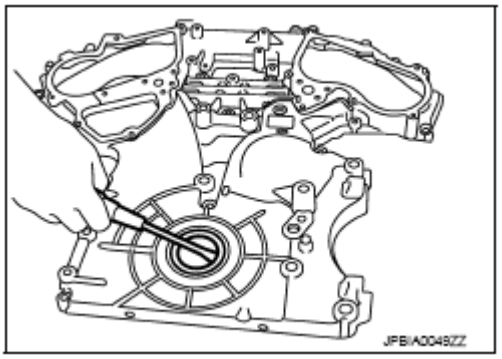

Fig. 85: Removing Front Oil Seal From Front Timing Chain Case Using Suitable Tool
Courtesy of NISSAN NORTH AMERICA, INC.

32. Remove O-ring (1) from rear timing chain case.

 © 2011 Mitchell Repair Information Company, LLC.

Symbol	Description
	N·m (kg-m, ft-lb)
	N·m (kg-m, in-lb)
	Always replace after disassembly.

A : Bank 1
B : Bank 2

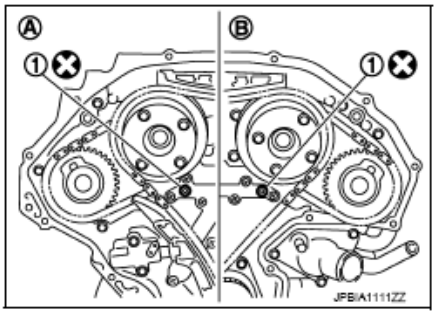

Fig. 86: Identifying Rear Timing Chain Case O-Ring
Courtesy of NISSAN NORTH AMERICA, INC.

33. Remove timing chain tensioner (primary) (1) as follows:
    a. Remove lower mounting bolt (A).
    b. Loosen upper mounting bolt (B) slowly, and then turn timing chain tensioner (primary) on the upper mounting bolt so that plunger (C) is fully expanded.

    NOTE: Even if plunger is fully expanded, it does not drop from the body of timing chain tensioner (primary).

    c. Remove upper mounting bolt, and then remove timing chain tensioner (primary).

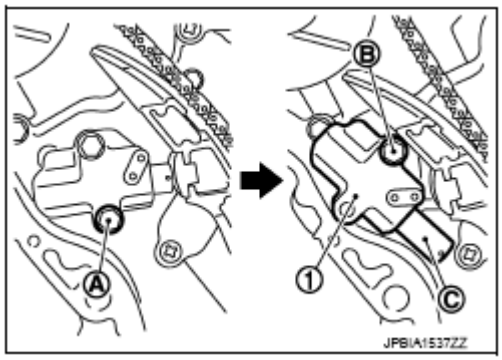

Fig. 87: Removing Timing Chain Tensioner (Primary)
Courtesy of NISSAN NORTH AMERICA, INC.

34. Remove internal chain guide (1), slack guide (2) and tension guide (3).

 © 2011 Mitchell Repair Information Company, LLC.

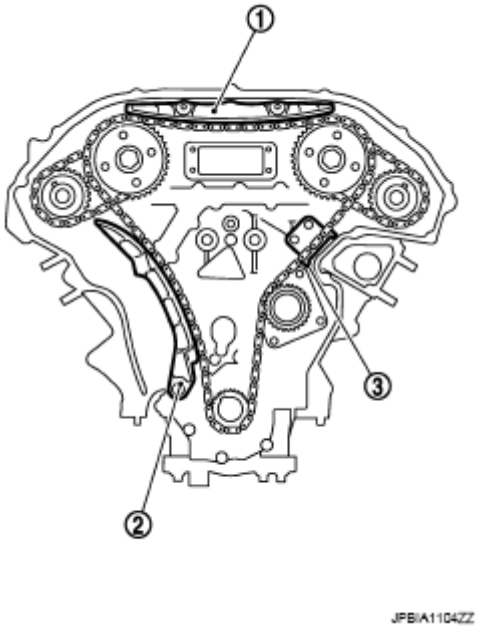

Fig. 88: Identifying Internal Chain, Slack And Tension Guide
Courtesy of NISSAN NORTH AMERICA, INC.

35. Remove timing chain (primary) and crankshaft sprocket.

CAUTION: After removing timing chain (primary), never turn crankshaft and camshaft separately, or valves strike the piston heads.

36. Remove timing chain (secondary) and camshaft sprockets as follows:
    a. Attach suitable stopper pin (C) to the timing chain tensioners (secondary) (1), (2).

A : Bank 1
B : Bank 2

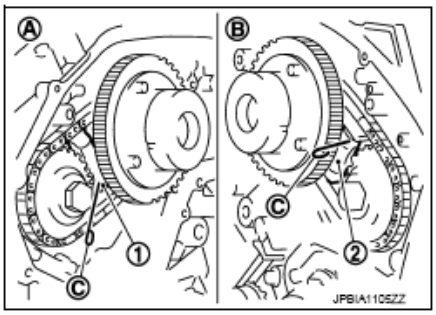

Fig. 89: Installing Suitable Stopper Pin To Timing Chain Tensioners (Secondary)
Courtesy of NISSAN NORTH AMERICA, INC.

NOTE:

- **Use approximately 0.5 mm (0.02 in) dia. hard metal pin as a stopper pin.**
- **For removal of timing chain tensioners (secondary), refer to "EXPLODED VIEW". (Removing VVEL ladder assembly is**

required.)

b. Remove camshaft sprocket (EXH) mounting bolt.
   - Secure the hexagonal portion of camshaft (EXH) using a wrench to loosen mounting bolt.

CAUTION: Never loosen the mounting bolt by securing anything other than the camshaft (EXH) hexagonal portion or with tensioning the timing chain.

c. Remove camshaft sprocket (INT) mounting bolt.
   - Secure the hexagonal portion (located in between journal No. 1 and journal No. 2) of drive shaft (A) using a wrench to loosen mounting bolt.

1 : Camshaft (EXH) (bank 2)
⇦ : Engine front

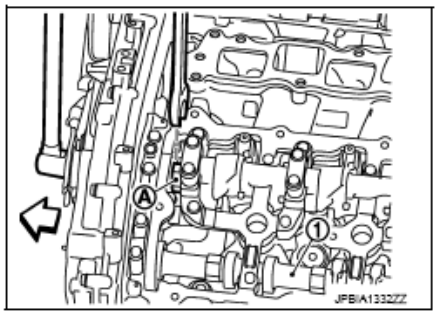

Fig. 90: Removing Camshaft Sprocket (INT) Mounting Bolt Using Tool
Courtesy of NISSAN NORTH AMERICA, INC.

CAUTION:
- **Never loosen the mounting bolt by securing anything other than the drive shaft hexagonal portion or with tensioning the timing chain.**
- **When holding the hexagonal part of drive shaft on the intake side with a wrench, be careful not to allow the wrench to cause interference with other parts.**
- **Never disassemble camshaft sprocket (INT). [Never loosen bolts (A) as shown in the figure below.]**

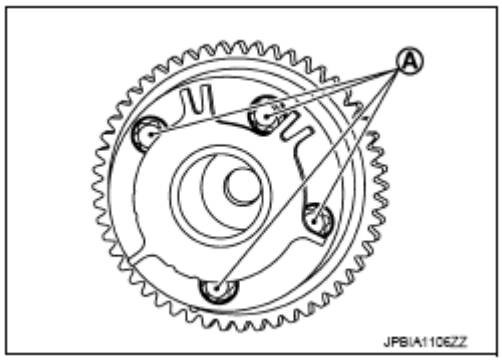

 © 2011 Mitchell Repair Information Company, LLC.

Fig. 91: Identifying Camshaft Sprocket Bolt
Courtesy of NISSAN NORTH AMERICA, INC.

d. Remove timing chain (secondary) together with camshaft sprockets.

37. Use a scraper to remove all traces of old liquid gasket from front and rear timing chain cases and oil pan (upper), and liquid gasket mating surfaces.

CAUTION: Be careful not to allow gasket fragments to enter oil pan.

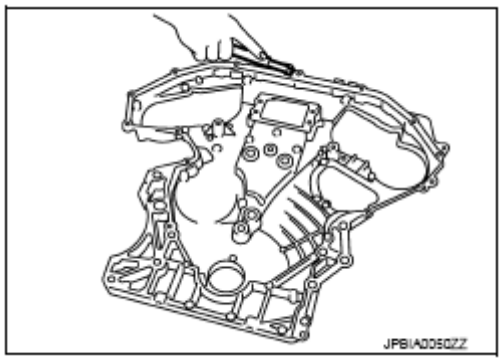

Fig. 92: Removing Liquid Gasket From Timing Chain Mating Surfaces Using Scraper
Courtesy of NISSAN NORTH AMERICA, INC.

38. Remove old liquid gasket from bolt hole and thread.

A : Remove old liquid gasket that is stuck
B : Bolt hole

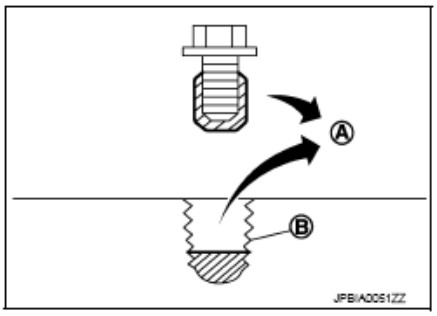

Fig. 93: Removing Liquid Gasket From Bolt Hole And Thread
Courtesy of NISSAN NORTH AMERICA, INC.

INSTALLATION

CAUTION: Do not reuse O-rings.

NOTE: The figure below shows the relationship between the matching mark on each timing chain and that on the corresponding sprocket with the components

 © 2011 Mitchell Repair Information Company, LLC.

installed.

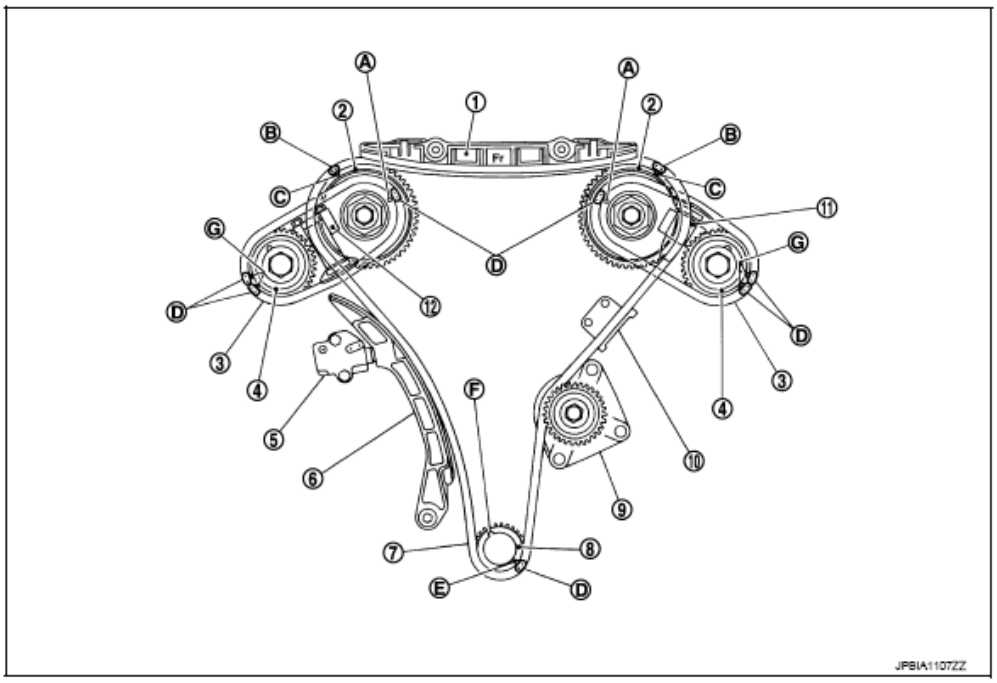

1.	Internal chain guide	2.	Camshaft sprocket (INT)	3.	Timing chain (secondary)
4.	Camshaft sprocket (EXH)	5.	Timing chain tensioner (primary)	6.	Slack guide
7.	Timing chain (primary)	8.	Crankshaft sprocket	9.	Water pump
10.	Tension guide	11.	Timing chain tensioner (secondary) (bank 2)	12.	Timing chain tensioner (secondary) (bank 1)
A.	Matching mark [punched (back side)]	B.	Matching mark (yellow link)	C.	Matching mark (punched)
D.	Matching mark (orange link)	E.	Matching mark (notched)	F.	Crankshaft key
G.	Matching mark [punched]				

Fig. 94: Identifying Timing Chain Related Components
Courtesy of NISSAN NORTH AMERICA, INC.

1. Check that dowel pin (A) and crankshaft key (1) are located as shown in the figure below. (No. 1 cylinder at compression TDC)

NOTE: Though camshaft does not stop at the position as shown in the figure below, for the placement of cam noses, it is generally accepted that camshaft is placed in the same direction as that of the figure.

Camshaft dowel pin: At cylinder head upper face side in each bank.

Crankshaft key: At cylinder head side of bank 1.

 © 2011 Mitchell Repair Information Company, LLC.

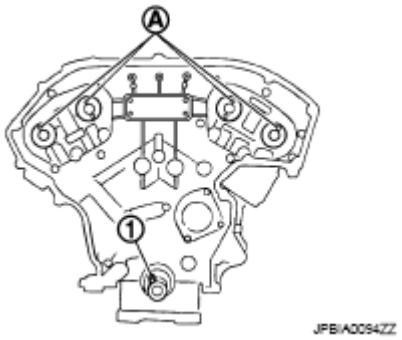

Fig. 95: Identifying Crankshaft Key And Dowel Pin
Courtesy of NISSAN NORTH AMERICA, INC.

2. Install timing chains (secondary) and camshaft sprockets as follows:

CAUTION: Matching marks between timing chain and sprockets slip easily. Confirm all matching mark positions repeatedly during the installation process.

a. Push plunger of timing chain tensioner (secondary) and keep it pressed in with a stopper pin (A).

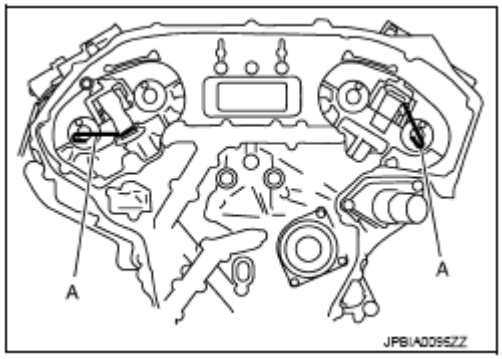

Fig. 96: Pressing Plunger Of Timing Chain Tensioner Using Stopper Pin
Courtesy of NISSAN NORTH AMERICA, INC.

b. Install timing chains (secondary) and camshaft sprockets.

NOTE: Figure shows bank 1 (rear view).

 © 2011 Mitchell Repair Information Company, LLC.

A : Camshaft sprocket (INT) back face
B : Orange link
C : Dowel groove
D : Matching mark (oval)
E : Matching mark (2 oval: on front face)
F : Matching mark (circle)
G : Camshaft sprocket (EXH) back face
H : Matching mark (2 circle: on front face)
I : Timing chain (secondary)

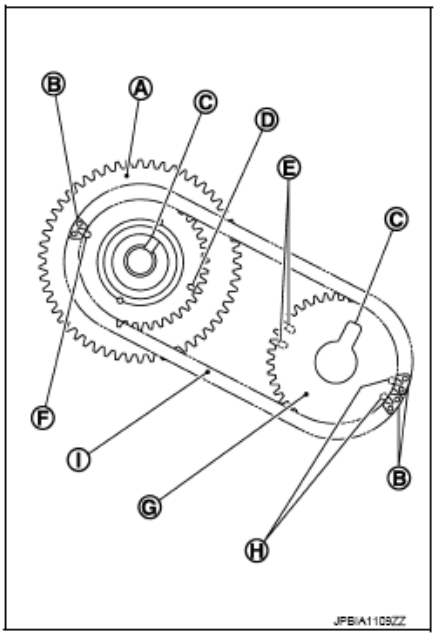

Fig. 97: Identifying Timing Chains (Secondary) And Camshaft Sprockets Related Components
Courtesy of NISSAN NORTH AMERICA, INC.

- Align the matching marks on timing chain (secondary) (orange link) with the ones on intake and exhaust camshaft sprockets (punched), and install them.

NOTE:

- **Matching marks for camshaft sprockets (INT) are on the back side of camshaft sprockets (secondary).**
- **There are two types of matching marks, the circle and oval types. They should be used for the bank 1 and bank 2, respectively.**

Bank 1: Use circle type

Bank 2: Use oval type

- Shape (orientation of signal plate) of camshaft sprocket (INT) varies depending on the bank position. See the right figure to install.

 © 2011 Mitchell Repair Information Company, LLC.

A : Bank 1
B : Bank 2

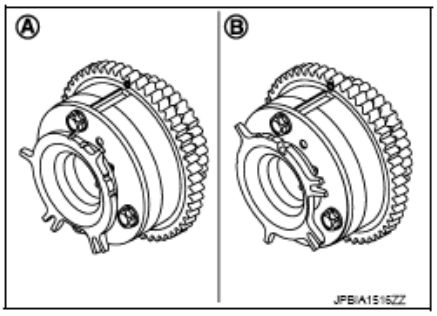

Fig. 98: Identifying Signal Plate Orientation
Courtesy of NISSAN NORTH AMERICA, INC.

- Align dowel pin camshafts with the pin groove on sprockets, and install them.
- In case that positions of each matching mark and each dowel pin do not fit with matching parts, make fine adjustment to the position holding the hexagonal portion on camshaft (EXH) or drive shaft with wrench or equivalent tool.
- Mounting bolts for camshaft sprockets must be tightened in the next step. Tightening them by hand is sufficient to prevent the dislocation of dowel pins.
- It may be difficult to visually check the dislocation of matching marks during and after installation. To make the matching easier, make a matching mark on the top of sprocket teeth and its extended line in advance with paint.

A : Matching mark (painted)
B : Matching mark (orange link)

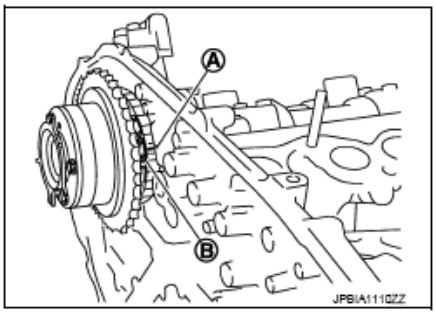

Fig. 99: Identifying Timing Chain Matching Mark
Courtesy of NISSAN NORTH AMERICA, INC.

c. Tighten camshaft sprocket (EXH) mounting bolt.
   - Secure camshaft (EXH) using a wrench at the hexagonal portion to tighten mounting bolt.
d. After confirming the matching marks are aligned, tighten camshaft sprocket (INT) mounting bolt.
   - Secure the hexagonal portion (located in between journal No. 1 and journal No. 2) of drive shaft (A) using a wrench to tighten mounting bolt.

 © 2011 Mitchell Repair Information Company, LLC.

1 : Camshaft (EXH) (bank 2)
⇦ : Engine front

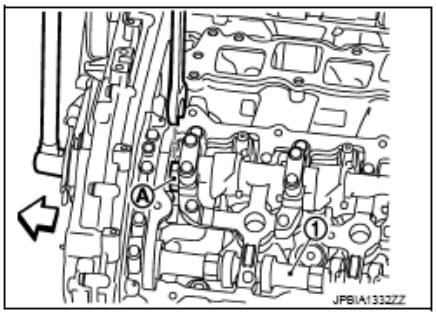

Fig. 100: Tightening Camshaft Sprocket (EXH) Mounting Bolt Using Tool
Courtesy of NISSAN NORTH AMERICA, INC.

CAUTION: When holding the hexagonal part of drive shaft on the intake side with a wrench, be careful not to allow the wrench to cause interference with other parts.

e. Pull stopper pins (C) out from timing chain tensioners (secondary) (1), (2).

A : Bank 1
B : Bank 2

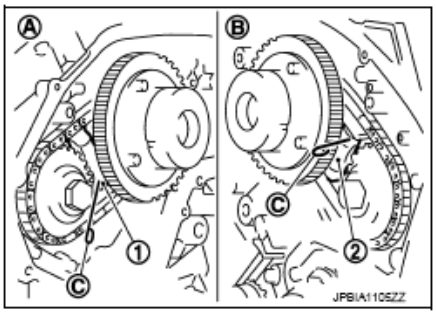

Fig. 101: Pulling Stopper Pins Out From Timing Chain Tensioners
Courtesy of NISSAN NORTH AMERICA, INC.

3. Install timing chain (primary) as follows:
   a. Install crankshaft sprocket (1).

A : Matching mark (front side)
⇦ : Engine front

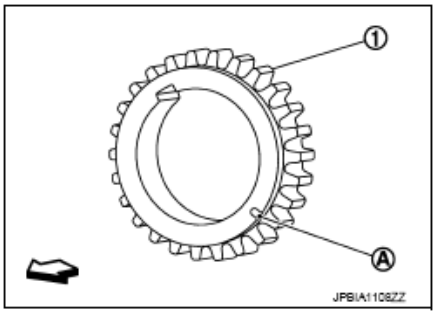

Fig. 102: Identifying Crankshaft Sprocket And Matching Mark
Courtesy of NISSAN NORTH AMERICA, INC.

 © 2011 Mitchell Repair Information Company, LLC.

- Check that the matching marks on crankshaft sprocket face the front of the engine.

b. Install timing chain (primary).

- Install timing chain (primary) so that the matching mark (punched) (B) on camshaft sprocket (INT) (1) is aligned with the yellow link (A) on timing chain, while the matching mark (notched) (C) on crankshaft sprocket (2) is aligned with the orange link (D) one on timing chain, as shown in the figure below.

3 : Water pump

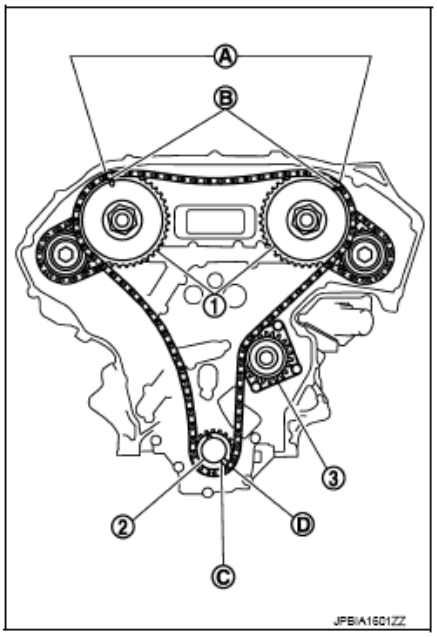

Fig. 103: Primary Timing Chain Marks
Courtesy of NISSAN NORTH AMERICA, INC.

- When it is difficult to align matching marks of timing chain (primary) with each sprocket, gradually turn drive shaft using wrench on the hexagonal portion to align it with the matching marks.

4. Install internal chain guide (1), slack guide (2), and tension guide (3).

 © 2011 Mitchell Repair Information Company, LLC.

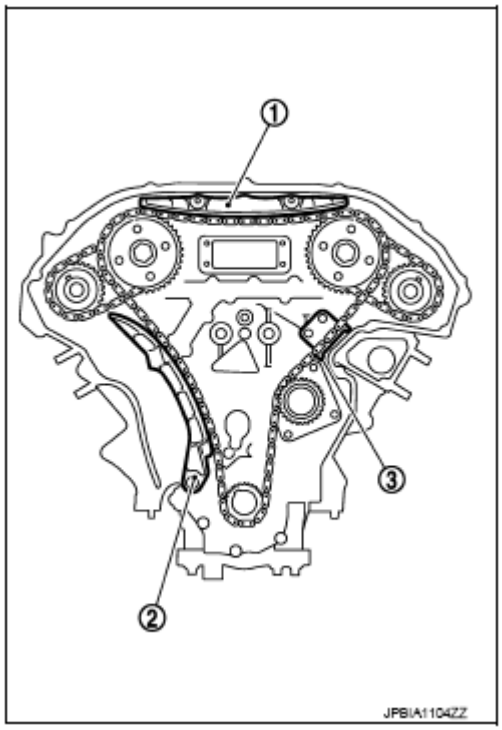

Fig. 104: Identifying Internal Chain Guide, Slack Guide And Tension Guide
Courtesy of NISSAN NORTH AMERICA, INC.

CAUTION: Never overtighten slack guide mounting bolt (2). It is normal for a gap (A) to exist under the bolt seats when mounting bolt are tightened to the specification.

1 : Slack guide
3 : Cylinder block

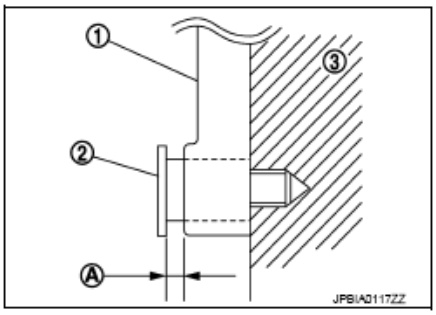

Fig. 105: Identifying Slack Guide Mounting Bolt Installation Position
Courtesy of NISSAN NORTH AMERICA, INC.

5. Install the timing chain tensioner (primary) with the following procedure:
   a. Pull plunger stopper tab (A) up (or turn lever downward) so as to remove plunger stopper tab from the ratchet of plunger (D).

NOTE: Plunger stopper tab and lever (C) are synchronized.

 © 2011 Mitchell Repair Information Company, LLC.

b. Push plunger into the inside of tensioner body.
c. Hold plunger in the fully compressed position by engaging plunger stopper tab with the tip of ratchet.
d. To secure lever, insert stopper pin (E) through hole of lever into tensioner body hole (B).
   - The lever parts and the plunger stopper tab are synchronized. Therefore, the plunger is secured under this condition.

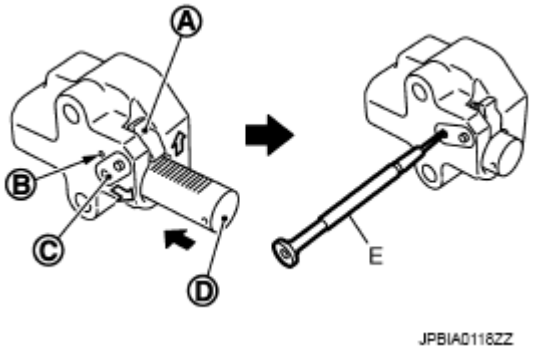

Fig. 106: Compressing Tensioner Body Plunger
Courtesy of NISSAN NORTH AMERICA, INC.

NOTE: Figure shows the example of 1.2 mm (0.047 in) diameter thin screwdriver being used as the stopper pin.

e. Install timing chain tensioner (primary) (1).
   - Remove any dirt and foreign materials completely from the back and the mounting surfaces of timing chain tensioner (primary).
f. Pull out stopper pin (A) after installing, and then release plunger.

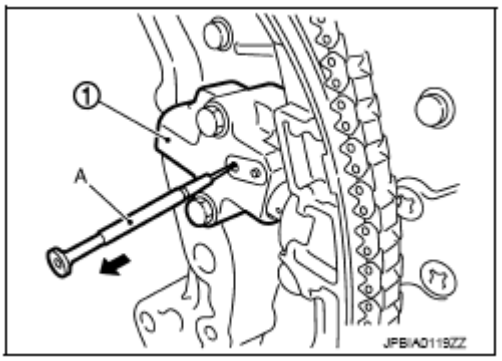

Fig. 107: Pulling Out Stopper Pin From Tensioner
Courtesy of NISSAN NORTH AMERICA, INC.

6. Check again that the matching marks on sprockets and timing chain have not slipped out of alignment.
7. Install new O-rings (1) on rear timing chain case.

 © 2011 Mitchell Repair Information Company, LLC.

Symbol	Description
	N·m (kg-m, ft-lb)
	N·m (kg-m, in-lb)
	Always replace after disassembly.

A : Bank 1
B : Bank 2

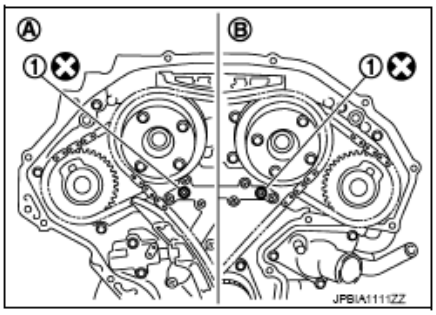

Fig. 108: Identifying Rear Timing Chain Case O-Ring
Courtesy of NISSAN NORTH AMERICA, INC.

CAUTION: Do not reuse O-rings.

8. Install new front oil seal on front timing chain case.

⇦ : Engine inside
⬅ : Engine outside

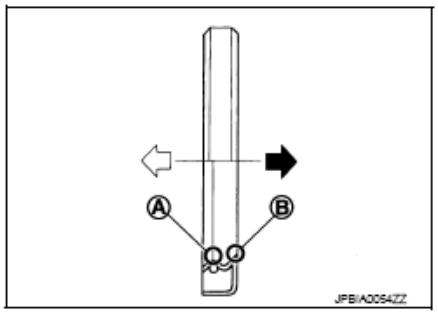

Fig. 109: Identifying Dust And Oil Seal Lip
Courtesy of NISSAN NORTH AMERICA, INC.

- Apply new engine oil to both oil seal lip (A) and dust seal lip (B).
- Install it so that each seal lip is oriented as shown in the figure below.
- Using a suitable drift [outer diameter: 60 mm (2.36 in)] (A), press-fit oil seal until it becomes flush with front timing chain case end face.
- Check that the garter spring is in position and seal lip is not inverted.

 © 2011 Mitchell Repair Information Company, LLC.

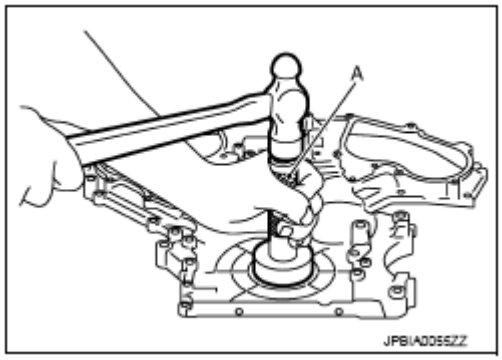

Fig. 110: Pressing-Fit Oil Seal Using Suitable Drift
Courtesy of NISSAN NORTH AMERICA, INC.

9. Install front timing chain case as follows:
   - Check that O-rings stay in place during installation to rear timing chain case.
   a. Apply a continuous bead of liquid gasket with the tube presser (commercial service tool) to front timing chain case back side as shown in the figure below.

B : Protrusion
c : ϕ3.4 - 4.4 mm (0.134 - 0.173 in)
d : ϕ2.6 - 3.6 mm (0.102 - 0.142 in)
e : 4.0 - 5.6 mm (0.157 - 0.220 in)

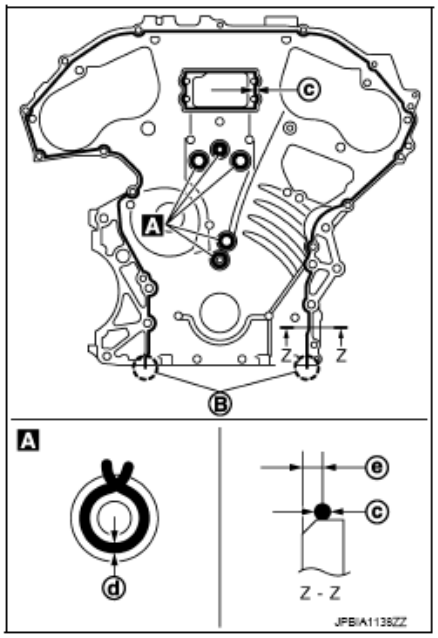

Fig. 111: Identifying Liquid Gasket Applying Area On Front Timing Chain Case
Courtesy of NISSAN NORTH AMERICA, INC.

Use Genuine RTV Silicone Sealant or equivalent. Refer to "RECOMMENDED CHEMICAL PRODUCTS AND SEALANTS ".

   b. Apply liquid gasket to top surface of oil pan (upper) as shown in the figure below.

 © 2011 Mitchell Repair Information Company, LLC.

A : ϕ4.0 - 5.0 mm (0.157 - 0.197 in)

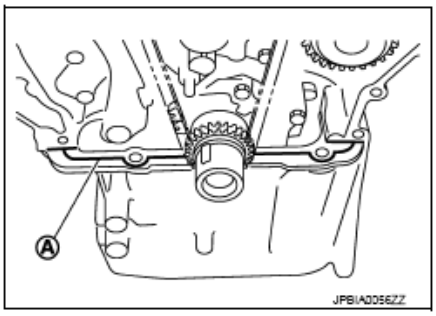

Fig. 112: Identifying Liquid Gasket Applying Area On Oil Pan (Upper)
Courtesy of NISSAN NORTH AMERICA, INC.

Use Genuine RTV Silicone Sealant or equivalent. Refer to "RECOMMENDED CHEMICAL PRODUCTS AND SEALANTS ".

c. Assemble front timing chain case.

1 : Front timing chain case
2 : Oil pan (upper)
3 : Cylinder block
⇦ : Engine front

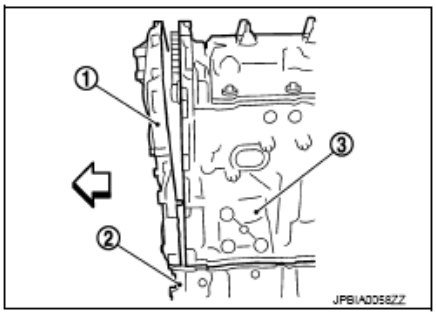

Fig. 113: Identifying Cylinder Block, Oil Pan (Upper) And Front Timing Chain Case
Courtesy of NISSAN NORTH AMERICA, INC.

CAUTION:
- **Be careful not to damage front oil seal by interference with front end of crankshaft.**
- **Attaching should be done within 5 minutes after liquid gasket application.**

d. Install front timing chain case fitting its dowel pin hole together with dowel pin on rear timing chain case.
e. Tighten mounting bolts to the specified torque in numerical order as shown in the figure below.
   - There are two types of mounting bolts. Refer to the following for locating bolts.

     M10 bolts: 1, 2, 3, 4, 5, 6, 7

     Torque: 55.0 N.m (5.6 kg-m, 41 ft-lb)

     M6 bolts: Except the above

 © 2011 Mitchell Repair Information Company, LLC.

Torque: 12.7 N.m (1.3 kg-m, 9 ft-lb)

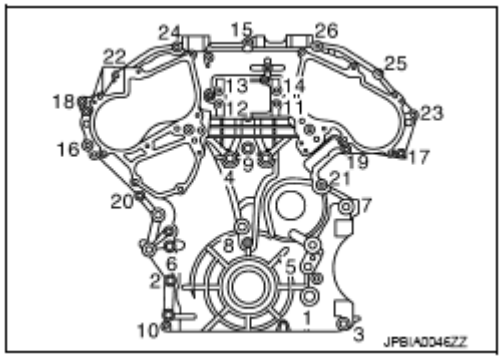

Fig. 114: Front Timing Chain Case Mounting Bolt Tightening Sequence
Courtesy of NISSAN NORTH AMERICA, INC.

f. After all bolts are tightened, retighten them to the specified torque in numerical order shown in the figure below.

CAUTION: Be sure to wipe off any excessive liquid gasket leaking on surface mating with oil pan (upper).

g. Install two mounting bolts in front of oil pan (upper) in numerical order shown in the figure below.

⇦ : Engine front

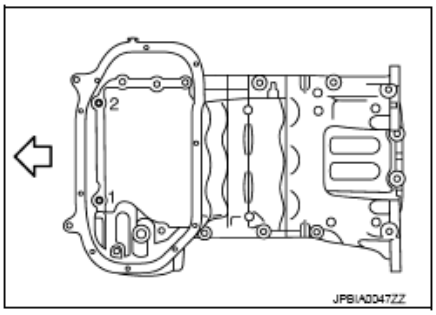

Fig. 115: Identifying Oil Pan (Upper) Mounting Bolts Tightening Sequence
Courtesy of NISSAN NORTH AMERICA, INC.

Tightening torque: Refer to "2WD: EXPLODED VIEW".

10. Install intake valve timing control covers as follows:
    a. Install new seal rings (1) in shaft grooves.

 © 2011 Mitchell Repair Information Company, LLC.

A : Bank 2

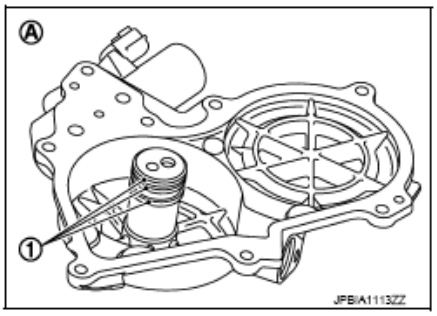

Fig. 116: Identifying Shaft Grooves Seal Rings
Courtesy of NISSAN NORTH AMERICA, INC.

CAUTION: When replacing seal ring, replace all rings with new ones.

NOTE: The figure shows an example of bank 2.

b. Install intake valve timing control cover with new gasket to front timing chain case.

CAUTION:
- **Align the center of both shaft holes of the shaft and the intake side camshaft sprocket, and then insert them.**
- **Be careful not to drop the seal ring from the shaft groove.**

c. Being careful not to move seal ring from the installation groove, align dowel pins on front timing chain case with dowel pin holes (C) to install intake valve timing control covers.

A : Bank 1
B : Bank 2

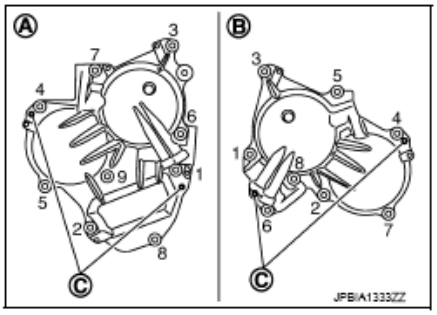

Fig. 117: Intake Valve Timing Control Cover Mounting Bolt Tightening Sequence
Courtesy of NISSAN NORTH AMERICA, INC.

d. Tighten mounting bolts in numerical order as shown in the figure below.
   - After all bolts are tightened, tighten No. 1 bolt to the specified torque again.

11. Install oil pan (lower). Refer to "**EXPLODED VIEW (2WD)**" (2WD models) or "**EXPLODED VIEW (AWD)**" (AWD models).
12. Install rocker covers (bank 1 and bank 2). Refer to "**EXPLODED VIEW**".

 © 2011 Mitchell Repair Information Company, LLC.

13. Install crankshaft pulley as follows:
    a. Fix crankshaft using the ring gear stopper [SST: KV10118600 (J-48641)].
    b. Install crankshaft pulley, taking care not to damage front oil seal.
        - When press-fitting crankshaft pulley with plastic hammer, tap on its center portion (not circumference).
    c. Tighten crankshaft pulley bolt.

       Torque: 44.1 N.m (4.5 kg-m, 33 ft-lb)

    d. Tighten the bolt 90 degrees (one mark) (b).
        - Place a matching mark (A) on crankshaft pulley (2) aligning with the matching (C) of crankshaft pulley bolt (1).

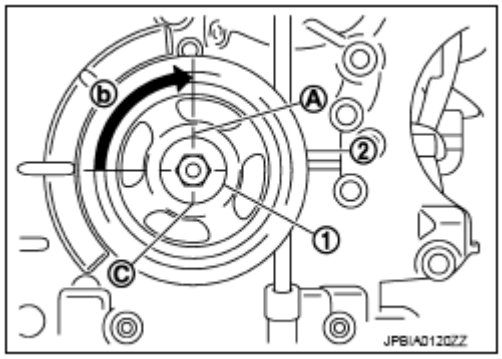

Fig. 118: Tightening Crankshaft Pulley Mounting Bolt
Courtesy of NISSAN NORTH AMERICA, INC.

    e. Rotate crankshaft pulley in normal direction (clockwise when viewed from front) to confirm it turns smoothly.
14. Install power steering oil pump bracket and idler pulley bracket as follows:
    a. Tighten mounting bolts in numerical order as shown in the figure below. (temporarily)

 © 2011 Mitchell Repair Information Company, LLC.

1 : Idler pulley bracket
2 : Power steering oil pump bracket
3 : Crankshaft pulley
A : Engine front side
B : Engine right side
⇦ : Engine front

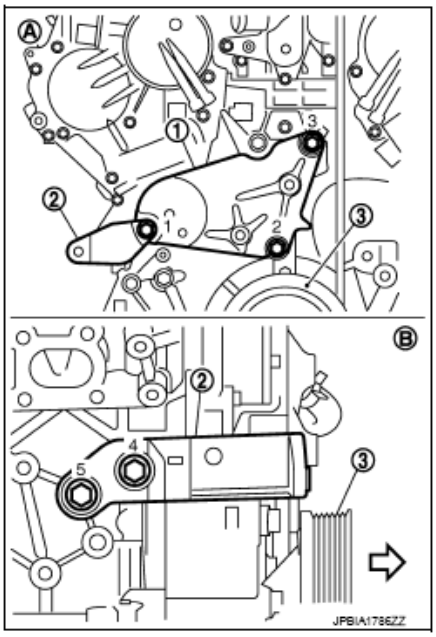

Fig. 119: Power Steering Oil Pump Bracket And Idler Pulley Bracket Mounting Bolts Tightening Sequence
Courtesy of NISSAN NORTH AMERICA, INC.

b. Tighten mounting bolts to specified torque in numerical order as shown in the figure below.

15. For the following operations, perform steps in the reverse order of removal.

Inspection

INSPECTION AFTER REMOVAL

Timing Chain

Check for cracks and any excessive wear at link plates and roller links of timing chain. Replace timing chain if necessary.

A : Crack
B : Wear

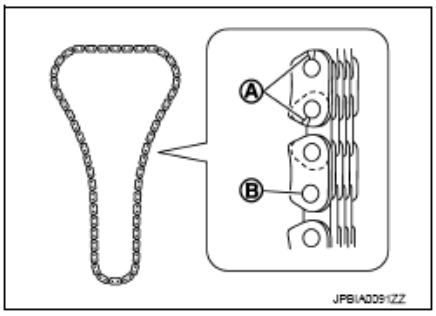

Fig. 120: Identifying Timing Chain Inspection Area
Courtesy of NISSAN NORTH AMERICA, INC.

INSPECTION AFTER INSTALLATION

 © 2011 Mitchell Repair Information Company, LLC.

Inspection for Leakage

The following are procedures for checking fluid leakage, lubricant leakage.

- Before starting engine, check oil/fluid levels including engine coolant and engine oil. If any are less than the required quantity, fill them to the specified level. Refer to "**FOR NORTH AMERICA: FLUIDS AND LUBRICANTS** ".
- Follow the procedure below to check for fuel leakage.
  - Turn ignition switch to the "ON" position (with engine stopped). With fuel pressure applied to fuel piping, check for fuel leakage at connection points.
  - Start engine. With engine speed increased, check again for fuel leakage at connection points.
- Run engine to check for unusual noise and vibration.

NOTE: **If hydraulic pressure inside chain tensioner drops after removal/installation, slack in guide may generate a pounding noise during and just after the engine start. However, this does not indicate a malfunction. The noise will stop after hydraulic pressure rises.**

- Warm up engine thoroughly to check that there is no leakage of fuel, or any oil/fluids including engine oil and engine coolant.
- Bleed air from lines and hoses of applicable lines, such as in cooling system.
- After cooling down engine, again check oil/fluid levels including engine oil and engine coolant. Refill them to the specified level, if necessary.

INSPECTION ITEMS DESCRIPTION

Items		Before starting engine	Engine running	After engine stopped
Engine coolant		Level	Leakage	Level
Engine oil		Level	Leakage	Level
Transmission/transaxle fluid	AT & CVT Models	Leakage	Level/Leakage	Leakage
	MT Models	Level/Leakage	Leakage	Level/Leakage
Other oils and fluids(1)		Level	Leakage	Level
Fuel		Leakage	Leakage	Leakage
(1) Power steering fluid, brake fluid, etc.				

OIL SEAL

FRONT OIL SEAL

FRONT OIL SEAL: Removal and Installation

REMOVAL

 © 2011 Mitchell Repair Information Company, LLC.

1. Remove the following parts:
   - Engine undercover with power tool.
   - Drive belt: Refer to "**EXPLODED VIEW**".
   - Crankshaft pulley: Refer to "**EXPLODED VIEW**".
2. Remove front oil seal using a suitable tool.

CAUTION: Be careful not to damage front timing chain case and crankshaft.

Symbol	Description
	N·m (kg-m, ft-lb)
	N·m (kg-m, in-lb)
	Always replace after disassembly.

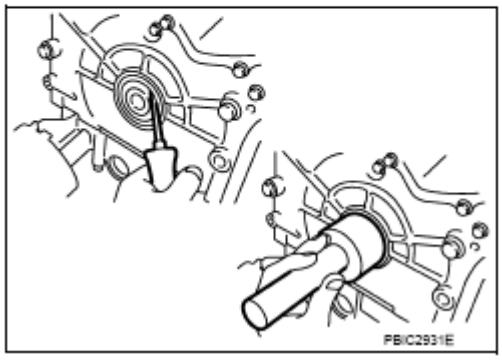

Fig. 121: Replacing Front Oil Seal
Courtesy of NISSAN NORTH AMERICA, INC.

INSTALLATION

1. Apply new engine oil to both oil seal lip and dust seal lip of new front oil seal.
2. Install front oil seal.
   - Install front oil seal so that each seal lip is oriented as shown in the figure below.

A : Oil seal lip
B : Dust seal lip
⇦ : Engine inside
⬅ : Engine outside

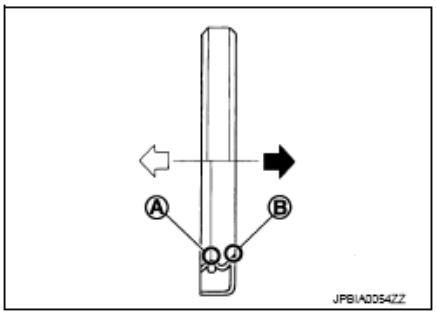

Fig. 122: Identifying Dust And Oil Seal Lip

 © 2011 Mitchell Repair Information Company, LLC.

Courtesy of NISSAN NORTH AMERICA, INC.

- Using a suitable drift, press-fit until the height of front oil seal is level with the mounting surface.
  - Suitable drift: outer diameter 60 mm (2.36 in), inner diameter 50 mm (1.97 in).
- Check that the garter spring is in position and seal lips are not inverted.

CAUTION:
- **Be careful not to damage front timing chain case and crankshaft.**
- **Press-fit straight and avoid causing burrs or tilting oil seal.**

3. Install in the reverse order of removal after this step.

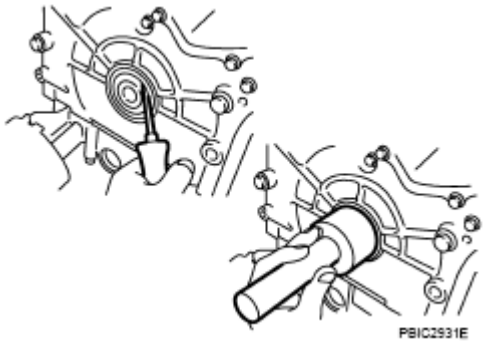

Fig. 123: Replacing Front Oil Seal
Courtesy of NISSAN NORTH AMERICA, INC.

REAR OIL SEAL

REAR OIL SEAL: Removal and Installation

REMOVAL

1. Remove transmission assembly. Refer to "**EXPLODED VIEW** " (M/T models), "**2WD: EXPLODED VIEW** " (2WD A/T models) or "**AWD: EXPLODED VIEW** " (AWD A/T models).
2. Remove drive plate (A/T models) or fly wheel (M/T models). Refer to "**EXPLODED VIEW**".
3. Remove rear oil seal with a suitable tool.

CAUTION: Be careful not to damage crankshaft and cylinder block.

 © 2011 Mitchell Repair Information Company, LLC.

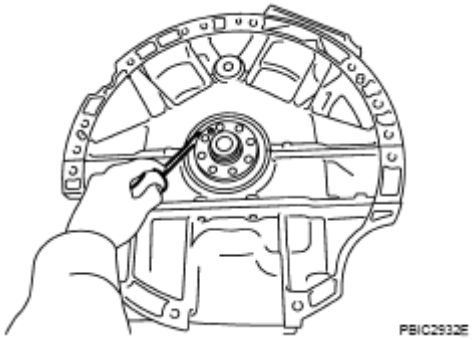

Fig. 124: Removing Rear Oil Seal Using Suitable Tool
Courtesy of NISSAN NORTH AMERICA, INC.

INSTALLATION

1. Install rear oil seal.
   - Install rear oil seal so that each seal lip is oriented as shown in the figure below.

A : Oil seal lip
B : Dust seal lip
⇦ : Engine inside
⬅ : Engine outside

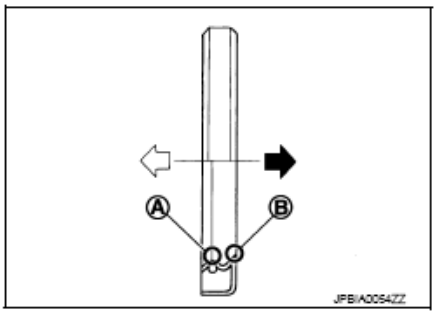

Fig. 125: Identifying Dust And Oil Seal Lip
Courtesy of NISSAN NORTH AMERICA, INC.

   - Press in rear oil seal (1) to the position as shown in the figure below.

B : Cylinder block rear end face
a : 0 - 0.5 mm (0 - 0.020 in)

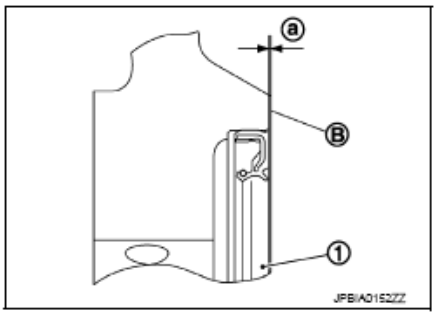

Fig. 126: Identifying Rear Oil Seal Installation Dimension
Courtesy of NISSAN NORTH AMERICA, INC.

   - Using a suitable drift (A), press-fit until the height of rear oil seal is level with the mounting surface.

 © 2011 Mitchell Repair Information Company, LLC.

- Suitable drift: outer diameter 100 mm (3.94 in), inner diameter 85 mm (3.35 in).

CAUTION:

- **Be careful not to damage crankshaft and cylinder block.**
- **Press-fit straight and avoid causing burrs or tilting oil seal.**

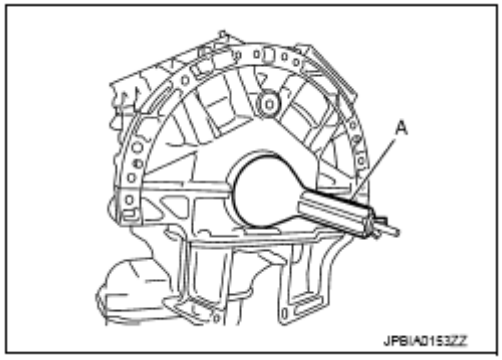

Fig. 127: Installing Rear Oil Seal Using Drift
Courtesy of NISSAN NORTH AMERICA, INC.

2. Install in the reverse order of removal after this step.

UNIT REMOVAL AND INSTALLATION

ENGINE ASSEMBLY

2WD

2WD: Exploded View

 © 2011 Mitchell Repair Information Company, LLC.

Symbol	Description
	N·m (kg-m, ft-lb)
	N·m (kg-m, in-lb)
	Always replace after disassembly.

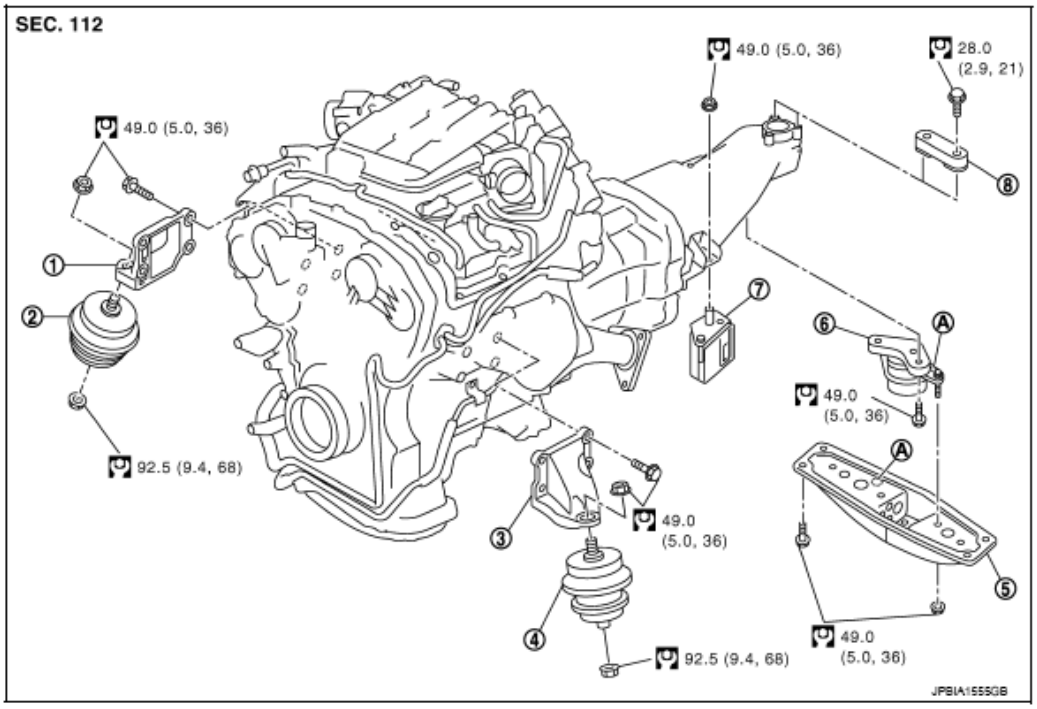

1. Engine mounting bracket (RH)
2. Engine mounting insulator (RH)
3. Engine mounting bracket (LH)
4. Engine mounting insulator (LH)
5. Rear engine mounting member
6. Engine mounting insulator (rear)
7. Dynamic damper (M/T models)
8. Dynamic damper (A/T models)

A. Front mark

Fig. 128: Exploded View Of Engine Assembly With Torque Specifications (2WD)
Courtesy of NISSAN NORTH AMERICA, INC.

Refer to "**COMPONENTS** " for symbols in the figure.

2WD: Removal and Installation

WARNING:

- **Situate the vehicle on a flat and solid surface.**
- **Place chocks at the front and back of rear wheels.**
- **For engines not equipped with engine slingers, attach proper slingers and bolts described in PARTS CATALOG.**

CAUTION:

- **Always be careful to work safely, and avoid forceful or uninstructed operations.**
- **Never start working until exhaust system and engine coolant are cool enough.**

 © 2011 Mitchell Repair Information Company, LLC.

- **If items or work required are not covered by this article, refer to the applicable articles.**
- **Always use the support point specified for lifting.**
- **Use either 2-pole lift type or separate type lift as much as possible. If board-on type is used for unavoidable reasons, support at rear axle jacking point with transmission jack or similar tool before starting work, in preparation for the backward shift of the center of gravity.**
- **For supporting points for lifting and jacking point at rear axle, refer to "GARAGE JACK AND SAFETY STAND AND 2-POLE LIFT ".**

NOTE: **When removing components such as hoses, tubes/lines, etc., cap or plug openings to prevent fluid from spilling.**

REMOVAL

Outline

At first, remove the engine and the transmission assembly with front suspension member facing downward. Then separate the engine from transmission.

Preparation

1. Release fuel pressure. Refer to "**INSPECTION** " (For USA AND CANADA) or "**INSPECTION** " (For MEXICO).
2. Disconnect both battery cables. Refer to "**EXPLODED VIEW** ".
3. Drain engine coolant from radiator. Refer to "**DRAINING** ".

CAUTION:
- **Perform this step when engine is cold.**
- **Never spill engine coolant on drive belt.**

4. Remove the following parts:
   - Radiator reservoir tank: Refer to "**EXPLODED VIEW** ".
   - Engine cover: Refer to "**EXPLODED VIEW**".
   - Front road wheel and tires (power tool)
   - Engine undercover (power tool)
   - Cowl top cover: Refer to "**EXPLODED VIEW** ".
   - Air duct and air cleaner case assembly (RH and LH): Refer to "**EXPLODED VIEW**".
   - Cooling fan assembly: Refer to "**EXPLODED VIEW** ".
5. Discharge refrigerant from A/C circuit. Refer to "**COLLECTION AND CHARGE** ".
6. Remove radiator hoses (upper and lower). Refer to "**EXPLODED VIEW** ".

Engine Room LH

 © 2011 Mitchell Repair Information Company, LLC.

1. Disconnect heater hose at vehicle side, and fit a plug onto hose end to prevent engine coolant leakage.
2. Disconnect A/C piping from A/C compressor, and temporarily fasten it on vehicle with a rope. Refer to "**EXPLODED VIEW** ".
3. Disconnect brake booster vacuum hose.
4. Disconnect ground cable.

Engine Room RH

1. Disconnect battery positive cable at vehicle side and temporarily fasten it on engine.
2. Disconnect all clips and connectors of the engine room harness from engine back side.
3. Disconnect fuel feed hose (with damper) and EVAP hose. Refer to "**EXPLODED VIEW**".

CAUTION: Fit plugs onto disconnected hoses to prevent fuel leakage.

4. Remove reservoir tank of power steering oil pump and piping from vehicle, and temporarily secure them on engine. Refer to "**2WD: EXPLODED VIEW** ".

CAUTION: When temporarily securing, keep the reservoir tank upright to avoid fluid leakage.

Vehicle Inside

Follow the procedure below to disconnect engine room harness connectors at passenger room side, and temporarily secure them on engine.

1. Remove passenger-side kicking plate and dash side finisher. Refer to "**EXPLODED VIEW** ".
2. Disconnect engine room harness connectors at unit sides TCM, ECM and other locations.
3. Disengage intermediate fixing point. Pull out engine room harnesses to engine room side, and temporarily secure them on engine.

CAUTION:

- **When pulling out harnesses, take care not to damage harnesses and connectors.**
- **After temporarily securing, cover connectors with vinyl or similar material to protect against adhesion of foreign materials.**

Vehicle Underbody

1. Remove A/T fluid cooler hoses (A/T models) and power steering oil pump oil cooler hoses.
2. Disconnect heated oxygen sensor 2 harness. Refer to "**EXPLODED VIEW** ".
3. Remove three way catalyst and exhaust front tube. Refer to "**EXPLODED VIEW** ".
4. Disconnect steering lower joint at power steering gear assembly side, and release steering lower shaft.

 © 2011 Mitchell Repair Information Company, LLC.

Refer to "**EXPLODED VIEW** ".

5. Remove rear propeller shaft. Refer to "**EXPLODED VIEW** " (M/T models) or "**EXPLODED VIEW** " (A/T models).
6. Disengage shift lever and remove clutch tube (M/T models). Refer to "**EXPLODED VIEW** ".
7. Disengage A/T control rod at A/T shift selector side. Then, temporarily secure it on the transmission assembly, so that it does not sag (A/T models). Refer to "**EXPLODED VIEW** ".
8. Remove rear plate cover from oil pan (upper). Then remove bolts fixing drive plate to torque converter (A/T models). Refer to "**EXPLODED VIEW (2WD)**".
9. Remove transmission joint bolts that pierce at oil pan (upper) lower rear side. Refer to "**2WD: EXPLODED VIEW**".
10. Remove front stabilizer connecting rod from transverse link. Refer to "**EXPLODED VIEW** ".
11. Remove lower ends of left and right steering knuckle from transverse link. Refer to "**EXPLODED VIEW** ".
12. Separate steering outer sockets from steering knuckle. Refer to "**2WD: EXPLODED VIEW** ".
13. Remove transverse links mounting bolts at suspension member side. Refer to "**EXPLODED VIEW** ".

Removal Work

1. Use a manual lift table caddy (commercial service tool) or equivalently rigid tool such as a transmission jack. Securely support bottom of suspension member and the transmission assembly.

CAUTION: Use a piece of wood or a similar item as the supporting surface to secure a completely stable condition.

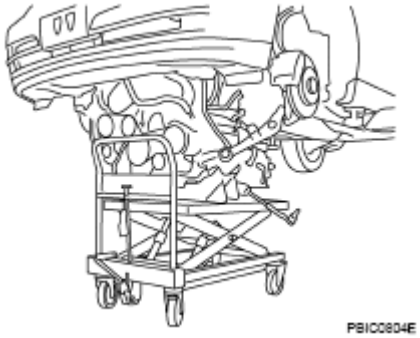

Fig. 129: Supporting Suspension Member And Transmission Assembly Using Transmission Jack
Courtesy of NISSAN NORTH AMERICA, INC.

2. Remove rear engine mounting member bolts.
3. Remove front suspension member mounting bolts and nuts. Refer to "**EXPLODED VIEW** ".
4. Carefully lower jack, or raise lift, to remove the engine, the transmission assembly and front suspension member. When performing work, observe the following caution items:

CAUTION:

- **Confirm there is no interference with the vehicle.**

 © 2011 Mitchell Repair Information Company, LLC.

- **Check that all connection points have been disconnected.**
- **Keep in mind that the center of gravity of the vehicle changes. If necessary, use jack(s) to support the vehicle at rear jacking point(s) to prevent it from falling off the lift.**

Separation Work

1. Install engine slingers into front of cylinder head (bank 1) and rear of cylinder head (bank 2).

1 : Engine front slinger
2 : Engine rear slinger
A : Bank 1
B : Bank 2
⇦: Engine front

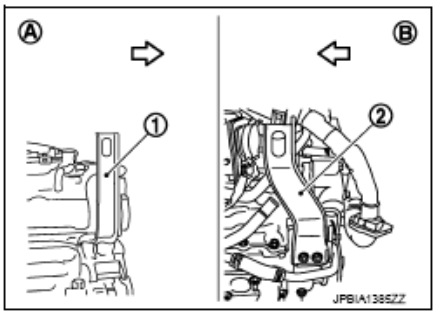

Fig. 130: Identifying Engine Slingers
Courtesy of NISSAN NORTH AMERICA, INC.

Slinger bolts:

Torque: 28.0 N.m (2.9 kg-m, 21 ft-lb)

2. Remove power steering oil pump from engine side. Refer to "**EXCEPT 2WD SPORT MODELS FOR NORTH AMERICA: EXPLODED VIEW** ".
3. Remove engine mounting insulators (RH and LH) under side nuts with power tool.
4. Lift with hoist and separate the engine and the transmission assembly from front suspension member.

CAUTION:
- **Before and during this lifting, always check that any harnesses are left connected.**
- **Never damage engine mounting insulator and avoid oil/grease smearing or spills onto engine mounting insulator.**

5. Remove alternator. Refer to "**2WD: EXPLODED VIEW** ".
6. Remove starter motor. Refer to "**EXPLODED VIEW** ".
7. Remove crankshaft position sensor. Refer to "**EXPLODED VIEW**".

CAUTION:
- **Handle it carefully and avoid impacts.**
- **Never disassemble.**
- **Never place sensor in a location where it is exposed to magnetism.**

 © 2011 Mitchell Repair Information Company, LLC.

8. Separate the engine from the transmission assembly. Refer to "**EXPLODED VIEW** " (M/T models) or "**2WD: EXPLODED VIEW** " (A/T models).
9. Remove each engine mounting insulator and each engine mounting bracket from the engine with power tool.

INSTALLATION

Note the following, and install in the reverse order of removal.

- Do not damage engine mounting insulator and do not spill oil on it.
- For a location with a positioning pin, insert it securely into hole of mating part.
- For a part with a specified installation orientation, refer to component figure in "**2WD: EXPLODED VIEW**".
- When installing engine mounting bracket (RH and LH) on cylinder block, tighten two upper bolts [shown as (B) in the figure below] first. Then tighten two lower bolts [shown as (C) in the figure below].

A : Example Left

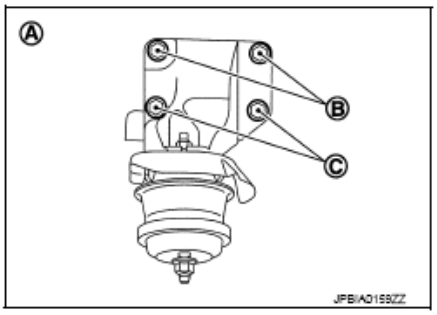

Fig. 131: Identifying Engine Mounting Bracket Bolts
Courtesy of NISSAN NORTH AMERICA, INC.

- Check that all engine mounting insulators are seated properly, then tighten mounting nuts.
- Tighten rear engine mounting member bolts in numerical order as shown in the figure below.

⇦ : Vehicle front

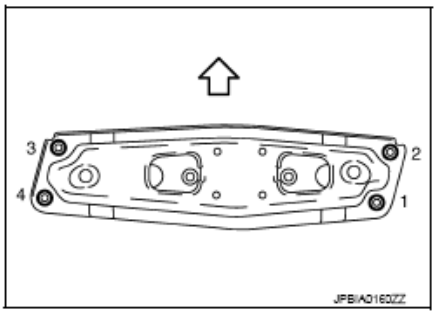

Fig. 132: Rear Engine Mounting Member Bolt Tightening Sequence
Courtesy of NISSAN NORTH AMERICA, INC.

2WD: Inspection

 © 2011 Mitchell Repair Information Company, LLC.

INSPECTION AFTER INSTALLATION

Inspection for Leakage

The following are procedures for checking fluid leakage, lubricant leakage.

- Before starting engine, check oil/fluid levels including engine coolant and engine oil. If any are less than the required quantity, fill them to the specified level. Refer to "**FOR NORTH AMERICA: FLUIDS AND LUBRICANTS** ".
- Follow the procedure below to check for fuel leakage.
  - Turn ignition switch to the "ON" position (with engine stopped). With fuel pressure applied to fuel piping, check for fuel leakage at connection points.
  - Start engine. With engine speed increased, check again for fuel leakage at connection points.
- Run engine to check for unusual noise and vibration.

NOTE: **If hydraulic pressure inside chain tensioner drops after removal/installation, slack in guide may generate a pounding noise during and just after the engine start. However, this does not indicate a malfunction. The noise will stop after hydraulic pressure rises.**

- Warm up engine thoroughly to check that there is no leakage of fuel, or any oil/fluids including engine oil and engine coolant.
- Bleed air from lines and hoses of applicable lines, such as in cooling system.
- After cooling down engine, again check oil/fluid levels including engine oil and engine coolant. Refill them to the specified level, if necessary.

INSPECTION ITEMS DESCRIPTION

Items		Before starting engine	Engine running	After engine stopped
Engine coolant		Level	Leakage	Level
Engine oil		Level	Leakage	Level
Transmission/transaxle fluid	AT & CVT Models	Leakage	Level/Leakage	Leakage
	MT Models	Level/Leakage	Leakage	Level/Leakage
Other oils and fluids(1)		Level	Leakage	Level
Fuel		Leakage	Leakage	Leakage
(1) Power steering fluid, brake fluid, etc.				

AWD

AWD: Exploded View

 © 2011 Mitchell Repair Information Company, LLC.

Symbol	Description
	N·m (kg-m, ft-lb)
	N·m (kg-m, in-lb)
	Always replace after disassembly.

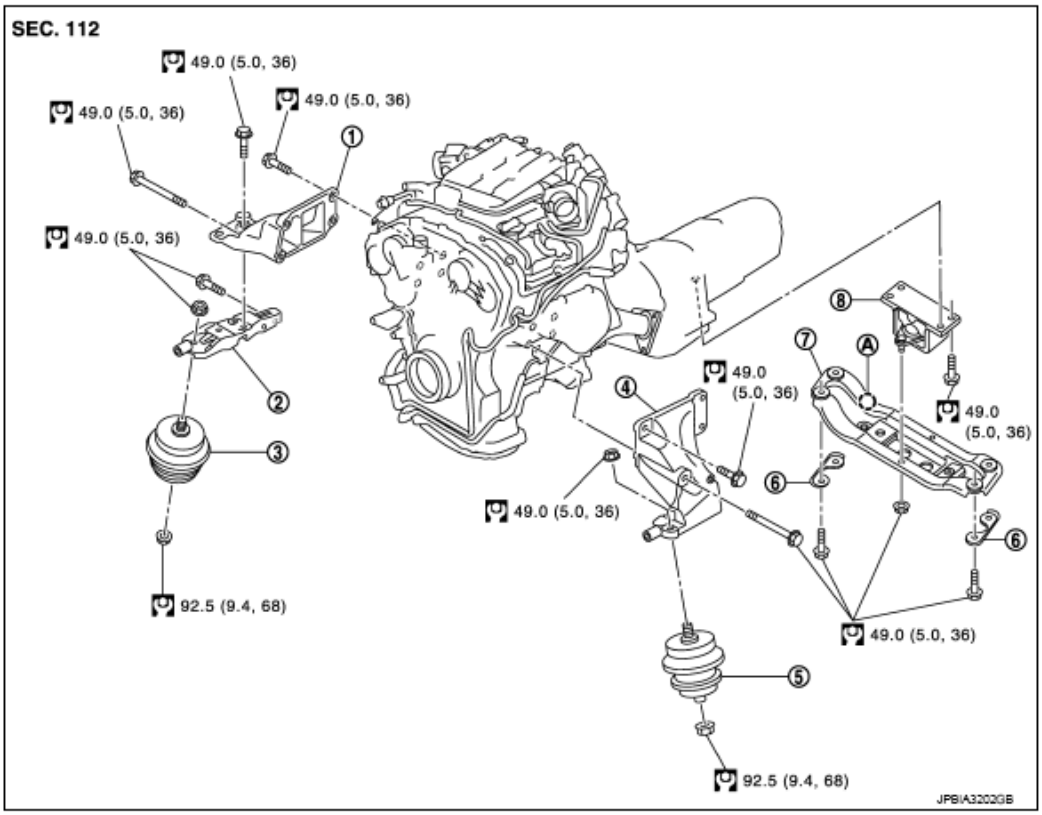

1.	Engine mounting bracket (RH)	2.	Engine mounting bracket (RH) (lower)	3.	Engine mounting insulator (RH)
4.	Engine mounting bracket (LH)	5.	Engine mounting insulator (LH)	6.	Heat insulator
7.	Rear engine mounting member	8.	Engine mounting insulator (rear)		
A.	Front mark				

Fig. 133: Exploded View Of Engine Assembly With Torque Specifications (AWD)
Courtesy of NISSAN NORTH AMERICA, INC.

Refer to "**COMPONENTS** " for symbols in the figure.

AWD: Removal and Installation

WARNING:

- **Situate the vehicle on a flat and solid surface.**
- **Place chocks at front and back of rear wheels.**
- **For engines not equipped with engine slingers, attach proper slingers and bolts described in PARTS CATALOG.**

CAUTION:

- **Always be careful to work safely, avoid forceful or uninstructed**

 © 2011 Mitchell Repair Information Company, LLC.

operations.

- **Never start working until exhaust system and engine coolant are cool enough.**
- **If items or work required are not covered by this article, refer to the applicable articles.**
- **Always use the support point specified for lifting.**
- **Use either 2-pole lift type or separate type lift as much as possible. If board-on type is used for unavoidable reasons, support at rear axle jacking point with transmission jack or similar tool before starting work, in preparation for the backward shift of center of gravity.**
- **For supporting points for lifting and jacking point at rear axle, refer to "GARAGE JACK AND SAFETY STAND AND 2-POLE LIFT ".**

NOTE: **When removing components such as hoses, tubes/lines, etc., cap or plug openings to prevent fluid from spilling.**

REMOVAL

Outline

At first, remove the engine, the transmission assembly, the transfer assembly and the front final drive assembly with front suspension member downward. Then separate the engine, the transmission assembly, the transfer and the front final drive assembly.

Preparation

1. Release fuel pressure. Refer to "**INSPECTION** " (For USA AND CANADA) or "**INSPECTION** " (For MEXICO).
2. Drain engine coolant from radiator. Refer to "**DRAINING** ".

CAUTION:

- **Perform this step when engine is cold.**
- **Never spill engine coolant on drive belts.**

3. Disconnect both battery terminals. Refer to "**EXPLODED VIEW** ".
4. Remove the following parts:
   - Radiator reservoir tank: Refer to "**EXPLODED VIEW** ".
   - Engine cover: Refer to "**EXPLODED VIEW**".
   - Front road wheel and tires (power tool)
   - Engine undercover (power tool)
   - Front cross bar: Refer to "**EXPLODED VIEW** ".
   - Cowl top cover: Refer to "**EXPLODED VIEW** ".
   - Air duct and air cleaner case assembly (RH and LH): Refer to "**EXPLODED VIEW**".

 © 2011 Mitchell Repair Information Company, LLC.

- Cooling fan assembly: Refer to "**EXPLODED VIEW** ".

5. Discharge refrigerant from A/C circuit. Refer to "**COLLECTION AND CHARGE** ".
6. Remove radiator hoses (upper and lower). Refer to "**EXPLODED VIEW** ".

Engine Room LH

1. Disconnect heater hose from vehicle side, and fit a plug onto hose end to prevent engine coolant leak.
2. Disconnect A/C piping from A/C compressor, and temporarily fasten it on vehicle with a rope. Refer to "**EXPLODED VIEW** ".
3. Disconnect brake booster vacuum hose.
4. Disconnect ground cables.

Engine Room RH

1. Disconnect battery positive cable vehicle side and temporarily fasten it on engine.
2. Disconnect all clips and connectors of the engine room harness from engine back side.
3. Disconnect fuel feed hose (with damper) and EVAP hose. Refer to "**EXPLODED VIEW**".

CAUTION: Fit plugs onto disconnected hoses to prevent fuel leakage.

4. Remove reservoir tank of power steering oil pump and piping from vehicle, and temporarily secure them on engine. Refer to "**EXCEPT 2WD SPORT MODELS FOR NORTH AMERICA: EXPLODED VIEW** " (EXCEPT 2WD SPORT MODELS FOR NORTH AMERICA) or "**2WD SPORT MODELS FOR NORTH AMERICA: EXPLODED VIEW** " (EXCEPT 2WD SPORT MODELS FOR NORTH AMERICA).

CAUTION: When temporarily securing, keep the reservoir tank upright to avoid a fluid leakage.

Vehicle Inside

Follow procedure below to disconnect engine room harness connectors at passenger room side, and temporarily secure them on engine.

1. Remove passenger-side kicking plate and dash side finisher. Refer to "**EXPLODED VIEW** ".
2. Disconnect engine room harness connectors at unit sides TCM, ECM and other.
3. Disengage intermediate fixing point. Pull out engine room harnesses to engine room side, and temporarily secure them on engine.

CAUTION:

- **When pulling out harnesses, take care not to damage harnesses and connectors.**

 © 2011 Mitchell Repair Information Company, LLC.

- **After temporarily securing, cover connectors with vinyl or similar material to protect against adhesion of foreign materials.**

Vehicle Underbody

1. Remove A/T fluid cooler hoses and power steering oil pump oil cooler hoses.
2. Disconnect heated oxygen sensor 2 harness. Refer to "**EXPLODED VIEW** ".
3. Remove three way catalyst and exhaust front tube. Refer to "**EXPLODED VIEW** ".
4. Disconnect steering lower joint at power steering gear assembly side, and release steering lower shaft. Refer to "**EXPLODED VIEW** ".
5. Remove rear propeller shaft. Refer to "**EXPLODED VIEW** ".
6. Remove front drive shaft (both side). Refer to "**EXPLODED VIEW** ".
7. Disconnect harness connector from transmission assembly and transfer assembly.
8. Disengage A/T control rod at A/T shift selector side. Then, temporarily secure it on the transmission assembly, so that it does not sag. Refer to "**EXPLODED VIEW** ".
9. Remove rear plate cover from oil pan (upper). Then remove bolts fixing drive plate to torque converter. Refer to "**AWD: EXPLODED VIEW**".
10. Remove transmission joint bolts that pierce at oil pan (upper) lower rear side. Refer to "**EXPLODED VIEW (AWD)**".
11. Remove front stabilizer connecting rod from transverse link. Refer to "**EXPLODED VIEW** ".
12. Remove lower ends of left and right steering knuckle from transverse link. Refer to "**EXPLODED VIEW** ".
13. Separate steering outer sockets from steering knuckle. Refer to "**AWD: EXPLODED VIEW** ".
14. Remove transverse links mounting bolts at suspension member side. Refer to "**EXPLODED VIEW** ".

Removal Work

1. Use a manual lift table caddy (commercial service tool) or equivalently rigid tool such as a transmission jack. Securely support bottom of suspension member and the transmission assembly.

CAUTION: Use a piece of wood or a similar item as the supporting surface to secure a completely stable condition.

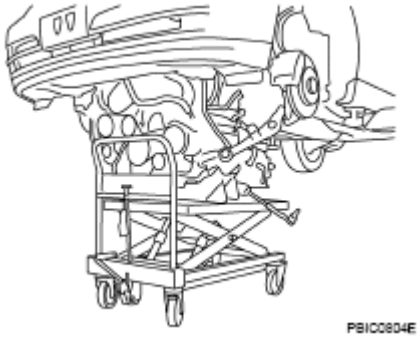

 © 2011 Mitchell Repair Information Company, LLC.

Fig. 134: Supporting Suspension Member And Transmission Assembly Using Transmission Jack
Courtesy of NISSAN NORTH AMERICA, INC.

2. Remove rear engine mounting member bolts.
3. Remove front suspension member mounting bolts and nuts. Refer to "**EXPLODED VIEW** ".
4. Carefully lower jack, or raise lift to remove the engine, transmission assembly, transfer, front final drive assembly and front suspension member. When performing work, observe the following caution:

CAUTION:
- **Confirm there is no interference with the vehicle.**
- **Check that all connection points have been disconnected.**
- **Keep in mind that the center of gravity of the vehicle changes. If necessary, use jack(s) to support the vehicle at rear jacking point(s) to prevent it from falling it off the lift.**

Separation Work

1. Install engine slingers into front of cylinder head (bank 1) and rear of cylinder head (bank 2).

1 : Engine front slinger
2 : Engine rear slinger
A : Bank 1
B : Bank 2
⇦ : Engine front

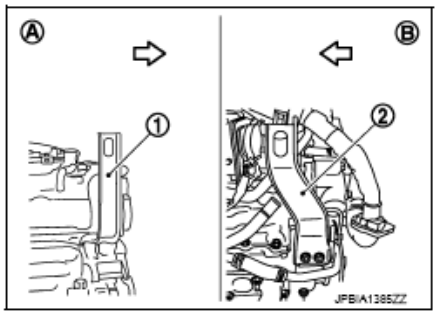

Fig. 135: Identifying Engine Slingers
Courtesy of NISSAN NORTH AMERICA, INC.

Slinger bolts:

Torque: 28.0 N.m (2.9 kg-m, 21 ft-lb)

2. Remove power steering oil pump from engine side. Refer to "**EXCEPT 2WD SPORT MODELS FOR NORTH AMERICA: EXPLODED VIEW** " (EXCEPT 2WD SPORT MODELS FOR NORTH AMERICA) or "**2WD SPORT MODELS FOR NORTH AMERICA: EXPLODED VIEW** " (EXCEPT 2WD SPORT MODELS FOR NORTH AMERICA).
3. Remove engine mounting insulators (RH and LH) under side nuts with power tool.
4. Lift with hoist and separate the engine, transmission assembly, transfer, front final drive assembly and front suspension member.

CAUTION:
- **Before and during this lifting, always check any harnesses are left connected.**

 © 2011 Mitchell Repair Information Company, LLC.

- **Never damage engine mounting insulator and avoid oil/grease smearing or spills onto engine mounting insulator.**

5. Remove alternator. Refer to "**AWD: EXPLODED VIEW** ".
6. Remove starter motor. Refer to "**EXPLODED VIEW** ".
7. Remove front propeller shaft from the front final drive assembly side. Refer to "**EXPLODED VIEW** ".
8. Separate the engine from the transmission assembly. Refer to "**AWD: EXPLODED VIEW** ".
9. Remove crankshaft position sensor. Refer to "**EXPLODED VIEW**".

CAUTION:

- **Handle it carefully and avoid impacts.**
- **Never disassemble.**
- **Never place sensor in a location where it is exposed to magnetism.**

10. Remove the front final drive assembly from oil pan (upper). Refer to "**EXPLODED VIEW** ".
11. Remove each engine mounting insulator and each engine mounting bracket from the engine with power tool.

INSTALLATION

Note the following, and install in the reverse order of removal.

- Do not damage engine mounting insulator and do not spill oil on it.
- For a location with a positioning pin, insert it securely into hole of mating part.
- For a part with a specified installation orientation, refer to component figure in "**AWD: EXPLODED VIEW**".
- When installing engine mounting bracket (RH and LH) on cylinder block, tighten two upper bolts [shown as (B) in the figure below] first. Then tighten two lower bolts [shown as (C) in the figure below].

 © 2011 Mitchell Repair Information Company, LLC.

3 : Engine mounting bracket (LH)
A : Right side
G : Left side

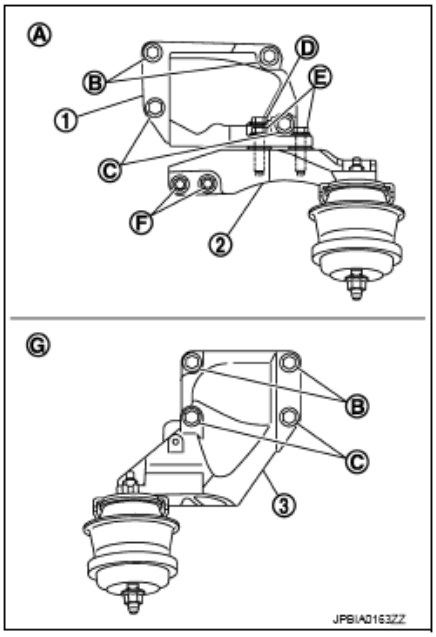

Fig. 136: Identifying Engine Mounting Bracket Bolts
Courtesy of NISSAN NORTH AMERICA, INC.

- Install engine mounting bracket (RH) (lower) (2) as follows:
  - Temporarily tighten mounting bolts [shown as (D), (E) and (F) in the figure below].
  - Tighten mounting bolts to the specified torque with following mounting surfaces touched.
- Engine mounting bracket (RH) (1) to engine mounting bracket (RH) (lower) [shown as and in figure below].
- Front final drive to engine mounting bracket (RH) (lower) [shown as in figure below].
- Check all engine mounting insulators are seated properly, then tighten mounting nuts.
- Tighten rear engine mounting member bolts in numerical order as shown in the figure below.

⇦ : Vehicle front

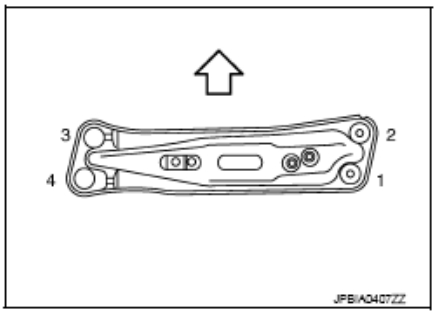

Fig. 137: Rear Engine Mounting Member Bolt Tightening Sequence
Courtesy of NISSAN NORTH AMERICA, INC.

AWD: Inspection

INSPECTION AFTER INSTALLATION

 © 2011 Mitchell Repair Information Company, LLC.

Inspection for Leaks

The following are procedures for checking fluids leak, lubricates leak and exhaust gases leak.

- Before starting engine, check oil/fluid levels including engine coolant and engine oil. If any are less than the required quantity, fill to the specified level. Refer to "**FOR NORTH AMERICA: FLUIDS AND LUBRICANTS** ".
- Follow the procedure below to check for fuel leakage.
  - Turn ignition switch to the "ON" (with engine stopped). With fuel pressure applied to fuel piping, check for fuel leakage at connection points.
  - Start engine. With engine speed increased, check again for fuel leakage at connection points.
- Run engine to check for unusual noise and vibration.

NOTE: **If hydraulic pressure inside chain tensioner drops after removal/installation, slack in guide may generate a pounding noise during and just after the engine start. However, this does not indicate a malfunction. The noise will stop after hydraulic pressure rises.**

- Warm up engine thoroughly to check that there is no leakage of fuel, or any oil/fluids including engine oil and engine coolant.
- Bleed air from lines and hoses of applicable lines, such as in cooling system.
- After cooling down engine, again check oil/fluid levels including engine oil and engine coolant. Refill them to the specified level, if necessary.

INSPECTION ITEMS DESCRIPTION

Items		Before starting engine	Engine running	After engine stopped
Engine coolant		Level	Leakage	Level
Engine oil		Level	Leakage	Level
Transmission/transaxle fluid	AT & CVT Models	Leakage	Level/Leakage	Leakage
	MT Models	Level/Leakage	Leakage	Level/Leakage
Other oils and fluids(1)		Level	Leakage	Level
Fuel		Leakage	Leakage	Leakage
(1) Power steering fluid, brake fluid, etc.				

UNIT DISASSEMBLY AND ASSEMBLY

ENGINE STAND SETTING

Setting

NOTE: **Explained here is how to disassemble with engine stand supporting**

 © 2011 Mitchell Repair Information Company, LLC.

transmission surface. When using a different type of engine stand, note the difference in the steps, etc.

1. Remove the engine assembly from the vehicle. Refer to "**2WD: EXPLODED VIEW**" (2WD models) or "**AWD: EXPLODED VIEW**" (AWD models).
2. Remove the parts that may restrict installation of engine to a widely use engine stand.

NOTE: **The procedure is described assuming that you use a widely use engine stand holding the surface, to which transmission is installed.**

- Remove clutch cover and clutch disc (M/T models). Refer to "**EXPLODED VIEW** ".
- Remove drive plate (A/T models) or flywheel (M/T models) with power tool. Fix crankshaft with a ring gear stopper [SST: KV10118600 (J-48641)], and remove mounting bolts.
- Loosen mounting bolts in diagonal order.
- Check for deformation or damage of drive plate (A/T models) or flywheel (M/T models).

CAUTION:
- **Never disassemble drive plate (A/T models) or flywheel (M/T models).**
- **Never place drive plate (A/T models) or flywheel (M/T models) with signal plate facing down.**
- **When handling signal plate, take care not to damage or scratch it.**
- **Handle signal plate in a manner that prevents it from becoming magnetized.**

3. Remove pilot converter (A/T models) using the pilot bushing puller [SST: ST16610001 (J-23907)] (A) if necessary.

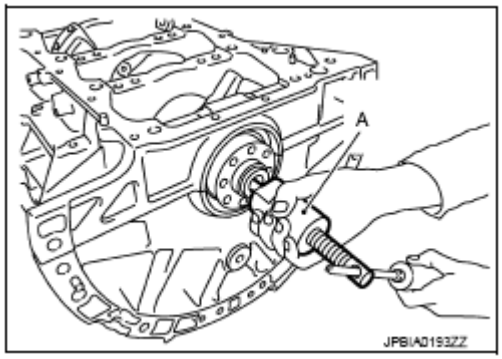

Fig. 138: Removing Pilot Converter Using Pilot Bushing Puller
Courtesy of NISSAN NORTH AMERICA, INC.

4. Lift the engine with hoist to install it onto the widely use engine stand.

 © 2011 Mitchell Repair Information Company, LLC.

CAUTION: Use an engine stand that has a load capacity [220 kg (485 lb) or more] large enough for supporting the engine weight.

- If the load capacity of the stand is not adequate, remove the following parts beforehand to reduce the potential risk of overturning the stand.
  - Remove intake manifold collector. Refer to "**EXPLODED VIEW**".
  - Remove intake manifold. Refer to "**EXPLODED VIEW**".
  - Remove fuel injector and fuel tube assembly. Refer to "**EXPLODED VIEW**".
  - Remove ignition coil. Refer to "**EXPLODED VIEW**".
  - Remove rocker cover. Refer to "**EXPLODED VIEW**".
  - Remove exhaust manifold. Refer to "**EXPLODED VIEW**".
  - Other removable brackets.

NOTE: The figure shows an example of widely use engine stand (A) that can hold mating surface of transmission with drive plate (A/T models) or flywheel (M/T models) removed.

CAUTION: Before removing the hanging chains, check the engine stand is stable and there is no risk of overturning.

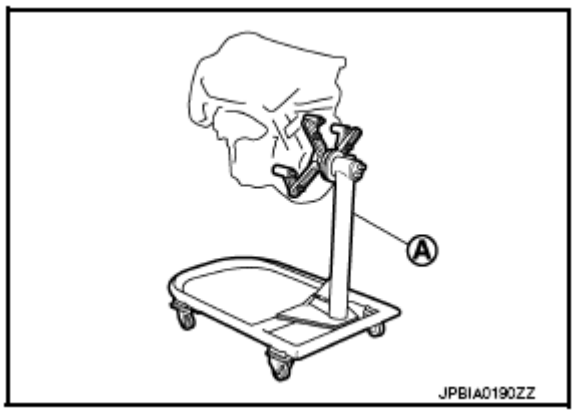

Fig. 139: Holding Mating Surface Of Transmission Using Engine Stand
Courtesy of NISSAN NORTH AMERICA, INC.

5. Drain engine oil. Refer to "**DRAINING** ".
6. Drain engine coolant by removing water drain plug (1) from both sides of the cylinder block as shown in the figure below.

 © 2011 Mitchell Repair Information Company, LLC.

Symbol	Description
	N·m (kg-m, ft-lb)
	N·m (kg-m, in-lb)
	Always replace after disassembly.

2 : Washer
3 : Plug
4 : Drain plug
⇦ : Engine front

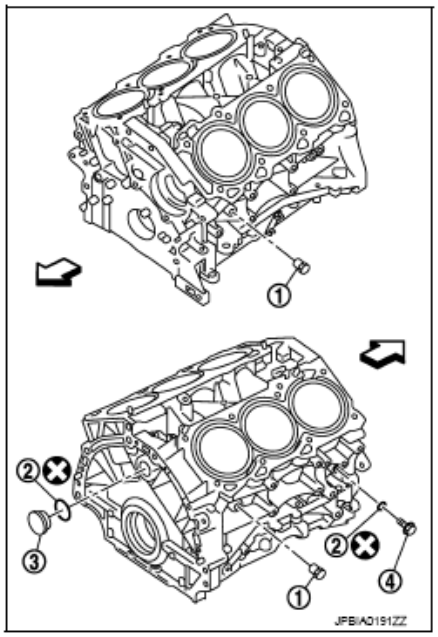

Fig. 140: Identifying Water Drain Plug And Washer
Courtesy of NISSAN NORTH AMERICA, INC.

ENGINE UNIT

Disassembly

1. Remove intake manifold collector. Refer to "**EXPLODED VIEW**".
2. Remove intake manifold. Refer to "**EXPLODED VIEW**".
3. Remove exhaust manifold. Refer to "**EXPLODED VIEW**".
4. Remove oil pan (lower). Refer to "**EXPLODED VIEW (2WD)**" (2WD models) or "**EXPLODED VIEW (AWD)**" (AWD models).
5. Remove ignition coil, spark plug and rocker cover. Refer to "**EXPLODED VIEW**".
6. Remove fuel injector and fuel tube. Refer to "**EXPLODED VIEW**".
7. Remove timing chain. Refer to "**EXPLODED VIEW**".
8. Remove rear timing chain case. Refer to "**EXPLODED VIEW**".
9. Remove camshaft (EXH) and VVEL ladder assembly. Refer to "**EXPLODED VIEW**".
10. Remove cylinder head. Refer to "**EXPLODED VIEW**".

Assembly

Assemble in the reverse order of disassembly.

 © 2011 Mitchell Repair Information Company, LLC.

OIL PAN (UPPER) AND OIL STRAINER

2WD

2WD: Exploded View

Symbol	Description
	N·m (kg-m, ft-lb)
	N·m (kg-m, in-lb)
	Always replace after disassembly.

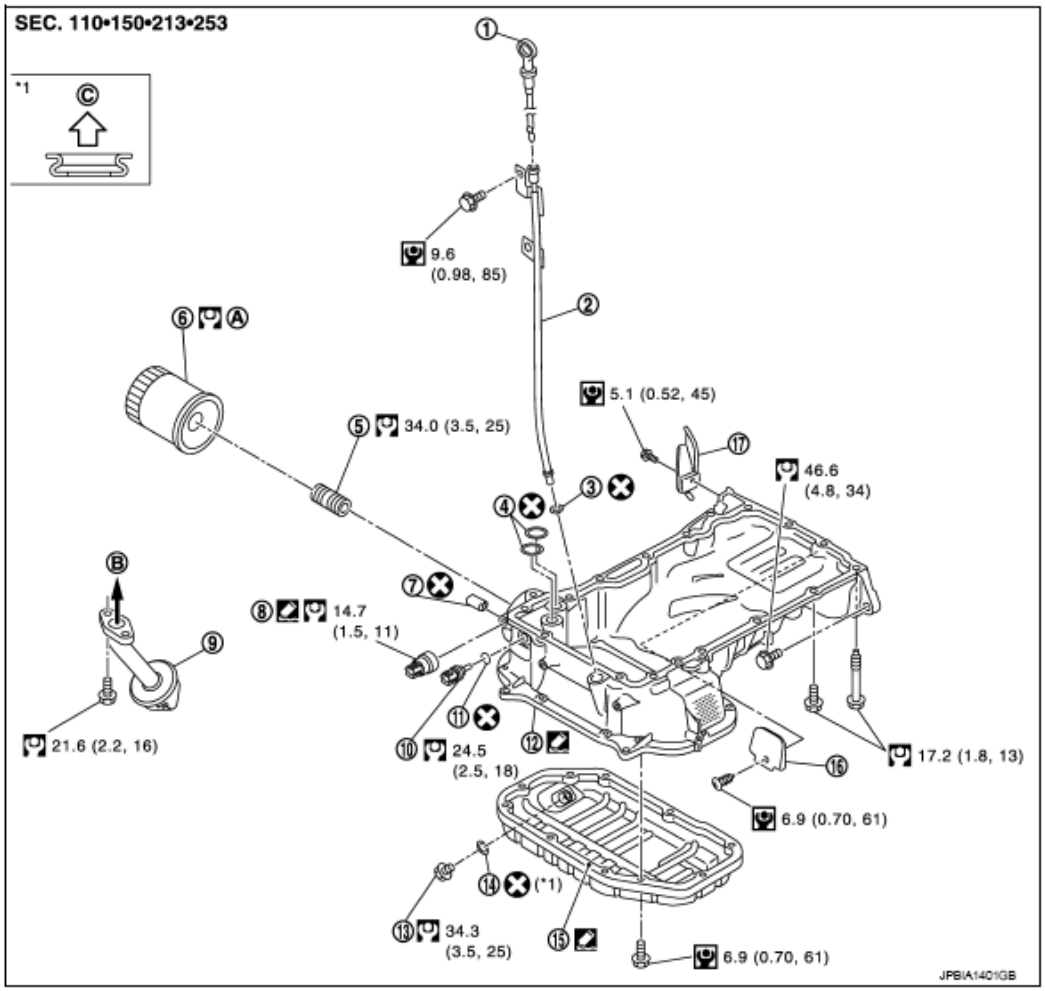

1.	Oil level gauge	2.	Oil level gauge guide	3.	O-ring
4.	O-ring	5.	Connector bolt	6.	Oil filter
7.	Relief valve	8.	Oil pressure switch	9.	Oil strainer
10.	Oil temperature sensor	11.	Washer	12.	Oil pan (upper)
13.	Drain plug	14.	Drain plug washer	15.	Oil pan (lower)
16.	Rear plate cover	17.	Rear cover plate (M/T models)		
A.	Comply with the installation procedure when tightening.	B.	To oil pump	C.	Oil pan side

Fig. 141: Exploded View Of Upper Oil Pan And Oil Strainer With Torque Specifications (2WD)

 © 2011 Mitchell Repair Information Company, LLC.

Courtesy of NISSAN NORTH AMERICA, INC.

Refer to "**COMPONENTS** " for symbols in the figure.

2WD: Disassembly and Assembly

REMOVAL

CAUTION: Never drain engine oil when the engine is hot to avoid the danger of being scalded.

1. Remove oil level gauge, oil pressure switch and oil temperature sensor.
2. Remove oil pan (lower). Refer to "**EXPLODED VIEW (2WD)**".
3. Remove oil strainer.
4. Loosen mounting bolts in the reverse order as shown in the figure below with power tool to remove.

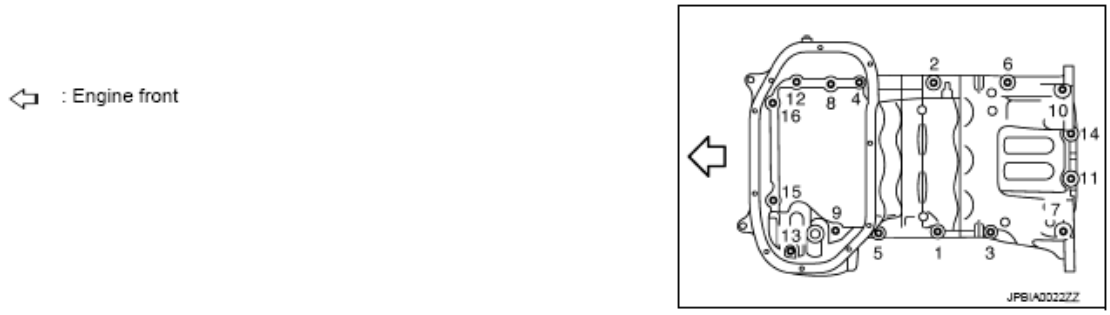

Fig. 142: Oil Strainer Mounting Bolt Tightening Sequence
Courtesy of NISSAN NORTH AMERICA, INC.

- Insert the seal cutter [SST: KV10111100 (J-37228)] between oil pan (upper) and lower cylinder block. Slide seal cutter by tapping on the side of tool with a hammer. Remove oil pan (upper).

CAUTION:
- **Be careful not to damage the mating surfaces.**
- **Never insert a screwdriver, because this damages the mating surfaces.**

5. Remove O-rings (2) from bottom of lower cylinder block (1) and oil pump (3).

 © 2011 Mitchell Repair Information Company, LLC.

Symbol	Description
	N·m (kg-m, ft-lb)
	N·m (kg-m, in-lb)
	Always replace after disassembly.

⇦ : Engine front

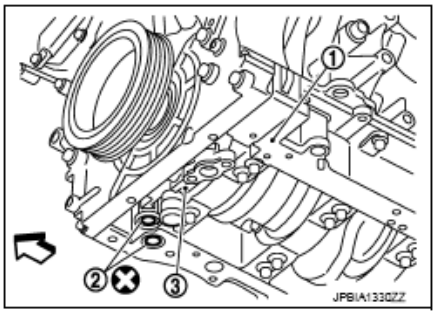

Fig. 143: Identifying Lower Cylinder Block, Oil Pump And O-Ring
Courtesy of NISSAN NORTH AMERICA, INC.

INSTALLATION

CAUTION: Do not reuse O-rings.

1. Install oil pan (upper) as follows:
   a. Use a scraper (A) to remove old liquid gasket from mating surfaces.

CAUTION: Never scratch or damage the mating surfaces when cleaning off old liquid gasket.

- Also remove old liquid gasket from mating surface of lower cylinder block.
- Remove old liquid gasket from the bolt holes and threads.

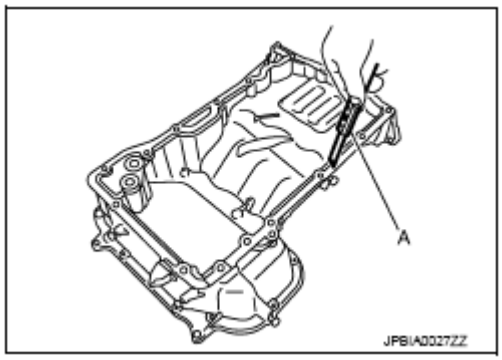

Fig. 144: Removing Liquid Gasket From Oil Pan (Upper) Mating Surfaces Using Scraper
Courtesy of NISSAN NORTH AMERICA, INC.

 © 2011 Mitchell Repair Information Company, LLC.

b. Install new O-rings (2) on the bottom of lower cylinder block (1) and oil pump (3).

Symbol	Description
	N·m (kg-m, ft-lb)
	N·m (kg-m, in-lb)
	Always replace after disassembly.

⇦ : Engine front

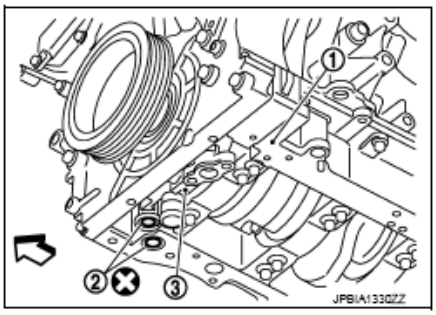

Fig. 145: Identifying Lower Cylinder Block, Oil Pump And O-Ring
Courtesy of NISSAN NORTH AMERICA, INC.

CAUTION: Do not reuse O-rings.

c. Apply a continuous bead of liquid gasket with the tube presser (commercial service tool) to the cylinder block mating surface of oil pan (upper) to a limited portion as shown in the figure below.

a : ϕ4.0 - 5.0 mm (0.157 - 0.197 in)
⇦ : Engine front

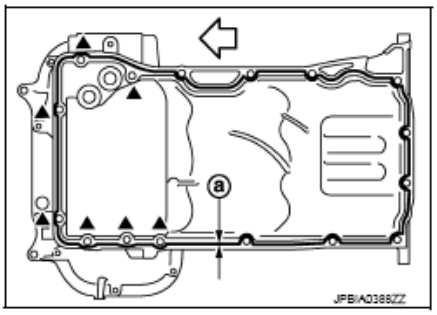

Fig. 146: Identifying Liquid Gasket Applying Area On Oil Pan (Upper)
Courtesy of NISSAN NORTH AMERICA, INC.

Use Genuine RTV Silicone Sealant or equivalent. Refer to "RECOMMENDED CHEMICAL PRODUCTS AND SEALANTS ".

CAUTION:
- **For bolt holes with "triangle" marks (7 locations), apply liquid gasket outside the holes.**
- **Attaching should be done within 5 minutes after coating.**

d. Install oil pan (upper).

 © 2011 Mitchell Repair Information Company, LLC.

CAUTION: Never misalign both O-rings during installation.

- Tighten mounting bolts in numerical order as shown in the figure below.

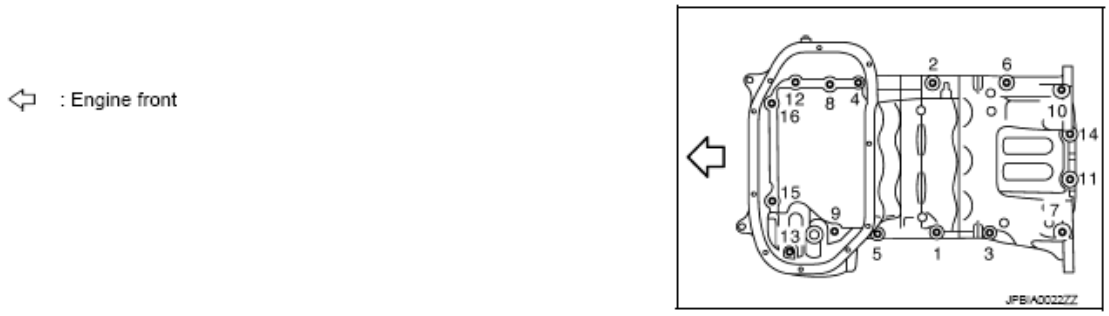

Fig. 147: Upper Oil Pan Mounting Bolt Tightening Sequence
Courtesy of NISSAN NORTH AMERICA, INC.

- There are two types of mounting bolts. Refer to the following for locating bolts.

  M8 x 90 mm (3.54 in): 7, 10, 13

  M8 x 25 mm (0.98 in): Except the above

2. Install oil strainer to oil pump.
3. Install oil pan (lower). Refer to "**EXPLODED VIEW (2WD)**".
4. Install oil pan drain plug.
   - Refer to the previous figure of components for installation direction of drain plug washer. Refer to "**EXPLODED VIEW (2WD)**".
5. Install in the reverse order of removal after this step.

NOTE: Wait at least 30 minutes after oil pan is installed before pouring engine oil.

2WD: Inspection

INSPECTION AFTER REMOVAL

Clean oil strainer if any object is attached.

INSPECTION AFTER INSTALLATION

1. Check the engine oil level and adjust engine oil. Refer to "**INSPECTION** ".
2. Start engine, and check there is no leakage of engine oil.
3. Stop engine and wait for 10 minutes.
4. Check the engine oil level again. Refer to "**INSPECTION** ".

 © 2011 Mitchell Repair Information Company, LLC.

AWD

AWD: Exploded View

Symbol	Description
	N·m (kg-m, ft-lb)
	N·m (kg-m, in-lb)
	Always replace after disassembly.

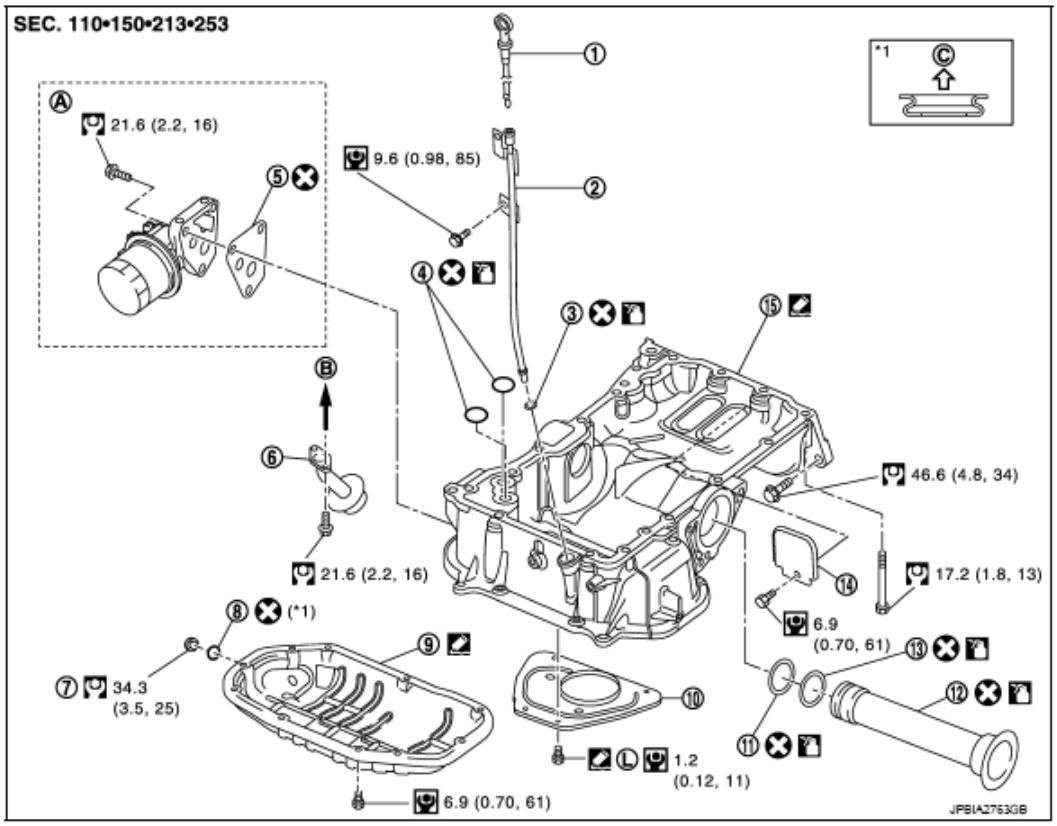

1.	Oil level gauge	2.	Oil level gauge guide	3.	O-ring
4.	O-ring	5.	Gasket	6.	Oil strainer
7.	Drain plug	8.	Drain plug washer	9.	Oil pan (lower)
10.	Baffle plate	11.	O-ring (small)	12.	Axle pipe
13.	O-ring (large)	14.	Rear plate cover	15.	Oil pan (upper)
A.	Comply with the installation procedure when tightening.	B.	To oil pump	C.	Oil pan side

Fig. 148: Exploded View Of Upper Oil Pan And Oil Strainer With Torque Specifications (AWD)
Courtesy of NISSAN NORTH AMERICA, INC.

Refer to "**COMPONENTS** " for symbols in the figure.

AWD: Disassembly and Assembly

REMOVAL

 © 2011 Mitchell Repair Information Company, LLC.

CAUTION: Never drain engine oil when the engine is hot to avoid the danger of being scalded.

1. Remove oil level gauge, oil pressure switch and oil temperature sensor.
2. Remove oil filter bracket. Refer to "**EXPLODED VIEW** ".
3. Remove oil pan (lower). Refer to "**EXPLODED VIEW (AWD)**".
4. Remove oil strainer.
5. Loosen mounting bolts in the reverse of the order shown in the figure below with power tool to remove.

⇦ : Engine front

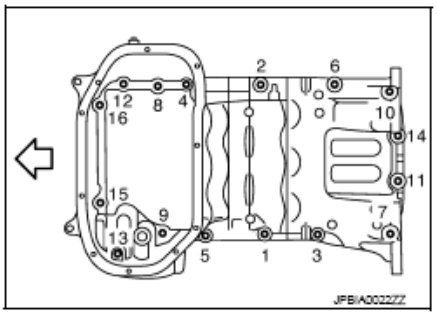

Fig. 149: Oil Strainer Mounting Bolt Tightening Sequence
Courtesy of NISSAN NORTH AMERICA, INC.

- Insert the seal cutter [SST: KV10111100 (J-37228)] between oil pan (upper) and lower cylinder block. Slide seal cutter by tapping on the side of tool with a hammer. Remove oil pan (upper).

CAUTION:
- **Be careful not to damage the mating surfaces.**
- **Never insert a screwdriver, because this will damage the mating surfaces.**

6. Remove O-rings (2) from bottom of lower cylinder block (1) and oil pump (3).

Symbol	Description
	N·m (kg-m, ft-lb)
	N·m (kg-m, in-lb)
	Always replace after disassembly.

⇦ : Engine front

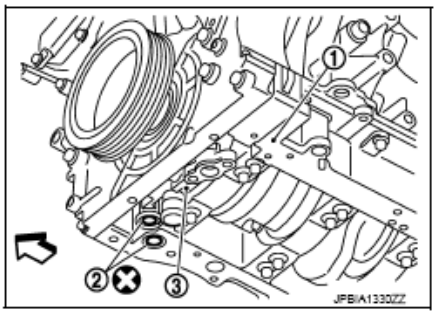

 © 2011 Mitchell Repair Information Company, LLC.

Fig. 150: Identifying Lower Cylinder Block, Oil Pump And O-Rings
Courtesy of NISSAN NORTH AMERICA, INC.

7. Remove axle pipe, if necessary.
   - Remove axle pipe from oil pan (upper) using a suitable drift (A) [outer diameter: 37 mm (1.46 in)].

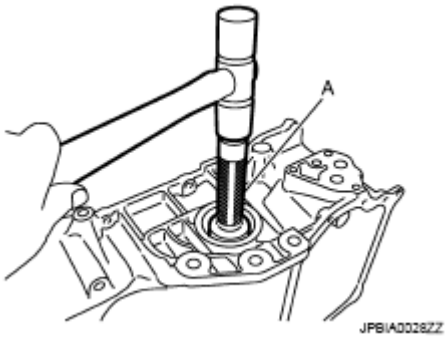

Fig. 151: Removing Axle Pipe From Oil Pan (Upper) Using Suitable Drift
Courtesy of NISSAN NORTH AMERICA, INC.

INSTALLATION

CAUTION: Do not reuse O-rings.

1. Install axle pipe (3) to oil pan (upper), if removed.

   CAUTION: Do not reuse O-rings.

   - Lubricate O-ring groove of axle pipe, O-rings (1), (2), and O-ring joint of oil pan with new engine oil.

	Unit: mm (in)
Items	**O-ring inner diameter**
Final drive side (right side)	31.4 (1.236)
Axle pipe flange side (left side)	33.6 (1.323)

 © 2011 Mitchell Repair Information Company, LLC.

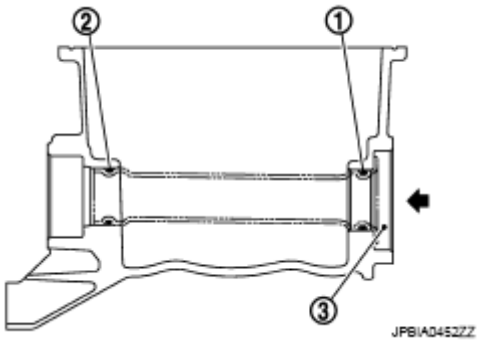

Fig. 152: Identifying Axle Pipe And O-Rings
Courtesy of NISSAN NORTH AMERICA, INC.

- Install axle pipe (1) to oil pan (upper) from axle pipe flange side (left side) using a suitable drift (A) [outer diameter: 43 to 57 mm (1.69 to 2.24 in)].

CAUTION: Insert it with care to prevent O-ring from sliding.

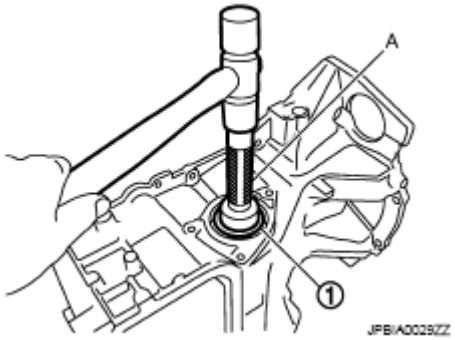

Fig. 153: Installing Axle Pipe To Oil Pan (Upper) Using Suitable Drift
Courtesy of NISSAN NORTH AMERICA, INC.

2. Install oil pan (upper) as follows:
   a. Use a scraper (A) to remove old liquid gasket from mating surfaces.

CAUTION: Never scratch or damage the mating surfaces when cleaning off old liquid gasket.

- Also remove old liquid gasket from mating surface of lower cylinder block.
- Remove old liquid gasket from the bolt holes and threads.

 © 2011 Mitchell Repair Information Company, LLC.

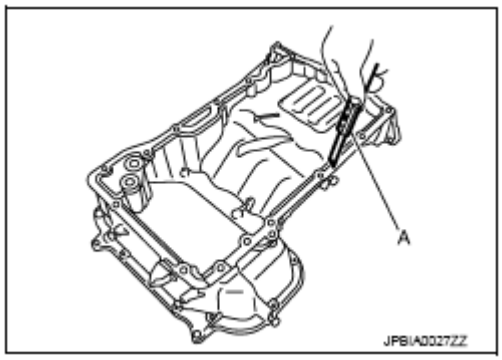

Fig. 154: Removing Liquid Gasket From Oil Pan (Upper) Mating Surfaces Using Scraper
Courtesy of NISSAN NORTH AMERICA, INC.

b. Install new O-rings (2) on the bottom of lower cylinder block (1) and oil pump (3).

Symbol	Description
	N·m (kg-m, ft-lb)
	N·m (kg-m, in-lb)
	Always replace after disassembly.

⇦ : Engine front

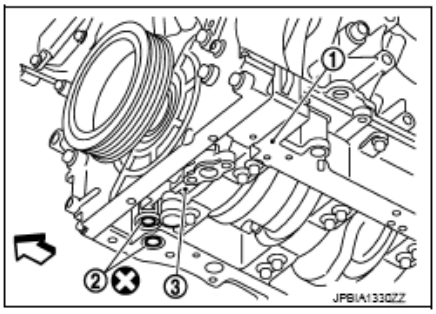

Fig. 155: Identifying Lower Cylinder Block, Oil Pump And O-Ring
Courtesy of NISSAN NORTH AMERICA, INC.

CAUTION: Do not reuse O-rings.

c. Apply a continuous bead of liquid gasket with the tube presser (commercial service tool) to the cylinder block mating surface of oil pan (upper) to a limited portion as shown in the figure below.

 © 2011 Mitchell Repair Information Company, LLC.

a : ϕ4.0 - 5.0 mm (0.157 - 0.197 in)
⇦ : Engine front

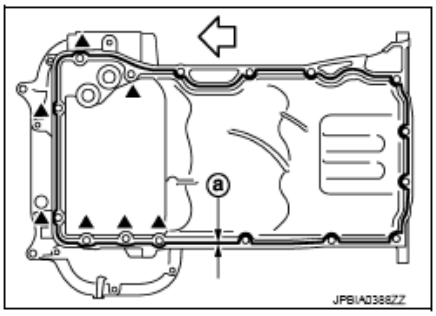

Fig. 156: Identifying Liquid Gasket Applying Area On Oil Pan (Upper)
Courtesy of NISSAN NORTH AMERICA, INC.

Use Genuine RTV Silicone Sealant or equivalent. Refer to "RECOMMENDED CHEMICAL PRODUCTS AND SEALANTS ".

CAUTION:
- **For bolt holes with "triangle" marks (7 locations), apply liquid gasket outside the holes.**
- **Attaching should be done within 5 minutes after coating.**

d. Install oil pan (upper).

CAUTION: Never misalign both O-rings during installation.

- Tighten mounting bolts in numerical order as shown in the figure below.

⇦ : Engine front

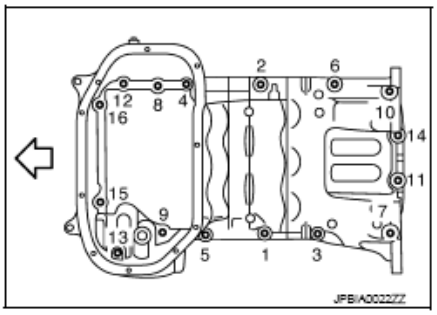

Fig. 157: Upper Oil Pan Mounting Bolts Tightening Sequence
Courtesy of NISSAN NORTH AMERICA, INC.

- There are three types of mounting bolts. Refer to the following for locating bolts.

M8 x 25 mm (0.98 in): 3, 6, 8, 9, 11, 12, 14, 15, 16

M8 x 50 mm (1.97 in): 2

M8 x 90 mm (3.54 in): 1, 4, 5, 7, 10, 13

 © 2011 Mitchell Repair Information Company, LLC.

3. Install oil strainer to oil pump.
4. Install oil pan (lower). Refer to "**EXPLODED VIEW (AWD)**".
5. Install oil pan drain plug.
   - Refer to the previous figure of components for installation direction of drain plug washer. Refer to "**EXPLODED VIEW (AWD)**".
6. Install in the reverse order of removal after this step.

NOTE: Wait at least 30 minutes after oil pan is installed before pouring engine oil.

AWD: Inspection

INSPECTION AFTER REMOVAL

Clean oil strainer if any object attached.

INSPECTION AFTER INSTALLATION

1. Check the engine oil level and adjust engine oil. Refer to "**INSPECTION** ".
2. Start engine, and check there is no leakage of engine oil.
3. Stop engine and wait for 10 minutes.
4. Check the engine oil level again. Refer to "**INSPECTION** ".

REAR TIMING CHAIN CASE

Exploded View

 © 2011 Mitchell Repair Information Company, LLC.

Symbol	Description
	N·m (kg-m, ft-lb)
	N·m (kg-m, in-lb)
	Always replace after disassembly.

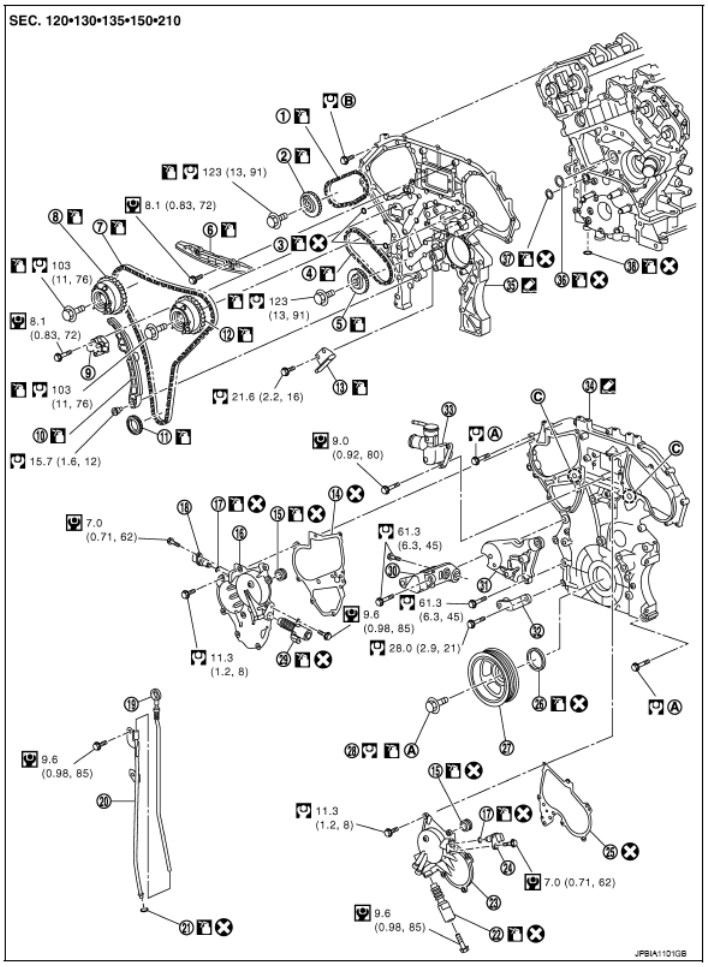

1.	Timing chain (secondary)	2.	Camshaft sprocket (EXH)	3.	O-ring
4.	Timing chain (secondary)	5.	Camshaft sprocket (EXH)	6.	Internal chain guide
7.	Timing chain (primary)	8.	Camshaft sprocket (INT) (bank 1)	9.	Timing chain tensioner (primary)
10.	Slack guide	11.	Crankshaft sprocket	12.	Camshaft sprocket (INT) (bank 2)
13.	Tension guide	14.	Intake valve timing control cover gasket (bank 1)	15.	Seal ring
16.	Intake valve timing control cover (bank 1)	17.	O-ring	18.	Camshaft position sensor (PHASE) (bank 1)
19.	Oil level gauge	20.	Oil level gauge guide	21.	O-ring
22.	Intake valve timing control solenoid valve (bank 2)	23.	Intake valve timing control cover (bank 2)	24.	Camshaft position sensor (PHASE) (bank 2)
25.	Intake valve timing control cover gasket (bank 2)	26.	Front oil seal	27.	Crankshaft pulley
28.	Crankshaft pulley bolt	29.	Intake valve timing control solenoid valve (bank 1)	30.	Power steering oil pump bracket
31.	Idler pulley bracket	32.	Alternator bracket	33.	Water outlet (front)
34.	Front timing chain case	35.	Rear timing chain case	36.	O-ring
37.	O-ring	38.	O-ring		
A.	Comply with the installation procedure when tightening.	B.	Comply with the installation procedure when tightening.	C.	Oil filter

Fig. 158: Exploded View Of Rear Timing Chain Case With Torque Specifications
Courtesy of NISSAN NORTH AMERICA, INC.

Refer to "**COMPONENTS** " for symbol marks in the figure.

 © 2011 Mitchell Repair Information Company, LLC.

Disassembly and Assembly

DISASSEMBLY

1. Remove front timing chain case and timing chain. Refer to "**REMOVAL AND INSTALLATION**".
2. Remove water pump. Refer to "**EXPLODED VIEW** ".
3. Remove oil pan (upper). Refer to "**2WD: EXPLODED VIEW**" (2WD models) or "**AWD: EXPLODED VIEW**" (AWD models).
4. Remove rear timing chain case as follows:
   a. Loosen mounting bolts in reverse of the order shown in the figure below.
   b. Cut liquid gasket using the seal cutter [SST: KV10111100 (J-37228)] and remove rear timing chain case.

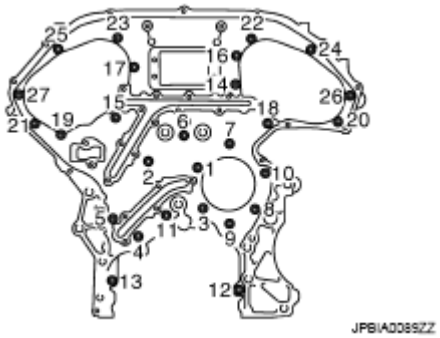

Fig. 159: Rear Timing Chain Case Mounting Bolt Tightening Sequence
Courtesy of NISSAN NORTH AMERICA, INC.

CAUTION:
- **Never remove plate metal cover (1) of oil passage.**
- **After removal, handle rear timing chain case carefully so it does not tilt, cant, or warp under a load.**

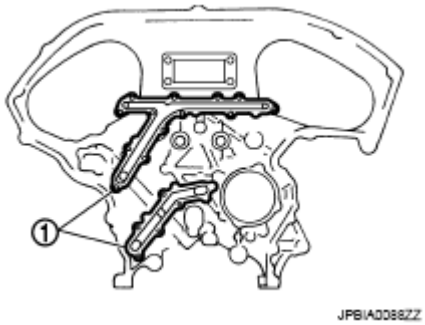

Fig. 160: Identifying Plate Metal Cover Of Oil Passage
Courtesy of NISSAN NORTH AMERICA, INC.

5. Remove O-rings (1) from cylinder block.

 © 2011 Mitchell Repair Information Company, LLC.

Symbol	Description
	N·m (kg-m, ft-lb)
	N·m (kg-m, in-lb)
	Always replace after disassembly.

⇦ : Engine front

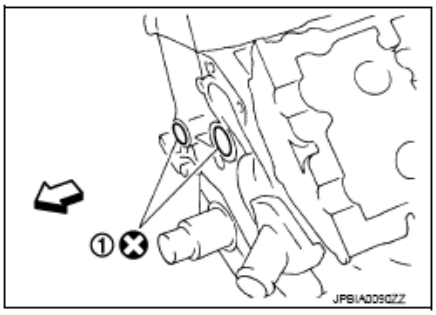

Fig. 161: Identifying Cylinder Block O-Rings
Courtesy of NISSAN NORTH AMERICA, INC.

6. Use a scraper to remove all traces of liquid gasket from rear timing chain cases and opposite mating surfaces.
7. Remove old liquid gasket from bolt hole and thread.

A : Remove old liquid gasket that is stuck
B : Bolt hole

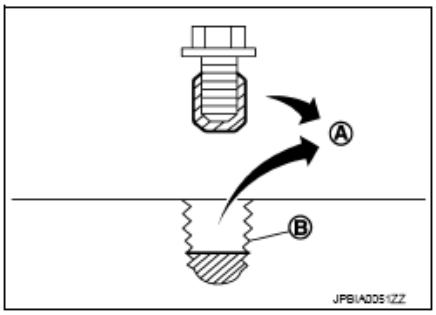

Fig. 162: Removing Liquid Gasket From Bolt Hole And Thread
Courtesy of NISSAN NORTH AMERICA, INC.

ASSEMBLY

CAUTION: Do not reuse O-rings.

1. Install rear timing chain case as follows:
   a. Install new O-rings (1) onto cylinder block.

 © 2011 Mitchell Repair Information Company, LLC.

Symbol	Description
	N·m (kg-m, ft-lb)
	N·m (kg-m, in-lb)
	Always replace after disassembly.

⇦ : Engine front

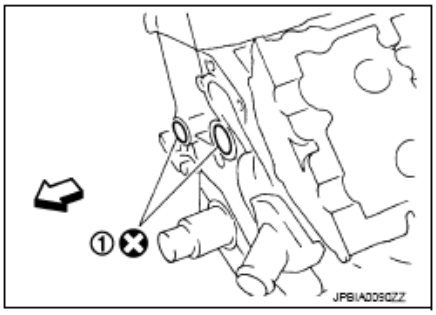

Fig. 163: Identifying Cylinder Block O-Ring
Courtesy of NISSAN NORTH AMERICA, INC.

CAUTION: Do not reuse O-rings.

b. Apply liquid gasket with the tube presser (commercial service tool) to rear timing chain case back side as shown in the figure below.

Use Genuine RTV Silicone Sealant or equivalent. Refer to "RECOMMENDED CHEMICAL PRODUCTS AND SEALANTS ".

CAUTION:

- **For [A] in the figure, completely wipe off liquid gasket extended on a portion touching at engine coolant.**
- **Apply liquid gasket on installation position of water pump and cylinder head completely.**

 © 2011 Mitchell Repair Information Company, LLC.

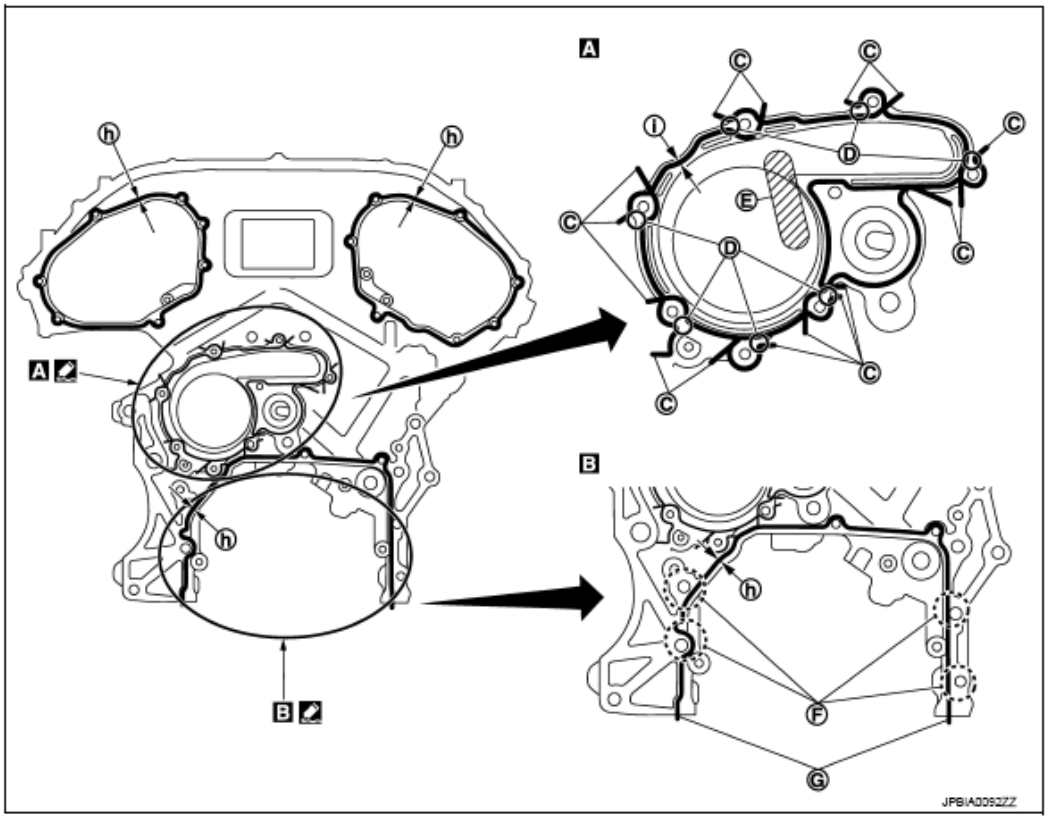

C.	Protrusion	D.	Clearance 1 mm (0.04 in)	E.	Do not protrude in this area
F.	Run along bolt hole inner side	G.	Protrusions at beginning and end of gasket		
h.	ϕ3.4 - 4.4 mm (0.134 - 173 in)	i.	ϕ2.6 - 2.8 mm (0.102 - 0.110 in)		

Fig. 164: Identifying Liquid Gasket Applying Area On Rear Timing Chain Case
Courtesy of NISSAN NORTH AMERICA, INC.

Refer to "**COMPONENTS** " for symbol marks in the figure.

c. Align rear timing chain case with dowel pins (bank 1 and bank 2) on cylinder block and install rear timing chain case.
   - Check that O-rings stay in place during installation to cylinder block.
d. Tighten mounting bolts in numerical order as shown in the figure below.
   - There are three types of mounting bolts. Refer to the following for locating bolts.

     Bolt length: Bolt position

     20 mm (0.79 in): 1, 2, 3, 6, 7, 8, 9, 10

     16 mm (0.63 in): 4, 5, 11, 12, 13

     Torque: 12.7 N.m (1.3 kg-m, 9 ft-lb)

 © 2011 Mitchell Repair Information Company, LLC.

16 mm (0.63 in): Except the above

Torque: 15.0 N.m (1.5 kg-m, 11 ft-lb)

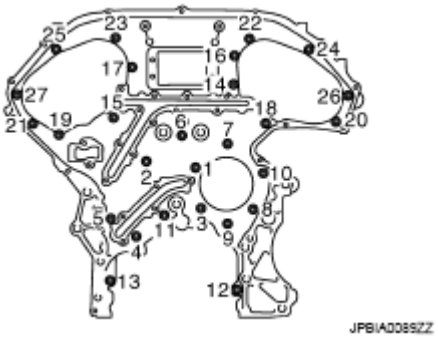

Fig. 165: Rear Timing Chain Case Mounting Bolts Tightening Sequence
Courtesy of NISSAN NORTH AMERICA, INC.

e. After all bolts are tightened, retighten them to the specified torque in numerical order shown in the figure below.
   - If liquid gasket protrudes, wipe it off immediately.
f. After installing rear timing chain case, check the surface height difference between the following parts on the oil pan (upper) mounting surface.

1 : Rear timing chain case
2 : Lower cylinder block

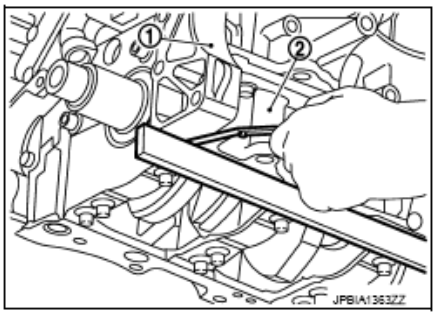

Fig. 166: Checking Surface Height Between Oil Pan (Upper) Mounting Surface
Courtesy of NISSAN NORTH AMERICA, INC.

Standard

Rear timing chain case to lower cylinder block:

--0.24 to 0.14 mm (--0.0094 to 0.0055 in)

- If not within the standard, repeat the installation procedure.

2. Install water pump with new O-rings. Refer to "**EXPLODED VIEW** ".
3. Install timing chains, camshaft sprockets and front timing chain case. Refer to "**REMOVAL AND INSTALLATION**".

 © 2011 Mitchell Repair Information Company, LLC.

- After installing front timing chain case, check the surface height difference between the following parts on the oil pan (upper) mounting surface.

1 : Front timing chain case
2 : Rear timing chain case
3 : Lower cylinder block

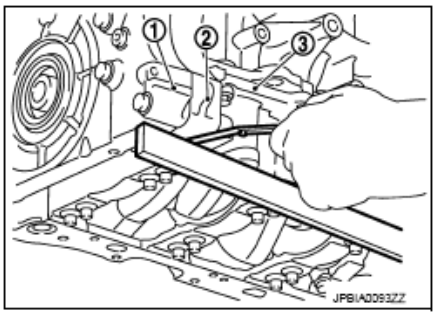

Fig. 167: Checking Surface Height Between Oil Pan (Upper) Mounting Surface
Courtesy of NISSAN NORTH AMERICA, INC.

Standard

Front timing chain case to rear timing chain case:

--0.14 to 0.14 mm (--0.0055 to 0.0055 in)

- If not within the standard, repeat the installation procedure.

4. Install oil pan (upper). Refer to "**2WD: EXPLODED VIEW**" (2WD models) or "**AWD: EXPLODED VIEW**" (AWD models).
5. Install in the reverse order of removal after this step.

CAMSHAFT

Exploded View

 © 2011 Mitchell Repair Information Company, LLC.

Symbol	Description
	N·m (kg-m, ft-lb)
	N·m (kg-m, in-lb)
	Always replace after disassembly.

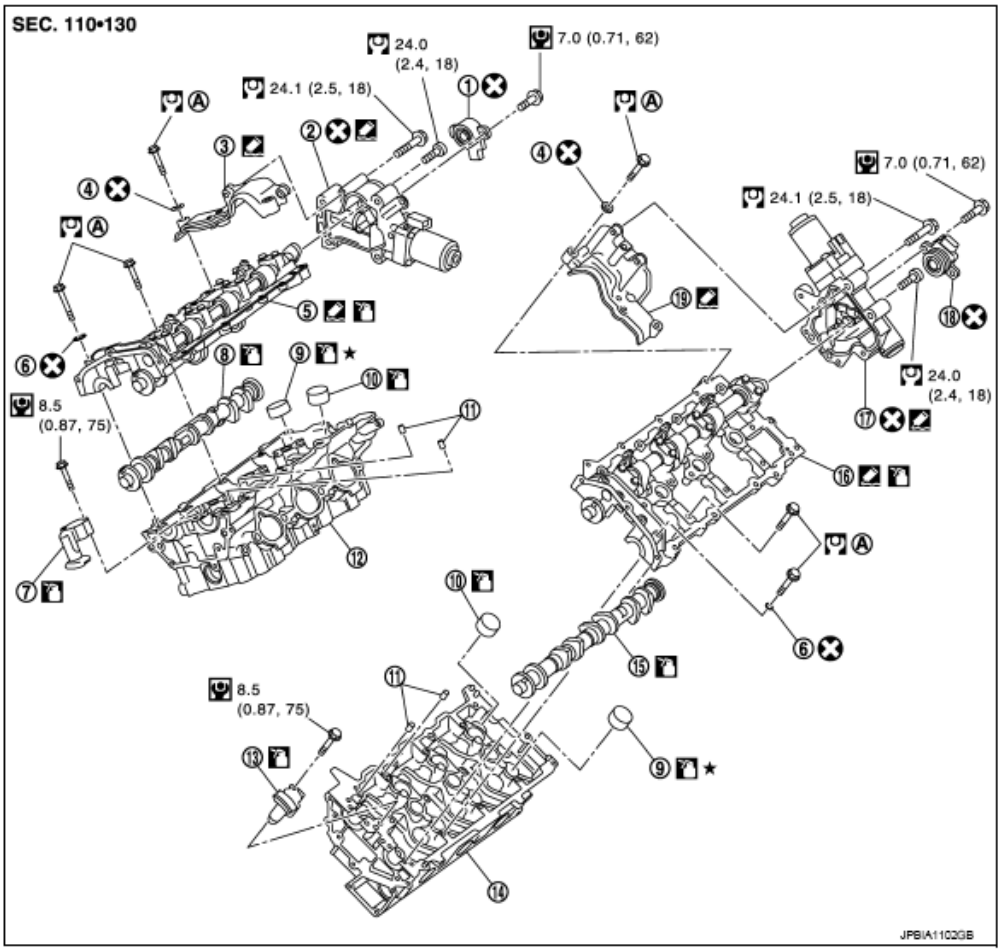

1.	VVEL control shaft position sensor (bank 1)	2.	VVEL actuator sub assembly (bank 1)	3.	Actuator bracket (rear) (bank 1)
4.	Washer	5.	VVEL ladder assembly (bank 1)	6.	Washer
7.	Timing chain tensioner (secondary) (bank 1)	8.	Camshaft (EXH) (bank 1)	9.	Valve lifter (EXH)
10.	Valve lifter (INT)	11.	Oil filter	12.	Cylinder head (bank 1)
13.	Timing chain tensioner (secondary) (bank 2)	14.	Cylinder head (bank 2)	15.	Camshaft (EXH) (bank 2)
16.	VVEL ladder assembly (bank 2)	17.	VVEL actuator sub assembly (bank 2)	18.	VVEL control shaft position sensor (bank 2)
19.	Actuator bracket (rear) (bank 2)				
A.	Comply with the installation procedure when tightening.				

Fig. 168: Exploded View Of Camshaft With Torque Specifications
Courtesy of NISSAN NORTH AMERICA, INC.

Refer to "**COMPONENTS** " for symbol marks in the figure.

 © 2011 Mitchell Repair Information Company, LLC.

CAUTION: As for replacement of parts on the intake side as shown in the exploded view, replace VVEL ladder assembly and cylinder head assembly.

NOTE: VVEL ladder assembly cannot be replaced as a single part, because it is machined together with cylinder head assembly.

VVEL Ladder Assembly and Cylinder Head Assembly Features

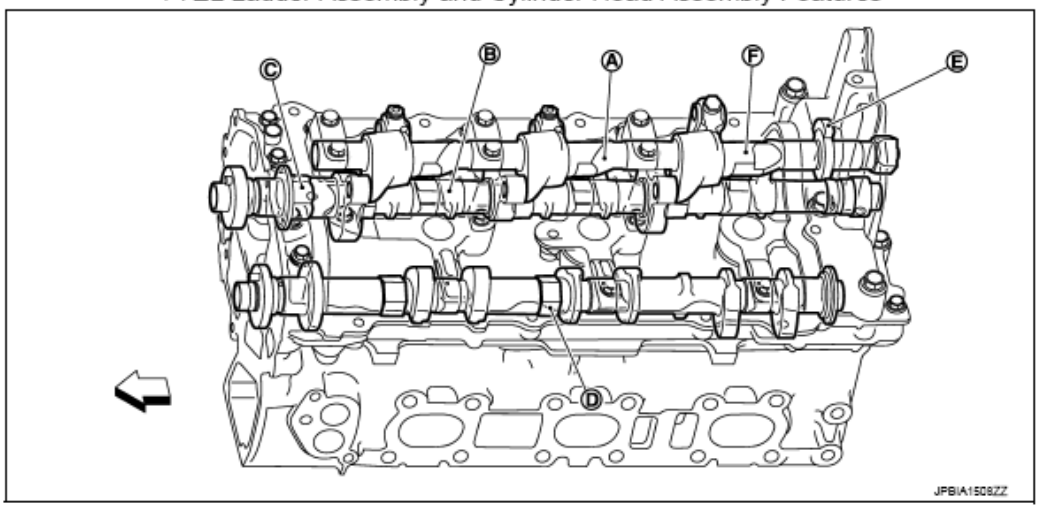

A.	Control shaft	B.	Drive shaft	C.	Hexagonal part of drive shaft (for holding)
D.	Hexagonal part of camshaft (EXH) (for holding)	E.	Stopper of control shaft	F.	Two flat area of control shaft (for holding)
⇦	: Engine front				

Fig. 169: VVEL Ladder Assembly And Cylinder Head Assembly
Courtesy of NISSAN NORTH AMERICA, INC.

NOTE: The figure shows an example of bank 2.

Disassembly and Assembly

DISASSEMBLY

 © 2011 Mitchell Repair Information Company, LLC.

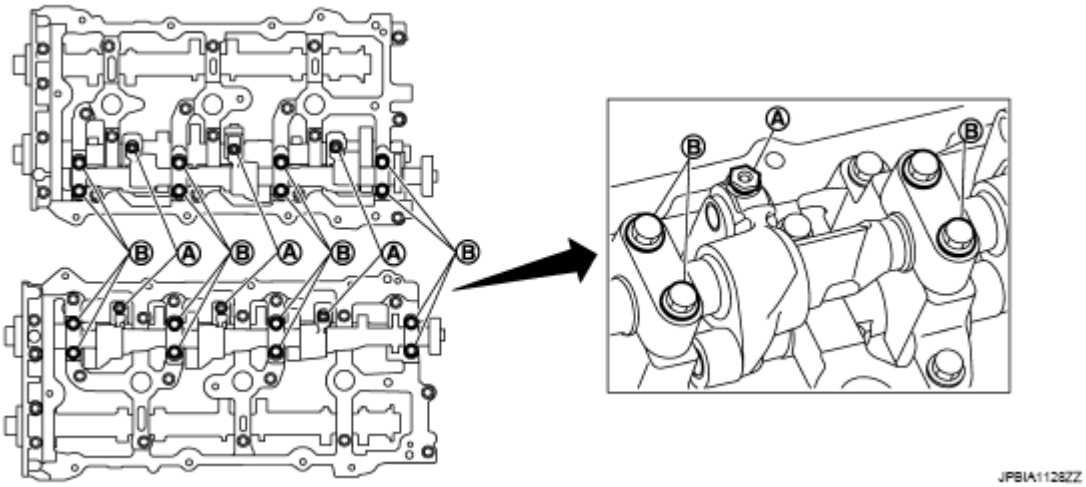

Fig. 170: Disassembled View Of VVEL Ladder & Cylinder Head Assembly
Courtesy of NISSAN NORTH AMERICA, INC.

CAUTION: Never loosen adjusting bolts (A) and mounting bolts (black color) (B) of VVEL ladder assembly. If loosened, the stroke of cam lift becomes out of adjustment. In such case, replacement of VVEL ladder assembly and cylinder head assembly is required.

NOTE: VVEL ladder assembly cannot be replaced as a single part, because it is machined together with cylinder head assembly.

1. Remove rocker covers (bank 1 and bank 2). Refer to "**EXPLODED VIEW**".
2. Remove VVEL actuator sub assembly as follows:

CAUTION: VVEL actuator sub assembly and VVEL control shaft position sensor are nonreusable. Never remove them unless they are required.

a. Remove VVEL control shaft position sensor.
b. Turn control shaft to the large lift side and fix it in order to prevent the interference of the stopper surface.
   - If control shaft cannot be moved, set crankshaft in position referring to the information below. (To displace cam nose)

   Bank 1: Turn 120 degrees from no. 1 cylinder at TDC

   Bank 2: No. 1 cylinder at TDC

c. Fix two flat areas (C) of control shaft with a wrench to remove mounting bolts of control shaft.

 © 2011 Mitchell Repair Information Company, LLC.

A : Bank 1
B : Bank 2
⇦ : Engine front

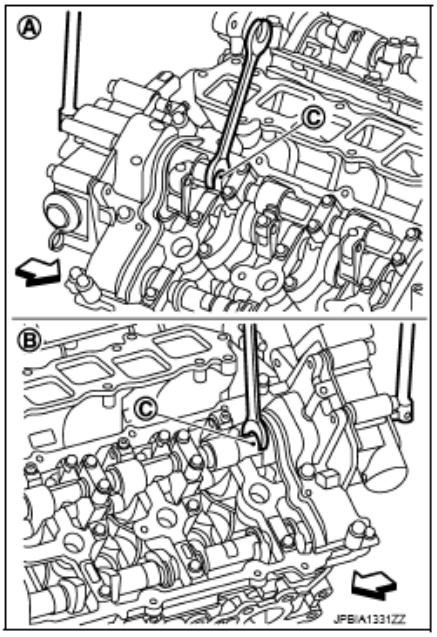

Fig. 171: Removing Control Shaft Mounting Bolt Using Tool
Courtesy of NISSAN NORTH AMERICA, INC.

CAUTION:
- **During the operation, never allow a wrench to interfere with other parts.**
- **Fix control shaft to prevent the interference of the stopper surface.**

d. Remove VVEL actuator sub assembly.
   - Loosen mounting bolts in the reverse order as shown in the figure below.

A : Bank 2
B : Bank 1

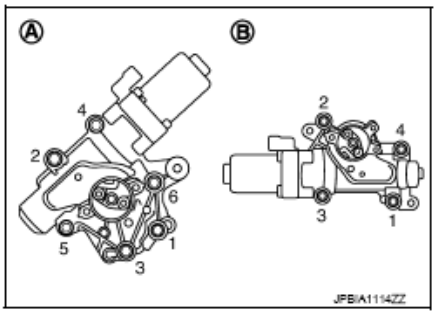

Fig. 172: Identifying VVEL Actuator Sub Assembly Mounting Bolt Loosening Sequence
Courtesy of NISSAN NORTH AMERICA, INC.

CAUTION:
- **When removing, prepare wastes because oil spills.**
- **When installing, be careful with VVEL actuator sub assembly (bank 2) mounting bolt No. 1 because its**

 © 2011 Mitchell Repair Information Company, LLC.

length is different.

e. Remove actuator bracket (rear).
   - Loosen mounting bolts in the reverse of the order shown in the figure below.

A : Bank 1
B : Bank 2
⇦ : Engine front

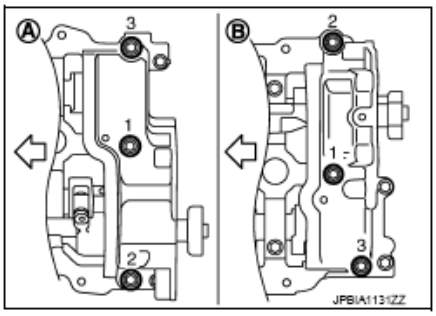

Fig. 173: Rear Actuator Bracket Mounting Bolt Tightening Sequence
Courtesy of NISSAN NORTH AMERICA, INC.

3. Remove front timing chain case, camshaft sprockets, and timing chain. Refer to "**EXPLODED VIEW**".
4. Remove rear timing chain case. Refer to "**EXPLODED VIEW**".
5. Remove VVEL ladder assembly.
   - Loosen mounting bolts (gold color) in the reverse order as shown in the figure below.

A : Bank 1
B : Bank 2
⇦ : Engine front

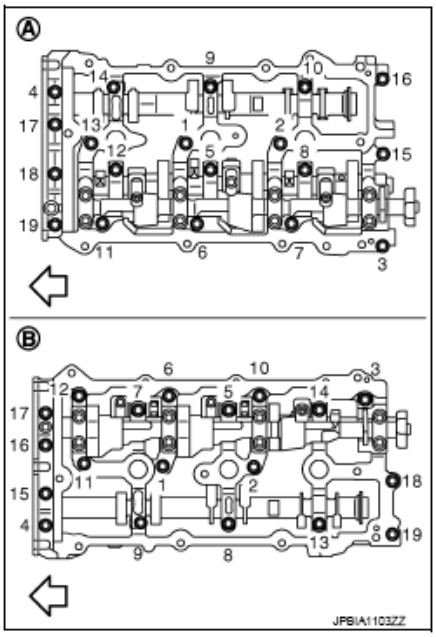

Fig. 174: VVEL Ladder Assembly Mounting Bolt Tightening Sequence
Courtesy of NISSAN NORTH AMERICA, INC.

CAUTION:
- **Never loosen adjusting bolts and mounting bolts (black**

 © 2011 Mitchell Repair Information Company, LLC.

color).

- **When removing VVEL ladder assembly, hold the drive shaft from below so as not to drop it.**

6. Remove camshaft (EXH).
7. Remove valve lifter.
   - Identify installation positions, and store them without mixing them up.
8. Remove timing chain tensioners (secondary) (1) from cylinder head.

A : Bank 1
B : Bank 2

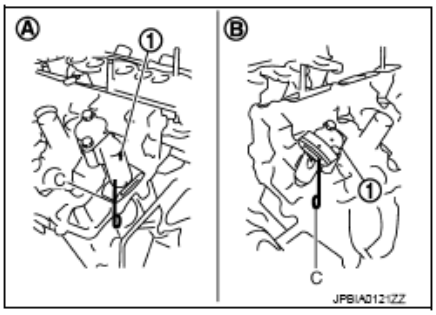

Fig. 175: Removing Oil Filter From Cylinder Head
Courtesy of NISSAN NORTH AMERICA, INC.

- Remove timing chain tensioners (secondary) with its stopper pin (C) attached.

NOTE: Stopper pin should be attached when timing chain (secondary) is removed.

9. Remove oil filter from cylinder head, if necessary.

ASSEMBLY

CAUTION: Do not reuse washers.

1. Install timing chain tensioners (secondary) (1) on both sides of cylinder head.

A : Bank 1
B : Bank 2

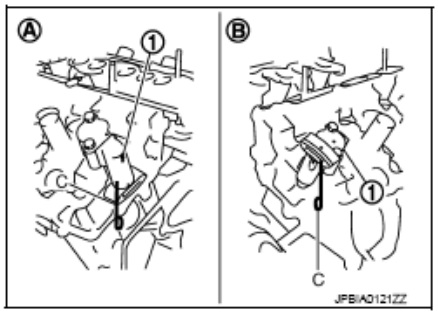

 © 2011 Mitchell Repair Information Company, LLC.

Fig. 176: Installing Timing Chain Tensioner Stopper Pin
Courtesy of NISSAN NORTH AMERICA, INC.

- Install timing chain tensioner with its stopper pin (C) attached.
- Install timing chain tensioner with sliding part facing downward on cylinder head (bank 1), and with sliding part facing upward on cylinder head (bank 2).

2. Install oil filter (1), if removed.
   - Do not project from the cylinder head (2) surface.

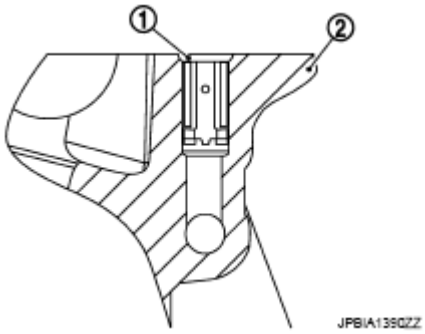

Fig. 177: Identifying Cylinder Head And Oil Filter
Courtesy of NISSAN NORTH AMERICA, INC.

3. Install valve lifter.
   - Install it in the original position.
4. Install camshaft (EXH).
   - Distinction between camshaft (EXH) (bank 1 and bank 2) is performed with the identification mark.

Bank	Paint marks			Identification mark (F)
	M1 (C)	M2 (D)	M3 (E)	
Bank 1 (A)	No	Blue	Light blue	1 N
Bank 2 (B)	No	Blue	Light blue	1 P

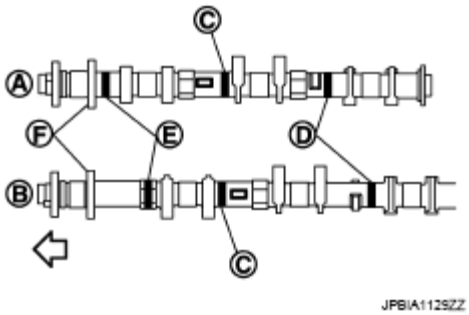

Fig. 178: Identifying Camshaft (EXH) Paint And Identification Mark
Courtesy of NISSAN NORTH AMERICA, INC.

 © 2011 Mitchell Repair Information Company, LLC.

5. Install VVEL ladder assembly as follows:
   a. Apply a continuous bead of liquid gasket with tube presser (commercial service tool) to the cylinder head as shown in the figure below.

A : Bank 1
B : Bank 2
c : ϕ3.4 - 4.4 mm (0.134 - 0.173 in)
⇦ : Engine front

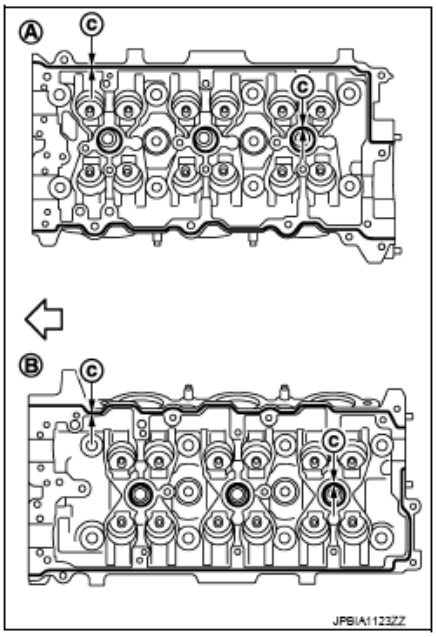

Fig. 179: Identifying Liquid Gasket Applying Area On Cylinder Head
Courtesy of NISSAN NORTH AMERICA, INC.

Use Genuine RTV Silicone Sealant or equivalent. Refer to "RECOMMENDED CHEMICAL PRODUCTS AND SEALANTS ".

   b. Tighten mounting bolts in the following step, in numerical order as shown in the figure below.

 © 2011 Mitchell Repair Information Company, LLC.

A : Bank 1
B : Bank 2
⇦ : Engine front

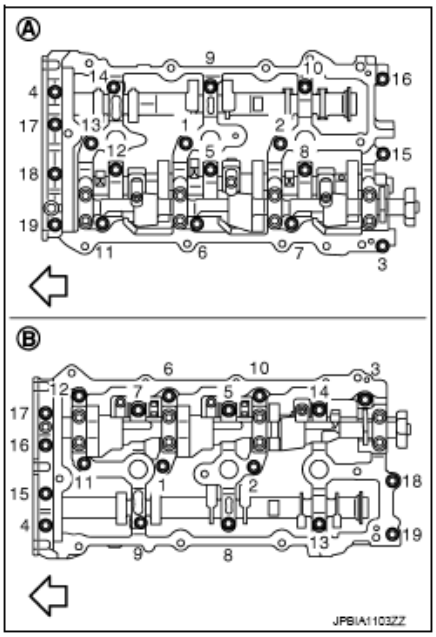

Fig. 180: VVEL Ladder Assembly Mounting Bolt Tightening Sequence
Courtesy of NISSAN NORTH AMERICA, INC.

CAUTION: Do not reuse washers.

i. Tighten bolts in numerical order as shown in the figure below.

Torque: 1.96 N.m (0.20 kg-m, 1 ft-lb)

ii. Tighten bolts in numerical order as shown in the figure below.

Torque: 5.88 N.m (0.60 kg-m, 4 ft-lb)

iii. Tighten bolts in numerical order as shown in the figure below.

Torque: 10.4 N.m (1.1 kg-m, 8 ft-lb)

6. Measure difference in levels between front end faces of VVEL ladder assembly and cylinder head.

Standard: -0.14 to 0.14 mm (-0.0055 to 0.0055 in)

- Measure two positions (both intake and exhaust side) for a single bank.
- If the measured value is out of the standard, re-install VVEL ladder assembly.

 © 2011 Mitchell Repair Information Company, LLC.

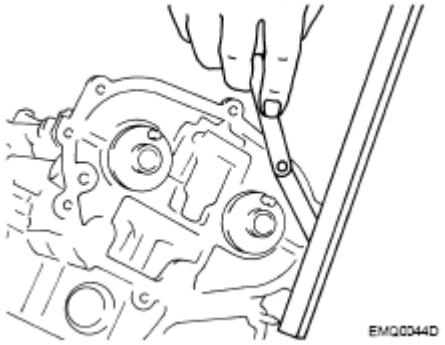

Fig. 181: Measuring Clearance Between Front End Faces Of VVEL Ladder Assembly And Cylinder Head
Courtesy of NISSAN NORTH AMERICA, INC.

7. Install rear timing chain case. Refer to "**EXPLODED VIEW**".
8. Install camshaft sprockets and timing chains. Refer to "**EXPLODED VIEW**".
9. Install actuator bracket (rear) as follows:
   a. Apply a continuous bead of liquid gasket with tube presser (commercial service tool) to the actuator bracket (rear) as shown in the figure below.

A : Bank 1
B : Bank 2
c : ϕ3.4 - 4.4 mm (0.134 - 0.173 in)
⇦ : Engine front

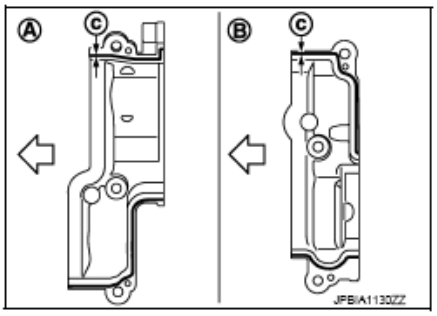

Fig. 182: Identifying Liquid Gasket Applying Area On Actuator Bracket (Rear)
Courtesy of NISSAN NORTH AMERICA, INC.

Use Genuine RTV Silicone Sealant or equivalent. Refer to "RECOMMENDED CHEMICAL PRODUCTS AND SEALANTS ".

CAUTION: Never apply gasket to the oil passage.

   b. Tighten mounting bolts in the following steps, in numerical order as shown in the figure below.

 © 2011 Mitchell Repair Information Company, LLC.

A : Bank 1
B : Bank 2
⇦ : Engine front

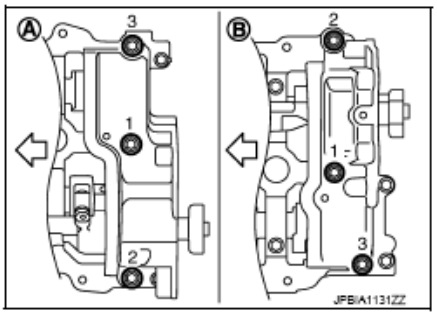

Fig. 183: Actuator Bracket (Rear) Mounting Bolt Tightening Sequence
Courtesy of NISSAN NORTH AMERICA, INC.

CAUTION: Do not reuse washers.

i. Tighten bolts in numerical order as shown in the figure below.

Torque: 1.96 N.m (0.20 kg-m, 1 ft-lb)

ii. Tighten bolts in numerical order as shown in the figure below.

Torque: 5.88 N.m (0.60 kg-m, 4 ft-lb)

iii. Tighten bolts in numerical order as shown in the figure below.

Torque: 31.4 N.m (3.2 kg-m, 23 ft-lb)

10. Install new VVEL actuator sub assembly as follows:

CAUTION: Regarding replacement, because VVEL actuator sub assembly and VVEL control shaft position sensor are controlled on a one-on-one basis, replace them as a set.

NOTE:

- **VVEL actuator arm (B) is factory-fixed at 5.5 degrees from the small lift with a holding jig (A).**
- **The holding jig is supplied in the new VVEL actuator sub assembly.**

 © 2011 Mitchell Repair Information Company, LLC.

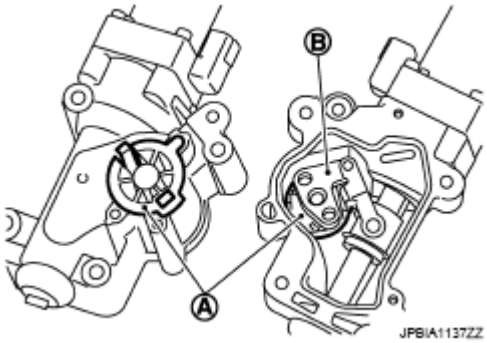

Fig. 184: Identifying VVEL Actuator Arm And Holding Jig
Courtesy of NISSAN NORTH AMERICA, INC.

CAUTION:

- **Never disassemble VVEL actuator sub assembly. [Never loosen actuator motor mounting bolts (A) shown in the figure below]**
- **Never shock VVEL actuator sub assembly.**

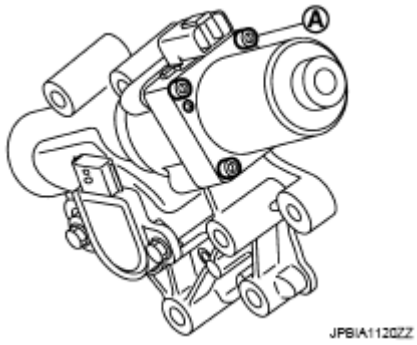

Fig. 185: Identifying Actuator Motor Mounting Bolts
Courtesy of NISSAN NORTH AMERICA, INC.

a. Move control shaft to the position of small lift stopper.
   - The position where a part of the stopper of control shaft contacts VVEL ladder bracket.

 © 2011 Mitchell Repair Information Company, LLC.

1 : VVEL ladder assembly (bank 2)
2 : VVEL ladder assembly (bank 1)
A : Stopper of control shaft
⬅ : Small lift side

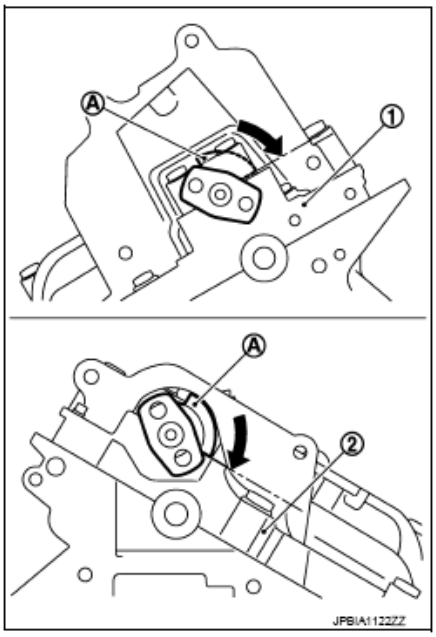

Fig. 186: Moving Control Shaft To Position Of Small Lift Stopper
Courtesy of NISSAN NORTH AMERICA, INC.

CAUTION: Be careful not to damage the stopper surface.

- If control shaft cannot be moved, set crankshaft in position referring to the information below. (To displace cam nose)

  Bank 1: Turn 120 degrees from No. 1 cylinder at TDC

  Bank 2: No. 1 cylinder at TDC

b. Hold two flat areas of control shaft with a wrench, and rotate the control shaft (5.5 degrees from the stopper) to the large lift side. (This is for aligning the bolt hole of control shaft and the hole of VVEL actuator arm.)

 © 2011 Mitchell Repair Information Company, LLC.

1 : VVEL actuator sub assembly (bank 1)
A : Control shaft
b : 5.5 degrees
⬅ : Large lift side

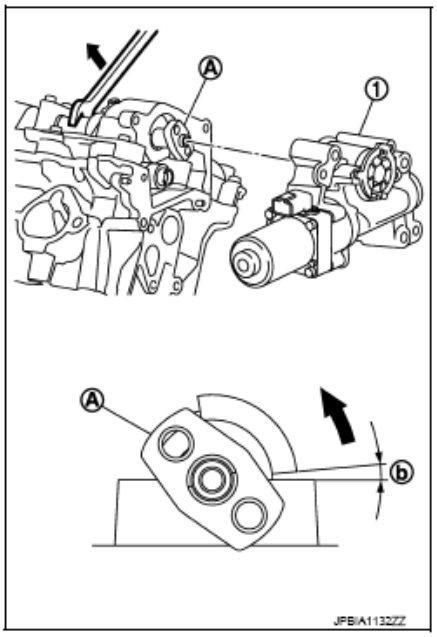

Fig. 187: Rotating Control Shaft Using Tool
Courtesy of NISSAN NORTH AMERICA, INC.

c. Apply a continuous bead of liquid gasket with tube presser (commercial service tool) to the VVEL actuator sub assembly as shown in the figure below.

1 : VVEL actuator sub assembly (bank 2)
2 : VVEL actuator sub assembly (bank 1)
a : 4.0 - 5.6 mm (0.157 - 0.220 in)
b : ϕ3.4 - 4.4 mm (0.134 - 0.173 in)

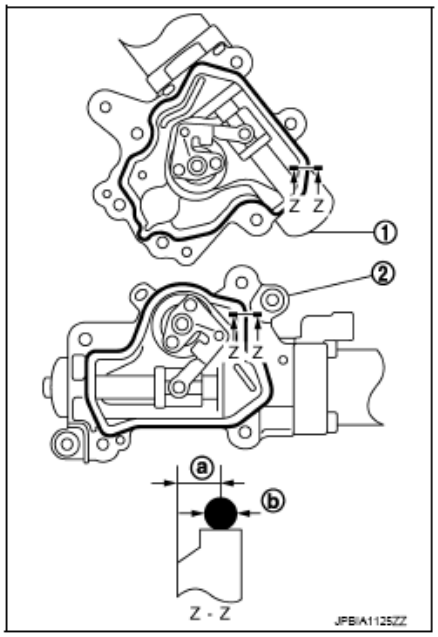

Fig. 188: Identifying Liquid Gasket Applying Area On VVEL Actuator Sub Assembly
Courtesy of NISSAN NORTH AMERICA, INC.

Use Genuine RTV Silicone Sealant or equivalent. Refer to "RECOMMENDED CHEMICAL PRODUCTS AND SEALANTS ".

 © 2011 Mitchell Repair Information Company, LLC.

CAUTION: Never apply gasket to the oil passage.

d. Install new VVEL actuator sub assembly.
   - Tighten mounting bolts in the following step, in numerical order as shown below.

A : Bank 2
B : Bank 1

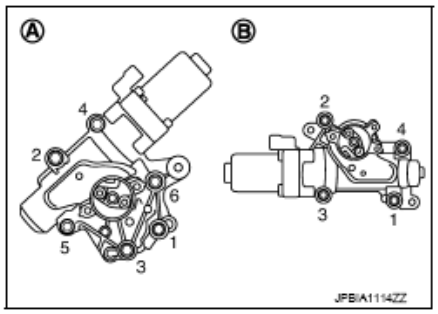

Fig. 189: VVEL Actuator Sub Assembly Mounting Bolt Tightening Sequence
Courtesy of NISSAN NORTH AMERICA, INC.

CAUTION:
- **When installing, be careful with VVEL actuator sub assembly (bank 2) mounting bolt No. 1 because its length is different.**
- **Be sure to check that the VVEL actuator sub assembly is in contact with the cylinder head before tightening the mounting bolts.**

e. Remove holding jig.
f. Check that VVEL actuator arm bolt hole is aligned with control shaft tapped hole. If it is not aligned, turn control shaft for alignment.
g. Fix two flat areas (C) of control shaft with a wrench to install mounting bolts of control shaft.

 © 2011 Mitchell Repair Information Company, LLC.

A : Bank 1
B : Bank 2
⇦ : Engine front

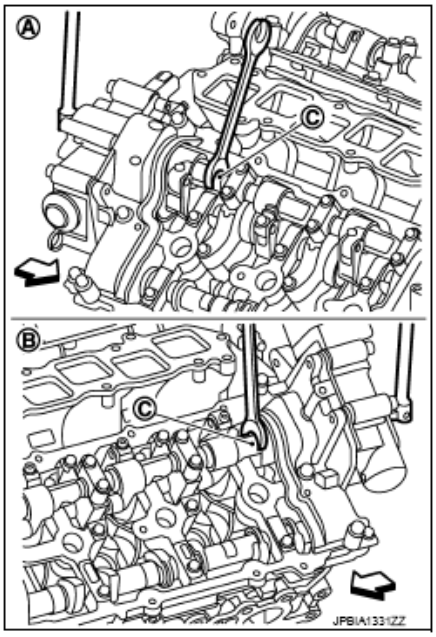

Fig. 190: Installing Control Shaft Mounting Bolt Using Tool
Courtesy of NISSAN NORTH AMERICA, INC.

CAUTION:
- **During the operation, never allow a wrench to interfere with other parts.**
- **Fix control shaft to prevent the interference of the stopper surface.**

11. Install new VVEL control shaft position sensor as follows:

CAUTION: Regarding replacement, because VVEL actuator sub assembly and VVEL control shaft position sensor are controlled on a one-on-one basis, replace them as a set.

a. Apply engine oil to O-ring or contact surface of O-ring.
b. Align matching marks (B) of VVEL control shaft position sensor and upper housing.

 © 2011 Mitchell Repair Information Company, LLC.

C : Bank 2

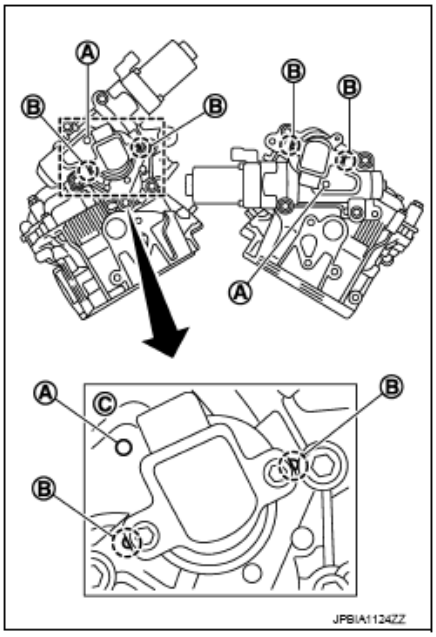

Fig. 191: Identifying VVEL Control Shaft Position Sensor And Upper Housing Matching Mark
Courtesy of NISSAN NORTH AMERICA, INC.

- Face connector toward matching mark (A).

c. Temporarily tighten bolt.

d. Adjust VVEL control shaft position sensor after setting the engine assembly in the vehicle. Refer to "**VVEL CONTROL SHAFT POSITION SENSOR ADJUSTMENT: DESCRIPTION** " (For USA AND CANADA) or "**VVEL CONTROL SHAFT POSITION SENSOR ADJUSTMENT: DESCRIPTION** " (For MEXICO).

CAUTION: Be sure to adjust VVEL control shaft position sensor.

e. After adjusting VVEL control shaft position sensor, tighten bolts to the specified torque.

12. Inspect the valve clearance. Refer to "**INSPECTION AND ADJUSTMENT**".
13. Install in the reverse order of removal after this step.

Inspection

INSPECTION AFTER REMOVAL (EXHAUST SIDE)

Camshaft (EXH) Runout

1. Put V-block on precise flat table, and support No. 2 and 4 journals of camshaft.

CAUTION: Never support No. 1 journal (on the side of camshaft sprocket)

 © 2011 Mitchell Repair Information Company, LLC.

because it has a different diameter from the other three locations.

2. Set a dial indicator vertically to No. 3 journal.
3. Turn camshaft (EXH) to one direction with hands, and measure the camshaft runout on a dial indicator. (Total indicator reading)

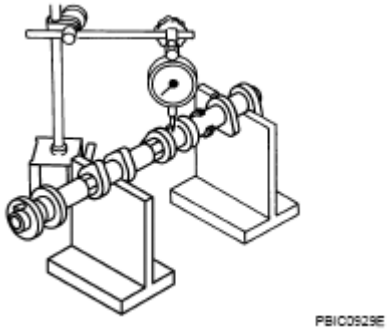

Fig. 192: Checking Camshaft (EXH) Runout Using Dial Indicator
Courtesy of NISSAN NORTH AMERICA, INC.

Standard and limit: Refer to "CAMSHAFT".

4. If it exceeds the limit, replace camshaft (EXH).

   Camshaft (EXH) Cam Height

   - Measure the camshaft (EXH) cam height with a micrometer.

     Standard: Refer to "CAMSHAFT".

   - If wear exceeds the limit, replace camshaft (EXH).

Fig. 193: Measuring Camshaft (EXH) Cam Height Using Micrometer
Courtesy of NISSAN NORTH AMERICA, INC.

Camshaft (EXH) Journal Oil Clearance

 © 2011 Mitchell Repair Information Company, LLC.

CAMSHAFT (EXH) JOURNAL DIAMETER

- Measure the outer diameter of camshaft (EXH) journal with a micrometer (A).

  Standard: Refer to "CAMSHAFT".

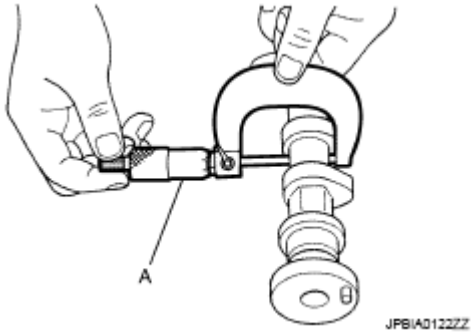

Fig. 194: Measuring Outer Diameter Of Camshaft (EXH) Journal Using Micrometer
Courtesy of NISSAN NORTH AMERICA, INC.

VVEL LADDER ASSEMBLY (EXHAUST SIDE) INNER DIAMETER

- Tighten VVEL ladder assembly bolts to the specified torque. Refer to "**INSTALLATION**" for the tightening procedure.
- Measure inner diameter (A) of VVEL ladder assembly (Exhaust side) with a bore gauge.

  Standard: Refer to "CAMSHAFT".

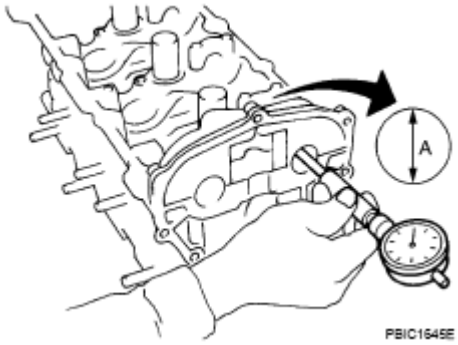

Fig. 195: Measuring Inner Diameter Of VVEL Ladder Assembly Using Bore Gauge
Courtesy of NISSAN NORTH AMERICA, INC.

CAMSHAFT (EXH) JOURNAL OIL CLEARANCE

- (Oil clearance) = [VVEL ladder assembly (Exhaust side) inner diameter] - [Camshaft (EXH) journal diameter].

  Standard and limit: Refer to "CAMSHAFT".

 © 2011 Mitchell Repair Information Company, LLC.

- If the calculated value exceeds the limit, replace either or both camshaft (EXH) and VVEL ladder assembly and cylinder head assembly.

NOTE: VVEL ladder assembly cannot be replaced as a single part, because it is machined together with cylinder head assembly.

Camshaft (EXH) End Play

- Install a dial indicator in thrust direction on front end of camshaft. Measure the end play of a dial indicator when camshaft (EXH) is moved forward/backward (in direction of axis).

  Standard and limit: Refer to "CAMSHAFT".

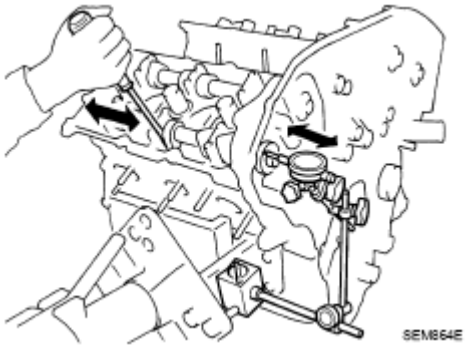

Fig. 196: Measuring Camshaft End Play Using Dial Indicator
Courtesy of NISSAN NORTH AMERICA, INC.

- Measure the following parts if out of the limit.
  - Dimension "A" for camshaft (EXH) No. 1 journal

    Standard: 27.500 - 27.548 mm (1.0827 - 1.0846 in)

  - Dimension "B" for cylinder head No. 1 journal bearing

    Standard: 27.360 - 27.385 mm (1.0772 - 1.0781 in)

- Refer to the standards above, and then replace camshaft (EXH) and/or VVEL ladder assembly and cylinder head assembly.

 © 2011 Mitchell Repair Information Company, LLC.

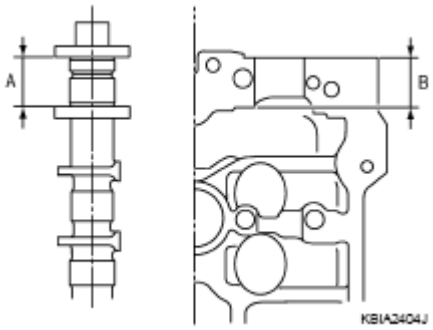

Fig. 197: Identifying Camshaft Journal Dimensions
Courtesy of NISSAN NORTH AMERICA, INC.

NOTE: Cylinder head assembly cannot be replaced as a single part, because it is machined together with VVEL ladder assembly.

Camshaft Sprocket (EXH) Runout

1. Put V-block on precise flat table, and support No. 2 and 4 journals of camshaft (EXH).

   CAUTION: Never support No. 1 journal (on the side of camshaft sprocket) because it has a different diameter from the other three locations.

2. Measure the camshaft sprocket (EXH) runout with a dial indicator. (Total indicator reading)

   Limit: Refer to "CAMSHAFT".

3. If it exceeds the limit, replace camshaft sprocket (EXH).

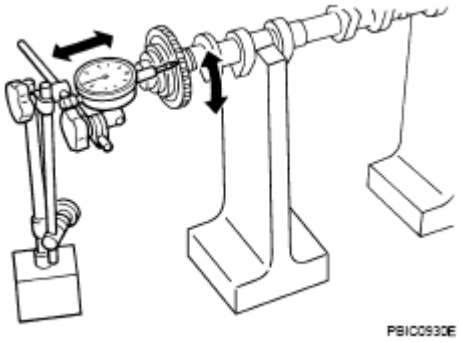

Fig. 198: Measuring Camshaft Sprocket (EXH) Runout Using Dial Indicator
Courtesy of NISSAN NORTH AMERICA, INC.

Valve Lifter (EXH)

- Check if surface of valve lifter has any wear or crack.
- If wear or crack is found, replace valve lifter (EXH). Refer to "**CAMSHAFT**".

 © 2011 Mitchell Repair Information Company, LLC.

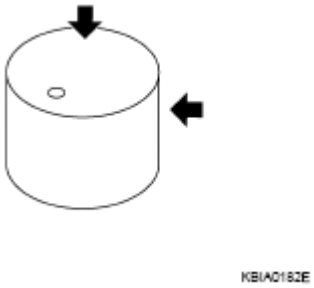

Fig. 199: Locating Valve Lifter Inspection Area
Courtesy of NISSAN NORTH AMERICA, INC.

Valve Lifter Clearance (EXH)

VALVE LIFTER OUTER DIAMETER

- Measure the outer diameter at 1/2 height of valve lifter with a micrometer (A) since valve lifter is in barrel shape.

  Standard: Refer to "CAMSHAFT".

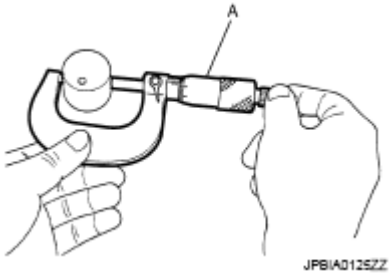

Fig. 200: Measuring Outer Diameter At 1/2 Height Of Valve Lifter Using Micrometer
Courtesy of NISSAN NORTH AMERICA, INC.

VALVE LIFTER HOLE DIAMETER

- Measure the inner diameter of valve lifter hole of cylinder head with an inside micrometer.

  Standard: Refer to "CAMSHAFT".

 © 2011 Mitchell Repair Information Company, LLC.

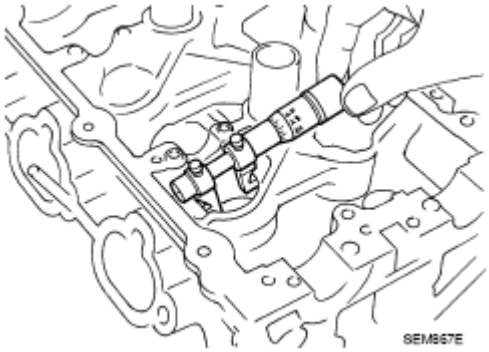

Fig. 201: Measuring Inner Diameter Of Valve Lifter Hole Of Cylinder Head Using Micrometer
Courtesy of NISSAN NORTH AMERICA, INC.

VALVE LIFTER CLEARANCE

- (Valve lifter clearance) = (Valve lifter hole diameter) - (Valve lifter outer diameter)

  Standard: Refer to "CAMSHAFT".

- If the calculated value is out of the standard, referring to each standard of valve lifter outer diameter and valve lifter hole diameter, replace either or both valve lifter and VVEL ladder assembly and cylinder head assembly.

NOTE: **Cylinder head assembly cannot be replaced as a single part, because it is machined together with VVEL ladder assembly.**

INSPECTION AFTER REMOVAL (INTAKE SIDE)

Drive Shaft End Play

- Install a dial indicator in thrust direction on front end of drive shaft. Measure the end play of a dial indicator when drive shaft is moved forward/backward (in direction of axis).

  Standard and limit: Refer to "CAMSHAFT".

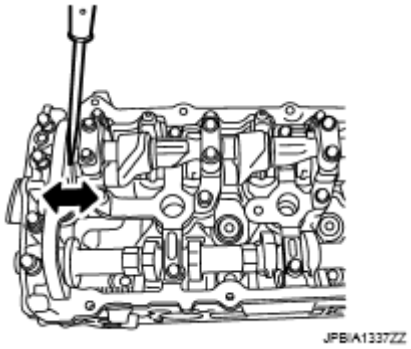

Fig. 202: Measuring Drive Shaft End Play Using Dial Indicator

 © 2011 Mitchell Repair Information Company, LLC.

Courtesy of NISSAN NORTH AMERICA, INC.

- Measure the following parts if out of the limit.
  - Dimension "A" for drive shaft No. 1 journal

    Standard: 27.500 - 27.548 mm (1.0827 - 1.0846 in)

  - Dimension "B" for cylinder head No. 1 journal bearing

    Standard: 27.360 - 27.385 mm (1.0772 - 1.0781 in)

- If it exceeds the limit, replace VVEL ladder assembly and cylinder head assembly.

NOTE: Cylinder head assembly cannot be replaced as a single part, because it is machined together with VVEL ladder assembly.

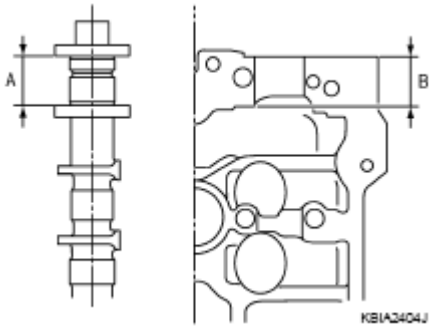

Fig. 203: Identifying Camshaft Journal Dimensions
Courtesy of NISSAN NORTH AMERICA, INC.

Camshaft Sprocket (INT) Runout

1. Put V-block on precise flat table, and support No. 2 and 4 journals of drive shaft.

   CAUTION: Never support No. 1 journal (on the side of camshaft sprocket) because it has a different diameter from the other three locations.

2. Measure the camshaft sprocket (INT) runout with a dial indicator. (Total indicator reading)

   Limit: Refer to "CAMSHAFT".

3. If it exceeds the limit, replace camshaft sprocket (INT).

Valve Lifter (INT)

- Check if surface of valve lifter has any wear or crack.
- If wear or crack is found, replace VVEL ladder assembly and cylinder head assembly. Refer to

 © 2011 Mitchell Repair Information Company, LLC.

"CAMSHAFT".

NOTE: Since the valve lifter (INT) cannot be replaced by the piece, VVEL ladder assembly and cylinder head assembly replacement are required.

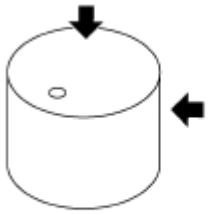

Fig. 204: Locating Valve Lifter Inspection Area
Courtesy of NISSAN NORTH AMERICA, INC.

Valve Lifter Clearance (INT)

VALVE LIFTER OUTER DIAMETER

- Measure the outer diameter at 1/2 height of valve lifter (INT) with a micrometer (A) since valve lifter is in barrel shape.

  Standard: Refer to "CAMSHAFT".

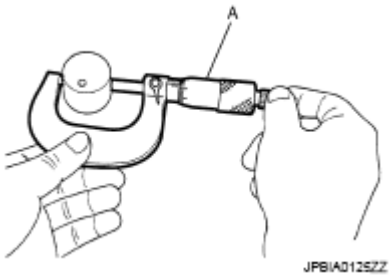

Fig. 205: Measuring Outer Diameter At 1/2 Height Of Valve Lifter Using Micrometer
Courtesy of NISSAN NORTH AMERICA, INC.

VALVE LIFTER HOLE DIAMETER

- Measure the inner diameter of valve lifter hole of cylinder head with an inside micrometer.

  Standard: Refer to "CAMSHAFT".

 © 2011 Mitchell Repair Information Company, LLC.

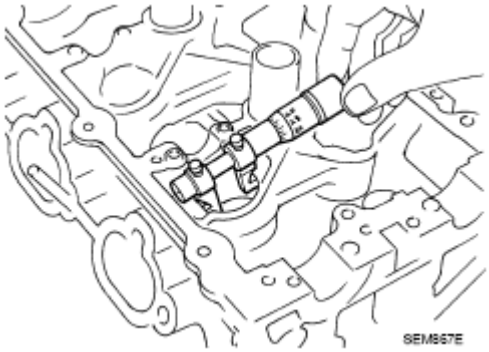

Fig. 206: Measuring Inner Diameter Of Valve Lifter Hole Of Cylinder Head Using Micrometer
Courtesy of NISSAN NORTH AMERICA, INC.

VALVE LIFTER CLEARANCE

- (Valve lifter clearance) = (Valve lifter hole diameter) - (Valve lifter outer diameter)

  Standard: Refer to "CAMSHAFT".

- If the calculated value is out of the standard, replace VVEL ladder assembly and cylinder head assembly.

NOTE: Since the valve lifter (INT) cannot be replaced by the piece, VVEL ladder assembly and cylinder head assembly replacement are required.

VVEL Ladder Assembly

DRIVE SHAFT OPERATIONAL CHECK

- Hold the both ends of the drive shaft (A) and rotate it to check that it rotates smoothly.

CAUTION: Turn VVEL ladder assembly upside down to prevent the drive shaft from dropping off.

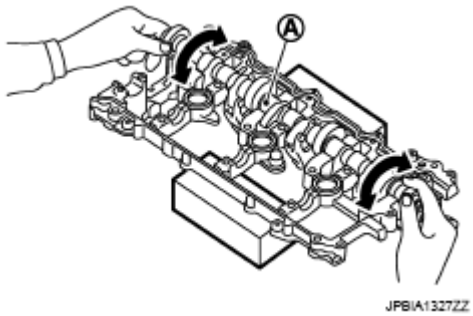

Fig. 207: Turning VVEL Ladder Assembly
Courtesy of NISSAN NORTH AMERICA, INC.

 © 2011 Mitchell Repair Information Company, LLC.

CONTROL SHAFT OPERATIONAL CHECK

- Move control shaft (A) to the small stopper and large stopper to check that the control shaft functions smoothly.

CAUTION: Turn VVEL ladder assembly upside down to prevent the drive shaft from dropping off.

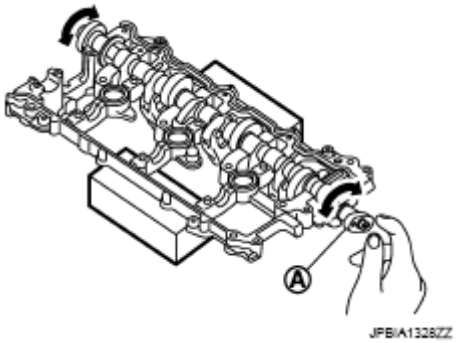

Fig. 208: Checking Control Shaft Function
Courtesy of NISSAN NORTH AMERICA, INC.

RINK CHECK FOR BACK-LASH (BONDING)

- Check that the link and the shaft of drive shaft and control shaft are not fixed.
- Check this by moving drive shaft and control shaft in the axial and rotation directions.

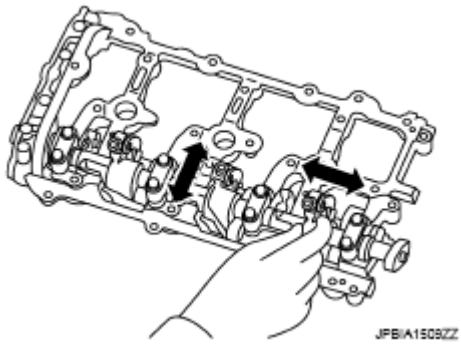

Fig. 209: Checking Link And Shaft Of Drive And Control Shaft
Courtesy of NISSAN NORTH AMERICA, INC.

- If there is an unusualness related to the above three, replace VVEL ladder assembly and cylinder head assembly.

NOTE: VVEL ladder assembly cannot be replaced as a single part, because it is machined together with cylinder head assembly.

 © 2011 Mitchell Repair Information Company, LLC.

INSPECTION AFTER INSTALLATION

Inspection of Camshaft Sprocket (INT) Oil Groove

CAUTION:

- **Perform this inspection only when DTC P0011, P0012 is detected in self-diagnostic results of CONSULT and it is directed according to inspection procedure. Refer to "DIAGNOSIS DESCRIPTION " (For USA AND CANADA) or "DIAGNOSIS DESCRIPTION " (For MEXICO).**
- **Check when engine is cold to prevent burns from the splashing engine oil.**

1. Check engine oil level. Refer to "**INSPECTION** ".
2. Perform the following procedure to prevent the engine from being unintentionally started while checking.
   a. Release the fuel pressure. Refer to "**INSPECTION** " (For USA AND CANADA) or "**INSPECTION** " (For MEXICO).
   b. Disconnect ignition coil and injector harness connectors. Refer to "**EXPLODED VIEW**".
3. Remove intake valve timing control solenoid valve. Refer to "**EXPLODED VIEW**".
4. Crank engine, and then check that engine oil comes out from intake valve timing control solenoid valve hole (A). End crank after checking.

1 : Intake valve timing control cover (bank 1)

⇦ : Engine front

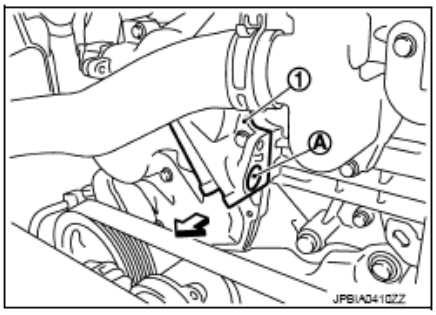

Fig. 210: Identifying Intake Valve Timing Control Cover And Hole
Courtesy of NISSAN NORTH AMERICA, INC.

WARNING: Be careful not to touch rotating parts (drive belt, idler pulley, and crankshaft pulley, etc.).

CAUTION:

- **Prevent splashing by using a shop cloth to prevent the worker from injury from engine oil and to prevent engine oil contamination.**
- **Prevent splashing by using a shop cloth to prevent engine oil from being splashed to engine and vehicle. Especially, be careful no to apply engine oil to rubber parts of drive belt, engine mounting insulator, etc. Wipe engine oil off immediately if it is splashed.**

 © 2011 Mitchell Repair Information Company, LLC.

5. Perform the following inspection if engine oil does not come out from intake valve timing control solenoid valve oil hole of the cylinder head.
   - Remove oil filter, and then clean it. Refer to "**EXPLODED VIEW**".
   - Clean oil groove between oil strainer and intake valve timing control solenoid valve. Refer to "**ENGINE LUBRICATION SYSTEM** ".
6. Remove components between intake valve timing control solenoid valve and camshaft sprocket (INT), and then check each oil groove for clogging.
   - Clean oil groove if necessary. Refer to "**ENGINE LUBRICATION SYSTEM** ".
7. After inspection, install removed parts in the reverse order.

Inspection for Leakage

The following are procedures for checking fluid leakage, lubricant leakage.

- Before starting engine, check oil/fluid levels including engine coolant and engine oil. If any are less than the required quantity, fill them to the specified level. Refer to "**FOR NORTH AMERICA: FLUIDS AND LUBRICANTS** ".
- Follow the procedure below to check for fuel leakage.
  - Turn ignition switch to the "ON" position (with engine stopped). With fuel pressure applied to fuel piping, check for fuel leakage at connection points.
  - Start engine. With engine speed increased, check again for fuel leakage at connection points.
- Run engine to check for unusual noise and vibration.

NOTE: **If hydraulic pressure inside chain tensioner drops after removal/installation, slack in guide may generate a pounding noise during and just after the engine start. However, this does not indicate a malfunction. The noise will stop after hydraulic pressure rises.**

- Warm up engine thoroughly to check that there is no leakage of fuel, or any oil/fluids including engine oil and engine coolant.
- Bleed air from lines and hoses of applicable lines, such as in cooling system.
- After cooling down engine, again check oil/fluid levels including engine oil and engine coolant. Refill them to the specified level, if necessary.

INSPECTION ITEMS DESCRIPTION

Items		Before starting engine	Engine running	After engine stopped
Engine coolant		Level	Leakage	Level
Engine oil		Level	Leakage	Level
Transmission/transaxle fluid	AT & CVT Models	Leakage	Level/Leakage	Leakage
	MT Models	Level/Leakage	Leakage	Level/Leakage
Other oils and fluids(1)		Level	Leakage	Level

 © 2011 Mitchell Repair Information Company, LLC.

Fuel	Leakage	Leakage	Leakage
(1) Power steering fluid, brake fluid, etc.			

CYLINDER HEAD

Exploded View

 © 2011 Mitchell Repair Information Company, LLC.

Symbol	Description
	N·m (kg-m, ft-lb)
	N·m (kg-m, in-lb)
	Always replace after disassembly.

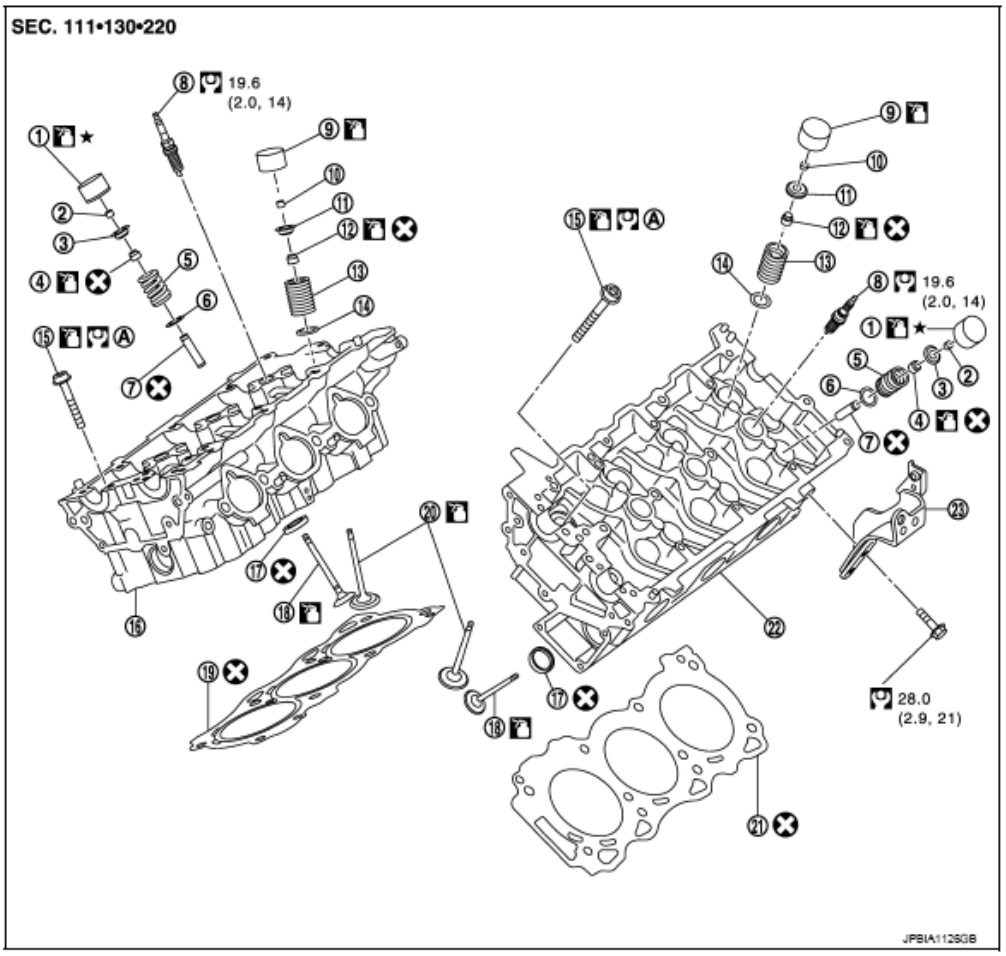

1. Valve lifter (EXH)
2. Valve collet (EXH)
3. Valve spring retainer (EXH)
4. Valve oil seal (EXH)
5. Valve spring (EXH)
6. Valve spring seat (EXH)
7. Valve guide (EXH)
8. Spark plug
9. Valve lifter (INT)
10. Valve collet (INT)
11. Valve spring retainer (INT)
12. Valve oil seal (INT)
13. Valve spring (INT)
14. Valve spring seat (INT)
15. Cylinder head bolt
16. Cylinder head (bank 1)
17. Valve seat (EXH)
18. Valve (EXH)
19. Cylinder head gasket (bank 1)
20. Valve (INT)
21. Cylinder head gasket (bank 2)
22. Cylinder head (bank 2)
23. Engine rear lower slinger

A. Comply with the installation procedure when tightening.

Fig. 211: Exploded View Of Cylinder Head With Torque Specifications
Courtesy of NISSAN NORTH AMERICA, INC.

Refer to "**COMPONENTS** " for symbol marks in the figure.

CAUTION: As for replacement of parts on the intake side as shown in the exploded view, replace VVEL ladder assembly and cylinder head assembly. (Only

 © 2011 Mitchell Repair Information Company, LLC.

valve oil seals are replaceable as a single part.)

NOTE: VVEL ladder assembly cannot be replaced as a single part, because it is machined together with cylinder head assembly.

Disassembly and Assembly

DISASSEMBLY

1. Remove the following parts:
   - Intake manifold collector: Refer to "**EXPLODED VIEW**".
   - Rocker cover: Refer to "**EXPLODED VIEW**".
   - Fuel tube and fuel injector assembly: Refer to "**EXPLODED VIEW**".
   - Intake manifold: Refer to "**EXPLODED VIEW**".
   - Exhaust manifold: Refer to "**EXPLODED VIEW**".
   - Water inlet and thermostat assembly: Refer to "**EXPLODED VIEW** ".
   - Water outlet, water pipe and heater pipe: Refer to "**EXPLODED VIEW** ".
   - Timing chain: Refer to "**EXPLODED VIEW**".
   - Rear timing chain case: Refer to "**EXPLODED VIEW**".
   - Camshaft (EXH) and VVEL ladder assembly: Refer to "**EXPLODED VIEW**".
2. Remove cylinder head.
   - Loosen mounting bolts in reverse of the order shown in the figure below.

A : Bank 1
B : Bank 2
⇦ : Engine front

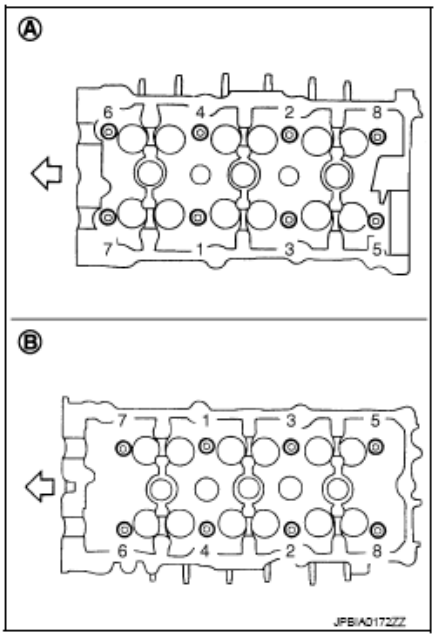

Fig. 212: Cylinder Head Mounting Bolt Tightening Sequence
Courtesy of NISSAN NORTH AMERICA, INC.

 © 2011 Mitchell Repair Information Company, LLC.

- Use the cylinder head bolt wrench [commercial service tool: - (J-24239-01)] and power tool.

3. Remove cylinder head gaskets.
4. Remove spark plug with spark plug wrench (commercial service tool).
5. Remove valve lifter.
   - Identify installation positions, and store them without mixing them up.
6. Remove valve collet.
   - Compress valve spring with the valve spring compressor [SST: KV10116200 (J-26336-A)] (A), the attachment [SST: KV10115900 (J-26336-20)] (C) and the adapter [SST: KV10109220 (-)] (B). Remove valve collet with a magnet hand.

CAUTION: When working, take care not to damage valve lifter holes.

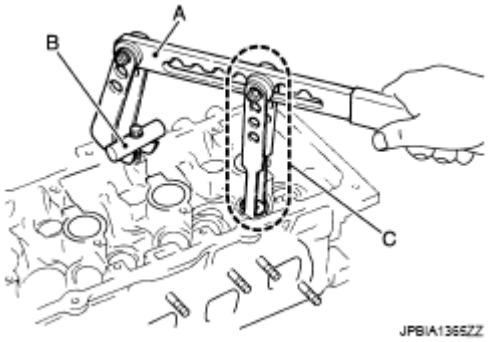

Fig. 213: Removing Valve Collet Using Tool
Courtesy of NISSAN NORTH AMERICA, INC.

7. Remove valve spring retainer, valve spring and valve spring seat.
8. Push valve stem to combustion chamber side, and remove valve.
   - Identify installation positions, and store them without mixing them up.
9. Remove valve oil seal using the valve oil seal puller [SST: KV10107902 (J-38959)] (A).

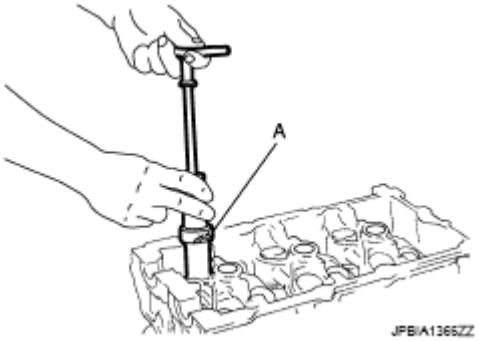

Fig. 214: Removing Valve Oil Seal Using Valve Oil Seal Puller
Courtesy of NISSAN NORTH AMERICA, INC.

 © 2011 Mitchell Repair Information Company, LLC.

10. Remove valve seat (EXH), if valve seat (EXH) must be replaced.
    - Bore out old seat until it collapses. Boring should not continue beyond the bottom face of the seat recess in cylinder head. Set the machine depth stop to ensure this. Refer to "**CYLINDER HEAD**".

CAUTION: Prevent to scratch cylinder head by excessive boring.

11. Remove valve guide (EXH), if valve guide (EXH) must be replaced.
    a. To remove valve guide (EXH), heat cylinder head to 110 to 130°C (230 to 266°F) by soaking in heated oil (A).

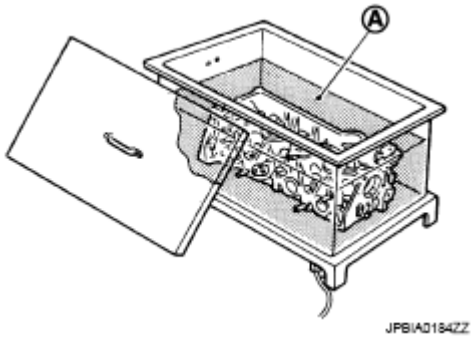

Fig. 215: Heating Cylinder Head
Courtesy of NISSAN NORTH AMERICA, INC.

    b. Drive out valve guide (EXH) with a press [under a 20 kN (2 ton, 2.2 US ton, 2.0 lmp ton) pressure] or a hammer and the valve guide drift (commercial service tool).

WARNING: Cylinder head contains heat. When working, wear protective equipment to avoid getting burned.

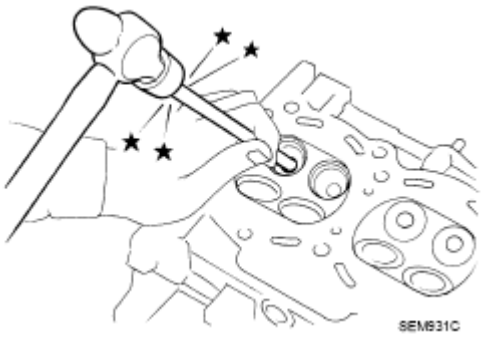

Fig. 216: Driving Out Valve Guide Using Tool
Courtesy of NISSAN NORTH AMERICA, INC.

ASSEMBLY

 © 2011 Mitchell Repair Information Company, LLC.

1. If valve guide (EXH) is removed in step 11 (DISASSEMBLY), install it. Replace with oversized [0.2 mm (0.008 in)] valve guide (EXH).
   a. Using the valve guide reamer (commercial service tool) (A), ream cylinder head valve guide (EXH) hole.

      Oversize (service) [0.2 mm (0.008 in)]:

      : Refer to "CYLINDER HEAD".

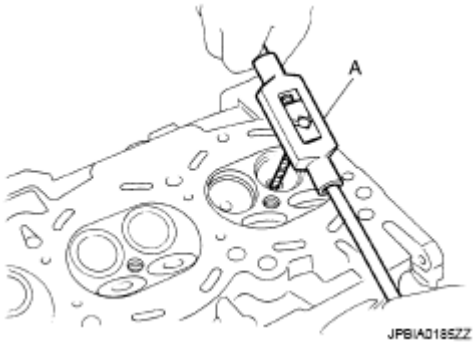

Fig. 217: Reaming Cylinder Head Valve Guide (EXH) Hole Using Valve Guide Reamer
Courtesy of NISSAN NORTH AMERICA, INC.

   b. Heat cylinder head to 110 to 130°C (230 to 266°F) by soaking in heated oil (A).

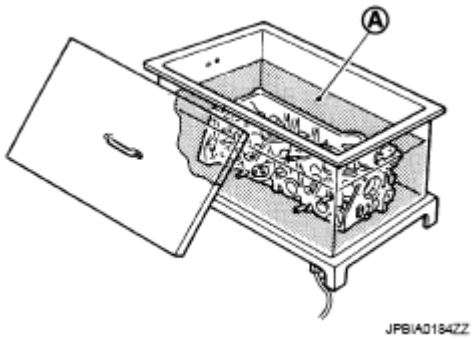

Fig. 218: Heating Cylinder Head
Courtesy of NISSAN NORTH AMERICA, INC.

   c. Using the valve guide drift (commercial service tool), press valve guide (EXH) from camshaft side to the dimensions as shown in the figure below.

      Projection (A)

      : Refer to "CYLINDER HEAD".

WARNING: Cylinder head contains heat. When working, wear protective equipment to avoid getting burned.

 © 2011 Mitchell Repair Information Company, LLC.

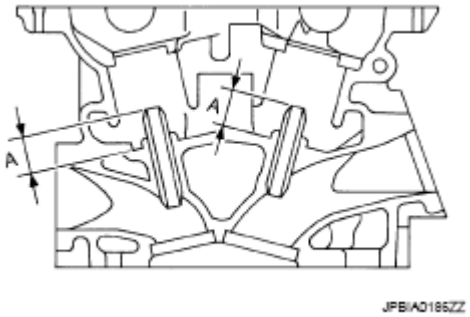

Fig. 219: Identifying Valve Guide Pressing Dimensions
Courtesy of NISSAN NORTH AMERICA, INC.

d. Using the valve guide reamer (commercial service tool) (A), apply reamer finish to valve guide (EXH).

Standard: Refer to "CYLINDER HEAD".

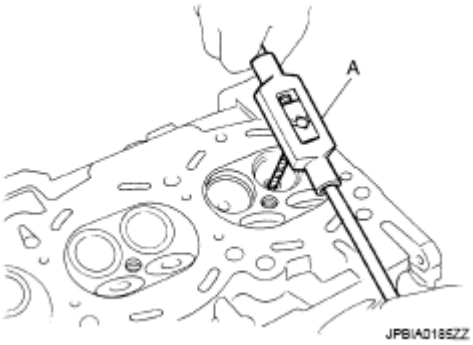

Fig. 220: Reaming Cylinder Head Valve Guide (EXH) Hole Using Valve Guide Reamer
Courtesy of NISSAN NORTH AMERICA, INC.

2. If valve seat (EXH) is removed in step 10 (DISASSEMBLY), install it. Replace with oversize [0.5 mm (0.020 in)] valve seat (EXH).
   a. Ream cylinder head recess diameter (a) for service valve seat (EXH).

   Oversize (service) [0.5 mm (0.020 in)]:

   : Refer to "CYLINDER HEAD".

   - Be sure to ream in circles concentric to valve guide center. This will enable valve to fit correctly.

 © 2011 Mitchell Repair Information Company, LLC.

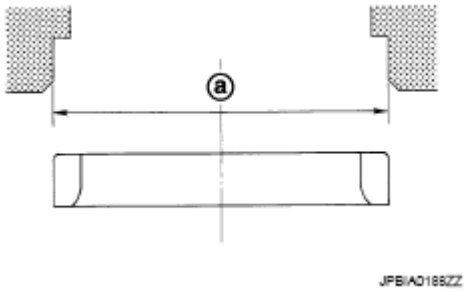

Fig. 221: Identifying Cylinder Head Recess Diameter
Courtesy of NISSAN NORTH AMERICA, INC.

b. Heat cylinder head to 110 to 130°C (230 to 266°F) by soaking in heated oil (A).

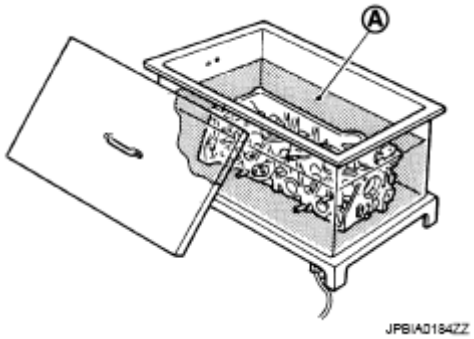

Fig. 222: Heating Cylinder Head
Courtesy of NISSAN NORTH AMERICA, INC.

c. Provide valve seats (EXH) cooled well with dry ice. Force fit valve seat (EXH) into cylinder head.

WARNING: Cylinder head contains heat. When working, wear protective equipment to avoid getting burned.

CAUTION: Avoid directly touching cold valve seats.

d. Using the valve seat cutter set (commercial service tool) or valve seat grinder, finish seat to the specified dimensions. Refer to "**CYLINDER HEAD**".

CAUTION: When using the valve seat cutter, firmly grip cutter handle with both hands. Then, press on the contacting surface all around the circumference to cut in a single drive. Improper pressure on cutter or cutting many different times may result in staged valve seat.

 © 2011 Mitchell Repair Information Company, LLC.

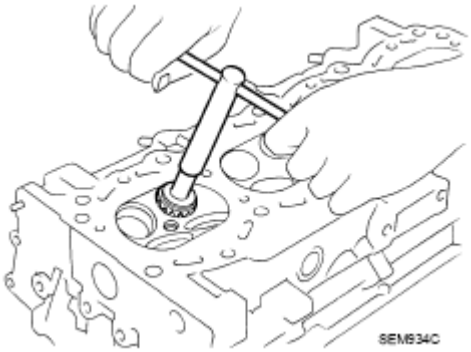

Fig. 223: Cutting Valve Seat Using Tool
Courtesy of NISSAN NORTH AMERICA, INC.

e. Using compound, grind to adjust valve fitting.
f. Check again for normal contact. Refer to "**VALVE SEAT CONTACT**".

3. Install new valve oil seals as follows.
   a. Apply new engine oil on new valve oil seal joint and seal lip.
   b. Using the valve oil seal drift [SST: KV10115600 (J-38958)] (A), press fit valve seal to height (b) shown in figure below.

NOTE: Dimension: Height measured before valve spring seat installation

Height (b): 14.3 - 14.9 mm (0.563 - 0.587 in)

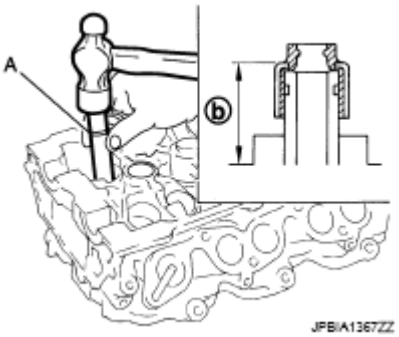

Fig. 224: Pressing Valve Seal Using Valve Oil Seal Drift
Courtesy of NISSAN NORTH AMERICA, INC.

4. Install valve spring seat.
5. Install valve.

NOTE: Larger diameter valves are for intake side.

6. Install new cylinder head gaskets.
7. Turn crankshaft until No. 1 piston is set at TDC.

 © 2011 Mitchell Repair Information Company, LLC.

1 : Crankshaft key
⇦ : Bank 1 side

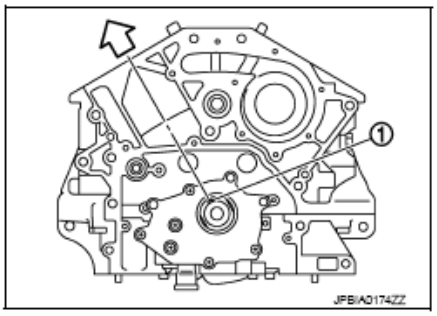

Fig. 225: Identifying Crankshaft Key
Courtesy of NISSAN NORTH AMERICA, INC.

- Crankshaft key should line up with the cylinder center line (bank 1) as shown in the figure below.

8. Install cylinder head, and tighten cylinder head bolts in numerical order as shown in figure below as follows:

A : Bank 1
B : Bank 2
⇦ : Engine front

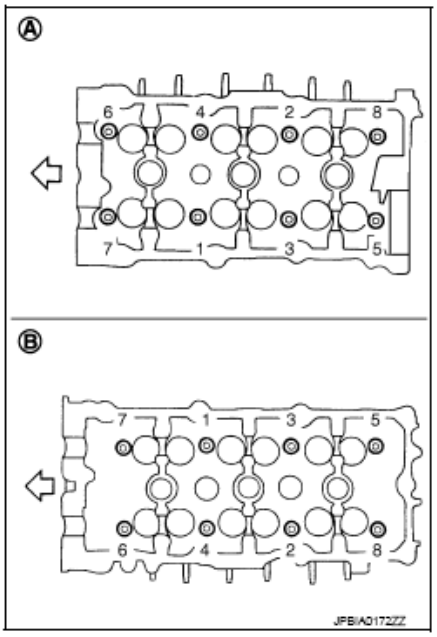

Fig. 226: Cylinder Head Mounting Bolt Tightening Sequence
Courtesy of NISSAN NORTH AMERICA, INC.

- Use the cylinder head bolt wrench [commercial service tool: - (J-24239-01)] and power tool.

CAUTION:

- **If cylinder head bolts are re-used, check their outer diameters before installation. Refer to "INSPECTION".**
- **Before installing cylinder head, inspect cylinder head distortion. Refer to "INSPECTION".**

a. Apply new engine oil to threads and seat surfaces of cylinder head bolts.

 © 2011 Mitchell Repair Information Company, LLC.

b. Tighten all cylinder head bolts.

Torque: 105 N.m (11 kg-m, 77 ft-lb)

c. Completely loosen all cylinder head bolts.

Torque: 0 N.m (0 kg-m, 0 ft-lb)

CAUTION: In step "c", loosen bolts in the reverse order of that indicated in the figure.

d. Tighten all cylinder head bolts.

Torque: 40.0 N.m (4.1 kg-m, 30 ft-lb)

e. Turn all cylinder head bolts 95 degrees clockwise (angle tightening).

CAUTION: Check the tightening angle using the angle wrench [SST: KV10112100 (BT8653-A)] (A). Never make judgment by visual inspection.

- Check tightening angle indicated on the angle wrench indicator plate.

f. Turn all cylinder head bolts 95 degrees clockwise again (angle tightening).

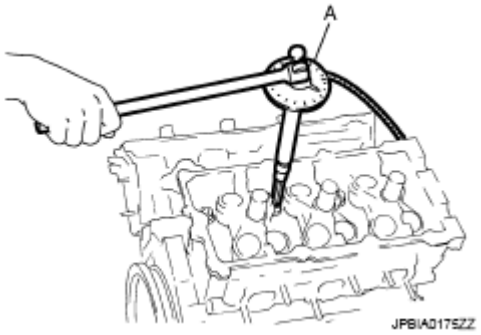

Fig. 227: Checking Cylinder Head Bolt Tightening Angle Using Angle Wrench
Courtesy of NISSAN NORTH AMERICA, INC.

9. After installing cylinder head, measure distance between front end faces of cylinder block and cylinder head (bank 1 and bank 2).

Standard: 14.1 - 14.9 mm (0.555 - 0.587 in)

- If measured value is out of the standard, re-install cylinder head.

 © 2011 Mitchell Repair Information Company, LLC.

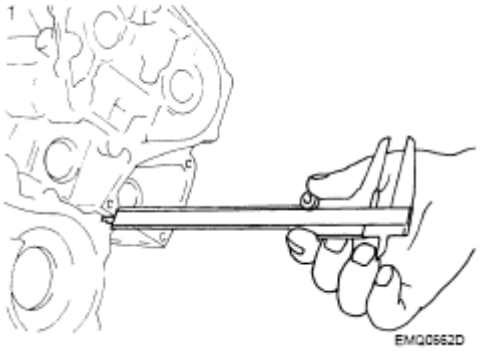

Fig. 228: Measuring Distance Between Front End Faces Of Cylinder Block And Cylinder Head
Courtesy of NISSAN NORTH AMERICA, INC.

10. Install valve spring (uneven pitch type).
    - Install narrow pitch (B) end [paint mark (C)] to cylinder head side (valve spring seat side).

A : Wide pitch
⇦ : Cylinder head side

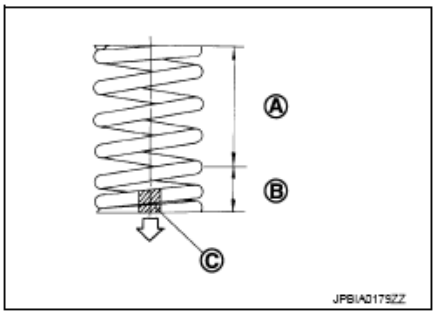

Fig. 229: Identifying Valve Spring Narrow And Wide Pitch
Courtesy of NISSAN NORTH AMERICA, INC.

Paint mark color

Intake: Purple

Exhaust: Yellowish green

11. Install valve spring retainer.
12. Install valve collet.
    - Compress valve spring with the valve spring compressor [SST: KV10116200 (J-26336-A)] (A), the attachment [SST: KV10115900 (J-26336-20)] (C) and the adapter [SST: KV10109220 (-)] (B). Install valve collet with a magnet hand.

CAUTION: When working, take care not to damage valve lifter holes.

- Tap valve stem edge lightly with plastic hammer after installation to check its installed condition.

 © 2011 Mitchell Repair Information Company, LLC.

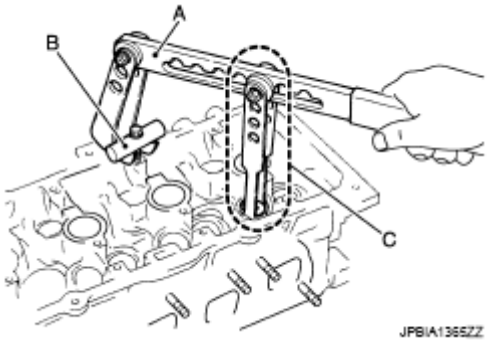

Fig. 230: Installing Valve Collet Using Tool
Courtesy of NISSAN NORTH AMERICA, INC.

13. Install valve lifter.
    - Install it in the original position.
14. Install spark plug with spark plug wrench (commercial service tool).
15. Install in the reverse order of removal after this step.

Inspection

INSPECTION AFTER DISASSEMBLY

Cylinder Head Bolts Outer Diameter

- Cylinder head bolts are tightened by plastic zone tightening method. Whenever the size difference between (B) and (A) exceeds the limit, replace them with new one.

c : 48 mm (1.89 in)
d : 11 mm (0.43 in)

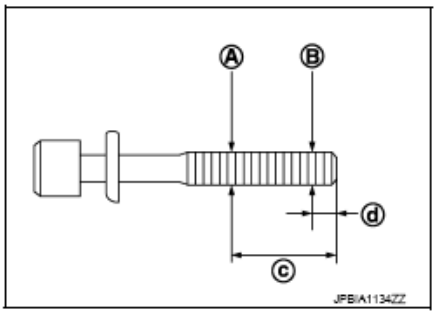

Fig. 231: Identifying Cylinder Head Bolt Outer Diameter
Courtesy of NISSAN NORTH AMERICA, INC.

Limit [(B) - (A)]: 0.18 mm (0.0071 in)

- If reduction of outer diameter appears in a position other than (A), use it as (A) point.

Cylinder Head Distortion

NOTE: When performing this inspection, cylinder block distortion should be also

 © 2011 Mitchell Repair Information Company, LLC.

checked. Refer to "INSPECTION".

1. Using a scraper, wipe off oil, scale, gasket, sealant and carbon deposits from surface of cylinder head.

   CAUTION: Never allow gasket fragments to enter engine oil or engine coolant passages.

2. At each of several locations on bottom surface of cylinder head, measure the distortion in six directions (A), (B), (C), (D), (E), and (F).

   Limit: Refer to "CYLINDER HEAD".

   - If it exceeds the limit, replace VVEL ladder assembly and cylinder head assembly.

   NOTE: Cylinder head assembly cannot be replaced as a single part, because it is machined together with VVEL ladder assembly.

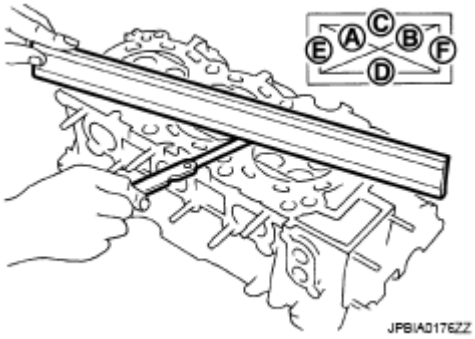

Fig. 232: Measuring Distortion Of Cylinder Head Using Tool
Courtesy of NISSAN NORTH AMERICA, INC.

Valve Dimensions

- Check the dimensions of each valve. For the dimensions, refer to "**CYLINDER HEAD**".
- If dimensions are out of the standard.
  - Replace valve (EXH) and check valve seat contact. Refer to "**VALVE SEAT CONTACT**". (Exhaust side)
  - Replace VVEL ladder assembly and cylinder head assembly. Refer to "**EXPLODED VIEW**". (Intake side)

NOTE: Since the valve (INT) cannot be replaced by the piece, VVEL ladder assembly and cylinder head assembly replacement are required.

Valve Guide Clearance

Valve Stem Diameter

 © 2011 Mitchell Repair Information Company, LLC.

- Measure the diameter of valve stem with micrometer (A).

  Standard: Refer to "CYLINDER HEAD".

Valve Guide Inner Diameter

- Measure the inner diameter of valve guide with bore gauge.

  Standard: Refer to "CYLINDER HEAD".

Valve Guide Clearance

- (Valve guide clearance) = (Valve guide inner diameter) - (Valve stem diameter)

  Standard: Refer to "CYLINDER HEAD".

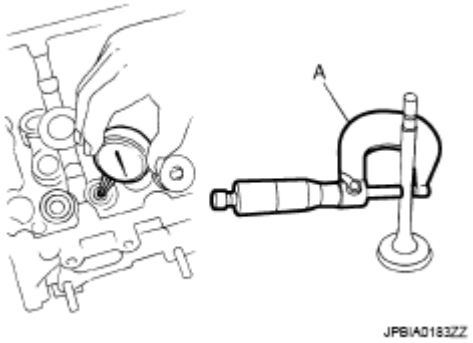

Fig. 233: Measuring Inner Diameter Of Valve Guide Using Bore Gauge
Courtesy of NISSAN NORTH AMERICA, INC.

- If the calculated value exceeds the limit.
  - Replace valve (EXH) and/or valve guide (EXH). Refer to "**EXPLODED VIEW**". (Exhaust side)
  - Replace VVEL ladder assembly and cylinder head assembly. Refer to "**EXPLODED VIEW**". (Intake side)

NOTE: Since the valve (INT) and valve guide (INT) cannot be replaced by the piece, VVEL ladder assembly and cylinder head assembly replacement are required.

Valve Seat Contact

- After confirming that the dimensions of valve guides and valves are within the specifications, perform this procedure.
- Apply prussian blue (or white lead) onto contacting surface of valve seat to check the condition of the valve contact on the surface.
- Check if the contact area band is continuous all around the circumference.

 © 2011 Mitchell Repair Information Company, LLC.

A : OK
B : NG

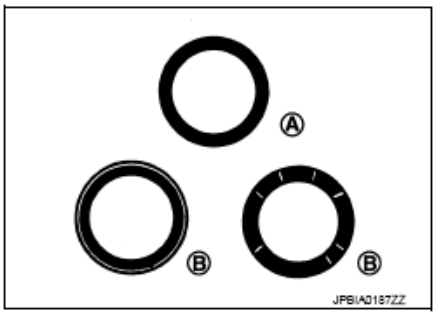

Fig. 234: Identifying Valve Seat Contact Area (OK/NG)
Courtesy of NISSAN NORTH AMERICA, INC.

- If not, grind to adjust valve fitting and check again. If the contacting surface still has "NG" conditions even after the recheck, replace valve seat (EXH). Refer to "**EXPLODED VIEW**". (Exhaust side)
- If not, replace VVEL ladder assembly and cylinder head assembly. Refer to "**EXPLODED VIEW**". (Intake side)

NOTE: Since the valve seat (INT) cannot be replaced by the piece, VVEL ladder assembly and cylinder head assembly replacement are required.

Valve Spring Squareness

- Set a try square (A) along the side of valve spring and rotate spring. Measure the maximum clearance between the top of spring and try square.

B : Contact

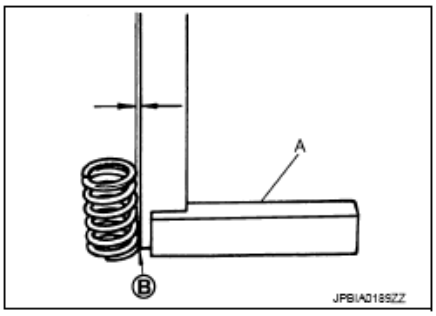

Fig. 235: Checking Valve Spring Squareness Using Try Square
Courtesy of NISSAN NORTH AMERICA, INC.

Limit: Refer to "CYLINDER HEAD".

- If it exceeds the limit.
  - Replace valve spring (EXH). Refer to "**EXPLODED VIEW**". (Exhaust side)
  - Replace VVEL ladder assembly and cylinder head assembly. Refer to "**EXPLODED VIEW**". (Intake side)

 © 2011 Mitchell Repair Information Company, LLC.

NOTE: **Since the valve spring (INT) cannot be replaced by the piece, VVEL ladder assembly and cylinder head assembly replacement are required.**

Valve Spring Dimensions and Valve Spring Pressure Load

- Check the valve spring pressure at specified spring height.

  Standard

  : Refer to "CYLINDER HEAD".

- If the installation load or load with valve open is out of the standard.
  - Replace valve spring (EXH). Refer to "**EXPLODED VIEW**". (Exhaust side)
  - Replace VVEL ladder assembly and cylinder head assembly. Refer to "**EXPLODED VIEW**". (Intake side)

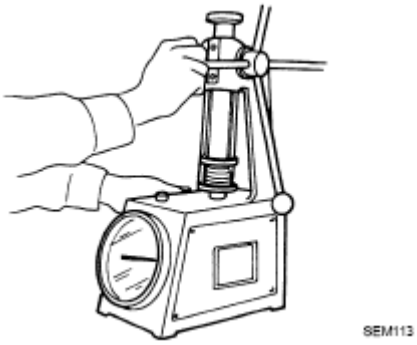

Fig. 236: Checking Valve Spring Pressure Load Using Tool
Courtesy of NISSAN NORTH AMERICA, INC.

NOTE: **Since the valve spring (INT) cannot be replaced by the piece, VVEL ladder assembly and cylinder head assembly replacement are required.**

INSPECTION AFTER INSTALLATION

Inspection for Leakage

The following are procedures for checking fluid leakage, lubricant leakage.

- Before starting engine, check oil/fluid levels including engine coolant and engine oil. If any are less than the required quantity, fill them to the specified level. Refer to "**FOR NORTH AMERICA: FLUIDS AND LUBRICANTS** ".
- Follow the procedure below to check for fuel leakage.
  - Turn ignition switch to the "ON" position (with engine stopped). With fuel pressure applied to fuel piping, check for fuel leakage at connection points.

 © 2011 Mitchell Repair Information Company, LLC.

- Start engine. With engine speed increased, check again for fuel leakage at connection points.

- Run engine to check for unusual noise and vibration.

NOTE: **If hydraulic pressure inside chain tensioner drops after removal/installation, slack in guide may generate a pounding noise during and just after the engine start. However, this does not indicate a malfunction. The noise will stop after hydraulic pressure rises.**

- Warm up engine thoroughly to check that there is no leakage of fuel, or any oil/fluids including engine oil and engine coolant.
- Bleed air from lines and hoses of applicable lines, such as in cooling system.
- After cooling down engine, again check oil/fluid levels including engine oil and engine coolant. Refill them to the specified level, if necessary.

INSPECTION ITEMS DESCRIPTION

Items		Before starting engine	Engine running	After engine stopped
Engine coolant		Level	Leakage	Level
Engine oil		Level	Leakage	Level
Transmission/transaxle fluid	AT & CVT Models	Leakage	Level/Leakage	Leakage
	MT Models	Level/Leakage	Leakage	Level/Leakage
Other oils and fluids(1)		Level	Leakage	Level
Fuel		Leakage	Leakage	Leakage
(1) Power steering fluid, brake fluid, etc.				

CYLINDER BLOCK

Exploded View

 © 2011 Mitchell Repair Information Company, LLC.

Symbol	Description
	N·m (kg-m, ft-lb)
	N·m (kg-m, in-lb)
	Always replace after disassembly.

SEC. 110•120•226

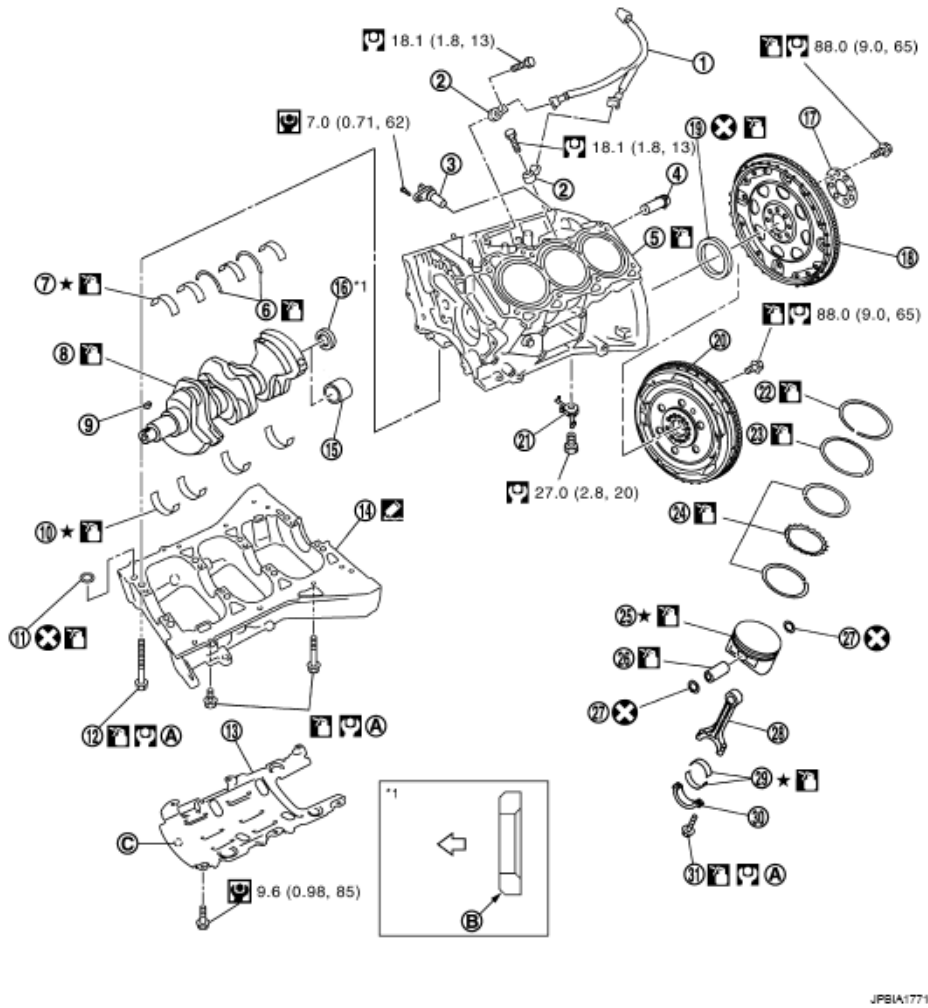

1. Sub harness
2. Knock sensor
3. Crankshaft position sensor
4. Cylinder block heater (for Canada)
5. Cylinder block
6. Thrust bearing
7. Main bearing (upper)
8. Crankshaft
9. Crankshaft key
10. Main bearing (lower)
11. O-ring
12. Lower cylinder block bolt
13. Baffle plate
14. Lower cylinder block
15. Pilot bush (M/T models)
16. Pilot converter (A/T models)
17. Reinforcement plate (A/T models)
18. Drive plate (A/T models)
19. Rear oil seal
20. Flywheel (M/T models)
21. Oil jet
22. Top ring
23. Second ring
24. Oil ring
25. Piston
26. Piston pin
27. Snap ring
28. Connecting rod
29. Connecting rod bearing
30. Connecting rod bearing cap
31. Connecting rod bolt

A. Comply with the installation procedure when tightening.
B. Chamfered
C. Front mark

 © 2011 Mitchell Repair Information Company, LLC.

Fig. 237: Exploded View Of Cylinder Block With Torque Specifications
Courtesy of NISSAN NORTH AMERICA, INC.

Refer to "**COMPONENTS** " for symbols in the figure.

Disassembly and Assembly

DISASSEMBLY

1. Remove the following parts:
   - Oil pans (upper and lower): Refer to "**EXPLODED VIEW (2WD)**" and "**2WD: EXPLODED VIEW**" (2WD models) or "**EXPLODED VIEW (AWD)**" or "**AWD: EXPLODED VIEW**" (AWD models).
   - Front and rear timing chain case: Refer to "**EXPLODED VIEW**" and "**EXPLODED VIEW**".
   - Cylinder head: Refer to "**EXPLODED VIEW**".
2. Remove knock sensor.

CAUTION: Carefully handle sensor avoiding shocks.

3. Remove baffle plate from lower cylinder block.
4. Remove piston and connecting rod assembly with the following procedure:
   - Before removing piston and connecting rod assembly, check the connecting rod side clearance. Refer to "**INSPECTION**".

CAUTION: Be careful not to drop connecting rod bearing, and to scratch the surface.

   a. Position crankshaft pin corresponding to connecting rod to be removed onto the bottom dead center.
   b. Remove connecting rod bearing cap.
   c. Using a hammer handle or similar tool, push piston and connecting rod assembly out to the cylinder head side.

CAUTION: Be careful not to damage the cylinder wall and crankshaft pin, resulting from an interference of the connecting rod big end.

 © 2011 Mitchell Repair Information Company, LLC.

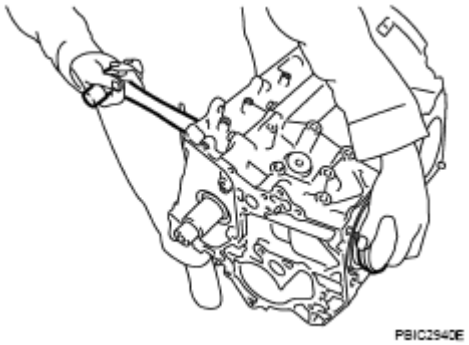

Fig. 238: Removing Piston And Connecting Rod Assembly Using Tool
Courtesy of NISSAN NORTH AMERICA, INC.

5. Remove connecting rod bearings from connecting rod and connecting rod bearing cap.

CAUTION:
- **Be careful not to drop connecting rod bearing, and to scratch the surface.**
- **Identify installation positions, and store them without mixing them up.**

6. Remove piston rings from piston.
   - Before removing piston rings, check the piston ring side clearance. Refer to "**INSPECTION**".
   - Use a piston ring expander (commercial service tool) (A).

CAUTION:
- **When removing piston rings, be careful not to damage piston.**
- **Be careful not to damage piston rings by expanding them excessively.**

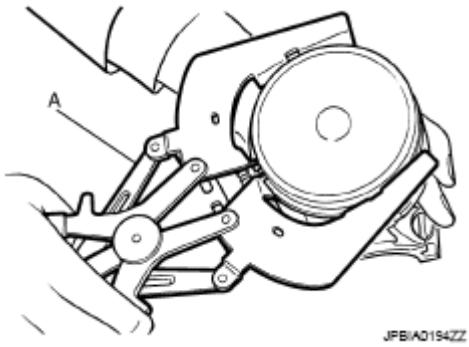

Fig. 239: Removing Piston Rings From Piston Using Piston Ring Expander
Courtesy of NISSAN NORTH AMERICA, INC.

7. Remove piston from connecting rod as follows:
   a. Using snap ring pliers (A), remove snap rings.

 © 2011 Mitchell Repair Information Company, LLC.

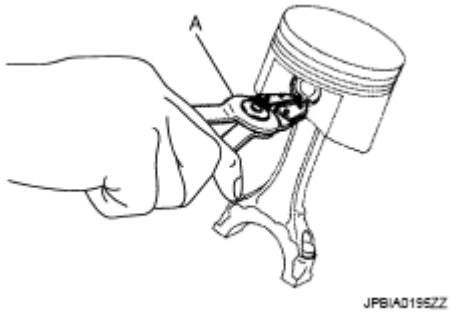

Fig. 240: Removing Snap Rings Using Snap Ring Plier
Courtesy of NISSAN NORTH AMERICA, INC.

b. Heat piston to 60 to 70°C (140 to 158°F) with an industrial use dryer (A) or equivalent.

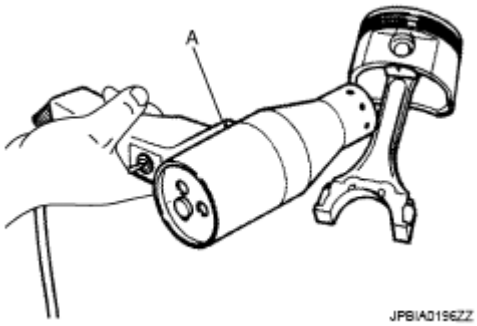

Fig. 241: Heating Piston Using Dryer
Courtesy of NISSAN NORTH AMERICA, INC.

c. Push out piston pin using a stick than has an outer diameter of approximately 20 mm (0.79 in).

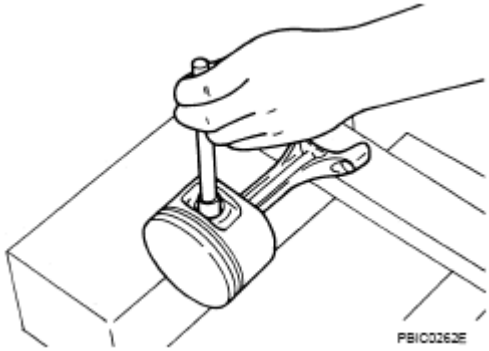

Fig. 242: Pushing Piston Pin Using Stick
Courtesy of NISSAN NORTH AMERICA, INC.

8. Remove lower cylinder block bolts.
   - Before loosening lower cylinder block bolts, measure the crankshaft end play. Refer to "**INSPECTION**".
   - Loosen lower cylinder block bolts in the reverse of the order shown in the figure below in several

different steps.

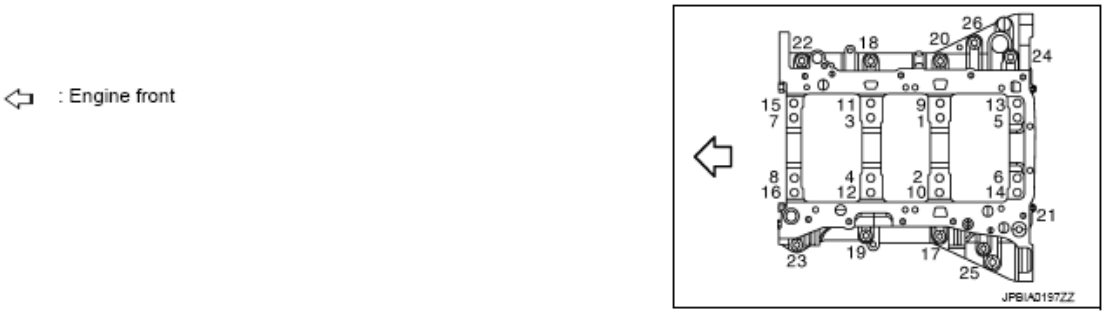

Fig. 243: Lower Cylinder Block Mounting Bolt Tightening Sequence
Courtesy of NISSAN NORTH AMERICA, INC.

9. Remove lower cylinder block as follows:

   Screw M8 bolt [pitch: 1.25 mm (0.049 in) length: approximately 50 mm (1.97 in)] into bolt holes (A). Then equally tighten each bolt, and remove lower cylinder block.

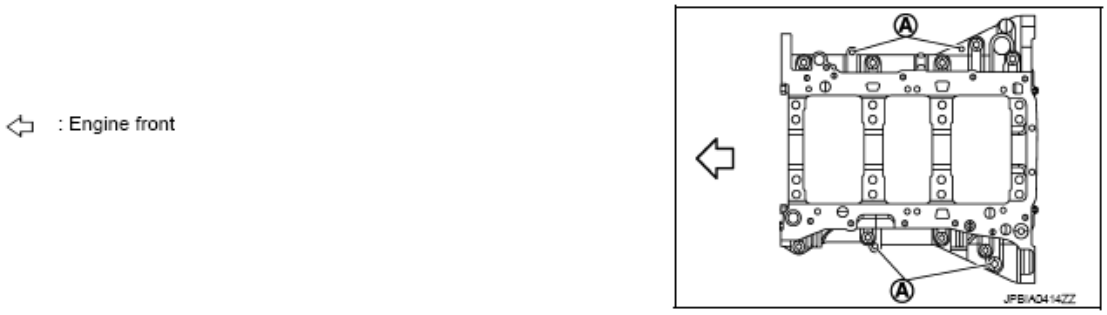

Fig. 244: Identifying M8 Bolt
Courtesy of NISSAN NORTH AMERICA, INC.

CAUTION:
- **Be careful not to damage the mounting surfaces.**
- **Never tighten bolts excessively.**
- **Never insert screwdriver, this will damage the mating surface.**

10. Remove crankshaft.
11. Pull rear oil seal out from rear end of crankshaft.
12. Remove main bearings and thrust bearings from cylinder block and lower cylinder block.

CAUTION:
- **Be careful not to drop main bearing, and to scratch the surface.**
- **Identify installation positions, and store them without mixing them up.**

13. Remove oil jet.

 © 2011 Mitchell Repair Information Company, LLC.

ASSEMBLY

CAUTION: Do not reuse O-rings or washers.

1. Fully air-blow engine coolant and engine oil passages in cylinder block, cylinder bore and crankcase to remove any foreign material.

   CAUTION: Use goggles to protect your eyes.

2. Install each plug to cylinder block as shown in the figure below.

Symbol	Description
	N·m (kg-m, ft-lb)
	N·m (kg-m, in-lb)
	Always replace after disassembly.

3 : Plug

⇦ : Engine front

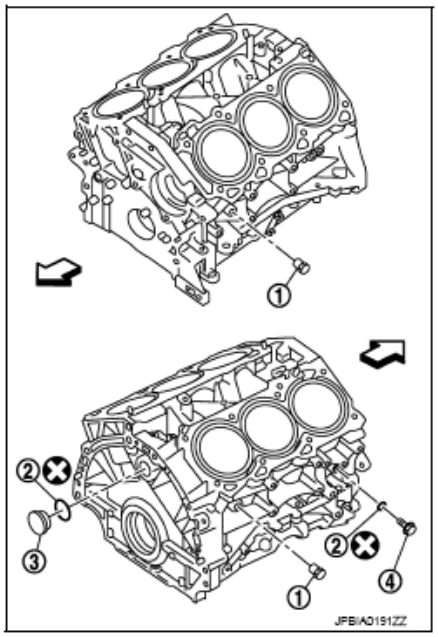

Fig. 245: Identifying Cylinder Block Water Drain Plug And Washer
Courtesy of NISSAN NORTH AMERICA, INC.

- Apply sealant to the thread of water drain plug (1).

  Use Genuine RTV Silicone Sealant or equivalent. Refer to "RECOMMENDED CHEMICAL PRODUCTS AND SEALANTS ".

- Apply sealant to the thread of plug (4).

 © 2011 Mitchell Repair Information Company, LLC.

Use Genuine High Strength Thread Locking Sealant or equivalent. Refer to "RECOMMENDED CHEMICAL PRODUCTS AND SEALANTS ".

- Replace washers (2) with new ones.

CAUTION: Do not reuse washers.

- Tighten each plug as specified below.

Unit: N.m (kg-m, ft-lb)		
Part	**Washer**	**Tightening torque**
1	No	19.6 (2.0, 14)
3	Yes	78.0 (8.0, 58)
4	Yes	12.3 (1.3, 9)

3. Install oil jet.
   - Insert oil jet dowel pin (A) into cylinder block dowel pin hole, and tighten mounting bolts.

⇦ : Engine front

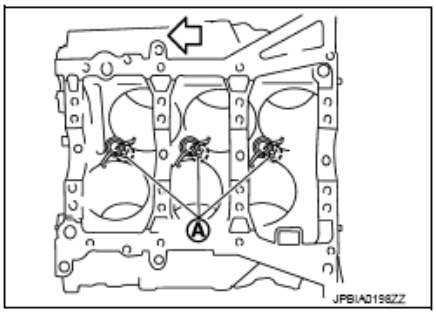

Fig. 246: Identifying Oil Jet Dowel Pin
Courtesy of NISSAN NORTH AMERICA, INC.

4. Install main bearings and thrust bearings as follows:

CAUTION: Be careful not to drop main bearing, and to scratch the surface.

   a. Remove dust, dirt, and engine oil on bearing mating surfaces of cylinder block and lower cylinder block.
   b. Install thrust bearings (1) to both sides of the No. 3 journal housing on cylinder block.

 © 2011 Mitchell Repair Information Company, LLC.

A : No. 1
B : No. 2
C : No. 3
D : No. 4
F : Thrust bearing installation position
⇦ : Engine front

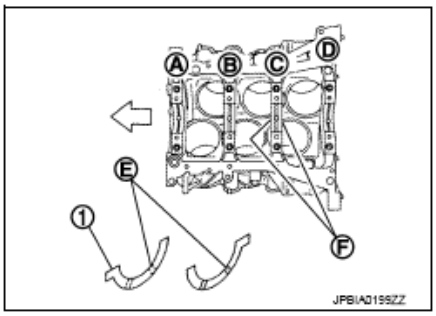

Fig. 247: Identifying Thrust Bearing Installation Position
Courtesy of NISSAN NORTH AMERICA, INC.

- Install thrust bearings with the oil groove (E) facing crankshaft arm (outside).

c. Install main bearings paying attention to the direction.

A : Cylinder block side
D : Lower cylinder block side
⇦ : Engine front

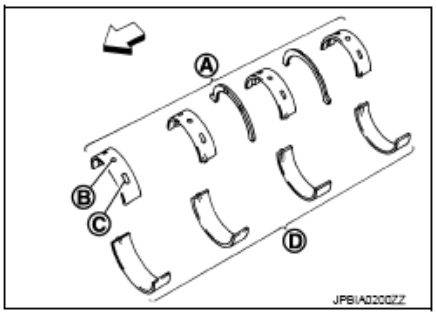

Fig. 248: Identifying Main Bearings
Courtesy of NISSAN NORTH AMERICA, INC.

- Main bearing with oil hole (B) and groove (C) goes on cylinder block. The one without them goes on lower cylinder block.
- Before installing main bearings, apply engine oil to the bearing surface (inside). Do not apply engine oil to the back surface, but thoroughly clean it.
- When installing, align main bearing stopper protrusion to cutout of cylinder block and lower cylinder block.
- Ensure the oil holes on cylinder block and those on the corresponding bearing are aligned.

5. Install crankshaft to cylinder block.
   - While turning crankshaft by hand, check that it turns smoothly.
6. Install lower cylinder block.

NOTE: Lower cylinder block cannot be replaced as a single part, because it is machined together with cylinder block.

- Apply a continuous bead of liquid gasket with the tube presser (commercial service tool) to lower cylinder block as shown in the figure below.

 © 2011 Mitchell Repair Information Company, LLC.

B : Apply to end
a : ϕ4.0 - 5.0 mm (0.157 - 0.197 in)

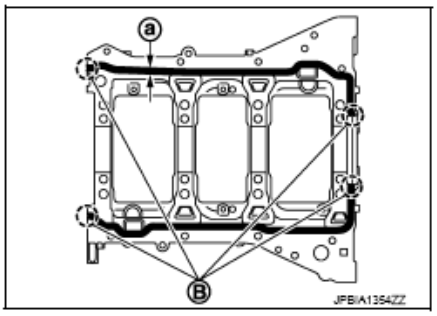

Fig. 249: Identifying Liquid Gasket Applying Area On Lower Cylinder Block
Courtesy of NISSAN NORTH AMERICA, INC.

Use Genuine RTV Silicone Sealant or equivalent. Refer to "RECOMMENDED CHEMICAL PRODUCTS AND SEALANTS ".

7. Inspect the outer diameter of lower cylinder block bolt. Refer to "**INSPECTION**".
8. Install lower cylinder block bolts in numerical order as shown in the figure below as follows:
   a. Apply new engine oil to threads and seat surfaces of lower cylinder block bolts.
   b. Tighten bolts (No. 17 to 26) in numerical order as shown in the figure below.

⇦ : Engine front

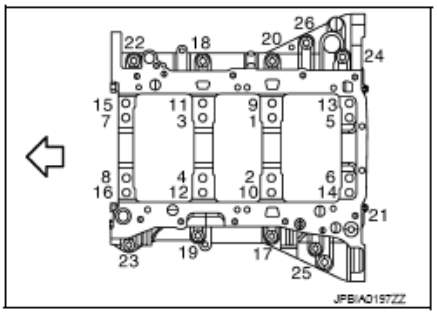

Fig. 250: Lower Cylinder Block Mounting Bolt Tightening Sequence
Courtesy of NISSAN NORTH AMERICA, INC.

Torque: 25.0 N.m (2.6 kg-m, 18 ft-lb)

CAUTION: Do not reuse O-rings.

   c. Repeat step b.
   d. Tighten bolts (No. 1 to 16) in numerical order as shown in the figure below.

 © 2011 Mitchell Repair Information Company, LLC.

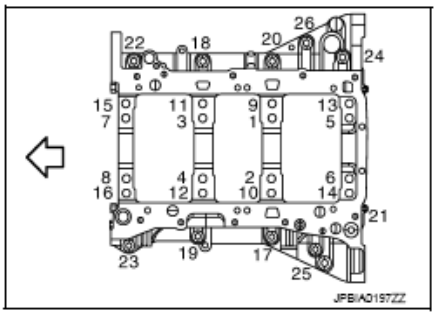

Fig. 251: Lower Cylinder Block Mounting Bolt Tightening Sequence
Courtesy of NISSAN NORTH AMERICA, INC.

NOTE: Use TORX socket for bolts No. 1 to 16.

Torque: 35.3 N.m (3.6 kg-m, 26 ft-lb)

e. Turn bolts (No. 1 to 16) 90 degrees clockwise (angle tightening).

CAUTION: Use the angle wrench [SST: KV10112100 (BT8653-A)] (A) to check tightening angle. Never make judgment by visual inspection.

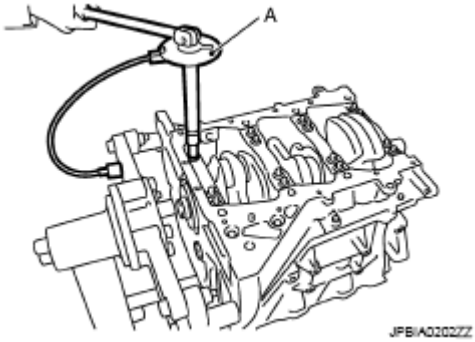

Fig. 252: Checking Lower Cylinder Block Bolt Tightening Angle Using Angle Wrench
Courtesy of NISSAN NORTH AMERICA, INC.

- After installing lower cylinder block bolts, check that crankshaft can be rotated smoothly by hand.
- Check the crankshaft end play. Refer to "**INSPECTION**".

9. Install piston to connecting rod as follows:
   a. Using snap ring pliers, install new snap ring to the groove of piston rear side.
      - Insert it fully into groove to install.
   b. Install piston to connecting rod.
      - Using an industrial use dryer or similar tool, heat piston until piston pin can be pushed in by hand without excess force [approximately 60 to 70°C (140 to 158°F)]. From the front to the

 © 2011 Mitchell Repair Information Company, LLC.

rear, insert piston pin into piston and connecting rod.

- Assemble so that the front mark on the piston head and the cylinder number on connecting rod are positioned as shown in the figure below.

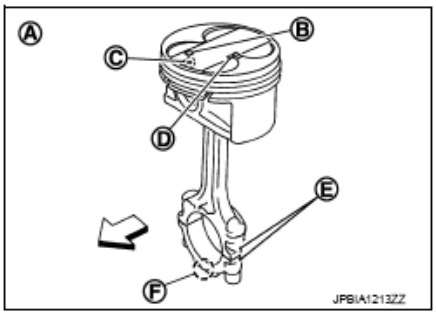

A : Example RH
B : Piston grade number
C : Front mark
D : Pin grade number
E : Cylinder number
F : Front mark
⇦ : Engine front

Fig. 253: Identifying Front Mark On Piston Head And Cylinder Number On Connecting Rod
Courtesy of NISSAN NORTH AMERICA, INC.

c. Install new snap ring to the groove of the piston front side.
   - Insert it fully into groove to install.
   - After installing, check that connecting rod moves smoothly.

10. Using a piston ring expander (commercial service tool) (A), install piston rings.

CAUTION:
- **When installing piston rings, be careful not to damage piston.**
- **Be careful not to damage piston rings by expending them excessively.**

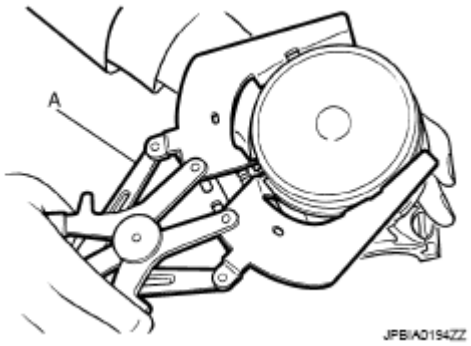

Fig. 254: Installing Piston Ring Using Piston Ring Expander
Courtesy of NISSAN NORTH AMERICA, INC.

- If there is stamped mark on ring, mount it with marked side up.

  Stamped mark:

  Top ring (A): 1 N

Second ring (B): 2 N

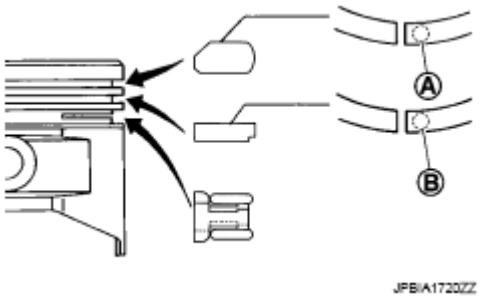

Fig. 255: Identifying Stamped Mark On Piston Ring
Courtesy of NISSAN NORTH AMERICA, INC.

- Position each ring with the gap as shown in the figure below referring to the piston front mark (D).

C : Top ring gap
E : Oil ring upper or lower rail gap (either of them)
F : Second ring and oil ring spacer gap
a : 90 degrees
b : 45 degrees

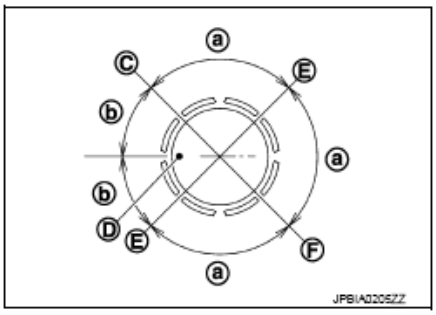

Fig. 256: Identifying Piston Ring Installation Position
Courtesy of NISSAN NORTH AMERICA, INC.

- Check the piston ring side clearance. Refer to "**INSPECTION**".

11. Install connecting rod bearings to connecting rod and connecting rod bearing cap.

CAUTION: Be careful not to drop connecting rod bearing, and to scratch the surface.

- Before installing connecting rod bearings, apply engine oil to the bearing surface (inside). Do not apply engine oil to the back surface, but thoroughly clean it.
- When installing, align connecting rod bearing stopper protrusion (B) with cutout (C) of connecting rods and connecting rod bearing caps to install.
- Ensure the oil hole (A) on connecting rod and that on the corresponding bearing are aligned.

 © 2011 Mitchell Repair Information Company, LLC.

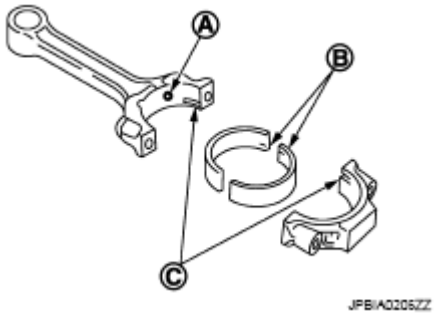

Fig. 257: Identifying Connecting Rod Bearing Stopper Protrusion, Cutout And Oil Hole
Courtesy of NISSAN NORTH AMERICA, INC.

12. Install piston and connecting rod assembly to crankshaft.
    - Position crankshaft pin corresponding to connecting rod to be installed onto the bottom dead center.
    - Apply engine oil sufficiently to the cylinder bore, piston and crankshaft pin journal.
    - Match the cylinder position with the cylinder number on connecting rod to install.
    - Be sure that front mark on piston crown is facing the front of the engine.
    - Using a piston ring compressor [SST: EM03470000 (J-8037)] (A) or suitable tool, install piston with the front mark on the piston crown facing the front of the engine.

CAUTION: Be careful not to damage the cylinder wall and crankshaft pin, resulting from an interference of the connecting rod big end.

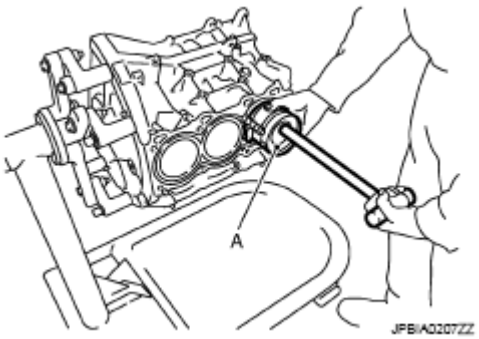

Fig. 258: Installing Piston And Connecting Rod Assembly To Crankshaft
Courtesy of NISSAN NORTH AMERICA, INC.

13. Install connecting rod bearing cap.
    - Match the stamped cylinder number marks on connecting rod with those on connecting rod bearing cap to install.

 © 2011 Mitchell Repair Information Company, LLC.

A : Sample codes
B : Bearing stopper groove
C : Small-end diameter grade
D : Big-end diameter grade
E : Weight grade
F : Cylinder No.
G : Management code
I : Management code

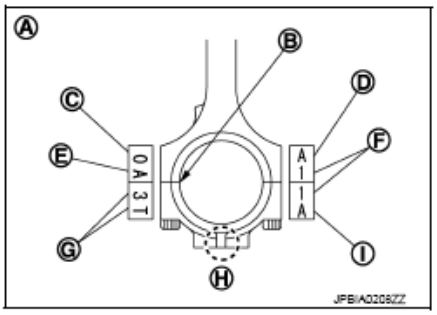

Fig. 259: Identifying Stamped Cylinder Number Marks On Connecting Rod
Courtesy of NISSAN NORTH AMERICA, INC.

- Be sure that front mark (H) on connecting rod bearing cap is facing the front of the engine.

14. Tighten connecting rod bolt as follows:
    a. Inspect the outer diameter of connecting rod bolt. Refer to "**INSPECTION**".
    b. Apply engine oil to the threads and seats of connecting rod bolts.
    c. Tighten connecting rod bolts.

       Torque: 28.4 N.m (2.9 kg-m, 21 ft-lb)

    d. Completely loosen connecting rod bolts.

       Torque: 0 N.m (0 kg-m, 0 ft-lb)

    e. Tighten connecting rod bolts.

       Torque: 24.5 N.m (2.5 kg-m, 18 ft-lb)

    f. Then turn connecting rod bolts 90 degrees clockwise (angle tightening).

       CAUTION: Always use the angle wrench [SST: KV10112100 (BT8653-A)] (A). Never make judgment by visual inspection.

       - After tightening connecting rod bolts, check that crankshaft rotates smoothly.
       - Check the connecting rod side clearance. Refer to "**INSPECTION**".

 © 2011 Mitchell Repair Information Company, LLC.

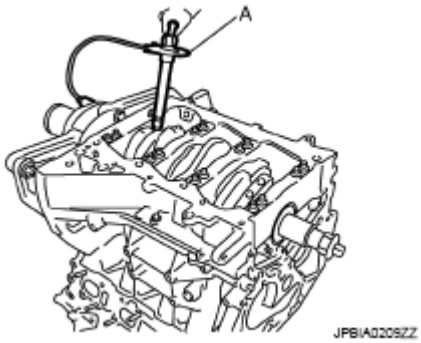

Fig. 260: Checking Connecting Rod Mounting Bolt Tightening Using Angle Wrench
Courtesy of NISSAN NORTH AMERICA, INC.

15. Install baffle plate.
16. Install new rear oil seal. Refer to "**REAR OIL SEAL: REMOVAL AND INSTALLATION**".
    - Apply new engine oil to both oil seal lip and dust seal lip.
17. Install pilot converter (A/T models) or pilot bushing (M/T models).
    - With a drift of the following outer diameter, press-fit as far as it will go.

      Pilot bushing: Approx. 17 mm (0.67 in)

      Pilot converter: Approx. 33 mm (1.30 in)

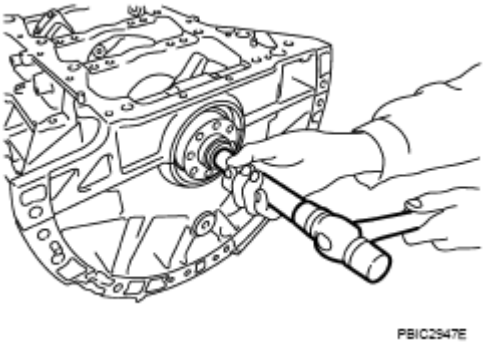

Fig. 261: Installing Pilot Converter Using Drift
Courtesy of NISSAN NORTH AMERICA, INC.

    - Press-fit pilot converter with its chamfer facing crankshaft as shown in the figure below. (A/T models)

 © 2011 Mitchell Repair Information Company, LLC.

⇦ : Crankshaft side

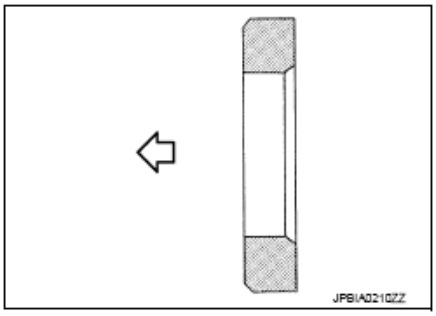

Fig. 262: Identifying Pilot Converter
Courtesy of NISSAN NORTH AMERICA, INC.

- Press-fit pilot bushing (1) as the dimension shown in the figure below. (M/T models)

  A: Crankshaft (rear end surface)

  b: 10.20 - 10.85 mm (0.402 - 0.427 in)

  [Target: 10.20 mm (0.402 in)]

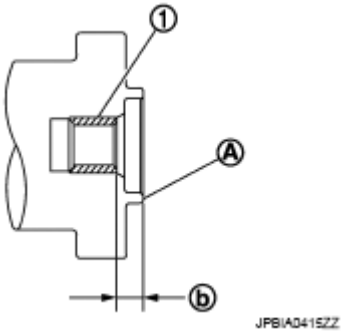

Fig. 263: Identifying Pilot Bushing Installation Dimension
Courtesy of NISSAN NORTH AMERICA, INC.

18. Install knock sensors.

 © 2011 Mitchell Repair Information Company, LLC.

A : Bank 1
B : Bank 2
⇦ : Engine front

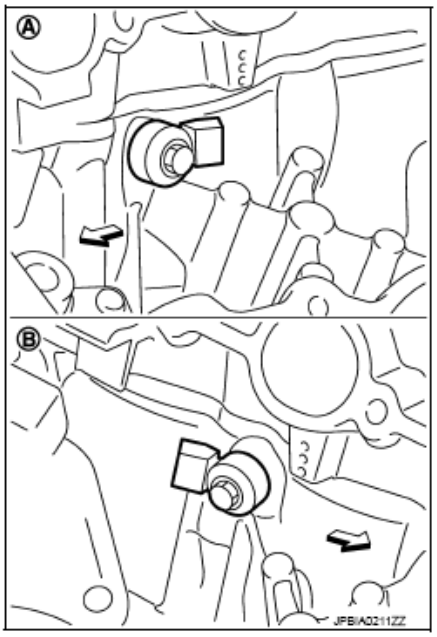

Fig. 264: Identifying Knock Sensors
Courtesy of NISSAN NORTH AMERICA, INC.

- Install knock sensor so that connector faces the rear of the engine.
- After installing knock sensor, connect harness connector, and lay it out to rear of the engine.

CAUTION:

- **Never tighten mounting bolts while holding connector.**
- **If any impact by dropping is applied to knock sensor, replace it with new one.**

NOTE:

- **Check that there is no foreign material on the cylinder block mating surface and the back surface of knock sensor.**
- **Check that knock sensor does not interfere with other parts.**

19. Note the following, assemble in the reverse order of disassembly after this step.

Flywheel (M/T models)

- Ensure the dowel pin (1) is installed in the crankshaft.

 © 2011 Mitchell Repair Information Company, LLC.

4 : Rear oil seal

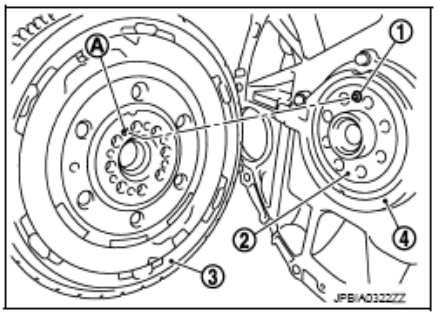

Fig. 265: Identifying Dowel Pin, Flywheel, Crankshaft And Rear Oil Seal (M/T Models)
Courtesy of NISSAN NORTH AMERICA, INC.

- When installing flywheel (3) to crankshaft (2), be sure to correctly align crankshaft side dowel pin and flywheel side dowel pin hole (A).
- There is a matching mark (B) on the clutch cover side of flywheel (4). Refer it during installation.

1 : Dowel pin
2 : Rear oil seal
3 : Crankshaft
A : Hole

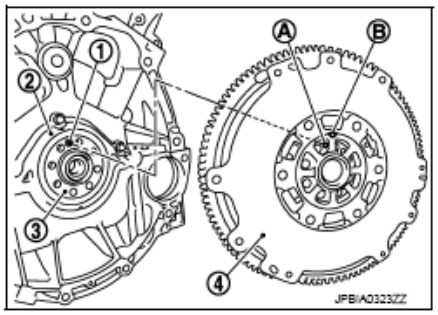

Fig. 266: Identifying Dowel Pin, Flywheel, Crankshaft And Rear Oil Seal
Courtesy of NISSAN NORTH AMERICA, INC.

Drive plate (A/T models)

- When installing drive plate to crankshaft, be sure to correctly align crankshaft side dowel pin and drive plate side dowel pin hole.

CAUTION: If these are not aligned correctly, engine runs roughly and "MIL" illuminates.

- Install drive plate (2) and reinforcement plate (3) as shown in the figure below.

 © 2011 Mitchell Repair Information Company, LLC.

1 : Ring gear
4 : Pilot converter
5 : Crankshaft
A : Rounded
⇦ : Engine front

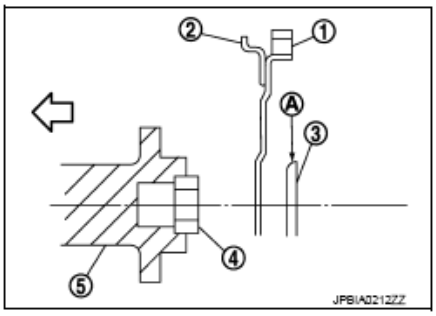

Fig. 267: Identifying Drive Plate And Reinforcement Plate
Courtesy of NISSAN NORTH AMERICA, INC.

- Holding ring gear with the ring gear stopper [SST: KV10118600 (J-48641)].
- Tighten the mounting bolts crosswise over several times.

Inspection

CRANKSHAFT END PLAY

- Measure the clearance between thrust bearings and crankshaft arm when crankshaft is moved fully forward or backward with a dial indicator.

  Standard and limit: Refer to "CYLINDER BLOCK".

- If the measured value exceeds the limit, replace thrust bearings, and measure again. If it still exceeds the limit, replace crankshaft also.

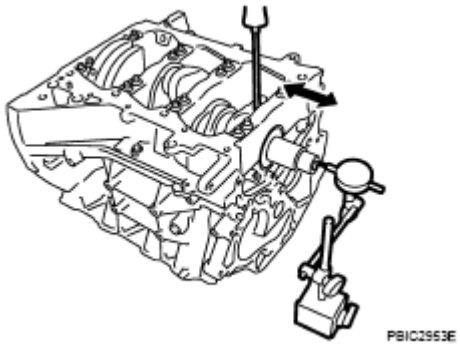

Fig. 268: Measuring Crankshaft End Play Using Tool
Courtesy of NISSAN NORTH AMERICA, INC.

CONNECTING ROD SIDE CLEARANCE

- Measure the side clearance between connecting rod and crankshaft arm with a feeler gauge.

  Standard and limit: Refer to "CYLINDER BLOCK".

 © 2011 Mitchell Repair Information Company, LLC.

- If the measured value exceeds the limit, replace connecting rod, and measure again. If it still exceeds the limit, replace crankshaft also.

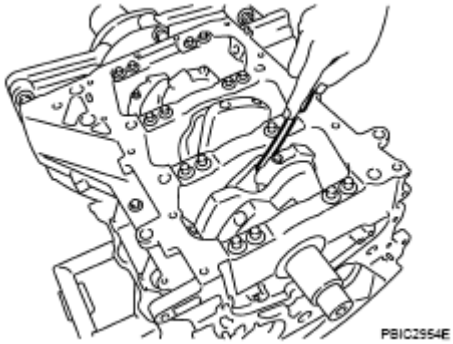

Fig. 269: Measuring Side Clearance Between Connecting Rod And Crankshaft Arm Using Feeler Gauge
Courtesy of NISSAN NORTH AMERICA, INC.

PISTON TO PISTON PIN OIL CLEARANCE

Piston Pin Hole Diameter

Measure the inner diameter of piston pin hole with an inside micrometer (A).

Standard: Refer to "CYLINDER BLOCK".

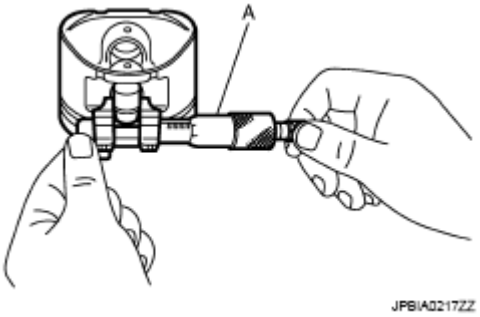

Fig. 270: Measuring Inner Diameter Of Piston Pin Hole Using Inside Micrometer
Courtesy of NISSAN NORTH AMERICA, INC.

Piston Pin Outer Diameter

Measure the outer diameter of piston pin with a micrometer (A).

Standard: Refer to "CYLINDER BLOCK".

 © 2011 Mitchell Repair Information Company, LLC.

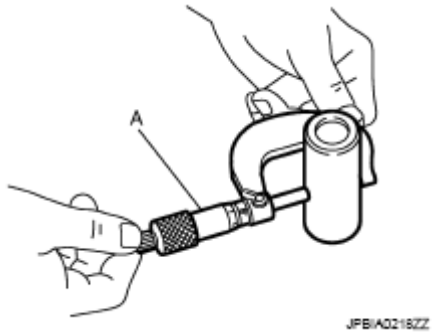

Fig. 271: Measuring Outer Diameter Of Piston Pin Using Micrometer
Courtesy of NISSAN NORTH AMERICA, INC.

Piston to Piston Pin Oil Clearance

(Piston to piston pin oil clearance) = (Piston pin hole diameter) - (Piston pin outer diameter)

Standard: Refer to "CYLINDER BLOCK".

- If the calculated value is out of the standard, replace piston and piston pin assembly.
- When replacing piston and piston pin assembly, refer to "**DESCRIPTION**".

NOTE:

- **Piston is available together with piston pin as assembly.**
- **Piston pin (piston pin hole) grade is provided only for the parts installed at the plant. For service parts, no piston pin grades can be selected. (Only "0" grade is available.)**

PISTON RING SIDE CLEARANCE

- Measure the side clearance of piston ring (1) and piston ring groove with a feeler gauge (C).

A : NG
B : OK

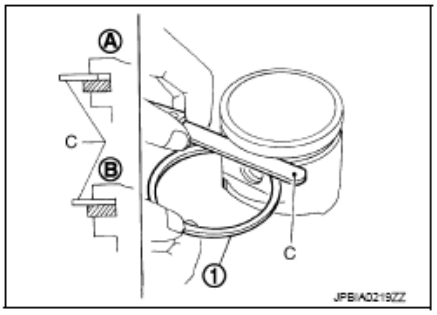

Fig. 272: Measuring Side Clearance Of Piston Ring And Piston Ring Groove Using Feeler Gauge
Courtesy of NISSAN NORTH AMERICA, INC.

Standard and limit: Refer to "CYLINDER BLOCK".

- If the measured value exceeds the limit, replace piston ring, and measure again. If it still exceeds the

 © 2011 Mitchell Repair Information Company, LLC.

limit, replace piston also.

PISTON RING END GAP

- Check that the cylinder bore inner diameter is within the specification. Refer to "**DISASSEMBLY AND ASSEMBLY**".
- Lubricate with new engine oil to piston (1) and piston ring (2), and then insert piston ring until middle of cylinder with piston, and measure the piston ring end gap with a feeler gauge (B).

A : Press-fit
C : Measuring point

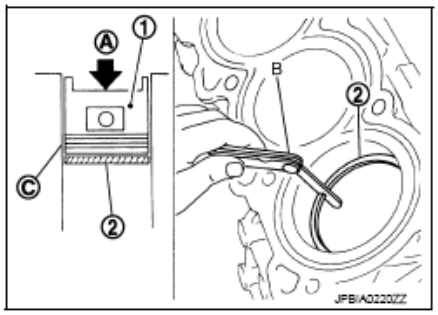

Fig. 273: Measuring Piston Ring End Gap Using Tool
Courtesy of NISSAN NORTH AMERICA, INC.

Standard and limit: Refer to "CYLINDER BLOCK".

- If the measured value exceeds the limit, replace piston ring, and measure again. If it still exceeds the limit, rebore cylinder and use oversize piston and piston rings.

CONNECTING ROD BEND AND TORSION

- Check with a connecting rod aligner.

 © 2011 Mitchell Repair Information Company, LLC.

A : Bend
B : Torsion
C : Feeler gauge

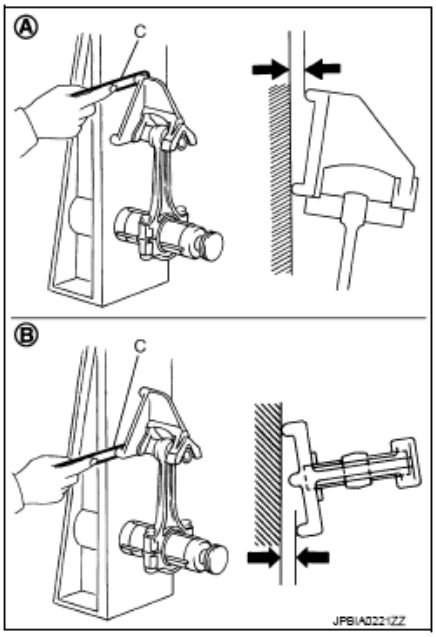

Fig. 274: Checking Connecting Rod
Courtesy of NISSAN NORTH AMERICA, INC.

Bend limit: Refer to "CYLINDER BLOCK".

Torsion limit

- If it exceeds the limit, replace connecting rod assembly.

CONNECTING ROD BIG END DIAMETER

- Install connecting rod bearing cap without installing connecting rod bearing, and tighten connecting rod bolts to the specified torque. Refer to "**DISASSEMBLY AND ASSEMBLY**" for the tightening procedure.

1 : Connecting rod

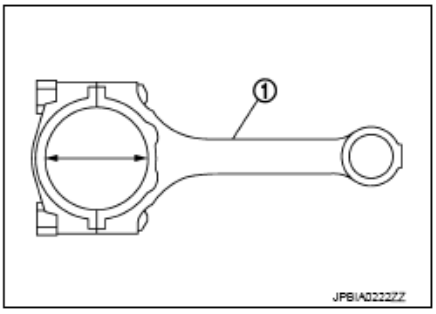

Fig. 275: Identifying Connecting Rod Big End Diameter
Courtesy of NISSAN NORTH AMERICA, INC.

- Measure the inner diameter of connecting rod big end with an inside micrometer.

 © 2011 Mitchell Repair Information Company, LLC.

Standard: Refer to "CYLINDER BLOCK".

- If out of the standard, replace connecting rod assembly.

CONNECTING ROD BUSHING OIL CLEARANCE

Connecting Rod Bushing Inner Diameter

Measure the inner diameter of connecting rod bushing with an inside micrometer (A).

Standard: Refer to "CYLINDER BLOCK".

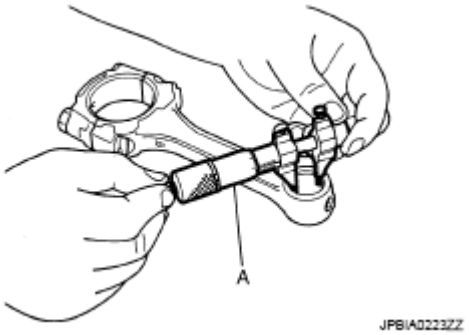

Fig. 276: Measuring Inner Diameter Of Connecting Rod Bushing Using Inside Micrometer
Courtesy of NISSAN NORTH AMERICA, INC.

Piston Pin Outer Diameter

Measure the outer diameter of piston pin with a micrometer (A).

Standard: Refer to "CYLINDER BLOCK".

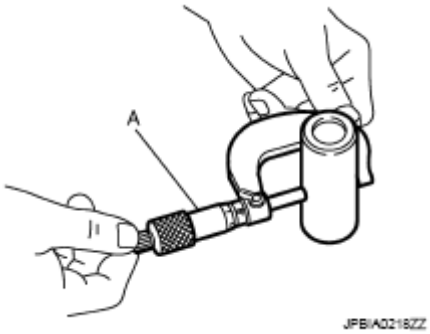

Fig. 277: Measuring Outer Diameter Of Piston Pin Using Micrometer
Courtesy of NISSAN NORTH AMERICA, INC.

Connecting Rod Bushing Oil Clearance

(Connecting rod bushing oil clearance) = (Connecting rod bushing inner diameter) - (Piston pin outer diameter)

 © 2011 Mitchell Repair Information Company, LLC.

Standard and limit: Refer to "CYLINDER BLOCK".

- If the calculated value exceeds the limit, replace connecting rod assembly and/or piston and piston pin assembly.
- If replacing piston and piston pin assembly, refer to "**DESCRIPTION**".
- If replacing connecting rod assembly, refer to "**CONNECTING ROD BEARING**" to select the connecting rod bearing.

A : Sample codes
B : Bearing stopper groove
C : Small-end diameter grade
D : Big-end diameter grade
E : Weight grade
F : Cylinder No.
G : Management code
H : Front mark
I : Management code

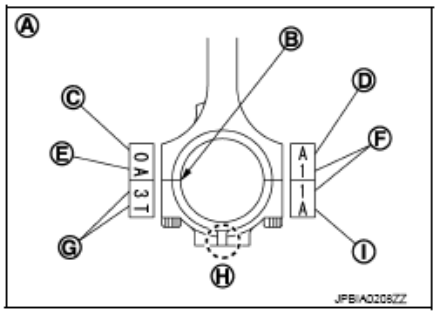

Fig. 278: Identifying Codes Stamped On Connecting Rod Assembly
Courtesy of NISSAN NORTH AMERICA, INC.

Factory installed parts grading:

- Service parts apply only to grade "0".

A : RH
B : LH
C : Piston pin grade number
D : Piston grade number
E : Front mark
F : Identification code

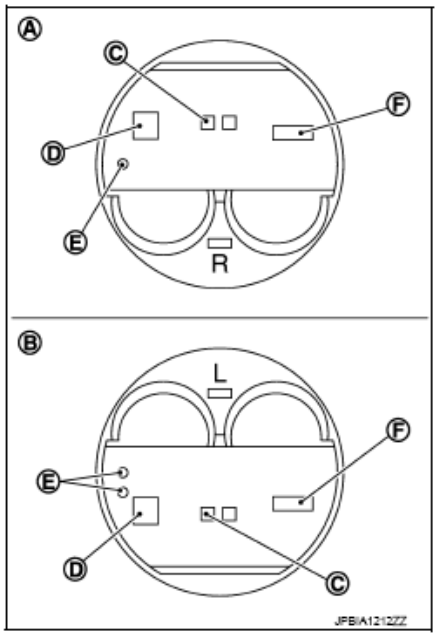

Fig. 279: Identifying Piston Pin Grade Number, Piston Grade Number, Front Mark And Identification Code
Courtesy of NISSAN NORTH AMERICA, INC.

 © 2011 Mitchell Repair Information Company, LLC.

		Unit: mm (in)
Grade	**0**	**1**
Connecting rod bushing inner diameter (1)	22.000 - 22.006 (0.8661 - 0.8664)	22.006 - 22.012 (0.8664 - 0.8666)
Piston pin hole diameter	21.993 - 21.999 (0.8659 - 0.8661)	21.999 - 22. 005 (0.8661 - 0.8663)
Piston pin outer diameter	21.989 - 21.995 (0.8657 - 0.8659)	21.995 - 22.001 (0.8659 - 0.8662)
(1) After installing in connecting rod		

CYLINDER BLOCK DISTORTION

- Using a scraper, remove gasket on the cylinder block surface, and also remove engine oil, scale, carbon, or other contamination.

CAUTION: Be careful not to allow gasket flakes to enter engine oil or engine coolant passages.

- Measure the distortion on the cylinder block upper face at some different points in six directions (C), (D), (E), (F), (G), and (H) with a straightedge (A) and a feeler gauge (B).

  Limit: Refer to "CYLINDER BLOCK".

- If it exceeds the limit, replace cylinder block.

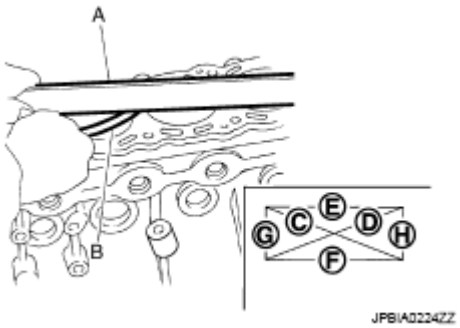

Fig. 280: Checking Cylinder Block Distortion Using Straightedge And Feeler Gauge
Courtesy of NISSAN NORTH AMERICA, INC.

MAIN BEARING HOUSING INNER DIAMETER

- Install lower cylinder block (2) without installing main bearings, and tighten lower cylinder block bolts to the specified torque. Refer to "**DISASSEMBLY AND ASSEMBLY**" for the tightening procedure.
- Measure the inner diameter of main bearing housing with a bore gauge.

  Standard: Refer to "CYLINDER BLOCK".

 © 2011 Mitchell Repair Information Company, LLC.

- If out of the standard, replace cylinder block (1) and lower cylinder block as assembly.

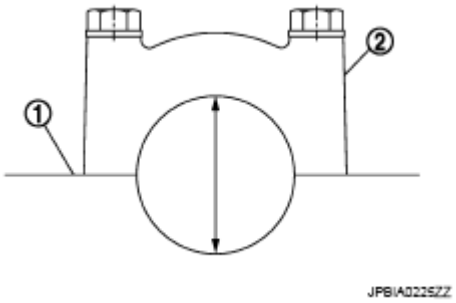

Fig. 281: Identifying Main Bearing Housing Inner Diameter
Courtesy of NISSAN NORTH AMERICA, INC.

NOTE: Cylinder block cannot be replaced as a single part, because it is machined together with lower cylinder block.

PISTON TO CYLINDER BORE CLEARANCE

Cylinder Bore inner Diameter

- Using a bore gauge, measure cylinder bore for wear, out-of-round and taper at six different points on each cylinder. [(A) and (B) directions at (C), (D) and (E)] is in longitudinal direction of engine.

  f: 10 mm (0.39 in)

  g: 60 mm (2.36 in)

  h: 125 mm (4.92 in)

  Standard and limit: Refer to "CYLINDER BLOCK".

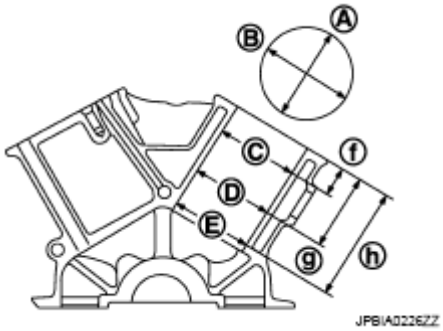

Fig. 282: Identifying Cylinder Bore Inner Diameter Measurement Direction
Courtesy of NISSAN NORTH AMERICA, INC.

- If the measured value exceeds the limit, or if there are scratches and/or seizure on the cylinder inner wall, hone or rebore the inner wall.
- Oversize piston is provided. When using oversize piston, rebore cylinder so that the clearance of the piston-to-cylinder bore satisfies the standard.

 © 2011 Mitchell Repair Information Company, LLC.

CAUTION: When using oversize piston, use oversize pistons for all cylinders with oversize piston rings.

Oversize (O/S): 0.2 mm (0.008 in)

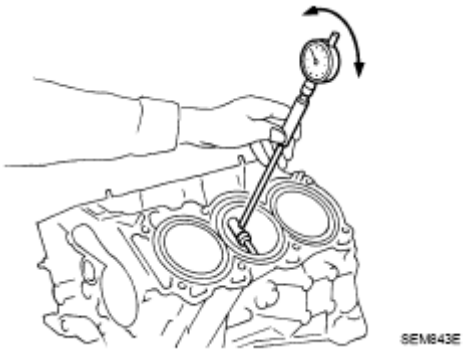

Fig. 283: Checking Clearance Of Piston-To-Cylinder Bore Using Tool
Courtesy of NISSAN NORTH AMERICA, INC.

Piston Skirt Diameter

Measure the outer diameter of piston skirt with a micrometer (A).

Measure point: Refer to "CYLINDER BLOCK".

Standard

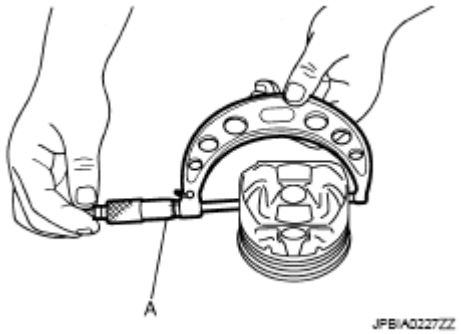

Fig. 284: Measuring Outer Diameter Of Piston Skirt Using Micrometer
Courtesy of NISSAN NORTH AMERICA, INC.

Piston-to-Cylinder Bore Clearance

Calculate by piston skirt diameter and cylinder bore inner diameter [direction (B), position (D)].

A: Direction A
C: Position C
E: Position E

 © 2011 Mitchell Repair Information Company, LLC.

f: 10 mm (0.39 in)
g: 60 mm (2.36 in)
h: 125 mm (4.92 in)

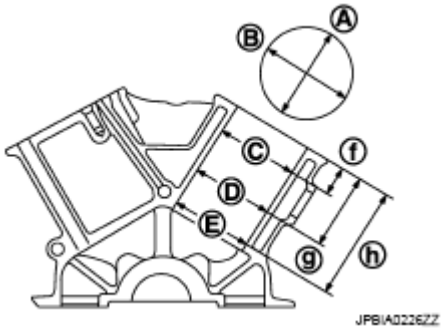

Fig. 285: Identifying Piston-To-Cylinder Bore Clearance
Courtesy of NISSAN NORTH AMERICA, INC.

(Clearance) = (Cylinder bore inner diameter) - (Piston skirt diameter).

Standard and limit: Refer to "CYLINDER BLOCK".

- If the calculated value exceeds the limit, replace piston and piston pin assembly. Refer to "**CYLINDER BLOCK**".

Reboring Cylinder Bore

1. Cylinder bore size is determined by adding piston to cylinder bore clearance to piston skirt diameter.

   Re-bored size calculation: D = A + B - C

   where,

   A. **Piston skirt diameter as measured**
   B. **Piston to cylinder bore clearance (standard value)**
   C. **Honing allowance 0.02 mm (0.0008 in)**
   D. **Bored diameter**
2. Install lower cylinder block, and tighten to the specified torque. Otherwise, cylinder bores may be distorted in final assembly.
3. Cut cylinder bores.

NOTE:

- **When any cylinder needs boring, all other cylinders must also be bored.**
- **Do not cut too much out of cylinder bore at a time. Cut only 0.05 mm (0.0020 in) or so in diameter at a time.**

 © 2011 Mitchell Repair Information Company, LLC.

4. Hone cylinders to obtain the specified piston to cylinder bore clearance.
5. Measure finished cylinder bore for the out-of-round and taper.

NOTE: Perform measurement after cylinder bore cools down.

CRANKSHAFT MAIN JOURNAL DIAMETER

- Measure the outer diameter of crankshaft main journals with a micrometer.

  Standard: Refer to "CYLINDER BLOCK".

- If out of the standard, measure the main bearing oil clearance. Then use undersize bearing. Refer to "**MAIN BEARING**".

CRANKSHAFT PIN JOURNAL DIAMETER

- Measure the outer diameter of crankshaft pin journal with a micrometer (A).

  Standard: Refer to "CYLINDER BLOCK".

- If out of the standard, measure the connecting rod bearing oil clearance. Then use undersize bearing. Refer to "**CONNECTING ROD BEARING**".

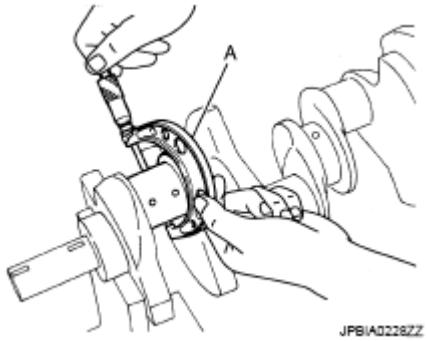

Fig. 286: Measuring Outer Diameter Of Crankshaft Pin Journal Using Micrometer
Courtesy of NISSAN NORTH AMERICA, INC.

CRANKSHAFT OUT-OF-ROUND AND TAPER

- Measure the dimensions at four different points as shown in the figure below on each main journal and pin journal with a micrometer.
- Out-of-round is indicated by the difference in the dimensions between (d) and (c) at (a) and (b).
- Taper is indicated by the difference in the dimensions between.

  Limit: Refer to "CYLINDER BLOCK".

- If the measured value exceeds the limit, correct or replace crankshaft.

 © 2011 Mitchell Repair Information Company, LLC.

- If corrected, measure the bearing oil clearance of the corrected main journal and/or pin journal. Then select the main bearing and/or connecting rod bearing. Refer to "**MAIN BEARING**" and/or "**CONNECTING ROD BEARING**".

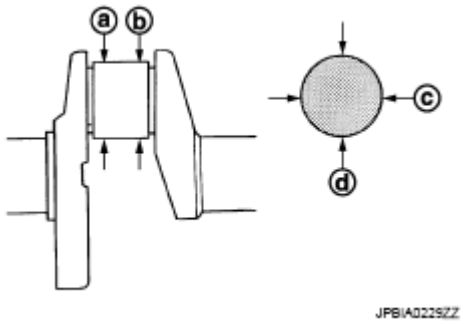

Fig. 287: Identifying Crankshaft Out-Of-Round And Taper
Courtesy of NISSAN NORTH AMERICA, INC.

CRANKSHAFT RUNOUT

- Place V-block on precise flat table, and support the journals on both ends of crankshaft.
- Place a dial indicator straight up on the No. 3 journal.
- While rotating crankshaft, read the movement of the pointer on a dial indicator. (Total indicator reading)

  Standard and limit: Refer to "CYLINDER BLOCK".

- If it exceeds the limit, replace crankshaft.

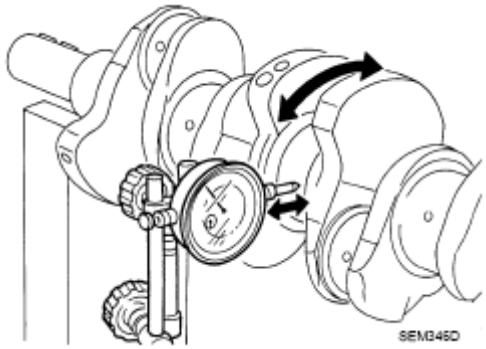

Fig. 288: Checking Crankshaft Runout Using Dial Indicator
Courtesy of NISSAN NORTH AMERICA, INC.

CONNECTING ROD BEARING OIL CLEARANCE

Method by Calculation

- Install connecting rod bearings (1) to connecting rod (2) and connecting rod cap, and tighten connecting rod bolts to the specified torque. Refer to "**DISASSEMBLY AND ASSEMBLY**" for the tightening

 © 2011 Mitchell Repair Information Company, LLC.

procedure.

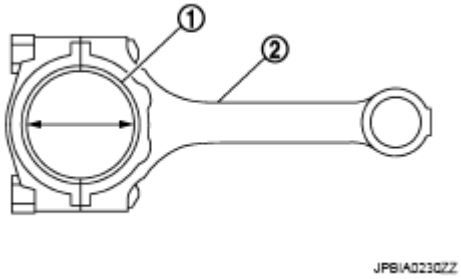

Fig. 289: Identifying Connecting Rod Bearing Inner Diameter
Courtesy of NISSAN NORTH AMERICA, INC.

- Measure the inner diameter of connecting rod bearing with an inside micrometer.

  (Oil clearance) = (Connecting rod bearing inner diameter) - (Crankshaft pin journal diameter)

  Standard and limit: Refer to "CONNECTING ROD BEARING".

- If the calculated value exceeds the limit, select proper connecting rod bearing according to connecting rod big end diameter and crankshaft pin journal diameter to obtain the specified bearing oil clearance. Refer to "**DESCRIPTION**".

Method of Using Plastigage

- Remove oil and dust on crankshaft pin journal and the surfaces of each bearing completely.
- Cut a plastigage slightly shorter than the bearing width, and place it in crankshaft axial direction, avoiding oil holes.
- Install connecting rod bearings to connecting rod and connecting rod bearing cap, and tighten connecting rod bolts to the specified torque. Refer to "**DISASSEMBLY AND ASSEMBLY**" for the tightening procedure.

CAUTION: Never rotate crankshaft.

- Remove connecting rod bearing cap and bearings, and using the scale on the plastigage bag, measure the plastigage width.

NOTE: The procedure when the measured value exceeds the limit is the same as that described in the "Method by Calculation".

 © 2011 Mitchell Repair Information Company, LLC.

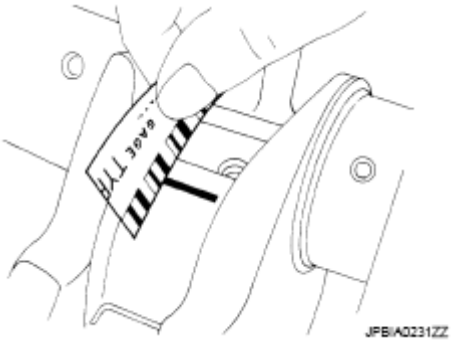

Fig. 290: Measuring Plastigage Width Using Scale On Plastigage Bag
Courtesy of NISSAN NORTH AMERICA, INC.

MAIN BEARING OIL CLEARANCE

Method by Calculation

- Install main bearings (3) to cylinder block (1) and lower cylinder block (2), and tighten lower cylinder block bolts to the specified torque. Refer to "**DISASSEMBLY AND ASSEMBLY**" for the tightening procedure.
- Measure the inner diameter of main bearing with a bore gauge.

(Oil clearance) = (Main bearing inner diameter) - (Crankshaft main journal diameter)

Standard and limit: Refer to "MAIN BEARING".

- If the calculated value exceeds the limit, select proper main bearing according to main bearing inner diameter and crankshaft main journal diameter to obtain the specified bearing oil clearance. Refer to "**DESCRIPTION**".

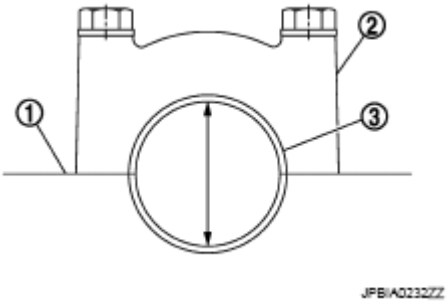

Fig. 291: Identifying Main Bearing Inner Diameter
Courtesy of NISSAN NORTH AMERICA, INC.

Method of Using Plastigage

- Remove engine oil and dust on crankshaft journal and the surfaces of each bearing completely.
- Cut a plastigage slightly shorter than the bearing width, and place it in crankshaft axial direction, avoiding oil holes.

 © 2011 Mitchell Repair Information Company, LLC.

- Install main bearing to cylinder block and lower cylinder block, and tighten lower cylinder block bolts with lower cylinder block to the specified torque. Refer to "**DISASSEMBLY AND ASSEMBLY**" for the tightening procedure.

CAUTION: Never rotate crankshaft.

- Remove lower cylinder block and bearings, and using the scale on the plastigage bag, measure the plastigage width.

NOTE: The procedure when the measured value exceeds the limit is the same as that described in the "Method by Calculation".

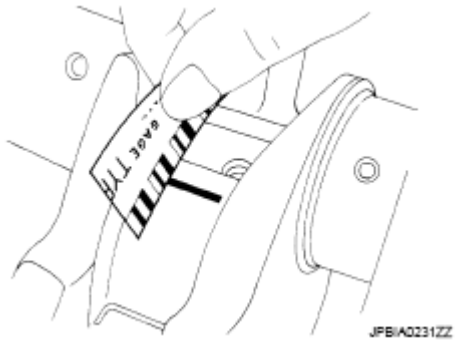

Fig. 292: Measuring Plastigage Width Using Scale On Plastigage Bag
Courtesy of NISSAN NORTH AMERICA, INC.

MAIN BEARING CRUSH HEIGHT

- When lower cylinder block is removed after being tightened to the specified torque with main bearings (1) installed, the tip end of bearing must protrude. Refer to "**DISASSEMBLY AND ASSEMBLY**" for the tightening procedure.

A : Crush height

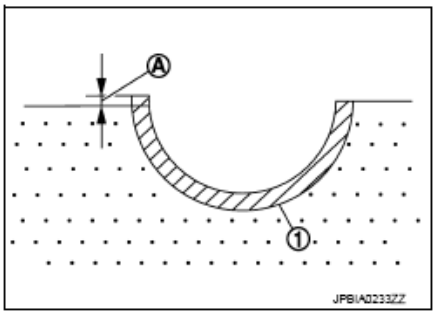

Fig. 293: Identifying Main Bearing Crush Height
Courtesy of NISSAN NORTH AMERICA, INC.

Standard: There must be crush height.

 © 2011 Mitchell Repair Information Company, LLC.

- If the standard is not met, replace main bearings.

CONNECTING ROD BEARING CRUSH HEIGHT

- When connecting rod bearing cap is removed after being tightened to the specified torque with connecting rod bearings (1) installed, the tip end of bearing must protrude. Refer to "**DISASSEMBLY AND ASSEMBLY**" for the tightening procedure.

A : Crush height

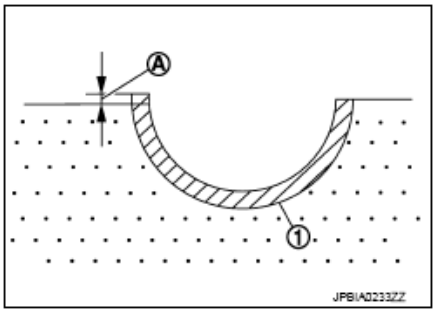

Fig. 294: Identifying Connecting Rod Bearing Crush Height
Courtesy of NISSAN NORTH AMERICA, INC.

Standard: There must be crush height.

- If the standard is not met, replace connecting rod bearings.

LOWER CYLINDER BLOCK BOLT OUTER DIAMETER

- Measure the outer diameters (c), (d) at two positions as shown in the figure below.

a : 20 mm (0.79 in)
b : 30 mm (1.18 in)
e : 10 mm (0.39 in)

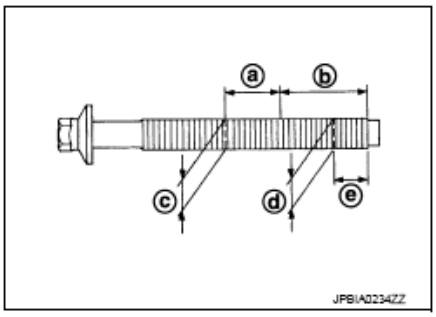

Fig. 295: Identifying Lower Cylinder Block Bolt Outer Diameter
Courtesy of NISSAN NORTH AMERICA, INC.

- If reduction appears in (a) range, regard it (c).

Limit [(d) - (c)]: 0.11 mm (0.0043 in)

- If it exceeds the limit (large difference in dimensions), replace lower cylinder block bolt with new one.

CONNECTING ROD BOLT OUTER DIAMETER

 © 2011 Mitchell Repair Information Company, LLC.

1. Measure the outer diameters [(a), (b) and (c)] at the position shown in the figure below.

a : Value at the end of the smaller diameter of the bolt
b : Value at the end of the smaller diameter of the bolt [opposite side of (a)]
c : Value of the smallest diameter of the smaller of the bolt

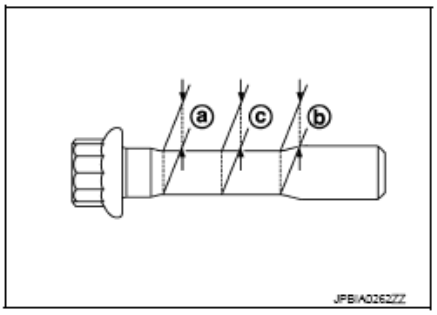

Fig. 296: Identifying Connecting Rod Bolt Outer Diameter
Courtesy of NISSAN NORTH AMERICA, INC.

2. Obtain a mean value (d) of (a) and (b).
3. Subtract (c) from (d).

   Limit [(d) - (c)]: 0.09 mm (0.0035 in)

4. If it exceeds the limit (large difference in dimensions), replace the bolt with new one.

FLYWHEEL DEFLECTION (M/T models)

- Measure the deflection of flywheel contact surface to clutch with a dial indicator (A).
- Measure the deflection at 210 mm (8.27 in) dia.

  Standard: 0.45 mm (0.0177 in) or less.

- If measured value is out of the standard, replace flywheel.

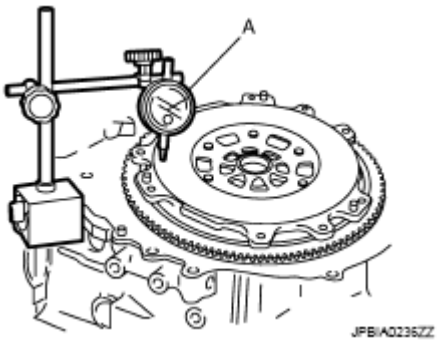

Fig. 297: Measuring Deflection Of Flywheel Contact Surface To Clutch Using Dial Indicator
Courtesy of NISSAN NORTH AMERICA, INC.

MOVEMENT AMOUNT OF FLYWHEEL (M/T models)

CAUTION: Never disassemble double mass flywheel.

 © 2011 Mitchell Repair Information Company, LLC.

Movement Amount in Radial (Rotation) Direction

Check the movement amount of radial (rotation) direction with the following procedure:

1. Install a bolt to clutch cover mounting hole, and place a torque wrench on the extended line of the flywheel center line.
   - Tighten bolt at a force of 9.8 N.m (1.0 kg-m, 87 in-lb) to keep it from loosening.
2. Put a matching mark on circumferences of the two flywheel masses without applying any load (measurement standard points).

1 : Clutch cover mounting bolt
2 : Flywheel (transaxle side)
A : Torque wrench
b : 9.8 N·m (1.0 kg-m, 87 in-lb)

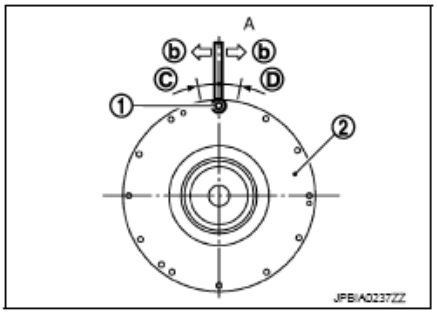

Fig. 298: Measuring Movement Amount Of Flywheel Using Tool
Courtesy of NISSAN NORTH AMERICA, INC.

3. Apply a force of 9.8 N.m (1.0 kg-m, 87 in-lb) in each direction, and mark the movement amount on the mass on the transaxle side.
4. Measure the dimensions of movement amounts (C) and (D) on circumference of the flywheel on the transaxle side.

   Standard: Less than 29.9 mm (1.177 in)

   - If measured value is out of the standard, replace flywheel.

DRIVE PLATE (A/T models)

- Check drive plate and signal plate for deformation or damage.

CAUTION:
- **Never disassemble drive plate.**
- **Never place drive plate with signal plate facing down.**
- **When handling signal plate, take care not to damage or scratch it.**
- **Handle signal plate in a manner that prevents it from becoming magnetized.**

 © 2011 Mitchell Repair Information Company, LLC.

- If anything is found, replace drive plate.

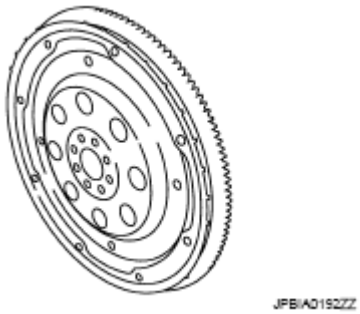

Fig. 299: Identifying Drive Plate
Courtesy of NISSAN NORTH AMERICA, INC.

OIL JET

- Check nozzle for deformation and damage.
- Blow compressed air from nozzle, and check for clogs.
- If it is not satisfied, clean or replace oil jet.

OIL JET RELIEF VALVE

- Using a clean plastic stick, press check valve in oil jet relief valve. Check that valve moves smoothly with proper reaction force.
- If it is not satisfied, replace oil jet relief valve.

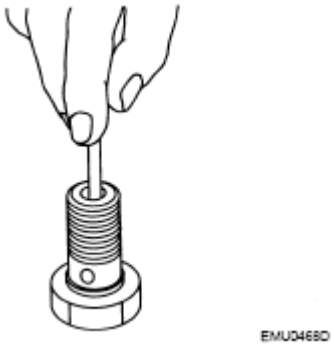

Fig. 300: Checking Oil Jet Relief Valve Using Plastic Stick
Courtesy of NISSAN NORTH AMERICA, INC.

HOW TO SELECT PISTON AND BEARING

Description

Selection points	Selection parts	Selection items	Selection methods
Between		Main bearing	Determined by match of cylinder block

 © 2011 Mitchell Repair Information Company, LLC.

cylinder block and crankshaft	Main bearing	grade (bearing thickness)	bearing housing grade (inner diameter of housing) and crankshaft journal grade (outer diameter of journal)
Between crankshaft and connecting rod	Connecting rod bearing	Connecting rod bearing grade (bearing thickness)	Combining service grades for connecting rod big end diameter and crankshaft pin outer diameter determine connecting rod bearing selection.
Between cylinder block and piston	Piston and piston pin assembly (Piston is available together with piston pin as assembly.)	Piston grade (piston skirt diameter)	Piston grade = cylinder bore grade (inner diameter of bore)
Between piston and connecting rod(1)	-	-	-

(1) For the service parts, the grade for fitting cannot be selected between piston pin and connecting rod. (Only "0" grade is available.) The information at the shipment from the plant is described as a reference.

- The identification grade stamped on each part is the grade for the dimension measured in new condition. This grade cannot apply to reused parts.
- For reused or repaired parts, measure the dimension accurately. Determine the grade by comparing the measurement with the values of each selection table.
- For details of the measurement method of each part, the reuse standards and the selection method of the selective fitting parts, refer to the text.

Piston

WHEN NEW CYLINDER BLOCK IS USED

Check the cylinder bore grade ("1", "2" or "3") on rear side of cylinder block, and select piston of the same grade.

A : Bearing housing grade No. 1
B : Bearing housing grade No. 2
C : Bearing housing grade No. 3
D : Bearing housing grade No. 4
E : Cylinder bore grade No. 1
F : Cylinder bore grade No. 2
G : Cylinder bore grade No. 3
H : Cylinder bore grade No. 4
I : Cylinder bore grade No. 5
J : Cylinder bore grade No. 6
K : Identification
⇦ : Engine front

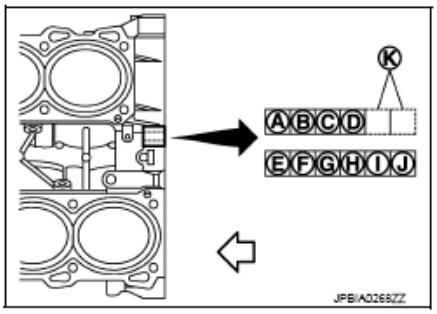

 © 2011 Mitchell Repair Information Company, LLC.

Fig. 301: Identifying Cylinder Bore Grade On Rear Side Of Cylinder
Courtesy of NISSAN NORTH AMERICA, INC.

NOTE: Piston is available with piston pin as a set for the service part. (Only "0" grade piston pin is available.)

WHEN CYLINDER BLOCK IS REUSED

1. Measure the cylinder bore inner diameter. Refer to "**INSPECTION**".
2. Determine the bore grade by comparing the measurement with the values under the cylinder bore inner diameter of the "PISTON SELECTION TABLE".

A : RH
B : LH
C : Piston pin grade number
D : Piston grade number
E : Front mark
F : Identification code

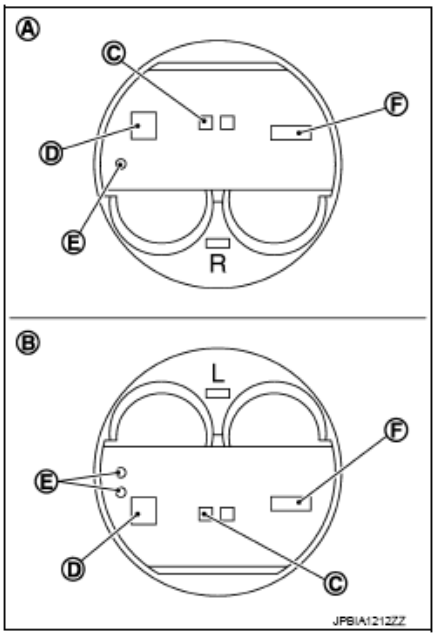

Fig. 302: Identifying Piston Pin Grade Number, Piston Grade Number, Front Mark And Identification Code
Courtesy of NISSAN NORTH AMERICA, INC.

3. Select piston of the same grade.

PISTON SELECTION TABLE

			Unit: mm (in)
Grade	**1**	**2**	**3**
Cylinder bore inner diameter	95.500 - 95.510 (3.7598 - 3.7602)	95.510 - 95.520 (3.7602 - 3.7606)	95.520 - 95.530 (3.7606 - 3.7610)
Piston skirt diameter	95.480 - 95.490 (3.7590 - 3.7594)	95.490 - 95.500 (3.7594 - 3.7598)	95.500 - 95.510 (3.7598 - 3.7602)

NOTE:

 © 2011 Mitchell Repair Information Company, LLC.

- **Piston is available together with piston pin as assembly.**
- **Piston pin (piston pin hole) grade is provided only for the parts installed at the plant. For service parts, no piston pin grades can be selected. (Only "0" grade is available.)**
- **No second grade mark is available on piston.**

Connecting Rod Bearing

WHEN NEW CONNECTING ROD AND CRANKSHAFT ARE USED

1. Apply connecting rod big end diameter grade stamped (D) on connecting rod side face to the row in the "CONNECTING ROD BEARING SELECTION TABLE".

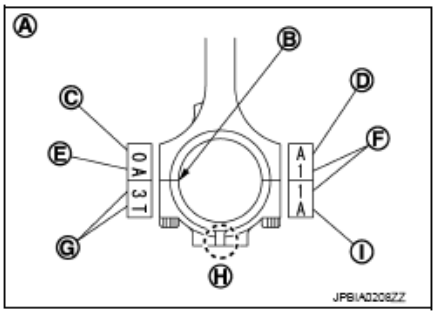

A : Sample codes
B : Bearing stopper groove
C : Small-end diameter grade
E : Weight grade
F : Cylinder No.
G : Management code
H : Front mark
I : Management code

Fig. 303: Identifying Piston Pin Grade Number, Piston Grade Number, Front Mark And Identification Code
Courtesy of NISSAN NORTH AMERICA, INC.

2. Apply crankshaft pin journal diameter grade stamped on crankshaft front side to the column in the "CONNECTING ROD BEARING SELECTION TABLE"

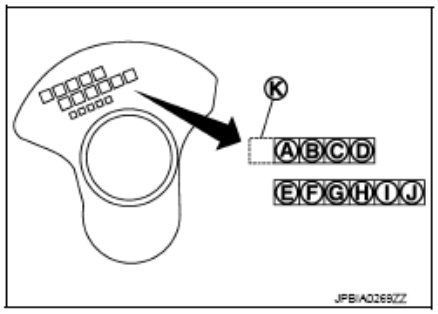

A : Journal diameter grade No. 1
B : Journal diameter grade No. 2
C : Journal diameter grade No. 3
D : Journal diameter grade No. 4
E : Pin diameter grade No. 1
F : Pin diameter grade No. 2
G : Pin diameter grade No. 3
H : Pin diameter grade No. 4
I : Pin diameter grade No. 5
J : Pin diameter grade No. 6
K : Identification

Fig. 304: Identifying Connecting Rod Big End Diameter Grade Stamped On Connecting Rod
Courtesy of NISSAN NORTH AMERICA, INC.

 © 2011 Mitchell Repair Information Company, LLC.

3. Read the symbol at the cross point of selected row and column in the "CONNECTING ROD BEARING SELECTION TABLE".
4. Apply the symbol obtained to the "CONNECTING ROD BEARING GRADE TABLE" to select connecting rod bearing.

WHEN CONNECTING ROD AND CRANKSHAFT ARE REUSED

1. Measure connecting rod big end diameter and crankshaft pin journal diameter. Refer to "**INSPECTION**".
2. Correspond the measured dimension in "connecting rod big end diameter" row of "CONNECTING ROD BEARING SELECTION TABLE".
3. Correspond the measured dimension in "crankshaft pin diameter" column of "CONNECTING ROD BEARING SELECTION TABLE".
4. Follow step 3 and later in "WHEN NEW CONNECTING ROD AND CRANKSHAFT ARE USED".

CONNECTING ROD BEARING SELECTION TABLE

Crankshaft pin journal diameter Unit: mm (in) / Connecting rod big end diameter Unit: mm (in)		Mark	A	B	C	D	E	F	G	H	J	K	L	M	N
		Hole diameter	57.000 - 57.001 (2.2441 - 2.2441)	57.001 - 57.002 (2.2441 - 2.2442)	57.002 - 57.003 (2.2442 - 2.2442)	57.003 - 57.004 (2.2442 - 2.2442)	57.004 - 57.005 (2.2442 - 2.2443)	57.005 - 57.006 (2.2443 - 2.2443)	57.006 - 57.007 (2.2443 - 2.2444)	57.007 - 57.008 (2.2444 - 2.2444)	57.008 - 57.009 (2.2444 - 2.2444)	57.009 - 57.010 (2.2444 - 2.2445)	57.010 - 57.011 (2.2445 - 2.2445)	57.011 - 57.012 (2.2445 - 2.2446)	57.012 - 57.013 (2.2446 - 2.2446)
Mark	Axle diameter														
A	53.974 - 53.973 (2.1250 - 2.1249)		0	0	0	0	0	0	1	1	1	1	1	1	2
B	53.973 - 53.972 (2.1249 - 2.1249)		0	0	0	0	0	1	1	1	1	1	1	2	2
C	53.972 - 53.971 (2.1249 - 2.1248)		0	0	0	0	1	1	1	1	1	1	2	2	2
D	53.971 - 53.970 (2.1248 - 2.1248)		0	0	0	1	1	1	1	1	1	2	2	2	2
E	53.970 - 53.969 (2.1248 - 2.1248)		0	0	1	1	1	1	1	1	2	2	2	2	2
F	53.969 - 53.968 (2.1248 - 2.1247)		0	1	1	1	1	1	1	2	2	2	2	2	2
G	53.968 - 53.967 (2.1247 - 2.1247)		1	1	1	1	1	1	2	2	2	2	2	2	3
H	53.967 - 53.966 (2.1247 - 2.1246)		1	1	1	1	1	2	2	2	2	2	2	3	3
J	53.966 - 53.965 (2.1246 - 2.1246)		1	1	1	1	2	2	2	2	2	2	3	3	3
K	53.965 - 53.964 (2.1246 - 2.1246)		1	1	1	2	2	2	2	2	2	3	3	3	3
L	53.964 - 53.963 (2.1246 - 2.1245)		1	1	2	2	2	2	2	2	3	3	3	3	3
M	53.963 - 53.962 (2.1245 - 2.1245)		1	2	2	2	2	2	2	3	3	3	3	3	3
N	53.962 - 53.961 (2.1245 - 2.1244)		2	2	2	2	2	2	3	3	3	3	3	3	4
P	53.961 - 53.960 (2.1244 - 2.1244)		2	2	2	2	2	3	3	3	3	3	3	4	4
R	53.960 - 53.959 (2.1244 - 2.1244)		2	2	2	2	3	3	3	3	3	3	4	4	4
S	53.959 - 53.958 (2.1244 - 2.1243)		2	2	2	3	3	3	3	3	3	4	4	4	4
T	53.958 - 53.957 (2.1243 - 2.1243)		2	2	3	3	3	3	3	3	4	4	4	4	4
U	53.957 - 53.956 (2.1243 - 2.1242)		2	3	3	3	3	3	3	4	4	4	4	4	4

PBIC5435E

Fig. 305: Connecting Rod Bearing Selection Chart

 © 2011 Mitchell Repair Information Company, LLC.

Courtesy of NISSAN NORTH AMERICA, INC.

CONNECTING ROD BEARING GRADE TABLE

Connecting rod bearing grade table: Refer to "CONNECTING ROD BEARING".

UNDERSIZE BEARING USAGE GUIDE

- When the specified connecting rod bearing oil clearance is not obtained with standard size connecting rod bearings, use undersize (US) bearings.
- When using undersize (US) bearing, measure the connecting rod bearing inner diameter with bearing installed, and grind crankshaft pin so that the connecting rod bearing oil clearance satisfies the standard.

CAUTION: In grinding crankshaft pin to use undersize bearings, keep the fillet R (A) [1.5 - 1.7 mm (0.059 - 0.067 in)].

Fig. 306: Identifying Fillet Radius
Courtesy of NISSAN NORTH AMERICA, INC.

Bearing undersize table: Refer to "CONNECTING ROD BEARING".

Main Bearing

WHEN NEW CYLINDER BLOCK AND CRANKSHAFT ARE USED

1. "MAIN BEARING SELECTION TABLE" rows correspond to bearing housing grade on rear side of cylinder block.

 © 2011 Mitchell Repair Information Company, LLC.

A : Bearing housing grade No. 1
B : Bearing housing grade No. 2
C : Bearing housing grade No. 3
D : Bearing housing grade No. 4
E : Cylinder bore grade No. 1
F : Cylinder bore grade No. 2
G : Cylinder bore grade No. 3
H : Cylinder bore grade No. 4
I : Cylinder bore grade No. 5
J : Cylinder bore grade No. 6
K : Identification code
⇦ : Engine front

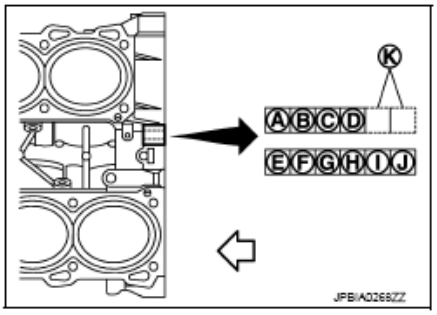

Fig. 307: Identifying Bearing Housing Grade Stamped On Rear Side Of Cylinder Block
Courtesy of NISSAN NORTH AMERICA, INC.

2. "MAIN BEARING SELECTION TABLE" columns correspond to journal diameter grade on front side of crankshaft.

A : Journal diameter grade No. 1
B : Journal diameter grade No. 2
C : Journal diameter grade No. 3
D : Journal diameter grade No. 4
E : Pin diameter grade No. 1
F : Pin diameter grade No. 2
G : Pin diameter grade No. 3
H : Pin diameter grade No. 4
I : Pin diameter grade No. 5
J : Pin diameter grade No. 6
K : Identification code

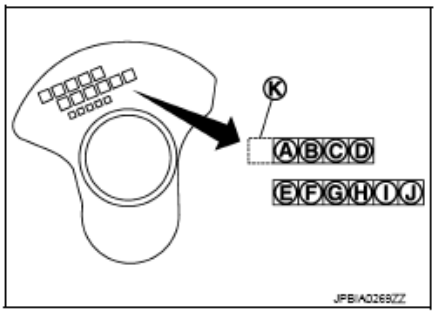

Fig. 308: Identifying Journal Diameter Grade Stamped On Front Side Of Crankshaft
Courtesy of NISSAN NORTH AMERICA, INC.

3. Select main bearing grade at the point where selected row and column meet in "MAIN BEARING SELECTION TABLE".
4. Apply sign at crossing in above step 3 to "MAIN BEARING GRADE TABLE".

NOTE:

- **"MAIN BEARING GRADE TABLE" applies to all journals.**
- **Service parts are available as a set of both upper and lower.**

WHEN CYLINDER BLOCK AND CRANKSHAFT ARE REUSED

1. Measure cylinder block main bearing housing inner diameter and crankshaft main journal diameter. Refer to "**INSPECTION**".

 © 2011 Mitchell Repair Information Company, LLC.

2. Correspond the measured dimension in "Cylinder block main bearing housing inner diameter" row of "MAIN BEARING SELECTION TABLE".
3. Correspond the measured dimension in "Crankshaft main journal diameter" column of "MAIN BEARING SELECTION TABLE".
4. Follow step 3 and later in "When New Cylinder Block and Crankshaft are Used".

MAIN BEARING SELECTION TABLE

Cylinder block main bearing housing inner diameter Unit: mm (in) / Crankshaft main journal diameter Unit: mm (in)		Mark	A	B	C	D	E	F	G	H	J	K	L	M	N	P	R	S	T	U	V	W	X	Y	4	7
		Hole diameter	69.993 - 69.994 (2.7556 - 2.7557)	69.994 - 69.995 (2.7557 - 2.7557)	69.995 - 69.996 (2.7557 - 2.7557)	69.996 - 69.997 (2.7557 - 2.7558)	69.997 - 69.998 (2.7558 - 2.7558)	69.998 - 69.999 (2.7558 - 2.7559)	69.999 - 70.000 (2.7559 - 2.7559)	70.000 - 70.001 (2.7559 - 2.7559)	70.001 - 70.002 (2.7559 - 2.7560)	70.002 - 70.003 (2.7560 - 2.7560)	70.003 - 70.004 (2.7560 - 2.7561)	70.004 - 70.005 (2.7561 - 2.7561)	70.005 - 70.006 (2.7561 - 2.7561)	70.006 - 70.007 (2.7561 - 2.7562)	70.007 - 70.008 (2.7562 - 2.7562)	70.008 - 70.009 (2.7562 - 2.7563)	70.009 - 70.010 (2.7563 - 2.7563)	70.010 - 70.011 (2.7563 - 2.7563)	70.011 - 70.012 (2.7563 - 2.7564)	70.012 - 70.013 (2.7564 - 2.7564)	70.013 - 70.014 (2.7564 - 2.7565)	70.014 - 70.015 (2.7565 - 2.7565)	70.015 - 70.016 (2.7565 - 2.7565)	70.016 - 70.017 (2.7565 - 2.7566)
Mark	Axle diameter																									
A	64.975 - 64.974 (2.5581 - 2.5580)		0	0	0	01	01	01	1	1	1	12	12	12	2	2	2	23	23	23	3	3	3	34	34	34
B	64.974 - 64.973 (2.5580 - 2.5580)		0	0	01	01	01	1	1	1	12	12	12	2	2	2	23	23	23	3	3	3	34	34	34	4
C	64.973 - 64.972 (2.5580 - 2.5579)		0	01	01	01	1	1	1	12	12	12	2	2	2	23	23	23	3	3	3	34	34	34	4	4
D	64.972 - 64.971 (2.5579 - 2.5579)		01	01	01	1	1	1	12	12	12	2	2	2	23	23	23	3	3	3	34	34	34	4	4	4
E	64.971 - 64.970 (2.5579 - 2.5579)		01	01	1	1	1	12	12	12	2	2	2	23	23	23	3	3	3	34	34	34	4	4	4	45
F	64.970 - 64.969 (2.5579 - 2.5578)		01	1	1	1	12	12	12	2	2	2	23	23	23	3	3	3	34	34	34	4	4	4	45	45
G	64.969 - 64.968 (2.5578 - 2.5578)		1	1	1	12	12	12	2	2	2	23	23	23	3	3	3	34	34	34	4	4	4	45	45	45
H	64.968 - 64.967 (2.5578 - 2.5578)		1	1	12	12	12	2	2	2	23	23	23	3	3	3	34	34	34	4	4	4	45	45	45	5
J	64.967 - 64.966 (2.5578 - 2.5577)		1	12	12	12	2	2	2	23	23	23	3	3	3	34	34	34	4	4	4	45	45	45	5	5
K	64.966 - 64.965 (2.5577 - 2.5577)		12	12	12	2	2	2	23	23	23	3	3	3	34	34	34	4	4	4	45	45	45	5	5	5
L	64.965 - 64.964 (2.5577 - 2.5576)		12	12	2	2	2	23	23	23	3	3	3	34	34	34	4	4	4	45	45	45	5	5	5	56
M	64.964 - 64.963 (2.5576 - 2.5576)		12	2	2	2	23	23	23	3	3	3	34	34	34	4	4	4	45	45	45	5	5	5	56	56
N	64.963 - 64.962 (2.5576 - 2.5576)		2	2	2	23	23	23	3	3	3	34	34	34	4	4	4	45	45	45	5	5	5	56	56	56
P	64.962 - 64.961 (2.5576 - 2.5575)		2	2	23	23	23	3	3	3	34	34	34	4	4	4	45	45	45	5	5	5	56	56	56	6
R	64.961 - 64.960 (2.5575 - 2.5575)		2	23	23	23	3	3	3	34	34	34	4	4	4	45	45	45	5	5	5	56	56	56	6	6
S	64.960 - 64.959 (2.5575 - 2.5574)		23	23	23	3	3	3	34	34	34	4	4	4	45	45	45	5	5	5	56	56	56	6	6	6
T	64.959 - 64.958 (2.5574 - 2.5574)		23	23	3	3	3	34	34	34	4	4	4	45	45	45	5	5	5	56	56	56	6	6	6	67
U	64.958 - 64.957 (2.5574 - 2.5574)		23	3	3	3	34	34	34	4	4	4	45	45	45	5	5	5	56	56	56	6	6	6	67	67
V	64.957 - 64.956 (2.5574 - 2.5573)		3	3	3	34	34	34	4	4	4	45	45	45	5	5	5	56	56	56	6	6	6	67	67	67
W	64.956 - 64.955 (2.5573 - 2.5573)		3	3	34	34	34	4	4	4	45	45	45	5	5	5	56	56	56	6	6	6	67	67	67	7
X	64.955 - 64.954 (2.5573 - 2.5572)		3	34	34	34	4	4	4	45	45	45	5	5	5	56	56	56	6	6	6	67	67	67	7	7
Y	64.954 - 64.953 (2.5572 - 2.5572)		34	34	34	4	4	4	45	45	45	5	5	5	56	56	56	6	6	6	67	67	67	7	7	7
4	64.953 - 64.952 (2.5572 - 2.5572)		34	34	4	4	4	45	45	45	5	5	5	56	56	56	6	6	6	67	67	67	7	7	7	X
7	64.952 - 64.951 (2.5572 - 2.5571)		34	4	4	4	45	45	45	5	5	5	56	56	56	6	6	6	67	67	67	7	7	7	X	X

JPBIA0264ZZ

Fig. 309: Main Bearing Selection Chart
Courtesy of NISSAN NORTH AMERICA, INC.

MAIN BEARING GRADE TABLE (ALL JOURNALS)

Main bearing grade table (All journals): Refer to "MAIN BEARING".

UNDERSIZE BEARING USAGE GUIDE

 © 2011 Mitchell Repair Information Company, LLC.

- When the specified main bearing oil clearance is not obtained with standard size main bearings, use underside (US) bearing.
- When using undersize (US) bearing, measure the main bearing inner diameter with bearing installed, and grind main journal so that the main bearing oil clearance satisfies the standard.

CAUTION: In grinding crankshaft main journal to use undersize bearings, keep the fillet R (A) [1.5 - 1.7 mm (0.059 - 0.067 in)].

Bearing undersize table: Refer to "MAIN BEARING".

Fig. 310: Identifying Fillet Radius
Courtesy of NISSAN NORTH AMERICA, INC.

SERVICE DATA AND SPECIFICATIONS (SDS)

SERVICE DATA AND SPECIFICATIONS (SDS)

General Specification

GENERAL SPECIFICATIONS

Cylinder arrangement		V-6
Displacement cm^3 (cu in)		3, 696 (225.53)
Bore and stroke mm (in)		95.5 x 86.0 (3.76 x 3.386)
Valve arrangement		DOHC
Firing order		1-2-3-4-5-6
Number of piston rings	Compression	2
	Oil	1
Number of main bearings		4
Compression ratio		11
Compression pressure kPa (kg/cm^2 , psi)/200 RPM	Standard	1, 667 - 2, 354 (17 - 24, 242 - 341)
	Minimum	1, 226 (12.5, 178)
	Differential limit between cylinders	98 (1.0, 14)

 © 2011 Mitchell Repair Information Company, LLC.

Cylinder number	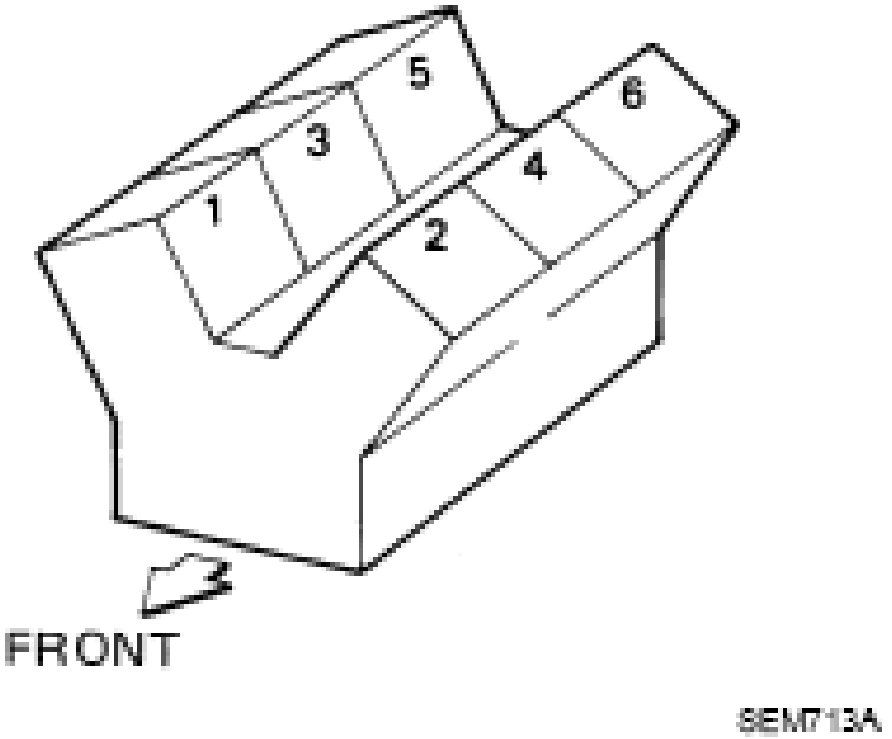	
		Unit: degree
Valve timing	Intake valve open (BTDC)	63 - -64
	Intake valve close (ABDC)	-73 - 82
	Exhaust valve open (BBDC)	64
	Exhaust valve close (ATDC)	12

Drive Belt

DRIVE BELT

Tension of drive belt	Belt tension is not necessary, as it is automatically adjusted by drive belt auto-tensioner.

Spark Plug

SPARK PLUG

	Unit: mm (in)
Make	DENSO
Standard type	FXE24HR11
Gap (Nominal)	1.1 (0.043)

Intake Manifold

 © 2011 Mitchell Repair Information Company, LLC.

INTAKE MANIFOLD

Unit: mm (in)		
Items		**Limit**
Surface distortion	Intake manifold	0.1 (0.004)

Exhaust Manifold

EXHAUST MANIFOLD

Unit: mm (in)		
Items		**Limit**
Surface distortion	Exhaust manifold	0.7 (0.028)

Camshaft

CAMSHAFT (EXH)

Unit: mm (in)			
Items		**Standard**	**Limit**
Camshaft (EXH) journal oil clearance	No. 1	0.045 - 0.086 (0.0018 - 0.0034)	0.150 (0.0059)
	No. 2, 3, 4	0.035 - 0.076 (0.0014 - 0.0030)	
VVEL ladder assembly bracket inner diameter (EXH)	No. 1	26.000 - 26.021 (1.0236 - 1.0244)	-
	No. 2, 3, 4	23.500 - 23.521 (0.9252 - 0.9260)	-
Camshaft (EXH) journal diameter	No. 1	25.935 - 25.955 (1.0211 - 1.0218)	-
	No. 2, 3, 4	23.445 - 23.465 (0.9230 - 0.9238)	-
Camshaft (EXH) end play		0.115 - 0.188 (0.0045 - 0.0074)	0.24 (0.0094)
Camshaft (EXH) cam height "A"	Bank 1	45.015 - 45.205 (1.7722 - 1.7797)	0.2 (0.008)(1)
	Bank 2	46.735 - 46.925 (1.8400 - 1.8474)	
Camshaft (EXH) runout [TIR(2)]		Less than 0.02 (0.001)	0.05 (0.002)
Camshaft sprocket (EXH) runout [TIR(2)]		-	0.15 (0.0059)

 © 2011 Mitchell Repair Information Company, LLC.

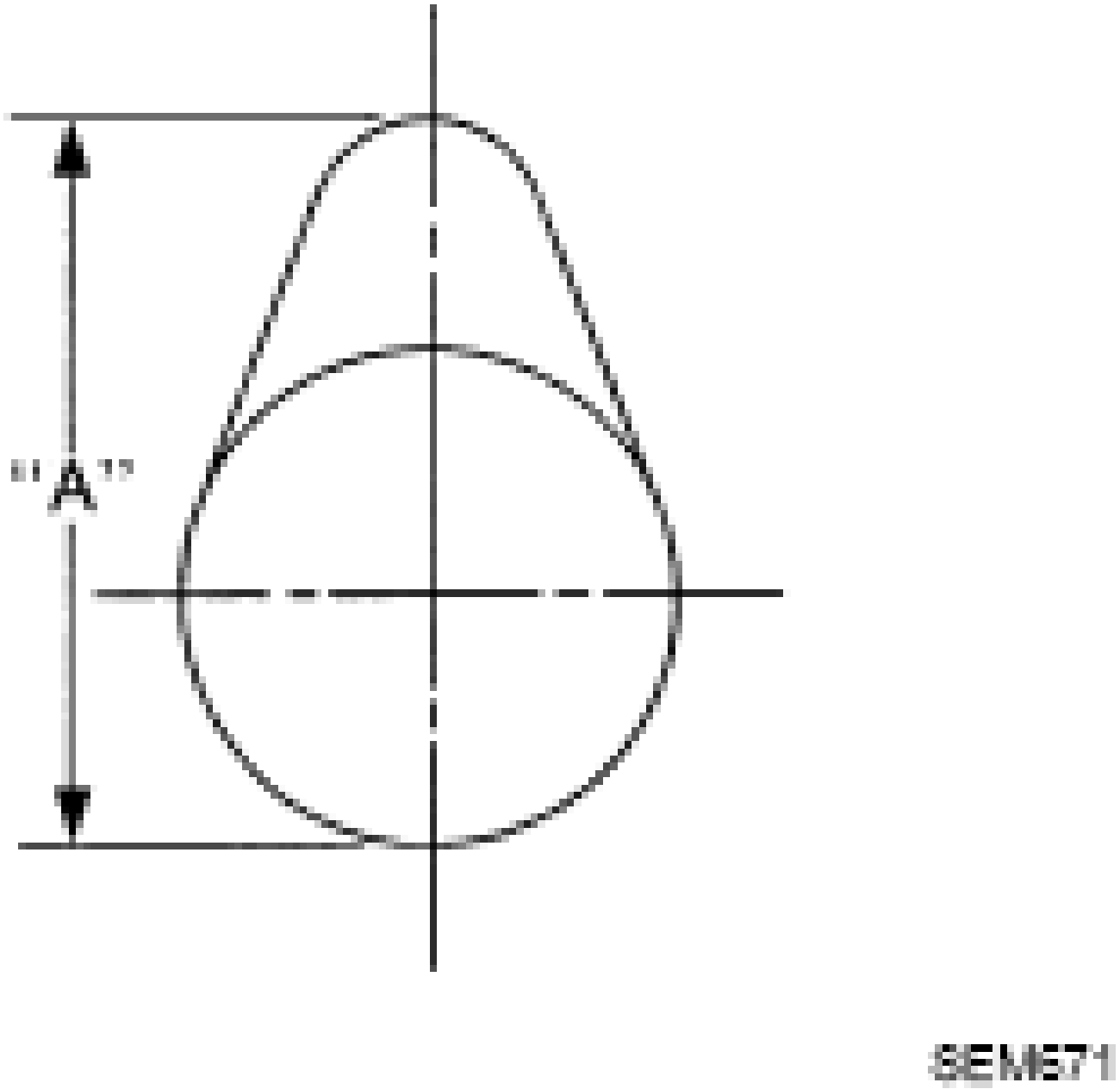

(1) Cam wear limit

(2) Total indicator reading

CAMSHAFT (INT)

		Unit: mm (in)
Items	**Standard**	**Limit**

 © 2011 Mitchell Repair Information Company, LLC.

Drive shaft end play	0.115 - 0.188 (0.0045 - 0.0074)	0.24 (0.0094)
Camshaft sprocket (INT) runout [TIR(1)]	-	0.15 (0.0059)
(1) Total indicator reading		

VALVE LIFTER

Unit: mm (in)	
Items	**Standard**
Valve lifter outer diameter	33.980 - 33.990 (1.3378 - 1.3382)
Valve lifter hole diameter	34.000 - 34.016 (1.3386 - 1.3392)
Valve lifter clearance	0.010 - 0.036 (0.0004 - 0.0014)

VALVE CLEARANCE

Unit: mm (in)		
Items	**Cold**	**Hot(1) (reference data)**
Intake	0.26 - 0.34 (0.010 - 0.013)	0.304 - 0.416 (0.012 - 0.016)
Exhaust	0.29 - 0.37 (0.011 - 0.015)	0.308 - 0.432 (0.012 - 0.017)
(1) Approximately 80°C (176°F)		

AVAILABLE VALVE LIFTER

Unit: mm (in)	
Identification (stamped) mark	**Thickness**
788	7.88 (0.3102)
790	7.90 (0.3110)
792	7.92 (0.3118)
794	7.94 (0.3126)
796	7.96 (0.3134)
798	7.98 (0.3142)
800	8.00 (0.3150)
802	8.02 (0.3157)
804	8.04 (0.3165)
806	8.06 (0.3173)
808	8.08 (0.3181)
810	8.10 (0.3189)
812	8.12 (0.3197)
814	8.14 (0.3205)
816	8.16 (0.3213)
818	8.18 (0.3220)
820	8.20 (0.3228)

 © 2011 Mitchell Repair Information Company, LLC.

822	8.22 (0.3236)
824	8.24 (0.3244)
826	8.26 (0.3252)
828	8.28 (0.3260)
830	8.30 (0.3268)
832	8.32 (0.3276)
834	8.34 (0.3283)
836	8.36 (0.3291)
838	8.38 (0.3299)
840	8.40 (0.3307)

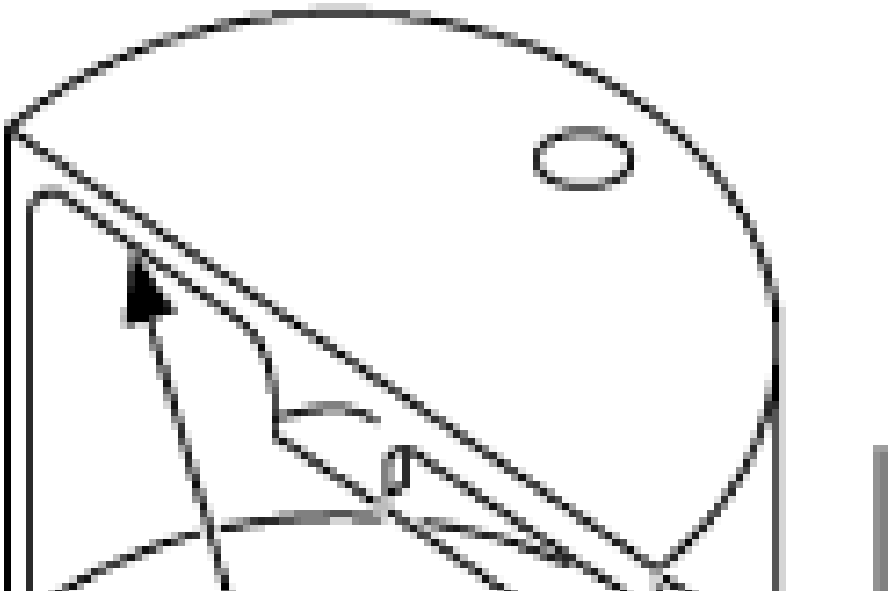

 © 2011 Mitchell Repair Information Company, LLC.

Cylinder Head

CYLINDER HEAD

		Unit: mm (in)
Items	**Standard**	**Limit**
Head surface distortion	Less than 0.03 (0.0012)	0.1 (0.004)
Normal cylinder head height "H"	126.4 (4.98)	-

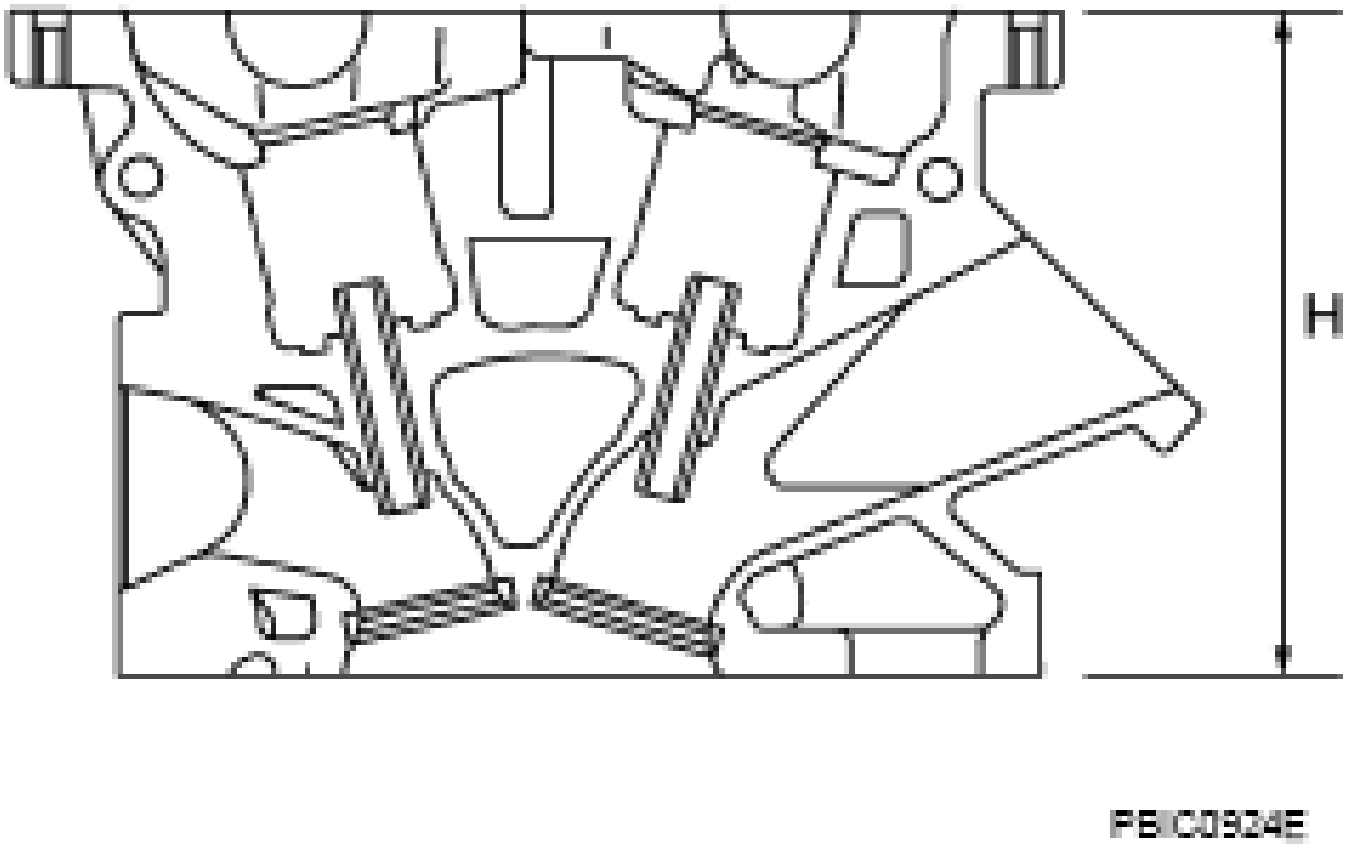

VALVE DIMENSIONS

Unit: mm (in)

 © 2011 Mitchell Repair Information Company, LLC.

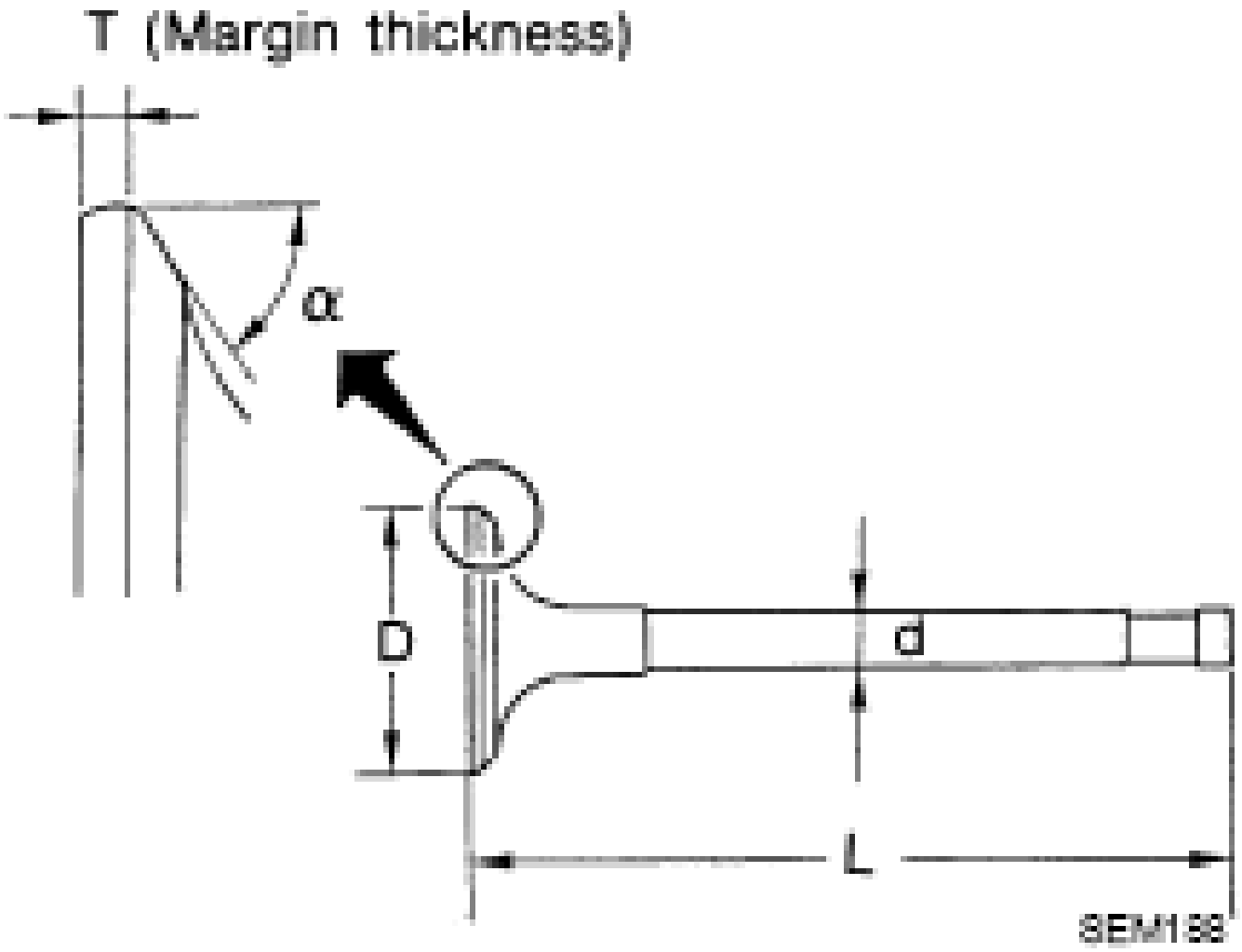

Valve head diameter "D"	Intake	36.6 - 36.9 (1.441 - 1.453)
	Exhaust	30.2 - 30.5 (1.189 - 1.201)
Valve length "L"	Intake	100.11 (3.94)
	Exhaust	94.67 (3.7272)
Valve stem diameter "d"	Intake	5.965 - 5.980 (0.2348 - 0.2354)
	Exhaust	5.962 - 5.970 (0.2347 - 0.2350)
Valve seat angle "a"	Intake	45°15' - 45°45'
	Exhaust	
Valve margin "T"	Intake	1.1 (0.043)
	Exhaust	1.3 (0.051)
Valve margin "T" limit		0.5 (0.020)
Valve stem end surface grinding limit		0.2 (0.008)

VALVE GUIDE

 © 2011 Mitchell Repair Information Company, LLC.

Unit: mm (in)

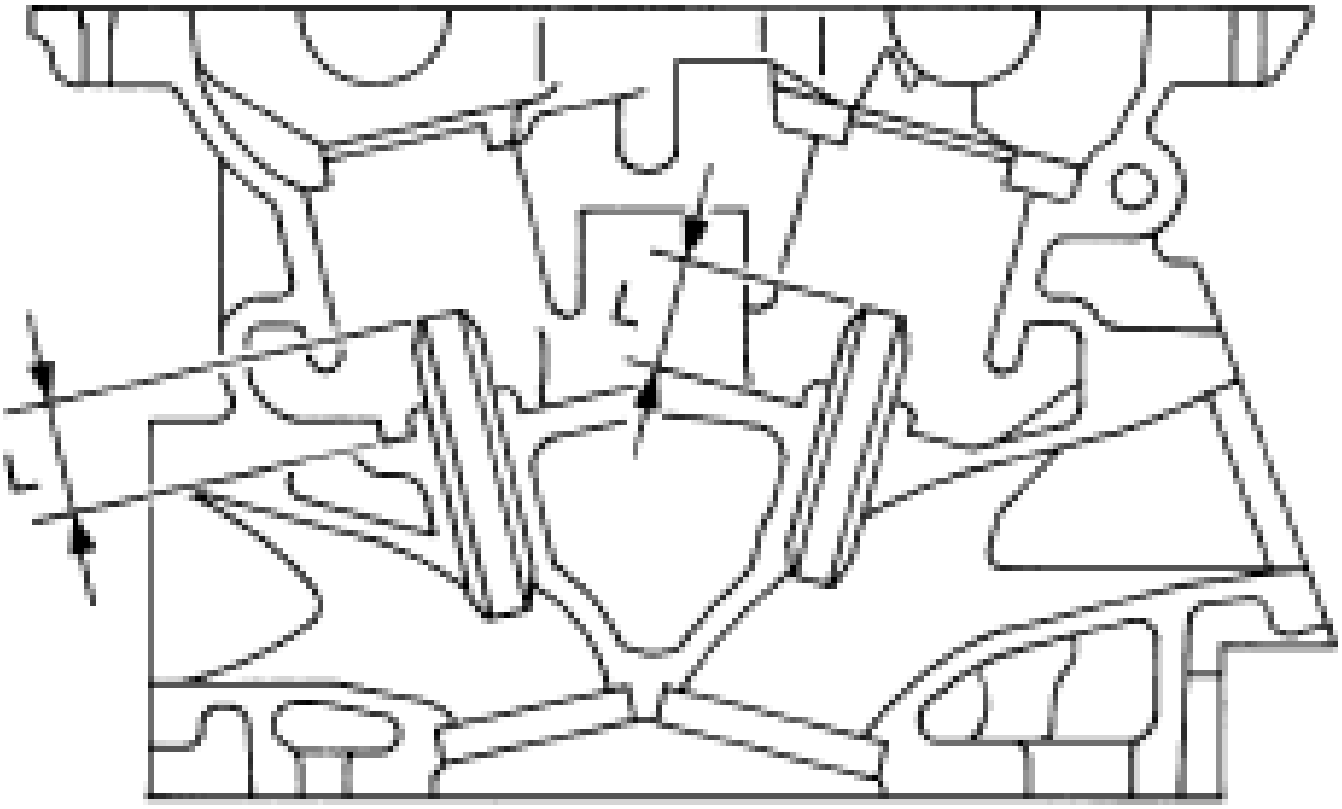

SEM950E

Items		Standard	Oversize (Service) [0.2 (0.008)] (1)
Valve guide	Outer diameter	10.023 - 10.034 (0.3946 - 0.3950)	10.223 - 10.234 (0.4025 - 0.4029)(1)
	Inner diameter (Finished size)	6.000 - 6.018 (0.2362 - 0.2369)	
Cylinder head valve guide hole diameter		9.975 - 9.996 (0.3927 - 0.3935)	10.175 - 10.196 (0.4006 - 0.4014)(1)
Interference fit of valve guide		0.027 - 0.059 (0.0011 - 0.0023)	
Items		Standard	Limit
Valve guide clearance	Intake	0.020 - 0.053 (0.0008 - 0.0021)	0.08 (0.003)
	Exhaust	0.030 - 0.056 (0.0012 - 0.0022)	0.09 (0.004)
Projection length "L"		12.6 - 12.8 (0.496 - 0.504)	

 © 2011 Mitchell Repair Information Company, LLC.

(1) Parts settings are for exhaust side only

VALVE SEAT

Unit: mm (in)

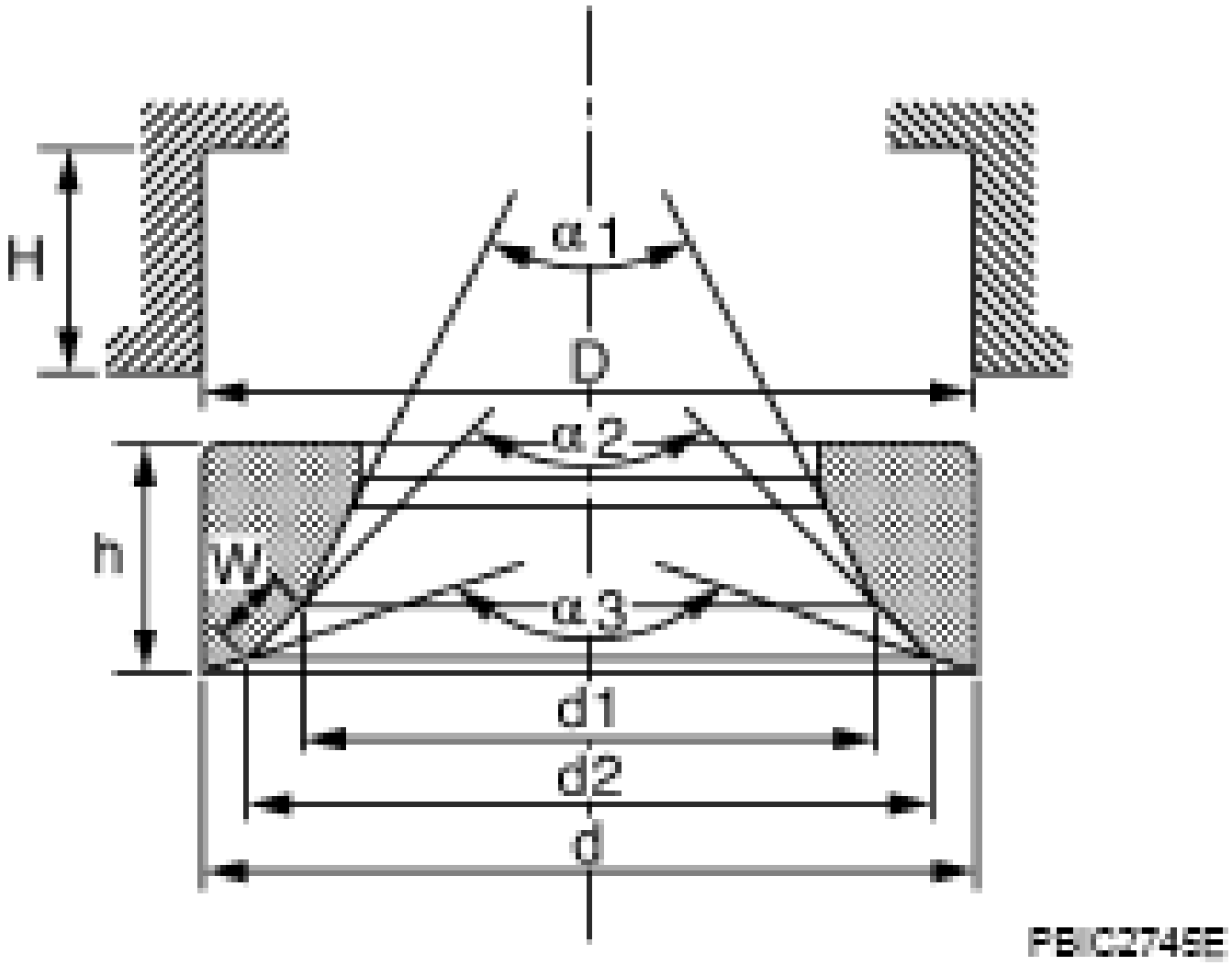

Items		Standard	Oversize (Service) [0.5 (0.02)] (4)
Cylinder head seat recess diameter "D"	Intake	38.000 - 38.016 (1.4961 - 1.4967)	-
	Exhaust	31.600 - 31.616 (1.2441 - 1.2447)	32.100 - 32.116 (1.2638 - 1.2644) (4)
Valve seat outer diameter "d"	Intake	38.097 - 38.113 (1.4999 - 1.5005)	-
	Exhaust	31.680 - 31.696 (1.2472 -	32.180 - 32.196 (1.2669 - 1.2676)

 © 2011 Mitchell Repair Information Company, LLC.

		1.2479)	(4)
Valve seat interference fit	Intake	0.081 - 0.113 (0.0032 - 0.0044)	
	Exhaust	0.064 - 0.096 (0.0025 - 0.0038)	
Diameter "d1"(1)	Intake	34.6 (1.362)	
	Exhaust	27.7 (1.091)	
Diameter "d2"(2)	Intake	35.9 - 36.4 (1.413 - 1.433)	
	Exhaust	29.3 - 29.8 (1.154 - 1.173)	
Angle "a1"	Intake	60°	
	Exhaust	60°	
Angle "a2"	Intake	88°45' - 90°15'	
	Exhaust	88°45' - 90°15'	
Angle "a3"	Intake	120°	
	Exhaust	120°	
Contacting width "W"(3)	Intake	1.0 - 1.4 (0.039 - 0.055)	
	Exhaust	1.2 - 1.6 (0.047 - 0.063)	
Height "h"	Intake	5.9 - 6.0 (0.232 - 0.236)	-
	Exhaust	5.9 - 6.0 (0.232 - 0.236)	4.95 - 5.05 (0.1949 - 0.1988)(4)
Depth "H"		6.0 (0.236)	

(1) Diameter made by intersection point of conic angles "a1" and "a2"

(2) Diameter made by intersection point of conic angles "a2" and "a3"

(3) Machining data

(4) Parts settings are for exhaust side only

VALVE SPRING

Items		Standard	
		Intake	Exhaust
Free height		45.66 mm (1.7976 in)	43.85 mm (1.7264 in)
Pressure	Installation	191.1 - 215.5 N (19.5 - 22 kg, 43 - 48 lb) at 40.90 mm (1.6102 in)	166 - 188 N (16.9 - 19.2 kg, 37 - 42 lb) at 37.00 mm (1.4567 in)
	Valve open	830.9 - 936.9 N (84.8 - 95.6 kg, 187 - 211 lb) at 28.07 mm (1.1051 in)	502 - 566 N (51.2 - 57.7 kg, 113 - 127 lb) at 26.80 mm (1.0551 in)
Identification color		Purple	Yellowish green

Items	Limit	
	Intake	Exhaust
Out-of-square	2.0 mm (0.079 in)	1.9 mm (0.075 in)

Cylinder Block

CYLINDER BLOCK

 © 2011 Mitchell Repair Information Company, LLC.

Unit: mm (in)

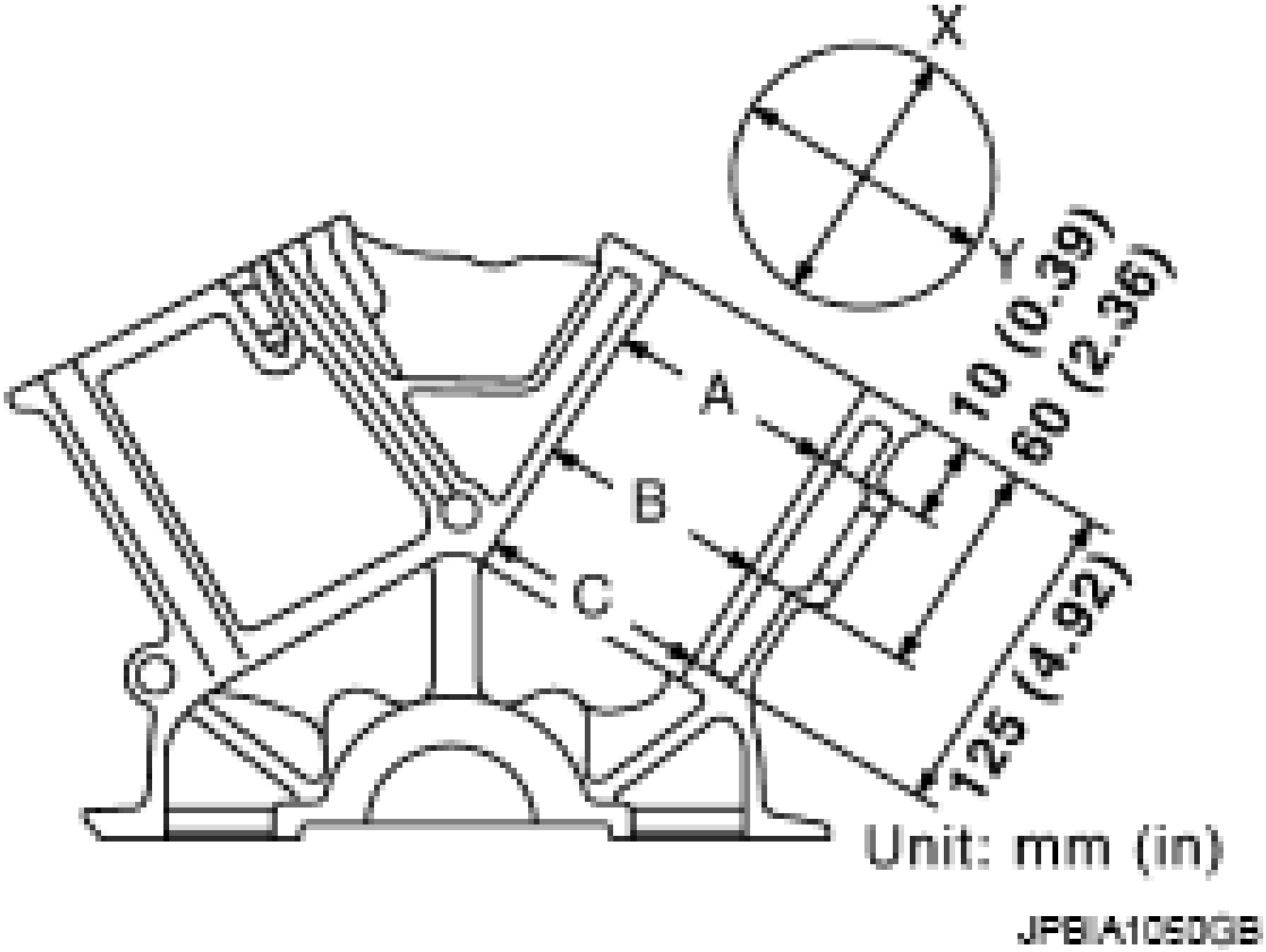

Surface flatness		Standard		Less than 0.03 (0.0012)
		Limit		0.1 (0.004)
Main bearing housing inner diameter		Standard		69.993 - 70.017 (2.7556 - 2.7566)
Cylinder bore	Inner diameter	Standard	Grade No. 1	95.500 - 95.510 (3.7598 - 3.7602)
			Grade No. 2	95.510 - 95.520 (3.7602 - 3.7606)
			Grade No. 3	95.520 - 95.530 (3.7606 - 3.7610)
		Wear limit		0.2 (0.008)
Out-of-round		Limit		0.015 (0.0006)
Taper				0.010 (0.0004)
			Grade No. A	69.993 - 69.994 (2.7556 - 2.7557)
			Grade No. B	69.994 - 69.995 (2.7557 - 2.7557)
			Grade No. C	69.995 - 69.996 (2.7557 - 2.7557)
			Grade No. D	69.996 - 69.997 (2.7557 - 2.7558)

 © 2011 Mitchell Repair Information Company, LLC.

Main bearing housing inner diameter grade (Without bearing)		Grade No. E	69.997 - 69.998 (2.7558 - 2.7558)
		Grade No. F	69.998 - 69.999 (2.7558 - 2.7559)
		Grade No. G	69.999 - 70.000 (2.7559 - 2.7559)
		Grade No. H	70.000 - 70.001 (2.7559 - 2.7559)
		Grade No. J	70.001 - 70.002 (2.7559 - 2.7560)
		Grade No. K	70.002 - 70.003 (2.7560 - 2.7560)
		Grade No. L	70.003 - 70.004 (2.7560 - 2.7561)
		Grade No. M	70.004 - 70.005 (2.7561 - 2.7561)
		Grade No. N	70.005 - 70.006 (2.7561 - 2.7561)
		Grade No. P	70.006 - 70.007 (2.7561 - 2.7562)
		Grade No. R	70.007 - 70.008 (2.7562 - 2.7562)
		Grade No. S	70.008 - 70.009 (2.7562 - 2.7563)
		Grade No. T	70.009 - 70.010 (2.7563 - 2.7563)
		Grade No. U	70.010 - 70.011 (2.7563 - 2.7563)
		Grade No. V	70.011 - 70.012 (2.7563 - 2.7564)
		Grade No. W	70.012 - 70.013 (2.7564 - 2.7564)
		Grade No. X	70.013 - 70.014 (2.7564 - 2.7565)
		Grade No. Y	70.014 - 70.015 (2.7565 - 2.7565)
		Grade No. 4	70.015 - 70.016 (2.7565 - 2.7565)
		Grade No. 7	70.016 - 70.017 (2.7565 - 2.7566)
Difference in inner diameter between cylinders	Standard		Less than 0.03 (0.0012)

AVAILABLE PISTON

Unit: mm (in)

 © 2011 Mitchell Repair Information Company, LLC.

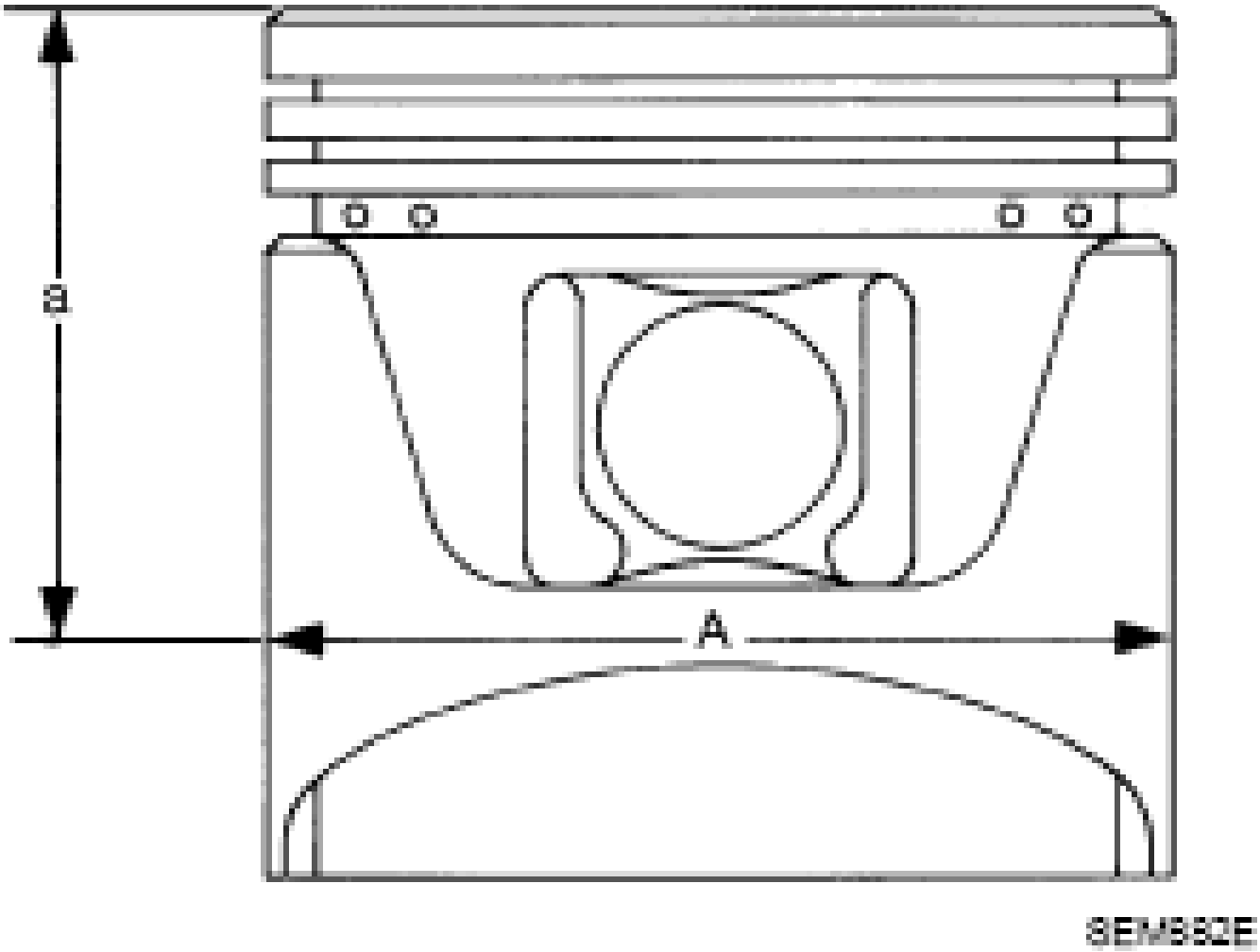

Items		Standard	Oversize (Service) [0.2 (0.008)]
Piston skirt diameter "A"	Grade No. 1	95.480 - 95.490 (3.7590 - 3.7594)	-
	Grade No. 2	95.490 - 95.500 (3.7594 - 3.7598)	-
	Grade No. 3	95.500 - 95.510 (3.7598 - 3.7602)	-
	Service	-	95.680 - 95.710 (3.7669 - 3.7681)
Items		Standard	Limit
"a" dimension		38.8 (1.528)	-
Piston pin hole diameter	Grade No. 0	21.993 - 21.999 (0.8659 - 0.8661)	-
	Grade No. 1	21.999 - 22.005 (0.8661 - 0.8663)	-

 © 2011 Mitchell Repair Information Company, LLC.

Piston to cylinder bore clearance	0.010 - 0.030 (0.0004 - 0.0012)	0.08 (0.0031)

PISTON RING

			Unit: mm (in)
Items		**Standard**	**Limit**
Side clearance	Top	0.040 - 0.080 (0.0016 - 0.0031)	0.11 (0.0043)
	2nd	0.030 - 0.070 (0.0012 - 0.0028)	0.10 (0.0039)
	Oil ring	0.055 - 0.155 (0.0022 - 0.0061)	0.19 (0.0075)
End gap	Top	0.23 - 0.33 (0.0091 - 0.0130)	0.42 (0.0169)
	2nd	0.23 - 0.33 (0.0091 - 0.0130)	0.57 (0.0224)
	Oil (rail ring)	0.17 - 0.47 (0.0067 - 0.0185)	0.63 (0.0248)

PISTON PIN

			Unit: mm (in)
Items		**Standard**	**Limit**
Piston pin outer diameter	Grade No. 0	21.989 - 21.995 (0.8657 - 0.8659)	-
	Grade No. 1	21.995 - 22.001 (0.8659 - 0.8662)	-
Piston to piston pin oil clearance		0.002 - 0.006 (0.0001 - 0.0002)	-
Connecting rod bushing oil clearance		0.005 - 0.017 (0.0002 - 0.0007)	0.030 (0.0012)

CONNECTING ROD

			Unit: mm (in)
Items		Standard	Limit
Center distance		149.45 - 149.55 (5.88 - 5.89)	-
Bend [per 100 (3.94)]		-	0.15 (0.0059)
Torsion [per 100 (3.94)]		-	0.30 (0.0118)
Connecting rod bushing inner diameter(1)	Grade No. 0	22.000 - 22.006 (0.8661 - 0.8664)	-
	Grade No. 1	22.006 - 22.012 (0.8664 - 0.8666)	-
	Grade No. A	57.000 - 57.001 (2.2441 - 2.2441)	-
	Grade No. B	57.001 - 57.002 (2.2441 - 2.2442)	-
	Grade No. C	57.002 - 57.003 (2.2442 - 2.2442)	-
	Grade No. D	57.003 - 57.004 (2.2442 - 2.2442)	-

 © 2011 Mitchell Repair Information Company, LLC.

Connecting rod big end diameter (Without bearing)	Grade No. E	57.004 - 57.005 (2.2442 - 2.2443)	-
	Grade No. F	57.005 - 57.006 (2.2443 - 2.2443)	-
	Grade No. G	57.006 - 57.007 (2.2443 - 2.2444)	-
	Grade No. H	57.007 - 57.008 (2.2444 - 2.2444)	-
	Grade No. J	57.008 - 57.009 (2.2444 - 2.2444)	-
	Grade No. K	57.009 - 57.010 (2.2444 - 2.2445)	-
	Grade No. L	57.010 - 57.011 (2.2445 - 2.2445)	-
	Grade No. M	57.011 - 57.012 (2.2445 - 2.2446)	-
	Grade No. N	57.012 - 57.013 (2.2446 - 2.2446)	-
Items		Standard	Limit
Side clearance		0.20 - 0.35 (0.0079 - 0.0138)	0.40 (0.0157)
(1) After installing in connecting rod			

CRANKSHAFT

Unit: mm (in

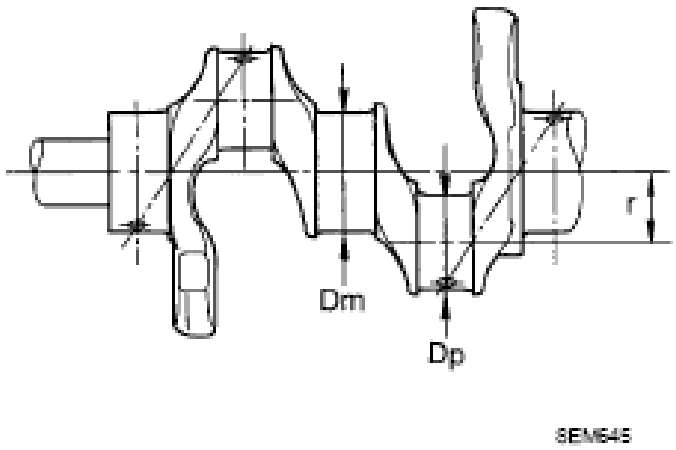

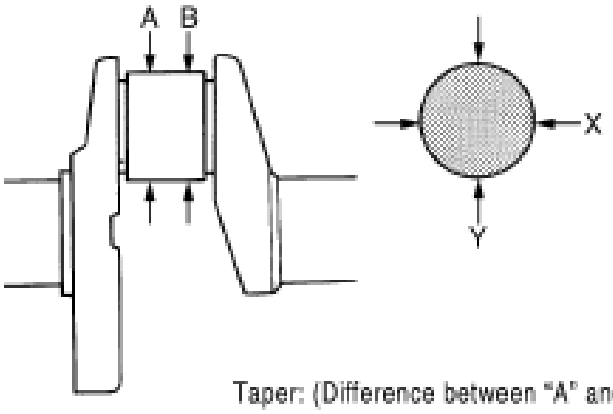

		Grade No. A	64.975 - 64.974 (2.5581 - 2.5580)
		Grade No. B	64.974 - 64.973 (2.5580 - 2.5580)
		Grade No. C	64.973 - 64.972 (2.5580 - 2.5579)
		Grade No. D	64.972 - 64.971 (2.5579 - 2.5579)

 © 2011 Mitchell Repair Information Company, LLC.

Main journal diameter. "Dm" grade	Standard	Grade No. E	64.971 - 64.970 (2.5579 - 2.5579)
		Grade No. F	64.970 - 64.969 (2.5579 - 2.5578)
		Grade No. G	64.969 - 64.968 (2.5578 - 2.5578)
		Grade No. H	64.968 - 64.967 (2.5578 - 2.5578)
		Grade No. J	64.967 - 64.966 (2.5578 - 2.5577)
		Grade No. K	64.966 - 64.965 (2.5577 - 2.5577)
		Grade No. L	64.965 - 64.964 (2.5577 - 2.5576)
		Grade No. M	64.964 - 64.963 (2.5576 - 2.5576)
		Grade No. N	64.963 - 64.962 (2.5576 - 2.5576)
		Grade No. P	64.962 - 64.961 (2.5576 - 2.5575)
		Grade No. R	64.961 - 64.960 (2.5575 - 2.5575)
		Grade No. S	64.960 - 64.959 (2.5575 - 2.5574)
		Grade No. T	64.959 - 64.958 (2.5574 - 2.5574)
		Grade No. U	64.958 - 64.957 (2.5574 - 2.5574)
		Grade No. V	64.957 - 64.956 (2.5574 - 2.5573)
		Grade No. W	64.956 - 64.955 (2.5573 - 2.5573)
		Grade No. X	64.955 - 64.954 (2.5573 - 2.5572)
		Grade No. Y	64.954 - 64.953 (2.5572 - 2.5572)
		Grade No. 4	64.953 - 64.952 (2.5572 - 2.5572)
		Grade No. 7	64.952 - 64.951 (2.5572 - 2.5571)
Pin journal diameter. "Dp" grade	Standard	Grade No. A	53.974 - 53.973 (2.1250 - 2.1249)
		Grade No. B	53.973 - 53.972 (2.1249 - 2.1249)
		Grade No. C	53.972 - 53.971 (2.1249 - 2.1248)
		Grade No. D	53.971 - 53.970 (2.1248 - 2.1248)
		Grade No. E	53.970 - 53.969 (2.1248 - 2.1248)
		Grade No. F	53.969 - 53.968 (2.1248 - 2.1247)
		Grade No. G	53.968 - 53.967 (2.1247 - 2.1247)
		Grade No. H	53.967 - 53.966 (2.1247 - 2.1246)
		Grade No. J	53.966 - 53.965 (2.1246 - 2.1246)
		Grade No. K	53.965 - 53.964 (2.1246 - 2.1246)
		Grade No. L	53.964 - 53.963 (2.1246 - 2.1245)
		Grade No. M	53.963 - 53.962 (2.1245 - 2.1245)
		Grade No. N	53.962 - 53.961 (2.1245 - 2.1244)
		Grade No. P	53.961 - 53.960 (2.1244 - 2.1244)
		Grade No. R	53.960 - 53.959 (2.1244 - 2.1244)
		Grade No. S	53.959 - 53.958 (2.1244 - 2.1243)
		Grade No. T	53.958 - 53.957 (2.1243 - 2.1243)
		Grade No. U	53.957 - 53.956 (2.1243 - 2.1242)
Center distance "r"			42.96 - 43.04 (1.6913 - 1.6945)
Taper (Difference between "A" and "B")	Limit		0.0025 (0.0001)
Out-of-round (Difference between "X" and "Y")			0.0025 (0.0001)

 © 2011 Mitchell Repair Information Company, LLC.

Crankshaft runout [TIR(1)]	Standard	Less than 0.05 (0.002)
	Limit	0.10 (0.0039)
Crankshaft end play	Standard	0.10 - 0.25 (0.0039 - 0.0098)
	Limit	0.30 (0.0118)
(1) Total indicator reading		

Main Bearing

MAIN BEARING

Unit: mm (in)

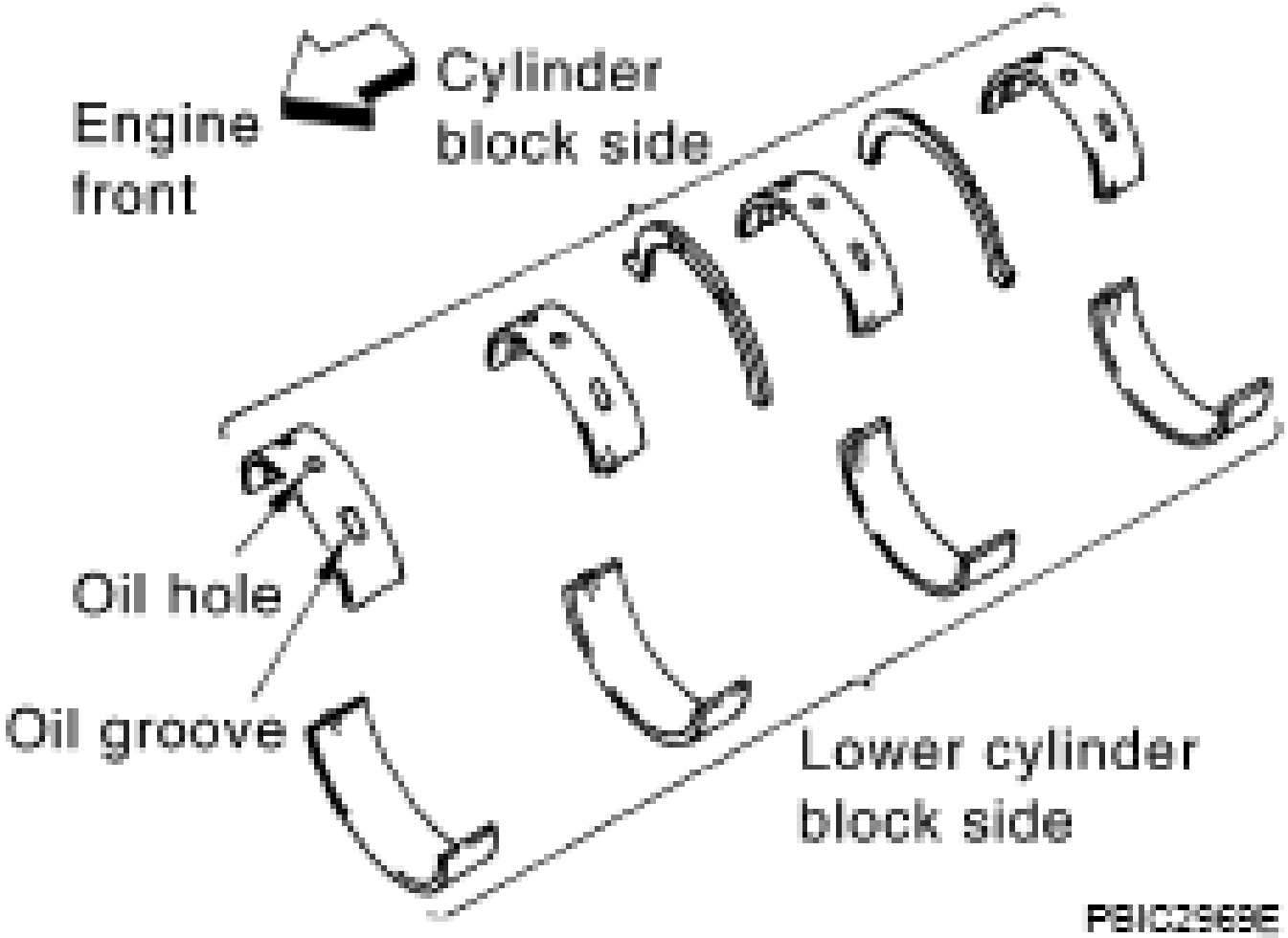

Grade number	Thickness	Width	Identification color	Remarks
0	2.500 - 2.503 (0.0984 - 0.0985)		Black	

 © 2011 Mitchell Repair Information Company, LLC.

1		2.503 - 2.506 (0.0985 - 0.0987)	19.9 - 20.1 (0.783 - 0.791)	Brown	Grade is the same for upper and lower bearings.
2		2.506 - 2.509 (0.0987 - 0.0988)		Green	
3		2.509 - 2.512 (0.0988 - 0.0989)		Yellow	
4		2.512 - 2.515 (0.0989 - 0.0990)		Blue	
5		2.515 - 2.518 (0.0990 - 0.0991)		Pink	
6		2.518 - 2.521 (0.0991 - 0.0993)		Purple	
7		2.521 - 2.524 (0.0993 - 0.0994)		White	
01	UPR	2.503 - 2.506 (0.0985 - 0.0987)		Brown	Grade and color are different for upper and lower bearings.
	LWR	2.500 - 2.503 (0.0984 - 0.0985)		Black	
12	UPR	2.506 - 2.509 (0.0987 - 0.0988)		Green	
	LWR	2.503 - 2.506 (0.0985 - 0.0987)		Brown	
23	UPR	2.509 - 2.512 (0.0988 - 0.0989)		Yellow	
	LWR	2.506 - 2.509 (0.0987 - 0.0988)		Green	
34	UPR	2.512 - 2.515 (0.0989 - 0.0990)		Blue	
	LWR	2.509 - 2.512 (0.0988 - 0.0989)		Yellow	
45	UPR	2.515 - 2.518 (0.0990 - 0.0991)		Pink	
	LWR	2.512 - 2.515 (0.0989 - 0.0990)		Blue	
56	UPR	2.518 - 2.521 (0.0991 - 0.0993)		Purple	
	LWR	2.515 - 2.518 (0.0990 - 0.0991)		Pink	
67	UPR	2.521 - 2.524 (0.0993 - 0.0994)		White	
	LWR	2.518 - 2.521 (0.0991 - 0.0993)		Purple	

UNDERSIZE

 © 2011 Mitchell Repair Information Company, LLC.

Unit: mm (in)

Items	Thickness	Main journal diameter
0.25 (0.0098)	2.633 - 2.641 (0.1037 - 0.1040)	Grind so that bearing clearance is the specified value.

MAIN BEARING OIL CLEARANCE

Unit: mm (in)

Items	Standard	Limit
Main bearing oil clearance	0.035 - 0.045 (0.0014 - 0.0018)(1)	0.065 (0.0026)
(1) Actual clearance		

Connecting Rod Bearing

CONNECTING ROD BEARING

Unit: mm (in)

Grade number	Thickness	Identification color (mark)
0	1.497 - 1.500 (0.0589 - 0.0591)	Black
1	1.500 - 1.503 (0.0591 - 0.0592)	Brown
2	1.503 - 1.506 (0.0592 - 0.0593)	Green
3	1.506 - 1.509 (0.0593 - 0.0594)	Yellow
4	1.509 - 1.512 (0.0594 - 0.0595)	Blue

UNDERSIZE

Unit: mm (in)

Items	Thickness	Crank pin journal diameter
0.25 (0.0098)	1.626 - 1.634 (0.0640 - 0.0643)	Grind so that bearing clearance is the specified value.

CONNECTING ROD BEARING OIL CLEARANCE

Unit: mm (in)

Items	Standard	Limit
Connecting rod bearing oil clearance	0.040 - 0.053 (0.0016 - 0.0021)(1)	0.070 (0.0028)
(1) Actual clearance		

 © 2011 Mitchell Repair Information Company, LLC.