# 2011 ENGINE

## 2.2L Diesel - Service Information - Compass & Patriot

# DESCRIPTION

### DESCRIPTION

This 2.2 Liter four-cylinder Common Rail Diesel Injection (CDI) engine is an in-line overhead valve diesel engine. This engine utilizes a cast iron cylinder block and an aluminum cylinder head. The engine is turbocharged and intercooled. This engine also has four valve per cylinder and dual overhead camshafts.

# STANDARD PROCEDURE

### DUST COVERS AND CAPS

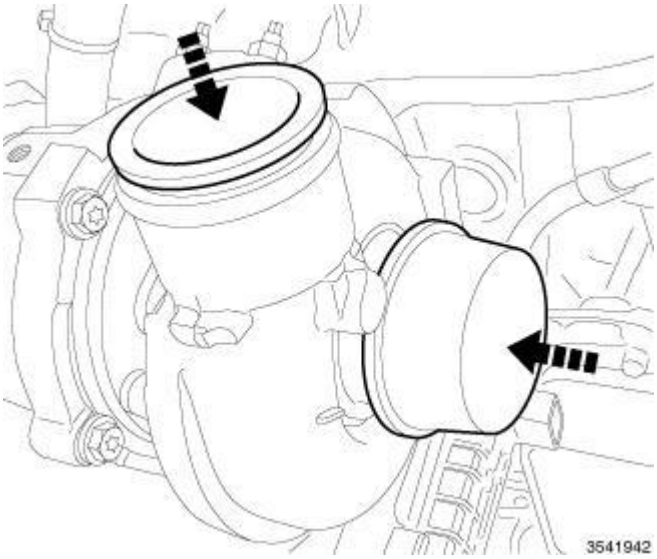


**Fig. 1: Covers/Caps**
**Courtesy of CHRYSLER LLC**

Due to the high amounts of failures cased by dust, dirt, moisture and other foreign debris being introduced to the engine during service. Covers or caps are needed to reduce the possible damage that can be caused or created.

 

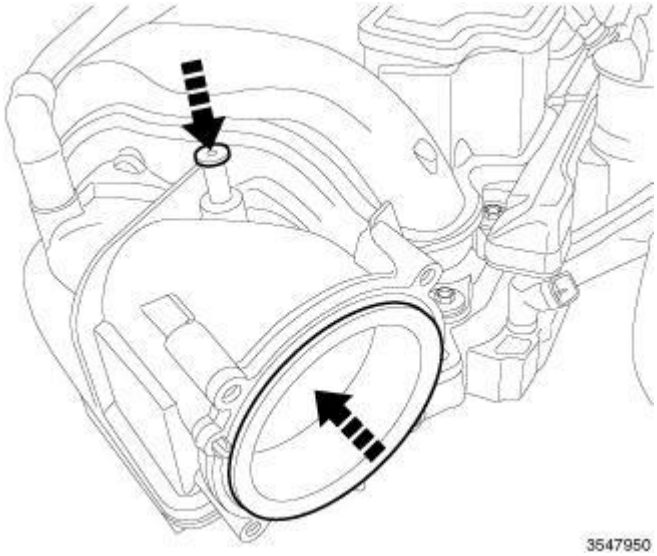


**Fig. 2: Opening Cover**
**Courtesy of CHRYSLER LLC**

Covers over openings will reduce any possibilities for foreign materials to enter the engine systems. Using miller tool (special tool #10368, Set, Universal Protective Cap), Select the appropriated cover needed to the procedure.

**ENGINE GASKET SURFACE PREPARATION**


**Fig. 3: Proper Tool Usage For Surface Preparation**
**Courtesy of CHRYSLER LLC**

To ensure engine gasket sealing, proper surface preparation must be performed, especially with the use of aluminum engine components and multi-layer steel cylinder head gaskets.

**Never** use the following to clean gasket surfaces:

 

- Metal scraper (1).
- Abrasive pad or paper to clean cylinder block and head.
- High speed power tool with an abrasive pad or a wire brush (2).

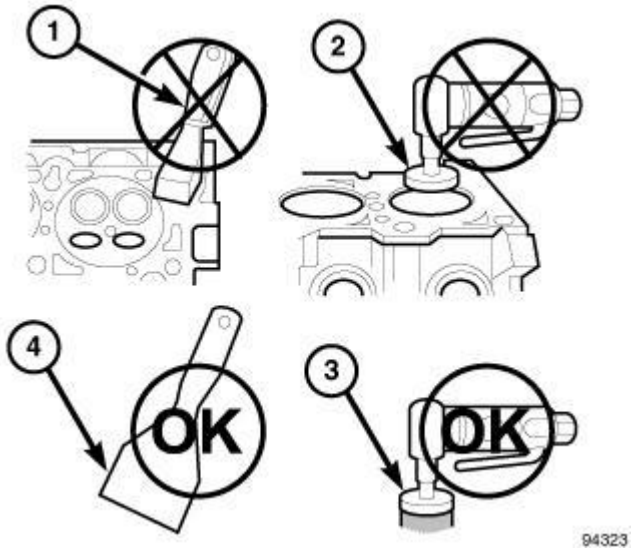


**Fig. 4: Proper Tool Usage For Surface Preparation**
**Courtesy of CHRYSLER LLC**

**NOTE: Multi-Layer Steel (MLS) head gaskets require a scratch free sealing surface.**

Only use the following for cleaning gasket surfaces:

- Solvent or a commercially available gasket remover
- Plastic or wood scraper (4).
- High speed power tool with a plastic bristle brush style disc.

Sealing surfaces must be free of grease or oil residue. Clean surfaces with Mopar® brake parts cleaner (or equivalent).

**COMPRESSION TESTING ENGINE**

1. Warm up engine to operating temperature (approximately 80°C, 176°F).
2. Shut off engine.
3. Remove engine cover.
4. Disable the fuel pump to prevent fuel from being pumped.
5. Remove injectors. Refer to **INJECTOR(S), Fuel , Removal** .
6. Crank engine several times with the starter to eliminate combustion residues in the cylinders.

 

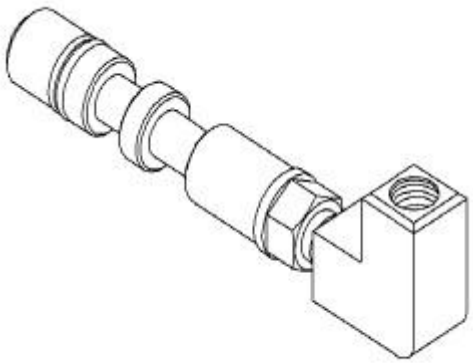

**Fig. 5: #9543 Adapter**
**Courtesy of CHRYSLER LLC**

7. Insert Adapter (special tool #9543, Adapter, Compression Test) into injector hole of cylinder to be tested. Install injector retainer.
8. Test compression pressure by cranking engine with starter for at least 8 revolutions.
9. Carry out test procedure at the remaining cylinders in the same way.
10. Compare pressure readings obtained with the specified pressures. If the pressure reading is below the minimum compression pressure or if the permissible difference between the individual cylinders is exceeded. Refer to **COMPRESSION TESTING ENGINE**.

**2.2L Compression Specification**

| COMPRESSION SPECIFICATION | |
|---|---|
| Minimum Allowable | 18 bar (261 psi.) |
| Maximum Allowable Difference Between Cylinders | 3 bar (44 psi.) |
| Average Compression Ratio | 24 - 30 bar (348 - 435 psi) |

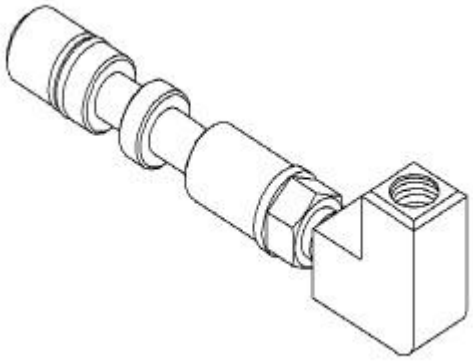

**Fig. 6: #9543 Adapter**
**Courtesy of CHRYSLER LLC**

 

11. Remove Adapter (special tool #9543, Adapter, Compression Test) from cylinder head.
12. Install injectors. Refer to **INJECTOR(S), Fuel , Installation** .
13. Install engine cover. Refer to **Installation**.

## CYLINDER LEAK DOWN TEST

1. Warm engine to operating temperature.

**WARNING: Do not open cooling system unless coolant temperature is below 90° c (194°f). Risk of injury to skin and eyes as a result of scalding with hot coolant which splashes out. Risk of poisoning from swallowing coolant. Open cap slowly and release pressure. Store coolant in proper containers only. Wear protective gloves, clothing and eye protection.**

**NOTE: Turn cap carefully as far as first detent, release pressure, then unscrew cap.**

2. Open cooling system cap at coolant recover pressure container.
3. Remove engine cover.
4. Unscrew oil filler cap.
5. Remove glow plugs. Refer to **PLUG, Glow , Removal** .

**NOTE: Crank engine at crankshaft in direction of rotation of the engine (clockwise).**

6. Position cylinder to be tested to ignition Top Dead Center (DTC).

**NOTE: Calibrate cylinder leak down tester and remove check valve in screw-in fitting.**

7. Connect cylinder leak down tester and follow INSPECTING Instruction.

### INSPECTING

**NOTE: If crankshaft rotates, install retaining lock for crankshaft/ring gear.**

1. Pressurize cylinder with compressed air and read off pressure loss at cylinder leak tester. If excessive pressure loss exists, determine cause by viewing the paragraph below.

**NOTE: If the retaining lock is installed, remove it, rotate engine and install lock once again.**

2. Carry out test of other cylinders in the firing order of engine.

 

**DETERMINING PRESSURE LOSS**

If a great pressure loss was detected, listen using a stethoscope around suspected areas, such as the cylinder head gasket through the air suction area, the exhaust system, the oil filler neck, the pre-chamber, the bore wholes of the cylinder effected or neighboring cylinders. Observe the coolant in the expansion tank, looking for traces of bubbles.

The possible causes of pressure loss are:

- If air leak is detected through the prechamber, cylinder bore hole, from a neighboring cylinder or air bubbles in the coolant expansion tank, pressure loss may be caused by the cylinder head gasket.
- If the air leak occurs in the air suction area, the pressure loss may be caused by the intake valve(s).
- Air leak through the exhaust system, may be caused by the exhaust valve(s).
- Air leak through the oil filler neck, may be caused by piston, ring, or cylinder sleeve.

If none of the above evidence supports a failure, the engine may be assembled and run until operating temperature is reached. Reconnect engine leak down tester on a warm engine with a few drops of clean engine oil in the cylinder being tested. Engine oil seals the clearance between the piston and cylinder for a short length of time. If under this condition a smaller pressure loss occurs for a shorter length of time, it is possible that the cause is piston, ring or cylinder sleeve related.

**CHECKING OIL PRESSURE**

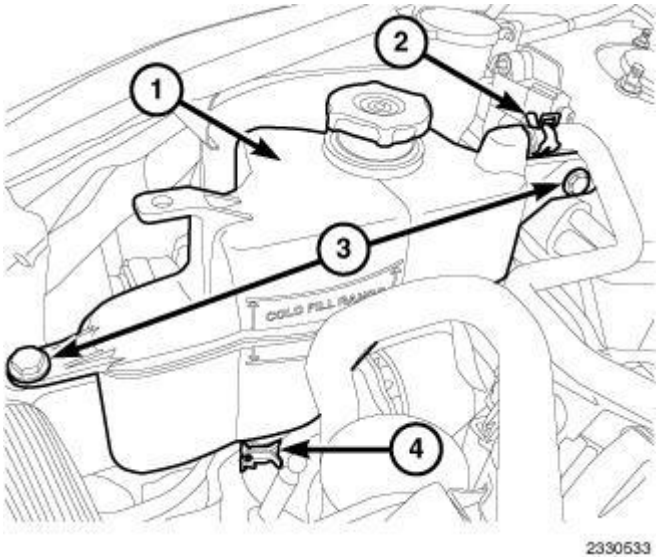


**Fig. 7: Coolant Recovery Reservoir, Clamps & Bolts**
**Courtesy of CHRYSLER LLC**

1. Remove engine cover.
2. Remove the bolts (3) and position aside the coolant recovery reservoir (1).

 

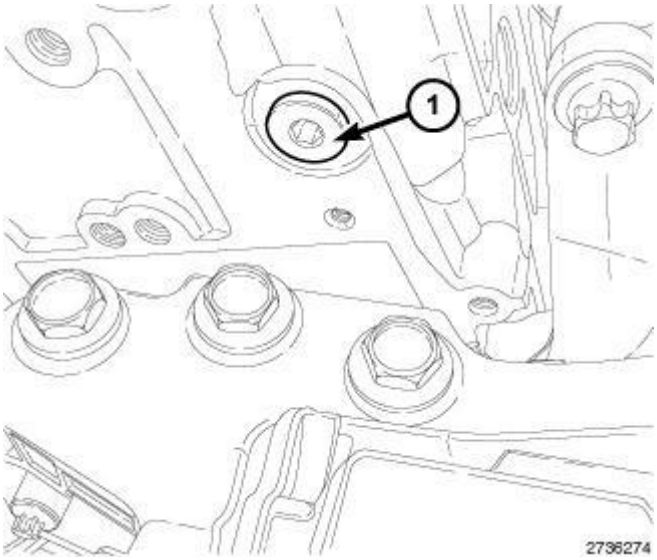


**Fig. 8: Oil Galley Plug**
**Courtesy of CHRYSLER LLC**

3. Remove oil galley plug (1) from the cylinder head.

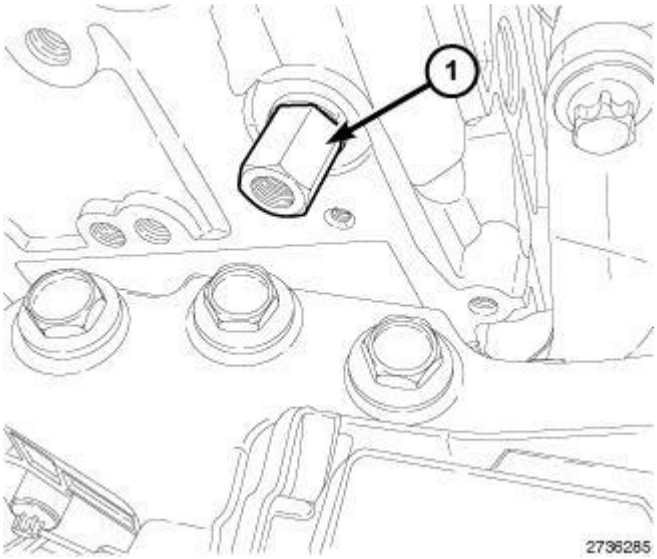


**Fig. 9: Test Adaptor Fitting**
**Courtesy of CHRYSLER LLC**

4. Install the Test Adaptor Fitting (special tool #10239, Adapter, Tester) (1) with seal onto cylinder head.
5. Install oil pressure gauge into Test Adaptor Fitting (special tool #10239, Adapter, Tester) (1).
6. Check oil level, adjust with correct engine oil if necessary.
7. Insert temperature probe or a remote thermometer into oil level indicator tube.

**WARNING: Use extreme caution when engine is operating. Do not stand in a direct line with fan. Do not put your hands near pulleys, belts or fan.**

 

**Do not wear loose clothes.**

**CAUTION: Ensure that fan and accessory drive belt DO NOT damage oil pressure gauge hose.**

8. Start engine and bring to operating temperature 90°C (194°F).
9. Record engine oil pressure at idle.
10. Raise engine speed to 3000 RPM and record oil pressure.
11. At normal operating temperature the oil pressure must not drop below 3 bar (44 psi.). When engine speed is raised, oil pressure must rise with out delay and be no less than 3 bar (44 psi.) at 3000 RPM.
12. If oil pressure is out of range, determine cause.

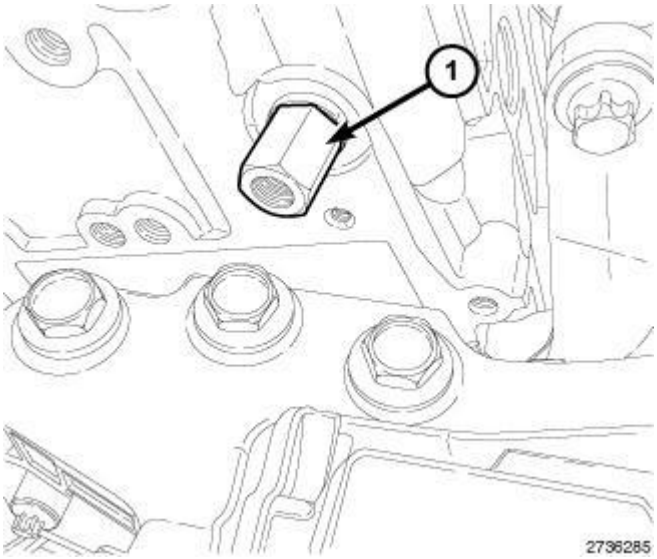


**Fig. 10: Test Adaptor Fitting**
**Courtesy of CHRYSLER LLC**

13. Remove oil pressure gauge from Test Adaptor Fitting (special tool #10239, Adapter, Tester) (1).
14. Remove the Test Adaptor Fitting (special tool #10239, Adapter, Tester) (1) with seal from the cylinder head.

 

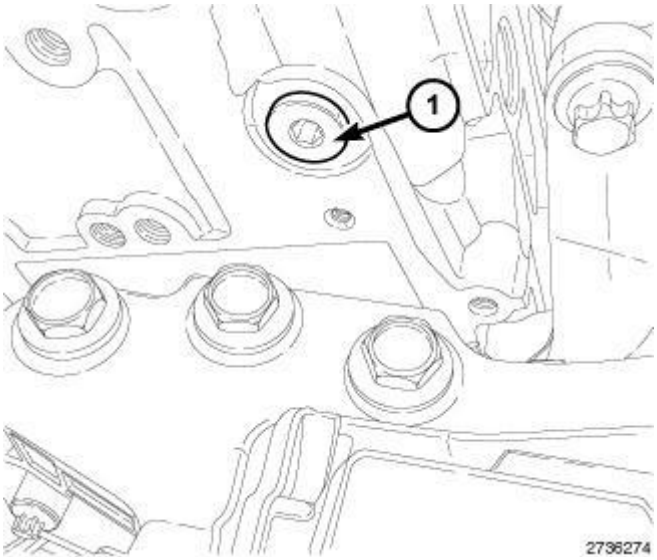


**Fig. 11: Oil Galley Plug**
**Courtesy of CHRYSLER LLC**

15. Install the oil galley plug (1) into the cylinder head and securely tighten plug.

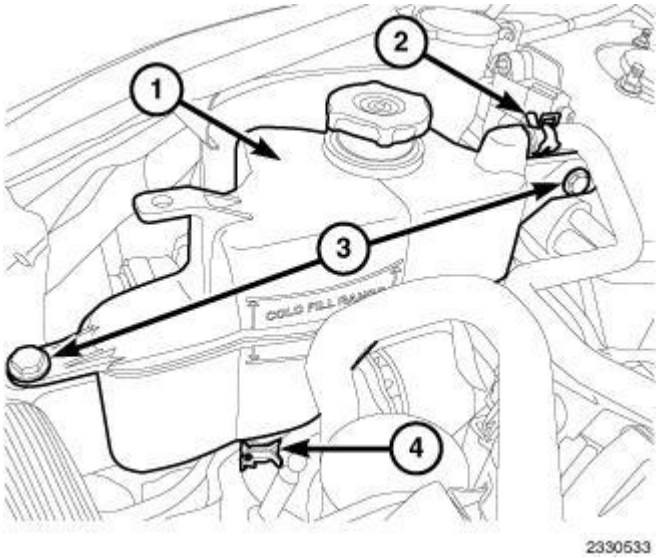


**Fig. 12: Coolant Recovery Reservoir, Clamps & Bolts**
**Courtesy of CHRYSLER LLC**

16. Install coolant recovery bottle (1). Tighten bolts to 4 N.m (35 lbs. in.).
17. Install the engine cover.

# SPECIFICATIONS

## SPECIFICATION

| | |
|---|---|

 

| DESCRIPTION | SPECIFICATION |
|---|---|
| Engine | 2.2L CDI |
| Engine Description | 4 Cylinder In-Line Engine With 4-Valve Technology |
| Fuel Injection System | Common Rail Diesel Injection (CDI) |
| Fuel | Diesel |
| Rated Output | 85/4200 kW at RPM |
| Torque | 250/1400-2600 N.m at RPM |
| Maximum Speed | 4600 RPM |
| Compression Ratio | 18:0 |
| Bore/Stroke | 88.0/88.3 mm |
| Eff. Displacement | 2148 cm3 |

| CRANKSHAFT BEARINGS | |
|---|---|
| Basic Bore Diameter | 64.000 mm - 64.019 mm |
| Basic Bore With Fitted Bearing | 21.447 mm - 21.480 mm |
| Permissible Out-of-Roundness | 0.007 mm |

| CRANKSHAFT MAIN BEARING SHELLS | |
|---|---|
| Replacement Part Number | Bearing Shell Thickness |
| 52 Blue Color Coding | 2.000 mm - 2.007 mm |
| 54 Yellow Color Coding | 2.007 mm - 2.014 mm |
| 56 Red Color Coding | 2.014 mm - 2.021 mm |

| CRANKSHAFT BEARING CLEARANCE (WHEN NEW) | |
|---|---|
| Radial | 0.028 mm - 0.063 mm |
| Axial | 0.110 mm - 0.300 mm |

| PISTON RING VERTICAL CLEARANCE | |
|---|---|
| Piston Ring Groove 1 | 0.12 mm - 0.16 mm |
| Piston Ring Groove 2 | 0.035 mm - 0.08 mm |
| Piston Ring Groove 3 | 0.03 mm - 0.07 mm |

| PISTON RING END GAP | |
|---|---|
| Piston Ring Groove 1 | 0.27 mm - 0.37 mm |
| Piston Ring Groove 2 | 0.8 mm- 1.0 mm |
| Piston Ring Groove 3 | 0.2 mm - 0.4 mm |

## TORQUE SPECIFICATIONS

| DESCRIPTION | N.m | Ft. Lbs. | In. Lbs. |
|---|---|---|---|
| | | | |

 

| | | | |
|---|---|---|---|
| A/C Compressor Bolts | 32 | 24 | - |
| A/C Compressor Bracket Bolts | 45 | 33 | - |
| A/C Compressor Lines at Compressor | 20 | - | 177 |
| Accessory Drive Belt Tensioner | | | |
| M8 Bolt | 20 | - | 177 |
| M10 Bolt | 45 | 33 | - |
| Accessory Drive Idler Pulley Bolt | 45 | 33 | - |
| Accessory Carrier | | | |
| M6 | 9 | - | 80 |
| M8 | 20 | - | 177 |
| Air Cleaner Bracket Bolt | 9 | - | 80 |
| Air Cleaner Mounting Bracket Bolt | 11 | - | 97 |
| Air Cleaner Mounting Bracket Nut | 11 | - | 97 |
| Air Temp/Pressure Sensor | 12 | - | 106 |
| Balance Shaft/Crankshaft Bearing Cap Bolts | 60 + 90° | 44 + 90° | - |
| Balance Shaft Drive Gear Bolts | 50 + 90° | 37 + 90° | - |
| Battery Clamp Bolt | 7 | - | 62 |
| Battery Tray Bolts | 11 | - | 97 |
| Battery Tray Nut | 11 | - | 97 |
| Boost Pressure Sensor Bolts | 8 | - | 71 |
| Camshaft Bearing Cap Bolts | Refer to **CAMSHAFT, Engine , Installation**. | | |
| Camshaft Position (CMP) | 6 | - | 53 |

 

| | | | |
|---|---|---|---|
| Sensor | | | |
| Camshaft Sprocket Bolt | 55 + 90° | 41 + 90° | - |
| Charge Air Cooler (CAC) Clamp - Intercooler Side | 25 | 18 | - |
| Charge Air Cooler (CAC) Clamp - Turbocharger Side | 5 | - | 44 |
| Charge Air Muffler Bracket Bolt | 9 | - | 80 |
| Charge Air Cooler Tube Bolt | 9 | - | 80 |
| Coolant Recovery Bottle | 4 | - | 35 |
| Connecting Rod Caps Bolts | Refer to **Installation**. | | |
| Crankshaft Position (CKP) Sensor | 8 | - | 71 |
| Cylinder Head Bolts | Refer to **Cylinder Head , Installation**. | | |
| Cylinder Head Cover Bolts | 9 | - | 80 |
| Cylinder Head to Timing Chain Cover Bolts | 20 | - | 177 |
| DRV Valve | Refer to **INSTALLATION** . | | |
| EGR Air Flow Control Valve | 9 | - | 80 |
| EGR Back Pressure Transducer | 25 | 18 | - |
| EGR Bypass Vacuum Diaphragm Bolts | 12 | - | 106 |
| EGR Bypass Valve Bolts | 9 | - | 80 |
| EGR Cooler Bolts | 9 | - | 80 |

 

| | | | |
|---|---|---|---|
| EGR Cooler Support Bracket Bolts | 9 | - | 80 |
| EGR Crossover Pipe to Exhaust Manifold Bolts | 12 + 90° | - | 106 + 90° |
| EGR Crossover Pipe Heat Shield Bolts | 8 | - | 71 |
| EGR Crossover Pipe to Upper Chain Case Cover Bolts | 9 | - | 80 |
| EGR Cooler Manifold Bolts | 9 | - | 80 |
| EGR Support Bracket Bolts | 9 | - | 80 |
| EGR Temperature Sensor | 45 | 33 | - |
| EGR Tube Bolts | 9 | - | 80 |
| EGR Vacuum Solenoid Bolts | 9 | - | 80 |
| EGR Valve Bolts | 15 | - | 133 |
| Engine Lifting Bracket Front | 9 | - | 80 |
| Engine Lifting Bracket Rear | 9 | - | 80 |
| Engine Carrier Mount at Engine Block Bolts | 25 | 18 | - |
| Engine Mount Bracket Bolt | 68 | 50 | - |
| Engine Mount to Frame Rail Bolts | 75 | 55 | - |
| Engine Mount Through Bolt | 88 | 65 | - |
| Exhaust Flex Coupler to Catalytic Converter Nuts | 29 | 21 | - |
| Exhaust Manifold Nuts | 30 | 22 | - |
| Exhaust | | | |

 

| | | | |
|---|---|---|---|
| Manifold Heat Shield Bolts | 8 | - | 71 |
| Flywheel Bolts | 45 + 90° | 33 + 90° | - |
| Front Coolant Tube Bolts | 9 | - | 80 |
| Front Fore/aft Member Bolts | 78 | 58 | - |
| Front Roll Mount Through Bolt | 65 | 48 | - |
| Front Roll Mount to Fore/aft Member | 63 | 46 | - |
| Front Oil Seal Carrier | 9 | - | 80 |
| Fuel Injector Tensioning Claw Bolt | 15 + 90° | - | 133 + 90° |
| Stage 2 | + 90° | - | + 90° |
| Fuel Injector Pressure Lines at Injector Union Nut | | | |
| Stage 1 | 7 | - | 62 |
| Stage 2 | 33 | 24 | - |
| Fuel Injector Pressure Lines at Fuel Rail Union Nut | | | |
| Stage 1 | 7 | - | 62 |
| Stage 2 | 33 | 24 | - |
| Fuel Line Bracket Bolts | 9 | - | 80 |
| Fuel Line Heat Shield Bolts | 9 | - | 80 |
| Fuel Rail Bolts | 14 | - | 124 |
| Fuel Return Line Banjo Bolt | 32 | 24 | - |
| Generator Bolts | 20 | - | 177 |
| Generator B+ Nut | 18 | - | 159 |
| Generator Bracket | 45 | 33 | - |
| Generator D+ Nut | 4 | - | 35 |
| Glow Plugs | 11 | - | 97 |
| Glow Plugs Module Bolts | 9 | - | 80 |
| Glow Plugs Module Ground | 9 | - | 80 |

 

| | | | |
|---|---|---|---|
| Wire Bolts | | | |
| High Pressure Fuel Feed Line at High Pressure Pump Union Nut | | | |
| Stage 1 | 7 | - | 62 |
| Stage 2 | 33 | 24 | - |
| High Pressure Fuel Feed Line at Fuel Rail Union Nut | | | |
| Stage 1 | 7 | - | 62 |
| Stage 2 | 33 | 24 | - |
| High Pressure Fuel Line P-clamp Bolts | 9 | - | 80 |
| Idler Pulley Bolt | 45 | 33 | - |
| Intake Manifold Bolts | 14 | - | 124 |
| Intermediate Gear to Engine Block Bolt | 80 | 59 | - |
| Knock Sensor | 20 | - | 177 |
| Main Bearing Caps Bolts | Refer to **CRANKSHAFT , Installation**. | | |
| Mixing Chamber Bolts | 9 | - | 80 |
| Mixing Chamber Support Bracket Bolts | 9 | - | 80 |
| Oil Control Valve | 20 | - | 177 |
| Oil Cooler Bolts | 10 | - | 89 |
| Oil Cooler Adapter to Engine Block Bolts | 20 | - | 177 |
| Oil Dipstick Tube Bolt | 9 | - | 80 |
| Oil Drain Plug | 30 | 22 | - |
| Oil Filter Cap | 25 | 18 | - |
| Oil Filter Housing Bolts | | | |
| M6 | 10 | - | 89 |
| M8 | 20 | - | 177 |
| Oil Jet | 5 | - | 44 |
| Oil Level Sensor | 9 | - | 80 |
| Oil Pan Bolts | Refer to **PAN, Oil , Installation**. | | |
| Oil Pump Bolts | 6 + 90° | - | 53 + 90° |
| Oil Pump | | | |

 

| | | | |
|---|---|---|---|
| Suction Tube Bolts | 6 + 90° | - | 53 + 90° |
| Oil Temperature Sensor | 26 | 18 | - |
| Power Steering Pressure Hose at Steering Gear | 32 | 24 | - |
| Power Steering Pressure Hose at Pump | 32 | 24 | - |
| Power Steering Pressure Hose Support Bracket Bolt | 9 | - | 80 |
| Power Steering Pump/Water Pump to Oil Pan Bolts | 20 | - | 177 |
| Power Steering Pump Bracket at Pump | 14 | - | 124 |
| Power Steering Pump Bracket at Engine Block Bolts | 9 | - | 80 |
| Rear Fore/aft Member Bolt | 129 | 95 | - |
| Rear Roll Mount to Crossmember Bolts | 153 | 112 | - |
| Rear Roll Mount Through Bolt | 65 | 48 | - |
| Starter Motor Bolts | 40 | 30 | - |
| Starter Motor B+ Cable Nut | 14 | - | 124 |
| Starter Motor Relay Cable Nut | 6 | - | 53 |
| Swirl Valve Actuator Bolts | 9 | - | 80 |
| Thermostat Housing to Engine Block Bolts | 9 | - | 80 |
| Timing Chain | | | |

 

| | | | |
|---|---|---|---|
| Press Thrust Spindle | 32 | 24 | - |
| Timing Chain Tensioner | 70 | 52 | - |
| Timing Cover to Engine Block Bolts | 20 | - | 177 |
| Transmission to Engine Bolts | 48 | 35 | - |
| Transmission Mount Bolts | 61 | 45 | - |
| Transmission Mount to Frame Rail Bolts | 75 | 55 | - |
| Transmission Mount Through Bolt | 100 | 74 | - |
| Turbocharger to Engine Block Support Bracket | 20 | - | 177 |
| Turbocharger Support Bracket at Turbocharger Bolts | 20 | - | 177 |
| Turbocharger to Exhaust Manifold Nuts | 20 + 90° | - | 177 + 90° |
| Turbocharger Oil Feed Line Banjo Bolt at Turbocharger | 24 | 18 | - |
| Turbocharger Oil Feed Line Bolts at Engine Block | 9 | - | 80 |
| Turbocharger Oil Return Line at Turbocharger Bolts | 9 | - | 80 |
| Turbocharger Oil Return Line at Engine Block Bolts | 9 | - | 80 |
| Upper Timing Chain Cover | 9 | - | 80 |
| | | | |

 

| | | | |
|---|---|---|---|
| Vacuum Pump Bolts | 9 | - | 80 |
| Vacuum Tube Bolt | 9 | - | 80 |
| Vibration Damper Bolts | 80 + 90° | 59 + 90° | - |
| Wire Harness Support Bracket Bolts | 9 | - | 80 |

# REMOVAL

**REMOVAL**

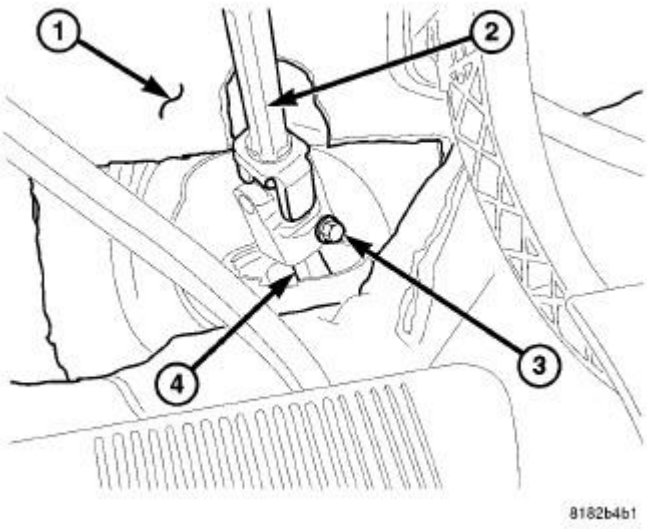


**Fig. 13: Floor Carpet, Intermediate Shaft, Coupling Bolt & Steering Gear Pinion Shaft**
**Courtesy of CHRYSLER LLC**

**CAUTION: When removing ancillary components, plug all inlet/outlet and fluid lines to prevent residual leakage and contamination.**

1. Disconnect the positive and negative battery cable.
2. Reposition the floor carpeting to access the intermediate shaft coupling at the base of the column.
3. Position the front wheels of vehicle in the STRAIGHT-AHEAD position, then turn the steering wheel to the right until the intermediate shaft coupling bolt (3) at the base of the column can be accessed.
4. Remove the intermediate shaft coupling bolt (3). Do not separate the intermediate shaft (2) from the steering gear pinion shaft (4) at this time.

 

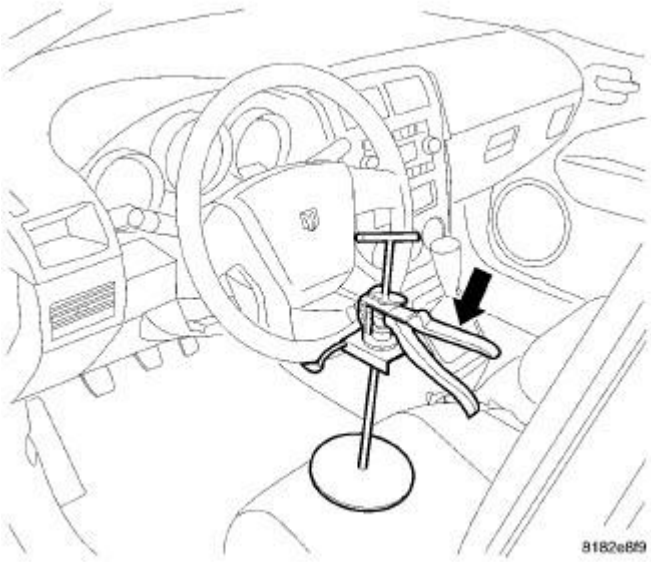


**Fig. 14: Steering Wheel Holding Tool**
**Courtesy of CHRYSLER LLC**

5. Return the front wheels of vehicle (and steering wheel) to the STRAIGHT-AHEAD position. Using a steering wheel holder, lock the steering wheel in place to keep it from rotating. This keeps the clockspring in the proper
6. Position the steering wheel in the straight ahead position and lock wheel.
7. Remove engine cover.
8. Remove the belly pan.
9. Drain cooling system. Refer to **Standard Procedure** .
10. Recover the air conditioning refrigerant. Refer to **Plumbing , Standard Procedure** .

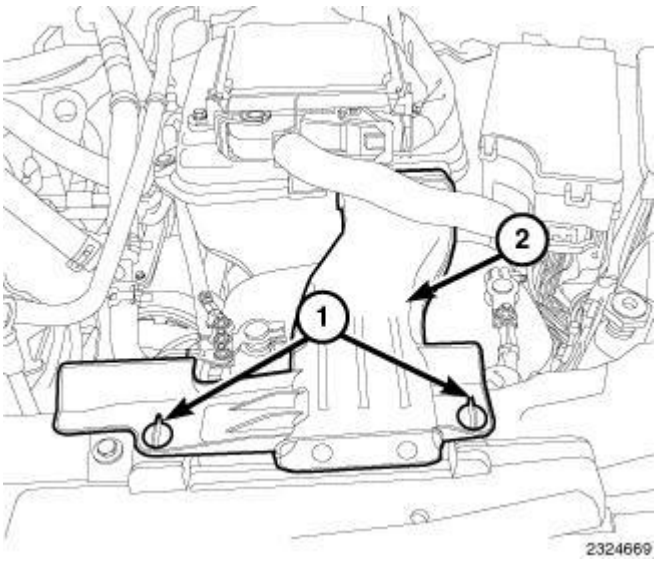


**Fig. 15: Quarter Turn Lock Tabs & Air Inlet Duct**
**Courtesy of CHRYSLER LLC**

 

11. Remove air inlet duct (2).

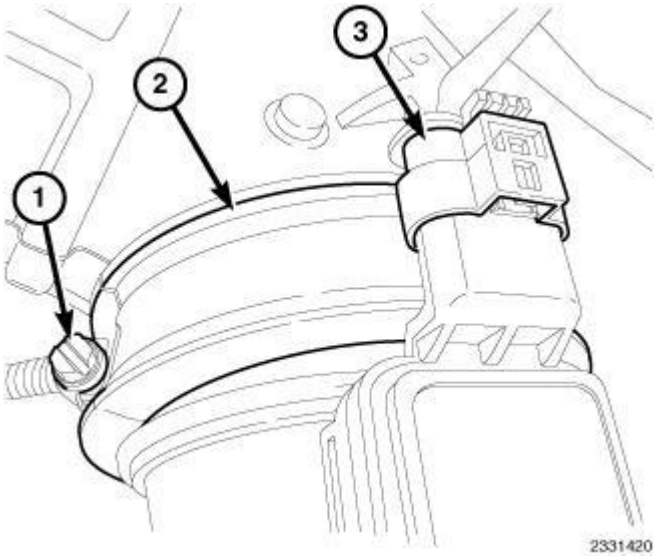


**Fig. 16: Mass Air Flow Sensor Harness Connector, Air Cleaner-To-Turbocharger Inlet Tube & Clamp**
**Courtesy of CHRYSLER LLC**

12. Disconnect the Mass air flow sensor harness connector (3).
13. Loosen the clamp (1) and disconnect the air cleaner-to-turbocharger inlet tube (2).

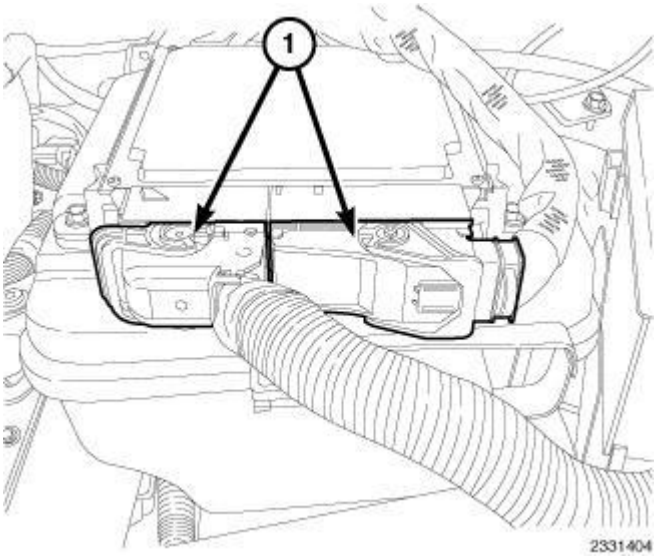


**Fig. 17: PCM Harness Connectors**
**Courtesy of CHRYSLER LLC**

14. Disconnect Powertrain Control Module (PCM) harness connectors (1).

 

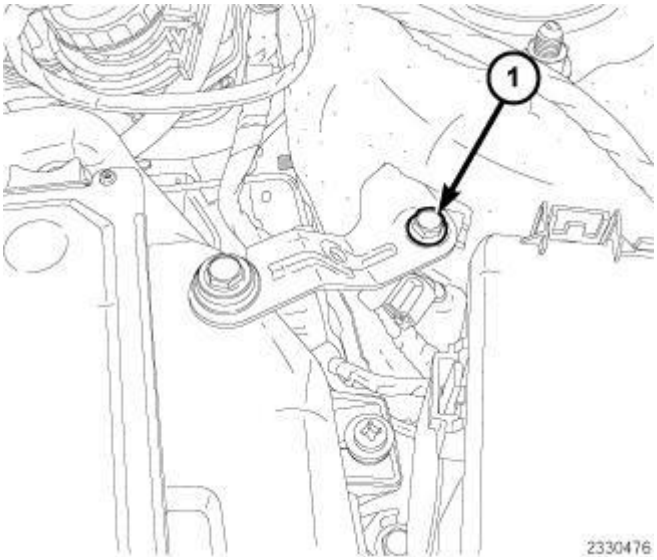


**Fig. 18: Air Cleaner Upper Support Bracket Retaining Bolt**
**Courtesy of CHRYSLER LLC**

15. Remove the air cleaner upper support bracket retaining bolt (1).

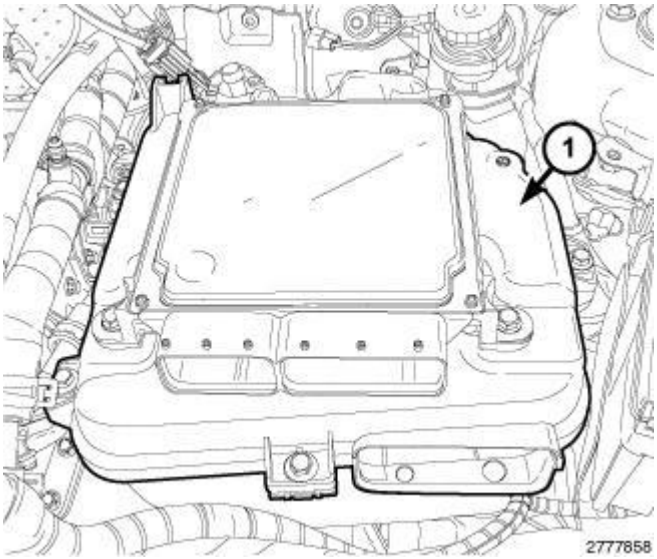


**Fig. 19: Air Cleaner Assembly**
**Courtesy of CHRYSLER LLC**

16. Remove air cleaner assembly (1).

 

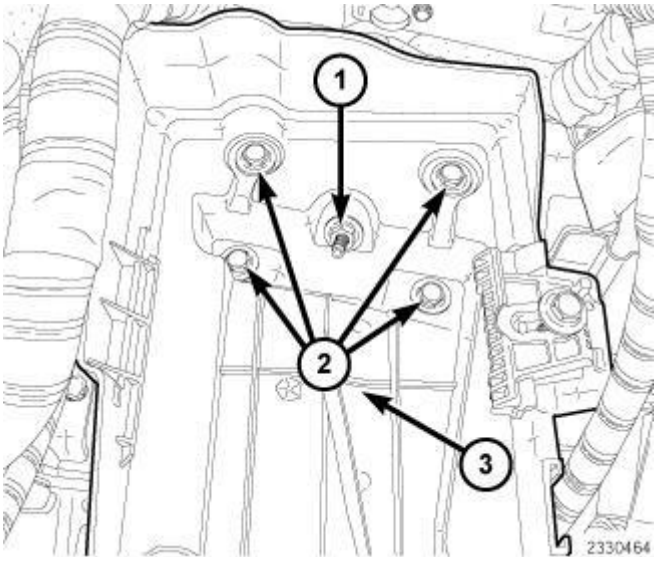


**Fig. 20: Battery Tray, Nut & Retaining Bolts**
**Courtesy of CHRYSLER LLC**

17. Remove the battery.
18. Remove the nut (1), retaining bolts (2) and the battery tray (3).

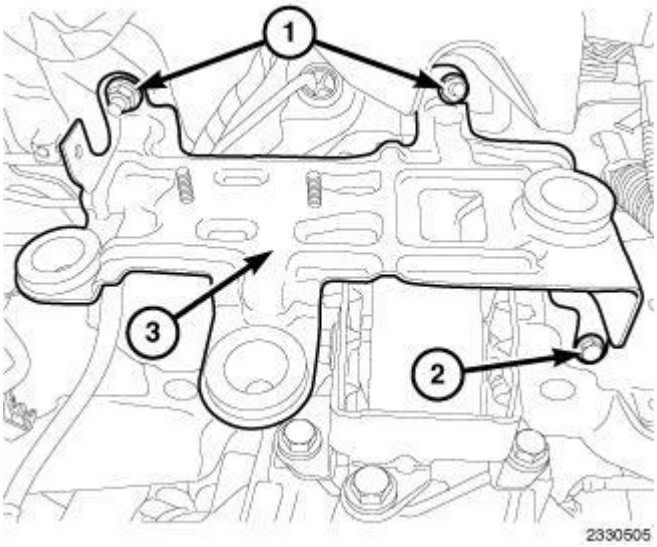


**Fig. 21: Air Cleaner Mounting Bracket, Nuts & Bolt**
**Courtesy of CHRYSLER LLC**

19. Remove the two nuts, bolt (2), and the air cleaner mounting bracket (3).

 

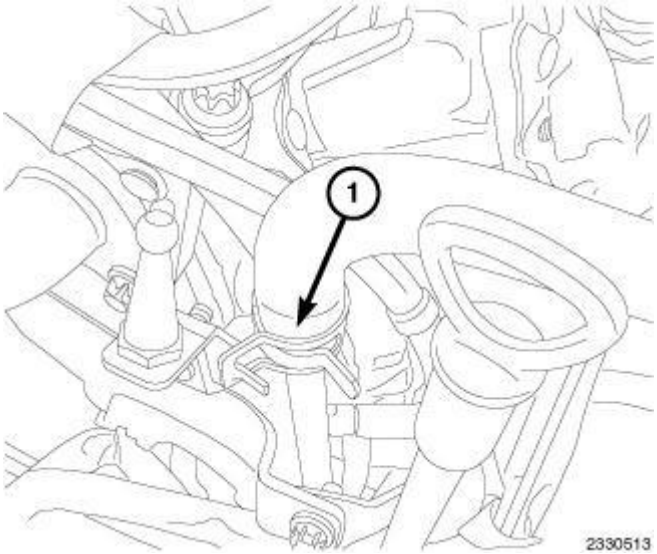


**Fig. 22: Brake Booster Vacuum Hose**
**Courtesy of CHRYSLER LLC**

20. Disconnect the brake booster vacuum hose.
21. Remove cooling fan assembly. Refer to **FAN, Cooling , Removal** .

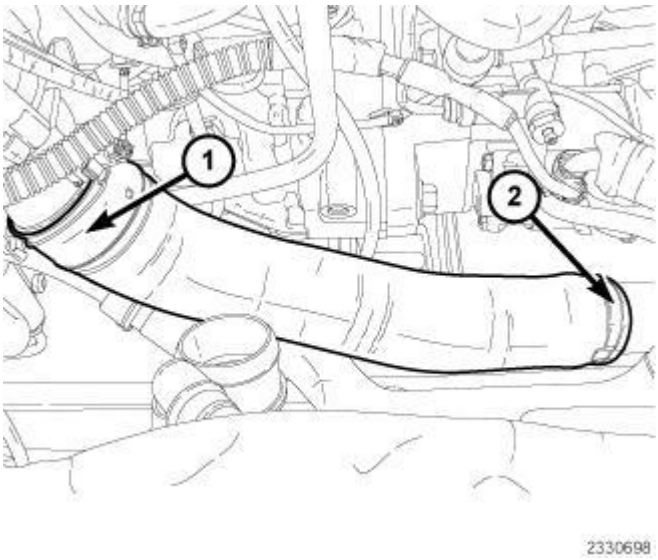


**Fig. 23: EGR Air Flow Control Valve & Clamp**
**Courtesy of CHRYSLER LLC**

22. Loosen the clamp and disconnect the charge air outlet tube from the charge air cooler (CAC).
23. Remove air inlet tube to EGR air flow control valve (1).

 

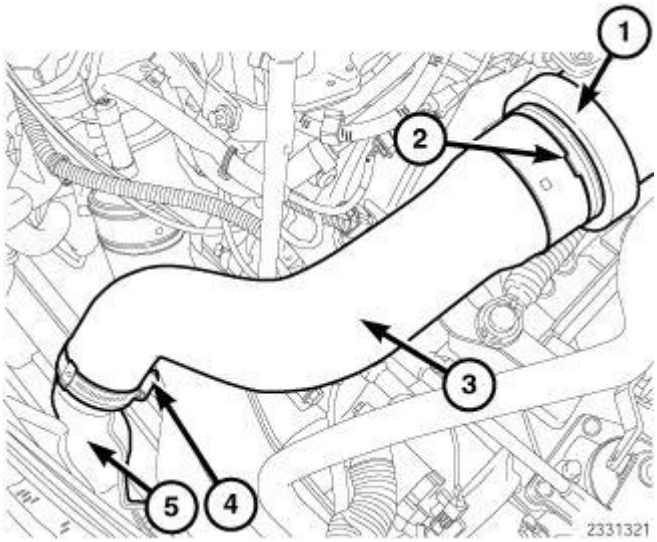


**Fig. 24: Upper Charge Air Tube, Lock Ring, Lower Charge Air Tube, Clamp & Charge Air Cooler (CAC) Inlet**
**Courtesy of CHRYSLER LLC**

24. Loosen the clamp (4) and disconnect the lower charge air tube (3) from the charge air cooler (CAC) inlet (5).
25. Release the lock ring (2) and remove the lower charge air tube from upper charge air tube (1) to turbocharger.

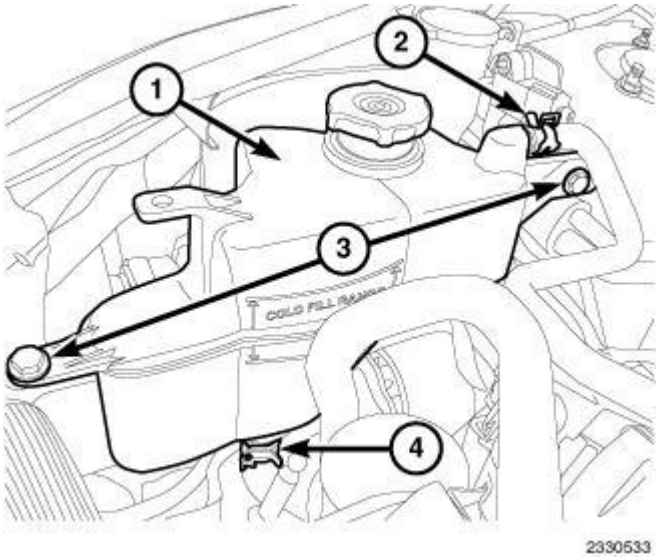


**Fig. 25: Coolant Recovery Reservoir, Clamps & Bolts**
**Courtesy of CHRYSLER LLC**

26. Disconnect the coolant hoses (2) and (4).
27. Remove the bolts (3) and the coolant recovery reservoir (1).

 

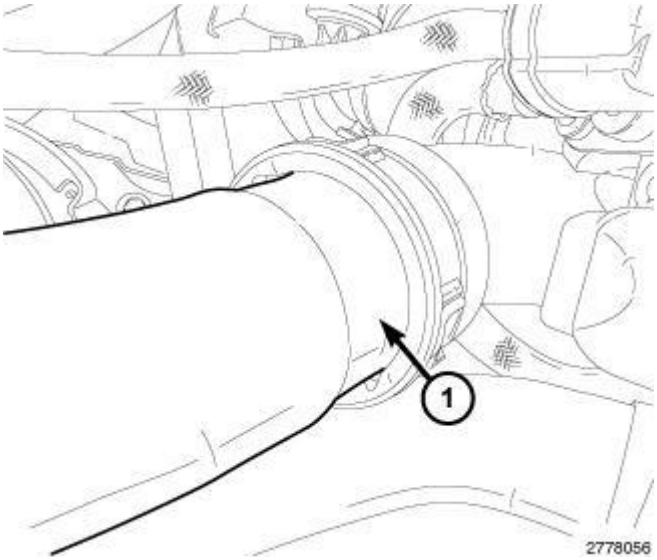


**Fig. 26: Lower Radiator Hose**
**Courtesy of CHRYSLER LLC**

28. Remove the lower radiator hose (1).

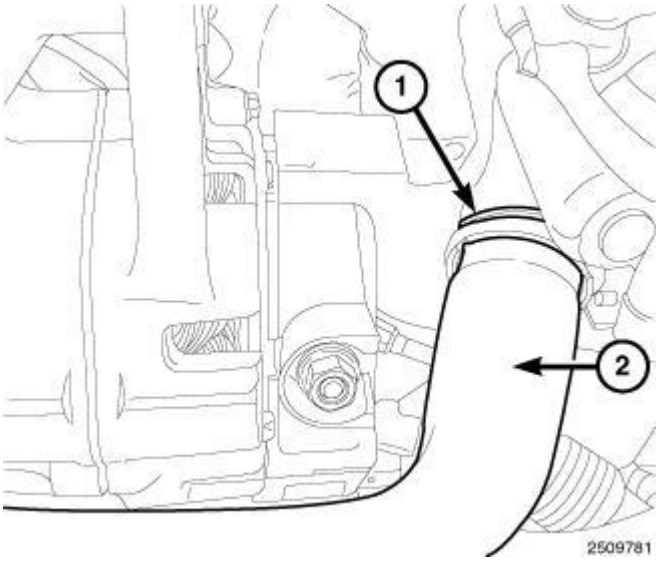


**Fig. 27: Upper Radiator Hose**
**Courtesy of CHRYSLER LLC**

29. Disconnect the upper radiator hose (2) at engine (1).
30. Disconnect and remove the upper radiator hose (2) at radiator.

 

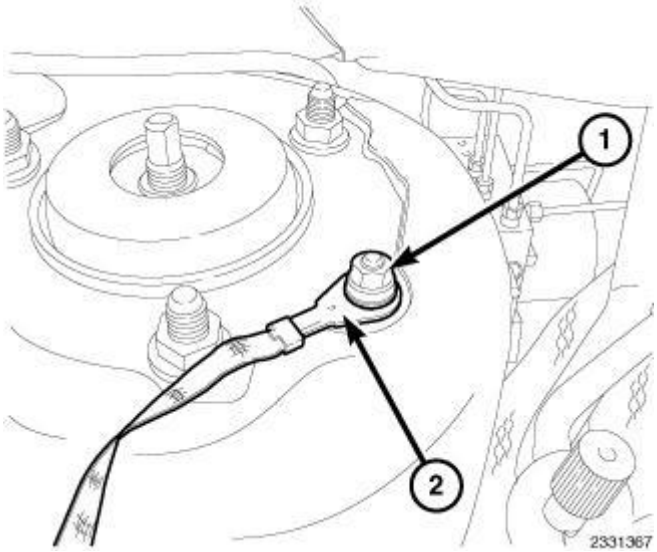


**Fig. 28: Engine Ground Strap & Retaining Nut**
**Courtesy of CHRYSLER LLC**

31. Remove the retaining nut (1) and the engine ground strap (2) from right strut tower.

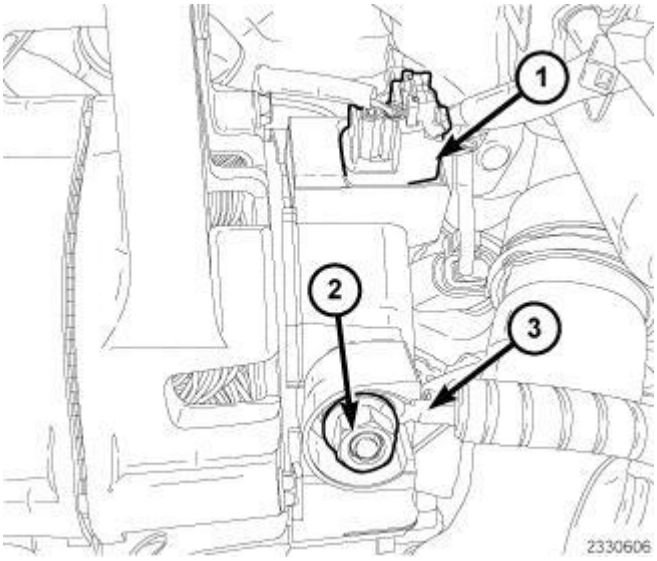


**Fig. 29: Battery Feed Wire, Generator Harness Connectors & Nut**
**Courtesy of CHRYSLER LLC**

32. Remove nut (2) and the battery feed wire (3) to generator.
33. Disconnect the generator harness connectors (1).

 

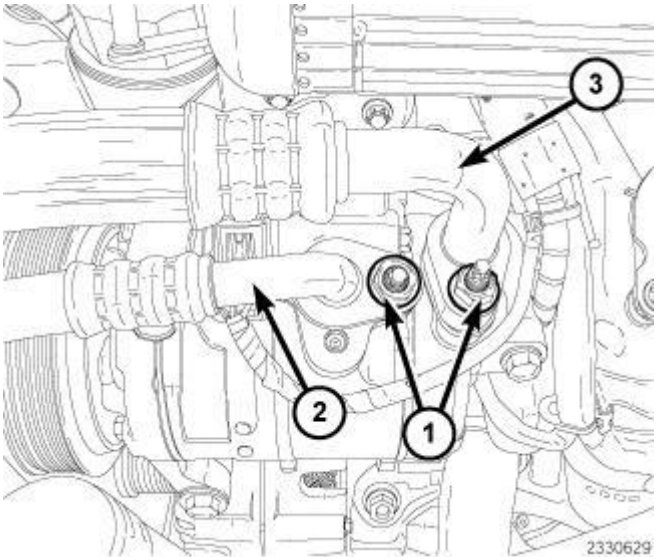


**Fig. 30: A/C Lines & Retaining Nuts**
**Courtesy of CHRYSLER LLC**

34. Remove the retaining nuts (1) and disconnect A/C lines (2) and (3) at the compressor.

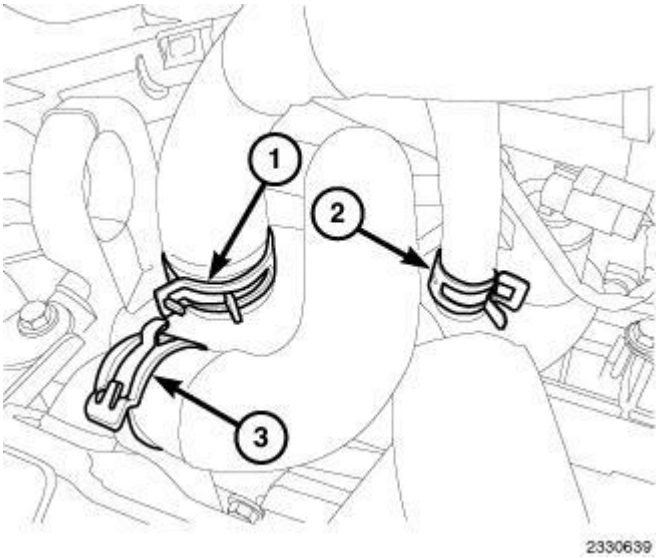


**Fig. 31: Heater Hoses And Clamps At Engine**
**Courtesy of CHRYSLER LLC**

35. Disconnect heater hoses at engine.

 

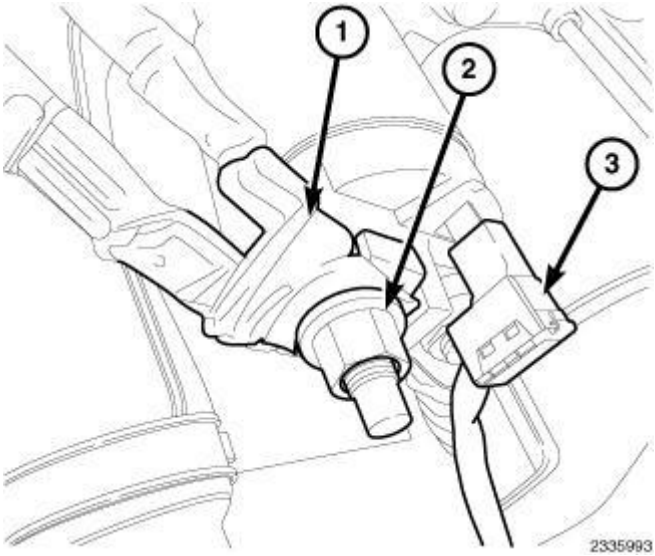


**Fig. 32: Battery Feed Wire To Starter, Starter Harness Connectors & Nut**
**Courtesy of CHRYSLER LLC**

36. Remove nut (2) and battery feed wire (2) to starter.
37. Disconnect the starter harness connections (3).

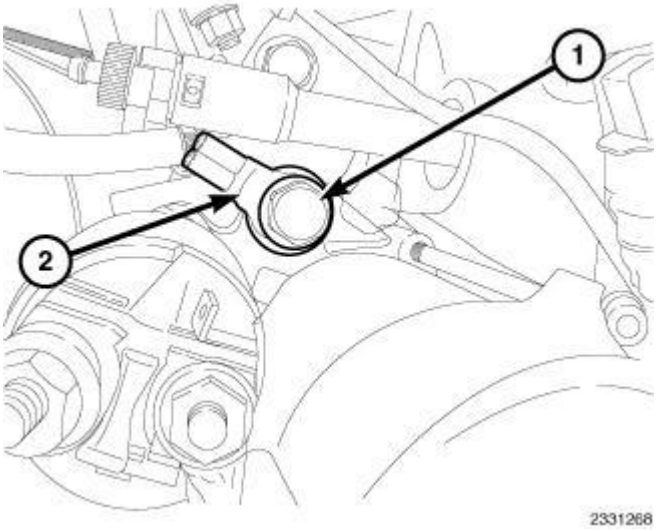


**Fig. 33: Battery Ground Cable & Bolt At Engine Block**
**Courtesy of CHRYSLER LLC**

38. Remove the battery ground cable (2) from the engine block.
39. Remove lower bolt and the starter motor.

 

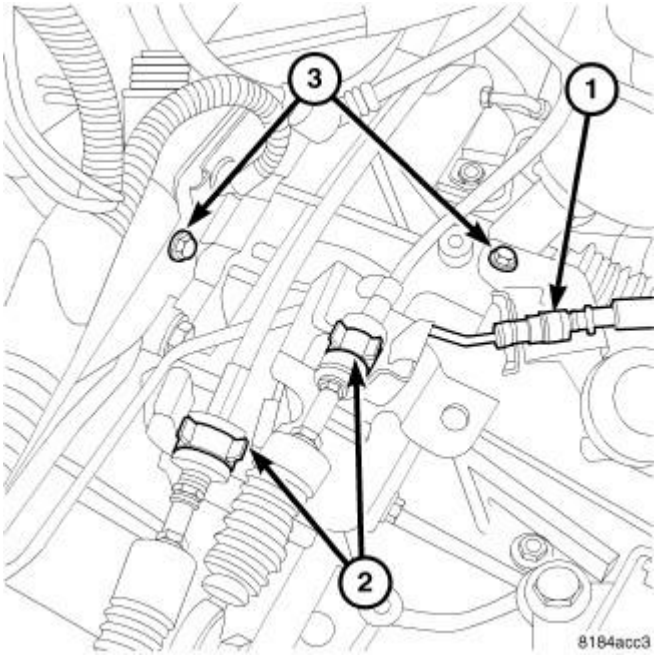


**Fig. 34: Hydraulic Line, Shift Cables & Bolts**
**Courtesy of CHRYSLER LLC**

40. Remove shift cables (2) from transaxle.
41. Disconnect hydraulic clutch line (1).

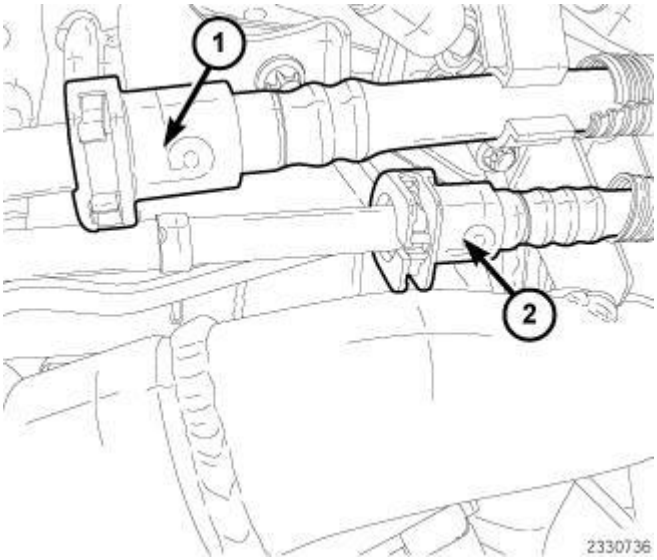


**Fig. 35: Fuel Feed & Return Lines**
**Courtesy of CHRYSLER LLC**

42. Disconnect the fuel feed and return lines.

**NOTE:** **When removing tripod joint, DO NOT let spline or snap ring drag across transaxle oil seal lip.**

 

43. Remove the left and right axle half shafts. Refer to **Removal** , **Removal** and **Removal** .

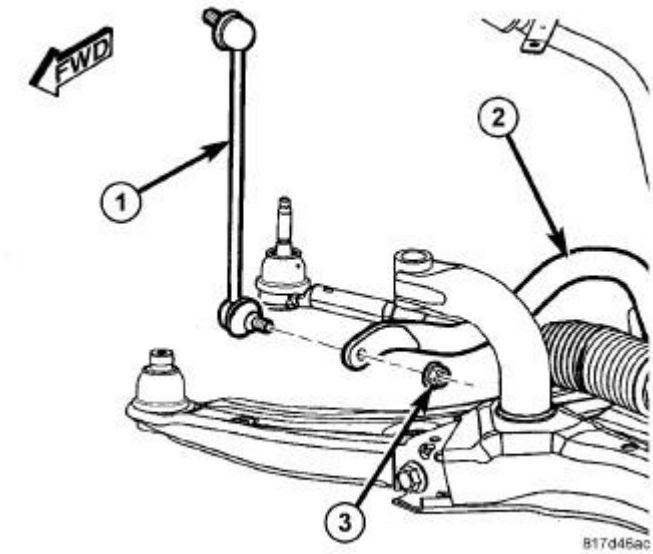


**Fig. 36: Stabilizer Bar Link, Stabilizer Bar & Nut**
**Courtesy of CHRYSLER LLC**

44. At each end of the stabilizer bar, while holding the stabilizer bar link (1) lower stud stationary, remove the nut (3) securing the link to the stabilizer bar (2).

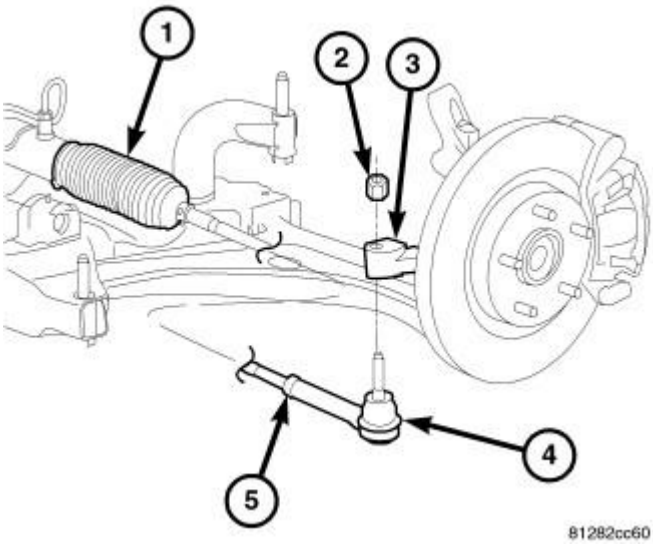


**Fig. 37: Inner And Outer Tie Rod Assembly**
**Courtesy of CHRYSLER LLC**

**NOTE: Right side shown in illustration, left side similar.**

45. On both sides, remove the nut (2) attaching the outer tie rod (4) to the knuckle (3).

 

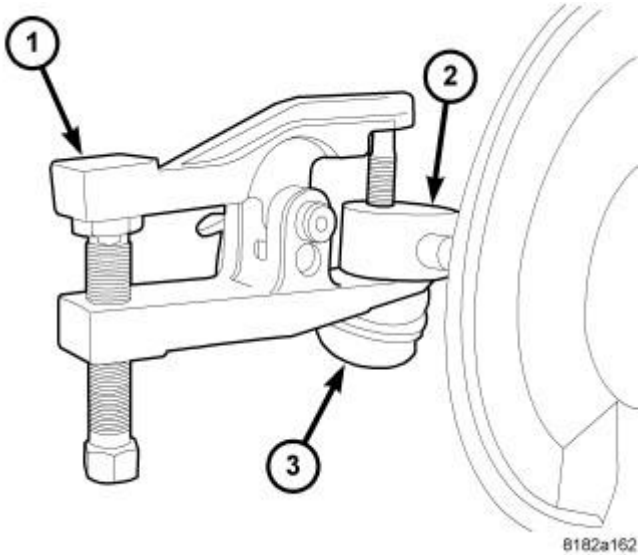


**Fig. 38: Separating Tie Rod End From Knuckle Using Ball Joint Remover**
**Courtesy of CHRYSLER LLC**

46. On both sides, release the tie rod end (3) from the knuckle (2) using Remover, Special Tool (special tool #9360, Remover, Ball Joint) (1).

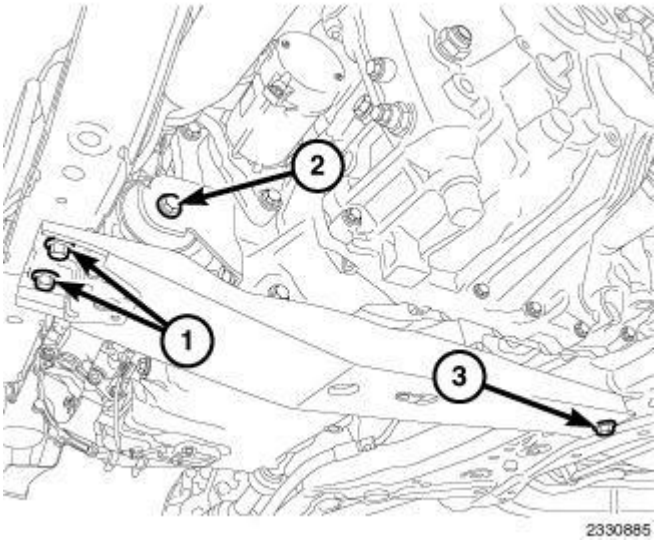


**Fig. 39: Fore/Aft Crossmember Fasteners & Transaxle Mount Through Bolt**
**Courtesy of CHRYSLER LLC**

47. Remove front transaxle mount through bolt (2).
48. Remove fore/aft member retaining bolts (1 and 3) and fore/aft member.
49. On AWD models, remove the driveline propeller shaft.
50. Remove the Diesel Particulate Filter (DPF). Refer to **FILTER, Diesel Particulate , Removal** .

 

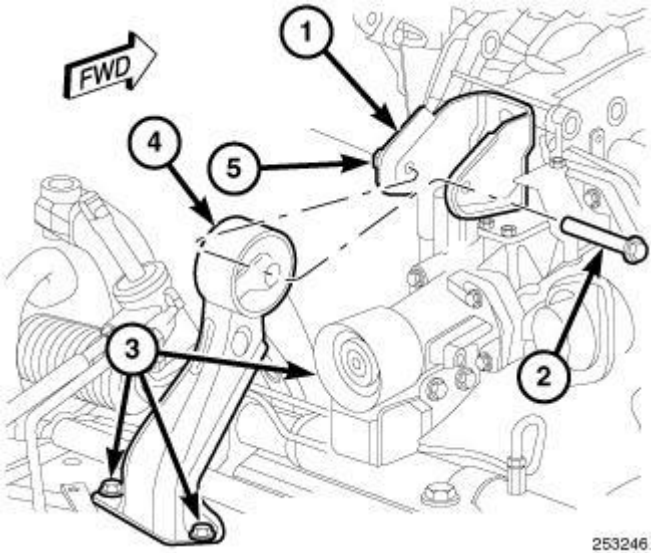


**Fig. 40: Removing/Installing Rear Roll Mount & Bolts**
**Courtesy of CHRYSLER LLC**

**NOTE: AWD shown in illustration, FWD similar.**

51. Remove the rear roll mount (4) through bolt (2).

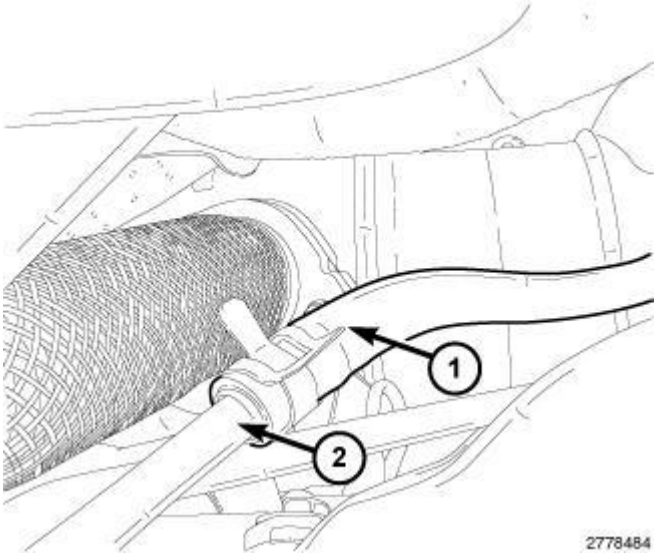


**Fig. 41: Power Steering Return Hose & Tube**
**Courtesy of CHRYSLER LLC**

52. Remove the power steering return hose from tube.

 

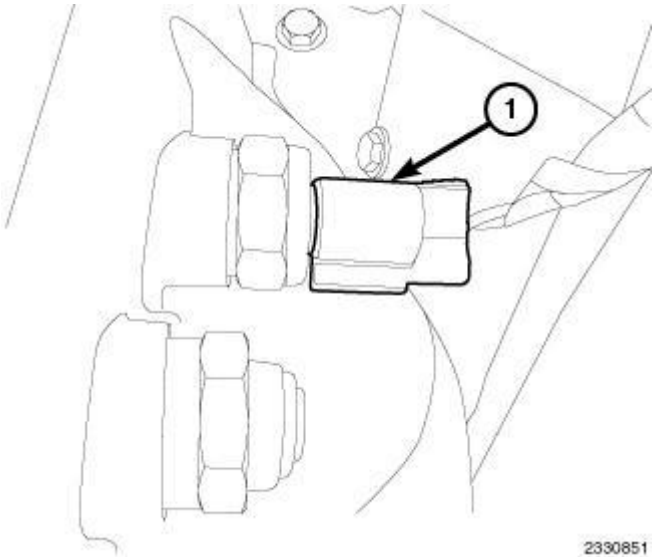


**Fig. 42: Reverse Lamp Switch Harness Connector**
**Courtesy of CHRYSLER LLC**

53. Disconnect the reverse lamp switch harness connector (1).
54. Remove the reverse lamp switch wire harness clip at transmission.

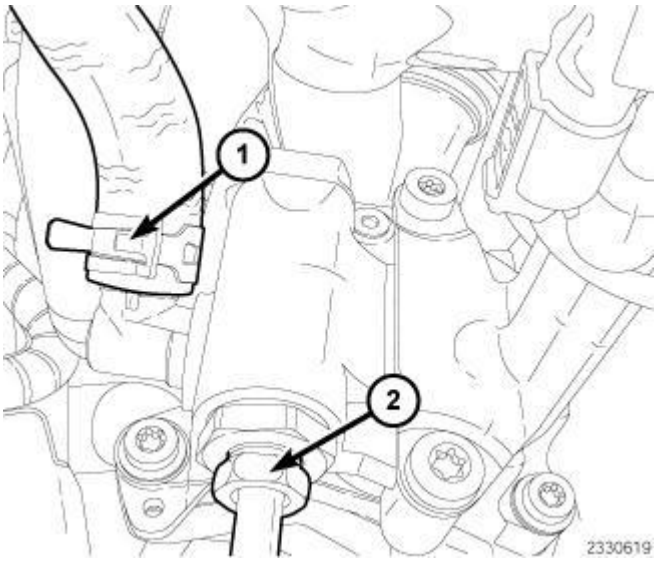


**Fig. 43: Power Steering Supply Line & Feed Line**
**Courtesy of CHRYSLER LLC**

55. Disconnect the power steering supply line (1) from pump.
56. Remove the power steering feed line (2) from pump.

 

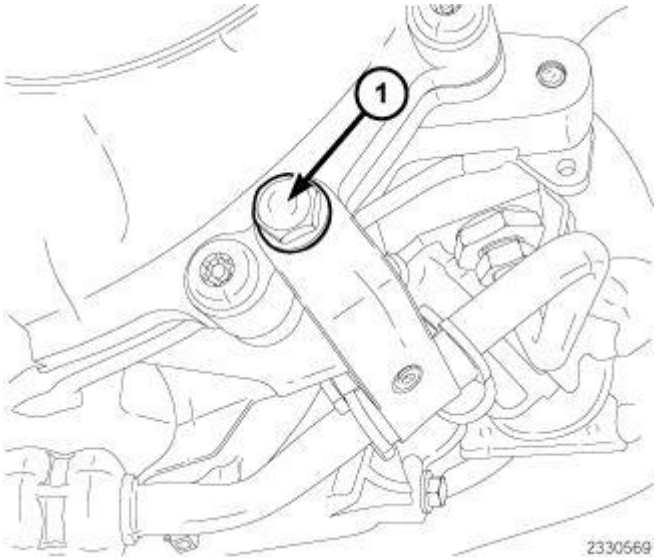


**Fig. 44: Power Steering Line Support Bracket Retaining Bolt**
**Courtesy of CHRYSLER LLC**

57. Remove power steering line support bracket retaining bolt (1).

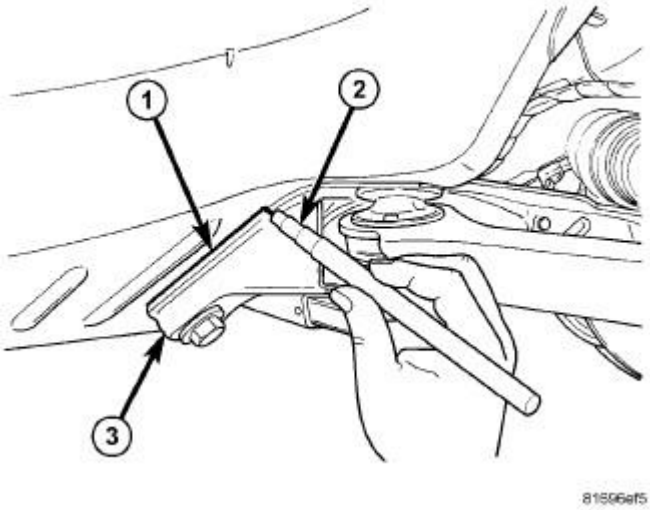


**Fig. 45: Marking Crossmember Location**
**Courtesy of CHRYSLER LLC**

58. Mark the crossmember (3) to body location (1) using a grease pencil (2) or equivalent.

 

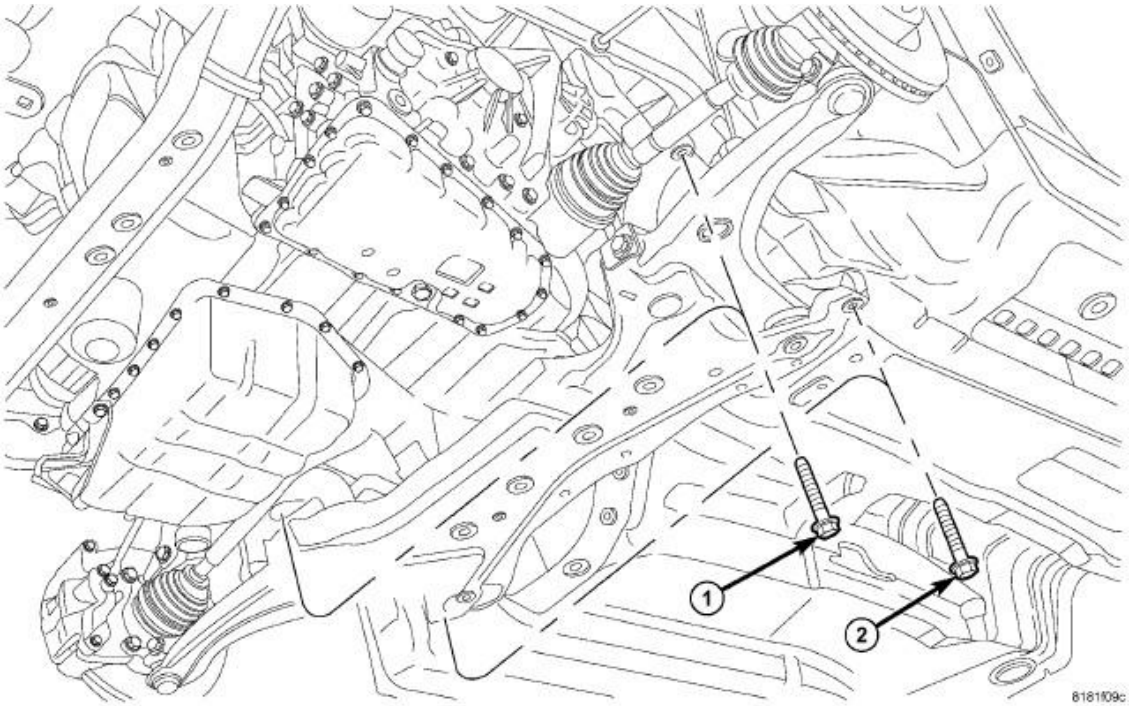


**Fig. 46: Front Crossmember Bolts**
**Courtesy of CHRYSLER LLC**

59. Support the crossmember with a suitable lifting device.
60. Remove the crossmember bolts (1 and 2) and lower the crossmember from the vehicle.

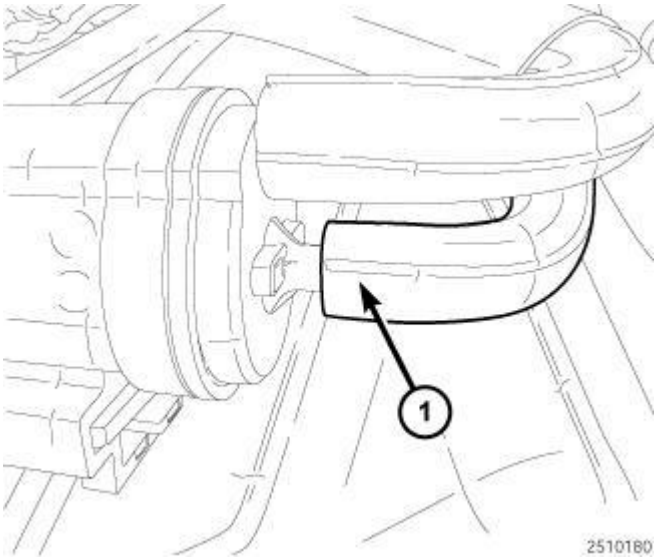


**Fig. 47: Coolant Pump Actuator Vacuum Line**
**Courtesy of CHRYSLER LLC**

61. Remove the serpentine belt. Refer to **BELT, Serpentine , Removal** .
62. Disconnect the coolant pump actuator vacuum line (1).

 

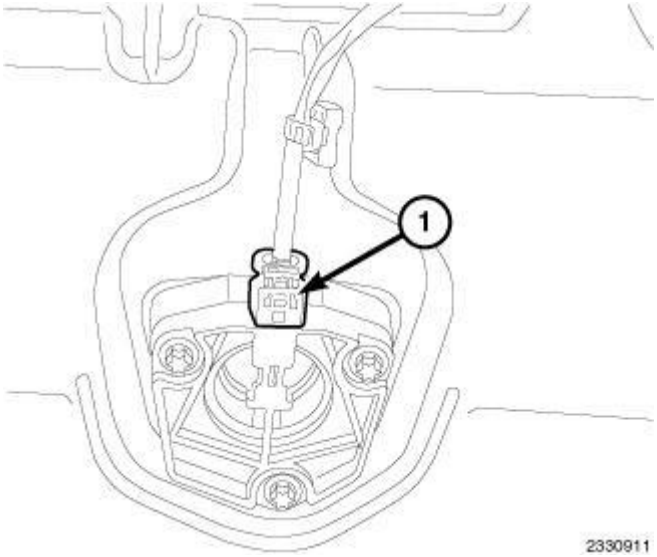


**Fig. 48: Oil Level Switch Wire Harness Connector**
**Courtesy of CHRYSLER LLC**

63. Disconnect the oil level switch wire harness connector (1) and wire harness retainers.
64. Remove the coolant/power steering pump assembly. Refer to **PUMP, Water , Removal** .

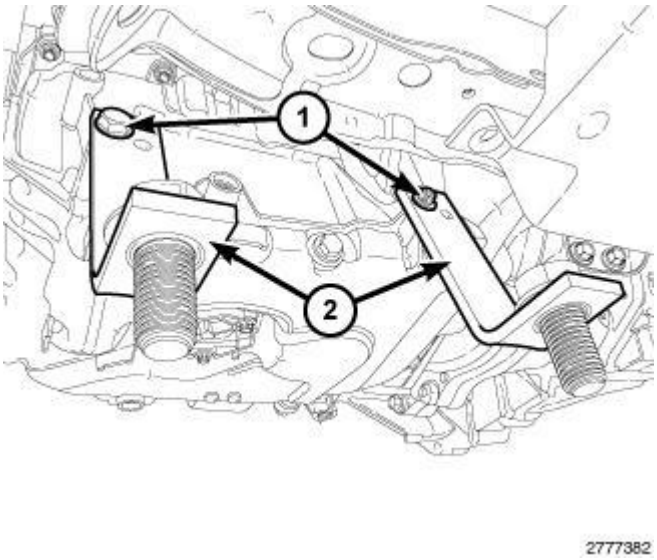


**Fig. 49: Engine Cradle Post Kit Adapter Brackets & Bolts**
**Courtesy of CHRYSLER LLC**

65. Install the (special tool #10205, Fixtures, Power Train Dolly Engine Support) (2) to oil pan and tighten bolts finger tight (1).

 

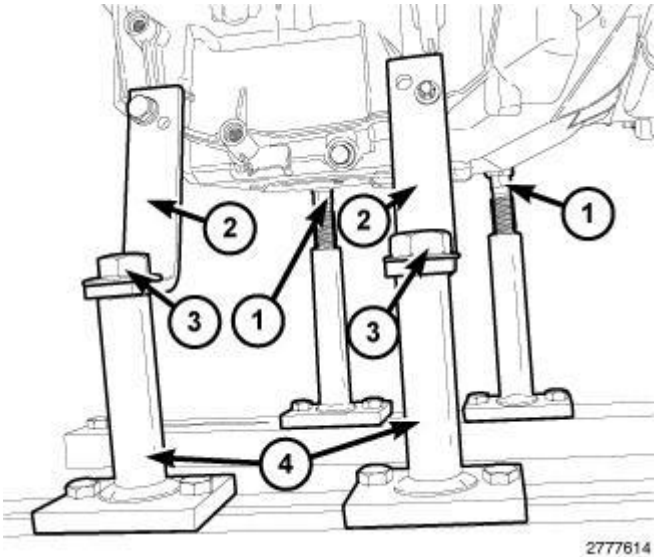


**Fig. 50: Dolly, Cradle & Engine Cradle Post Kit Components**
**Courtesy of CHRYSLER LLC**

66. Assemble the (special tool #6135, Dolly, Power Train), (special tool #6710A, Cradle, Engine Support) and (special tool #6848, Posts, Cradle).
67. Carefully lower the vehicle and position the (special tool #6135, Dolly, Power Train), (special tool #6710A, Cradle, Engine Support) under engine.
68. Align the back posts (1) and adjust the height to the bosses in the oil pan.
69. Position (special tool #10205, Fixtures, Power Train Dolly Engine Support) (2) to the front posts (4) and install bolts (3).
70. Tighten the support posts and cradle fasteners.

**WARNING: Safety straps must be use to secure engine to the dolly fixture.**

71. Install, tighten and lock safety straps around engine and attach them to the cradle.
72. Lower vehicle so that only the weight of the engine and transmission assembly is on dolly fixture.

 

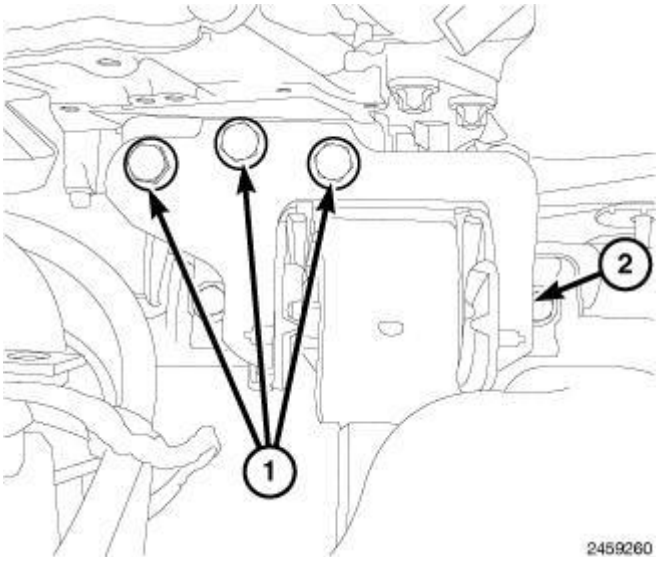


**Fig. 51: Engine Mount Through Bolt & Right Engine Mount Bolts**
**Courtesy of CHRYSLER LLC**

73. Remove the engine mount through bolt (2).
74. Remove bolts (1) and the right engine mount.

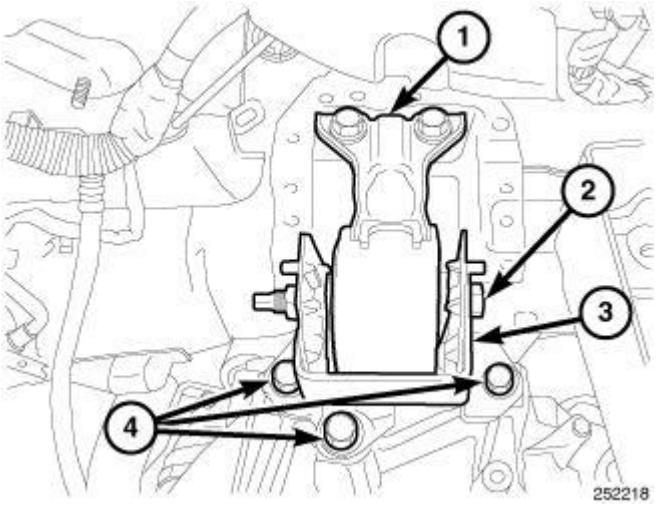


**Fig. 52: Left Engine Mount & Fasteners**
**Courtesy of CHRYSLER LLC**

75. Remove left mount (3) to transaxle retaining bolts (4).

**CAUTION: It may be necessary to adjust the engine and transmission assembly, with the dolly fixture attached, to successfully clear the engine compartment.**

76. While watching for obstructions, slowly raise the vehicle until the engine and transmission assembly clear the engine compartment.

 

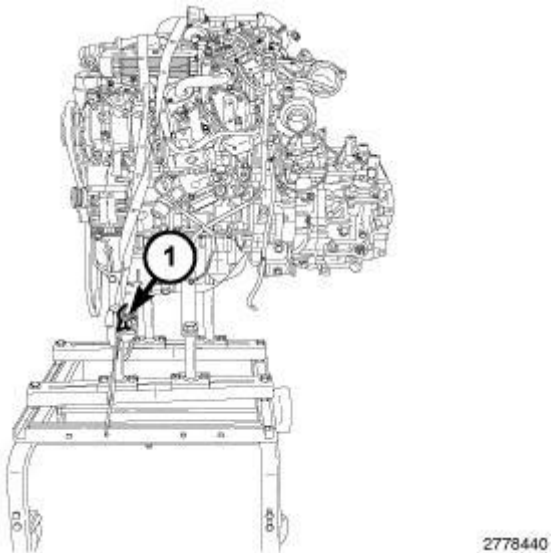


**Fig. 53: Safety Straps & Dolly Fixture**
**Courtesy of CHRYSLER LLC**

77. On AWD models, remove the PTU.
78. Separate the transmission from the engine.

# INSTALLATION

## INSTALLATION

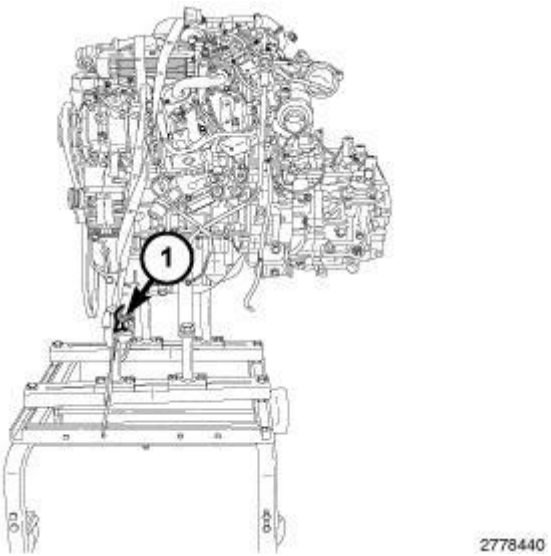


**Fig. 54: Safety Straps & Dolly Fixture**
**Courtesy of CHRYSLER LLC**

**WARNING: Safety straps must be used to secure engine to the dolly fixture.**

 

1. Seat engine onto fixture support posts then install, tighten and lock safety straps (1) around engine, securing it to the cradle.
2. Install the transmission to the engine. Tighten bolts to 48 N.m (35 ft. lbs.).
3. On AWD models, install the Power Transfer Unit (PTU).
4. Position the engine and transmission assemblies below vehicle engine compartment.

**CAUTION: It may be necessary to adjust the engine and transmission assembly, with the dolly fixture attached, to successfully clear the engine compartment.**

5. While watching for obstructions, slowly lower the vehicle until the engine and transmission assembly clearly fit the engine compartment.

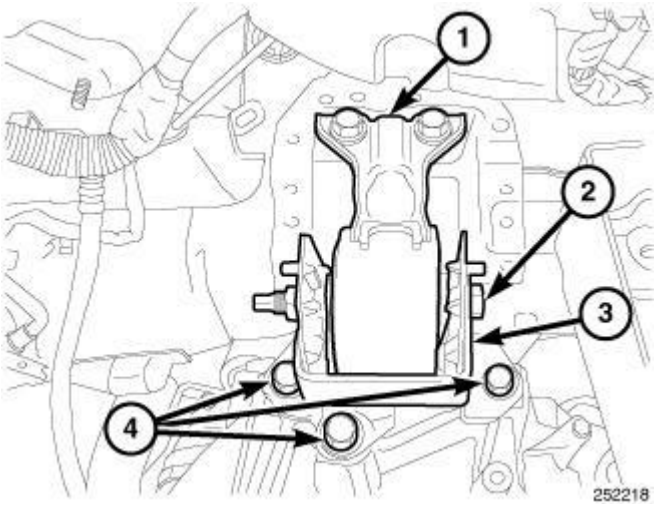


**Fig. 55: Left Engine Mount & Fasteners**
**Courtesy of CHRYSLER LLC**

6. Install left mount bracket (3) to transaxle retaining bolts and tighten to 61 N.m (45 ft. lbs.).

 

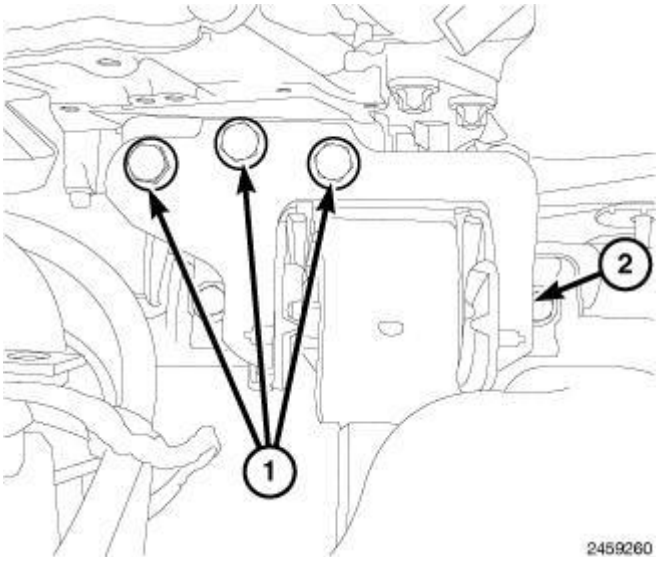


**Fig. 56: Engine Mount Through Bolt & Right Engine Mount Bolts**
**Courtesy of CHRYSLER LLC**

7. Install right engine mount. Tighten bolts (1) to 65 N.m (50 ft. lbs.).
8. Install the engine mount through bolt and tighten bolt (2) to 65 N.m (50 ft. lbs.).

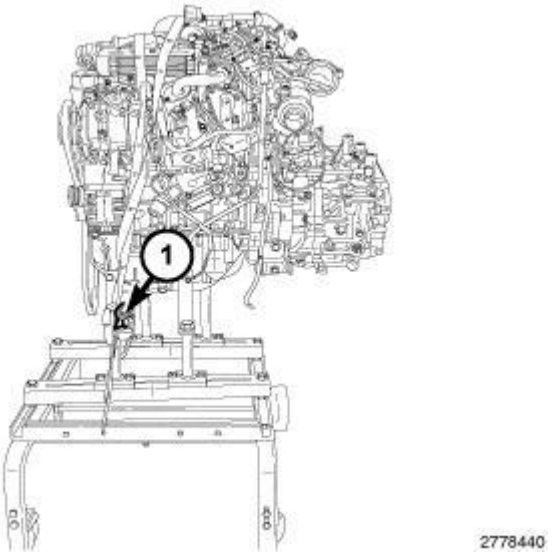


**Fig. 57: Safety Straps & Dolly Fixture**
**Courtesy of CHRYSLER LLC**

9. Remove safety straps (1).

 

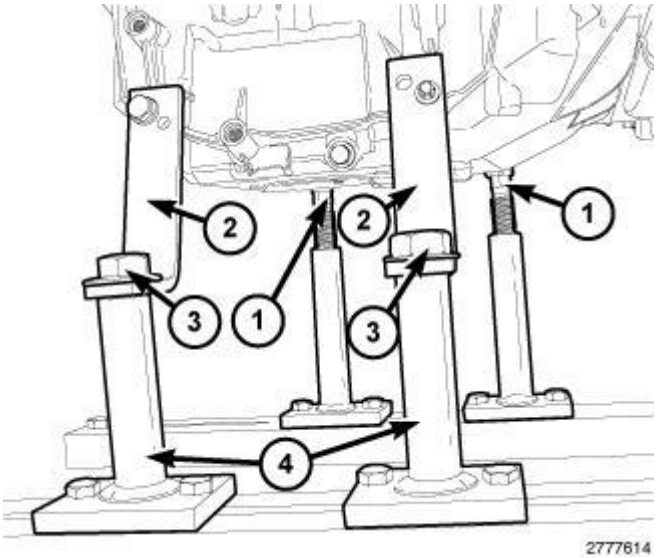


**Fig. 58: Dolly, Cradle & Engine Cradle Post Kit Components**
**Courtesy of CHRYSLER LLC**

10. Remove bolts (3) securing (special tool #10205, Fixtures, Power Train Dolly Engine Support) (2) from the front post (4).
11. Carefully raise the vehicle enough to clear the cradle and support post and remove the cradle.

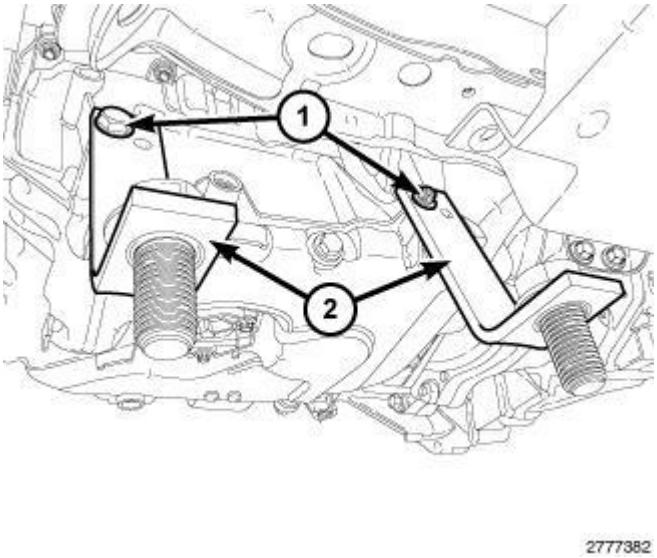


**Fig. 59: Engine Cradle Post Kit Adapter Brackets & Bolts**
**Courtesy of CHRYSLER LLC**

12. Remove bolts (2) the (special tool #10205, Fixtures, Power Train Dolly Engine Support) (1) from the oil pan.
13. Install the coolant/power steering pump assembly. Refer to **PUMP, Water , Installation** .

 

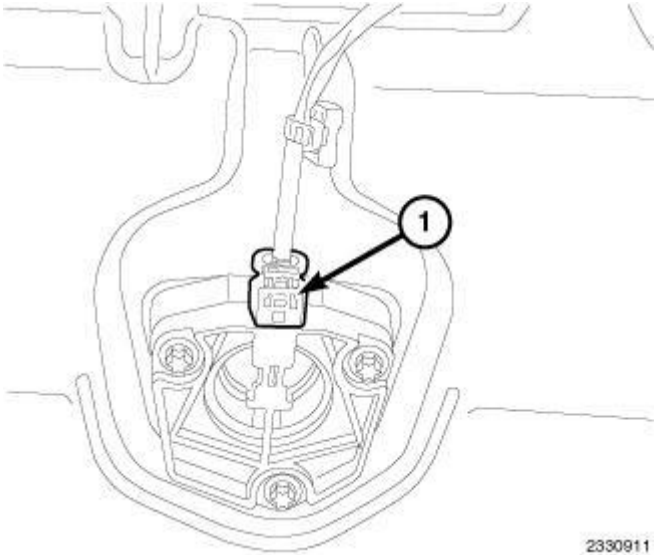


**Fig. 60: Oil Level Switch Wire Harness Connector**
**Courtesy of CHRYSLER LLC**

14. Connect the oil level switch wire harness connector and wire harness retainers (1).

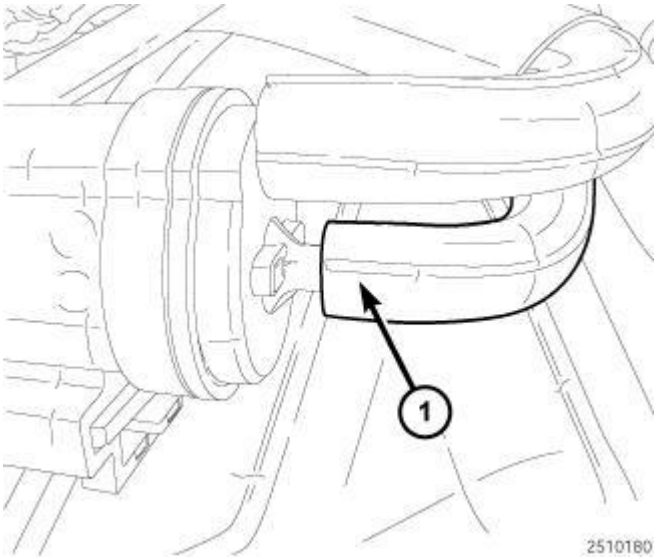


**Fig. 61: Coolant Pump Actuator Vacuum Line**
**Courtesy of CHRYSLER LLC**

15. Connect the coolant pump actuator vacuum line (1).
16. Install the serpentine belt. Refer to **BELT, Serpentine , Installation** .

 

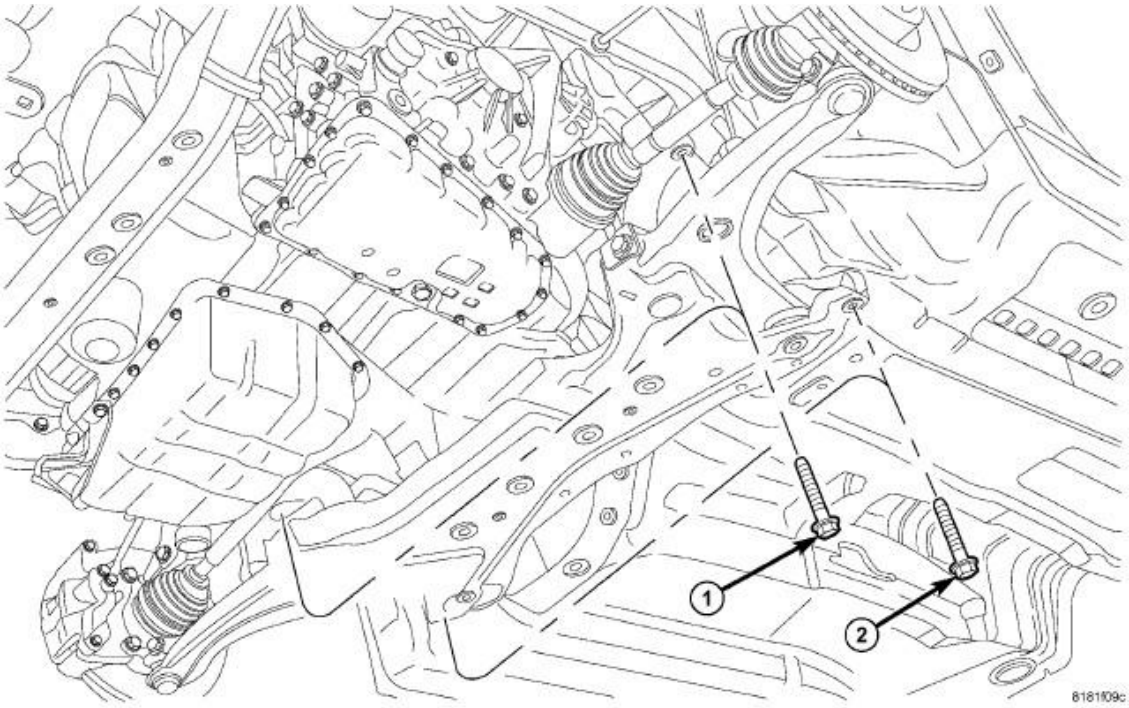


**Fig. 62: Front Crossmember Bolts**
**Courtesy of CHRYSLER LLC**

17. Support the crossmember on a suitable lifting device.
18. Raise the crossmember into position onto the vehicle.
19. Install the bolts (1 and 2) and align the engine cradle to the marks made during removal.
20. Tighten the bolts to 150 N.m (111 ft. lbs.).

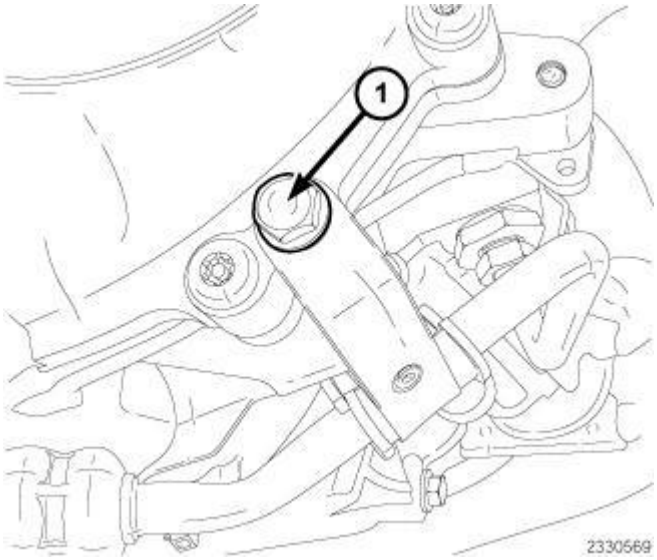


**Fig. 63: Power Steering Line Support Bracket Retaining Bolt**
**Courtesy of CHRYSLER LLC**

 

21. Install the power steering line support bracket Tighten bolt (1) to 9 N.m (80 in. lbs).

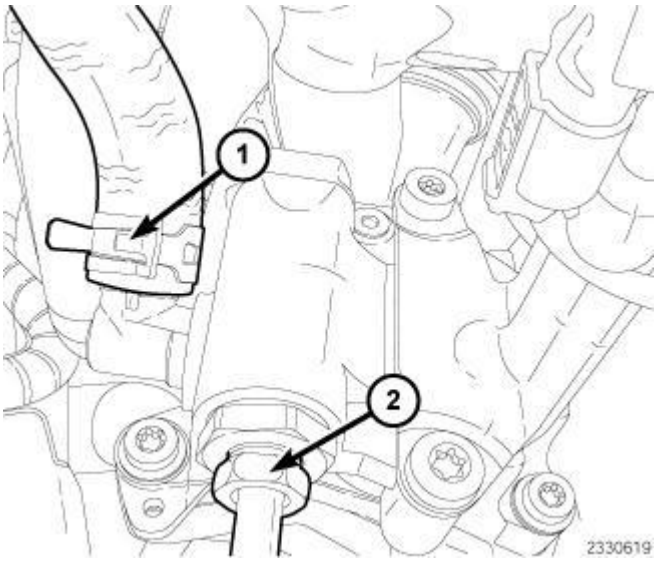


**Fig. 64: Power Steering Supply Line & Feed Line**
**Courtesy of CHRYSLER LLC**

22. Install the power steering pressure line from pump. Tighten pressure line fitting to 32 N.m (24 ft. lbs.).
23. Connect the power steering return line from pump.

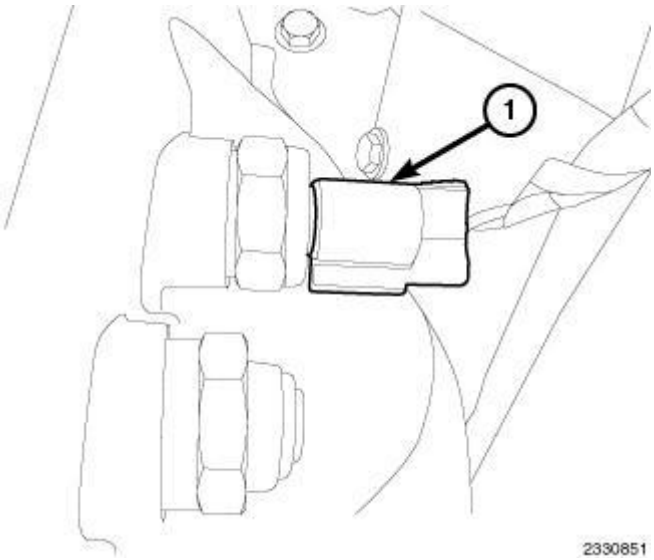


**Fig. 65: Reverse Lamp Switch Harness Connector**
**Courtesy of CHRYSLER LLC**

24. Install the reverse lamp switch wire harness clip at transmission.
25. Connect the reverse switch harness connector (1).

 

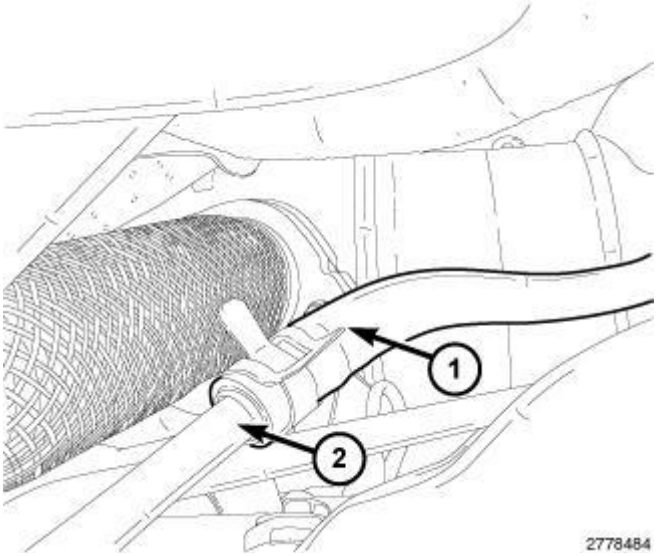


**Fig. 66: Power Steering Return Hose & Tube**
**Courtesy of CHRYSLER LLC**

26. Install the power steering return hose at tube.

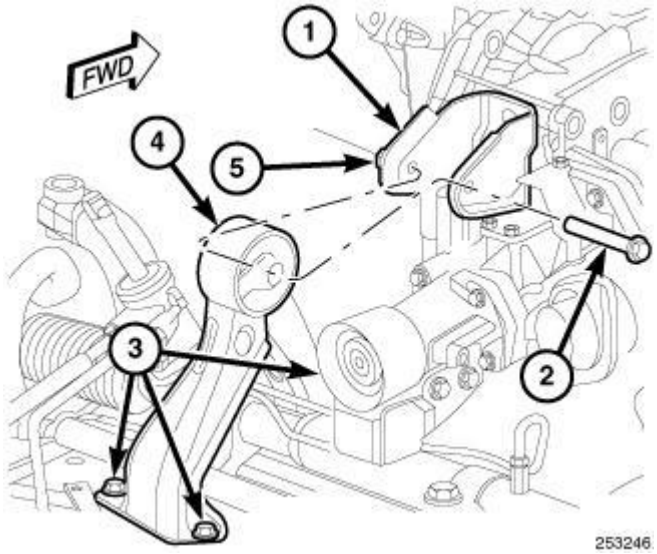


**Fig. 67: Removing/Installing Rear Roll Mount & Bolts**
**Courtesy of CHRYSLER LLC**

**NOTE: AWD shown in illustration, FWD similar.**

27. Install the through bolt (2) and tighten to 65 N.m (48 ft. lbs.).

 

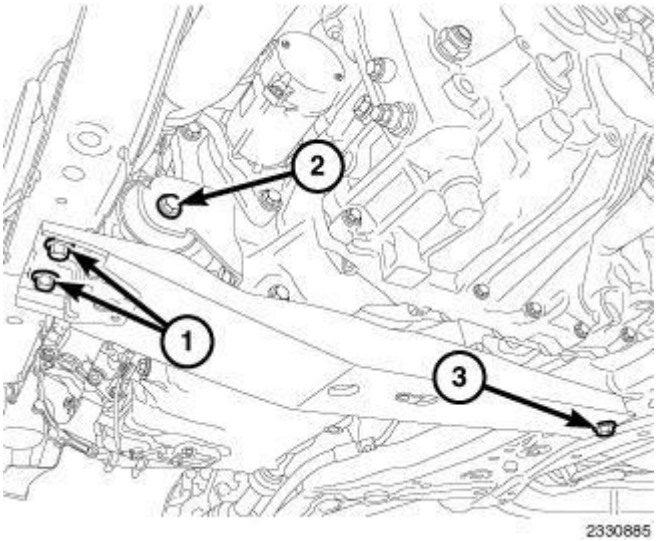


**Fig. 68: Fore/Aft Crossmember Fasteners & Transaxle Mount Through Bolt**
**Courtesy of CHRYSLER LLC**

28. Install the Diesel Particulate Filter (DPF). Refer to **FILTER, Diesel Particulate , Installation** .
29. On AWD models, Install the driveline propeller shaft.
30. Install the fore/aft member and tighten using the following sequence:
    1. Tighten the bolts (1) to 78 N.m (58 ft. lbs.).
    2. Tighten the bolt (3) to 129 N.m (95 ft. lbs.).
    3. Tighten the bolt (2) to 65 N.m (48 ft. lbs.).

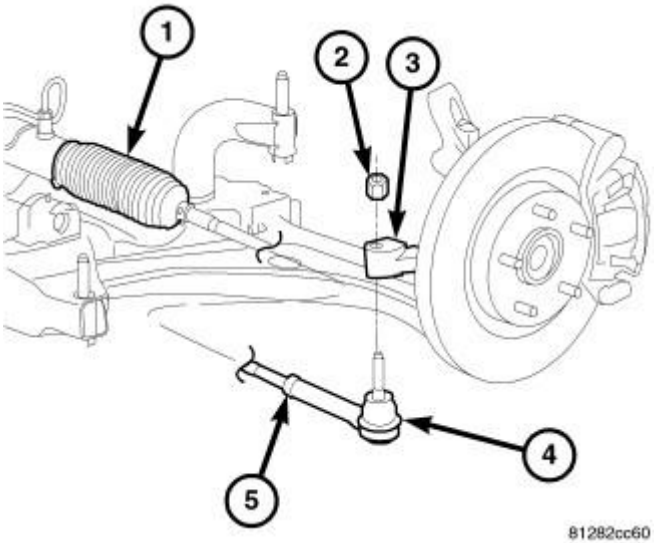


**Fig. 69: Inner And Outer Tie Rod Assembly**
**Courtesy of CHRYSLER LLC**

**NOTE: Right side shown in illustration, left side similar.**

 

31. Install the outer tie rod ball stud into the hole in the knuckle arm (3). Tighten the nut to 132 N.m (97 ft. lbs.).

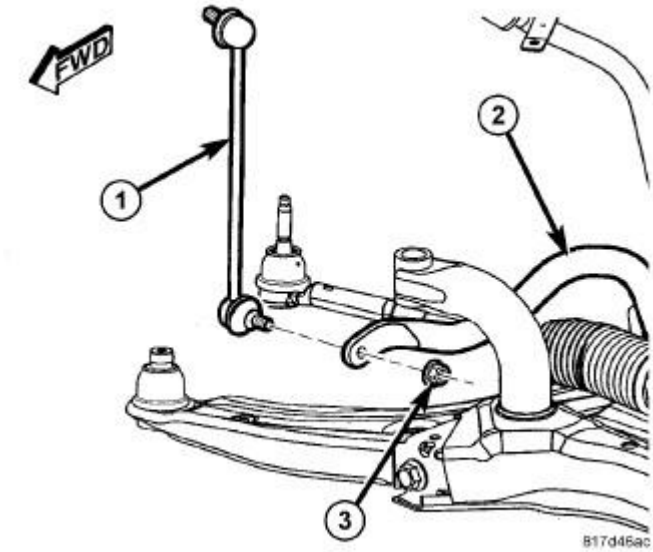


**Fig. 70: Stabilizer Bar Link, Stabilizer Bar & Nut**
**Courtesy of CHRYSLER LLC**

32. Attach the stabilizer bar link (1) at each end of the stabilizer bar (2). At each link, install and tighten the nut (3) while holding the stabilizer bar link lower stud stationary. Tighten the nuts to 58 N.m (43 ft. lbs.).

**NOTE: When removing tripod joint, DO NOT let spline or snap ring drag across transaxle oil seal lip.**

33. Install the right and left axle half shafts. Refer to **Installation** , **Installation** and **Installation** .

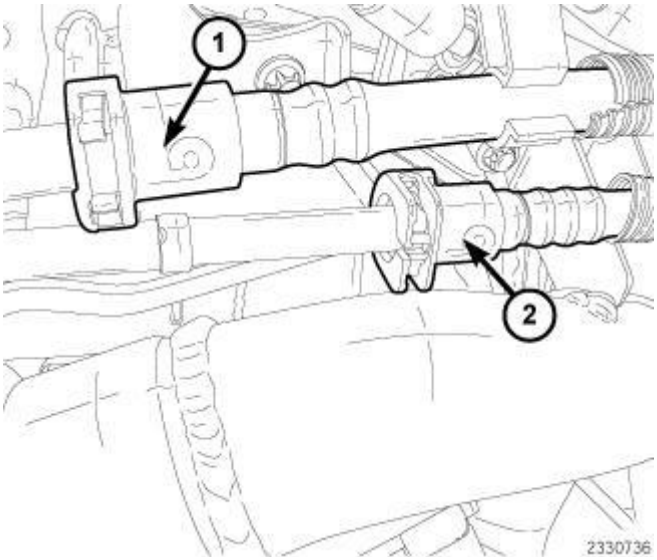


 

**Fig. 71: Fuel Feed & Return Lines**
**Courtesy of CHRYSLER LLC**

34. Connect the fuel feed and return lines.

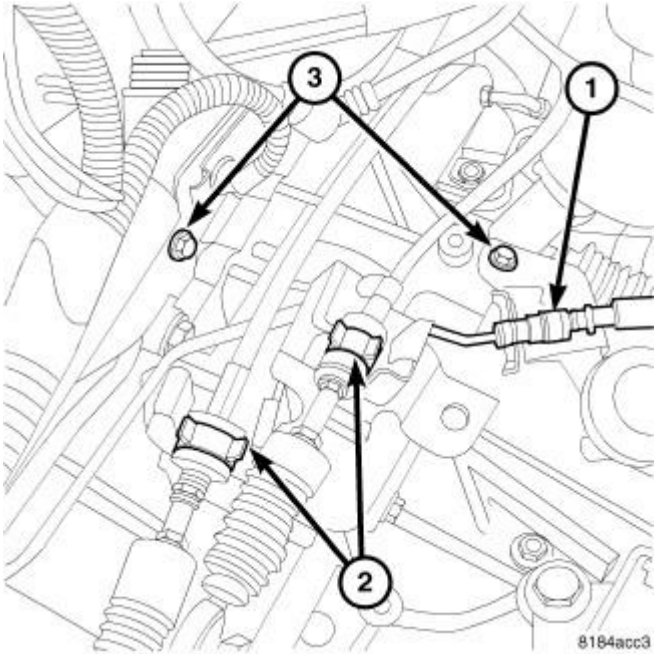


**Fig. 72: Hydraulic Line, Shift Cables & Bolts**
**Courtesy of CHRYSLER LLC**

35. Connect hydraulic clutch line (1).
36. Install shift cables (2) to transaxle.

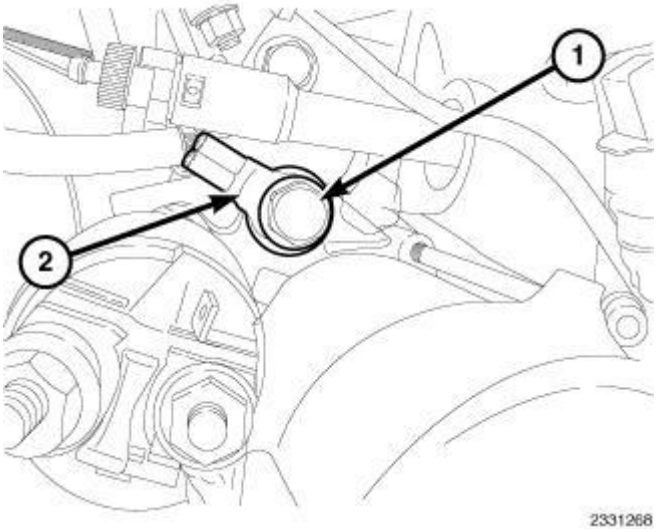


**Fig. 73: Battery Ground Cable & Bolt At Engine Block**
**Courtesy of CHRYSLER LLC**

 

37. Install the starter motor. Tighten bolt to 40 N.m (30 ft. lbs.).
38. Install the battery ground cable to the engine block (2). Tighten bolt (1) to 40 N.m (30 ft. lbs.).

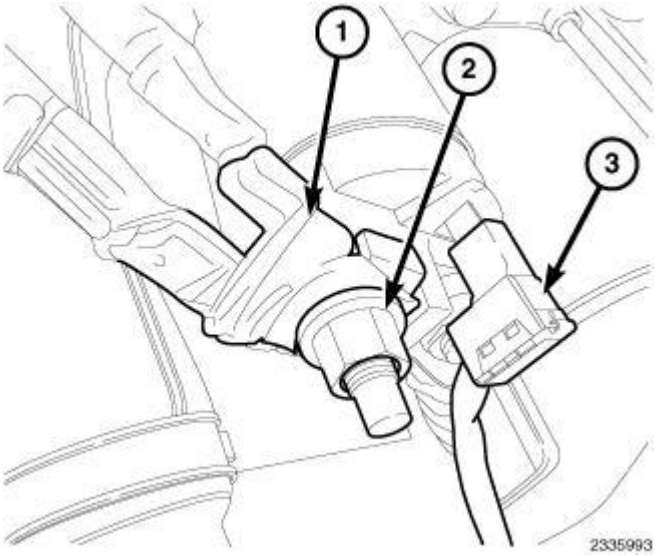


**Fig. 74: Battery Feed Wire To Starter, Starter Harness Connectors & Nut**
**Courtesy of CHRYSLER LLC**

39. Connect the starter harness connectors (3).
40. Install the battery feed wire (1) to starter. Tighten nut (2) to 10 N.m (89 In. lbs.).

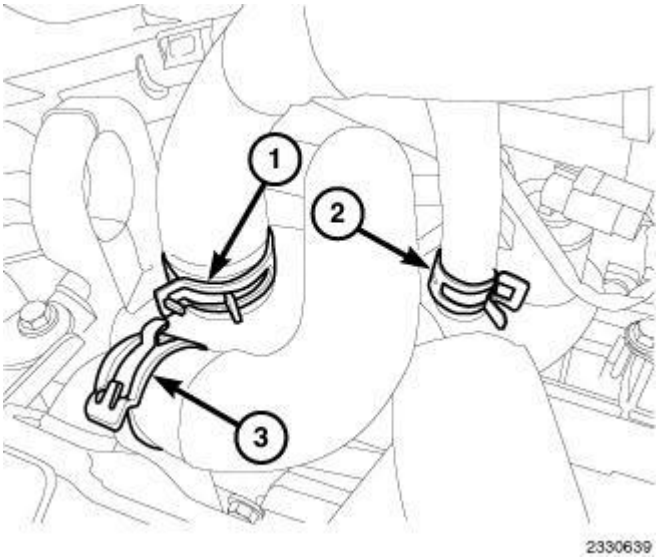


**Fig. 75: Heater Hoses And Clamps At Engine**
**Courtesy of CHRYSLER LLC**

41. Connect heater hoses at engine.

 

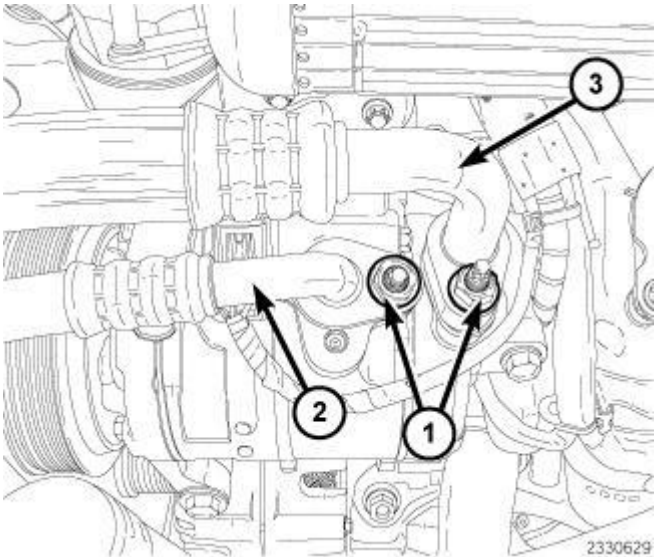


**Fig. 76: A/C Lines & Retaining Nuts**
**Courtesy of CHRYSLER LLC**

42. Lubricate new rubber O-ring seals with clean refrigerant oil and install them and new gaskets onto the refrigerant line fittings. Use only the specified O-rings as they are made of a special material for the R-134a system. Use only refrigerant oil of the type recommended for the A/C compressor in the vehicle.
43. Install A/C compressor lines. Tighten nuts to 20 N.m (177 In. lbs.).

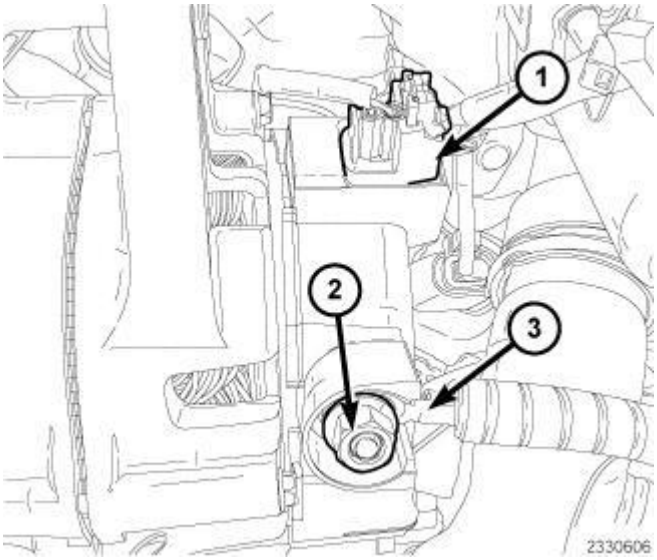


**Fig. 77: Battery Feed Wire, Generator Harness Connectors & Nut**
**Courtesy of CHRYSLER LLC**

44. Connect the generator harness connectors (1).
45. Install the battery feed wire (3) to generator. Tighten nut (2) to 18 N.m (159 in. lbs.).

 

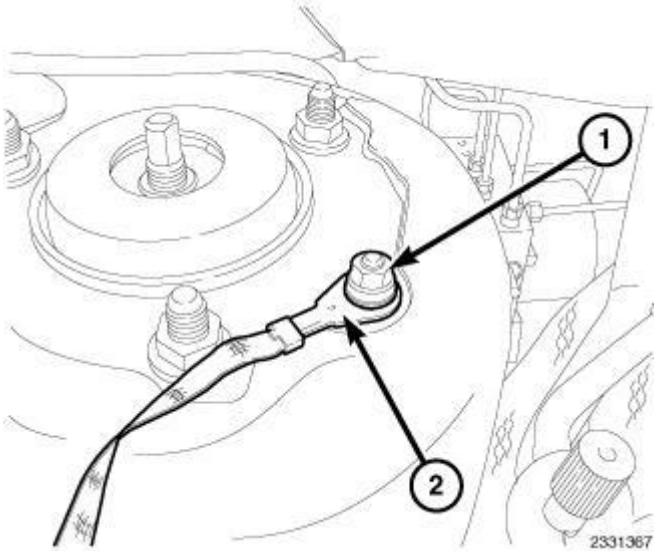


**Fig. 78: Engine Ground Strap & Retaining Nut**
**Courtesy of CHRYSLER LLC**

46. Install the engine ground strap (2) to the right strut tower and securely tighten nut (1).

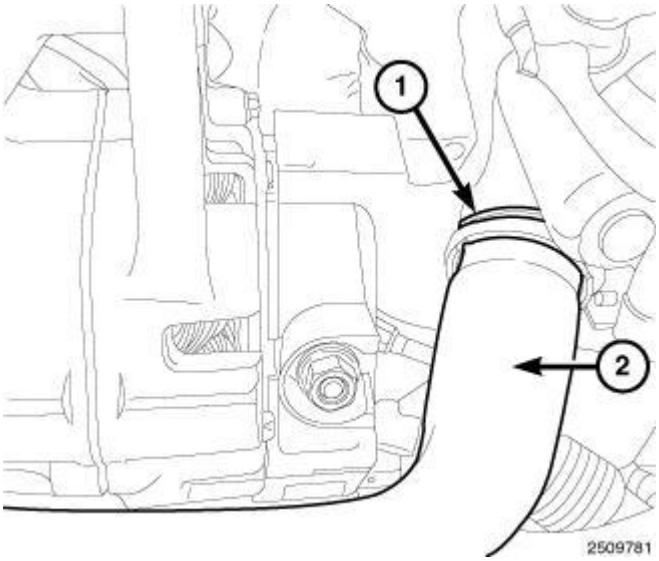


**Fig. 79: Upper Radiator Hose**
**Courtesy of CHRYSLER LLC**

47. Install the upper radiator hose (2) at radiator.
48. Connect the upper radiator hose (2) at engine (1).

 

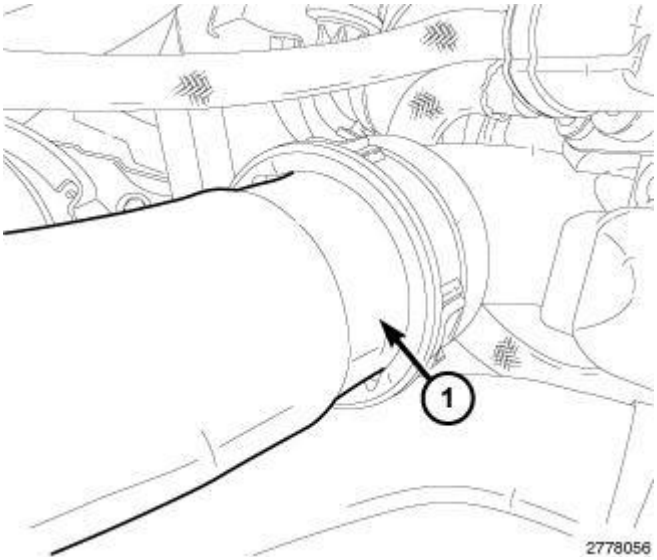


**Fig. 80: Lower Radiator Hose**
**Courtesy of CHRYSLER LLC**

49. Install the lower radiator hose (1).

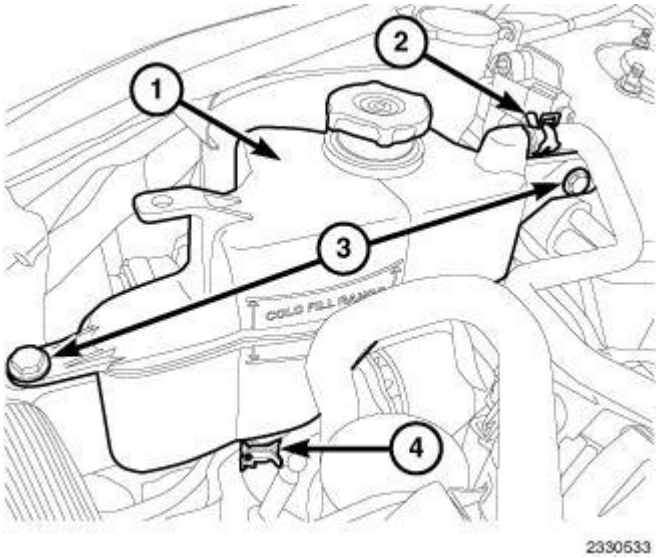


**Fig. 81: Coolant Recovery Reservoir, Clamps & Bolts**
**Courtesy of CHRYSLER LLC**

50. Install coolant recovery bottle (1). Tighten the mounting bolts to 4 N.m (35 in. lbs.).
51. Connect the coolant hoses (2 and 4).

 

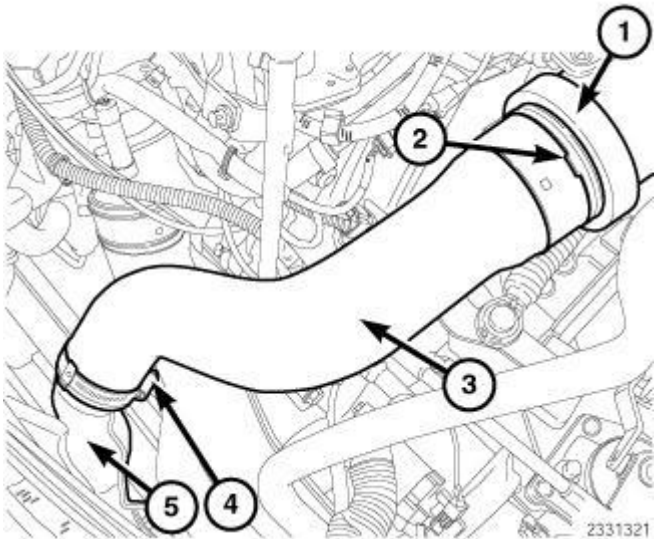


**Fig. 82: Upper Charge Air Tube, Lock Ring, Lower Charge Air Tube, Clamp & Charge Air Cooler (CAC) Inlet**
**Courtesy of CHRYSLER LLC**

52. Connect the lower charge air tube (3) from the charge air cooler (CAC) inlet (5). Tighten clamp (4) to 5 N.m (44 in. lbs.).
53. Install the lower charge air tube (3) to the upper charge air tube (1) to turbocharger and lock the lock ring in place.

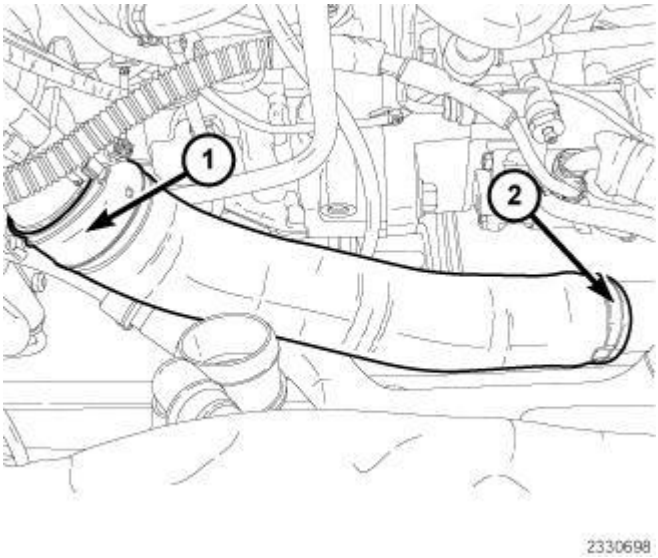


**Fig. 83: EGR Air Flow Control Valve & Clamp**
**Courtesy of CHRYSLER LLC**

54. Install charge air inlet tube to the charge air cooler (CAC) and the EGR air control valve.
55. Install coolant fan assembly. Refer to **FAN, Cooling , Installation** .

 

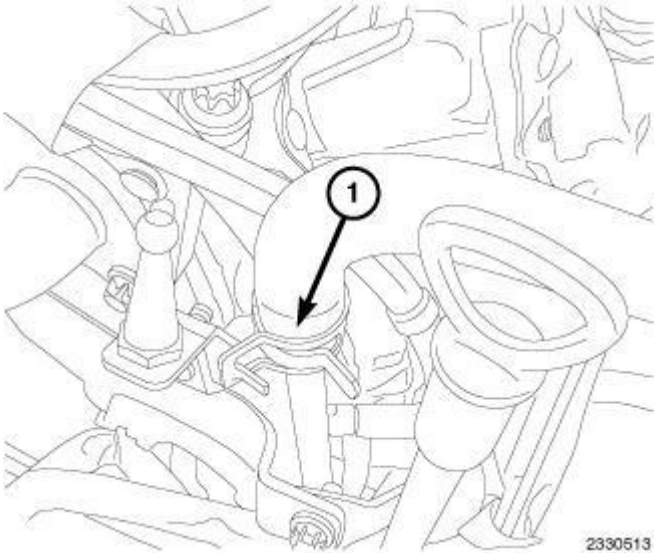


**Fig. 84: Brake Booster Vacuum Hose**
**Courtesy of CHRYSLER LLC**

56. Connect the brake booster vacuum hose.

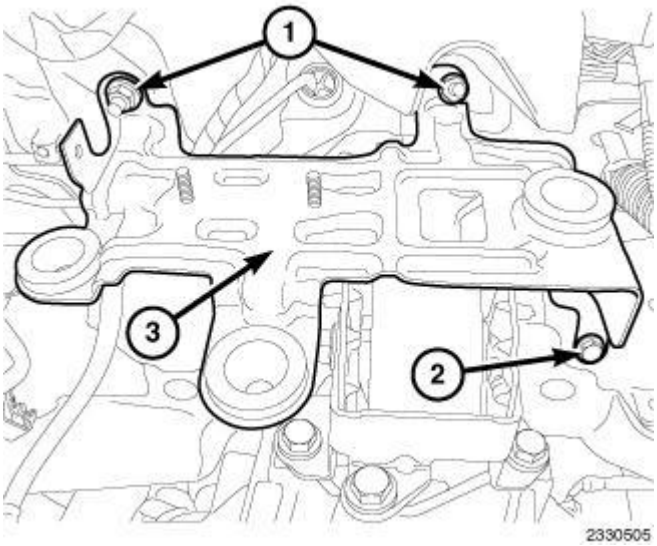


**Fig. 85: Air Cleaner Mounting Bracket, Nuts & Bolt**
**Courtesy of CHRYSLER LLC**

57. Install the air cleaner mounting bracket (3)
    1. Tighten bolt (2) to 11 N.m (97 in. lbs.).
    2. Tighten nuts (1) to 11 N.m (97 in. lbs.).

 

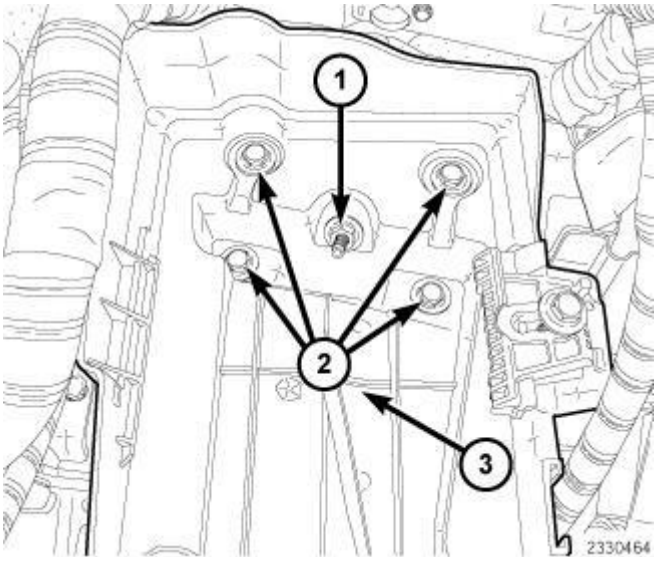


**Fig. 86: Battery Tray, Nut & Retaining Bolts**
**Courtesy of CHRYSLER LLC**

58. Install the battery tray (3):
    1. Tighten bolt (2) to 11 N.m (97 in. lbs.).
    2. Tighten nuts (1) to 11 N.m (97 in. lbs.).

**NOTE: Do not connect the battery cables at this time.**

59. Install the battery. Tighten bolt to 7 N.m (62 in. lbs.).

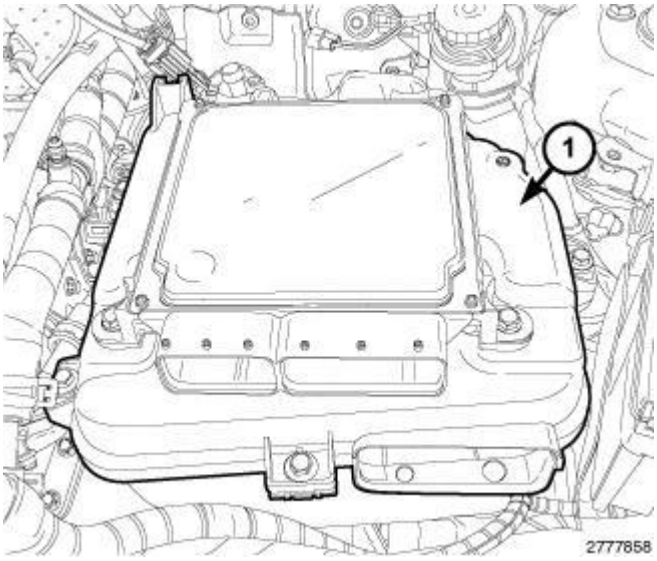


**Fig. 87: Air Cleaner Assembly**
**Courtesy of CHRYSLER LLC**

60. Install the air cleaner assembly (1).

 

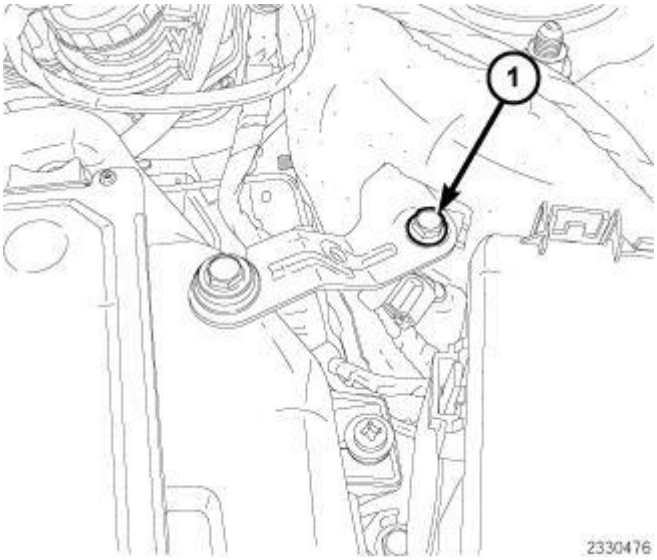


**Fig. 88: Air Cleaner Upper Support Bracket Retaining Bolt**
**Courtesy of CHRYSLER LLC**

61. Install the air cleaner upper support bracket retaining bolt (1). Tighten bolt to (9 N.m 80 in. lbs.).

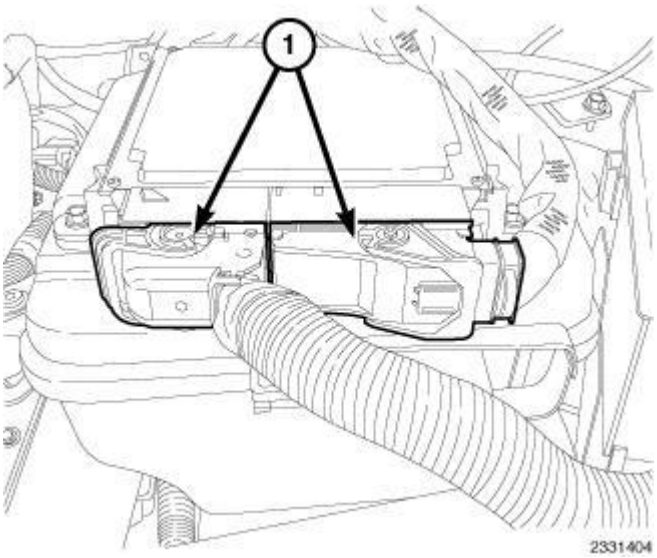


**Fig. 89: PCM Harness Connectors**
**Courtesy of CHRYSLER LLC**

62. Connect Powertrain Control Module (PCM) harness connectors (1).

 

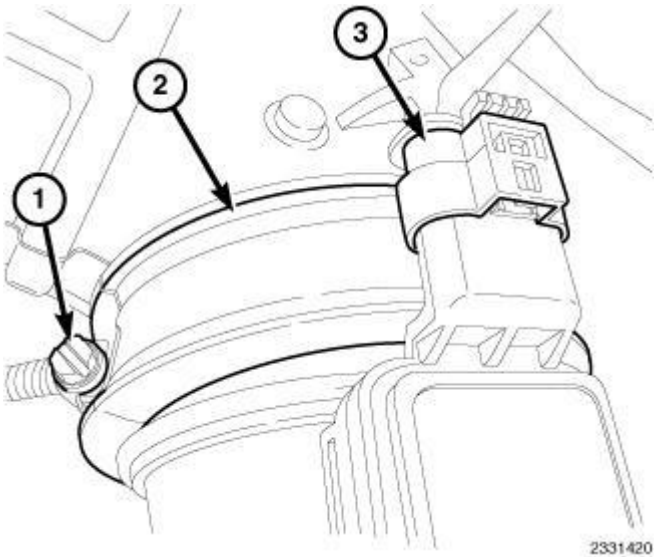


**Fig. 90: Mass Air Flow Sensor Harness Connector, Air Cleaner-To-Turbocharger Inlet Tube & Clamp**
**Courtesy of CHRYSLER LLC**

63. Connect the air cleaner-to-turbocharger inlet tube (2) and tighten the clamp (1).
64. Connect the Mass Air Flow (MAF) sensor harness connector (3).

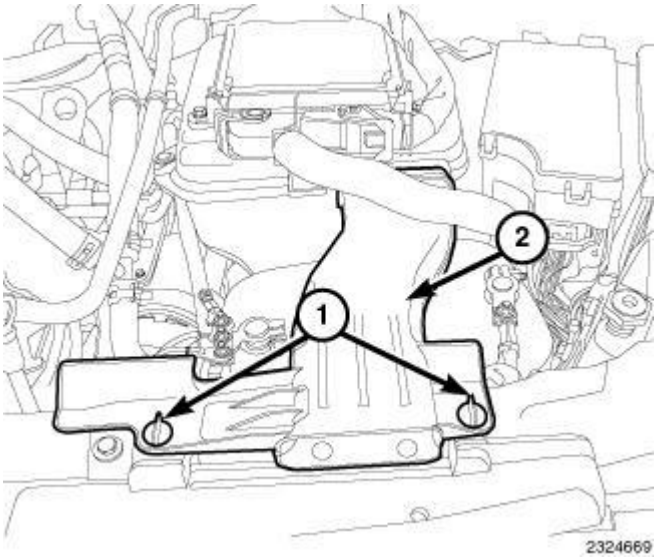


**Fig. 91: Quarter Turn Lock Tabs & Air Inlet Duct**
**Courtesy of CHRYSLER LLC**

65. Install the air inlet duct (1).

**CAUTION: Do NOT run the engine with a vacuum pump in operation or with a vacuum present within the A/C system. Failure to follow this caution will result in serious A/C compressor damage.**

 

66. Evacuate the refrigerant system. Refer to **Plumbing , Standard Procedure** .
67. Charge the refrigerant system. Refer to **Plumbing , Standard Procedure** .
68. Fill engine with coolant.
69. Install new oil filter and fill engine with oil.

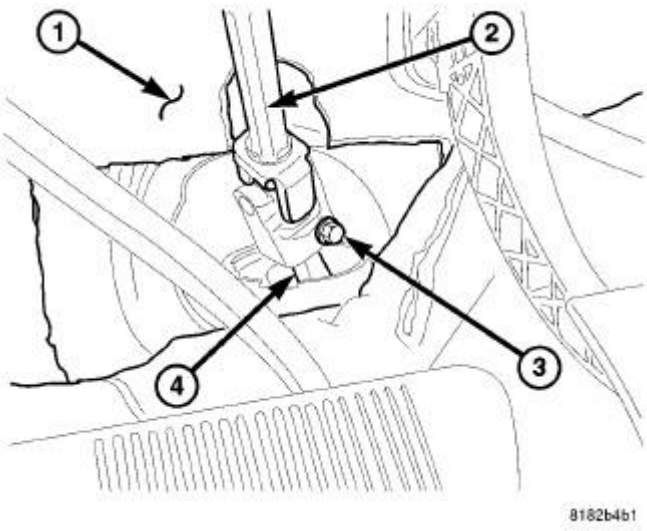


**Fig. 92: Floor Carpet, Intermediate Shaft, Coupling Bolt & Steering Gear Pinion Shaft**
**Courtesy of CHRYSLER LLC**

70. Verify the front wheels of vehicle are in the STRAIGHT-AHEAD position.
71. Center the intermediate shaft (2) over the steering gear pinion shaft (4), lining up the ends, then slide the intermediate shaft onto the steering gear pinion shaft.
72. From center, rotate the steering wheel to the right approximately 90° or until the intermediate shaft coupling bolt (3) can be easily installed.
73. Install the intermediate shaft coupling bolt (3). Tighten the bolt to 42 N.m (31 ft. lbs.).
74. Reposition the floor carpet (1) in place.

 

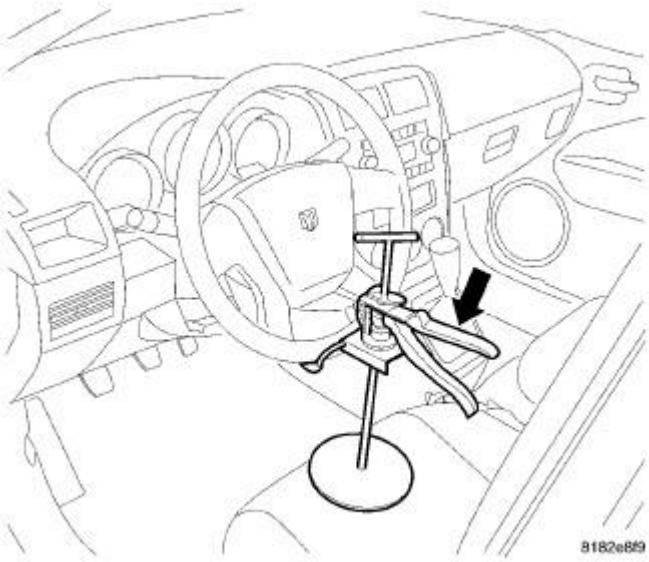


**Fig. 93: Steering Wheel Holding Tool**
**Courtesy of CHRYSLER LLC**

75. Remove the steering wheel holder.
76. Connect the positive and negative battery cables.
77. Start engine and check for leaks.
78. Install engine cover (1).

# SPECIAL TOOLS

## SPECIAL TOOLS

| |
|---|
| 10205 - Fixtures, Power Train Dolly Engine Support |
| 10228 - Assembly, Inserts Timing Chain |
| 10231 - Lock, Balance Shaft |
| 10232 - Lock, Flywheel/Clutch Plate |
| 10233 - Install, Rear Crankshaft Seal |
| 10234 - Lock, Camshaft |
| 10235 - Install, Front Crankshaft Seal Ring |
| 10236 - Holder, Vibration Damper |
| 10237 - Socket, Shift Valve |
| 10238 - Claw, Extraction |
| 10239 - Adapter, Tester |
| 10240 - Bolt, Extractor |
| 10241 - Screw, Forcing |
| 10368 - Set, Universal Protective Cap |
| 6135 - Dolly, Power Train<br>(Originally Shipped In Kit Number(s) 6784C.) |

 

| | |
|---|---|
| | 6710A - Cradle, Engine Support<br>(Originally Shipped In Kit Number(s) 6784, 6809.)<br>6848 - Posts, Cradle<br>(Originally Shipped In Kit Number(s) 6880, 6881, 6882, 6883.)<br>8941 - Puller<br>(Originally Shipped In Kit Number(s) 9299, 9299CC, 9299CC, 9300A-CAN, 9550, 9560.)<br>8951 - Assembly Links<br>(Originally Shipped In Kit Number(s) 9550, 9560, 9566.)<br>9307 - Compressor, Valve Spring<br>(Originally Shipped In Kit Number(s) 9300, 9300A-CAN, 9300-CAN, 9300-CAN.)<br>9312-1 - Block, Pressing<br>(Originally Shipped In Kit Number(s) 9550, 9560, 9580.)<br>9312-13 - Guide, Pin Removal<br>(Originally Shipped In Kit Number(s) 9550, 9560, 9580.)<br>9312-2 - Handle<br>(Originally Shipped In Kit Number(s) 9550, 9560, 9580.)<br>9312-4 - Assembly, Screw, Forcing<br>(Originally Shipped In Kit Number(s) 9550, 9560, 9580.)<br>9360 - Remover, Ball Joint<br>(Originally Shipped In Kit Number(s) 9329, 9515, 9516, 9516-CAN, 9517, 9517-CAN, 9518, 9519, 9540, 9541.)<br>9543 - Adapter, Compression Test<br>(Originally Shipped In Kit Number(s) 9300A-CAN, 9550, 9560, 9580.)<br>9717 - Brush, Injector Bore<br>(Originally Shipped In Kit Number(s) 9910.)<br>9723 - Installer, Bearing<br>(Originally Shipped In Kit Number(s) 9720, 9967.) |

# COVER, ENGINE

## REMOVAL

### REMOVAL

 

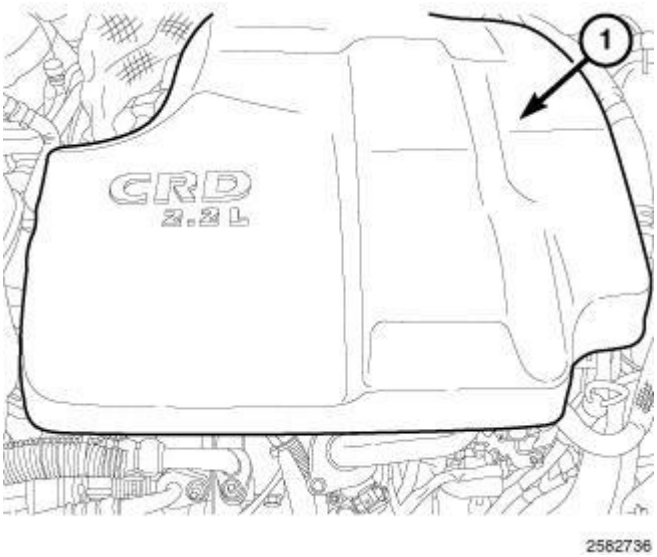


**Fig. 94: Engine Cover**
**Courtesy of CHRYSLER LLC**

1. Lift up to release engine cover (1) from engine cover mounts and remove the engine cover from engine.

**INSTALLATION**

**INSTALLATION**

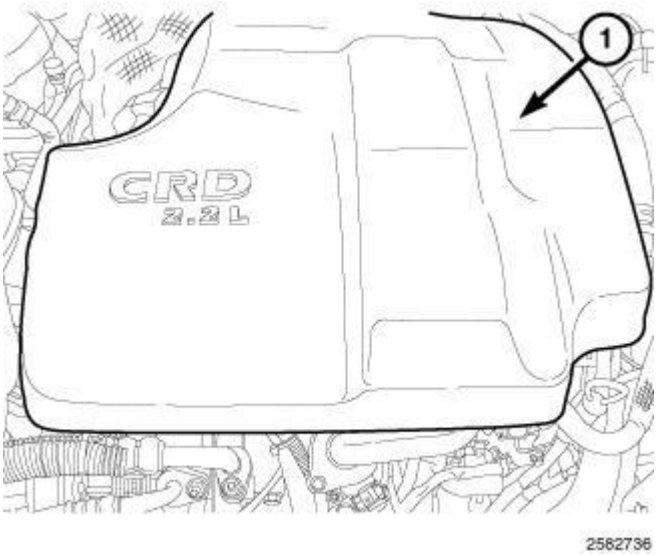


**Fig. 95: Engine Cover**
**Courtesy of CHRYSLER LLC**

1. Align engine cover (1) to mounting studs and firmly press down to lock in place.

## AIR INTAKE SYSTEM

 

## AIR CLEANER

### Removal

**REMOVAL**

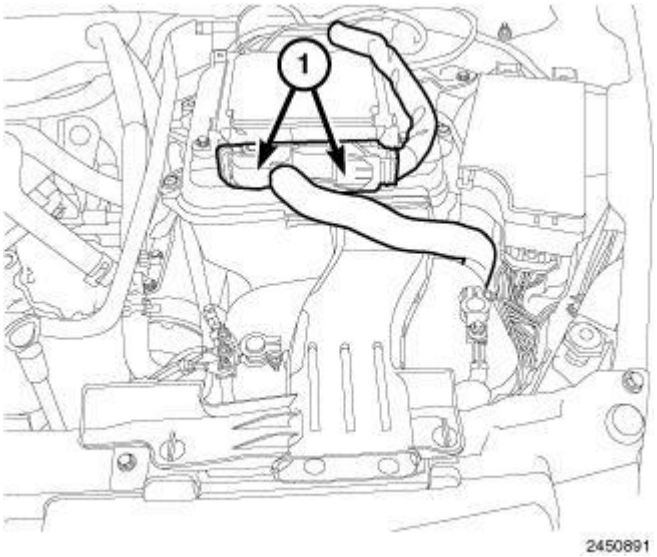


**Fig. 96: PCM Harness Connectors**
**Courtesy of CHRYSLER LLC**

1. Disconnect the negative battery cable.
2. Disconnect the Powertrain Control Module (PCM) harness connectors (1).

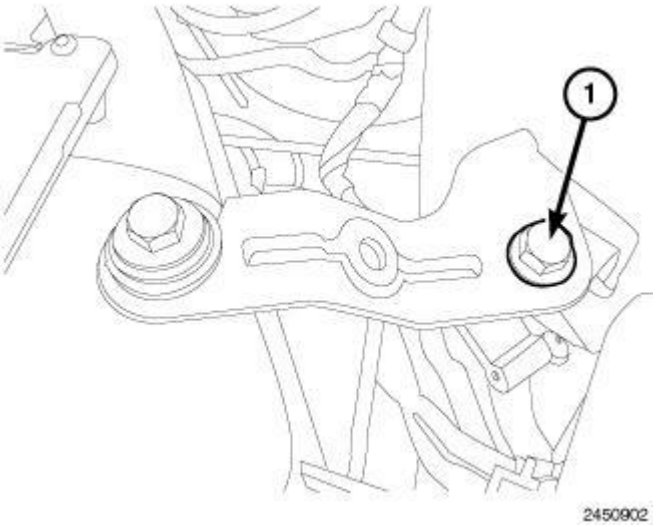


**Fig. 97: Air Cleaner Support Bracket Bolt**
**Courtesy of CHRYSLER LLC**

3. Remove bolt (1) from the air cleaner support bracket.

 

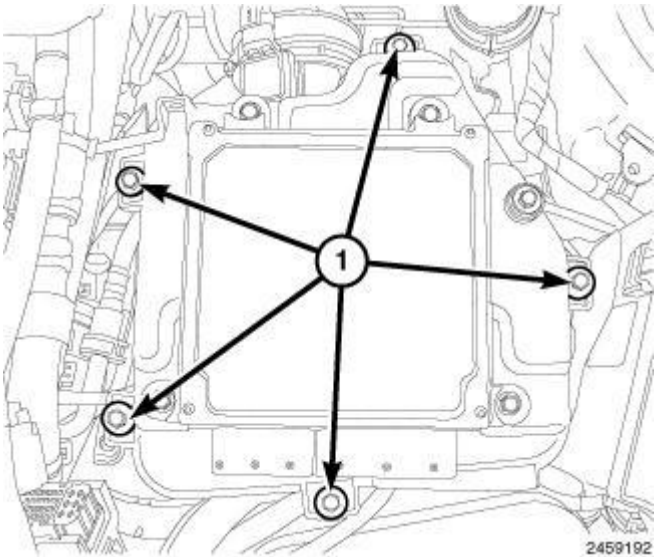


**Fig. 98: Air Cleaner Cover Screws**
**Courtesy of CHRYSLER LLC**

4. Loosen the five screws (1) securing the air cleaner cover and remove the air cleaner cover.

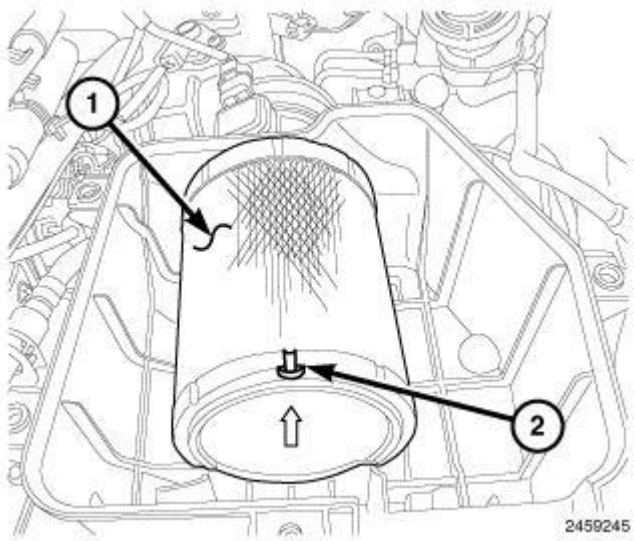


**Fig. 99: Air Filter Element**
**Courtesy of CHRYSLER LLC**

5. Remove air filter element (1).
6. If necessary, clean the inside of the air cleaner housing.

**Installation**

**INSTALLATION**

**CAUTION: Only use Chrysler/Mopar Air Cleaner Filter. Failure to use the**

**recommended Air Cleaner Filter may result in MIL illumination along with the following DTC P2073, P2074, and P2279 being set.**

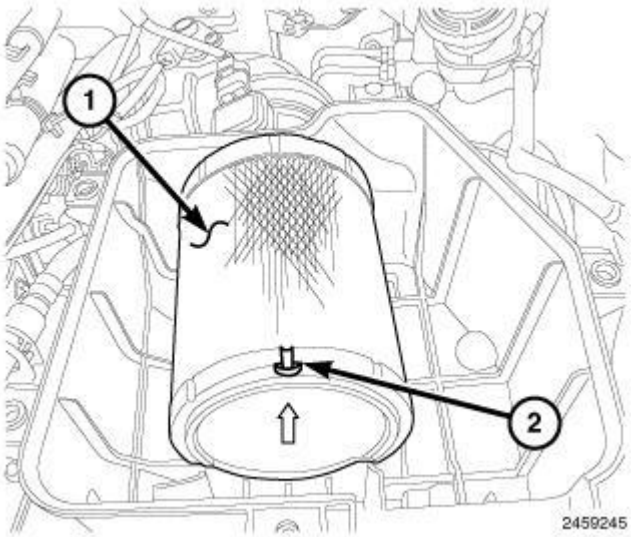


**Fig. 100: Air Filter Element**
**Courtesy of CHRYSLER LLC**

**NOTE:** **Proper installing and orientation for the air cleaner is with the arrows pointing up.**

1. Install new air cleaner filter element (1) with the directional arrow and notch (2) pointing up.

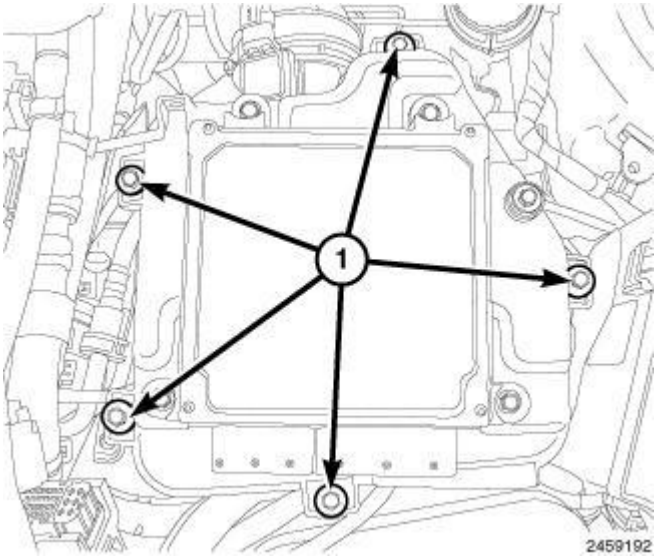


**Fig. 101: Air Cleaner Cover Screws**
**Courtesy of CHRYSLER LLC**

2. Install the air cleaner cover and tighten the five screws (1) securing the air cleaner cover.

 

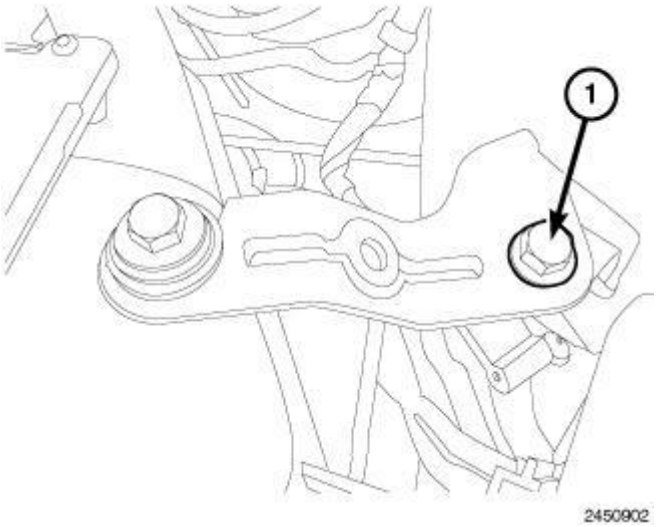


**Fig. 102: Air Cleaner Support Bracket Bolt**
**Courtesy of CHRYSLER LLC**

3. Install the air cleaner support bracket bolt (1).

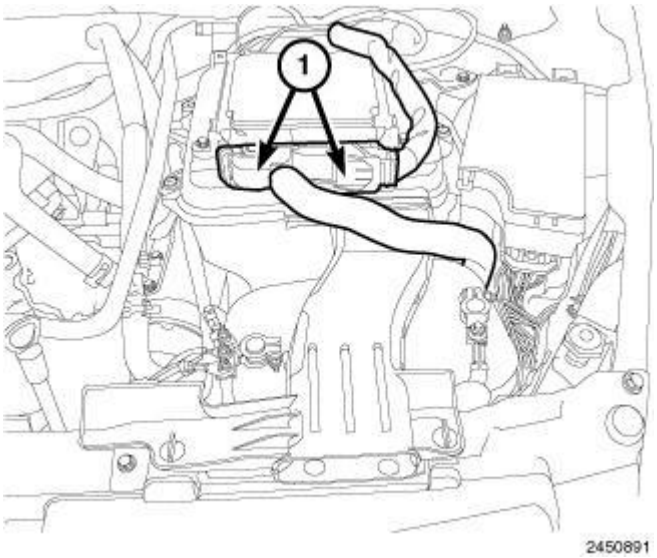


**Fig. 103: PCM Harness Connectors**
**Courtesy of CHRYSLER LLC**

4. Connect the Powertrain Control Module (PCM) harness connectors (1).
5. Connect the negative battery cable.

## BODY, AIR CLEANER

### Removal

#### REMOVAL

 

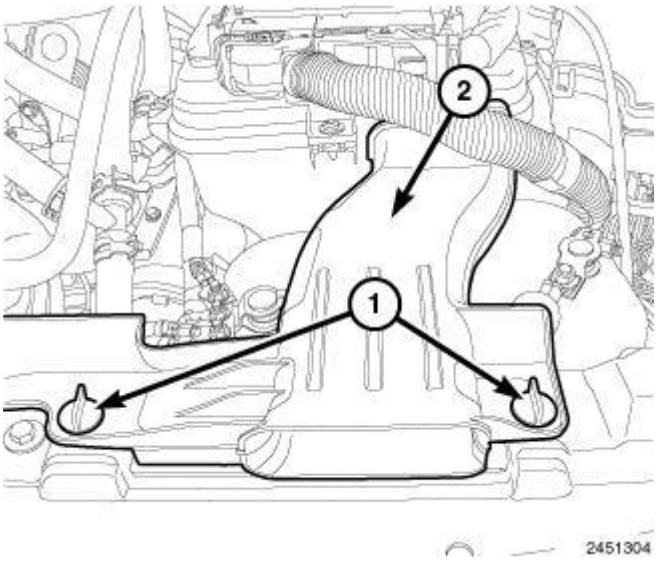


**Fig. 104: Air Inlet Duct & Fasteners**
**Courtesy of CHRYSLER LLC**

1. Remove the engine cover.
2. Turn the fasteners (1) a quarter turn to release the lock tabs and remove the air inlet duct (2).
3. Disconnect the negative battery cable.

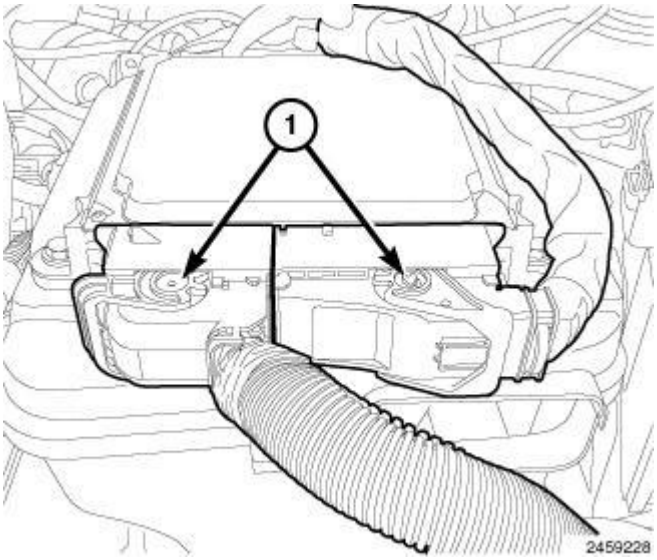


**Fig. 105: PCM Harness Connectors**
**Courtesy of CHRYSLER LLC**

4. Disconnect the Powertrain Control Module (PCM) harness connectors (1).

 

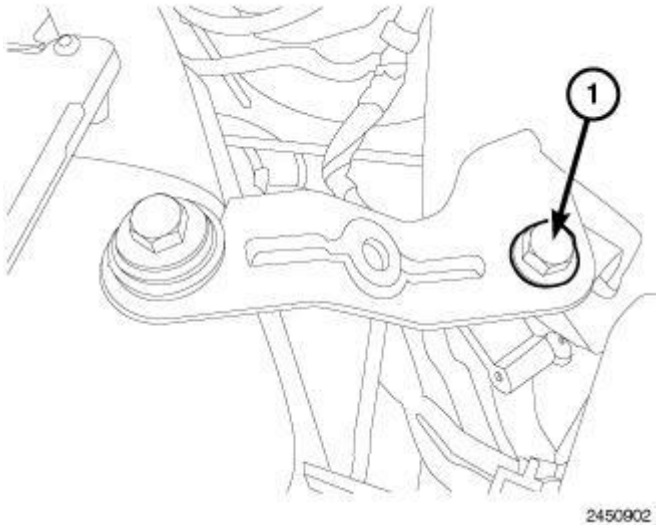


**Fig. 106: Air Cleaner Support Bracket Bolt**
**Courtesy of CHRYSLER LLC**

5. Remove the bolt from air cleaner support bracket (1).

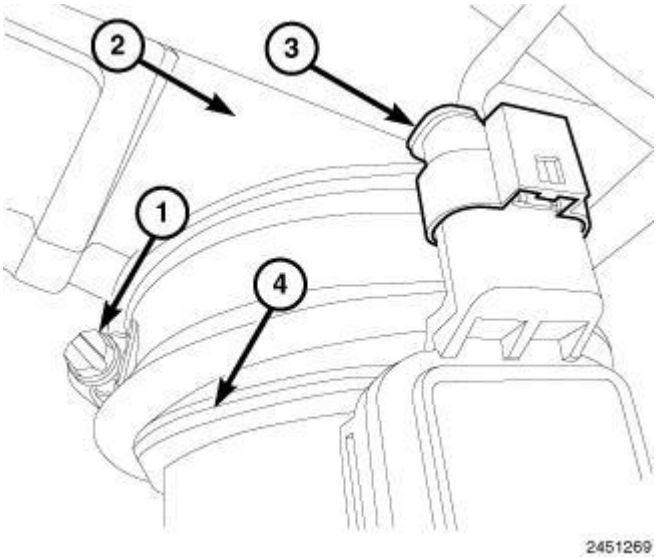


**Fig. 107: Mass Air Flow Sensor, Harness Connector, Turbocharger Inlet Tube & Clamp**
**Courtesy of CHRYSLER LLC**

6. Disconnect the Mass Air Flow (MAF) sensor (3) harness connector.
7. Loosen the clamp (1) and disconnect the turbocharger inlet tube (2) from (MAF) sensor (4).

 

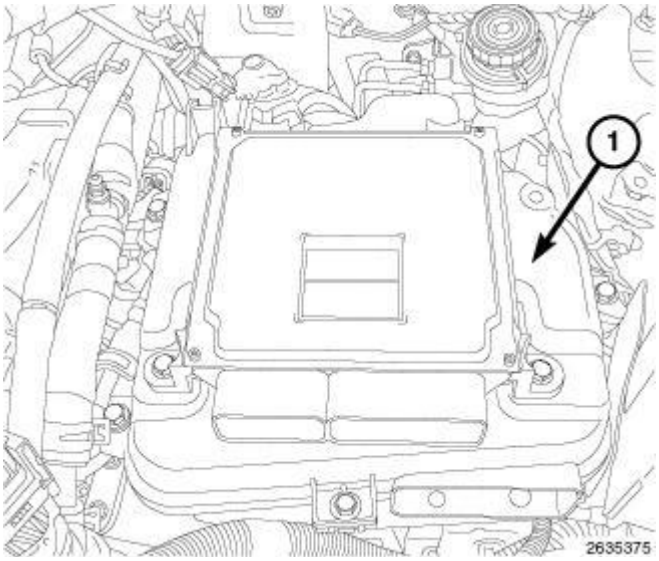


**Fig. 108: Air Cleaner Housing Assembly**
**Courtesy of CHRYSLER LLC**

8. Lift up and remove the air cleaner housing assembly.

**Turbocharger Air Inlet Tube**

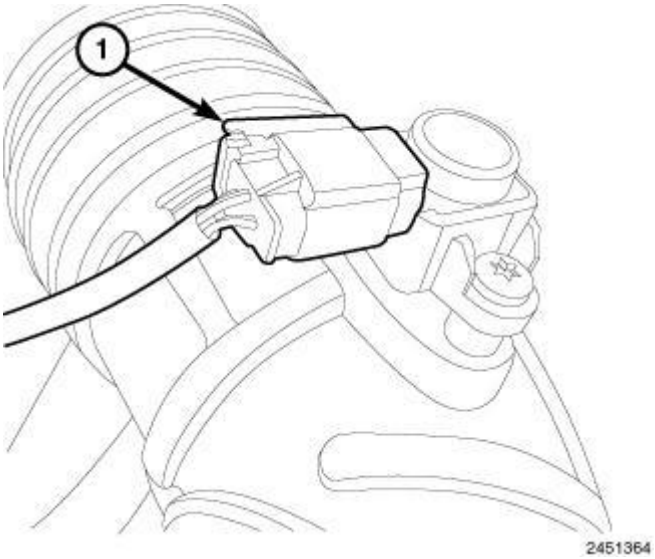


**Fig. 109: Intake Air Temperature/Boost Pressure Sensor**
**Courtesy of CHRYSLER LLC**

1. Disconnect the intake air temperature/boost pressure sensor (1).

 

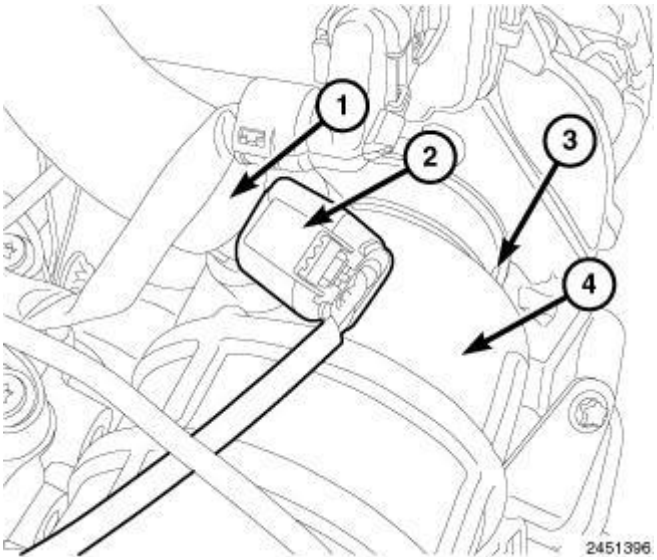


**Fig. 110: CCV Hose, Heater Harness Connector, Turbocharger Inlet Tube & Clamp**
**Courtesy of CHRYSLER LLC**

2. Disconnect the Crankcase Vent (CCV) heater harness connector (2).
3. Remove the CCV hose (1) from the turbocharger inlet tube (4).
4. Loosen the clamp (3) and remove the turbocharger air inlet tube (4) from the turbocharger.

**Installation**

**INSTALLATION**

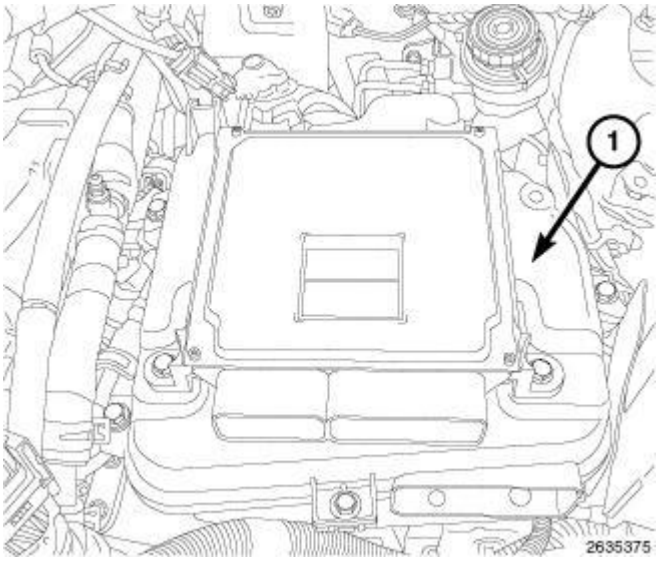


**Fig. 111: Air Cleaner Housing Assembly**
**Courtesy of CHRYSLER LLC**

1. Position the air cleaner housing assembly and push down to lock in place.

 

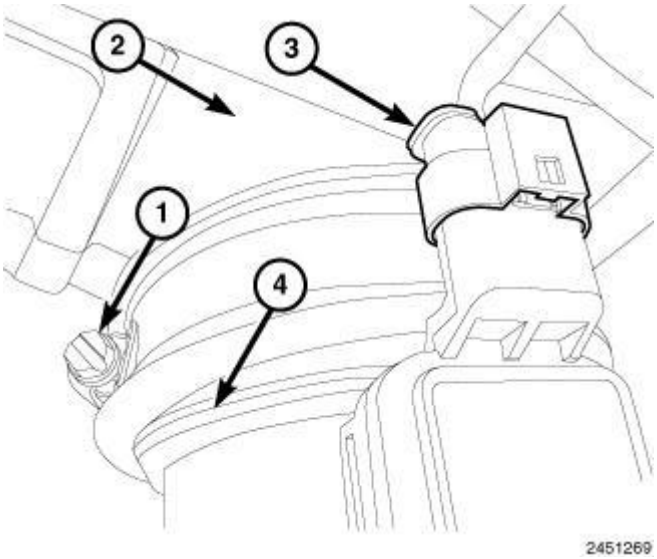


**Fig. 112: Mass Air Flow Sensor, Harness Connector, Turbocharger Inlet Tube & Clamp**
**Courtesy of CHRYSLER LLC**

2. Connect the turbocharger inlet tube (2) to the Mass Air Flow (MAF) sensor (4) and securely tighten the clamp (1).
3. Connect the (MAF) sensor (3) harness connector.

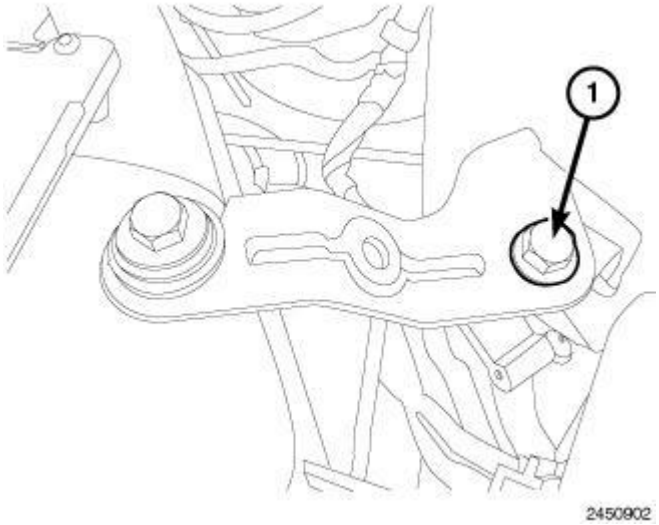


**Fig. 113: Air Cleaner Support Bracket Bolt**
**Courtesy of CHRYSLER LLC**

4. Install the air cleaner support bracket bolt (1).

 

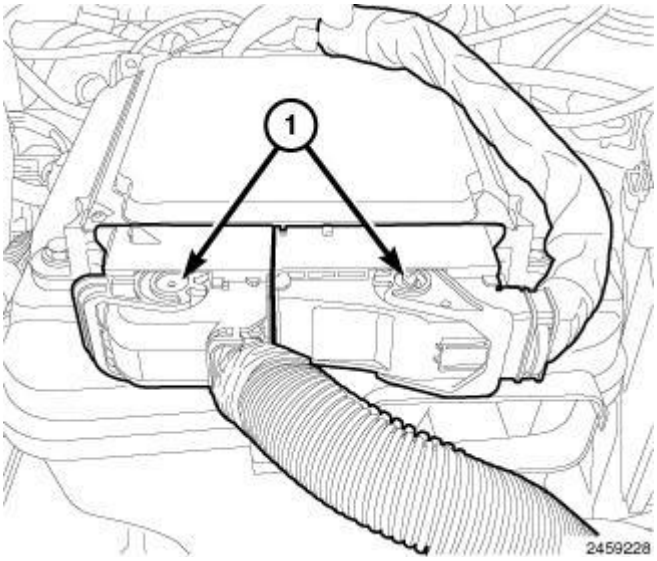


**Fig. 114: PCM Harness Connectors**
**Courtesy of CHRYSLER LLC**

5. Connect the Powertrain Control Module (PCM) harness connectors (1).

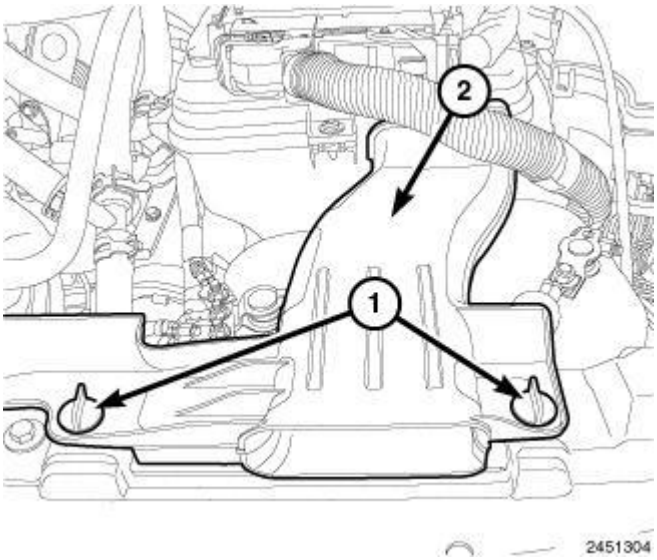


**Fig. 115: Air Inlet Duct & Fasteners**
**Courtesy of CHRYSLER LLC**

6. Disconnect the negative battery cable.
7. Install the air inlet duct (2) and turn the fasteners (1) a quarter turn to lock the lock tabs.
8. Install engine cover.

**Turbocharger Air Inlet Tube**

 

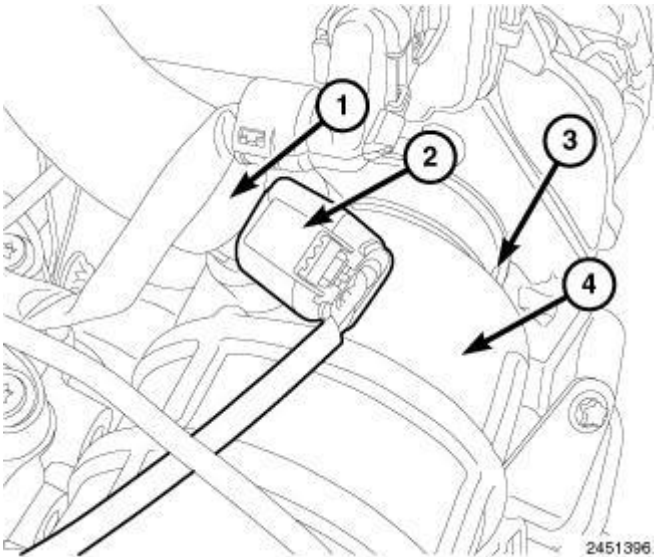


**Fig. 116: CCV Hose, Heater Harness Connector, Turbocharger Inlet Tube & Clamp**
**Courtesy of CHRYSLER LLC**

9. Connect turbocharger inlet hose (4) to the turbocharger and securely tighten clamp (3).
10. Connect the CCV hose (1) to the turbocharger inlet tube (4).
11. Connect the Crankcase Vent (CCV) heater harness connector (2).

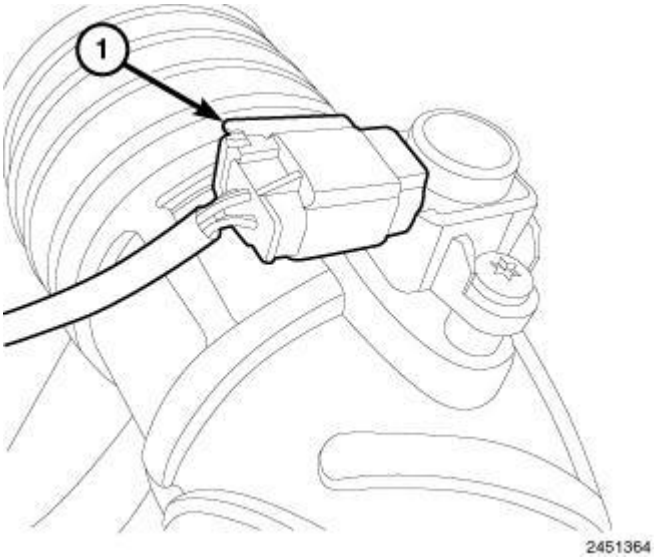


**Fig. 117: Intake Air Temperature/Boost Pressure Sensor**
**Courtesy of CHRYSLER LLC**

12. Connect the intake air temperature sensor (1).

# CYLINDER HEAD

## STANDARD PROCEDURE

 

**CYLINDER HEAD BOLT INSPECTION**

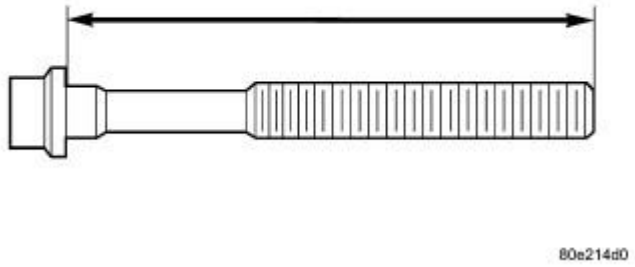


**Fig. 118: Measuring Cylinder Head Bolts**
**Courtesy of CHRYSLER LLC**

1. Measure cylinder head bolts between points shown in illustration.

| Cylinder Head Bolts Dimensions | |
|---|---|
| Thread Diameter | M 12 |
| Length When New | 226 mm (±0.5) |
| Maximum Length | 227.5 mm |

2. If the cylinder head bolt length is greater than the maximum allowable measurement, replace the cylinder head bolts.

**MEASURE CYLINDER HEAD SURFACE**

 

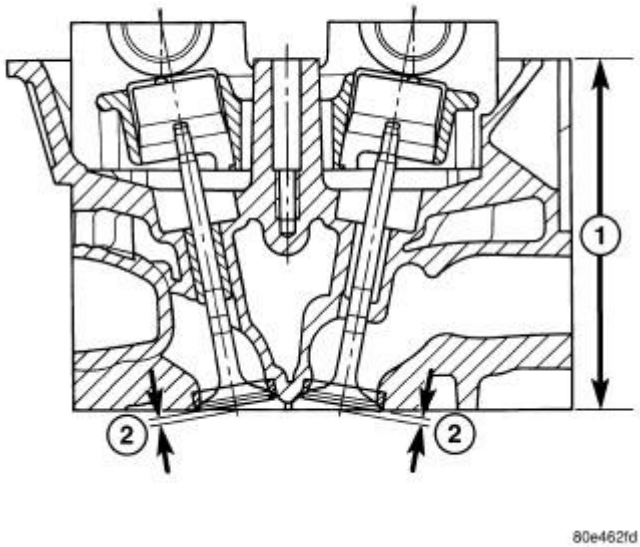


**Fig. 119: Cylinder Head Measurements**
**Courtesy of CHRYSLER LLC**

| |
|---|
| 1 - CYLINDER HEAD HEIGHT |
| 2 - VALVE SETBACK |

**NOTE: Only resurface cylinder head contact surface if porous or damaged. IT IS NOT necessary to rework minor variations in flatness in the longitudinal direction.**

1. Disconnect negative battery cable.
2. Remove cylinder head. Refer to **Cylinder Head , Removal**.
3. Remove valves.
4. Inspect cylinder head contact surface for flatness, porous and damage.
5. Using a straight edge, measure cylinder head and cylinder block flatness.
6. Measure cylinder head height at point (1) indicated and retain reading.

**NOTE: The camshaft housing Must Not be machined. Basic bore of the camshaft bearings will be altered.**

7. Machine cylinder head contact surface, if necessary.
8. Measure cylinder head height (1) at point indicated, record stock removal.
9. Measure valve setback at points (2) indicated.

**NOTE: If measurement is less than dimension "2" no further correct valve clearance**

 

**compensation is possible; replace valve seat ring or cylinder head if measurement is greater than specification.**

**CYLINDER HEAD SPECIFICATIONS**

| Description | Specification |
|---|---|
| Height of Cylinder Head (1), With Out Camshaft Housing | 134.35 mm to 134.65 mm |
| Valve Set Back (2) With New Valves and New Valve Seat Rings | Exhaust Valve:mm - 1.1 mm<br>Intake Valve: 1.0 mm - 1.4 mm |
| Wear Limit After Machining | 134.15 mm |

## REMOVAL

### REMOVAL

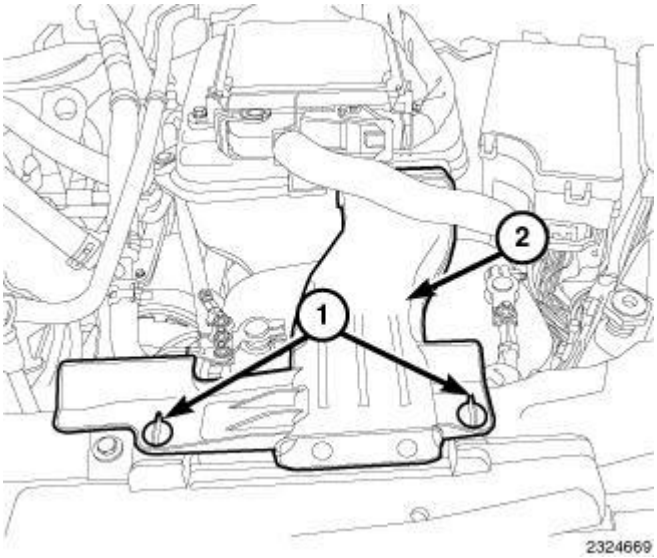


**Fig. 120: Quarter Turn Lock Tabs & Air Inlet Duct**
**Courtesy of CHRYSLER LLC**

1. Release quarter turn lock tabs (1) and remove air inlet duct (2).
2. Disconnect the negative battery cable.
3. Remove the engine cover.
4. Remove air cleaner housing assembly. Refer to **BODY, Air Cleaner , Removal**.
5. Remove air inlet tube to the turbocharger.
6. Remove the belly pan.
7. Drain cooling system. Refer to **Standard Procedure** .

 

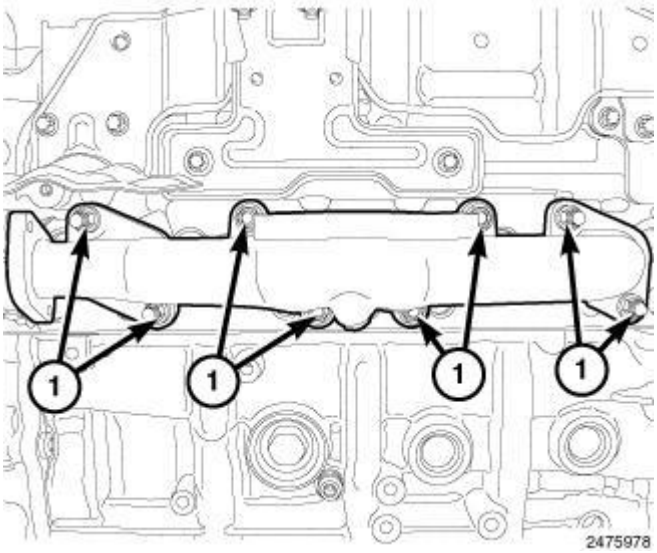


**Fig. 121: Exhaust Manifold Retaining Nuts**
**Courtesy of CHRYSLER LLC**

8. Remove exhaust manifold. Refer to **MANIFOLD, Exhaust , Removal**.
9. Remove the intake manifold. Refer to **MANIFOLD, Intake , Removal**.

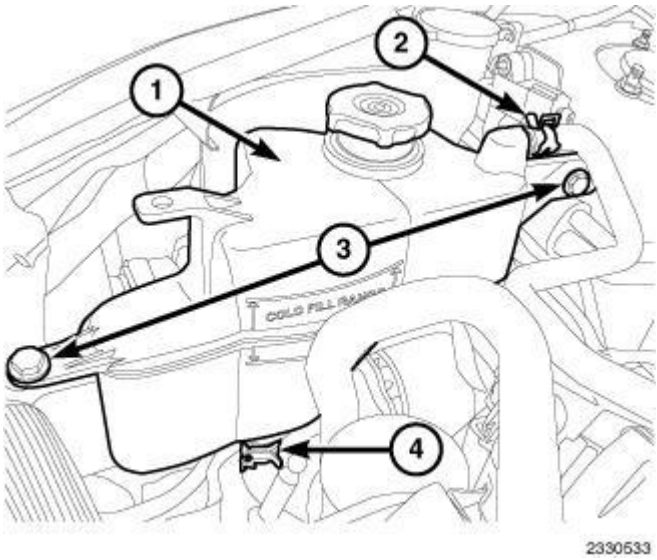


**Fig. 122: Coolant Recovery Reservoir, Clamps & Bolts**
**Courtesy of CHRYSLER LLC**

10. Disconnect the coolant hoses (2 and 4).
11. Remove the bolts (3) and the coolant recovery reservoir (1).

 

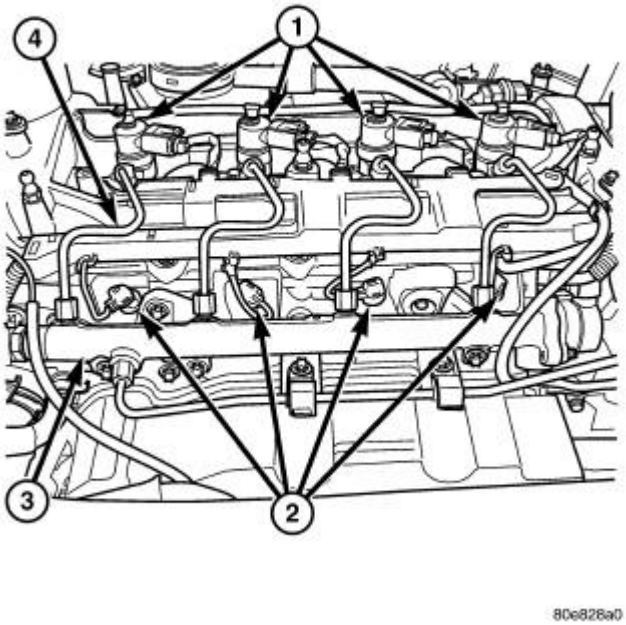


**Fig. 123: Glow Plugs, Harness Connectors & Fuel Rails**
**Courtesy of CHRYSLER LLC**

12. Disconnect the glow plug (2) harness connectors.

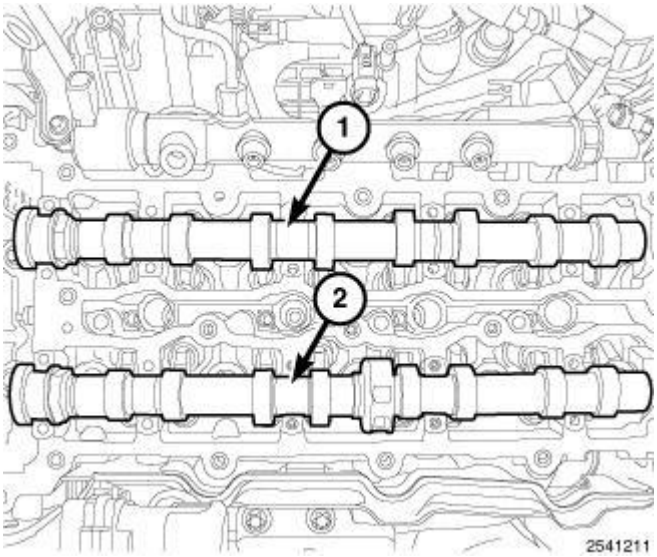


**Fig. 124: Camshafts**
**Courtesy of CHRYSLER LLC**

13. Remove the camshafts. Refer to **CAMSHAFT, Engine , Removal**.

 

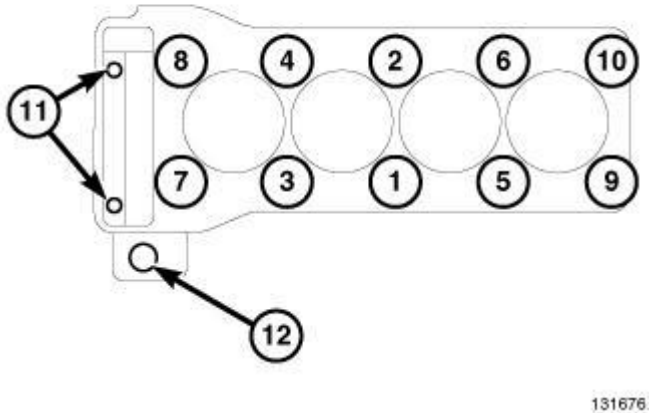


**Fig. 125: Cylinder Head Bolt Removal Sequence**
**Courtesy of CHRYSLER LLC**

14. Remove the rocker arms from cylinder head.
15. Remove the hydraulic lifters from cylinder head.
16. Remove cylinder head bolts in reverse order of the tightening sequence and inspect bolts. Refer to **Cylinder Head , Standard Procedure**.
17. Remove cylinder head assembly from engine.
18. Remove and discard cylinder head gasket.
19. Disassemble cylinder head assembly as necessary for service.

## CLEANING

### CLEANING

To ensure engine gasket sealing, proper surface preparation must be performed, especially with the use of aluminum engine components and multi-layer steel cylinder head gaskets.

**NOTE: Multi-Layer Steel (MLS) head gaskets require a scratch free sealing surface.**

Remove all gasket material from cylinder head and block. Refer to **Engine - Standard Procedure**. Be careful not to gouge or scratch the aluminum head sealing surface.

Clean all engine oil passages.

## INSTALLATION

### INSTALLATION

**WARNING: NO FIRE, OPEN FLAMES OR SMOKING. SERVICE VEHICLES IN WELL**

 

**VENTILATED AREAS. RISK OF POISONING FROM INHALING OR SWALLOWING FUEL. RISK OF INJURY FROM SKIN AND EYE CONTACT WITH FUEL. WEAR PROTECTIVE CLOTHING.**

**NOTE: Thoroughly clean all mating surfaces with appropriate solvents and blow out bolt holes, to assure that no grease or oil is present during reassembly.**

**NOTE: If piston or connecting rods have been replaced, measure piston projection.**

**NOTE: Check facing on cylinder head contact surface.**

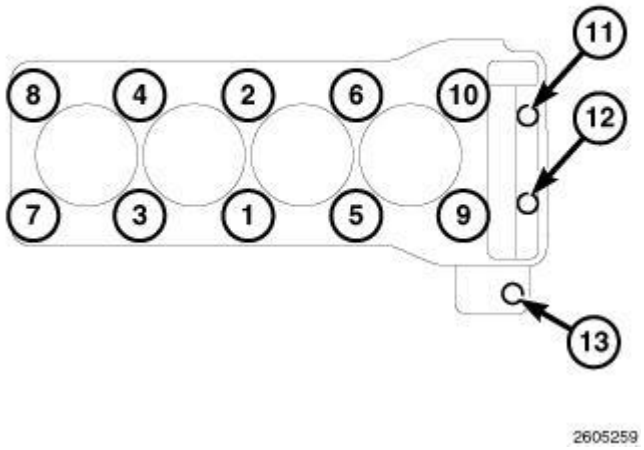


**Fig. 126: Cylinder Head Bolts Tightening Sequence**
**Courtesy of CHRYSLER LLC**

1. Position the cylinder head gasket properly on engine using the dowel pins as guide.

   **NOTE: Inspect all cylinder head bolts for defects and stretching before installation. Refer to Cylinder Head , Standard Procedure.**

2. Install cylinder head assembly on engine block.

   **NOTE: The M12 cylinder head bolts must be tightened in 5 stages.**

   **NOTE: M12 bolts are (1 - 10) and M8 bolts are (11 - 13).**

3. Install M12 cylinder head bolts. Tighten bolts in numeric order starting with number 1 to 10 N.m (89 in. lbs.).
4. Install M8 cylinder head-to-timing chain cover bolts. Tighten bolts (11, 12, and 13) to 20 N.m (177 in. lbs.).

 

5. Tighten M12 cylinder head bolts in numeric order starting with number 1 to:
    - 50 N.m (37 ft. lbs.).
    - Plus an additional 90 °
    - Plus an additional 90 °
    - Plus an additional 90 °
    - Plus an additional 90 °
6. Install the hydraulic lifters into cylinder head.
7. Install the rocker arms into cylinder head.

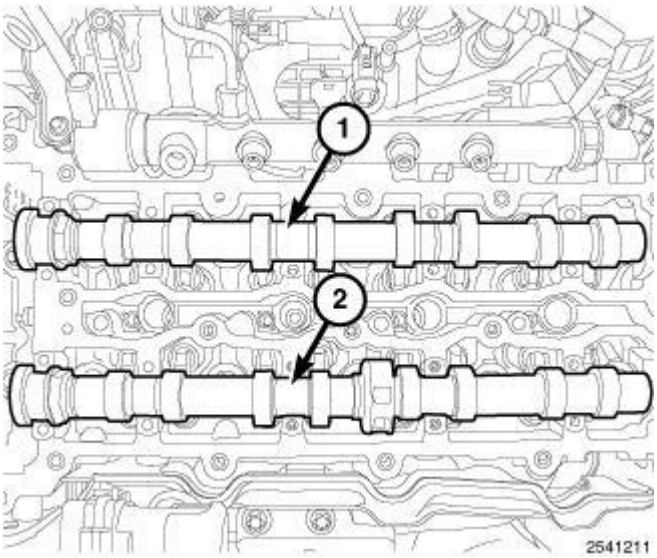


**Fig. 127: Camshafts**
**Courtesy of CHRYSLER LLC**

8. Install the camshafts. Refer to **CAMSHAFT, Engine , Installation**.

 

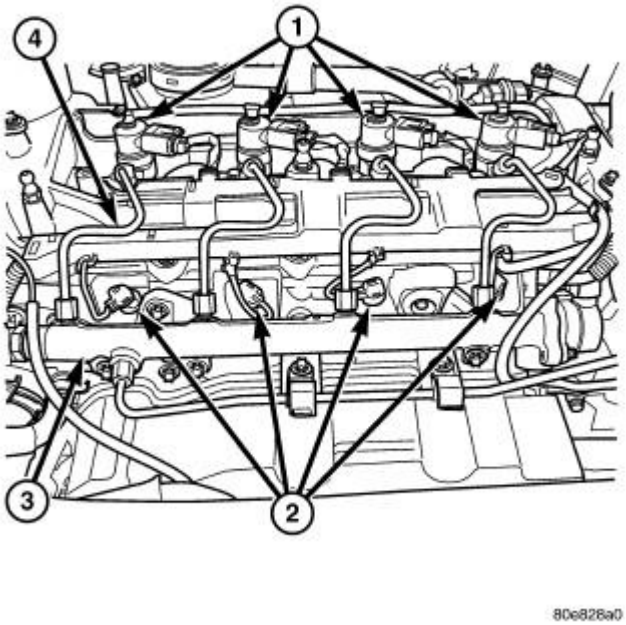


**Fig. 128: Glow Plugs, Harness Connectors & Fuel Rails**
**Courtesy of CHRYSLER LLC**

9. Connect the glow plug (2) harness connectors.

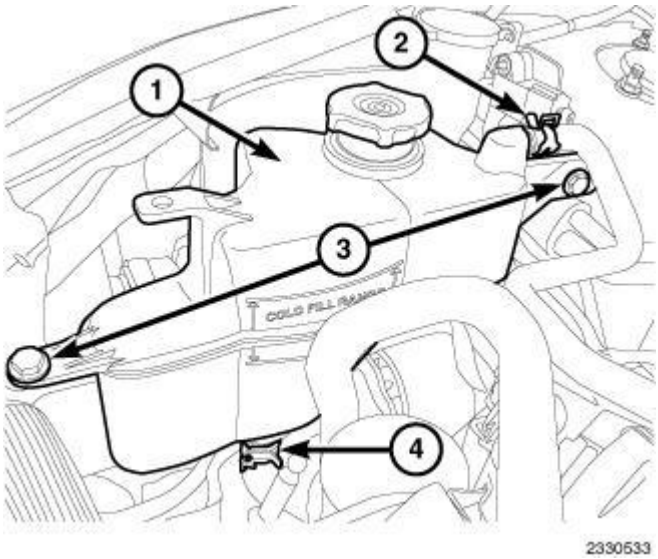


**Fig. 129: Coolant Recovery Reservoir, Clamps & Bolts**
**Courtesy of CHRYSLER LLC**

10. Install the coolant recovery reservoir (1). Tighten bolts (3) to 4 N.m (35 in. lbs.).

11. Connect the coolant hoses (2 and 4).
12. Install the intake manifold. Refer to **MANIFOLD, Intake , Installation**.

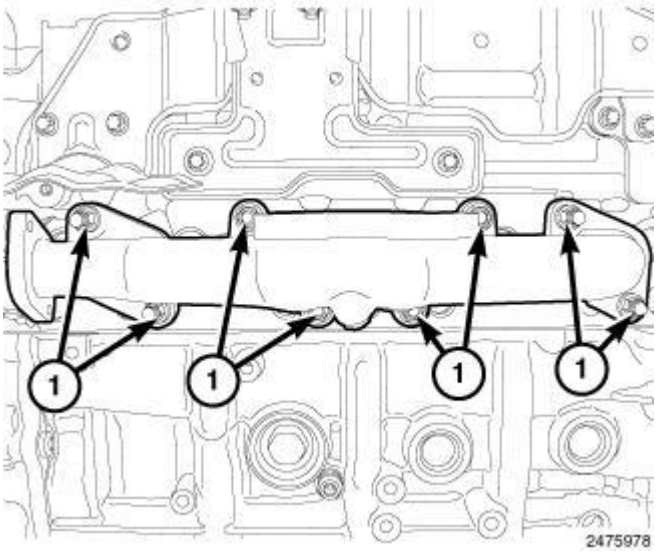


**Fig. 130: Exhaust Manifold Retaining Nuts**
**Courtesy of CHRYSLER LLC**

13. Install the exhaust manifold. Refer to **MANIFOLD, Exhaust , Installation**.

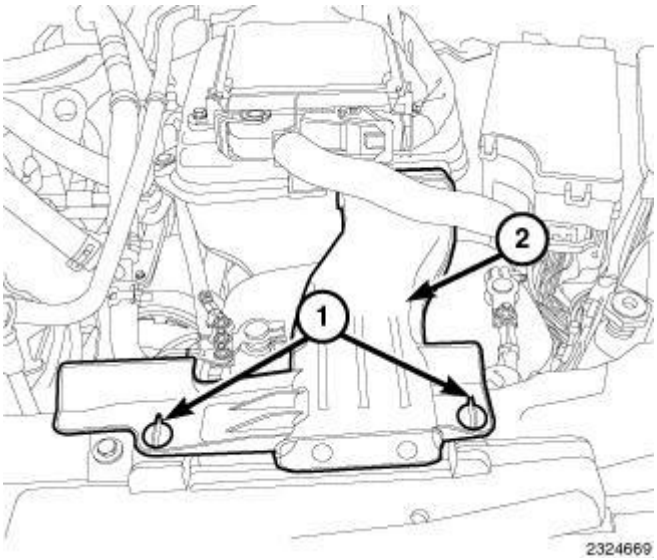


**Fig. 131: Quarter Turn Lock Tabs & Air Inlet Duct**
**Courtesy of CHRYSLER LLC**

14. Fill the cooling system. Refer to **Standard Procedure** .
15. Install the belly pan.
16. Install the air inlet tube to the turbocharger.
17. Install the air cleaner housing assembly. Refer to **BODY, Air Cleaner , Installation**.

 

18. Connect the negative battery cable.
19. Start engine and check for leaks.
20. Install engine cover.
21. Install the air inlet duct (2) and lock the quarter turn lock tabs (1).

## CAMSHAFT, ENGINE

### Standard Procedure

#### STANDARD PROCEDURE - CHECKING CAMSHAFT POSITION

1. Disconnect the negative battery cable.
2. Remove engine cover.
3. Remove cylinder head cover Refer to **COVER(S), Cylinder Head , Removal**.
4. Clean injectors and recesses. Refer to **STANDARD PROCEDURE** .

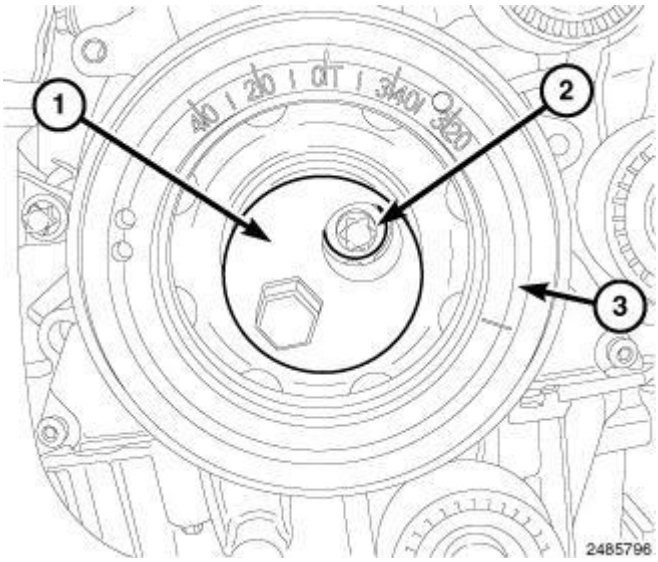


**Fig. 132: Vibration Damper Holder, Bolts & Vibration Damper**
**Courtesy of CHRYSLER LLC**

**NOTE: Rotate engine at crankshaft only. DO NOT crank engine at the camshaft and DO NOT rotate the engine backward.**

5. Using Vibration Damper Holder (special tool #10236, Holder, Vibration Damper) (1), to rotate engine.

 

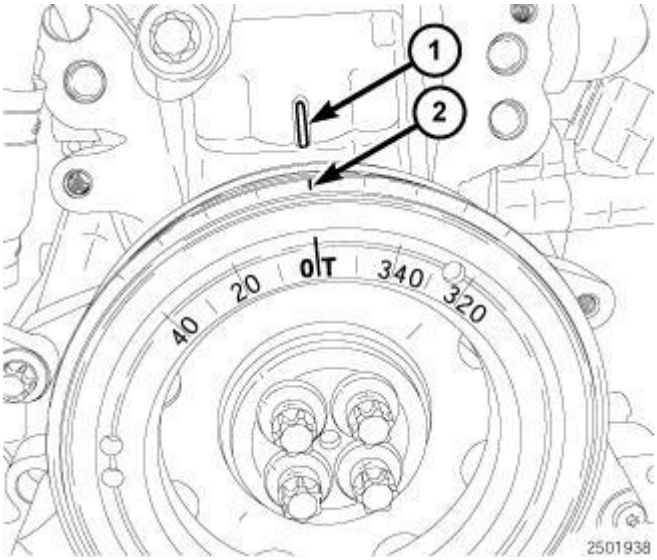


**Fig. 133: Positioning Cylinder No. 1 Piston To Ignition TDC**
**Courtesy of CHRYSLER LLC**

6. Rotate engine to position cylinder No. 1 piston to ignition TDC.

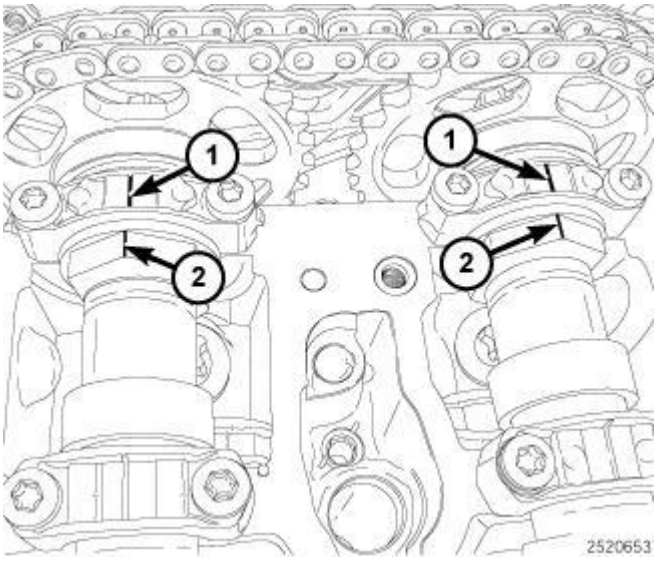


**Fig. 134: Ensuring Camshaft Mark Is Aligned With Bearing Cap Mark**
**Courtesy of CHRYSLER LLC**

7. Verify the alignment of the camshaft mark (2) is aligned with the bearing cap mark (1) is at (TDC).
8. Install cylinder head cover. Refer to **COVER(S), Cylinder Head , Installation**.
9. Connect the negative battery cable.
10. Start the engine and inspect for leaks.
11. Install engine cover.

**Removal**

 

**REMOVAL**

1. Disconnect the negative battery cable.
2. Remove engine cover.
3. Remove the belly pan.
4. Remove the upper timing chain cover. Refer to **COVER(S), Engine Timing , Removal**.

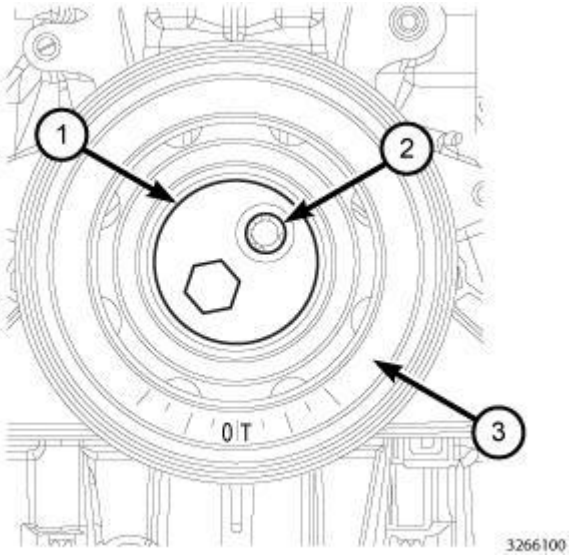


**Fig. 135: Vibration Damper Holder Tool, Vibration Damper & Bolts**
**Courtesy of CHRYSLER LLC**

**NOTE: Rotate engine at crankshaft only. DO NOT crank engine at the camshaft and DO NOT rotate the engine backward.**

5. Using Vibration Damper Holder (special tool #10236, Holder, Vibration Damper) (1), to rotate engine.

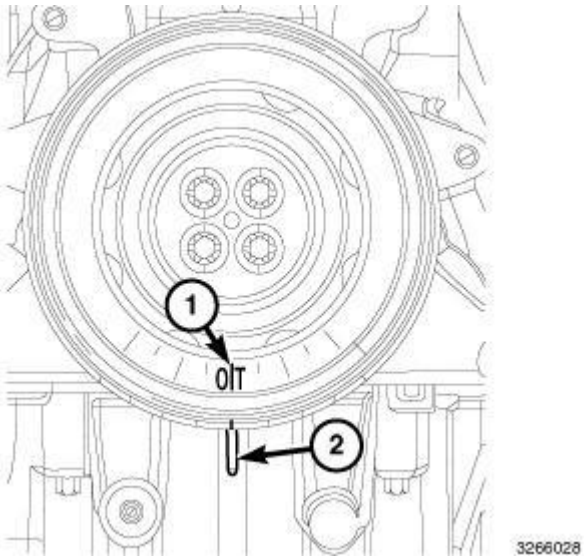


 

**Fig. 136: Crankshaft Alignment Timing Marks**
**Courtesy of CHRYSLER LLC**

6. Rotate the crankshaft to align the timing mark (1) with mark (2) to set cylinder No. 1 at Top Dead Center (TDC).

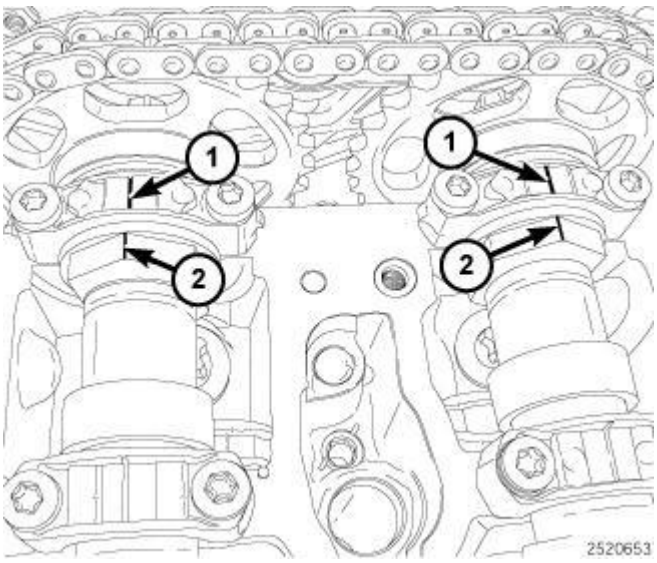


**Fig. 137: Ensuring Camshaft Mark Is Aligned With Bearing Cap Mark**
**Courtesy of CHRYSLER LLC**

7. Verify the alignment of the camshaft mark (2) is aligned with the bearing cap mark (1) is at (TDC).

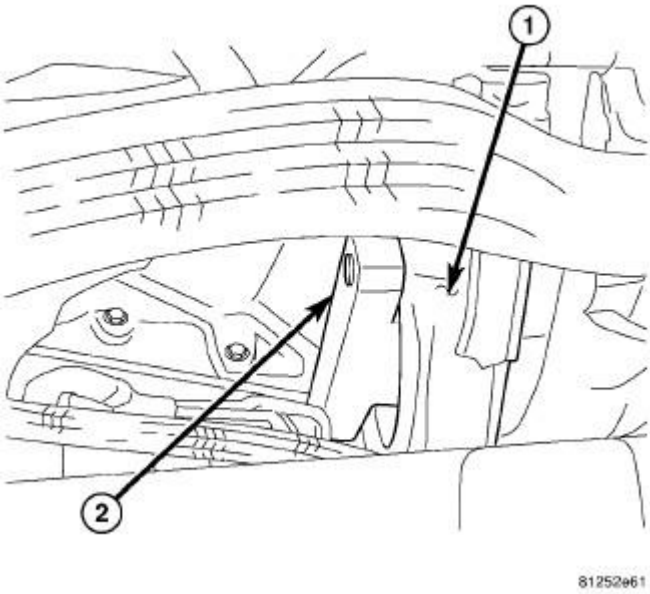


**Fig. 138: Flywheel/Clutch Plate Lock**

 

**Courtesy of CHRYSLER LLC**

8. Remove the starter Refer to **STARTER , Removal** .
9. Install the Flywheel/Clutch Plate Lock (special tool #10232, Lock, Flywheel/Clutch Plate) (2).

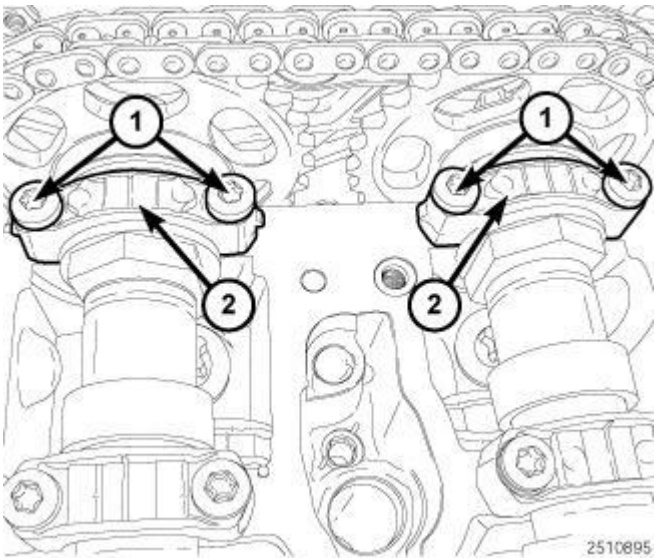


**Fig. 139: No. 1 Camshaft Bearing Caps & Bolts**
**Courtesy of CHRYSLER LLC**

10. Remove bolts (1) and the number one camshaft bearing caps (2).

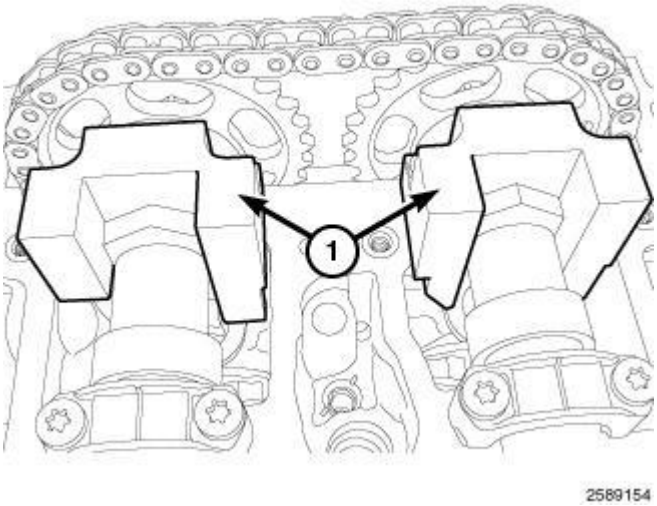


**Fig. 140: Camshaft Lock Tools**
**Courtesy of CHRYSLER LLC**

11. Install the Camshaft Lock Tools (1) (special tool #10234, Lock, Camshaft) and tighten bolts finger tight.

 

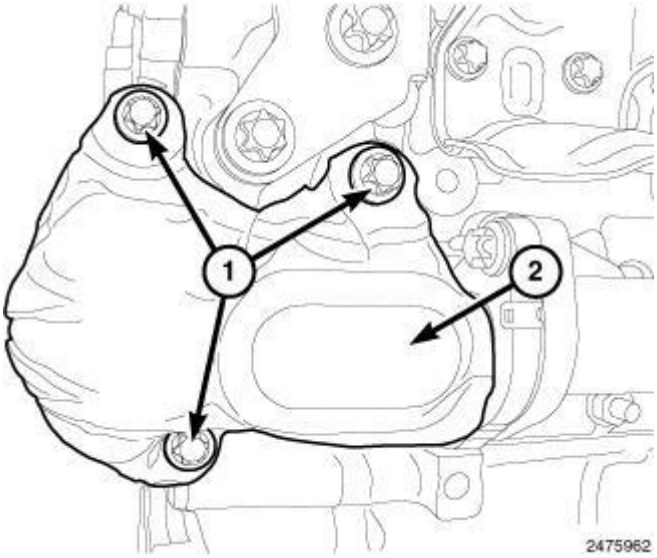


**Fig. 141: EGR Pipe Heat Shield & Bolts**
**Courtesy of CHRYSLER LLC**

12. Remove bolts (1) and the EGR pipe heat shield (2).

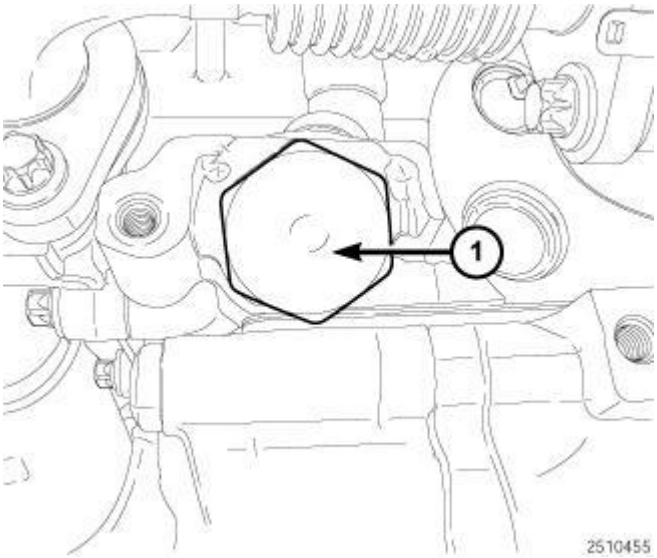


**Fig. 142: Timing Chain Tensioner**
**Courtesy of CHRYSLER LLC**

13. Remove timing chain tensioner (1).

 

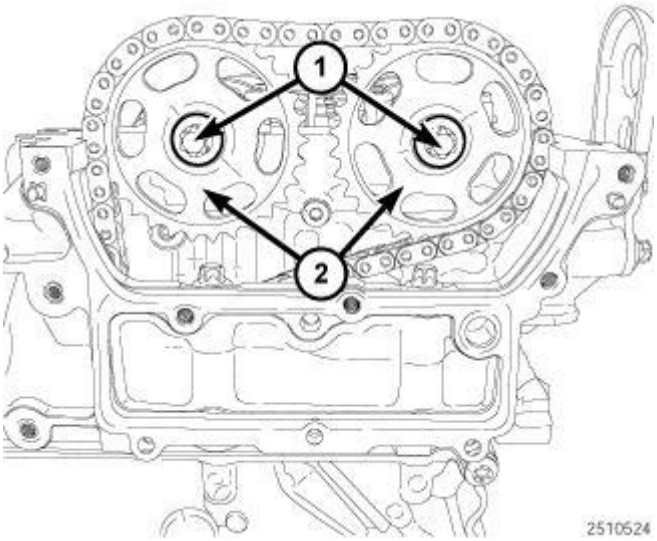


**Fig. 143: Camshaft Sprockets & Bolts**
**Courtesy of CHRYSLER LLC**

**NOTE: Camshaft sprocket bolts (1) are left hand thread.**

14. Remove bolts (1) and the camshaft sprockets (2) and secure the timing chain from falling down.

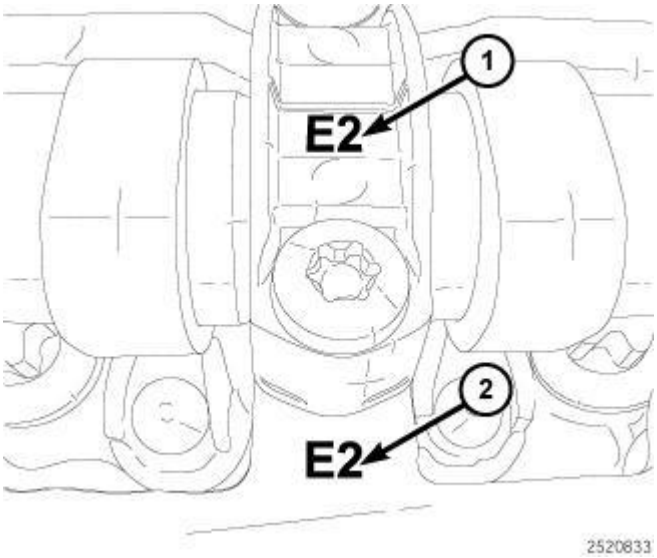


**Fig. 144: Mark And Number Camshaft Caps & Cylinder Head**
**Courtesy of CHRYSLER LLC**

**NOTE: Intake camshaft "E" shown in illustration, exhaust similar.**

**NOTE: Verify that the intake and exhaust camshaft caps (1) along with cylinder head (2) are marked. "A" exhaust and "E" intake and are numbered.**

 

15. If there are no mark on the camshafts bearing caps, mark each bearing cap to it location.
16. Remove the intake and exhaust camshaft bearing caps in the following order (E 1, E 3, E 5) and (A 1, A 3, A 5).
17. Remove the intake and exhaust camshaft bearing caps the following order (E 2, E 4) and (A 2, A 4) in half turn increments.

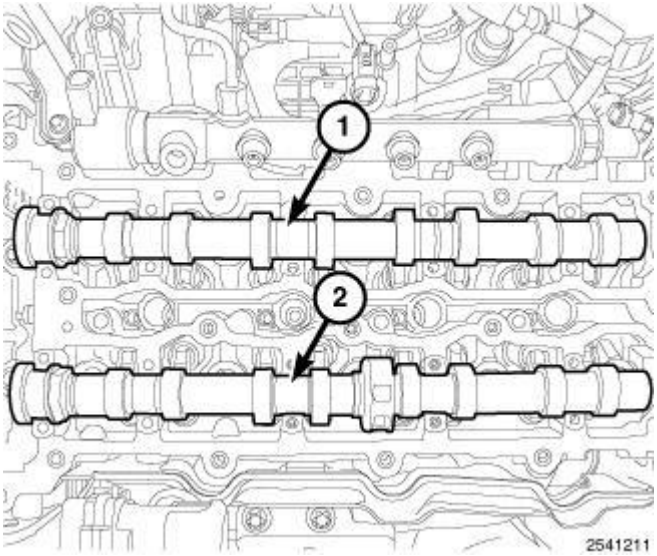


**Fig. 145: Camshafts**
**Courtesy of CHRYSLER LLC**

18. Remove the intake (1) and exhaust (2) camshafts.

**NOTE: Number the location of each rocker arm.**

19. Remove the rocker arm assembly from the cylinder head.

**Installation**

**INSTALLATION**

 

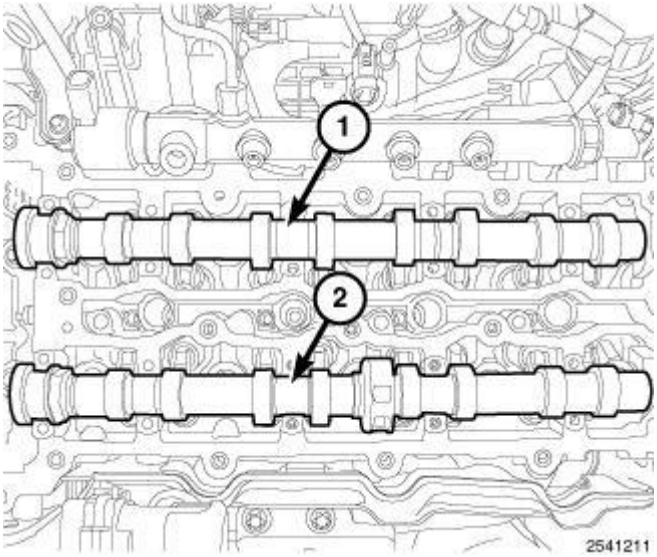


**Fig. 146: Camshafts**
**Courtesy of CHRYSLER LLC**

**CAUTION: The camshafts are sensitive to fracturing. Ensure they are installed free of stress.**

1. Inspect rocker arms for wear or damage and replace as necessary.
2. Inspect the hydraulic lifters for wear or damage and replace as necessary.
3. Install the intake (1) and exhaust (2) camshafts.

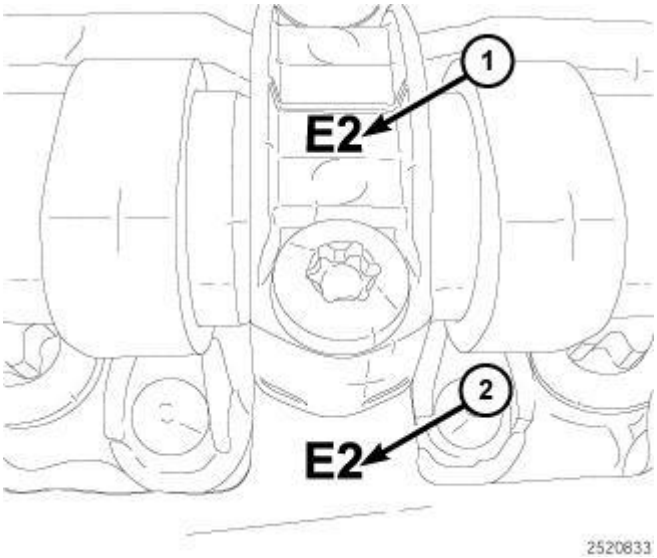


**Fig. 147: Mark And Number Camshaft Caps & Cylinder Head**
**Courtesy of CHRYSLER LLC**

**NOTE: Pay attention to markings on camshaft bearing caps (1) to cylinder head (2).**

 

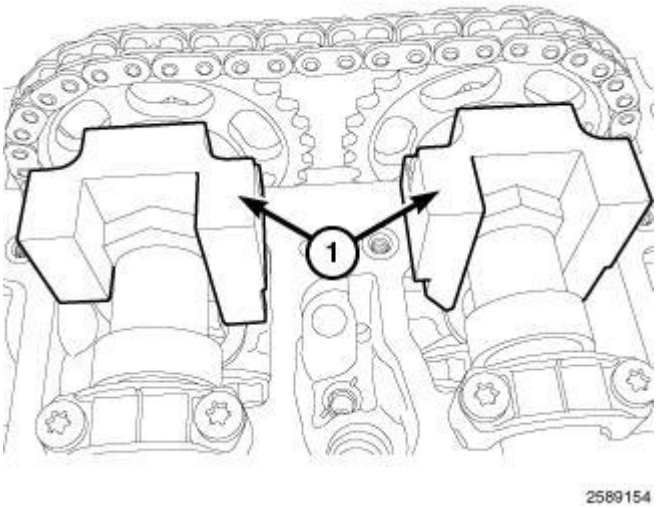


**Fig. 148: Camshaft Lock Tools**
**Courtesy of CHRYSLER LLC**

4. Using new bolts, install camshaft bearing caps the following order (A 2, A 4) and (E 2, E 4) and tighten bolts finger tight.
5. Using new bolts, install and the remaining intake and exhaust camshaft bearing caps in the following order (E 3, E 5) and (A 3, A 5). Tighten bolts finger tight.
6. Using the old bolts, install the Camshaft Lock Tool (1) (special tool #10234, Lock, Camshaft).
7. Tighten the camshaft bolts to:
   - 5 N.m (44 in. lbs.).
   - 9 N.m (80 in. lbs.).

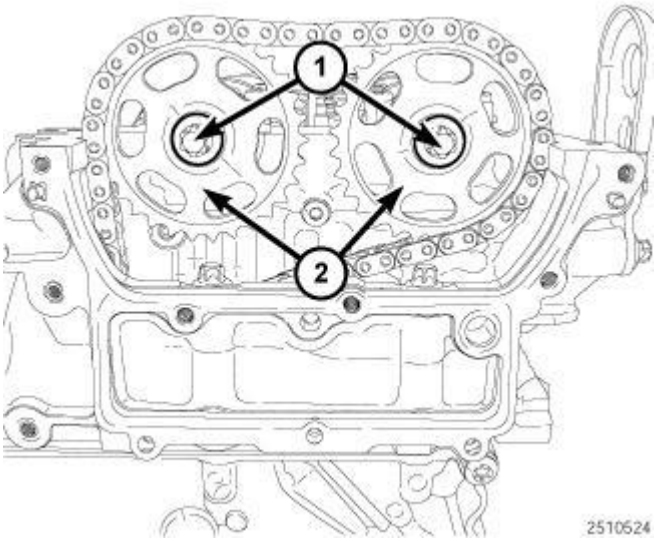


**Fig. 149: Camshaft Sprockets & Bolts**
**Courtesy of CHRYSLER LLC**

 

8. Position the timing chain unto the camshaft sprockets (2) and install onto camshaft. Using new bolts, tighten the camshaft bolts (1) finger tight.

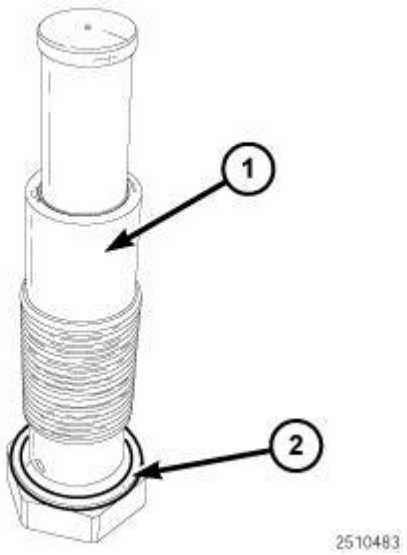


**Fig. 150: Sealing Washer & Timing Chain Tensioner**
**Courtesy of CHRYSLER LLC**

9. Install a new sealing washer (2) onto the timing chain tensioner (1).

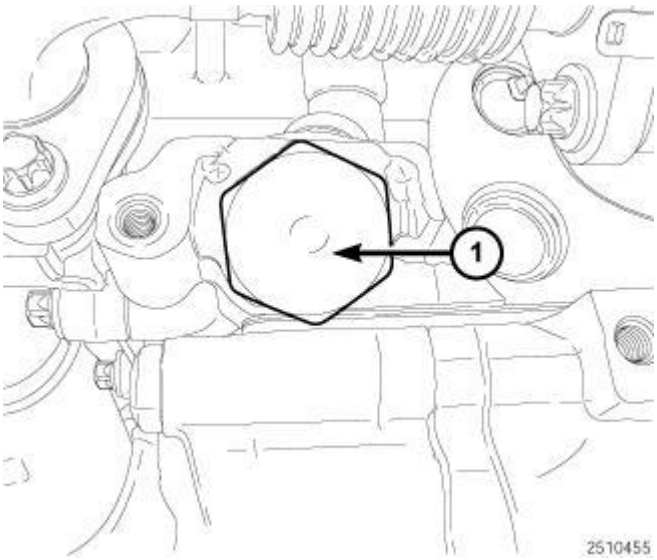


**Fig. 151: Timing Chain Tensioner**
**Courtesy of CHRYSLER LLC**

10. Install timing chain tensioner (1) and tighten to 80 N.m (59 ft. lbs.).
11. Tighten the camshaft bolts (1) to 55 N.m (41 ft. lbs.) plus an additional 90°.
12. Install the upper timing chain cover. Refer to **COVER(S), Engine Timing , Installation**.

 

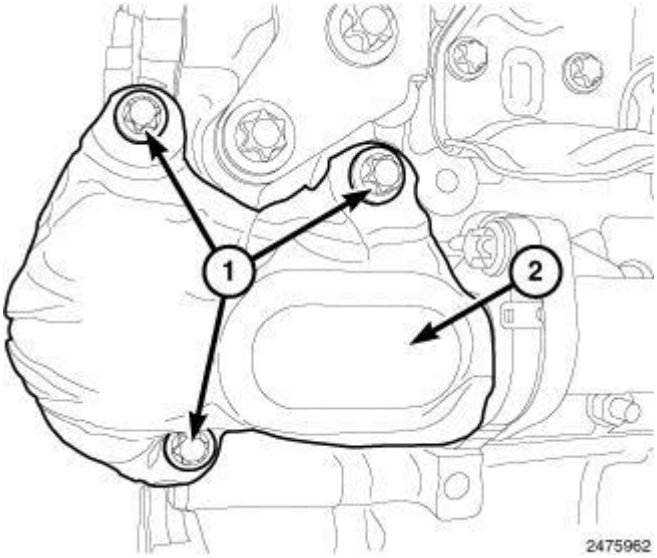


**Fig. 152: EGR Pipe Heat Shield & Bolts**
**Courtesy of CHRYSLER LLC**

13. Install the EGR pipe heat shield. Tighten bolts to 9 N.m (80 in. lbs.).

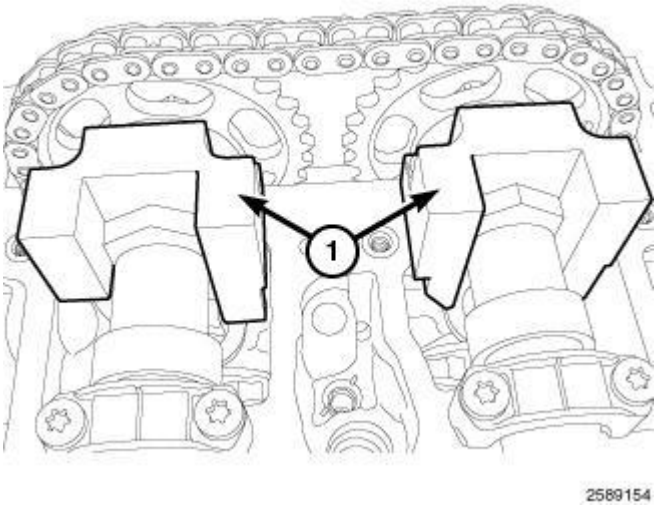


**Fig. 153: Camshaft Lock Tools**
**Courtesy of CHRYSLER LLC**

14. Remove bolts and the Camshaft Lock Tool (1) (special tool #10234, Lock, Camshaft).

 

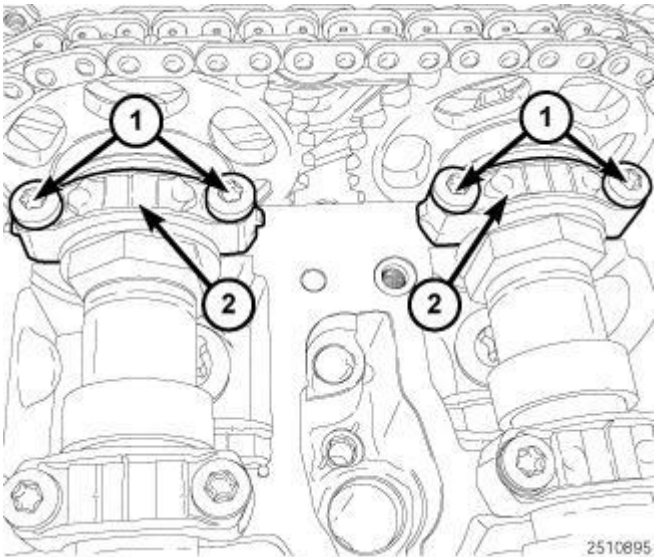


**Fig. 154: No. 1 Camshaft Bearing Caps & Bolts**
**Courtesy of CHRYSLER LLC**

15. Using new bolts (1), install the camshaft bearing caps (2). Tighten bolts (1) to 9 N.m (80 in. lbs.).

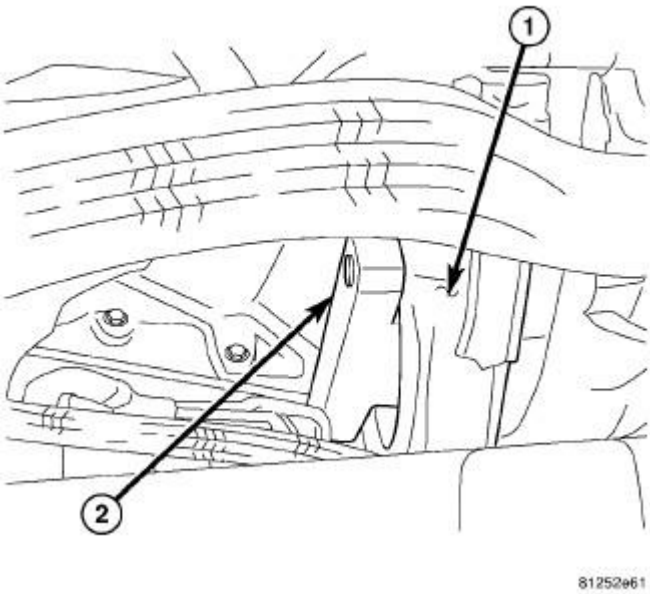


**Fig. 155: Flywheel/Clutch Plate Lock**
**Courtesy of CHRYSLER LLC**

16. Remove the Flywheel/Clutch Plate Lock (special tool #10232, Lock, Flywheel/Clutch Plate) (2).
17. Install the starter. Refer to **STARTER , Installation** .
18. Connect negative battery cable.
19. Start engine and inspect for leaks.

 

20. Install the belly pan.
21. Install engine cover.

## COVER(S), CYLINDER HEAD

### Removal

#### REMOVAL

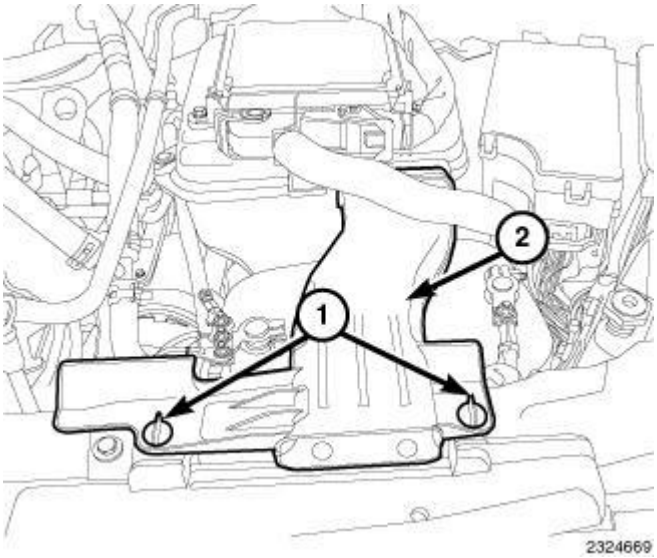


**Fig. 156: Quarter Turn Lock Tabs & Air Inlet Duct**
**Courtesy of CHRYSLER LLC**

1. Release quarter turn lock tabs (1) and remove air inlet duct (2).
2. Disconnect the negative battery cable.
3. Remove engine cover.

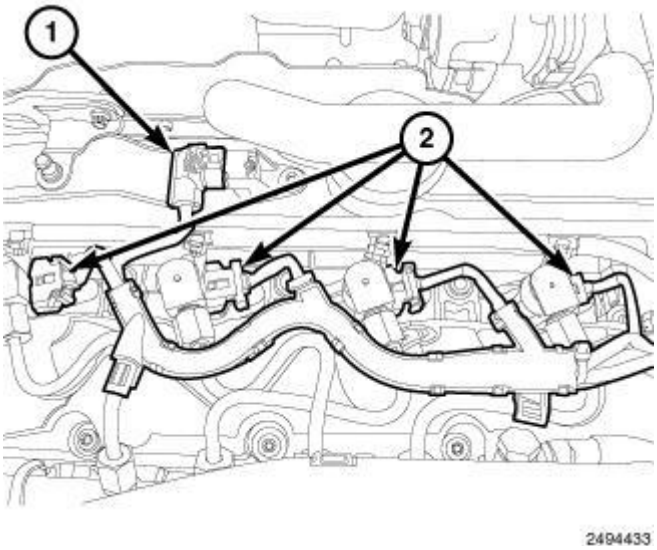


 

**Fig. 157: Camshaft Position Sensor (CMP) Harness Connector & Fuel Injector Harness Connectors**
**Courtesy of CHRYSLER LLC**

4. Disconnect the Camshaft Position Sensor (CMP) (1) harness connector.
5. Disconnect the fuel injector harness connector (2).
6. Lift up on fuel injector wire harness and position aside.

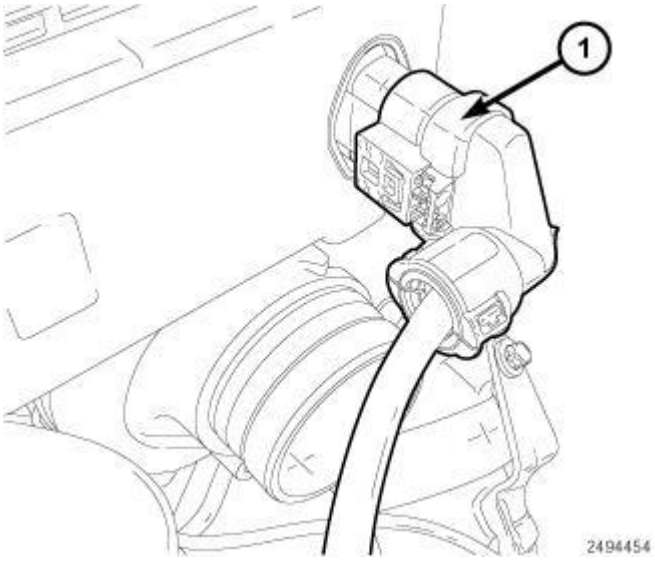


**Fig. 158: Turbocharger Actuator Harness Connector**
**Courtesy of CHRYSLER LLC**

7. Disconnect the turbocharger actuator (1) harness connector.
8. Remove the air cleaner body. Refer to **BODY, Air Cleaner , Removal**.

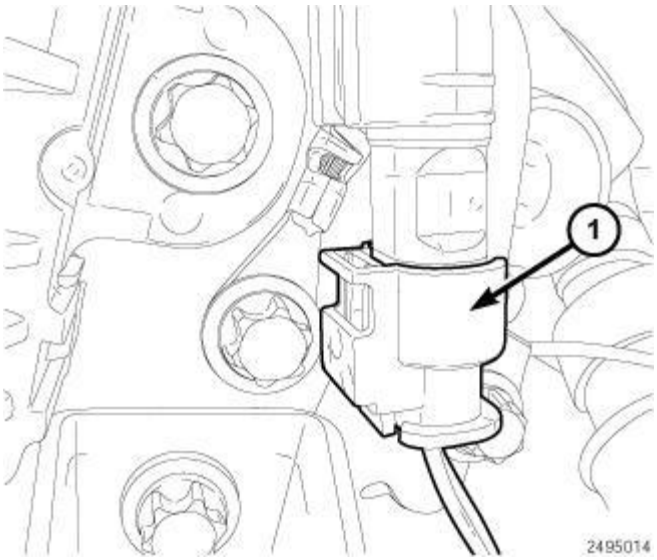


**Fig. 159: Turbocharger Exhaust Temperature Sensor Harness Connector**
**Courtesy of CHRYSLER LLC**

 

9. Disconnect the turbocharger exhaust temperature sensor (1) harness connector.

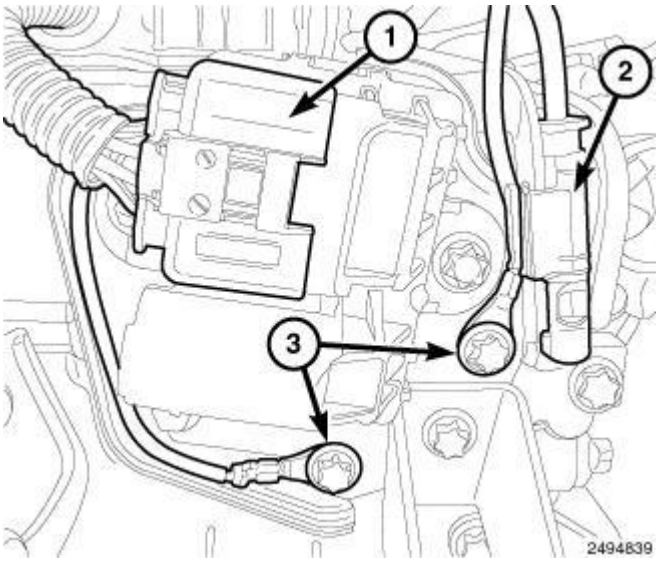


**Fig. 160: Glow Plug Module Harness Connector, Bolts & Turbocharger Exhaust Temperature Sensor Harness Connector**
**Courtesy of CHRYSLER LLC**

10. Disconnect the turbocharger exhaust temperature sensor harness connector (2) from bracket.
11. Remove the two bolts (3) and position aside the ground wires.
12. Disconnect the glow plug module harness connector (1).

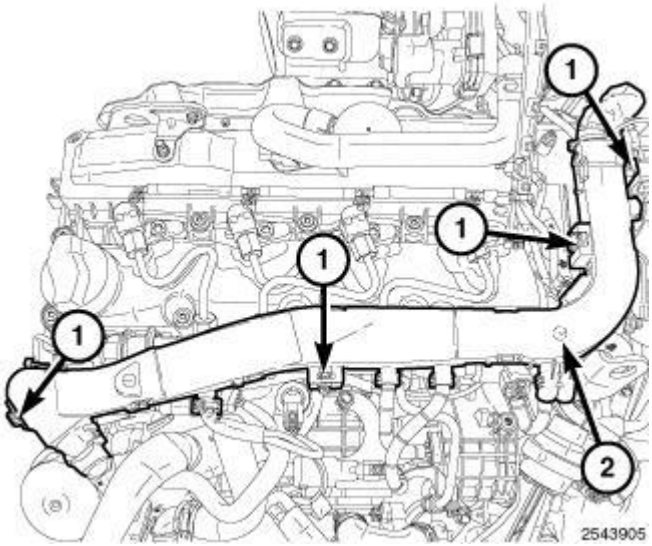


**Fig. 161: Lock Tabs & Engine Wire Harness**
**Courtesy of CHRYSLER LLC**

13. Disconnect the fuel rail pressure sensor.
14. Release the four lock tabs (1) position aside engine wire harness (2).

 

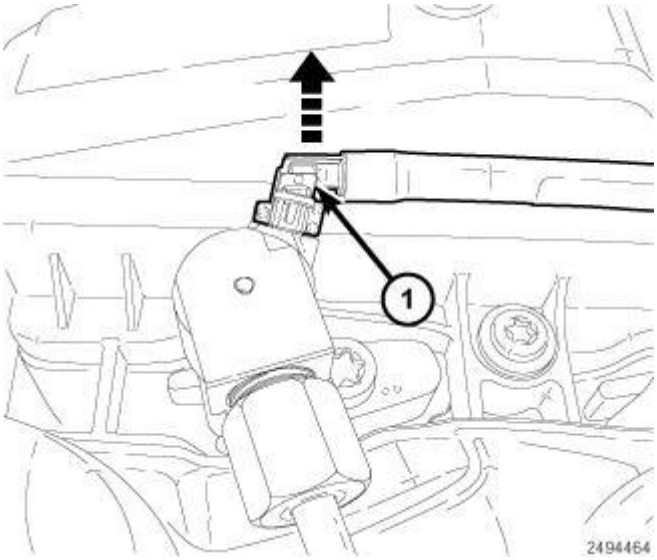


**Fig. 162: Releasing Lock Tab**
**Courtesy of CHRYSLER LLC**

15. Release the lock tab (1) and disconnect the four fuel injector return lines and position aside.

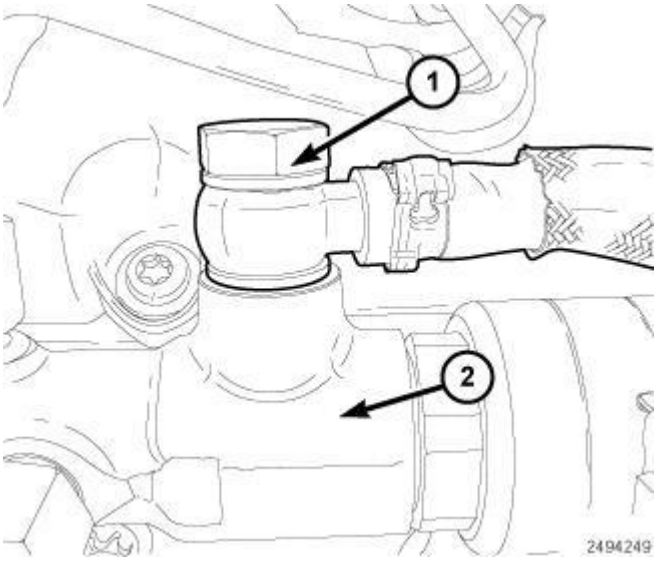


**Fig. 163: Banjo Bolt & Rail**
**Courtesy of CHRYSLER LLC**

16. Remove fuel rail return line banjo bolt (1) at rail (2).

 

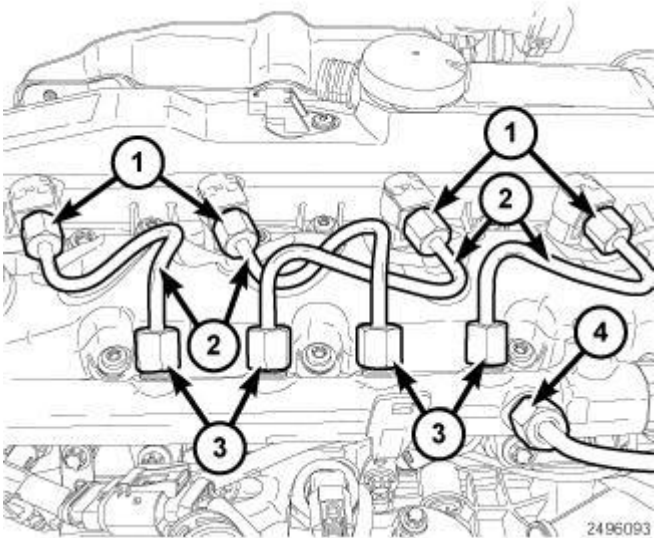


**Fig. 164: Fuel Injectors, High Pressure Fuel Tubes, Fuel Rail & High Pressure Feed Line**
**Courtesy of CHRYSLER LLC**

17. Remove high pressure fuel lines (2) at fuel injectors (1) and fuel rail (3).
18. Install protective caps onto fuel rail and fuel injectors.

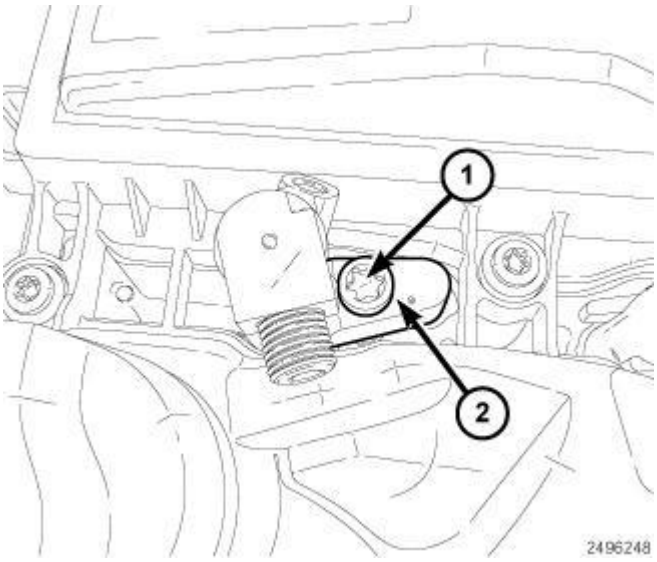


**Fig. 165: Bolt & Clamping Claw**
**Courtesy of CHRYSLER LLC**

**NOTE: Mark the location of each injector.**

19. Remove bolt (1) and fuel injector clamping claw (2).

 

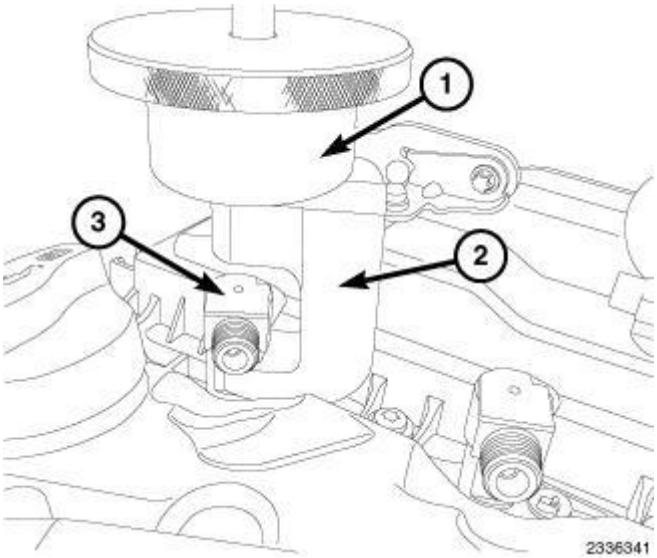


**Fig. 166: Puller, Extraction Claw & Fuel Injector**
**Courtesy of CHRYSLER LLC**

20. Using Puller (special tool #8941, Puller) (1) and Extraction Claw (special tool #10238, Claw, Extraction) (2) remove the fuel injectors (3).

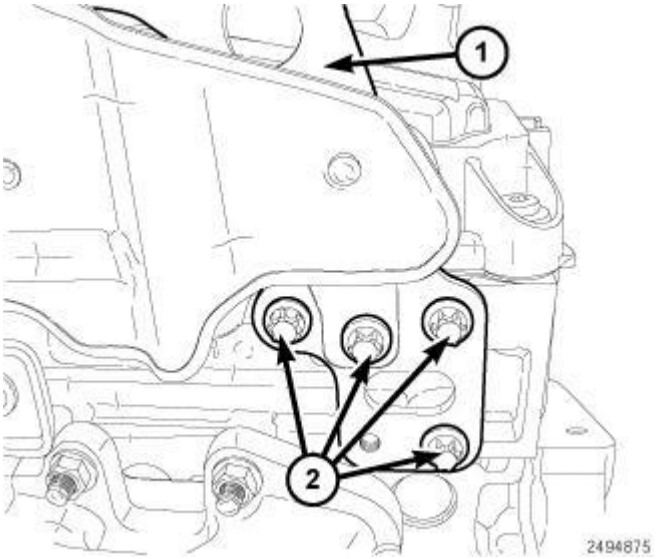


**Fig. 167: Engine Lifting Eye & Bolts**
**Courtesy of CHRYSLER LLC**

21. Remove bolts (2) and the engine lifting eye (1).

 

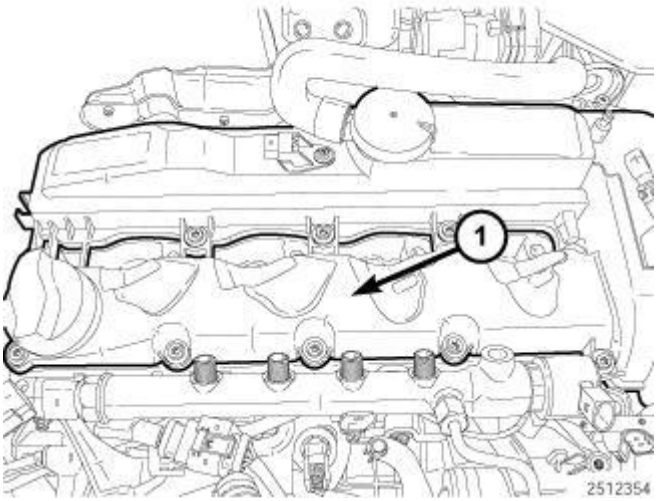


**Fig. 168: Cylinder Head Cover**
**Courtesy of CHRYSLER LLC**

22. Remove the 18 bolts and the cylinder head cover (1) and detach the breather hose.

**Installation**

**INSTALLATION**

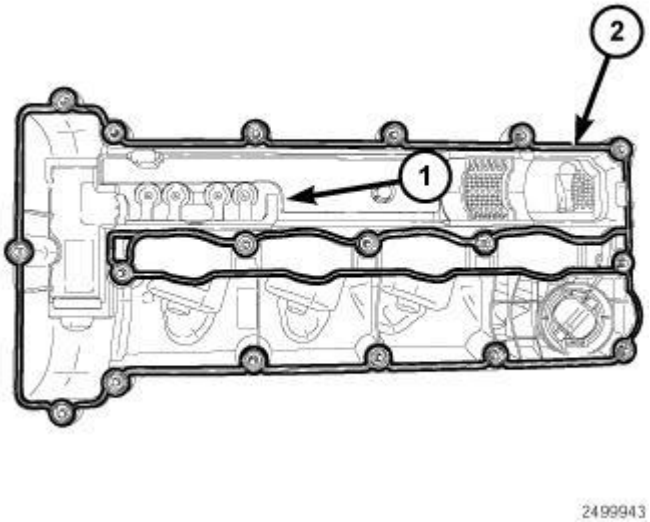


**Fig. 169: Cylinder Head Cover & Gasket**
**Courtesy of CHRYSLER LLC**

1. Clean the gasket mating surfaces.
2. Install new gasket (2) on to the cylinder head cover (1).
3. Attach breather hose and install the cylinder head cover (1). Tighten bolts 9 N.m (80 lbs. in.).

 

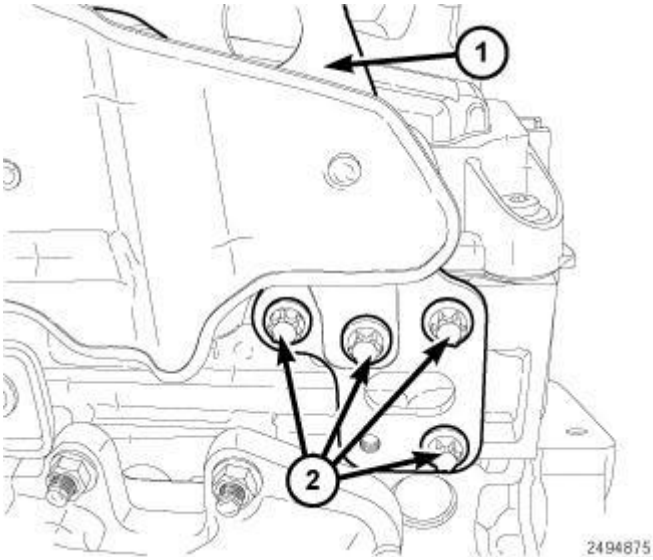


**Fig. 170: Engine Lifting Eye & Bolts**
**Courtesy of CHRYSLER LLC**

4. Install the engine lifting eye (1). Tighten bolts (2) to 9 N.m (80 in. lbs.).
5. Clean the fuel injectors with a non-fibrous cloth.
6. Clean the fuel injector bore using Injector Bore Brush Tool (special tool #9717, Brush, Injector Bore).

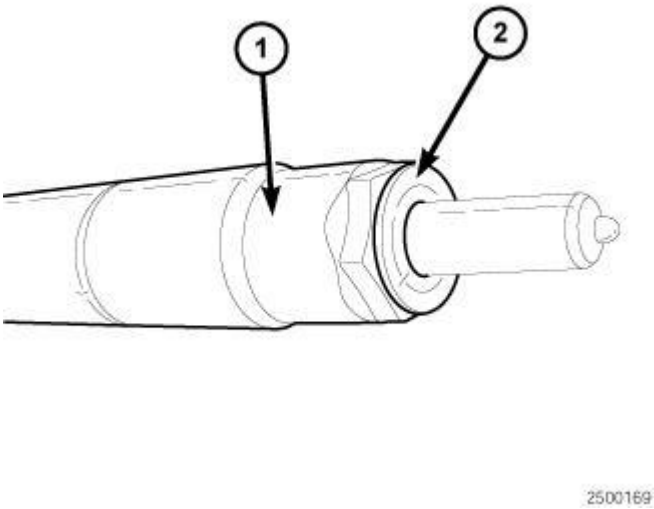


**Fig. 171: Identifying Injectors & Sealing Rings**
**Courtesy of CHRYSLER LLC**

7. Using Mopar® White Lithium Grease, coat the shaft of the injectors (1).
8. Using new sealing rings (2), install fuel injectors (1) into cylinder head as numbered.

 

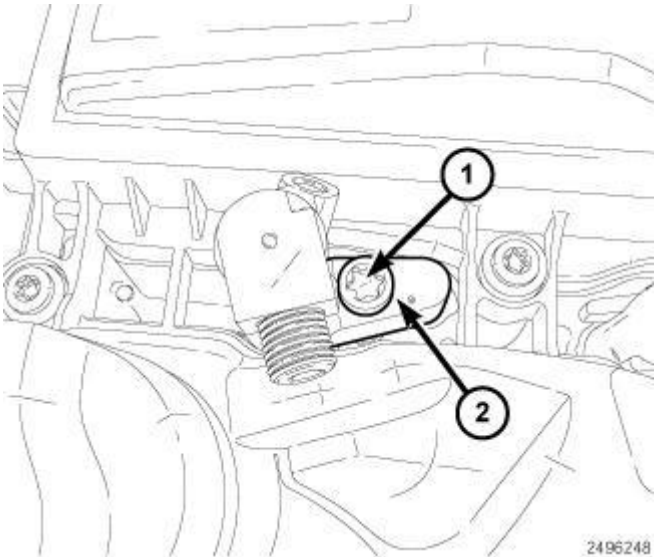


**Fig. 172: Bolt & Clamping Claw**
**Courtesy of CHRYSLER LLC**

9. Install the fuel clamping claw (2) and a new bolts (1).
10. Tighten bolts (1) to 15 N.m (133 in. lbs.).
    1. Plus an additional 90 degrees.
    2. Plus an additional 90 degrees.

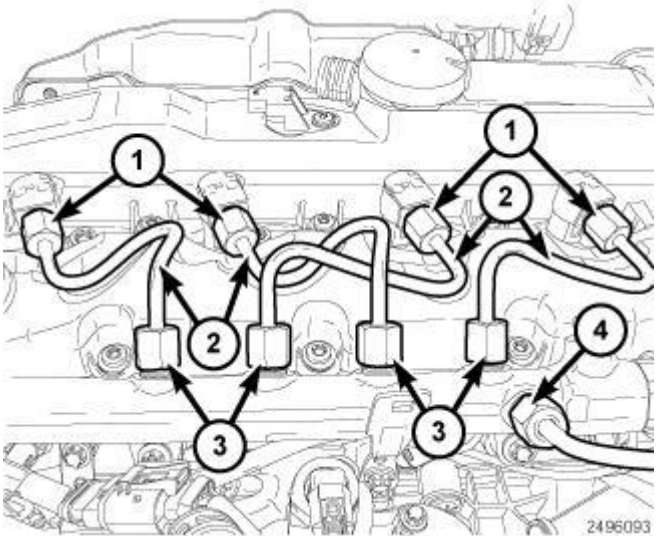


**Fig. 173: Fuel Injectors, High Pressure Fuel Tubes, Fuel Rail & High Pressure Feed Line**
**Courtesy of CHRYSLER LLC**

11. Remove protective caps from fuel rail and fuel injectors.
12. Install the new high pressure fuel lines (2) at fuel injectors (1) and fuel rail (3).
13. Tighten the high pressure fuel lines (2) at fuel injectors (1) to 7 N.m (62 in. lbs.).
14. Tighten the high pressure fuel lines (2) and fuel rail (3) to 7 N.m (62 in. lbs.).

 

15. Tighten the high pressure fuel lines (2) at fuel injectors (1) to 33 N.m (24 ft. lbs.).
16. Tighten the high pressure fuel lines (2) and fuel rail (3) to 33 N.m (24 ft. lbs.).

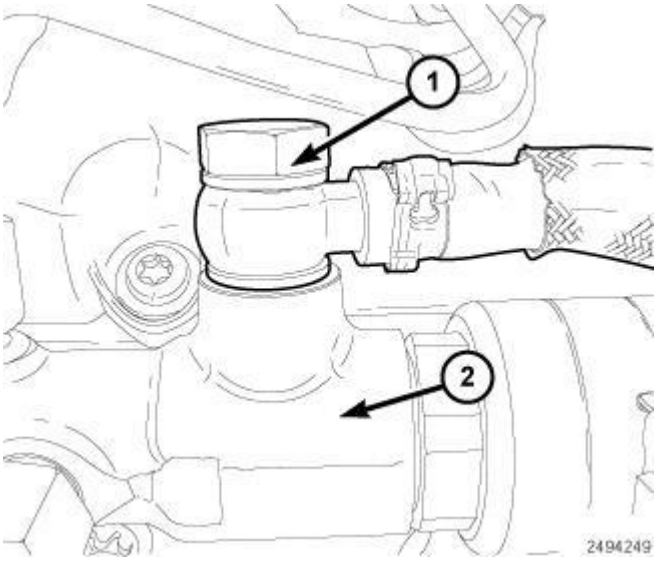


**Fig. 174: Banjo Bolt & Rail**
**Courtesy of CHRYSLER LLC**

17. Using new sealing washers, install fuel rail return line at rail (2). Tighten the banjo bolt (1) to 32 N.m (24 ft. lbs.).

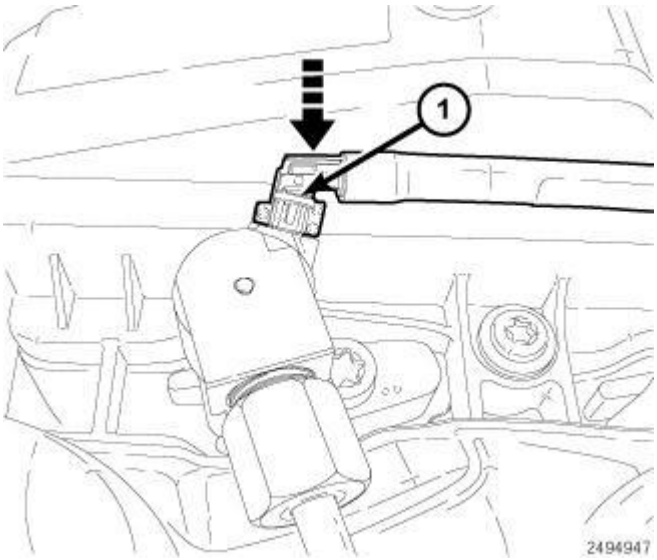


**Fig. 175: Installing Lock Tab**
**Courtesy of CHRYSLER LLC**

18. Reposition and install the fuel injector return line and set the lock tab (1).

 

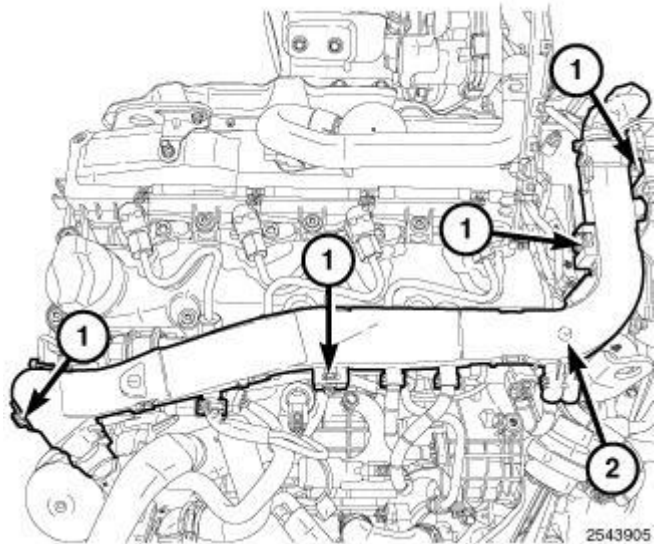


**Fig. 176: Lock Tabs & Engine Wire Harness**
**Courtesy of CHRYSLER LLC**

19. Reposition the engine wire harness (2) and push down to lock tabs (1).
20. Connect the fuel rail pressure sensor.

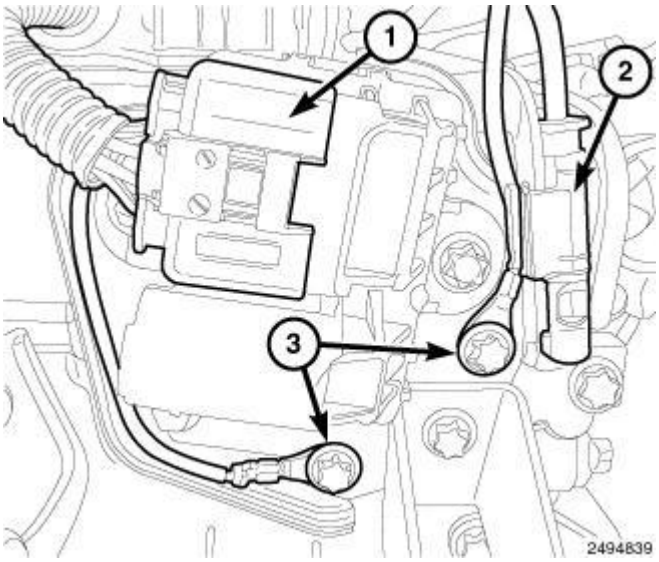


**Fig. 177: Glow Plug Module Harness Connector, Bolts & Turbocharger Exhaust Temperature Sensor Harness Connector**
**Courtesy of CHRYSLER LLC**

21. Connect the glow plug module harness connector (1).
22. Reposition ground wires and tighten bolts (3) to 9 N.m (80 in. lbs.).
23. Connect the turbocharger exhaust temperature sensor harness connector (2) to bracket.

 

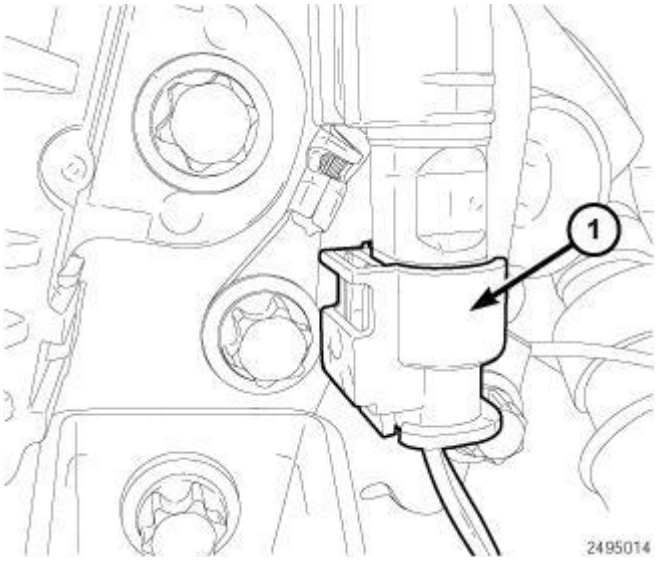


**Fig. 178: Turbocharger Exhaust Temperature Sensor Harness Connector**
**Courtesy of CHRYSLER LLC**

24. Connect the turbocharger exhaust temperature sensor (1) harness connector.

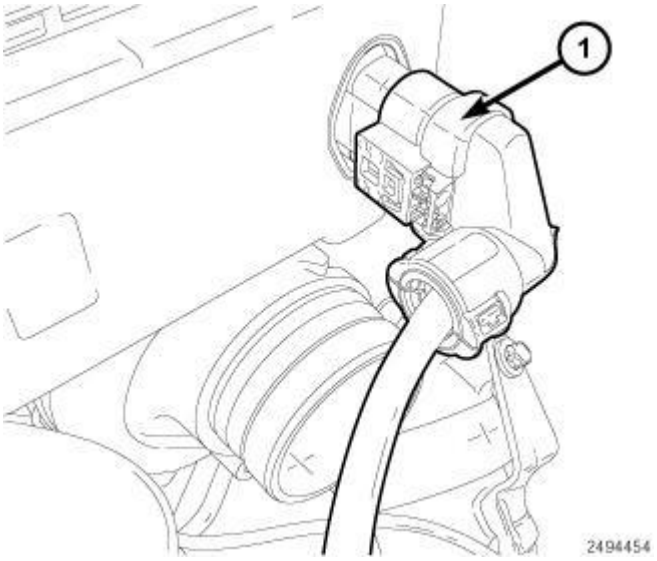


**Fig. 179: Turbocharger Actuator Harness Connector**
**Courtesy of CHRYSLER LLC**

25. Install the air cleaner body. Refer to **BODY, Air Cleaner , Installation**.
26. Connect the turbocharger actuator (1) harness connector.

 

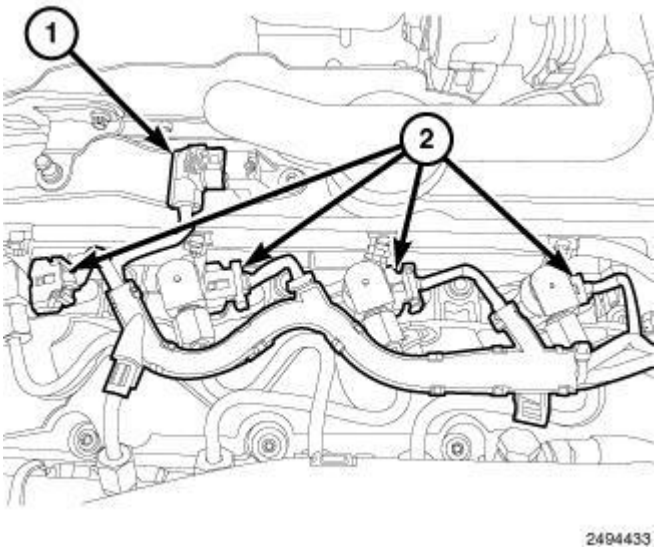


**Fig. 180: Camshaft Position Sensor (CMP) Harness Connector & Fuel Injector Harness Connectors**
**Courtesy of CHRYSLER LLC**

27. Position the fuel injector wire harness and push down to lock in place.
28. Connect the fuel injector (2) harness connector.
29. Connect the Camshaft Position Sensor (CMP) (1) harness connector.

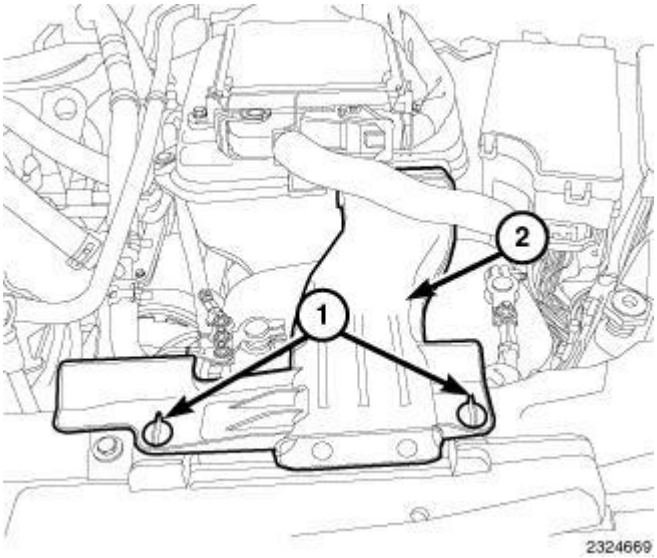


**Fig. 181: Quarter Turn Lock Tabs & Air Inlet Duct**
**Courtesy of CHRYSLER LLC**

30. Connect negative battery cable.
31. Start engine and inspect for leaks.
32. Install engine cover.
33. Install the air inlet duct (2) and lock the quarter turn lock tabs (1).

 

## LIFTER(S), HYDRAULIC

### Description

**DESCRIPTION**

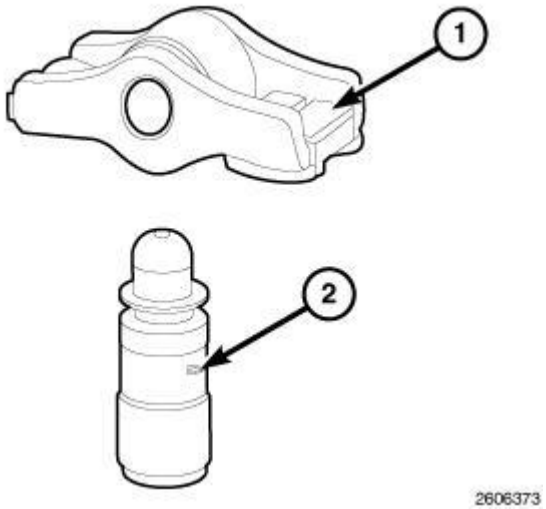


**Fig. 182: Hydraulic Lifter & Rocker Arm**
**Courtesy of CHRYSLER LLC**

Valve lash is controlled by hydraulic lifters (2) located inside the cylinder head, in tappet bores below the camshafts.

### Removal

**REMOVAL**

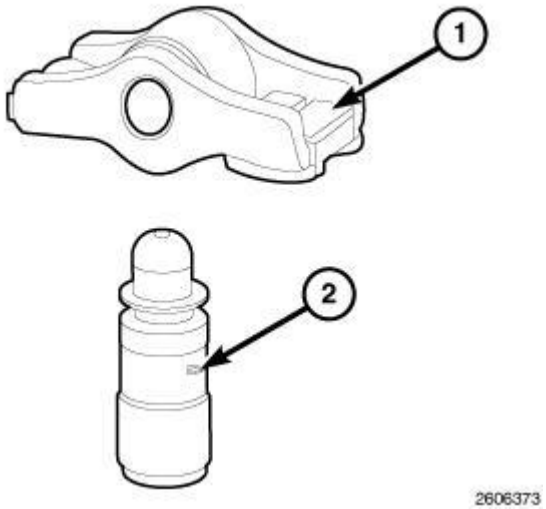


**Fig. 183: Hydraulic Lifter & Rocker Arm**

 

**Courtesy of CHRYSLER LLC**

1. Remove the camshafts. Refer to **CAMSHAFT, Engine , Removal**.
2. Remove the rocker arm (1) from cylinder head.

**NOTE: When the hydraulic lifters are removed from the engine, they must be stored upright and in clean conditions.**

3. Remove the hydraulic lifter (2) from cylinder head.

**Inspection**

**INSPECTION**

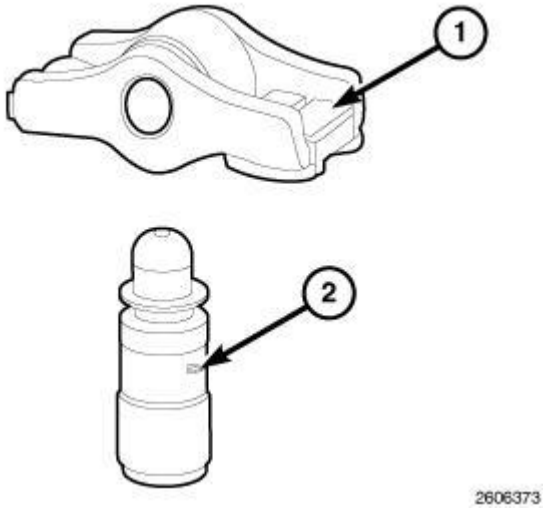


**Fig. 184: Hydraulic Lifter & Rocker Arm**
**Courtesy of CHRYSLER LLC**

1. Clean each lifter assembly (2) in cleaning solvent to remove all varnish and sludge deposits. Inspect for indications of scuffing on the side and base of each lifter body (2).
2. Squeeze the lifter (2) and be sure that the spring returns the lifter to its correct position.
3. Inspect the and rocker arm (1) roller for damage or excessive wear.
4. Replace any worn or damaged components.

**Installation**

**INSTALLATION**

 

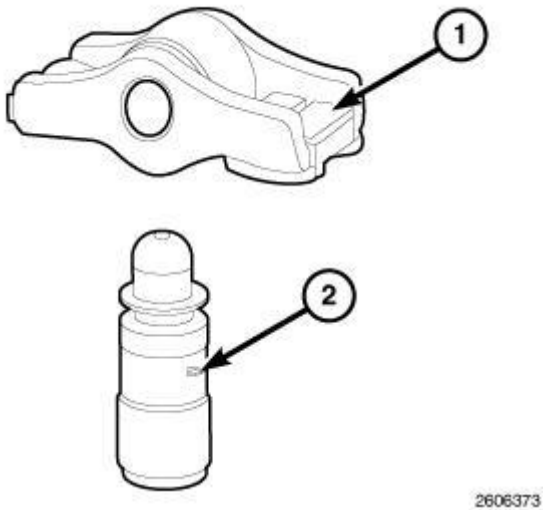


**Fig. 185: Hydraulic Lifter & Rocker Arm**
**Courtesy of CHRYSLER LLC**

**NOTE:** **Install the rocker arms and hydraulic lifters in the same location as removed.**

**NOTE:** **Replacement of the camshaft will also require replacement of the finger followers and hydraulic lifters.**

1. Install the hydraulic lifter (2) into the cylinder head.
2. Install the rocker arm.
3. Install the camshaft(s). Refer to **CAMSHAFT, Engine , Installation**.

## ROCKER ARM, VALVE

### Description

#### DESCRIPTION

 

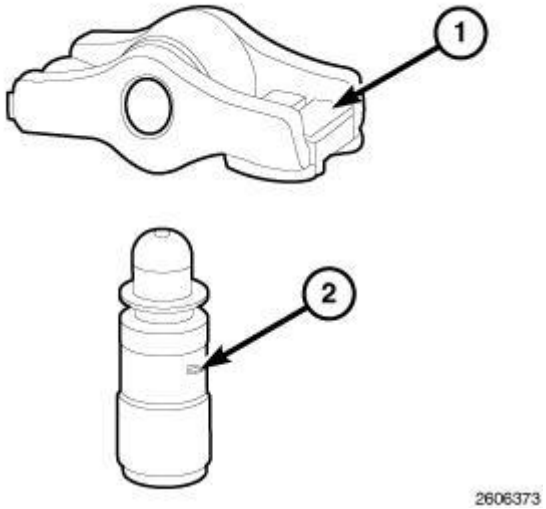


**Fig. 186: Hydraulic Lifter & Rocker Arm**
**Courtesy of CHRYSLER LLC**

The rocker arms (1) are located on the top of the hydraulic lifters (2) and the valves. The rocker arms are not held rigidly into position; instead they are held in position by resting on top of the valve stem and the hydraulic lifter pivoting ball. The camshaft applies downward pressure holding the rocker arm in position.

**Operation**

**OPERATION**

The rocker arms are used as a link between the camshaft and valves. As the camshaft rotates, the lobes of the camshafts apply downward pressure on the rocker arms. This pressure is then transmitted to the valves which causes the valves to open.

**Removal**

**REMOVAL**

 

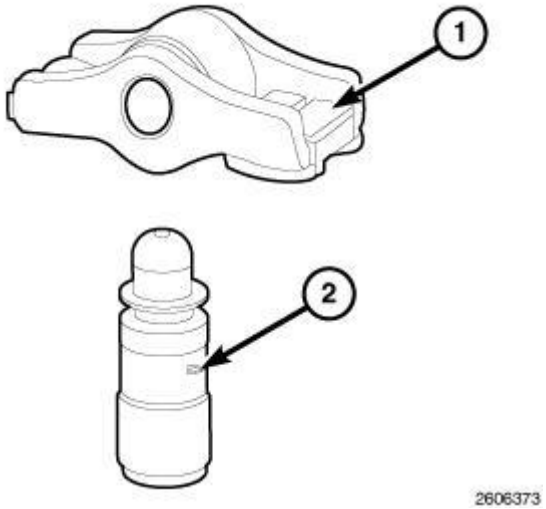


**Fig. 187: Hydraulic Lifter & Rocker Arm**
**Courtesy of CHRYSLER LLC**

1. Remove the appropriate camshafts. Refer to **CAMSHAFT, Engine , Removal**.

**NOTE: Keep the rocker arm in a numerical order as they were removed.**

2. Remove the rocker arm (1) assembly from the cylinder head and inspect for wear or damage.

**Installation**

**INSTALLATION**

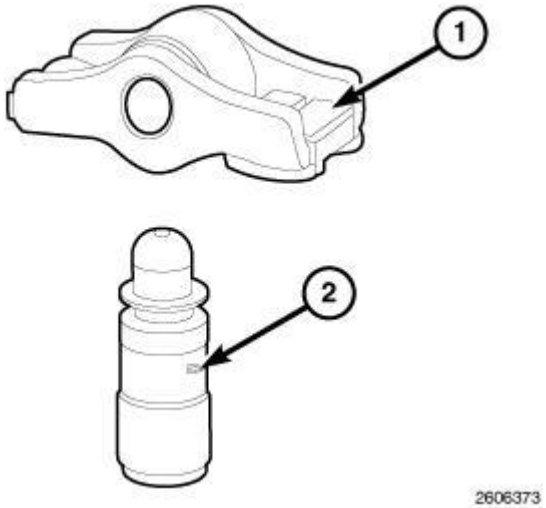


**Fig. 188: Hydraulic Lifter & Rocker Arm**
**Courtesy of CHRYSLER LLC**

 

**NOTE: Replacement of the camshaft will also require replacement of the rocker arms and hydraulic lifters.**

1. Install the rocker arm assembly in the same location as removed.
2. Install the camshaft(s). Refer to **CAMSHAFT, Engine , Installation**.

## SPRING(S), VALVE

### Removal

#### REMOVAL

1. Disconnect the negative battery cable.
2. Remove engine cover.
3. Remove the intake and exhaust camshafts Refer to **CAMSHAFT, Engine , Removal**.
4. Position the cylinder being worked on at Top Dead Center (TDC).
5. Remove the Starter. Refer to **STARTER , Removal** .
6. Install the Flywheel/Clutch Plate Locking Tool (special tool #10232, Lock, Flywheel/Clutch Plate).

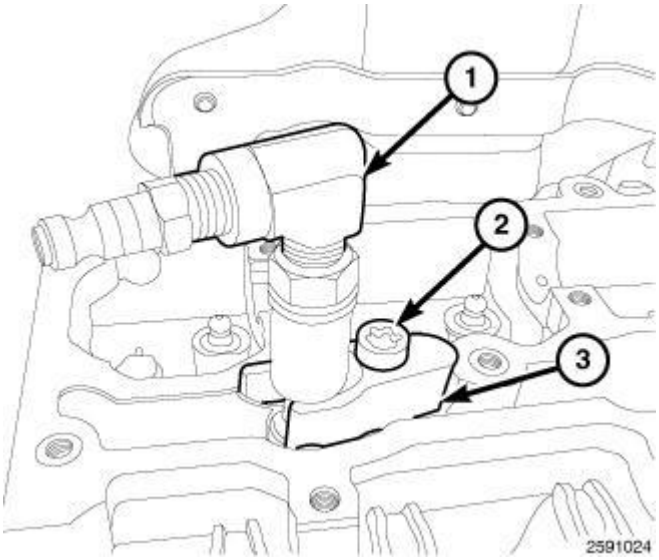


**Fig. 189: Compression Test Adapter, Tensioning Claw & Bolt**
**Courtesy of CHRYSLER LLC**

7. Install the Compression Test Adapter (special tool #9543, Adapter, Compression Test) (1) into fuel injector hole along with the tensioning claw (3) and securely tighten bolt (2).
8. Connect air supply to the Compression Test Adapter (1) and pressurize the cylinder to 5 bar (73 psi).

 

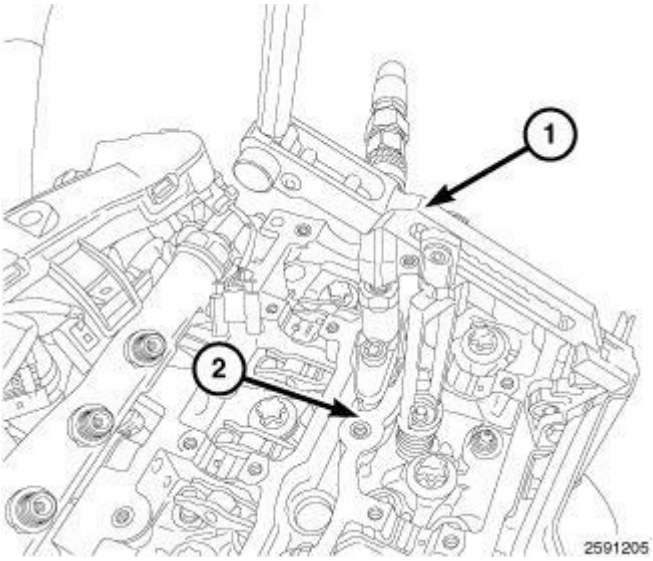


**Fig. 190: Valve Spring Compressor & Cylinder Head**
**Courtesy of CHRYSLER LLC**

**NOTE: Valve springs and retainers must be kept in order of the cylinder they were removed.**

9. Install the valve spring compressor (special tool #9307, Compressor, Valve Spring) (1) onto cylinder head (2).
10. Compress valve spring and remove the keepers.
11. Remove valve spring retainer and valve spring.
12. Remove valve stem seals.
13. Remove valve spring seat.
14. Inspect all cylinder head components for wear or damage.
15. Repeat procedure for each cylinder as necessary.

**Installation**

**INSTALLATION**

 

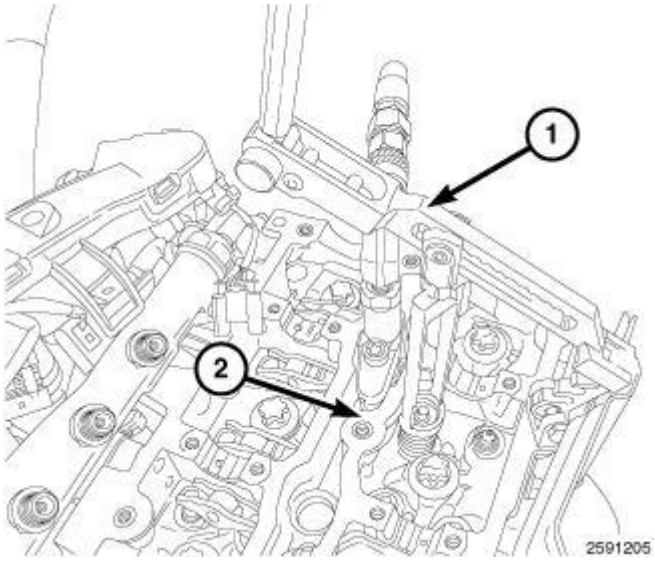


**Fig. 191: Valve Spring Compressor & Cylinder Head**
**Courtesy of CHRYSLER LLC**

**NOTE: Ensure that the valve keepers are seated properly.**

1. Install lower valve spring seat.
2. Install valve stem seal.
3. Install valve spring.
4. Install valve spring retainer.
5. Position the Valve Spring Compressor (special tool #9307, Compressor, Valve Spring) (1) on to valve spring retainer. Now compress the valve spring and install valve keepers.
6. Repeat procedure for each cylinder as necessary.
7. Remove the Valve Spring Compressor (special tool #9307, Compressor, Valve Spring) (1) from cylinder head (2).

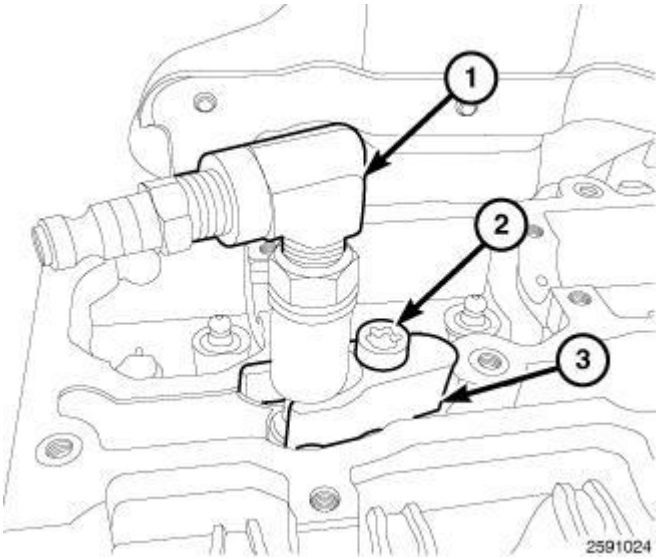


 

**Fig. 192: Compression Test Adapter, Tensioning Claw & Bolt**
**Courtesy of CHRYSLER LLC**

8. Disconnect air supply from the Compression Test Adapter (special tool #9543, Adapter, Compression Test) (1).
9. Remove the bolt, tensioning claw, and Compression Test Adapter (special tool #9543, Adapter, Compression Test) (1).
10. Remove the Flywheel/Clutch Plate Locking Tool (special tool #10232, Lock, Flywheel/Clutch Plate).
11. Install the Starter. Refer to **STARTER , Installation** .
12. Install the intake and exhaust camshafts Refer to **CAMSHAFT, Engine , Installation**.
13. Connect the negative battery cable.
14. Start the engine and inspect for leaks.
15. Install engine cover.

## VALVES, INTAKE AND EXHAUST

### Removal

#### REMOVAL

1. Remove cylinder head Refer to **Cylinder Head , Removal**.

**CAUTION: Suitably mark the valve and the position in the cylinder head before removal. Failure to do so will result in improperly seated valves and possible engine damage after reassembly.**

**CAUTION: Valves, springs and retainers must be kept in order of the cylinder they were removed.**

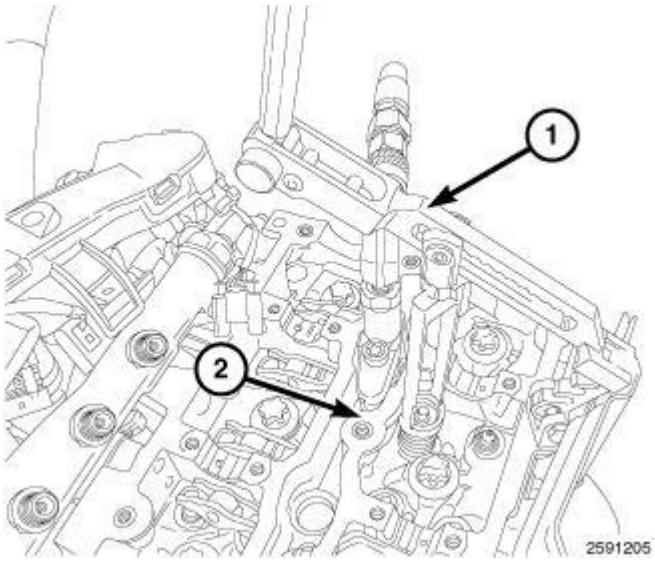

**Fig. 193: Valve Spring Compressor & Cylinder Head**
**Courtesy of CHRYSLER LLC**

2. Install the Valve Spring Compressor (special tool #9307, Compressor, Valve Spring) (1) onto cylinder head (2).

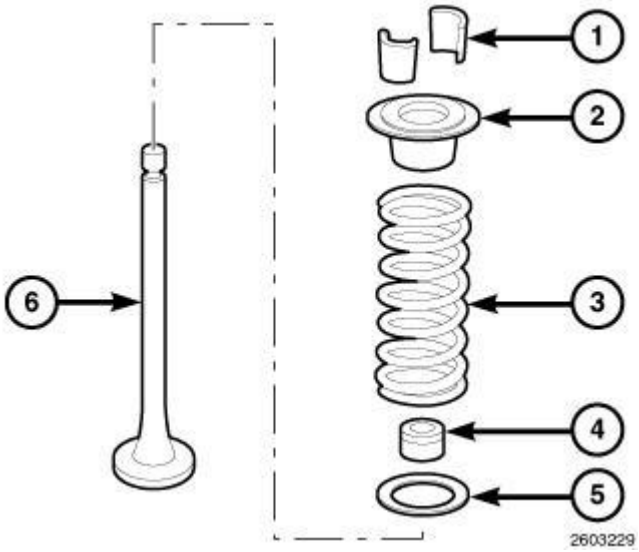


**Fig. 194: Valve Spring, Keeper, Retainer, Spring Seat, Valve Stem Seals & Valve**
**Courtesy of CHRYSLER LLC**

3. Compress the valve spring (3) and remove valve keepers (1).
4. Remove valve spring retainer (2) and valve spring (3) and spring seat (5).
5. Remove valve stem seals (4).
6. Remove valves (6).
7. Repeat steps 5 through 9 for each valve as necessary.

**Installation**

**INSTALLATION**

 

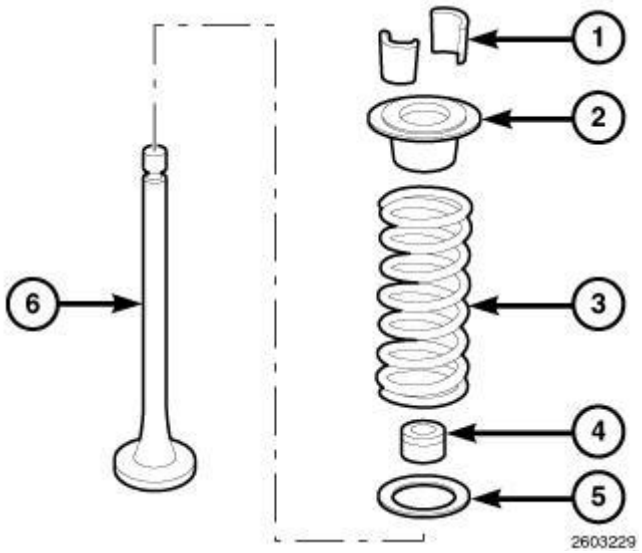


**Fig. 195: Valve Spring, Keeper, Retainer, Spring Seat, Valve Stem Seals & Valve**
**Courtesy of CHRYSLER LLC**

**CAUTION: Valves must be kept in their original positions in cylinder head. Failure to do so will result in engine damage.**

**NOTE: Inspect all valves, springs and retainers for wear or damage. Replace as necessary.**

1. Install valves (6) in their original position in the cylinder head.
2. Install valve spring seat (5).
3. Install valve stem seal (4).
4. Install valve spring (3).
5. Install valve spring retainer (2).

 

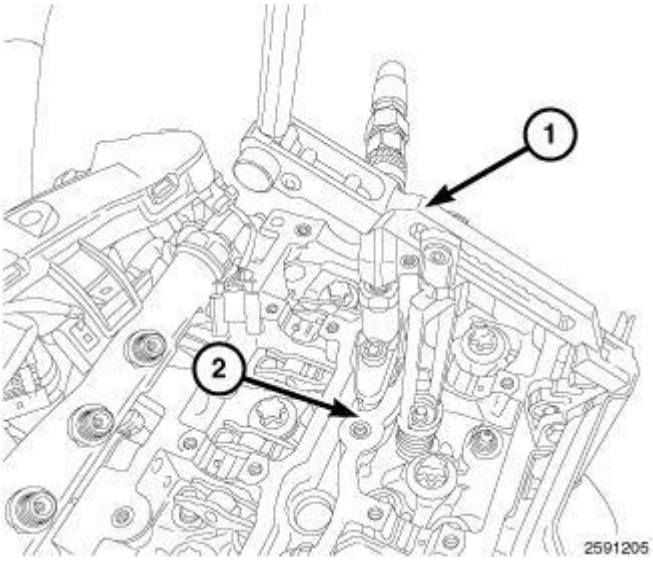


**Fig. 196: Valve Spring Compressor & Cylinder Head**
**Courtesy of CHRYSLER LLC**

**NOTE: Ensure that the valve keepers are seated properly.**

6. Using Valve Spring Compressor (special tool #9307, Compressor, Valve Spring), compress valve spring (3) and install valve keepers (1).
7. Repeat steps 3 through 7 for each valve as necessary.
8. Install cylinder head Refer to **Cylinder Head , Installation**.

# ENGINE BLOCK

## STANDARD PROCEDURE

### REPLACING ENGINE CORE AND OIL GALLERY PLUGS

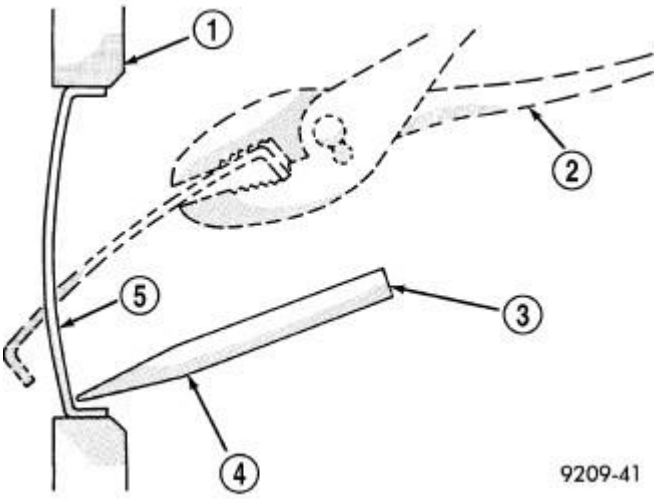


 

**Fig. 197: Core Hole Plug Removal**
**Courtesy of CHRYSLER LLC**

| |
|---|
| 1 - CYLINDER BLOCK |
| 2 - REMOVE PLUG WITH PLIERS |
| 3 - STRIKE HERE WITH HAMMER |
| 4 - DRIFT PUNCH |
| 5 - CUP PLUG |

Using a blunt tool such as a drift (4) and a hammer, strike the bottom edge of the cup plug (5). With the cup plug (5) rotated, grasp firmly with pliers (2) or other suitable tool and remove plug. Refer to **Fig. 197**.

**CAUTION: Do not drive cup plug into the casting as restricted cooling can result and cause serious engine problems.**

Thoroughly clean inside of cup plug hole in cylinder block or head. Be sure to remove old sealer. Lightly coat inside of cup plug hole with Mopar® Stud and Bearing Mount. Make certain the new plug is cleaned of all oil or grease. Using proper drive plug, drive plug into hole so that the sharp edge of the plug is at least 0.5 mm (0.020 in.) inside the lead-in chamfer.

It is not necessary to wait for curing of the sealant. The cooling system can be refilled and the vehicle placed in service immediately.

**MEASURING CYLINDER BORES**

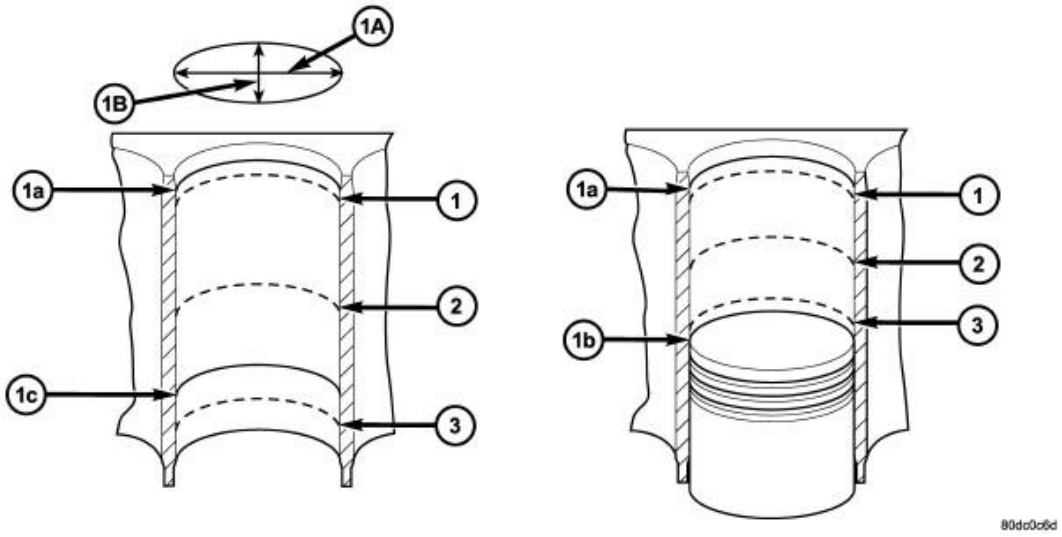


**Fig. 198: Measuring Cylinder Bores**
**Courtesy of CHRYSLER LLC**

| |
|---|
| 1 - MEASURING POINT OF CYLINDER BORE |
| 2 - MEASURING POINT OF CYLINDER BORE |

 

| |
|---|
| 3 - MEASURING POINT OF CYLINDER BORE |
| 1a - UPPER REVERSAL POINT OF #1 PISTON RING |
| 1b - BOTTOM DEAD CENTER OF PISTON |
| 1c - BOTTOM REVERSAL POINT OF OIL SCRAPER RING |
| 1A - LONGITUDINAL DIRECTION |
| 1B - TRANSVERSE DIRECTION |

**NOTE: This must be done with engine completely disassembled.**

1. Thoroughly clean all cylinder bores with appropriate cleaning solvent.
2. Measure each cylinder at the three measuring points shown in illustration (1, 2, 3).
3. Using the three measurement points, measure cylinder in the longitudinal and in the transverse direction.

| Cylinder Bore Measurement | |
|---|---|
| Standard size | 88.0 mm |
| Group code letter A | 88.000-88.006 mm |
| Group code letter X | 88.006-88.012 mm |
| Group code letter B | 88.012-88.018 mm |
| Wear limit in longitudinal in transverse direction | 0.020 mm |
| Permissible variation of cylinder shape (when new) | 0.000-0.014 mm |

4. Use the measurement and table above to group cylinder bores.

## BEARING(S), CRANKSHAFT

### Removal

#### REMOVAL

1. Remove the engine. Refer to **Removal**.
2. Remove the cylinder head. Refer to **Cylinder Head , Removal**.
3. Remove the balance shaft module. Refer to **MODULE, Balance Shaft , Removal**.
4. Remove crankshaft bearings one at a time.

### Installation

#### INSTALLATION

**NOTE: Oil bearing shells before inserting crankshaft.**

**NOTE: Oil grooves in thrust washers must point toward the thrust collars of the**

 

**crankshaft.**

**NOTE: Thrust washers in bearing cap each have one retaining lugs as a anti-twist lock.**

**NOTE: Oil thread and head contact surfaces of bolts that retain crankshaft bearing caps; tighten bolts from inside to outside, beginning at fit bearing. Rotate crankshaft to check clearance.**

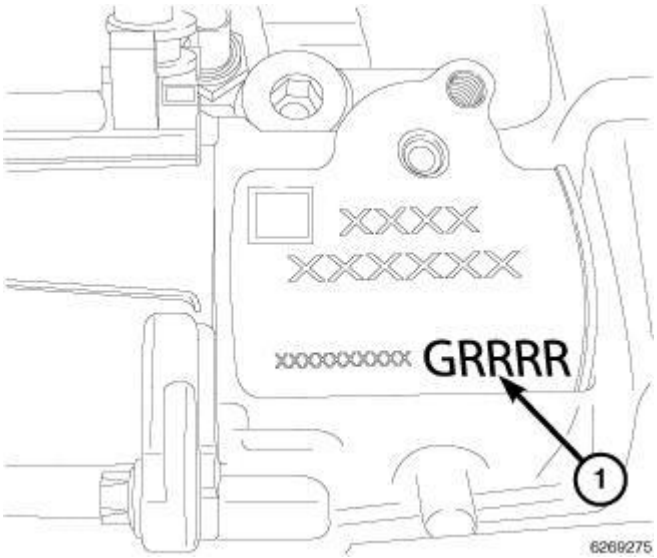


**Fig. 199: Bearing Selection Letters On Engine Block**
**Courtesy of CHRYSLER LLC**

**NOTE: The engine block is marked for main bearing shell selection located by the vacuum pump.**

1. Using the bearing selection letters (1) on engine block, install bearing halves into engine block and lubricate bearing with clean engine oil.
   - B = blue bearing
   - G = yellow bearing
   - R = red bearing

 

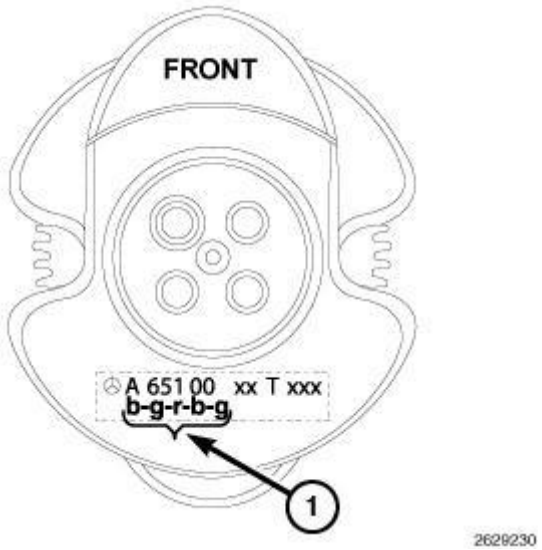


**Fig. 200: Letters Stamped On Crankshaft**
**Courtesy of CHRYSLER LLC**

2. The letters stamped on crankshaft (1) are the bearing halves which are to be selected for the crankshaft bearing caps.
   - B = blue bearing
   - G = yellow bearing
   - R = red bearing

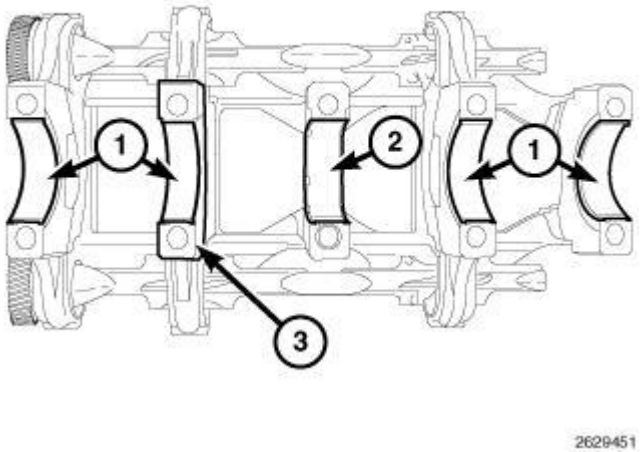


**Fig. 201: Installing Bearing Halves Into Bearing Caps**
**Courtesy of CHRYSLER LLC**

3. Install bearing halves (1 and 2) into bearing caps and lubricate bearing with clean engine oil.
4. Install the balance shaft module and check bearing clearance. Refer to **MODULE, Balance Shaft , Installation**.

5. Check crankshaft endplay.
6. Install the balance shaft module. Refer to **MODULE, Balance Shaft , Installation**.
7. Install the cylinder head. Refer to **Cylinder Head , Installation**.
8. Install the engine. Refer to **Installation**.

## CRANKSHAFT

### Standard Procedure

#### STANDARD PROCEDURE - CRANKSHAFT BOLT INSPECTION

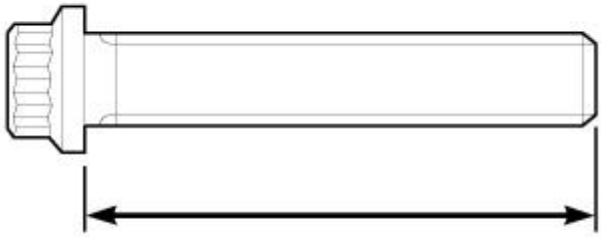


**Fig. 202: Measuring Crankshaft Bolt**
**Courtesy of CHRYSLER LLC**

1. Measure crankshaft bolt between points shown in illustration.

| Crankshaft Bearing Cap Bolt Dimensions | |
|---|---|
| Thread Diameter | M 12 |
| Length When New | 104.7 mm to 103.5 mm |
| Maximum Length | 106.5 mm |

2. If the bolt length is greater than the maximum allowable measurement, replace the bolts.

### Removal

#### REMOVAL

1. Remove the engine. Refer to **Removal**.

 

2. Remove the cylinder head. Refer to **Cylinder Head , Removal**.
3. Remove the balance shaft module. Refer to **MODULE, Balance Shaft , Removal**.

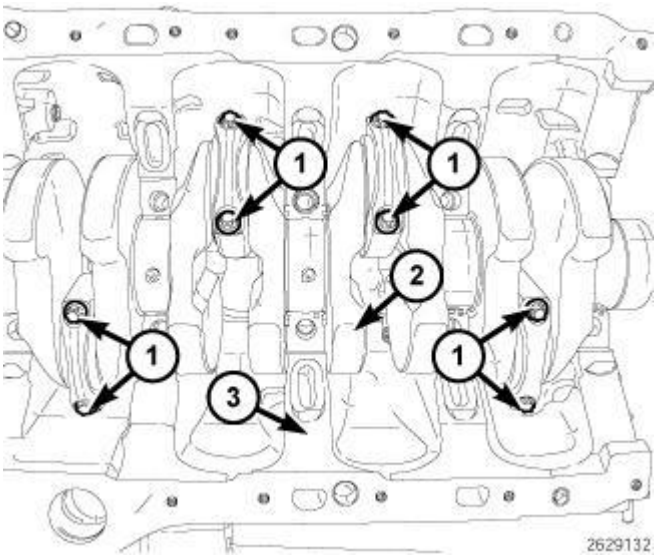


**Fig. 203: Crankshaft, Engine Block, Connecting Rod Bearing Caps & Bolts**
**Courtesy of CHRYSLER LLC**

4. Remove bolts (1) and the connecting rod bearing caps.
5. Remove the crankshaft (2) from engine block (3).

**Installation**

**INSTALLATION**

**NOTE:** **Oil bearing shells before inserting crankshaft.**

**NOTE:** **Oil grooves in thrust washers must point toward the thrust collars of the crankshaft.**

**NOTE:** **Thrust washers in bearing cap each have one retaining lugs as a anti-twist lock.**

**NOTE:** **Oil thread and head contact surfaces of bolts that retain crankshaft bearing caps; tighten bolts from inside to outside, beginning at fit bearing. Rotate crankshaft to check clearance.**

 

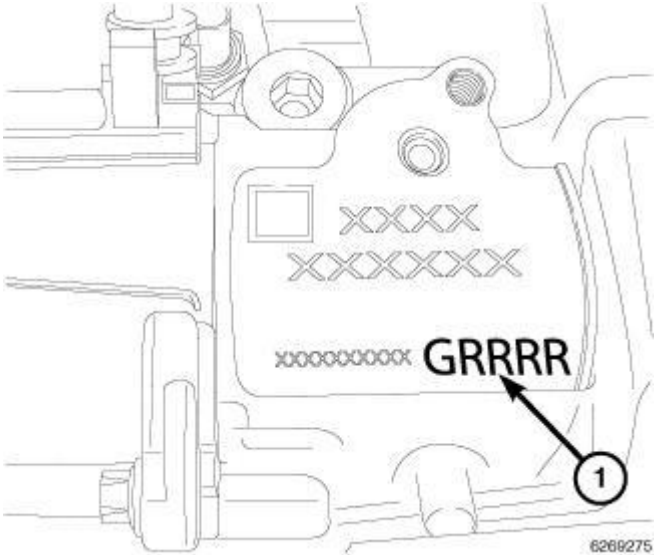


**Fig. 204: Bearing Selection Letters On Engine Block**
**Courtesy of CHRYSLER LLC**

**NOTE: The engine block is marked for main bearing shell selection located by the vacuum pump.**

1. Using the bearing selection letters (1) on engine block, install bearing halves into engine block and lubricate bearing with clean engine oil.
   - B = blue bearing
   - G = yellow bearing
   - R = red bearing

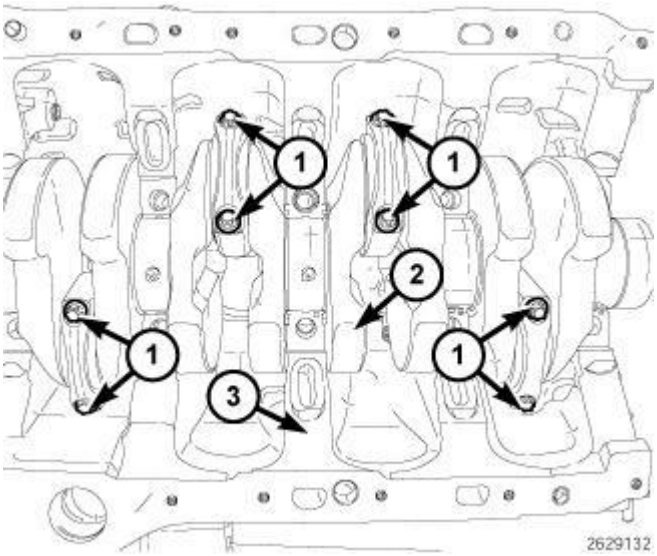


**Fig. 205: Crankshaft, Engine Block, Connecting Rod Bearing Caps & Bolts**
**Courtesy of CHRYSLER LLC**

2. Install crankshaft (2) into engine block (3).
3. Install new rod bearings and check bearing clearance.
4. Install the connecting rod bearing caps.
5. For new connecting rods, tighten bolts to:
    - 5 N.m (44 in. lbs.)
    - 25 N.m (18 ft. lbs.)
    - plus an additional 180°
6. For used connecting rods, tighten bolts to:
    - 5 N.m (44 in. lbs.)
    - 25 N.m (18 ft. lbs.)
    - plus an additional 90°

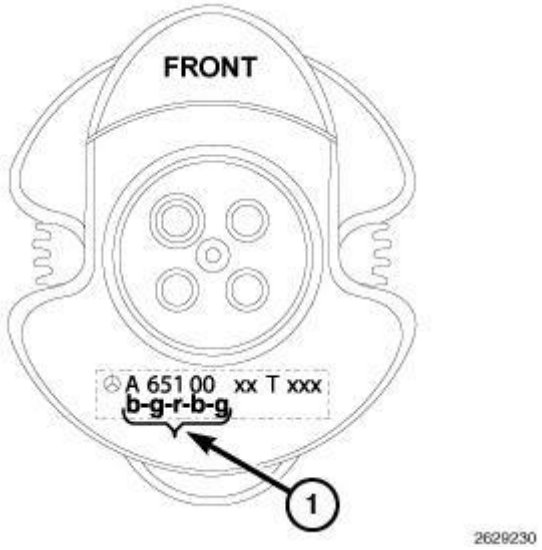


**Fig. 206: Letters Stamped On Crankshaft**
**Courtesy of CHRYSLER LLC**

7. The letters stamped on crankshaft (1) are the bearing halves which are to be selected for the crankshaft bearing caps.
    - B = blue bearing
    - G = yellow bearing
    - R = red bearing

 

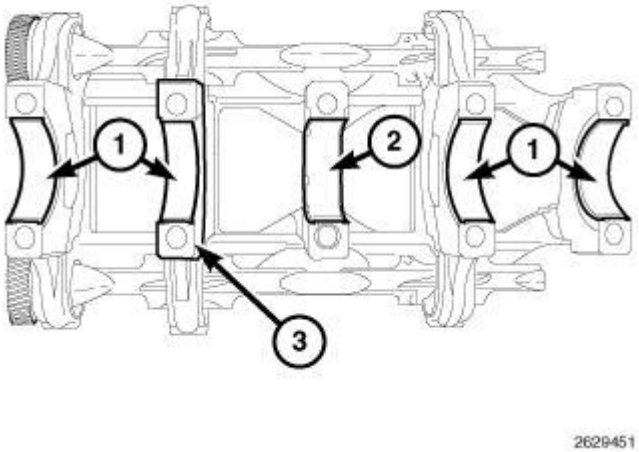


**Fig. 207: Installing Bearing Halves Into Bearing Caps**
**Courtesy of CHRYSLER LLC**

8. Install bearing halves (1 and 2) into bearing caps and lubricate bearing with clean engine oil.
9. Install the balance shaft module and check bearing clearance. Refer to **MODULE, Balance Shaft , Installation**.
10. Check crankshaft endplay.
11. Install the cylinder head. Refer to **Cylinder Head , Installation**.
12. Install the engine. Refer to **Installation**.

## DAMPER, VIBRATION

### Removal

#### REMOVAL

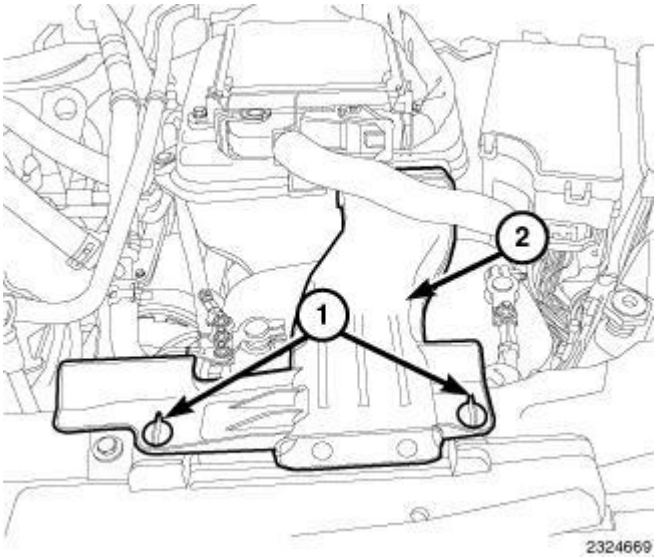


 

**Fig. 208: Quarter Turn Lock Tabs & Air Inlet Duct**
**Courtesy of CHRYSLER LLC**

1. Remove air inlet duct (2).
2. Disconnect the negative battery cable.
3. Remove the right front tire. Refer to **Removal** .
4. Remove the belly pan.
5. Remove the serpentine belt. Refer to **BELT, Serpentine , Removal** .

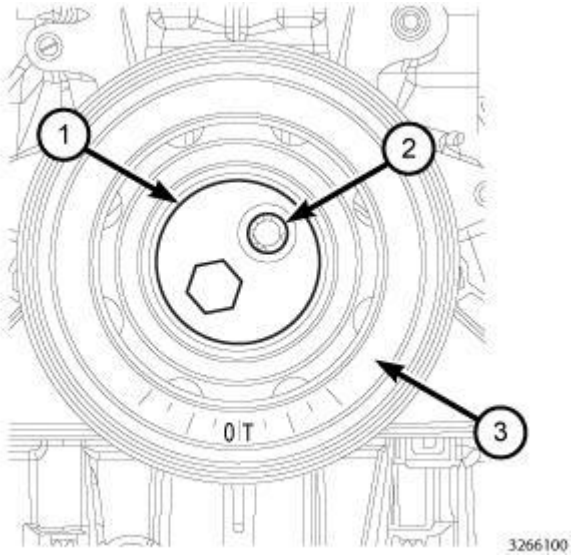


**Fig. 209: Vibration Damper Holder Tool, Vibration Damper & Bolts**
**Courtesy of CHRYSLER LLC**

6. Using the Vibration Damper Holder (special tool #10236, Holder, Vibration Damper) (1), remove bolts (2) and the vibration damper (3).

**Installation**

**INSTALLATION**

 

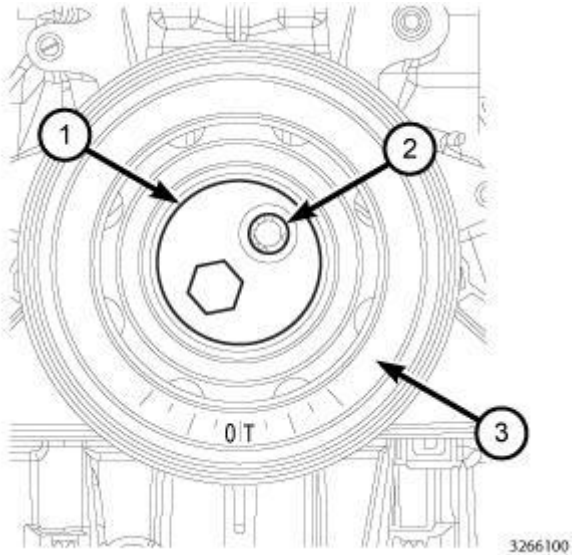


**Fig. 210: Vibration Damper Holder Tool, Vibration Damper & Bolts**
**Courtesy of CHRYSLER LLC**

1. Install the vibration damper (3) and bolts (2).
2. Using Vibration Damper Holder Tool (special tool #10236, Holder, Vibration Damper) (1), tighten bolts to 80 N.m (59 ft. lbs.) plus additional 90°.

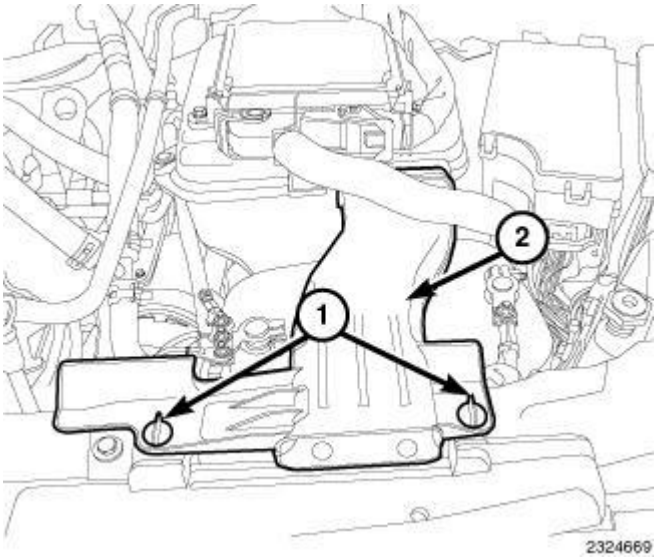


**Fig. 211: Quarter Turn Lock Tabs & Air Inlet Duct**
**Courtesy of CHRYSLER LLC**

3. Install the serpentine belt. Refer to **BELT, Serpentine , Installation** .
4. Install the belly pan.
5. Install the right front tire. Refer to **Installation** .
6. Connect the negative battery cable.
7. Install air inlet duct (2).

 

## MODULE, BALANCE SHAFT

### Description

#### DESCRIPTION

The 2.2L engine is equipped with two cast iron balance shafts and is installed in a cast iron carrier. The cast iron carrier also incorporates the crankshaft bearing caps used to hold the crankshaft to the engine block.

### Operation

#### OPERATION

The balance shafts are driven by the crankshaft via two helical gears. The balance shafts are connected to the helical gears. The dual counter rotating shafts decrease second order vertical shaking forces caused by component movement.

### Removal

#### REMOVAL

1. Disconnect the negative battery cable.
2. Set the engine to Top Dead Center (TDC).
3. Remove the lower timing chain cover. Refer to **COVER(S), Engine Timing , Removal**.

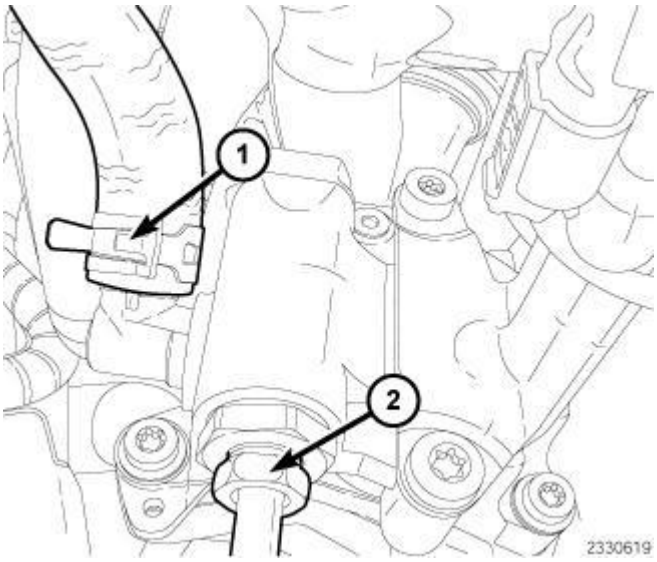


**Fig. 212: Power Steering Supply Line & Feed Line**
**Courtesy of CHRYSLER LLC**

4. Remove the bolts and the oil dipstick tube.
5. Disconnect the power steering return line (1) from pump.
6. Remove the power steering feed line (2) from pump.

 

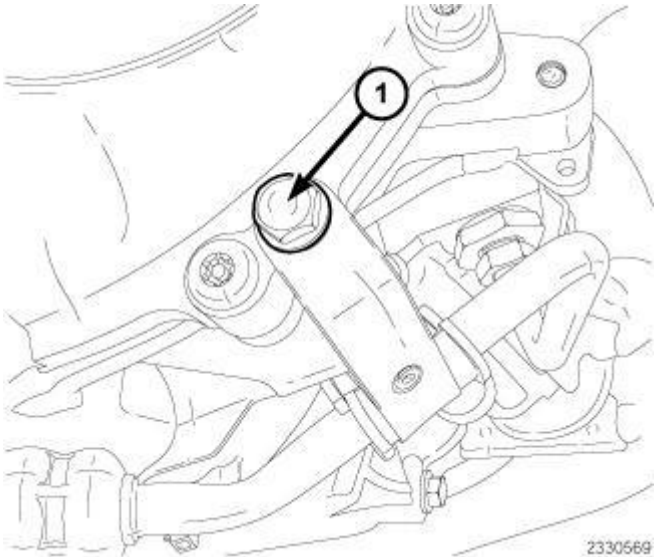


**Fig. 213: Power Steering Line Support Bracket Retaining Bolt**
**Courtesy of CHRYSLER LLC**

7. Remove power steering line support bracket bolt (1).
8. Disconnect power steering line from steering gear and reposition out of way.

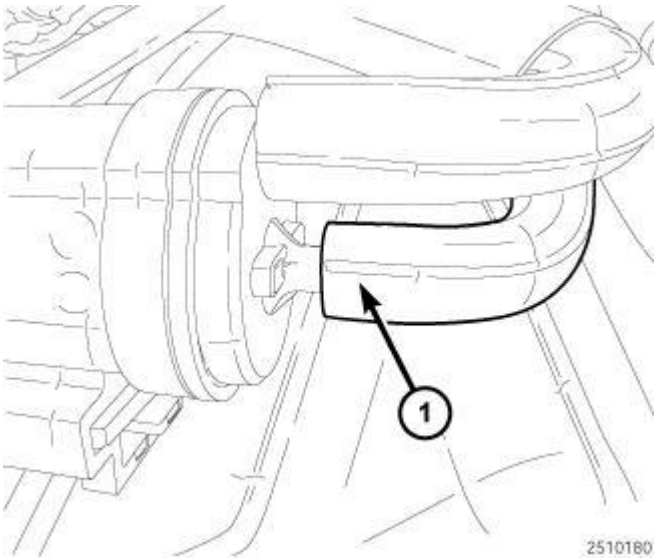


**Fig. 214: Coolant Pump Actuator Vacuum Line**
**Courtesy of CHRYSLER LLC**

9. Disconnect the coolant pump actuator vacuum line (1).
10. Remove the water pump/power steering assembly.

 

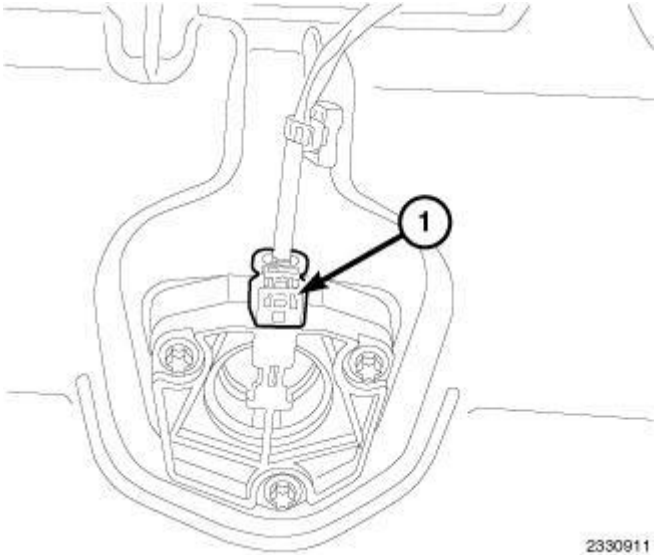


**Fig. 215: Oil Level Switch Wire Harness Connector**
**Courtesy of CHRYSLER LLC**

11. Disconnect the oil life monitor harness connector (1).
12. Remove bolts and the oil pan from engine.

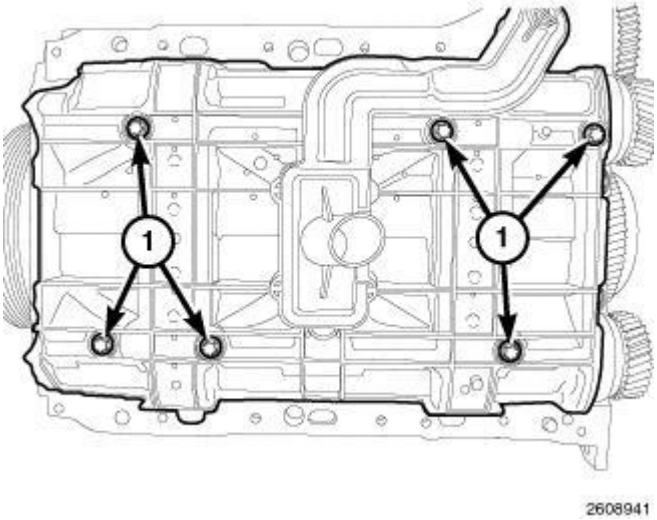


**Fig. 216: Oil Pump Pickup Bolts**
**Courtesy of CHRYSLER LLC**

13. Remove bolts and the oil pump pickup.
14. Remove the front oil seal carrier. Refer to **SEAL, Crankshaft Oil, Front , Removal**.

 

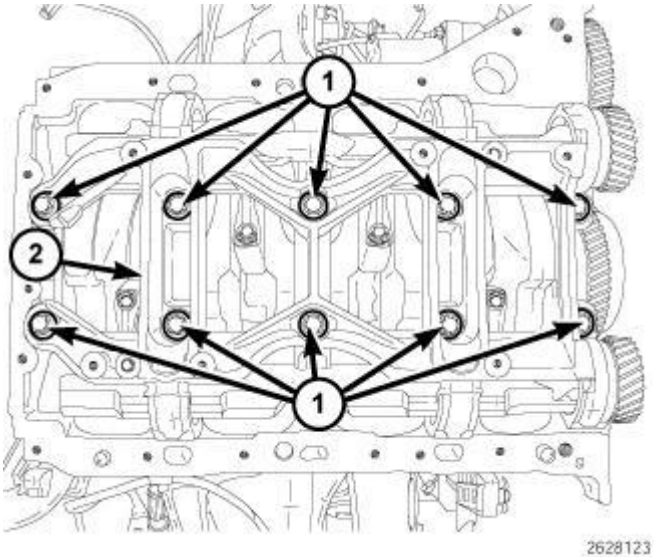


**Fig. 217: Crankshaft Main Bearing Cap/Balance Shaft Assembly Bolts**
**Courtesy of CHRYSLER LLC**

15. Remove bolts (1) and the crankshaft main bearing cap/balance shaft assembly (2) from engine block.
16. Inspect crankshaft bearing caps (2) for wear.
17. Inspect the crankshaft bearing caps bolts (1) for stretching. Refer to **CRANKSHAFT**.

**Installation**

**INSTALLATION**

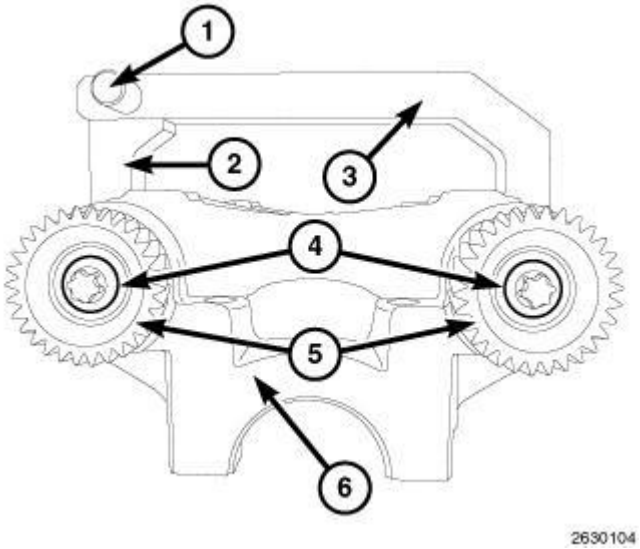


**Fig. 218: Balance Shaft Drive Gears Installation**
**Courtesy of CHRYSLER LLC**

1. Clean all gasket mating surfaces.
2. Install into the Balance Shaft Lock Tool (special tool #10231, Lock, Balance Shaft) and rotate halves (2

and 3) into the locked position and insert the locking pin (1).

3. Loosen the bolts (4) securing balance shaft drive gears (5).
4. Install crankshaft main bearing cap/balance shaft onto engine block while ensuring the balance shaft drive gears are meshed properly and install crankshaft main bearing cap bolts finger tight.
5. Tighten balance shaft drive gear bolts to 50 N.m (37 ft. lbs.) plus an additional 90 degrees.
6. Remove Balance Shaft Locking Tool (special tool #10231, Lock, Balance Shaft).

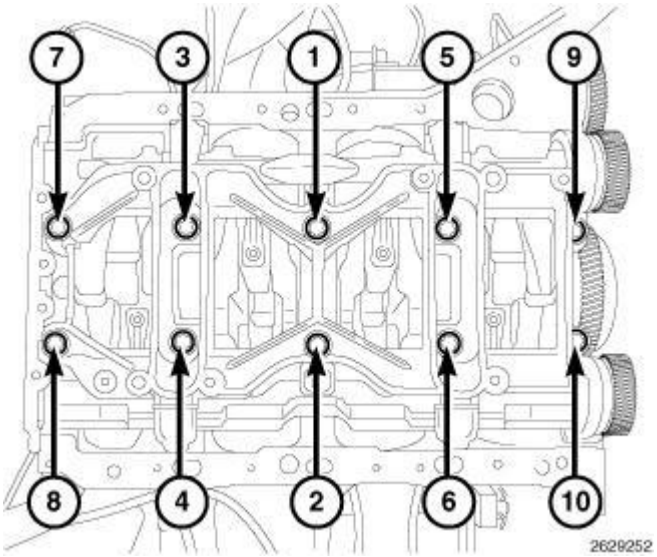


**Fig. 219: Crankshaft Main Bearing Cap Bolts Torque Sequence**
**Courtesy of CHRYSLER LLC**

7. Using the sequence shown in illustration, tighten bolts to 60 N.m (44 ft. lbs.) plus an additional 90 degrees.
8. Install the front oil seal carrier. Refer to **SEAL, Crankshaft Oil, Front , Installation**.

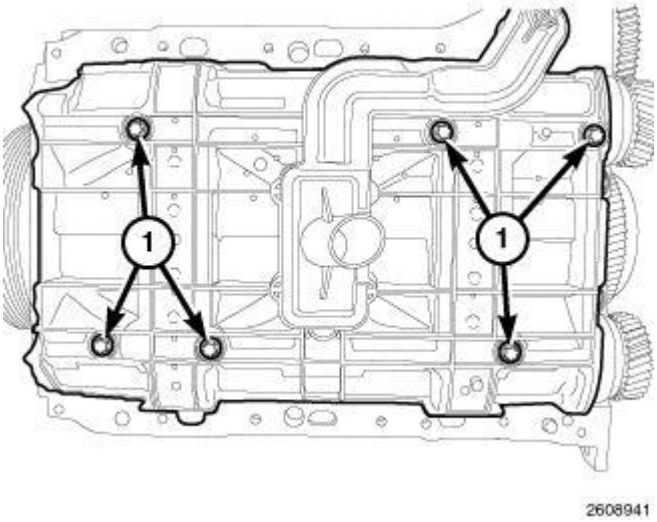


**Fig. 220: Oil Pump Pickup Bolts**

 

**Courtesy of CHRYSLER LLC**

9. Install the oil pump pickup. Tighten bolts to 6 N.m (53 in. lbs.) plus additional 90 degrees.

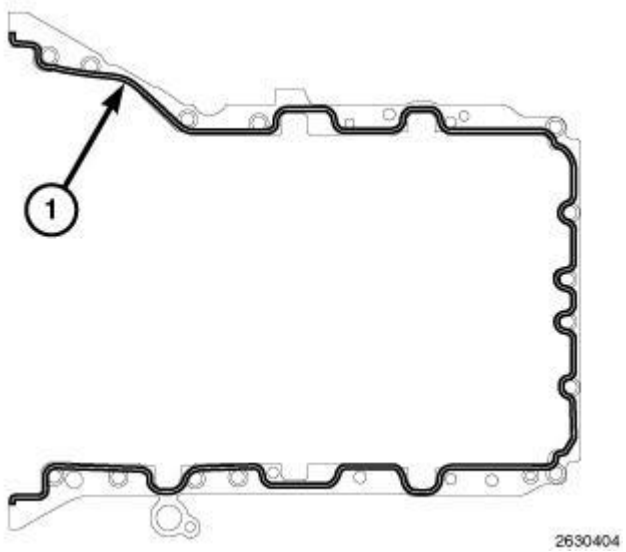


**Fig. 221: Applying Engine Sealant RTV Onto Oil Pan Mating Surface**
**Courtesy of CHRYSLER LLC**

10. Apply a 2 mm bead of Engine Sealant RTV onto the oil pan mating surface (1).

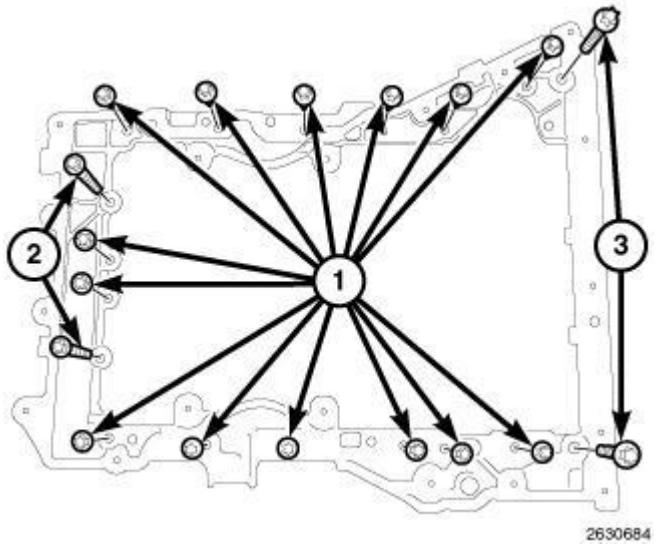


**Fig. 222: Locating Oil Pan Bolts**
**Courtesy of CHRYSLER LLC**

11. Install oil pan.
    - Tighten M6 bolts to 9 N.m (80 in. lbs.).
    - Tighten M8 bolts to 20 N.m (177 in. lbs.).
    - Tighten transmission-to-oil pan bolts to 40 N.m (30 ft. lbs.).

 

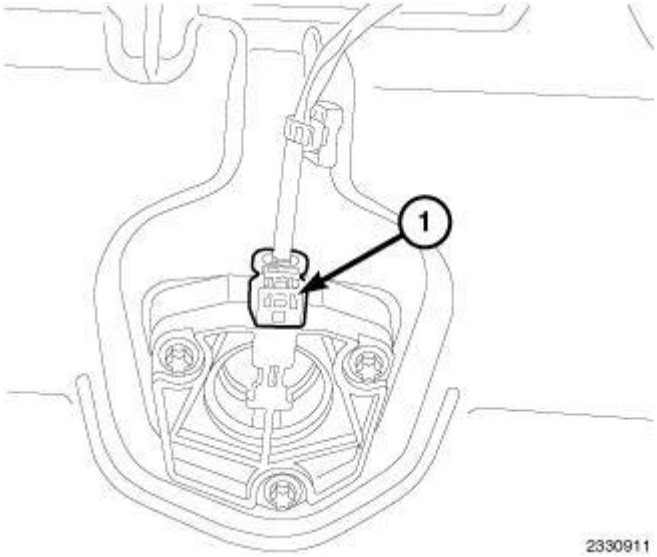


**Fig. 223: Oil Level Switch Wire Harness Connector**
**Courtesy of CHRYSLER LLC**

12. Connect the oil life monitor harness connector.

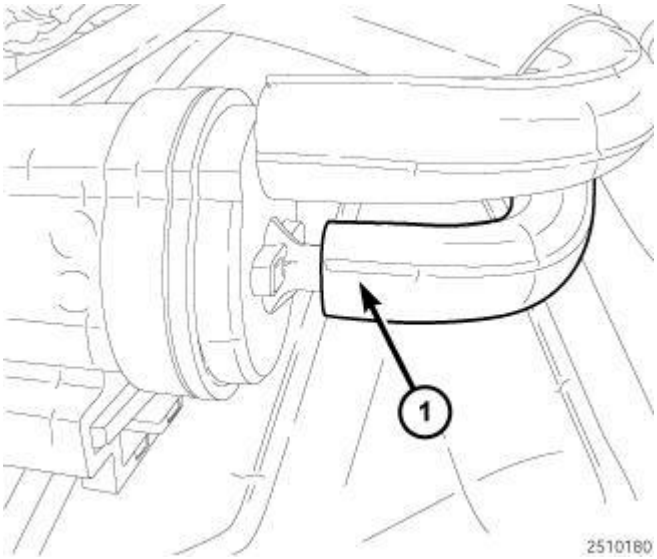


**Fig. 224: Coolant Pump Actuator Vacuum Line**
**Courtesy of CHRYSLER LLC**

13. Install the water pump/power steering pump assembly.
14. Connect the coolant pump actuator vacuum line (1).

 

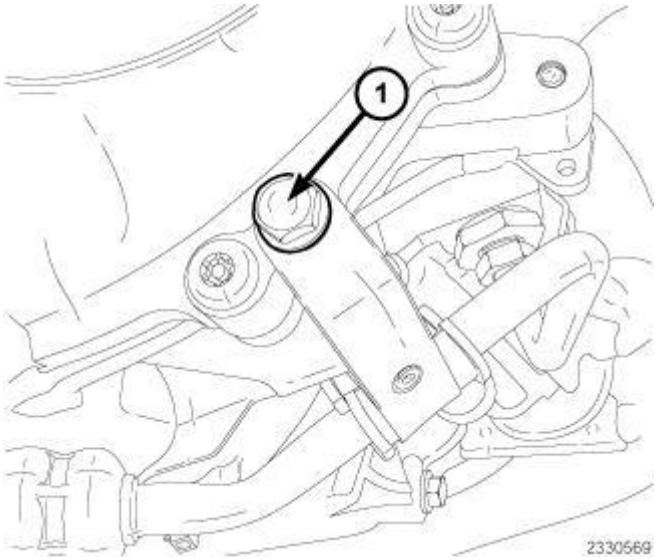


**Fig. 225: Power Steering Line Support Bracket Retaining Bolt**
**Courtesy of CHRYSLER LLC**

15. Install the power steering line to steering gear. Tighten the tube nut to 32 N.m (24 ft. lbs.).
16. Install the power steering line support bracket bolt (1) and tighten bolt to 11 N.m (97 in. lbs.).

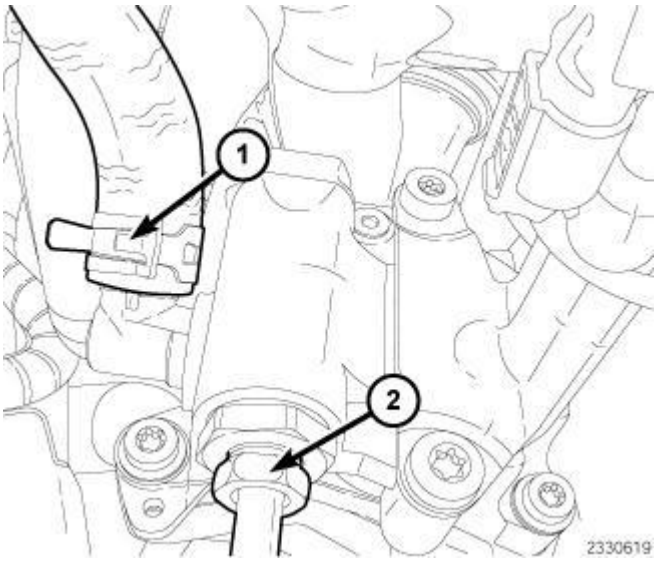


**Fig. 226: Power Steering Supply Line & Feed Line**
**Courtesy of CHRYSLER LLC**

17. Install the power steering feed line (2) to pump. Tighten the tube nut to 32 N.m (24 ft. lbs.).
18. Connect the power steering return line (1) to pump.
19. Install the oil dipstick tube. Tighten bolts to 9 N.m. 80 in. lbs.).
20. Install the lower timing chain cover. Refer to **COVER(S), Engine Timing , Installation**.
21. Connect the negative battery cable.

 

## PUMP, VACUUM

### Description

#### DESCRIPTION

The vacuum pump (1) is mounted to the rear of the oil pump. The vacuum pump is of the vane-type pump that is driven by a hex drive on the rear of the oil pump. The vacuum pump supplies vacuum to the brake booster, EGR system, coolant pump solenoid.

### Diagnosis and Testing

#### DIAGNOSIS AND TESTING - VACUUM PUMP

1. Connect a vacuum gauge to the booster check valve with a short length of hose and T-fitting.
2. Start the engine allowing the engine to run for 30 seconds. Vacuum should be 18 inches HG (609 millibars). Verify the vacuum line is not leaking. If no leak is present replace vacuum pump.

### Removal

#### REMOVAL

1. Disconnect the negative battery cable.
2. Remove the engine cover.
3. Remove the thermostat housing. Refer to **THERMOSTAT , Removal** .

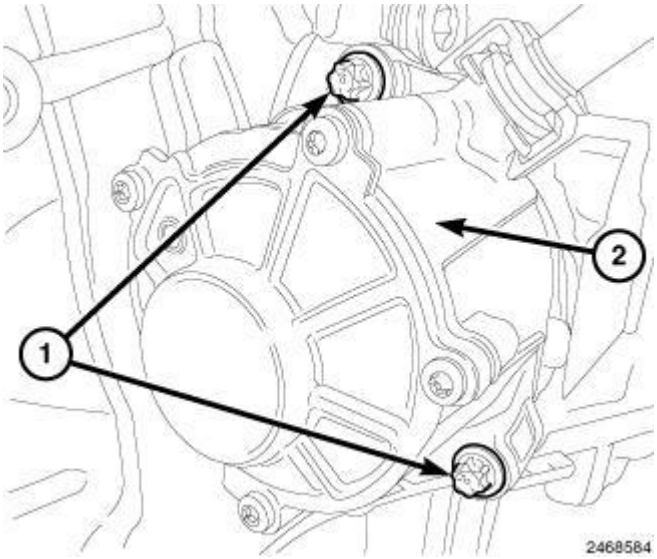


**Fig. 227: Vacuum Pump & Bolts**
**Courtesy of CHRYSLER LLC**

4. Remove bolts (1) and remove the vacuum pump (2).

### Installation

 

**INSTALLATION**

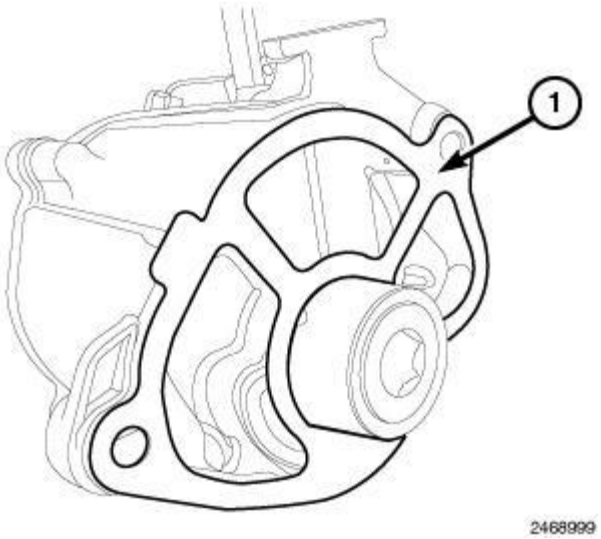


**Fig. 228: Vacuum Pump Gasket**
**Courtesy of CHRYSLER LLC**

1. Position a new gasket onto the vacuum pump (1).

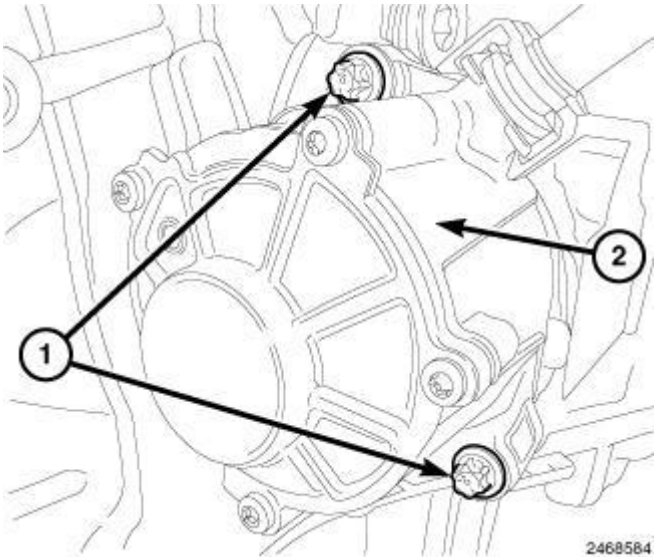


**Fig. 229: Vacuum Pump & Bolts**
**Courtesy of CHRYSLER LLC**

2. Slide vacuum pump (2) onto oil pump hex drive and seat against the block. Tighten bolts (1) to 9 N.m (80 in. lbs.).
3. Install the thermostat housing. Refer to **THERMOSTAT , Installation** .
4. Install the engine cover.
5. Connect the negative battery cable.

 

## SEAL, CRANKSHAFT OIL, FRONT

**Removal**

**REMOVAL**

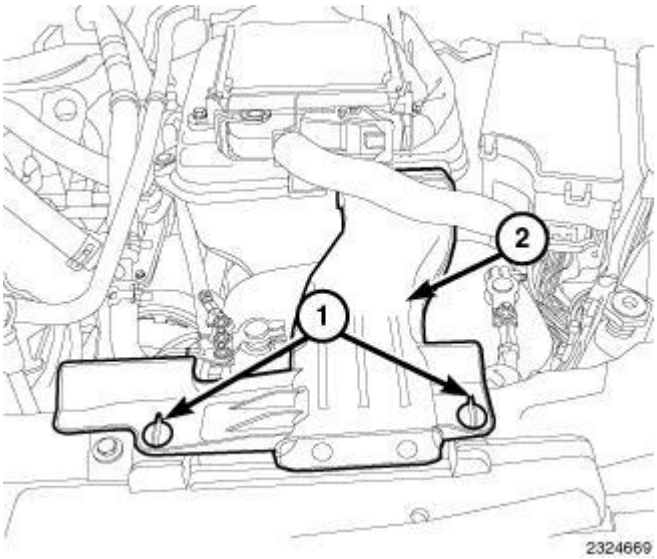


**Fig. 230: Quarter Turn Lock Tabs & Air Inlet Duct**
**Courtesy of CHRYSLER LLC**

1. Release quarter turn lock tabs (1) and remove air inlet duct (2).
2. Disconnect the negative battery cable.
3. Remove the right front tire. Refer to **Removal** .
4. Remove the belly pan.
5. Partially remove the serpentine belt. Refer to **BELT, Serpentine , Removal** .

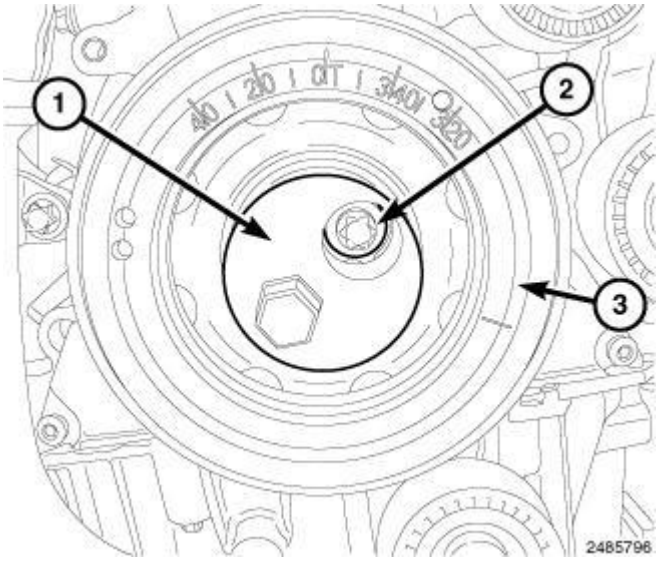


**Fig. 231: Vibration Damper Holder, Bolts & Vibration Damper**

**Courtesy of CHRYSLER LLC**

**NOTE: DO NOT rotate the engine backward.**

6. Using Vibration Damper Holder (special tool #10236, Holder, Vibration Damper) (1), remove bolts (2) and the vibration damper (3).
7. Place a suitable tool behind the lip of the oil seal to pry the oil seal outward. Be careful not to damage the crankshaft seal bore of cover.

**Removal - Front Seal Carrier**

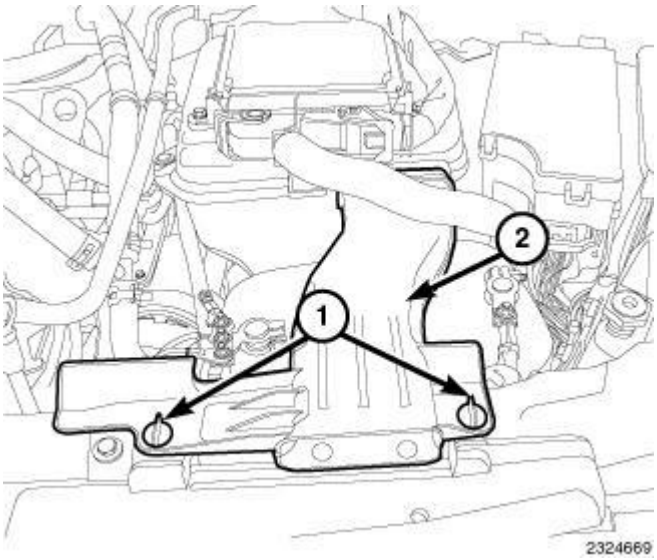


**Fig. 232: Quarter Turn Lock Tabs & Air Inlet Duct**
**Courtesy of CHRYSLER LLC**

1. Release quarter turn lock tabs (1) and remove air inlet duct (2).
2. Disconnect the negative battery cable.
3. Remove the right front tire. Refer to **Removal** .
4. Remove the belly pan.
5. Partially remove the serpentine belt. Refer to **BELT, Serpentine , Removal** .

 

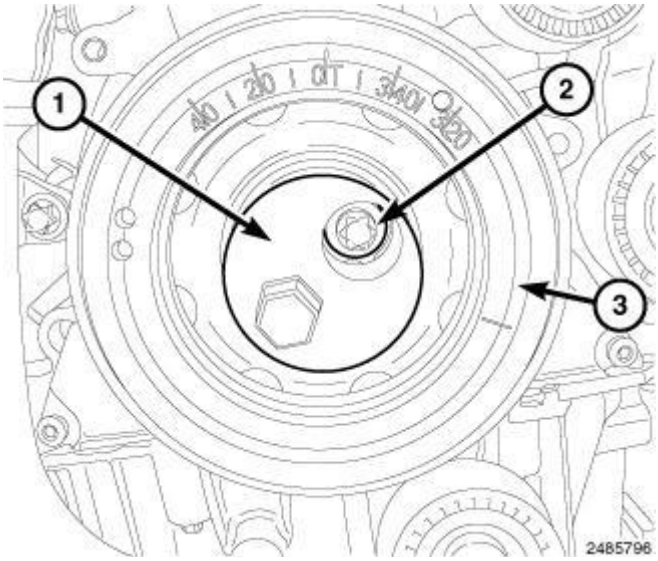


**Fig. 233: Vibration Damper Holder, Bolts & Vibration Damper**
**Courtesy of CHRYSLER LLC**

**NOTE: DO NOT rotate the engine backward.**

6. Using Vibration Damper Holder (special tool #10236, Holder, Vibration Damper) (1), remove bolts (2) and the vibration damper (3).

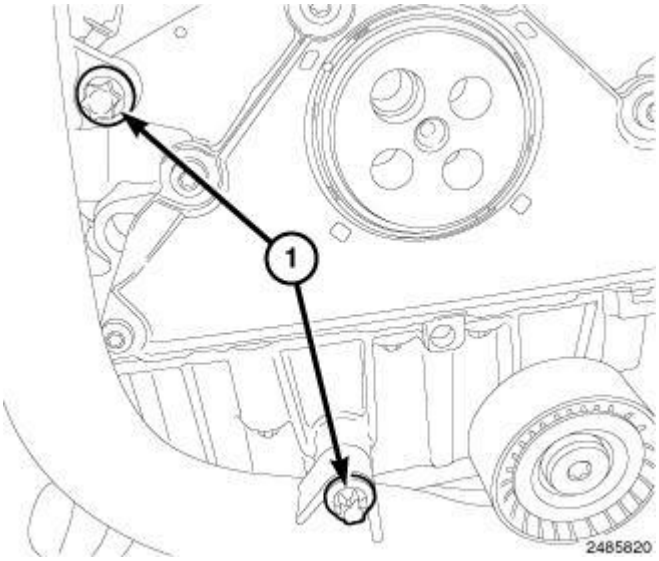


**Fig. 234: Coolant Tube Bolts**
**Courtesy of CHRYSLER LLC**

7. Remove the bolts (1) from the coolant tube.

 

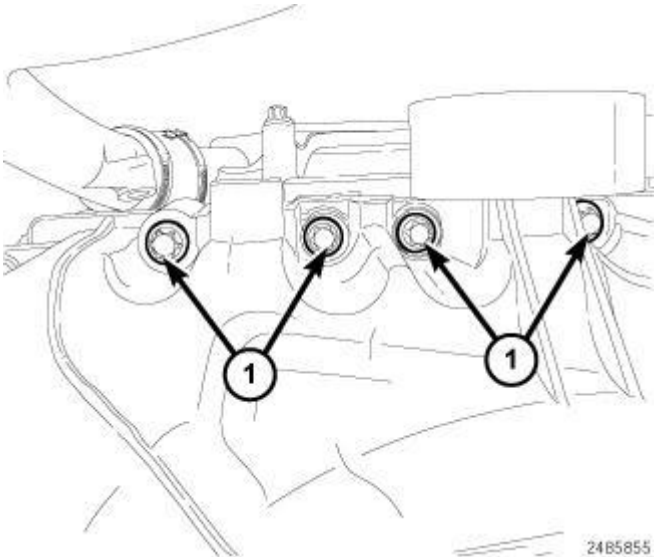


**Fig. 235: Front Oil Pan Bolts**
**Courtesy of CHRYSLER LLC**

8. Remove the front oil pan bolts (1).

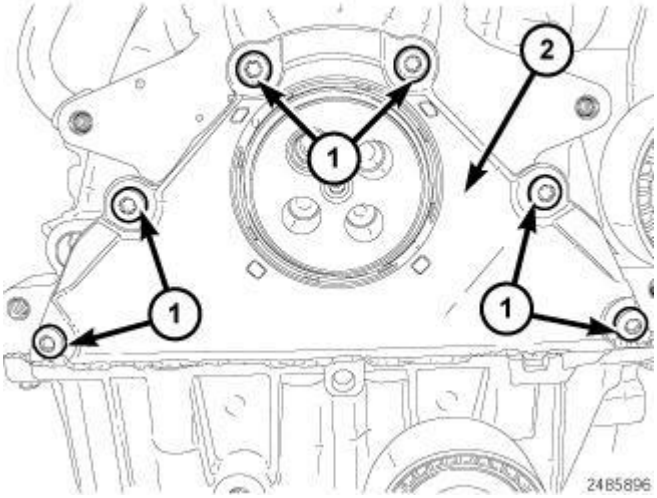


**Fig. 236: Front Oil Seal Carrier & Bolts**
**Courtesy of CHRYSLER LLC**

9. Remove bolts (1) and the front oil seal carrier (2).

**Installation**

**Front Seal Carrier**

 

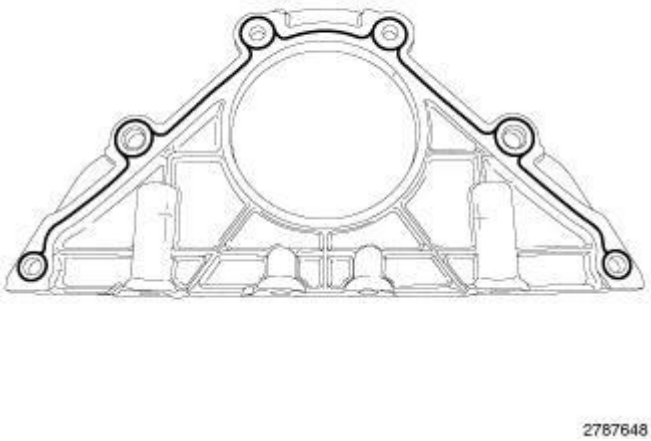


**Fig. 237: Applying Bead Of Engine Sealant RTV To Front Seal Carrier**
**Courtesy of CHRYSLER LLC**

2/2/10

1. Clean the gasket mating surfaces.
2. Apply a 2 mm bead of engine sealant RTV to the front seal carrier as illustrated and to the front of oil pan.

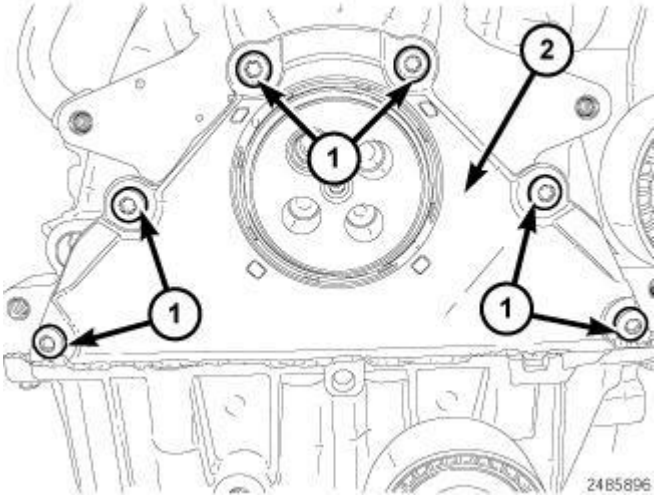


**Fig. 238: Front Oil Seal Carrier & Bolts**
**Courtesy of CHRYSLER LLC**

3. Install the front oil seal carrier (2). Tighten bolts (1) to 9 N.m (80 in. lbs.).

 

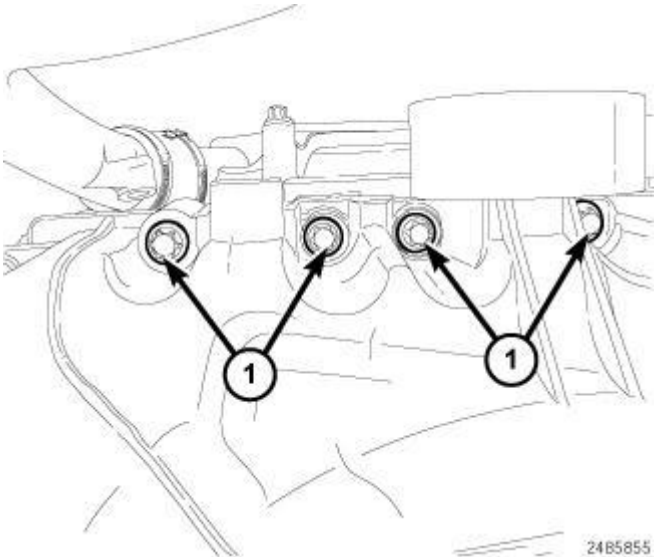


**Fig. 239: Front Oil Pan Bolts**
**Courtesy of CHRYSLER LLC**

4. Install the front oil pan bolts. Tighten bolts to 9 N.m (80 in. lbs.).

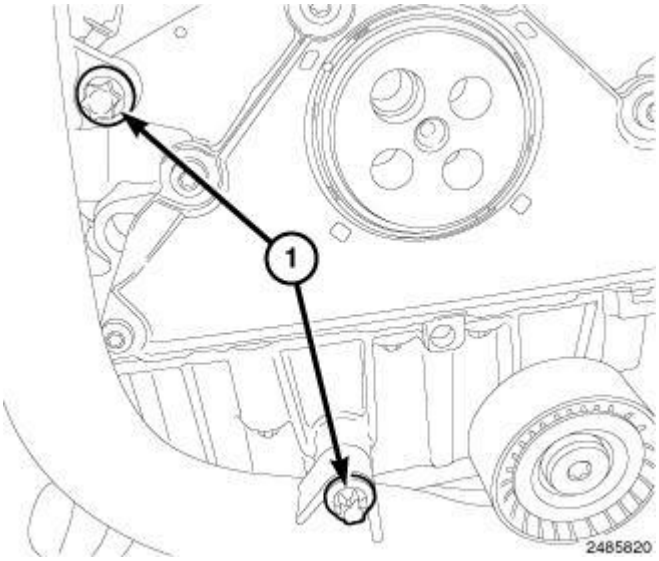


**Fig. 240: Coolant Tube Bolts**
**Courtesy of CHRYSLER LLC**

5. Install the bolts to the coolant tube. Tighten bolts to 9 N.m (80 in. lbs.).

 

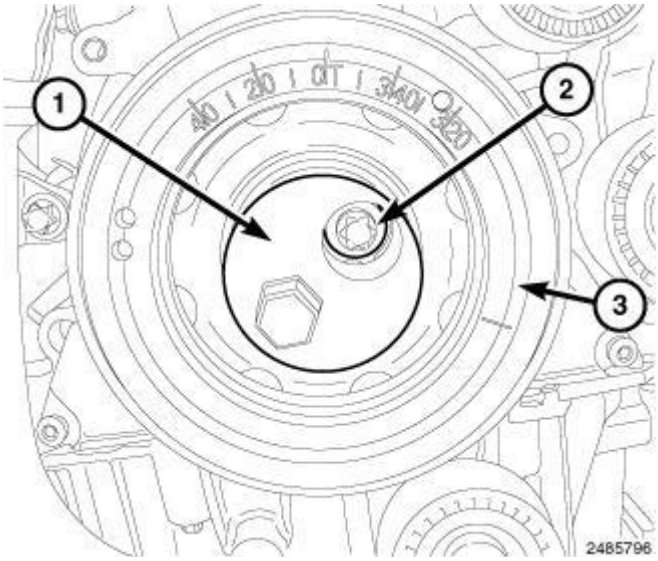


**Fig. 241: Vibration Damper Holder, Bolts & Vibration Damper**
**Courtesy of CHRYSLER LLC**

6. Install the vibration damper and bolts.
7. Using Vibration Damper Holder Tool (special tool #10236, Holder, Vibration Damper), tighten bolts to 80 N.m (59 ft. lbs.) plus additional 90 degrees.

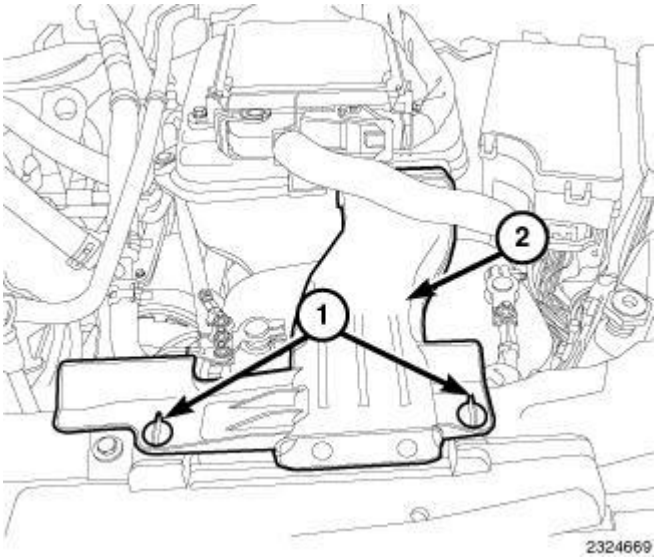


**Fig. 242: Quarter Turn Lock Tabs & Air Inlet Duct**
**Courtesy of CHRYSLER LLC**

8. Install the serpentine belt. Refer to **BELT, Serpentine , Installation** .
9. Install the belly pan.
10. Install the right front tire. Refer to **Installation** .
11. Connect the negative battery cable.
12. Install air inlet duct (2) and lock the quarter turn lock tabs (1).

 

**INSTALLATION**

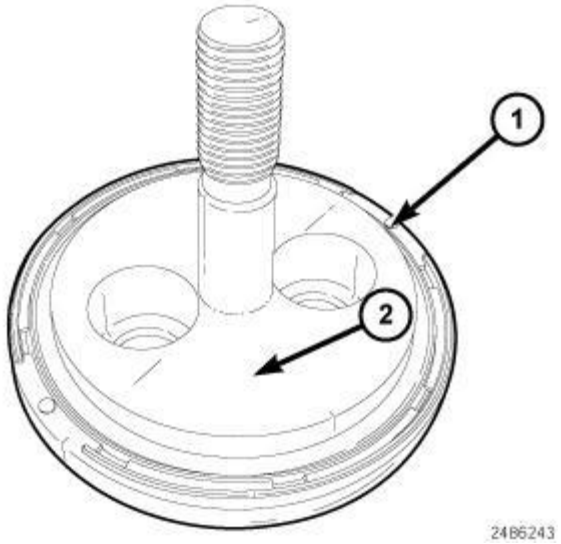


**Fig. 243: Front Crankshaft Oil Seal & Front Crankshaft Seal Adapter**
**Courtesy of CHRYSLER LLC**

1. Position the front crankshaft oil seal (1) onto the Front Crankshaft Seal adapter (special tool #10235, Install, Front Crankshaft Seal Ring) (2).

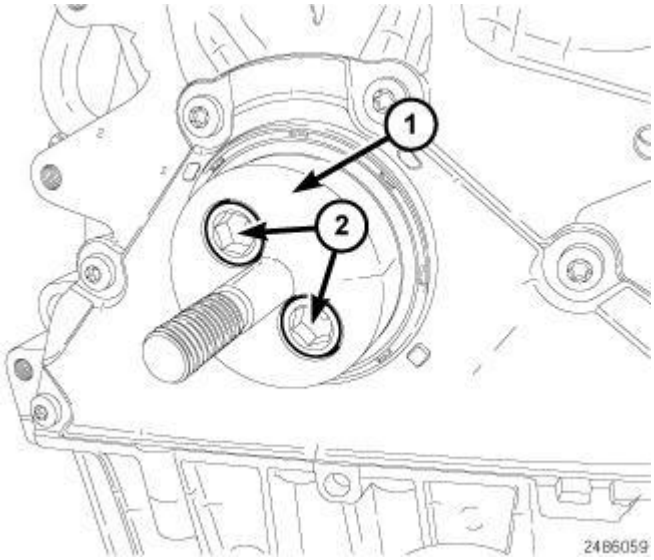


**Fig. 244: Front Crankshaft Seal Adapter & Bolts**
**Courtesy of CHRYSLER LLC**

2. Position the Front Crankshaft Seal Installer Adapter (special tool #10235, Install, Front Crankshaft Seal Ring) (1) to crankshaft and install the bolts (2).

 

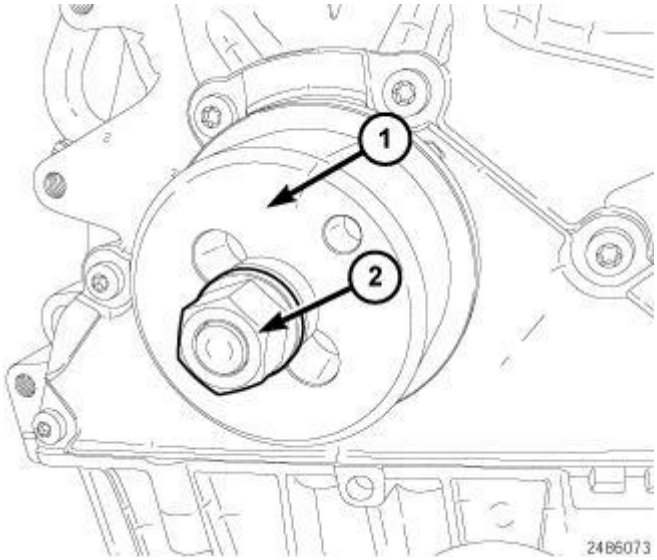


**Fig. 245: Front Crankshaft Seal Adapter & Nut**
**Courtesy of CHRYSLER LLC**

3. Position the Front Crankshaft Seal Installer (special tool #10235, Install, Front Crankshaft Seal Ring) (1) onto the seal/adaptor and install the nut (2).
4. Turn the nut (2) to draw the seal in. When the nut (2) can no longer turn the seal is fully installed.
5. Remove the rear seal installer assembly.

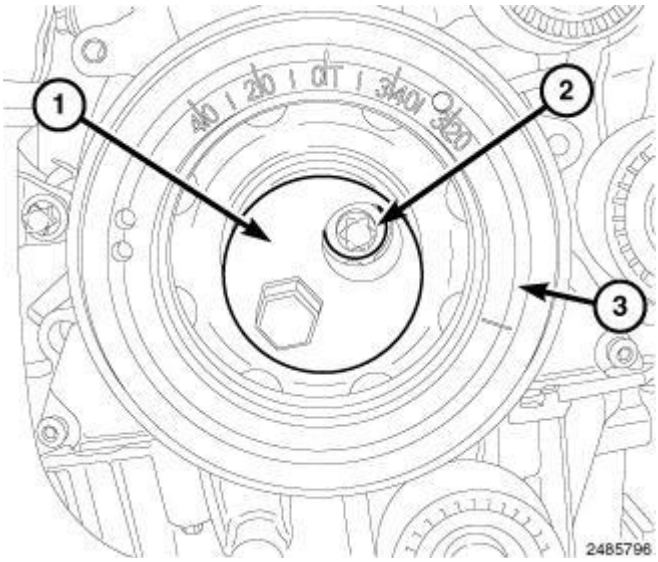


**Fig. 246: Vibration Damper Holder, Bolts & Vibration Damper**
**Courtesy of CHRYSLER LLC**

6. Install the vibration damper and bolts.
7. Using Vibration Damper Holder tool (special tool #10236, Holder, Vibration Damper), tighten bolts to 80 N.m (59 ft. lbs.) plus additional 90 degrees.

 

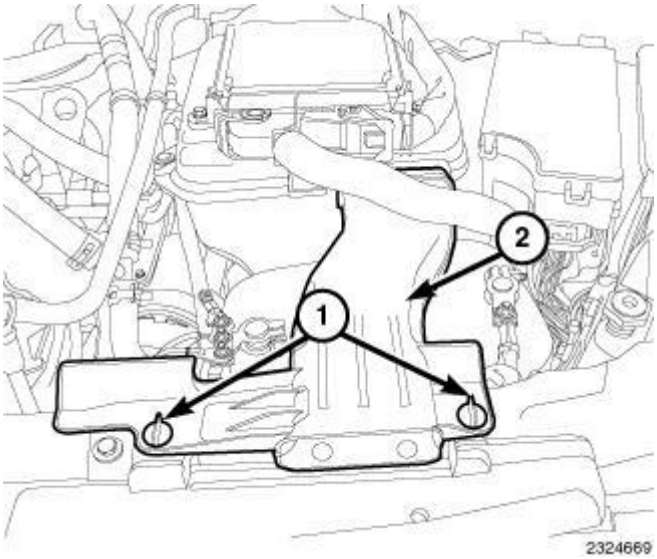


**Fig. 247: Quarter Turn Lock Tabs & Air Inlet Duct**
**Courtesy of CHRYSLER LLC**

8. Install the serpentine belt. Refer to **BELT, Serpentine , Installation** .
9. Install the belly pan.
10. Install the right front tire. Refer to **Installation** .
11. Connect the negative battery cable.
12. Install air inlet duct (2) and lock the quarter turn lock tabs (1).

## SEAL, CRANKSHAFT OIL, REAR

### Removal

#### REMOVAL

1. Disconnect the negative battery cable.
2. Remove the clutch assembly. Refer to **DISC, Clutch , Removal** .

 

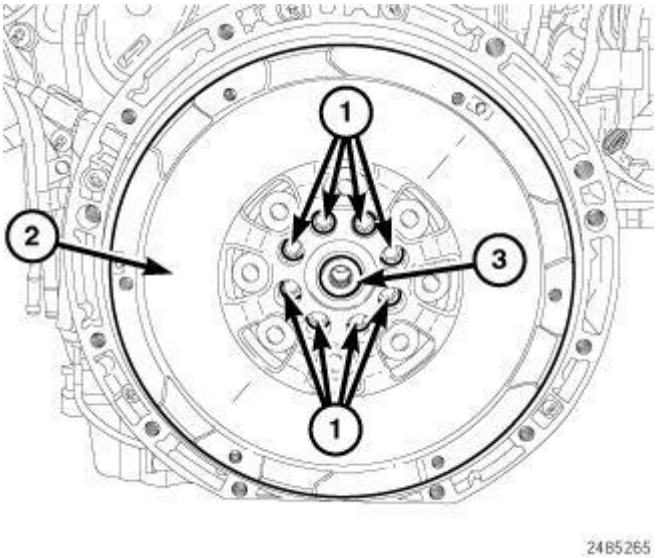


**Fig. 248: Flywheel & Bolts**
**Courtesy of CHRYSLER LLC**

3. Remove bolts (1) and the flywheel (2).

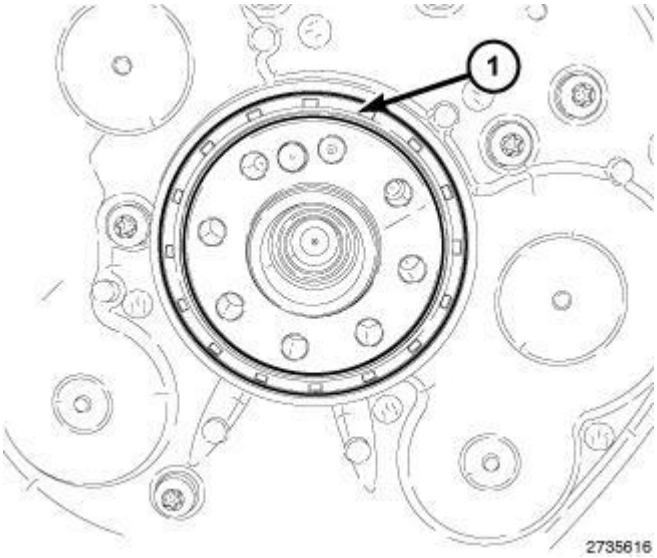


**Fig. 249: Rear Crankshaft Oil Seal**
**Courtesy of CHRYSLER LLC**

4. Place a suitable tool behind the lips of the oil seal to pry the oil seal outward. Be careful not to damage the crankshaft seal bore of cover.

**Installation**

**INSTALLATION**

 

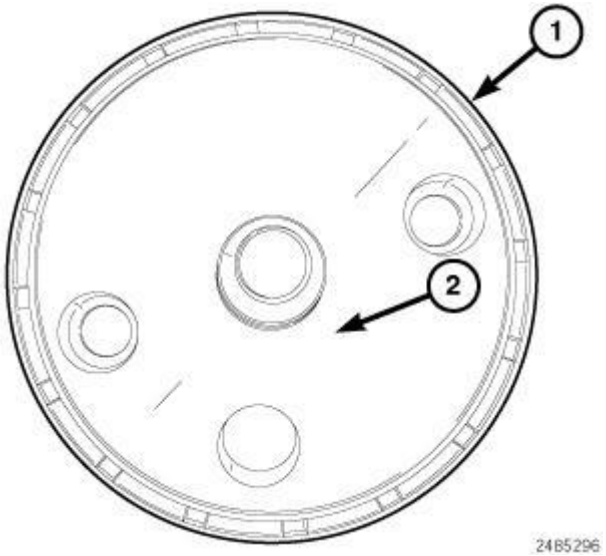


**Fig. 250: Rear Crankshaft Oil Seal & Rear Main Seal Ring Installer Adaptor**
**Courtesy of CHRYSLER LLC**

1. Position the rear crankshaft oil seal (1) onto the Rear Main Seal Ring Installer Adaptor (special tool #10233, Install, Rear Crankshaft Seal) (2).

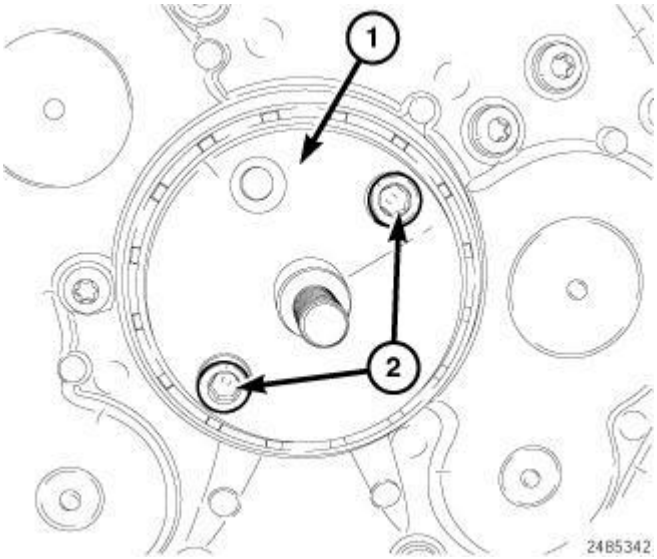


**Fig. 251: Rear Main Seal Ring Adaptor & Bolts**
**Courtesy of CHRYSLER LLC**

2. Position the Rear Main Seal Ring Adaptor (special tool #10233, Install, Rear Crankshaft Seal) (1) to crankshaft and install the bolts (2).

 

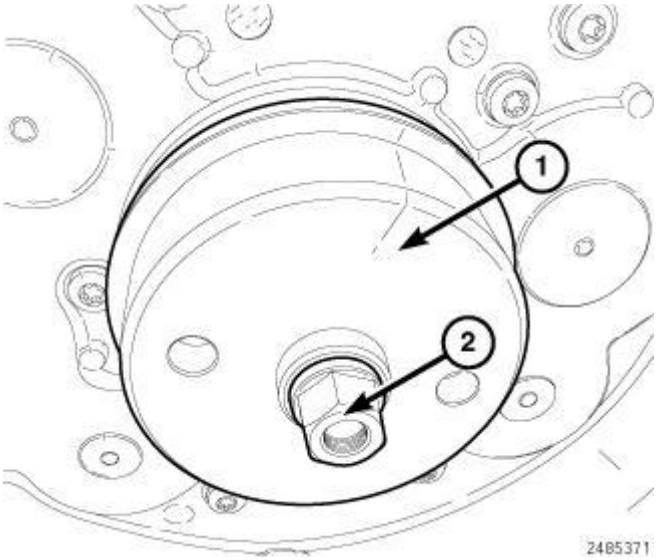


**Fig. 252: Seal Installer & Nut**
**Courtesy of CHRYSLER LLC**

3. Position the Seal Installer (special tool #10233, Install, Rear Crankshaft Seal) (1) onto the seal/adaptor (special tool #10233, Install, Rear Crankshaft Seal) and install the nut (2).
4. Turn the nut (2) to draw the seal in. When the nut (2) can no longer turn the seal is fully installed.
5. Remove the rear seal installer assembly.

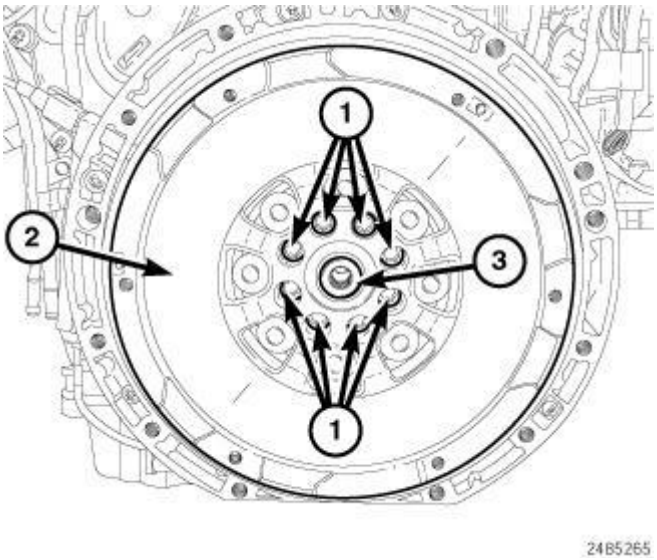


**Fig. 253: Flywheel & Bolts**
**Courtesy of CHRYSLER LLC**

6. Install dual mass flywheel (2) and the bolts (1). Tighten bolts to 45 N.m (33 ft. lbs.) plus an additional 90 degrees.
7. Install the clutch assembly. Refer to **DISC, Clutch , Installation** .
8. Connect negative battery cable.

 

# ENGINE MOUNTING

## DESCRIPTION

### DESCRIPTION

The engine mounting system consists of a four-point system utilizing two load-carrying mounts and two torque struts. The load-carrying mounts are located on each frame rail. The right mount is a hydro-elastic mount and left mount is a conventional elastomeric isolator. The two torque controlling struts are attached at the front of the engine, straddling the right side load-carrying mount. The upper strut connects to the suspension strut tower and the lower to the suspension crossmember.

## OPERATION

### OPERATION

The four-point engine mounting system minimizes the transmission of structure-borne engine noise to the passenger compartment. The load-carrying right and left mounts dampen and isolate vertical motion and vibration. The two struts absorbs torque reaction forces and torsional vibrations.

## INSULATOR, ENGINE MOUNT, FRONT MOUNT

**Removal**

**REMOVAL**

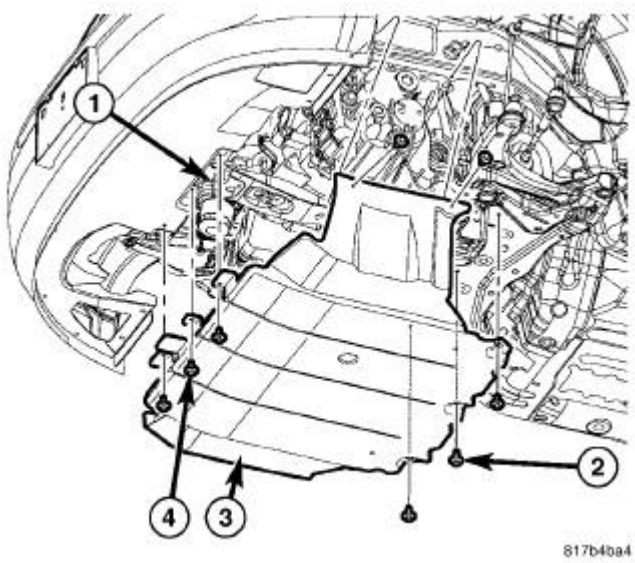


**Fig. 254: Removing/Installing Belly Pan**
**Courtesy of CHRYSLER LLC**

1. Raise and support the vehicle.
2. Remove the four wheel well push pin retainers.

 

3. Remove the three front screws (4), the three rear screws (2) the center bolt and the belly pan.

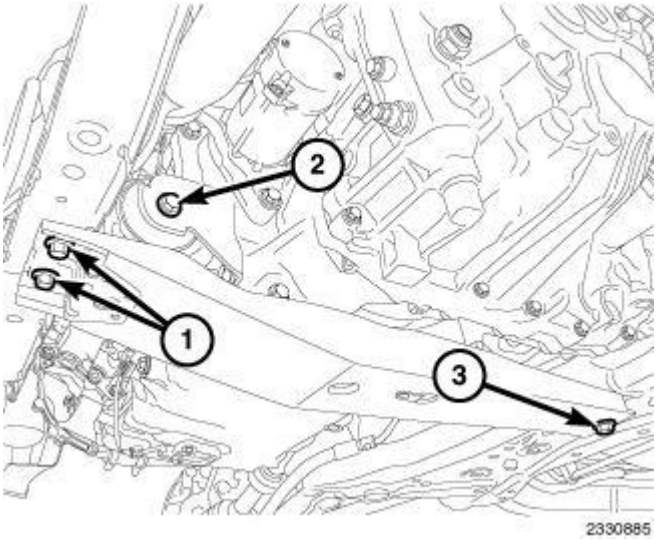


**Fig. 255: Fore/Aft Crossmember Fasteners & Transaxle Mount Through Bolt**
**Courtesy of CHRYSLER LLC**

4. Remove front mount through bolt (2).
5. Remove fore/aft member retaining bolts (1 and 3) and remove fore/aft member.
6. Remove the bolts and the front engine mount from the fore/aft member.

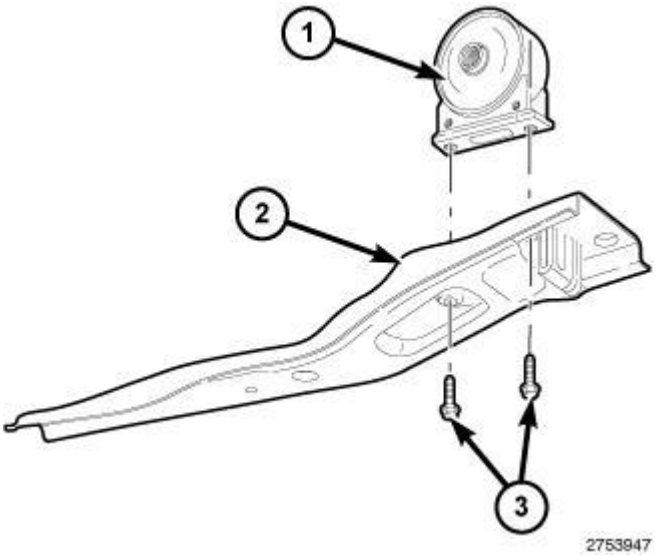


**Fig. 256: Front Engine Mount, Fore/Aft Member & Bolts**
**Courtesy of CHRYSLER LLC**

7. Remove bolts (2) and the front engine mount (1).

**Installation**

 

**INSTALLATION**

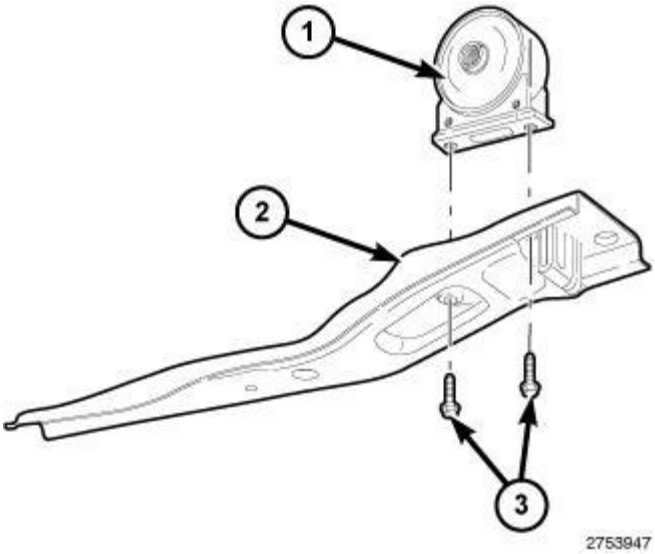


**Fig. 257: Front Engine Mount, Fore/Aft Member & Bolts**
**Courtesy of CHRYSLER LLC**

1. Install the front engine mount (1) to the fore/aft member (2). Tighten bolts (3) to 60 N.m (44 ft. lbs.).

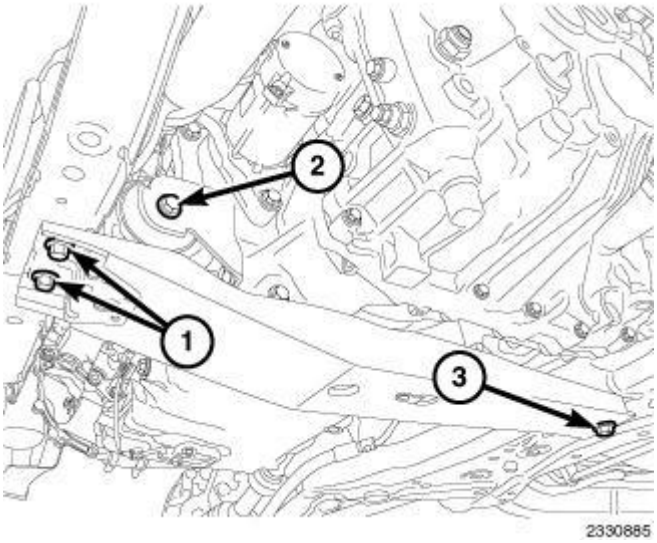


**Fig. 258: Fore/Aft Crossmember Fasteners & Transaxle Mount Through Bolt**
**Courtesy of CHRYSLER LLC**

2. Install the front mount to the crossmember.
3. Install the fore/aft member and tighten bolts (1 and 3) finger tight.
4. Install the front mount through bolt (2) finger tight.
5. Tighten bolts in the following sequence:
    1. Tighten the bolt (1) to 78 N.m (58 ft. lbs.).

 

2. Tighten the bolt (3) to 129 N.m (95 ft. lbs.).
3. Tighten the bolt (2) to 65 N.m (48 ft. lbs.).

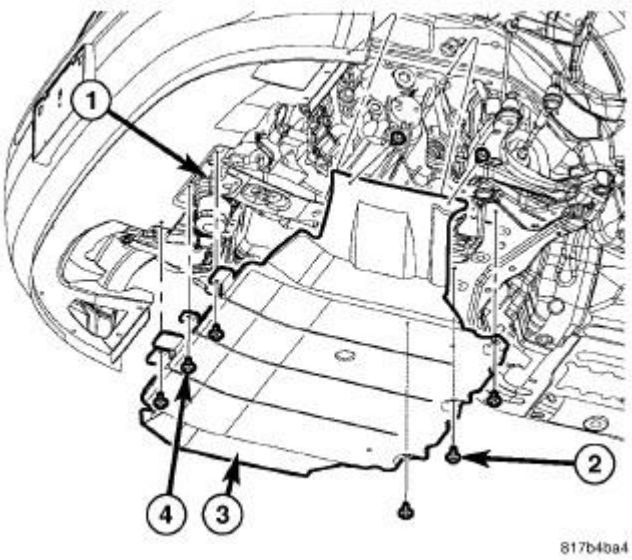


**Fig. 259: Removing/Installing Belly Pan**
**Courtesy of CHRYSLER LLC**

6. Position the belly pan and install the three front bolts (4), the three rear bolts (2) and the center belly pan bolt.
7. Install the four wheel well push pin retainers.
8. Lower the vehicle.

## INSULATOR, ENGINE MOUNT, REAR MOUNT

**Removal**

**REMOVAL**

 

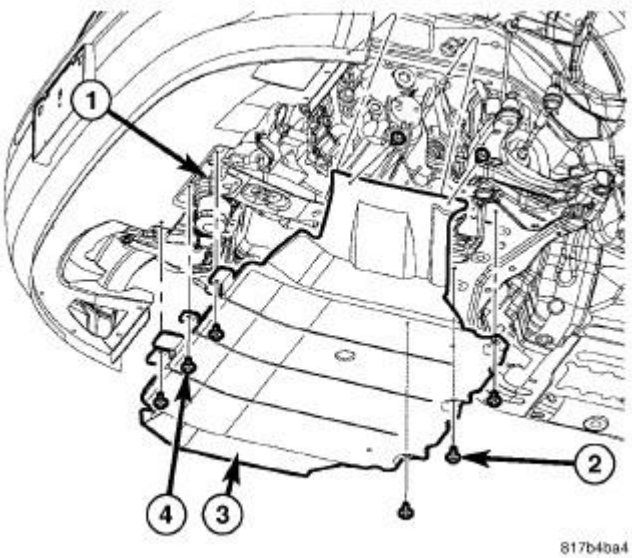


**Fig. 260: Removing/Installing Belly Pan**
**Courtesy of CHRYSLER LLC**

1. Raise and support the vehicle.
2. Remove the four wheel well push pin retainers.
3. Remove the three front screws (4), the three rear screws (2) the center bolt and the belly pan.
4. Position a transmission jack under transmission and slightly raise.

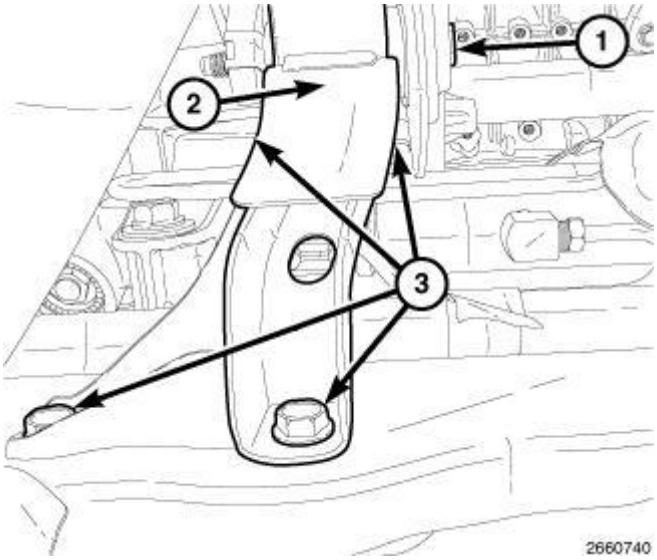


**Fig. 261: Rear Roll Mount & Bolts**
**Courtesy of CHRYSLER LLC**

5. Remove the rear roll mount (2) through bolt (1).
6. Remove the four bolts (3) attaching the rear roll mount (5) to the crossmember and remove the mount.

 

**Installation**

**INSTALLATION**

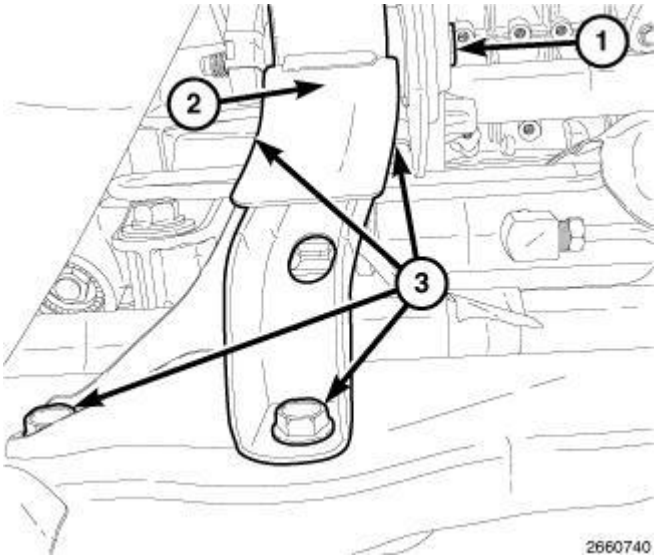


**Fig. 262: Rear Roll Mount & Bolts**
**Courtesy of CHRYSLER LLC**

1. Install the rear roll mount (2) to the crossmember. Tighten the bolts (3) to 153 N.m (112 ft. lbs.).
2. Install the rear roll mount through bolt (1) and tighten to 65 N.m (48 ft. lbs.).

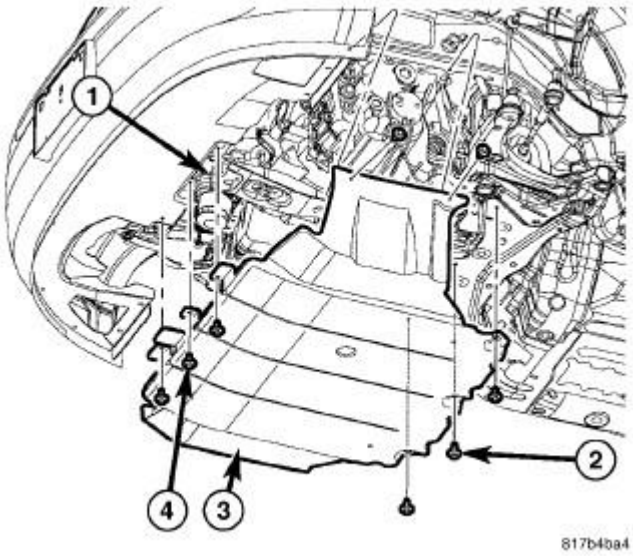


**Fig. 263: Removing/Installing Belly Pan**
**Courtesy of CHRYSLER LLC**

3. Lower the transmission and remove the transmission jack.
4. Position the belly pan and install the three front bolts (4), the three rear bolts (2) and the center belly pan

 

bolt.
5. Install the four wheel well push pin retainers.
6. Lower the vehicle.

## INSULATOR, ENGINE MOUNT, LEFT

### Removal

#### REMOVAL

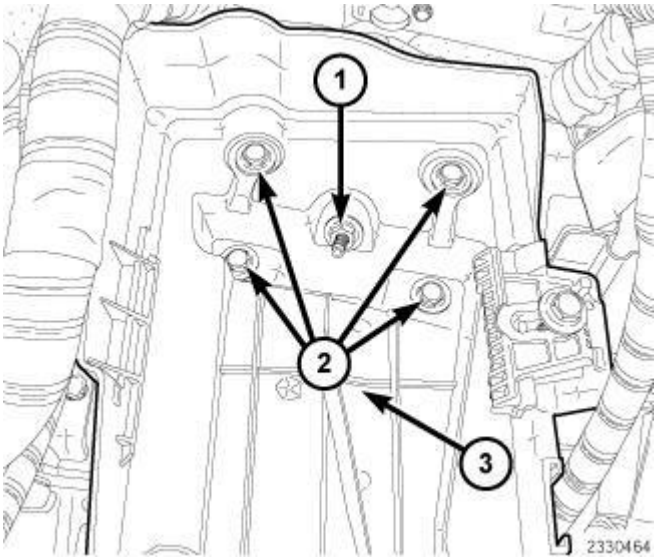


**Fig. 264: Battery Tray, Nut & Retaining Bolts**
**Courtesy of CHRYSLER LLC**

1. Disconnect the positive and negative battery cables.
2. Remove air cleaner assembly. Refer to **BODY, Air Cleaner , Removal**.
3. Remove the battery.
4. Release the lock tabs, lift up and position aside the TIPM.
5. Remove the nut (1), retaining bolts (2) and the battery tray (3).

 

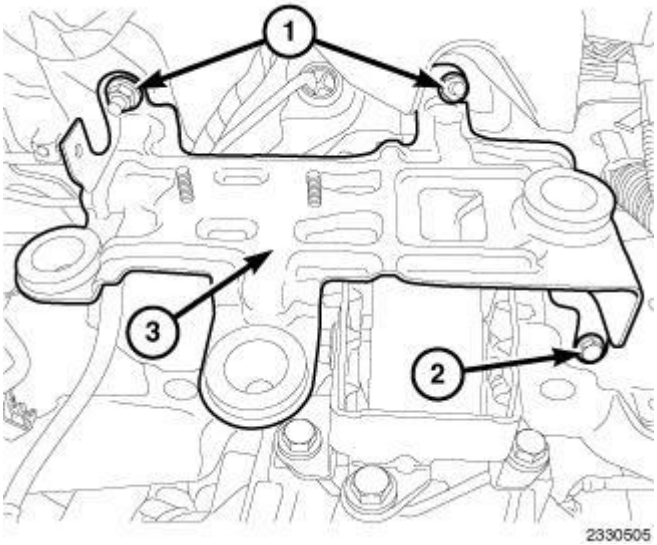


**Fig. 265: Air Cleaner Mounting Bracket, Nuts & Bolt**
**Courtesy of CHRYSLER LLC**

6. Remove the two nuts (1), bolt (2), and the air cleaner mounting bracket (3).

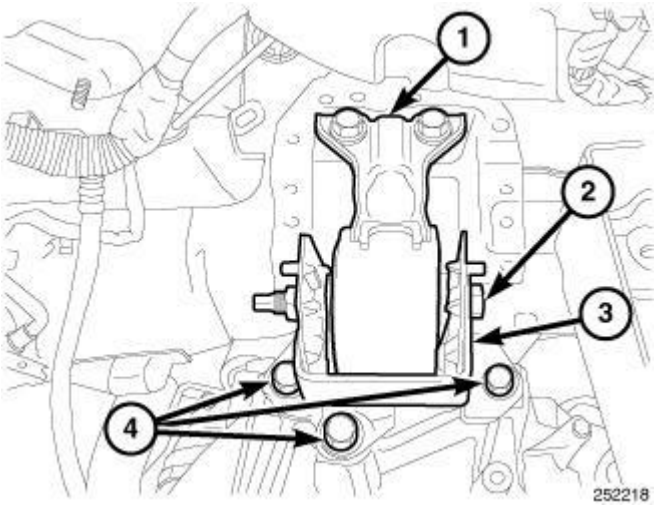


**Fig. 266: Left Engine Mount & Fasteners**
**Courtesy of CHRYSLER LLC**

7. Support transaxle with floor jack.
8. Remove mount to transaxle through bolt (2).
9. Remove the three bolts (4) and the left mount bracket (3).

 

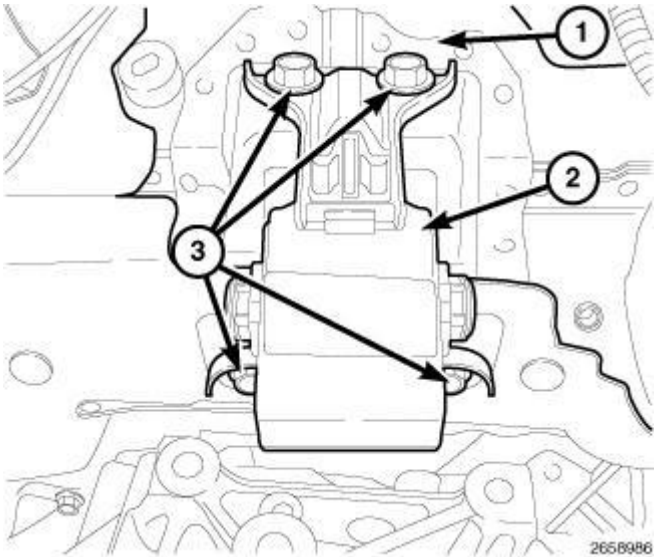


**Fig. 267: Left Side Engine Mount & Bolts**
**Courtesy of CHRYSLER LLC**

10. Remove four bolts (3) and the left side engine mount (2).

**Installation**

**INSTALLATION**

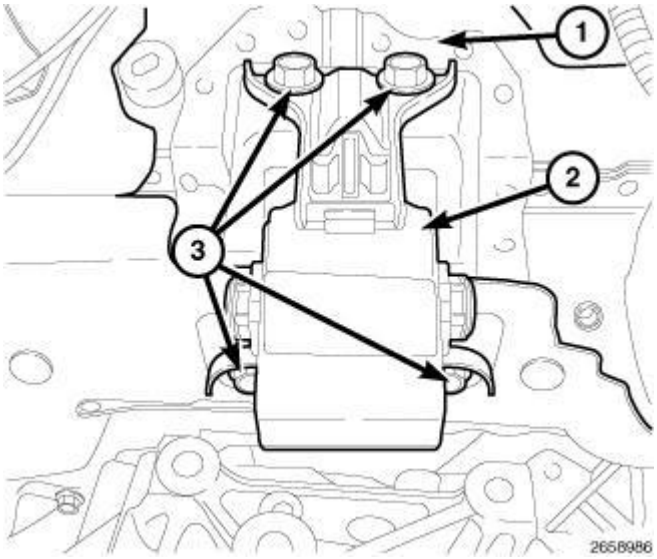


**Fig. 268: Left Side Engine Mount & Bolts**
**Courtesy of CHRYSLER LLC**

1. Install left transmission mount (2) to body frame rail. Tighten Bolts (3) 75 N.m (55 ft. lbs.).

 

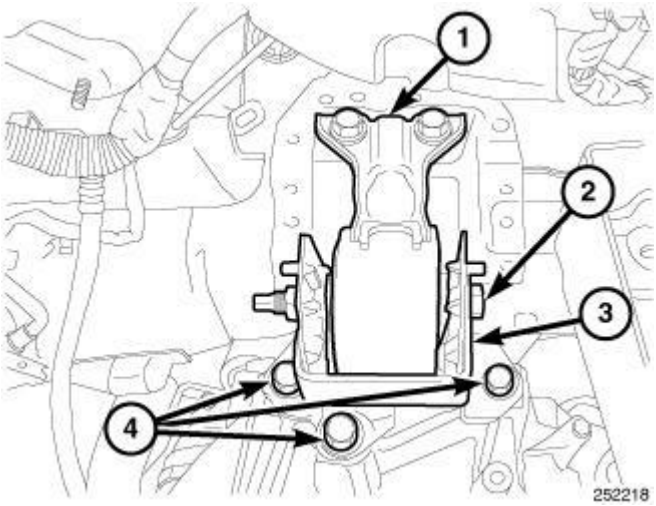


**Fig. 269: Left Engine Mount & Fasteners**
**Courtesy of CHRYSLER LLC**

2. Raise transaxle with a floor jack.
3. Install the left mount bracket (3). Tighten bolts (4) to 61 N.m (45 ft. lbs.).
4. Install left transmission mount through bolt (2) and tighten to 100 N.m (74 ft. lbs.).
5. Remove floor jack.

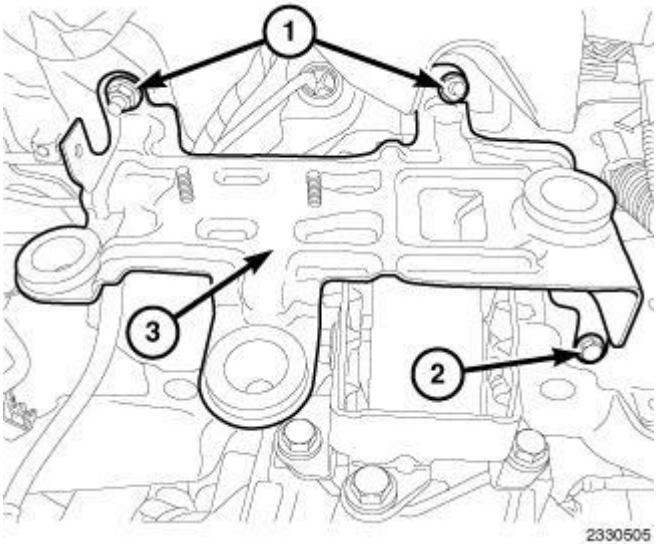


**Fig. 270: Air Cleaner Mounting Bracket, Nuts & Bolt**
**Courtesy of CHRYSLER LLC**

6. Install the air cleaner mounting bracket (3).
    1. Tighten nuts (1) to 11 N.m (97 in. lbs.).
    2. Tighten bolt (2) to 11 N.m (97 in. lbs.).

 

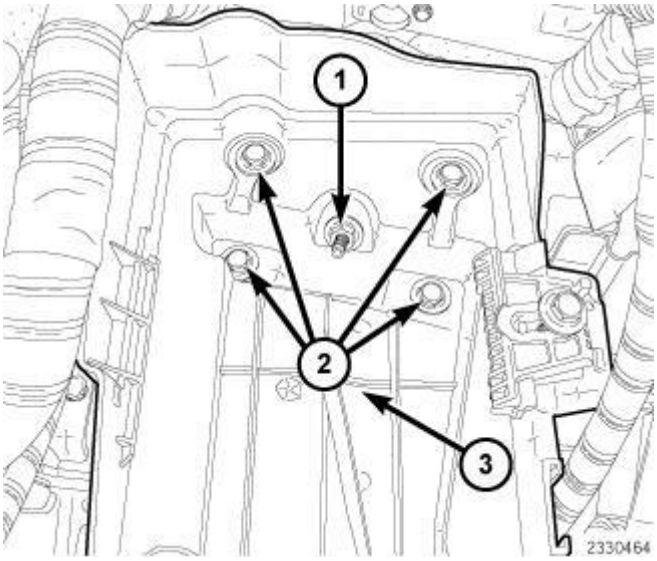


**Fig. 271: Battery Tray, Nut & Retaining Bolts**
**Courtesy of CHRYSLER LLC**

7. Install the battery tray (3).
    1. Tighten bolts (2) to 11 N.m (97 in. lbs.).
    2. Tighten Nut (1) to 11 N.m (97 in. lbs.).
8. Position TIPM the into bracket and push down to lock in place.
9. Install the battery. Tighten bolt to 7 N.m (62 in. lbs.).
10. Install air cleaner assembly. Refer to **BODY, Air Cleaner , Installation**.
11. Connect negative and positive battery cables.

## INSULATOR, ENGINE MOUNT, RIGHT

**Removal**

**ENGINE MOUNT CARRIER BRACKET**

 

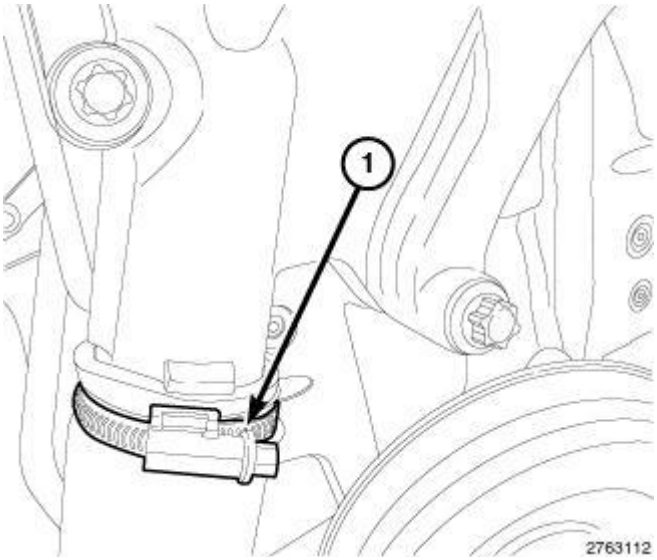


**Fig. 272: Hose Clamp**
**Courtesy of CHRYSLER LLC**

1. Disconnect the negative battery cable.
2. Remove the engine cover.
3. Remove the belly pan.
4. Drain the cooling system. Refer to **Standard Procedure** .
5. Loosen hose clamp (1) and position it aside.

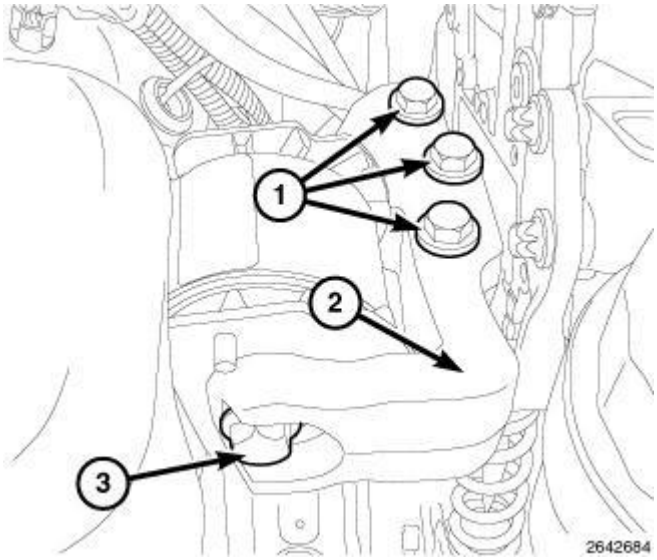


**Fig. 273: Engine Mount, Bracket & Through Bolt**
**Courtesy of CHRYSLER LLC**

**NOTE: Use care in positioning the floor jack to oil pan.**

6. Position a floor jack under the oil pan.

 

7. Remove the engine mount through bolt (3).
8. Remove bolts (1) and the engine mount bracket (2).

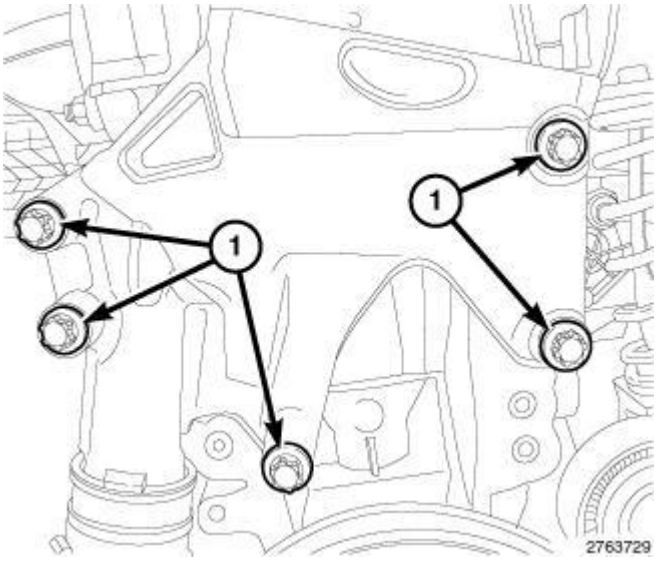


**Fig. 274: Engine Mount Carrier Bracket & Bolts**
**Courtesy of CHRYSLER LLC**

9. Remove bolts (1) and the engine mount carrier bracket.
10. Remove and discard gasket.

**REMOVAL**

1. Disconnect the negative battery cable.
2. Remove the engine cover.
3. Remove the windshield washer reservoir. Refer to **RESERVOIR, Windshield Washer , Removal** .

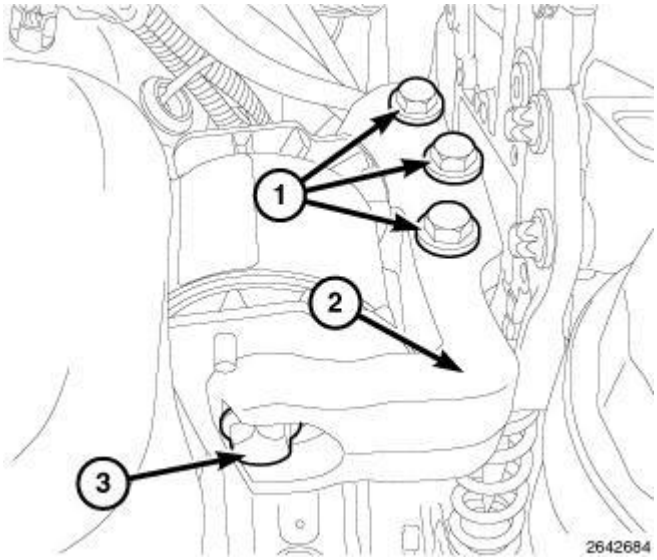


 

**Fig. 275: Engine Mount, Bracket & Through Bolt**
**Courtesy of CHRYSLER LLC**

**NOTE: Use care in positioning the floor jack to oil pan.**

4. Position a floor jack under the oil pan.
5. Remove the engine mount through bolt (3).
6. Remove bolts (1) and the engine mount bracket (2).

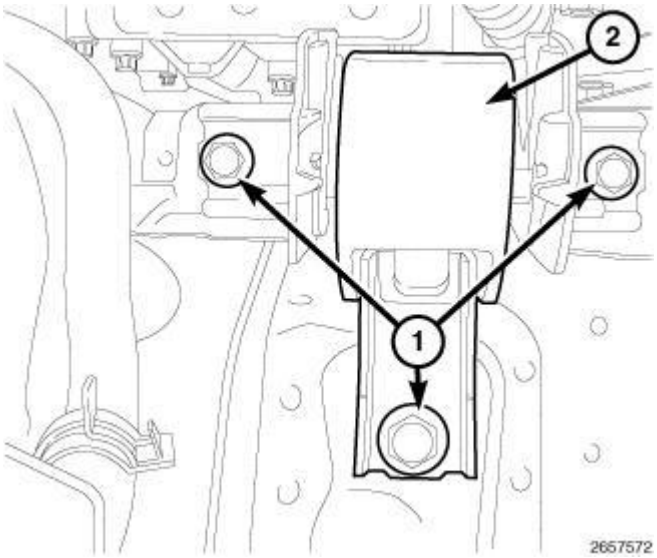


**Fig. 276: Engine Mount At Body Frame Rail & Bolts**
**Courtesy of CHRYSLER LLC**

7. Using a permanent ink marker or equivalent, mark the position of engine mount (2) to the body frame rail.
8. Remove bolts (1) and engine mount (2) from body frame rail.

**Installation**

**ENGINE MOUNT CARRIER BRACKET**

 

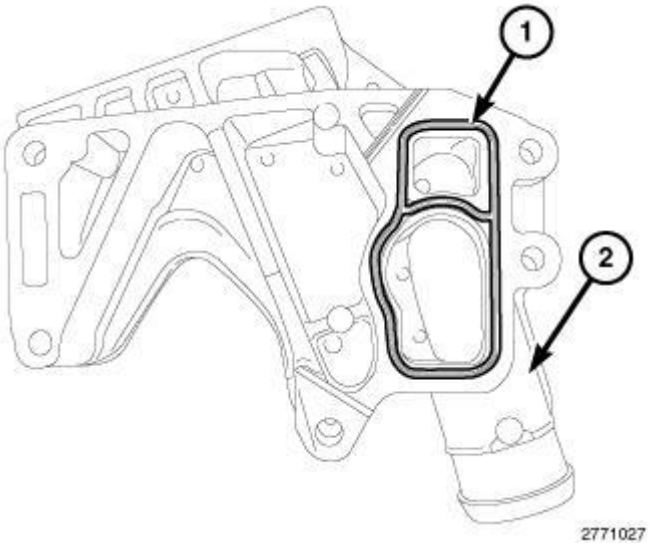


**Fig. 277: Engine Mount Carrier Bracket & Gasket**
**Courtesy of CHRYSLER LLC**

1. Clean the gasket mating surfaces.
2. Install a new gasket (1) onto the engine mount carrier bracket (2).

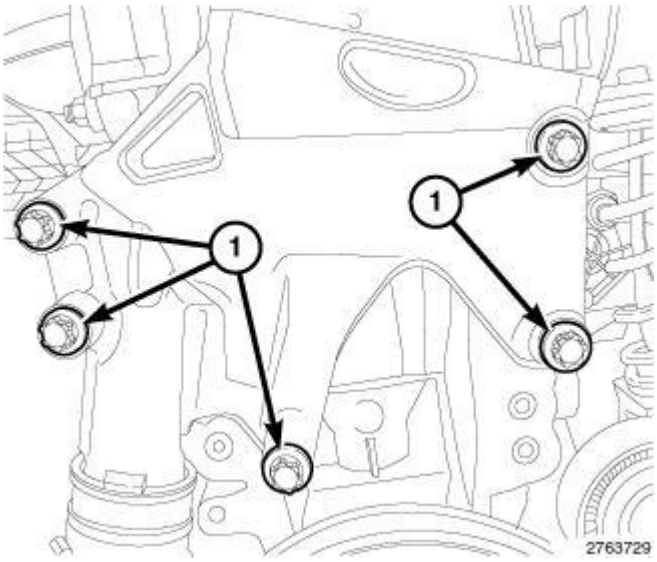


**Fig. 278: Engine Mount Carrier Bracket & Bolts**
**Courtesy of CHRYSLER LLC**

3. Install the engine mount carrier bracket. Tighten bolts (1) to 25 N.m (18 ft. lbs.).

 

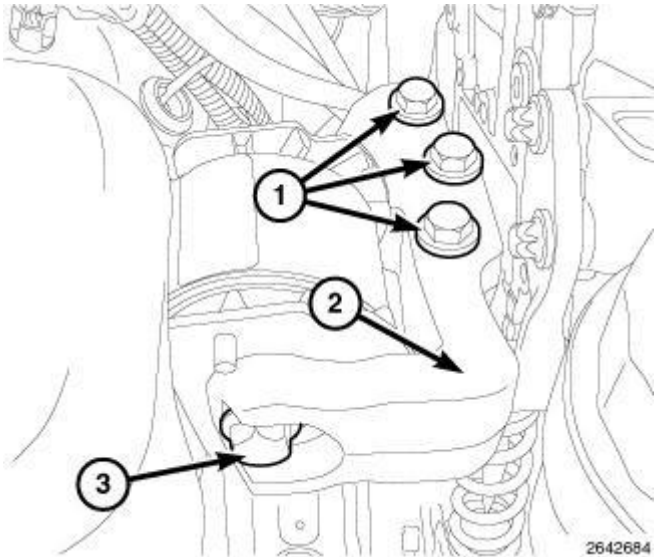


**Fig. 279: Engine Mount, Bracket & Through Bolt**
**Courtesy of CHRYSLER LLC**

4. Install the engine mount bracket (2) and tighten bolts (1) finger tight.
5. Install engine mount through bolt (3) and tighten to 88 N.m (65 ft. lbs.).
   - Tighten engine mount bracket bolts (1) to 68 N.m (50 ft. lbs.).
6. Remove the floor jack.

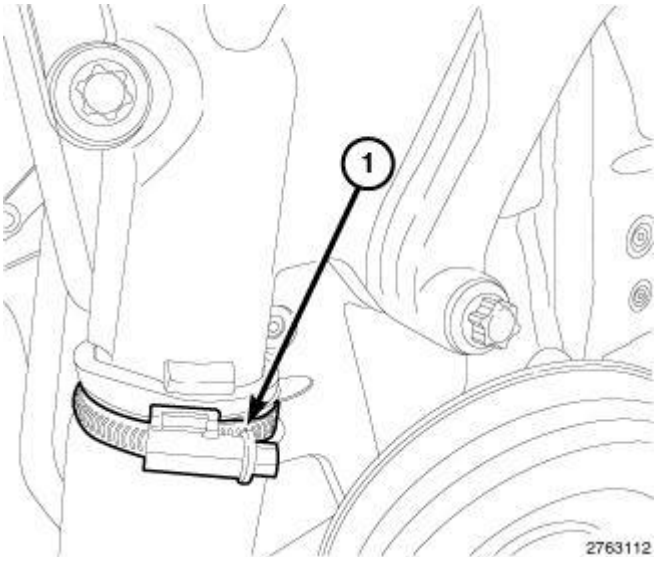


**Fig. 280: Hose Clamp**
**Courtesy of CHRYSLER LLC**

7. Position hose clamp (1) and securely tighten.
8. Fill the cooling system. Refer to **Standard Procedure** .
9. Install the belly pan.
10. Install the engine cover.

 

11. Connect the negative battery cable.
12. Start the engine and check for leaks.

**INSTALLATION**

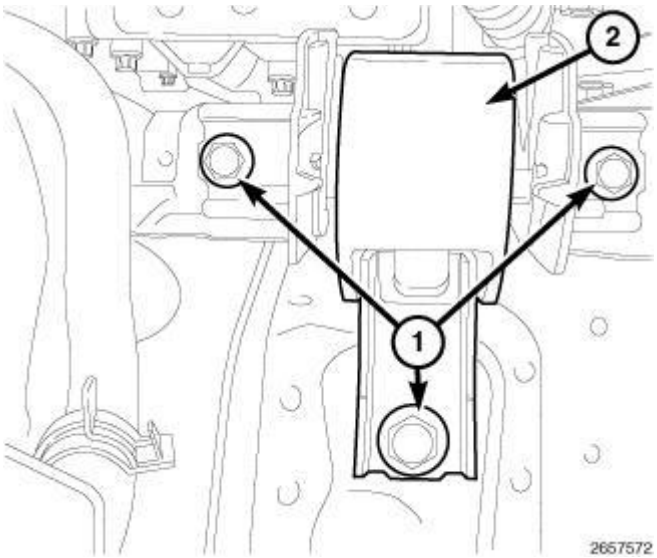


**Fig. 281: Engine Mount At Body Frame Rail & Bolts**
**Courtesy of CHRYSLER LLC**

1. Install the engine mount (2) onto the body frame rail. Tighten bolts (1) 75 N.m (55 ft. lbs.).

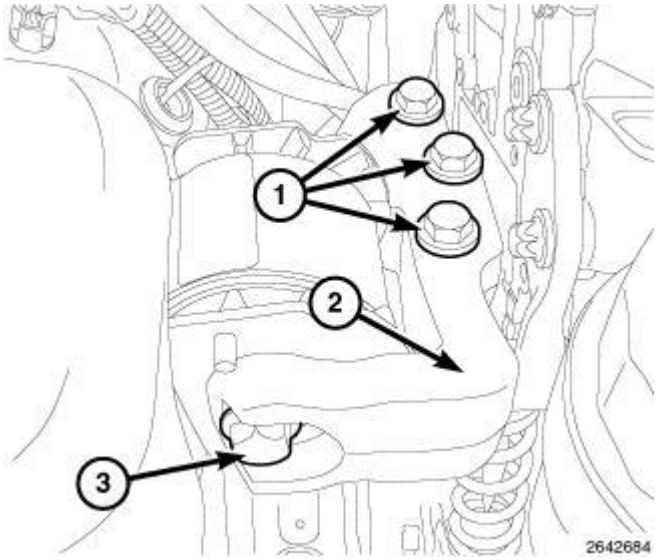


**Fig. 282: Engine Mount, Bracket & Through Bolt**
**Courtesy of CHRYSLER LLC**

2. Install the engine mount bracket (2) and tighten bolts (1) finger tight.
3. Install engine mount through bolt (3) and tighten to 88 N.m (65 ft. lbs.).

 

1. Tighten engine mount bracket bolts (1) to 68 N.m (50 ft. lbs.).
4. Remove the floor jack.
5. Install the windshield reservoir. Refer to **RESERVOIR, Windshield Washer , Installation** .
6. Install the engine cover.
7. Connect the negative battery cable.

# LUBRICATION

## CONTROL VALVE, OIL INTAKE

### Removal

#### REMOVAL

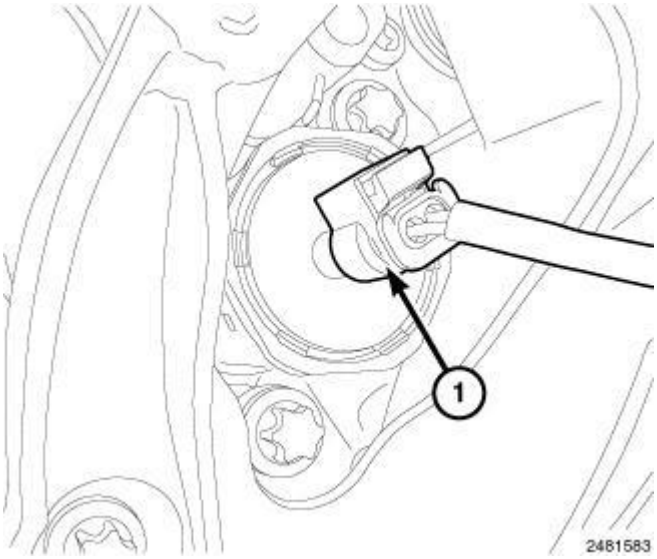


**Fig. 283: Piston Cooling Oil Control Valve Harness Connector**
**Courtesy of CHRYSLER LLC**

1. Disconnect the negative battery cable.
2. Disconnect the piston cooling oil control valve harness connector (1).

 

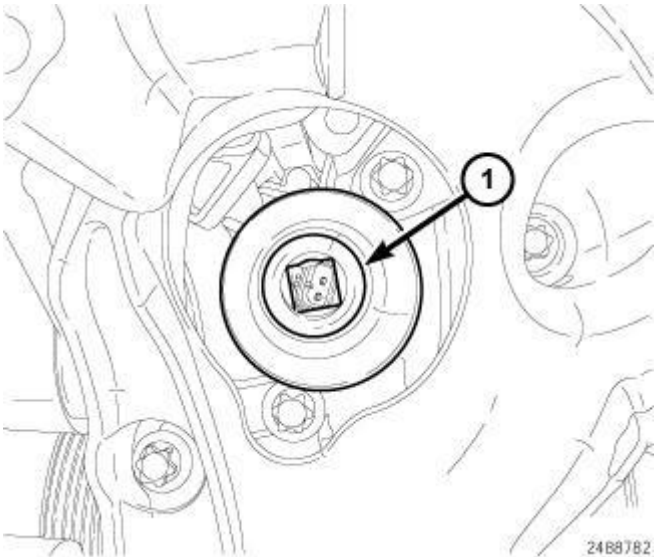


**Fig. 284: Removing/Installing Piston Cooling Oil Control Valve Using Shift Valve Socket**
**Courtesy of CHRYSLER LLC**

3. Using Shift Valve Socket (special tool #10237, Socket, Shift Valve) (1), remove the piston cooling oil control valve.

**Installation**

**INSTALLATION**


**Fig. 285: O-Ring Seal**
**Courtesy of CHRYSLER LLC**

1. Replace the O-ring seal.

 

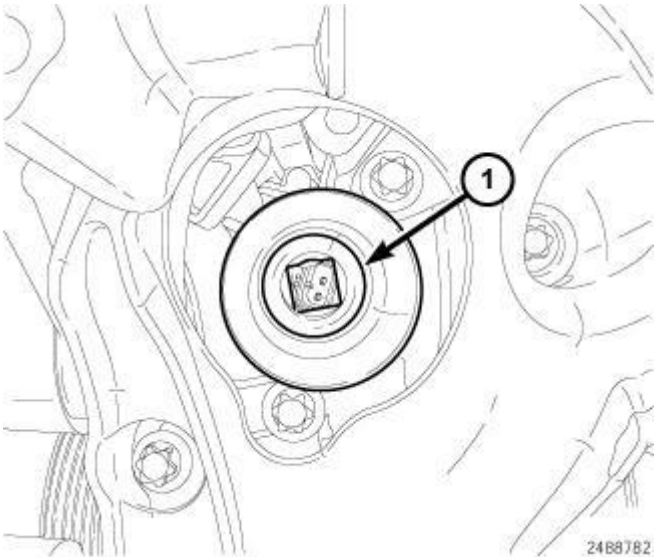


**Fig. 286: Removing/Installing Piston Cooling Oil Control Valve Using Shift Valve Socket**
**Courtesy of CHRYSLER LLC**

2. Using the Shift Valve Socket (special tool #10237, Socket, Shift Valve) (1), install the piston cooling oil control valve. Tighten to 20 N.m (177 in. lbs.).

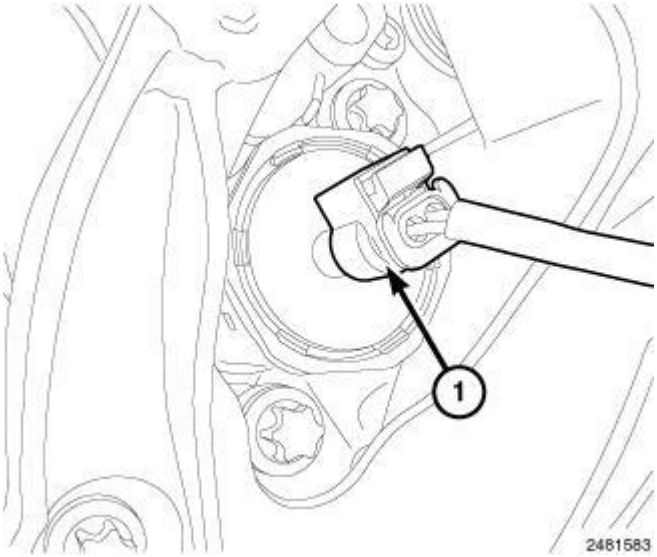


**Fig. 287: Piston Cooling Oil Control Valve Harness Connector**
**Courtesy of CHRYSLER LLC**

3. Connect the piston cooling oil control valve harness connector.
4. Connect the negative battery cable.
5. Start the engine and check for leaks.

## COOLER, OIL

### Removal

 

**REMOVAL**

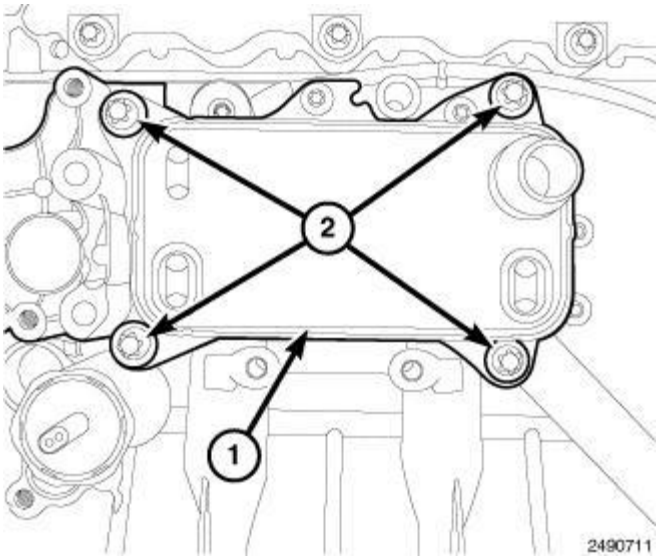


**Fig. 288: Oil Cooler Adapter & Bolts**
**Courtesy of CHRYSLER LLC**

1. Disconnect the negative battery cable.
2. Drain the engine oil.
3. Remove the oil filter housing Refer to **HOUSING, Oil Filter , Removal**.
4. Remove bolts (2) and the oil cooler adapter (1).

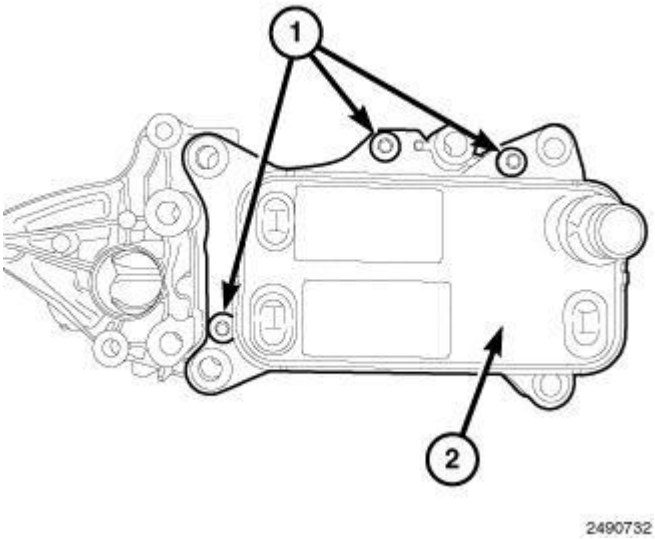


**Fig. 289: Oil Cooler & Bolts**
**Courtesy of CHRYSLER LLC**

5. Remove bolts (1) and the oil cooler (2).

**Installation**

**INSTALLATION**

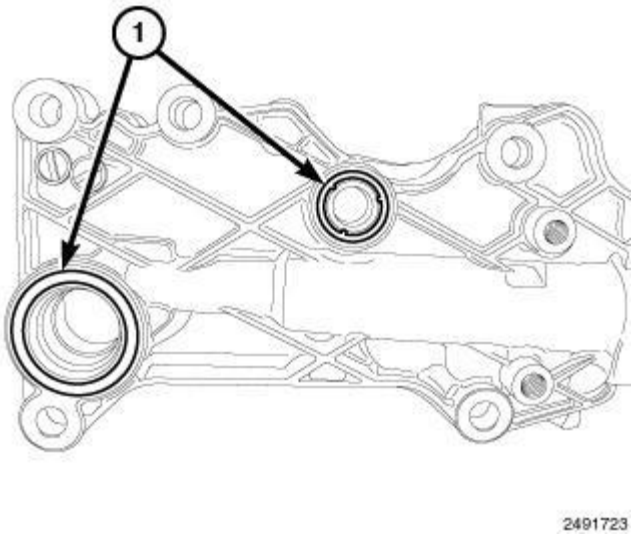


**Fig. 290: O-Ring Seals On Back Side Of Adapter**
**Courtesy of CHRYSLER LLC**

1. Clean the sealing surfaces and install new O-ring seals (1) on the back side of adapter.

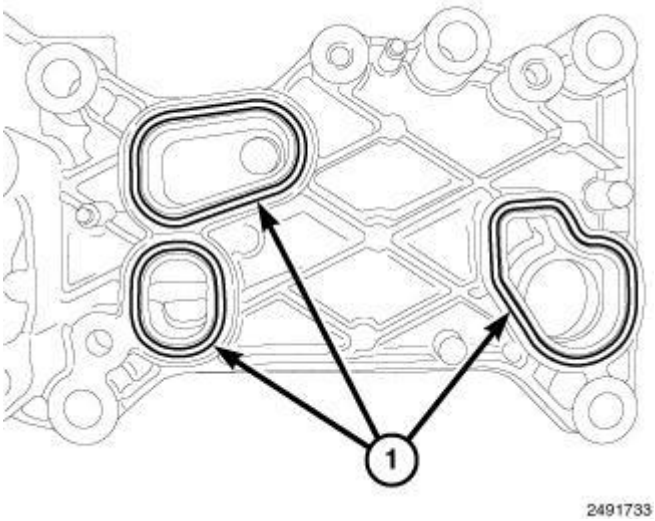


**Fig. 291: O-Ring Seals On Front Side Of Adapter**
**Courtesy of CHRYSLER LLC**

2. Clean the sealing surfaces and install new O-ring seals (1) on the front side of adapter.

 

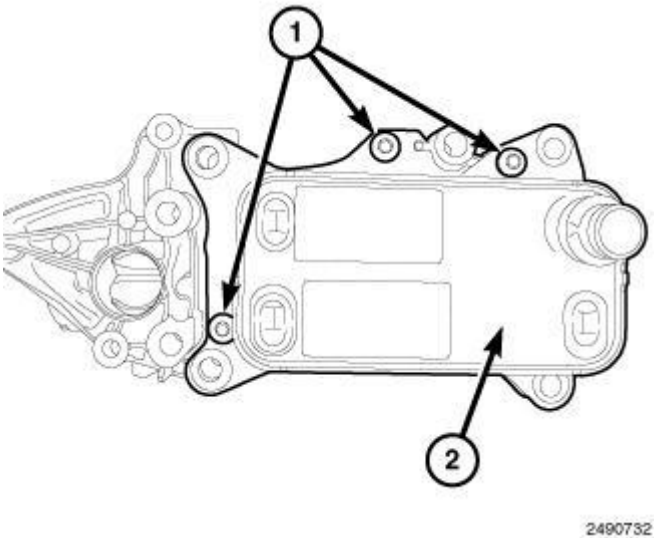


**Fig. 292: Oil Cooler & Bolts**
**Courtesy of CHRYSLER LLC**

3. Install the oil cooler (1) onto the oil cooler adapter. Tighten bolts (1) to 10 N.m (89 in. lbs.).

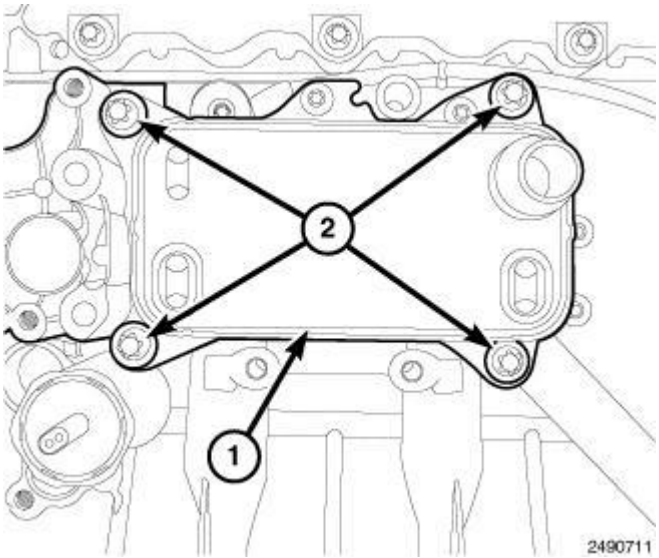


**Fig. 293: Oil Cooler Adapter & Bolts**
**Courtesy of CHRYSLER LLC**

4. Install the oil cooler adapter (1) to the engine block. Tighten bolts (2) to 20 N.m (177 in. lbs.).
5. Install the oil filter housing (1). Refer to **HOUSING, Oil Filter , Installation**.
6. Fill the engine with the recommended oil. Refer to **Capacities and Recommended Fluids , Specifications** .
7. Install engine cover.
8. Connect the negative battery cable.
9. Start the engine and check for leaks.

 

## HOUSING, OIL FILTER

### Removal

#### REMOVAL

1. Disconnect the negative battery cable.
2. Remove engine cover.
3. Remove the underbody belly pan.
4. Recover the refrigerant from the refrigerant system. Refer to **Plumbing , Standard Procedure** .
5. Drain the cooling system. Refer to **Standard Procedure** .
6. Disconnect upper radiator hose from radiator.
7. Disconnect lower radiator hose at radiator.
8. Disconnect cooling fan electrical connector.
9. Disconnect both A/C lines at condenser.
10. Remove A/C condenser to radiator mounting screws and remove condenser.
11. Unclip charge air cooler from radiator.
12. Lift radiator and cooling fan assembly from vehicle.
13. Remove the A/C compressor. Refer to **COMPRESSOR, A/C , Installation** .
14. Remove the generator. Refer to **GENERATOR , Removal** .
15. Remove the mixing chamber (3). Refer to **MANIFOLD, Intake , Removal**.

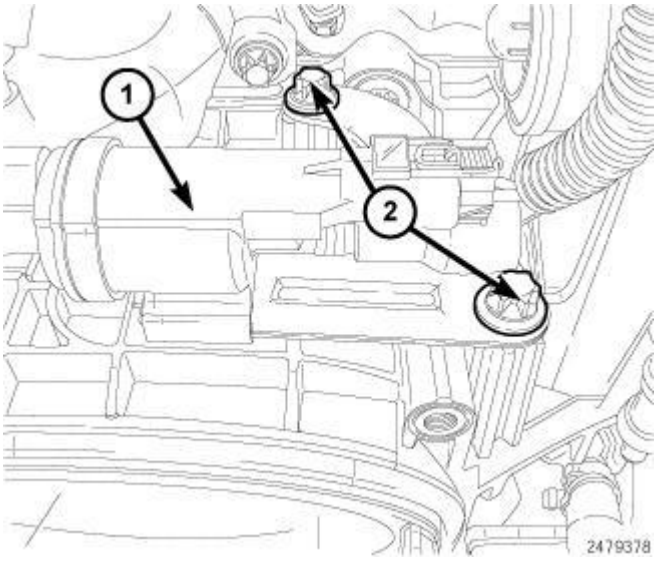


**Fig. 294: EGR Vacuum Solenoid & Bolts**
**Courtesy of CHRYSLER LLC**

16. Remove bolts (2) and the EGR vacuum solenoid (1).

 

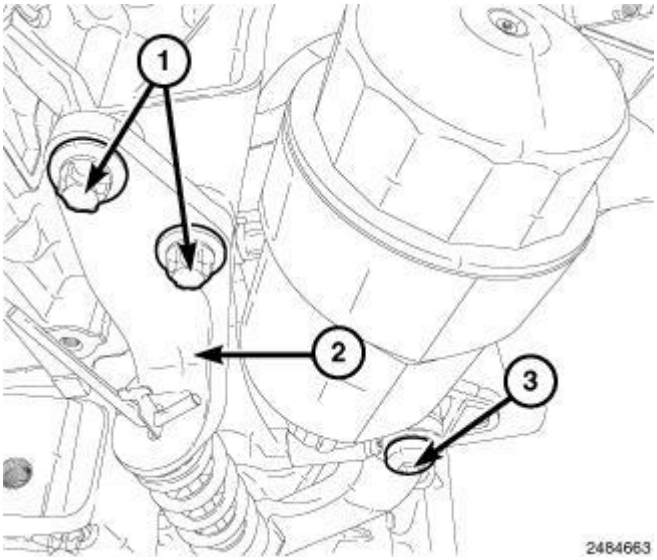


**Fig. 295: Accessory Drive Belt Tensioner & Bolts**
**Courtesy of CHRYSLER LLC**

17. Remove the bolts (1 and 3) and accessory drive belt tensioner (2).

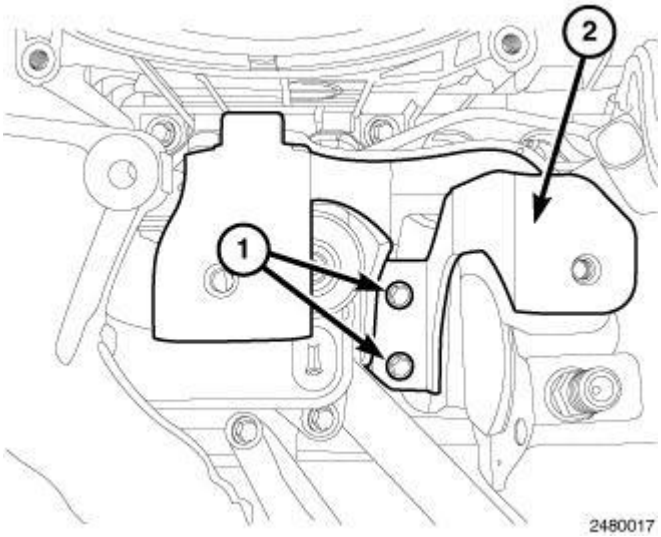


**Fig. 296: Intake Manifold Support Bracket & Bolts**
**Courtesy of CHRYSLER LLC**

18. Remove bolts (1) and the intake manifold support bracket (2).

 

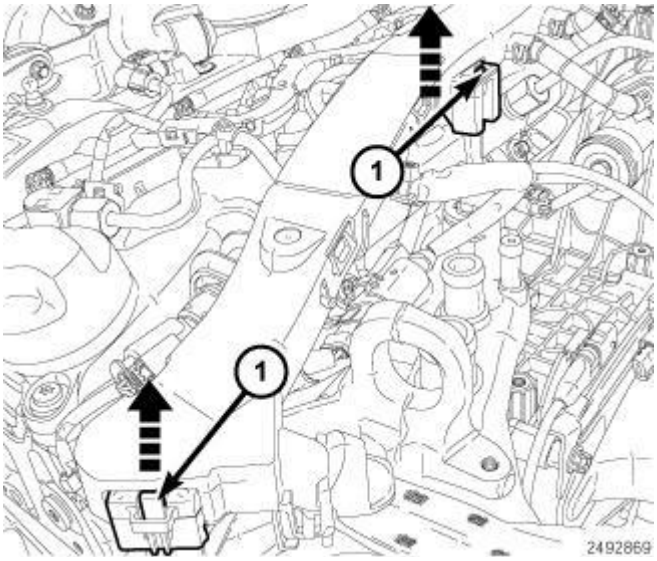


**Fig. 297: Locating Lock Tabs And Lifting Up On Wire Harness**
**Courtesy of CHRYSLER LLC**

19. Release the lock tabs and lift up on wire harness.

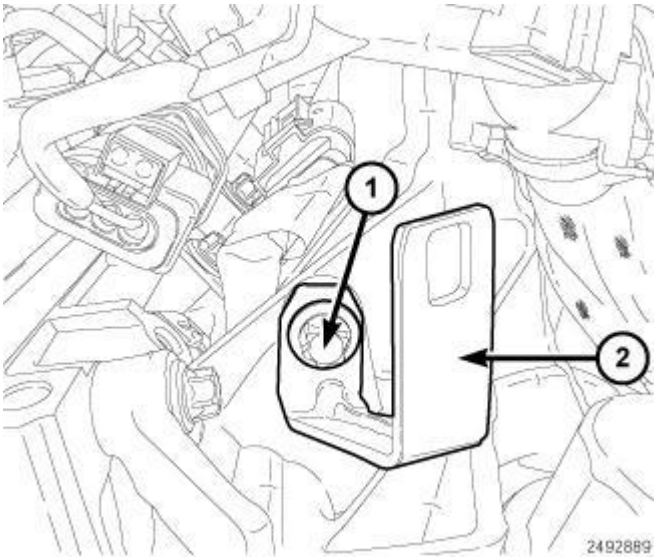


**Fig. 298: Wire Harness Support Bracket & Bolt**
**Courtesy of CHRYSLER LLC**

20. Remove bolt (1) and wire harness support bracket (2).

 

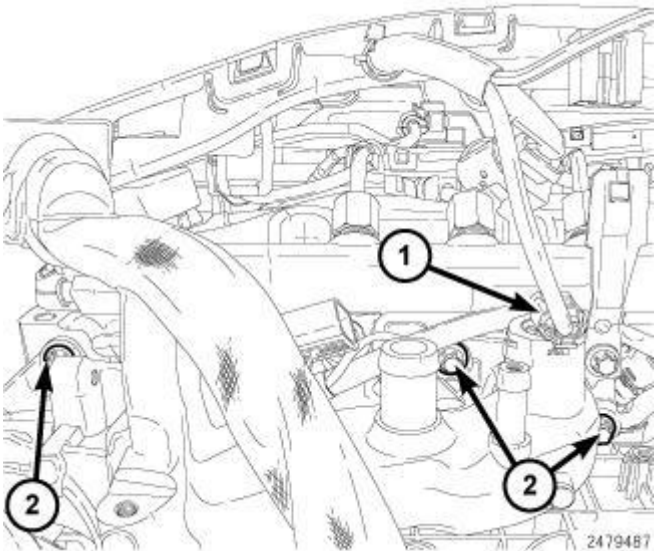


**Fig. 299: Coolant Temp Sensor & Cooling Manifold Bolts**
**Courtesy of CHRYSLER LLC**

21. Disconnect the coolant temp sensor (1).
22. Remove the three upper bolts (2).

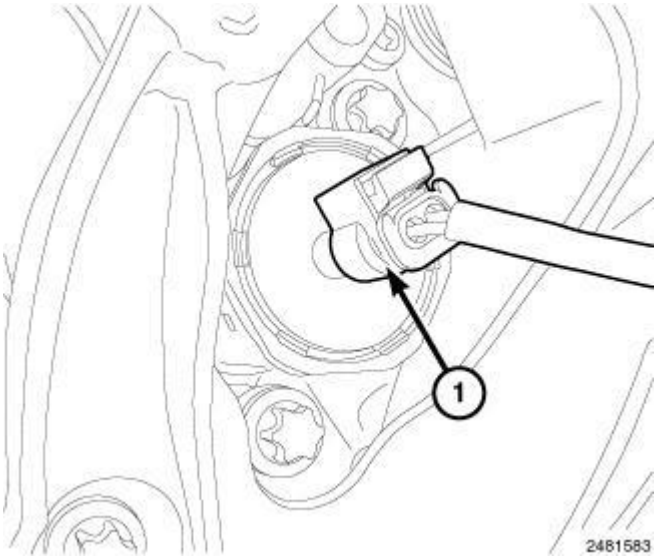


**Fig. 300: Piston Cooling Oil Control Valve Harness Connector**
**Courtesy of CHRYSLER LLC**

23. Disconnect the piston cooling oil control valve harness connector (1).

 

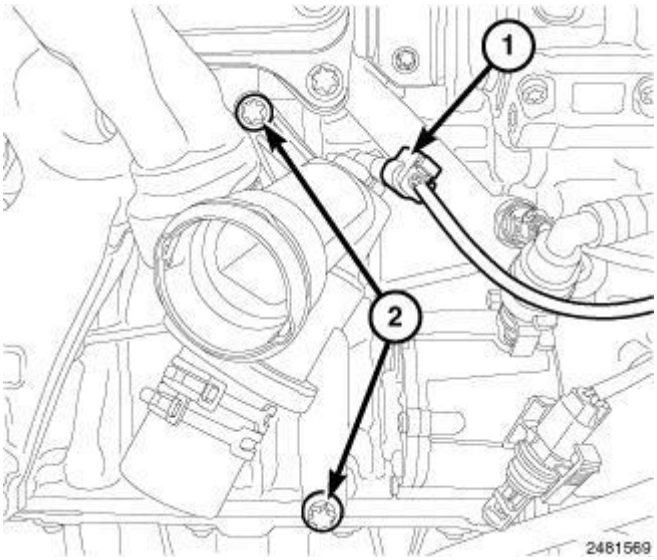


**Fig. 301: ECT Sensor Connector & Thermostat Housing Bolts**
**Courtesy of CHRYSLER LLC**

24. Disconnect the coolant temperature sensor (1).
25. Remove the two bolt (2) securing the thermostat housing.

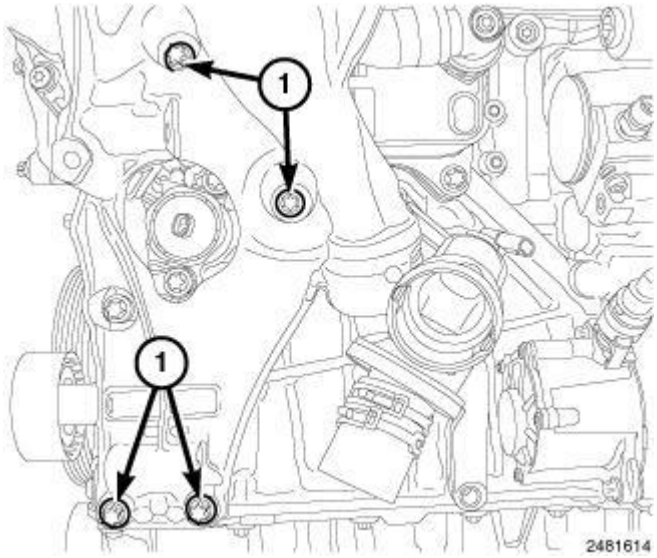


**Fig. 302: Accessory Carrier Bolts**
**Courtesy of CHRYSLER LLC**

26. Remove the bolts (1) from the accessory carrier.

 

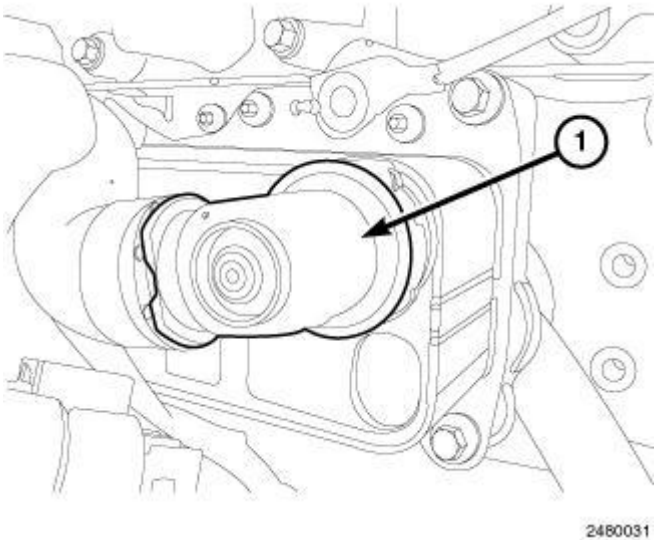


**Fig. 303: Coolant Hose To Oil Cooler**
**Courtesy of CHRYSLER LLC**

27. Disconnect the coolant hose (1) to the oil cooler and remove the accessory carrier.

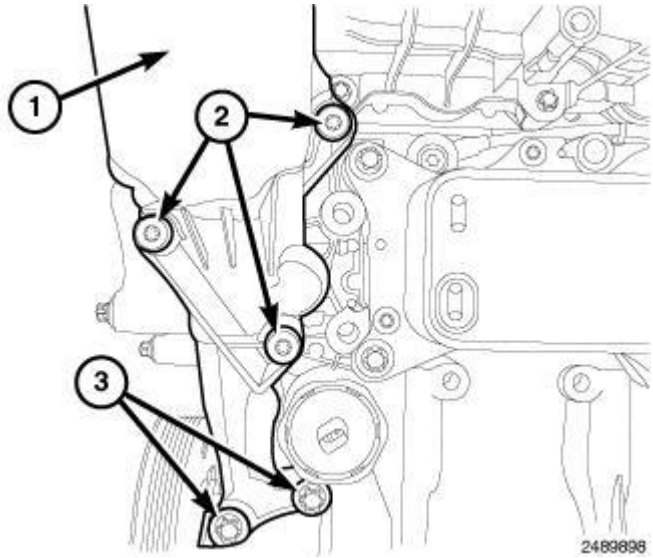


**Fig. 304: Oil Filter Housing & Bolts**
**Courtesy of CHRYSLER LLC**

28. Remove upper bolts (2).
29. Remove lower bolts (3) and the oil filter housing (1).
30. Remove and discard O-ring seals.

**Installation**

**INSTALLATION**

 

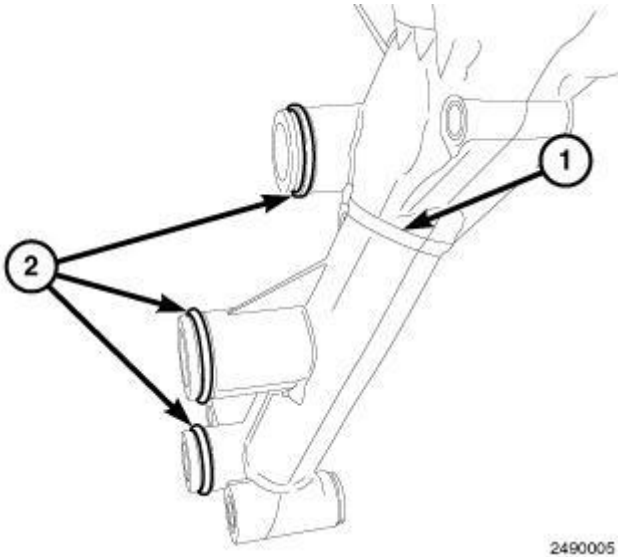


**Fig. 305: Oil Filter Housing & O-Ring Seals**
**Courtesy of CHRYSLER LLC**

1. Install new O-ring seals (2) onto the oil filter housing (1).

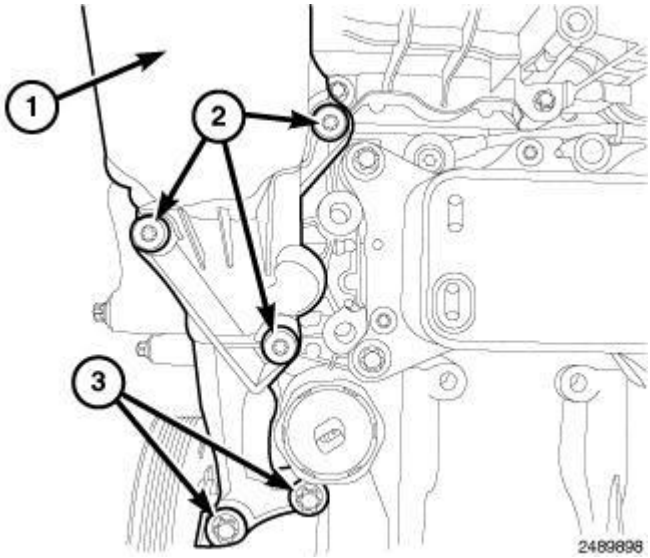


**Fig. 306: Oil Filter Housing & Bolts**
**Courtesy of CHRYSLER LLC**

2. Install the oil filter housing (1).
   - Tighten the M6 bolts (2) to 10 N.m (89 in. lbs.).
   - Tighten the M8 bolts (3) to 20 N.m (177 in. lbs.).

 

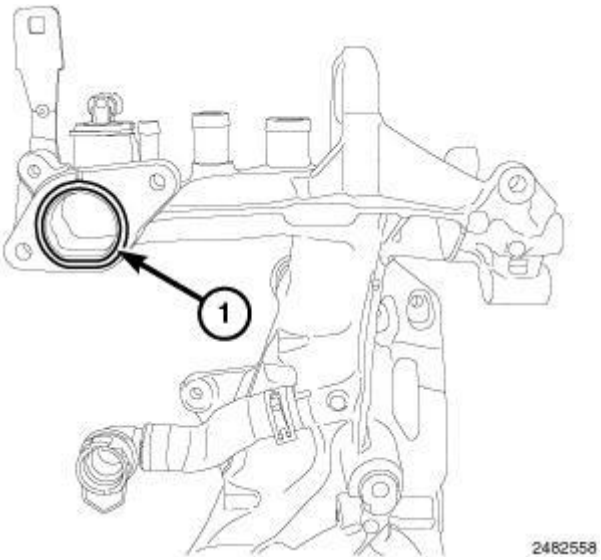


**Fig. 307: Accessory Carrier & O-Ring Gasket**
**Courtesy of CHRYSLER LLC**

3. Clean the gasket surfaces and install a new O-ring gasket (1) onto the accessory carrier.
4. Position the accessory carrier to the engine and install bolts finger tight.

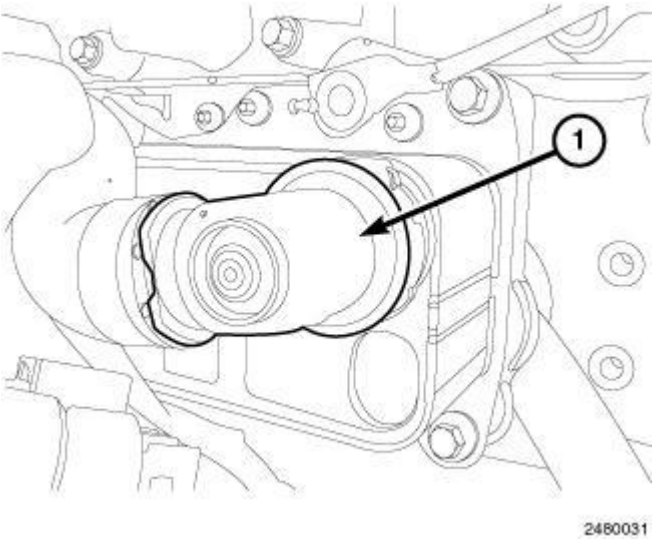


**Fig. 308: Coolant Hose To Oil Cooler**
**Courtesy of CHRYSLER LLC**

5. Connect the coolant hose (1) to the oil cooler and set the lock tab.

 

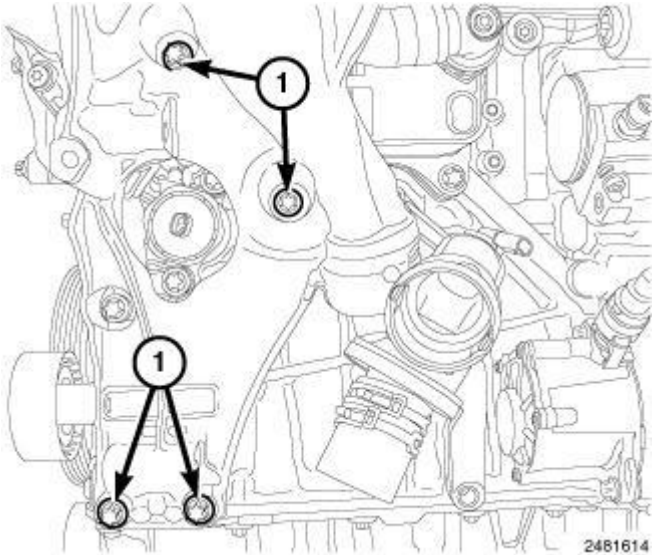


**Fig. 309: Accessory Carrier Bolts**
**Courtesy of CHRYSLER LLC**

6. Tighten the accessory carrier bolts (1) to 20 N.m (177 in. lbs.)

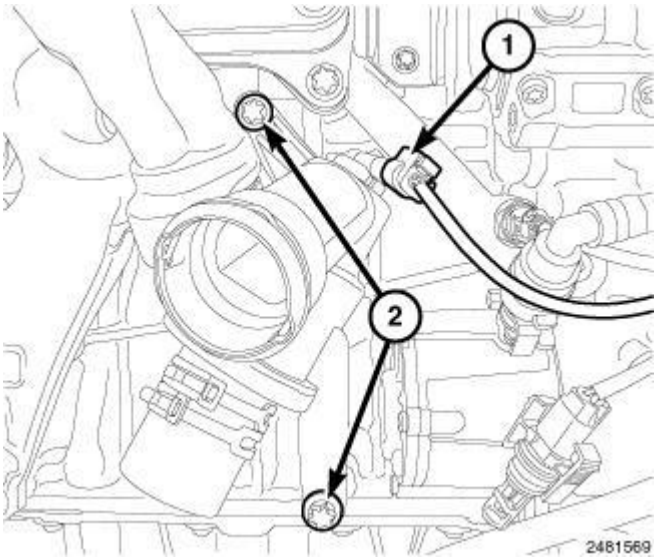


**Fig. 310: ECT Sensor Connector & Thermostat Housing Bolts**
**Courtesy of CHRYSLER LLC**

7. Install the two bolt (2) securing the thermostat housing to engine block. Tighten bolts to 9 N.m (80 in. lbs.).
8. Connect the coolant temperature sensor (1) harness connector.

 

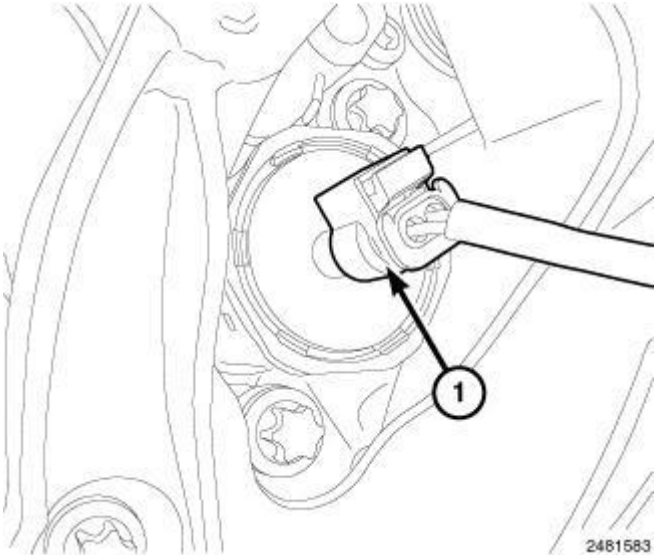


**Fig. 311: Piston Cooling Oil Control Valve Harness Connector**
**Courtesy of CHRYSLER LLC**

9. Connect the piston cooling oil control valve harness connector (1).

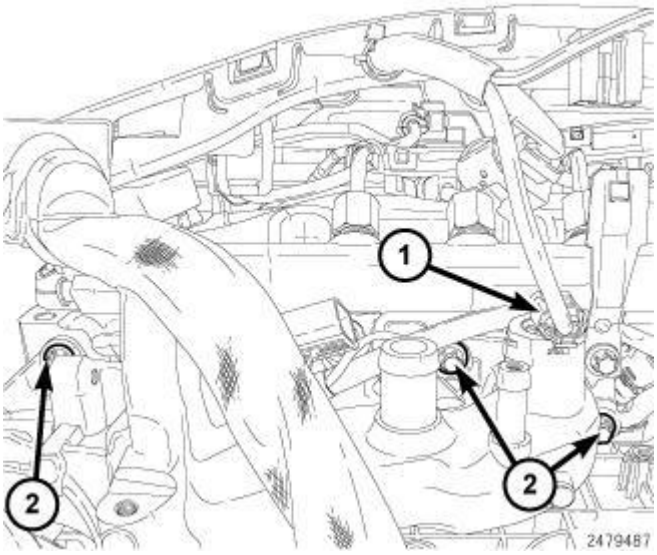


**Fig. 312: Coolant Temp Sensor & Cooling Manifold Bolts**
**Courtesy of CHRYSLER LLC**

10. Install the three accessory carrier upper bolts (2). Tighten bolts to 9 N.m (80 in. lbs.).
11. Connect the coolant temp sensor (1) harness connector.

 

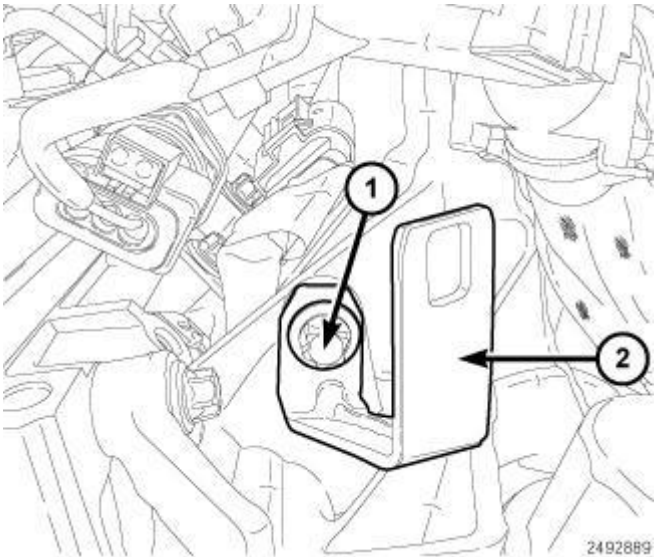


**Fig. 313: Wire Harness Support Bracket & Bolt**
**Courtesy of CHRYSLER LLC**

12. Install the wire harness support bracket (2). Tighten bolt (1) to 9 N.m (80 in. lbs.).

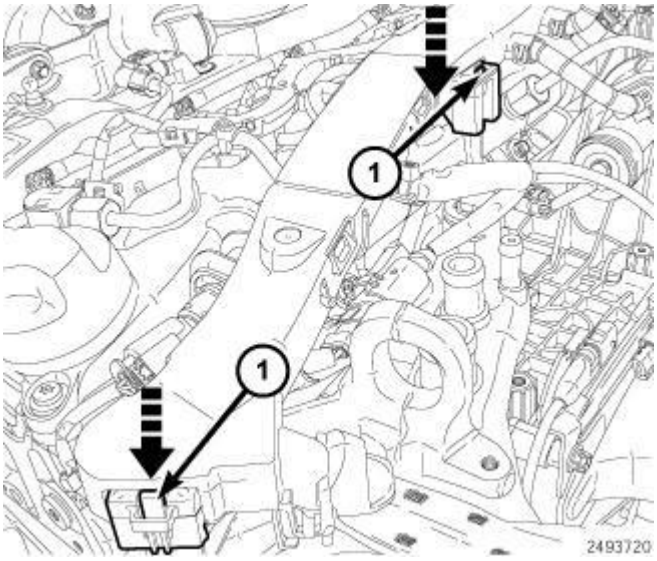


**Fig. 314: Positioning Wire Harness And Pushing Down To Lock Tabs**
**Courtesy of CHRYSLER LLC**

13. Position the wire harness and push down to lock tabs (1).

 

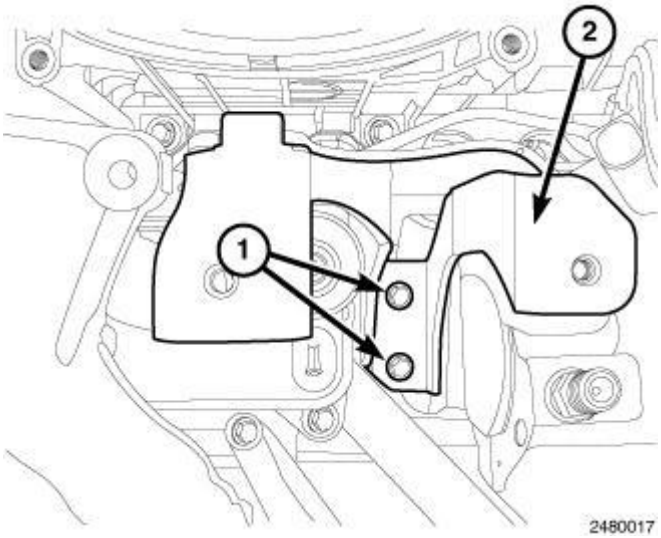


**Fig. 315: Intake Manifold Support Bracket & Bolts**
**Courtesy of CHRYSLER LLC**

14. Install the mixing chamber support bracket (2). Tighten bolts to 9 N.m (80 in. lbs.).

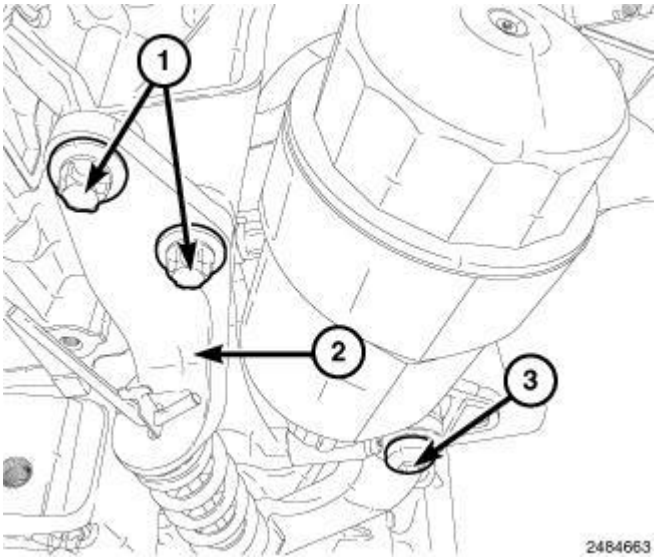


**Fig. 316: Accessory Drive Belt Tensioner & Bolts**
**Courtesy of CHRYSLER LLC**

15. Install accessory drive belt tensioner (2).
    - Tighten M8 bolts (1) to 20 N.m (177 in. lbs.).
    - Tighten M10 bolt (3) to 45 N.m (33 ft. lbs.).

 

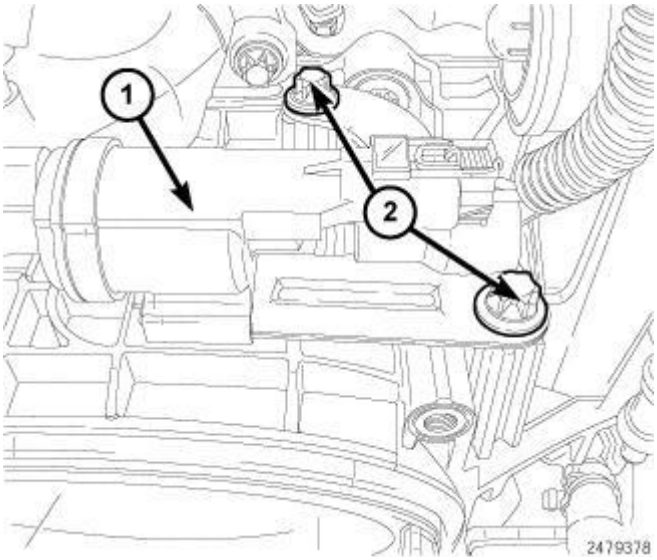


**Fig. 317: EGR Vacuum Solenoid & Bolts**
**Courtesy of CHRYSLER LLC**

16. Install the EGR vacuum solenoid (1). Tighten bolts (2) to 9 N.m (80 in. lbs.).
17. Install the mixing chamber (3). Refer to **MANIFOLD, Intake , Installation**.
18. Install the generator. Refer to **GENERATOR , Installation** .
19. Install the A/C compressor. Refer to **COMPRESSOR, A/C , Installation** .
20. Connect air inlet hose at intake manifold.
21. Lower radiator and cooling fan assembly in vehicle. Attach charge air cooler to radiator.
22. Attach A/C condenser to radiator. Tighten the bolts to 5 N.m (44 in. lbs.).
23. Remove the tape or plug from the condenser ports.
24. Lubricate a new rubber O-ring seal with clean refrigerant oil and install it and a new gasket onto the liquid line fitting. Use only the specified O-ring as it is made of a special material for the R-134a system. Use only refrigerant oil of the type recommended for the A/C compressor in the vehicle.
25. Connect both A/C lines to the condenser. Tighten the nuts to 5 N.m (44 in. lbs.).
26. Connect cooling fan electrical connector.
27. Connect lower radiator hose at radiator.
28. Connect upper radiator hose at radiator.
29. Install the underbody belly pan.
30. Fill the cooling system. Refer to **Standard Procedure** .
31. Fill the engine oil.
32. Install engine cover.
33. Connect the negative battery cable.
34. Start the engine and check for leaks.

## JET, PISTON OIL COOLER

 

**Description**

**DESCRIPTION**

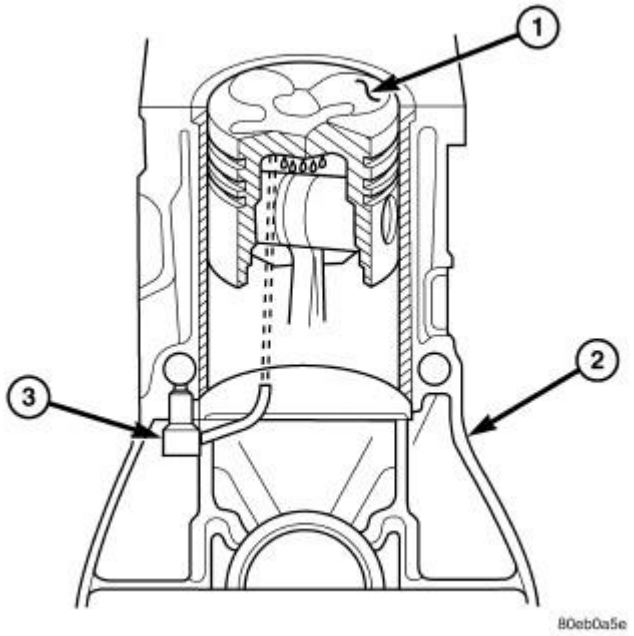


**Fig. 318: Piston Assembly, Engine Block & Oil Jet**
**Courtesy of CHRYSLER LLC**

| |
|---|
| 1 - PISTON ASSEMBLY |
| 2 - ENGINE BLOCK |
| 3 - OIL JET |

There are four oil jets (3) installed in the engine block (2). These oil jets are used to cool and lubricate the piston assemblies.

**Removal**

**REMOVAL**

The engine must be removed from the vehicle and completely disassembled to replace the oil jets (2).

1. Remove engine from vehicle. Refer to **Removal**.
2. Remove the crankshaft. Refer to **CRANKSHAFT , Removal**.

 

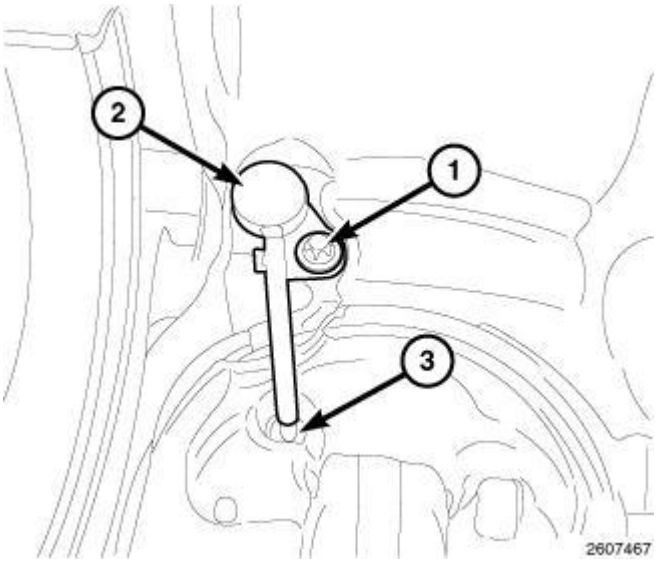


**Fig. 319: Oil Jet, Bolt & Engine Block**
**Courtesy of CHRYSLER LLC**

3. Remove bolt (1) and oil jets (2) from the engine block.

**Installation**

**INSTALLATION**

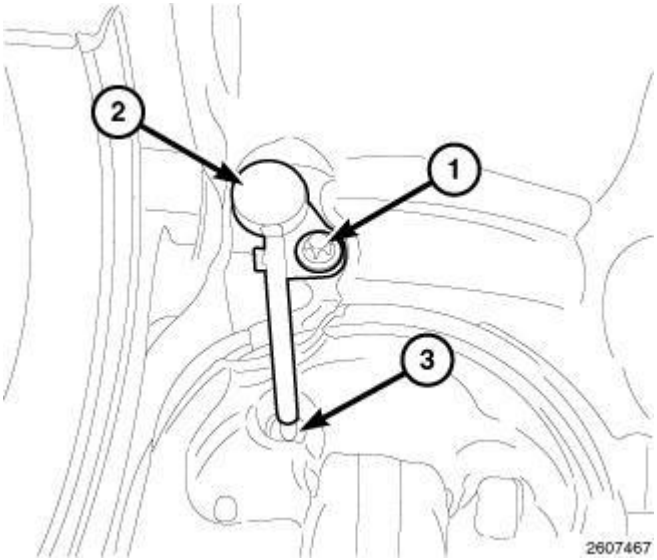


**Fig. 320: Oil Jet, Bolt & Engine Block**
**Courtesy of CHRYSLER LLC**

1. Install oil jet (2) into the engine block. Tighten bolt to 5 N.m (44 in. lbs.).
2. Install the crankshaft. Refer to **CRANKSHAFT , Installation**.
3. Install engine into vehicle. Refer to **Installation**.

 

## PAN, OIL

### Removal

#### REMOVAL

1. Disconnect the negative battery cable.
2. Remove the belly pan.
3. Drain engine oil. Tighten drain plug to 25 N.m (18 ft. lbs.).
4. Remove the flywheel. Refer to **FLYWHEEL , Removal** .
5. Remove the oil dipstick tube.
6. Remove the water pump/power steering assembly. Refer to **PUMP, Water , Removal** .

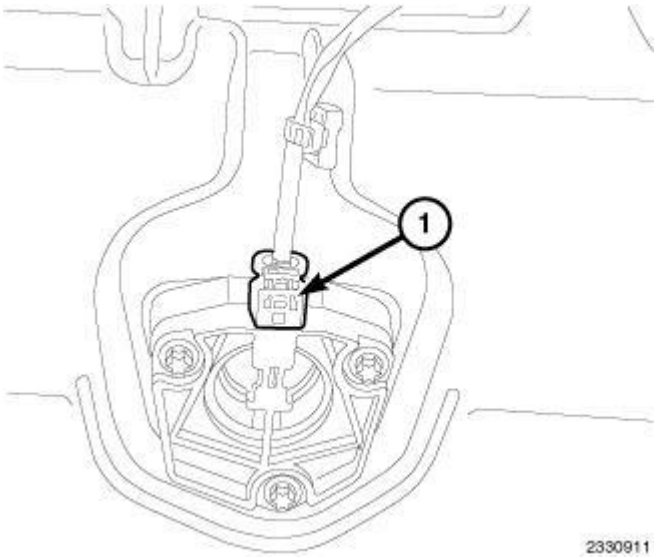


**Fig. 321: Oil Level Switch Wire Harness Connector**
**Courtesy of CHRYSLER LLC**

7. Disconnect the oil level switch wire harness connector (1).
8. Remove bolts and remove oil pan.

### Installation

#### INSTALLATION

 

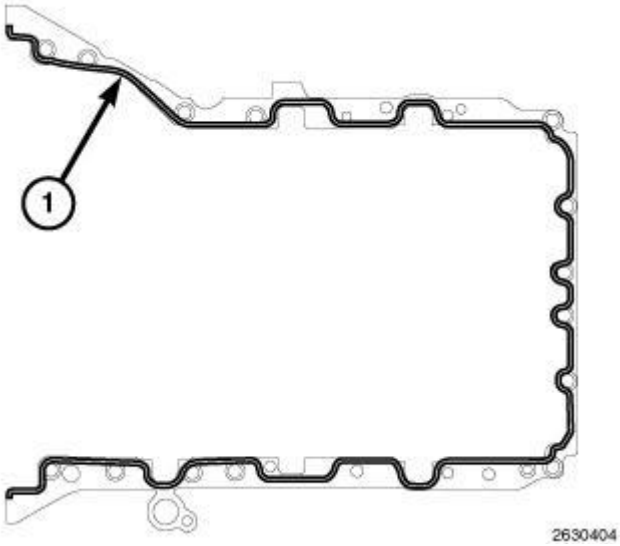


**Fig. 322: Applying Engine Sealant RTV Onto Oil Pan Mating Surface**
**Courtesy of CHRYSLER LLC**

1. Thoroughly clean oil pan and all sealing surfaces to be free of any oil residue.
2. Apply a 3 mm bead of Locktite® 5970 RTV or equivalent onto the oil pan mating surface (1).

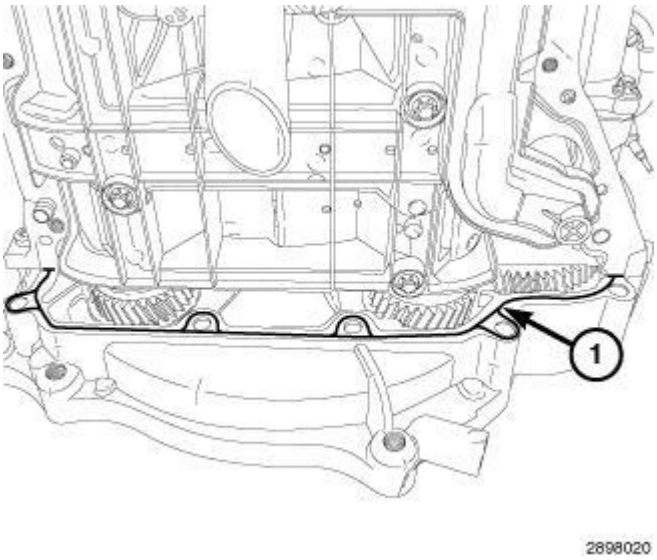


**Fig. 323: Applying A 2-mm Bead Of Locktite(R) Onto Timing Cover Mating Surface**
**Courtesy of CHRYSLER LLC**

3. Apply a 3 mm bead of Locktite® 5970 RTV or equivalent onto timing cover mating surface as illustrated (1).

 

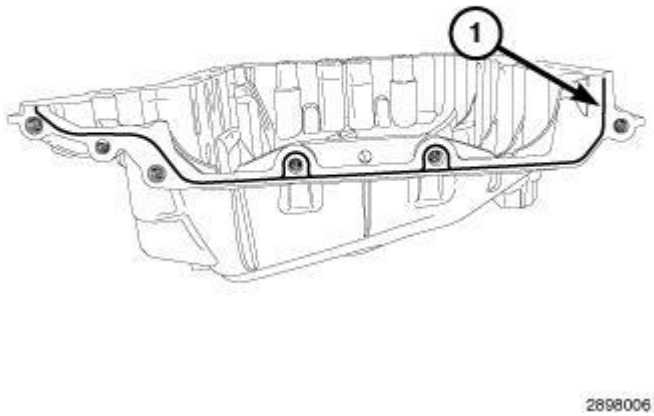


**Fig. 324: Applying Small Amount Of Locktite(R) Onto Timing Cover Mating Surface**
**Courtesy of CHRYSLER LLC**

4. Apply a small amount of Locktite® 5970 RTV or equivalent onto timing cover mating surface.

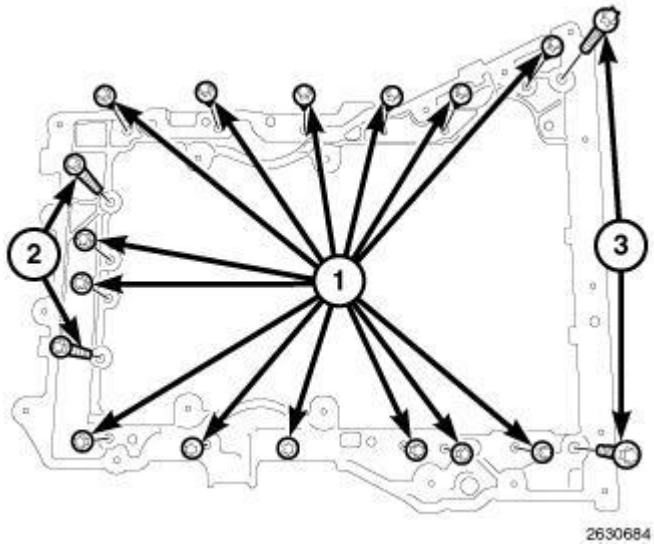


**Fig. 325: Locating Oil Pan Bolts**
**Courtesy of CHRYSLER LLC**

5. Install oil pan. Tighten bolts to:
   - M6 bolts to 9 N.m (80 in. lbs.).
   - M8 bolts to 20 N.m (177 in. lbs.)
   - M8 bolts timing cover to oil pan 20 N.m (177 in. lbs.).

 

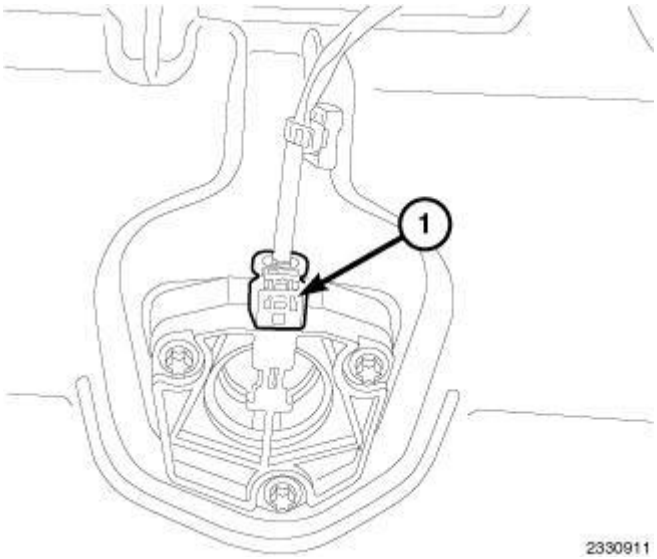


**Fig. 326: Oil Level Switch Wire Harness Connector**
**Courtesy of CHRYSLER LLC**

6. Connect the oil level switch wire harness connector (1).
7. Install the water pump/power steering pump assembly. Refer to **PUMP, Water , Installation** .
8. Install the oil dip stick tube. Tighten bolt to 9 N.m. 80 in. lbs.).
9. Install the transmission. Refer to **Installation** and **Installation** .
10. Fill engine with recommended engine oil. Refer to **Capacities and Recommended Fluids , Specifications** .
11. Connect the negative battery cable.
12. Start engine and check for leaks.
13. Install the belly pan.

## PUMP, ENGINE OIL

### Removal

#### REMOVAL

1. Disconnect negative battery cable.
2. Raise vehicle on hoist.
3. Remove the lower timing cover Refer to **COVER(S), Engine Timing , Removal**.
4. Remove oil pan. Refer to **PAN, Oil , Removal**.

 

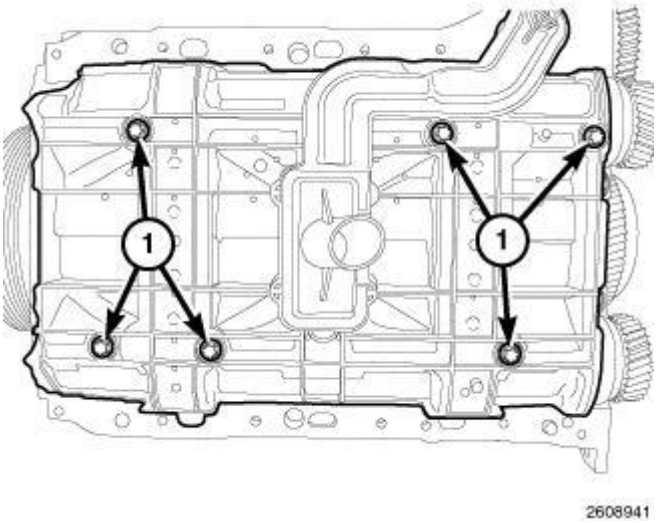


**Fig. 327: Oil Pump Pickup Bolts**
**Courtesy of CHRYSLER LLC**

5. Remove the bolts (1) and the oil pump pickup.

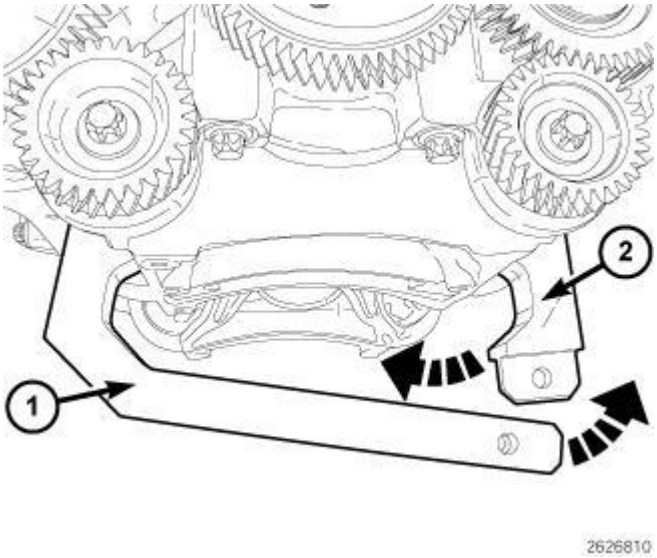


**Fig. 328: Installing Balance Shaft Lock Tool Halves & Rotating Into Locked Position**
**Courtesy of CHRYSLER LLC**

6. Install the Balance Shaft Lock Tool (special tool #10231, Lock, Balance Shaft) halves (1 and 2) and rotate halves into the locked position.

 

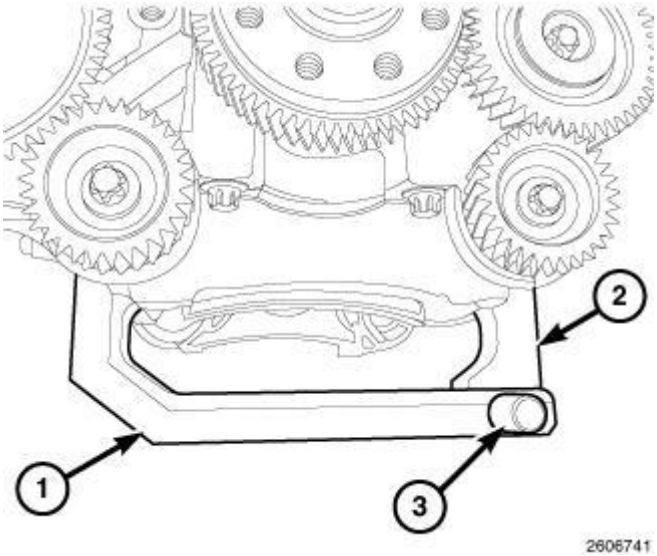


**Fig. 329: Removing/Installing Locking Pin At Balance Shaft Lock Tool Halves**
**Courtesy of CHRYSLER LLC**

7. Install locking pin (3) into the Balance Shaft Lock Tool (special tool #10231, Lock, Balance Shaft) halves (1 and 2) together.

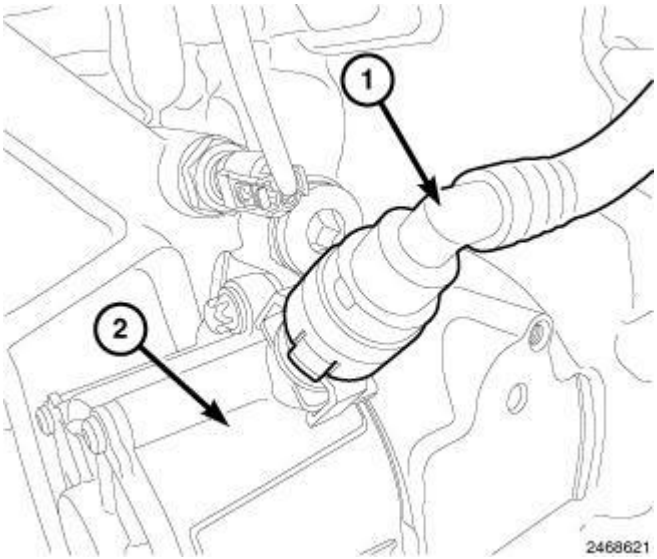


**Fig. 330: Vacuum Hose At Vacuum Pump**
**Courtesy of CHRYSLER LLC**

8. Disconnect vacuum hose from vacuum pump (1).

 

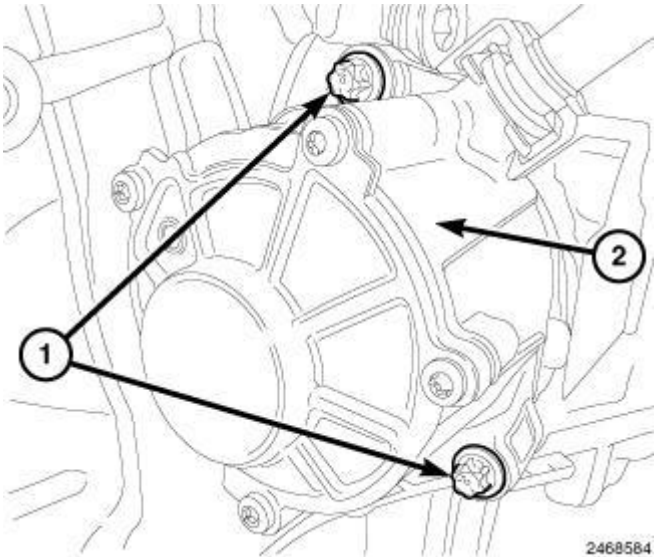


**Fig. 331: Vacuum Pump & Bolts**
**Courtesy of CHRYSLER LLC**

9. Remove bolts (1) and the vacuum pump (2).

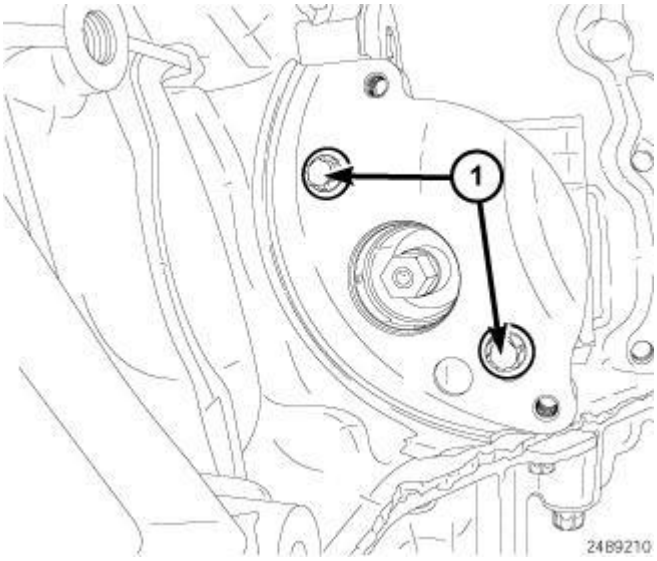


**Fig. 332: Oil Pump Retaining Bolts**
**Courtesy of CHRYSLER LLC**

10. Remove oil pump retaining bolts (1).

 

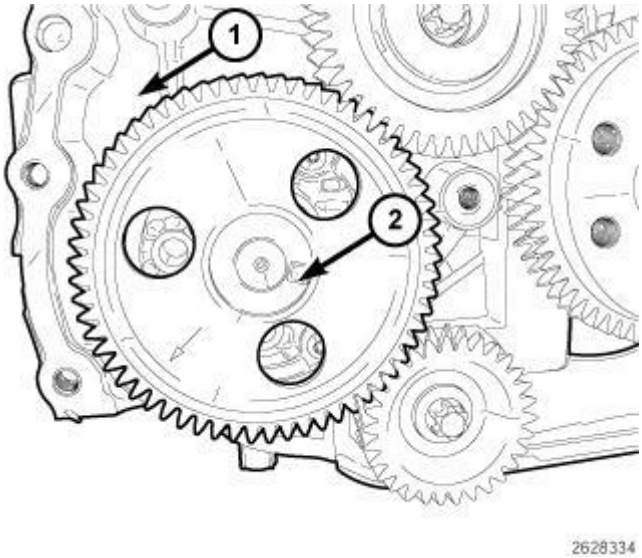


**Fig. 333: Oil Pump And Drive Gear Assembly At Engine Block**
**Courtesy of CHRYSLER LLC**

11. Carefully pull forward on pump gear (2) while rotating gear clockwise and remove the oil pump and gear assembly (2).

**Installation**

**INSTALLATION**

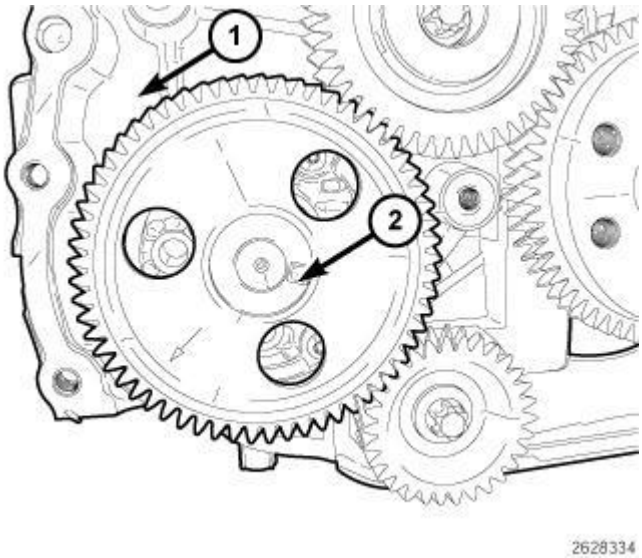


**Fig. 334: Oil Pump And Drive Gear Assembly At Engine Block**
**Courtesy of CHRYSLER LLC**

**NOTE: Carefully turn pump gear counter clockwise while installing pump to get gears to mesh together.**

 

1. Install the oil pump and drive gear assembly (2) onto engine block (1).

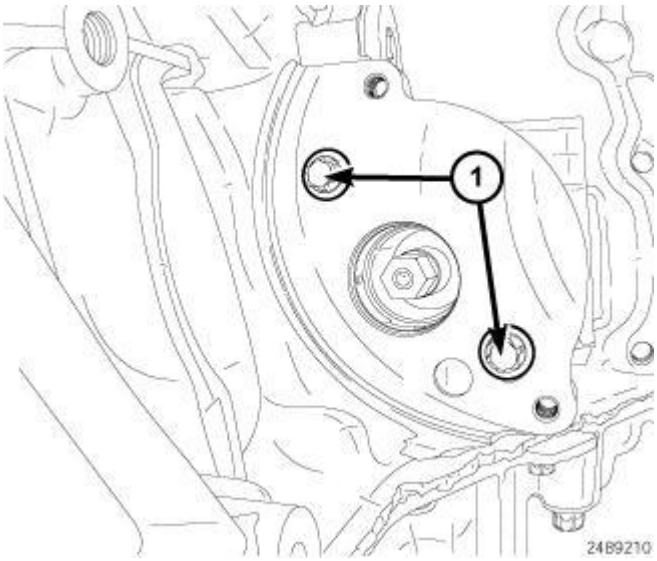


**Fig. 335: Oil Pump Retaining Bolts**
**Courtesy of CHRYSLER LLC**

2. Install oil pump bolts (1). Tighten bolts to 6 N.m (53 in. lbs.) plus additional 90°.

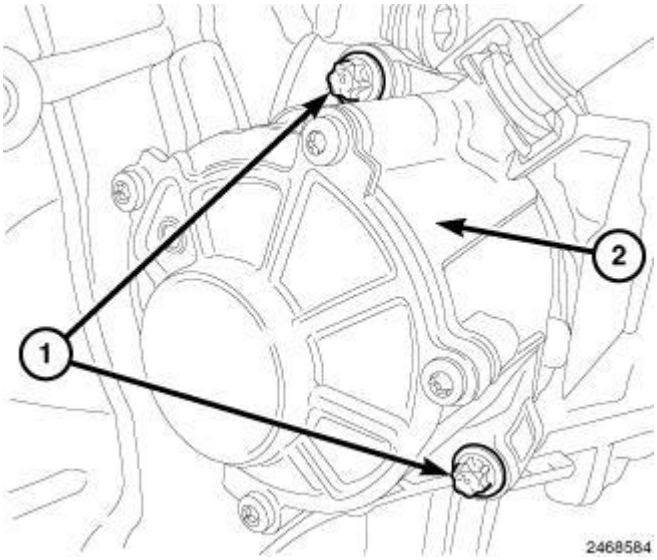


**Fig. 336: Vacuum Pump & Bolts**
**Courtesy of CHRYSLER LLC**

3. Install the vacuum pump (2). Tighten bolts to 9 N.m (80 in. lbs.).

 

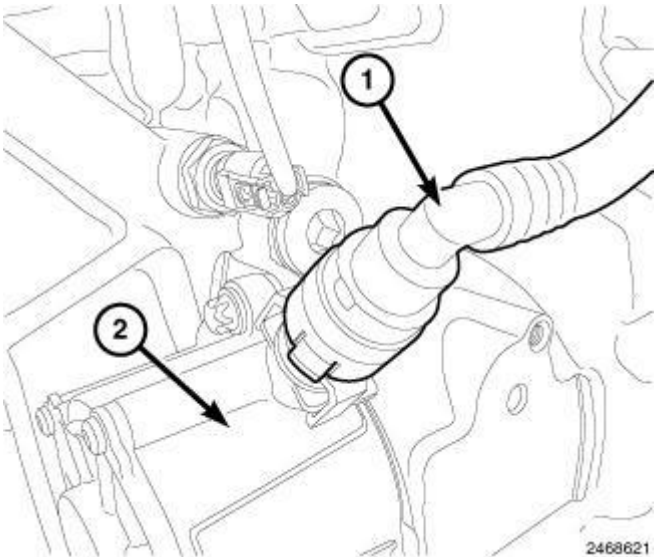


**Fig. 337: Vacuum Hose At Vacuum Pump**
**Courtesy of CHRYSLER LLC**

4. Connect vacuum hose from vacuum pump (1).

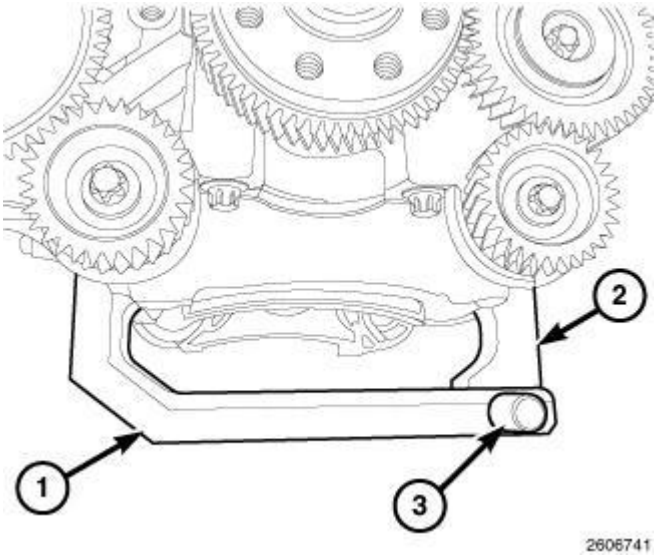


**Fig. 338: Removing/Installing Locking Pin At Balance Shaft Lock Tool Halves**
**Courtesy of CHRYSLER LLC**

5. Remove locking pin (3) and the Balance Shaft Lock Tool (special tool #10231, Lock, Balance Shaft) halves (1 and 2).

 

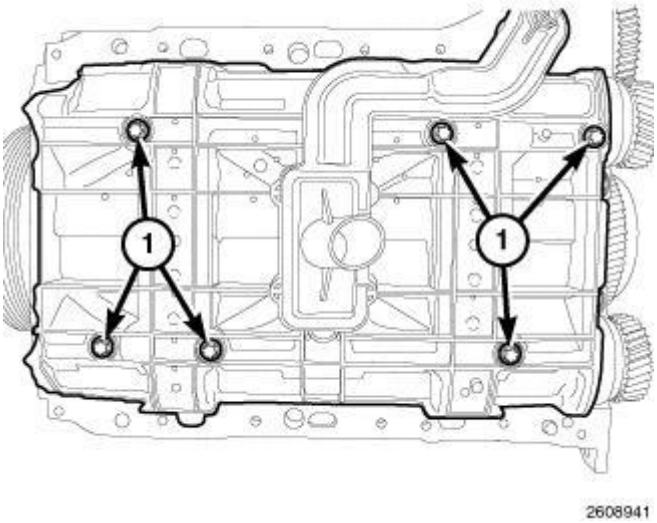


**Fig. 339: Oil Pump Pickup Bolts**
**Courtesy of CHRYSLER LLC**

6. Install the oil pump pickup. Tighten bolts to 6 N.m (53 in. lbs.) plus additional 90 degrees.
7. Install oil pan. Refer to **PAN, Oil , Installation**.
8. Install the timing cover. Refer to **COVER(S), Engine Timing , Installation**.
9. Lower vehicle from hoist.
10. Refill engine with recommended oil.
11. Connect negative battery cable.
12. Start engine and check for leaks.

## SENSOR, OIL TEMPERATURE

### Removal

#### REMOVAL

 

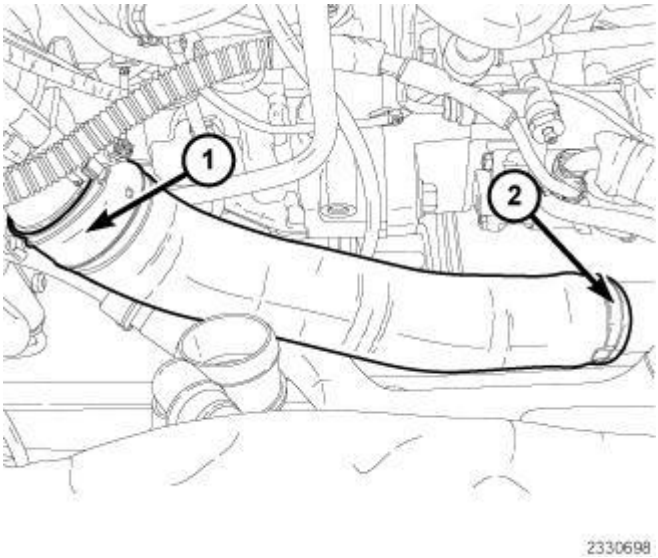


**Fig. 340: EGR Air Flow Control Valve & Clamp**
**Courtesy of CHRYSLER LLC**

1. Disconnect the negative battery cable.
2. Loosen the clamp and disconnect the charge air outlet tube from the charge air cooler (CAC).
3. Remove air inlet tube to EGR air flow control valve (1).

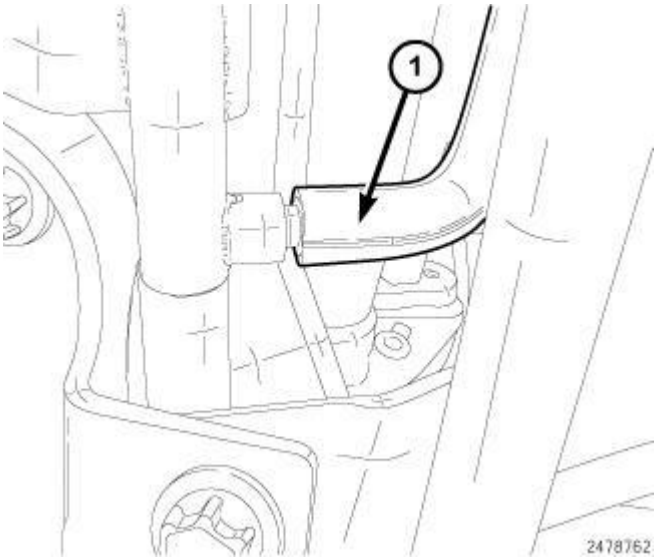


**Fig. 341: Vacuum Supply Line At EGR Solenoid**
**Courtesy of CHRYSLER LLC**

4. Disconnect the vacuum supply line (1) to the EGR solenoid.

 

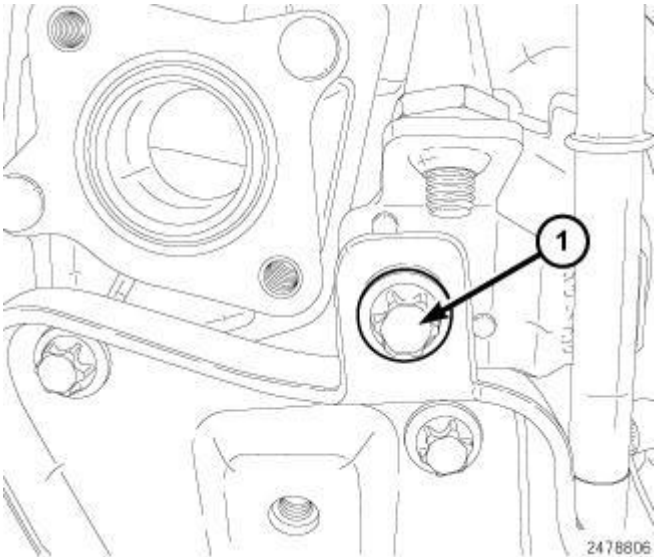


**Fig. 342: Vacuum Tube Bolt**
**Courtesy of CHRYSLER LLC**

5. Remove the bolt (1) securing the vacuum tube.

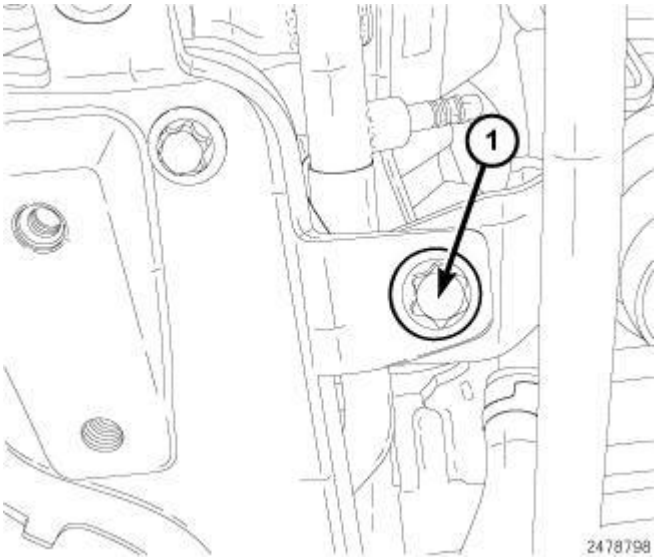


**Fig. 343: Oil Dip Stick Bolt**
**Courtesy of CHRYSLER LLC**

6. Remove the bolt (1) securing the oil dip stick tube.

 

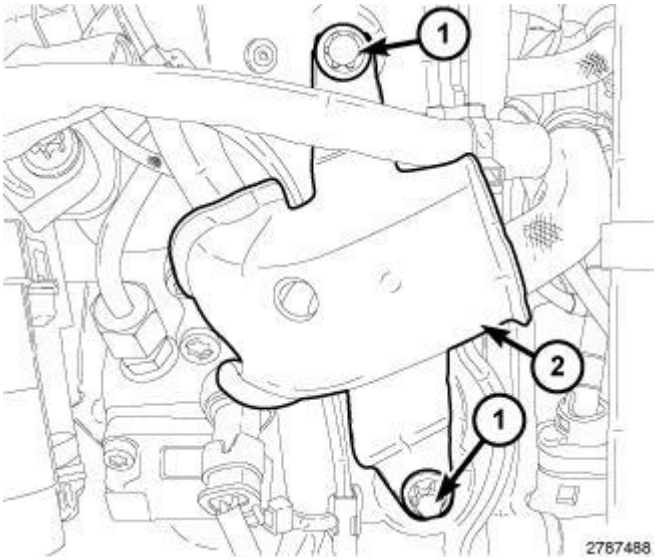


**Fig. 344: Bolts & Heat Shield**
**Courtesy of CHRYSLER LLC**

7. Remove bolts (1) and the heat shield (2).

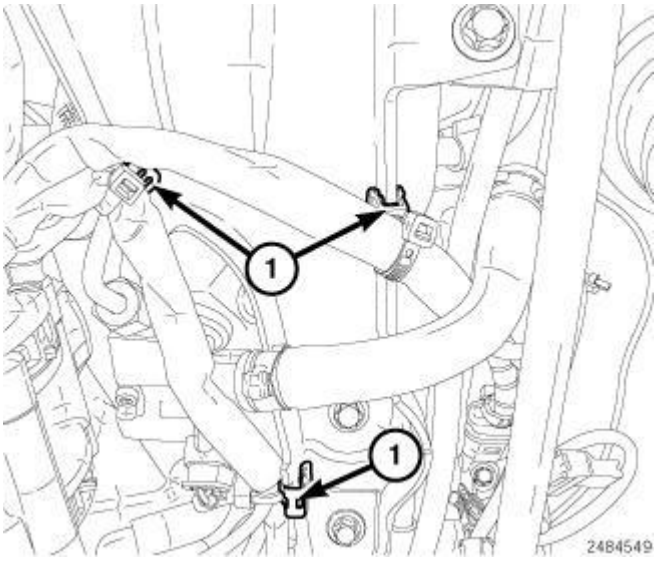


**Fig. 345: Wire Harness Retainers**
**Courtesy of CHRYSLER LLC**

8. Disconnect the wire harness retainers (1).

 

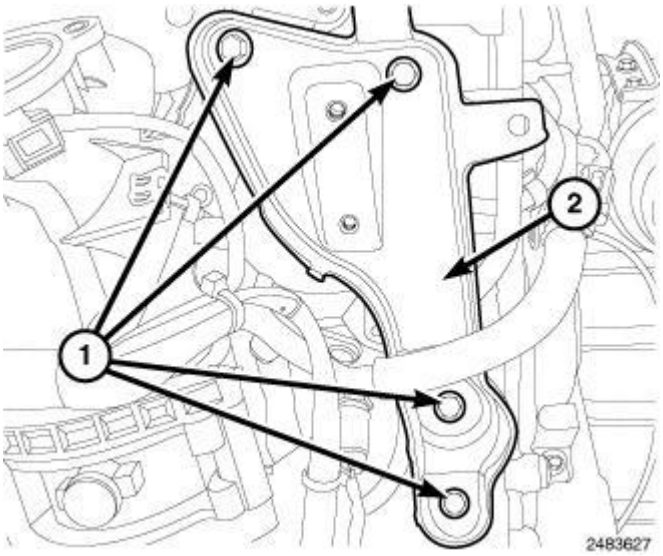


**Fig. 346: Bolts & EGR Support Bracket**
**Courtesy of CHRYSLER LLC**

9. Remove bolts (1) and position aside the EGR support bracket (2).

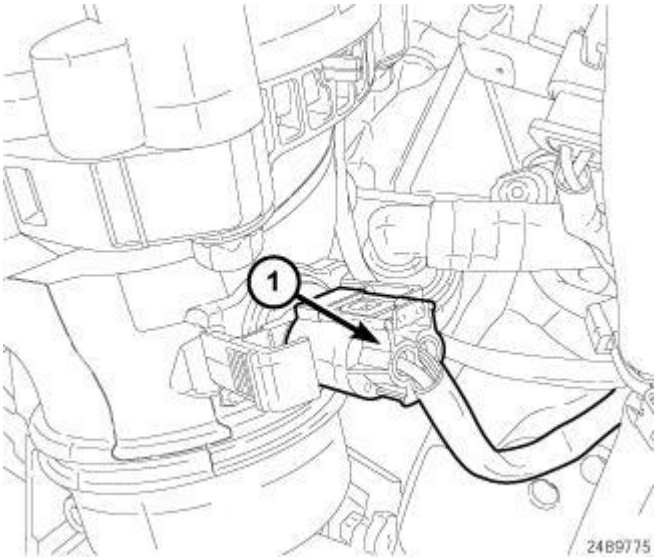


**Fig. 347: Charge Air Temperature Sensor Connectors**
**Courtesy of CHRYSLER LLC**

10. Disconnect the charge air inlet temperature sensor (1) harness connector.

 

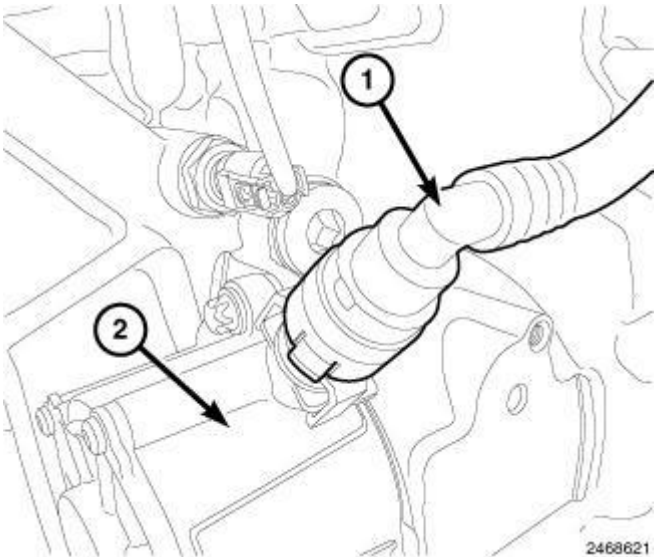


**Fig. 348: Vacuum Hose At Vacuum Pump**
**Courtesy of CHRYSLER LLC**

11. Disconnect vacuum hose (1) from vacuum pump (2).

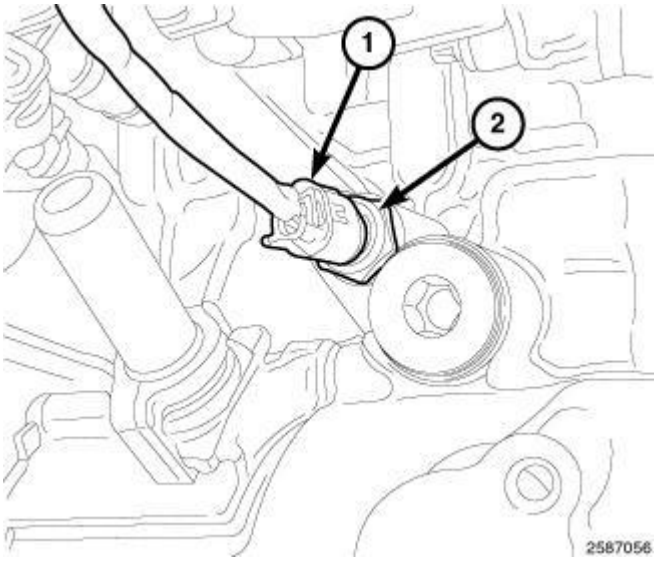


**Fig. 349: Oil Temperature Sensor Harness Connector & Sensor**
**Courtesy of CHRYSLER LLC**

12. Disconnect the oil temperature sensor harness connector (1).
13. Remove the oil temperature sensor (2).

**Installation**

**INSTALLATION**

 

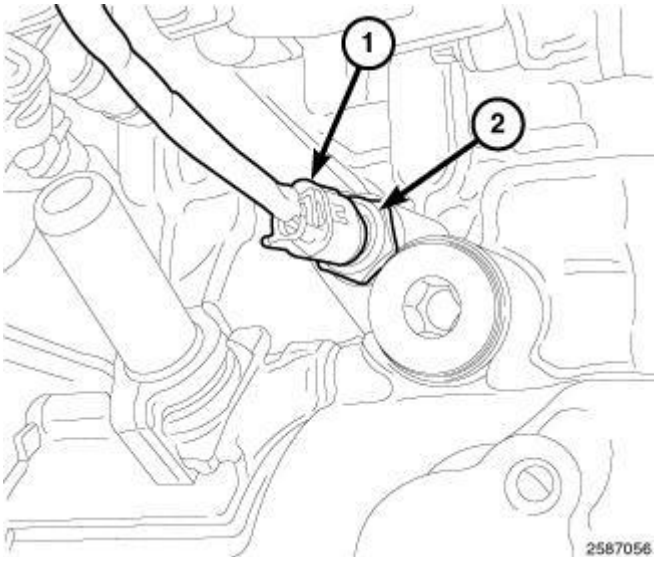


**Fig. 350: Oil Temperature Sensor Harness Connector & Sensor**
**Courtesy of CHRYSLER LLC**

1. Install the oil temperature sensor (2). Tighten sensor (2) to 26 N.m (19 ft. lbs.).
2. Connect the oil temperature sensor harness connector (1).

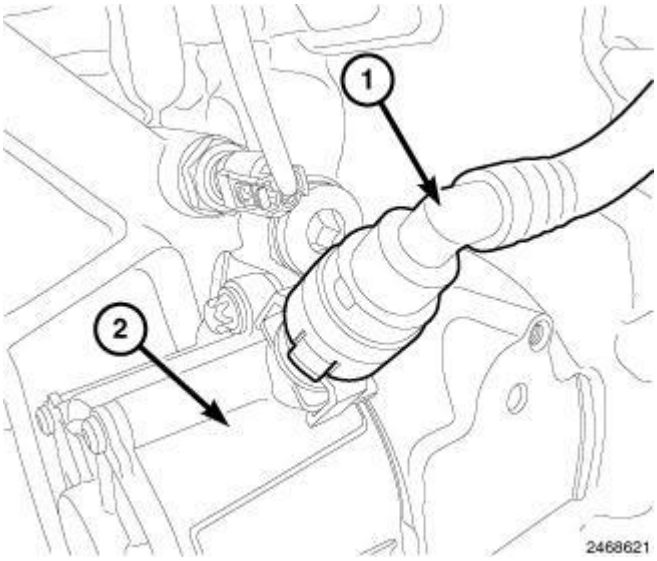


**Fig. 351: Vacuum Hose At Vacuum Pump**
**Courtesy of CHRYSLER LLC**

3. Connect vacuum hose (1) to the vacuum pump (2).

 

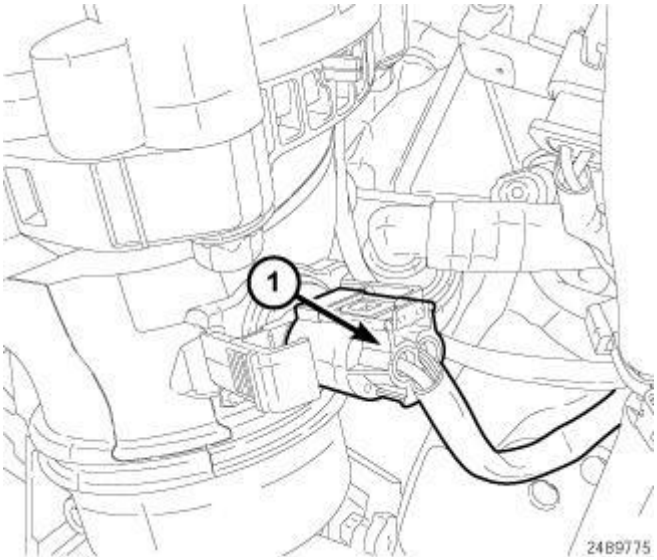


**Fig. 352: Charge Air Temperature Sensor Connectors**
**Courtesy of CHRYSLER LLC**

4. Connect the charge air inlet temperature sensor (1) harness connector.

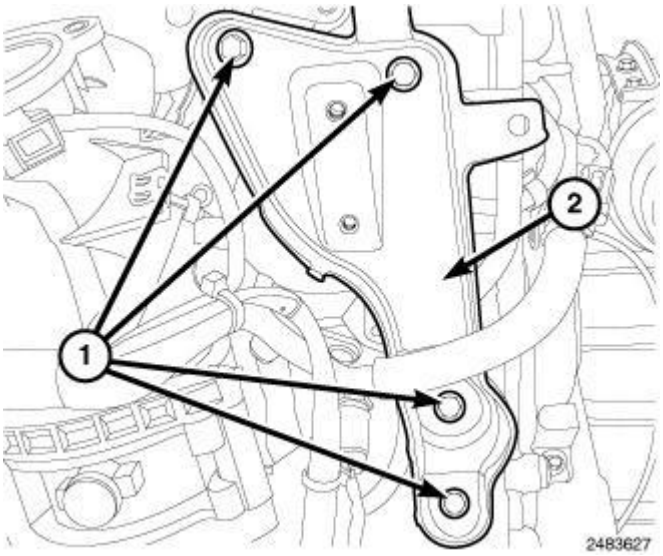


**Fig. 353: Bolts & EGR Support Bracket**
**Courtesy of CHRYSLER LLC**

5. Install the EGR support bracket (2). Tighten bolts (1) to 9 N.m (80 in. lbs.).

 

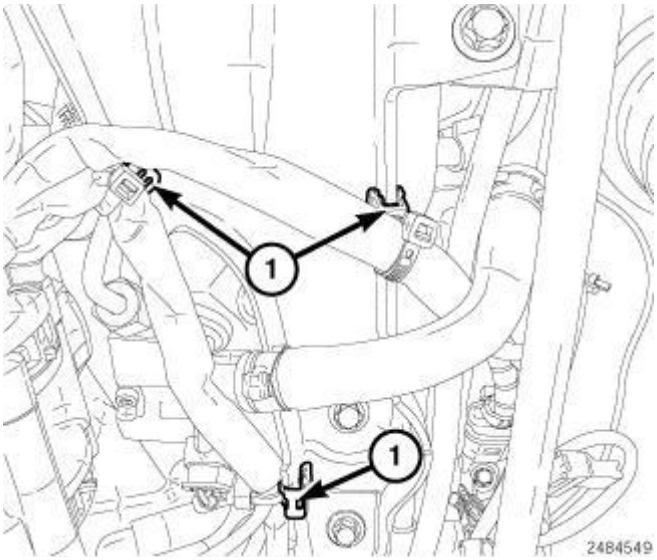


**Fig. 354: Wire Harness Retainers**
**Courtesy of CHRYSLER LLC**

6. Connect the wire harness retainers (1).

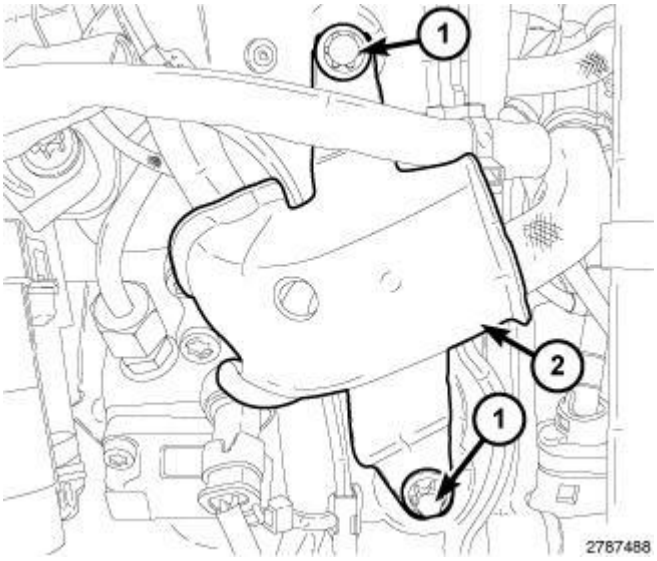


**Fig. 355: Bolts & Heat Shield**
**Courtesy of CHRYSLER LLC**

7. Install the heat shield (2). Tighten bolts (1) to 9 N.m (80 in. lbs.).

 

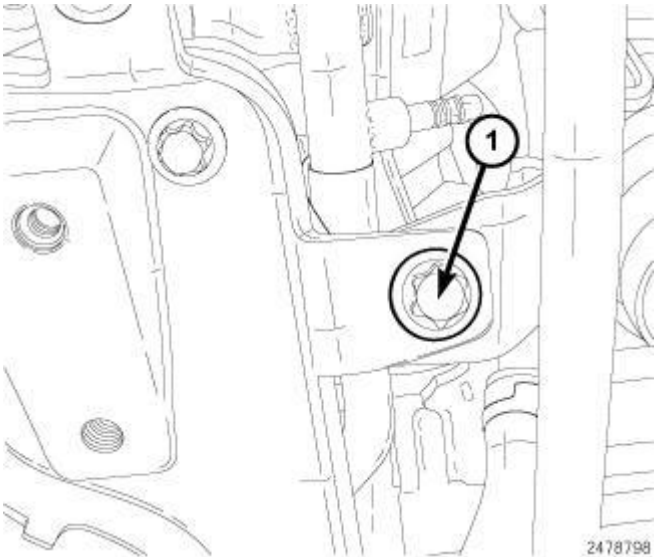


**Fig. 356: Oil Dip Stick Bolt**
**Courtesy of CHRYSLER LLC**

8. Install the bolt securing the oil dip stick tube. Tighten bolt to 9 N.m (80 in. lbs.).

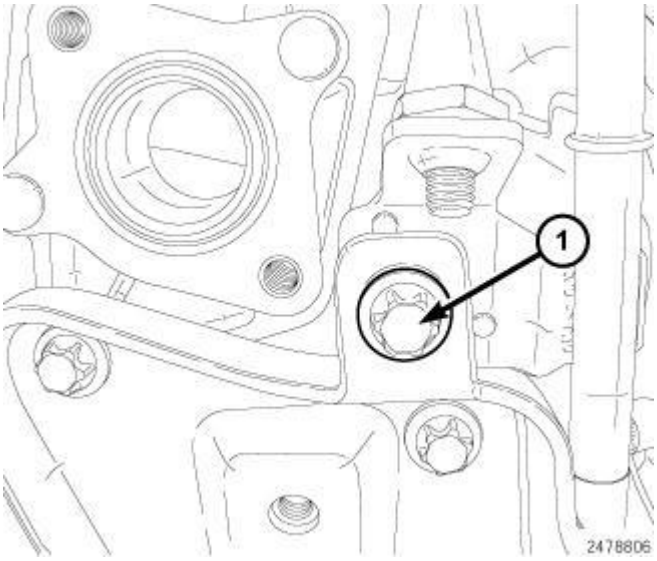


**Fig. 357: Vacuum Tube Bolt**
**Courtesy of CHRYSLER LLC**

9. Install the bolt securing the vacuum tube (1). Tighten bolt to 9 N.m (80 in. lbs.).

 

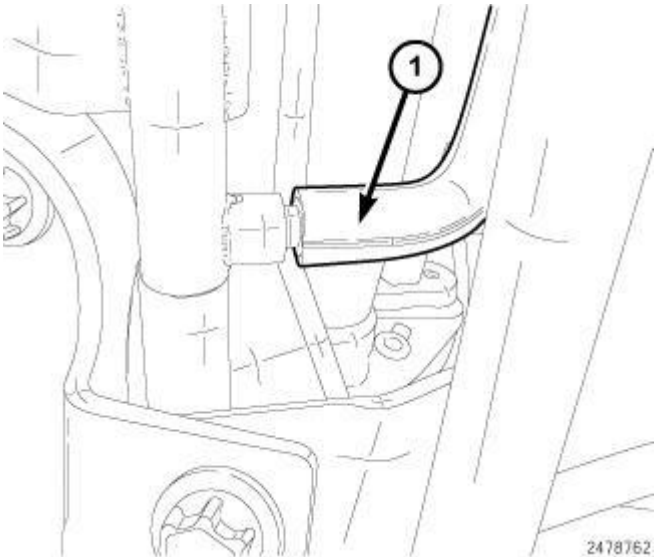


**Fig. 358: Vacuum Supply Line At EGR Solenoid**
**Courtesy of CHRYSLER LLC**

10. Connect the vacuum supply line (1) to the EGR solenoid.

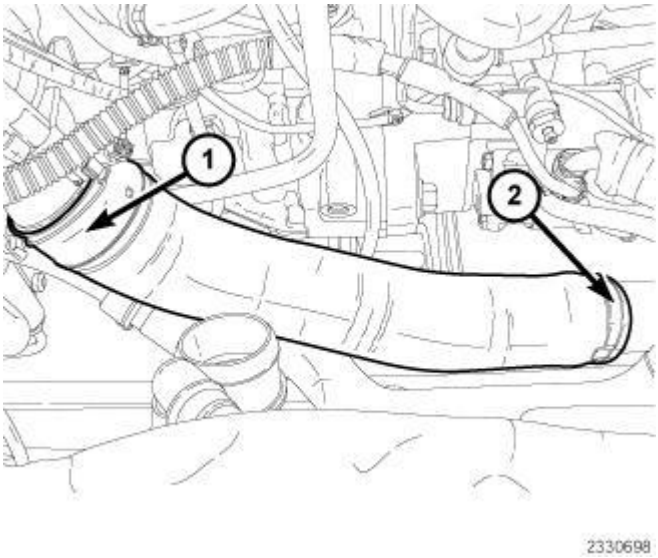


**Fig. 359: EGR Air Flow Control Valve & Clamp**
**Courtesy of CHRYSLER LLC**

11. Install charge air inlet tube to the charge air cooler (CAC) and the EGR air control valve.
12. Connect the negative battery cable.

## SWITCH, OIL LEVEL

### Description

#### DESCRIPTION

 

The oil level switch is located on the bottom of the oil pan. The oil level switch is sends a signal to the Powertrain Control Module (PCM) which turns the oil light on in the cluster when oil level is below its threshold.

If the engine oil light is on while engine is running perform the DIAGNOSING AN OIL LIGHT ON test procedure. Refer to **Diagnosis and Testing** .

**Removal**

**REMOVAL**

1. Disconnect the negative battery cable.
2. Raise and support the vehicle. Refer to **Hoisting , Standard Procedure** .
3. Remove the belly pan.
4. Drain engine oil. Tighten drain plug to 25 N.m (18 ft. lbs.).

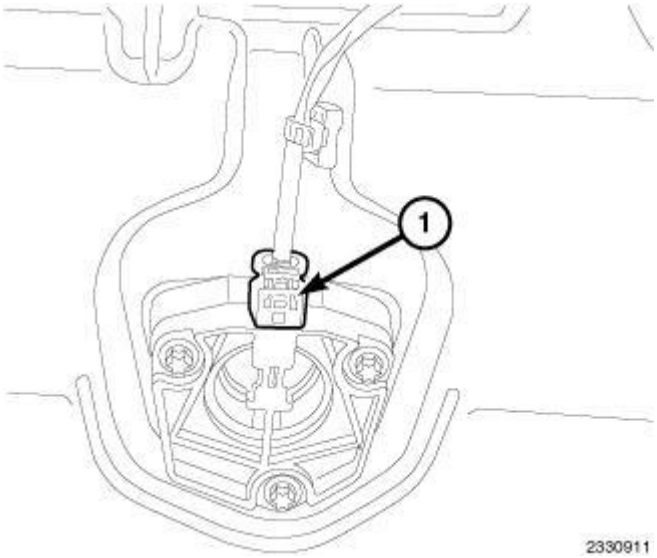


**Fig. 360: Oil Level Switch Wire Harness Connector**
**Courtesy of CHRYSLER LLC**

5. Disconnect oil level switch harness connector (1).

 

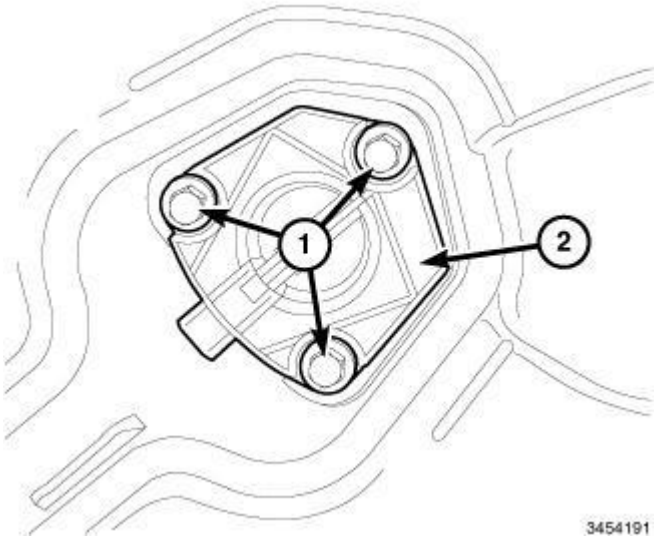


**Fig. 361: Oil Level Switch & Bolts**
**Courtesy of CHRYSLER LLC**

6. Remove bolts (1) and the oil level switch (2).

**Installation**

**INSTALLATION**

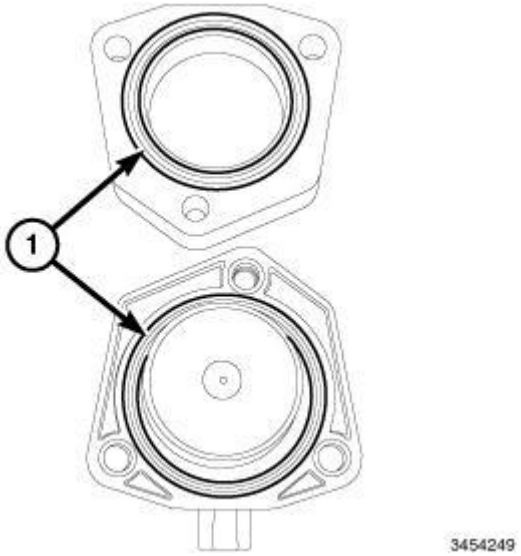


**Fig. 362: O-Ring seals**
**Courtesy of CHRYSLER LLC**

1. Clean the gasket sealing area on oil pan.
2. Inspect the O-ring seals (1) and replace as necessary.

 

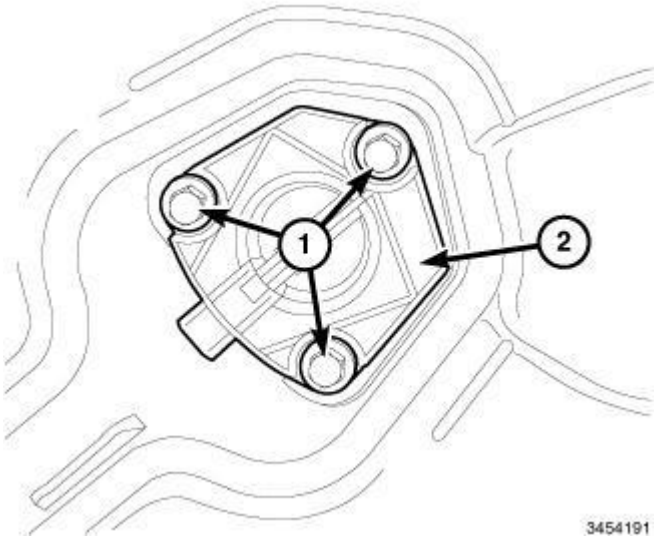


**Fig. 363: Oil Level Switch & Bolts**
**Courtesy of CHRYSLER LLC**

3. Install the oil level switch. Tighten bolts to 9 N.m (80 in. lbs.).

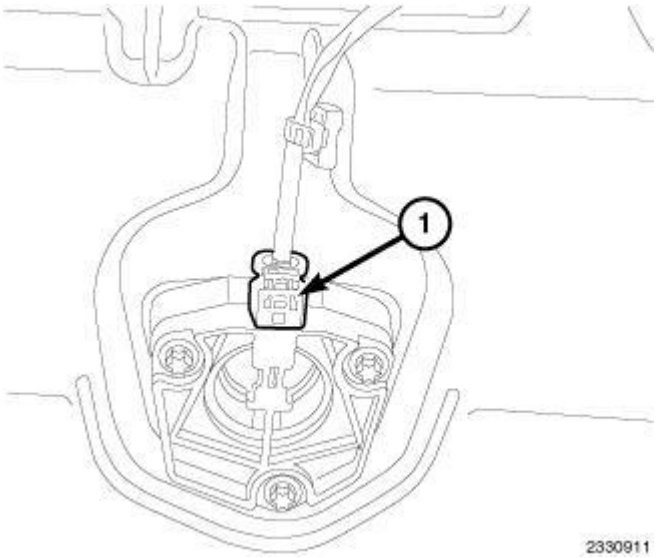


**Fig. 364: Oil Level Switch Wire Harness Connector**
**Courtesy of CHRYSLER LLC**

4. Connect oil level switch harness connector (1).
5. Install the belly pan.
6. Lower the vehicle
7. Fill the engine with recommended engine oil. Refer to **Capacities and Recommended Fluids , Specifications** .
8. Connect the negative battery cable.

# MANIFOLDS

## ACTUATOR, SWIRL VALVE

### Description

#### DESCRIPTION

The intake manifold swirl valve is located inside the intake manifold. The swirl valve actuator is mounted on top of the intake manifold.

### Operation

#### OPERATION

The swirl and charge inlet port are provided in the intake manifold for each cylinder. The charge inlet port can be closed by means of flaps. The flaps are connected to each other by means of a shaft, which is operated by the swirl valve actuator. They are held in the open position by means of spring force.

At lower engine speed and load range, all the charge inlet ports are sealed off by the flaps. The entire air flows is through the swirl inlet ports only. This results in high air swirling which in turn produces more effective mixing of the fuel with the air, which improves combustion and reduces the amount of soot particulants in the exhaust.

As engine speed and load increases, the charge inlet ports are continuously opened to obtain the best possible ratio between air swirling and air mass for each engine operating point, which will optimize exhaust characteristics and engine power output.

The position of the flaps in the charge inlet ports is determined by the map stored in the Powertrain Control Module (PCM).

### Removal

#### REMOVAL

 

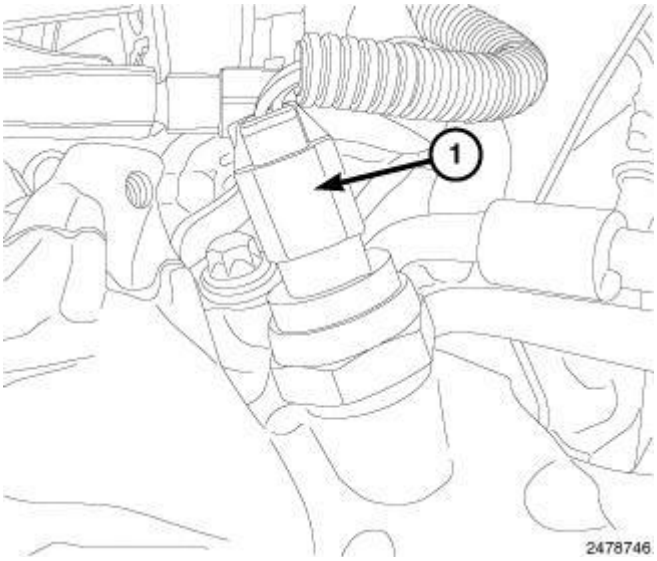


**Fig. 365: EGR Back Pressure Transducer Harness Connector**
**Courtesy of CHRYSLER LLC**

1. Disconnect the negative battery cable.
2. Remove the engine cover.
3. Drain cooling system. Refer to **Standard Procedure** .
4. Disconnect the EGR back pressure transducer harness connector (1).

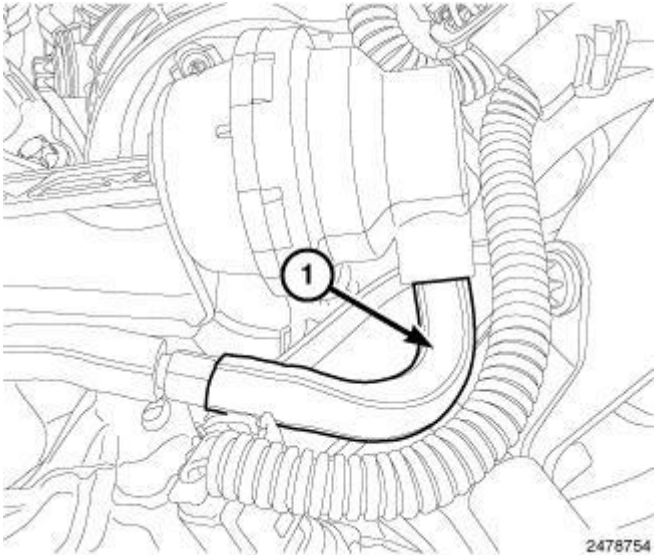


**Fig. 366: EGR Control Valve Actuator Vacuum Line**
**Courtesy of CHRYSLER LLC**

5. Disconnect the vacuum line (1) from the EGR control valve actuator.

 

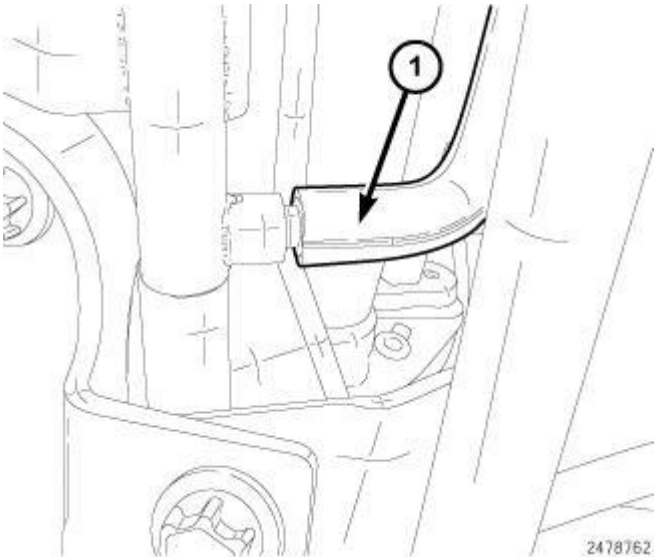


**Fig. 367: Vacuum Supply Line At EGR Solenoid**
**Courtesy of CHRYSLER LLC**

6. Disconnect the vacuum supply line (1) to the EGR solenoid.

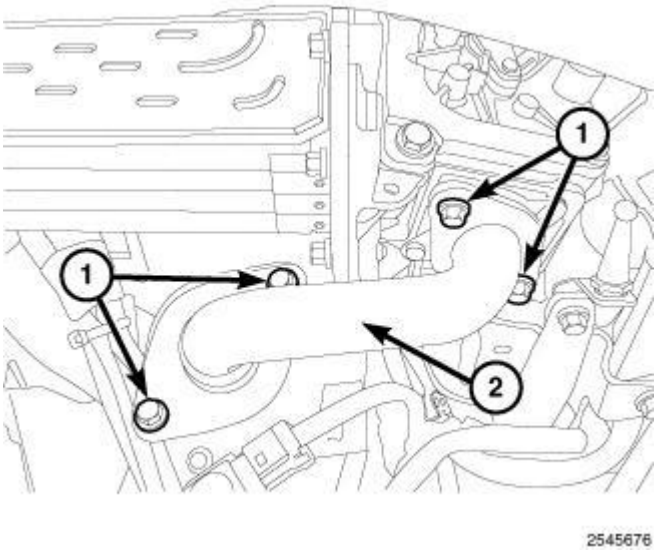


**Fig. 368: EGR Tube & Bolts**
**Courtesy of CHRYSLER LLC**

7. Remove bolts (1) and the EGR tube (2).

 

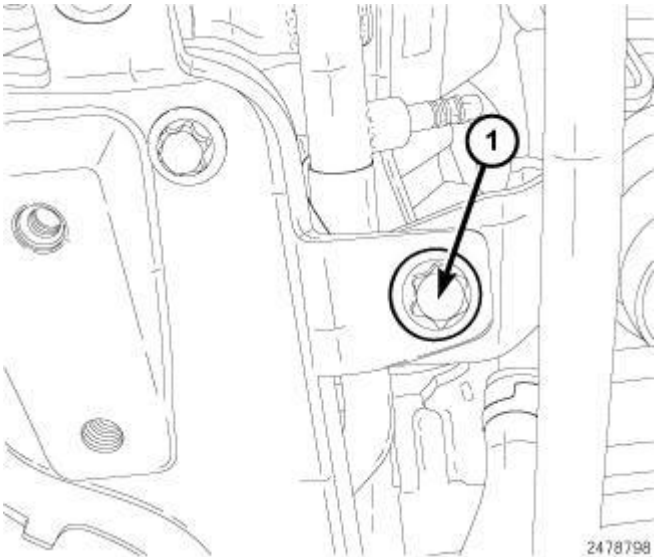


**Fig. 369: Oil Dip Stick Bolt**
**Courtesy of CHRYSLER LLC**

8. Remove the bolt (1) securing the oil dip stick tube.

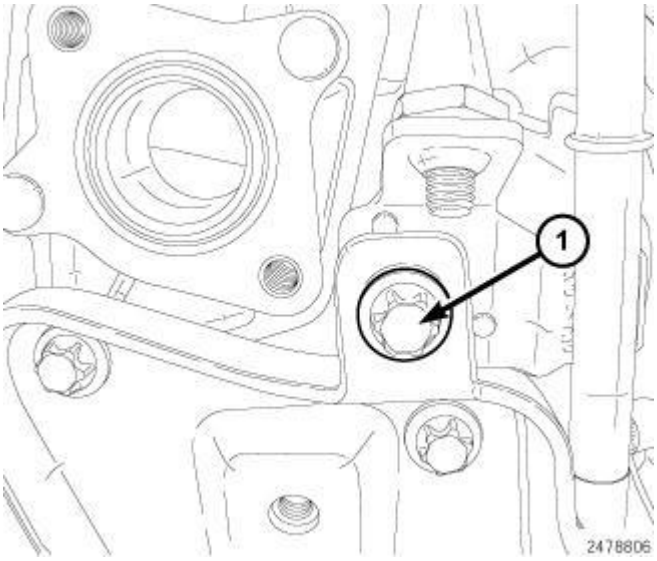


**Fig. 370: Vacuum Tube Bolt**
**Courtesy of CHRYSLER LLC**

9. Remove the bolt (1) securing the vacuum tube.

 

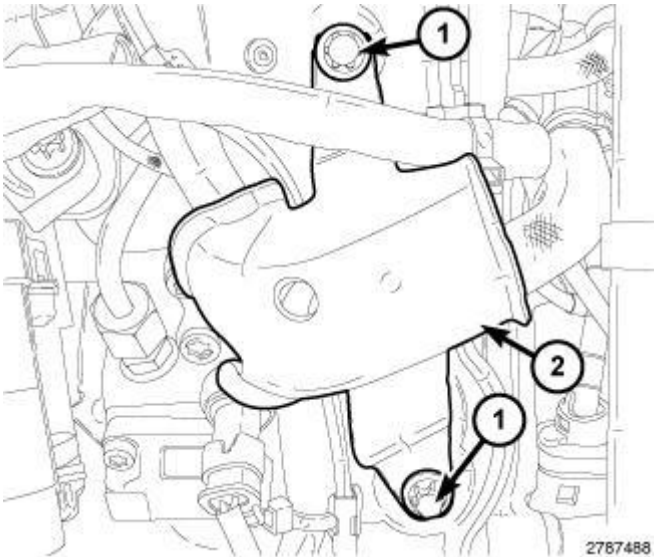


**Fig. 371: Bolts & Heat Shield**
**Courtesy of CHRYSLER LLC**

10. Remove bolts (1) and the heat shield (2).

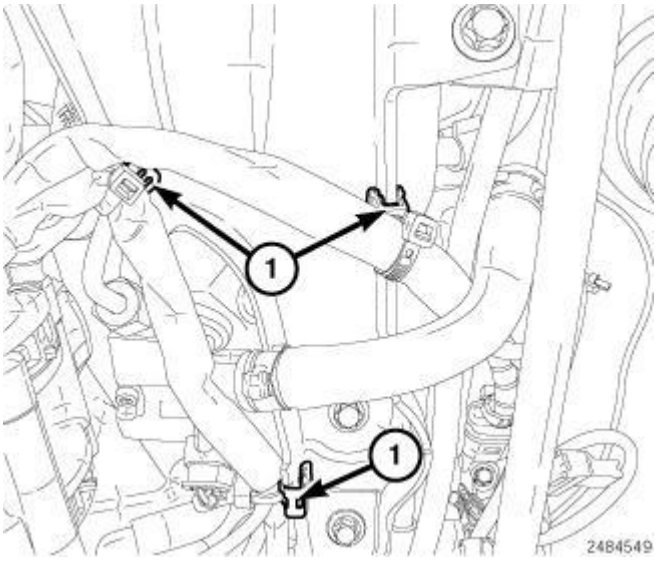


**Fig. 372: Wire Harness Retainers**
**Courtesy of CHRYSLER LLC**

11. Disconnect the wire harness retainers (1).

 

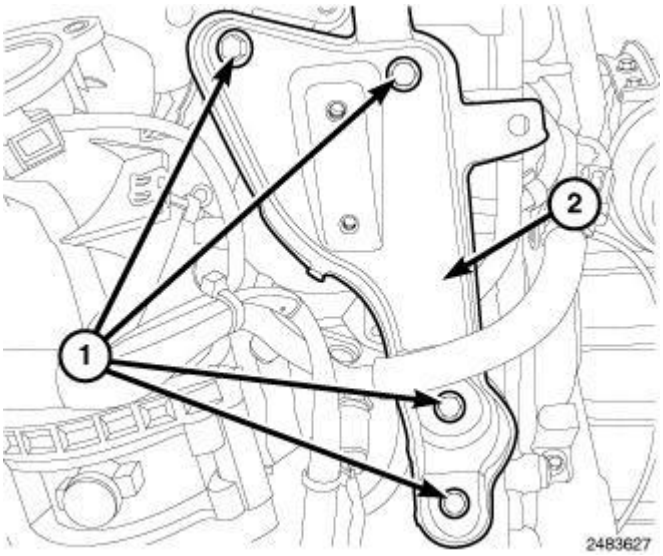


**Fig. 373: Bolts & EGR Support Bracket**
**Courtesy of CHRYSLER LLC**

12. Remove bolts (1) and the EGR support bracket (2).

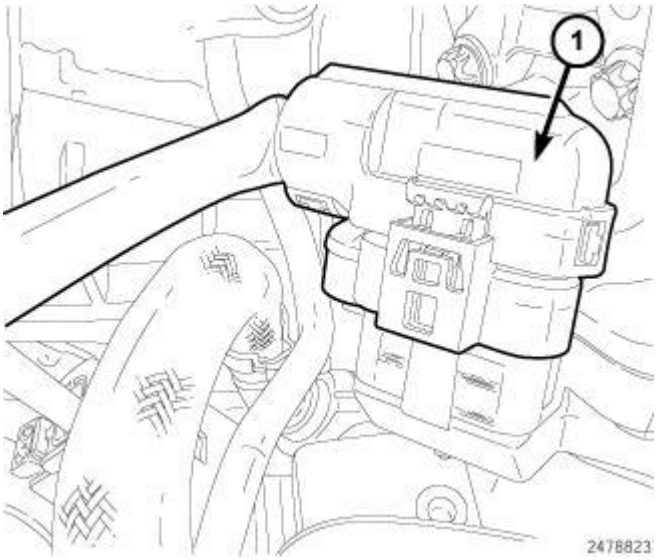


**Fig. 374: EGR Valve Harness Connector**
**Courtesy of CHRYSLER LLC**

13. Disconnect the EGR valve harness connector (1).

 

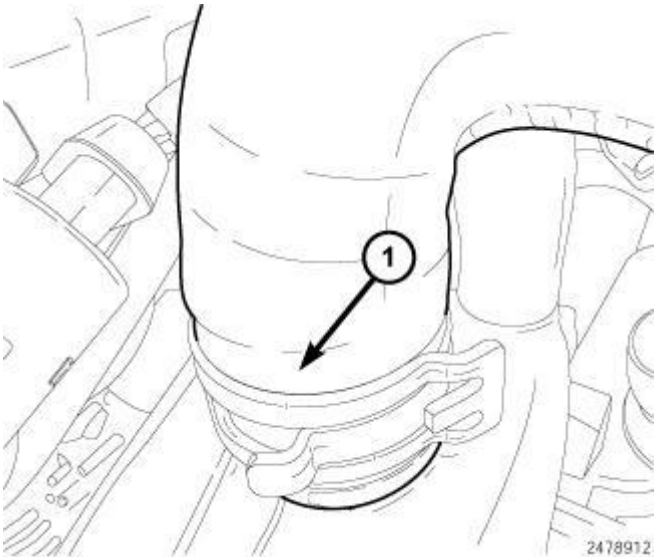


**Fig. 375: EGR Coolant Hose**
**Courtesy of CHRYSLER LLC**

14. Disconnect the EGR coolant hose (1).

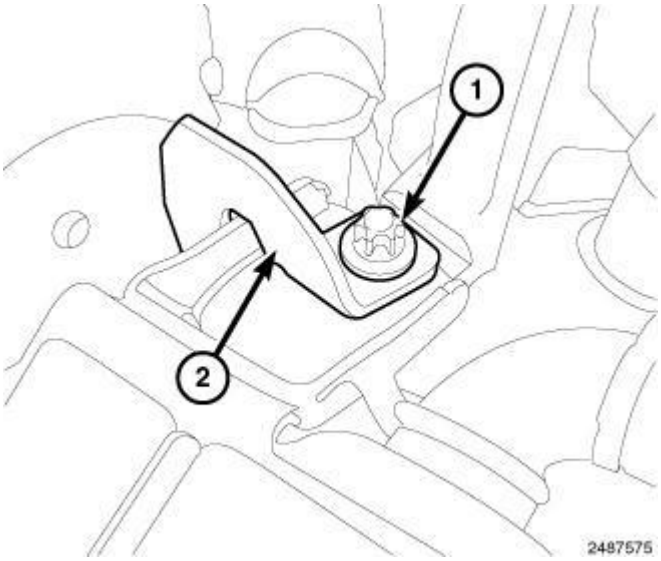


**Fig. 376: Upper EGR Cooler Bolt & Bracket**
**Courtesy of CHRYSLER LLC**

15. Remove the upper EGR cooler bolt (1) and bracket (2).

 

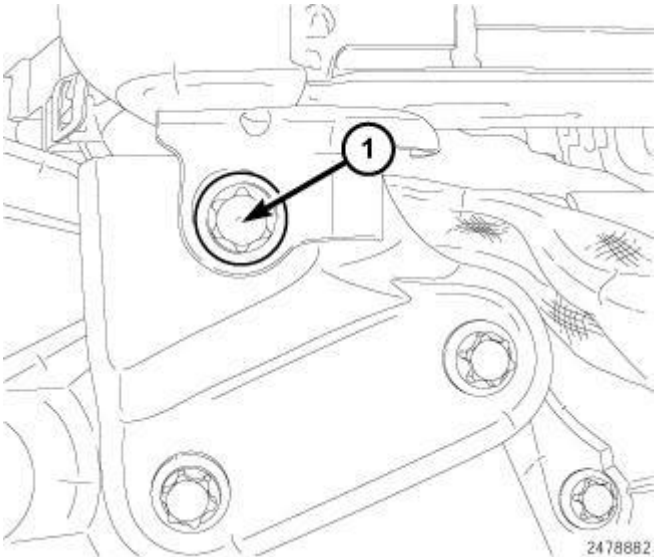


**Fig. 377: Lower EGR Cooler Bolt**
**Courtesy of CHRYSLER LLC**

16. Remove the lower EGR cooler bolt (1).

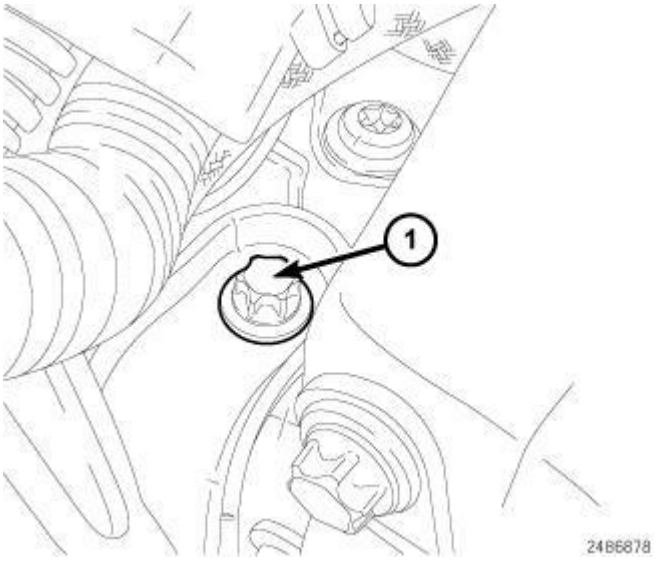


**Fig. 378: Support Bracket Bolt**
**Courtesy of CHRYSLER LLC**

17. Remove the support bracket bolt (1).

 

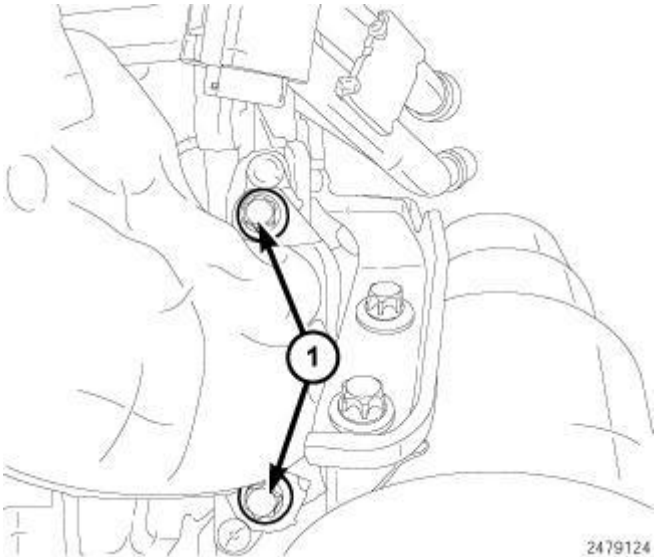


**Fig. 379: EGR Cooler Manifold Bolts**
**Courtesy of CHRYSLER LLC**

18. Remove two bolts (1) and the EGR cooler manifold.

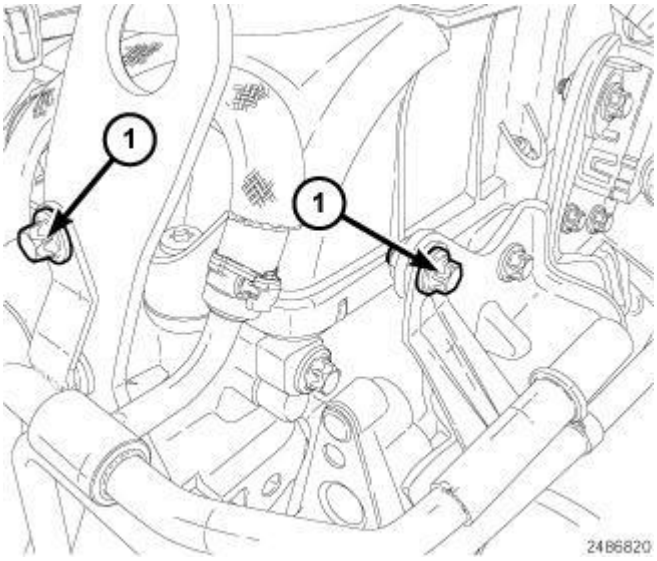


**Fig. 380: Upper Fuel Line Bracket Bolts**
**Courtesy of CHRYSLER LLC**

19. Remove the two upper fuel line bracket bolts (1).

 

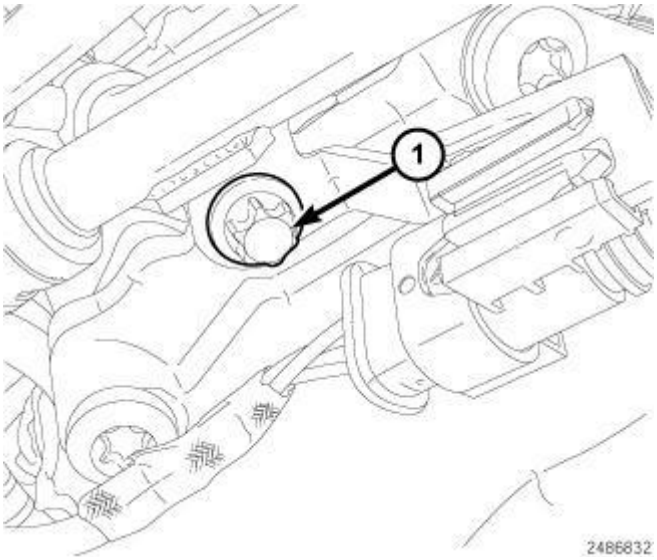


**Fig. 381: Lower Fuel Line Bracket Bolt**
**Courtesy of CHRYSLER LLC**

20. Remove the lower fuel line bracket bolt (1).

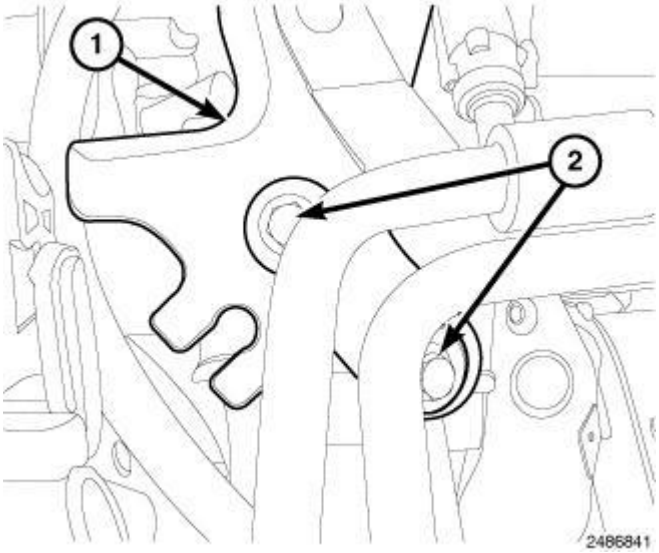


**Fig. 382: Engine Lifting Eye & Bolts**
**Courtesy of CHRYSLER LLC**

21. Remove bolts (2) and the engine lifting eye (1).

 

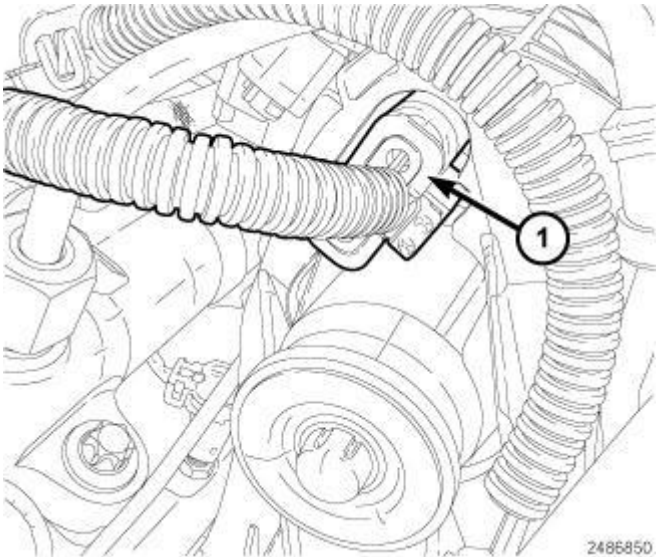


**Fig. 383: Swirl Valve Actuator Harness Connector**
**Courtesy of CHRYSLER LLC**

22. Disconnect the swirl valve actuator harness connector (1).

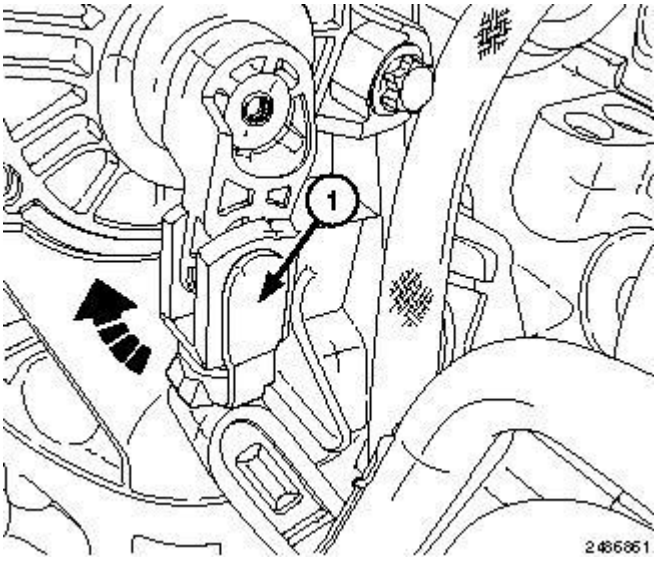


**Fig. 384: Releasing Lock Clip At Swirl Valve Linkage**
**Courtesy of CHRYSLER LLC**

23. Release the lock clip (1) and disconnect the swirl valve linkage.

 

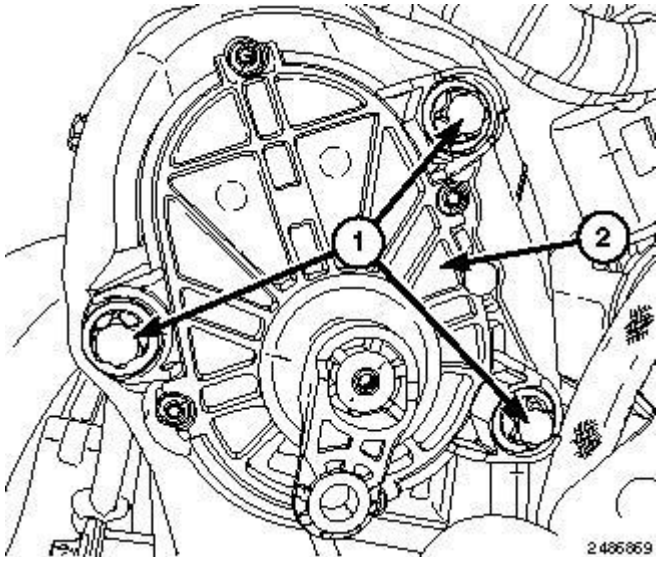


**Fig. 385: Swirl Valve Actuator & Bolts**
**Courtesy of CHRYSLER LLC**

24. Remove the bolts (1) and the swirl valve actuator (2).

**Installation**

**INSTALLATION**

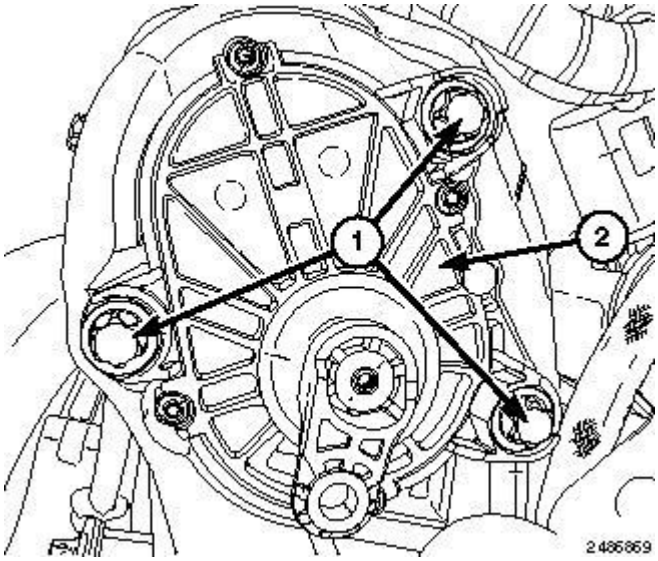


**Fig. 386: Swirl Valve Actuator & Bolts**
**Courtesy of CHRYSLER LLC**

1. Install swirl valve motor (2). Tighten bolts (1) to 9 N.m 80 (in. lbs.).

 

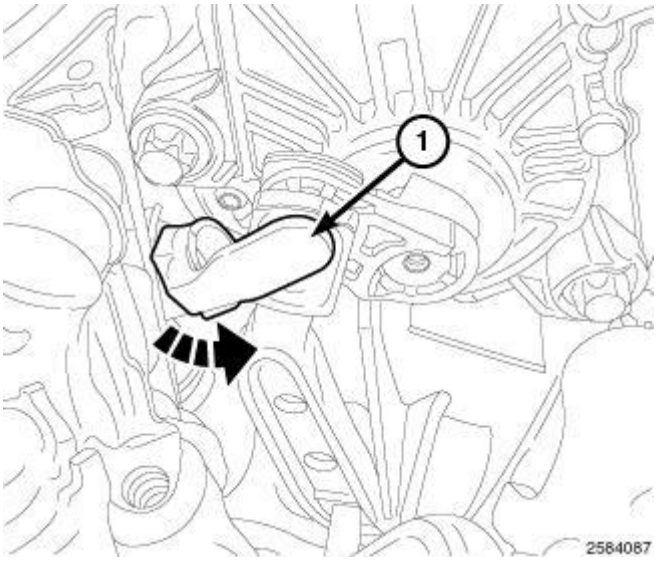


**Fig. 387: Installing Lock Clip On Swirl Valve Linkage**
**Courtesy of CHRYSLER LLC**

2. Position the swirl valve linkage and install the lock clip (1).

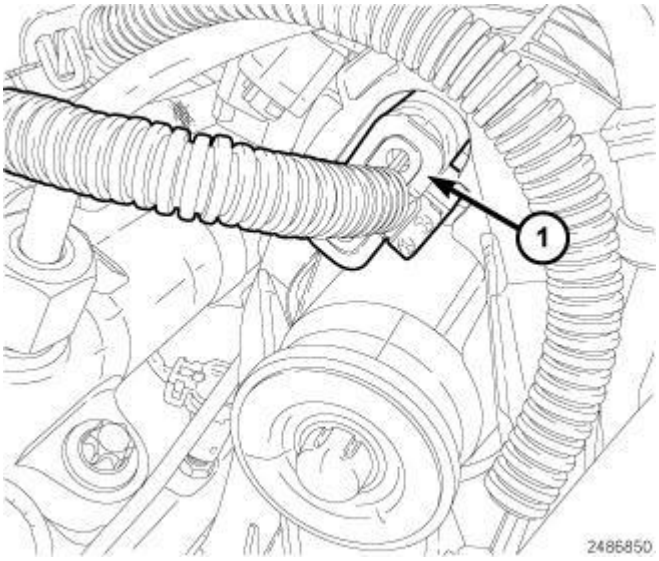


**Fig. 388: Swirl Valve Actuator Harness Connector**
**Courtesy of CHRYSLER LLC**

3. Connect the swirl valve motor harness connector (1).

 

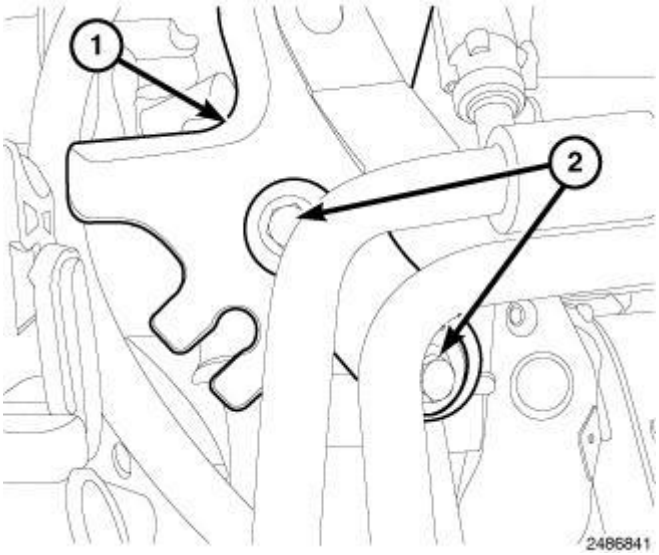


**Fig. 389: Engine Lifting Eye & Bolts**
**Courtesy of CHRYSLER LLC**

4. Install the engine lifting bracket (1). Tighten bolts (2) to 9 N.m 80 (in. lbs.).

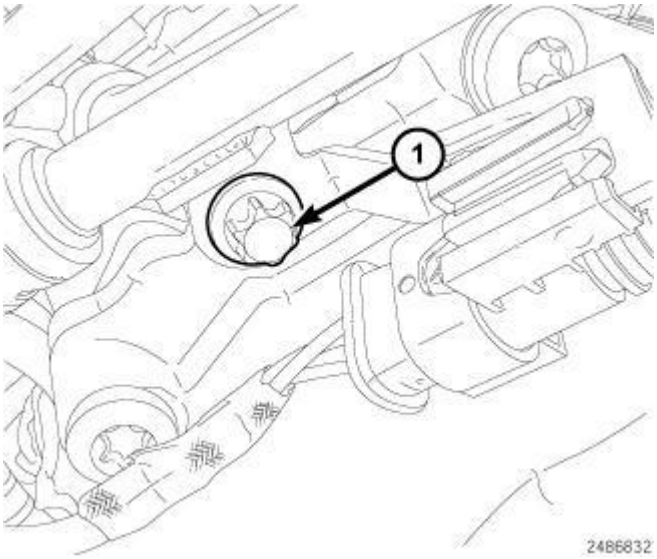


**Fig. 390: Lower Fuel Line Bracket Bolt**
**Courtesy of CHRYSLER LLC**

5. Install the lower fuel line bracket bolt (1). Tighten bolt to 9 N.m 80 (in. lbs.).

 

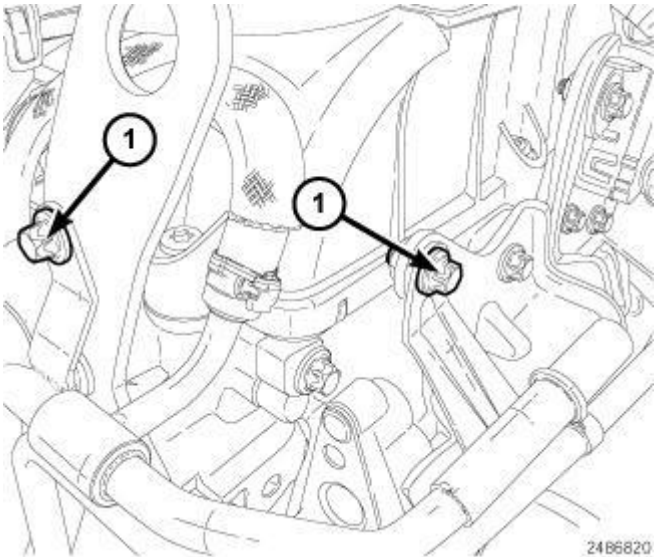


**Fig. 391: Upper Fuel Line Bracket Bolts**
**Courtesy of CHRYSLER LLC**

6. Install the two upper fuel line bracket bolts. Tighten bolts to 9 N.m 80 (in. lbs.).

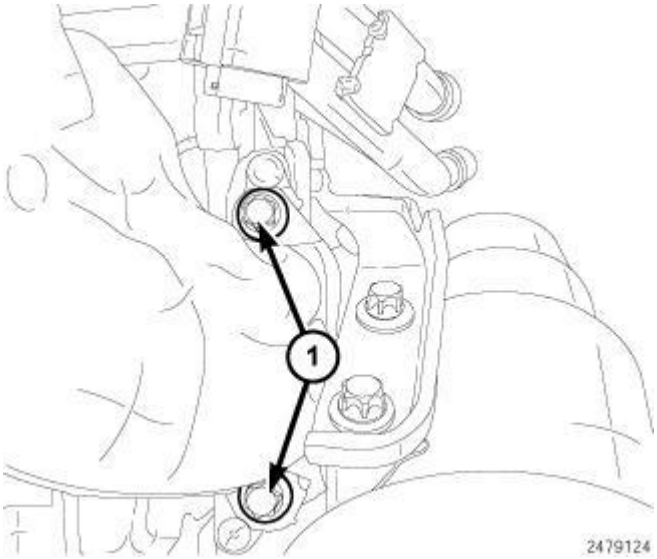


**Fig. 392: EGR Cooler Manifold Bolts**
**Courtesy of CHRYSLER LLC**

7. Install the EGR cooler manifold. Tighten bolts (1) to 9 N.m 80 (in. lbs.).

 

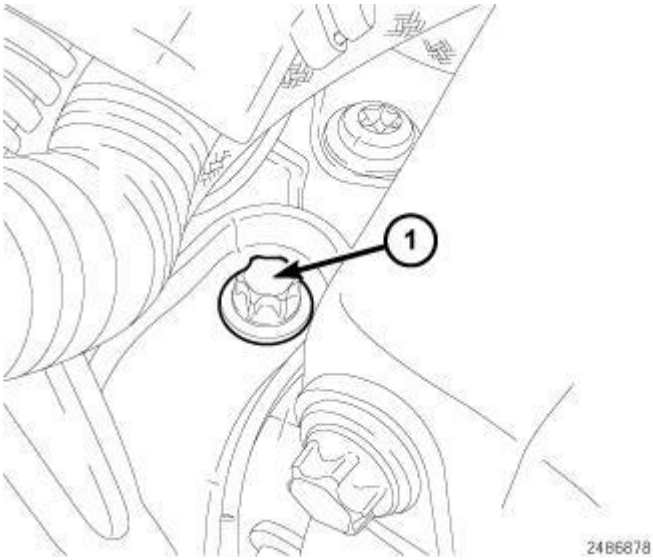


**Fig. 393: Support Bracket Bolt**
**Courtesy of CHRYSLER LLC**

8. Install the upper EGR cooler support bracket bolt (1). Tighten bolt (1) to 9 N.m 80 (in. lbs.).

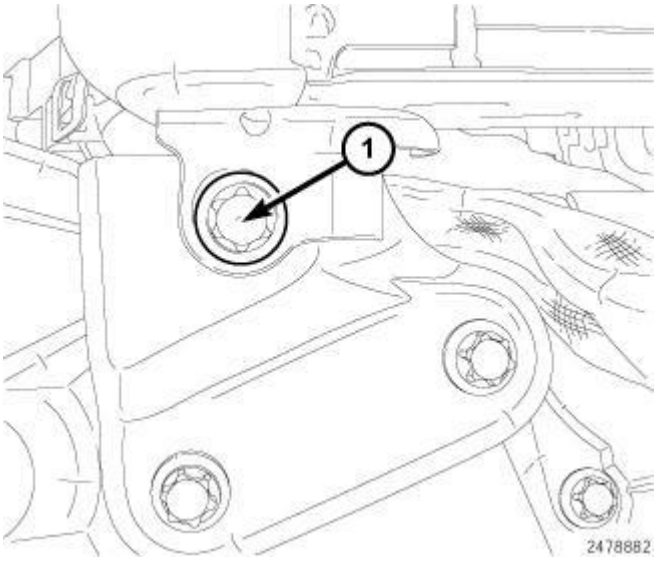


**Fig. 394: Lower EGR Cooler Bolt**
**Courtesy of CHRYSLER LLC**

9. Install the lower EGR cooler support bracket bolt (1). Tighten bolt (1) to 9 N.m 80 (in. lbs.).

 

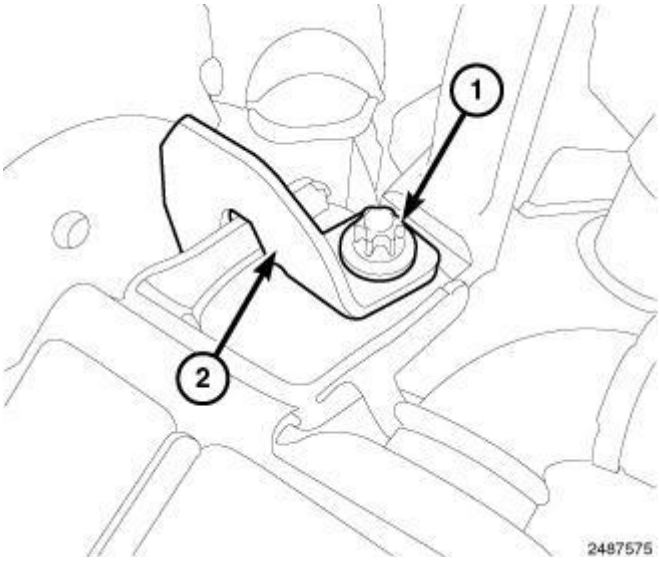


**Fig. 395: Upper EGR Cooler Bolt & Bracket**
**Courtesy of CHRYSLER LLC**

10. Install the upper EGR cooler bracket (2) and bolt (1). Tighten bolt (1) to 9 N.m 80 (in. lbs.).

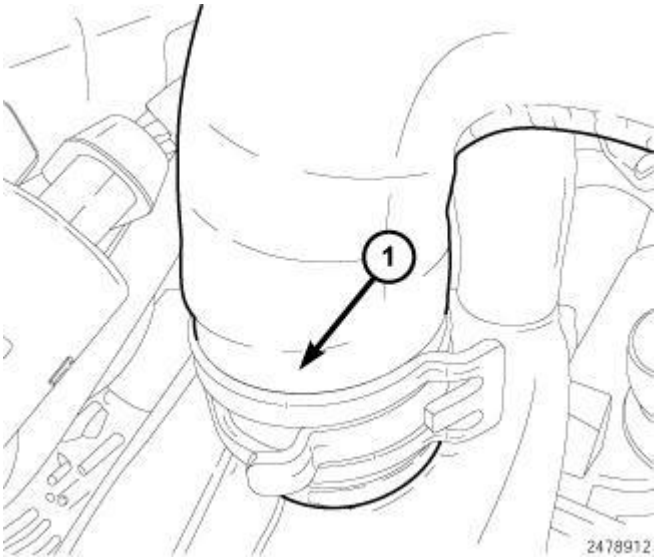


**Fig. 396: EGR Coolant Hose**
**Courtesy of CHRYSLER LLC**

11. Connect the EGR coolant hose (1).

 

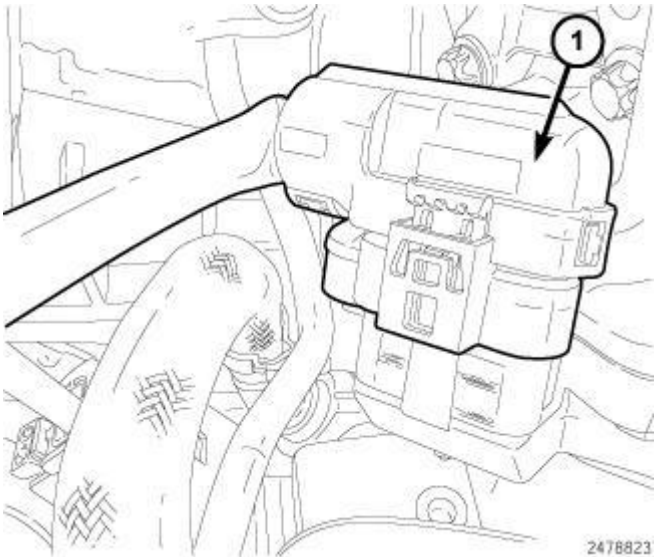


**Fig. 397: EGR Valve Harness Connector**
**Courtesy of CHRYSLER LLC**

12. Connect the EGR valve electrical connector (1).

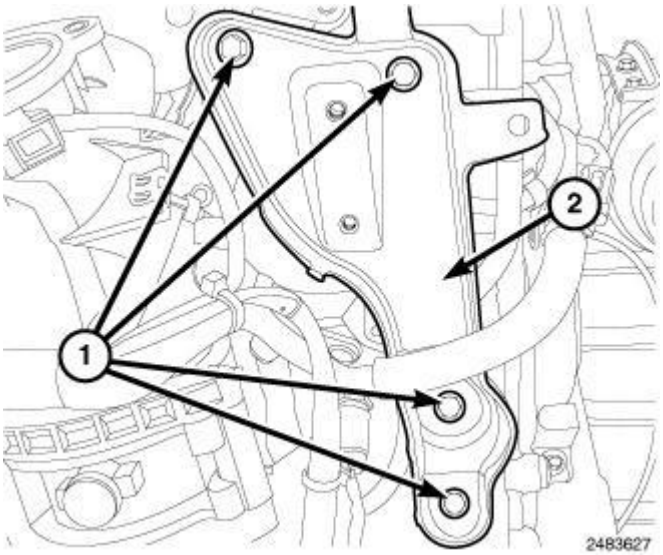


**Fig. 398: Bolts & EGR Support Bracket**
**Courtesy of CHRYSLER LLC**

13. Install the EGR support bracket (2). Tighten bolts (1) to 9 N.m 80 (in. lbs.).

 

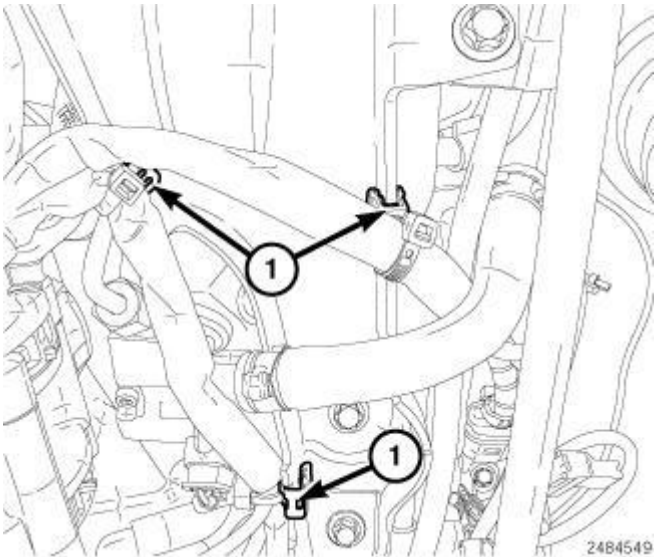


**Fig. 399: Wire Harness Retainers**
**Courtesy of CHRYSLER LLC**

14. Connect the wire harness retainers (1).

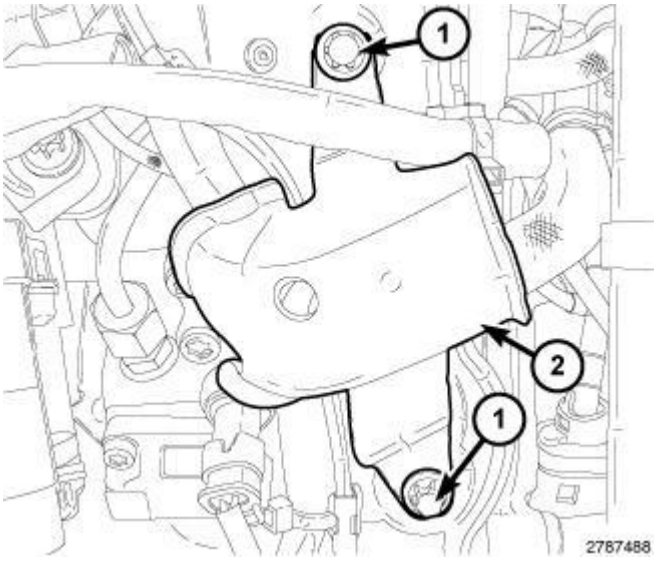


**Fig. 400: Bolts & Heat Shield**
**Courtesy of CHRYSLER LLC**

15. Install the heat shield (2). Tighten bolts (1) to 9 N.m (80 in. lbs.).

 

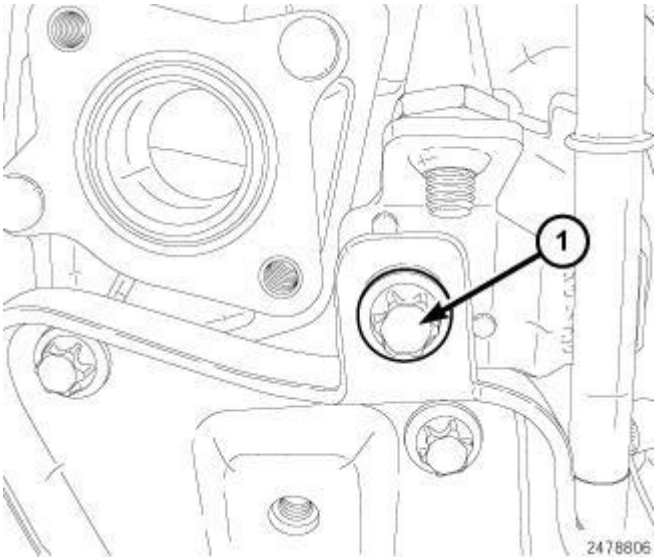


**Fig. 401: Vacuum Tube Bolt**
**Courtesy of CHRYSLER LLC**

16. Install the bolt (1) securing the vacuum tube. Tighten bolt (1) to 9 N.m 80 (in. lbs.).

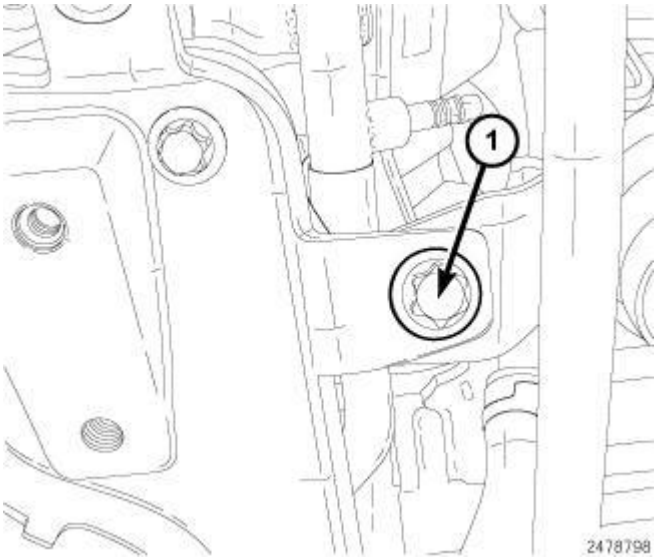


**Fig. 402: Oil Dip Stick Bolt**
**Courtesy of CHRYSLER LLC**

17. Install the bolt (1) securing the oil dip stick tube. Tighten bolt (1) to 9 N.m 80 (in. lbs.).

 

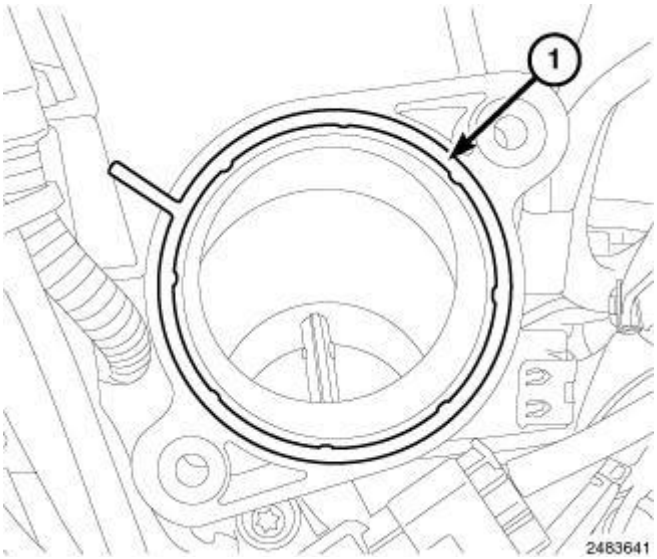


**Fig. 403: EGR Tube Gasket Onto Mixing Chamber**
**Courtesy of CHRYSLER LLC**

18. Clean the gasket surfaces and install a new gasket (1).

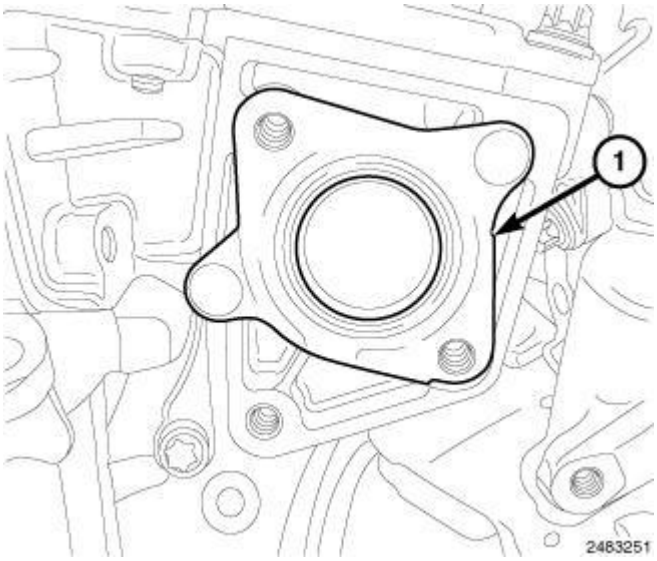


**Fig. 404: EGR Tube Gasket Onto EGR Actuator**
**Courtesy of CHRYSLER LLC**

19. Clean the gasket surfaces and install a new gasket (1).

 

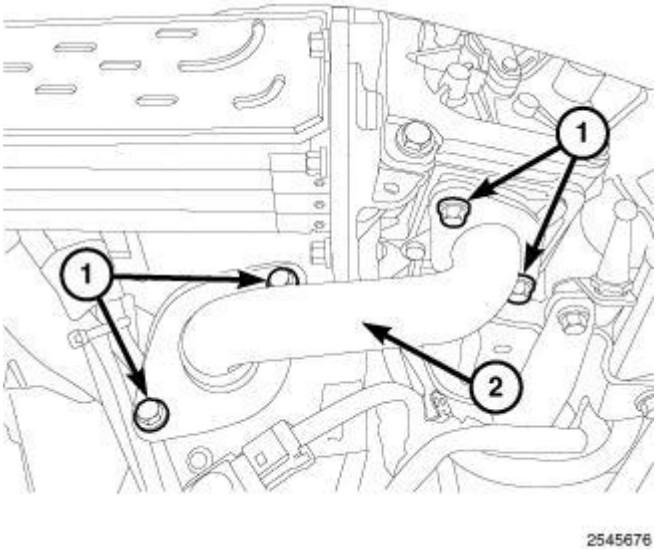


**Fig. 405: EGR Tube & Bolts**
**Courtesy of CHRYSLER LLC**

20. Install the EGR tube (2). Tighten bolts (1) to 9 N.m 80 (in. lbs.).

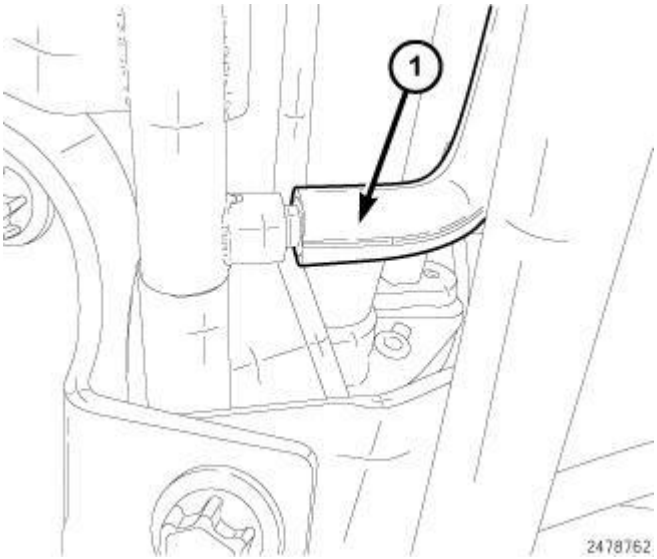


**Fig. 406: Vacuum Supply Line At EGR Solenoid**
**Courtesy of CHRYSLER LLC**

21. Connect the vacuum supply line (1) to the EGR solenoid.

 

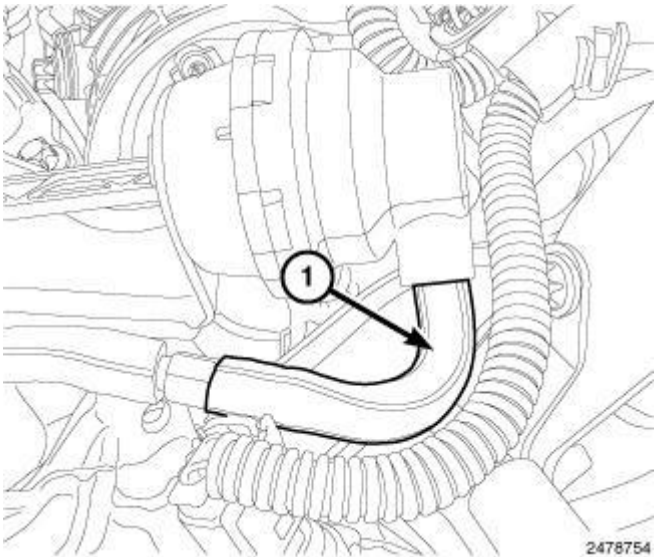


**Fig. 407: EGR Control Valve Actuator Vacuum Line**
**Courtesy of CHRYSLER LLC**

22. Connect the vacuum line (1) from the EGR control valve actuator.

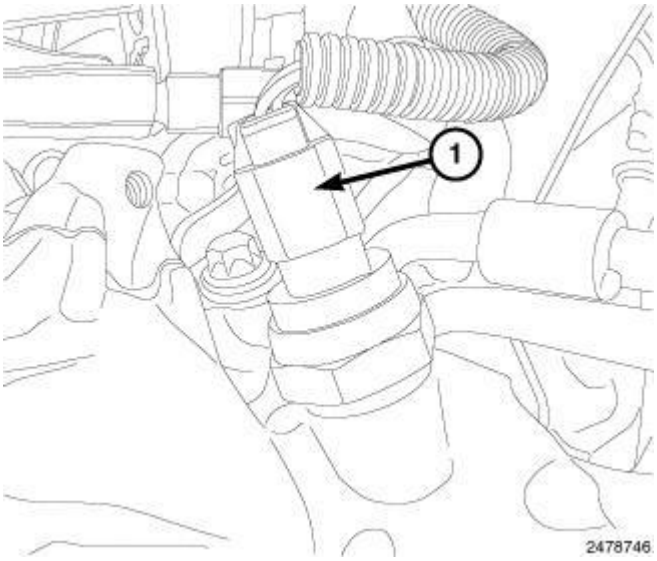


**Fig. 408: EGR Back Pressure Transducer Harness Connector**
**Courtesy of CHRYSLER LLC**

23. Connect the EGR back pressure transducer harness connector (1).
24. Fill cooling system. Refer to **Standard Procedure** .
25. Install the engine cover.
26. Connect the negative battery cable.

## MANIFOLD, EXHAUST

### Removal

 

**REMOVAL**

1. Disconnect negative battery cable.
2. Remove the turbocharger. Refer to **TURBOCHARGER , Removal**.

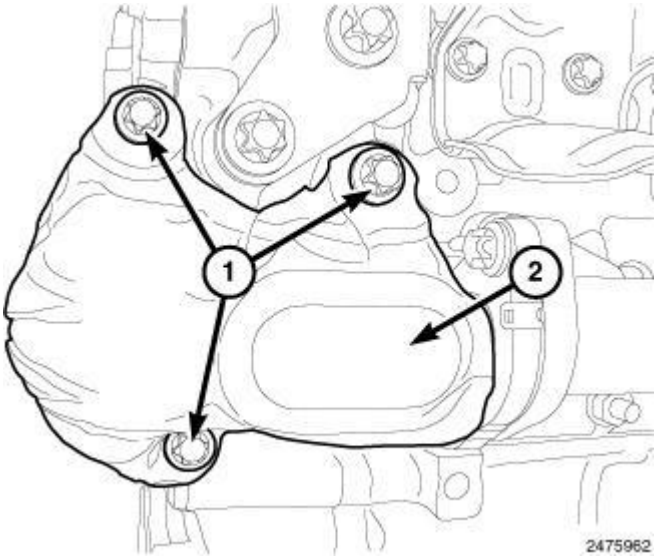


**Fig. 409: EGR Pipe Heat Shield & Bolts**
**Courtesy of CHRYSLER LLC**

3. Remove bolts (1) and the EGR pipe heat shield (2).

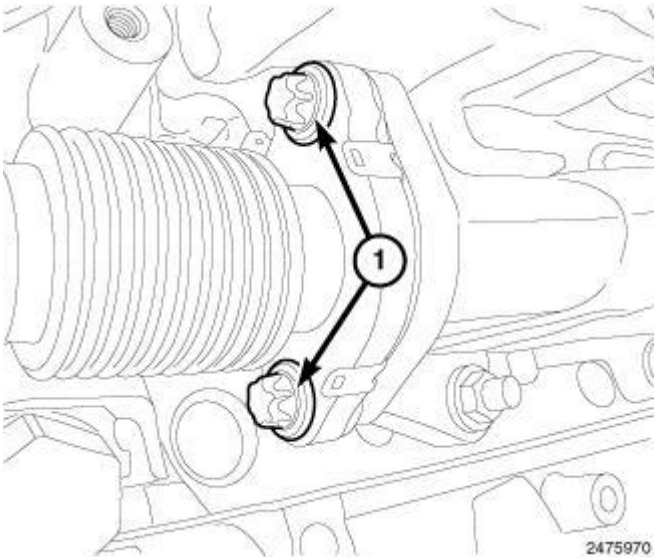


**Fig. 410: EGR Crossover Pipe Bolts**
**Courtesy of CHRYSLER LLC**

4. Remove the two bolts (1) from the EGR crossover pipe.

 

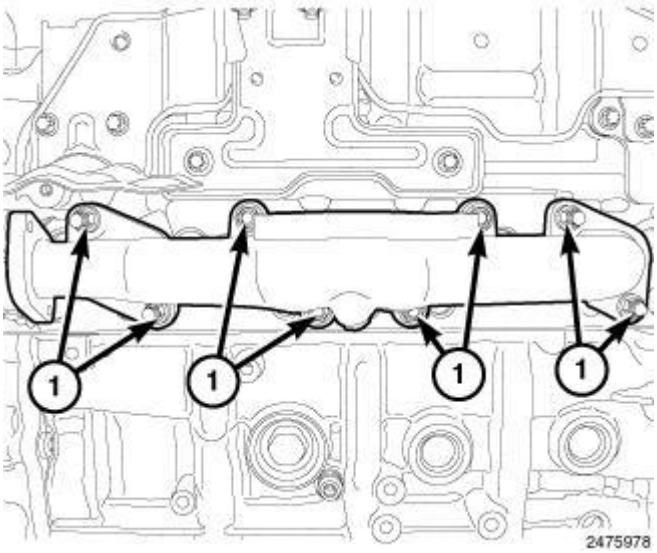


**Fig. 411: Exhaust Manifold Retaining Nuts**
**Courtesy of CHRYSLER LLC**

5. Remove exhaust manifold retaining nuts (1) and remove manifold.

**Inspection**

**INSPECTION**

1. Inspect manifold gasket surfaces for flatness with straight edge. Surface must be flat within 0.15 mm per 300 mm (0.006 in. per foot) of manifold length.
2. Inspect manifolds for cracks or distortion. Replace manifold as necessary.

**Installation**

**INSTALLATION**

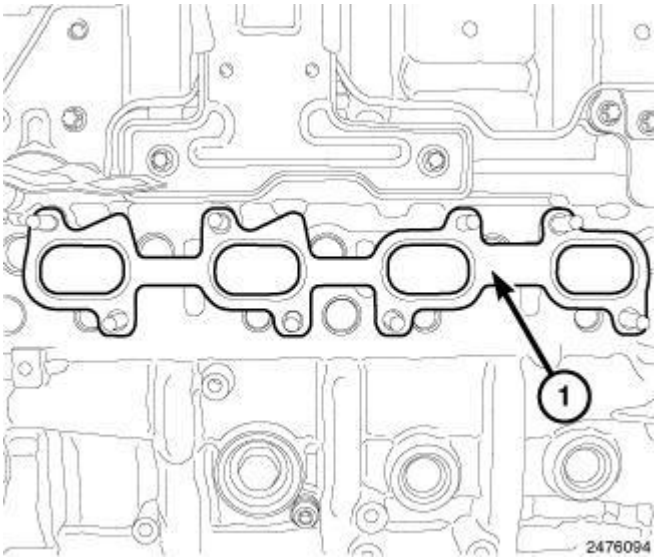


 

**Fig. 412: Exhaust Manifold Gasket**
**Courtesy of CHRYSLER LLC**

1. Clean the gasket surfaces and install a new gasket (1).

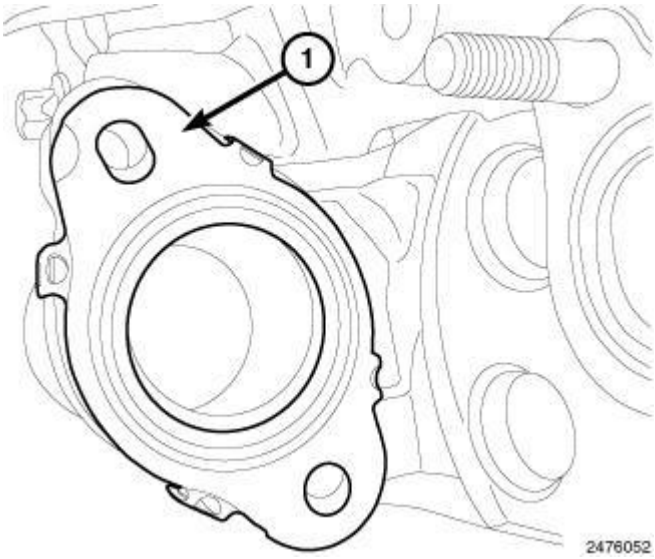


**Fig. 413: EGR Pipe Gasket**
**Courtesy of CHRYSLER LLC**

2. Clean the gasket surface and install a new gasket (1) onto the EGR pipe.

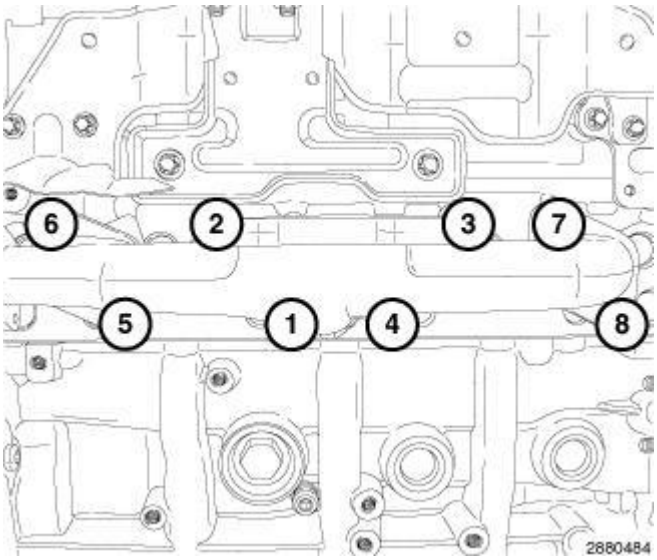


**Fig. 414: Exhaust Manifold Bolt Tightening Sequence**
**Courtesy of CHRYSLER LLC**

3. Install exhaust manifold and tighten nuts finger tight.
4. Using the sequence shown in illustration tighten nuts to 30 N.m (22 ft. lbs.).

 

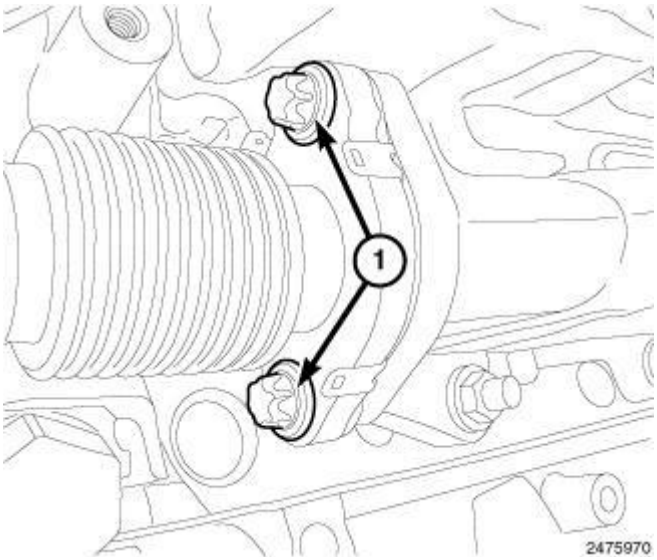


**Fig. 415: EGR Crossover Pipe Bolts**
**Courtesy of CHRYSLER LLC**

5. Install the two bolts (1) into the EGR crossover pipe. Tighten bolts (1) to 12 N.m (106 in. lbs.) plus an additional 90 degrees.

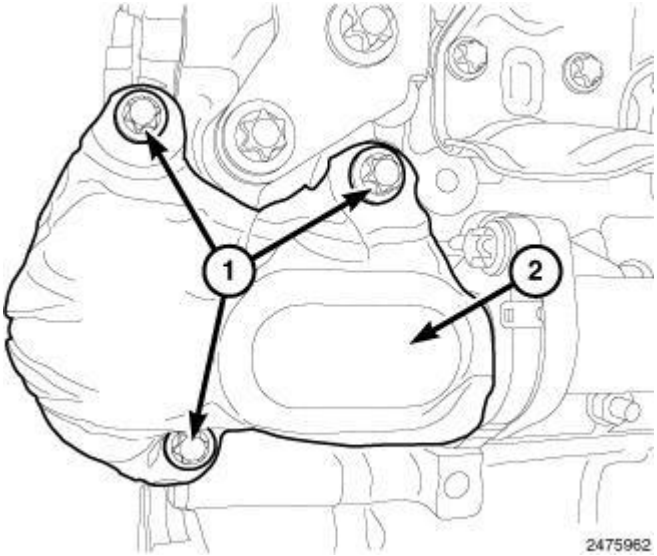


**Fig. 416: EGR Pipe Heat Shield & Bolts**
**Courtesy of CHRYSLER LLC**

6. Install the heat shield (2). Tighten bolts (1) to 8 N.m (71 in. lbs.).
7. Install turbocharger Refer to **TURBOCHARGER , Installation**.
8. Connect the negative battery cable.

## MANIFOLD, INTAKE

### Description

**DESCRIPTION**

The intake manifold is two-piece design and is made of a composite material.

**Removal**

**MIXING CHAMBER**

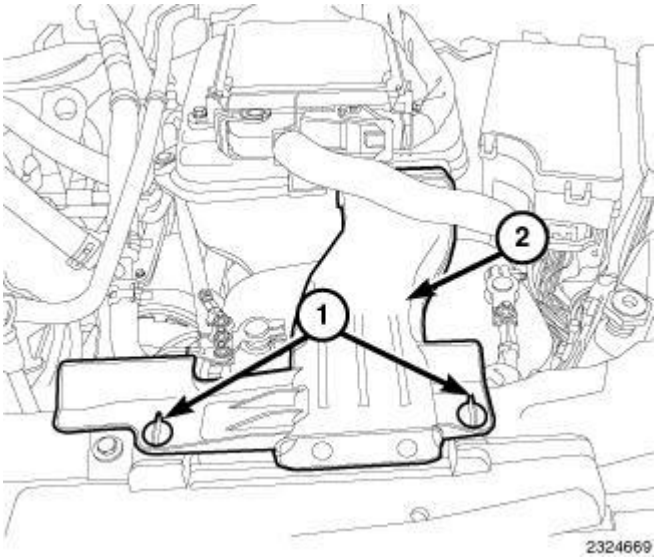


**Fig. 417: Quarter Turn Lock Tabs & Air Inlet Duct**
**Courtesy of CHRYSLER LLC**

1. Release quarter turn lock tabs (1) and remove air inlet duct (2).
2. Disconnect the negative battery cable.
3. Remove the engine cover.
4. Remove the belly pan.
5. Remove the EGR Cooler. Refer to **COOLER, EGR , Removal** .

 

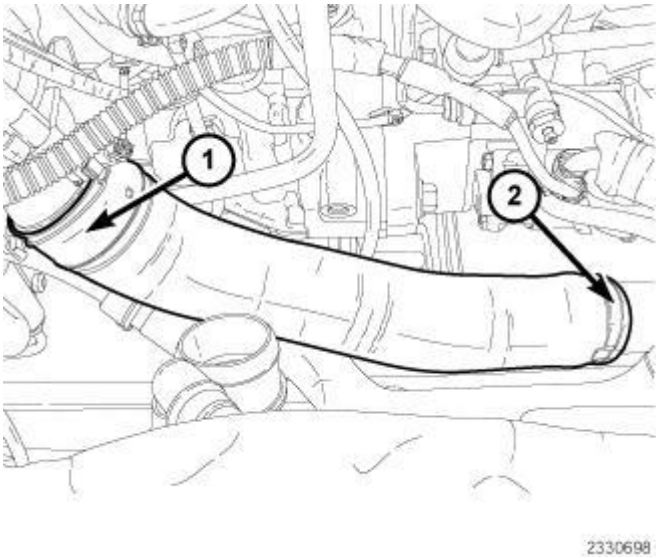


**Fig. 418: EGR Air Flow Control Valve & Clamp**
**Courtesy of CHRYSLER LLC**

6. Loosen the clamp and disconnect the charge air outlet tube from the charge air cooler (CAC).
7. Remove air inlet tube to EGR air flow control valve (1).
8. Remove the cooling fan module. Refer to **FAN, Cooling , Removal** .

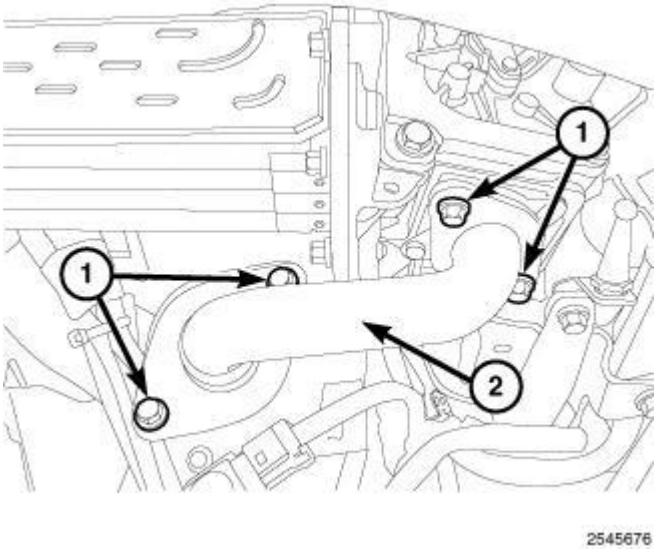


**Fig. 419: EGR Tube & Bolts**
**Courtesy of CHRYSLER LLC**

9. Remove EGR tube bolts (1) and the EGR tube (2).

 

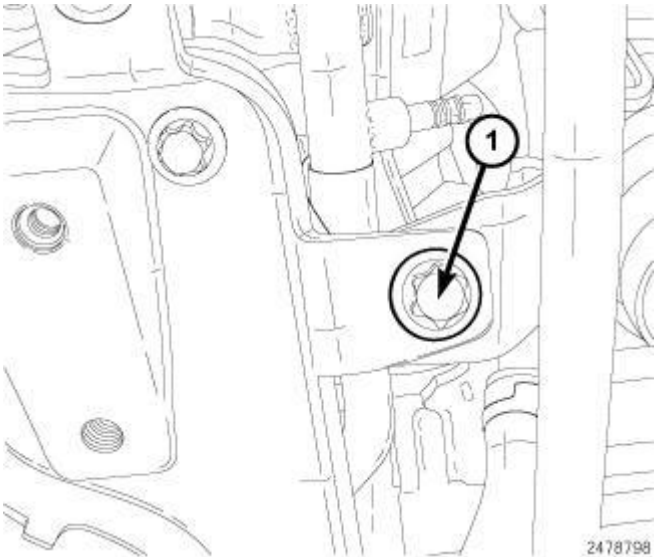


**Fig. 420: Oil Dip Stick Bolt**
**Courtesy of CHRYSLER LLC**

10. Remove the bolt (1) securing the oil dip stick tube.

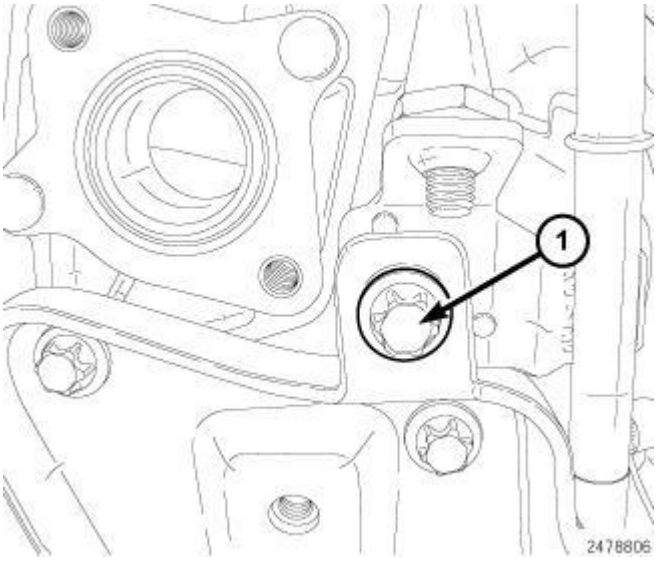


**Fig. 421: Vacuum Tube Bolt**
**Courtesy of CHRYSLER LLC**

11. Remove the bolt (1) securing the vacuum tube.

 

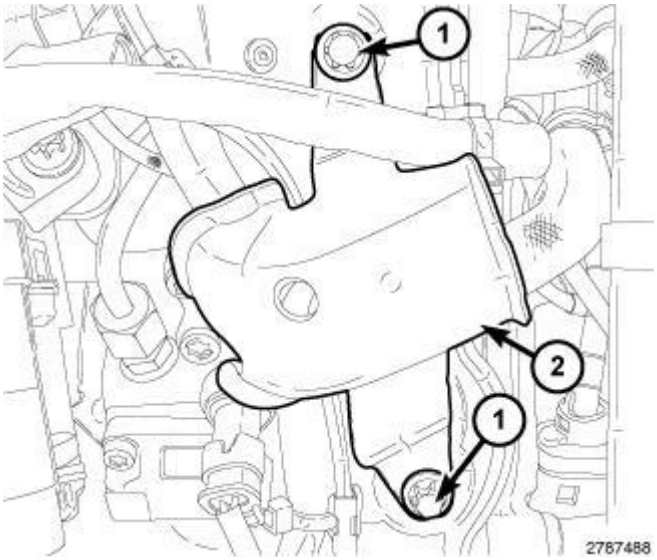


**Fig. 422: Bolts & Heat Shield**
**Courtesy of CHRYSLER LLC**

12. Remove bolts (1) and the heat shield (2).

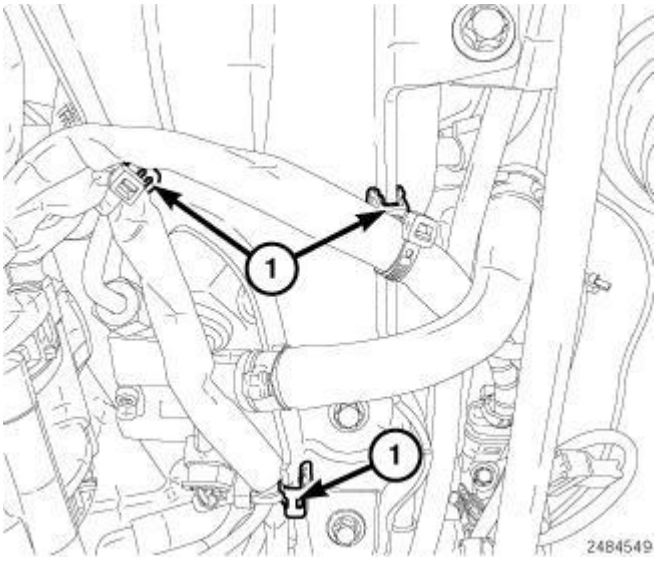


**Fig. 423: Wire Harness Retainers**
**Courtesy of CHRYSLER LLC**

13. Disconnect the wire harness retainers (1).

 

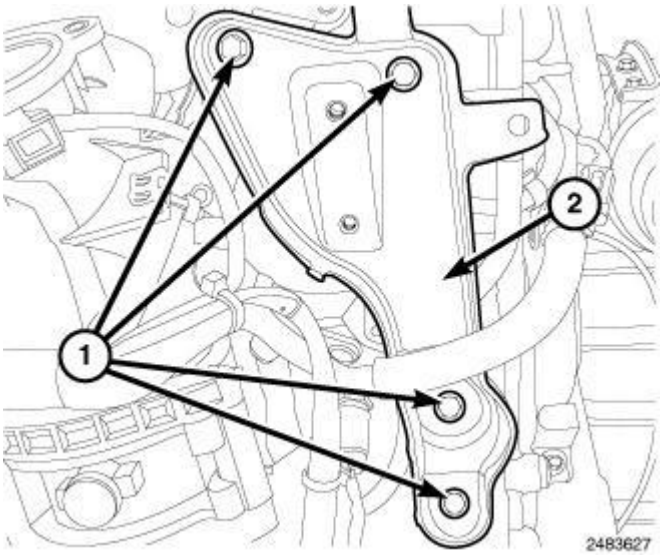


**Fig. 424: Bolts & EGR Support Bracket**
**Courtesy of CHRYSLER LLC**

14. Remove bolts (1) and the EGR support bracket (2).

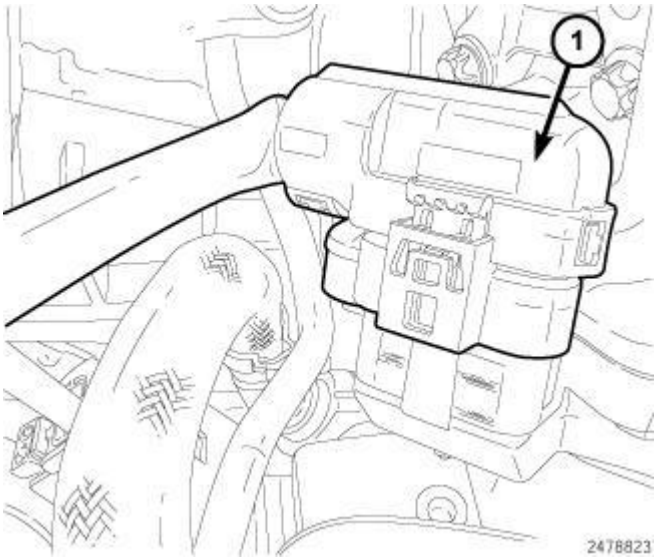


**Fig. 425: EGR Valve Harness Connector**
**Courtesy of CHRYSLER LLC**

15. Disconnect the EGR valve (1) harness connector.

 

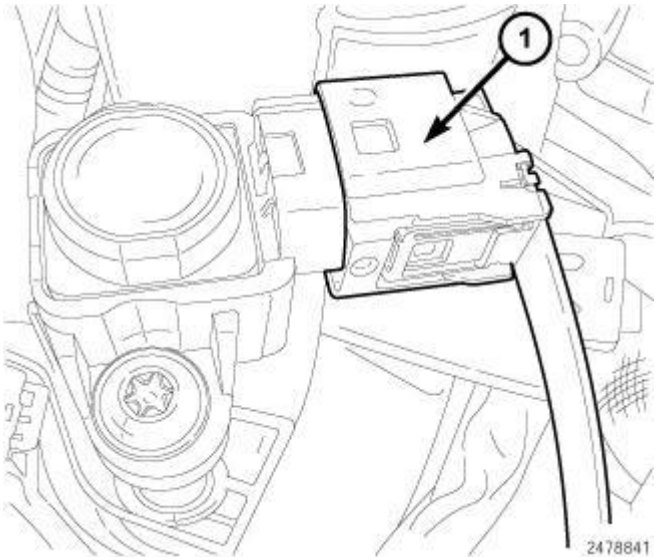


**Fig. 426: Boost Pressure Sensor Harness Connector**
**Courtesy of CHRYSLER LLC**

16. Disconnect the boost pressure sensor harness connector (1).

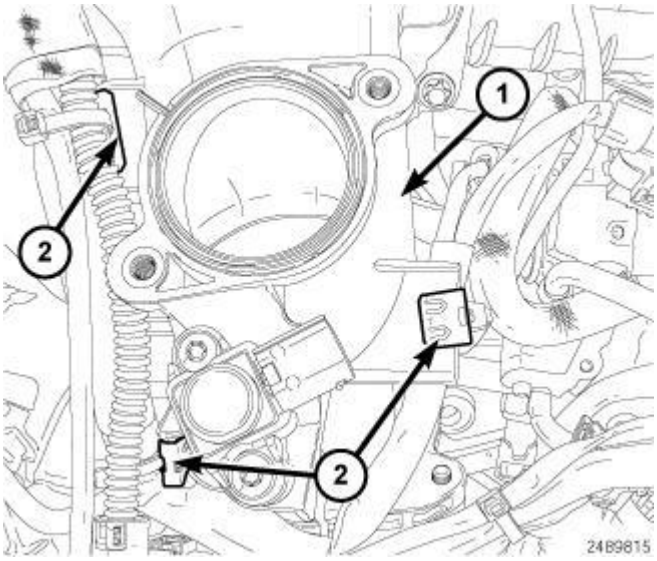


**Fig. 427: Mixing Chamber & Wire Harness Retainer Clips**
**Courtesy of CHRYSLER LLC**

17. Disconnect the wire harness retainer clips (2) from the mixing chamber (1).

 

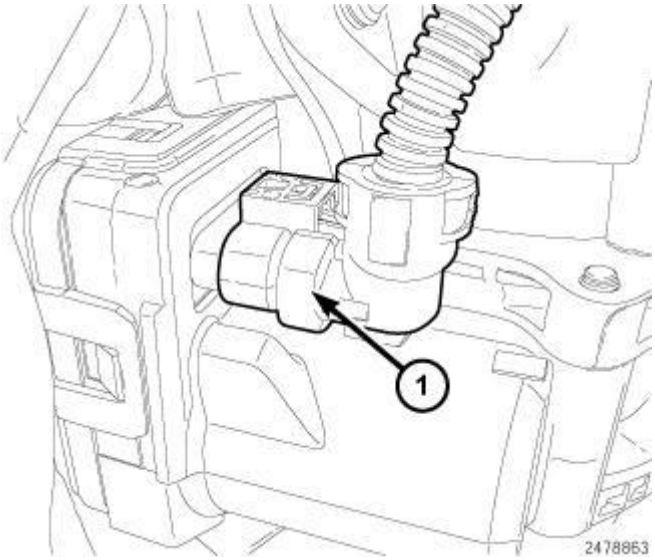


**Fig. 428: EGR Air Flow Control Valve Harness Connector**
**Courtesy of CHRYSLER LLC**

18. Disconnect the EGR air flow control valve (1) harness connector.

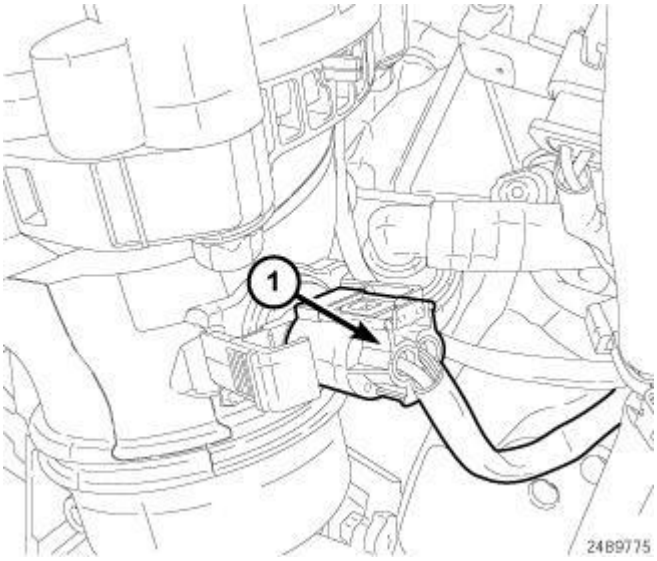


**Fig. 429: Charge Air Temperature Sensor Connectors**
**Courtesy of CHRYSLER LLC**

19. Disconnect the charge air inlet temperature sensor (1).

 

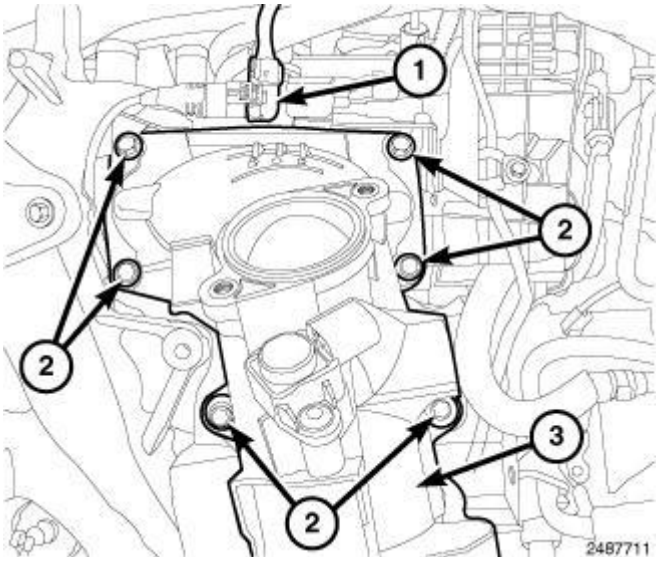


**Fig. 430: Knock Sensor Electrical Connector, Mixing Chamber & Bolts**
**Courtesy of CHRYSLER LLC**

20. Disconnect the knock sensor electrical connector (1).
21. Remove bolts (2) and the mixing chamber (3).

**INTAKE MANIFOLD**

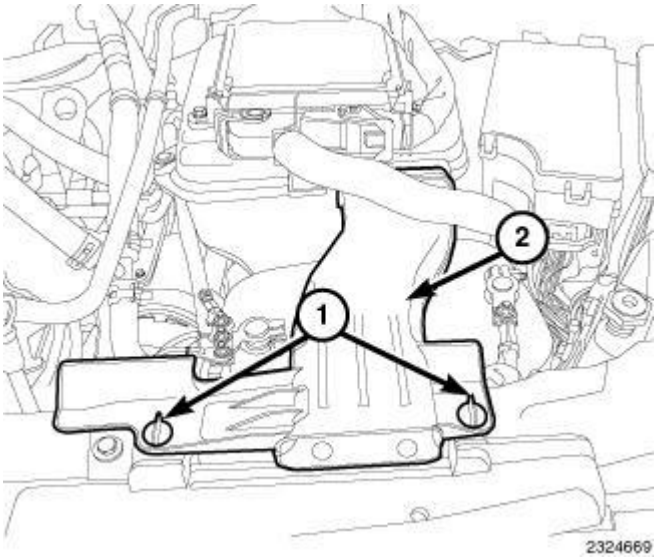


**Fig. 431: Quarter Turn Lock Tabs & Air Inlet Duct**
**Courtesy of CHRYSLER LLC**

1. Release quarter turn lock tabs (1) and remove air inlet duct (2).
2. Disconnect the negative battery cable.
3. Remove engine cover.
4. Remove the belly pan.

 

5. Drain cooling system. Refer to **Standard Procedure** .
6. Disconnect upper radiator hose from radiator.
7. Remove the cooling fan module. Refer to **FAN, Cooling , Removal** .
8. Remove the coolant pump. Refer to **PUMP, Water , Removal** .
9. Remove the A/C compressor. Refer to **COMPRESSOR, A/C , Removal** .

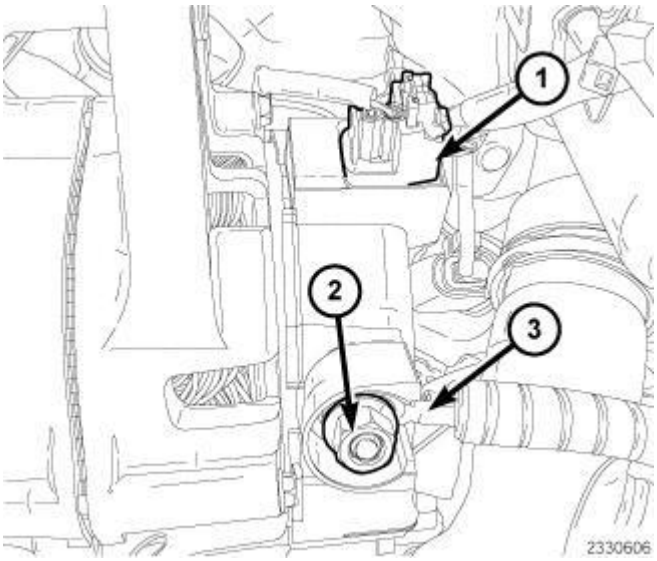


**Fig. 432: Battery Feed Wire, Generator Harness Connectors & Nut**
**Courtesy of CHRYSLER LLC**

10. Remove nut (2) and the battery feed wire (3) to generator.
11. Disconnect the generator harness connectors (1).
12. Remove bolts and the generator.

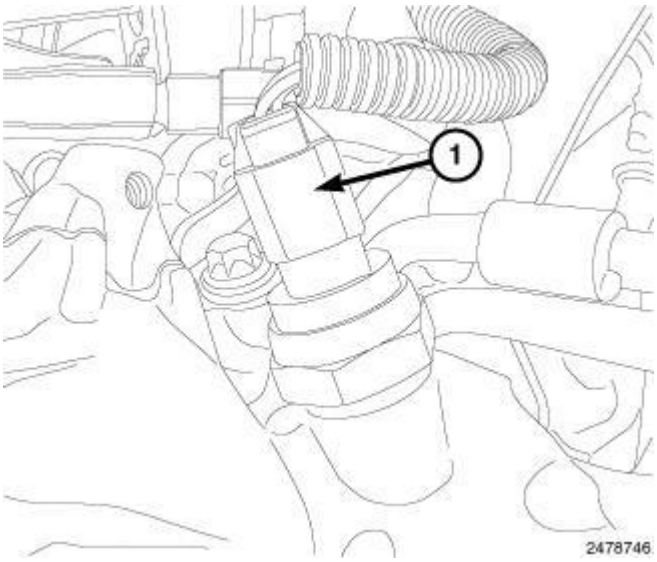


**Fig. 433: EGR Back Pressure Transducer Harness Connector**
**Courtesy of CHRYSLER LLC**

 

13. Disconnect the EGR back pressure transducer harness connector (1).

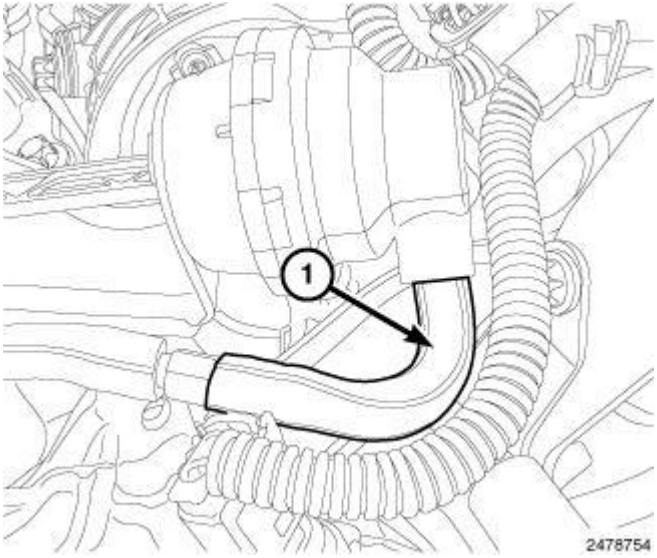


**Fig. 434: EGR Control Valve Actuator Vacuum Line**
**Courtesy of CHRYSLER LLC**

14. Disconnect the vacuum line (1) from the EGR control valve actuator.

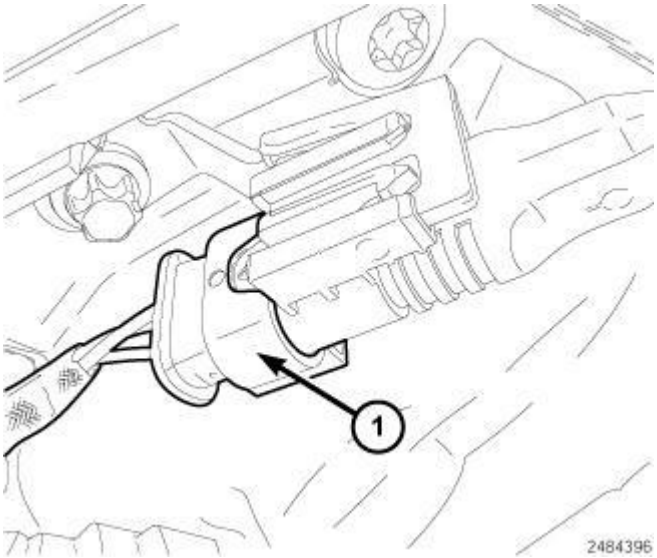


**Fig. 435: Knock Sensor Harness Connector**
**Courtesy of CHRYSLER LLC**

15. Disconnect the knock sensor (1) harness connector.

 

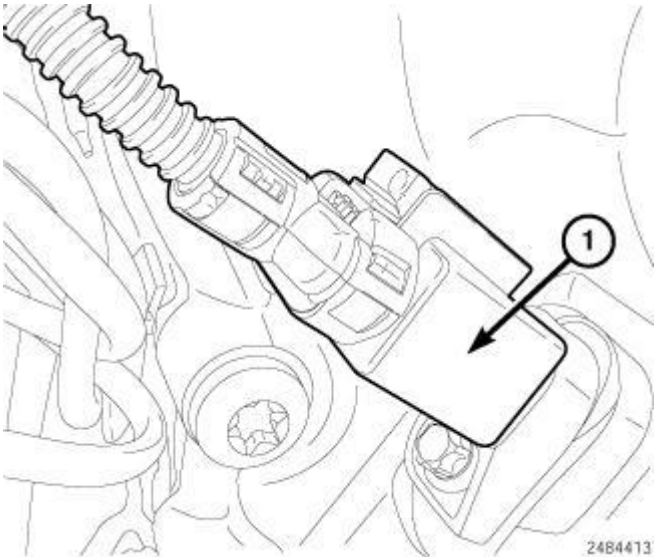


**Fig. 436: Crankshaft Position Sensor Harness Connector**
**Courtesy of CHRYSLER LLC**

16. Disconnect the Crankshaft Position Sensor (CKP) (1) harness connector.

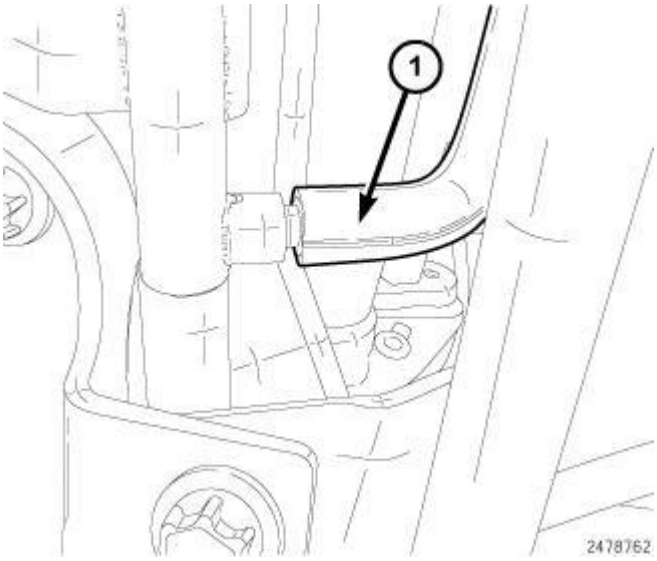


**Fig. 437: Vacuum Supply Line At EGR Solenoid**
**Courtesy of CHRYSLER LLC**

17. Disconnect the vacuum supply line (1) to the EGR solenoid.

 

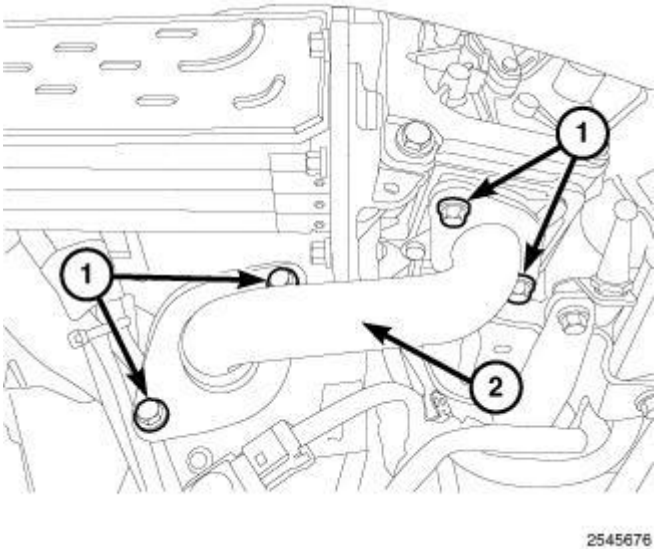


**Fig. 438: EGR Tube & Bolts**
**Courtesy of CHRYSLER LLC**

18. Remove bolts (1) and the EGR tube (2).

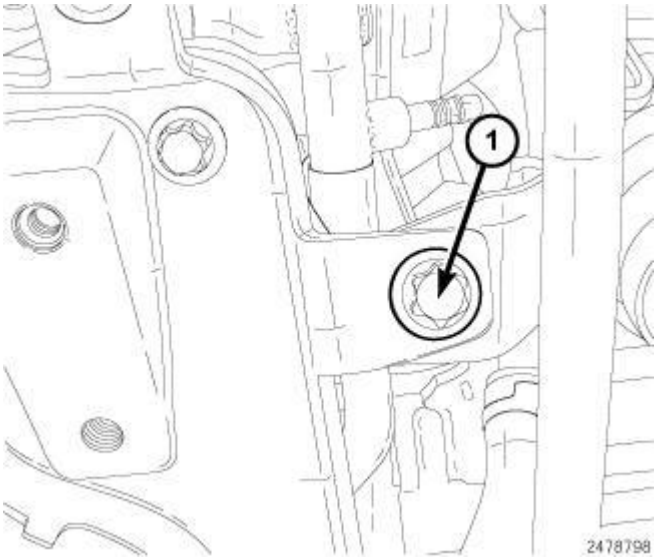


**Fig. 439: Oil Dip Stick Bolt**
**Courtesy of CHRYSLER LLC**

19. Remove the bolt (1) securing the oil dip stick tube.

 

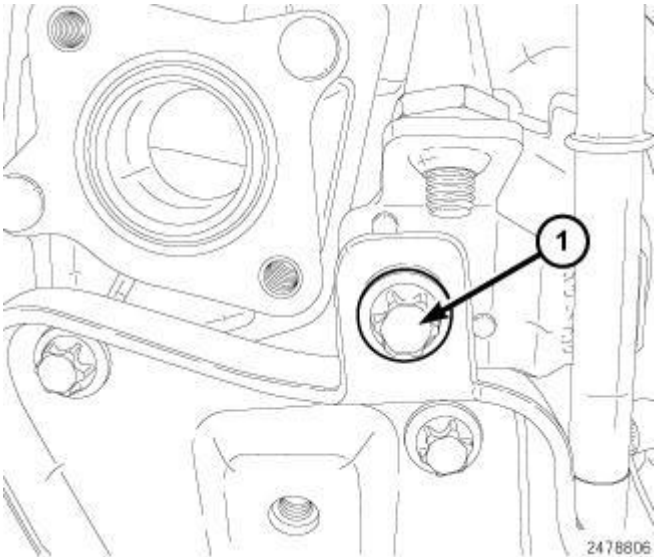


**Fig. 440: Vacuum Tube Bolt**
**Courtesy of CHRYSLER LLC**

20. Remove the bolt (1) securing the vacuum tube.

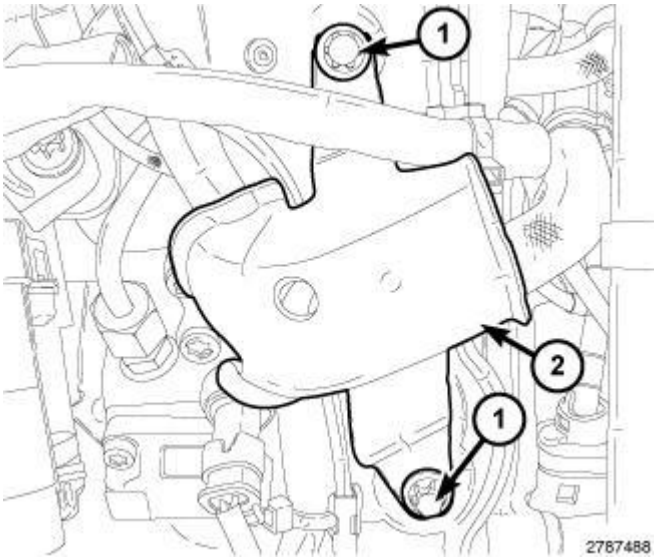


**Fig. 441: Bolts & Heat Shield**
**Courtesy of CHRYSLER LLC**

21. Remove bolts (1) and the heat shield (2).

 

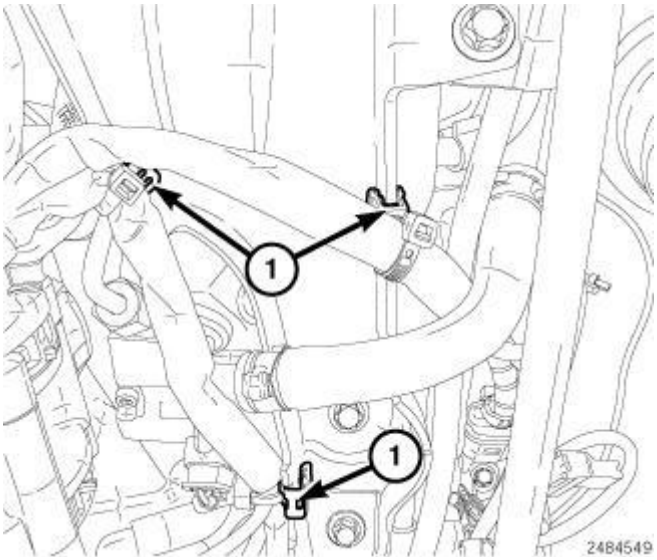


**Fig. 442: Wire Harness Retainers**
**Courtesy of CHRYSLER LLC**

22. Disconnect the wire harness retainers (1).

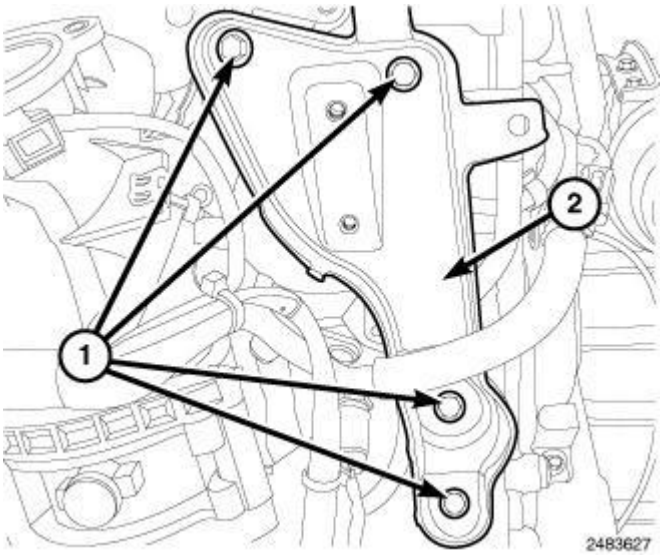


**Fig. 443: Bolts & EGR Support Bracket**
**Courtesy of CHRYSLER LLC**

23. Remove bolts (1) and the EGR support bracket (2).

 

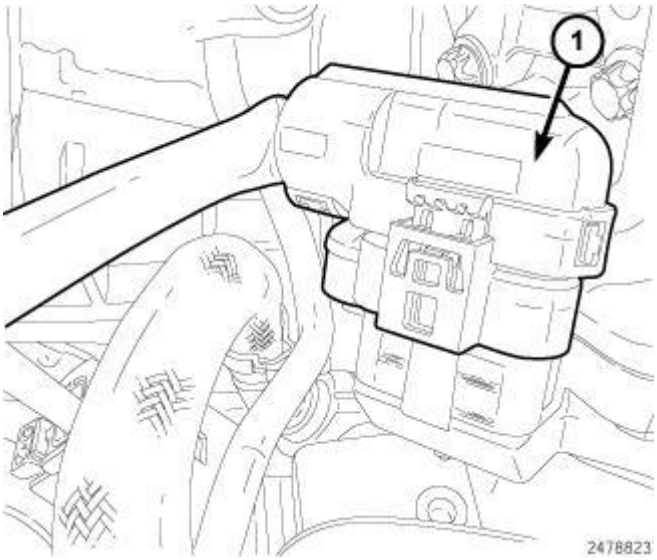


**Fig. 444: EGR Valve Harness Connector**
**Courtesy of CHRYSLER LLC**

24. Disconnect the EGR valve (1) harness connector.

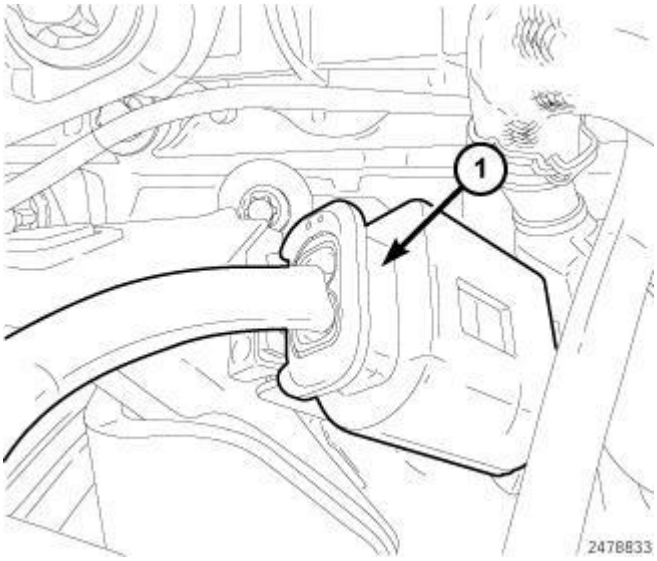


**Fig. 445: Fuel Quantity Control Valve Harness Connector**
**Courtesy of CHRYSLER LLC**

25. Disconnect the fuel quality sensor (1) harness connector.

 

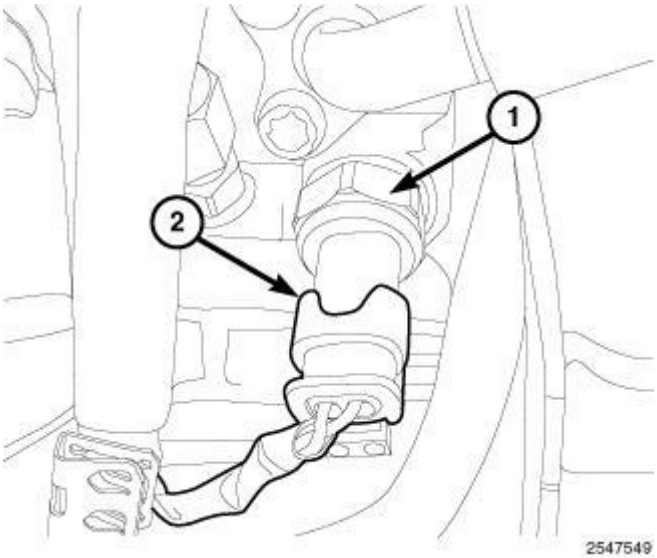


**Fig. 446: Fuel Temperature Sensor Harness Connector**
**Courtesy of CHRYSLER LLC**

26. Disconnect the fuel temperature sensor harness connector (2).

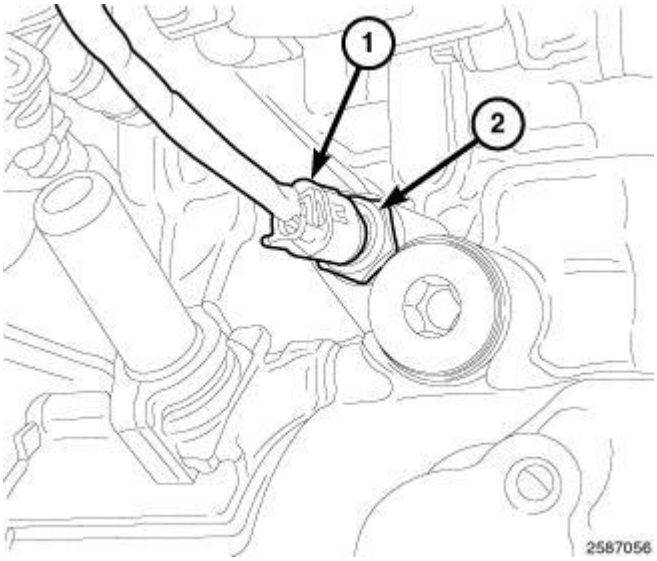


**Fig. 447: Oil Temperature Sensor Harness Connector & Sensor**
**Courtesy of CHRYSLER LLC**

27. Disconnect the oil temperature sensor harness connector.

 

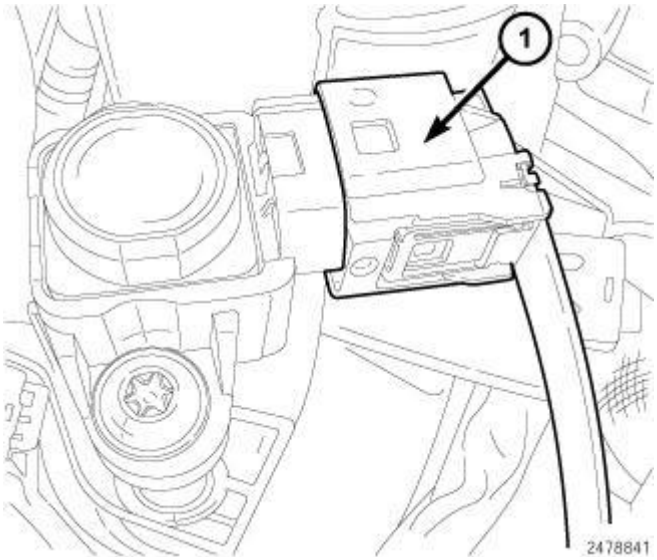


**Fig. 448: Boost Pressure Sensor Harness Connector**
**Courtesy of CHRYSLER LLC**

28. Disconnect the boost pressure sensor harness connector (1).

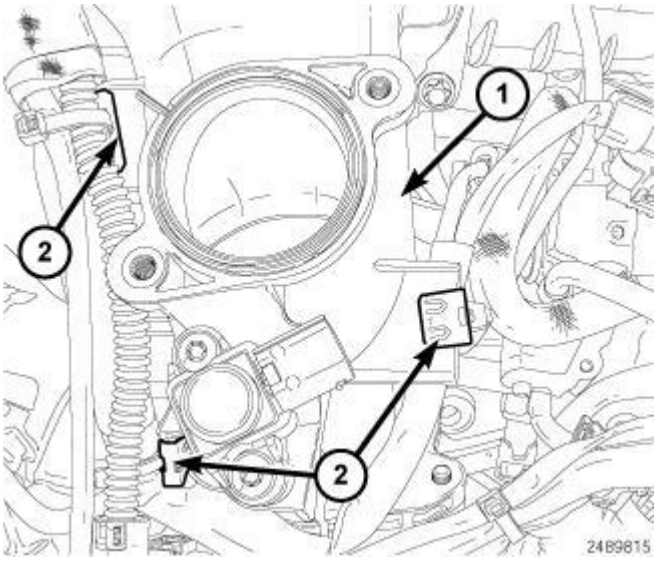


**Fig. 449: Mixing Chamber & Wire Harness Retainer Clips**
**Courtesy of CHRYSLER LLC**

29. Disconnect the wire harness retainer clips (2) from the mixing chamber (1).

 

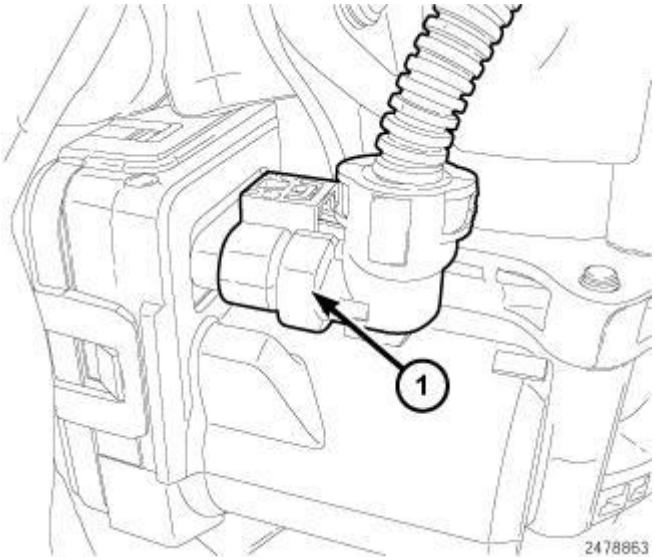


**Fig. 450: EGR Air Flow Control Valve Harness Connector**
**Courtesy of CHRYSLER LLC**

30. Disconnect the EGR air flow control valve (1) harness connector.

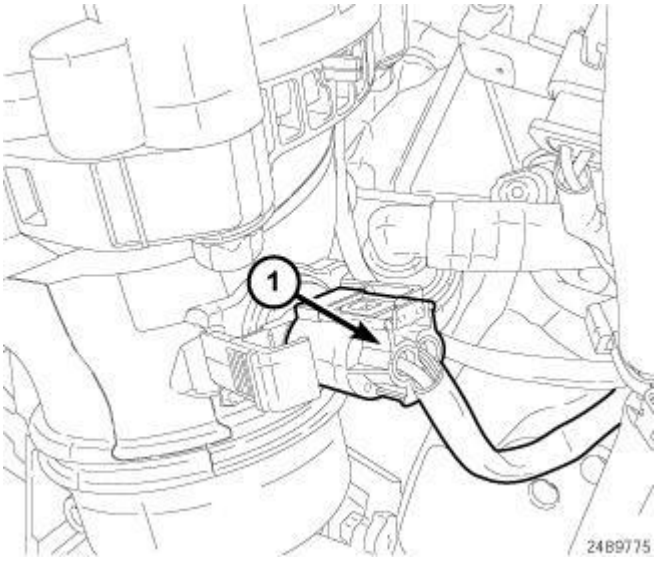


**Fig. 451: Charge Air Temperature Sensor Connectors**
**Courtesy of CHRYSLER LLC**

31. Disconnect the charge air inlet temperature sensor (1).

 

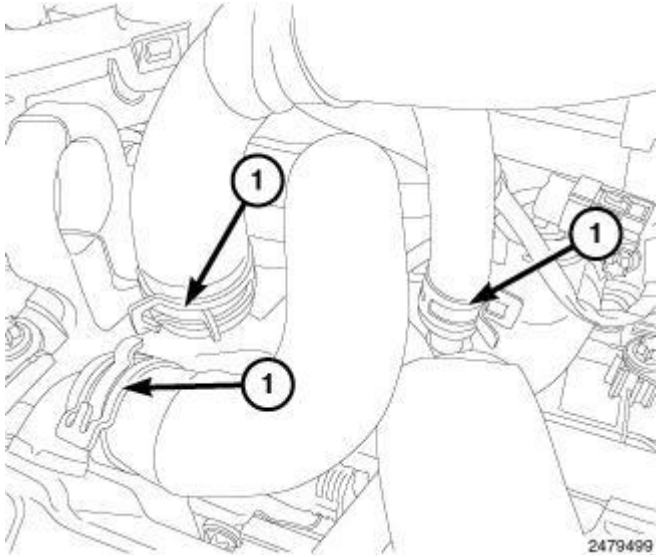


**Fig. 452: Coolant Hoses & Clamps**
**Courtesy of CHRYSLER LLC**

32. Disconnect the coolant hoses (1).

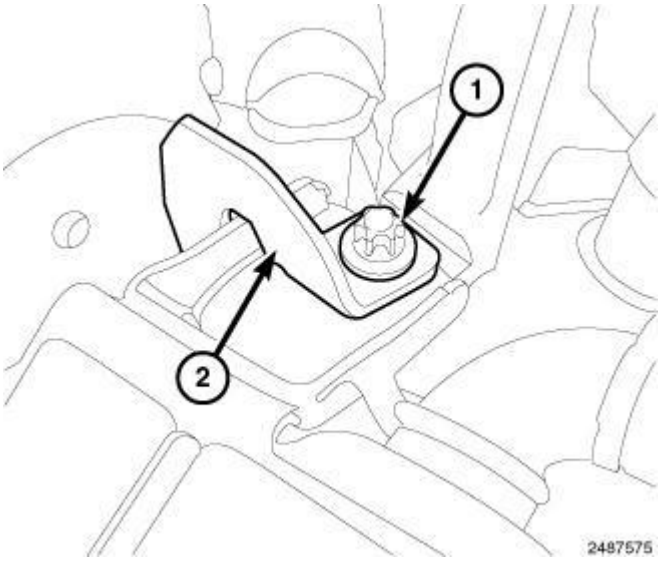


**Fig. 453: Upper EGR Cooler Bolt & Bracket**
**Courtesy of CHRYSLER LLC**

33. Remove the upper EGR cooler bolt (1) and bracket (2).

 

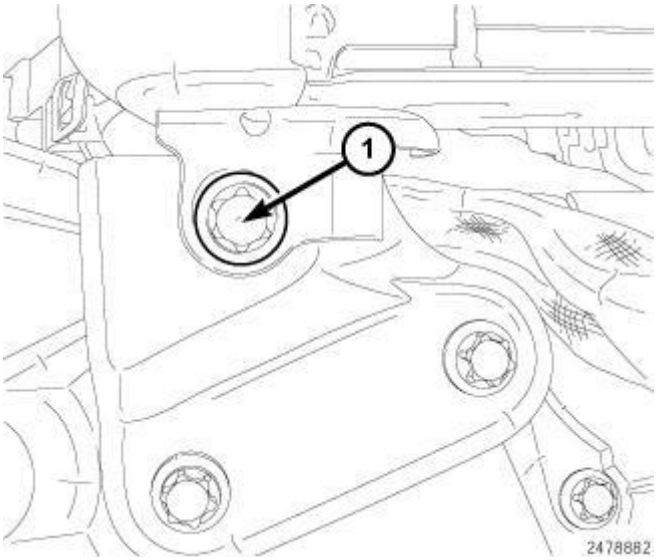


**Fig. 454: Lower EGR Cooler Bolt**
**Courtesy of CHRYSLER LLC**

34. Remove the lower EGR cooler bolt (1).

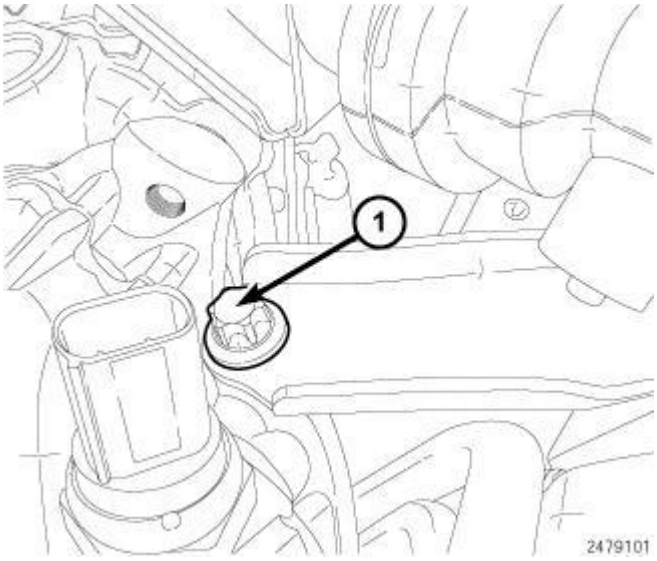


**Fig. 455: Support Bracket Bolt**
**Courtesy of CHRYSLER LLC**

35. Remove the support bracket bolt (1).

 

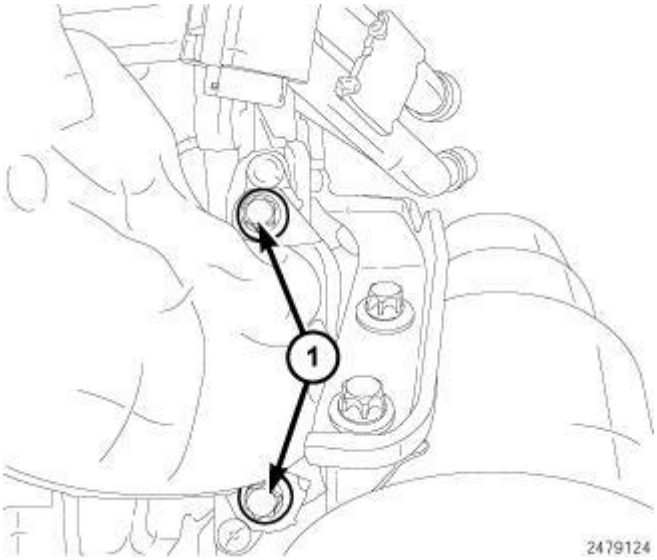


**Fig. 456: EGR Cooler Manifold Bolts**
**Courtesy of CHRYSLER LLC**

36. Remove two bolts (1) and the EGR cooler manifold.

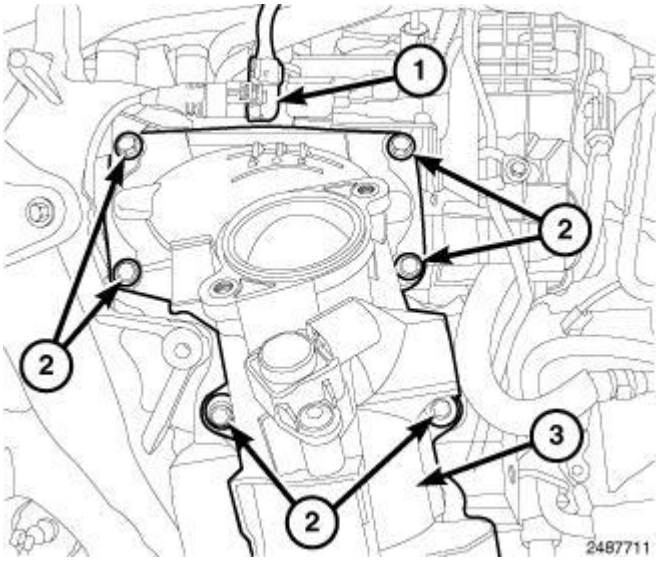


**Fig. 457: Knock Sensor Electrical Connector, Mixing Chamber & Bolts**
**Courtesy of CHRYSLER LLC**

37. Disconnect the knock sensor harness connector (1).
38. Remove bolts (2) and the mixing chamber (3).

 

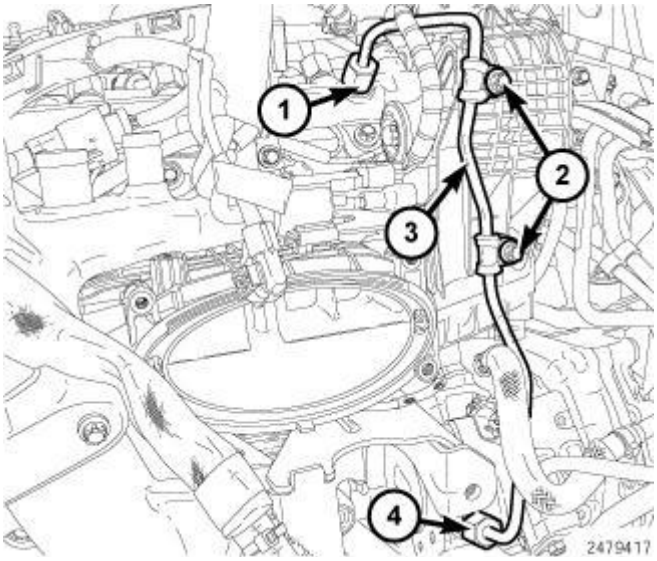


**Fig. 458: Fuel Rail, Bolts, High Pressure Fuel Tube & Pump**
**Courtesy of CHRYSLER LLC**

39. Remove the two bolts (2) securing the high pressure fuel line (3).
40. Disconnect the high pressure fuel line at pump (4).
41. Disconnect the high pressure line at fuel rail (1) and remove the high pressure fuel line (3).

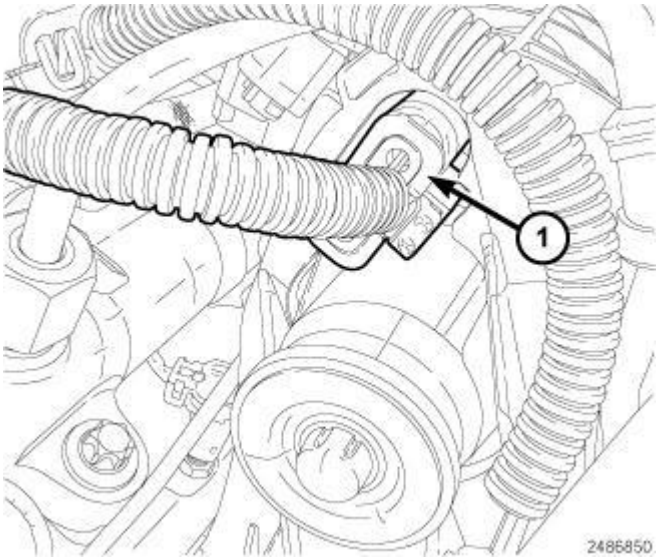


**Fig. 459: Swirl Valve Actuator Harness Connector**
**Courtesy of CHRYSLER LLC**

42. Disconnect the swirl valve actuator harness connector (1).

 

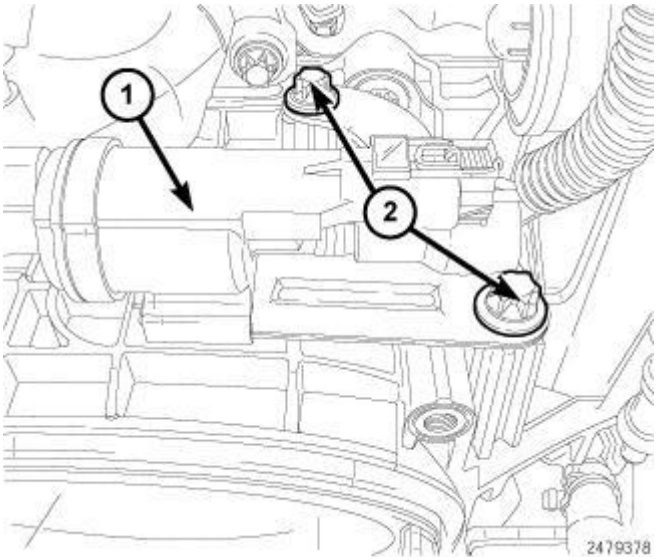


**Fig. 460: EGR Vacuum Solenoid & Bolts**
**Courtesy of CHRYSLER LLC**

43. Remove bolts (2) and the EGR vacuum solenoid (1).

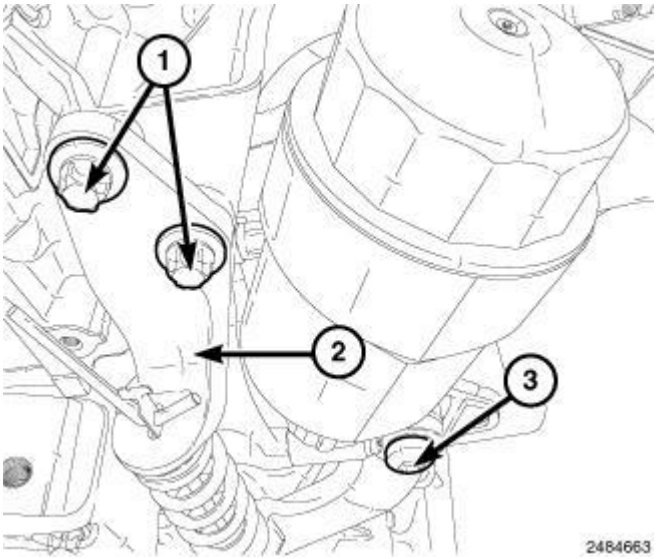


**Fig. 461: Accessory Drive Belt Tensioner & Bolts**
**Courtesy of CHRYSLER LLC**

44. Remove the bolts (1, 3) and accessory drive belt tensioner (2).

 

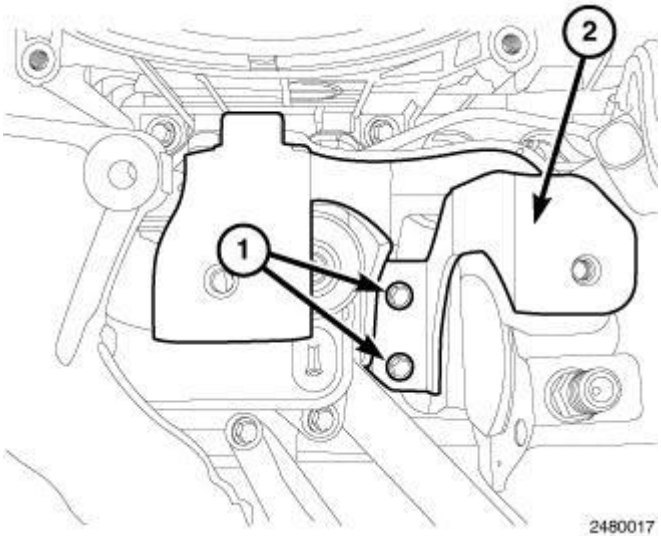


**Fig. 462: Intake Manifold Support Bracket & Bolts**
**Courtesy of CHRYSLER LLC**

45. Remove bolts (1) and the intake manifold support bracket (2).

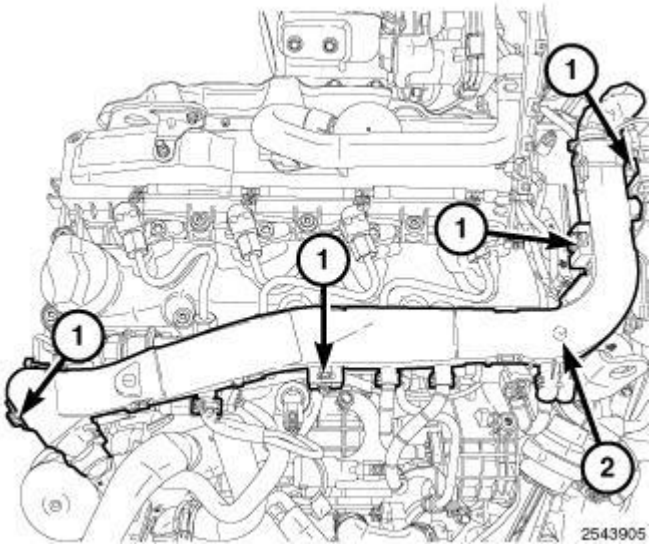


**Fig. 463: Lock Tabs & Engine Wire Harness**
**Courtesy of CHRYSLER LLC**

46. Disconnect the fuel rail pressure sensor.
47. Release the lock tabs (1) and lift up on the wire harness (2) and position aside.

 

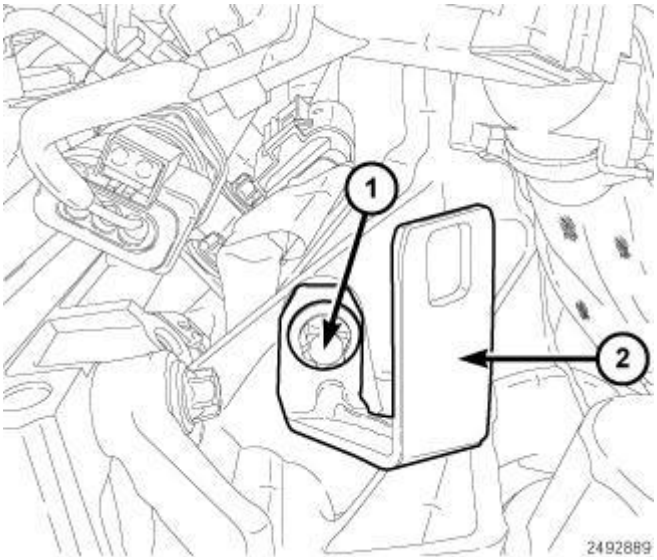


**Fig. 464: Wire Harness Support Bracket & Bolt**
**Courtesy of CHRYSLER LLC**

48. Remove bolt (1) and wire harness support bracket (2).

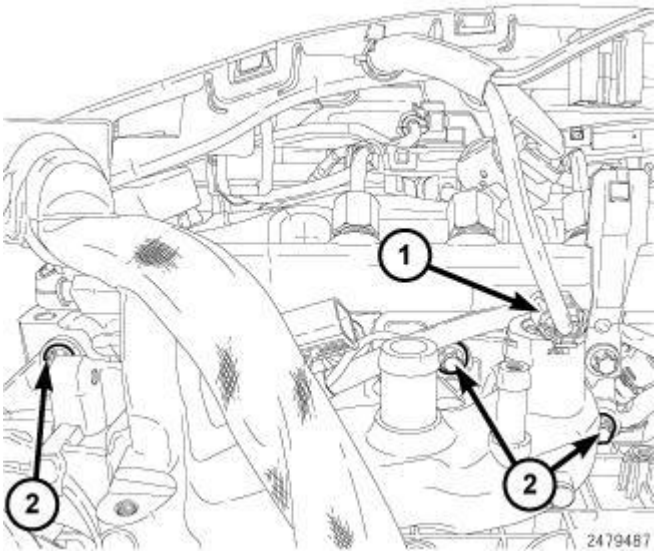


**Fig. 465: Coolant Temp Sensor & Cooling Manifold Bolts**
**Courtesy of CHRYSLER LLC**

49. Disconnect the coolant temp sensor (1) harness connector.
50. Remove the three accessory carrier bracket bolts (2).

 

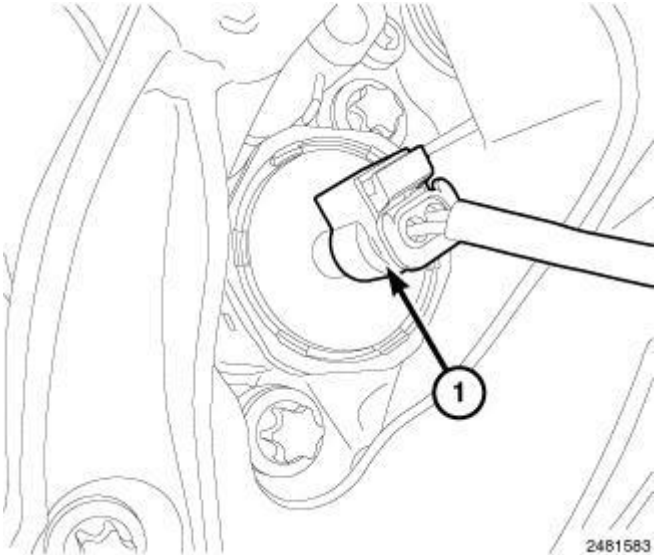


**Fig. 466: Piston Cooling Oil Control Valve Harness Connector**
**Courtesy of CHRYSLER LLC**

51. Disconnect the oil jet control valve (1) harness connector.

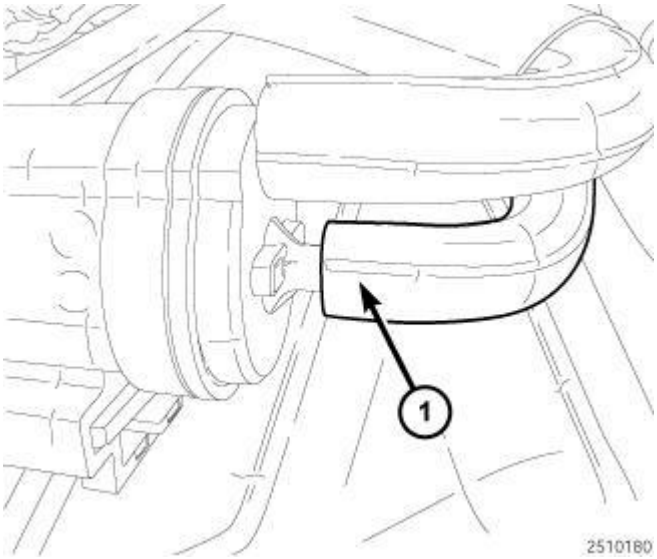


**Fig. 467: Coolant Pump Actuator Vacuum Line**
**Courtesy of CHRYSLER LLC**

52. Disconnect the coolant pump actuator vacuum line (1).

 

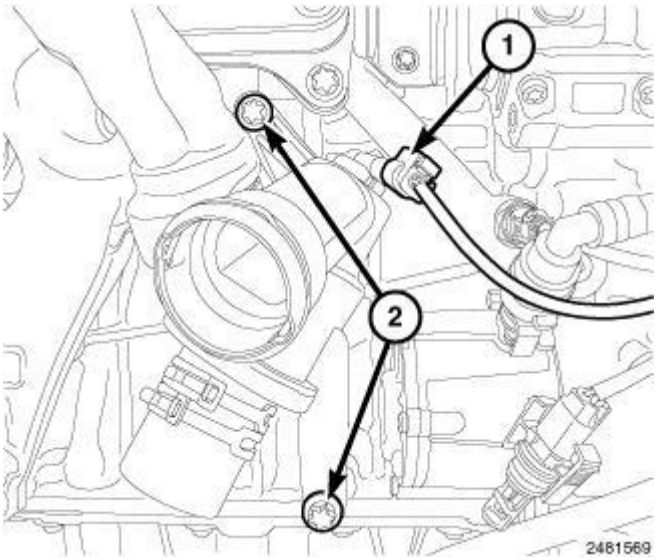


**Fig. 468: ECT Sensor Connector & Thermostat Housing Bolts**
**Courtesy of CHRYSLER LLC**

53. Disconnect the coolant temperature sensor (1) harness connector.
54. Remove the two bolt (2) from thermostat housing.

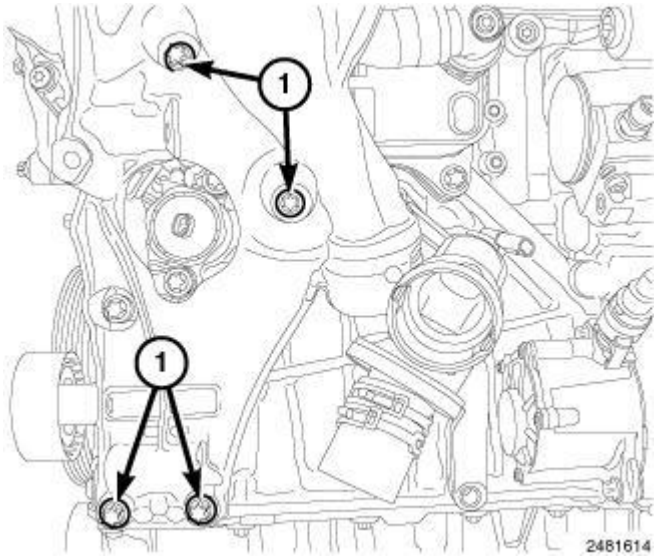


**Fig. 469: Accessory Carrier Bolts**
**Courtesy of CHRYSLER LLC**

55. Remove oil filter cap.
56. Remove the bolts (1) from the accessory carrier.

 

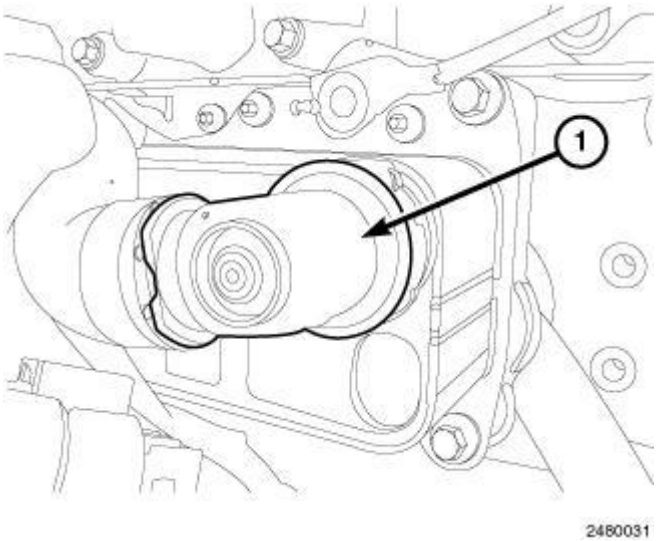


**Fig. 470: Coolant Hose To Oil Cooler**
**Courtesy of CHRYSLER LLC**

57. Disconnect coolant hose (1) to the oil cooler and remove the accessory carrier.

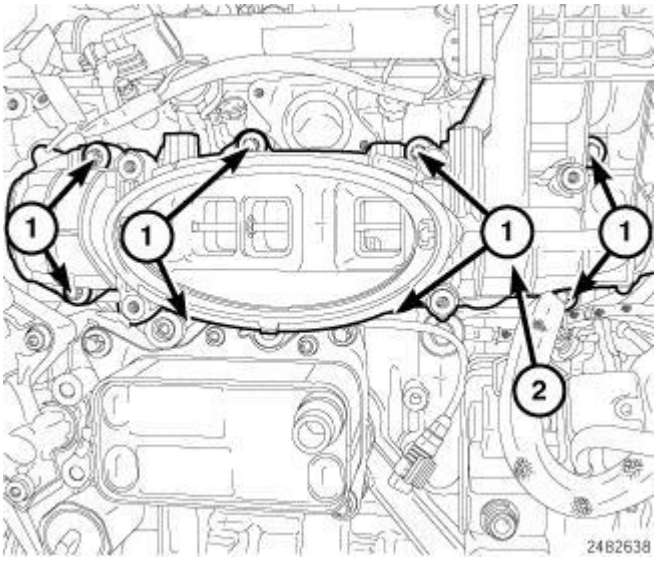


**Fig. 471: Intake Manifold & Bolts**
**Courtesy of CHRYSLER LLC**

58. Remove the bolts (1) and the intake manifold (2).
59. Inspect intake manifold for cracks or distortion. Replace manifold if necessary.
60. Inspect manifold for gasket surface damage or warpage. Replace manifold if necessary.

**Installation**

**MIXING CHAMBER**

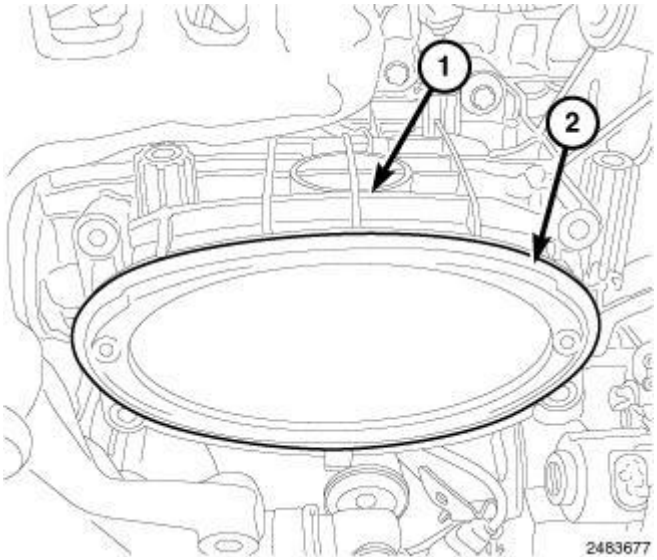


**Fig. 472: Intake Manifold & O-Ring Seal**
**Courtesy of CHRYSLER LLC**

1. Clean all gasket mating surfaces
2. Install a new O-ring seal (2) onto the intake manifold (1).

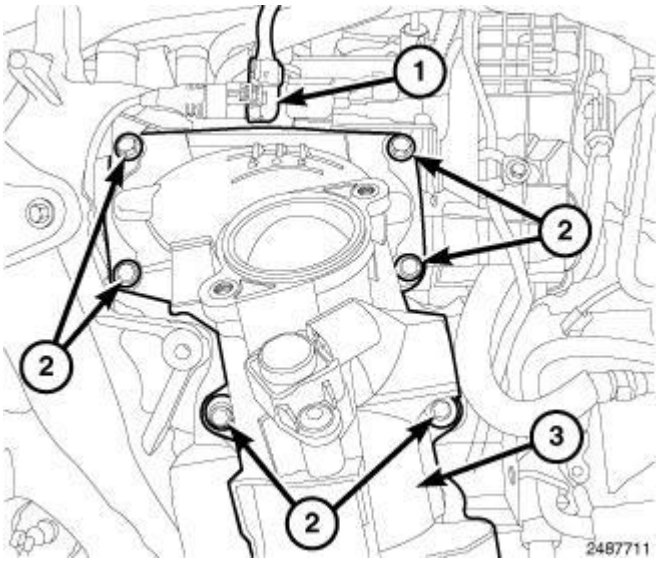


**Fig. 473: Knock Sensor Electrical Connector, Mixing Chamber & Bolts**
**Courtesy of CHRYSLER LLC**

3. Install the mixing chamber (3). Tighten bolts (2) to 9 N.m (80 in. lbs.).
4. Connect the knock sensor harness connector (1).

 

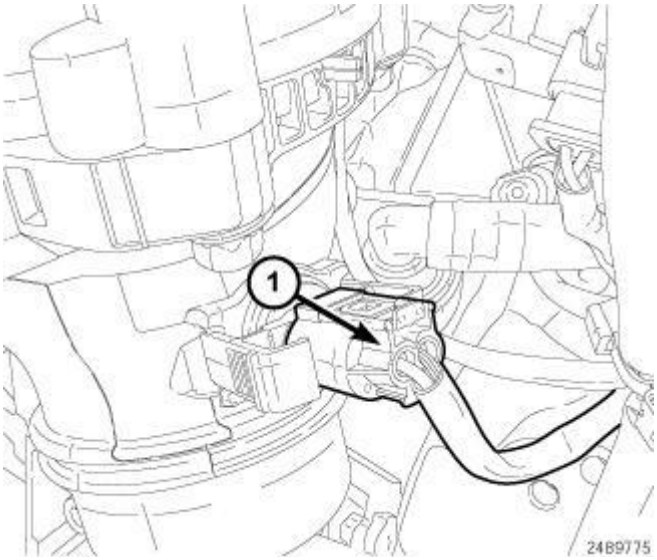


**Fig. 474: Charge Air Temperature Sensor Connectors**
**Courtesy of CHRYSLER LLC**

5. Connect the Charge Air inlet temperature sensor harness connector.

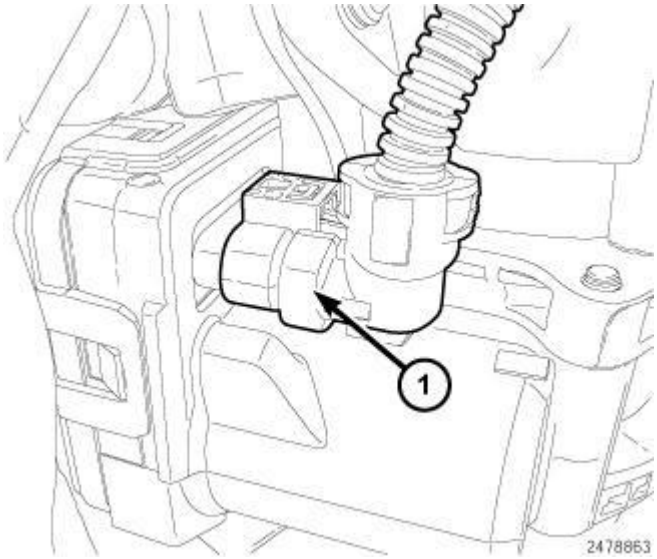


**Fig. 475: EGR Air Flow Control Valve Harness Connector**
**Courtesy of CHRYSLER LLC**

6. Connect the EGR air control valve harness connector.

 

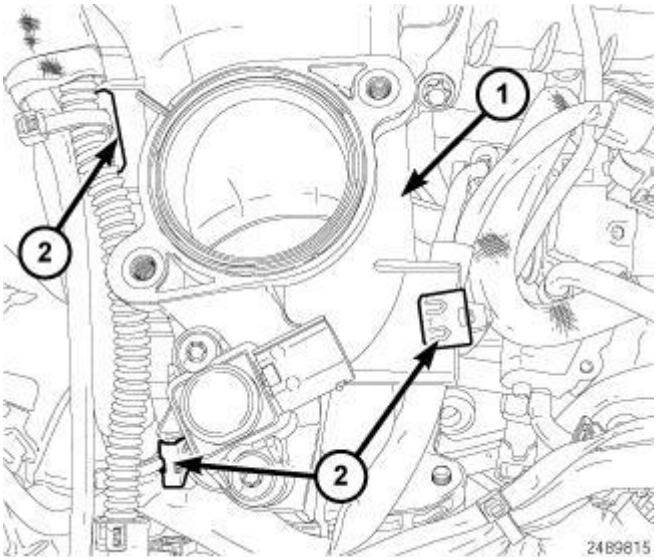


**Fig. 476: Mixing Chamber & Wire Harness Retainer Clips**
**Courtesy of CHRYSLER LLC**

7. Connect the wire harness retainer clips (2) to the mixing chamber (1).

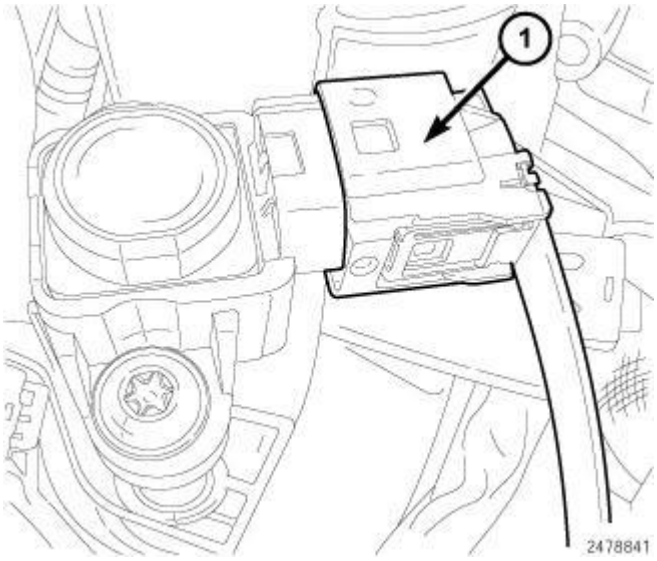


**Fig. 477: Boost Pressure Sensor Harness Connector**
**Courtesy of CHRYSLER LLC**

8. Connect the boost pressure sensor (1) harness connector.

 

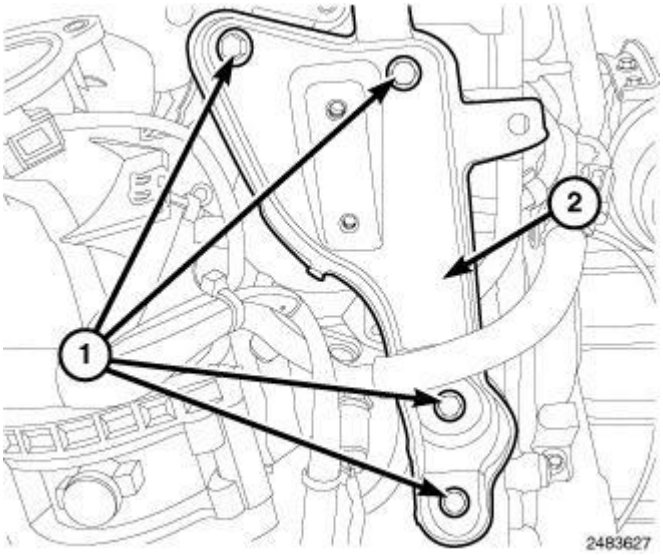


**Fig. 478: Bolts & EGR Support Bracket**
**Courtesy of CHRYSLER LLC**

9. Install the EGR support bracket (2). Tighten bolts (1) to 9 N.m (80 in. lbs.).

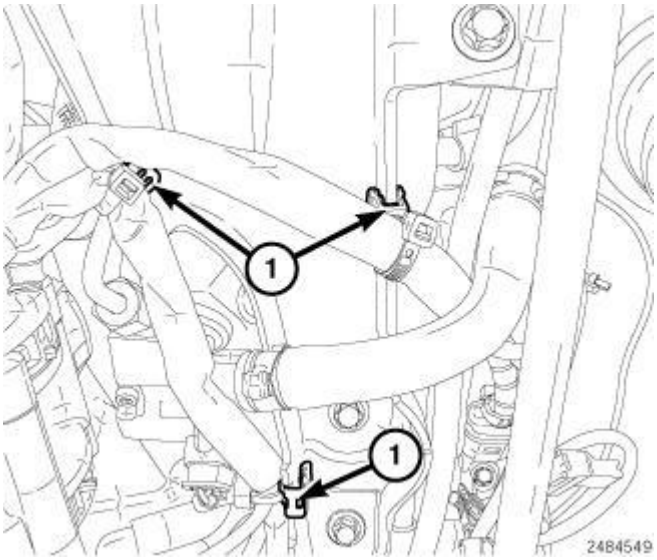


**Fig. 479: Wire Harness Retainers**
**Courtesy of CHRYSLER LLC**

10. Connect the wire harness retainers (1).

 

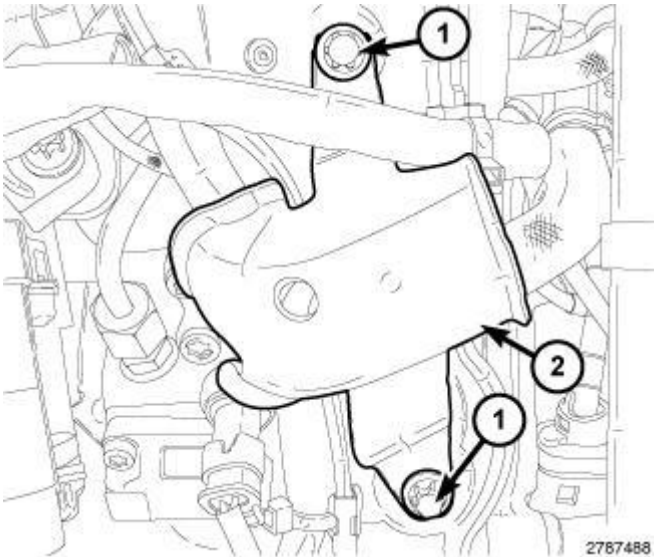


**Fig. 480: Bolts & Heat Shield**
**Courtesy of CHRYSLER LLC**

11. Install the heat shield (2). Tighten bolts (1) to 9 N.m (80 in. lbs.).

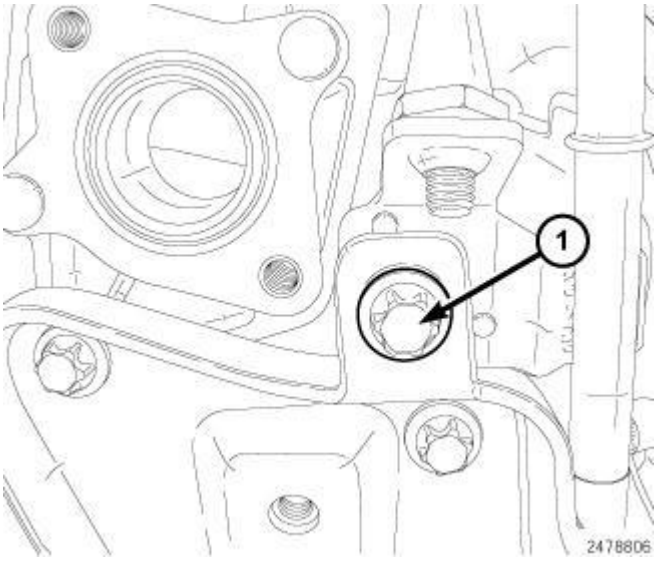


**Fig. 481: Vacuum Tube Bolt**
**Courtesy of CHRYSLER LLC**

12. Install the bolt securing the vacuum tube (1). Tighten bolt to 9 N.m (80 in. lbs.).

 

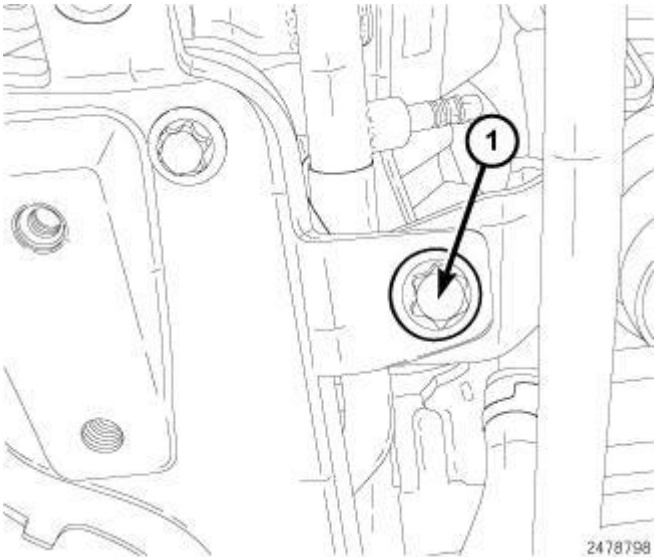


**Fig. 482: Oil Dip Stick Bolt**
**Courtesy of CHRYSLER LLC**

13. Install the bolt securing the oil dip stick tube. Tighten bolt to 9 N.m (80 in. lbs.).

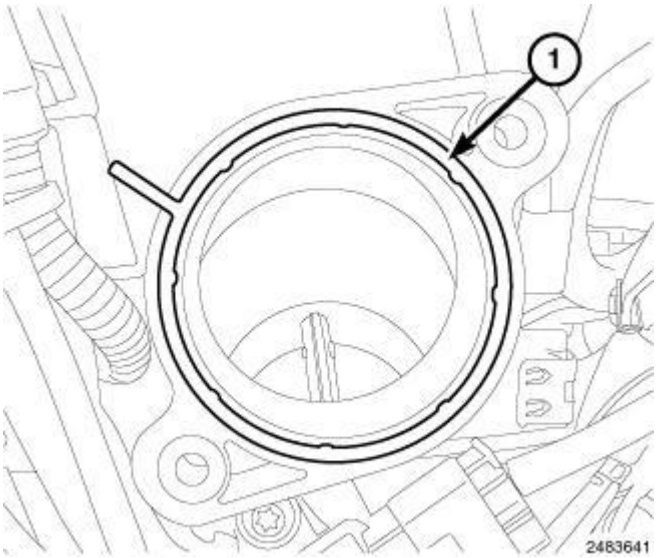


**Fig. 483: EGR Tube Gasket Onto Mixing Chamber**
**Courtesy of CHRYSLER LLC**

14. Clean the gasket surfaces and install a new gasket (1).

 

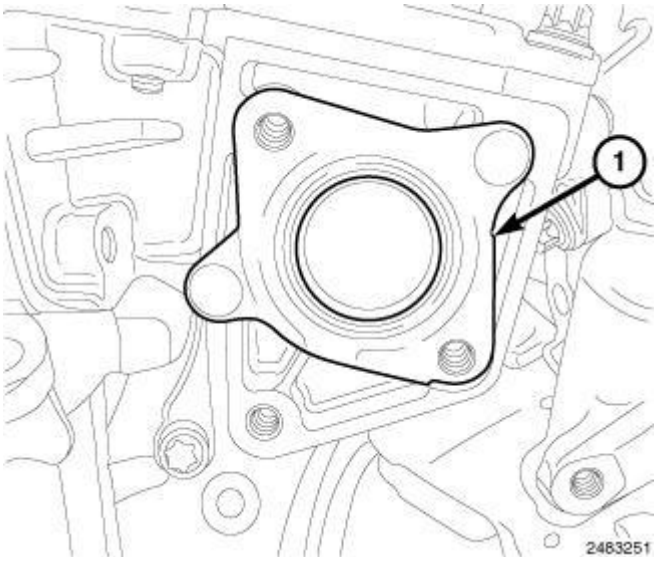


**Fig. 484: EGR Tube Gasket Onto EGR Actuator**
**Courtesy of CHRYSLER LLC**

15. Clean the gasket surfaces and install a new gasket (1).

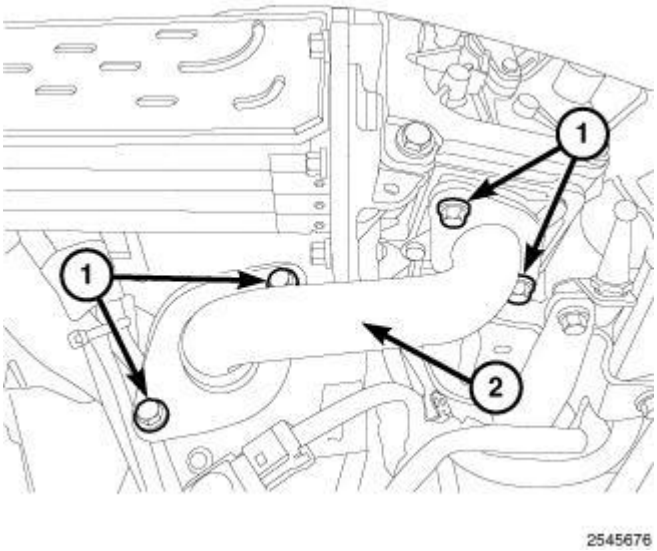


**Fig. 485: EGR Tube & Bolts**
**Courtesy of CHRYSLER LLC**

16. Install the EGR tube (2). Tighten bolts (1) to 9 N.m (80 in. lbs.).

 

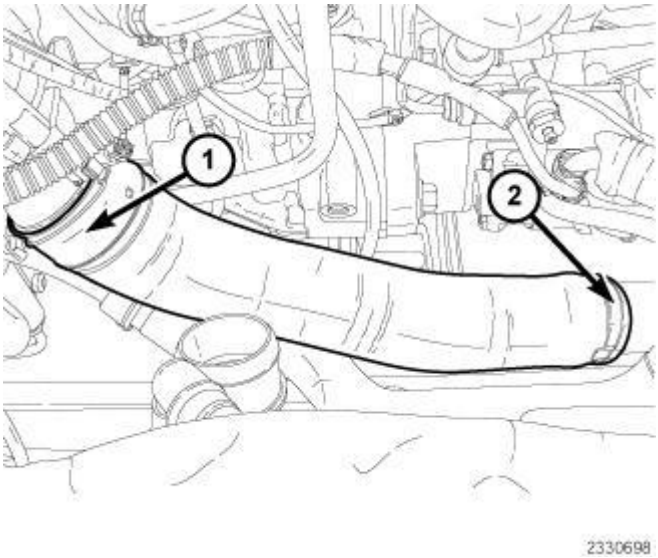


**Fig. 486: EGR Air Flow Control Valve & Clamp**
**Courtesy of CHRYSLER LLC**

17. Install the cooling fan module Refer to **FAN, Cooling , Installation** .
18. Install air inlet tube to EGR air flow control valve (1).
19. Connect the charge air outlet tube from the Charge Air Cooler (CAC) and tighten clamp.

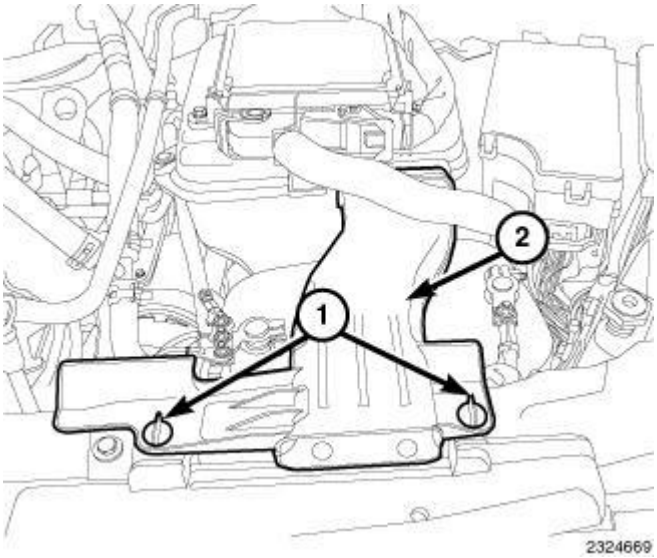


**Fig. 487: Quarter Turn Lock Tabs & Air Inlet Duct**
**Courtesy of CHRYSLER LLC**

20. Install the EGR cooler Refer to **COOLER, EGR , Installation** .
21. Install the belly pan.
22. Install the engine cover.
23. Connect the negative battery cable.
24. Install the air inlet duct (2) and lock the quarter turn lock tabs (1).

 

**INTAKE MANIFOLD**

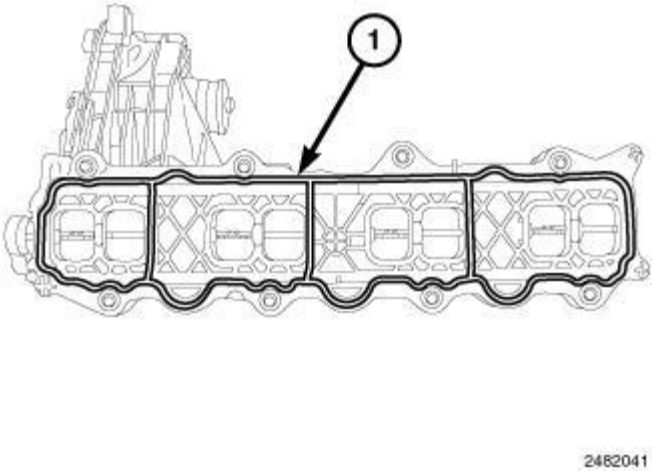


**Fig. 488: Intake Manifold Gasket**
**Courtesy of CHRYSLER LLC**

1. Clean gasket mating surfaces.
2. Install new intake manifold gasket (1) on intake manifold.

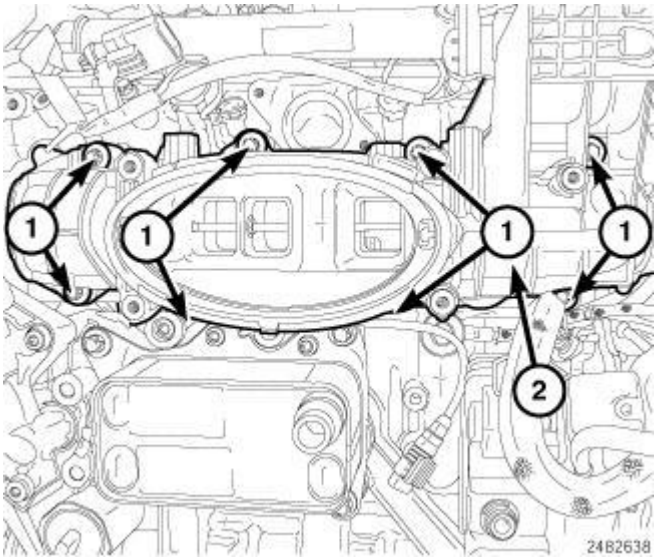


**Fig. 489: Intake Manifold & Bolts**
**Courtesy of CHRYSLER LLC**

3. Install the intake manifold (2) and tighten bolts (1) finger tight.

 

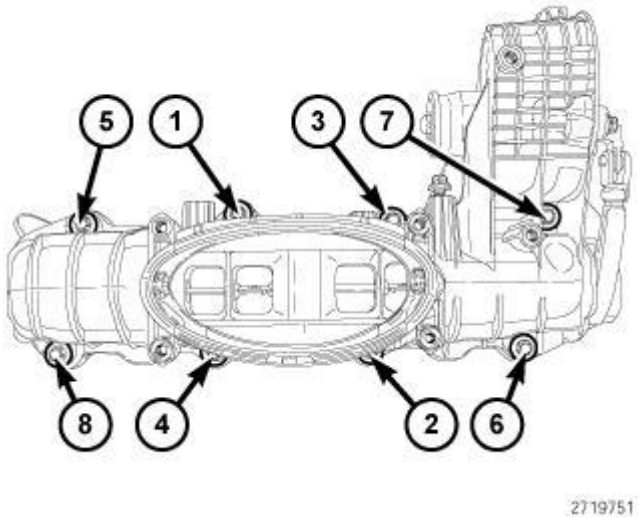


**Fig. 490: Intake Manifold Bolt Tightening Sequence**
**Courtesy of CHRYSLER LLC**

4. Using the sequence shown in illustration, tighten bolts to 14 N.m (124 in. lbs.).

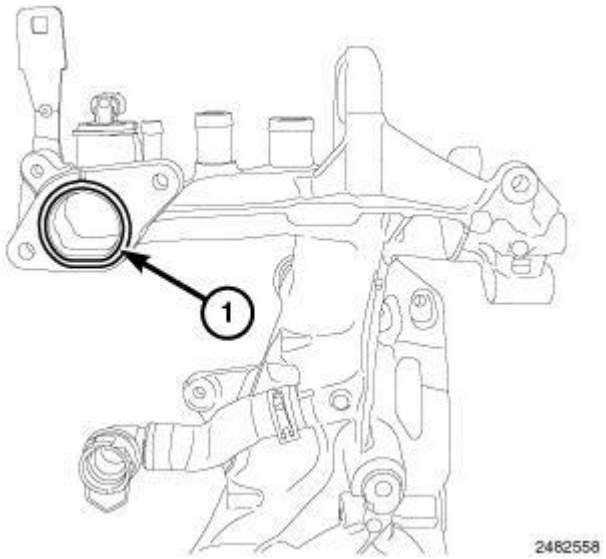


**Fig. 491: Accessory Carrier & O-Ring Gasket**
**Courtesy of CHRYSLER LLC**

5. Clean the gasket surfaces and install a new gasket (1) and inspect the O-ring (2).
6. Position the accessory carrier to the engine and install bolts finger tight.

 

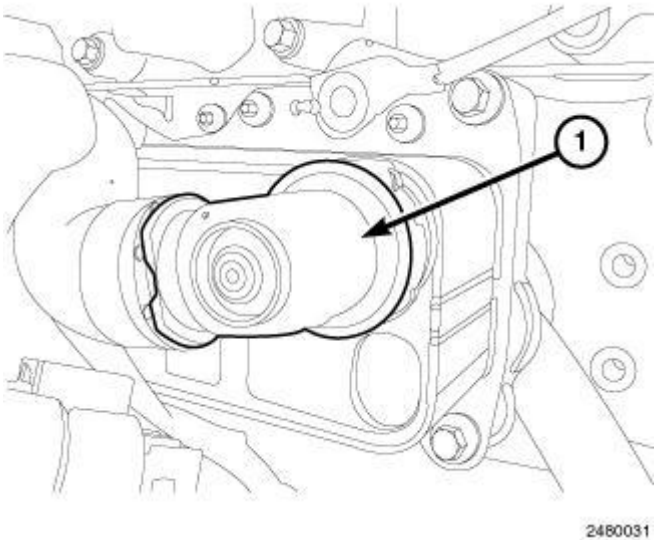


**Fig. 492: Coolant Hose To Oil Cooler**
**Courtesy of CHRYSLER LLC**

7. Connect the coolant hose (1) to the oil cooler.

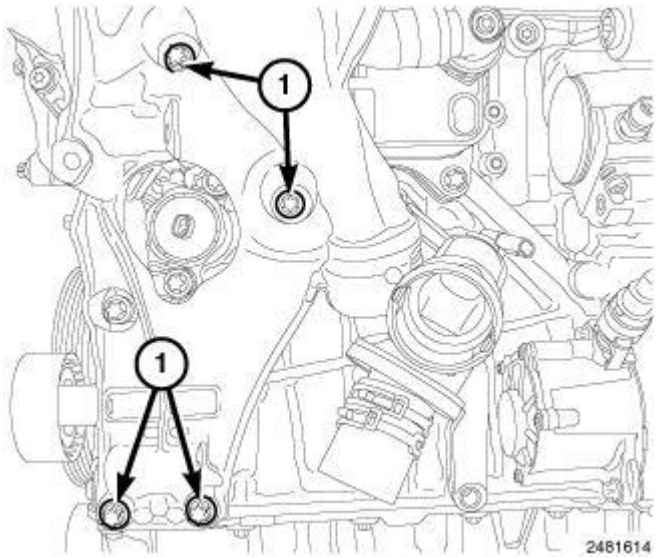


**Fig. 493: Accessory Carrier Bolts**
**Courtesy of CHRYSLER LLC**

8. Tighten the lower accessory carrier bolts (1) to 20 N.m (177 in. lbs.).
9. Install the oil filter cap. Tighten cap to 25 N.m (18 ft. lbs.).

 

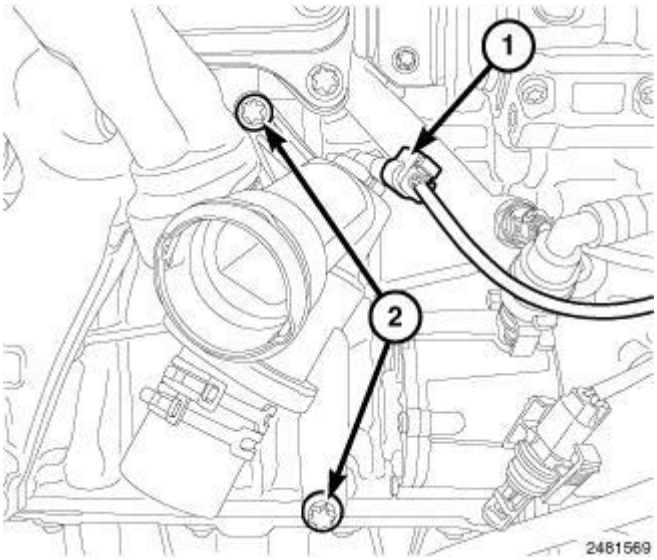


**Fig. 494: ECT Sensor Connector & Thermostat Housing Bolts**
**Courtesy of CHRYSLER LLC**

10. Install the two bolt securing the thermostat housing to engine block and tighten bolts to 9 N.m (80 in. lbs.).
11. Connect the coolant temperature sensor harness connector (1).

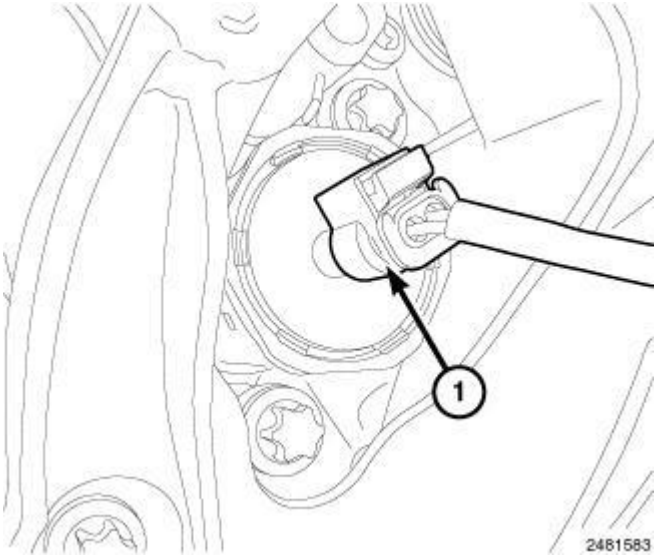


**Fig. 495: Piston Cooling Oil Control Valve Harness Connector**
**Courtesy of CHRYSLER LLC**

12. Connect the oil control valve harness connector.

 

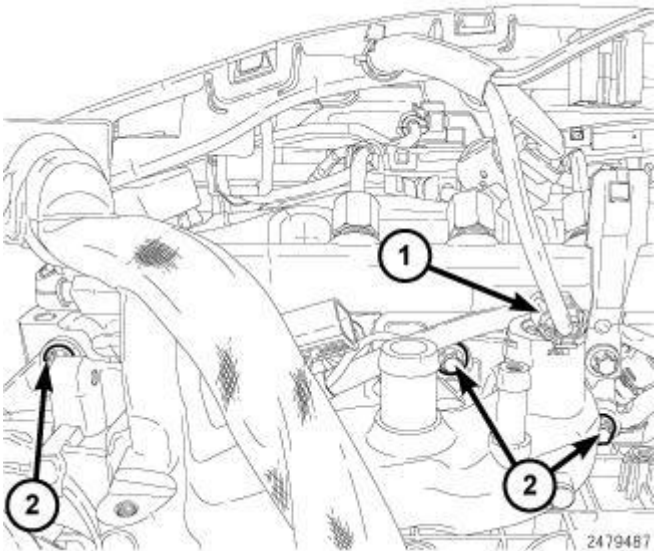


**Fig. 496: Coolant Temp Sensor & Cooling Manifold Bolts**
**Courtesy of CHRYSLER LLC**

13. Tighten the three upper accessory carrier bolts (2) to 9 N.m (80 in. lbs.).
14. Connect the coolant temp sensor (1) harness connector.

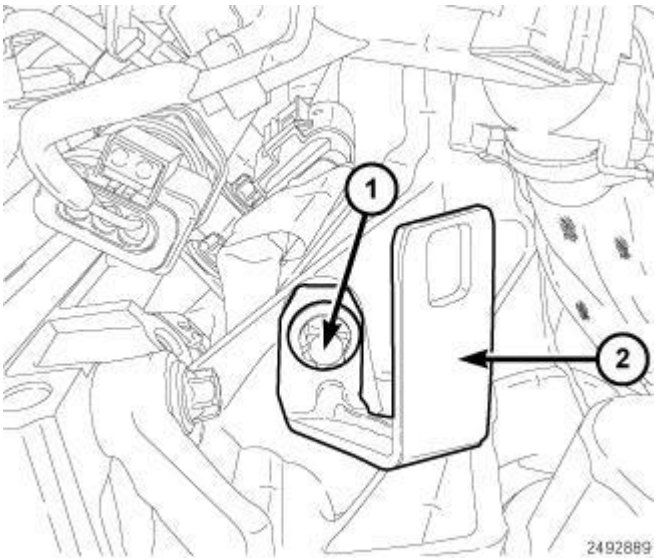


**Fig. 497: Wire Harness Support Bracket & Bolt**
**Courtesy of CHRYSLER LLC**

15. Install the wire harness support bracket. Tighten bolt to 9 N.m (80 in. lbs.).

 

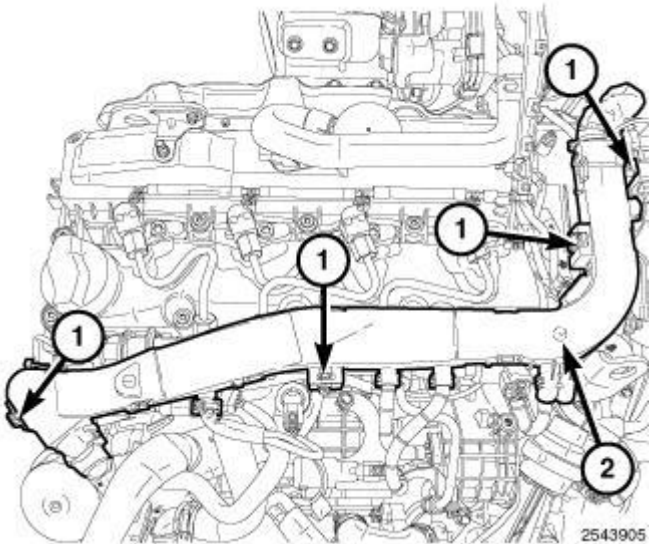


**Fig. 498: Lock Tabs & Engine Wire Harness**
**Courtesy of CHRYSLER LLC**

16. Position the wire harness (2) and push down to lock tabs (1).

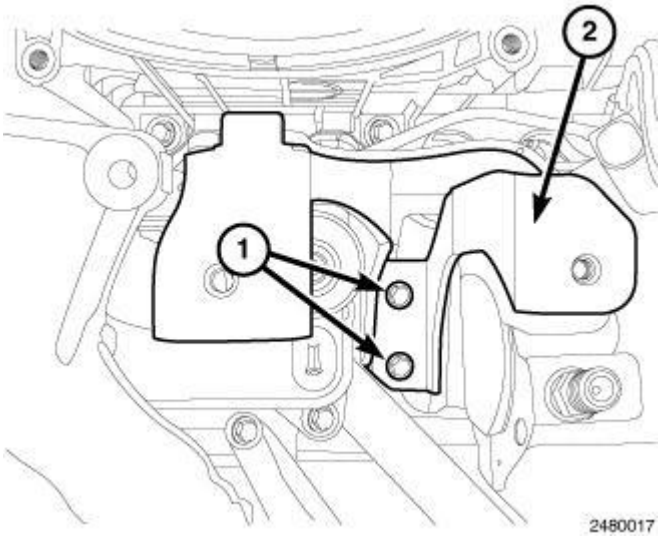


**Fig. 499: Intake Manifold Support Bracket & Bolts**
**Courtesy of CHRYSLER LLC**

17. Install the mixing chamber support bracket (2). Tighten bolts (1) to 9 N.m (80 in. lbs.).

 

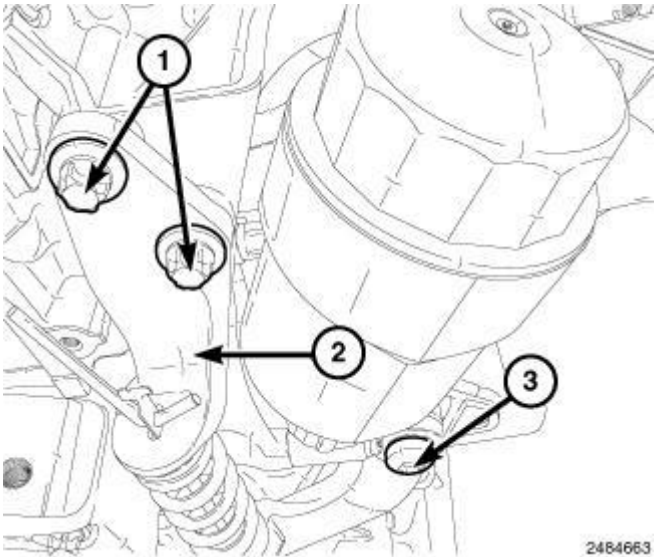


**Fig. 500: Accessory Drive Belt Tensioner & Bolts**
**Courtesy of CHRYSLER LLC**

18. Install the accessory drive belt tensioner.
    - Tighten bolts (1) to 20 N.m (177 in. lbs.).
    - Tighten bolt (3) to 45 N.m (33 ft. lbs.).

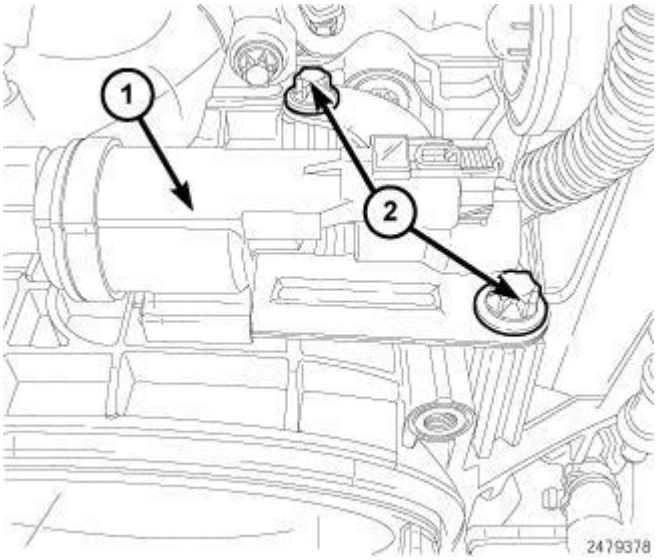


**Fig. 501: EGR Vacuum Solenoid & Bolts**
**Courtesy of CHRYSLER LLC**

19. Install the EGR vacuum solenoid (1). Tighten bolts (2) to 9 N.m (80 in. lbs.).

 

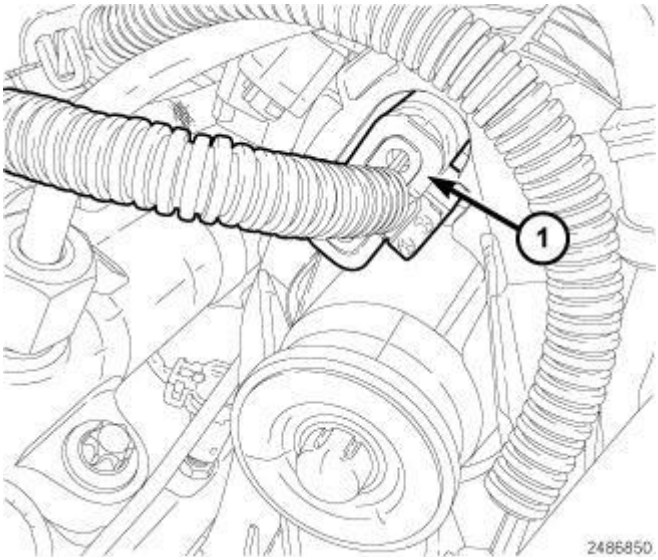


**Fig. 502: Swirl Valve Actuator Harness Connector**
**Courtesy of CHRYSLER LLC**

20. Connect the swirl valve actuator harness connector (1).

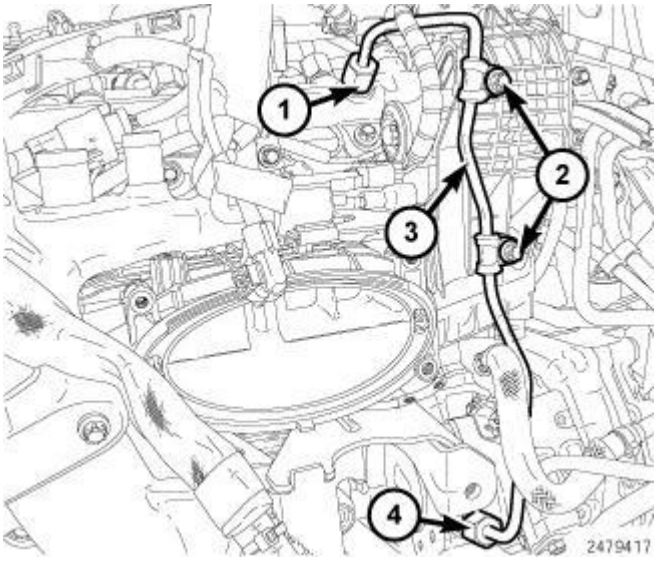


**Fig. 503: Fuel Rail, Bolts, High Pressure Fuel Tube & Pump**
**Courtesy of CHRYSLER LLC**

21. Install the new high pressure fuel line (3) at fuel rail (1) and high pressure pump (4).
22. Tighten the high pressure fuel line (3) at fuel rail (1) and high pressure pump (4) to 7 N.m (62 in. lbs.).
23. Tighten the high pressure fuel line (3) at fuel rail (1) and high pressure pump (4) to 33 N.m (24 ft. lbs.).
24. Install the two bolts (2) securing the high pressure fuel line and tighten to 9 N.m (80 in. lbs.).

 

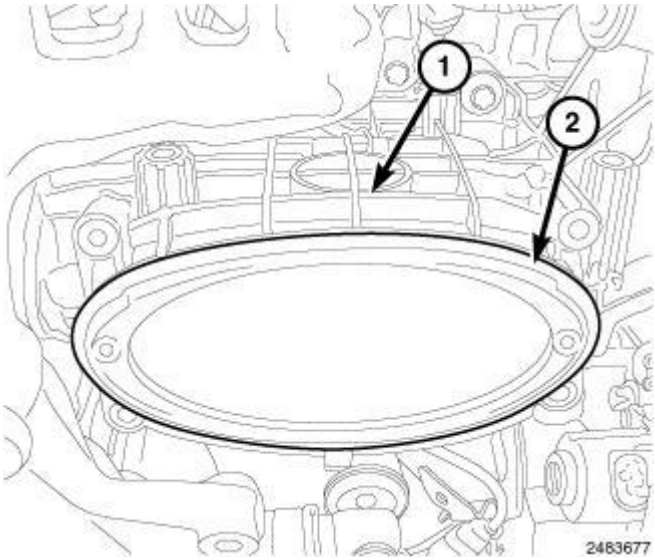


**Fig. 504: Intake Manifold & O-Ring Seal**
**Courtesy of CHRYSLER LLC**

25. Install a new O-ring seal (2) onto the intake manifold (1).

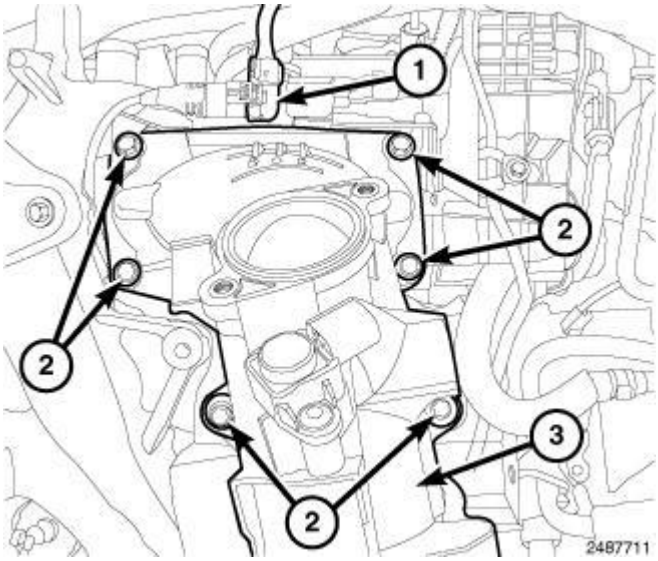


**Fig. 505: Knock Sensor Electrical Connector, Mixing Chamber & Bolts**
**Courtesy of CHRYSLER LLC**

26. Install the mixing chamber (3). Tighten bolts (2) to 9 N.m (80 in. lbs.).
27. Connect the knock sensor harness connector (1).

 

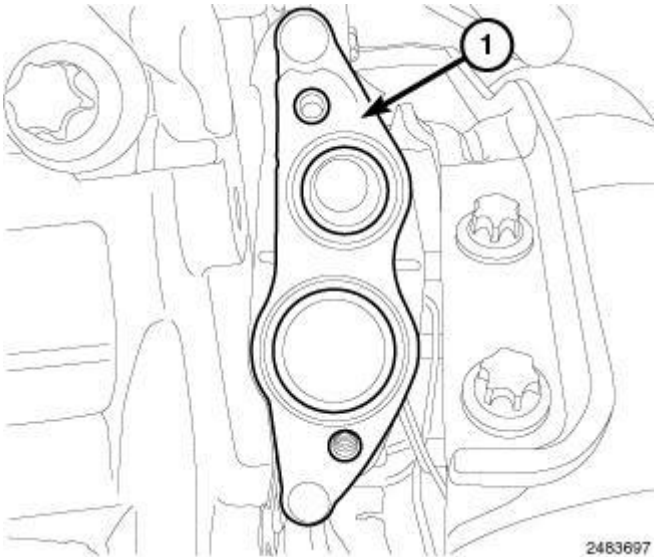


**Fig. 506: EGR Manifold Gasket**
**Courtesy of CHRYSLER LLC**

28. Clean the gasket surfaces and install a new EGR manifold gasket.

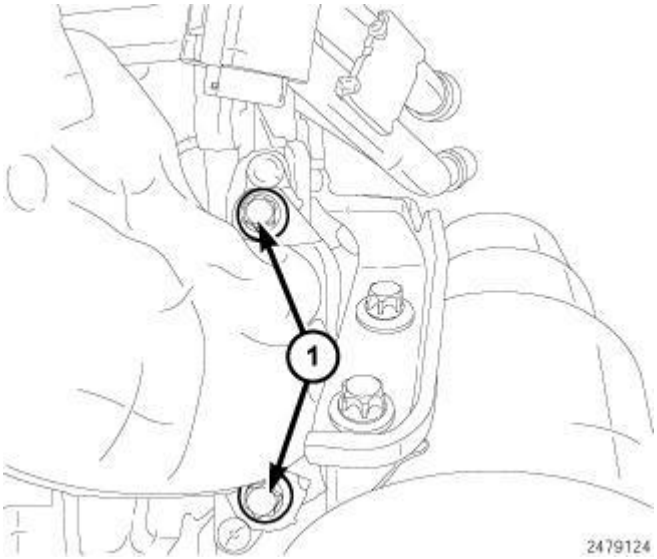


**Fig. 507: EGR Cooler Manifold Bolts**
**Courtesy of CHRYSLER LLC**

29. Install the EGR manifold. Tighten bolts (1) to 9 N.m (80 in. lbs.).

 

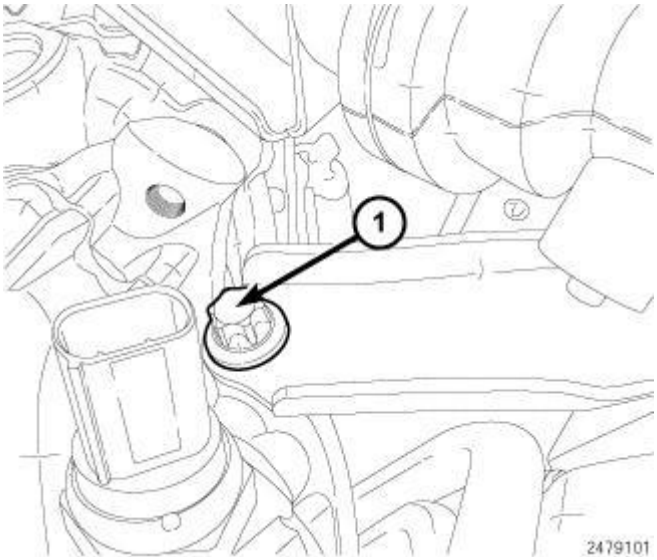


**Fig. 508: Support Bracket Bolt**
**Courtesy of CHRYSLER LLC**

30. Install the EGR support bracket bolt (1). Tighten to 9 N.m (80 in. lbs.).

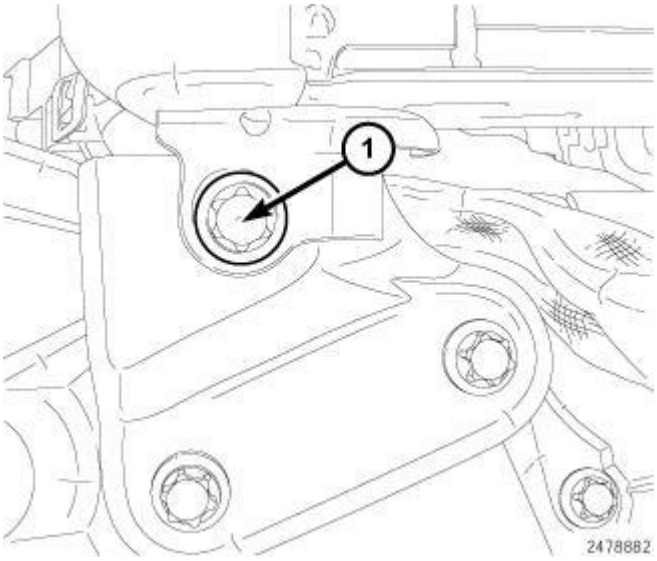


**Fig. 509: Lower EGR Cooler Bolt**
**Courtesy of CHRYSLER LLC**

31. Install the lower EGR cooler bracket bolt (1). Tighten to 9 N.m (80 in. lbs.).

 

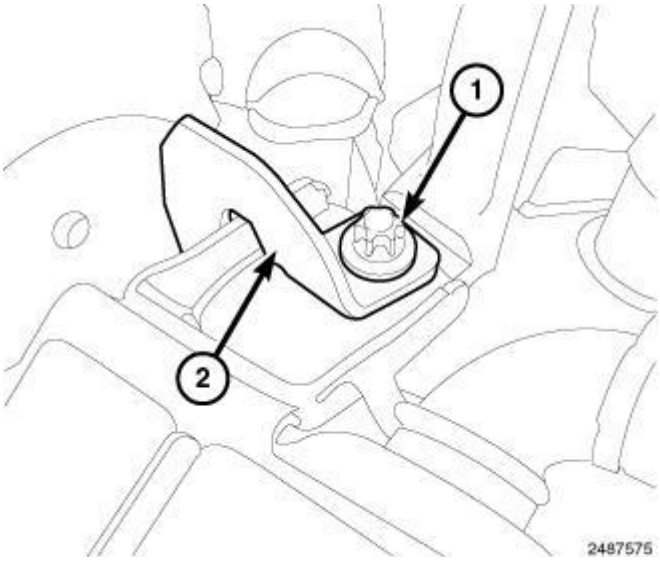


**Fig. 510: Upper EGR Cooler Bolt & Bracket**
**Courtesy of CHRYSLER LLC**

32. Install the upper EGR cooler bolt. Tighten bolt to 9 N.m (80 in. lbs.).

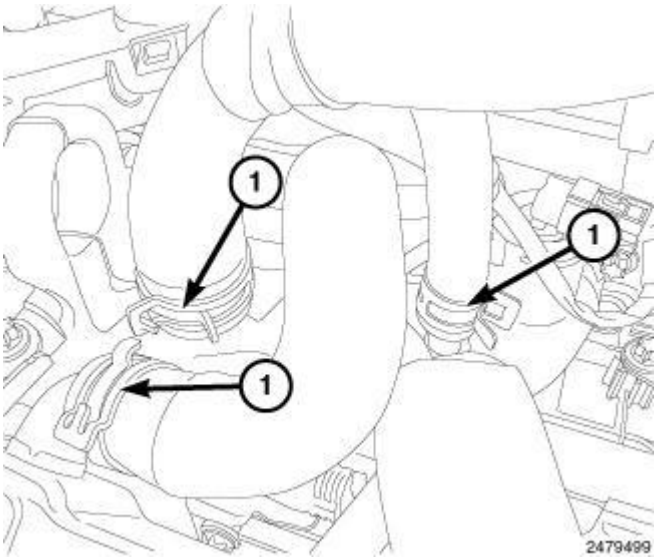


**Fig. 511: Coolant Hoses & Clamps**
**Courtesy of CHRYSLER LLC**

33. Connect the coolant hoses (1).

 

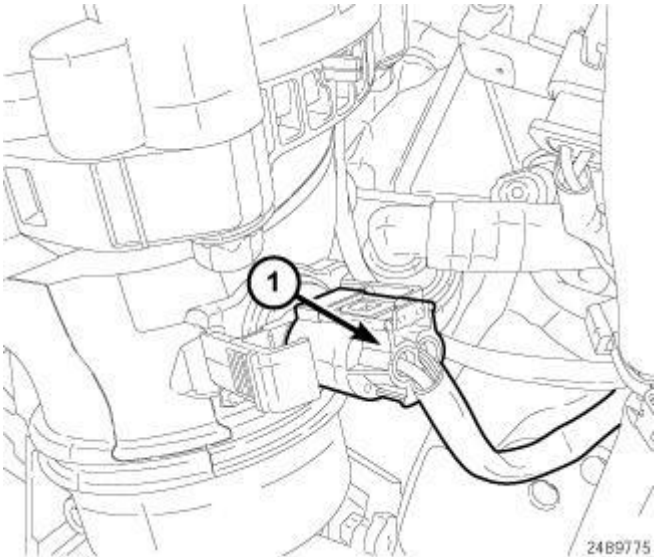


**Fig. 512: Charge Air Temperature Sensor Connectors**
**Courtesy of CHRYSLER LLC**

34. Connect the Charge Air inlet temperature sensor harness connector.

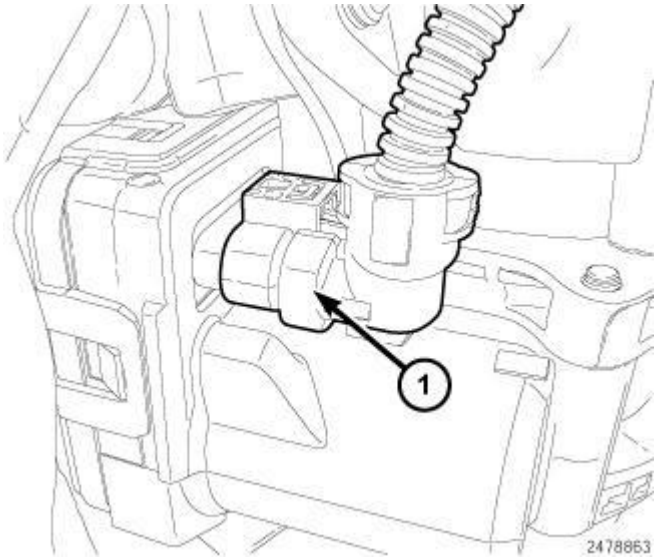


**Fig. 513: EGR Air Flow Control Valve Harness Connector**
**Courtesy of CHRYSLER LLC**

35. Connect the EGR air control valve harness connector.

 

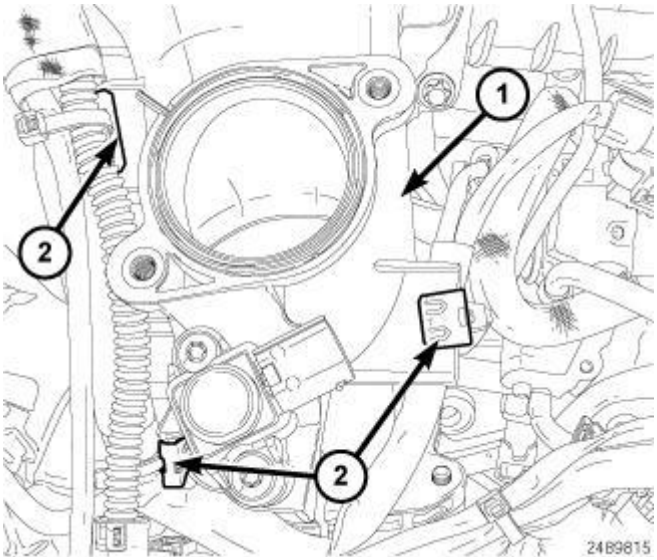


**Fig. 514: Mixing Chamber & Wire Harness Retainer Clips**
**Courtesy of CHRYSLER LLC**

36. Connect the wire harness retainer clips (2) to the mixing chamber (1).

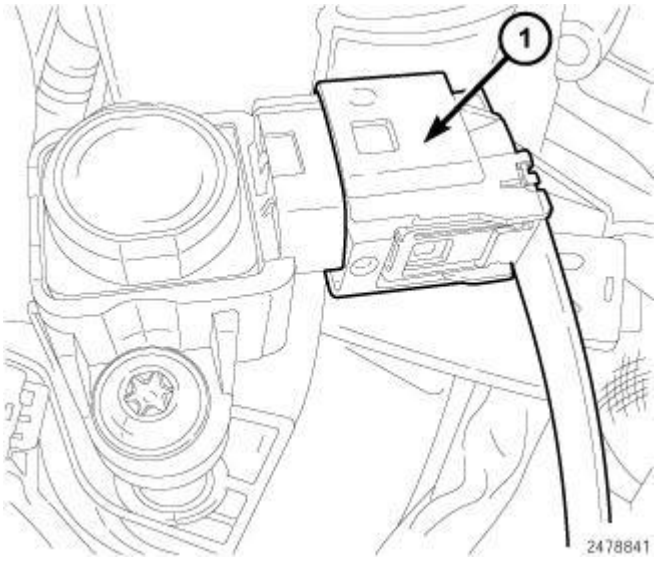


**Fig. 515: Boost Pressure Sensor Harness Connector**
**Courtesy of CHRYSLER LLC**

37. Connect the boost pressure sensor (1) harness connector.

 

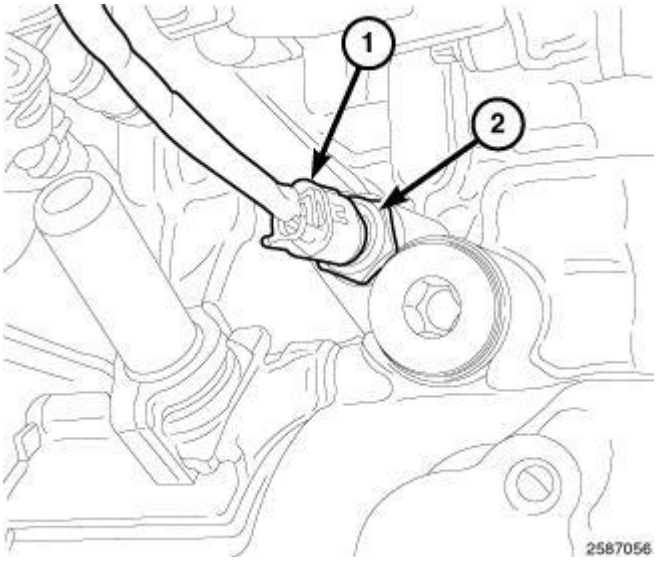


**Fig. 516: Oil Temperature Sensor Harness Connector & Sensor**
**Courtesy of CHRYSLER LLC**

38. Connect the oil temperature sensor harness connector.

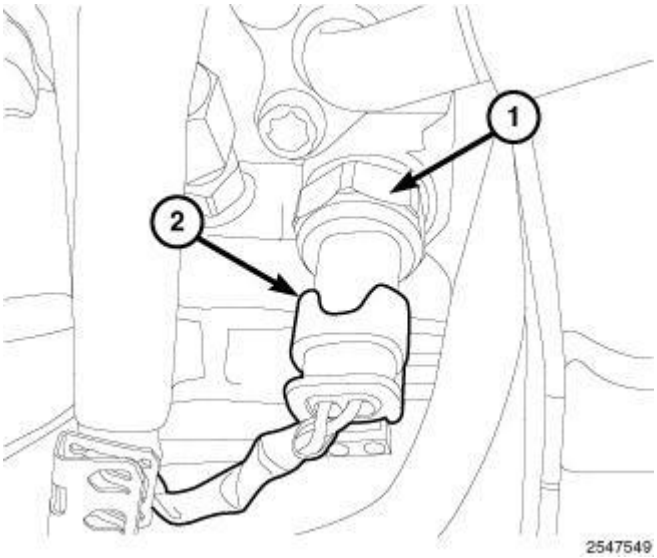


**Fig. 517: Fuel Temperature Sensor Harness Connector**
**Courtesy of CHRYSLER LLC**

39. Connect the fuel temperature sensor harness connector (2).

 

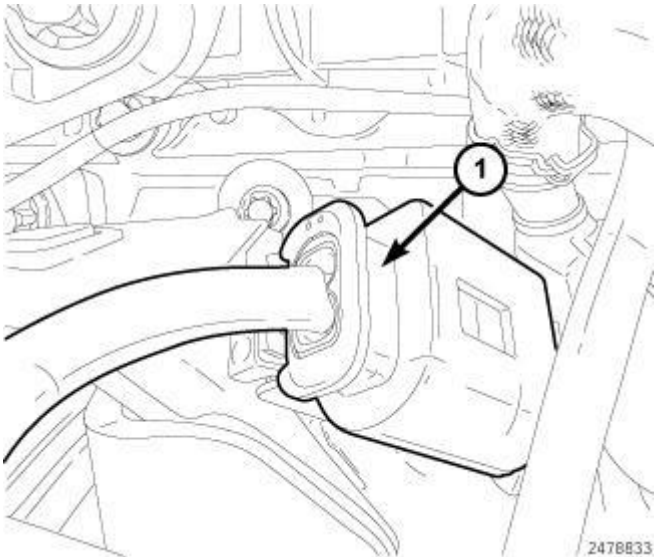


**Fig. 518: Fuel Quantity Control Valve Harness Connector**
**Courtesy of CHRYSLER LLC**

40. Connect the fuel quality sensor harness connector (1).

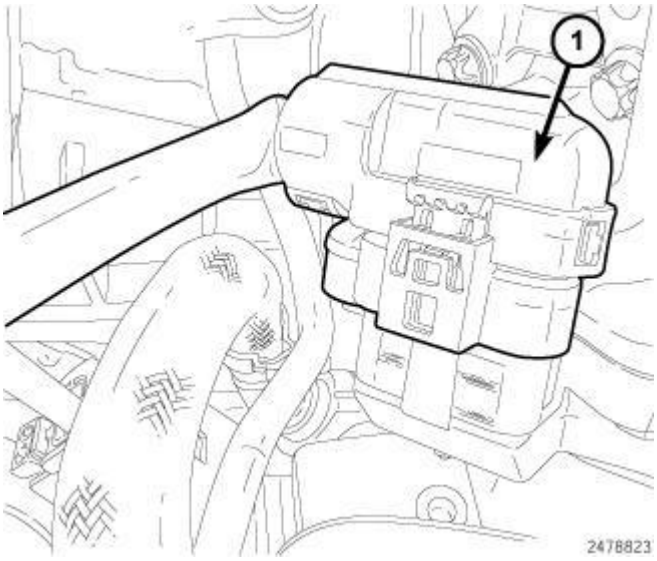


**Fig. 519: EGR Valve Harness Connector**
**Courtesy of CHRYSLER LLC**

41. Connect the EGR valve harness connector (1).

 

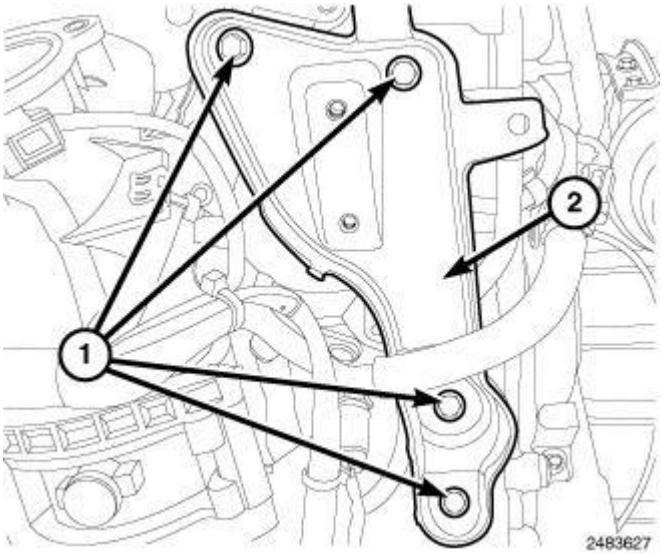


**Fig. 520: Bolts & EGR Support Bracket**
**Courtesy of CHRYSLER LLC**

42. Install the EGR support bracket (2). Tighten bolts (1) to 9 N.m (80 in. lbs.).

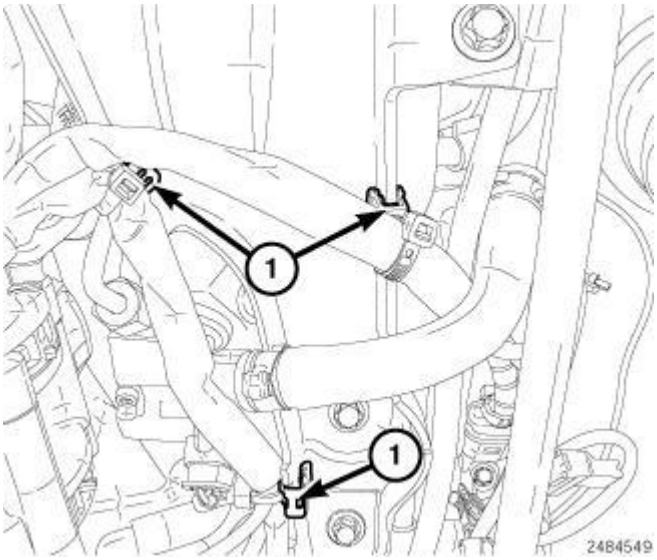


**Fig. 521: Wire Harness Retainers**
**Courtesy of CHRYSLER LLC**

43. Connect the wire harness retainers (1).

 

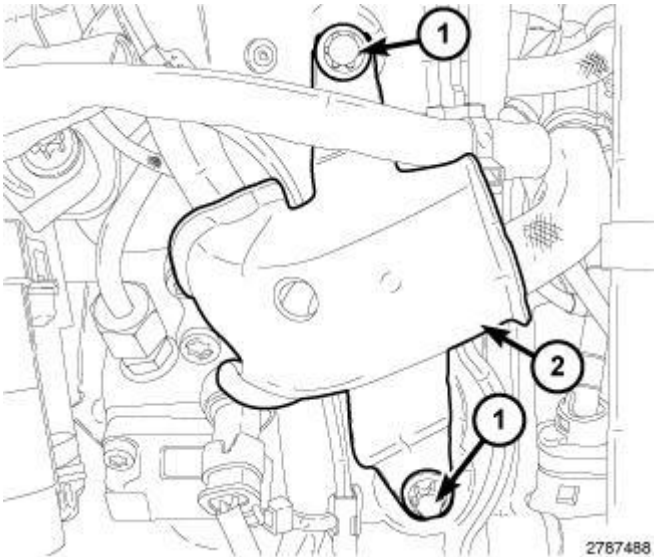


**Fig. 522: Bolts & Heat Shield**
**Courtesy of CHRYSLER LLC**

44. Install the heat shield (2). Tighten bolts (1) to 9 N.m (80 in. lbs.).

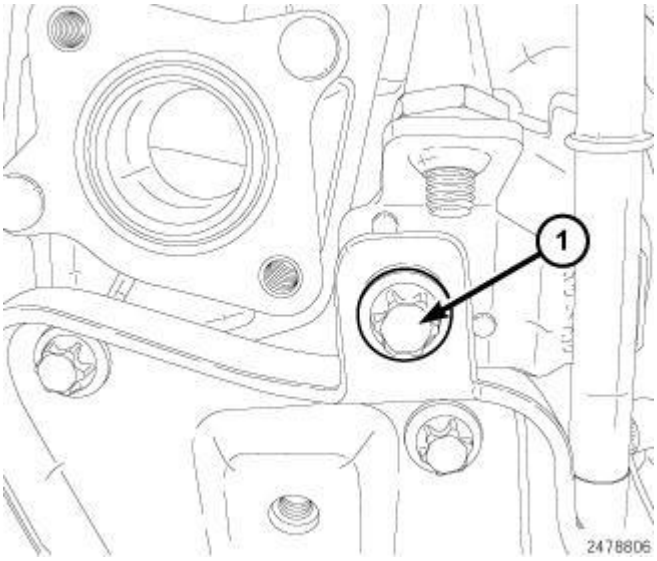


**Fig. 523: Vacuum Tube Bolt**
**Courtesy of CHRYSLER LLC**

45. Install the bolt securing the vacuum tube (1). Tighten bolt to 9 N.m (80 in. lbs.).

 

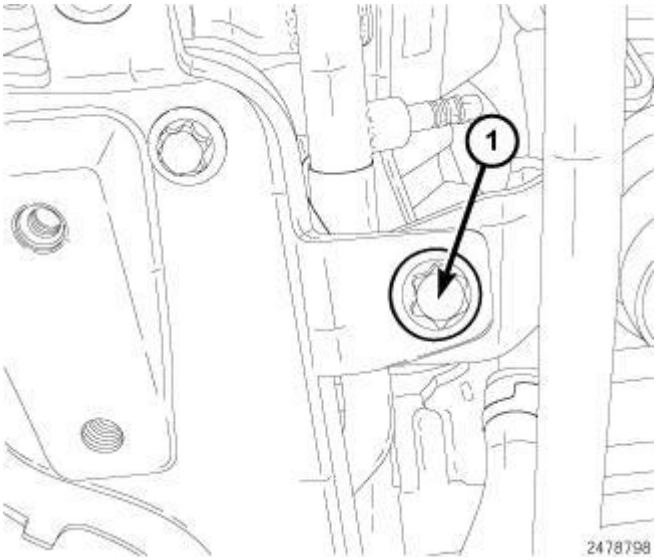


**Fig. 524: Oil Dip Stick Bolt**
**Courtesy of CHRYSLER LLC**

46. Install the bolt securing the oil dip stick tube. Tighten bolt to 9 N.m (80 in. lbs.).

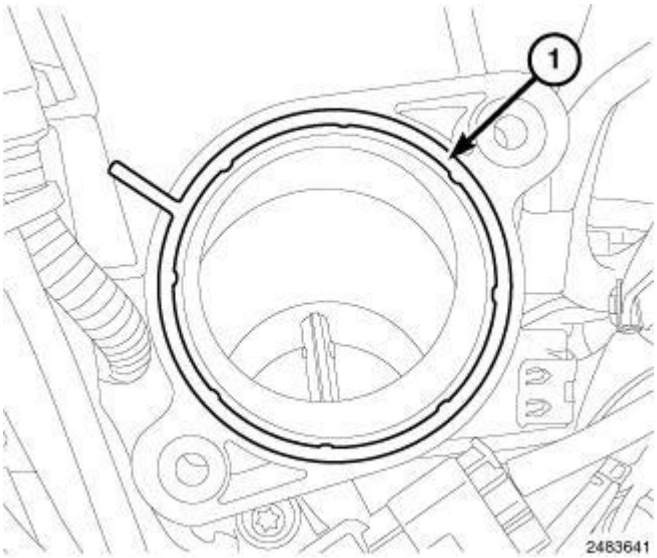


**Fig. 525: EGR Tube Gasket Onto Mixing Chamber**
**Courtesy of CHRYSLER LLC**

47. Clean the gasket surfaces and install a new gasket (1).

 

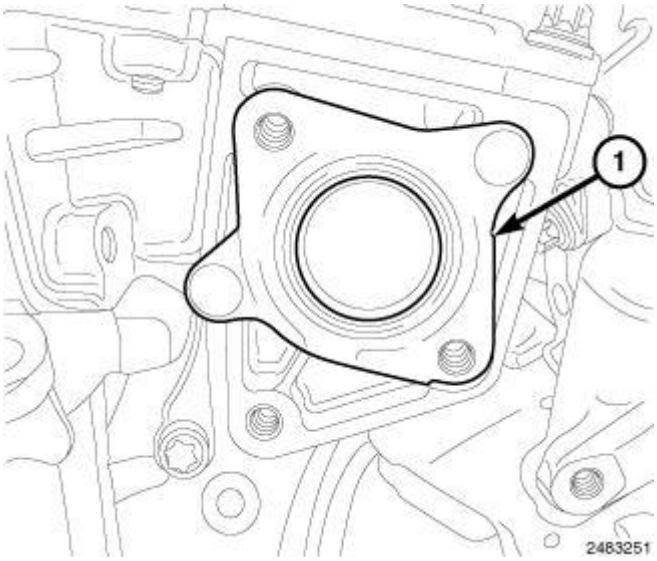


**Fig. 526: EGR Tube Gasket Onto EGR Actuator**
**Courtesy of CHRYSLER LLC**

48. Clean the gasket surfaces and install a new gasket (1).

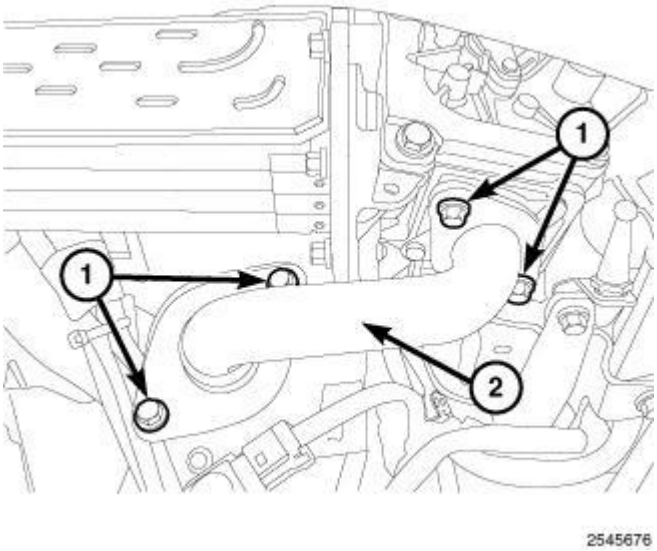


**Fig. 527: EGR Tube & Bolts**
**Courtesy of CHRYSLER LLC**

49. Install the EGR tube (2). Tighten bolt (1) to 9 N.m (80 in. lbs.).

 

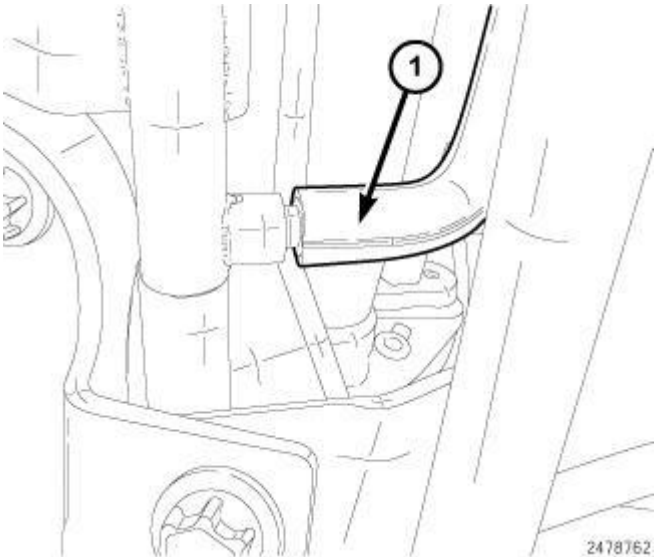


**Fig. 528: Vacuum Supply Line At EGR Solenoid**
**Courtesy of CHRYSLER LLC**

50. Connect the vacuum supply line to the EGR solenoid (1).

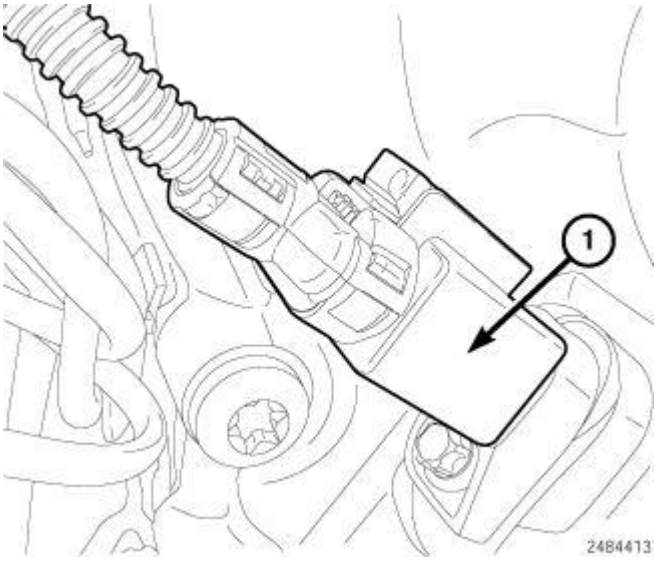


**Fig. 529: Crankshaft Position Sensor Harness Connector**
**Courtesy of CHRYSLER LLC**

51. Connect the Crankshaft Position Sensor (CKP) (1) harness connector.

 

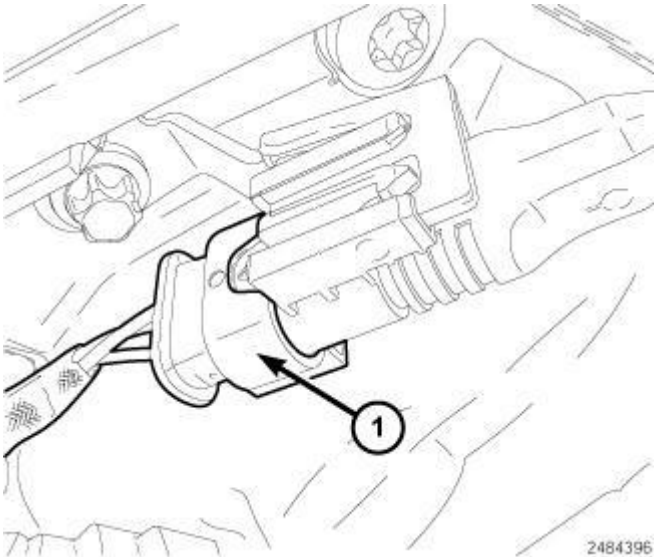


**Fig. 530: Knock Sensor Harness Connector**
**Courtesy of CHRYSLER LLC**

52. Connect the knock sensor (1) harness connector.

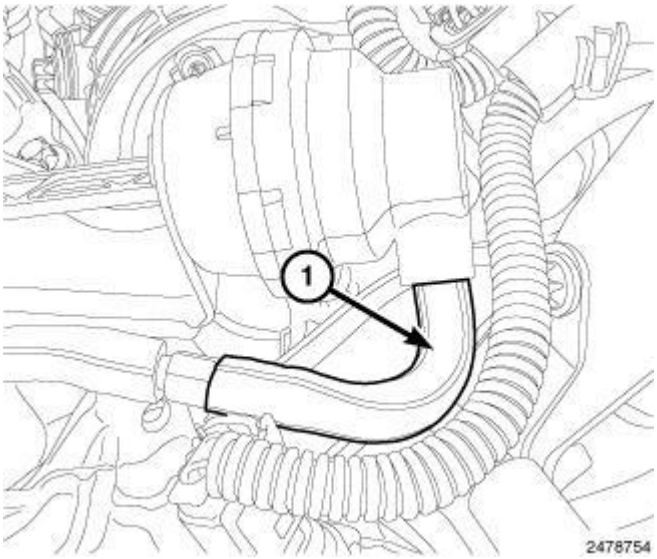


**Fig. 531: EGR Control Valve Actuator Vacuum Line**
**Courtesy of CHRYSLER LLC**

53. Connect the vacuum line from the EGR control valve actuator.

 

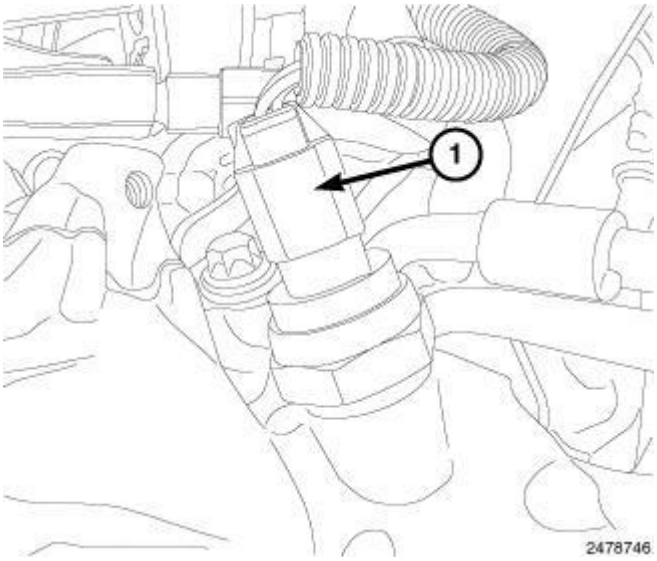


**Fig. 532: EGR Back Pressure Transducer Harness Connector**
**Courtesy of CHRYSLER LLC**

54. Connect the EGR back pressure transducer harness connector.

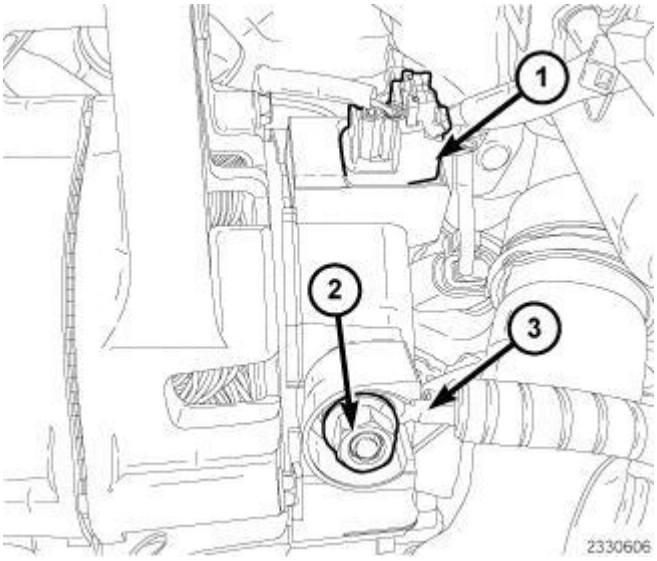


**Fig. 533: Battery Feed Wire, Generator Harness Connectors & Nut**
**Courtesy of CHRYSLER LLC**

55. Install the generator. Tighten bolts to 20 N.m (177 in. lbs.).
56. Connect the generator harness connectors (1).
57. Install the battery feed wire (3) to generator. Tighten nut (2) to 18 N.m (159 in. lbs.).

 

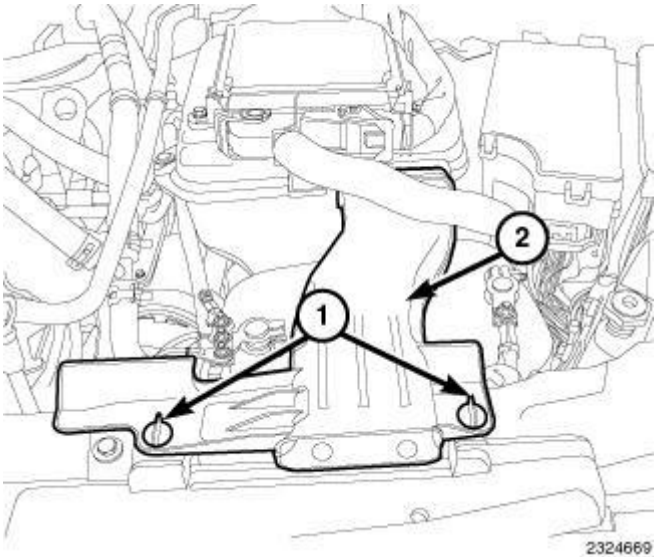


**Fig. 534: Quarter Turn Lock Tabs & Air Inlet Duct**
**Courtesy of CHRYSLER LLC**

58. Install the A/C compressor. Refer to **COMPRESSOR, A/C , Installation** .
59. Install the coolant pump. Refer to **PUMP, Water , Installation** .
60. Install cooling fan module. Refer to **FAN, Cooling , Installation** .
61. Connect upper radiator hose at radiator.
62. Refill cooling system. Refer to **Standard Procedure** .
63. Install the belly pan.
64. Install engine cover.
65. Connect the negative battery cable.
66. Install the air inlet duct (2) and lock the quarter turn lock tabs (1).

# TURBOCHARGER SYSTEM

## DIAGNOSIS AND TESTING

### DIAGNOSIS AND TESTING - TURBOCHARGER

Check for Diagnostic Trouble Codes (DTCs) stored in PCM memory. If any DTCs are present, refer to the appropriate Powertrain Diagnostic Information.

**Turbocharger Diagnosis**

| CONDITION | POSSIBLE CAUSES |
|---|---|
| Low boost pressure, lack of power | Clogged air filter<br>Leaks between engine and turbocharger |
| | Exhaust restriction |
| | Restriction in charge air cooler hose(s) |
| | Wastegate stuck open |

 

| | |
|---|---|
| | Wastegate actuator malfunction |
| | Seized turbocharger shaft |
| Overboost | Wastegate stuck shut<br>Wastegate actuator malfunction |
| Noisy operation or vibration | Leak(s) in charge air cooler hose(s)<br>Intake or exhaust leaks |
| | Oil starvation |
| | Worn turbocharger bearings |
| | Damaged turbine/compressor fins |
| Blue smoke from exhaust | Oil return line blocked |
| | Engine breather clogged |
| | Turbocharger shaft seals damaged |

**LEAK TESTING**

**NOTE: Slight engine oil pooling in the charge air inlet hose IS NOT premature turbocharger failure. Slight pooling is the normal result of the breather system.**

1. Remove the air cleaner assembly. Refer to **BODY, Air Cleaner , Removal**.

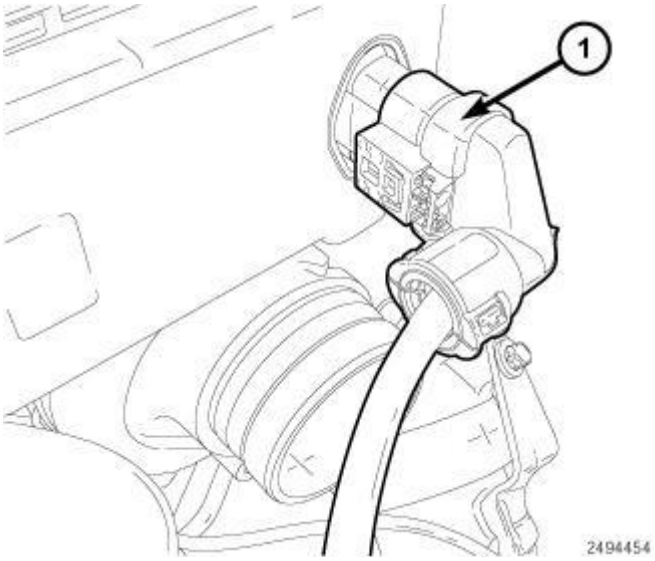


**Fig. 535: Turbocharger Actuator Harness Connector**
**Courtesy of CHRYSLER LLC**

2. Disconnect the turbocharger actuator electrical connector (1).
3. Remove Intake Hose between Air Filter and Turbo.

 

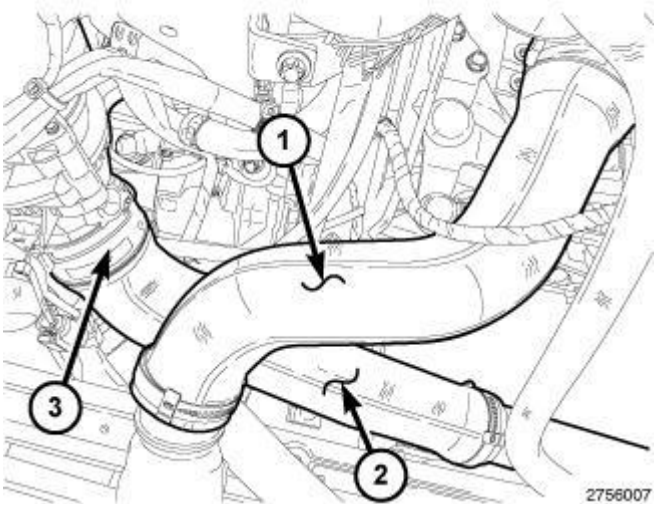


**Fig. 536: Front Upper, Lower Air Charge Hose & Clamp**
**Courtesy of CHRYSLER LLC**

4. Raise vehicle.
5. Remove lower engine cover.
6. Remove the front lower aircharge tube (2) from the intercooler outlet tube and position aside.
7. Plug the bore on the intercooler outlet tube.
8. Lower vehicle.
9. Remove the oil fill hole cap.
10. Add the air pressure to the intercooler system through the turbo. Only add up to 28 KPA (4 PSI).
11. Using soapy water. Check the air inlet ducts, rubber sleeves and intercooler.

## COOLER AND HOSES, CHARGE AIR

### Removal

#### CHARGE AIR COOLER HOSES

1. Remove the upper engine cover.
2. Remove the fan module. Refer to **FAN, Cooling , Removal** .

 

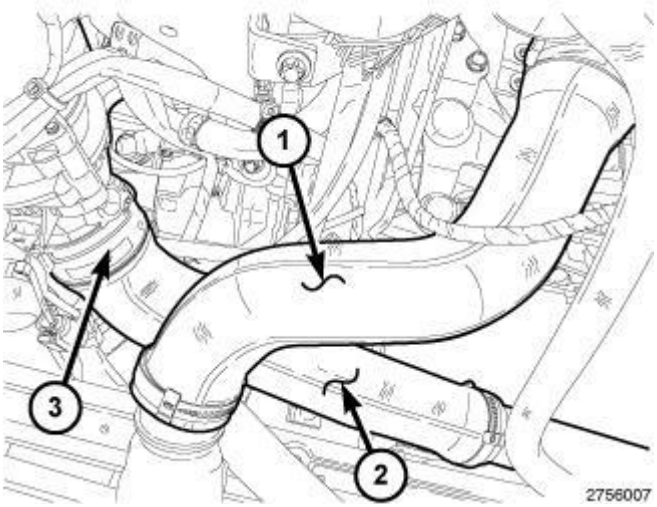


**Fig. 537: Front Upper, Lower Air Charge Hose & Clamp**
**Courtesy of CHRYSLER LLC**

3. Remove the front charge air inlet tube (1).
4. Remove the lower charge air tube (2).

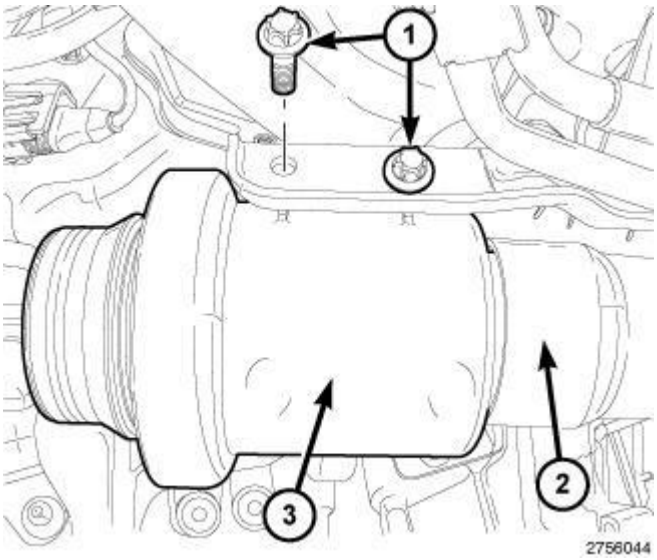


**Fig. 538: Air Charge Resonator, Rear Air Charge Tube & Mounting Bolts**
**Courtesy of CHRYSLER LLC**

5. Remove the air cleaner assembly. Refer to **BODY, Air Cleaner , Removal**.
6. Remove the two mounting bolts (1) from the air charge resonator (3).
7. Separate the resonator (3) from the rear air charge tube (2).

 

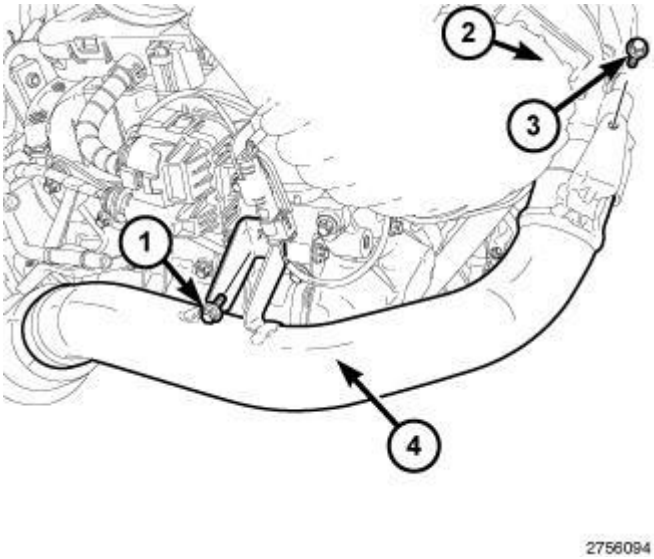


**Fig. 539: Rear Air Charge Tube & Bolts**
**Courtesy of CHRYSLER LLC**

8. Remove the bolt (1) holding the front of the rear air charge tube (4) to the cylinder head.
9. Remove the mounting bolt (3) holding the air charge tube (4) to the turbo.
10. Remove the rear air charge tube.

**Installation**

**Installation**

**CHARGE AIR COOLER HOSES**

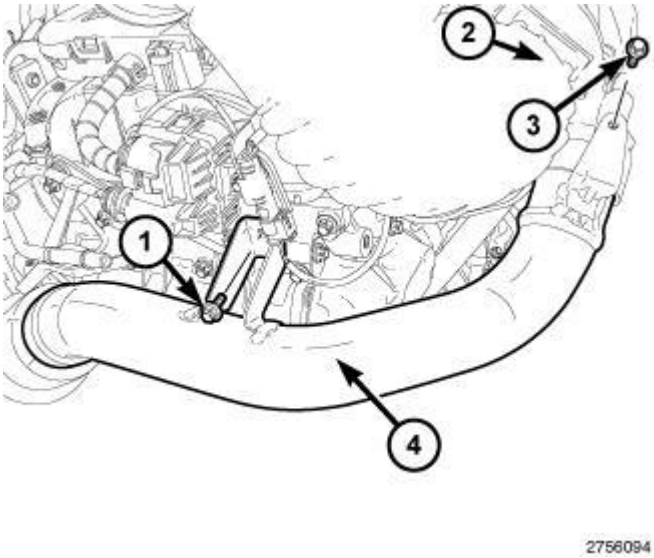


**Fig. 540: Rear Air Charge Tube & Bolts**
**Courtesy of CHRYSLER LLC**

 

1. Position pipe (4) to mounting location.
2. Connect pipe (4) to turbo body (2).
3. Install mounting bolts (1, 3). Tighten bolts to 16 N.m (12 ft. lbs.).

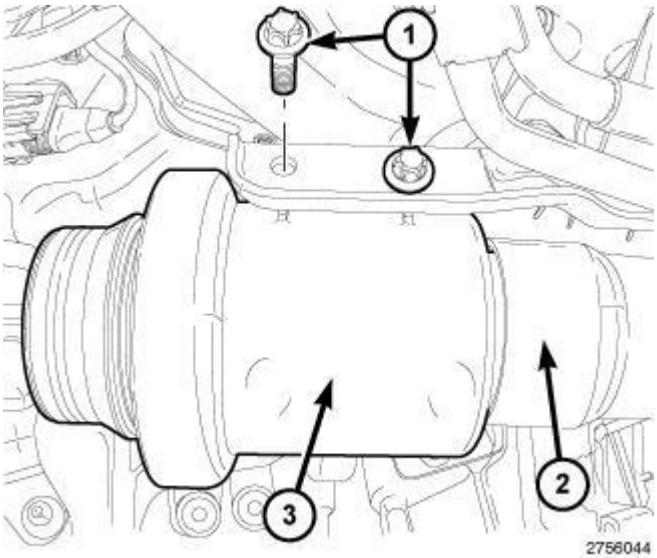


**Fig. 541: Air Charge Resonator, Rear Air Charge Tube & Mounting Bolts**
**Courtesy of CHRYSLER LLC**

4. Apply a light coating of oil to the o-ring on the resonator so no damage would occur to the o-ring.
5. Connect resonator (3) to the rear charge air cooler pipe (2).
6. Install the bolts (1) to the resonator. Tighten bolts to 8 N.m (70 in. lbs.).
7. Install air cleaner housing assembly. Refer to **BODY, Air Cleaner , Installation**.

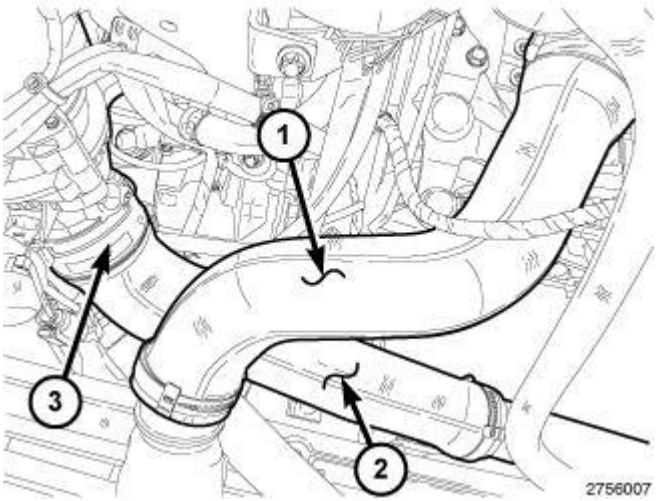


**Fig. 542: Front Upper, Lower Air Charge Hose & Clamp**
**Courtesy of CHRYSLER LLC**

 

8. Install the lower front air charge hose (2).
9. Tighten hose clamps to 6 N.m (53 in. lbs.).
10. Install the front upper air charge hose (1).
11. Install the fan module. Refer to **FAN, Cooling , Installation** .
12. Install engine cover.

## LINES AND HOSES, TURBOCHARGER, OIL AND COOLANT

**Removal**

**REMOVAL**

**COOLANT SUPPLY LINE**

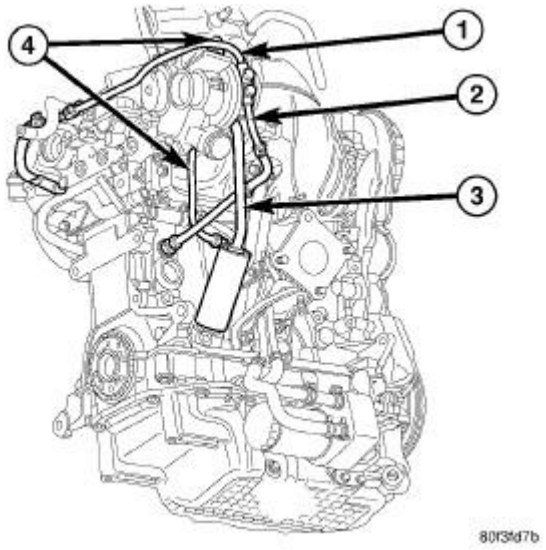


**Fig. 543: Turbocharger Lines And Hoses**
**Courtesy of CHRYSLER LLC**

1. Raise vehicle on hoist.

 

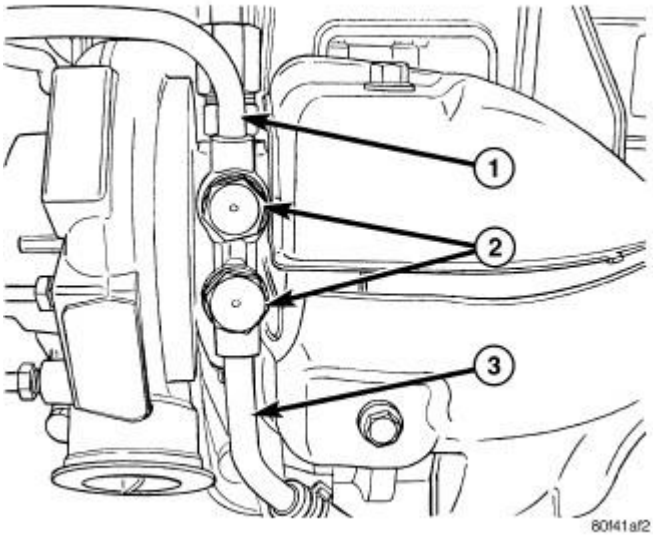


**Fig. 544: Coolant Lines & Banjo Fittings**
**Courtesy of CHRYSLER LLC**

| |
|---|
| 1 - COOLANT RETURN LINE |
| 2 - BANJO BOLTS - 30 N.m (22 ft. lbs.) |
| 3 - COOLANT SUPPLY LINE |

2. Drain cooling system. Refer to **Standard Procedure** .
3. Remove banjo bolt (2) from coolant supply line (3) at turbocharger.

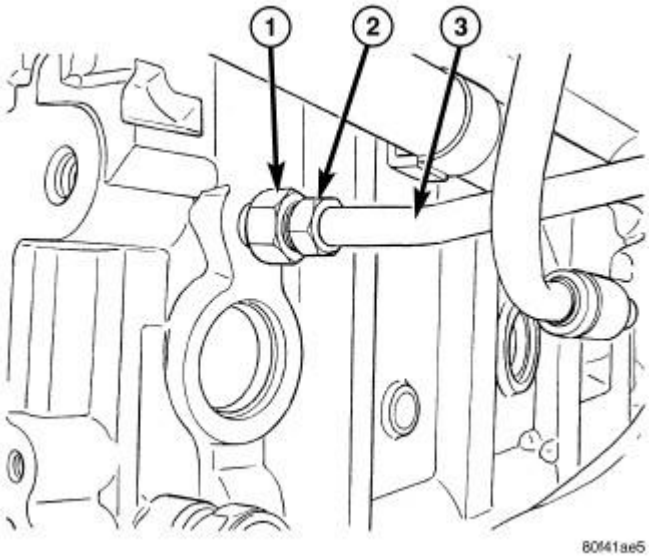


**Fig. 545: Coolant Supply Line & Fittings**
**Courtesy of CHRYSLER LLC**

 

| |
|---|
| 1 - BRASS FITTING - 41 N.m (30 ft. lbs.) |
| 2 - FLARED FITTING - 31 N.m (23 ft. lbs.) |
| 3 - COOLANT SUPPLY LINE |

4. Disconnect coolant supply line (3) flared fitting (2) from brass fitting (1) at engine block.
5. Remove coolant supply line.

**COOLANT RETURN LINE**

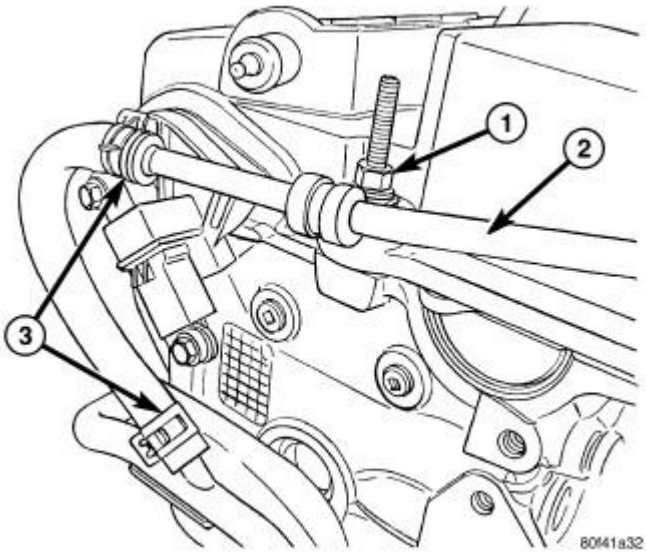


**Fig. 546: Coolant Return Line, Nut & Clamps**
**Courtesy of CHRYSLER LLC**

| |
|---|
| 1 - NUT |
| 2 - COOLANT RETURN LINE |
| 3 - HOSE CLAMPS |

1. Drain cooling system. Refer to **Standard Procedure** .
2. Remove air cleaner housing. Refer to **BODY, Air Cleaner , Removal**.
3. Disconnect Inlet Air Temperature (IAT) sensor connector.
4. Disconnect Throttle Inlet Pressure (TIP) hose from charge air cooler hose.
5. Loosen hose clamp at throttle body.
6. Disconnect charge air cooler hose from throttle body. Reposition charge air cooler hose.
7. Remove fastener securing coolant return line bracket to cylinder head cover stud.
8. Remove hose clamp from coolant return line (2) at heater tube. Disconnect hose from heater tube.
9. Remove banjo bolt from coolant return line at turbocharger.
10. Remove coolant return line.

 

**OIL SUPPLY LINE**

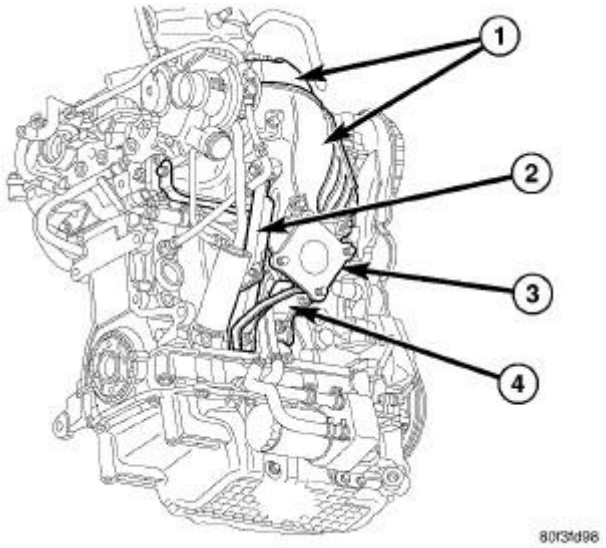


**Fig. 547: Turbocharger Brackets And Heat Shields**
**Courtesy of CHRYSLER LLC**

| |
|---|
| 1 - UPPER/LOWER HEAT SHIELDS |
| 2 - TURBOCHARGER SUPPORT BRACKET |
| 3 - ELBOW |
| 4 - ELBOW SUPPORT BRACKET |

1. Raise vehicle on hoist.
2. Remove elbow support bracket (4).

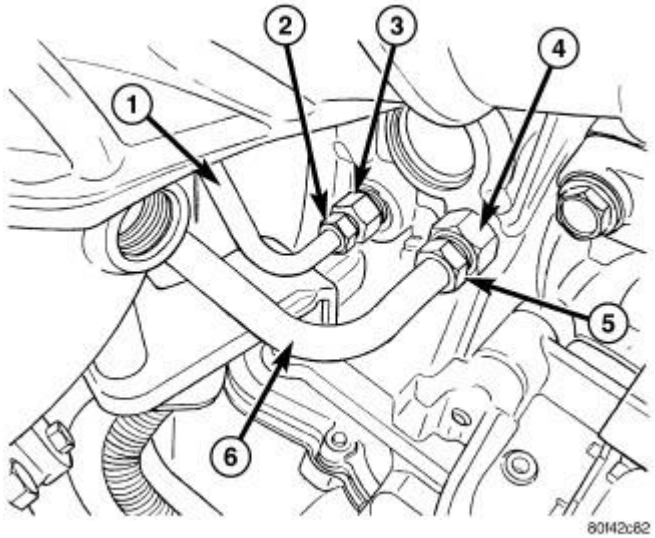

**Fig. 548: Oil Supply Line, Oil Cooler Coolant Line & Fittings**
**Courtesy of CHRYSLER LLC**

| |
|---|
| 1 - OIL SUPPLY LINE |
| 2 - FLARED FITTING - 31 N.m (23 ft. lbs.) |
| 3 - BRASS FITTING - 41 N.m (30 ft. lbs.) |
| 4 - BRASS FITTING - 41 N.m (30 ft. lbs.) |
| 5 - FLARED FITTING - 31 N.m (23 ft. lbs.) |
| 6 - OIL COOLER COOLANT LINE |

3. Disconnect oil supply line flared fitting (2) from brass fitting (3) at engine block.
4. Lower vehicle.
5. Disconnect oil supply line flared fitting (2) from brass fitting (3) at turbocharger.

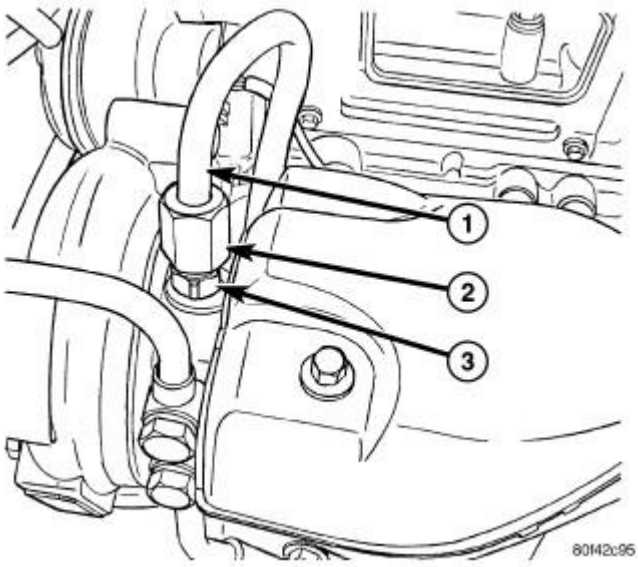


**Fig. 549: Oil Supply Line & Fittings**
**Courtesy of CHRYSLER LLC**

| |
|---|
| 1 - OIL SUPPLY LINE |
| 2 - FLARED FITTING - 31 N.m (23 ft. lbs.) |
| 3 - BRASS FITTING - 41 N.m (30 ft. lbs.) |

6. Remove oil supply line (1).

**OIL RETURN LINE**

1. Raise vehicle on hoist.
2. Remove the two fasteners securing the oil return line to the turbocharger.
3. Remove hose clamp from oil return line.

 

4. Remove oil return line from crankcase nipple.

**Installation**

**INSTALLATION**

**COOLANT SUPPLY LINE**

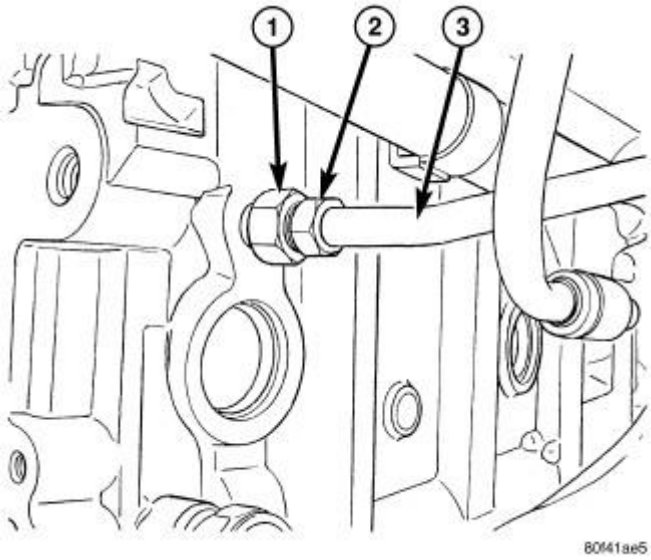


**Fig. 550: Coolant Supply Line & Fittings**
**Courtesy of CHRYSLER LLC**

| |
|---|
| 1 - BRASS FITTING - 41 N.m (30 ft. lbs.) |
| 2 - FLARED FITTING - 31 N.m (23 ft. lbs.) |
| 3 - COOLANT SUPPLY LINE |

1. If the brass fitting (1) was removed from the engine block, apply thread sealer to the threads and install into the engine block. Tighten the brass fitting (1) to 41 N.m (30 ft. lbs.).
2. Position the coolant supply line tube (3) onto the brass fitting (1) at the engine block.
3. Install the after run pump hoses to the after run pump.
4. Install **NEW** washers on the banjo fitting of coolant supply line. Hand start the banjo bolt.
5. Tighten the flared fitting (2) to 31 N.m (23 ft. lbs.).

 

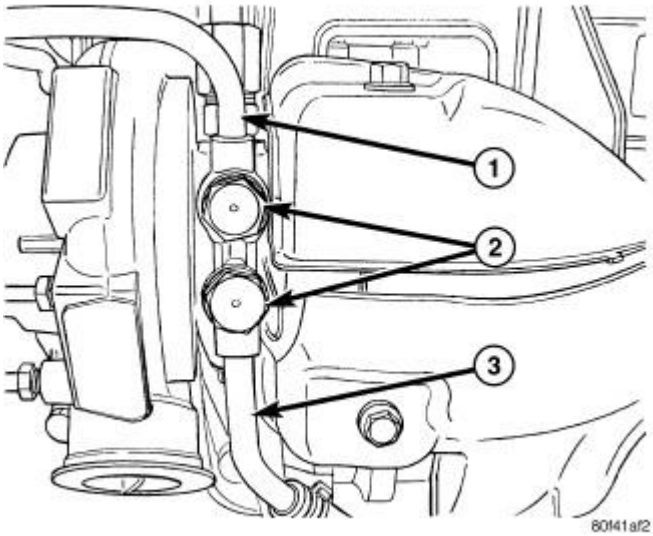


**Fig. 551: Coolant Lines & Banjo Fittings**
**Courtesy of CHRYSLER LLC**

| |
|---|
| 1 - COOLANT RETURN LINE |
| 2 - BANJO BOLTS - 30 N.m (22 ft. lbs.) |
| 3 - COOLANT SUPPLY LINE |

6. Tighten the banjo fitting bolts (2) to 30 N.m (22 ft. lbs.).
7. Lower the vehicle.
8. Fill the cooling system. Refer to **Standard Procedure** .

**COOLANT RETURN LINE**

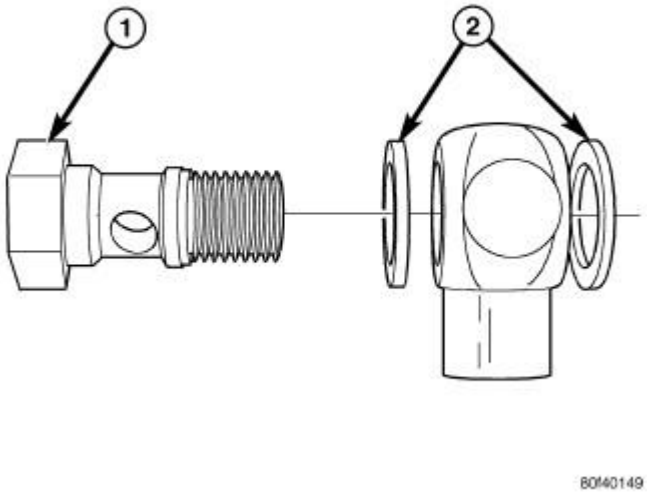

**Fig. 552: Banjo Bolt & Washers**
**Courtesy of CHRYSLER LLC**

| |
|---|
| 1 - BANJO BOLT |
| 2 - WASHERS |

1. Position the coolant return line on the turbocharger.
2. Install **NEW** washers (2) onto the banjo fitting of the coolant return line. Hand start the banjo bolt.
3. Install the hose onto the thermostat housing.
4. Tighten the banjo bolt to 40 N.m (29.5 ft. lbs.).
5. Secure the coolant return line bracket to the turbocharger housing tighten to 12 N.m (9 ft. lbs.).
6. Fill the cooling system. Refer to **Standard Procedure** .

**OIL SUPPLY LINE**

1. If the engine block brass fitting (3) or turbocharger brass fitting was removed, apply thread sealer to threads and install. Tighten the brass fittings (3) to 41 N.m (30 ft. lbs.).
2. Position the oil supply line (1) to the mounting location.

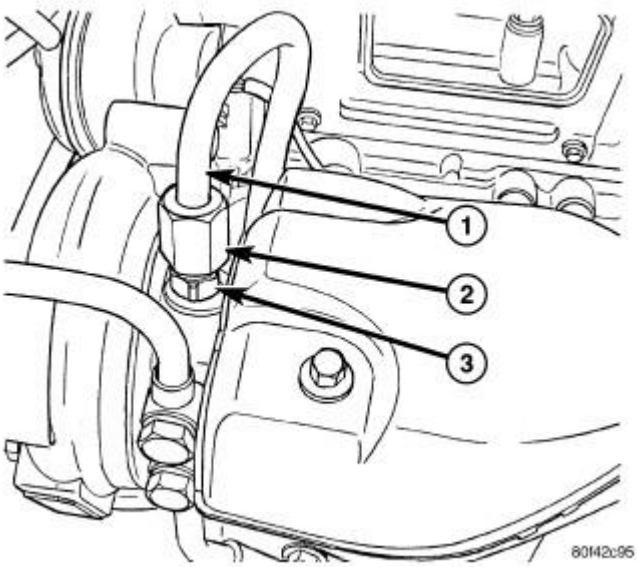


**Fig. 553: Oil Supply Line & Fittings**
**Courtesy of CHRYSLER LLC**

| |
|---|
| 1 - OIL SUPPLY LINE |
| 2 - FLARED FITTING - 31 N.m (23 ft. lbs.) |
| 3 - BRASS FITTING - 41 N.m (30 ft. lbs.) |

3. Hand start the flared fitting (2) at turbocharger.
4. Raise the vehicle on hoist.

 

5. Hand start the flared fitting (2) on the line to the engine block brass fitting (3).

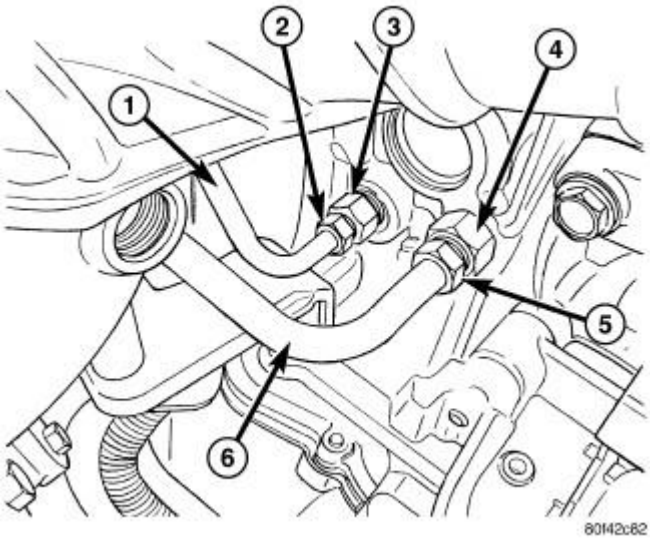


**Fig. 554: Oil Supply Line, Oil Cooler Coolant Line & Fittings**
**Courtesy of CHRYSLER LLC**

| |
|---|
| 1 - OIL SUPPLY LINE |
| 2 - FLARED FITTING - 31 N.m (23 ft. lbs.) |
| 3 - BRASS FITTING - 41 N.m (30 ft. lbs.) |
| 4 - BRASS FITTING - 41 N.m (30 ft. lbs.) |
| 5 - FLARED FITTING - 31 N.m (23 ft. lbs.) |
| 6 - OIL COOLER COOLANT LINE |

6. Tighten the flared fittings to 31 N.m (23 ft. lbs.).
7. Lower the vehicle.

**OIL RETURN LINE**

**NOTE: If drain back nipple is not damaged or showing signs of leakage, steps 2, 3, 4, and 9 can be skipped.**

1. Clean gasket surfaces.
2. Using a paint pen, mark the new drain back nipple to a depth of 17 mm (0.669in.) from the end to be installed in block.
3. Apply MOPAR® Stud'n Bearing mount and adhesive to the drain back nipple.
4. Using Bearing Installer (special tool #9723, Installer, Bearing), install the drainback nipple.
5. Install the oil return line hose over the drain back nipple.
6. Install a new gasket.

 

7. Install the two fasteners securing the oil return tube to the turbocharger. Tighten the fasteners to 12 N.m (105 in. lbs.).
8. Perform oil change. Refer to **Lubrication**.
9. Lower the vehicle.

## SOLENOID, WASTEGATE

### Description

#### DESCRIPTION

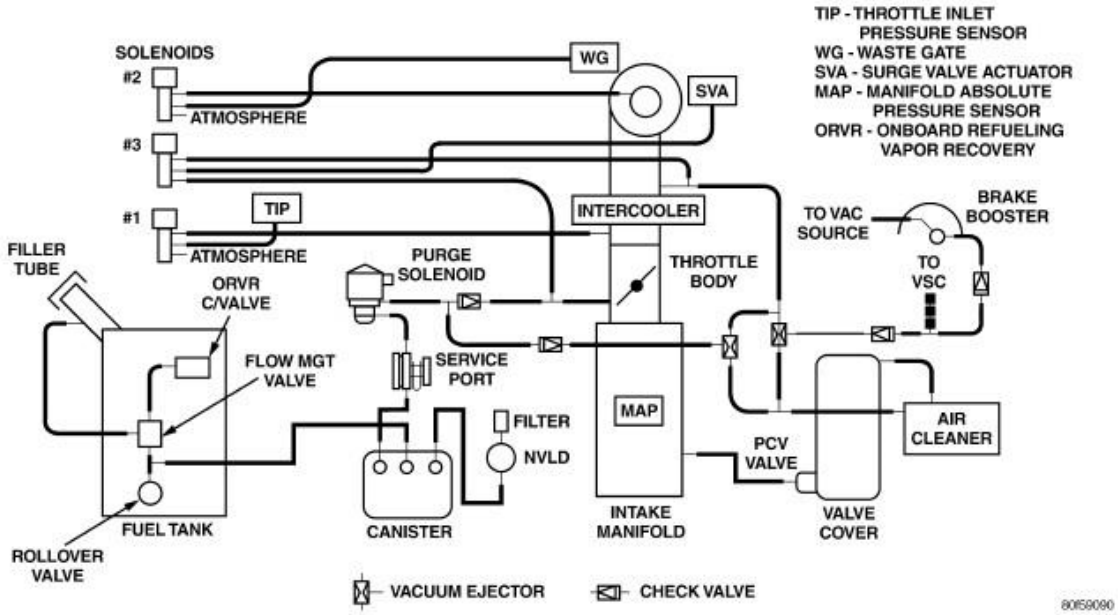


**Fig. 555: Vacuum Harness Schematic**
**Courtesy of CHRYSLER LLC**

Turbocharged vehicles are equipped with three solenoids that are PCM controlled. They are mounted to the right shock tower. A vacuum harness connects the solenoids to their respective component.

- Wastegate Actuator Solenoid
- Surge Valve Actuator Solenoid
- Throttle Inlet Pressure (TIP) Solenoid

### Removal

#### REMOVAL

 

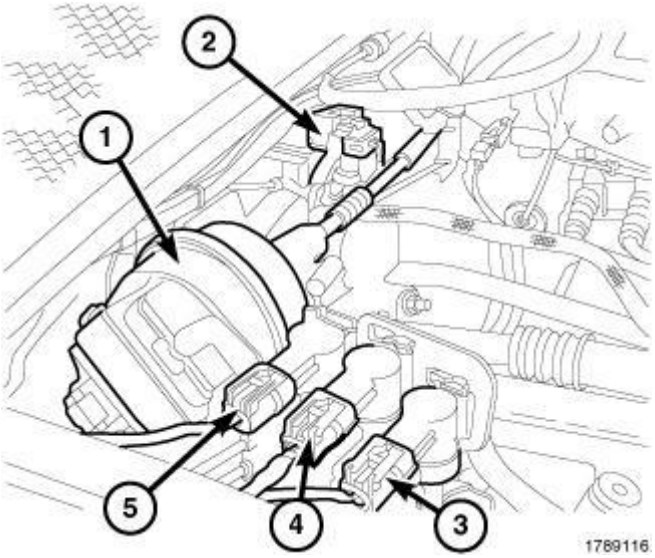


**Fig. 556: Wastegate Solenoid & Electrical Connectors**
**Courtesy of CHRYSLER LLC**

1. Disconnect the electrical connectors (3, 4 and 5).
2. Remove the nuts (1) the securing the solenoid mounting bracket to the shock tower.

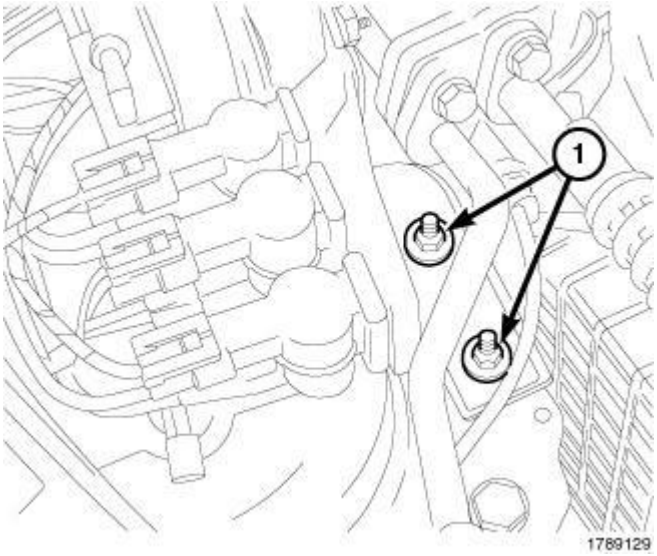


**Fig. 557: Nuts Securing Solenoid Mounting Bracket**
**Courtesy of CHRYSLER LLC**

3. Disconnect vacuum harness connector from solenoid.
4. Push on the solenoid lock tab and slide solenoid off the bracket.

 

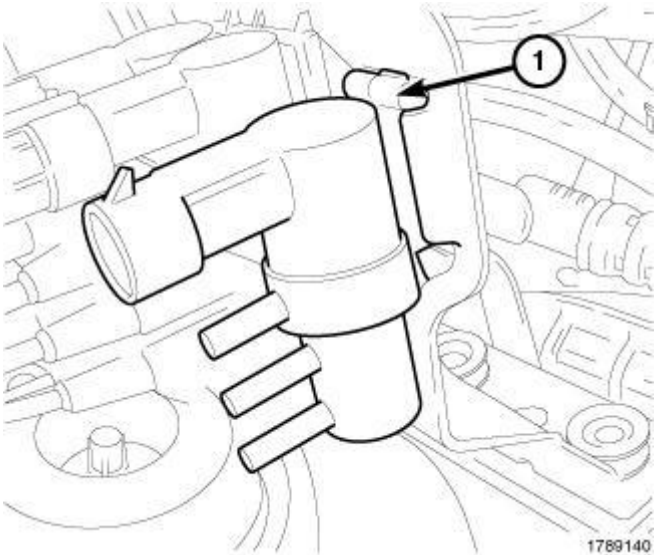


**Fig. 558: Solenoid Mounting Bracket**
**Courtesy of CHRYSLER LLC**

5. If necessary, remove the solenoid mounting bracket.

**Installation**

**INSTALLATION**

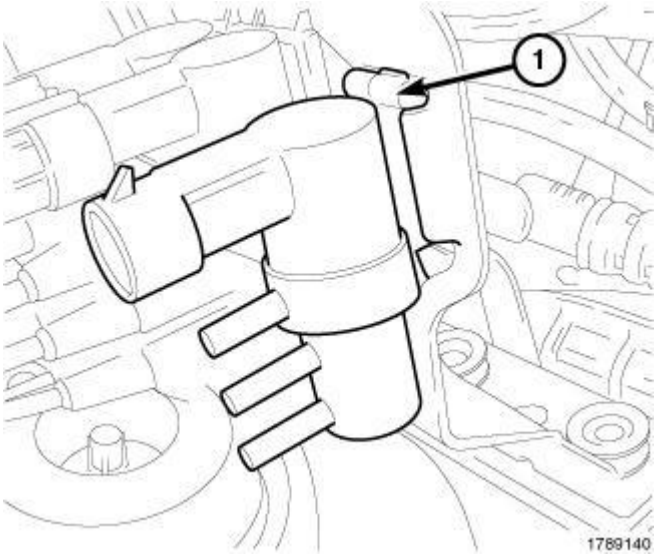


**Fig. 559: Solenoid Mounting Bracket**
**Courtesy of CHRYSLER LLC**

1. If removed, install the solenoid mounting bracket.
2. Slide the solenoids onto the mounting tab until the lock tab (1) engages.
3. Connect vacuum harness connector to solenoid.

 

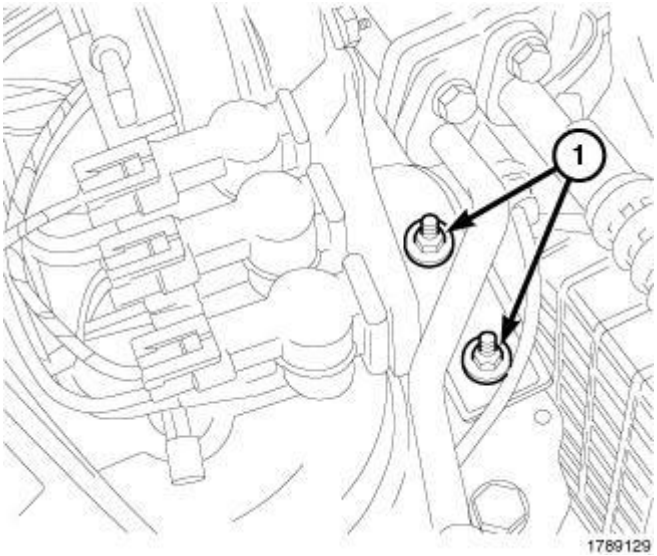


**Fig. 560: Nuts Securing Solenoid Mounting Bracket**
**Courtesy of CHRYSLER LLC**

4. Install the nuts securing the solenoid mounting bracket to the shock tower (1).

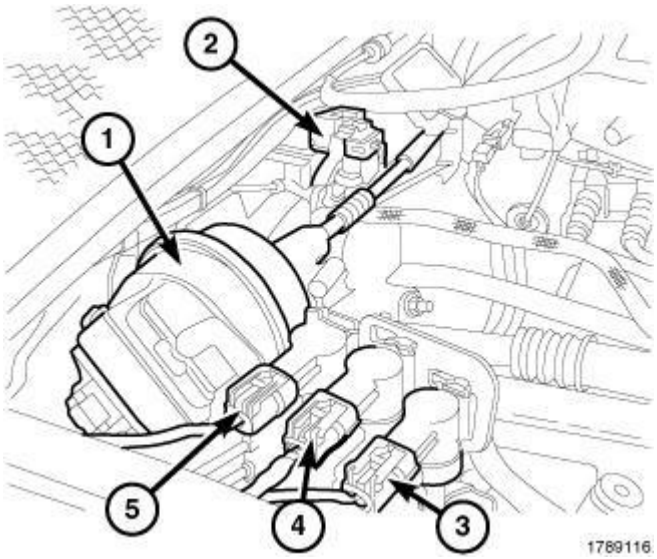


**Fig. 561: Wastegate Solenoid & Electrical Connectors**
**Courtesy of CHRYSLER LLC**

5. Connect solenoid electrical connectors (3, 4 and 5).

## TURBOCHARGER

### Description

#### DESCRIPTION

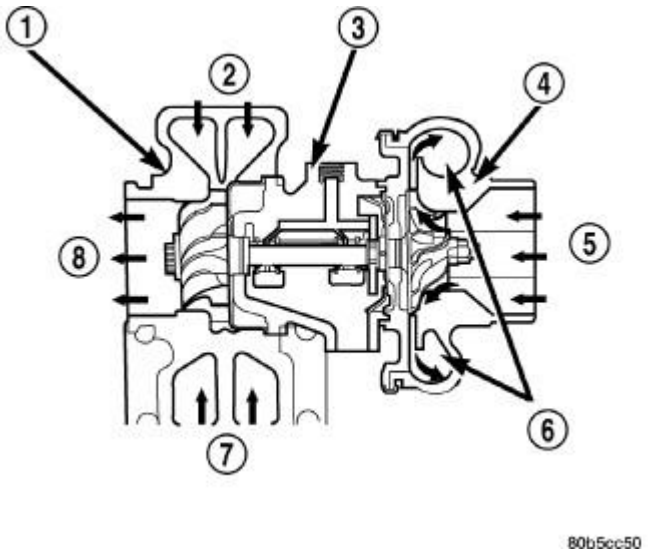


**Fig. 562: Turbocharger Description**
**Courtesy of CHRYSLER LLC**

| |
|---|
| 1 - TURBINE SECTION |
| 2 - EXHAUST GAS |
| 3 - BEARING HOUSING |
| 4 - COMPRESSOR SECTION |
| 5 - INLET AIR |
| 6 - COMPRESSED AIR TO ENGINE |
| 7 - EXHAUST GAS |
| 8 - EXHAUST GAS TO EXHAUST PIPE |

**CAUTION: The turbocharger is a performance part and must not be tampered with. Tampering with the variable vane components can reduce durability by increasing cylinder pressure and thermal loading due to incorrect inlet and exhaust manifold pressure. Poor fuel economy and failure to meet regulatory emissions laws may result. Increasing the turbocharger boost WILL NOT increase engine power.**

The turbocharger is an exhaust-driven supercharger which increases the pressure and density of the air entering the engine. With the increase of air entering the engine, more fuel can be injected into the cylinders, which creates more power during combustion.

The turbocharger assembly consists of four (4) major component systems:

- Turbine section (1)
- Compressor section (4)
- Bearing housing (3)
- Wastegate

 

**Operation**

**OPERATION**

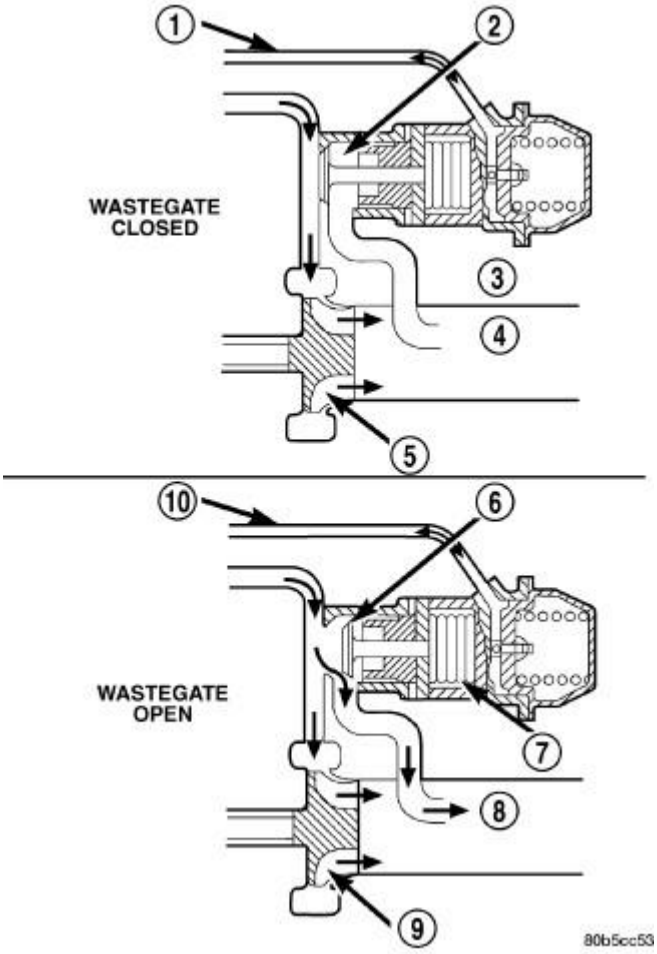


**Fig. 563: Wastegate Operation**
**Courtesy of CHRYSLER LLC**

| |
|---|
| 1 - SIGNAL LINE |
| 2 - EXHAUST BYPASS VALVE |
| 3 - WASTEGATE |
| 4 - EXHAUST |
| 5 - TURBINE |
| 6 - EXHAUST BYPASS VALVE |
| 7 - WASTEGATE |
| 8 - EXHAUST |
| 9 - TURBINE |
| 10 - SIGNAL LINE |

 

Exhaust gas pressure and energy drive the turbine, which in turn drives a centrifugal compressor that compresses the inlet air, and forces the air into the engine through the charge air cooler and plumbing. Since heat is a by-product of this compression, the air must pass through a charge air cooler to cool the incoming air and maintain power and efficiency.

**Increasing air flow to the engine provides:**

- Improved engine performance
- Improved operating economy
- Altitude compensation

The turbocharger also uses a wastegate (3), which regulates intake manifold air pressure and prevents over boosting at high engine speeds. When the wastegate valve is closed, all of the exhaust gases flow through the turbine wheel. As the intake manifold pressure increases, the wastegate actuator opens the valve, diverting some of the exhaust gases away from the turbine wheel. This limits turbine shaft speed and air output from the impeller.

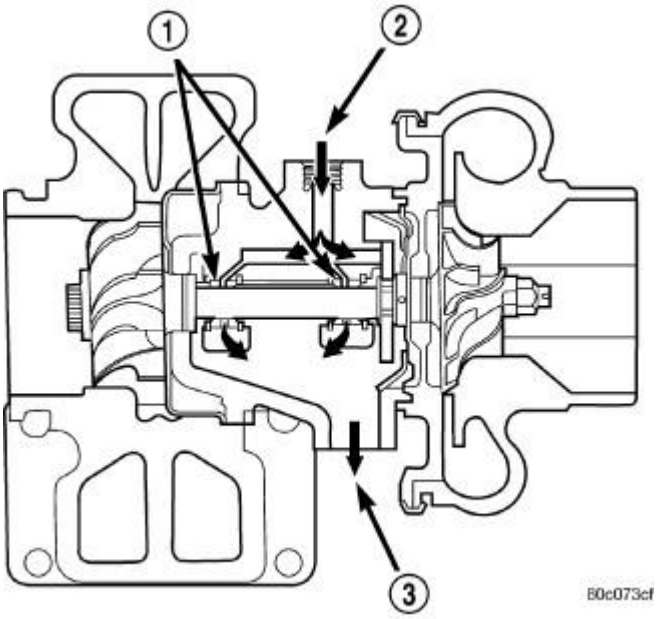


**Fig. 564: Turbocharger Bearings, Oil Supply & Drain**
**Courtesy of CHRYSLER LLC**

| |
|---|
| 1 - BEARINGS |
| 2 - OIL SUPPLY (FROM ENGINE BLOCK) |
| 3 - OIL RETURN (TO OIL PAN) |

The turbocharger is cooled by engine coolant. The coolant is delivered to the turbocharger by a supply line that connects from engine block to the turbocharger. A coolant return line connects the turbocharger to heater tubes.

The turbocharger is lubricated by engine oil that is pressurized, cooled, and filtered. The oil is delivered to the turbocharger by a supply line that is tapped into the cylinder block. The oil travels into the bearing housing,

where it lubricates the shaft and bearings (1). A return pipe at the bottom of the bearing housing, routes the engine oil back to the crankcase.

The most common turbocharger failure is bearing failure related to repeated hot shutdowns with inadequate "cool-down" periods. A sudden engine shut down after prolonged operation will result in the transfer of heat from the turbine section of the turbocharger to the bearing housing. This causes the oil to overheat and break down, which causes bearing and shaft damage the next time the vehicle is started.

Letting the engine idle after extended operation allows the turbine housing to cool to normal operating temperature. The following chart should be used as a guide in determining the amount of engine idle time required to sufficiently cool down the turbocharger before shut down, depending upon the type of driving and the amount of cargo.

| TURBOCHARGER "COOL DOWN" CHART | |
|---|---|
| Driving Conditions | Idle Time (in minutes) Before Shut Down |
| Normal Driving | Not required |
| Aggressive Driving or Heavily Loaded | 3 |
| Trailer Tow | 5 |

**Removal**

**REMOVAL**

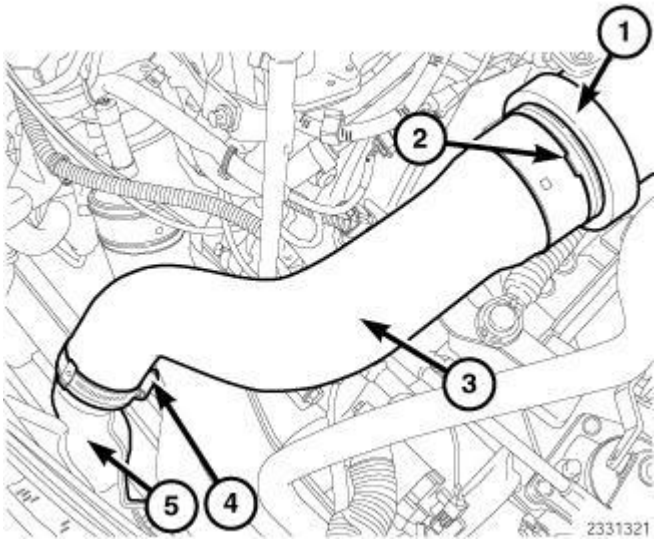


**Fig. 565: Upper Charge Air Tube, Lock Ring, Lower Charge Air Tube, Clamp & Charge Air Cooler (CAC) Inlet**
**Courtesy of CHRYSLER LLC**

1. Disconnect the negative battery cable.
2. Remove the engine trim cover.
3. Remove the air cleaner assembly. Refer to **BODY, Air Cleaner , Removal** **BODY, Air Cleaner ,**

**Removal** **BODY, Air Cleaner , Removal**.

4. Release the lock ring (2) and remove the lower charge air tube (3) from the upper charge air to turbocharger tube (1).
5. Remove the upper charge air to turbocharger tube (1).

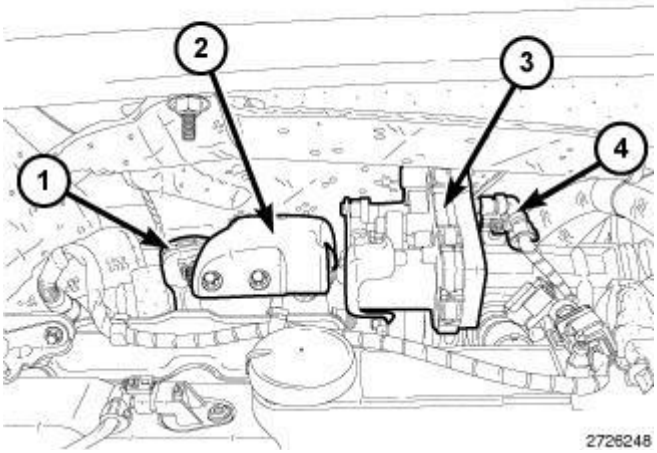


**Fig. 566: Catalytic Converter, Turbocharger Heat Shield, Catalytic Converter Band Clamp & Upstream Temperature Sensor**
**Courtesy of CHRYSLER LLC**

6. Disconnect the electrical connector (4) from the turbocharger actuator (3).
7. Remove the catalytic converter. Refer to **CONVERTER, Catalytic , Removal** .

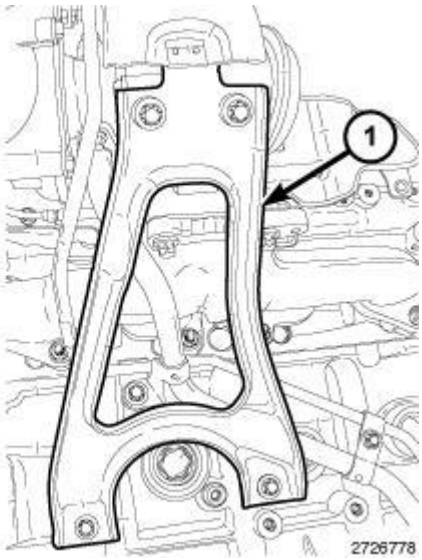


**Fig. 567: Turbocharger Bracket**
**Courtesy of CHRYSLER LLC**

8. Remove the turbocharger bracket (1).

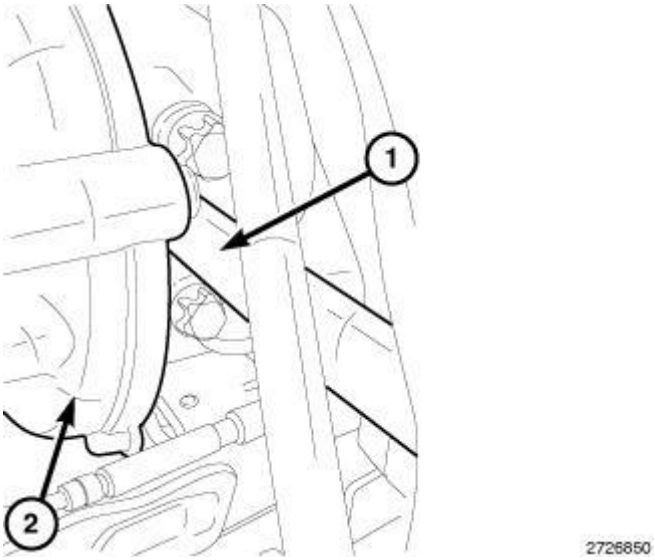


**Fig. 568: Oil Return Line At Turbocharger**
**Courtesy of CHRYSLER LLC**

9. Disconnect the turbocharger temperature sensor from the engine wiring harness.
10. Remove the turbocharger oil return line (1) from the turbocharger (2).

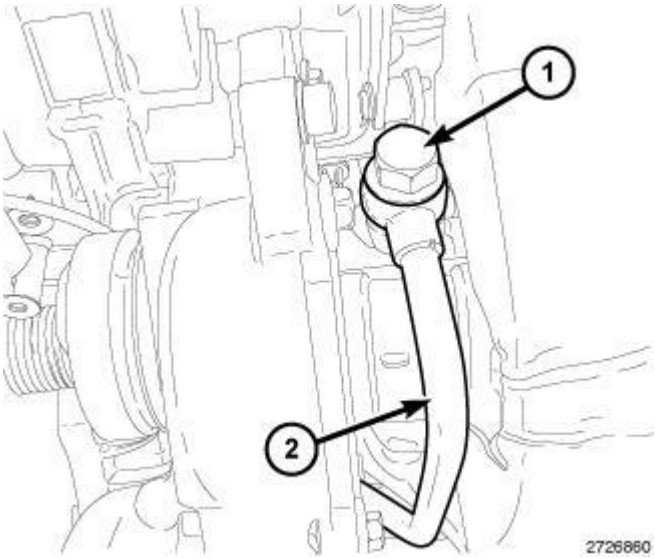


**Fig. 569: Oil Supply Line & Banjo Bolt At Turbocharger**
**Courtesy of CHRYSLER LLC**

11. Remove the turbocharger oil send line (2) from the turbocharger.

 

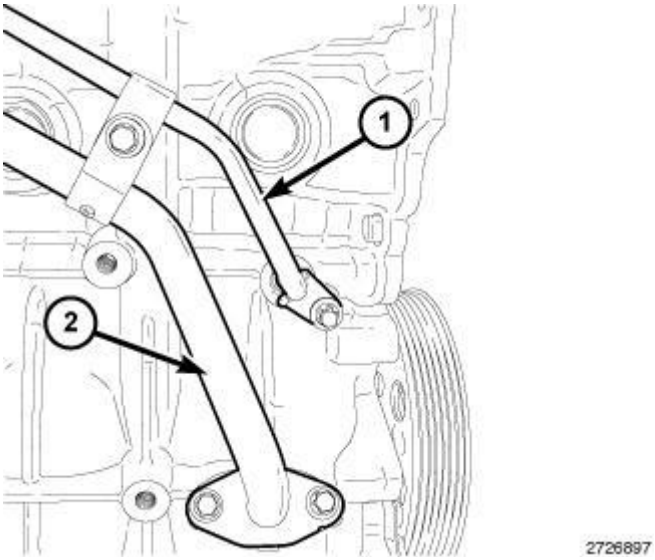


**Fig. 570: Oil Supply & Return Lines**
**Courtesy of CHRYSLER LLC**

12. Remove the turbocharger oil send and return lines (1, 2) from the engine block and position aside.

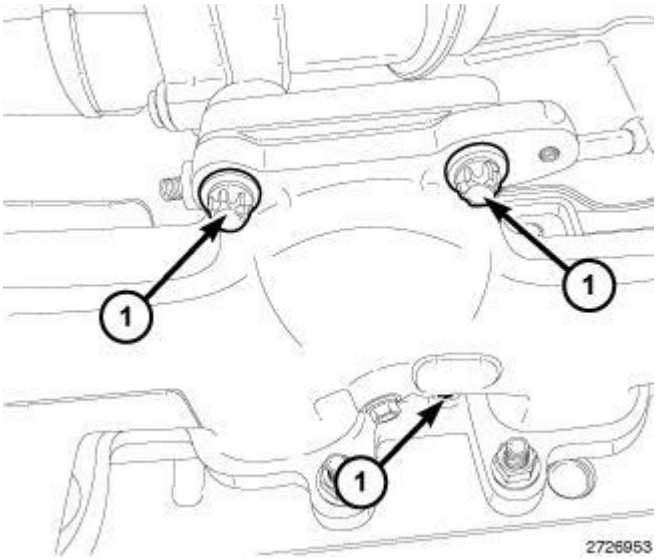


**Fig. 571: Turbocharger-To-Exhaust Manifold Mounting Bolts**
**Courtesy of CHRYSLER LLC**

13. Remove the turbocharger to exhaust manifold mounting bolts (1) from under the exhaust manifold.
14. Remove the turbocharger from underneath the vehicle.

**Inspection**

**INSPECTION**

 

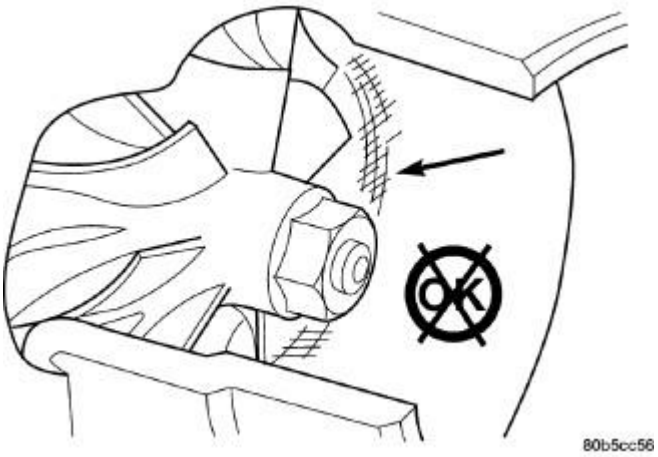


**Fig. 572: Inspect Compressor Housing For Impeller Rubbing Condition**
**Courtesy of CHRYSLER LLC**

Visually inspect the turbocharger and exhaust manifold gasket surfaces. Replace stripped or eroded mounting studs.

1. Visually inspect the turbocharger for cracks. The following cracks are NOT acceptable:
   - Cracks in the turbine and compressor housing that go completely through.
   - Cracks in the mounting flange that are longer than 15 mm (0.6 in.).
   - Cracks in the mounting flange that intersect bolt through-holes.
   - Two (2) Cracks in the mounting flange that are closer than 6.4 mm (0.25 in.) together.
2. Visually inspect the impeller and compressor wheel fins for nicks, cracks, or chips.
3. Visually inspect the turbocharger compressor housing for an impeller rubbing condition. Replace the turbocharger if the condition exists.

**Installation**

**INSTALLATION**

 

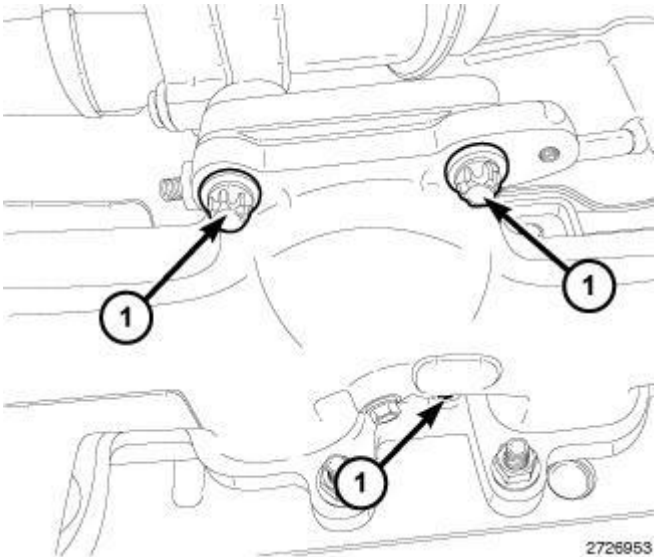


**Fig. 573: Turbocharger-To-Exhaust Manifold Mounting Bolts**
**Courtesy of CHRYSLER LLC**

1. From under the vehicle, position the turbocharger assembly to the exhaust manifold.
2. Install the turbocharger to exhaust manifold mounting bolts (1). Tighten the bolts to 20 N.m + 90° (177 ft.lbs + 90°)

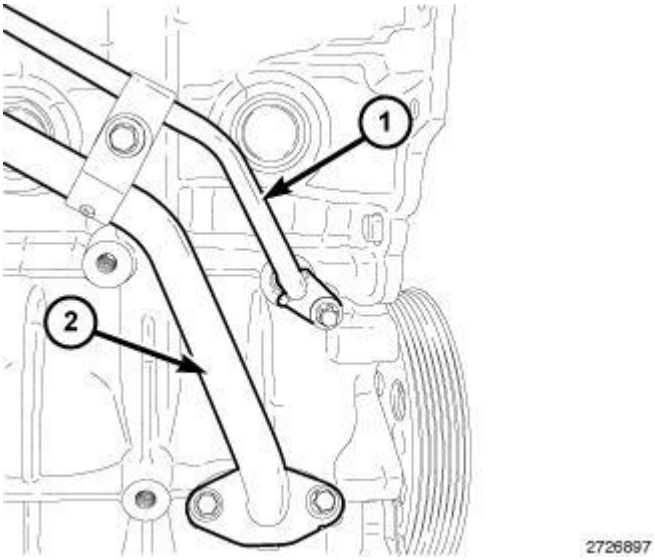


**Fig. 574: Oil Supply & Return Lines**
**Courtesy of CHRYSLER LLC**

3. Install the turbocharger oil send and return lines (1, 2) to the engine block. Tighten the bolts to 9 N.m (80 in. lbs.).

 

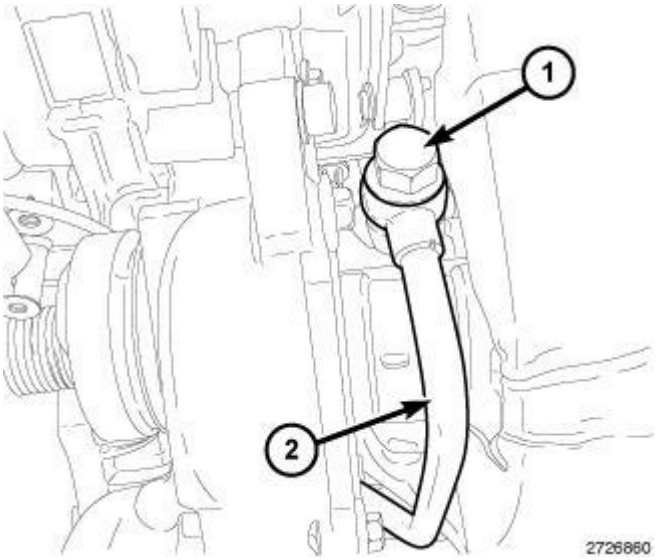


**Fig. 575: Oil Supply Line & Banjo Bolt At Turbocharger**
**Courtesy of CHRYSLER LLC**

4. Install the turbocharger oil feed line (2) to the turbocharger. Tighten the banjo bolt (1) to 24 N.m (18 ft.lbs.).

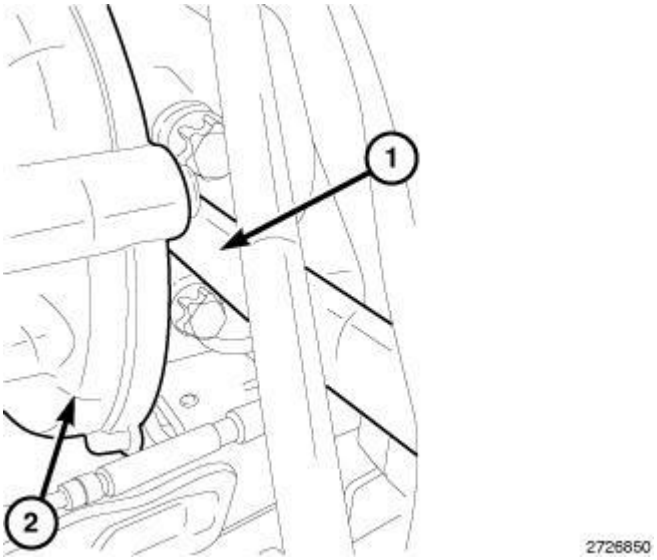


**Fig. 576: Oil Return Line At Turbocharger**
**Courtesy of CHRYSLER LLC**

5. Install the turbocharger oil return line to the turbocharger assembly. Tighten the fasteners to 9 N.m (80 in. lbs.).
6. Connect the turbocharger temperature sensor to the engine wiring harness.

 

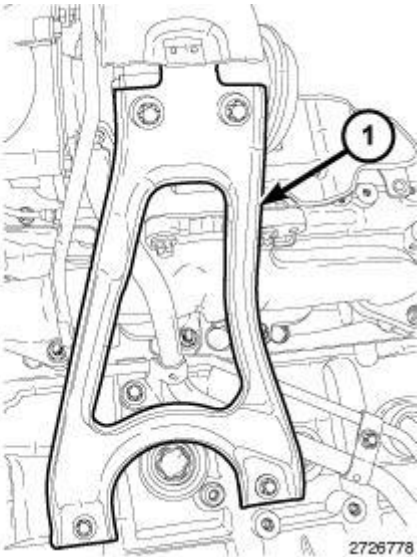


**Fig. 577: Turbocharger Bracket**
**Courtesy of CHRYSLER LLC**

7. Install the turbocharger bracket (1). Tighten the fasteners to 20 N.m (15 ft. lbs.).

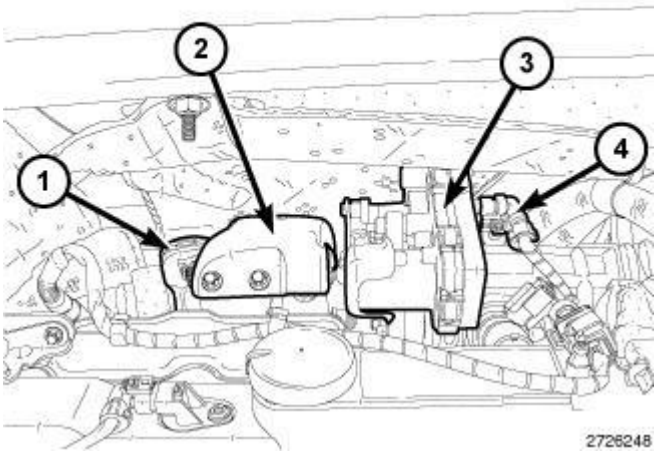


**Fig. 578: Catalytic Converter, Turbocharger Heat Shield, Catalytic Converter Band Clamp & Upstream Temperature Sensor**
**Courtesy of CHRYSLER LLC**

8. Install the catalytic converter. Refer to **CONVERTER, Catalytic , Installation** .
9. Connect the electrical connector (4) to the turbocharger actuator (3).

 

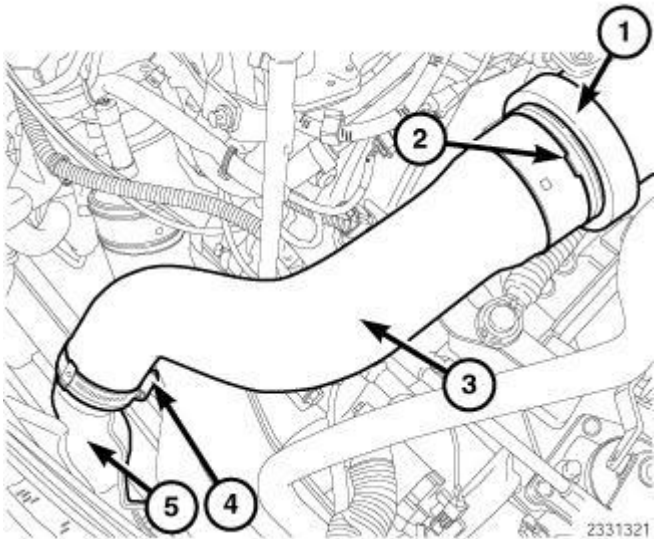


**Fig. 579: Upper Charge Air Tube, Lock Ring, Lower Charge Air Tube, Clamp & Charge Air Cooler (CAC) Inlet**
**Courtesy of CHRYSLER LLC**

10. Install the upper charge air to turbocharger tube.
11. Install the upper charge air tube (1) to the lower charge air tube (3). Connect the lock ring (2).
12. Install the air cleaner assembly. Refer to **BODY, Air Cleaner , Installation**.
13. Install the engine trim cover.
14. Connect negative battery cable.

# VALVE TIMING

## CHAIN, TIMING

### Removal

#### REMOVAL

1. Disconnect the negative battery cable.
2. Remove the engine cover.
3. Remove cylinder head cover. Refer to **COVER(S), Cylinder Head , Removal**.

 

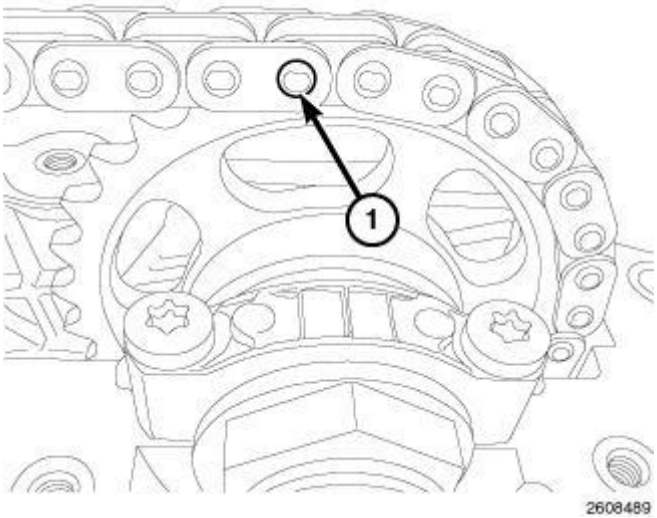


**Fig. 580: Timing Chain Pin At Chain Link**
**Courtesy of CHRYSLER LLC**

**CAUTION: Be sure that the thrust pin is centered on the chain link before attempting to remove pin or damage to chain or tools may result**

4. When fitting the Chain Link Tool (special tool #9312-1, Block, Pressing) thrust spindle, ensure that the thrust pin is positioned at the left timing chain pin of a chain link (1) and is centered or damage to chain result.

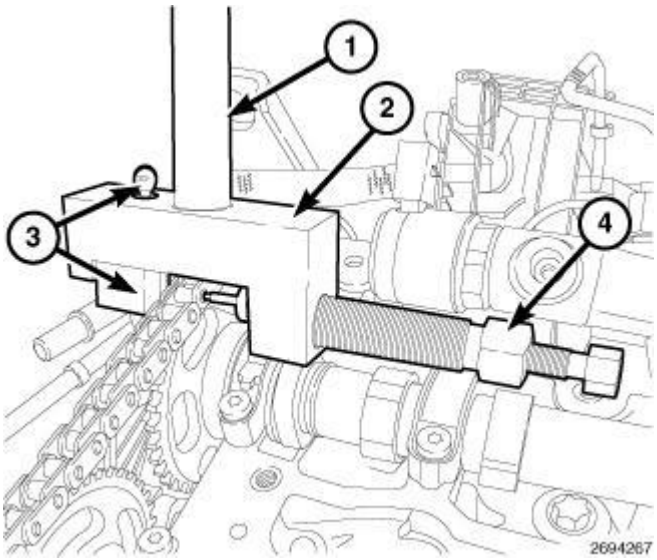


**Fig. 581: Chain Link Tool, Handle, Insert & Thrust Screw/Pin**
**Courtesy of CHRYSLER LLC**

**CAUTION: Cover timing chain cover recess to prevent foreign material from entering engine.**

 

5. Assemble Chain Link Tool (special tool #9312-1, Block, Pressing) (2) using (special tool #9312-2, Handle) handle (1), and (special tool #9312-4, Assembly, Screw, Forcing) (4) thrust screw/pin. Install insert (special tool #9312-13, Guide, Pin Removal) (3) and retain with screw provided and install into timing chain.

**CAUTION: Care must be taken not to drop timing chain plates into the engine once the timing chain is separated.**

**NOTE: when installing Chain Link Tool (special tool #9312-1, Block, Pressing) onto timing chain link, be sure to back off the smaller nut of the thrust pin (special tool #9312-4, Assembly, Screw, Forcing) so tool can be installed on timing chain. Screw the thrust spindle #(special tool #9312-4, Assembly, Screw, Forcing) in until it is seated and aligned properly over the left timing chain pin of a chain link, as viewed.**

6. Screw the thrust pin in and separate the timing chain.
7. Unscrew the thrust spindle and remove the tool.
8. Remove pressed - out timing chain pin from chain separation tool.
9. Remove the camshaft. Refer to **CAMSHAFT, Engine , Removal**.

**Installation**

**INSTALLATION**

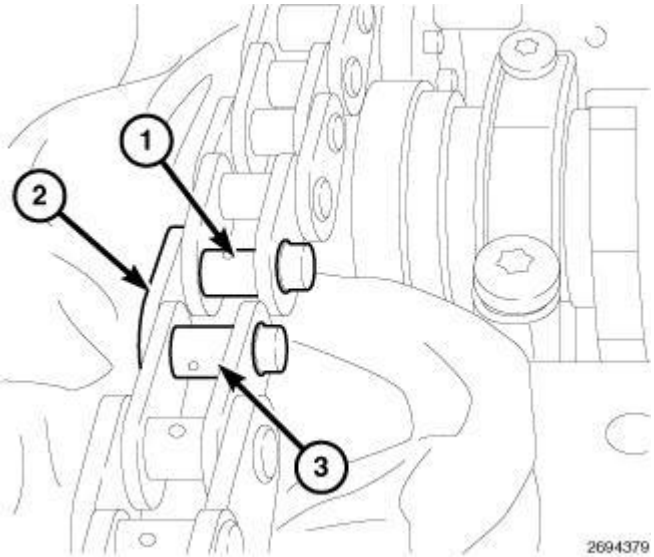


**Fig. 582: Connecting New Timing Chain With Old Timing Chain With Assembly Link**
**Courtesy of CHRYSLER LLC**

**CAUTION: IT IS ESSENTIAL that the installation procedure is followed exactly. Failure to do so will result in severe engine damage.**

 

**CAUTION: Cover timing case recesses to prevent foreign material from entering engine.**

1. Connect new timing chain (3) and old timing chain (1) with assembly link (special tool #8951, Assembly Links) 2), assembly plate and locking element, and secure.

**NOTE: Rotate engine at crankshaft only. DO NOT rotate engine backward.**

**NOTE: Draw out the end of old timing chain evenly as it becomes free, to the same extent that new timing chain is drawn in.**

2. Using the Vibration Damper Holder (special tool #10236, Holder, Vibration Damper), draw in new timing chain by rotating the crankshaft slowly in direction of rotation of engine until the ends of the new timing chain meet and can be connected.
3. Verify that the engine is at TDC.

**NOTE: Install the camshafts and stop at step 8. Now continue with the timing chain installation procedure and then resume with camshaft installation procedure.**

4. Install the camshafts. Refer to **CAMSHAFT, Engine , Installation**.

**NOTE: Assembly link is only an assembly aid and NOT designed for engine running.**

5. Remove assembly link (special tool #8951, Assembly Links) locking element, outer plate, and link (2).
6. Engage both halves of the new timing chain into the timing chain gear.
7. Install the new chain center link plate (2).

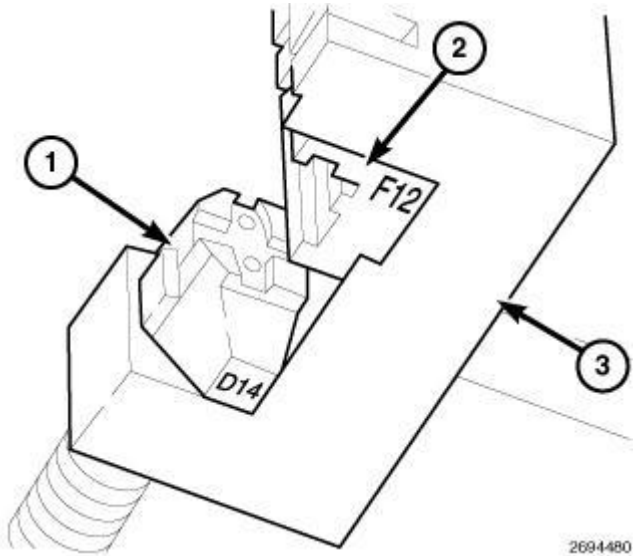

**Fig. 583: Rivet Press Tool, Anvil & Thrust Piece**
**Courtesy of CHRYSLER LLC**

**CAUTION: Cover voids in timing chain cover. Be careful not to allow the guide link to fall into the timing chain cover as the new link is pressed in.**

**NOTE: The outer plate is held magnetically by link plate installation tool.**

8. Assemble the Rivet Press Tool (special tool #10241, Screw, Forcing) (3), with the anvil (special tool #10228-F12, Guide Piece) (2), and thrust piece (special tool #10228-D14, Thrust Piece) (1).

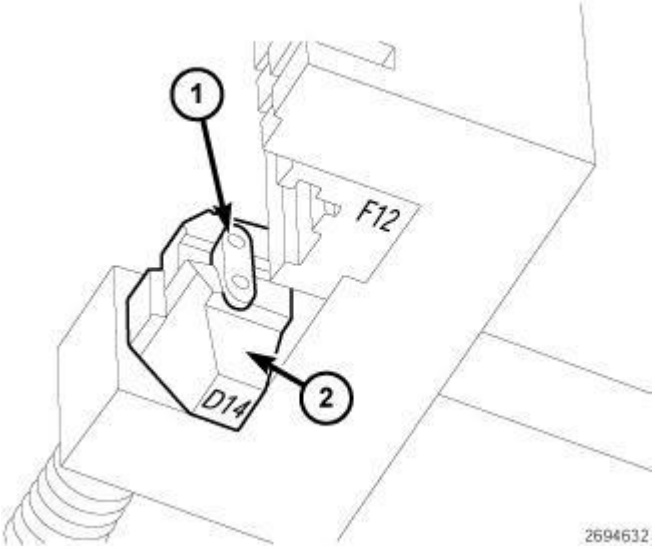


**Fig. 584: Placing Outer Plate Into Thrust Piece With Digit D14**
**Courtesy of CHRYSLER LLC**

**NOTE: The outer plate (1) is retained magnetically.**

9. Place outer plate (1) into thrust piece (special tool #10228, Assembly, Inserts Timing Chain) with digit D14 (2).

 

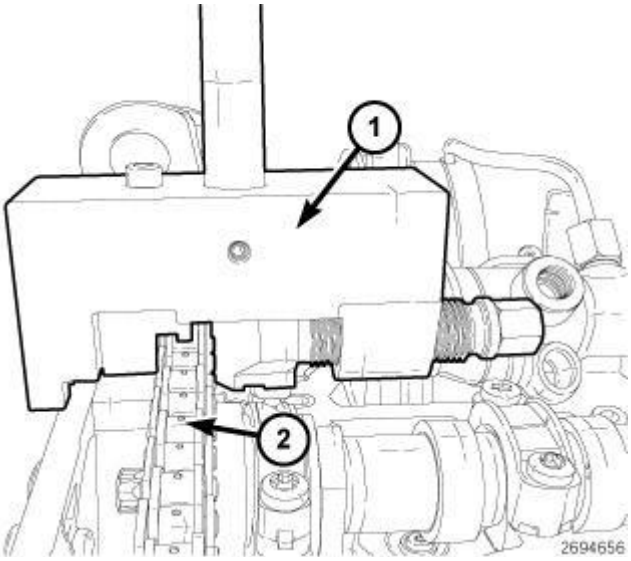


**Fig. 585: Installing Rivet Press Tool Onto Timing Chain**
**Courtesy of CHRYSLER LLC**

10. Install Rivet Press Tool (special tool #10241, Screw, Forcing) (1) onto the timing chain (2) and tighten spindle until link plate is fully seated and remove tool (1).

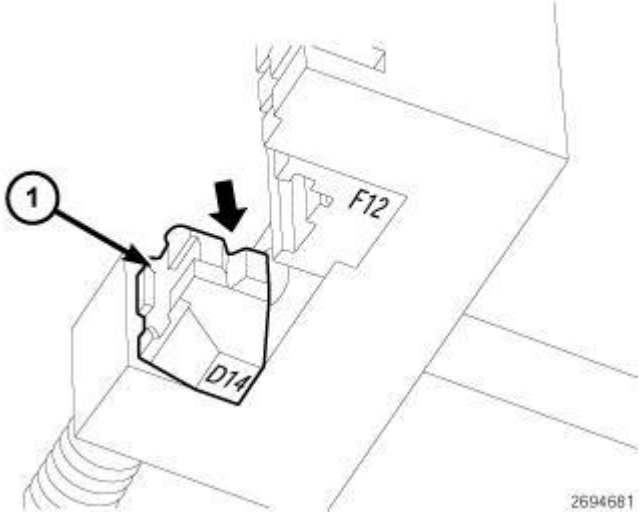


**Fig. 586: Turning Over Thrust Piece With Digit D14**
**Courtesy of CHRYSLER LLC**

11. Turn over thrust piece (special tool #10228, Assembly, Inserts Timing Chain) (1) with digit D14 on the riveted profile as indicated by arrow.

 

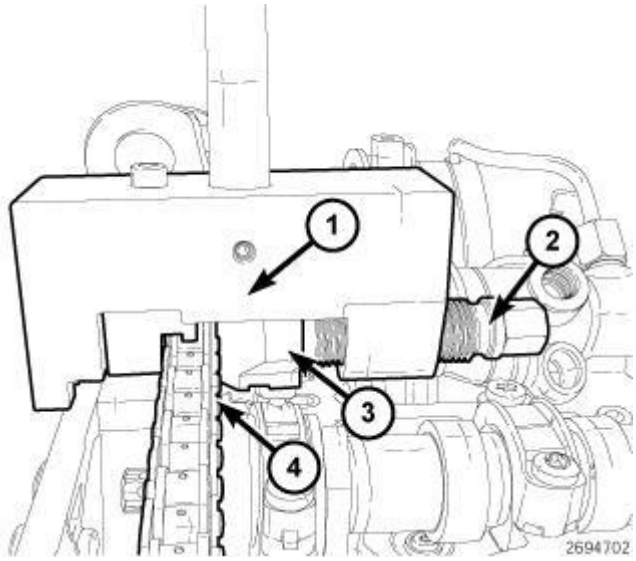


**Fig. 587: Riveting Press Tool, Timing Chain Thrust Spindle, Thrust Piece & Timing Chain**
**Courtesy of CHRYSLER LLC**

**NOTE: Ensure that the riveted link and riveting tool are aligned.**

12. Position Riveting Press Tool (special tool #10241, Screw, Forcing) (1) exactly over middle of pin.
13. Tighten the timing chain thrust spindle (2) until thrust piece (3) is fully seated against the timing chain (4) to 32 N.m (24 ft. lbs.). Repeat process for both link rivets.

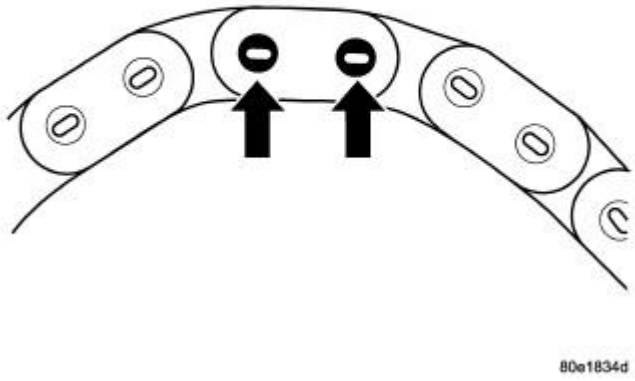


**Fig. 588: Rivet Inspection**
**Courtesy of CHRYSLER LLC**

14. Remove Riveting Press Tool (special tool #10241, Screw, Forcing) and inspect rivets to ensure they have been properly peened as indicated. Repeat process if necessary.

 

15. Install cylinder head cover. Refer to **COVER(S), Cylinder Head , Installation**.
16. Install engine cover.
17. Connect the negative battery cable.

## COVER(S), ENGINE TIMING

### Removal

#### UPPER TIMING CHAIN COVER

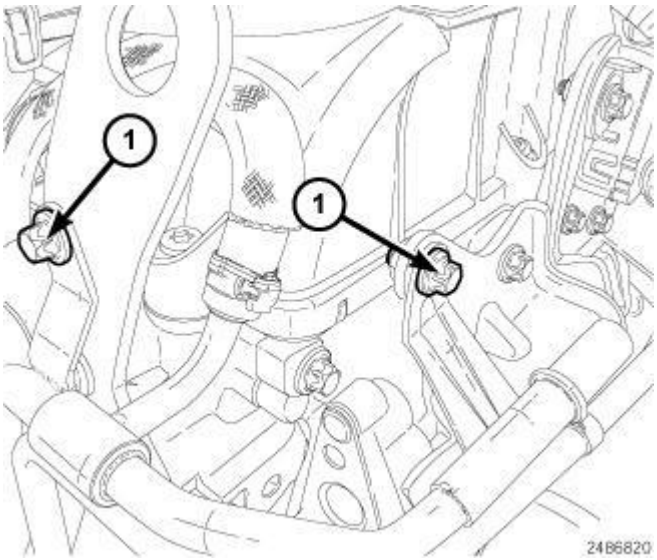


**Fig. 589: Upper Fuel Line Bracket Bolts**
**Courtesy of CHRYSLER LLC**

1. Disconnect negative battery cable.
2. Remove cylinder head cover. Refer to **COVER(S), Cylinder Head , Removal**.
3. Remove the two upper fuel line bracket bolts (1).

 

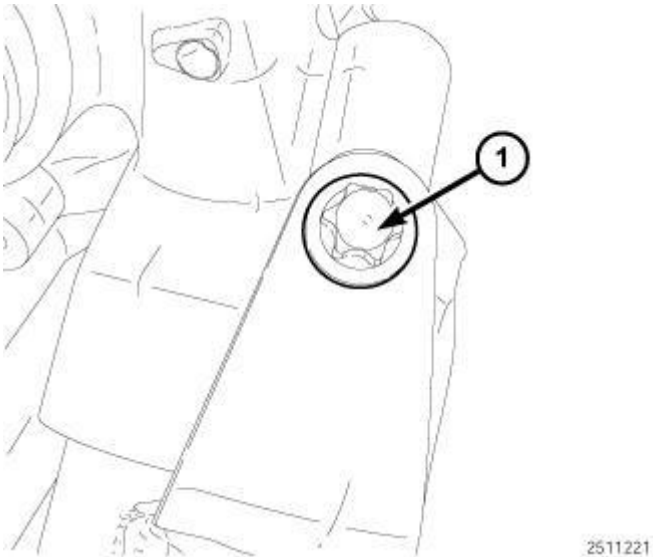


**Fig. 590: Charge Air Cooler CAC Tube Bolt**
**Courtesy of CHRYSLER LLC**

4. Remove the bolt (1) securing the Charge Air Cooler (CAC) tube to turbocharger.

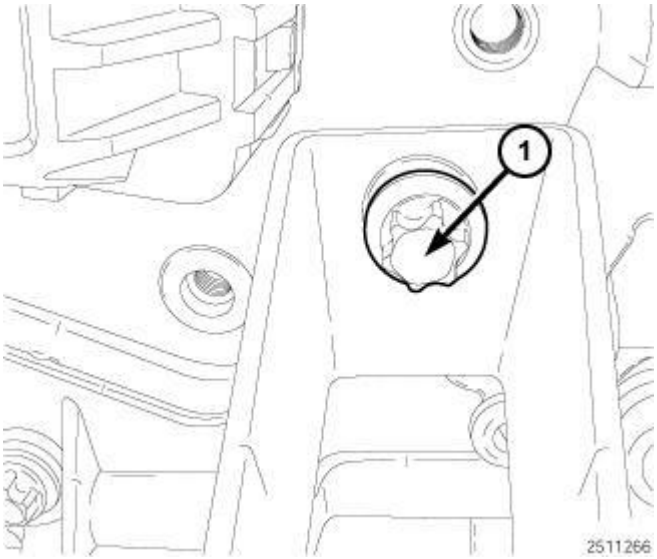


**Fig. 591: Bolt Securing CAC Tube To Glow Plug Module**
**Courtesy of CHRYSLER LLC**

5. Remove bolt (1) securing the (CAC) tube to glow plug module.

 

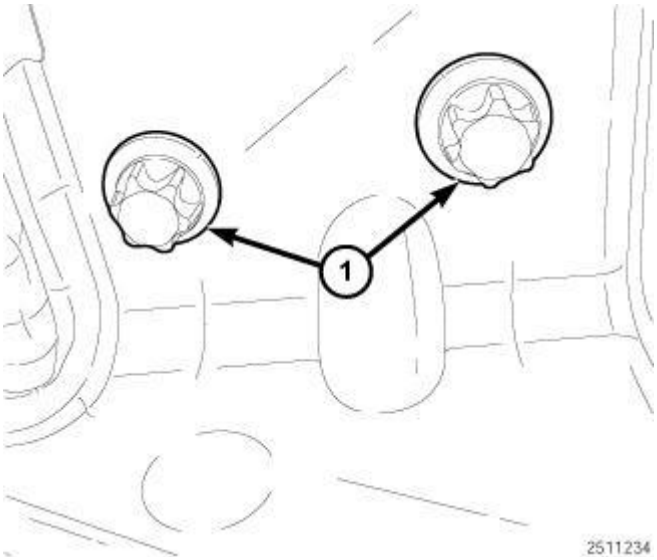


**Fig. 592: CAC Tube And Bracket Assembly Bolts**
**Courtesy of CHRYSLER LLC**

6. Remove bolts (1) and the (CAC) tube and bracket assembly.

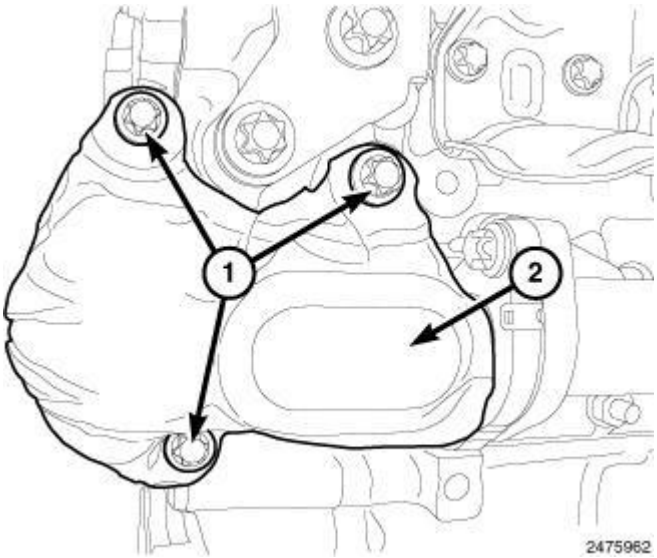


**Fig. 593: EGR Pipe Heat Shield & Bolts**
**Courtesy of CHRYSLER LLC**

7. Remove bolts (1) and the EGR pipe heat shield (2).

 

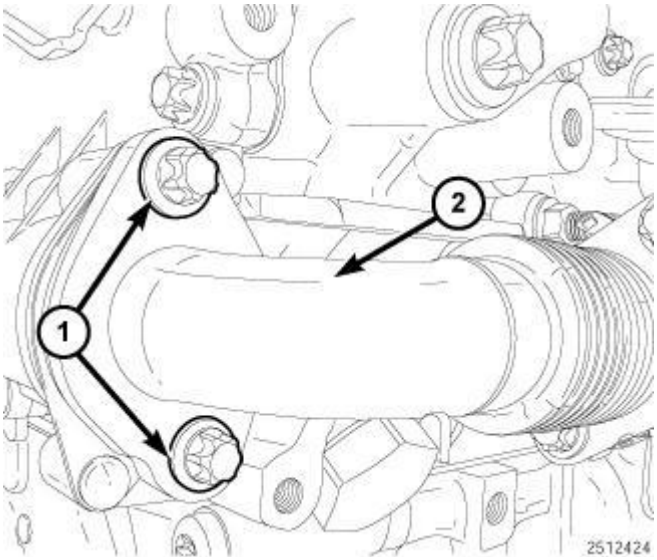


**Fig. 594: EGR Pipe & Bolt**
**Courtesy of CHRYSLER LLC**

8. Remove bolts (1) from the EGR pipe (2).
9. Remove the cooling fan module. Refer to **FAN, Cooling , Removal** .

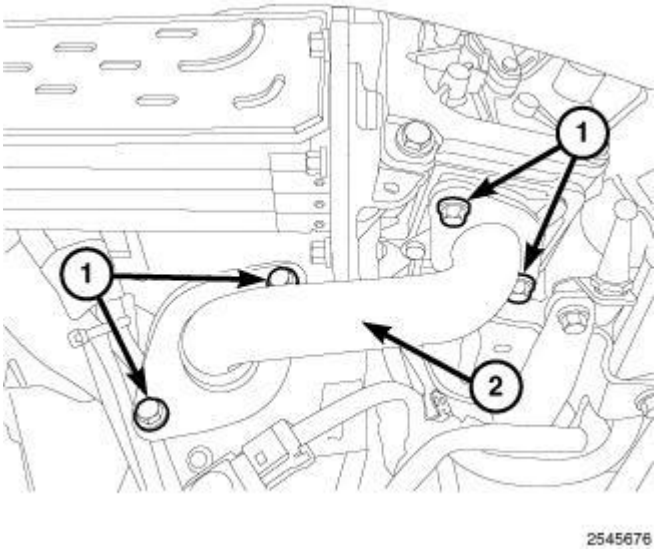


**Fig. 595: EGR Tube & Bolts**
**Courtesy of CHRYSLER LLC**

10. Remove bolts (1) and the EGR tube (2).

 

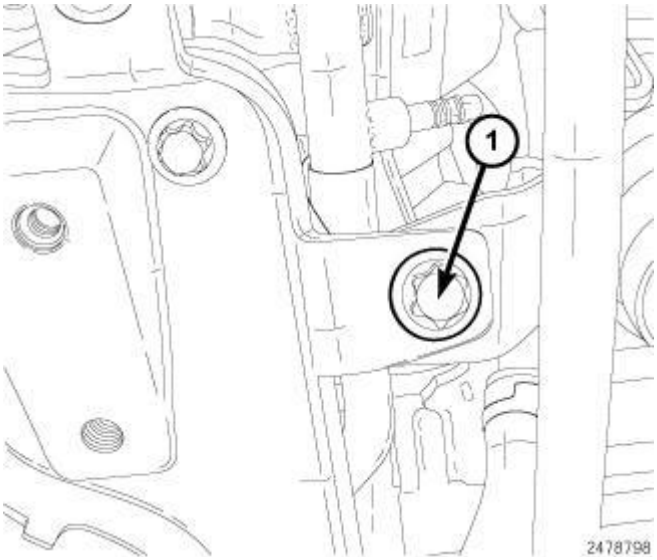


**Fig. 596: Oil Dip Stick Bolt**
**Courtesy of CHRYSLER LLC**

11. Remove the bolt (1) securing the oil dip stick tube.

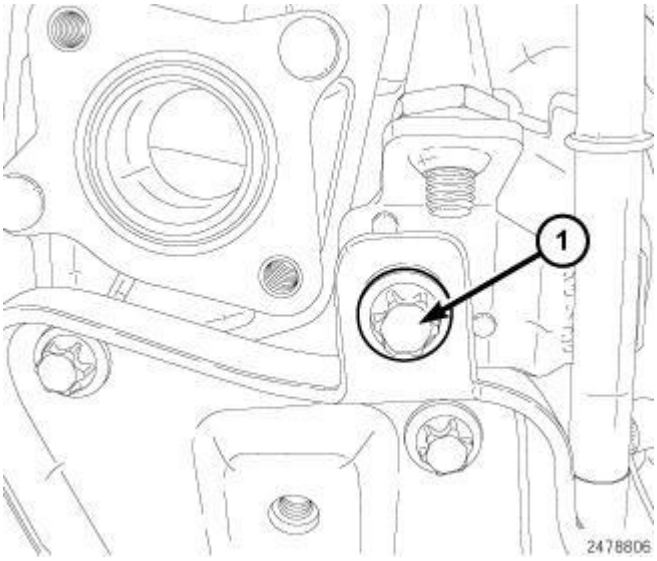


**Fig. 597: Vacuum Tube Bolt**
**Courtesy of CHRYSLER LLC**

12. Remove the bolt (1) securing the vacuum tube.

 

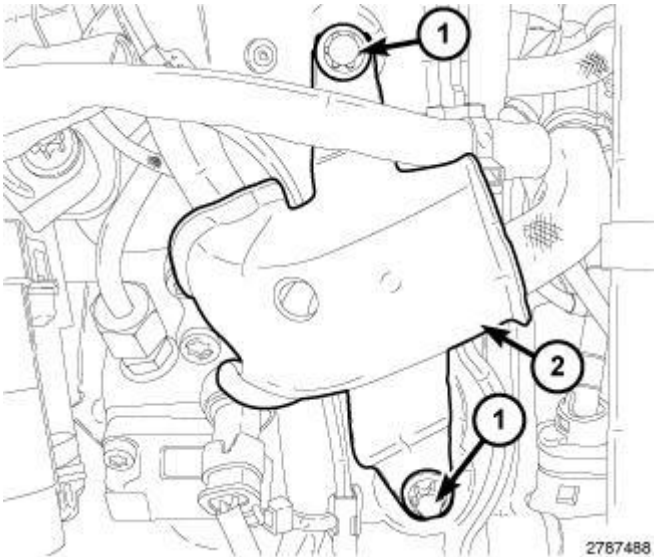


**Fig. 598: Bolts & Heat Shield**
**Courtesy of CHRYSLER LLC**

13. Remove bolts (1) and the heat shield (2).

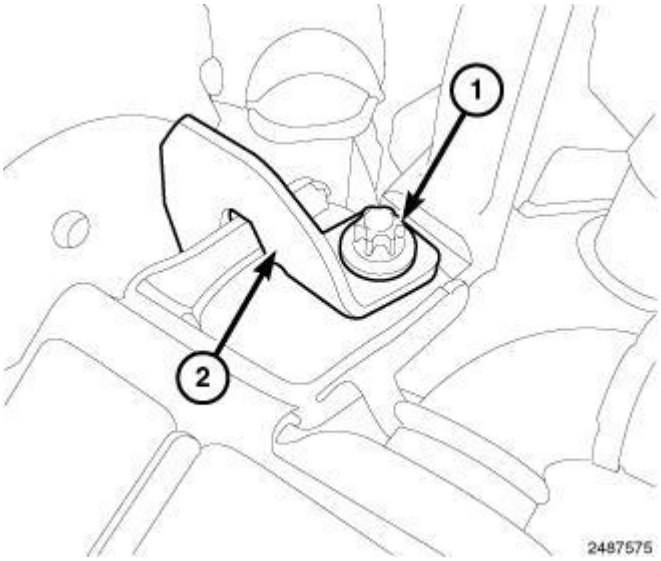


**Fig. 599: Upper EGR Cooler Bolt & Bracket**
**Courtesy of CHRYSLER LLC**

14. Loosen the upper EGR cooler bolt (1).

 

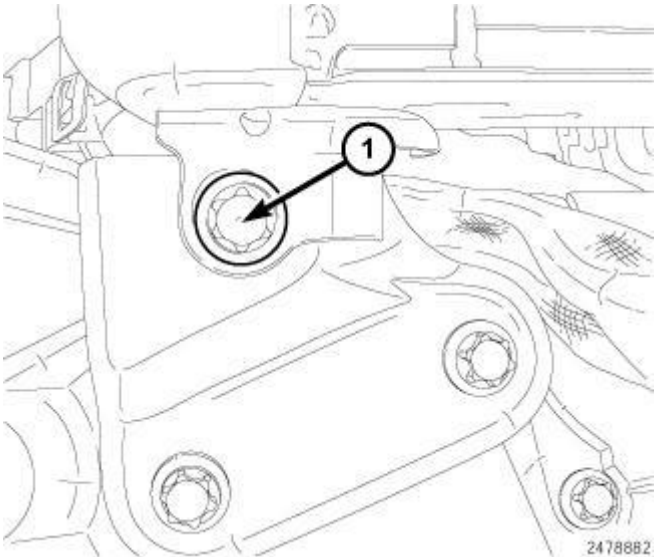


**Fig. 600: Lower EGR Cooler Bolt**
**Courtesy of CHRYSLER LLC**

15. Loosen the lower EGR cooler bolt (1).

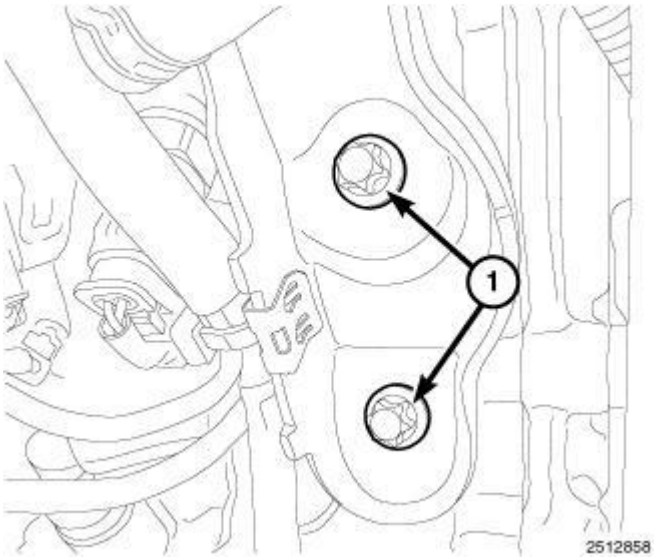


**Fig. 601: EGR Support Bracket Bolts**
**Courtesy of CHRYSLER LLC**

16. Loosen the EGR support bracket bolts (1).

 

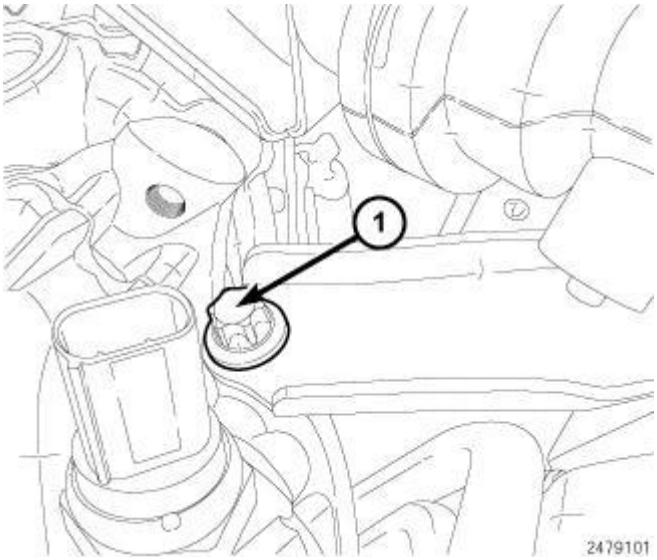


**Fig. 602: Support Bracket Bolt**
**Courtesy of CHRYSLER LLC**

17. Remove the support bracket bolt (1).

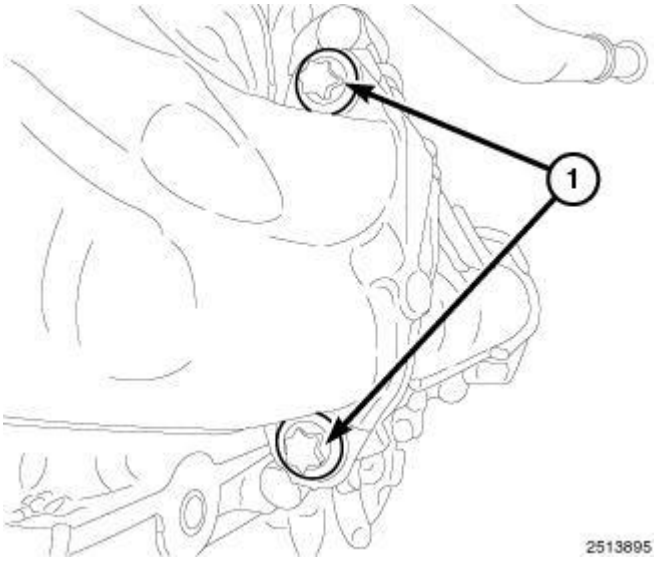


**Fig. 603: EGR Assembly Bolts**
**Courtesy of CHRYSLER LLC**

18. Remove two bolts (1) and pull back on the EGR assembly.

 

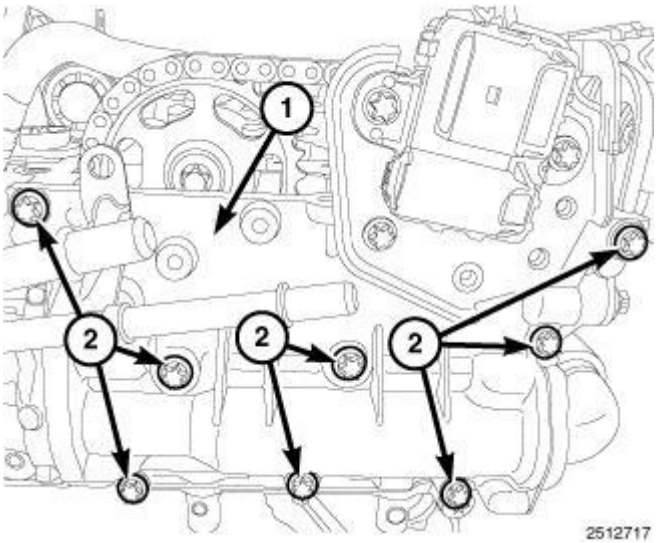


**Fig. 604: Timing Chain Upper Cover & Bolts**
**Courtesy of CHRYSLER LLC**

19. Remove bolts (2) and the timing chain upper cover (1).

**LOWER TIMING CHAIN COVER**

**NOTE: The engine must be removed from the vehicle to remove the timing chain cover.**

1. Remove the engine. Refer to **Removal**.
2. Remove the cylinder head. Refer to **Cylinder Head , Removal**.
3. Remove the flywheel assembly. Refer to **FLYWHEEL , Removal** .

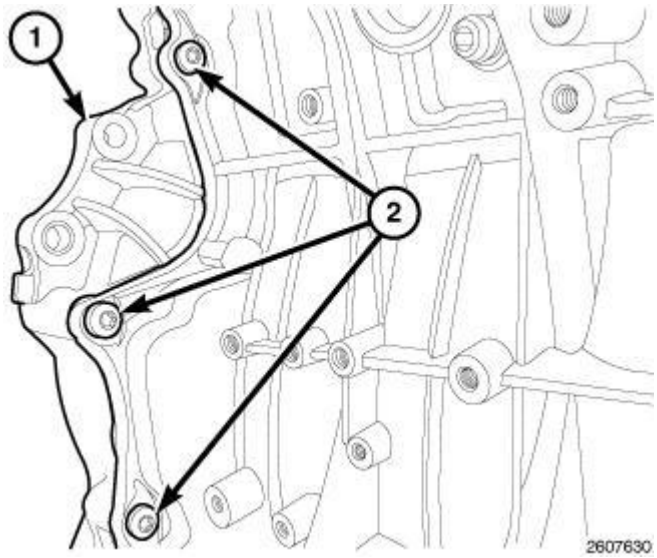


**Fig. 605: Locating Bolts At Backside Of Timing Cover**
**Courtesy of CHRYSLER LLC**

 

4. Remove the bolts (2) from backside of timing cover.

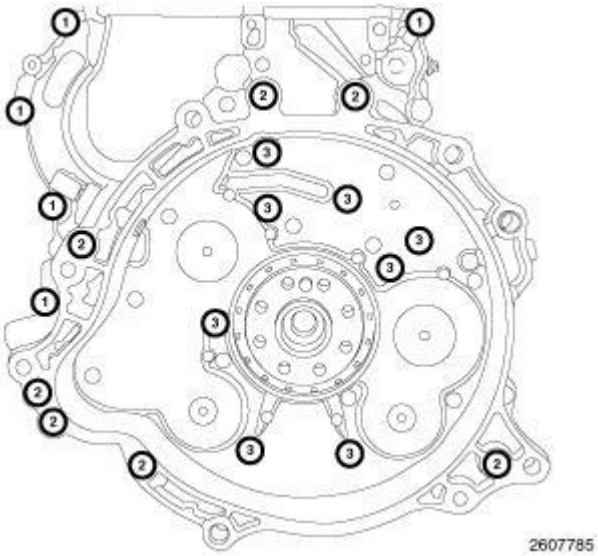


**Fig. 606: Timing Chain Cover At Engine Bolts**
**Courtesy of CHRYSLER LLC**

5. Remove bolts (1, 2, and 3) and the timing chain cover from engine.

**Installation**

**UPPER TIMING CHAIN COVER**

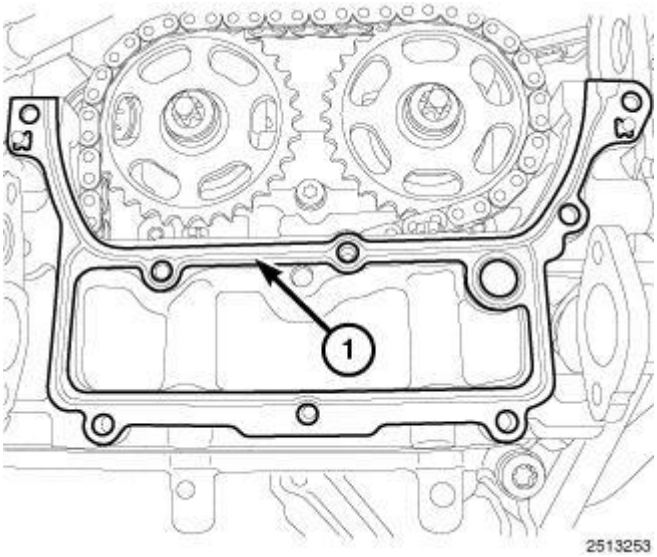


**Fig. 607: Upper Timing Cover Gasket**
**Courtesy of CHRYSLER LLC**

1. Clean the gasket mating surfaces install a new upper timing cover gasket (1).

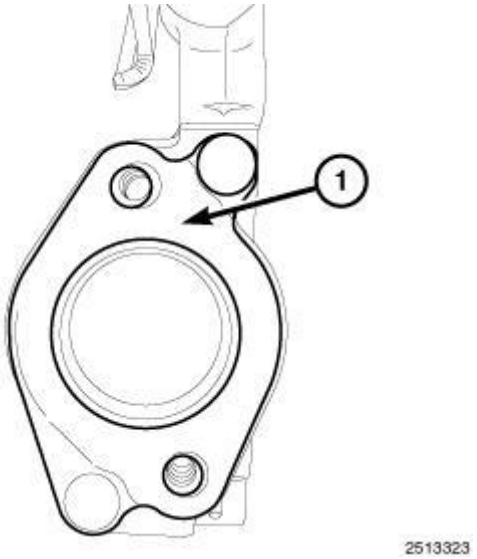


**Fig. 608: Upper Timing Cover-To-EGR Pipe Gasket**
**Courtesy of CHRYSLER LLC**

2. Install a new gasket (1) onto upper timing cover to EGR pipe.

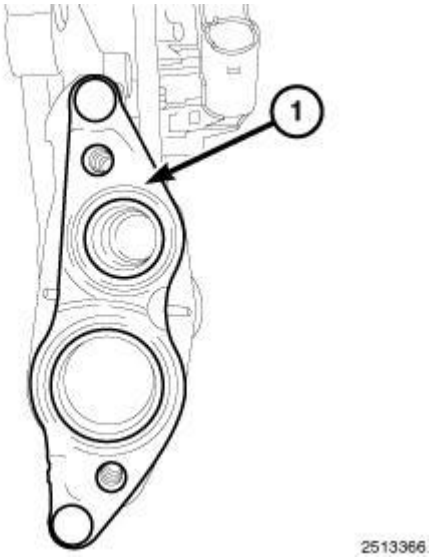


**Fig. 609: Cylinder Head Rear Cover-To-EGR Gasket**
**Courtesy of CHRYSLER LLC**

3. Install a new gasket (1) onto cylinder head rear cover to EGR.

 

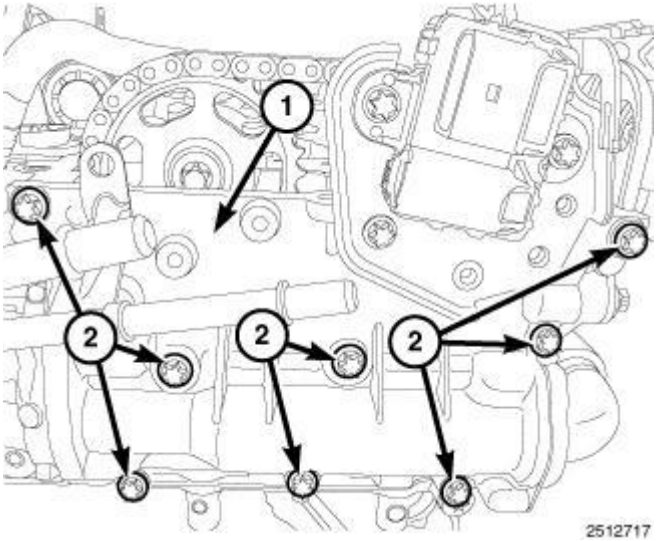


**Fig. 610: Timing Chain Upper Cover & Bolts**
**Courtesy of CHRYSLER LLC**

4. Install the cylinder head rear cover (1). Tighten bolts (2) to 9 N.m (80 in. lbs.).

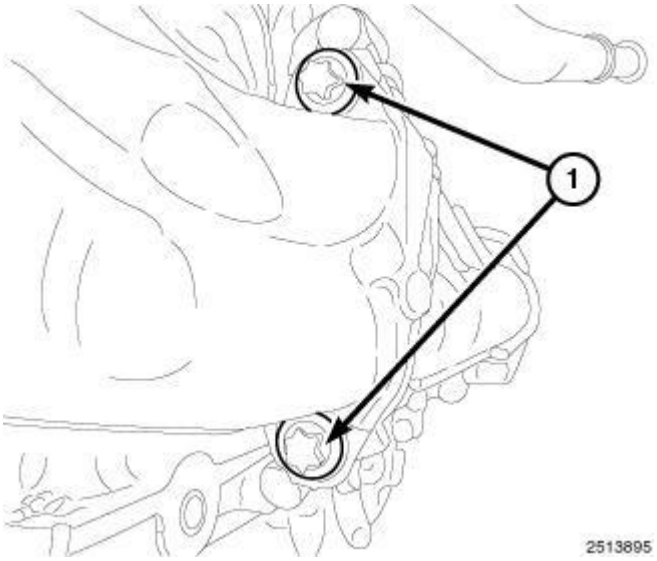


**Fig. 611: EGR Assembly Bolts**
**Courtesy of CHRYSLER LLC**

5. Install the EGR cooler manifold. Tighten bolts (1) to 9 N.m (80 in. lbs.).

 

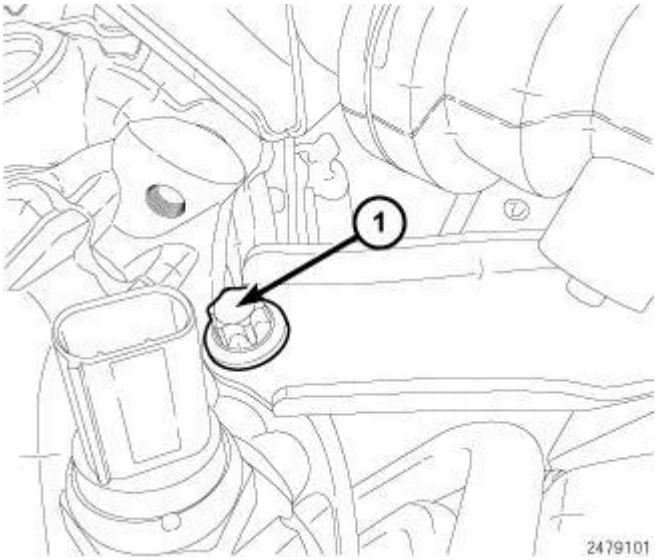


**Fig. 612: Support Bracket Bolt**
**Courtesy of CHRYSLER LLC**

6. Install the support bracket bolt (1). Tighten bolts (1) to 9 N.m (80 in. lbs.).

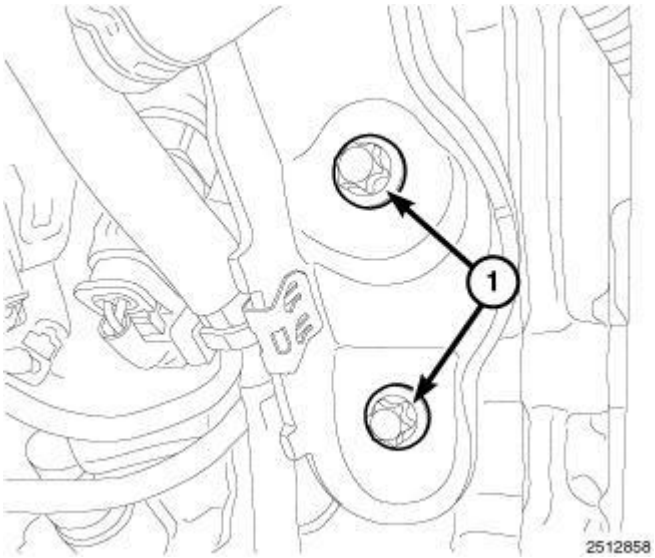


**Fig. 613: EGR Support Bracket Bolts**
**Courtesy of CHRYSLER LLC**

7. Tighten the EGR support bracket bolts (1) to 9 N.m (80 in. lbs.).

 

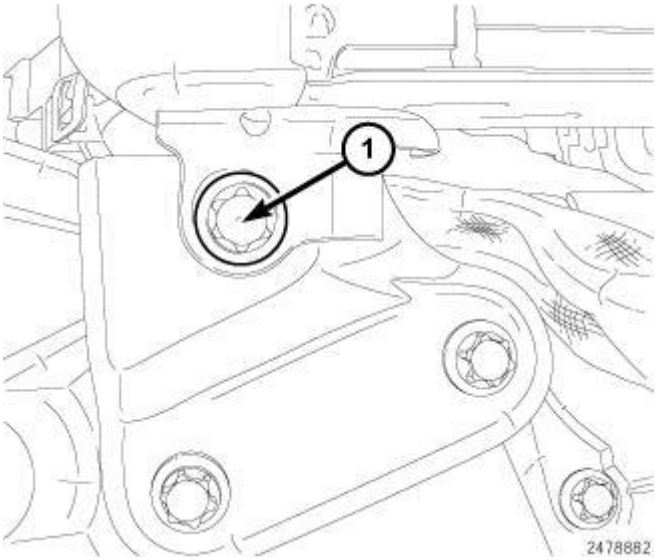


**Fig. 614: Lower EGR Cooler Bolt**
**Courtesy of CHRYSLER LLC**

8. Tighten the lower EGR cooler bolt (1) to 9 N.m (80 in. lbs.).

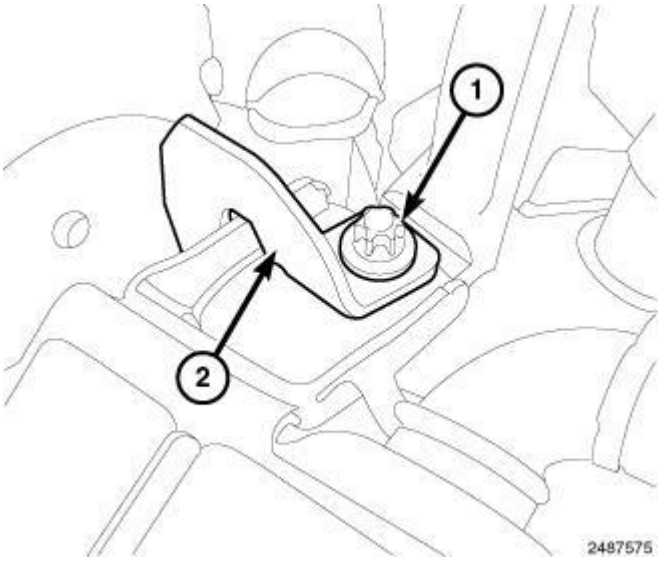


**Fig. 615: Upper EGR Cooler Bolt & Bracket**
**Courtesy of CHRYSLER LLC**

9. Tighten the upper EGR cooler bolt (1) to 9 N.m (80 in. lbs.).

 

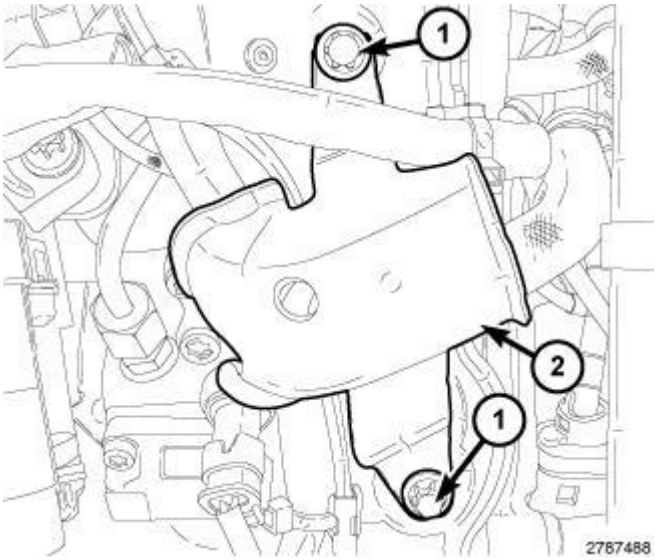


**Fig. 616: Bolts & Heat Shield**
**Courtesy of CHRYSLER LLC**

10. Install the heat shield (2). Tighten bolts (1) to 9 N.m (80 in. lbs.).

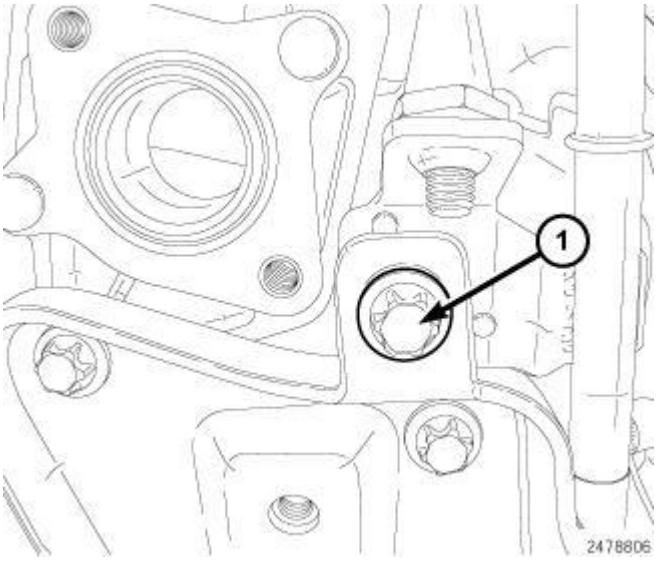


**Fig. 617: Vacuum Tube Bolt**
**Courtesy of CHRYSLER LLC**

11. Install the bolt (1) securing the vacuum tube. Tighten bolt (1) to 9 N.m (80 in. lbs.).

 

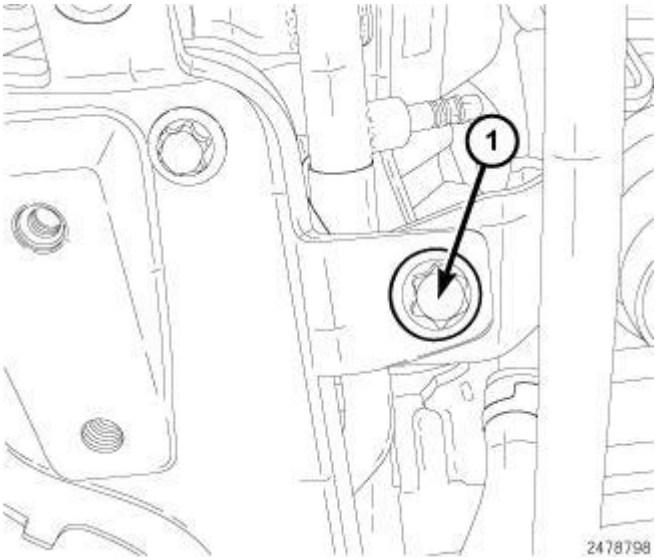


**Fig. 618: Oil Dip Stick Bolt**
**Courtesy of CHRYSLER LLC**

12. Install the bolt (1) securing the oil dip stick tube. Tighten bolt (1) to 9 N.m (80 in. lbs.).

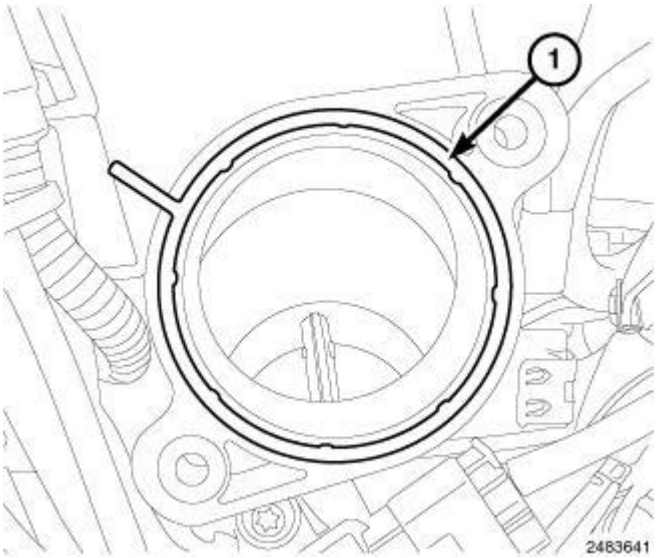


**Fig. 619: EGR Tube Gasket Onto Mixing Chamber**
**Courtesy of CHRYSLER LLC**

13. Clean the gasket surfaces and install a new gasket (1).

 

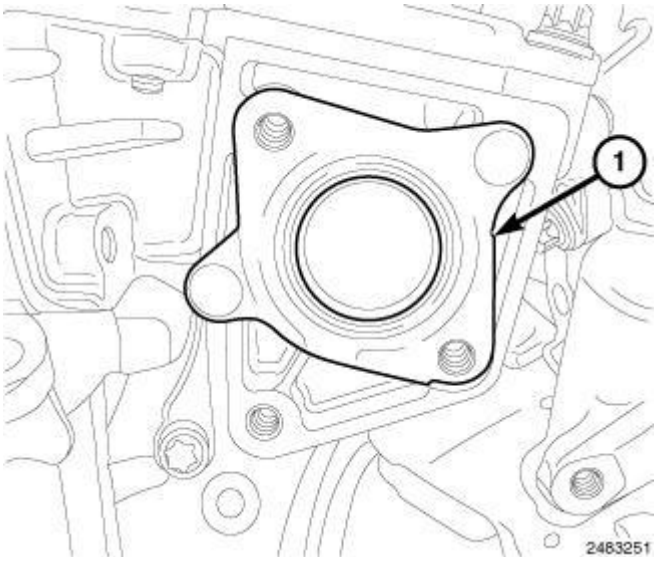


**Fig. 620: EGR Tube Gasket Onto EGR Actuator**
**Courtesy of CHRYSLER LLC**

14. Clean the gasket surfaces and install a new gasket (1).

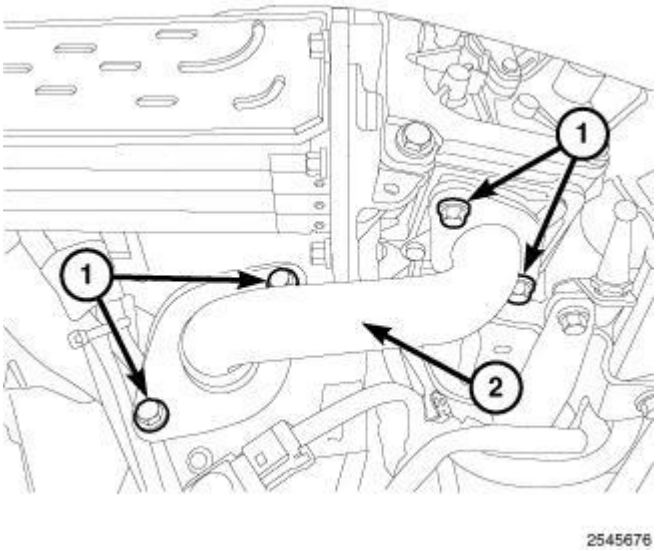


**Fig. 621: EGR Tube & Bolts**
**Courtesy of CHRYSLER LLC**

15. Install the EGR tube (2). Tighten bolt (1) to 9 N.m (80 in. lbs.).

 

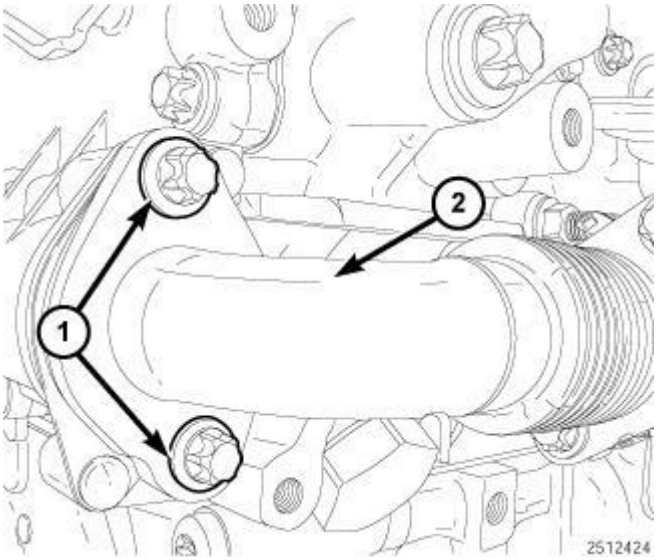


**Fig. 622: EGR Pipe & Bolt**
**Courtesy of CHRYSLER LLC**

16. Install bolts (1) to the EGR pipe (2). Tighten bolts (1) to 9 N.m (80 in. lbs.).

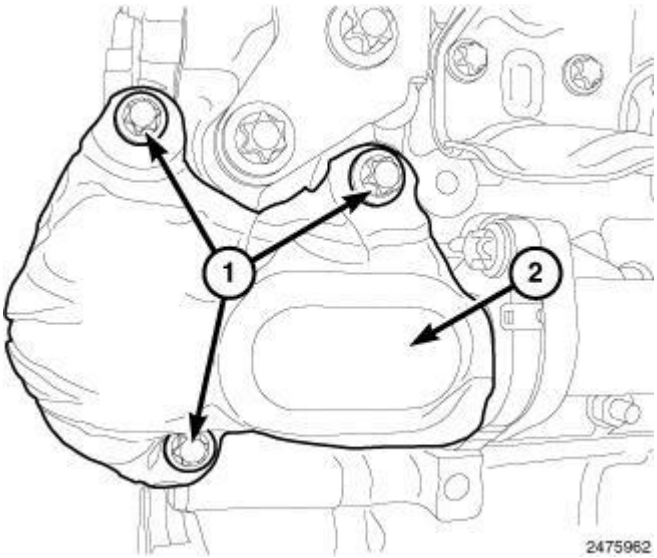


**Fig. 623: EGR Pipe Heat Shield & Bolts**
**Courtesy of CHRYSLER LLC**

17. Install the heat shield (2). Tighten bolts (1) to 9 N.m (80 in. lbs.).

 

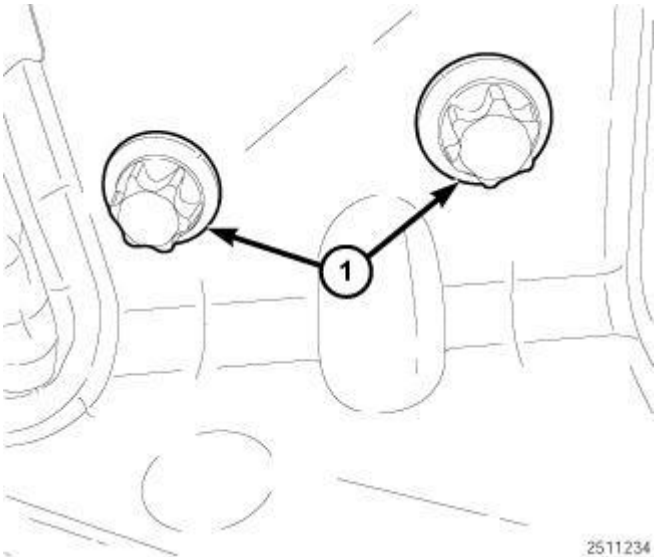


**Fig. 624: CAC Tube And Bracket Assembly Bolts**
**Courtesy of CHRYSLER LLC**

18. Install the (CAC) tube and bracket assembly. Tighten bolts (1) to 9 N.m (80 in. lbs.).

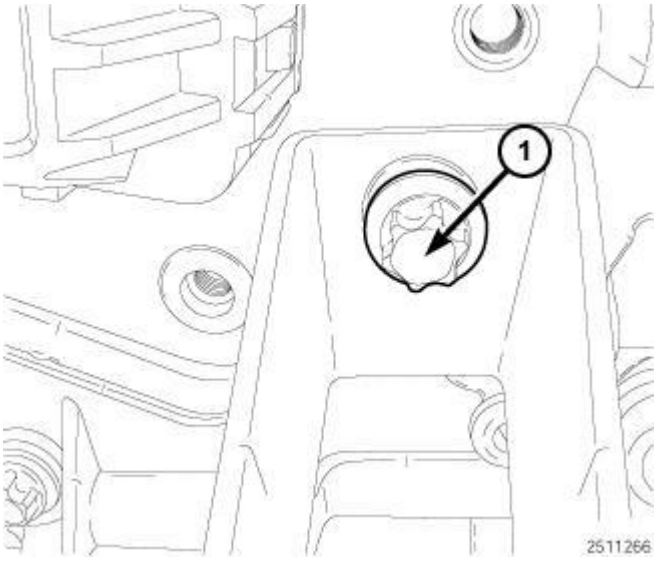


**Fig. 625: Bolt Securing CAC Tube To Glow Plug Module**
**Courtesy of CHRYSLER LLC**

19. Install bolt (1) securing the (CAC) tube to glow plug module bracket. Tighten bolt (1) to 9 N.m (80 in. lbs.).

 

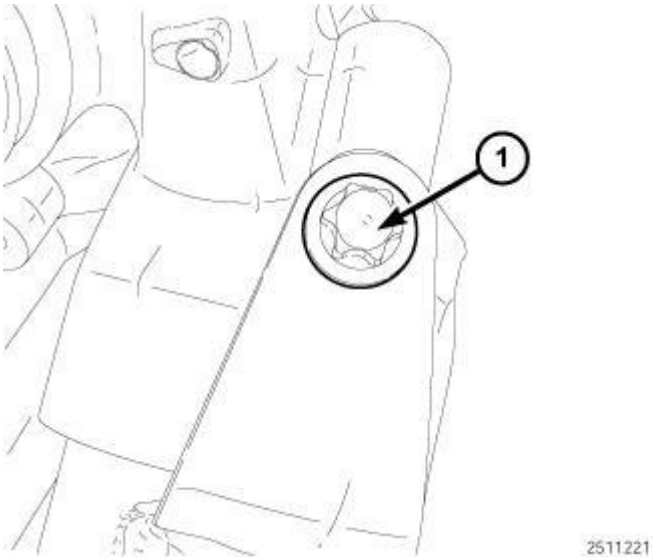


**Fig. 626: Charge Air Cooler CAC Tube Bolt**
**Courtesy of CHRYSLER LLC**

20. Tighten bolt (1) securing the Charge Air Cooler (CAC) tube to turbocharger to 9 N.m (80 in. lbs.).

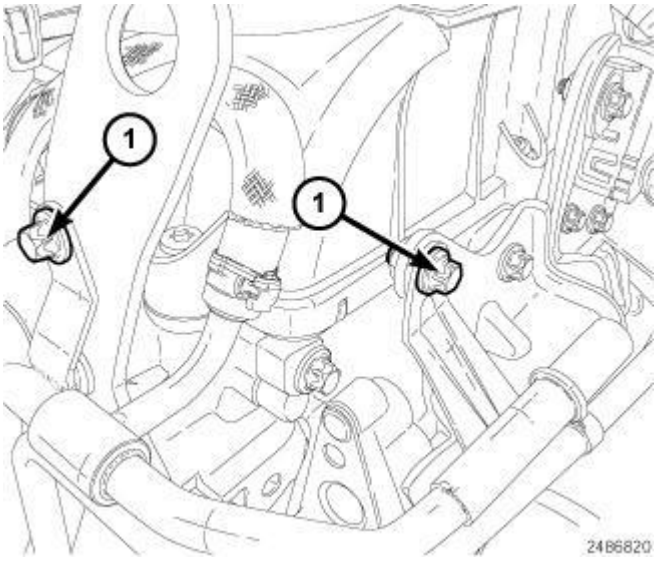


**Fig. 627: Upper Fuel Line Bracket Bolts**
**Courtesy of CHRYSLER LLC**

21. Install the two upper fuel line bracket bolts (1) and tighten to 9 N.m (80 in. lbs.).
22. Install the cylinder head cover. Refer to **COVER(S), Cylinder Head , Installation**.
23. Connect negative battery cable.
24. Start the engine and inspect for leaks.
25. Install engine cover.

**LOWER TIMING CHAIN COVER**

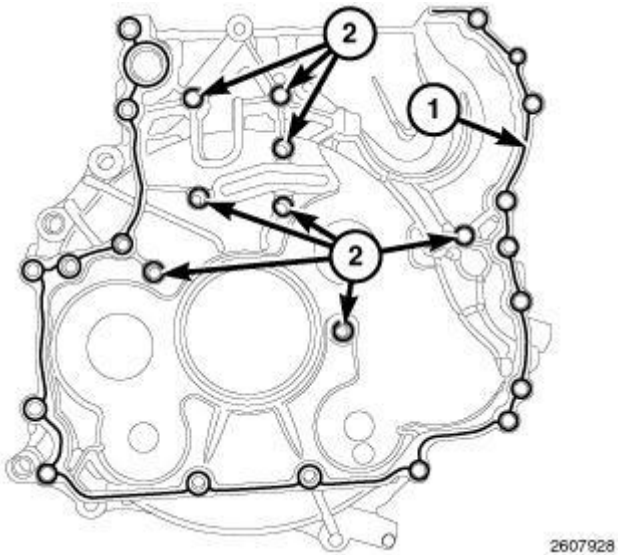


**Fig. 628: Applying Sealant To Lower Timing Chain Cover Mating Surfaces**
**Courtesy of CHRYSLER LLC**

1. Thoroughly clean all gasket mating surfaces.

**NOTE:** **Install timing cover within 10 minutes after applying sealant. Do not spread sealant bead.**

2. Apply a 2 mm bead of Engine Sealant RTV to the mating surfaces (1 and 2).

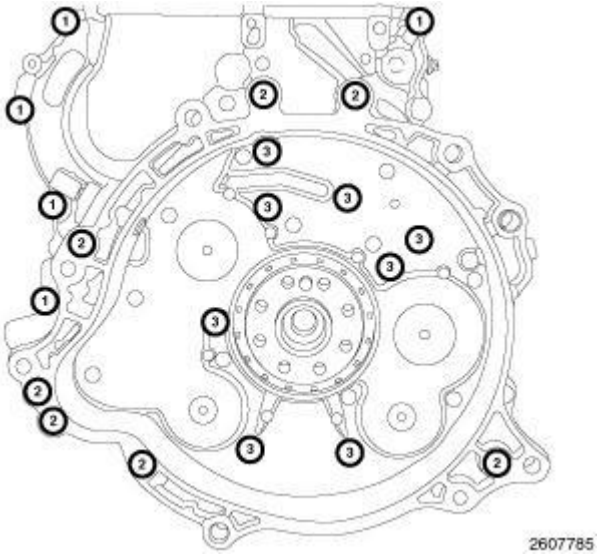


**Fig. 629: Timing Chain Cover At Engine Bolts**
**Courtesy of CHRYSLER LLC**

**NOTE:** **Bolts (1 and 3) are M8 x 30. Bolts (2) are M8 x 60.**

3. Install timing chain cover. Tighten bolts (1, 2, and 3) to 20 N.m (177 in. lbs.).

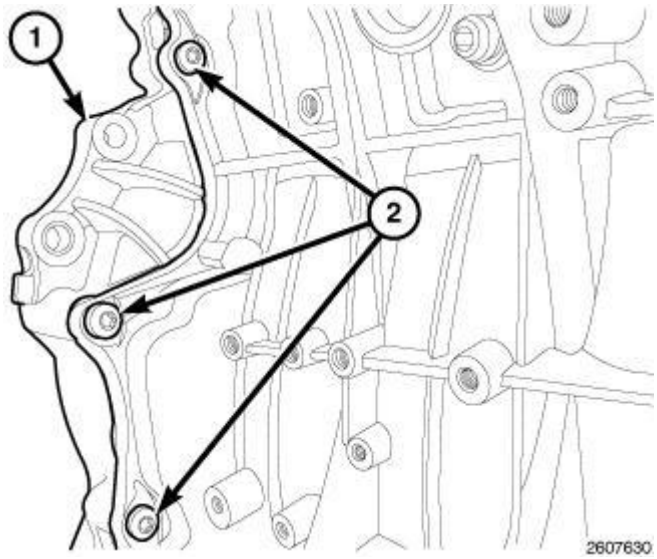


**Fig. 630: Locating Bolts At Backside Of Timing Cover**
**Courtesy of CHRYSLER LLC**

4. Install the M8 X 30 bolts (2) to the backside of timing cover and tighten to 20 N.m (177 in. lbs.).
5. Install the cylinder head. Refer to **Cylinder Head , Installation**.
6. Install the engine. Refer to **Installation**.

## GUIDES, TIMING CHAIN

### Removal

#### REMOVAL - TIMING CHAIN GUIDE - CYLINDER HEAD

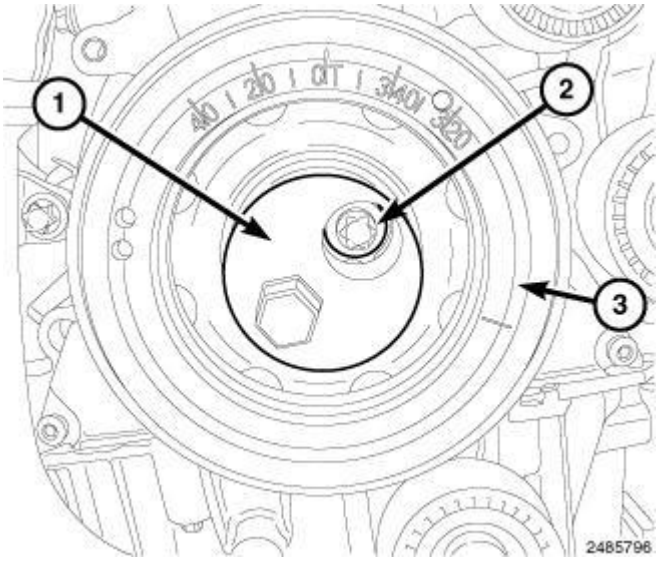


**Fig. 631: Vibration Damper Holder, Bolts & Vibration Damper**
**Courtesy of CHRYSLER LLC**

1. Disconnect the negative battery cable.
2. Remove the engine cover.
3. Remove the belly pan.

**NOTE: Rotate engine at crankshaft only. DO NOT crank engine at the camshaft and DO NOT rotate the engine backward.**

4. Using Vibration Damper Holder (special tool #10236, Holder, Vibration Damper) (1), to rotate engine.

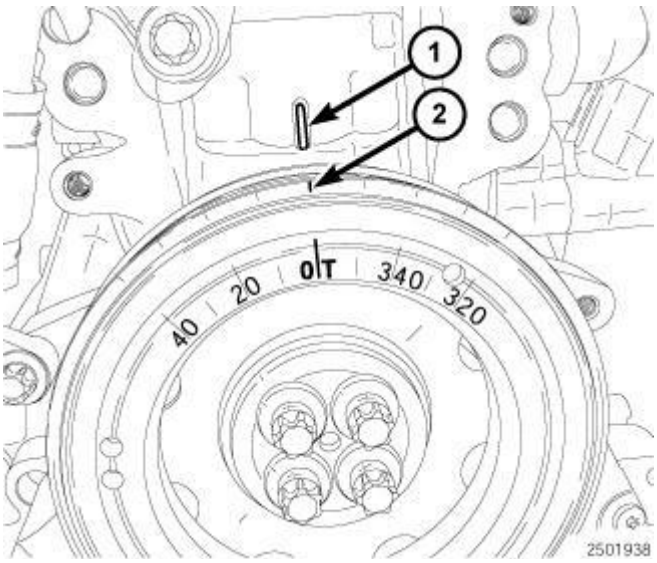


**Fig. 632: Positioning Cylinder No. 1 Piston To Ignition TDC**
**Courtesy of CHRYSLER LLC**

5. Rotate the crankshaft to align the timing mark (1) with mark (2) to set cylinder No. 1 at Top Dead Center (TDC).
6. Remove the upper timing chain cover. Refer to **COVER(S), Engine Timing , Removal**.

 

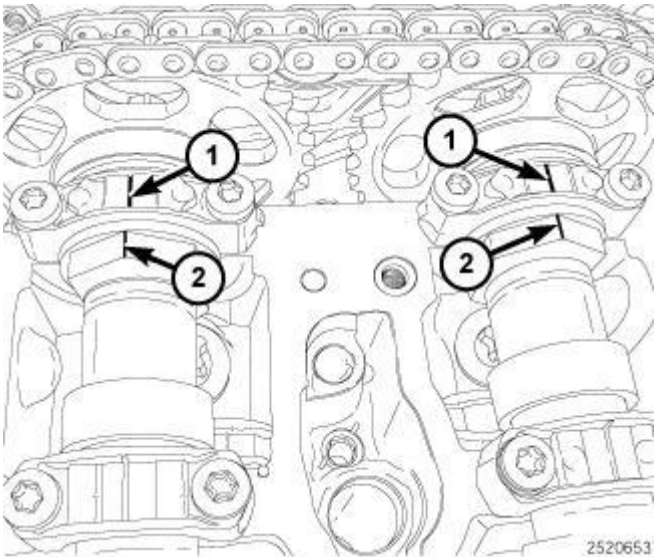


**Fig. 633: Ensuring Camshaft Mark Is Aligned With Bearing Cap Mark**
**Courtesy of CHRYSLER LLC**

7. Verify the alignment of the camshaft mark (2) is aligned with the bearing cap mark (1) is at (TDC).

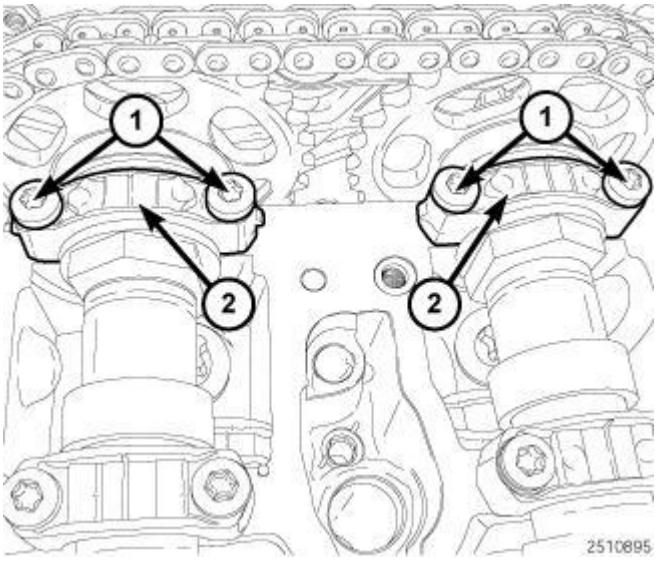


**Fig. 634: No. 1 Camshaft Bearing Caps & Bolts**
**Courtesy of CHRYSLER LLC**

8. Remove bolts (1) and the number one camshaft bearing caps (2).

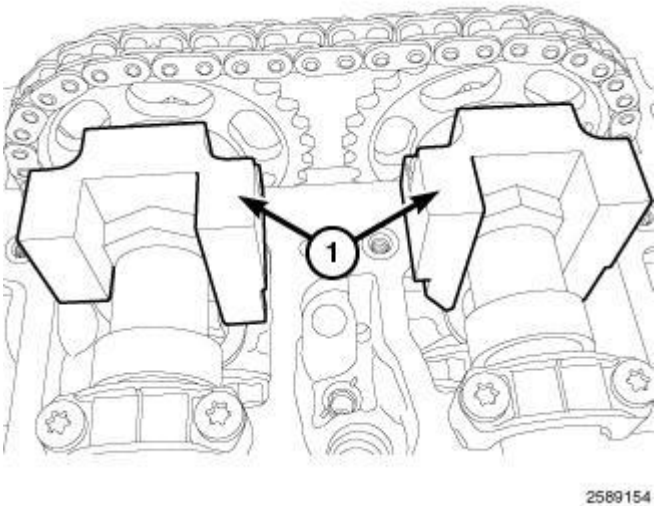


**Fig. 635: Camshaft Lock Tools**
**Courtesy of CHRYSLER LLC**

9. Install the Camshaft Lock Tools (special tool #10234, Lock, Camshaft) (1) and tighten bolts finger tight.

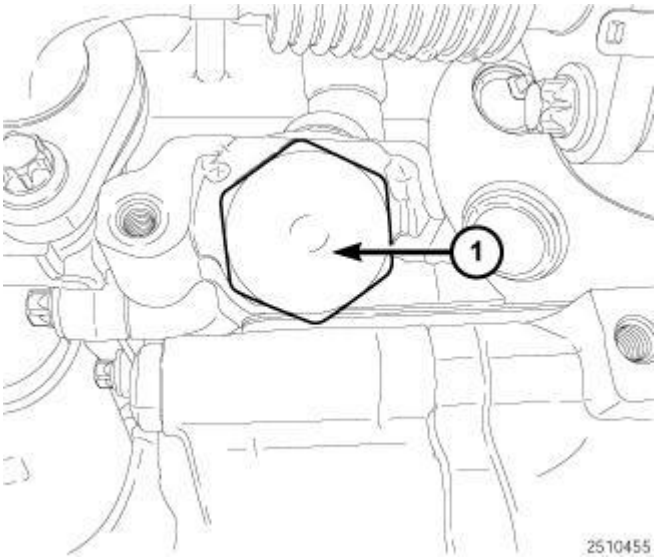


**Fig. 636: Timing Chain Tensioner**
**Courtesy of CHRYSLER LLC**

10. Remove timing chain tensioner (1).

 

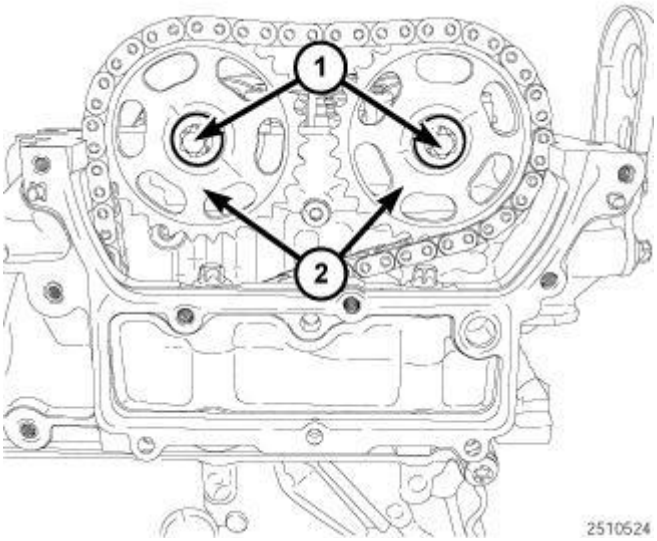


**Fig. 637: Camshaft Sprockets & Bolts**
**Courtesy of CHRYSLER LLC**

**NOTE: Camshaft sprocket bolts (1) are left hand thread.**

11. Remove bolts (1) and the camshaft sprockets (2) and secure the timing chain from falling into the engine.

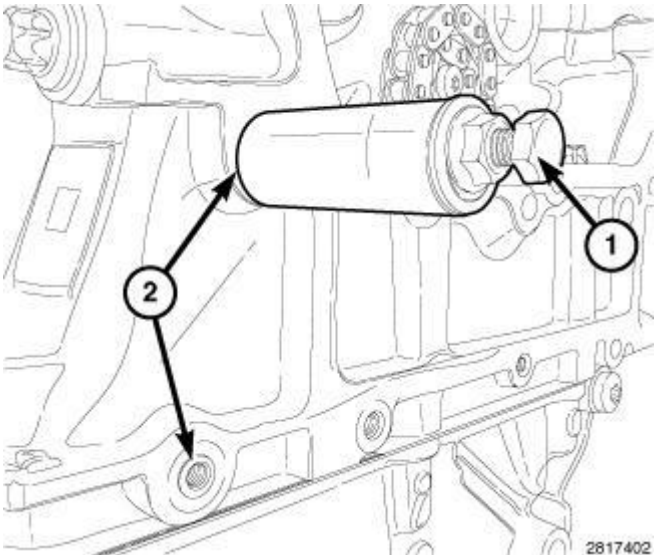


**Fig. 638: Extractor Bolt Tool & Timing Guide Pin**
**Courtesy of CHRYSLER LLC**

**NOTE: Care should be given not to drop the timing chain guide into the cylinder head.**

12. Using Extractor Bolt Tool (special tool #10240, Bolt, Extractor) (1), remove the timing guide pins (2) and guide from cylinder head.

 

**TIMING CHAIN TENSIONING RAIL**

1. Disconnect negative battery cable.
2. Remove the timing chain cover. Refer to **COVER(S), Engine Timing , Removal**.

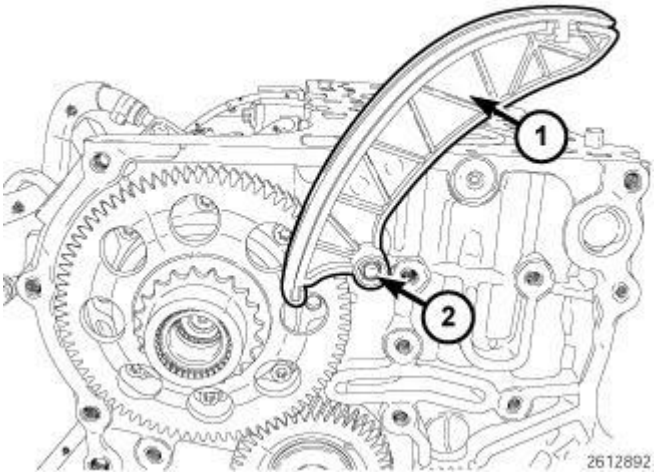


**Fig. 639: Tensioning Rail & Pin**
**Courtesy of CHRYSLER LLC**

3. Remove tensioning rail (1) from pin (2).

**Installation**

**INSTALLATION - TIMING CHAIN GUIDE - CYLINDER HEAD**

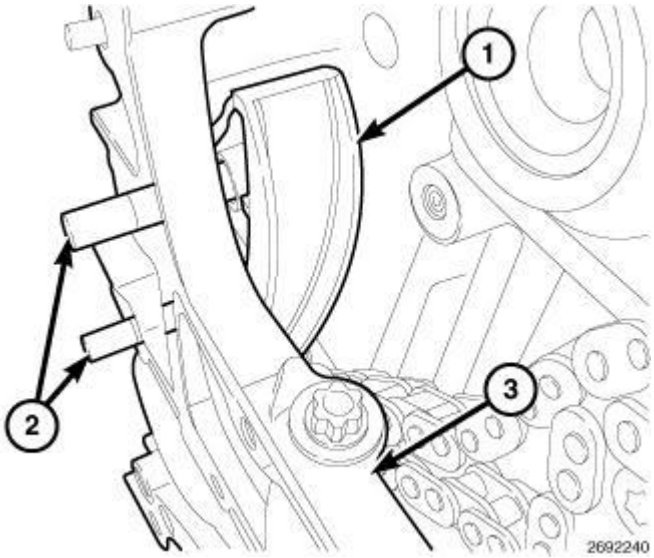


**Fig. 640: Timing Chain Guide, Guide Pins & Cylinder Head**
**Courtesy of CHRYSLER LLC**

 

**NOTE: Care should be given not to drop the timing chain guide into the cylinder head.**

1. Install the timing chain guide (1) and guide pins (2) into the cylinder head (3).
2. Using a small brass hammer gently tap in the guide pins (2) into the cylinder head (3).

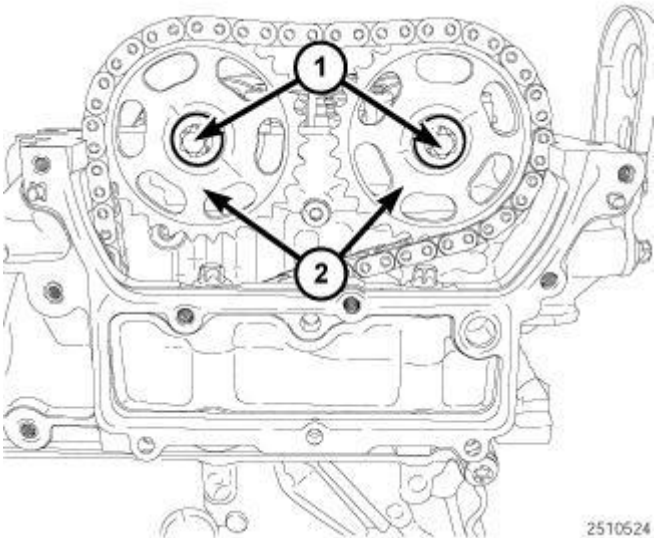


**Fig. 641: Camshaft Sprockets & Bolts**
**Courtesy of CHRYSLER LLC**

**NOTE: Camshaft sprocket bolts (1) are left hand thread.**

3. Position the timing chain onto the camshaft sprockets (2) and install onto camshaft. Using new bolts (1), tighten to 55 N.m (41 ft. lbs.) plus an additional 90 degrees.

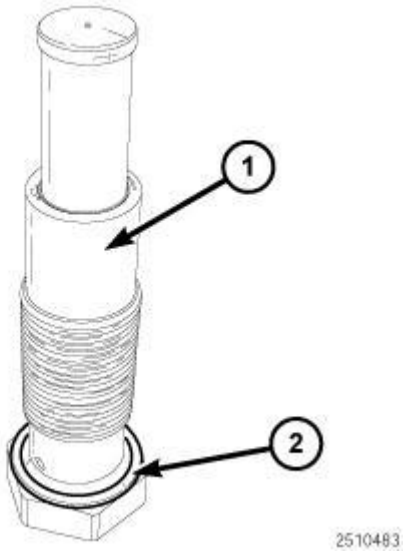


**Fig. 642: Sealing Washer & Timing Chain Tensioner**
**Courtesy of CHRYSLER LLC**

 

4. Install a new sealing washer (2) onto the timing chain tensioner (1).

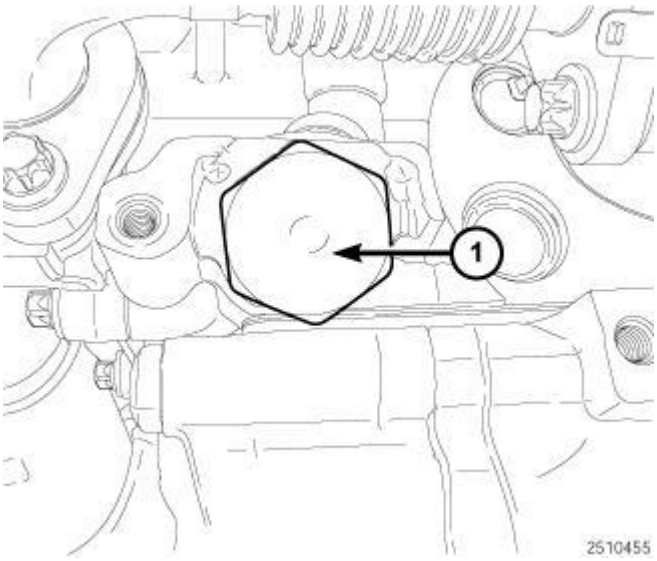


**Fig. 643: Timing Chain Tensioner**
**Courtesy of CHRYSLER LLC**

5. Install timing chain tensioner (1). Tighten to 70 N.m (52 ft. lbs.).

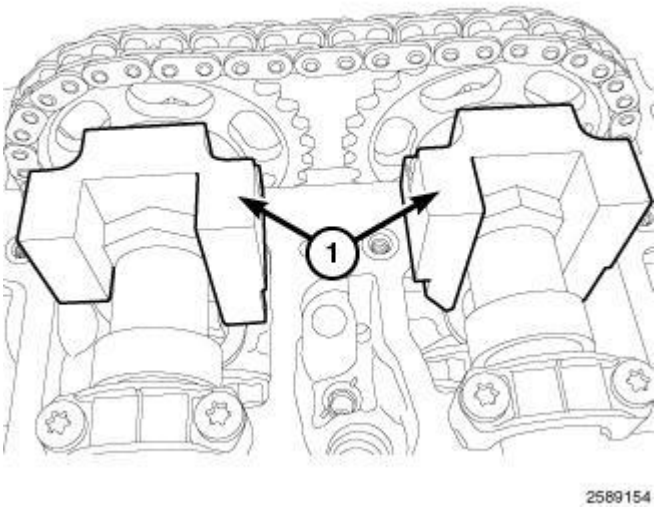


**Fig. 644: Camshaft Lock Tools**
**Courtesy of CHRYSLER LLC**

6. Remove bolts and the Camshaft Lock Tool (1) (special tool #10234, Lock, Camshaft).

 

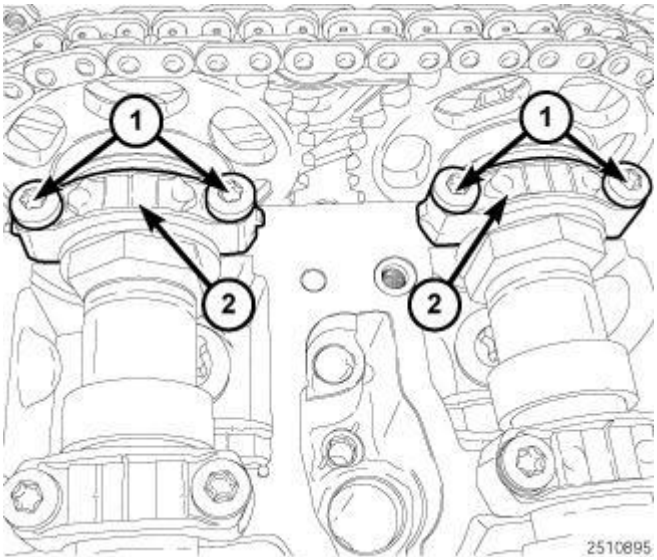


**Fig. 645: No. 1 Camshaft Bearing Caps & Bolts**
**Courtesy of CHRYSLER LLC**

7. Using new bolts (1), install the camshaft bearing caps (2). Tighten bolts (1) in two stages,
   - Stage 1: 5 N.m (44 in. lbs.)
   - Stage 2: 9 N.m (80 in. lbs.).
8. Install the upper timing chain cover. Refer to **COVER(S), Engine Timing , Installation**.
9. Install the belly pan.
10. Install the engine cover.
11. Connect the negative battery cable.

**TIMING CHAIN TENSIONING RAIL**

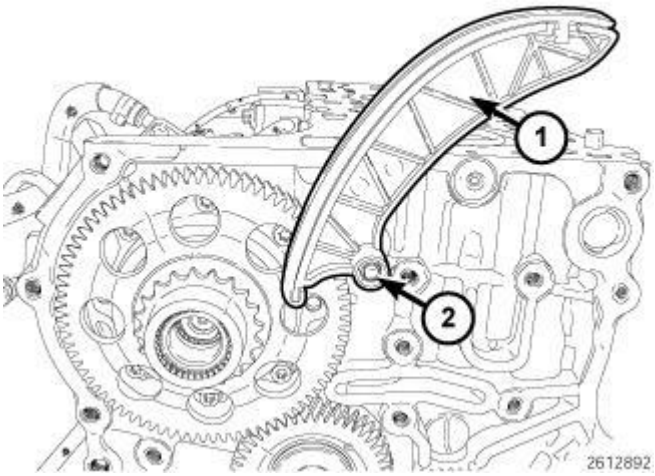


**Fig. 646: Tensioning Rail & Pin**
**Courtesy of CHRYSLER LLC**

 

1. Install tensioning rail (1) on dowel pin (2).
2. Install timing chain cover. Refer to **COVER(S), Engine Timing , Installation**.
3. Connect negative battery cable.
4. Start the engine and inspect for leaks.

## TENSIONER, ENGINE TIMING

### Removal

#### REMOVAL

1. Disconnect negative battery cable.
2. Remove the cylinder head cover. Refer to **COVER(S), Cylinder Head , Removal**.

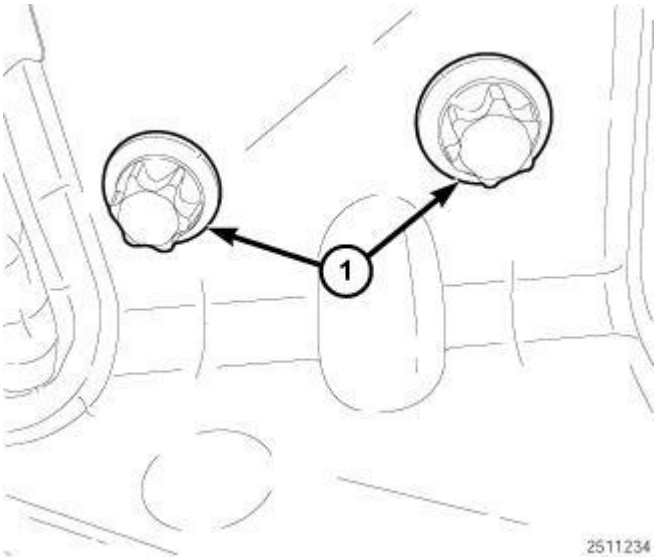


**Fig. 647: CAC Tube And Bracket Assembly Bolts**
**Courtesy of CHRYSLER LLC**

3. Remove bolts (1) and the (CAC) tube and bracket assembly.

 

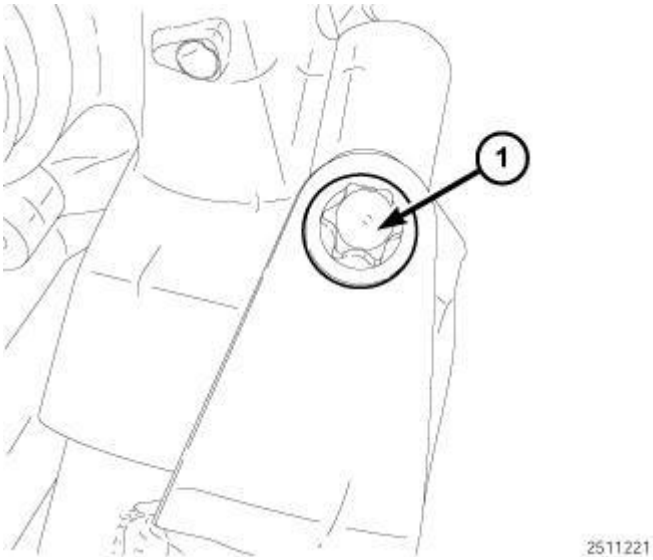


**Fig. 648: Charge Air Cooler CAC Tube Bolt**
**Courtesy of CHRYSLER LLC**

4. Remove the bolt (1) securing the Charge Air Cooler (CAC) tube to turbocharger.

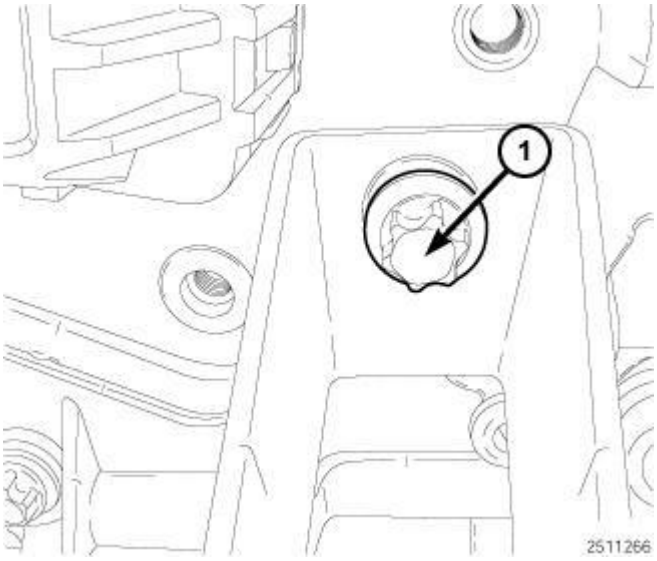


**Fig. 649: Bolt Securing CAC Tube To Glow Plug Module**
**Courtesy of CHRYSLER LLC**

5. Remove bolt (1) securing the (CAC) tube to glow plug module.

 

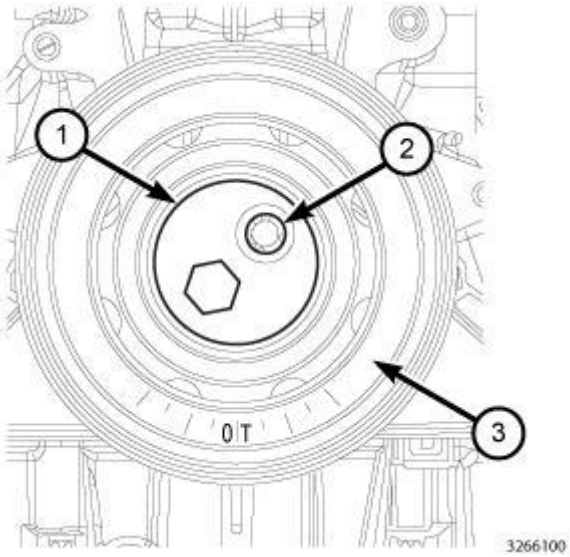


**Fig. 650: Vibration Damper Holder Tool, Vibration Damper & Bolts**
**Courtesy of CHRYSLER LLC**

**CAUTION: Rotate engine at crankshaft only. DO NOT rotate the engine with the bolt of the camshaft sprocket. DO NOT rotate the engine counter clockwise.**

6. Remove the belly pan.
7. Install Vibration Damper Holder (special tool #10236, Holder, Vibration Damper) (1), to rotate the engine.

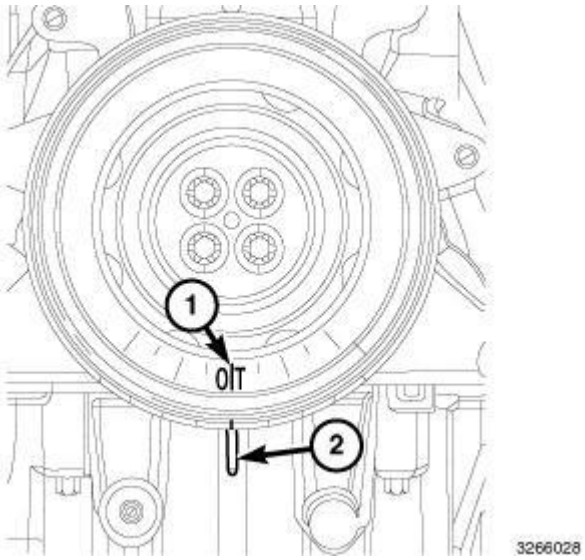


**Fig. 651: Crankshaft Alignment Timing Marks**
**Courtesy of CHRYSLER LLC**

8. Rotate the engine clockwise to align the timing mark (1) with mark (2) to set cylinder No. 1 at Top Dead Center (TDC).

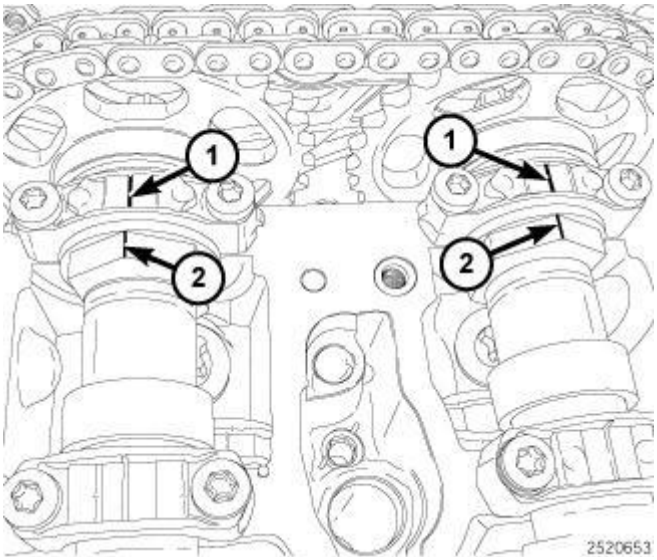


**Fig. 652: Ensuring Camshaft Mark Is Aligned With Bearing Cap Mark**
**Courtesy of CHRYSLER LLC**

9. Verify the alignment of the camshaft mark (2) is aligned with the bearing cap mark (1) is at (TDC).

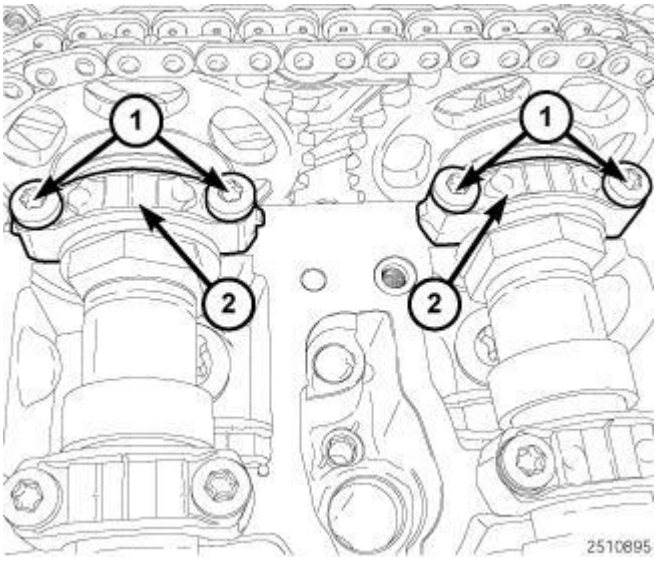


**Fig. 653: No. 1 Camshaft Bearing Caps & Bolts**
**Courtesy of CHRYSLER LLC**

10. Remove bolts (1) and the number one camshaft bearing caps (2).

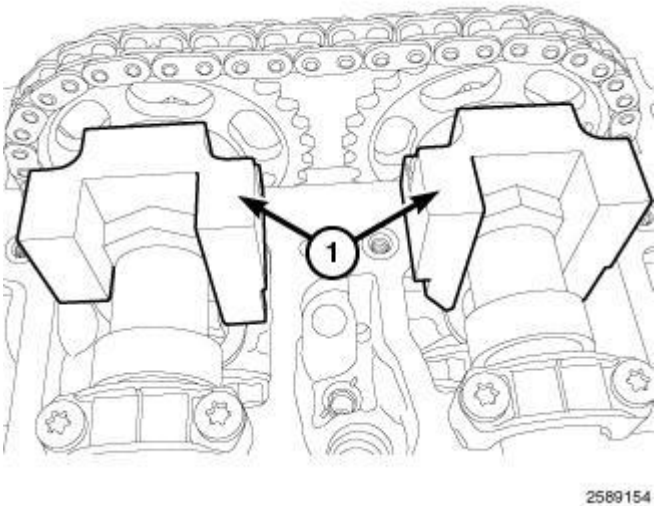


**Fig. 654: Camshaft Lock Tools**
**Courtesy of CHRYSLER LLC**

11. Install the Camshaft Lock Tools (1) (special tool #10234, Lock, Camshaft) and tighten bolts finger tight.

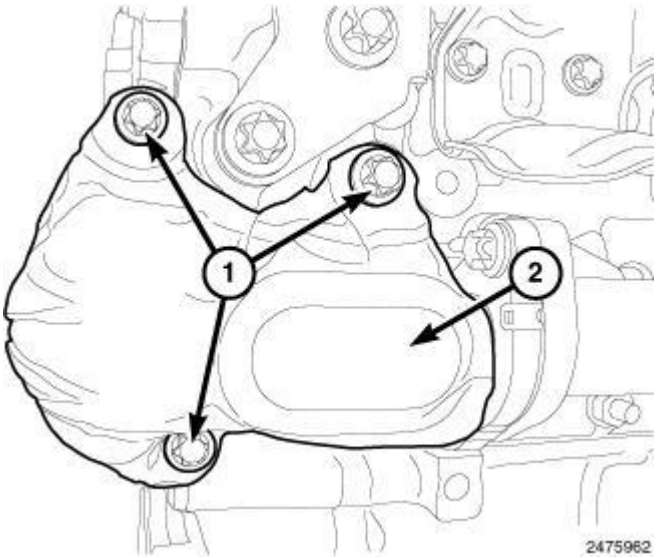


**Fig. 655: EGR Pipe Heat Shield & Bolts**
**Courtesy of CHRYSLER LLC**

12. Remove bolts (1) and the EGR pipe heat shield (2).

 

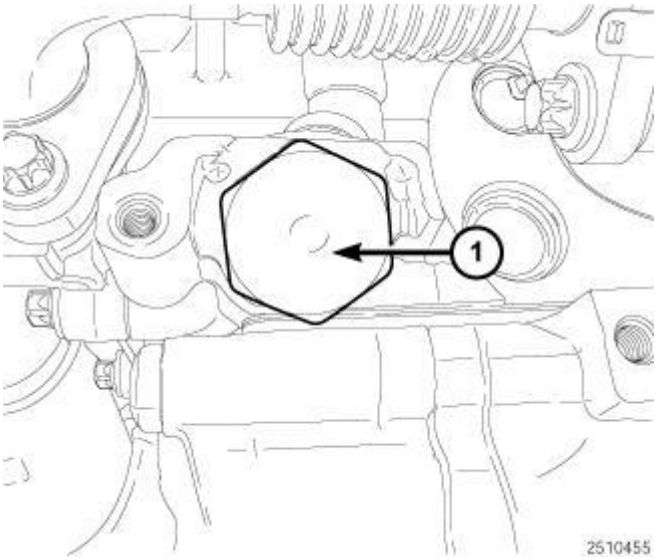


**Fig. 656: Timing Chain Tensioner**
**Courtesy of CHRYSLER LLC**

13. Remove timing chain tensioner (1).

**Installation**

**INSTALLATION**

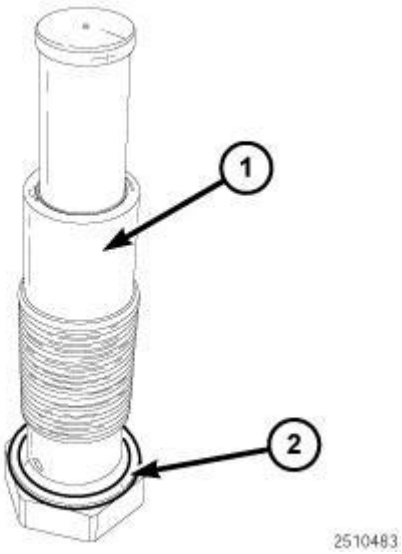


**Fig. 657: Sealing Washer & Timing Chain Tensioner**
**Courtesy of CHRYSLER LLC**

1. Install a new timing chain tensioner (1) seal washer (2).

 

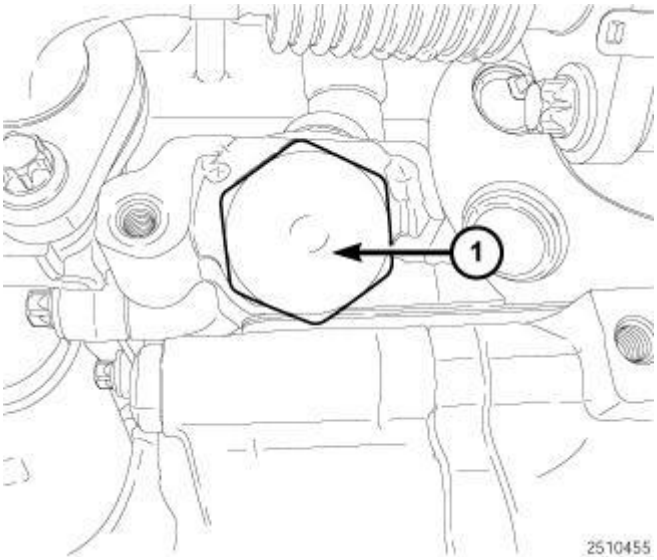


**Fig. 658: Timing Chain Tensioner**
**Courtesy of CHRYSLER LLC**

**NOTE: Carefully clean all mating surfaces with appropriate solvents to assure that no grease or oil is present during reassembly.**

2. Install timing chain tensioner (1). Tighten to 70 N.m (52 ft. lbs.).

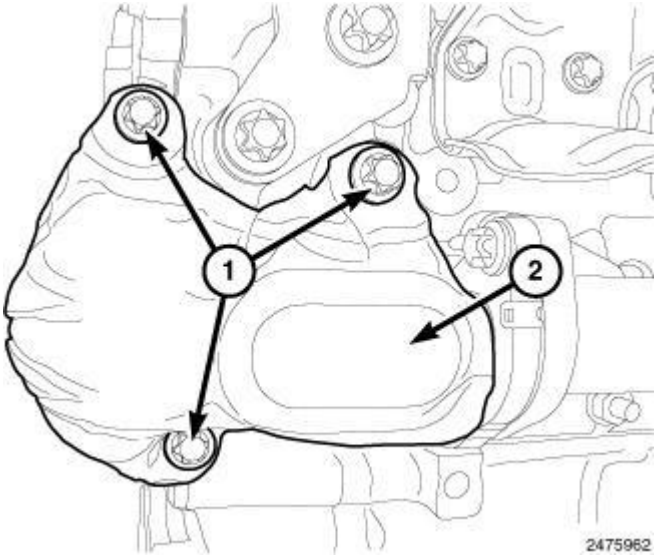


**Fig. 659: EGR Pipe Heat Shield & Bolts**
**Courtesy of CHRYSLER LLC**

3. Install the EGR pipe heat shield (2). Tighten bolts (1) to 9 N.m (80 in. lbs.).

 

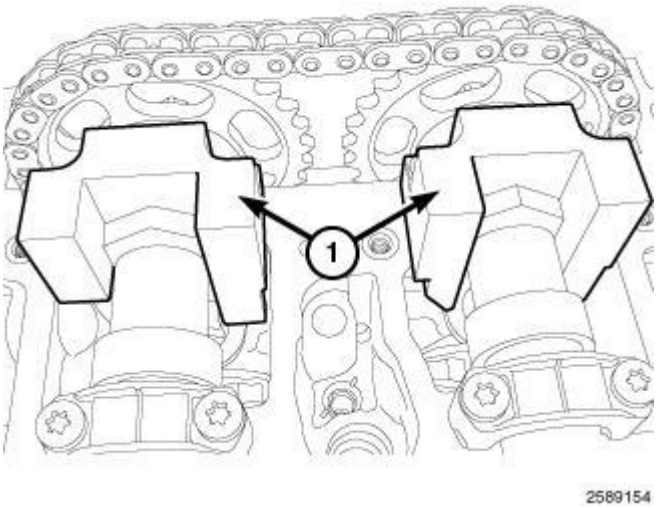


**Fig. 660: Camshaft Lock Tools**
**Courtesy of CHRYSLER LLC**

4. Remove bolts and the Camshaft Lock Tool (1) (special tool #10234, Lock, Camshaft).

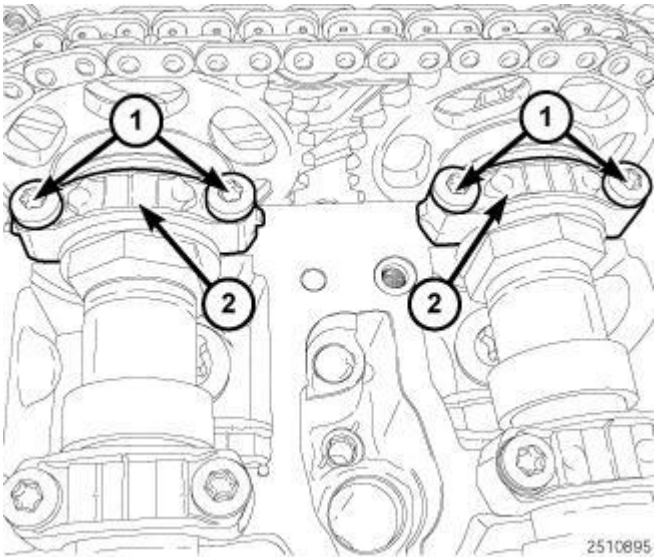


**Fig. 661: No. 1 Camshaft Bearing Caps & Bolts**
**Courtesy of CHRYSLER LLC**

5. Using new bolts (1), install the camshaft bearing caps (2). Tighten bolts (1) to 9 N.m (80 in. lbs.).

 

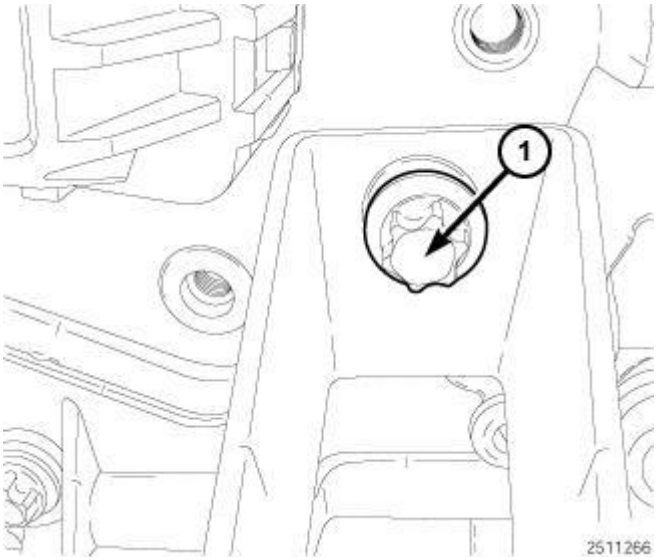


**Fig. 662: Bolt Securing CAC Tube To Glow Plug Module**
**Courtesy of CHRYSLER LLC**

6. Install bolt (1) securing the (CAC) tube to glow plug module bracket. Tighten bolt (1) to 9 N.m (80 in. lbs.).

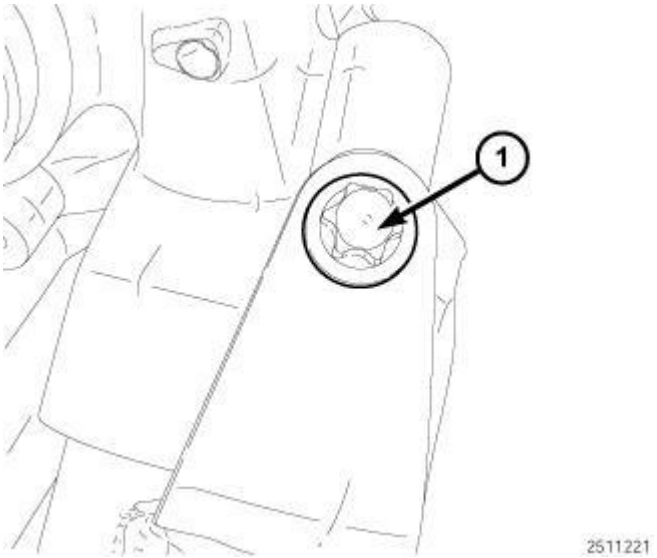


**Fig. 663: Charge Air Cooler CAC Tube Bolt**
**Courtesy of CHRYSLER LLC**

7. Tighten bolt (1) securing the Charge Air Cooler (CAC) tube to turbocharger to 9 N.m (80 in. lbs.).

 

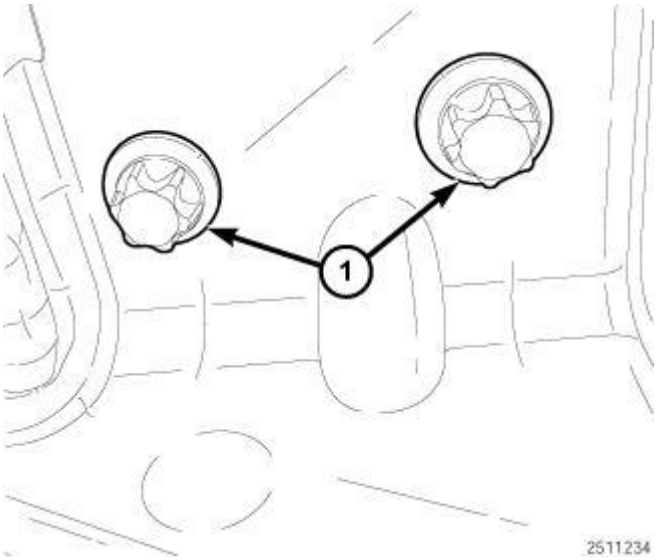


**Fig. 664: CAC Tube And Bracket Assembly Bolts**
**Courtesy of CHRYSLER LLC**

8. Install the charge air muffler bracket. Tighten bolts (1) to 9 N.m (80 in. lbs.).
9. Install the cylinder head cover. Refer to **COVER(S), Cylinder Head , Installation**.
10. Connect negative battery cable.

 