2014 ENGINE

2.0L - Service Information - Compass & Patriot

DESCRIPTION

DESCRIPTION

The 2.0 Liter (122 cu. in.) in-line four cylinder engine is a double over head camshaft with mechanical lash buckets and four valves per cylinder design. This engine is NOT free-wheeling; meaning that the pistons will contact the valves in the event of a timing chain failure.

The cylinders are numbered from front of the engine to the rear. The firing order is 1-3-4-2.

The engine serial number is located on the rear of the cylinder block. The serial number contains engine build date information.

DIAGNOSIS AND TESTING

INTRODUCTION

Engine diagnosis is helpful in determining the causes of malfunctions not detected and remedied by routine maintenance.

These malfunctions may be classified as either mechanical (e.g., a strange noise), or performance (e.g., engine idles rough and stalls).

Refer to the Engine **MECHANICAL** and the Engine **PERFORMANCE** diagnostic charts, for possible causes and corrections of malfunctions. Refer to **DIAGNOSIS AND TESTING** .

For fuel system diagnosis, refer to **FUEL SYSTEM** article .

Additional tests and diagnostic procedures may be necessary for specific engine malfunctions that cannot be isolated with the Service Diagnosis charts. Information concerning additional tests and diagnosis is provided within the following:

- Cylinder Compression Pressure Test: Refer to **CYLINDER COMPRESSION PRESSURE TEST**.
- Cylinder Combustion Pressure Leakage Test: Refer to **CYLINDER COMBUSTION PRESSURE LEAKAGE TEST**.
- Engine Cylinder Head Gasket Failure Diagnosis: Refer to **DIAGNOSIS AND TESTING - CYLINDER HEAD GASKET**.
- Intake Manifold Leakage Diagnosis: Refer to **MANIFOLD, INTAKE**.
- Mechanical Valve Tappet Noise Diagnosis: Refer to **DIAGNOSIS AND TESTING - MECHANICAL VALVE TAPPET NOISE DIAGNOSIS**.
- Engine Oil Leak Inspection: Refer to **ENGINE OIL LEAK INSPECTION**.

 © 2011 Mitchell Repair Information Company, LLC.

PERFORMANCE

CONDITION	POSSIBLE CAUSE	CORRECTION
ENGINE WILL NOT START	1. Weak battery.	1. Test battery. Charge or replace as necessary. Refer to **DIAGNOSIS AND TESTING** .
	2. Corroded or loose battery connections.	2. Clean and tighten battery connections. Apply a coat of light mineral grease to terminals.
	3. Faulty starter.	3. Test starting system. Check for codes. (Refer to **DIAGNOSIS AND TESTING**)
	4. Faulty coil(s) or control unit.	4. Test and replace as needed. (Refer to **CHECKING THE IGNITION COIL OPERATION**)
	5. Incorrect spark plug gap.	5. Set gap. Refer to **SPECIFICATIONS** .
	6. Contamination in fuel system.	6. Clean system and replace fuel filter.
	7. Faulty fuel pump.	7. Test fuel pump and replace as needed. (Refer to **FUEL SYSTEM**)
	8. Incorrect engine timing.	8. Check for a skipped timing belt/chain.
ENGINE STALLS OR IDLES ROUGH	1. Idle speed too low.	1. Test minimum air flow. (Refer to Appropriate Diagnostic Information)
	2. Incorrect fuel mixture.	2. (Refer to **FUEL SYSTEM**)
	3. Intake manifold leakage.	3. Inspect intake manifold, manifold gasket, and vacuum hoses.
	4. Faulty ignition coil(s).	4. Test and replace as necessary. (Refer to **CHECKING THE IGNITION COIL OPERATION**
	5. Contamination in Oil Control Valve (OCV).	5. Remove OCV and inspect for contamination. Replace OCV if contaminated.
ENGINE LOSS OF POWER	1. Dirty or incorrectly gapped plugs.	1. Clean plugs and set gap.
	2. Contamination in fuel system.	2. Clean system and replace fuel filter.
	3. Faulty fuel pump.	3. Test and replace as necessary. (Refer to **FUEL SYSTEM**)
	4. Incorrect valve timing.	4. Correct valve timing.
	5. Leaking cylinder head gasket.	5. Replace cylinder head gasket.
	6. Low compression.	6. Test compression of each cylinder.
	7. Burned, warped, or pitted	7. Replace valves.

 © 2011 Mitchell Repair Information Company, LLC.

	valves.	
	8. Plugged or restricted exhaust system.	8. Perform exhaust restriction test. Install new parts, as necessary. Refer to **DIAGNOSIS AND TESTING** .
	9. Faulty ignition coil(s).	9. Test and replace as necessary. (Refer to **CHECKING THE IGNITION COIL OPERATION**)
ENGINE MISSES ON ACCELERATION	1. Dirty or incorrectly gapped spark plugs.	1. Clean spark plugs and set gap.
	2. Contamination in Fuel System.	2. Clean fuel system and replace fuel filter.
	3. Burned, warped, or pitted valves.	3. Replace valves.
	4. Faulty ignition coil(s).	4. Test and replace as necessary. (Refer to **CHECKING THE IGNITION COIL OPERATION**)
ENGINE MISSES AT HIGH SPEED	1. Dirty or incorrect spark plug gap.	1. Clean spark plugs and set gap.
	2. Faulty ignition coil(s).	2. Test and replace as necessary. (Refer to **CHECKING THE IGNITION COIL OPERATION**)
	3. Dirty fuel injector(s).	3. Test and replace as necessary. (Refer to **FUEL SYSTEM**)
	4. Contamination in fuel system.	4. Clean system and replace fuel filter.

MECHANICAL

CONDITION	POSSIBLE CAUSES	CORRECTION
VALVETRAIN NOISE	1. High or low oil level in crankcase.	1. Check and correct engine oil level.
	2. Thin or diluted oil.	2. Change oil to correct viscosity.
	3. Thick oil	3. (a) Change engine oil and filter.
		(b) Run engine to operating temperature.
		(c) Change engine oil and filter again.
	4. Low oil pressure.	4. (a) Check and correct engine oil level.
		(b) Check pressure regulating valve.
	5. Worn cam lobe.	5. Install new camshaft.
	6. Worn tappet bucket.	6. Install new select fit tappet bucket.

 © 2011 Mitchell Repair Information Company, LLC.

	7. Worn valve guides.	7. Replace cylinder head.
	8. Excessive runout of valve seats on valve faces.	8. Grind valve seats and replace valves.
CONNECTING ROD NOISE	1. Insufficient oil supply.	1. Check engine oil level.
	2. Low oil pressure.	2. Check engine oil level. Inspect oil pump relief valve and spring.
	3. Thin or diluted oil.	3. Change oil to correct viscosity.
	4. Thick oil	4. (a) Change engine oil and filter.
		(b) Run engine to operating temperature.
		(c) Change engine oil and filter again.
	5. Excessive bearing clearance.	5. Measure bearings for correct clearance. Repair as necessary.
	6. Connecting rod journal out-of-round.	6. Replace crankshaft or grind surface.
	7. Connecting rod out-of-round.	7. Replace connecting rod.
	8. Misaligned connecting rods.	8. Replace bent connecting rods.
MAIN BEARING NOISE	1. Insufficient oil supply.	1. Check engine oil level.
	2. Low oil pressure.	2. Check engine oil level. Inspect oil pump relief valve and spring.
	3. Thin or diluted oil.	3. Change oil to correct viscosity.
	4. Thick oil	4. (a) Change engine oil and filter.
		(b) Run engine to operating temperature.
		(c) Change engine oil and filter again.
	5. Excessive bearing clearance.	5. Measure bearings for correct clearance. Repair as necessary.
	6. Excessive end play.	6. Check thrust bearing for wear on flanges.
	7. Crankshaft journal out-of-round or worn.	7. Replace crankshaft or grind journals.
	8. Loose flywheel or torque converter.	8. Tighten to correct torque.
OIL PRESSURE DROP	1. Low oil level.	1. Check engine oil level.
	2. Faulty oil pressure sending unit.	2. Install new sending unit.
	3. Low oil pressure.	3. Check sending unit and main bearing oil clearance.
	4. Clogged oil filter.	4. Install new oil filter.
	5. Worn parts in oil pump.	5. Replace balance shaft module.
	6. Thin or diluted oil.	6. Change oil to correct viscosity.

 © 2011 Mitchell Repair Information Company, LLC.

	7. Oil pump relief valve stuck.	7. Remove valve and inspect, clean, or replace.
	8. Excessive bearing clearance.	8. Measure bearings for correct clearance.
OIL LEAKS	1. Misaligned or deteriorated gaskets.	1. Replace gasket(s).
	2. Loose fastener, broken or porous metal part.	2. Tighten, repair or replace the part.
	3. Misaligned or deteriorated cup or threaded plug.	3. Replace as necessary.
OIL CONSUMPTION OR SPARK PLUGS FOULED	1. PCV system malfunction.	1. Check system and repair as necessary. Refer to **VALVE, POSITIVE CRANKCASE VENTILATION (PCV), DIAGNOSIS AND TESTING** .
	2. Worn, scuffed or broken rings.	2. Hone cylinder bores. Install new rings.
	3. Carbon in oil ring slots.	3. Install new rings.
	4. Rings fitted too tightly in grooves.	4. Remove rings and check grooves. If groove is not proper width, replace piston.
	5. Worn valve guide(s).	5. Replace cylinder head.
	6. Valve stem seal(s) worn or damaged.	6. Replace seal(s).

CYLINDER COMBUSTION PRESSURE LEAKAGE TEST

The combustion pressure leakage test provides an accurate means for determining engine condition.

Combustion pressure leakage testing will detect:

- Exhaust and intake valve leaks (improper seating).
- Leaks between adjacent cylinders or into water jacket.
- Any causes for combustion/compression pressure loss.

WARNING: Do not remove the pressure cap with the system hot and under pressure because serious burns from coolant can occur.

1. Check the coolant level and fill as required. DO NOT install the pressure cap.
2. Start and operate the engine until it attains normal operating temperature, then turn the engine OFF.
3. Clean spark plug recesses with compressed air.
4. Remove the spark plugs.
5. Remove the oil filler cap.

 © 2011 Mitchell Repair Information Company, LLC.

6. Remove the air cleaner.
7. Calibrate the tester according to the manufacturer's instructions. The shop air source for testing should maintain 483 kPa (70 psi) minimum, 1, 379 kPa (200 psi) maximum, with 552 kPa (80 psi) recommended.
8. Perform the test procedures on each cylinder according to the tester manufacturer's instructions. While testing, listen for pressurized air escaping through the throttle body, tailpipe and oil filler cap opening. Check for bubbles in the coolant.
9. All gauge pressure indications should be equal, with no more than 25% leakage per cylinder.
10. **FOR EXAMPLE:** At 552 kPa (80 psi) input pressure, a minimum of 414 kPa (60 psi) should be maintained in the cylinder.

CYLINDER COMPRESSION PRESSURE TEST

The results of a cylinder compression pressure test can be utilized to diagnose several engine malfunctions.

Ensure the battery is completely charged and the engine starter motor is in good operating condition. Otherwise the indicated compression pressures may not be valid for diagnosis purposes.

1. Check engine oil level and add oil if necessary.
2. Drive the vehicle until engine reaches normal operating temperature. Select a route free from traffic and other forms of congestion, observe all traffic laws, and accelerate through the gears several times briskly.
3. Remove engine cover.
4. Disconnect coil electrical connectors and remove coils.
5. Remove all spark plugs from engine. As spark plugs are being removed, check electrodes for abnormal firing indicators such as fouled, hot, oily, etc. Record cylinder number of spark plug for future reference.
6. Disconnect injector electrical connectors.
7. Insert compression pressure adaptor (special tool #8116, Adapter, Pressure PEP) or the equivalent, into the #1 spark plug hole in cylinder head. Connect the 0-500 psi (Blue) pressure transducer CH7059 with cable adaptors to the DRBIII®. For Special Tool identification, refer to **SPECIAL TOOLS** .
8. Crank engine until maximum pressure is reached on gauge. Record this pressure as #1 cylinder pressure.
9. Repeat the previous step for all remaining cylinders.
10. Compression should not be less than 689 kPa (100 psi) and not vary more than 25 percent from cylinder to cylinder.
11. If one or more cylinders have abnormally low compression pressures, repeat the compression test.
12. If the same cylinder or cylinders repeat an abnormally low reading on the second compression test, it could indicate the existence of a problem in the cylinder in question. **The recommended compression pressures are to be used only as a guide to diagnosing engine problems. An engine should not be disassembled to determine the cause of low compression unless some malfunction is present.**

OIL CONSUMPTION TEST AND DIAGNOSIS

The following diagnostic procedures are used to determine the source of excessive internal oil consumption, these procedures and tests apply to vehicles with 50, 000 miles or less.

 © 2011 Mitchell Repair Information Company, LLC.

NOTE: Engine oil consumption may be greater than normal during engine break-in. Repairs should be delayed until vehicle has been driven at least 7, 500 miles.

Severe service (high ambient temperature, short trips, heavy loading, trailer towing, taxi, off-road, or law enforcement use) may result in greater oil consumption than normal.

Sustained high speed driving and high engine RPM operation may result in increased oil consumption.

Failure to comply with the recommended oil type and viscosity rating, as outlined in the owner's manual, may impact oil economy as well as fuel economy.

Oil consumption may increase with vehicle age and mileage due to normal engine wear.

NOTE: Because a few drops of external oil leakage per mile can quickly account for the loss of one quart of oil in a few hundred miles, be certain there is no external engine oil leaks present.

- **Oil leakage is not the same as oil consumption and all external leakage must be eliminated before any action can be taken to verify and/or correct oil consumption complaints.**
- **Verify that the engine has the correct oil level dipstick and dipstick tube installed.**
- **Verify that the engine is not being run in an overfilled condition. Check the oil level 15 minutes after a hot shutdown with the vehicle parked on a level surface. In no case should the level be above MAX or the FULL mark on the dipstick.**

OIL CONSUMPTION TEST

1. Check the oil level at least 15 minutes after a hot shutdown.
2. If the oil level is low, top off with the proper viscosity and API service level engine oil. Add one bottle of MOPAR® 4-In-1 Leak Detection Dye into the engine oil.
3. Tamper proof the oil pan drain plug, oil filter, dipstick and oil fill cap.
4. Record the vehicle mileage.
5. Instruct the customer to drive the vehicle as usual.
6. Ask the customer to return to the servicing dealer after accumulating 500 miles, Check the oil level at least 15 minutes after a hot shutdown. If the oil level is half way between the "FULL" and "ADD" mark continue with the next step.
7. Using a black light, re-check for any external engine oil leaks, repair as necessary, if no external engine oil leaks are present, continue with oil consumption diagnosis.

OIL CONSUMPTION DIAGNOSIS

1. Check the positive crankcase ventilation (PCV) system. Make sure the system is not restricted and the PCV valve has the correct part number and correct vacuum source (18-20 in. Hg at idle below 3000 ft. above sea level is considered normal).
2. Perform a cylinder compression test and cylinder leak down test using the standard leak down gauge following manufacturers suggested best practices.

 © 2011 Mitchell Repair Information Company, LLC.

NOTE: Verify the spark plugs are not oil saturated. If the spark plugs are oil saturated and compression is good it can be assumed the valve seals or valve guides are at fault.

3. If one or more cylinders have more than 15% leak down further engine tear down and inspection will be required.

TOP 19 REASONS THAT MAY LEAD TO ENGINE OIL CONSUMPTION

1. **Tapered and Out-of-Round Cylinders**

   The increased piston clearances permit the pistons to rock in the worn cylinders. While tilted momentarily, an abnormally large volume of oil is permitted to enter on one side of the piston. The rings, also tilted in the cylinder, permit oil to enter on one side. Upon reversal of the piston on each stroke, some of this oil is passed into the combustion chamber.

2. **Distorted Cylinders**

   This may be caused by unequal heat distribution or unequal tightening of cylinder head bolts. This condition presents a surface which the rings may not be able to follow completely. In this case, there may be areas where the rings will not remove all of the excess oil. When combustion takes place, this oil will be burned and cause high oil consumption.

3. **Improper operation of "PCV "system**

   The main purpose of the Positive Crankcase Ventilation (PCV) valve is to recirculate blow-by gases back from the crankcase area through the engine to consume unburned hydrocarbons. The PCV system usually has a one way check valve and a make up air source. The system uses rubber hoses that route crankcase blow by gases to the intake manifold. Vacuum within the engine intake manifold pulls the blow by gases out of the crankcase into the combustion chamber along with the regular intake air and fuel mixture.

   The PCV system can become clogged with sludge and varnish deposits and trap blow by gases in the crankcase. This degrades the oil, promoting additional formation of deposit material. If left uncorrected, the result is plugged oil rings, oil consumption, rapid ring wear due to sludge buildup, ruptured gaskets and seals due to crankcase pressurization.

4. **Worn Piston Ring Grooves**

   For piston rings to form a good seal, the sides of the ring grooves must be true and flat - not flared or shouldered. Piston rings in tapered or irregular grooves will not seal properly and, consequently, oil will pass around behind the rings into the combustion chamber.

5. **Worn, Broken or Stuck Piston Rings**

   When piston rings are broken, worn or stuck to such an extent that the correct tension and clearances are not maintained, this will allow oil to be drawn into the combustion chamber on the intake stroke and hot gases of combustion to be blown down the cylinder past the piston on the power stroke. All of these

 © 2011 Mitchell Repair Information Company, LLC.

conditions will result in burning and carbon build up of the oil on the cylinders, pistons and rings.

6. **Cracked or Broken Ring Lands**

   Cracked or broken ring lands prevent the rings from seating completely on their sides and cause oil pumping. This condition will lead to serious damage to the cylinders as well as complete destruction of the pistons and rings. Cracked or broken ring lands cannot be corrected by any means other than piston replacement.

7. **Worn Valve Stems and Guides**

   When wear has taken place on valve stems and valve guides, the vacuum in the intake manifold will draw oil and oil vapor between the intake valve stems and guides into the intake manifold and then into the cylinder where it will be burned.

8. **Bent or Misaligned Connecting Rods**

   Bent or misaligned connecting rods will not allow the pistons to ride straight in the cylinders. This will prevent the pistons and rings from forming a proper seal with the cylinder walls and promote oil consumption. In addition, it is possible that a bearing in a bent connect rod will not have uniform clearance on the connecting rod wrist pin. Under these conditions, the bearing will wear rapidly and throw off an excessive amount of oil into the cylinder.

9. **Fuel Dilution**

   If raw fuel is allowed to enter the lubrication system, the oil will become thinner and more volatile and will result in higher oil consumption. The following conditions will lead to higher oil consumption;

   - Excess fuel can enter and mix with the oil via a leaking fuel injector
   - Gasoline contaminated with diesel fuel
   - Restricted air intake
   - Excessive idling

10. **Contaminated Cooling Systems**

    Corrosion, rust, scale, sediment or other formations in the water jacket and radiator will prevent a cooling system from extracting heat efficiently. This is likely to cause cylinder distortion thus leading to higher oil consumption.

11. **Oil Viscosity**

    The use of oil with a viscosity that is too light may result in high oil consumption. Refer to the vehicle owner's manual for the proper oil viscosity to be used under specific driving conditions and/or ambient temperatures.

12. **Dirty Engine Oil**

 © 2011 Mitchell Repair Information Company, LLC.

Failure to change the oil and filter at proper intervals may cause the oil to be so dirty that it will promote accumulation of sludge and varnish and restrict oil passages in the piston rings and pistons. This will increase oil consumption; dirty oil by nature is also consumed at a higher rate than clean oil.

13. **Crankcase Overfull**

Due to an error in inserting the oil dip stick so that it does not come to a seat on its shoulder, a low reading may be obtained. Additional oil may be added to make the reading appear normal with the stick in this incorrect position which will actually make the oil level too high. If the oil level is so high that the lower ends of the connecting rods touch the oil in the oil pan excessive quantities of oil will be thrown on the cylinder walls and some of it will work its way up into the combustion chamber.

14. **Excessively High Oil Pressure**

A faulty oil pressure relief valve may cause the oil pressure to be too high. The result will be that the engine will be flooded with an abnormally large amount of oil in a manner similar to that which occurs with worn bearings. This condition may also cause the oil filter to burst.

15. **Aftermarket Performance Chips and Modification**

Increasing performance through the use of performance/power enhancement products to a stock or factory engine will increase the chance of excessive oil consumption.

16. **Lugging Engine**

Lugging is running the engine at a lower RPM in a condition where a higher RPM (more power/torque) should be implemented. Especially susceptible on vehicles equipped with a manual transmission. This driving habit causes more stress loading on the piston and can lead to increases in engine oil consumption.

17. **Turbocharged Engines**

There is a possibility for PCV "push-over" due to higher crankcase pressure (as compared to naturally aspirated engines) which is normal for turbocharged engines. This condition causes varying amounts of engine oil to enter the intake manifold, charge air cooler and associated plumbing to and from the charge air cooler, also a leaking turbocharger seal will draw oil into the combustion chamber where it will burn (blue smoke from tail pipe may be present) and form carbon deposits which contribute to further oil consumption as they interfere with proper engine function.

18. **Restricted Air Intake**

Excessive restriction in the air intake system will increase engine vacuum and can increase oil consumption, an extremely dirty air filter would be one example of this situation.

19. **Intake Manifold port seals**

Engines that have a "V" configuration and a "wet valley" (3.3/3.8L) could draw oil into the intake ports due to improper sealing between the intake manifold ports and cylinder head. Causes may include

 © 2011 Mitchell Repair Information Company, LLC.

improper torque of intake manifold bolts, corrosion (aluminum intake manifold) and or warped sealing surface.

ENGINE OIL LEAK INSPECTION

Begin with a thorough visual inspection of the engine, particularly at the area of the suspected leak. If an oil leak source is not readily identifiable, the following steps should be followed:

1. Do not clean or degrease the engine at this time because some solvents may cause rubber to swell, temporarily stopping the leak.
2. Add an oil soluble dye (use as recommended by manufacturer). Start the engine and let idle for approximately 15 minutes. Check the oil dipstick to make sure the dye is thoroughly mixed as indicated with a bright yellow color under a black light.
3. Using a black light, inspect the entire engine for fluorescent dye, particularly at the suspected area of oil leak. If the oil leak is found and identified, repair as necessary.
4. If dye is not observed, drive the vehicle at various speeds for approximately 24 km (15 miles), and repeat inspection.
5. **If the oil leak source is not positively identified at this time** , proceed with the air leak detection test method as follows:
   - Disconnect the fresh air hose (make-up air) at the cylinder head cover and plug or cap the nipple on the cover.
   - Remove the PCV valve hose from the cylinder head cover. Cap or plug the PCV valve nipple on the cover.
   - Attach an air hose with pressure gauge and regulator to the dipstick tube.

     CAUTION: Do not subject the engine assembly to more than 20.6 kPa (3 PSI) of test pressure.

   - Gradually apply air pressure from 1 psi to 2.5 psi maximum while applying soapy water at the suspected source. Adjust the regulator to the suitable test pressure that provides the best bubbles which will pinpoint the leak source. If the oil leak is detected and identified, repair per service manual procedures.
   - If the leakage occurs at the crankshaft rear oil seal area, refer to **INSPECTION FOR REAR SEAL AREA LEAKS** .
6. If no leaks are detected, turn off the air supply. Remove the air hose, all plugs, and caps. Install the PCV valve and fresh air hose (make-up air). Proceed to next step.
7. Clean the oil off the suspect oil leak area using a suitable solvent. Drive the vehicle at various speeds approximately 24 km (15 miles). Inspect the engine for signs of an oil leak by using a black light.

NOTE: If oil leakage is observed at the dipstick tube to block location; remove the tube, clean and reseal using Mopar® Stud AND Bearing Mount (press fit tube applications only), and for O-ring style tubes, remove tube and replace the O-ring seal.

 © 2011 Mitchell Repair Information Company, LLC.

INSPECTION FOR REAR SEAL AREA LEAKS

Since it is sometimes difficult to determine the source of an oil leak in the rear seal area of the engine, a more involved inspection is necessary. The following steps should be followed to help pinpoint the source of the leak.

If the leakage occurs at the crankshaft rear oil seal area:

1. Disconnect the battery.
2. Raise the vehicle.
3. Remove torque converter or clutch housing cover and inspect rear of block for evidence of oil. Use a black light to check for the oil leak. If a leak is present in this area, remove transmission for further inspection.
   a. Circular spray pattern generally indicates seal leakage or crankshaft damage.
   b. Where leakage tends to run straight down, possible causes are a porous block, oil gallery cup plug, bedplate to cylinder block mating surfaces and seal bore. See appropriate repair procedures for these items.
4. If no leaks are detected, pressurize the crankcase as previously described.

   CAUTION: Do not exceed 20.6 kPa (3 psi).

5. If the leak is not detected, very slowly turn the crankshaft and watch for leakage. If a leak is detected between the crankshaft and seal while slowly turning the crankshaft, it is possible the crankshaft seal surface is damaged. The seal area on the crankshaft could have minor nicks or scratches that can be polished out with emery cloth.

   CAUTION: Use extreme caution when crankshaft polishing is necessary to remove minor nicks and scratches. The crankshaft seal flange is especially machined to complement the function of the rear oil seal.

6. For bubbles that remain steady with shaft rotation, no further inspection can be done until disassembled.
7. After the oil leak root cause and appropriate corrective action have been identified, replace component(s) as necessary.

STANDARD PROCEDURE

DUST COVERS AND CAPS

 © 2011 Mitchell Repair Information Company, LLC.

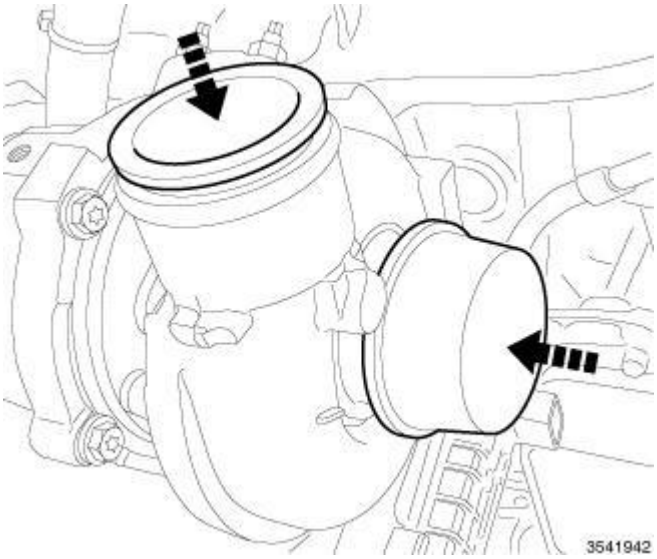

Fig. 1: Covers/Caps
Courtesy of CHRYSLER GROUP, LLC

Due to the high amounts of failures caused by dust, dirt, moisture and other foreign debris being introduced to the engine during service. Covers or caps are needed to reduce the possible damage that can be caused or created.

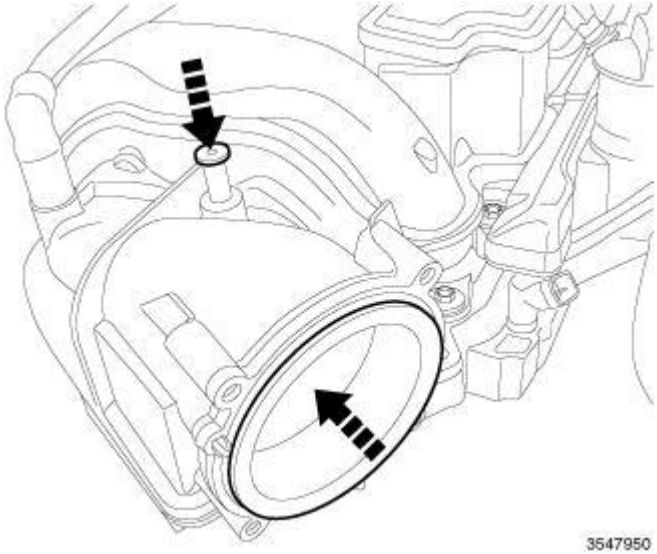

Fig. 2: Opening Cover
Courtesy of CHRYSLER GROUP, LLC

Covers over openings will reduce any possibilities for foreign materials to enter the engine systems. Using miller tool (special tool #10368, Set, Universal Protective Cap), Select the appropriated cover needed to the procedure.

ENGINE GASKET SURFACE PREPARATION

 © 2011 Mitchell Repair Information Company, LLC.

Fig. 3: Proper Tool Usage For Surface Preparation
Courtesy of CHRYSLER GROUP, LLC

To ensure engine gasket sealing, proper surface preparation must be performed, especially with the use of aluminum engine components and multi-layer steel cylinder head gaskets.

Never use the following to clean gasket surfaces:

- Metal scraper (1).
- Abrasive pad or paper to clean cylinder block and head.
- High speed power tool with an abrasive pad or a wire brush (2).

Fig. 4: Proper Tool Usage For Surface Preparation
Courtesy of CHRYSLER GROUP, LLC

NOTE: Multi-Layer Steel (MLS) head gaskets require a scratch free sealing surface.

 © 2011 Mitchell Repair Information Company, LLC.

Only use the following for cleaning gasket surfaces:

- Solvent or a commercially available gasket remover
- Plastic or wood scraper (4).
- High speed power tool with a plastic bristle brush style disc (3).

Sealing surfaces must be free of grease or oil residue. Clean surfaces with Mopar® brake parts cleaner (or equivalent).

REPAIR OF DAMAGED OR WORN THREADS

Damaged or worn threads (excluding spark plug and camshaft bearing cap attaching threads) can be repaired. Essentially, this repair consists of drilling out worn or damaged threads, tapping the hole with a special Heli-Coil Tap, (or equivalent) and installing an insert into the tapped hole. This brings the hole back to its original thread size.

CAUTION: Be sure that the tapped holes maintain the original center line.

Heli-Coil tools and inserts are readily available from automotive parts jobbers.

HYDROSTATIC LOCKED ENGINE

When an engine is suspected to be hydrostatically locked, regardless of what caused the problem, the following steps should be used.

CAUTION: DO NOT use starter motor to rotate the engine, severe damage may occur.

1. Inspect air cleaner, induction system and intake manifold to insure system is dry and clear of foreign material.
2. Remove negative battery cable.
3. Place a shop towel around the spark plugs when removing them from the engine. This will catch any fluid that may possibly be in the cylinder under pressure.
4. With all spark plugs removed, rotate engine crankshaft using a breaker bar and socket.
5. Identify the fluid in the cylinder(s) (i.e., coolant, fuel, oil or other).
6. Make sure all fluid has been removed from the cylinders. Inspect engine for damage (i.e., connecting rods, pistons, valves, etc.)
7. Repair engine or components as necessary to prevent this problem from re-occurring.

CAUTION: Squirt approximately one teaspoon of oil into the cylinders, rotate engine to lubricate the cylinder walls to prevent damage on restart.

 © 2011 Mitchell Repair Information Company, LLC.

8. Install new spark plugs.
9. Drain engine oil and remove oil filter.
10. Install a new oil filter.
11. Fill engine with specified amount of approved oil.
12. Connect negative battery cable.
13. Start engine and check for any leaks.

FORM-IN-PLACE GASKETS AND SEALERS

NOTE: All of the sealants mentioned below are not used on every engine, they are listed as a general reference guide. See appropriate service information for specific sealer usage.

There are numerous places where form-in-place gaskets are used on the engine. Care must be taken when applying form-in-place gaskets to assure obtaining the desired results.**Do not use form-in-place gasket material unless specified.** Bead size, continuity, and location are of great importance. Too thin a bead can result in leakage while too much can result in spill-over which can break off and obstruct fluid feed lines. A continuous bead of the proper width is essential to obtain a leak-free gasket. All sealing surfaces that use form-in-place gaskets and sealers **must** free of grease or oil. Surfaces should be cleaned with Mopar® brake parts cleaner prior to sealer application. After the sealer is applied, the parts should be assembled in no more than 10 minutes.

There are numerous types of form-in-place gasket materials that are used in the engine area. Mopar® Engine RTV GEN II, Mopar® ATF-RTV, and Mopar® Gasket Maker gasket materials, each have different properties and can not be used in place of the other.

MOPAR® ENGINE RTV GEN II is used to seal components exposed to engine oil. This material is a specially designed black silicone rubber RTV that retains adhesion and sealing properties when exposed to engine oil. Moisture in the air causes the material to cure. This material is available in three ounce tubes and has a shelf life of one year. After one year this material will not properly cure. Always inspect the package for the expiration date before use.

MOPAR® ATF RTV is a specifically designed black silicone rubber RTV that retains adhesion and sealing properties to seal components exposed to automatic transmission fluid, engine coolants, and moisture. This material is available in three ounce tubes and has a shelf life of one year. After one year this material will not properly cure. Always inspect the package for the expiration date before use.

MOPAR® GASKET MAKER is an anaerobic type gasket material. The material cures in the absence of air when squeezed between two metallic surfaces. It will not cure if left in the uncovered tube. The anaerobic material is for use between two machined surfaces. Do not use on flexible metal flanges.

MOPAR® BED PLATE SEALANT is a unique (green-in-color) anaerobic type gasket material that is specially made to seal the area between the bed plate and cylinder block without disturbing the bearing clearance or alignment of these components. The material cures slowly in the absence of air when torqued between two metallic surfaces, and will rapidly cure when heat is applied.

 © 2011 Mitchell Repair Information Company, LLC.

MOPAR® GASKET SEALANT is a slow drying, permanently soft sealer. This material is recommended for sealing threaded fittings and gaskets against leakage of oil and coolant. Can be used on threaded and machined parts under all temperatures. This material also will prevent corrosion. Mopar® Gasket Sealant is available in a 13 oz. aerosol can or 4 oz./16 oz. can w/applicator.

SEALER APPLICATION

Mopar® Gasket Maker material should be applied sparingly 1 mm (0.040 in.) diameter or less of sealant to one gasket surface. Be certain the material surrounds each mounting hole. Excess material can easily be wiped off. Components should be torqued in place within 15 minutes. The use of a locating dowel is recommended during assembly to prevent smearing material off the location.

Mopar® Engine RTV GEN II or ATF RTV gasket material should be applied in a continuous bead approximately 3 mm (0.120 in.) in diameter. All mounting holes must be circled. For corner sealing and "T" joint locations, a 3.17 or 6.35 mm (1/8 or 1/4 in.) drop is placed in the center of the gasket contact area. Uncured sealant may be removed with a shop towel. Components should be torqued in place while the sealant is still wet to the touch (within 10 minutes). The usage of a locating dowel is recommended during assembly to prevent smearing material off the location.

Mopar® Gasket Sealant in an aerosol can should be applied using a thin, even coat sprayed completely over both surfaces to be joined, and both sides of a gasket. Then proceed with assembly. Material in a can w/applicator can be brushed on evenly over the sealing surfaces.

CORE/GALLERY PLUGS

CYLINDER HEAD CORE PLUGS

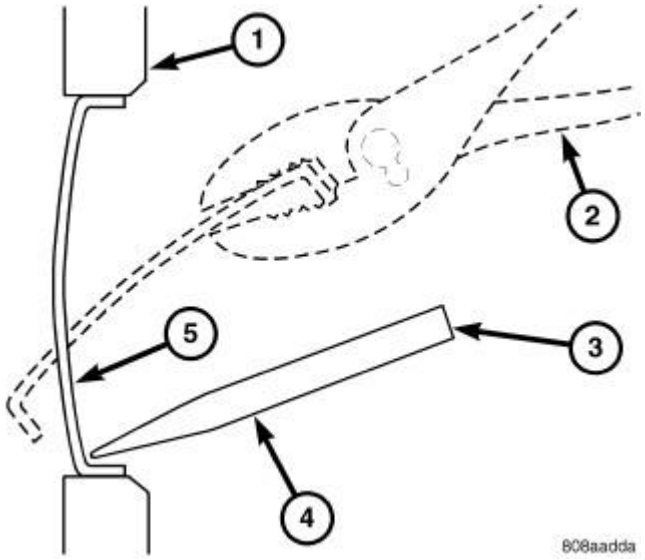

Fig. 5: Core Hole Plug Removal
Courtesy of CHRYSLER GROUP, LLC

Using a blunt tool (3) such as a drift and a hammer, strike the bottom edge of the cup plug (5). With the cup plug rotated, grasp firmly with pliers or other suitable tool (2) and remove plug (5).

 © 2011 Mitchell Repair Information Company, LLC.

CAUTION: Do not drive cup plug into the casting as restricted cooling can result and cause serious engine problems.

Thoroughly clean inside of cup plug hole in cylinder head. Be sure to remove old sealer. Lightly coat inside of cup plug hole with Mopar® Stud and Bearing Mount (or equivalent). Make certain the new plug is cleaned of all oil or grease. Using proper drive plug, drive plug into hole so that the sharp edge of the plug is at least 0.5 mm (0.020 in.) inside the lead-in chamfer.

It is not necessary to wait for curing of the sealant. The cooling system can be refilled and the vehicle placed in service immediately.

MEASURING BEARING CLEARANCE USING PLASTIGAGE

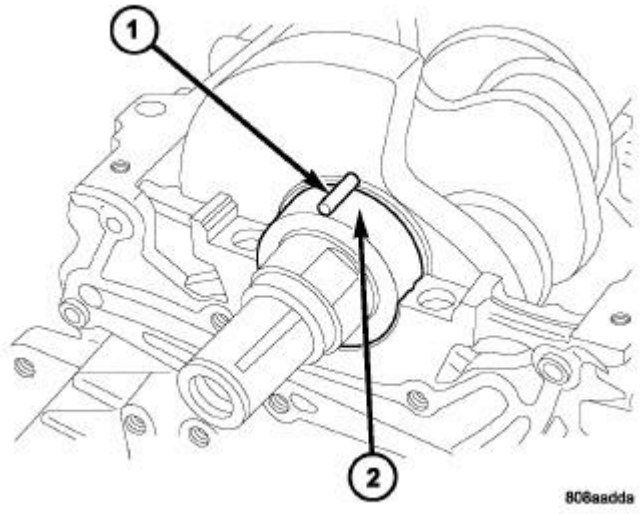

Fig. 6: Plastigage Placed In Lower Shell-Typical
Courtesy of CHRYSLER GROUP, LLC

Engine crankshaft bearing clearances can be determined by use of Plastigage or equivalent. The following is the recommended procedure for the use of Plastigage:

1. Remove oil film from surface to be checked. Plastigage is soluble in oil.
2. Place a piece of Plastigage (1) across the entire width of the journal. (In addition, suspected areas can be checked by placing the Plastigage in the suspected area). Tighten the bearing cap bolts of the bearing being checked to the proper specifications.
3. Remove the bearing cap and compare the width of the flattened Plastigage with the scale provided on the package. Locate the band closest to the same width. This band shows the amount of clearance. Differences in readings between the ends indicate the amount of taper present. Record all readings taken. Compare clearance measurements to specs found in engine specifications. Refer to **SPECIFICATIONS** . **Plastigage generally is accompanied by two scales. One scale is in inches, the other is a metric scale.**

 © 2011 Mitchell Repair Information Company, LLC.

NOTE: **Plastigage is available in a variety of clearance ranges. Use the most appropriate range for the specifications you are checking.**

4. Install the proper crankshaft bearings to achieve the specified bearing clearances.

SPECIFICATIONS

2.0L ENGINE

GENERAL SPECIFICATIONS

DESCRIPTION	SPECIFICATION	
	Metric	Standard
Type	In-Line OHV, DOHC	
Number of Cylinders	4	
Firing Order	1-3-4-2	
Compression Ratio	10.5:1	
Displacement	2.0 L	122 cu. in.
Bore	86 mm	3.386 in.
Stroke	86 mm	3.386 in.
Compression Pressure	1172 - 1551 kPa	170 - 225 psi
Max. Variation Between Cylinders	25%	

CYLINDER BLOCK

DESCRIPTION	SPECIFICATION	
	Metric	Standard
Material	Cast Aluminum	
Cylinder Bore Diameter		
A	86.0 - 86.010 mm	3.3858 - 3.3862 in.
B	86.010 - 86.020 mm	3.3862 - 3.3866 in.
C	86.020 - 86.030 mm	3.3866 - 3.3869 in.
Cylinder Bore Out-of-Round (Max.)	0.020 mm	0.0008 in.
Cylinder Bore Taper (Max.)	0.028 mm	0.001 in.
Main Bearing Bore Diameter		
1	56.000 - 56.006 mm	2.2047 - 2.2049 in.
2	56.006 - 56.012 mm	2.2049 - 2.2051 in.
3	56.012 - 56.018 mm	2.2051 - 2.2054 in.
Main Bearing Bore Diameter Taper (Max.)	0.0082 mm	0.0003 in.

PISTONS

DESCRIPTION	SPECIFICATION	
	Metric	Standard

 © 2011 Mitchell Repair Information Company, LLC.

Piston Diameter		
A	85.995 - 86.015 mm	3.3856 - 3.3864 in.
B	86.005 - 86.025 mm	3.3860 - 3.3868 in.
C	86.015 - 86.035 mm	3.3864 - 3.3872 in.
Clearance to Bore	(-0.015) - 0.015 mm	(-0.0006) - 0.0006 in.
Weight	345 - 355 grams	12.17 - 12.52 oz.
Land Clearance (Diametrical)	0.60 - 0.73 mm	0.0236 - 0.0287 in.
Piston Length	49.0 mm	2.929 in.
Piston Ring Groove Depth No. 1	3.51 - 3.68 mm	0.1382 - 0.0256 in.
Piston Ring Groove Depth No. 2	4.05 - 4.25 mm	0.1594 - 0.1673 in.
Piston Ring Groove Depth No. 3	2.70 - 2.90 mm	0.1063 - 0.1142 in.

PISTON RINGS

DESCRIPTION	SPECIFICATION	
	Metric	Standard
Ring Gap-Top Compression Ring	0.15 - 0.30 mm	0.0059 - 0.0118 in.
Wear Limit	0.8 mm	0.031 in.
Ring Gap-2nd Compression Ring	0.30 - 0.45 mm	0.0118 - 0.0177 in.
Wear Limit	0.8 mm	0.031 in.
Ring Gap-Oil Control Steel Rails	0.20 - 0.70 mm	0.0079 - 0.0276 in.
Wear Limit	1.0 mm	0.039 in.
Ring Side Clearance-Compression Rings	0.03 - 0.07 mm	0.1182 - 0.0028 in.
Wear Limit	0.10 mm	0.004 in.
Ring Side Clearance-Oil Ring Pack	0.06 - 0.15 mm	0.0024 - 0.0059 in.
Ring Width-Top Compression Ring	2.95 - 3.25 mm	0.1161 - 0.1280 in.
Ring Width-2nd Compression Ring	3.45 - 3.75 mm	0.1358 - 0.1476 in.
Ring Width-Oil Ring Pack	2.30 - 2.60 mm	0.0906 - 0.1024 in.
Ring Thickness-Top Compression Ring	1.17 - 1.19 mm	0.0461 - 0.0469 in.
Ring Thickness-2nd Compression Ring	1.17 - 1.19 mm	0.0461 - 0.0469 in.
Ring Thickness-Oil Ring Pack	1.88 - 1.95 mm	0.0740 - 0.0768 in.

CONNECTING ROD

DESCRIPTION	SPECIFICATION	
	Metric	Standard
Bearing Clearance	0.032 - 0.060 mm	0.001 - 0.002 in.
Wear Limit	0.070 mm	0.0027 in.
Bore Diameter-Piston Pin	20.974 - 20.985 mm	0.8257 - 0.8261 in.
Bore Diameter-Crankshaft End	51 - 51.015 mm	2.0078 - 2.0084 in.
Side Clearance	0.1 - 0.25 mm	0.0039 - 0.0098 in.

 © 2011 Mitchell Repair Information Company, LLC.

Wear Limit	0.27 mm	0.0106 in.
Weight-Total (Less Bearing)	490 grams	17.28 oz.

CRANKSHAFT

DESCRIPTION	SPECIFICATION	
	Metric	Standard
Connecting Rod Journal Diameter		
Journal Grade		
1	47.966 - 47.972 mm	1.8884 - 1.8886 in.
2	47.960 - 47.966 mm	1.8884 - 1.8881 in.
3	47.954 - 47.960 mm	1.8879 - 1.8881 in.
Rod Journal- Taper (Max)	0.005 mm	0.0001 in.
Main Bearing Journal Diameter		
Journal Grade		
0	51.985 - 51.988 mm	2.0466 - 2.0467 in.
1	51.982 - 51.985 mm	2.0465 - 2.0466 in.
2	51.979 - 51.982 mm	2.0464 - 2.0465 in.
3	51.976 - 51.979 mm	2.0462 - 2.0464 in.
4	51.973 - 51.976 mm	2.0461 - 2.0462 in.
Journal Out-of-Round (Max.)	0.005 mm	0.0001 in.
Journal Taper (Max.)	0.006 mm	0.0002 in.
End Play	0.05 - 0.25 mm	0.0019 - 0.0098 in.
Wear Limit	0.30 mm	0.0118 in.
Main Bearing Diametrical Clearance	0.028 - 0.048 mm	0.0011 - 0.0018 in.
Main Bearing Diametrical Clearance (Max)	0.058 mm	0.0022 in.

CYLINDER HEAD CAMSHAFT BEARING BORE DIAMETER

DESCRIPTION	SPECIFICATION	
	Metric	Standard
Cam Bearing Bore		
Front Intake	30.000 - 30.021 mm	1.1810 - 1.1819 in.
Front Exhaust	40.000 - 40.024 mm	1.5747 - 1.5756 in.
Cam Bearing Bore No. 1-4	24.000 - 24.021 mm	0.9448 - 0.9457 in.

CAMSHAFT

DESCRIPTION	SPECIFICATION	
	Metric	Standard
Cam Journal Diameter		
Front Intake Cam	29.964 - 29.980 mm	1.1797 - 1.1803 in.
Front Exhaust Cam	35.984 - 36.000 mm	1.4166 - 1.4173 in.
Cam Journal Diameter No. 1-4	23.954 - 23.970 mm	0.943 - 0.944 in.

 © 2011 Mitchell Repair Information Company, LLC.

Bearing Clearance - Diametrical		
Front Intake Journal	0.020 - 0.057 mm	0.0008 - 0.0022 in.
Front Exhaust Journal	0.019 - 0.051 mm	0.0007 - 0.0020 in.
All Others	0.020 - 0.067 mm	0.0008 - 0.0026 in.
End Play	0.11 - 0.25 mm	0.004 - 0.009 in.
Max Lift @ 0.2mm (0.007 in.) lash		
Intake	9.2 mm	0.362 in.
Max Lift @ 0.28mm (0.011 in.) lash		
Exhaust	8.42 mm	0.331 in.
Intake Valve Timing w/ VVT in lock-pin position*		
Closes (ABDC)	49.3°	
Opens (ATDC)	10.3°	
Duration	219°	
Exhaust Valve Timing w/ VVT in lock-pin position*		
Closes (BTDC)	8.45°	
Opens (BBDC)	45°	
Duration	216.55°	
Valve Overlap @ 0.5mm (0.019 in.) w/ VVT in lock-pin position	18.75°	
* All reading in crankshaft degrees at 0.5 mm (0.019 in.) valve lift.		

CYLINDER HEAD

DESCRIPTION	SPECIFICATION	
	Metric	Standard
Material	Cast Aluminum - Heat treated	
Gasket Thickness (Compressed)	0.54 mm	0.021 in.
Valve Tappet Bore I.D.	32.000 - 32.025 mm	1.2598 - 1.2608 in.
Valve Tappet O.D	31.964 - 31.980 mm	1.2584 - 1.2590 in.

VALVE SEAT

DESCRIPTION	SPECIFICATION	
	Metric	Standard
Angle	44.75° - 45.10°	
Seat Outer Diameter - Intake	34.45 - 34.61 mm	1.3562 - 1.3625 in.
Seat Outer Diameter - Exhaust	28.04 - 28.20 mm	1.1039 - 1.1102 in.
Runout (Max.)	0.05 mm	0.002 in.
Valve Seat Width		
Intake	1.16 - 1.46 mm	0.0456 - 0.0574 in.
Service Limit	2.0 mm	0.079 in.
Exhaust	1.35 - 1.65 mm	0.0531 - 0.0649 in.
Service Limit	2.5 mm	0.098 in.

 © 2011 Mitchell Repair Information Company, LLC.

VALVE GUIDE

DESCRIPTION	SPECIFICATION	
	Metric	Standard
Diameter I.D.	5.500 - 5.518 mm	0.2165 - 0.2172 in.
Guide Bore Diameter	10.983 - 11.001 mm	0.432 - 0.4331 in.
Guide Height (spring seat to guide tip)	14.6 - 15.2 mm	0.5748 - 0.5984 in.

VALVES

DESCRIPTION	SPECIFICATION	
	Metric	Standard
Face Angle - Intake and Exhaust	45.25° - 45.75°	
Head Diameter - Intake	34.9 - 35.1 mm	1.374 - 1.3818 in.
Head Diameter - Exhaust	28.9 - 29.1 mm	1.1377 - 1.1456 in.
Valve Lash		
Intake	0.17 - 0.23 mm	0.006 - 0.009 in.
Exhaust	0.27 - 0.33 mm	0.010 - 0.012 in.
Valve Length (Overall)		
Intake	113.18 mm	4.455 in.
Exhaust	105.887 mm	4.168 in.
Valve Stem Diameter		
Intake	5.465 - 5.480 mm	0.2151 - 0.2157 in.
Exhaust	5.458 - 5.470 mm	0.2148 - 0.2153 in.

VALVE MARGIN

DESCRIPTION	SPECIFICATION	
	Metric	Standard
Intake	0.672 mm	0.0264 in.
Exhaust	0.744 mm	0.02929 in.

VALVE STEM TIP

DESCRIPTION	SPECIFICATION	
	Metric	Standard
Intake	48.04 mm	1.891 in.
Exhaust	47.99 mm	1.889 in.

VALVE STEM TO GUIDE CLEARANCE

DESCRIPTION	SPECIFICATION	
	Metric	Standard
Intake	0.020 - 0.053 mm	0.0008 - 0.0021 in.
Max. Allowable	0.076 mm	0.003 in.
Exhaust	0.030 - 0.060 mm	0.0012 - 0.0024 in.
Max. Allowable	0.101 mm	0.004 in.

 © 2011 Mitchell Repair Information Company, LLC.

VALVE SPRINGS

DESCRIPTION	SPECIFICATION	
	Metric	Standard
Free Length (Approx.)	47.0 mm	1.850 in.
Nominal Force (Valve Closed)	179.5 N ± 9 @ 35.0 mm	40.35 lbs. @ 1.38 in.
Nominal Force (Valve Open)	364.8 N ± 17 N @ 29.25 mm	82.01 lbs. ± 3.82 lbs. @ 1.152 in.
Installed Height	35.00 mm	1.378 in.
Number of Coils	8.5 ± 0.1	
Wire Diameter	2.90 mm ± 0.03	0.114 in ± 0.001 in.

OIL PRESSURE

DESCRIPTION	SPECIFICATION	
	Metric	Standard
At Curb Idle Speed*	25 kPa	4 psi. min.
At 3000 RPM	170 - 550 kPa	25 - 80 psi.

CAUTION:
***If pressure is ZERO at curb idle, DO NOT run engine at 3000 RPM.**

TORQUE

DESCRIPTION	N.m	Ft. Lbs.	In. Lbs.
Balance Shaft Module	Refer to **PUMP, ENGINE OIL, INSTALLATION**		
Bell Housing-Bolts	48	35	-
Camshaft Bearing Cap-Bolts			
M6 Bolts	12	-	106
M8 Bolts	30	22	-
Coils	8	-	71
Connecting Rod Cap-Bolts	20 + 90°	15 + 90°	-
Coolant Temperature Sender	18	13	-
Crankshaft Main Bearing Cap-Bolts	Refer to **INSTALLATION**		
Crankshaft Damper-Bolt	210	155	-
Cylinder Head-Bolts	Refer to **INSTALLATION**		
Cylinder Head Cover-Bolts	Refer to **INSTALLATION**		
Engine Support Bracket-Bolts	48	36	-
Exhaust Manifold-Bolts	34	25	-
Exhaust Manifold Heat Shield-Bolts			
M6x25mm Bolts	7	-	62
M6x70mm Bolts	9	-	80
Flex Plate to Crankshaft-Bolts	29 + 51°	22 + 51°	-
Intake Manifold-Bolts	24	18	-
Ladder Frame	22	16	-

 © 2011 Mitchell Repair Information Company, LLC.

Oil Cooler Connector Bolt	49	36	-
Oil Filter	14	10	-
Oil Filter Nipple	49	36	-
Oil Jet Fastener	12	-	106
Oil Pan-Bolts			
M6 Bolts	9	-	80
M8 Bolts	24	18	-
Oil Pan Drain-Plug	27	20	-
Oil Pressure Switch	8	-	71
PCV Valve	5	-	44
Phaser to Camshaft-Bolt	75	55	-
Spark Plugs	27	20	239
Timing Chain Cover			
M6 Bolts	9	-	80
M8 Bolts	26	19	-
Timing Chain Tensioner Assembly-Bolts	10	-	89
Timing Chain Guides	12	-	106

REMOVAL

ENGINE COVER

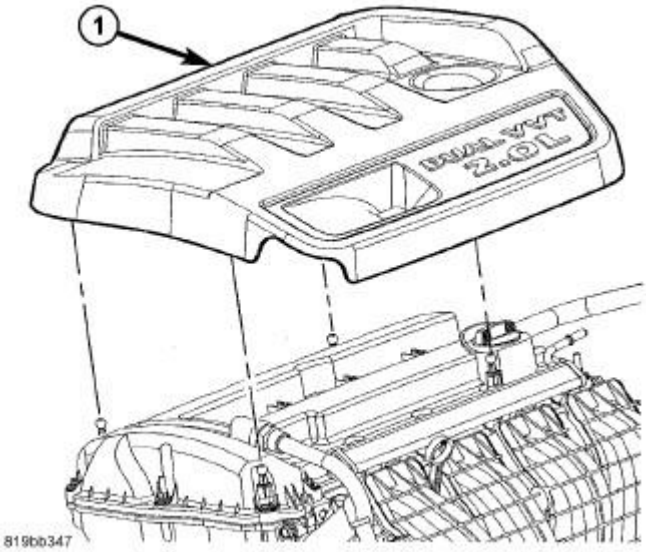

Fig. 7: Engine Cover - 2.0L
Courtesy of CHRYSLER GROUP, LLC

1. Remove engine cover (1) by pulling upwards.

REMOVAL - ENGINE

 © 2011 Mitchell Repair Information Company, LLC.

CAUTION: If the original engine has experienced a catastrophic failure or an individual failure with the piston, cylinder bore, engine block, valve or valve seat, the intake manifold MUST be replaced with a new manifold.

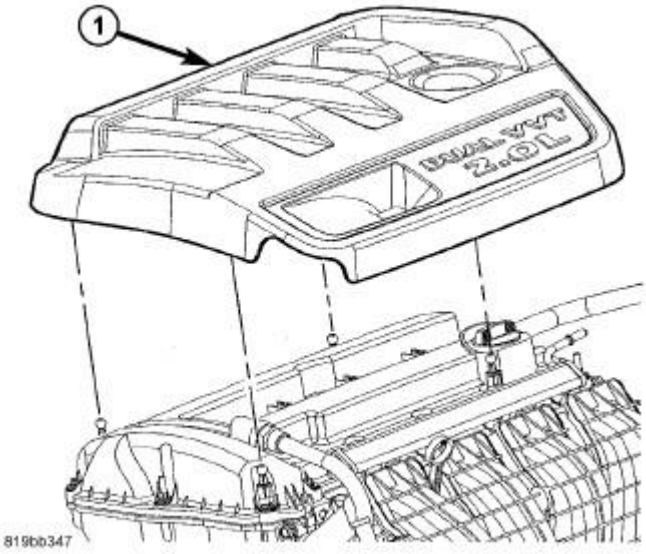

Fig. 8: Engine Cover - 2.0L
Courtesy of CHRYSLER GROUP, LLC

1. Remove the hood. Refer to **HOOD, REMOVAL** .
2. Remove the engine cover (1).

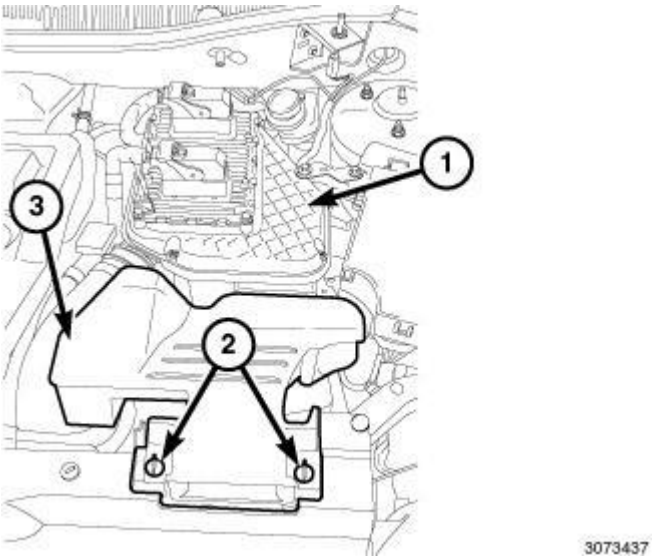

Fig. 9: Retainers, Fresh Air Inlet Duct & Air Cleaner Body
Courtesy of CHRYSLER GROUP, LLC

3. Perform fuel pressure release procedure. Refer to **FUEL SYSTEM PRESSURE RELEASE PROCEDURE** .

 © 2011 Mitchell Repair Information Company, LLC.

4. Unlock the retainers (2) and remove the fresh air inlet duct (3) from air cleaner body (1).

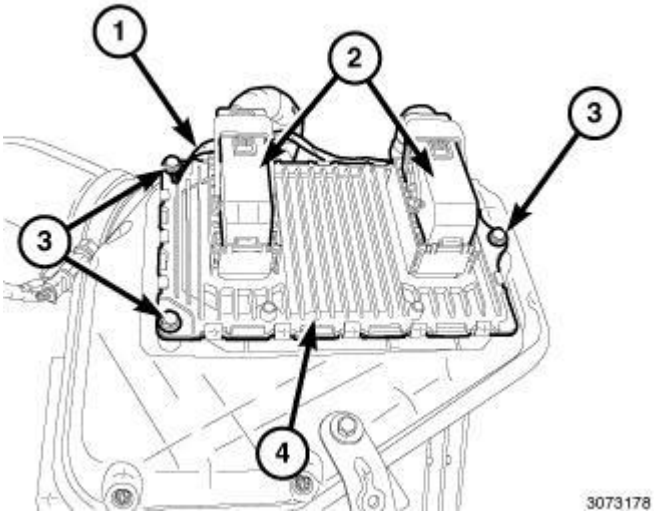

Fig. 10: Electrical Connectors, PCM, Three Mounting Bolts & Ground Wire
Courtesy of CHRYSLER GROUP, LLC

5. Disconnect and isolate the negative battery cable.
6. Unlock and disconnect the electrical connectors (2) from the PCM (4).
7. Remove the mounting bolt (3) and ground wire (1).

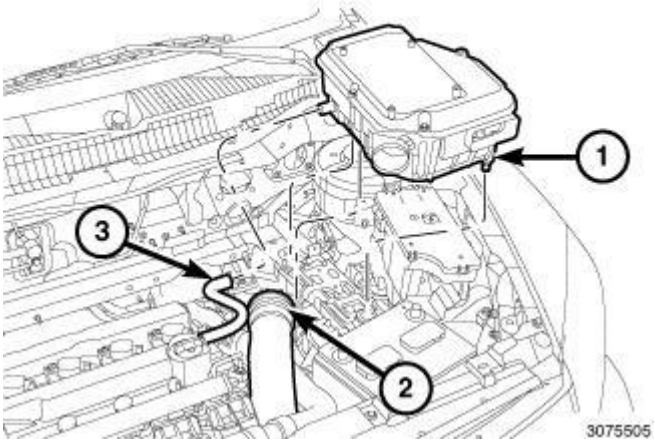

Fig. 11: Air Cleaner Body, Air Inlet Tube & Make-Up Air Hose
Courtesy of CHRYSLER GROUP, LLC

8. Remove the air inlet tube (2) from the air cleaner body (1).
9. Disconnect the make-up air hose (3) from the air cleaner body.
10. Remove the support bracket bolt from the strut tower.

 © 2011 Mitchell Repair Information Company, LLC.

11. Pull upward to disengage the pins from the rubber grommets and remove the air cleaner body (1).

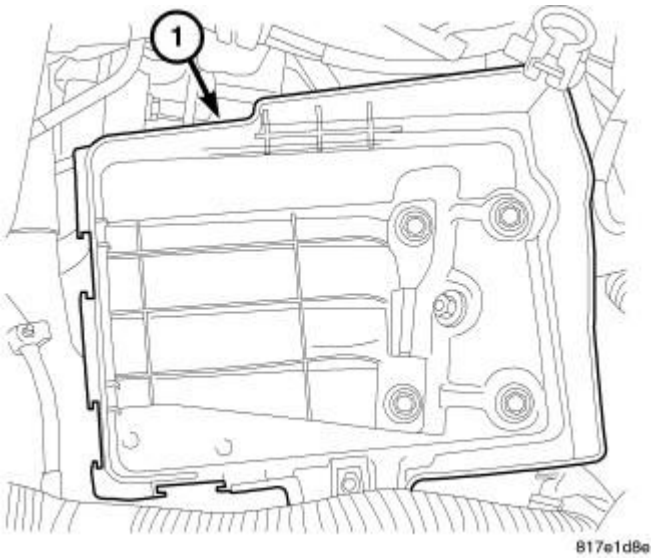

Fig. 12: Battery Tray
Courtesy of CHRYSLER GROUP, LLC

12. Remove the battery and the battery tray (1). Refer to **TRAY, BATTERY, REMOVAL** .
13. Discharge air conditioning system, if equipped. Refer to **PLUMBING, STANDARD PROCEDURE** .
14. Drain cooling system. Refer to **STANDARD PROCEDURE** .

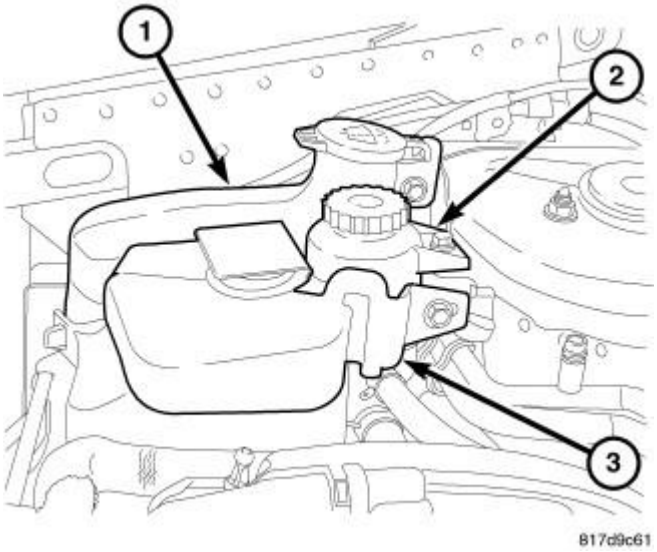

Fig. 13: Windshield Washer Reservoir, Power Steering Reservoir & Coolant Reservoir
Courtesy of CHRYSLER GROUP, LLC

15. Remove coolant reservoir (3).
16. Remove power steering reservoir (2).
17. Remove windshield washer reservoir (1).

 © 2011 Mitchell Repair Information Company, LLC.

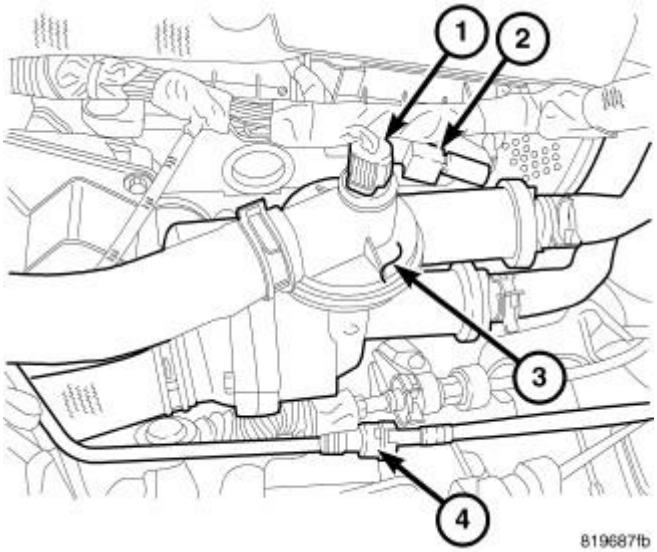

Fig. 14: Coolant Adapter
Courtesy of CHRYSLER GROUP, LLC

18. Remove coolant hoses from coolant adapter (3).

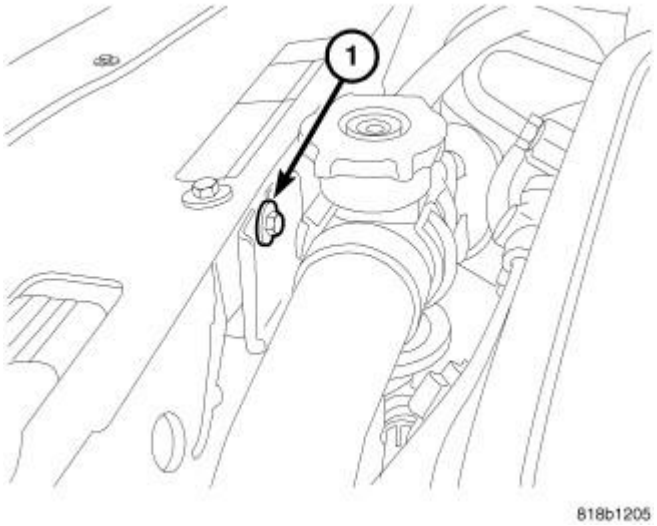

Fig. 15: Radiator Hose Support
Courtesy of CHRYSLER GROUP, LLC

19. Remove grill closure panel.
20. Remove upper radiator hose support (1).

 © 2011 Mitchell Repair Information Company, LLC.

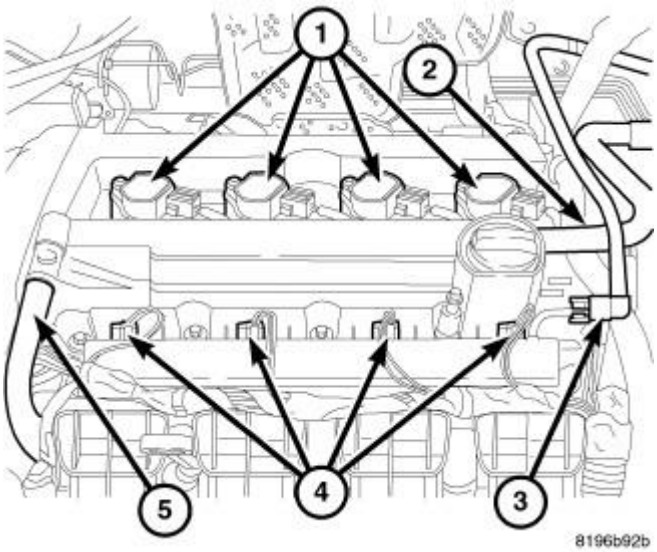

Fig. 16: Coil Connector
Courtesy of CHRYSLER GROUP, LLC

21. Disconnect engine electrical connectors and reposition harness.
22. Remove air intake tube from throttle body.
23. Disconnect fuel line (3) from fuel rail.

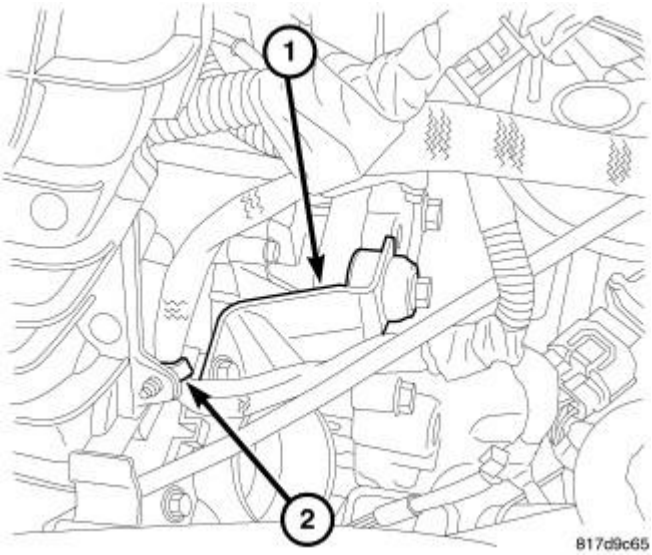

Fig. 17: Throttle Body Support
Courtesy of CHRYSLER GROUP, LLC

24. Remove vacuum lines from throttle body and intake manifold.
25. Remove harness from intake (2).
26. Remove throttle body support bracket (1).

 © 2011 Mitchell Repair Information Company, LLC.

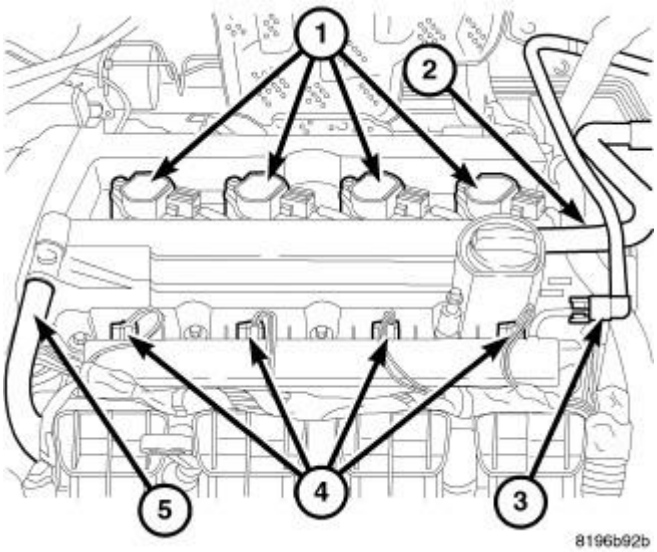

Fig. 18: Coil Connector
Courtesy of CHRYSLER GROUP, LLC

27. Disconnect electronic throttle control and manifold flow control valve electrical connectors.
28. Remove PCV hose (5), and make-up air hose (2) from valve cover.
29. Remove dipstick.

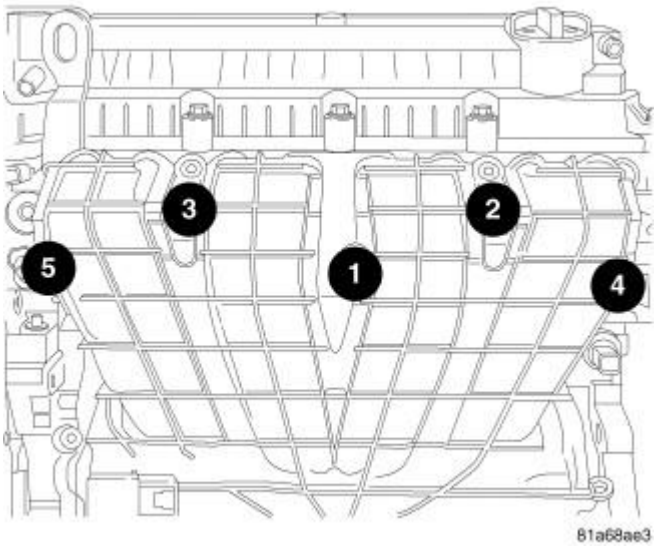

Fig. 19: Intake Manifold Bolt Removal & Tightening Sequence
Courtesy of CHRYSLER GROUP, LLC

30. Remove intake bolts (1-5) and remove intake.
31. Disconnect electrical connectors and reposition harness.
32. Remove accessory drive belt.

 © 2011 Mitchell Repair Information Company, LLC.

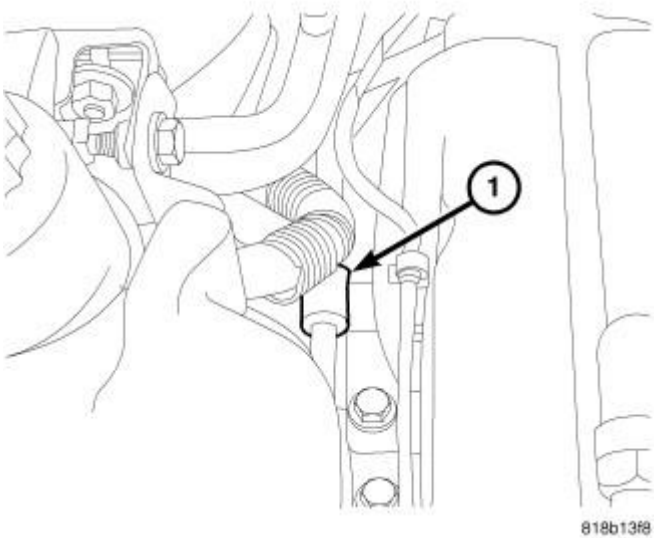

Fig. 20: Power Steering Line Support
Courtesy of CHRYSLER GROUP, LLC

33. Remove power steering line support at engine mount (1) and exhaust manifold.
34. Remove power steering pump and set aside.
35. Remove upper idler pulley.

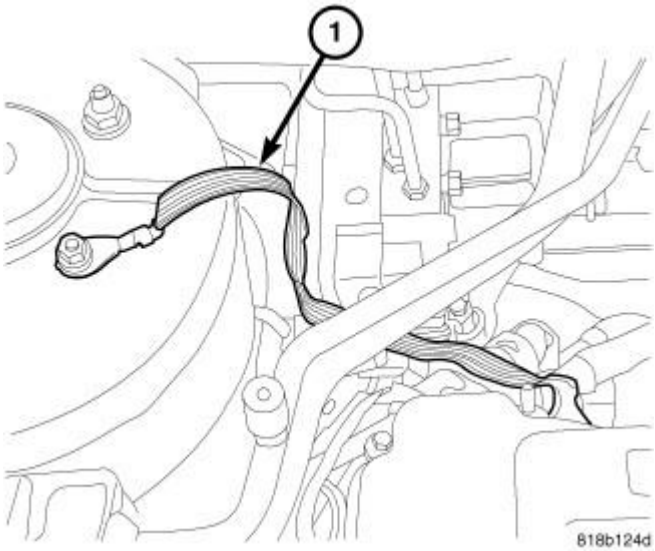

Fig. 21: Ground Strap
Courtesy of CHRYSLER GROUP, LLC

36. Remove ground strap near right tower.
37. Raise vehicle.
38. Remove right front tire.
39. Remove splash shield.

 © 2011 Mitchell Repair Information Company, LLC.

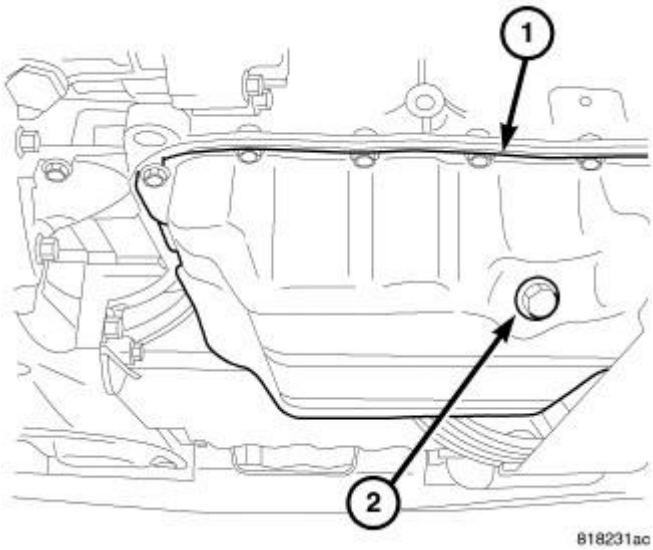

Fig. 22: Oil Drain Plug
Courtesy of CHRYSLER GROUP, LLC

40. Drain oil (2).

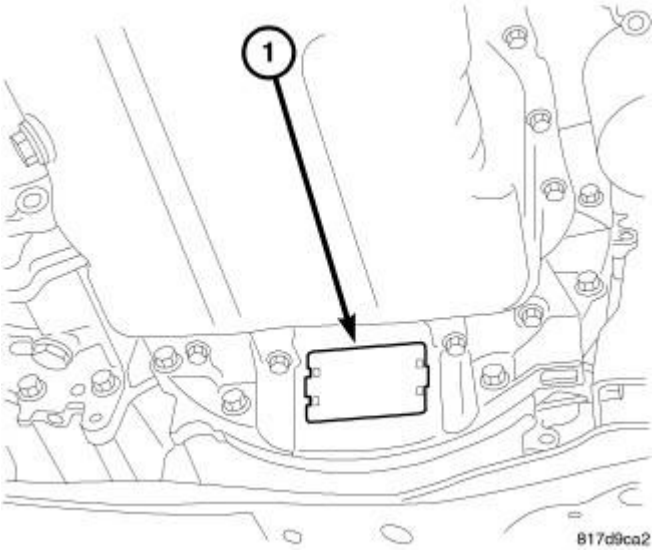

Fig. 23: Inspection Cover
Courtesy of CHRYSLER GROUP, LLC

41. Remove inspection cover (1) and mark torque converter to flywheel.

 © 2011 Mitchell Repair Information Company, LLC.

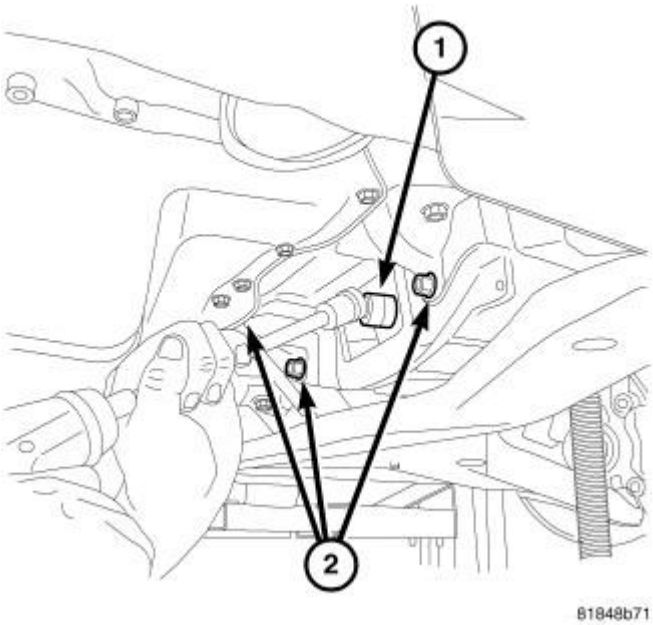

Fig. 24: Modular Clutch To Flex Plate Bolts
Courtesy of CHRYSLER GROUP, LLC

42. Remove torque converter bolts (1).
43. Remove lower bellhousing bolts (2).

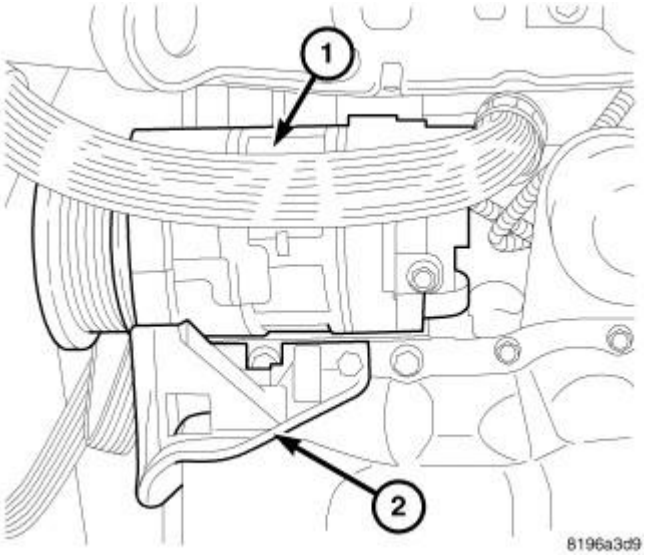

Fig. 25: A/C Compressor
Courtesy of CHRYSLER GROUP, LLC

44. Remove A/C compressor (1) mounting bolts.
45. Remove generator and lower idler pulley.

 © 2011 Mitchell Repair Information Company, LLC.

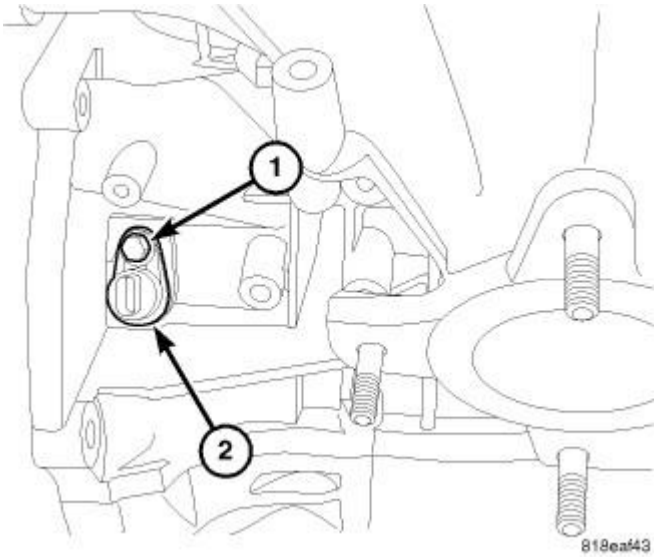

Fig. 26: Crankshaft Position Sensor
Courtesy of CHRYSLER GROUP, LLC

46. Disconnect crankshaft position sensor electrical connector and remove crankshaft position sensor (2).

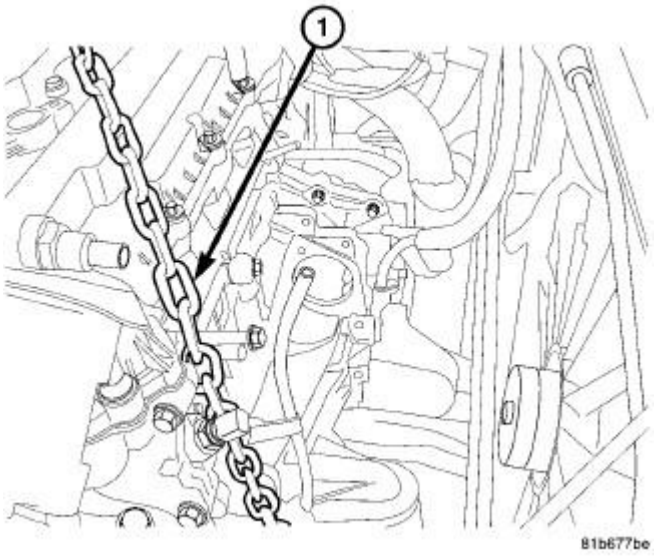

Fig. 27: Identifying Lift Chain
Courtesy of CHRYSLER GROUP, LLC

47. Remove exhaust variable valve timing solenoid.
48. Install engine lift chain (1) as shown in illustration to cylinder head.
49. Connect the chain to the rear engine lift hook.
50. Install engine lifting crane.

 © 2011 Mitchell Repair Information Company, LLC.

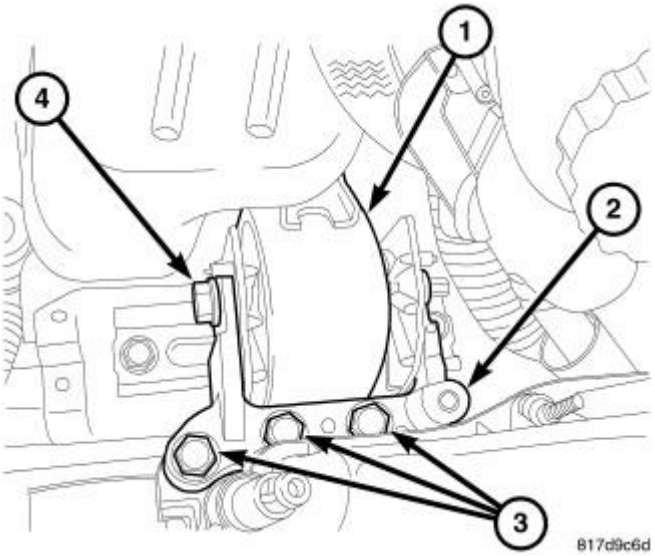

Fig. 28: Right Engine Mount
Courtesy of CHRYSLER GROUP, LLC

51. Remove right engine mount through bolt (4).
52. Remove engine mount adapter retaining bolts (3) and mount adapter (2).
53. Lift engine from engine compartment.

INSTALLATION

ENGINE COVER

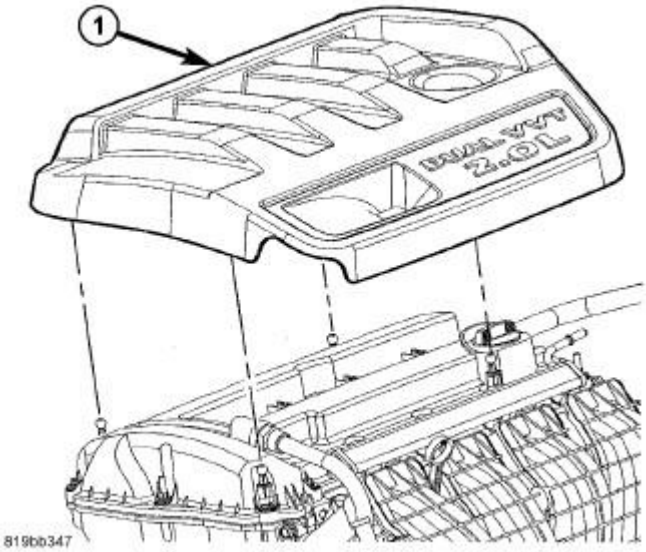

Fig. 29: Engine Cover - 2.0L
Courtesy of CHRYSLER GROUP, LLC

 © 2011 Mitchell Repair Information Company, LLC.

1. Position engine cover (1) over mounting studs.
2. Seat the cover on the rear studs by pushing downwards.
3. Push downward on the front of the cover to seat the front studs.

INSTALLATION - ENGINE

CAUTION: If the original engine has experienced a catastrophic failure or an individual failure with the piston, cylinder bore, engine block, valve or valve seat, the intake manifold MUST be replaced with a new manifold.

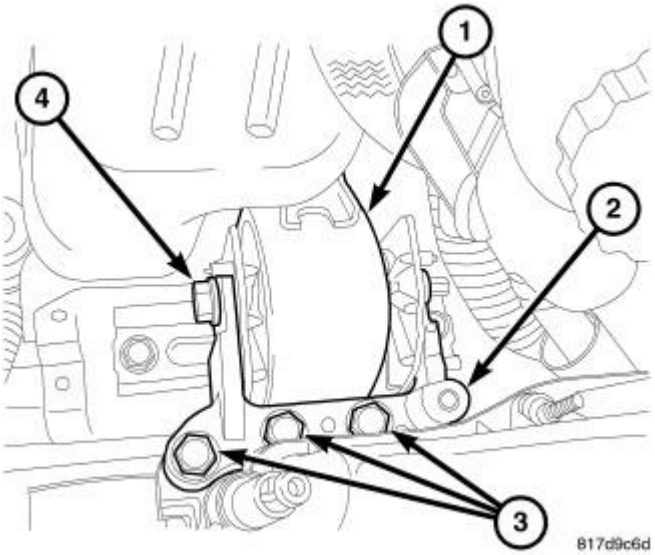

Fig. 30: Right Engine Mount
Courtesy of CHRYSLER GROUP, LLC

1. Position engine assembly over vehicle and slowly lower the engine into place.
2. Continue lowering engine until engine and transaxle are aligned. to mounting locations.
3. Install engine mount adapter (2) and tighten bolts (3). Install mount through bolt (4) and tighten to 118 N.m (87 ft. lbs.).

 © 2011 Mitchell Repair Information Company, LLC.

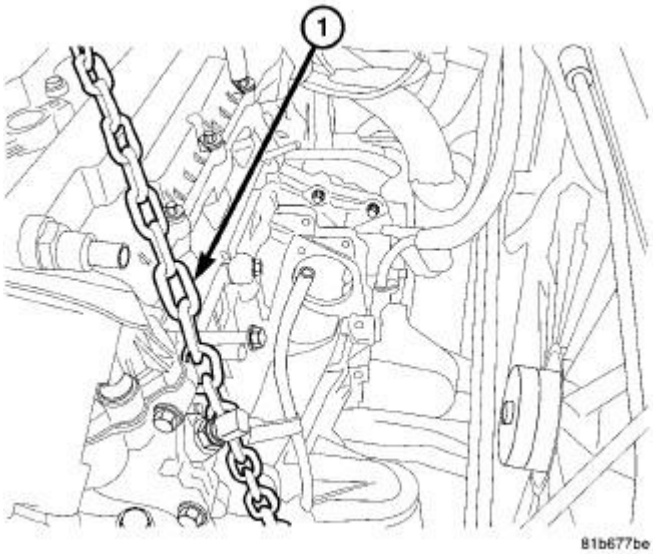

Fig. 31: Identifying Lift Chain
Courtesy of CHRYSLER GROUP, LLC

4. Remove engine lift chain (1).
5. Install oil control valve.

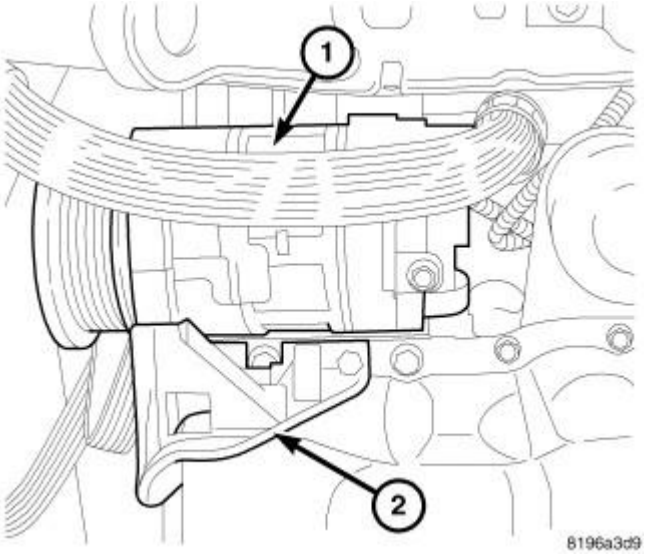

Fig. 32: A/C Compressor
Courtesy of CHRYSLER GROUP, LLC

6. Raise vehicle.
7. Install A/C compressor (1).

 © 2011 Mitchell Repair Information Company, LLC.

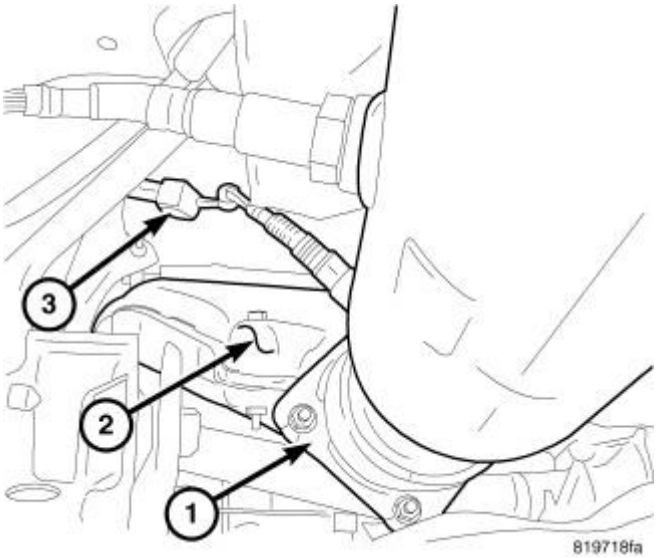

Fig. 33: Removing/Installing Exhaust Manifold, Heat Shields, & Oxygen Sensor
Courtesy of CHRYSLER GROUP, LLC

8. Install exhaust manifold and heat shields (2). Refer to **MANIFOLD, EXHAUST, INSTALLATION**.
9. Install oxygen sensor and connect electrical connector (3).

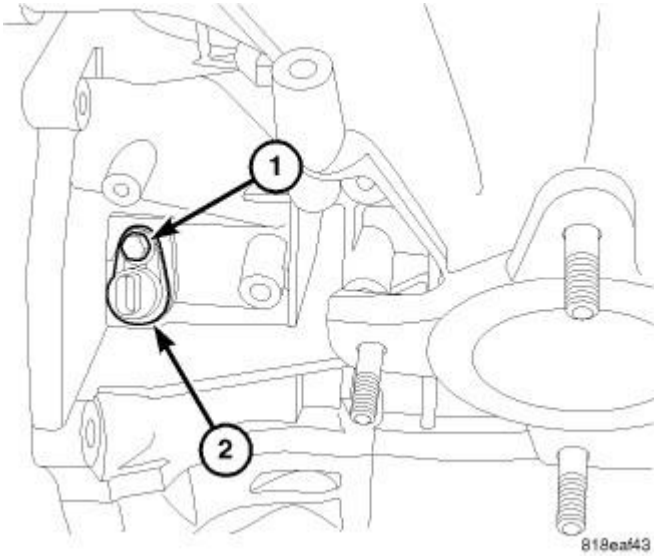

Fig. 34: Crankshaft Position Sensor
Courtesy of CHRYSLER GROUP, LLC

10. Install crankshaft position sensor (2) and connect connector.

 © 2011 Mitchell Repair Information Company, LLC.

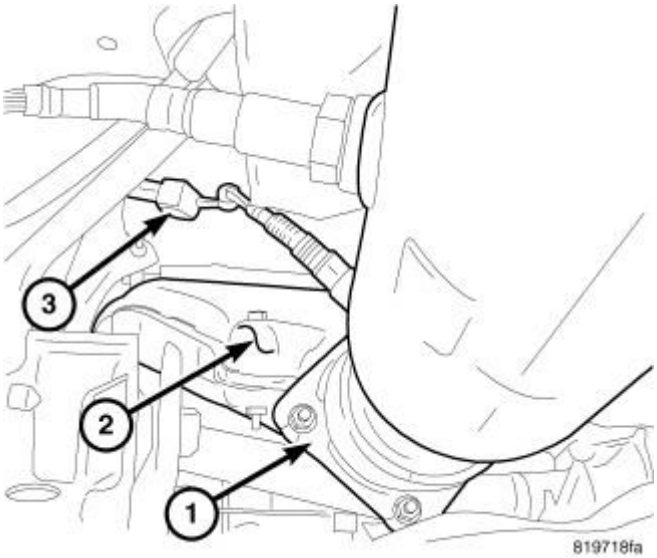

Fig. 35: Removing/Installing Exhaust Manifold, Heat Shields, & Oxygen Sensor
Courtesy of CHRYSLER GROUP, LLC

11. Install manifold to exhaust pipe bolts (1) and tighten bolts.
12. Install generator.

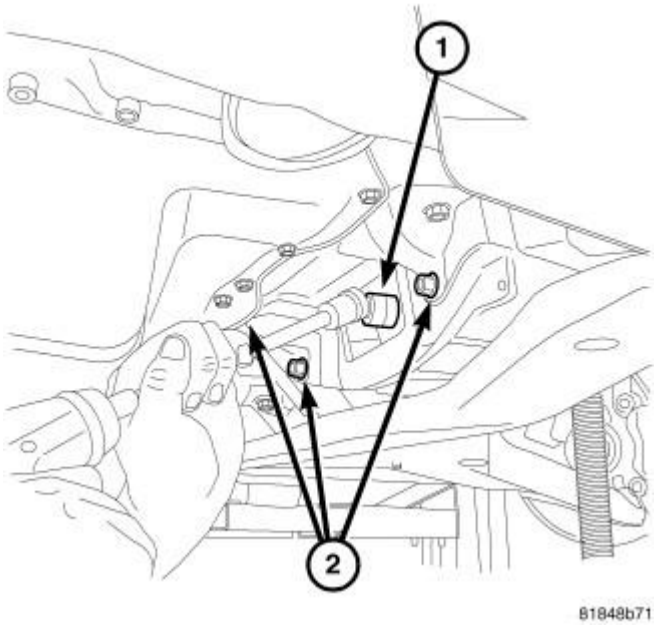

Fig. 36: Modular Clutch To Flex Plate Bolts
Courtesy of CHRYSLER GROUP, LLC

13. Install lower bell housing bolts (2) and tighten bolts.
14. Align torque converter and flex plate mark. Install torque converter bolts (1) and tighten.

 © 2011 Mitchell Repair Information Company, LLC.

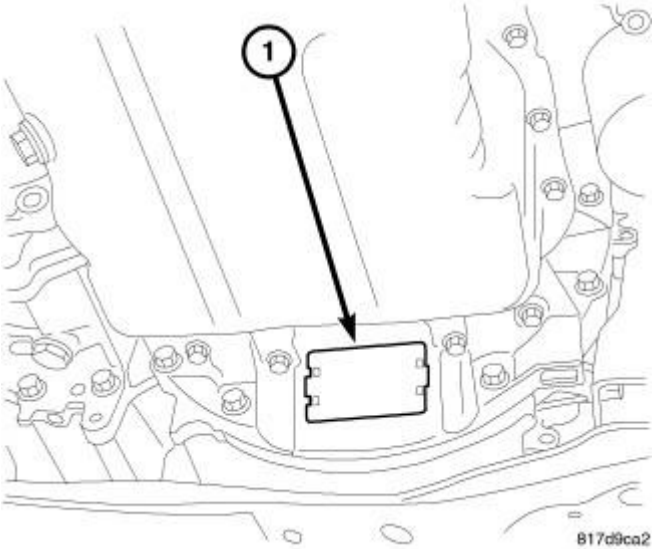

Fig. 37: Inspection Cover
Courtesy of CHRYSLER GROUP, LLC

15. Install inspection cover (1).

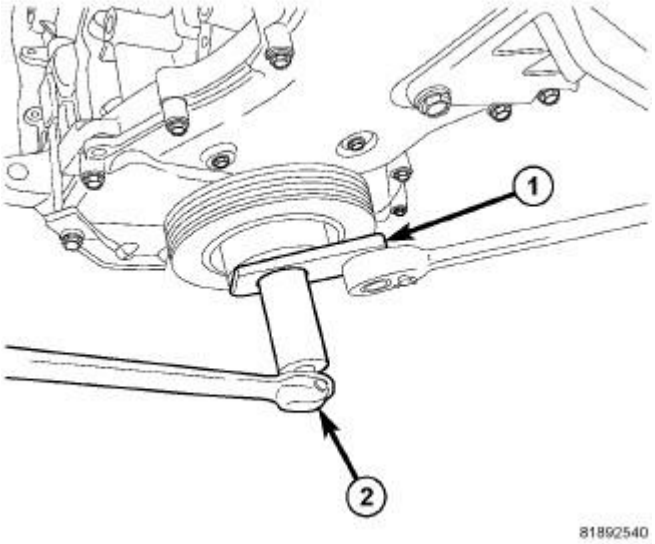

Fig. 38: Removing/Installing Damper Bolt
Courtesy of CHRYSLER GROUP, LLC

16. Install crankshaft damper
17. Install Damper holder (special tool #9707, Holder, Vibration Damper) (1).
18. Apply clean engine oil crankshaft damper bolt threads and between bolt head and washer. Tighten bolt to 210 N.m (155 ft. lbs.).
19. Install right splash shield.
20. Install tire.

 © 2011 Mitchell Repair Information Company, LLC.

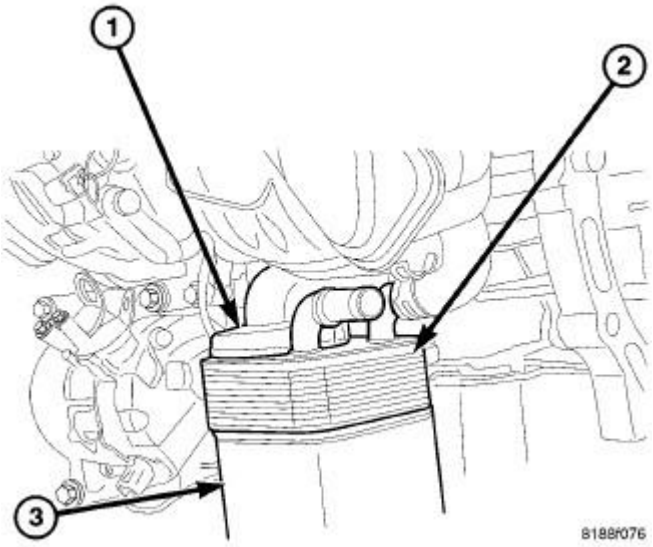

Fig. 39: Oil Cooler
Courtesy of CHRYSLER GROUP, LLC

21. Install coolant hose to oil cooler (2).
22. Install new oil filter (3).
23. Lower vehicle.
24. Install upper idler pulley.

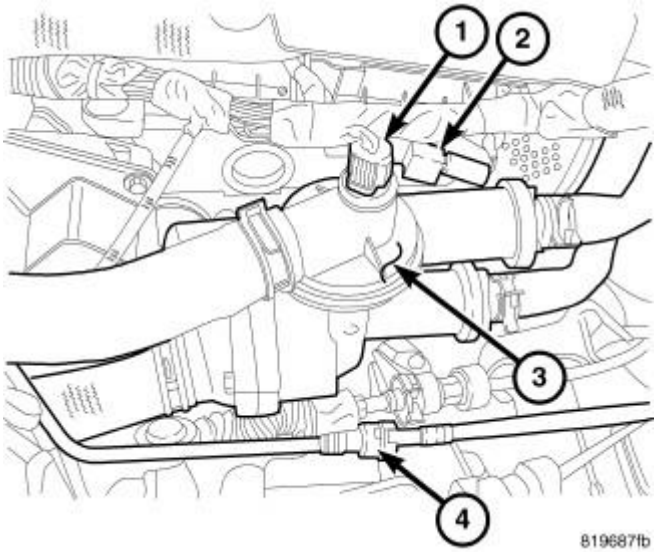

Fig. 40: Coolant Adapter
Courtesy of CHRYSLER GROUP, LLC

25. Install coolant adapter assembly (3).

 © 2011 Mitchell Repair Information Company, LLC.

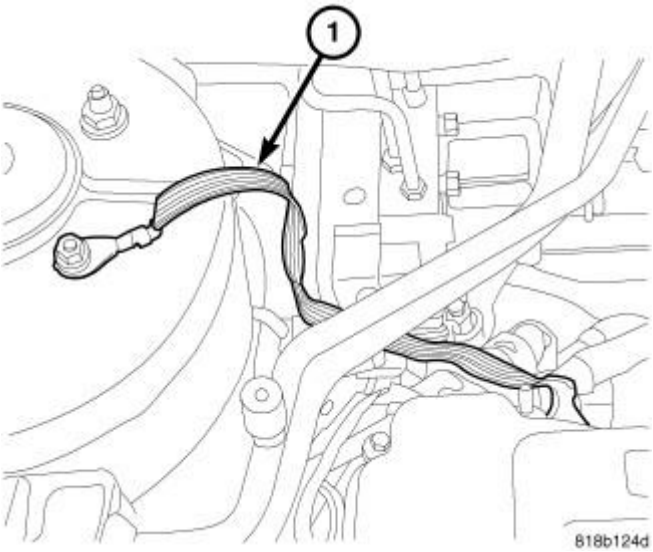

Fig. 41: Ground Strap
Courtesy of CHRYSLER GROUP, LLC

26. Install Ground strap (1) near right strut tower.

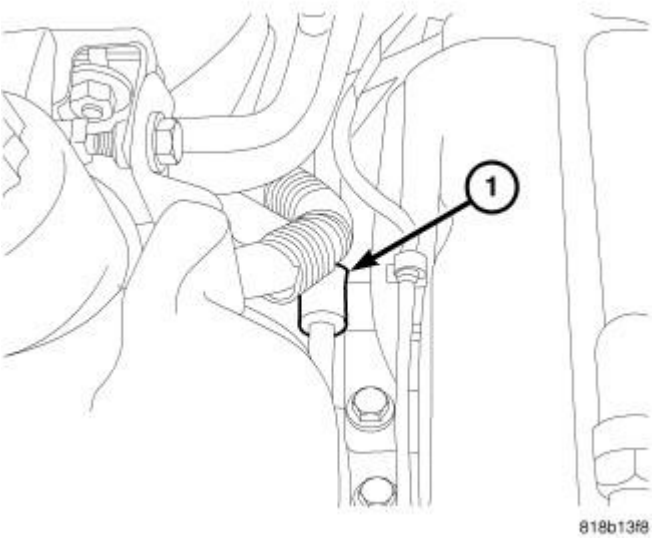

Fig. 42: Power Steering Line Support
Courtesy of CHRYSLER GROUP, LLC

27. Install power steering line support bracket (1).
28. Install power steering pump.
29. Install accessory drive belt.
30. Connect electrical connectors at block ground, starter, A/C compressor, knock sensor, Oil pressure sensor, generator, Coolant temperature sensor at block, and block heater (if equipped).

 © 2011 Mitchell Repair Information Company, LLC.

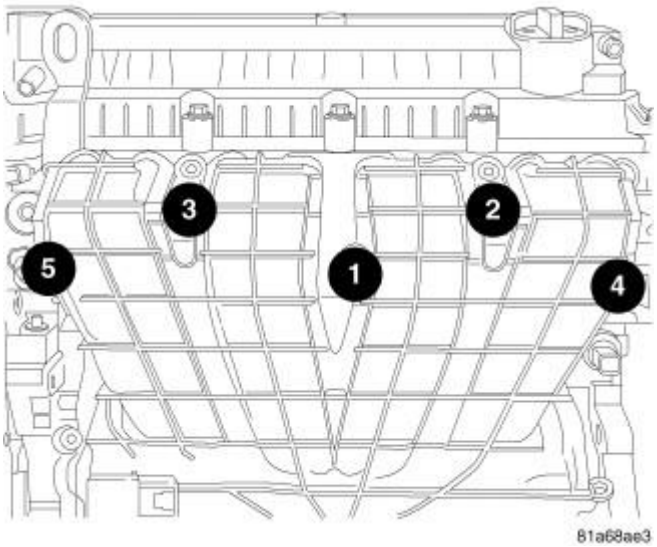

Fig. 43: Intake Manifold Bolt Removal & Tightening Sequence
Courtesy of CHRYSLER GROUP, LLC

31. Install intake manifold and tighten bolts as shown in illustration.

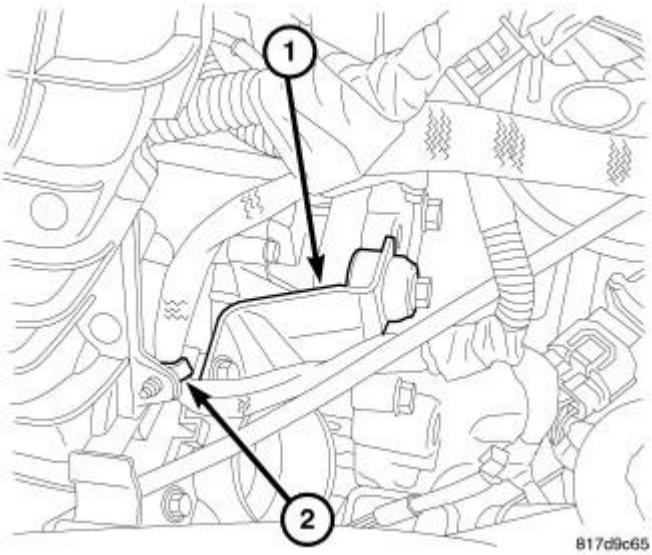

Fig. 44: Throttle Body Support
Courtesy of CHRYSLER GROUP, LLC

32. Install throttle body support bracket (1).
33. Install harness retainer (2).
34. Install engine oil level indicator.

 © 2011 Mitchell Repair Information Company, LLC.

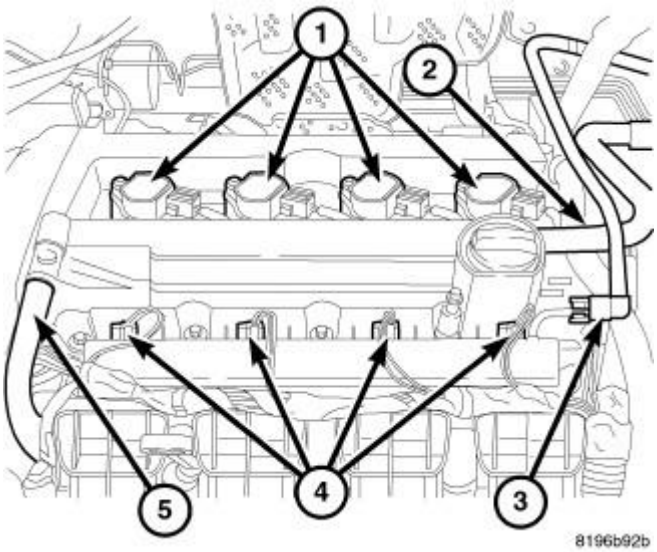

Fig. 45: Ignition Coils, Air Hose, Fuel Line, Injectors & PCV Hose
Courtesy of CHRYSLER GROUP, LLC

35. Install PCV hose (5) to valve cover.
36. Install make-up air hose (2).
37. Connect manifold flow control valve and electronic throttle control electrical connectors.
38. Install vacuum lines at throttle body and intake manifold.
39. Install intake air tube to throttle body.

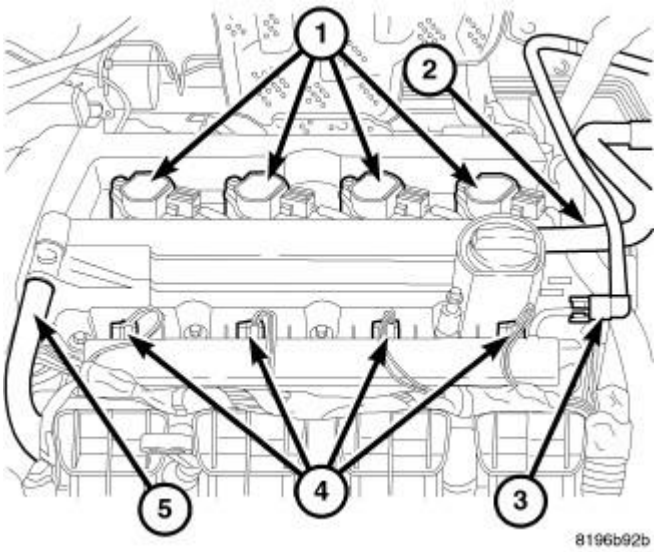

Fig. 46: Ignition Coils, Air Hose, Fuel Line, Injectors & PCV Hose
Courtesy of CHRYSLER GROUP, LLC

40. Connect coil electrical connectors (1).
41. Connect injector electrical connectors (4).
42. Connect fuel line (3) to rail.

 © 2011 Mitchell Repair Information Company, LLC.

43. Connect intake and exhaust oil control valve electrical connectors.

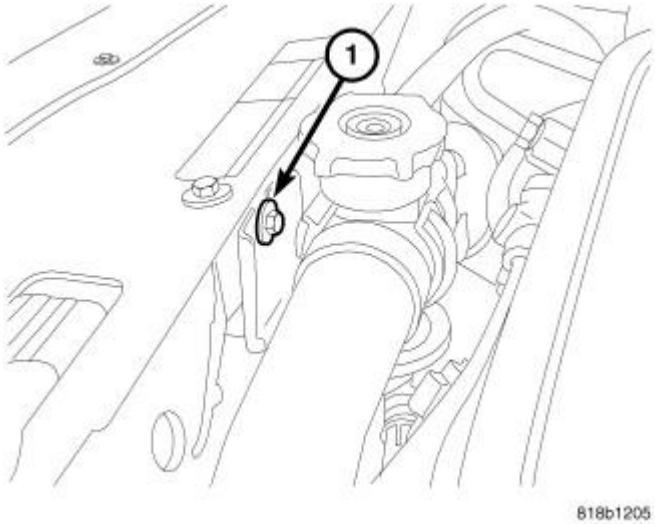

Fig. 47: Radiator Hose Support
Courtesy of CHRYSLER GROUP, LLC

44. Install grill trim panel.
45. Install upper radiator support bracket (1).

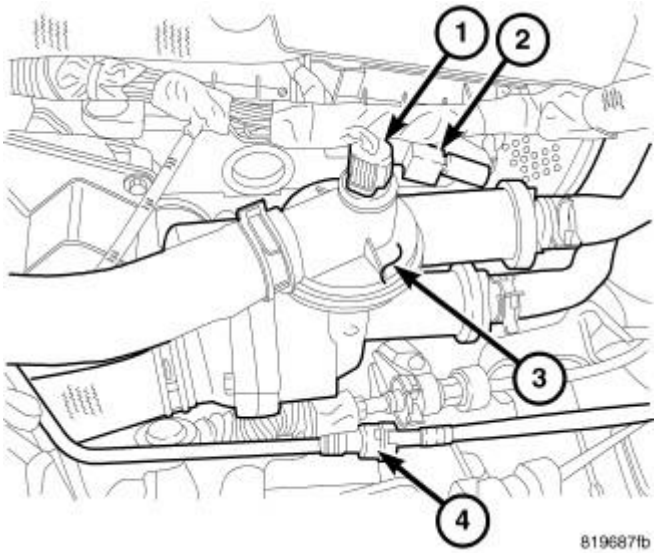

Fig. 48: Coolant Adapter
Courtesy of CHRYSLER GROUP, LLC

46. Connect coolant temperature sensor (1).
47. Connect capacitor electrical connector (2).
48. Install coolant hoses at coolant adapter (3).

 © 2011 Mitchell Repair Information Company, LLC.

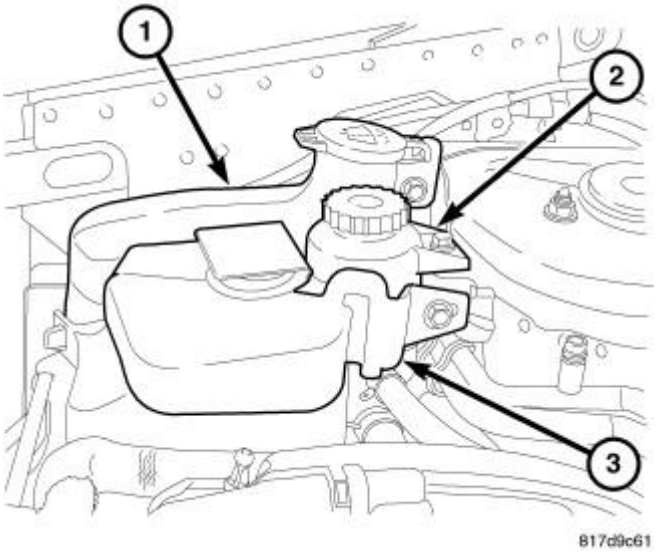

Fig. 49: Coolant Reservoir
Courtesy of CHRYSLER GROUP, LLC

49. Install coolant reservoir (3) and connect hose.

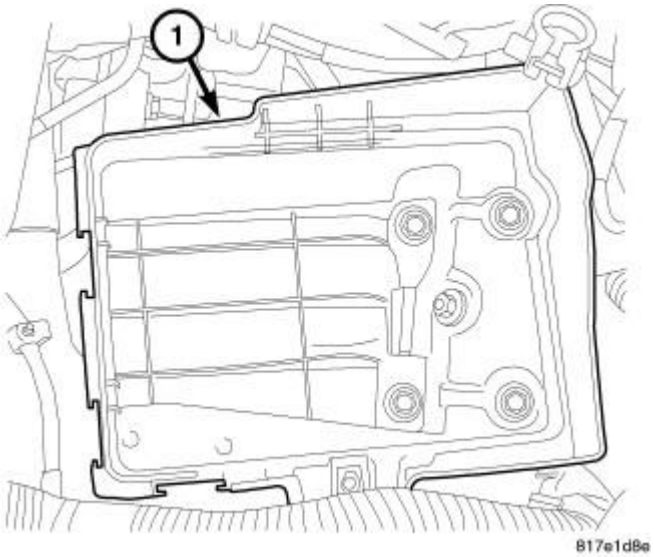

Fig. 50: Battery Tray
Courtesy of CHRYSLER GROUP, LLC

50. Install the battery tray (1). Refer to **TRAY, BATTERY, INSTALLATION** .

 © 2011 Mitchell Repair Information Company, LLC.

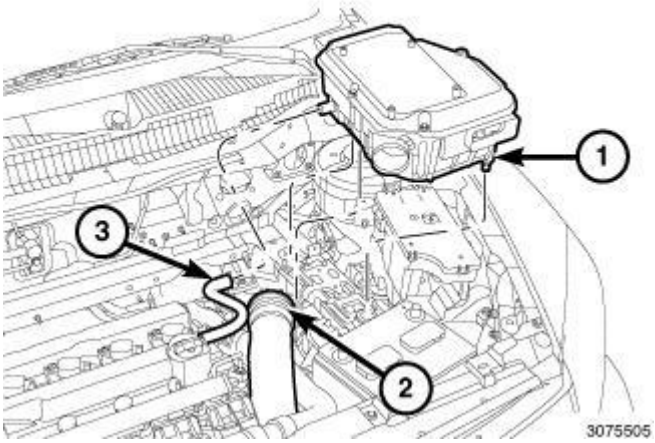

Fig. 51: Air Cleaner Body, Air Inlet Tube & Make-Up Air Hose
Courtesy of CHRYSLER GROUP, LLC

51. Push down on the air cleaner body (1) to engage the pins into the grommets.
52. Install the support bracket bolt to the strut tower and tighten to 10 N.m (89 in. lbs.).
53. Install the air inlet tube (2) to the air cleaner body (1).
54. Connect the make-up air hose (3) to the air cleaner body.

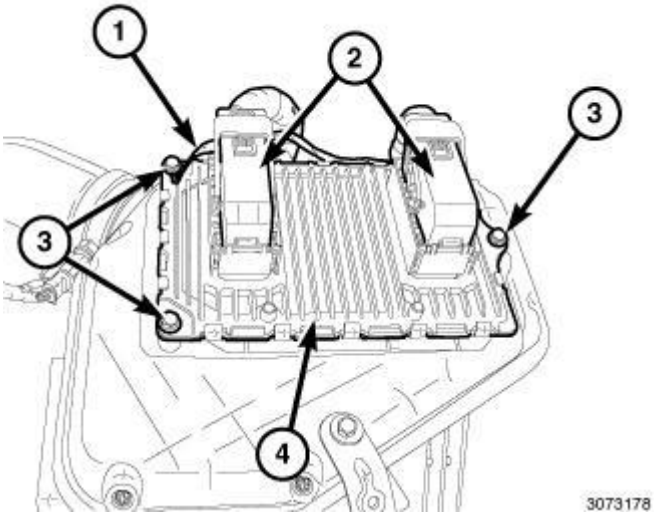

Fig. 52: Electrical Connectors, PCM, Three Mounting Bolts & Ground Wire
Courtesy of CHRYSLER GROUP, LLC

55. Install the mounting bolt (3) with ground wire (1) and tighten to 12 N.m (106 in. lbs.).
56. Connect and lock the electrical connectors (2).

 © 2011 Mitchell Repair Information Company, LLC.

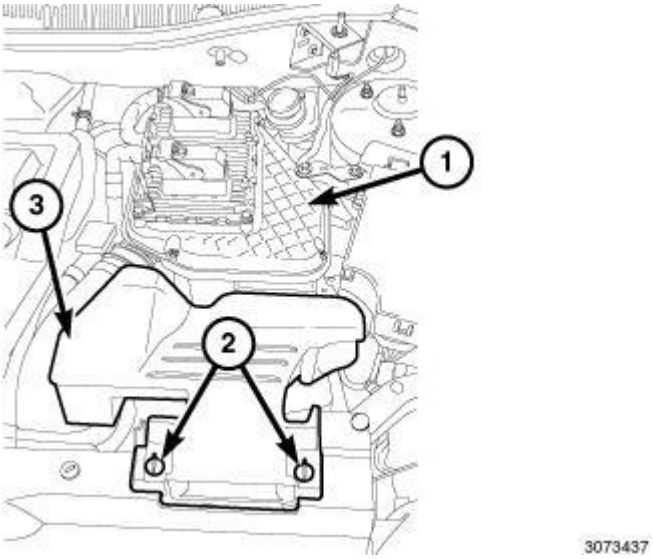

Fig. 53: Retainers, Fresh Air Inlet Duct & Air Cleaner Body
Courtesy of CHRYSLER GROUP, LLC

57. Install the battery and connect the battery cables. Refer to **BATTERY, INSTALLATION** .
58. Install the fresh air inlet duct (3) on the air cleaner body (1) and lock the retainers (2).

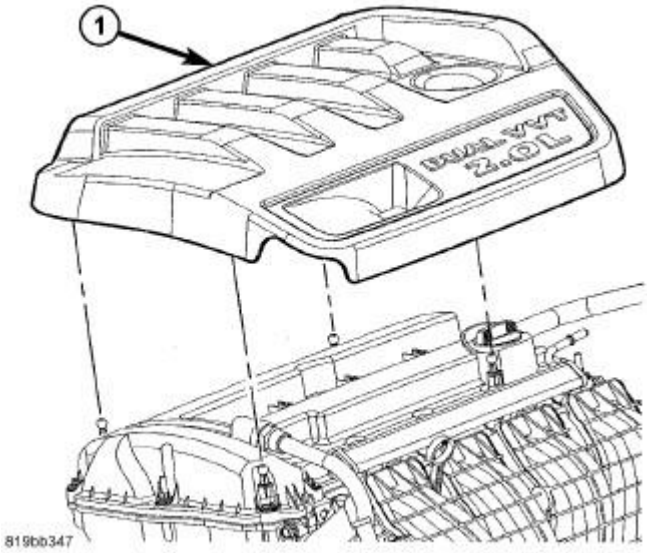

Fig. 54: Engine Cover - 2.0L
Courtesy of CHRYSLER GROUP, LLC

59. Install the hood. Refer to **HOOD, INSTALLATION** .
60. Fill with coolant. Refer to **STANDARD PROCEDURE** .
61. Fill with oil.
62. Start engine and check for leaks.
63. Install engine cover (1).

 © 2011 Mitchell Repair Information Company, LLC.

SPECIAL TOOLS

SPECIAL TOOLS

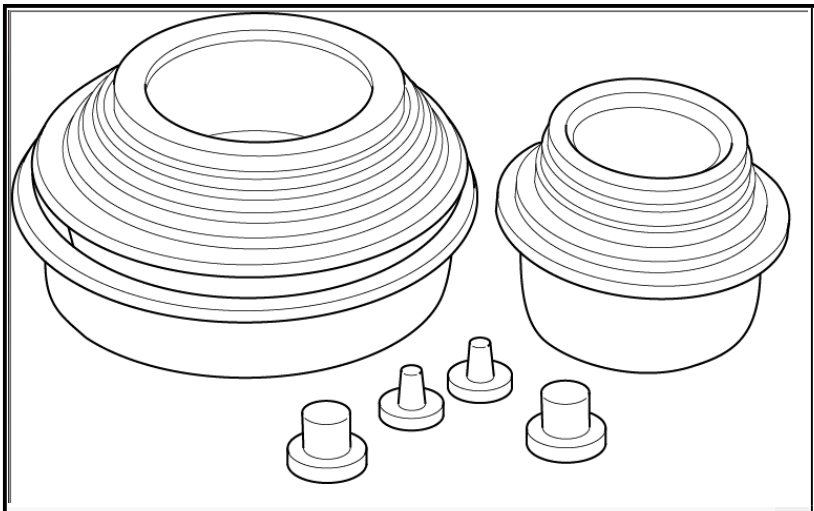	10368 - Set, Universal Protective Cap
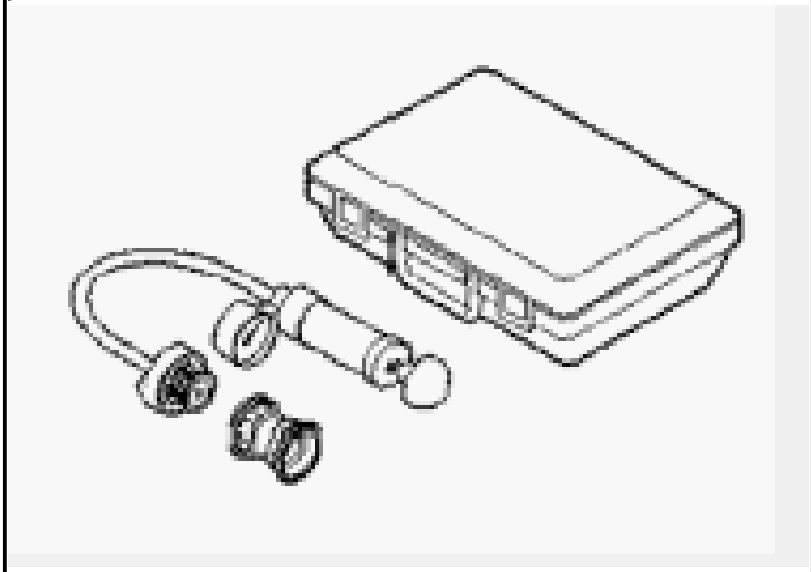	7700 - Tester, Cooling System (Originally Shipped In Kit Number(s) 7700-A.)
	8116 - Adapter, Pressure PEP (Originally Shipped In Kit Number(s) 8201, 8201CC, 8204, 8204CC.)

 © 2011 Mitchell Repair Information Company, LLC.

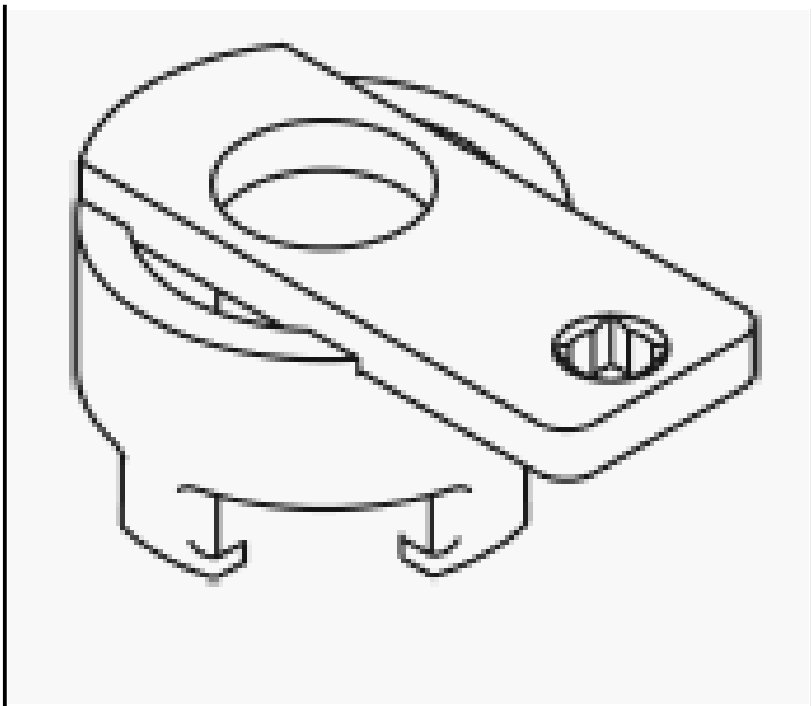

8514 - Pins, Tensioner
(Originally Shipped In Kit Number(s) 8283, 8283CC, 8527, 8527CC, 8575, 8575CC, 9975.)

9506 - Installer, Oil Seal

 © 2011 Mitchell Repair Information Company, LLC.

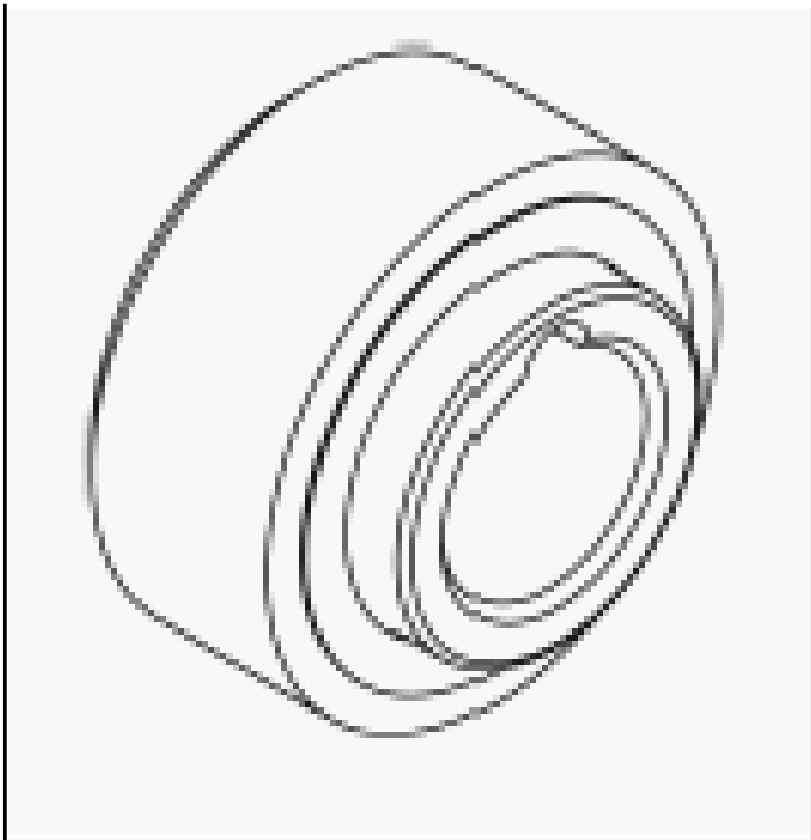

(Originally Shipped In Kit Number(s) 9610, 9970.)

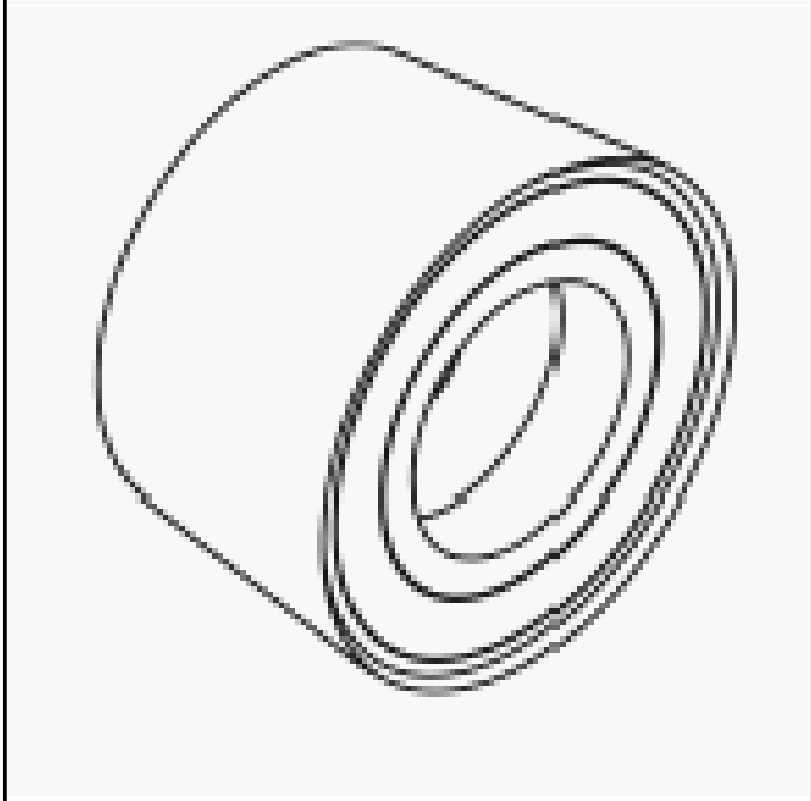

9509 - Installer, Oil Seal
(Originally Shipped In Kit Number(s) 9610, 9970.)

 © 2011 Mitchell Repair Information Company, LLC.

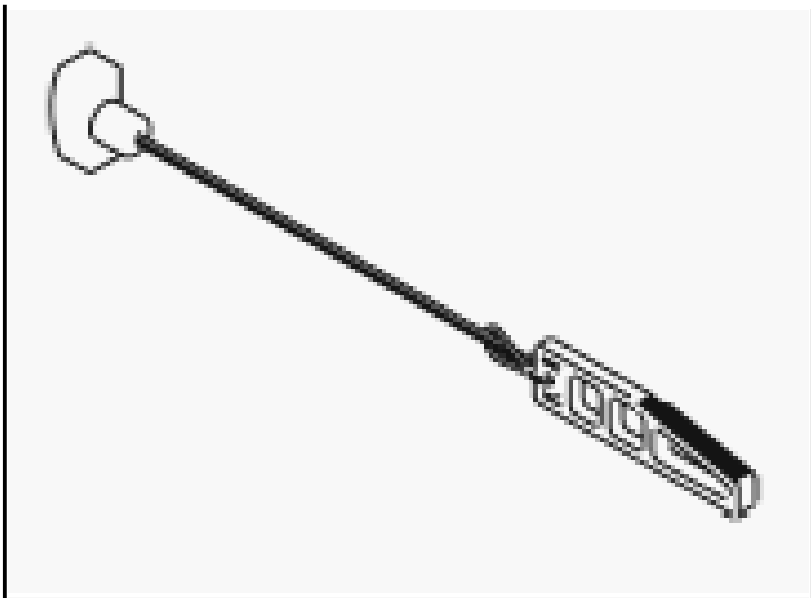

9701 - Wedge, Locking
(Originally Shipped In Kit Number(s) 9610, 9970.)

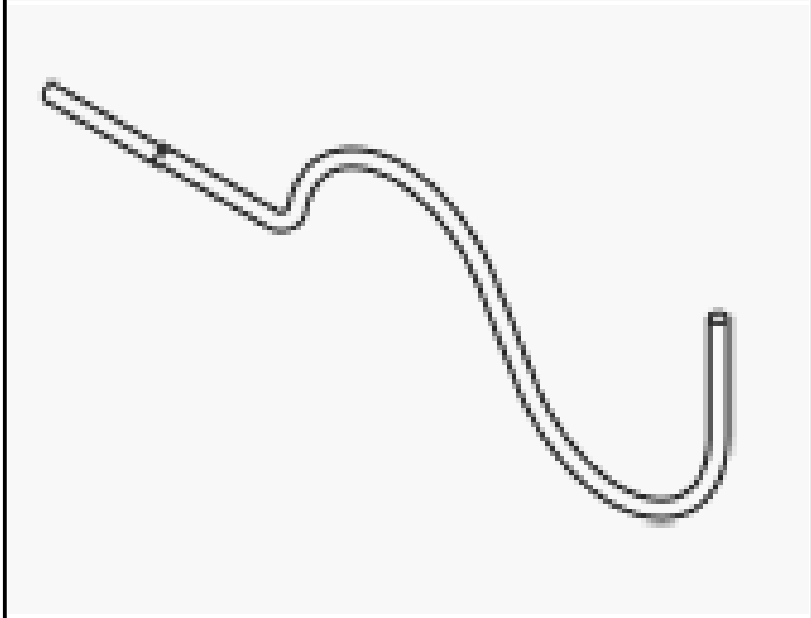

9703 - Pin, Tensioner
(Originally Shipped In Kit Number(s) 9610, 9970.)

9706 - Installer, Crankshaft Rear Oil Seal
(Originally Shipped In Kit Number(s) 9610, 9970.)

 © 2011 Mitchell Repair Information Company, LLC.

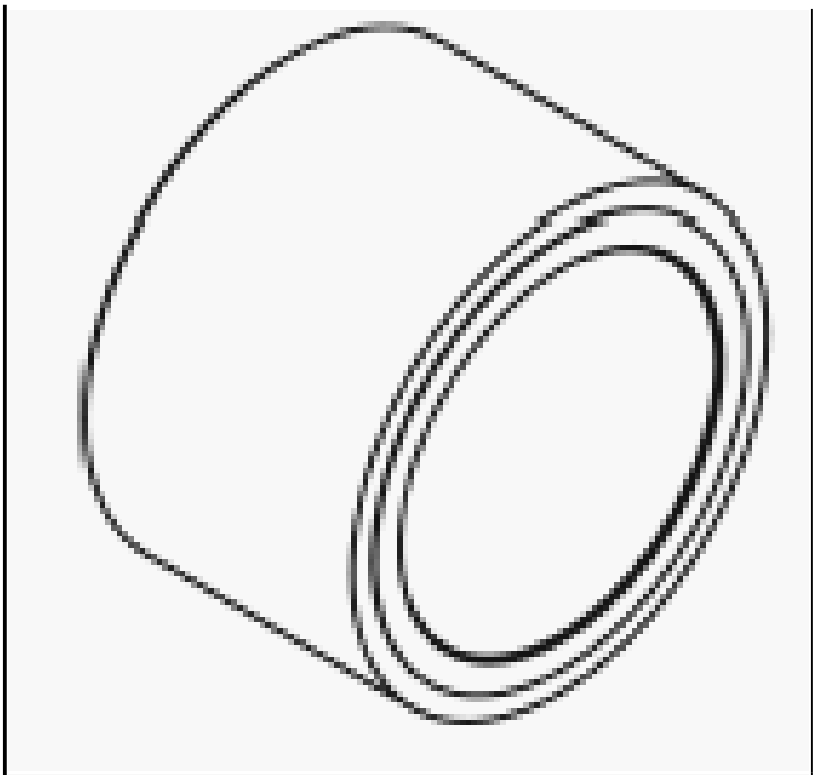

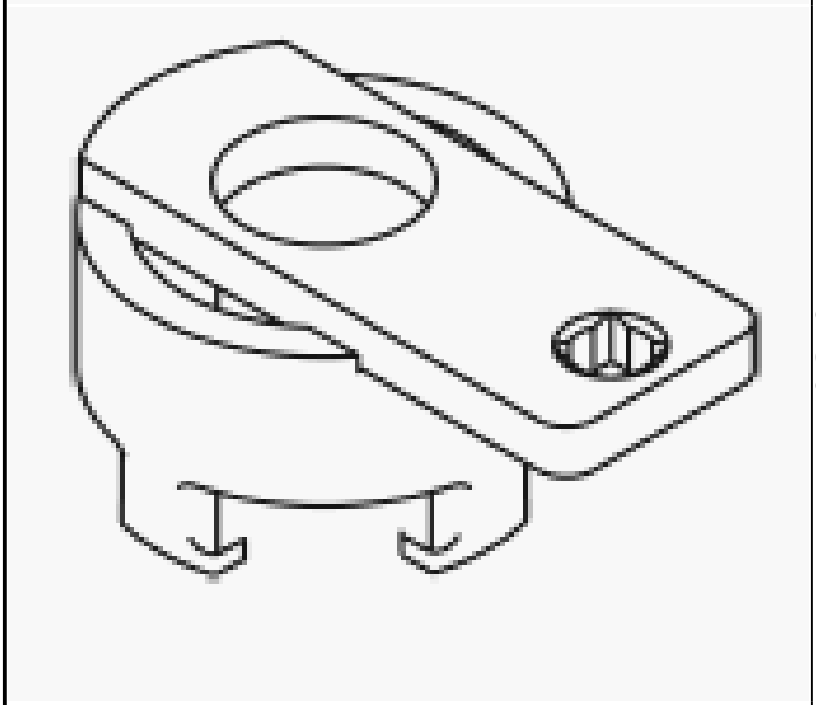

9707 - Holder, Vibration Damper (Originally Shipped In Kit Number(s) 9610, 9970.)

 © 2011 Mitchell Repair Information Company, LLC.

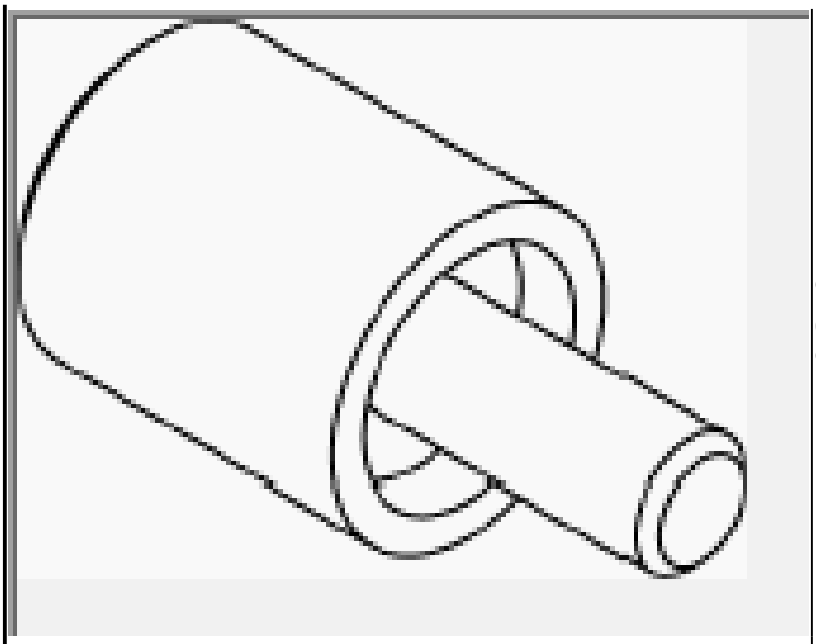

9879 - Adapter, Oil Pressure Test (Originally Shipped In Kit Number(s) 9998.)

C-3685-A - Bloc-Chek Kit

 © 2011 Mitchell Repair Information Company, LLC.

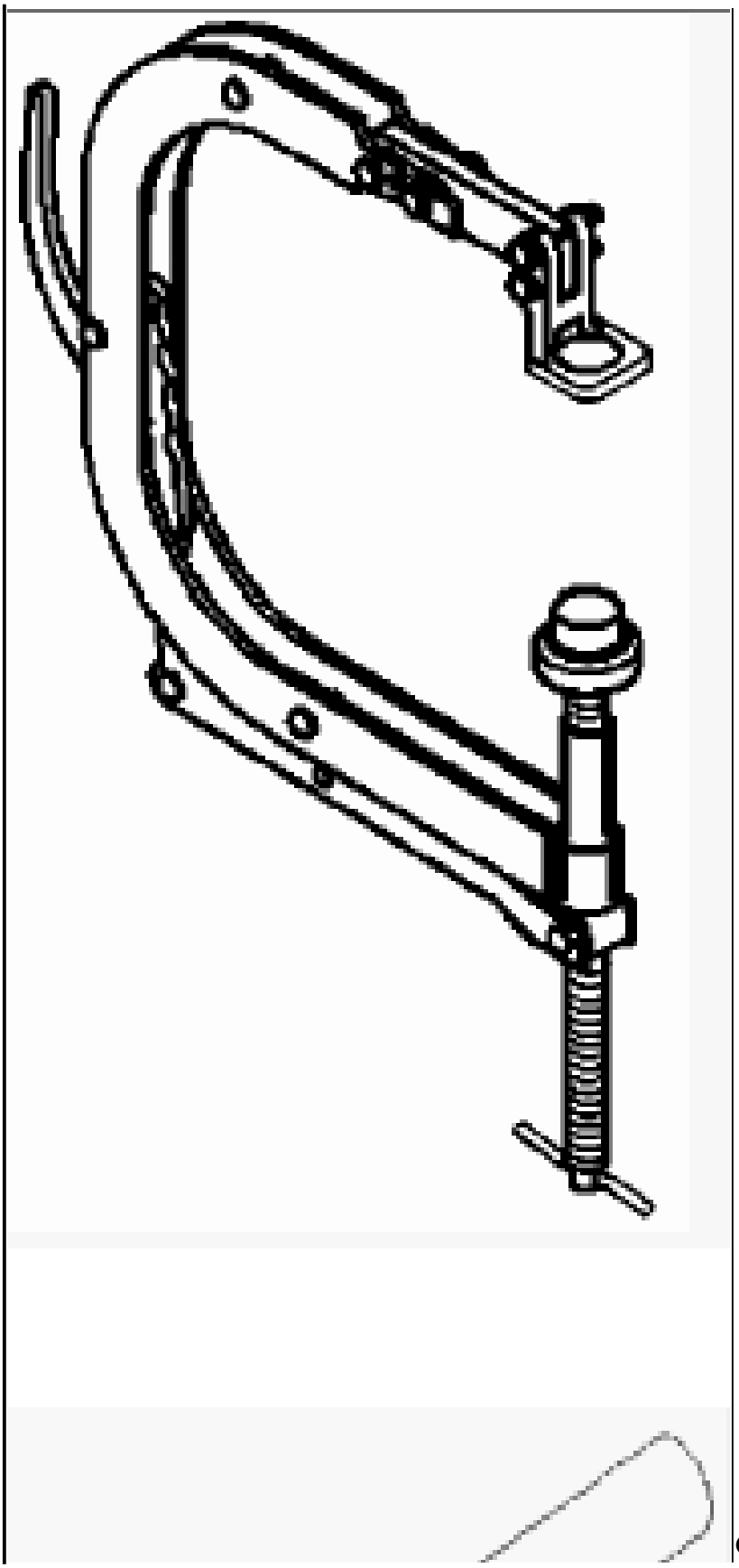

C-4171 - Driver Handle, Universal

 © 2011 Mitchell Repair Information Company, LLC.

	(Originally Shipped In Kit Number(s) 9202, 9202A-CAN, 9202CC, 9299, 9299CC, 9300A-CAN.)
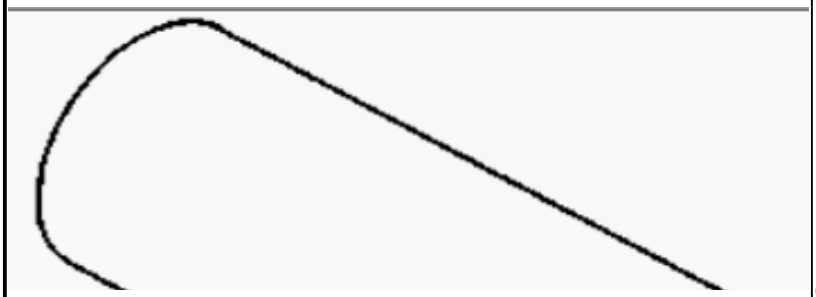	C-4597 - Socket, Oil Pressure

PLATE, IDENTIFICATION

DESCRIPTION

DESCRIPTION

 © 2011 Mitchell Repair Information Company, LLC.

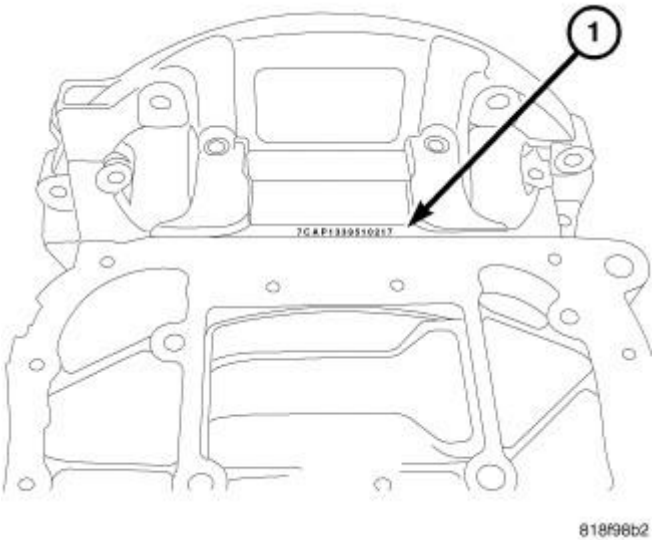

Fig. 55: Locating Engine Serial Number
Courtesy of CHRYSLER GROUP, LLC

The engine serial number (1) is located between the oil pan and the bellhousing. The serial number contains engine build date, build location, and displacement.

Example: 8CAP1339710217

WORLD ENGINE							
8	C	A	P1	339	7	1	0217
Model Year	Engine Displacement	Engine Build Variation (with oil cooler, turbo, for MMNA)	Engine Plant	Julian Day of Year	Julian Year 2007	Shift	Build Sequence Number
2008	A = 1.8L		P1 = GEMA North				
	B = 2.0L		P2 = GEMA South				
	C = 2.4L						

AIR INTAKE SYSTEM

AIR CLEANER

REMOVAL

REMOVAL

 © 2011 Mitchell Repair Information Company, LLC.

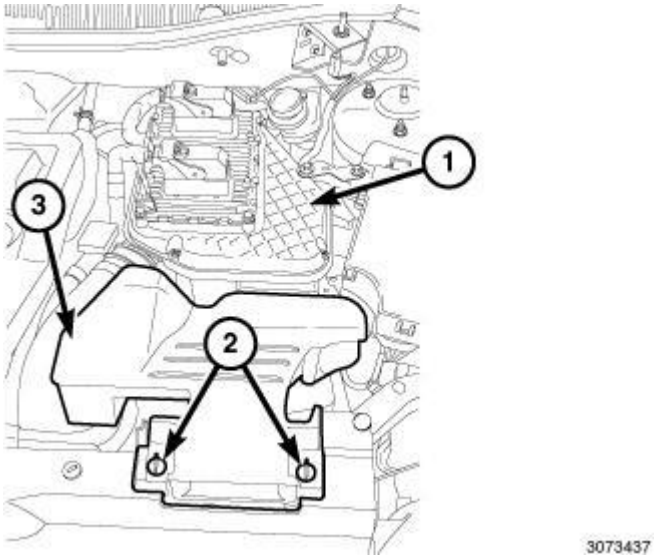

Fig. 56: Retainers, Fresh Air Inlet Duct & Air Cleaner Body
Courtesy of CHRYSLER GROUP, LLC

1. Unlock the retainers (2) and remove the fresh air inlet duct (3) from air cleaner housing (1).
2. Remove the support bracket bolt from the strut tower.
3. Remove the screws that hold the cover on the air cleaner housing.

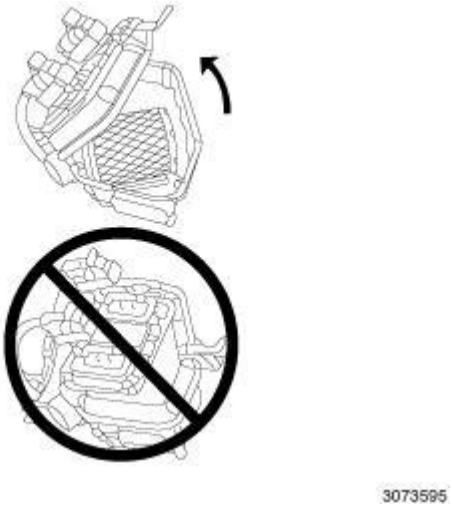

Fig. 57: Electrical Connectors At Powertrain Control Module (PCM) - DO NOT Unplug
Courtesy of CHRYSLER GROUP, LLC

CAUTION: Do Not unplug the electrical connectors from the Powertrain Control Module (PCM). A possible voltage spike can erase and damage the PCM.

4. Position the air cleaner housing cover aside.

 © 2011 Mitchell Repair Information Company, LLC.

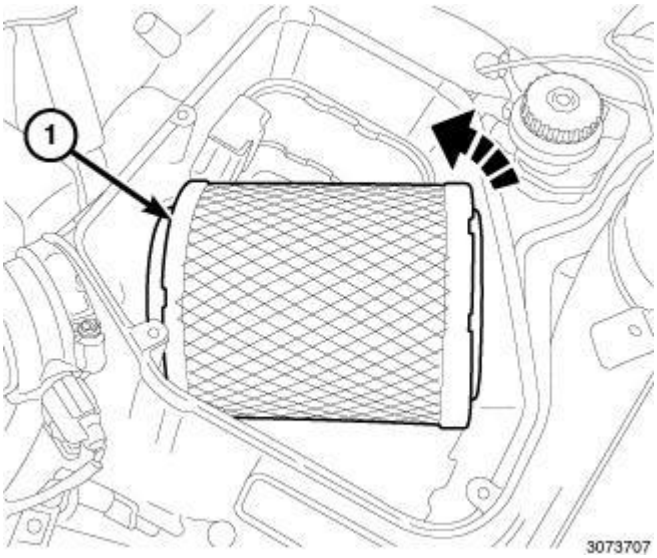

Fig. 58: Air Cleaner Element
Courtesy of CHRYSLER GROUP, LLC

5. Remove the air cleaner element (1).
6. If necessary, clean the inside of the air cleaner housing.

INSTALLATION

INSTALLATION

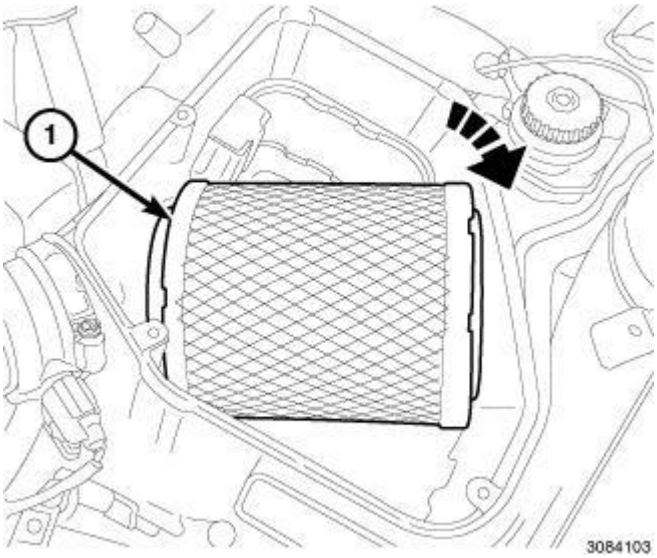

Fig. 59: Air Cleaner Element
Courtesy of CHRYSLER GROUP, LLC

1. Install the new cleaner element (1).

 © 2011 Mitchell Repair Information Company, LLC.

Fig. 60: Electrical Connectors At Powertrain Control Module (PCM) - DO NOT Unplug
Courtesy of CHRYSLER GROUP, LLC

CAUTION: Do Not unplug the electrical connectors from the Powertrain Control Module (PCM). A possible voltage spike can erase and damage the PCM.

2. Place the cover over the air cleaner housing. Hand tighten the cover screws.

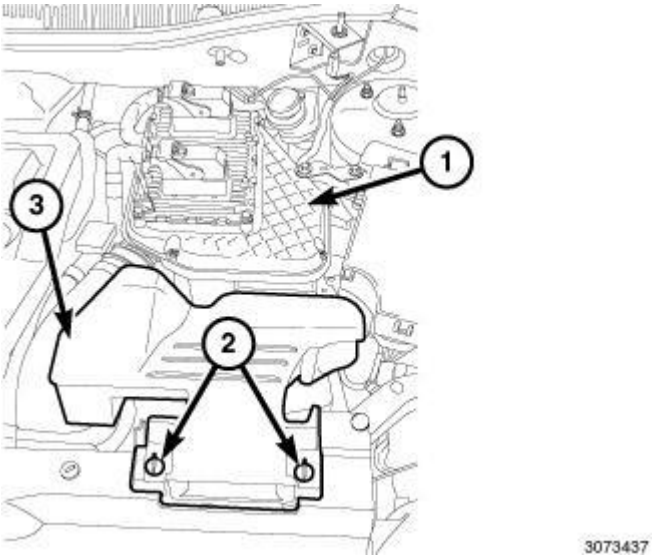

Fig. 61: Retainers, Fresh Air Inlet Duct & Air Cleaner Body
Courtesy of CHRYSLER GROUP, LLC

3. Install the support bracket bolt to the strut tower and tighten to 10 N.m (89 in. lbs.).
4. Install the fresh air inlet duct (3) on the air cleaner housing (1) and lock the retainers (2).

BODY, AIR CLEANER

 © 2011 Mitchell Repair Information Company, LLC.

REMOVAL

REMOVAL

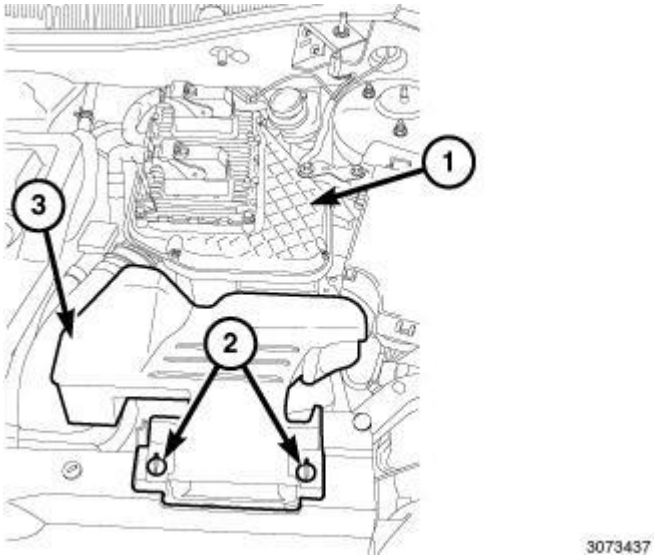

Fig. 62: Retainers, Fresh Air Inlet Duct & Air Cleaner Body
Courtesy of CHRYSLER GROUP, LLC

1. Unlock the retainers (2) and remove the fresh air inlet duct (3) from air cleaner body (1).

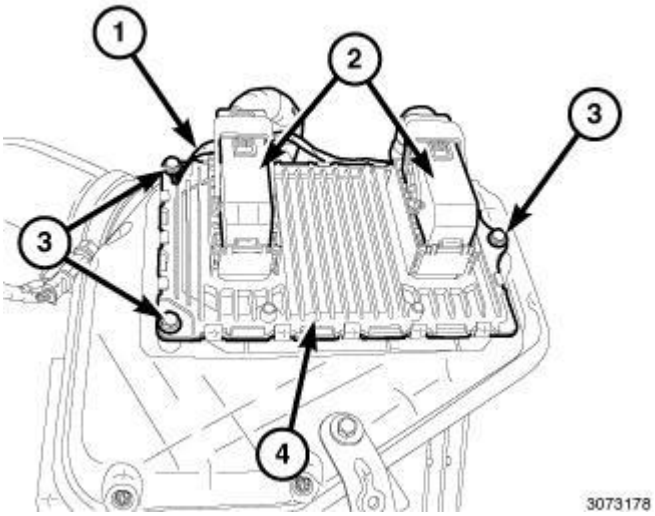

Fig. 63: Electrical Connectors, PCM, Three Mounting Bolts & Ground Wire
Courtesy of CHRYSLER GROUP, LLC

2. Remove the bolts (3) that secure the PCM (4) to the air cleaner body cover and position aside.

 © 2011 Mitchell Repair Information Company, LLC.

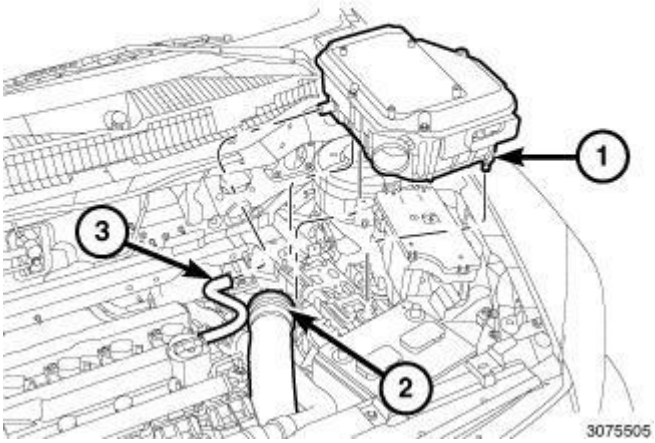

Fig. 64: Air Cleaner Body, Air Inlet Tube & Make-Up Air Hose
Courtesy of CHRYSLER GROUP, LLC

3. Remove the air inlet tube (2) from the air cleaner body (1).
4. Disconnect the make-up air hose (3) from the air cleaner body.
5. Remove the support bracket bolt from the strut tower.
6. Pull upward to disengage the pins from the rubber grommets and remove the air cleaner body (1).

INSTALLATION

INSTALLATION

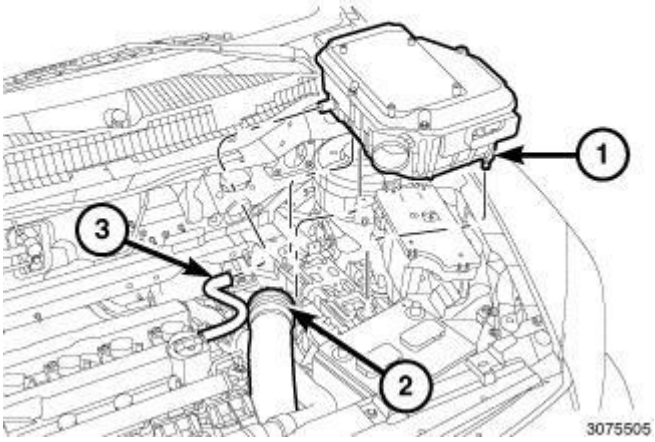

Fig. 65: Air Cleaner Body, Air Inlet Tube & Make-Up Air Hose
Courtesy of CHRYSLER GROUP, LLC

1. Make sure the rubber grommets, for the air cleaner body lower pins, are in place when reinstalling the air

 © 2011 Mitchell Repair Information Company, LLC.

cleaner body.

2. Push down on the air cleaner body (1) to engage the pins into the grommets.
3. Install the support bracket bolt to the strut tower and tighten to 10 N.m (89 in. lbs.).
4. Install the air inlet tube (2) to the air cleaner body (1).
5. Connect the make-up air hose (3) to the air cleaner body.

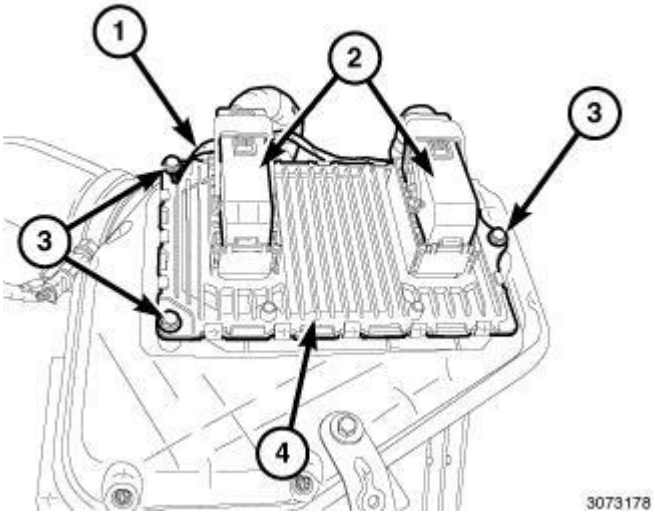

Fig. 66: Electrical Connectors, PCM, Three Mounting Bolts & Ground Wire
Courtesy of CHRYSLER GROUP, LLC

6. Position the PCM (4) on the air cleaner body cover.
7. Install three mounting bolts (3) with one ground wire (1) and tighten to 10 N.m (89 in. lbs.).

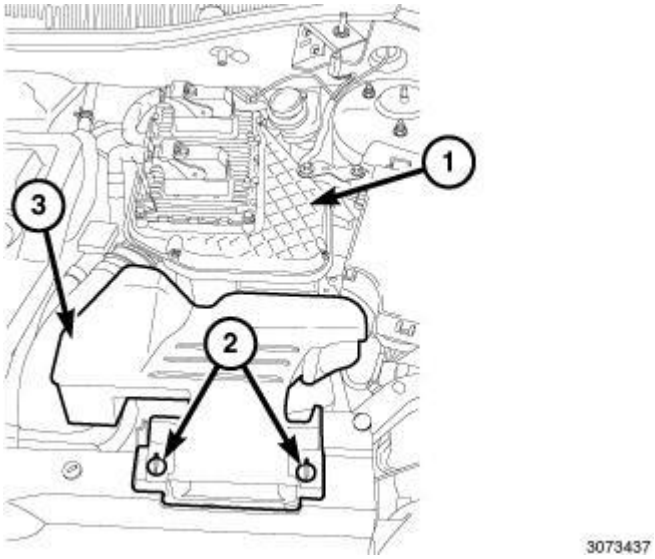

Fig. 67: Retainers, Fresh Air Inlet Duct & Air Cleaner Body
Courtesy of CHRYSLER GROUP, LLC

 © 2011 Mitchell Repair Information Company, LLC.

8. Install the fresh air inlet duct (3) on the air cleaner body (1) and lock the retainers (2).

CYLINDER HEAD

DESCRIPTION

DESCRIPTION

The cross flow designed, aluminum cylinder head contains dual over-head camshafts with four valves per cylinder. The valves are arranged in two in-line banks. The intake valves face toward the front of the vehicle. The exhaust valves face the dash panel. The cylinder head incorporates powdered metal valve guides and seats. The cylinder head is sealed to the block using a multi-layer steel head gasket and retaining bolts.

Integral oil galleries provide lubrication passages to the variable camshaft timing phasers, camshafts, and valve mechanisms.

NOTE: Replacement cylinder heads will come complete with valves, seals, springs, retainers, keepers, lash buckets, and camshafts.

DIAGNOSIS AND TESTING

DIAGNOSIS AND TESTING - CYLINDER HEAD GASKET

A cylinder head gasket leak can be located between adjacent cylinders, between a cylinder and the adjacent water jacket or from an oil passage to the exterior of the engine.

Possible indications of the cylinder head gasket leaking between adjacent cylinders are:

- Loss of engine power
- Engine misfiring
- Poor fuel economy

Possible indications of the cylinder head gasket leaking between a cylinder and an adjacent water jacket are:

- Engine overheating
- Loss of coolant
- Excessive steam (white smoke) emitting from exhaust
- Coolant foaming

CYLINDER-TO-CYLINDER LEAKAGE TEST

To determine if an engine cylinder head gasket is leaking between adjacent cylinders, follow the procedures in Cylinder Compression Pressure Test. Refer to **CYLINDER COMPRESSION PRESSURE TEST** . An engine cylinder head gasket leaking between adjacent cylinders will result in approximately a 50-70% reduction in compression pressure.

 © 2011 Mitchell Repair Information Company, LLC.

CYLINDER-TO-WATER JACKET LEAKAGE TEST

WARNING: USE EXTREME CAUTION WHEN THE ENGINE IS OPERATING WITH COOLANT PRESSURE CAP REMOVED.

VISUAL TEST METHOD

With the engine cool, remove the coolant pressure cap. Start the engine and allow it to warm up until thermostat opens.

If a large combustion/compression pressure leak exists, bubbles will be visible in the coolant.

COOLING SYSTEM TESTER METHOD

WARNING: WITH THE COOLING SYSTEM TESTER IN PLACE, PRESSURE WILL BUILD UP FAST. EXCESSIVE PRESSURE BUILT UP BY CONTINUOUS ENGINE OPERATION MUST BE RELEASED TO A SAFE PRESSURE POINT. NEVER PERMIT THE PRESSURE TO EXCEED 138 kPa (20 psi).

Install Cooling System Tester (special tool #7700, Tester, Cooling System) or equivalent to pressure cap neck. Start the engine and observe the tester's pressure gauge. If gauge pulsates with every power stroke of a cylinder a combustion pressure leak is evident.

CHEMICAL TEST METHOD

Combustion leaks into the cooling system can also be checked by using combustion leak tester (special tool #C-3685-A, Bloc-Chek Kit) or equivalent. Perform test following the procedures supplied with the tool kit.

REMOVAL

REMOVAL

 © 2011 Mitchell Repair Information Company, LLC.

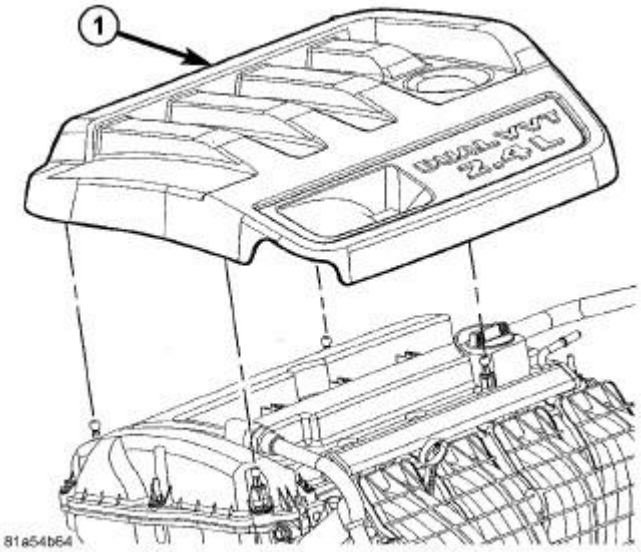

Fig. 68: Engine Cover
Courtesy of CHRYSLER GROUP, LLC

1. Remove the engine cover (1) by pulling upward.
2. Perform the fuel system pressure release procedure. Refer to **FUEL SYSTEM PRESSURE RELEASE PROCEDURE** .

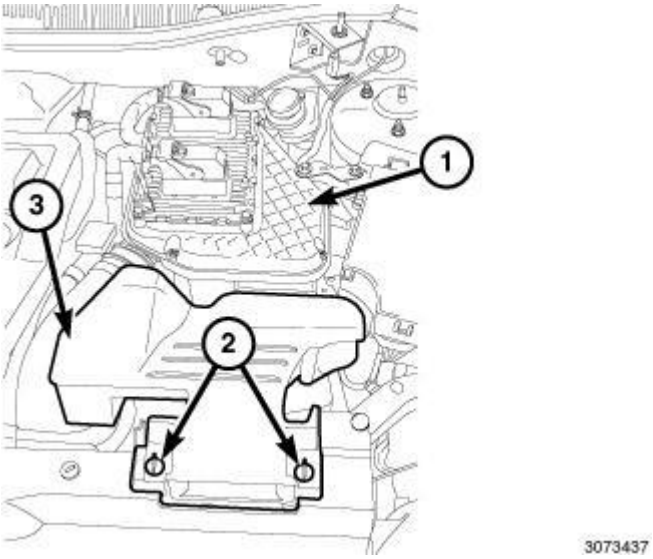

Fig. 69: Retainers, Fresh Air Inlet Duct & Air Cleaner Body
Courtesy of CHRYSLER GROUP, LLC

3. Unlock the retainers (2) and remove the fresh air inlet duct (3) from air cleaner body (1).

 © 2011 Mitchell Repair Information Company, LLC.

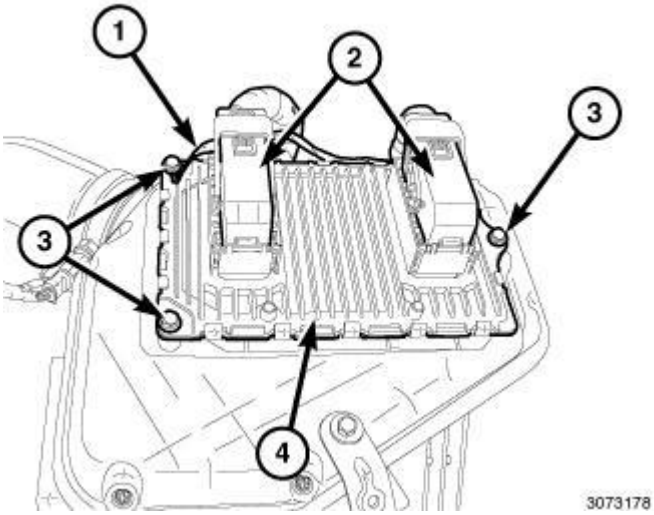

Fig. 70: Electrical Connectors, PCM, Three Mounting Bolts & Ground Wire
Courtesy of CHRYSLER GROUP, LLC

4. Disconnect and isolate the negative battery cable.
5. Unlock and disconnect the electrical connectors (2) from the PCM (4).
6. Remove the mounting bolt (3) and ground wire (1).

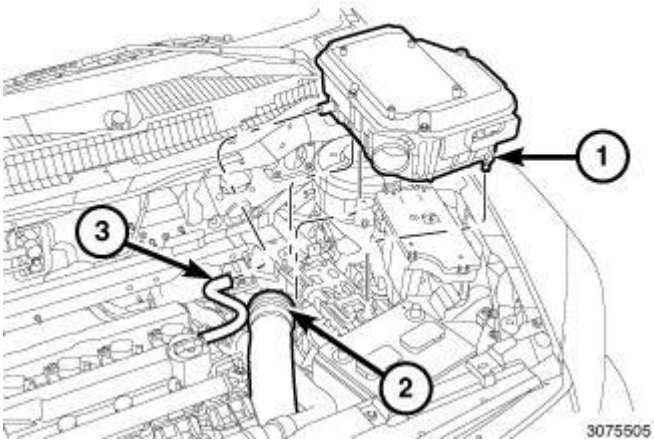

Fig. 71: Air Cleaner Body, Air Inlet Tube & Make-Up Air Hose
Courtesy of CHRYSLER GROUP, LLC

7. Remove the air inlet tube (2) from the air cleaner body (1).
8. Disconnect the make-up air hose (3) from the air cleaner body.
9. Remove the support bracket bolt from the strut tower.
10. Pull upward to disengage the pins from the rubber grommets and remove the air cleaner body (1).

 © 2011 Mitchell Repair Information Company, LLC.

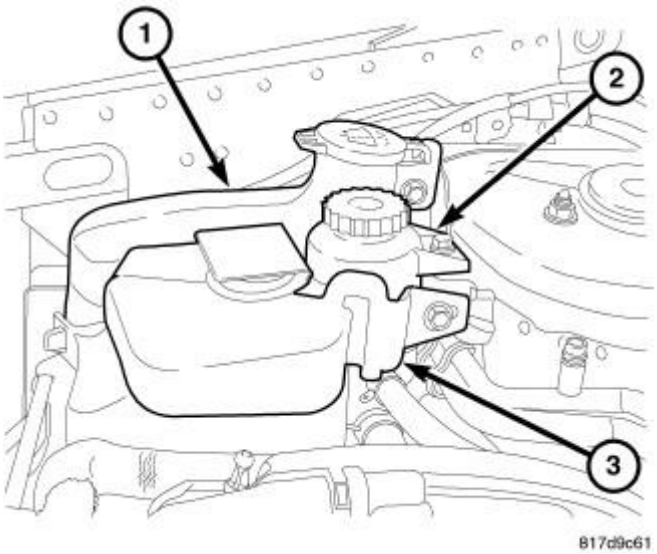

Fig. 72: Windshield Washer Reservoir, Power Steering Reservoir & Coolant Reservoir
Courtesy of CHRYSLER GROUP, LLC

11. Drain the cooling system. Refer to **STANDARD PROCEDURE** .
12. Remove the coolant recovery bottle (3). Refer to **BOTTLE, COOLANT RECOVERY, REMOVAL** .
13. Remove and reposition power steering reservoir (2).
14. Remove windshield washer bottle (1). Refer to **RESERVOIR, WINDSHIELD WASHER, REMOVAL** .
15. Remove accessory drive belt. Refer to **BELT, SERPENTINE, REMOVAL** .

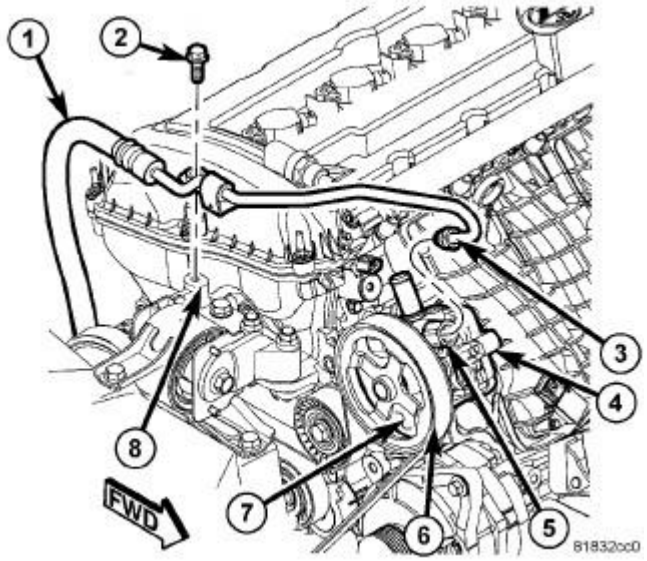

Fig. 73: Power Steering Pressure Hose
Courtesy of CHRYSLER GROUP, LLC

16. Remove power steering hose hold down (2).

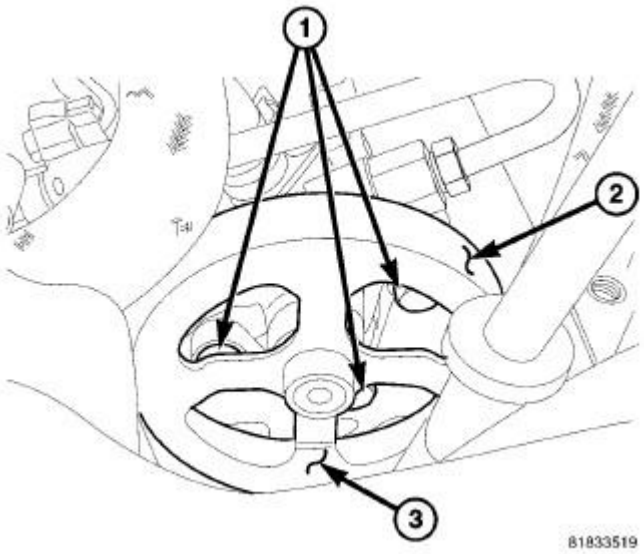

Fig. 74: Power Steering Pump Bolts & Pulley
Courtesy of CHRYSLER GROUP, LLC

17. Remove the three power steering pump mounting bolts (1) through the openings in the pulley (3) and reposition the pump.

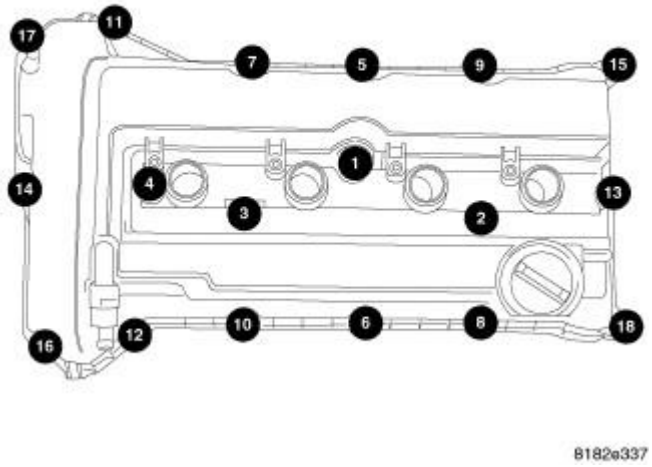

Fig. 75: Removing/Installing Cylinder Head Cover Bolts In Sequence
Courtesy of CHRYSLER GROUP, LLC

18. Remove the cylinder head cover. Refer to **COVER(S), CYLINDER HEAD, REMOVAL**.
19. Remove ignition coils from cylinder head cover.

 © 2011 Mitchell Repair Information Company, LLC.

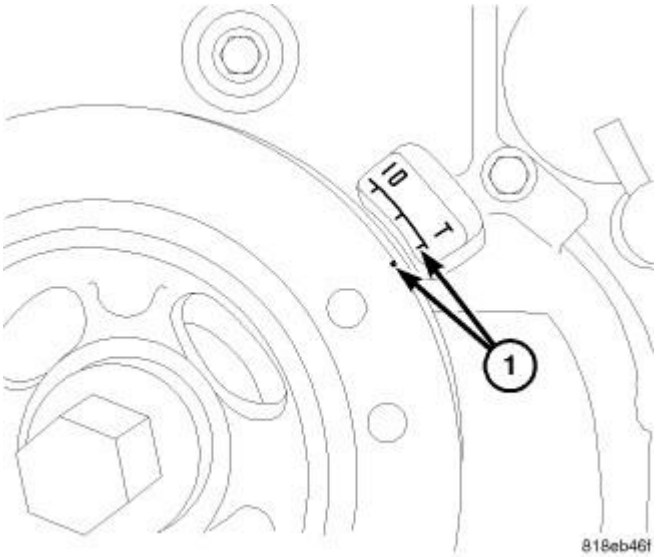

Fig. 76: Setting Engine To Top Dead Center
Courtesy of CHRYSLER GROUP, LLC

20. Raise and support the vehicle. Refer to **HOISTING, STANDARD PROCEDURE** .
21. Remove the right splash shield. Refer to **SHIELD, SPLASH, FRONT WHEELHOUSE, REMOVAL** .
22. Set engine to TDC (1).

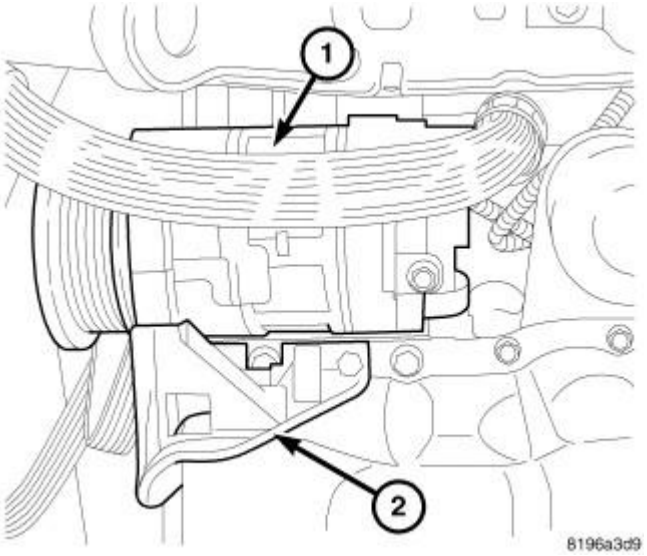

Fig. 77: A/C Compressor
Courtesy of CHRYSLER GROUP, LLC

23. Remove lower A/C compressor bolts if equipped.
24. Remove lower A/C compressor mount (2) if equipped.

 © 2011 Mitchell Repair Information Company, LLC.

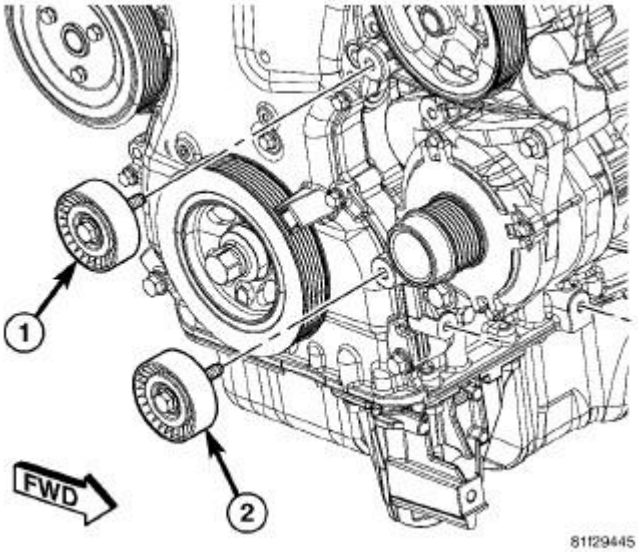

Fig. 78: Removing/Installing Accessory Drive Belt Upper & Lower Idler Pulley
Courtesy of CHRYSLER GROUP, LLC

25. Remove accessory drive belt lower idler pulley (2).

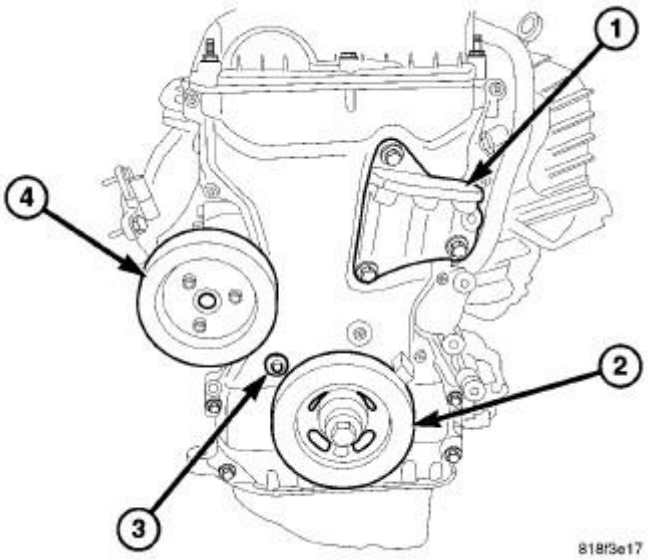

Fig. 79: Engine Front
Courtesy of CHRYSLER GROUP, LLC

26. Remove crankshaft damper (2). Refer to **DAMPER, VIBRATION, REMOVAL**.
27. Remove three bolts and water pump pulley (4) from water pump.
28. Remove lower bolt from right side engine mount bracket (1).

 © 2011 Mitchell Repair Information Company, LLC.

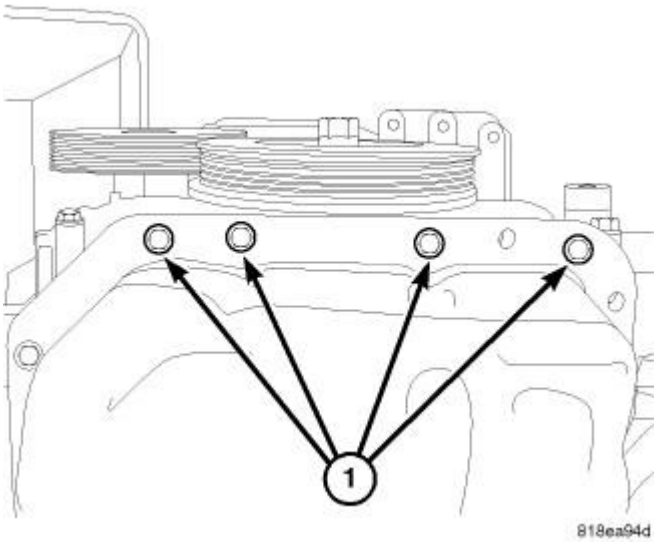

Fig. 80: Timing Chain Cover Lower Bolts
Courtesy of CHRYSLER GROUP, LLC

29. Remove timing chain cover lower bolts (1).

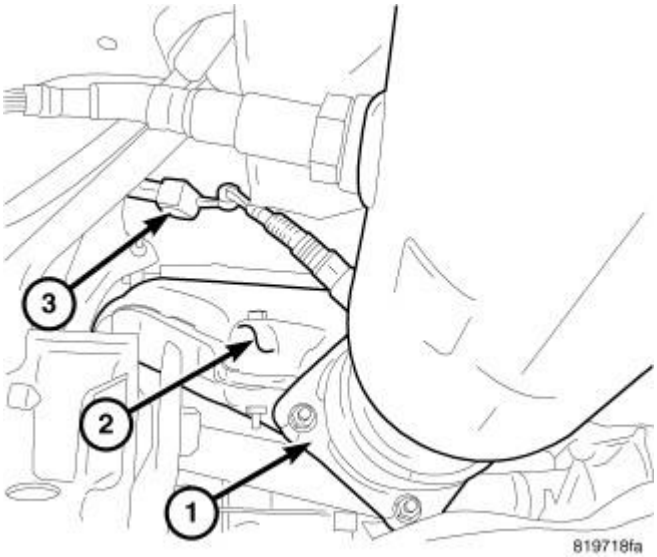

Fig. 81: Removing/Installing Under Floor Catalytic Converter
Courtesy of CHRYSLER GROUP, LLC

30. Remove under floor catalytic converter Refer to **CONVERTER, CATALYTIC, REMOVAL** .
31. Lower vehicle.
32. Support engine with suitable jack.

 © 2011 Mitchell Repair Information Company, LLC.

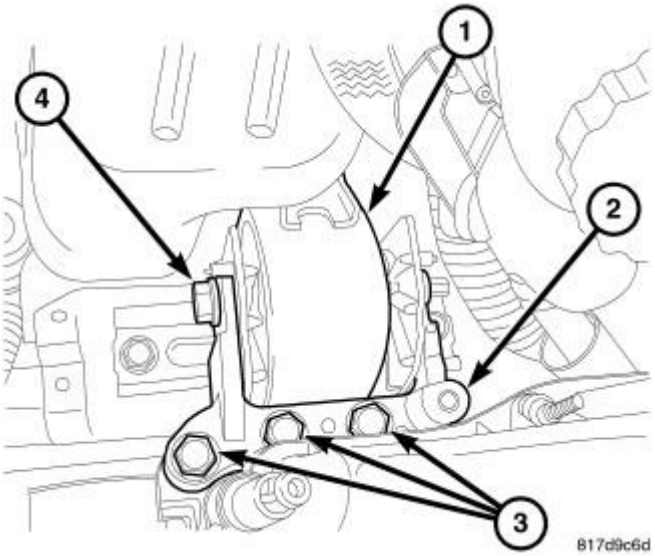

Fig. 82: Right Engine Mount
Courtesy of CHRYSLER GROUP, LLC

33. Remove right engine mount through bolt (4).
34. Remove right engine mount to mount bracket bolts (3).
35. Remove right engine mount adapter (1).

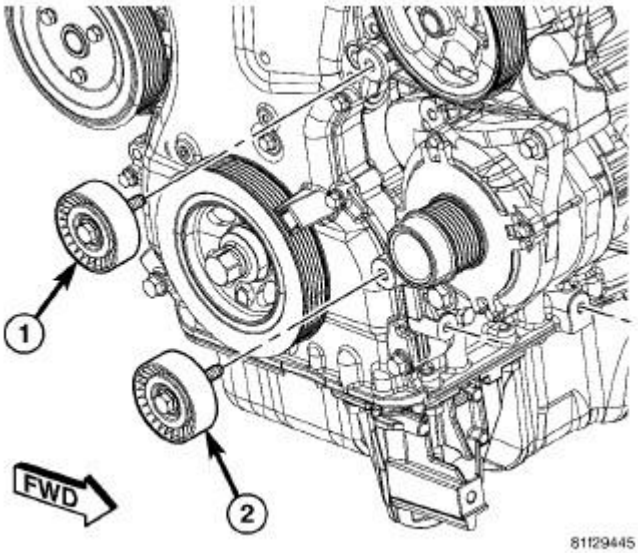

Fig. 83: Removing/Installing Accessory Drive Belt Upper & Lower Idler Pulley
Courtesy of CHRYSLER GROUP, LLC

36. Remove accessory drive upper idler pulley (1).

 © 2011 Mitchell Repair Information Company, LLC.

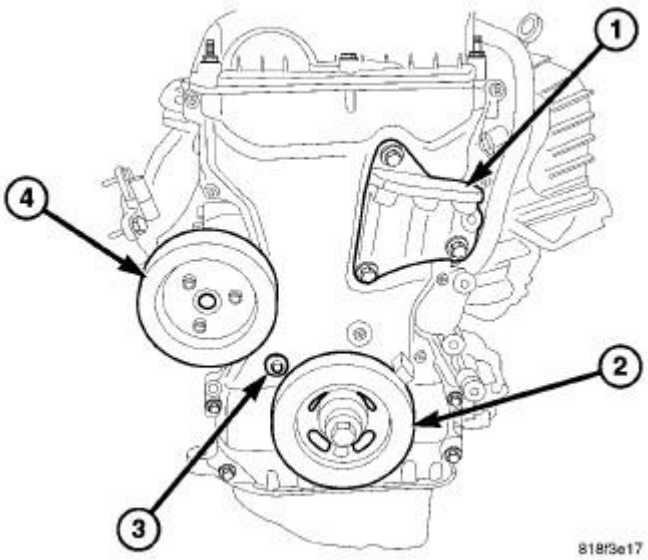

Fig. 84: Engine Front
Courtesy of CHRYSLER GROUP, LLC

37. Remove right upper engine mount bracket (1).
38. Remove accessory drive belt tensioner.
39. Remove upper timing chain cover retaining bolts.

 © 2011 Mitchell Repair Information Company, LLC.

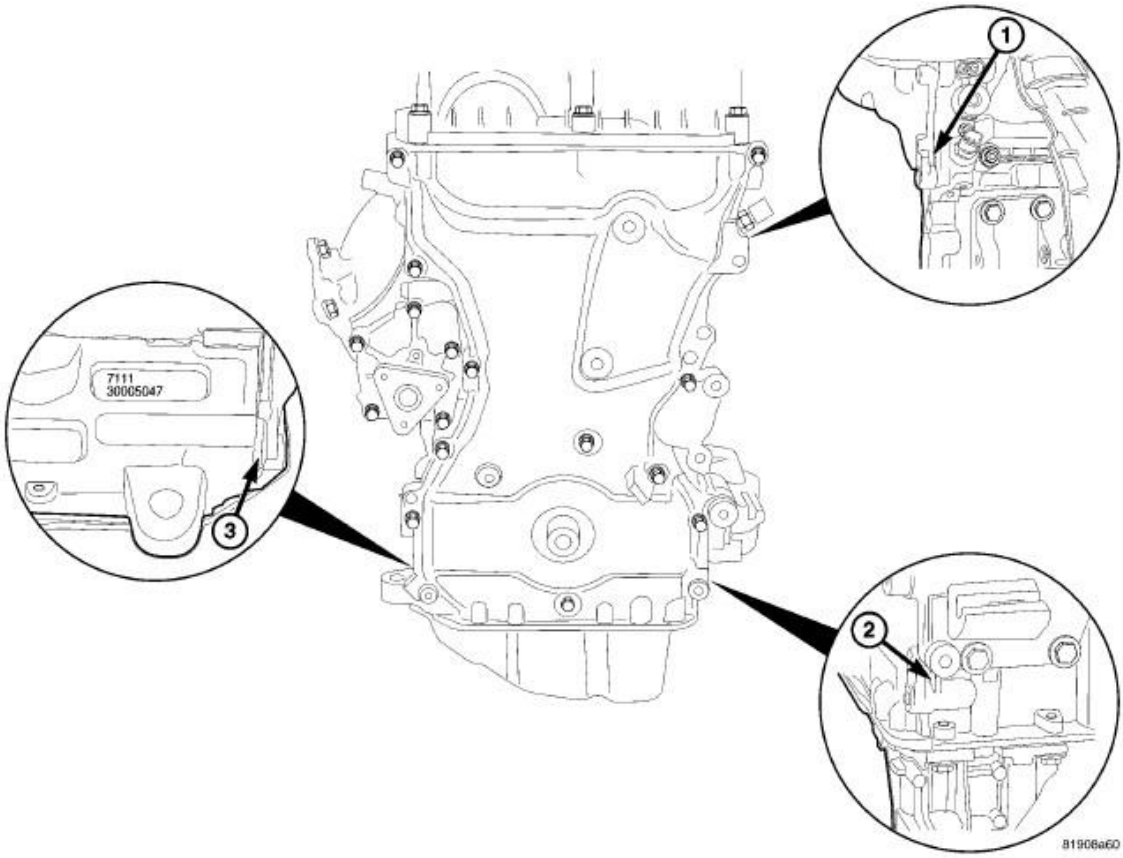

Fig. 85: Timing Chain Cover Pry Points
Courtesy of CHRYSLER GROUP, LLC

40. Remove timing chain cover using pry points (1, 2, 3).

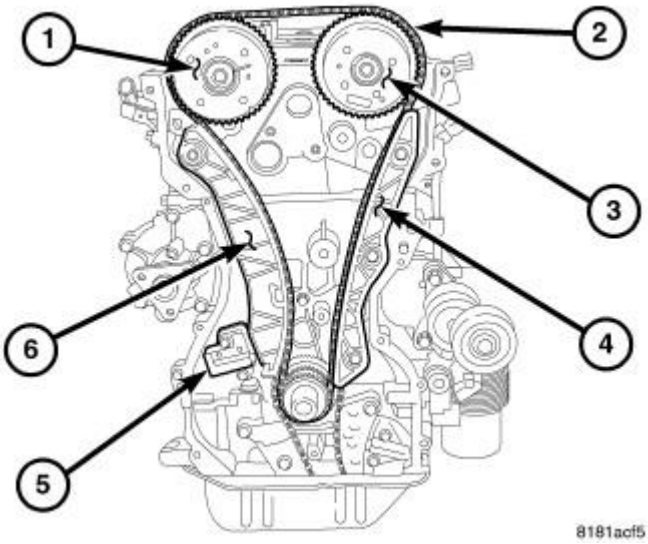

Fig. 86: Removing/Installing Timing Chain, Tensioner, Chain Guide, & Chain Pivot Guide
Courtesy of CHRYSLER GROUP, LLC

41. Remove tensioner (5) and timing chain (2) Refer to **CHAIN AND SPROCKETS, TIMING, REMOVAL**.
42. Remove timing chain guide (4) and timing chain pivot guide (6).

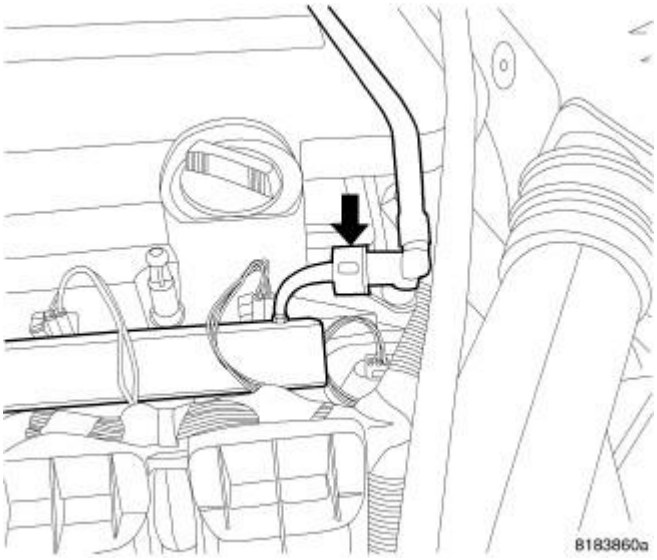

Fig. 87: Fuel Line At Fuel Rail
Courtesy of CHRYSLER GROUP, LLC

43. Disconnect the fuel line from the fuel rail. Refer to **FITTING, QUICK CONNECT** .

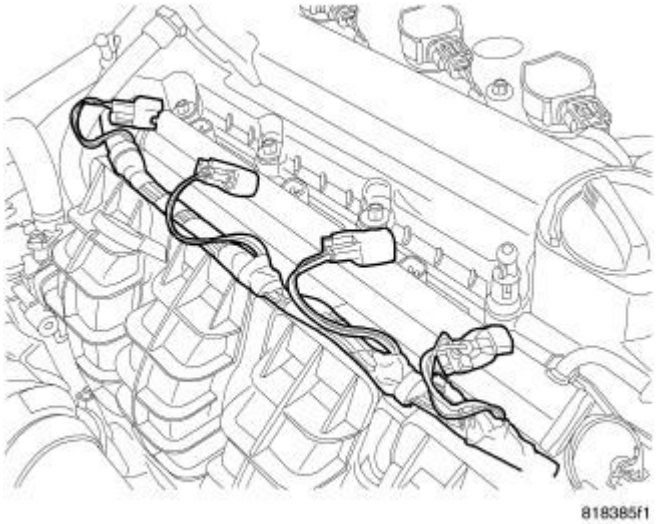

Fig. 88: Fuel Injector Electrical Connectors
Courtesy of CHRYSLER GROUP, LLC

44. Unlock and disconnect the electrical connectors from the fuel injectors.

 © 2011 Mitchell Repair Information Company, LLC.

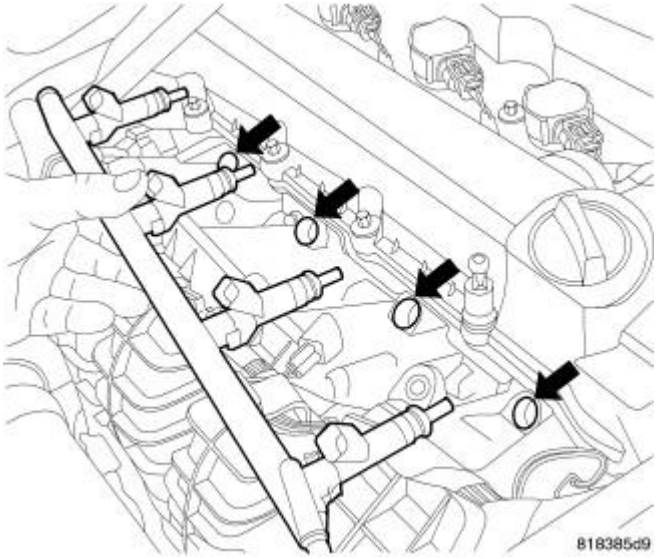

Fig. 89: Rail Removal/Install
Courtesy of CHRYSLER GROUP, LLC

45. Remove two fuel rail retaining bolts and remove fuel rail.

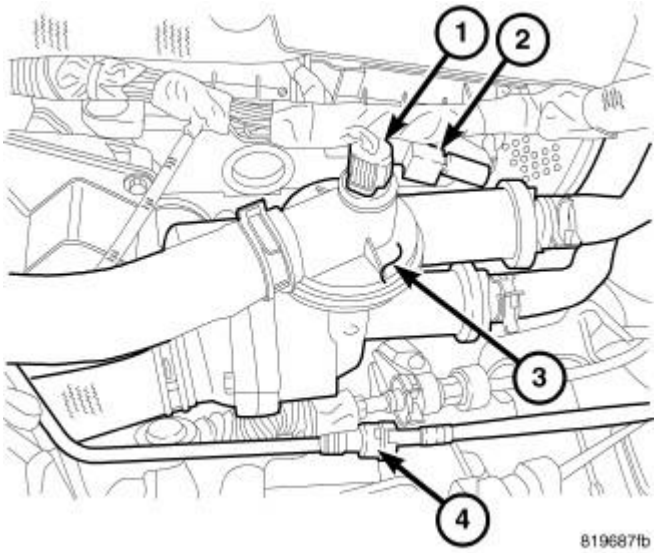

Fig. 90: Coolant Adapter
Courtesy of CHRYSLER GROUP, LLC

46. Disconnect electrical connectors from coolant temperature sensor (1), oil temperature sensor, variable valve timing solenoids, camshaft position sensors, MAP sensor, manifold tuning valve, ignition interference suppressor (2) and electronic throttle control.

 © 2011 Mitchell Repair Information Company, LLC.

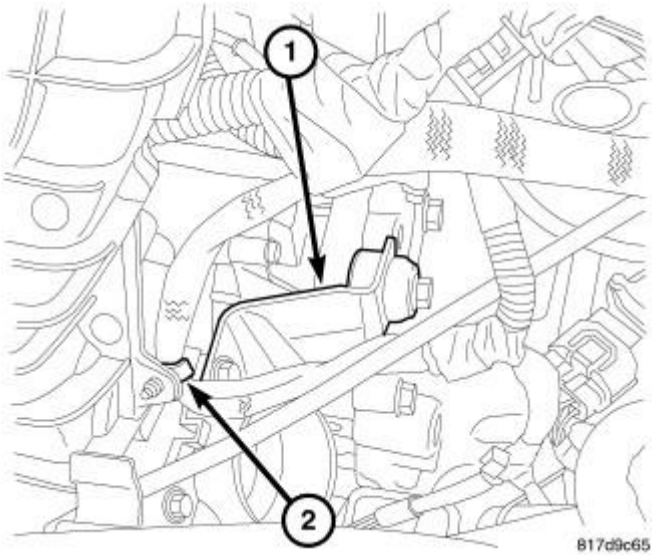

Fig. 91: Throttle Body Support
Courtesy of CHRYSLER GROUP, LLC

47. Remove wiring harness retainer from intake manifold (2) and reposition harness.
48. Remove throttle body support bracket (1).
49. Disconnect vacuum lines at intake.

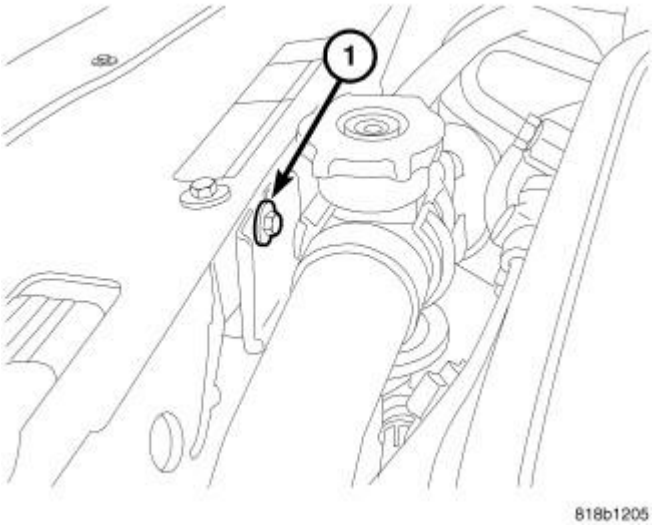

Fig. 92: Radiator Hose Support
Courtesy of CHRYSLER GROUP, LLC

50. Remove upper radiator hose retaining bolt (1).

 © 2011 Mitchell Repair Information Company, LLC.

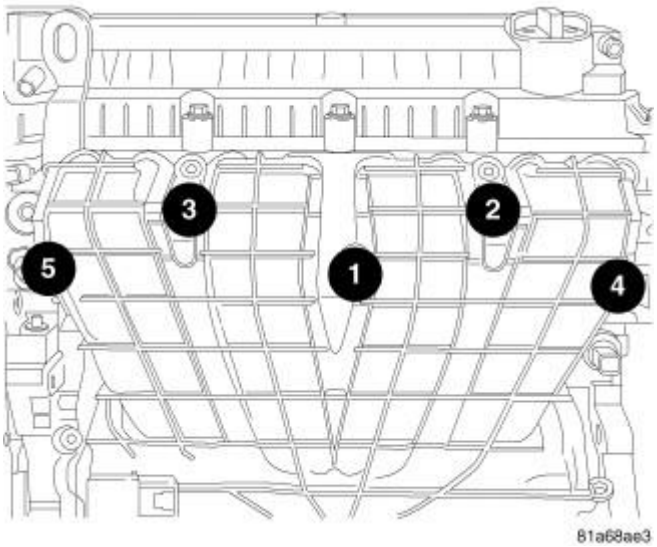

Fig. 93: Intake Manifold Bolt Removal & Tightening Sequence
Courtesy of CHRYSLER GROUP, LLC

51. Remove intake manifold retaining bolts and remove intake manifold.

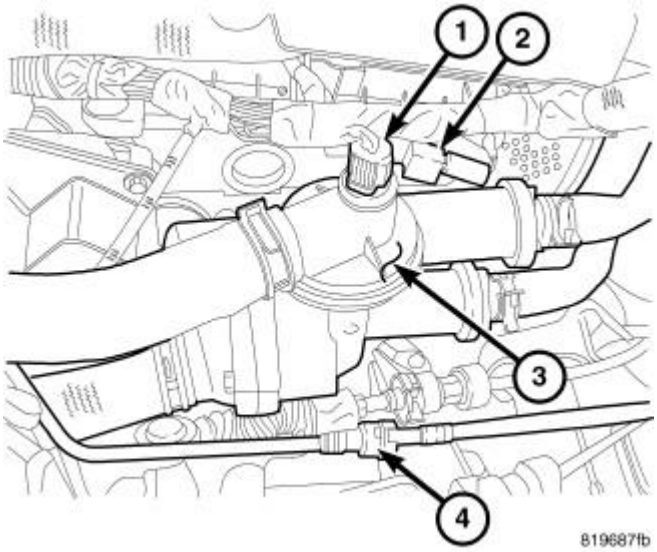

Fig. 94: Coolant Adapter
Courtesy of CHRYSLER GROUP, LLC

52. Remove four bolts and reposition coolant adapter (3).

 © 2011 Mitchell Repair Information Company, LLC.

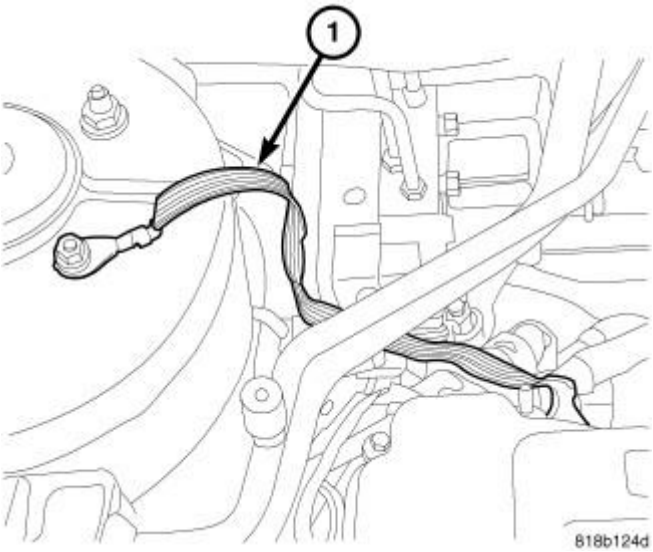

Fig. 95: Ground Strap
Courtesy of CHRYSLER GROUP, LLC

53. Remove ground strap (1) at right rear of cylinder head if equipped.

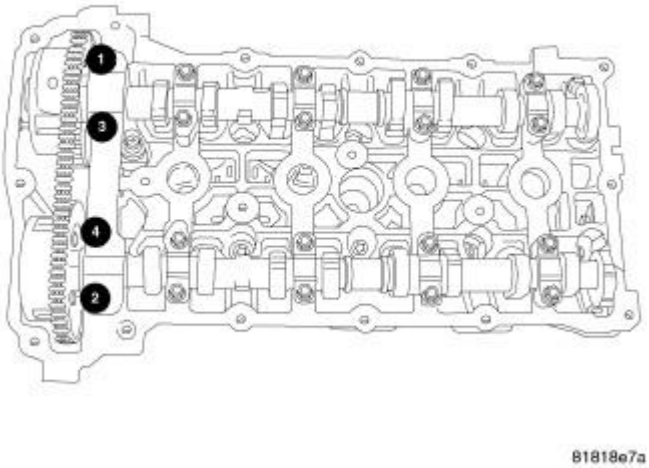

Fig. 96: Front Cam Cap Removal Sequence
Courtesy of CHRYSLER GROUP, LLC

NOTE: **Camshaft bearing caps should have been marked during engine manufacturing. For example, number one exhaust camshaft bearing is marked "E1>".**

CAUTION: DO NOT use a number stamp or a punch to mark camshaft bearing caps. Damage to bearing caps could occur.

 © 2011 Mitchell Repair Information Company, LLC.

54. Using a permanent ink or paint marker, identify location and position on each camshaft bearing cap.
55. Remove the front camshaft bearing cap.
56. Slowly remove the remaining intake and exhaust camshaft bearing cap bolts one turn at a time.
57. Remove the camshafts.

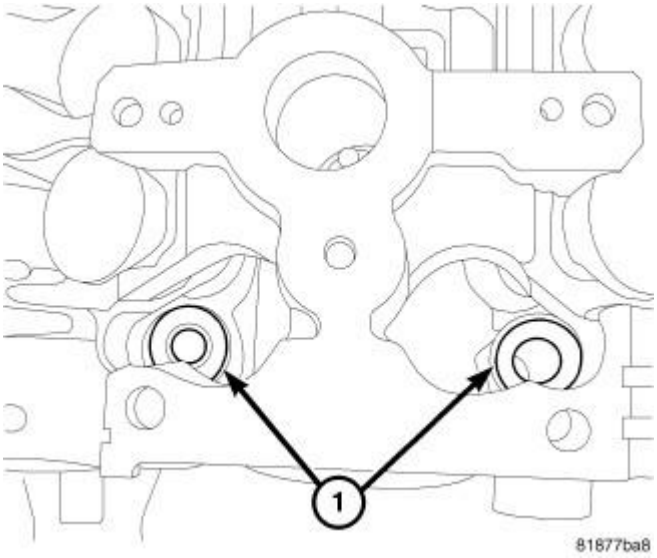

Fig. 97: Front Head Bolt Washers
Courtesy of CHRYSLER GROUP, LLC

NOTE: All of the cylinder head bolts have captured washers EXCEPT the front two (1).

58. Remove cylinder head bolts and two uncaptured washers.
59. Remove cylinder head from engine block.
60. Inspect and clean cylinder head and block sealing surfaces. Refer to **INSPECTION** and **CLEANING**.

NOTE: Ensure cylinder head bolt holes in the block are clean, dry (free of residual oil or coolant), and threads are not damaged.

CLEANING

CLEANING

To ensure engine gasket sealing, proper surface preparation must be performed, especially with the use of aluminum engine components and multi-layer steel cylinder head gaskets.

NOTE: Multi-Layer Steel (MLS) head gaskets require a scratch free sealing surface.

Remove all gasket material from cylinder head and block. Refer to **ENGINE GASKET SURFACE PREPARATION** . Be careful not to gouge or scratch the aluminum head sealing surface.

 © 2011 Mitchell Repair Information Company, LLC.

Clean all engine oil passages.

INSPECTION

INSPECTION

NOTE: Replacement cylinder heads will come complete with valves, seals, springs, retainers, keepers, tappets, and camshafts.

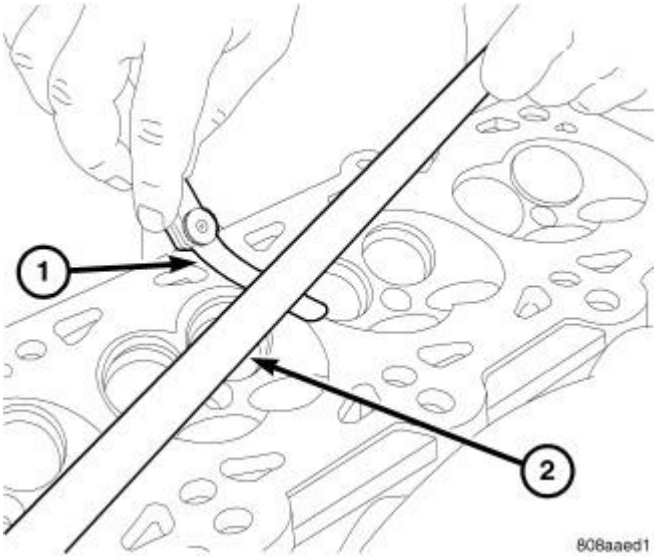

Fig. 98: Checking Cylinder Head Flatness
Courtesy of CHRYSLER GROUP, LLC

1. Check cylinder head warpage with a straight edge (2) and feeler gauge (1).
2. Cylinder head must be flat within 0.1 mm (0.004 in.).
3. Verify that the valve tappets move freely in theirs bores and that they have been rotating.
4. Inspect camshaft bearing journals for scoring.
5. Remove carbon and varnish deposits from inside of valve guides with a reliable guide cleaner.
6. Inspect the following components and verify that they are within specification : Refer to **SPECIFICATIONS** .
   - Camshafts
   - Valve Tappets
   - Springs
   - Valve Seats
   - Valve Guides
   - Valves
7. Prior to installing cylinder head, the cylinder block should be checked for flatness. Refer to **INSPECTION** .

INSTALLATION

 © 2011 Mitchell Repair Information Company, LLC.

INSTALLATION

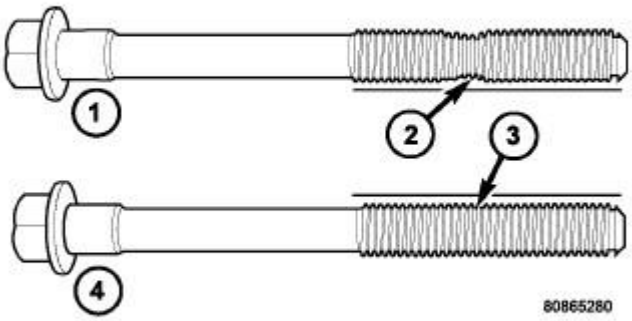

Fig. 99: Checking Cylinder Head Bolts For Stretching (Necking)
Courtesy of CHRYSLER GROUP, LLC

CAUTION: The cylinder head bolts are tightened using a torque plus angle procedure. The bolts must be examined BEFORE reuse. If the threads are necked down the bolts must be replaced.

1. Check cylinder head bolts for necking by holding a scale or straight edge against the threads. If all the threads do not contact the scale (2) the bolt must be replaced.

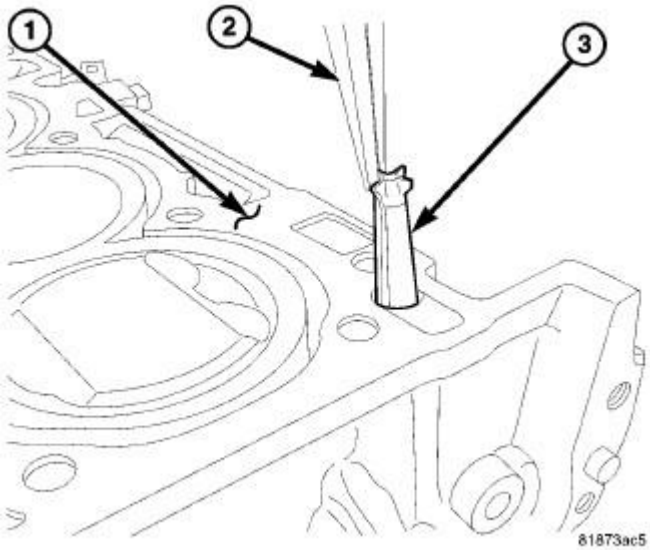

Fig. 100: Variable Valve Timing Filter Screen
Courtesy of CHRYSLER GROUP, LLC

 © 2011 Mitchell Repair Information Company, LLC.

NOTE: **Ensure cylinder head bolt holes in the block are clean, dry (free of residual oil or coolant), and threads are not damaged.**

CAUTION: Always replace the variable valve timing filter screen (3) when servicing the head gasket or engine damage could result.

2. Replace the variable valve timing filter screen (3).

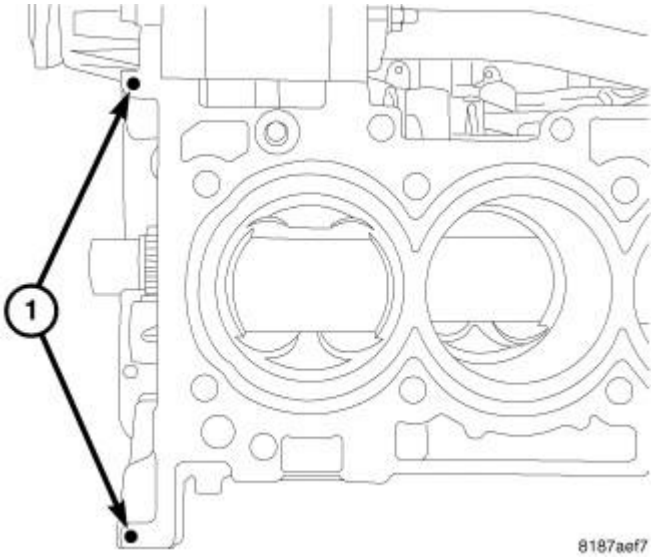

Fig. 101: Engine Sealant RTV Location
Courtesy of CHRYSLER GROUP, LLC

NOTE: **When using RTV, the sealing surfaces must be clean and free from grease and oil.**

NOTE: **When using RTV, parts should be assembled in 10 minutes and tighten to final torque within 45 minutes.**

3. Place two pea size dots of Mopar® engine sealant RTV or equivalent (1) on cylinder block as shown in illustration.

 © 2011 Mitchell Repair Information Company, LLC.

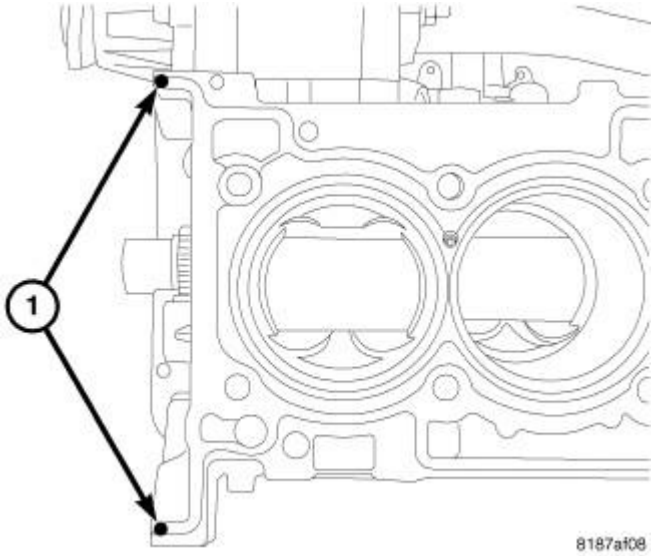

Fig. 102: Cylinder Head Gasket RTV
Courtesy of CHRYSLER GROUP, LLC

4. Position the new cylinder head gasket on engine block with the part number facing up. Ensure gasket is seated over the locating dowels in block.
5. Place two pea size dots of Mopar® engine sealant RTV or equivalent (1) on cylinder head gasket as shown in illustration.

NOTE: The head must be installed within 15 minutes before the RTV skins.

6. Position cylinder head onto engine block.

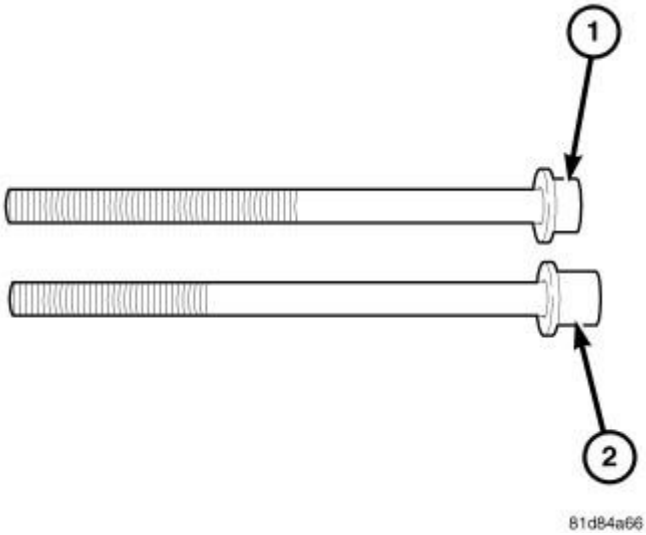

Fig. 103: Cylinder Head Bolt Identification
Courtesy of CHRYSLER GROUP, LLC

 © 2011 Mitchell Repair Information Company, LLC.

CAUTION: This engine was built with 2 different style cylinder head bolts. Each style bolt requires a different torque value. The bolts can be identified by the short bolt head (1) and the long bolt head (2).

7. Measure the bolt head from the washer to the top of the bolt head. The short bolt head (1) measures 8 mm (5/16") and the long bolt head (2) measures 13 mm (1/2").
8. Identify whether your engine has the short head design (1) or the long head design (2).

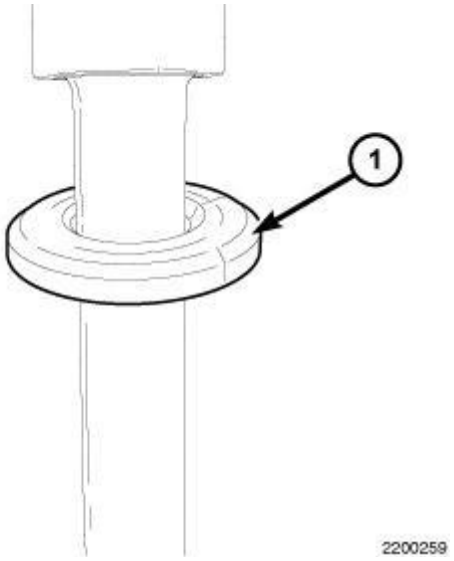

Fig. 104: Washers Must Be Installed With Bevel Edge Up Towards Bolt Head
Courtesy of CHRYSLER GROUP, LLC

NOTE: The front two cylinder head bolts do not have captured washers. The washers must be installed with the bevel edge (1) up towards the bolt head.

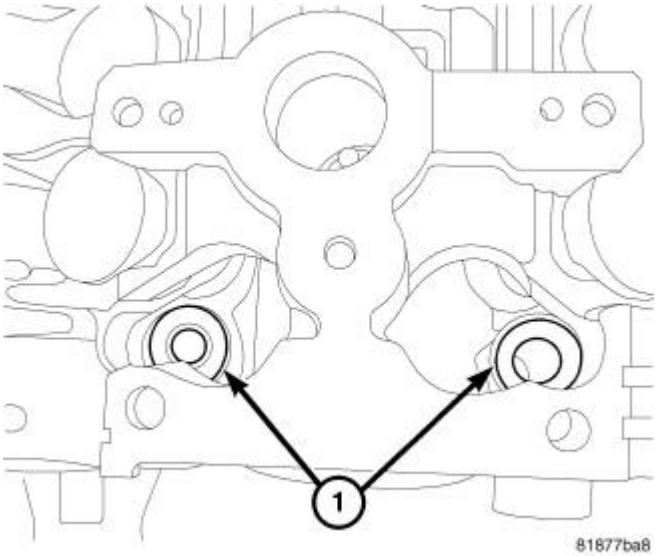

 © 2011 Mitchell Repair Information Company, LLC.

Fig. 105: Front Head Bolt Washers
Courtesy of CHRYSLER GROUP, LLC

9. Install washers (1) for the front two cylinder head bolts with the beveled edge facing up.

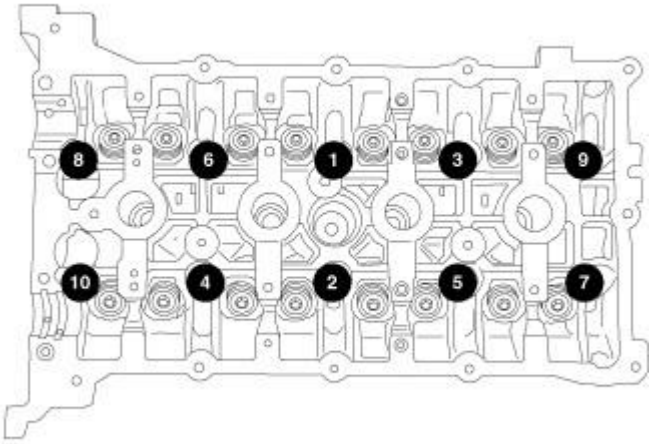

Fig. 106: Cylinder Head Torque Sequence
Courtesy of CHRYSLER GROUP, LLC

NOTE: **Before installing the cylinder head bolts, lubricate the threads with clean engine oil.**

10. Install the cylinder head bolts and tighten in the sequence shown in illustration.

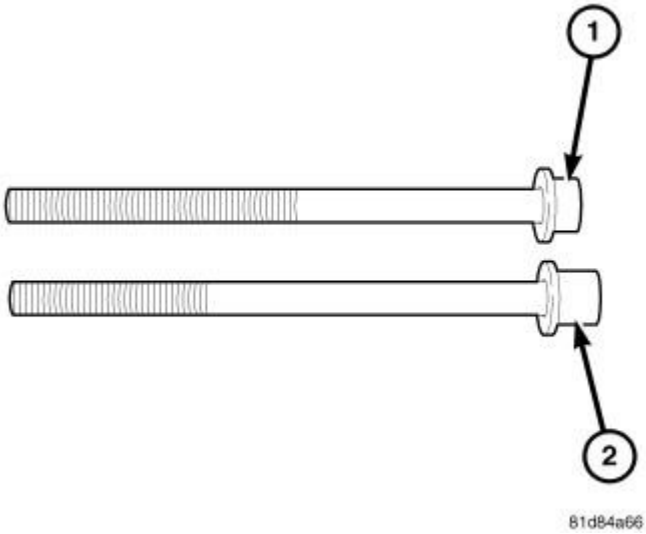

Fig. 107: Cylinder Head Bolt Identification
Courtesy of CHRYSLER GROUP, LLC

 © 2011 Mitchell Repair Information Company, LLC.

11. If your bolt has the short head (1), use the following torque specifications:
    - First: All to 30 N.m (25 ft. lbs.)
    - Second: All to 61 N.m (45 ft. lbs.)
    - Third: All to 61 N.m (45 ft. lbs.)
    - Fourth: All an additional 90°

CAUTION: Do not use a torque wrench for the Fourth step.

12. If your bolt has the long head (2), use the following torque specifications:
    - First: All to 30 N.m (25 ft. lbs.)
    - Second: All to 73 N.m (54 ft. lbs.)
    - Third: All to 73 N.m (54 ft. lbs.)
    - Fourth: All an additional 90°

CAUTION: Do not use a torque wrench for the Fourth step.

13. Clean excess RTV from the timing chain cover sealing surface.

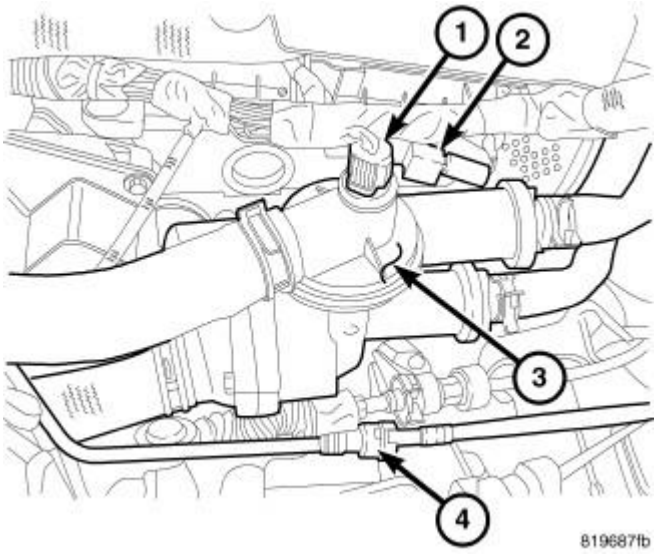

Fig. 108: Coolant Adapter
Courtesy of CHRYSLER GROUP, LLC

14. Install coolant adapter (3) with new seals. Tighten bolts to 18.1 N.m (159 in. lbs.).

 © 2011 Mitchell Repair Information Company, LLC.

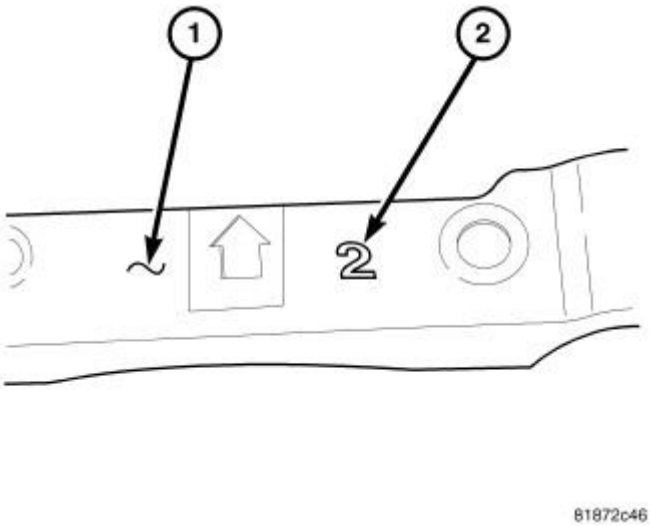

Fig. 109: Cam Cap Bearing Identification
Courtesy of CHRYSLER GROUP, LLC

15. The front camshaft bearing cap (1) is numbered (2) either one, two, or three, this corresponds to the select fit front exhaust camshaft bearing to use.

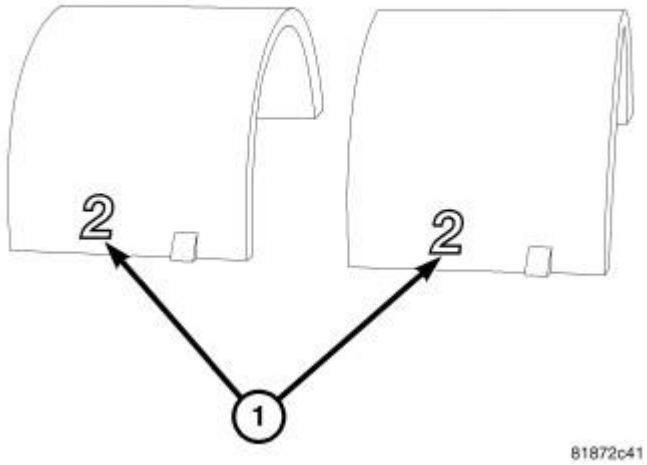

Fig. 110: Cam Bearing Identification
Courtesy of CHRYSLER GROUP, LLC

16. Install the corresponding select fit front exhaust camshaft bearing (1).
17. Oil all of the camshaft journals with clean engine oil.

 © 2011 Mitchell Repair Information Company, LLC.

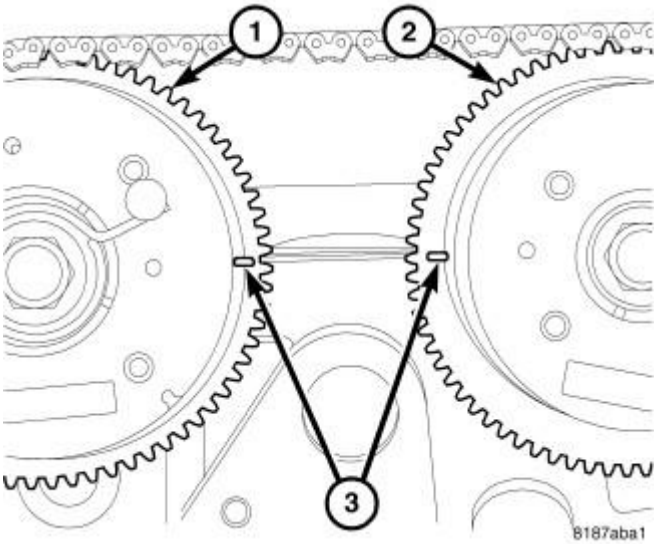

Fig. 111: Camshaft Timing
Courtesy of CHRYSLER GROUP, LLC

18. Position exhaust camshaft (1) and intake camshaft (2) on bearing journals in the cylinder head.
19. Align camshaft timing marks (3) so that they are facing each other and are in line with the cylinder head cover sealing surface.

CAUTION: Install the front intake and exhaust camshaft bearing cap last. Ensure that the dowels are seated and follow torque sequence or damage to engine could result.

NOTE: If the front camshaft bearing cap is broken, the cylinder head MUST be replaced.

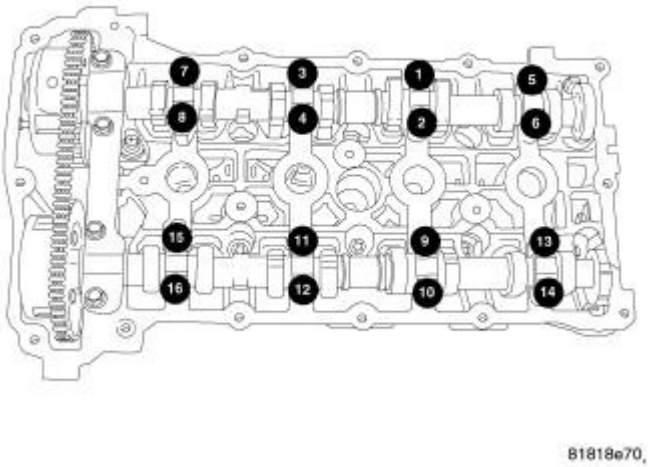

Fig. 112: Cam Cap Torque Sequence

 © 2011 Mitchell Repair Information Company, LLC.

Courtesy of CHRYSLER GROUP, LLC

20. Install intake and exhaust camshaft bearing caps and slowly tighten bolts to 9.5 N.m (85 in. lbs.) in the sequence shown in illustration.

NOTE: Verify that the exhaust bearing shells are correctly installed, and the dowels are seated in the head, prior to torquing bolts.

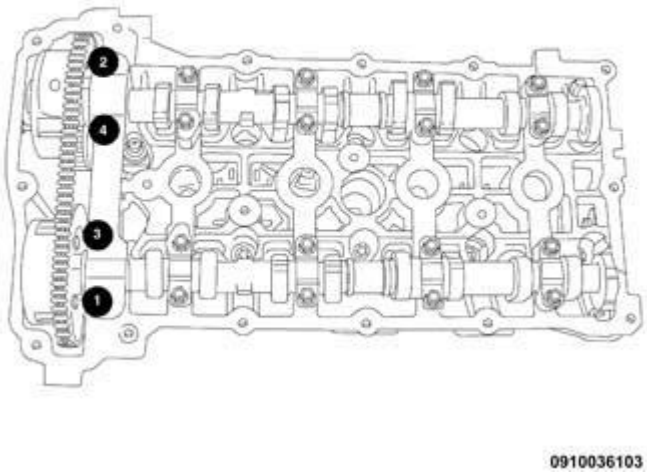

Fig. 113: Front Cam Cap Removal/Tightening Sequence
Courtesy of CHRYSLER GROUP, LLC

NOTE: This torque sequence is for vehicles with the round hole for the Front Cam Cap Dowel located on the intake side of the cylinder head.

21. Install the front intake and exhaust bearing cap and tighten bolts to 25 N•m (18 ft. lbs.) in the sequence shown in illustration.

 © 2011 Mitchell Repair Information Company, LLC.

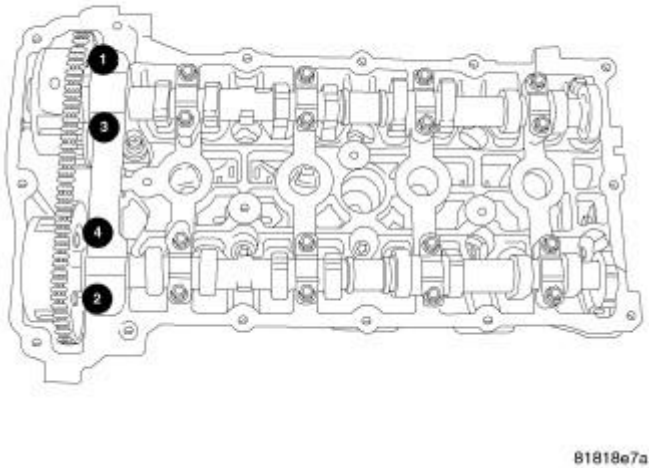

Fig. 114: Front Cam Cap Removal Sequence
Courtesy of CHRYSLER GROUP, LLC

NOTE: This torque sequence is for vehicles with the round hole for the Front Cam Cap Dowel located on the exhaust side of the cylinder head.

22. Install the front intake and exhaust bearing cap and tighten bolts to 25 N.m (18 ft. lbs.) in the sequence shown in illustration.

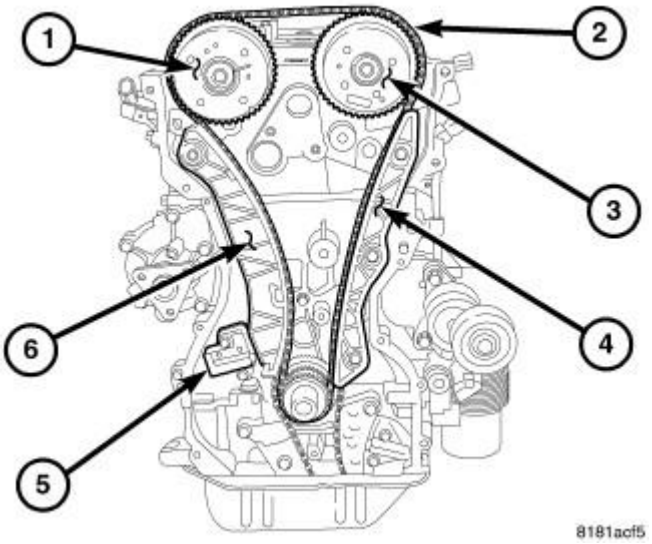

Fig. 115: Timing Drive
Courtesy of CHRYSLER GROUP, LLC

23. Install timing chain guide (4) and tighten bolts to 12 N.m (105 in. lbs.).
24. Install the moveable timing chain pivot guide (6) and tighten bolt to 12 N.m (105 in. lbs.).
25. Install timing chain (2) and tensioner (5). Refer to **CHAIN AND SPROCKETS, TIMING, INSTALLATION**.

 © 2011 Mitchell Repair Information Company, LLC.

26. Install timing chain cover, engine mount, pulleys and accessory drive belt. Refer to **COVER(S), ENGINE TIMING, INSTALLATION**.

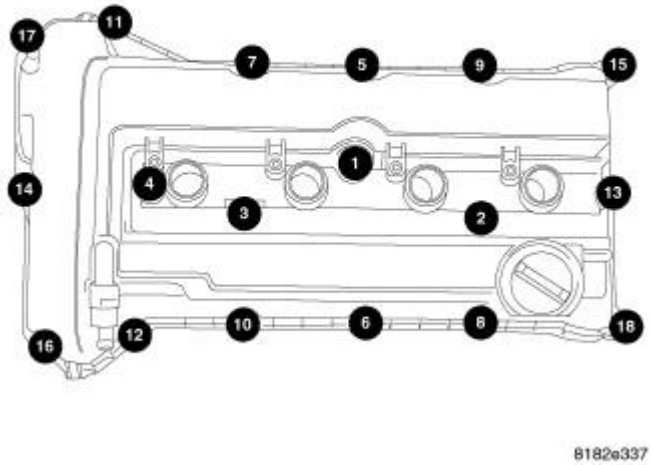

Fig. 116: Removing/Installing Cylinder Head Cover Bolts In Sequence
Courtesy of CHRYSLER GROUP, LLC

27. Install cylinder head cover and ignition coils. Refer to **COVER(S), CYLINDER HEAD, INSTALLATION**.

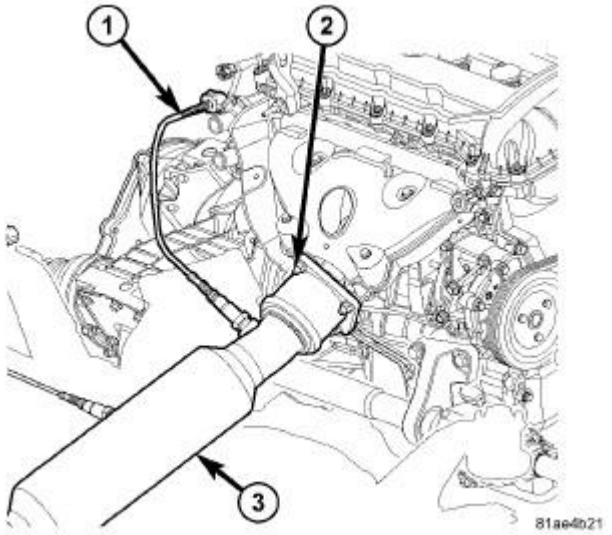

Fig. 117: Oxygen Sensor Connector, Catalytic Converter & Bolts
Courtesy of CHRYSLER GROUP, LLC

28. Install exhaust manifold. Refer to **MANIFOLD, EXHAUST, INSTALLATION**.

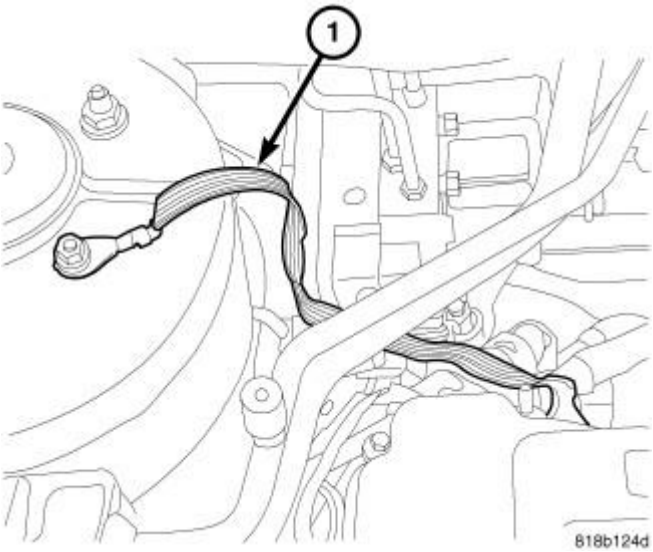

Fig. 118: Ground Strap
Courtesy of CHRYSLER GROUP, LLC

29. Install ground strap (1) at right rear of cylinder head if equipped.

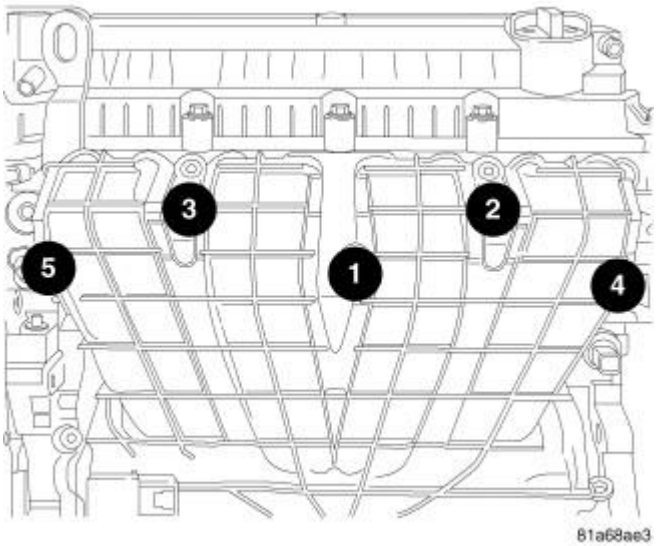

Fig. 119: Intake Bolt Removal/Tightening Sequence
Courtesy of CHRYSLER GROUP, LLC

30. Install intake manifold, vacuum lines and fuel rail. Refer to **MANIFOLD, INTAKE, INSTALLATION**.

 © 2011 Mitchell Repair Information Company, LLC.

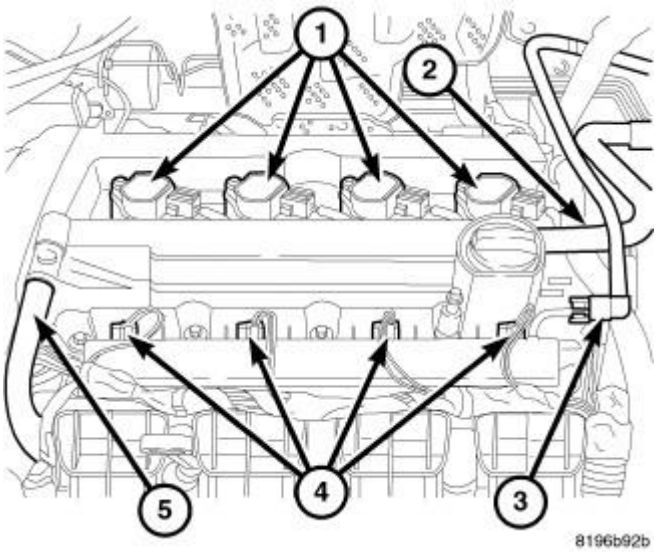

Fig. 120: Identifying Ignition Coil Electrical Connectors, Air Hose, PCV Hose, Fuel Line & Injectors
Courtesy of CHRYSLER GROUP, LLC

31. Connect coil (1) and injector (4) electrical connectors.

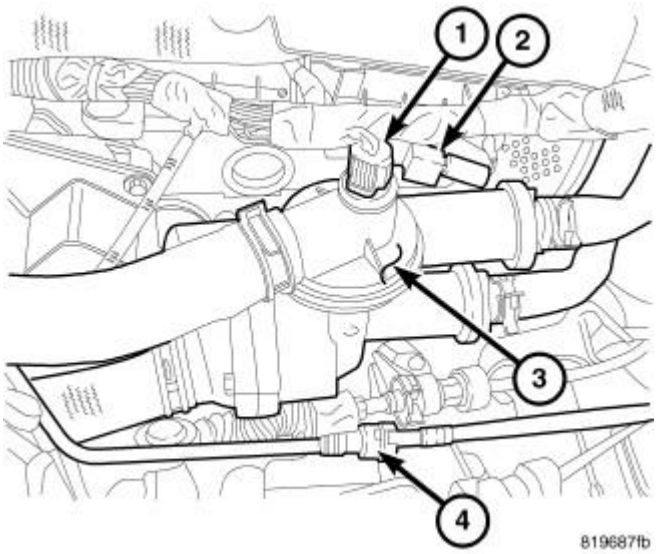

Fig. 121: Coolant Adapter
Courtesy of CHRYSLER GROUP, LLC

32. Connect electrical connectors to coolant temperature sensor (1), camshaft position sensors, oil temperature sensor, variable valve timing solenoids, MAP sensor, manifold tuning valve, ignition interference suppressor (2) and electronic throttle control.

 © 2011 Mitchell Repair Information Company, LLC.

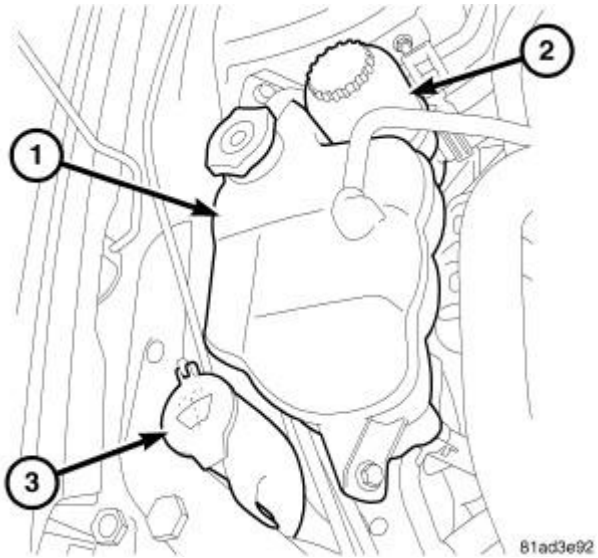

Fig. 122: Coolant Reservoir, Power Steering Reservoir & Windshield Washer Bottle
Courtesy of CHRYSLER GROUP, LLC

33. Install power steering pump reservoir (2). Tighten mounting screw to 12 N.m (106 in. lbs.).
34. Install coolant recovery reservoir (1). Tighten mounting bolts to 10 N.m (89 in. lbs.).

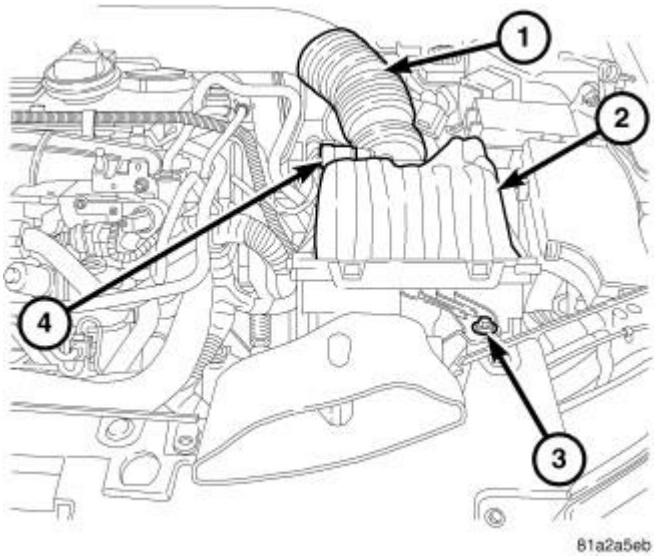

Fig. 123: Air Cleaner Housing & Retaining Bolt
Courtesy of CHRYSLER GROUP, LLC

35. Install clean air hose (1) and air cleaner housing (2). Refer to **BODY, AIR CLEANER, INSTALLATION**.
36. Fill cooling system. Refer to **STANDARD PROCEDURE** .
37. Install new oil filter and fill engine with oil.
38. Connect negative battery cable.

 © 2011 Mitchell Repair Information Company, LLC.

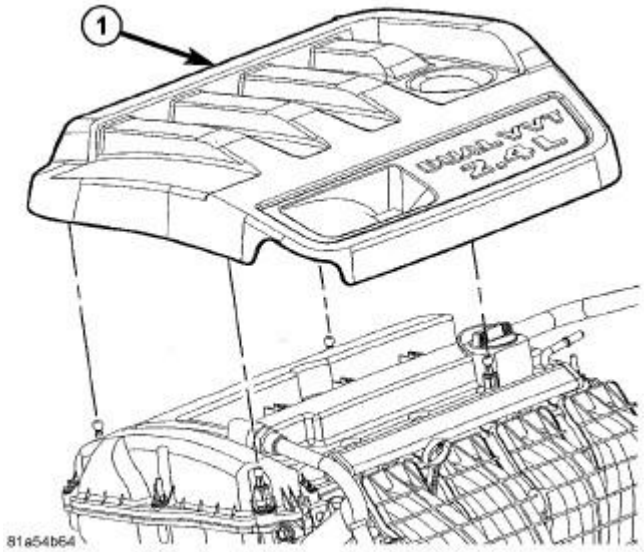

Fig. 124: Engine Cover
Courtesy of CHRYSLER GROUP, LLC

39. Operate engine until it reaches normal operating temperature. Check oil and cooling systems for leaks and correct fluid levels.
40. Install engine cover (1).

ASSEMBLY, VARIABLE VALVE TIMING

DESCRIPTION

DESCRIPTION

The world engine is equipped with Variable Valve Timing (VVT). This system advances and/or retards intake and/or exhaust camshaft timing to improve engine performance, mid-range torque, idle quality, fuel economy, and reduce emissions. The camshaft sprockets are integrated with the VVT assemblies and are serviced as an assembly. VVT assemblies are sometimes referred to as camshaft phasers.

OPERATION

OPERATION

The Variable Valve Timing (VVT) assemblies are actuated with engine oil pressure. The oil flow to the VVT assemblies are controlled by two Oil Control Valves (OCV). There is an OCV and Camshaft Position Sensor (CMP) for each camshaft. The OCV's consist of a Pulse Width Modulated (PWM) solenoid and a spool valve. The PCM actuates the OCV to control oil flow through the spool valve into the VVT assemblies. The VVT assembly consists of a rotor, stator, and sprocket. The stator is connected to the timing chain through the sprocket. The rotor is connected to the camshaft. Oil flow in to the VVT assembly rotates the rotor with respect to the stator, thus rotating the camshaft with respect to the timing chain. Thus, the VVT assemblies change valve timing by changing the relationship between the camshaft and the timing chain. An integral oil pressure activated pin is used to lock base camshaft timing for engine start up. Oil pressure releases the pin and allows

 © 2011 Mitchell Repair Information Company, LLC.

the PCM to control cam timing once the engine is running. An infinitely variable valve timing position can be achieved within the limits of the hardware. The CMP monitors the position of the camshaft with respect to the crankshaft and provides feedback to the PCM.

REMOVAL

REMOVAL

NOTE: Camshaft phaser and camshaft sprocket are supplied as an assembly, do not attempt to disassemble.

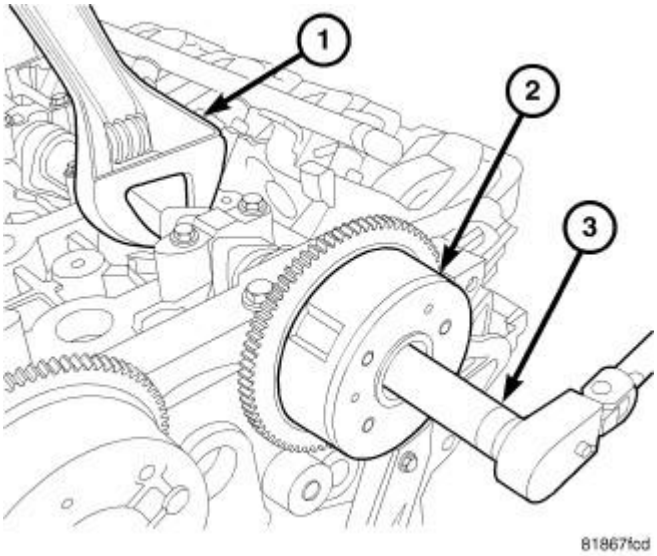

Fig. 125: Removing & Installing Cam Phaser
Courtesy of CHRYSLER GROUP, LLC

1. Remove camshafts . Refer to **CAMSHAFT, ENGINE, REMOVAL**.
2. Remove camshaft phaser (2) retaining bolt while holding the camshaft in place with a wrench (1) on the camshaft flats.
3. Remove phaser (2) assembly from camshaft.

INSTALLATION

INSTALLATION

 © 2011 Mitchell Repair Information Company, LLC.

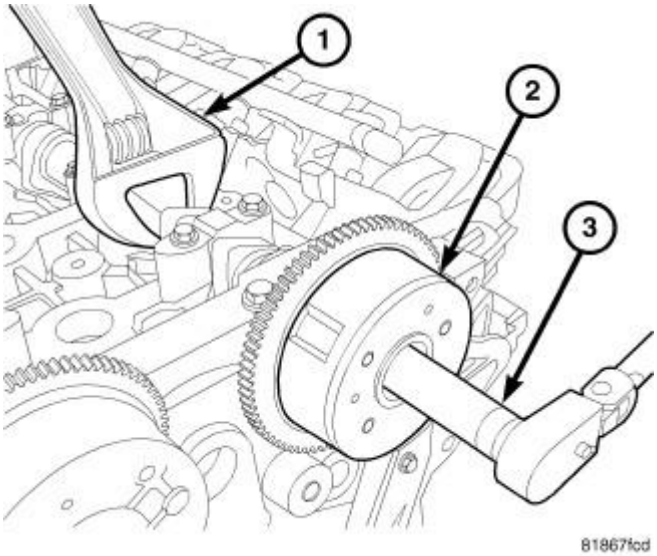

Fig. 126: Removing & Installing Cam Phaser
Courtesy of CHRYSLER GROUP, LLC

CAUTION: Do not use an impact wrench to tighten camshaft sprocket bolts. Damage to the camshaft-to-sprocket locating dowel pin and camshaft phaser may occur.

1. Install phaser (2) assembly on camshaft.

NOTE: Make sure the dowel is seated in the dowel hole and not in an oil feed hole. The dowel hole is larger than the 4 oil feed holes.

2. Install phaser retaining bolt. Hold camshaft in place with a wrench (1) and tighten bolt to 59 N.m (44 ft. lbs.).
3. Install camshafts . Refer to **CAMSHAFT, ENGINE, INSTALLATION**.

BUCKET, TAPPET

DIAGNOSIS AND TESTING

DIAGNOSIS AND TESTING - MECHANICAL VALVE TAPPET NOISE DIAGNOSIS

A tappet-like noise may be produced from incorrect valve lash. Refer to **STANDARD PROCEDURE - MEASURING VALVE LASH** .

STANDARD PROCEDURE

STANDARD PROCEDURE - MEASURING VALVE LASH

 © 2011 Mitchell Repair Information Company, LLC.

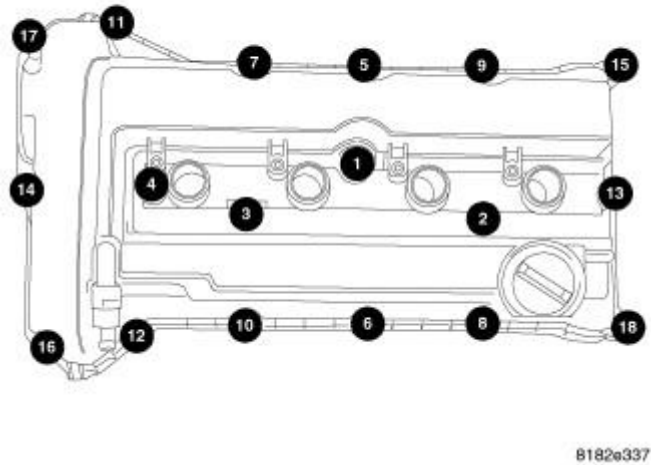

Fig. 127: Cylinder Head Cover Bolt Torque Sequence
Courtesy of CHRYSLER GROUP, LLC

NOTE: The engine must be cold to measure valve lash.

1. Remove engine cover.
2. Remove cylinder head cover. Refer to **COVER(S), CYLINDER HEAD, REMOVAL**.

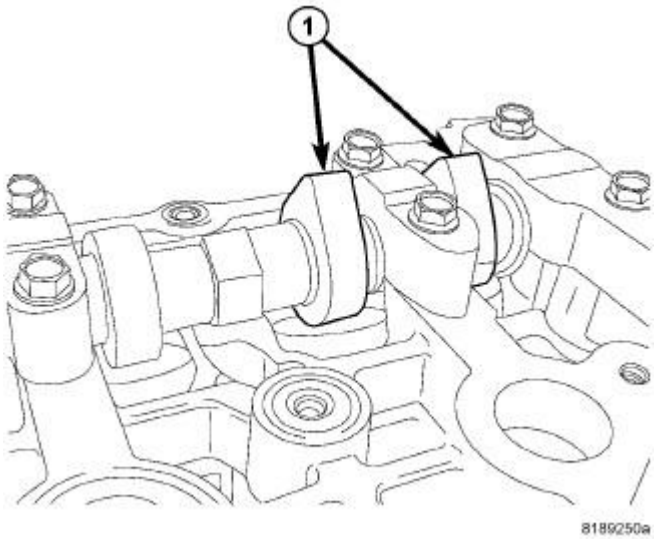

Fig. 128: Identifying Camshaft So Lobes Are Vertical
Courtesy of CHRYSLER GROUP, LLC

3. Rotate camshaft so lobes are vertical (1).
4. Check clearance using feeler gauges.
5. Repeat for all tappets and record readings.

 © 2011 Mitchell Repair Information Company, LLC.

6. If clearance was too small, refer to the **CLEARANCE TOO SMALL** procedure.
7. If clearance was too large, refer to the **CLEARANCE TOO LARGE** procedure.

CLEARANCE TOO SMALL

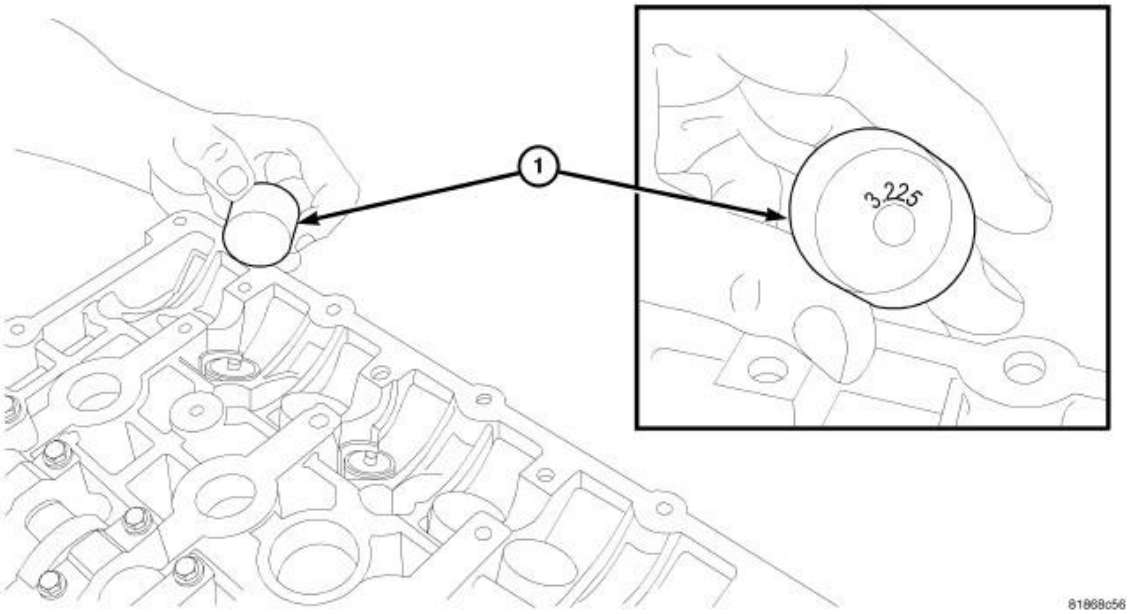

Fig. 129: Tappet Identification
Courtesy of CHRYSLER GROUP, LLC

1. Remove camshafts . Refer to **CAMSHAFT, ENGINE, REMOVAL**.
2. Specification - clearance = change.
3. Decrease tappet thickness by change figure.
4. Install camshafts . Refer to **CAMSHAFT, ENGINE, INSTALLATION**.
5. Verify that valve lash is correct.

CLEARANCE TOO LARGE

 © 2011 Mitchell Repair Information Company, LLC.

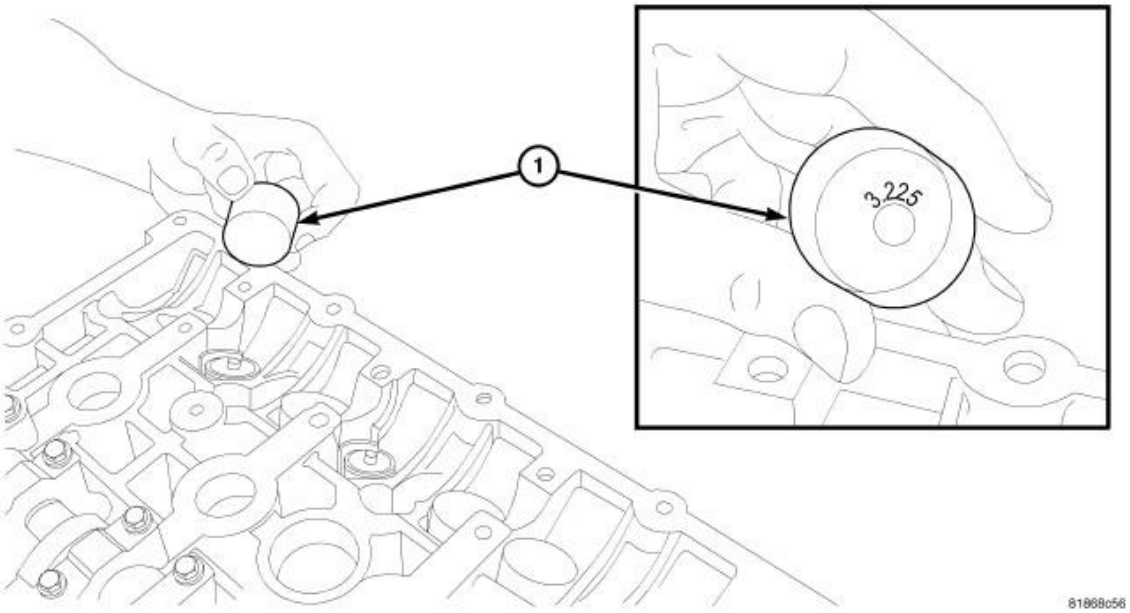

Fig. 130: Tappet Identification
Courtesy of CHRYSLER GROUP, LLC

1. Remove camshafts . Refer to **CAMSHAFT, ENGINE, REMOVAL**.
2. Clearance - specification = change.
3. Increase tappet thickness by change figure.
4. Install camshafts . Refer to **CAMSHAFT, ENGINE, INSTALLATION**.
5. Verify that valve lash is correct.

REMOVAL

REMOVAL

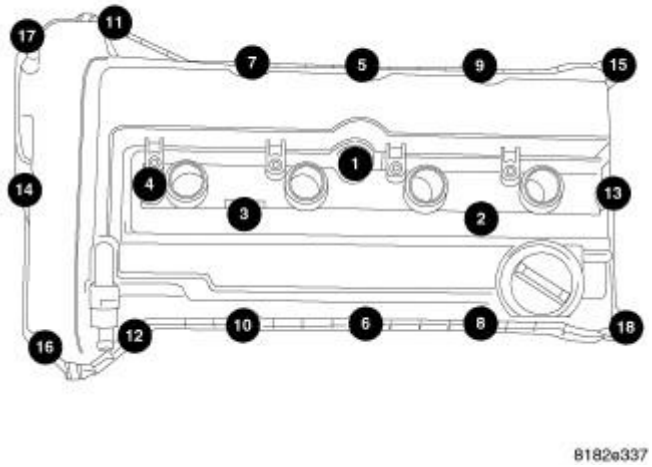

Fig. 131: Removing/Installing Cylinder Head Cover Bolts In Sequence

Courtesy of CHRYSLER GROUP, LLC

NOTE: This procedure is for in-vehicle service with camshafts installed.

NOTE: Camshaft tappets must be replaced if cylinder head or camshafts are replaced.

1. Remove cylinder head cover . Refer to **COVER(S), CYLINDER HEAD, REMOVAL**.
2. Remove camshafts . Refer to **CAMSHAFT, ENGINE, REMOVAL**.

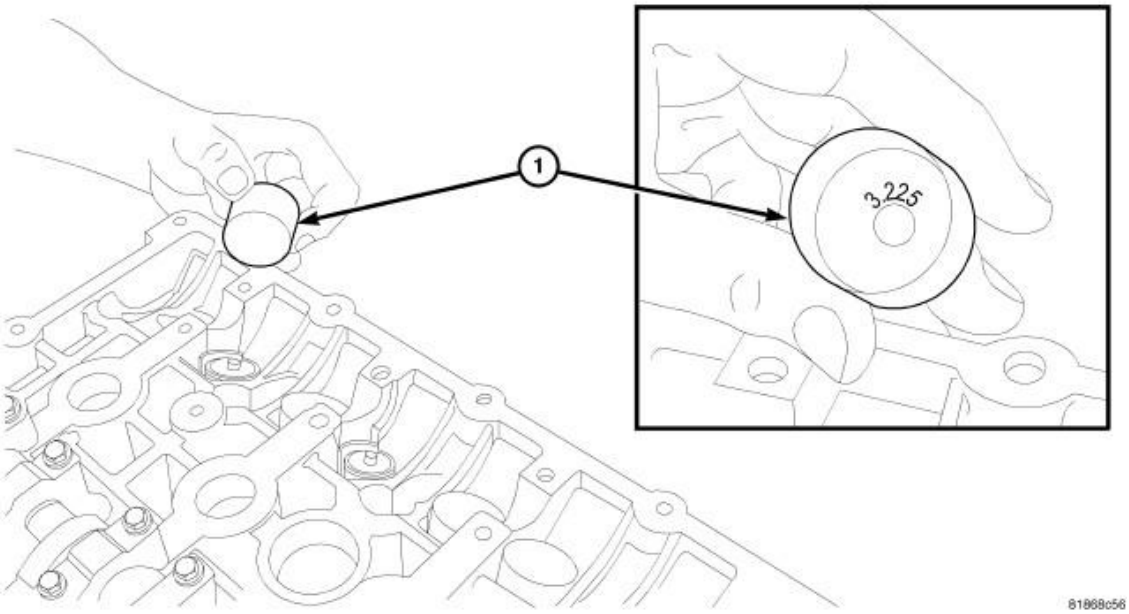

Fig. 132: Tappet Identification
Courtesy of CHRYSLER GROUP, LLC

3. Remove camshaft tappets (1).
4. Repeat removal procedure for each camshaft tappet (1).
5. If reusing, mark each camshaft tappet for reassembly in it's original position.

INSTALLATION

INSTALLATION

 © 2011 Mitchell Repair Information Company, LLC.

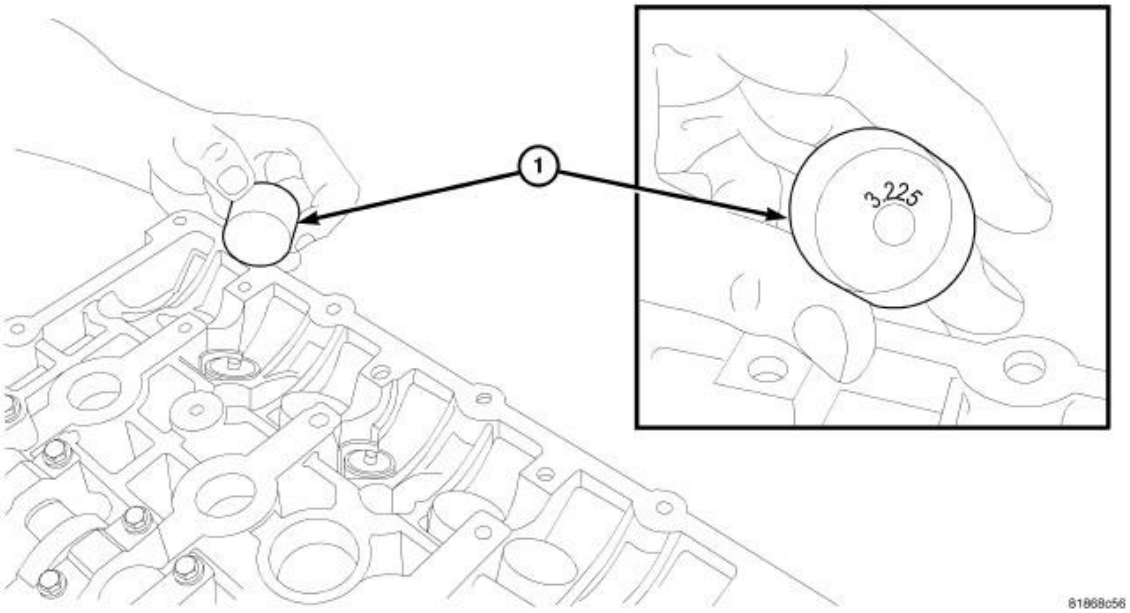

Fig. 133: Tappet Identification
Courtesy of CHRYSLER GROUP, LLC

NOTE: If reinstalling original tappets they must go back in their original location or engine damage could result.

1. Apply a light coat of clean engine oil to camshaft tappets (1) prior to assembly.
2. Install camshaft tappets (1) into cylinder head.
3. Repeat installation procedure for each camshaft tappet.
4. Install camshafts . Refer to **CAMSHAFT, ENGINE, INSTALLATION**.

NOTE: If installing new tappets, the valve lash procedure must be performed.

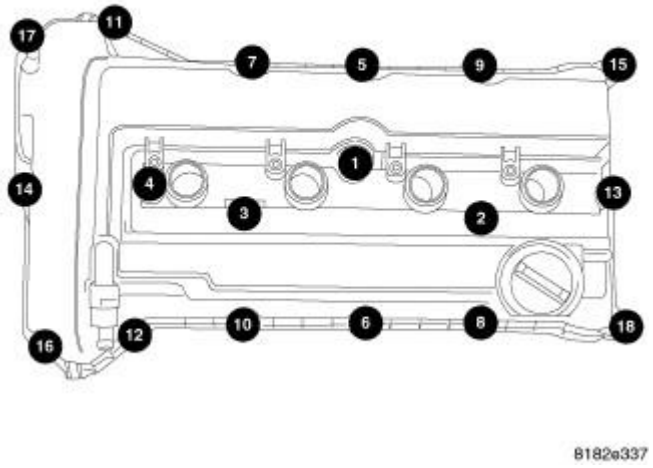

Fig. 134: Removing/Installing Cylinder Head Cover Bolts In Sequence
Courtesy of CHRYSLER GROUP, LLC

5. Install cylinder head cover . Refer to **COVER(S), CYLINDER HEAD, INSTALLATION**.

CAMSHAFT, ENGINE

DESCRIPTION

DESCRIPTION

Both camshafts have five bearing journal surfaces and two cam lobes per cylinder. The two front journals are larger to allow for feeding oil to the variable valve timing (VVT) camshaft phasers. Flanges on the third smaller journal control camshaft end play. At the rear of each camshaft is an integral cam sensor target.

CAMSHAFT BEARING CAPS

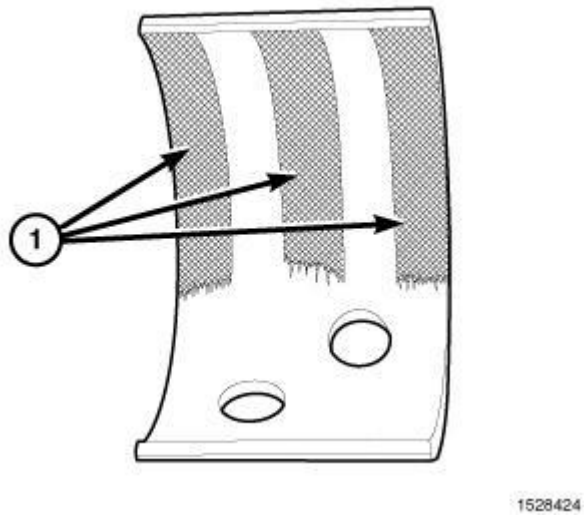

Fig. 135: Uneven Wear Patterns On Cam Bearing
Courtesy of CHRYSLER GROUP, LLC

The front cam bearing cap spans both camshafts, and includes dowels for precise alignment. The front exhaust camshaft journal has a select fit bearing insert. This bearing is required to seal the oil passage to the camshaft phaser, because a portion of the lower bearing saddle is machined away for head bolt access. The select fit is required to minimize bearing clearance and oil leakage. An exhaust bearing grade (1, 2, or 3) is stamped into the front bearing cap adjacent to the exhaust cam journal. The bearings are also marked with the corresponding grade markings. If the bearing is replaced, the same grade must be used. Due to the unique purpose of this bearing, it may appear to have uneven wear patterns (1). Maximum wear of 0.05 mm (.002 in.) is acceptable. Unless the wear is excessive it is no cause for concern and the bearing should not be replaced. Cam bearing inspection should not be the sole reason for removal of the exhaust camshaft. The upper cam bearing may be replaced if the front bearing cap is removed. The lower cam bearing should be replaced if the camshaft is removed due to a failure of a component within the cylinder head.

 © 2011 Mitchell Repair Information Company, LLC.

The front intake cam journal has a full lower bearing saddle, and therefore, no bearing insert is required.

All small bearing caps have a formed-in arrow to assist in assembly. All small bearing cap arrows must point towards the center of the cylinder head. The small bearing caps are marked for position during the manufacturing process, and must be reinstalled in their original position.

The #1 small cap includes a passage to direct oil from the cylinder head oil gallery to the #1 small bearing journal, and into the camshaft as well. The hollow camshaft then distributes oil to the remainder of the small journals. Oil flowing out of each cam journal lubricates the valve tappets.

The #3 small cap is machined at the front and rear face to control camshaft end-play. This cap has dowels for precise alignment.

OPERATION

OPERATION

The camshaft is driven by the crankshaft via drive sprockets and a chain. The camshaft has precisely machined lobes to provide accurate valve timing and duration.

STANDARD PROCEDURE

STANDARD PROCEDURE - MEASURING CAMSHAFT END PLAY

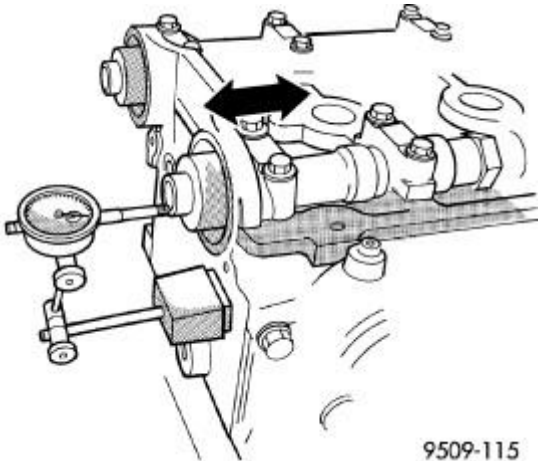

Fig. 136: Camshaft End Play
Courtesy of CHRYSLER GROUP, LLC

1. Using a suitable tool, move camshaft as far rearward as it will go.
2. Zero dial indicator.
3. Move camshaft as far forward as it will go.
4. Record reading on dial indicator. For end play specification, refer to **SPECIFICATIONS** .
5. If end play is excessive, check cylinder head and camshaft for wear; replace as necessary.

REMOVAL

 © 2011 Mitchell Repair Information Company, LLC.

REMOVAL

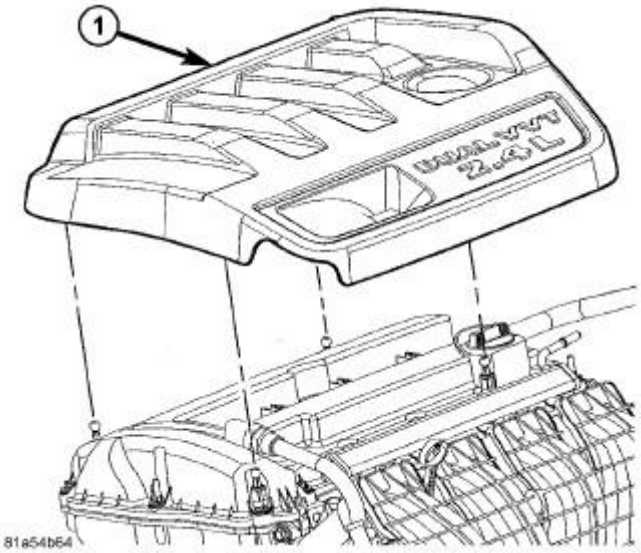

Fig. 137: Engine Cover
Courtesy of CHRYSLER GROUP, LLC

1. Remove engine cover (1) by pulling upward.
2. Disconnect and isolate the negative battery cable.
3. Remove cylinder head cover . Refer to **COVER(S), CYLINDER HEAD, REMOVAL**.

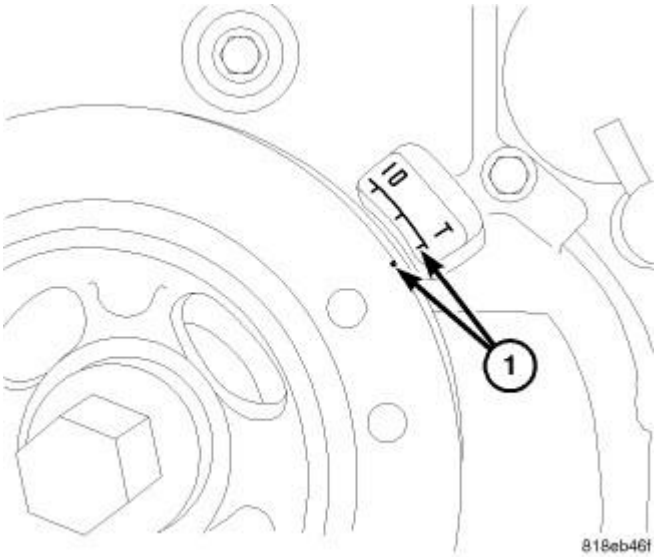

Fig. 138: Setting Engine To Top Dead Center
Courtesy of CHRYSLER GROUP, LLC

4. Raise and support the vehicle. Refer to **HOISTING, STANDARD PROCEDURE** .
5. Remove the frame cover portion of the right splash shield. Refer to **SHIELD, SPLASH, FRONT**

WHEELHOUSE, REMOVAL .

6. Rotate engine to TDC (1).

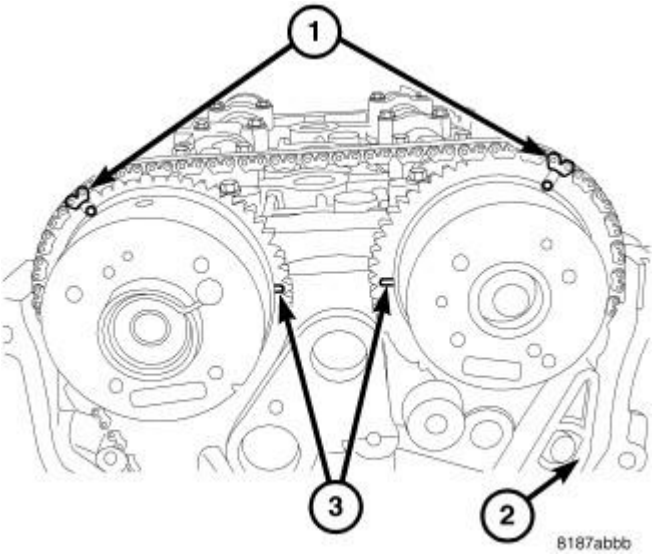

Fig. 139: Timing Chain Timing Marks
Courtesy of CHRYSLER GROUP, LLC

7. Make sure camshaft timing marks (3) are in line with the cylinder head cover sealing surface.
8. Mark the chain link corresponding to timing marks (1) with a paint marker.

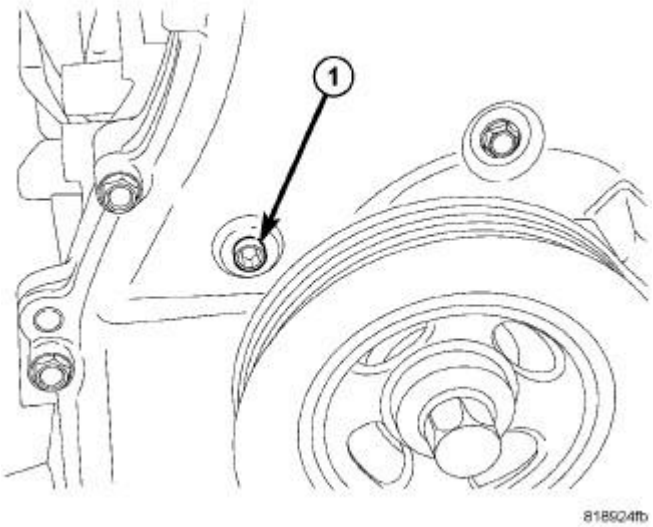

Fig. 140: Tensioner Access Plug
Courtesy of CHRYSLER GROUP, LLC

9. Remove timing tensioner plug (1) from front cover.

 © 2011 Mitchell Repair Information Company, LLC.

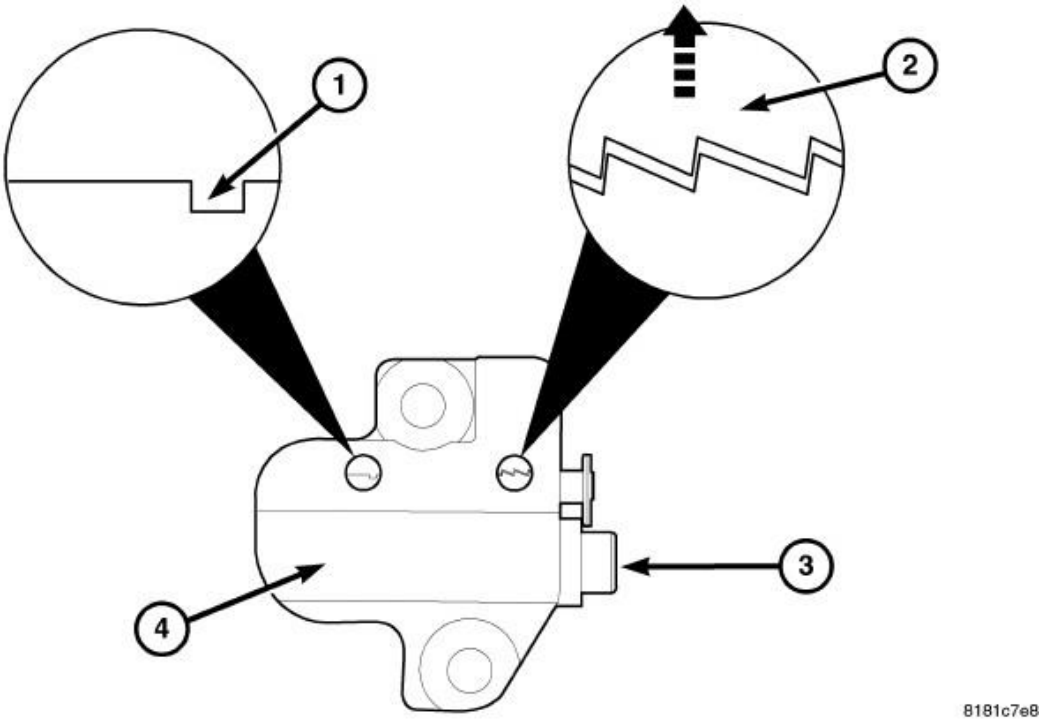

Fig. 141: Tensioner Reset
Courtesy of CHRYSLER GROUP, LLC

10. Insert small Allen wrench through timing tensioner plug hole and lift ratchet (2) upward to release the tensioner and push Allen wrench inward. Leave the Allen wrench installed during the remainder of this procedure.

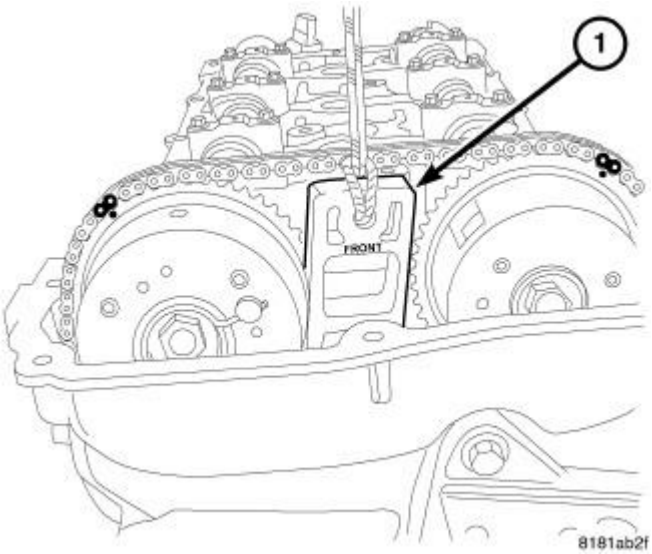

Fig. 142: Inserting Wedge 9701 Between Camshaft Phasers
Courtesy of CHRYSLER GROUP, LLC

11. Insert Locking Wedge (special tool #9701, Wedge, Locking) (1) between camshaft phasers.

 © 2011 Mitchell Repair Information Company, LLC.

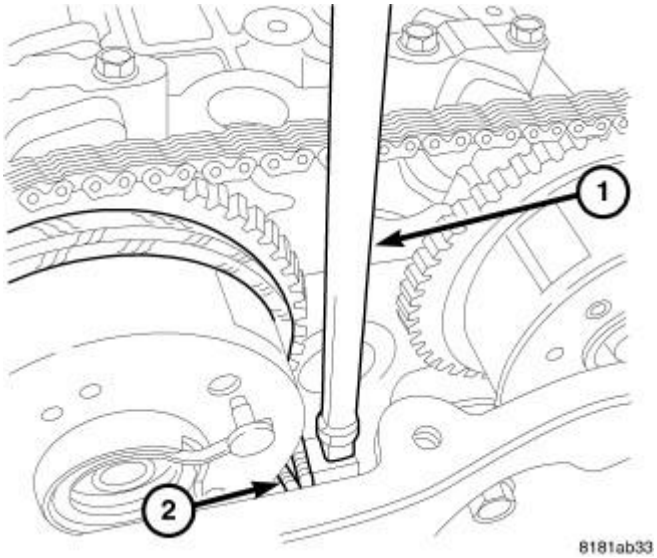

Fig. 143: Seating Wedge Tool 9701
Courtesy of CHRYSLER GROUP, LLC

12. Lightly tap Locking Wedge (special tool #9701, Wedge, Locking) (2) into place until it will no longer sink down.

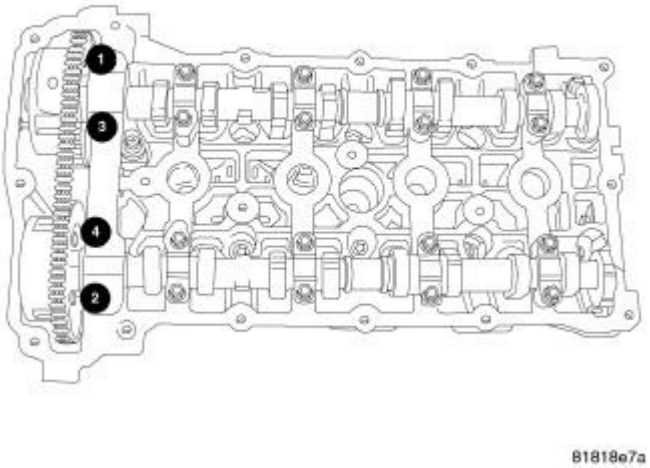

Fig. 144: Front Cam Cap Removal Sequence
Courtesy of CHRYSLER GROUP, LLC

NOTE: Camshaft bearing caps should have been marked during engine manufacturing. For example, number one exhaust camshaft bearing is marked "E1>".

CAUTION: DO NOT use a number stamp or a punch to mark camshaft bearing caps. Damage to bearing caps could occur.

 © 2011 Mitchell Repair Information Company, LLC.

13. Using a permanent ink or paint marker, identify location and position on each camshaft bearing cap.
14. Remove the front camshaft bearing cap.
15. Slowly remove the remaining intake and exhaust camshaft bearing cap bolts one turn at a time.

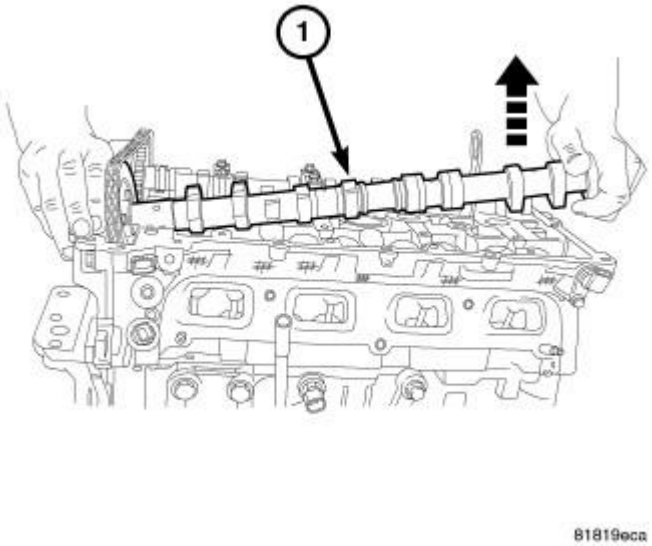

Fig. 145: Raise Intake Cam
Courtesy of CHRYSLER GROUP, LLC

16. Remove intake camshaft (1) by lifting the rear of the camshaft upward.

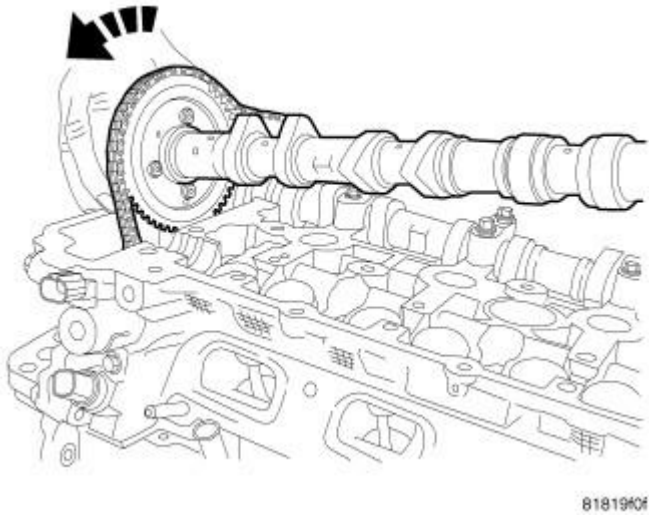

Fig. 146: Roll Camshaft
Courtesy of CHRYSLER GROUP, LLC

17. Rotate the camshaft while lifting out of the front bearing cradle.

 © 2011 Mitchell Repair Information Company, LLC.

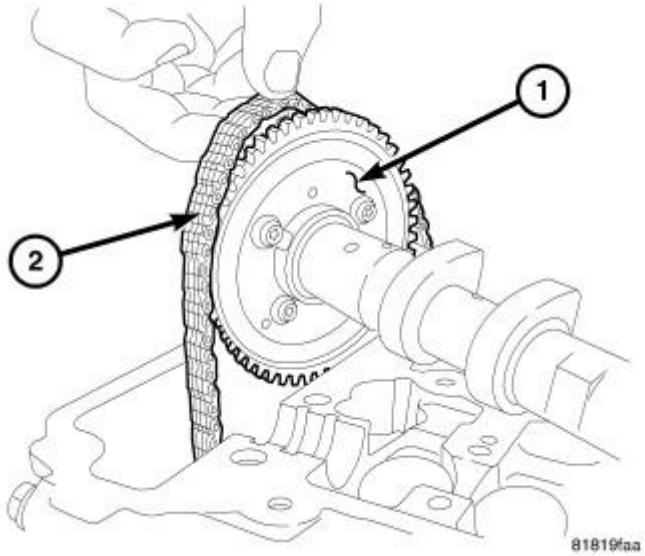

Fig. 147: Chain Removal
Courtesy of CHRYSLER GROUP, LLC

18. Lift the timing chain (2) off the sprocket (1).
19. Remove exhaust camshaft.
20. Secure timing chain with wire so that it does fall into the timing chain cover.

INSPECTION

INSPECTION

1. Inspect camshaft bearing journals for damage. If journals are damaged, check the cylinder head for damage. Also check cylinder head oil holes for clogging.
2. Check the cam lobe and bearing surfaces for abnormal wear and damage. Replace camshaft if defective.

NOTE: If camshaft is replaced due to lobe wear or damage, always replace the lash buckets.

INSTALLATION

INSTALLATION

 © 2011 Mitchell Repair Information Company, LLC.

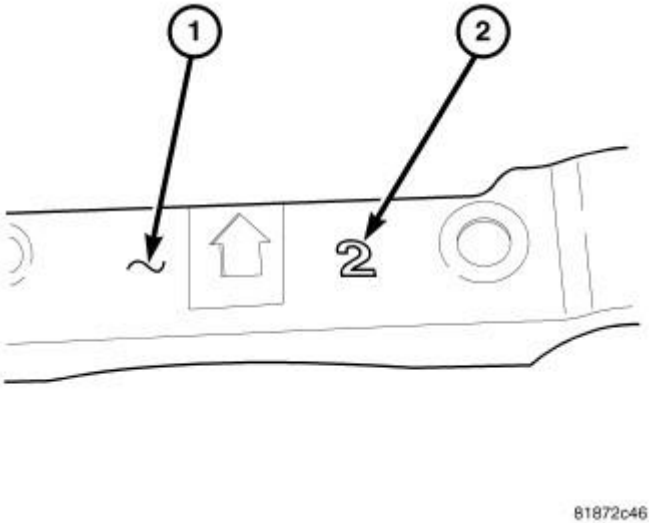

Fig. 148: Cam Cap Bearing Identification
Courtesy of CHRYSLER GROUP, LLC

1. The front camshaft bearing cap (1) is numbered (2) either one, two, or three, this corresponds to the select fit front exhaust camshaft bearing to use.

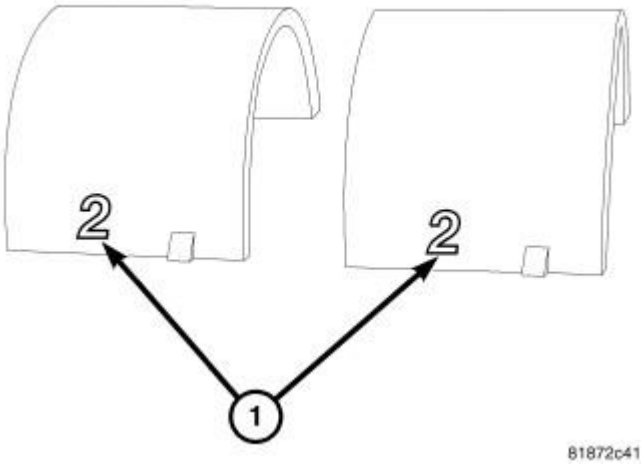

Fig. 149: Cam Bearing Identification
Courtesy of CHRYSLER GROUP, LLC

2. Install the corresponding select fit front exhaust camshaft bearing (1).
3. Oil all of the camshaft journals with clean engine oil.
4. Install camshaft phasers on camshafts if removed. Refer to **ASSEMBLY, VARIABLE VALVE TIMING, INSTALLATION**.

 © 2011 Mitchell Repair Information Company, LLC.

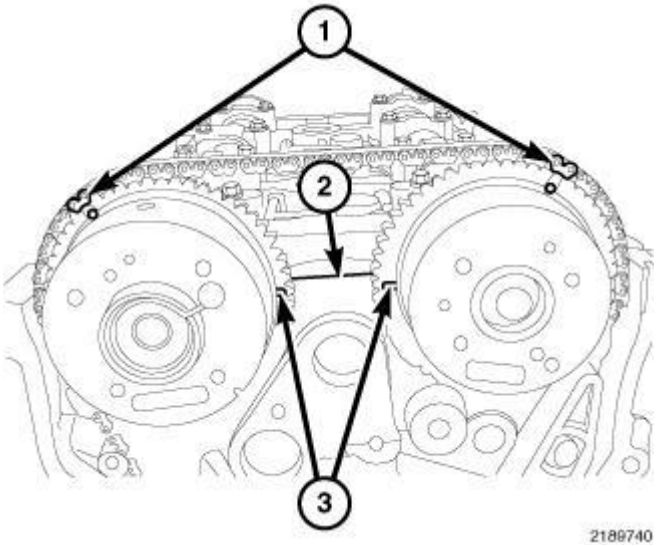

Fig. 150: Timing Chain Timing Marks
Courtesy of CHRYSLER GROUP, LLC

5. Install timing chain onto exhaust cam sprocket making sure that the timing marks (1) on the sprocket and the painted chain link are aligned.
6. Position exhaust camshaft and on bearing journals in the cylinder head.
7. Align exhaust cam timing mark (3) so it is in line with the cylinder head cover sealing surface (2).

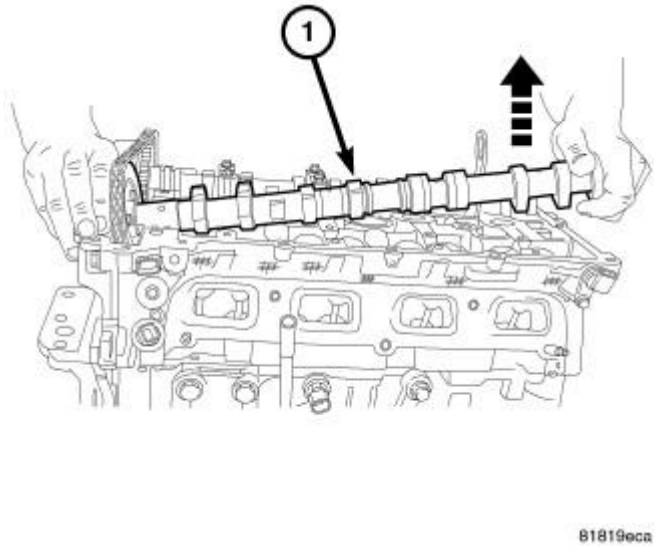

Fig. 151: Removing/Installing Intake Camshaft
Courtesy of CHRYSLER GROUP, LLC

8. Install intake camshaft by raising the rear of the camshaft upward and roll the sprocket into the chain.

 © 2011 Mitchell Repair Information Company, LLC.

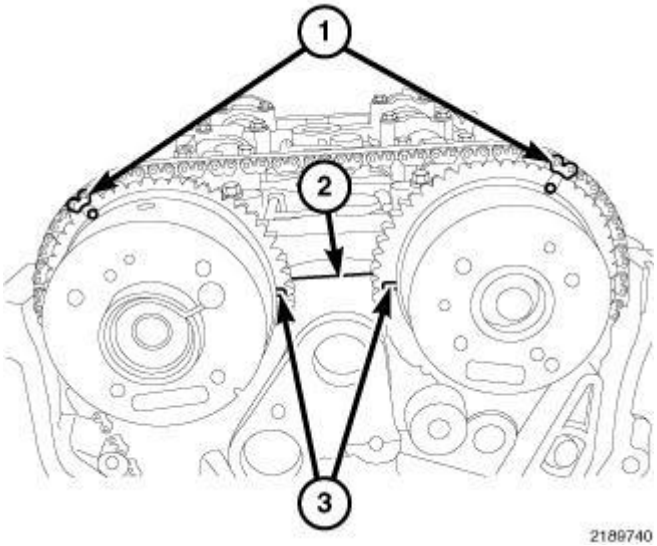

Fig. 152: Timing Chain Timing Marks
Courtesy of CHRYSLER GROUP, LLC

9. Align the timing marks (1) on the intake cam sprocket with the painted chain link.
10. Position the intake camshaft into the bearing journals in the cylinder head.
11. Verify that the timing marks (1) are aligned on both camshafts and that the timing marks (3) are facing each other and are in line with the cylinder head cover sealing surface (2).

CAUTION: Install the front intake and exhaust camshaft bearing cap last. Ensure that the dowels are seated and follow torque sequence or damage to engine could result.

NOTE: If the front camshaft bearing cap is broken, the cylinder head MUST be replaced.

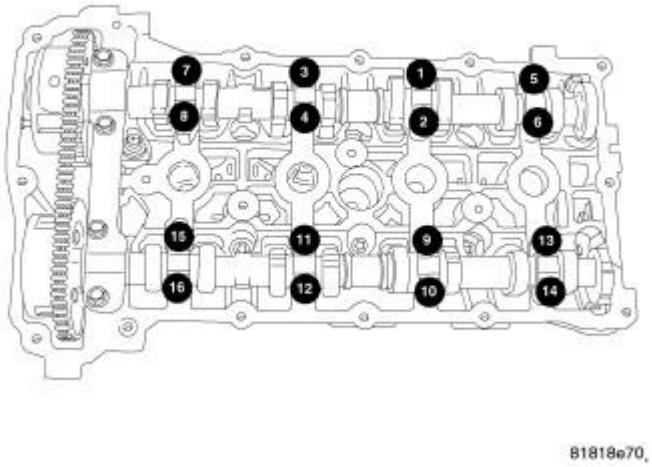

Fig. 153: Cam Cap Torque Sequence
Courtesy of CHRYSLER GROUP, LLC

12. Install intake and exhaust camshaft bearing caps and slowly tighten bolts to 9.5 N.m (85 in. lbs.) in the sequence shown in illustration.

NOTE: Verify that the exhaust bearing shells are correctly installed, and the dowels are seated in the head, prior to torquing bolts.

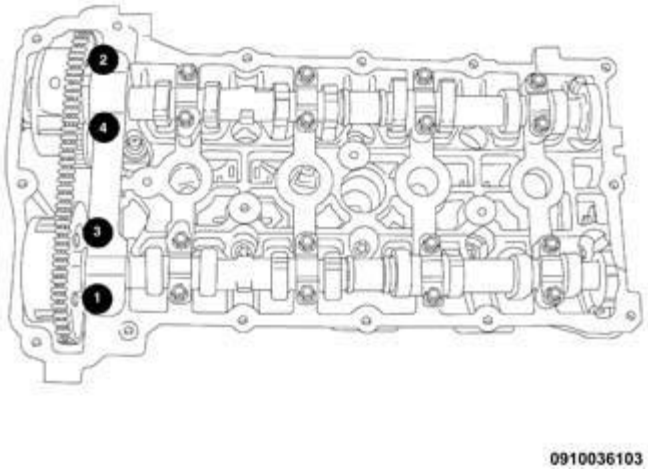

Fig. 154: Front Cam Cap Removal/Tightening Sequence
Courtesy of CHRYSLER GROUP, LLC

NOTE: This torque sequence is for vehicles with the round hole for the Front Cam Cap Dowel located on the intake side of the cylinder head.

13. Install the front intake and exhaust bearing cap and tighten bolts to 25 N.m (18 ft. lbs.) in the sequence shown in illustration.

 © 2011 Mitchell Repair Information Company, LLC.

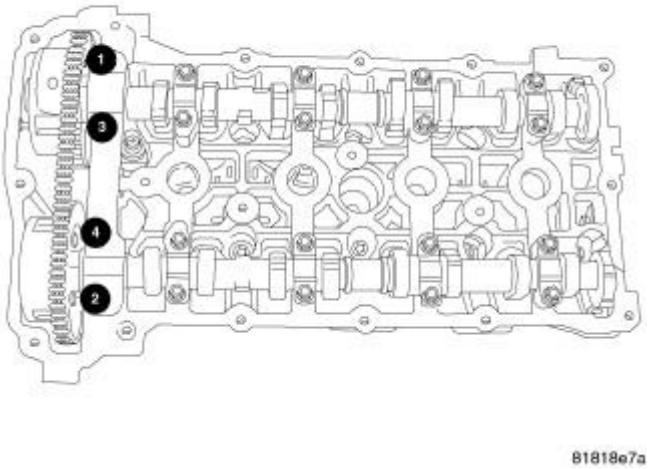

Fig. 155: Front Cam Cap Removal Sequence
Courtesy of CHRYSLER GROUP, LLC

NOTE: This torque sequence is for vehicles with the round hole for the Front Cam Cap Dowel located on the exhaust side of the cylinder head.

14. Install the front intake and exhaust bearing cap and tighten bolts to 25 N.m (18 ft. lbs.) in the sequence shown in illustration.

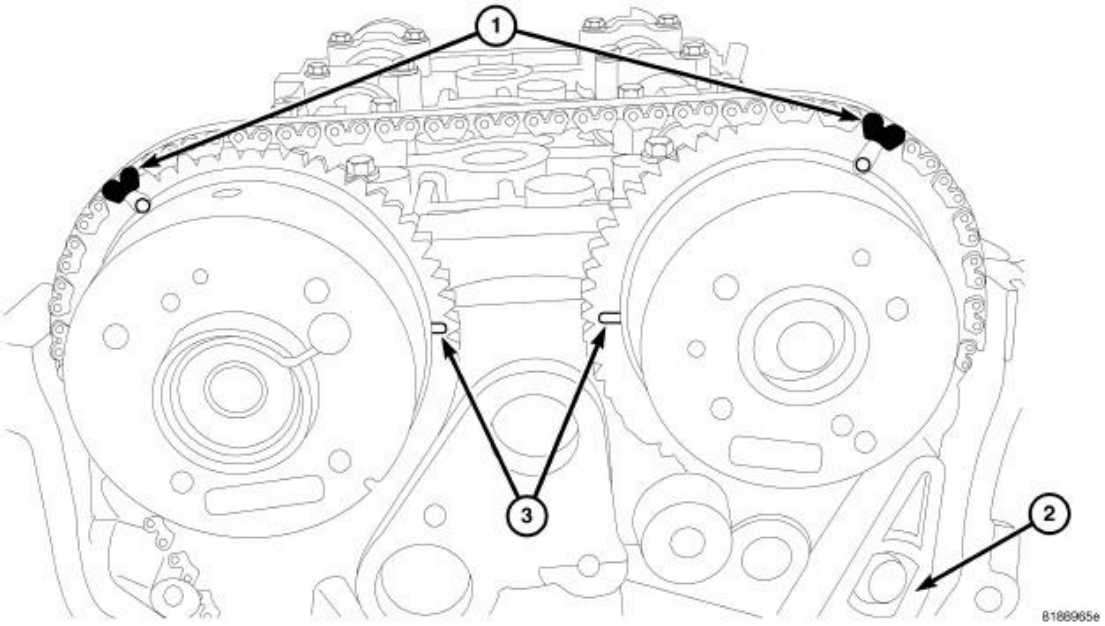

Fig. 156: Timing Chain Timing Marks
Courtesy of CHRYSLER GROUP, LLC

15. Verify that all timing marks (1, 3) are aligned.
16. Remove Allen wrench from timing chain tensioner.

 © 2011 Mitchell Repair Information Company, LLC.

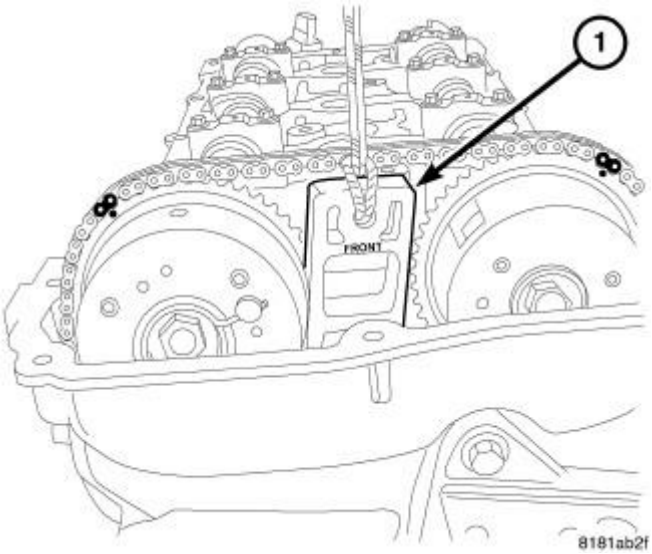

Fig. 157: Inserting Wedge 9701 Between Camshaft Phasers
Courtesy of CHRYSLER GROUP, LLC

17. Remove Locking Wedge (special tool #9701, Wedge, Locking) (1) by pulling straight upward on pull rope.

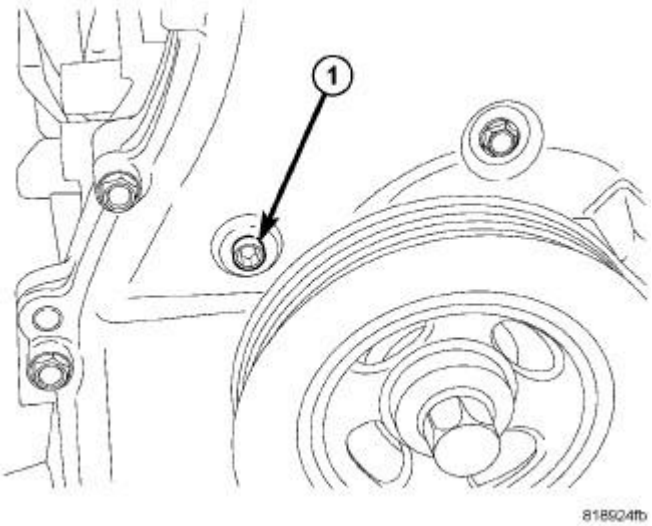

Fig. 158: Tensioner Access Plug
Courtesy of CHRYSLER GROUP, LLC

18. Apply MOPAR® thread sealant to timing tensioner plug (1) and Install.
19. Rotate the crankshaft CLOCKWISE two complete revolutions until the crankshaft is repositioned at the TDC position.

 © 2011 Mitchell Repair Information Company, LLC.

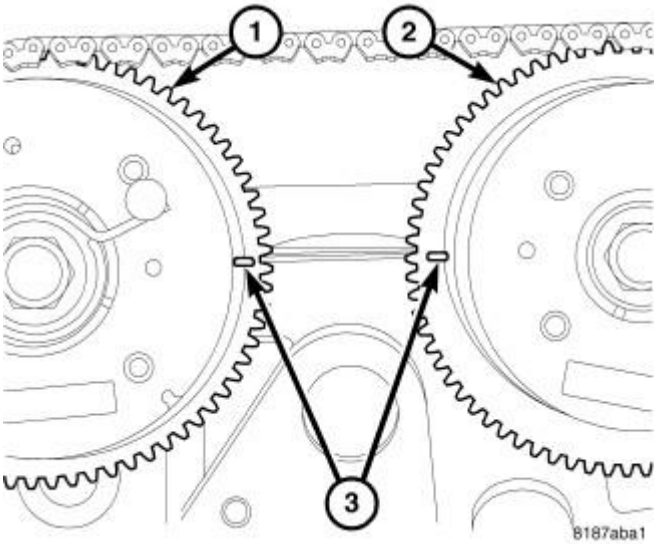

Fig. 159: Camshaft Timing
Courtesy of CHRYSLER GROUP, LLC

20. Verify that the camshafts timing marks (3) are in the proper position and in line with the cylinder head cover sealing surface. If the marks do not line up, the timing chain is not correctly installed.
21. Install right splash shield. Refer to **SHIELD, SPLASH, FRONT WHEELHOUSE, INSTALLATION** .

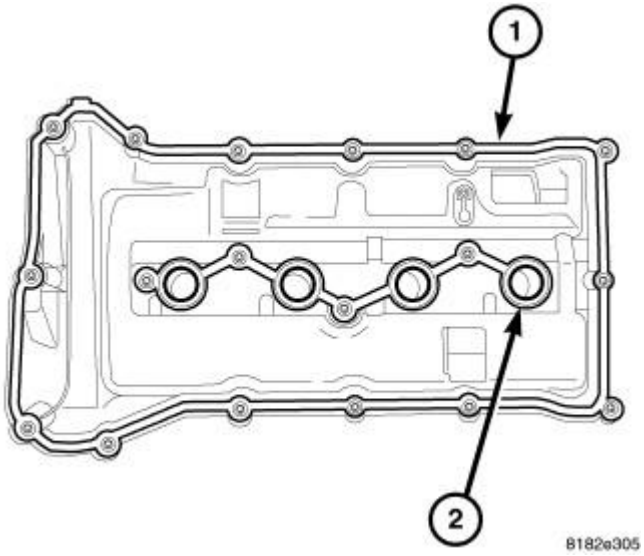

Fig. 160: Cylinder Head Cover Gaskets Location
Courtesy of CHRYSLER GROUP, LLC

22. Remove RTV from gasket (1).
23. Inspect cylinder head cover gaskets (1, 2) for damage. If no damage is present, gaskets can be re-installed.

 © 2011 Mitchell Repair Information Company, LLC.

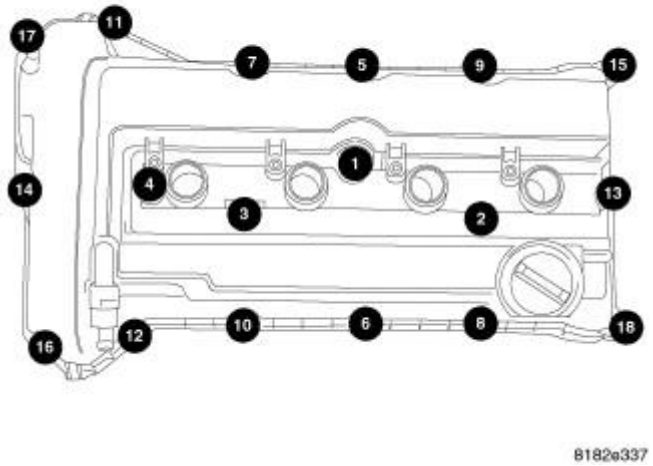

Fig. 161: Removing/Installing Cylinder Head Cover Bolts In Sequence
Courtesy of CHRYSLER GROUP, LLC

24. Install cylinder head cover . Refer to **COVER(S), CYLINDER HEAD, INSTALLATION**.
25. Connect negative battery cable.
26. Fill cooling system. Refer to **STANDARD PROCEDURE** .
27. Fill with oil.

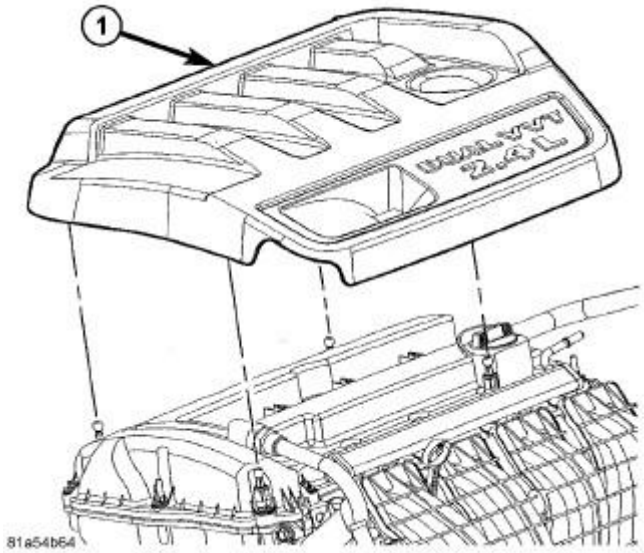

Fig. 162: Engine Cover
Courtesy of CHRYSLER GROUP, LLC

28. Operate engine until it reaches normal operating temperature. Check oil and cooling systems for correct fluid levels.
29. Install engine cover (1).

 © 2011 Mitchell Repair Information Company, LLC.

COVER(S), CYLINDER HEAD

REMOVAL

REMOVAL

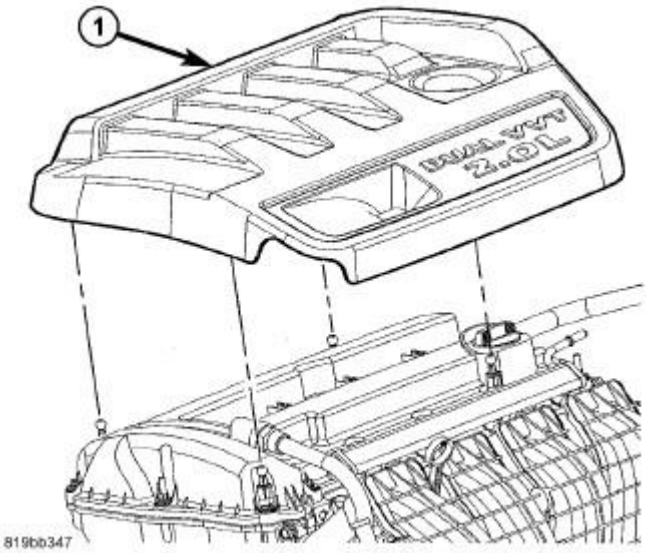

Fig. 163: Engine Cover
Courtesy of CHRYSLER GROUP, LLC

1. Remove engine cover (1) by pulling upward.
2. Disconnect and isolate the negative battery cable.

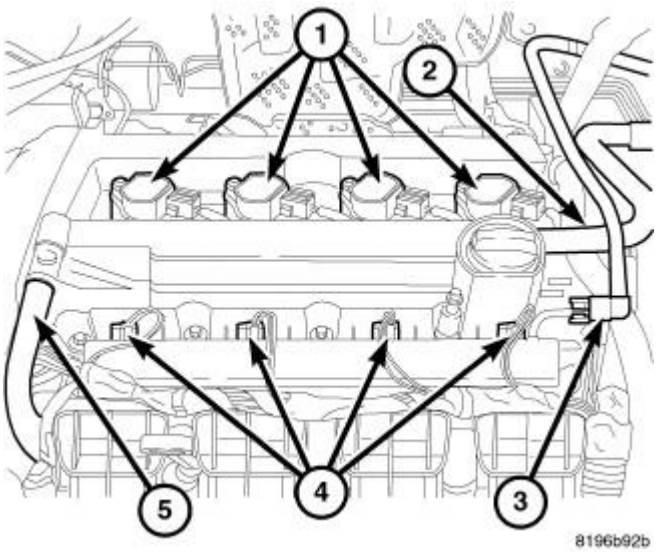

Fig. 164: Ignition Coils, Air Hose, Fuel Line, Injectors & PCV Hose
Courtesy of CHRYSLER GROUP, LLC

 © 2011 Mitchell Repair Information Company, LLC.

3. Remove make up air hose (2).
4. Remove PCV hose (5).
5. Disconnect ignition coil electrical connectors (1).

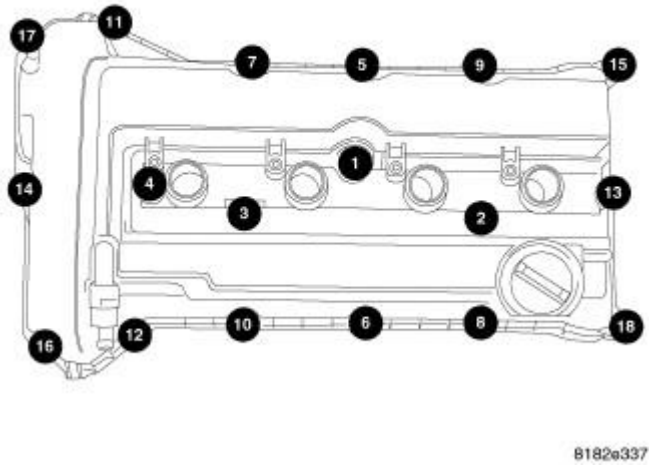

Fig. 165: Removing/Installing Cylinder Head Cover Bolts In Sequence
Courtesy of CHRYSLER GROUP, LLC

6. Use compressed air to blow dirt and debris off the cylinder head cover prior to removal.
7. Remove cylinder head cover bolts.
8. Remove cylinder head cover from cylinder head.

INSTALLATION

INSTALLATION

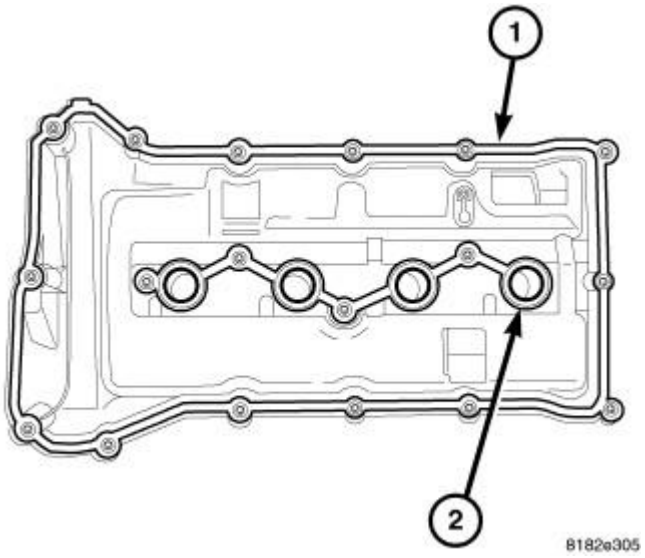

Fig. 166: Cylinder Head Cover Gaskets Location
Courtesy of CHRYSLER GROUP, LLC

1. Install new cylinder head cover gaskets (1, 2).

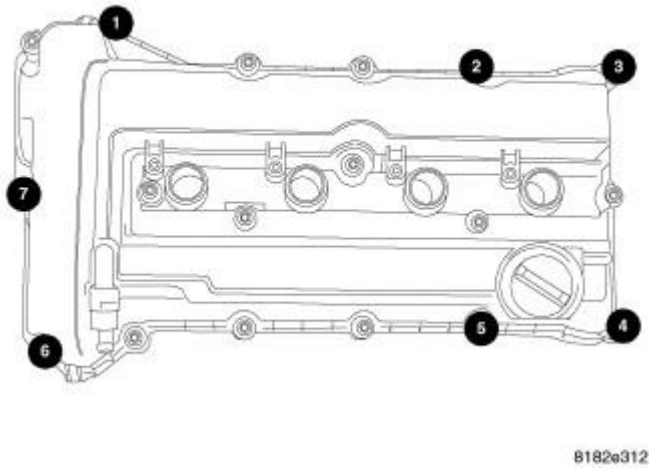

Fig. 167: Cylinder Head Stud Installation Sequence
Courtesy of CHRYSLER GROUP, LLC

2. Install studs in cover as shown in illustration.

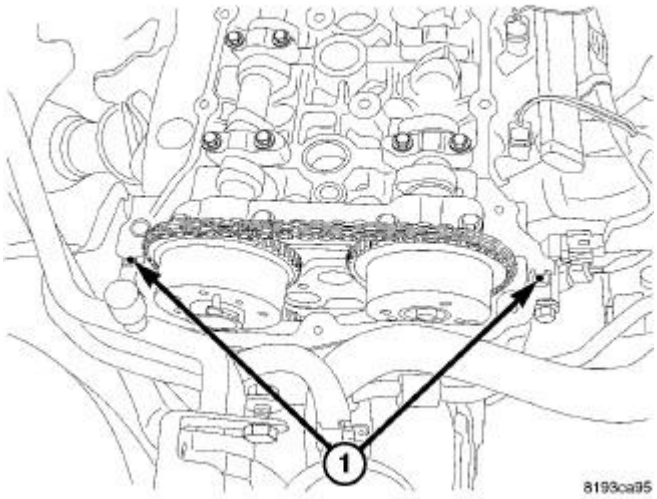

Fig. 168: Head Cover T-Joint
Courtesy of CHRYSLER GROUP, LLC

3. Clean all RTV from cylinder head. Refer to **ENGINE GASKET SURFACE PREPARATION** .

 © 2011 Mitchell Repair Information Company, LLC.

NOTE: **When using RTV, the sealing surfaces must be clean and free from grease and oil.**

NOTE: **When using RTV, parts should be assembled in 10 minutes and tighten to final torque within 45 minutes.**

4. Apply a dot of Mopar® engine sealant RTV or equivalent to cylinder head/front cover T-joint (1).

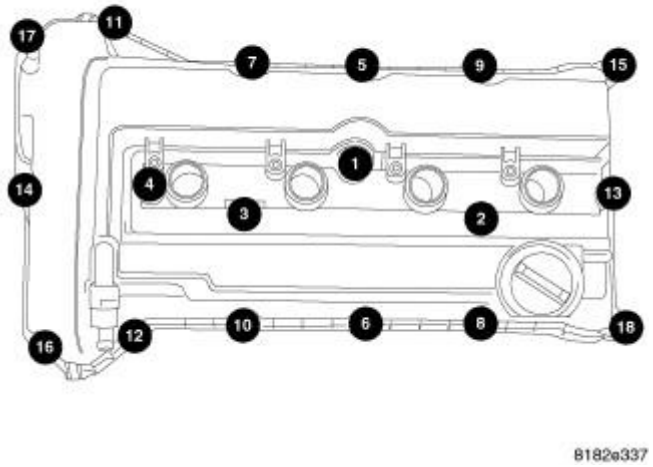

Fig. 169: Remove/Install Cylinder Head Cover Bolts In Sequence
Courtesy of CHRYSLER GROUP, LLC

5. Install cylinder head cover assembly to cylinder head and install all bolts, ensuring the studs are located as shown in illustration.
6. Tighten bolts in sequence shown in illustration using a 2 step torque method as follows:
   a. Tighten all bolts to 5 N.m (44 in. lbs.).
   b. Tighten all bolts to 10 N.m (90 in. lbs.).

 © 2011 Mitchell Repair Information Company, LLC.

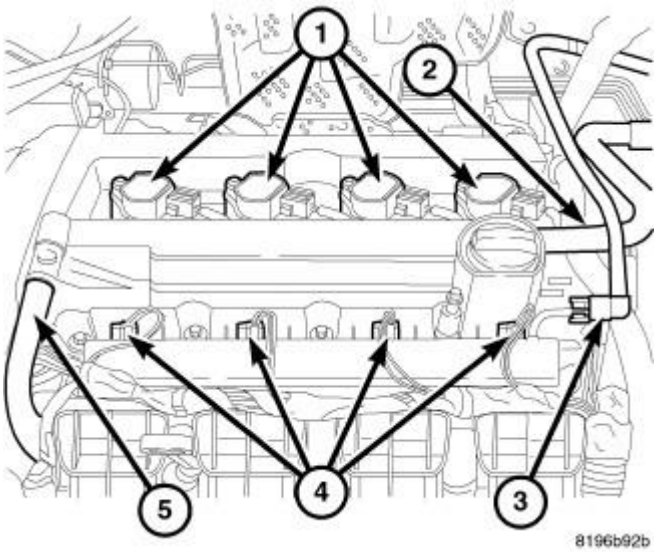

Fig. 170: Ignition Coils, Air Hose, Fuel Line, Injectors & PCV Hose
Courtesy of CHRYSLER GROUP, LLC

7. Install ignition coils. Tighten fasteners to 8 N.m (70 in. lbs.).
8. If the PCV valve was removed, tighten PCV valve to 5 N.m (44 in. lbs.).
9. Connect coil electrical connectors (1).
10. Connect PCV hose (5) to PCV valve.
11. Connect make up air hose (2).

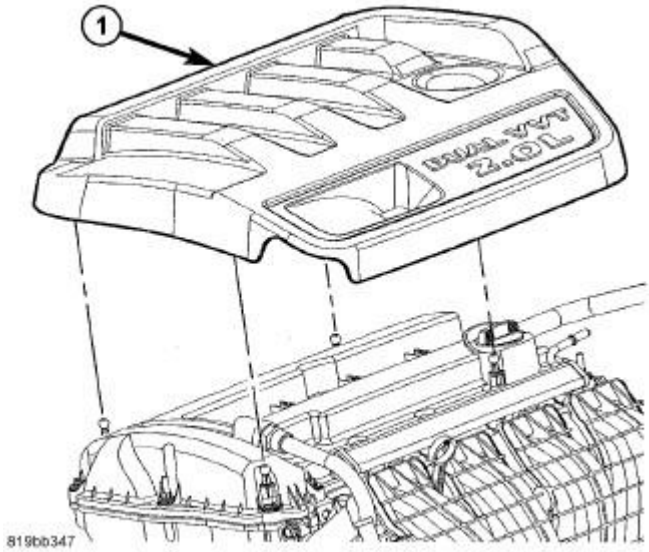

Fig. 171: Engine Cover
Courtesy of CHRYSLER GROUP, LLC

12. Connect negative battery cable.
13. Install engine cover (1) by pressing the rear of the cover down first.

 © 2011 Mitchell Repair Information Company, LLC.

SPRING(S), VALVE

REMOVAL

CYLINDER HEAD ON

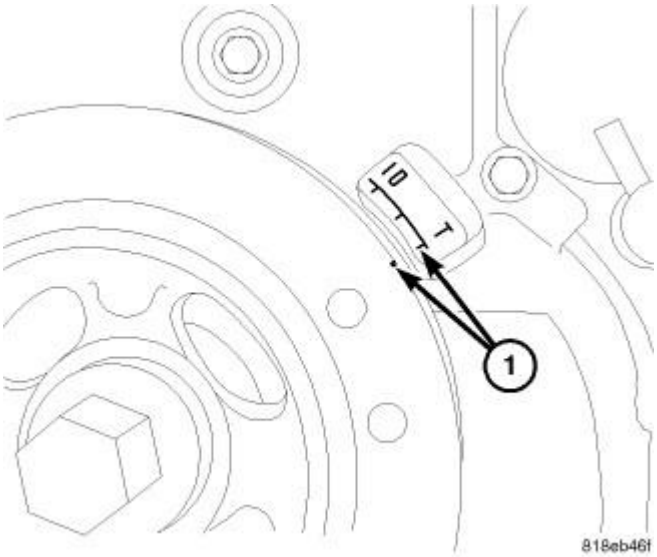

Fig. 172: Setting Crankshaft To Top Dead Center
Courtesy of CHRYSLER GROUP, LLC

1. Rotate crankshaft until piston is at TDC on compression.

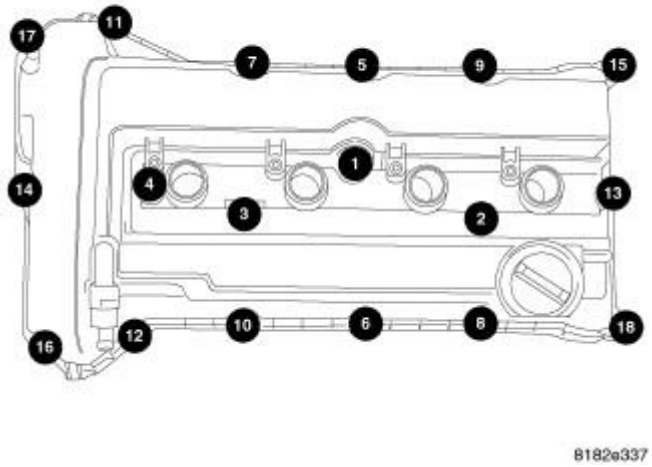

Fig. 173: Removing/Installing Cylinder Head Cover Bolts In Sequence
Courtesy of CHRYSLER GROUP, LLC

2. Remove cylinder head cover . Refer to **COVER(S), CYLINDER HEAD, REMOVAL**.
3. Remove camshafts . Refer to **CAMSHAFT, ENGINE, REMOVAL**.

 © 2011 Mitchell Repair Information Company, LLC.

4. Mark valve tappet location for assembly.
5. Remove valve tappets.
6. With air hose attached to adapter tool installed in spark plug hole, apply 90-120 psi air pressure.

CAUTION: Care must be taken not to damage the tappet bore or engine damage may result.

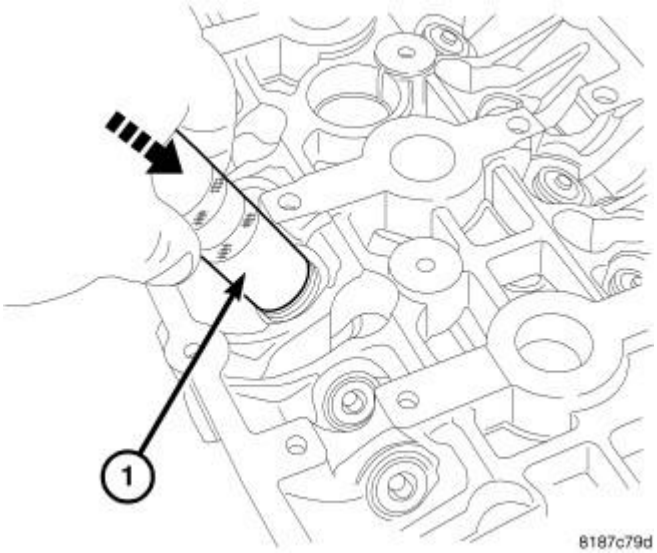

Fig. 174: Valve Removal
Courtesy of CHRYSLER GROUP, LLC

7. Using metric valve keeper tool (1) such as Snap-on® GA317 (or equivalent), and remove valve spring keepers and retainer.
8. Remove valve spring(s).
9. Remove valve stem seal(s) by a using valve stem seal tool.

CYLINDER HEAD OFF

 © 2011 Mitchell Repair Information Company, LLC.

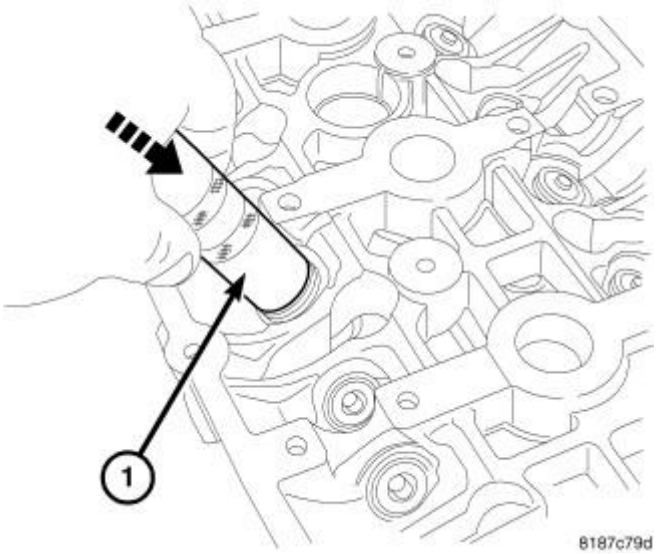

Fig. 175: Valve Removal
Courtesy of CHRYSLER GROUP, LLC

1. With cylinder head removed from cylinder block, place a ball of rags in the combustion chamber.

CAUTION: Care must be taken not to damage the tappet bore or engine damage may result.

2. Mark valve tappet location for assembly.
3. Remove valve tappets.
4. Using metric valve keeper tool such as Snap-on® GA317 (or equivalent) remover (1), remove valve keepers with a downward push.
5. Remove retainer and springs.
6. Before removing valves, **remove any burrs from valve stem lock grooves to prevent damage to the valve guides.** Identify valves, locks and retainers to insure installation in original location.
7. Inspect the valves. Refer to **INSPECTION** .

INSPECTION

INSPECTION

1. Whenever valves have been removed for inspection, reconditioning or replacement, valve springs should be tested for correct load. Discard the springs that do not meet specifications. The following specifications apply to both intake and exhaust valves springs:
   - Valve closed nominal load - 179.5 N ± 9 N @ 35.0 mm (40.35 lbs. ± 2 lbs. @ 1.38 in.).
   - Valve open nominal load - 364.8 N ± 17 N @ 29.25 mm (82 lbs. ± 3.8 lbs. @ 1.152 in.).
2. Inspect each valve spring for squareness with a steel square and surface plate, test springs from both ends. If the spring is more than 1.5 mm (1/16 inch) out of square, install a new spring.

INSTALLATION

 © 2011 Mitchell Repair Information Company, LLC.

CYLINDER HEAD ON

CAUTION: Care must be taken not to damage the tappet bore or engine damage may result.

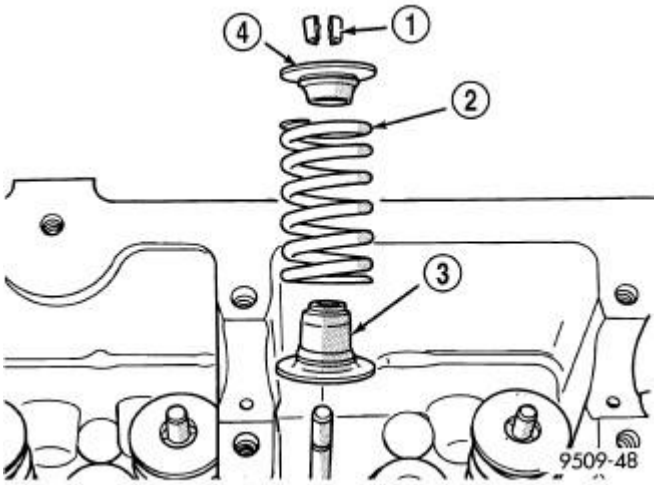

Fig. 176: Valve Spring Assembly
Courtesy of CHRYSLER GROUP, LLC

1 - VALVE RETAINING LOCKS
2 - VALVE SPRING
3 - VALVE SEAL AND VALVE SPRING SEAT ASSEMBLY
4 - VALVE SPRING RETAINER

1. Install valve seal/valve spring seat (3) assembly. Push the assembly down with appropriate size socket to seat it onto the valve guide.
2. Install valve spring (2) and retainer (4) with keepers (1).

 © 2011 Mitchell Repair Information Company, LLC.

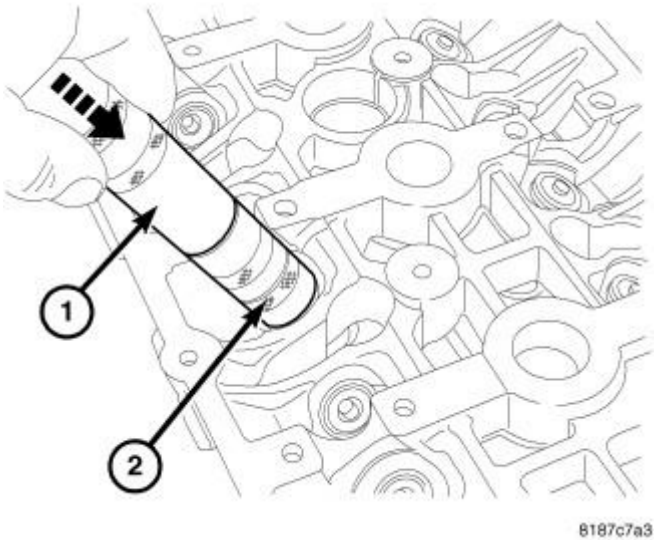

Fig. 177: Valve Installation
Courtesy of CHRYSLER GROUP, LLC

3. Place the valve keepers in the retainer. Using metric valve keeper tool such as Snap-on® GA317 (or equivalent) installer (2) and remover (1) as a handle, install valve keepers with a downward push.
4. Remove air hose and install spark plugs.
5. Install valve tappets.
6. Install camshafts . Refer to **CAMSHAFT, ENGINE, INSTALLATION**.
7. Install cylinder head cover . Refer to **COVER(S), CYLINDER HEAD, INSTALLATION**.

CYLINDER HEAD OFF

CAUTION: Care must be taken not to damage the tappet bore or engine damage may result.

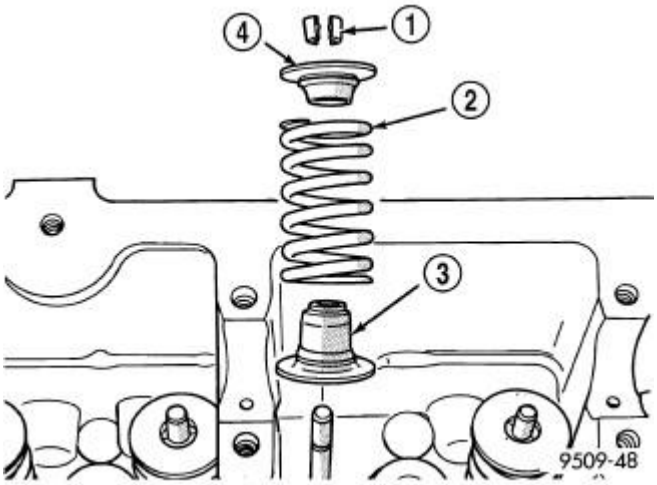

Fig. 178: Valve Spring Assembly

 © 2011 Mitchell Repair Information Company, LLC.

Courtesy of CHRYSLER GROUP, LLC

1. Coat valve stems with clean engine oil and insert in cylinder head.
2. Install new valve stem seals (3) on all valves using an appropriate sized socket to seat the seal/spring seat. The valve stem seals should be pushed firmly and squarely over valve guide.
3. Install valve springs (2).
4. Install keepers in retainer and place on valve spring.

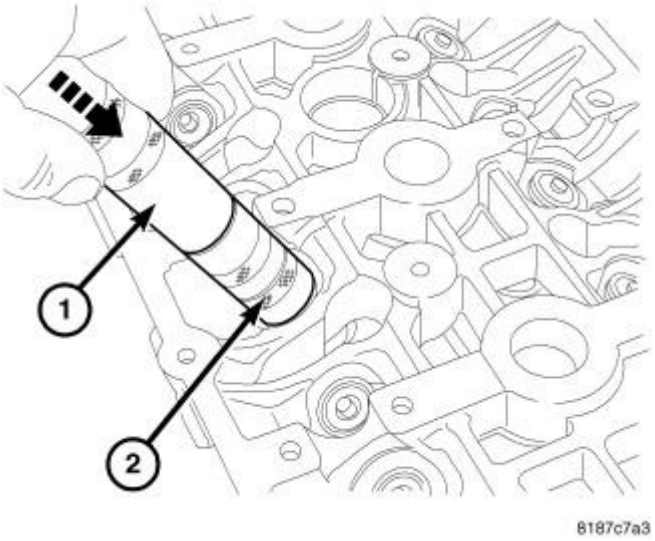

Fig. 179: Valve Installation
Courtesy of CHRYSLER GROUP, LLC

5. Using metric valve keeper tool such as Snap-on® GA317 (or equivalent) installer (2) and remover (1) as a handle, push downward to install keepers.

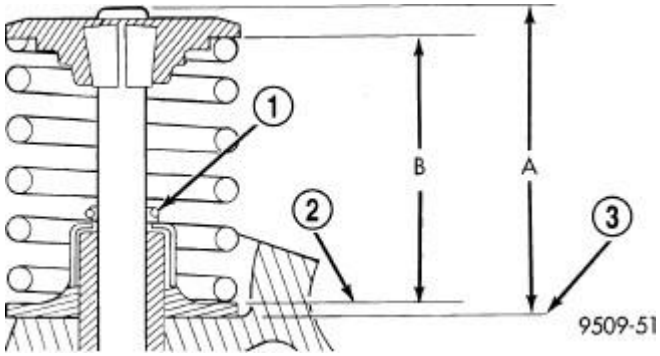

Fig. 180: Spring Installed Height And Valve TIP To Spring Seat Dimensions
Courtesy of CHRYSLER GROUP, LLC

1 - GARTER SPRING
2 - VALVE SPRING SEAT
3 - CYLINDER HEAD SURFACE

 © 2011 Mitchell Repair Information Company, LLC.

6. Check the valve spring installed height B after refacing the valve and seat. Make sure measurements are taken from top of spring seat to the bottom surface of spring retainer. If height is greater than 38.75 mm (1.525 in.), install a 0.762 mm (0.030 in.) spacer under the valve spring seat to bring spring height back within specification.
7. Install valve tappets.

VALVES, INTAKE AND EXHAUST

DESCRIPTION

DESCRIPTION

The valves are made of heat resistant steel. They have nitrided stems to prevent scuffing. Viton rubber valve stem seals are integral with the spring seats. The valves have single bead lock keepers to retain the springs.

OPERATION

OPERATION

The four valves per cylinder (two intake and two exhaust) are opened by using direct acting tappets which are actuated by the camshaft.

CLEANING

CLEANING

Clean all valves thoroughly and discard burned, warped and cracked valves.

CAUTION: Due to the small margin on the valves, grinding is not recommended.

ENGINE BLOCK

DESCRIPTION

DESCRIPTION

The die cast aluminum cylinder block is a two-piece assembly, consisting of the cylinder block and ladder frame. The block is an open deck design with cast in place cast iron cylinder liners. The cast iron cylinder liners are recessed below the aluminum deck surface. The ladder frame bolts to the cylinder block and does not incorporate the main bearing caps. This design offers a much stronger lower end and increased cylinder block and transaxle rigidity. The rear oil seal retainer is integral with the block and ladder frame. The ladder frame and block are serviced as an assembly.

 © 2011 Mitchell Repair Information Company, LLC.

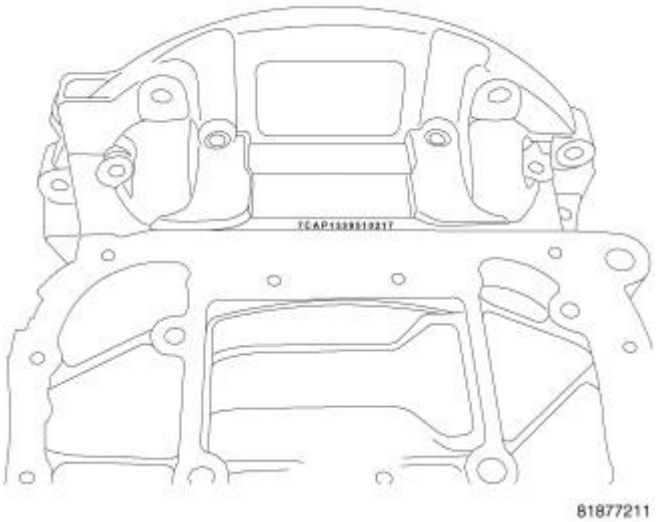

Fig. 181: Engine Serial Number
Courtesy of CHRYSLER GROUP, LLC

The engine serial number is located on the bottom of the ladder frame just behind the oil pan. The date can be seen with the oil pan in place.

STANDARD PROCEDURE

STANDARD PROCEDURE - CYLINDER BORE HONING

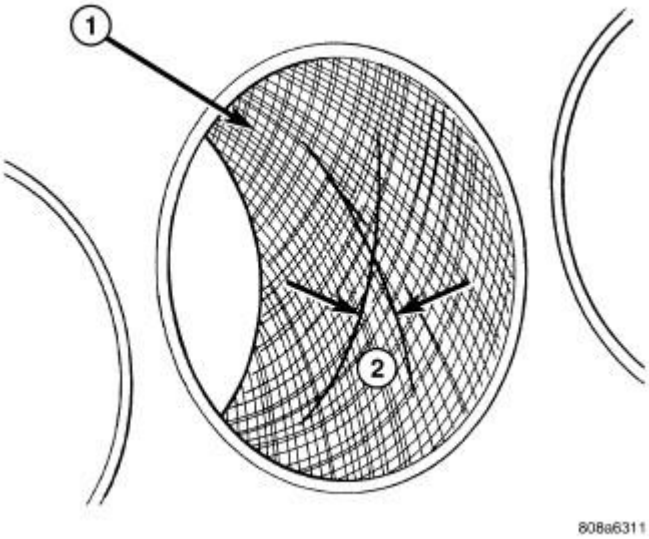

Fig. 182: Cylinder Bore Cross-Hatch Pattern
Courtesy of CHRYSLER GROUP, LLC

1 - CROSS-HATCH PATTERN 2 - 40°-60°

 © 2011 Mitchell Repair Information Company, LLC.

1. Deglazing of the cylinder walls may be done using a quality commercially available flex hone, if the cylinder bore is straight and round. 20-60 strokes depending on the bore condition, will be sufficient to provide a satisfactory surface. Use a light honing oil. **Do not use engine or transmission oil, mineral spirits or kerosene.** Inspect cylinder walls after each 20 strokes.
2. Honing should be done by moving the hone up and down fast enough to get a cross-hatch pattern. When hone marks **intersect** at 30-50 degrees, the cross hatch angle is most satisfactory for proper seating of rings.
3. A controlled hone motor speed between 200-300 RPM is necessary to obtain the proper cross-hatch angle. The number of up and down strokes per minute can be regulated to get the desired 30-50 degree angle. Faster up and down strokes increase the cross-hatch angle.
4. After honing, it is necessary that the block be cleaned again to remove all traces of abrasive.

CAUTION: Ensure all abrasives are removed from engine parts after honing. It is recommended that a solution of soap and hot water be used with a brush and the parts then thoroughly dried. The bore can be considered clean when it can be wiped clean with a white cloth and cloth remains clean. Oil the bores after cleaning to prevent rusting.

INSPECTION

INSPECTION

ENGINE BLOCK

1. Clean cylinder block thoroughly and check all core hole plugs for evidence of leaking.
2. Examine block and cylinder bores for cracks or fractures.
3. Check block deck surfaces for flatness. Deck surface must be within service limit of 0.050 mm (0.002 in.).

CYLINDER BORE

 © 2011 Mitchell Repair Information Company, LLC.

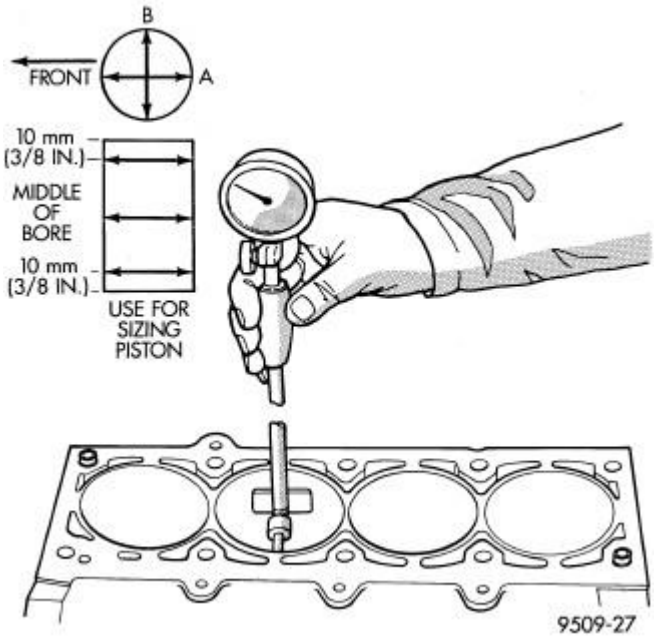

Fig. 183: Checking Cylinder Bore Size
Courtesy of CHRYSLER GROUP, LLC

NOTE: The cylinder bores should be measured at normal room temperature, 21°C (70° F).

The cylinder walls should be checked for out-of-round and taper with Cylinder Indicator C119 or equivalent. Refer to **SPECIFICATIONS** . If the cylinder walls are badly scuffed or scored, the cylinder block should be replaced, and new pistons and rings fitted.

Measure the cylinder bore at three levels in directions A and B. Top measurement should be 10 mm (3/8 in.) down and bottom measurement should be 10 mm (3/8 in.) up from bottom of bore. Refer to **SPECIFICATIONS** .

BEARING(S), CONNECTING ROD

STANDARD PROCEDURE

STANDARD PROCEDURE - CONNECTING ROD - FITTING

 © 2011 Mitchell Repair Information Company, LLC.

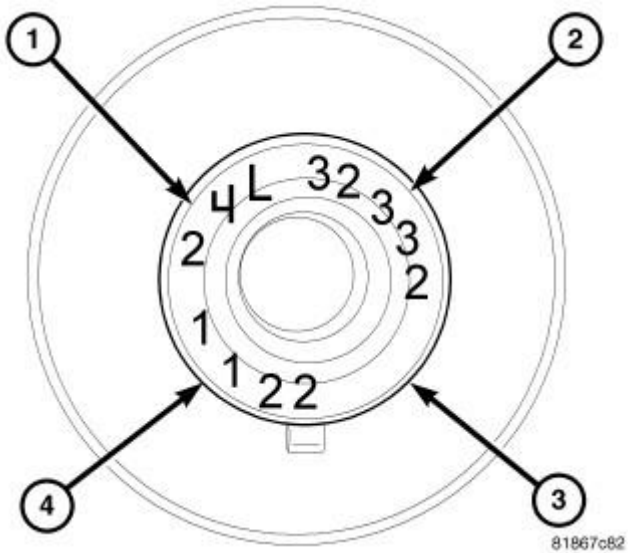

Fig. 184: Bearing Selection
Courtesy of CHRYSLER GROUP, LLC

There are three different sizes of rod bearings available. Connecting rod bearing identification (4) can be found on the nose of the crankshaft (3). Use the table below for proper bearing selection.

CONNECTING ROD BEARING SELECTION

CRANKSHAFT PIN DIAMETER GRADE	CONNECTING ROD BEARING CLASSIFICATION	CONNECTING ROD BEARING THICKNESS
1	1 (Black)	-3 Micron (-.003 mm.)
2	2 (No Color)	Standard
3	3 (Green)	+3 Micron (+.003 mm.)

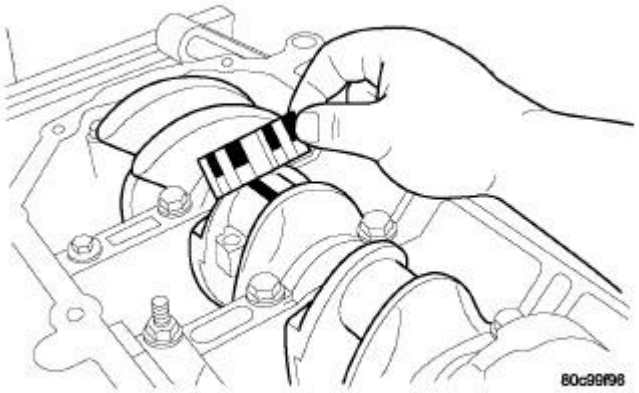

Fig. 185: Measuring Connecting Rod Bearing Clearance Using Plastigage

 © 2011 Mitchell Repair Information Company, LLC.

Courtesy of CHRYSLER GROUP, LLC

1. For measuring connecting rod bearing clearance procedure and use of Plastigage, refer to **MEASURING BEARING CLEARANCE USING PLASTIGAGE** . For bearing clearance, refer to **SPECIFICATIONS** .

NOTE: The rod bolts should not be reused.

2. Before installing the **NEW** rod bolts the threads and under the bolt head should be oiled with clean engine oil.
3. Install each bolt finger tight then alternately tighten each bolt to assemble the cap properly.
4. Tighten the connecting rod bolts using the 2 step torque-turn method. Tighten according to the following values:

CAUTION: Do not use a torque wrench for the second step.

- Tighten the bolts to 20 N.m (15 ft. lbs.).
- Tighten the connecting rod bolts an additional 90°.

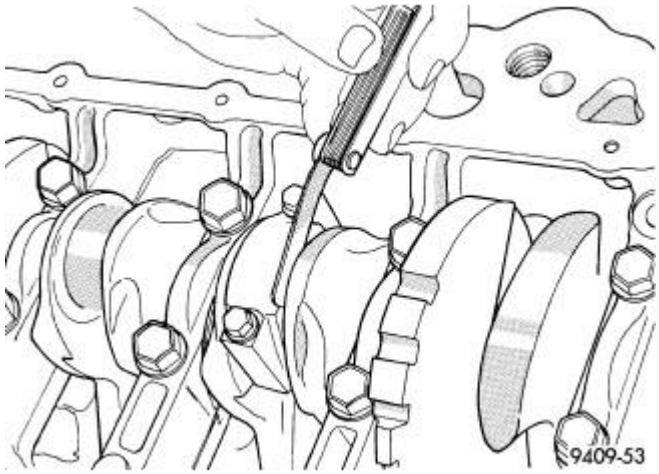

Fig. 186: Connecting Rod Side Clearance
Courtesy of CHRYSLER GROUP, LLC

5. Using a feeler gauge, check connecting rod side clearance. For clearance specifications, refer to **SPECIFICATIONS** .

BEARING(S), CRANKSHAFT, MAIN

STANDARD PROCEDURE

STANDARD PROCEDURE - MAIN BEARING SELECTION

 © 2011 Mitchell Repair Information Company, LLC.

NOTE: **There are three different possibilities for the upper main bearings and five different lower main bearings. The upper and lower bearing shells are not interchangeable.**

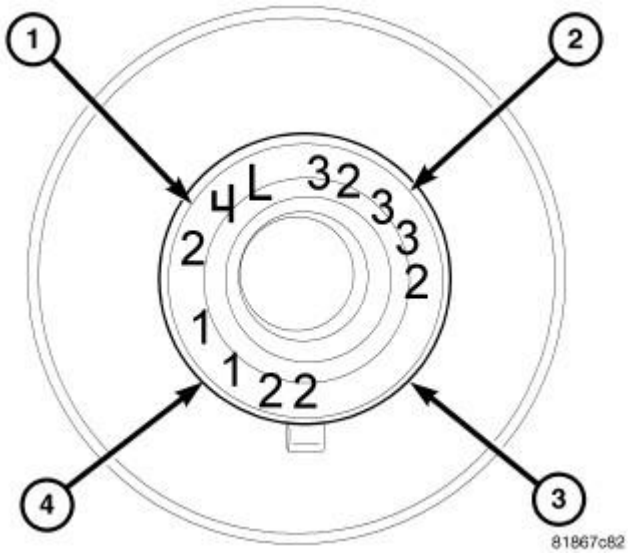

Fig. 187: Bearing Selection
Courtesy of CHRYSLER GROUP, LLC

The lower main bearing identification (2) is stamped in the nose of the crankshaft (3). There are 5 different bearing sizes available 0 through 4.

CRANKSHAFT IDENTIFICATION	LOWER CRANKSHAFT BEARING SELECTION		
JOURNAL DIAMETER GRADE	DIMENSION	LOWER MAIN BEARING SIZE CLASSIFICATION	LOWER MAIN BEARING DIMENSION
0	52 mm, -0.012 to -0.015 mm	0 (Pink or Red)	2 mm, 0 to -0.003 mm
1	52 mm, -0.015 to -0.018 mm	1 (Black)	2 mm, +0.003 to 0 mm
2	52 mm, -0.018 to -0.021 mm	2 (No Color)	2 mm, +0.006 to +0.003 mm
3	52 mm, -0.021 to -0.024 mm	3 (Green)	2 mm, +0.009 to +0.006 mm
4	52 mm, -0.024 to -0.027 mm	4 (Blue)	2 mm, +0.012 to +0.009 mm

 © 2011 Mitchell Repair Information Company, LLC.

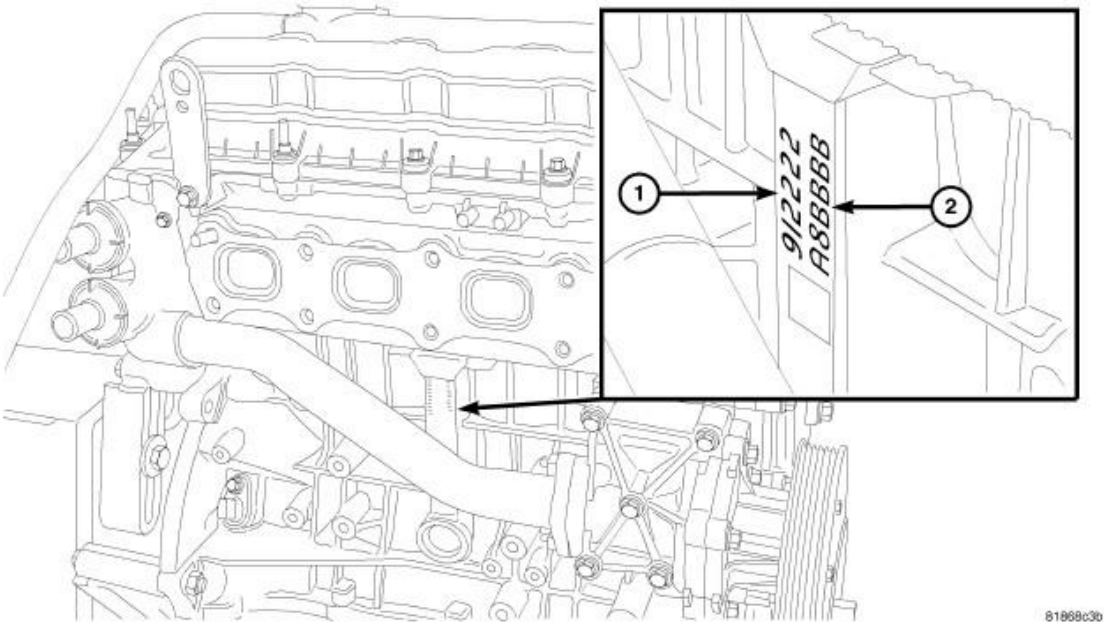

Fig. 188: Upper Main Bearing Shell Identification
Courtesy of CHRYSLER GROUP, LLC

The upper main bearing shell identification (1) is located in the middle of cylinder block on the right side of the engine. There are three different size bearings available. The bearing class is read downward from top and corresponds to the front journal to the rear journal on the bottom.

UPPER MAIN BEARING SELECTION

CYLINDER BLOCK IDENTIFICATION	UPPER CRANKSHAFT BEARING SELECTION		
MAIN BEARING GRADE	DIMENSION	UPPER MAIN BEARING SIZE CLASSIFICATION	UPPER MAIN BEARING DIMENSION
1	56.000<56.006 mm	1 (Black)	2 mm, 0 to -0.006 mm
2	56.006<56.012 mm	2 (No Color)	2 mm, +0.006 to 0 mm
3	56.012<56.018 mm	3 (Green)	2 mm, +0.012 to +0.006 mm

CRANKSHAFT

STANDARD PROCEDURE

STANDARD PROCEDURE - MEASURING CRANKSHAFT END PLAY

 © 2011 Mitchell Repair Information Company, LLC.

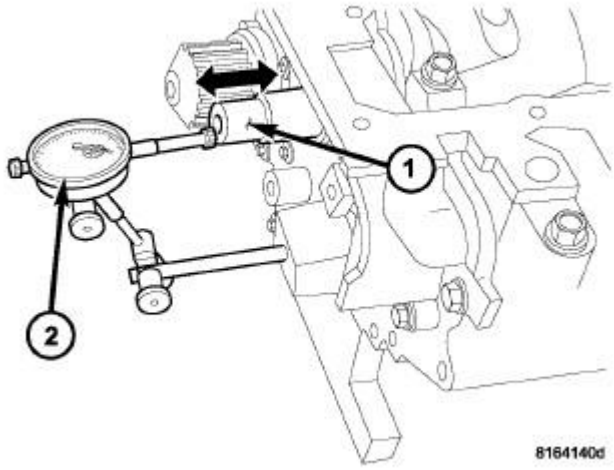

Fig. 189: Checking Crankshaft End Play - Typical
Courtesy of CHRYSLER GROUP, LLC

1 - Crankshaft 2 - DIAL INDICATOR

1. Mount a dial indicator (2) to front of engine with the locating probe on nose of crankshaft (1).
2. Move crankshaft all the way to the rear of its travel.
3. Zero the dial indicator.
4. Move crankshaft all the way to the front and read the dial indicator. For end play specification, refer to **SPECIFICATIONS** .

REMOVAL

REMOVAL

 © 2011 Mitchell Repair Information Company, LLC.

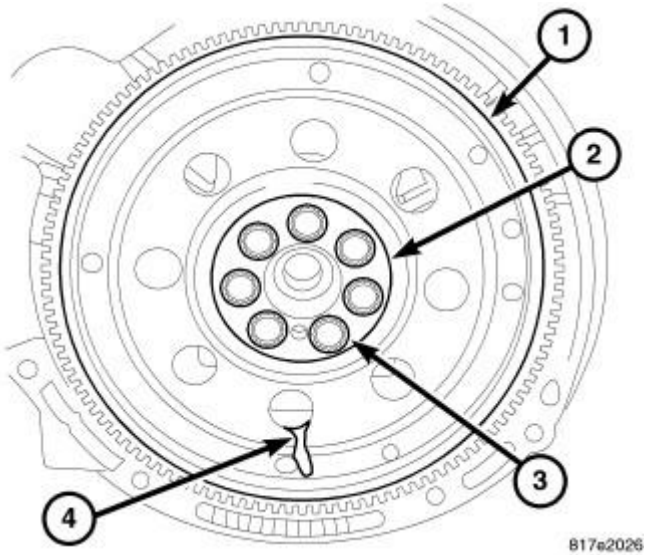

Fig. 190: Flex Plate
Courtesy of CHRYSLER GROUP, LLC

NOTE: Crankshaft can not be removed when engine is in vehicle.

1. Remove engine assembly from vehicle. Refer to **REMOVAL**.
2. Separate transaxle from engine.
3. Remove flex plate/flywheel (1).
4. Remove crankshaft rear oil seal. Refer to **SEAL, CRANKSHAFT OIL, REAR, REMOVAL**.

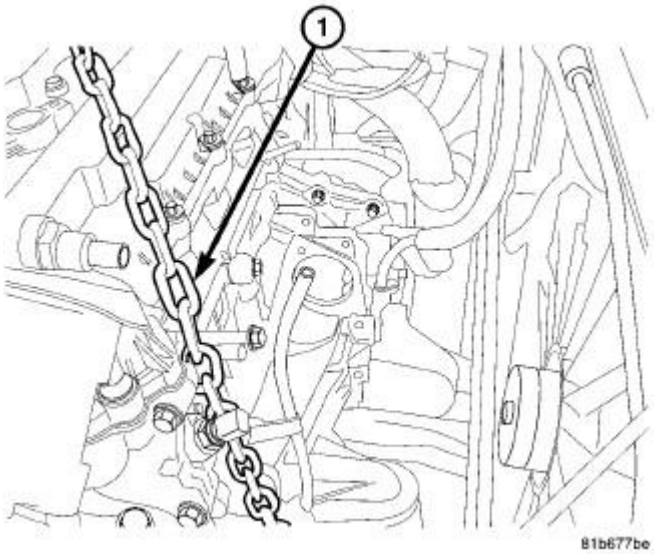

Fig. 191: Identifying Lift Chain
Courtesy of CHRYSLER GROUP, LLC

5. Remove engine from lift chain (1) and mount engine on a suitable repair stand.

 © 2011 Mitchell Repair Information Company, LLC.

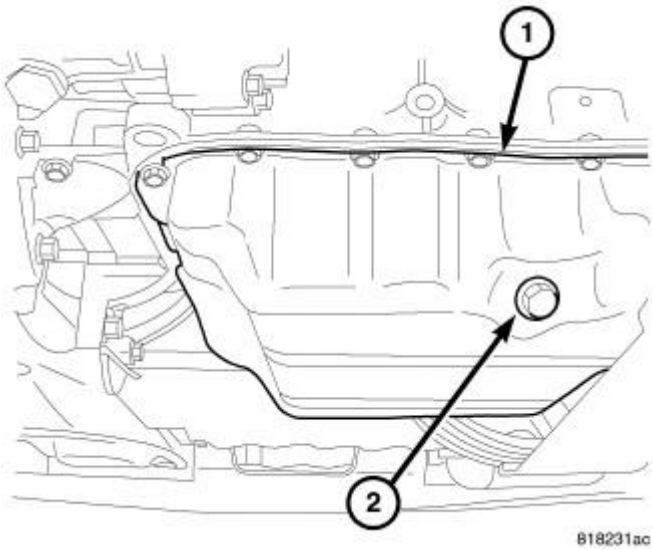

Fig. 192: Oil Drain Plug
Courtesy of CHRYSLER GROUP, LLC

6. Drain engine oil (2).

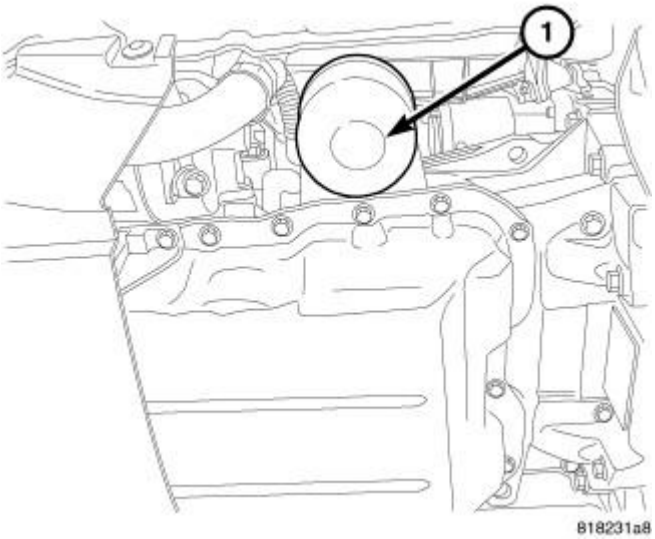

Fig. 193: Oil Filter
Courtesy of CHRYSLER GROUP, LLC

7. Remove oil filter (1).

 © 2011 Mitchell Repair Information Company, LLC.

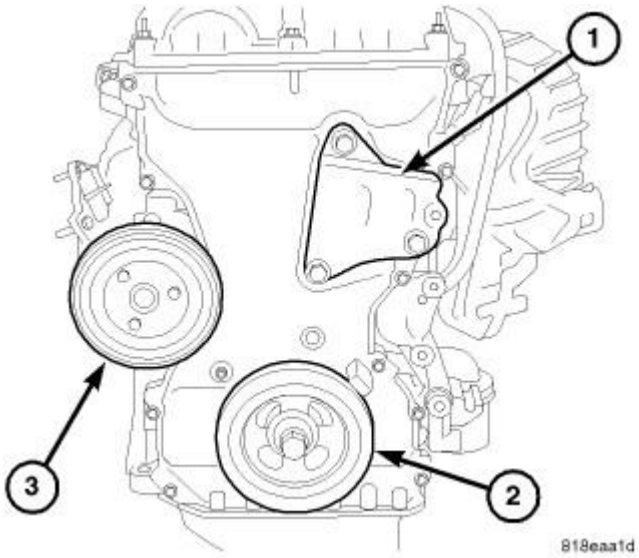

Fig. 194: Right Side Engine Mount Bracket, Crankshaft Damper & Water Pump Pulley
Courtesy of CHRYSLER GROUP, LLC

8. Remove crankshaft vibration damper (2). Refer to **DAMPER, VIBRATION, REMOVAL**.
9. Remove water pump pulley (3).
10. Remove engine mount support bracket (1).

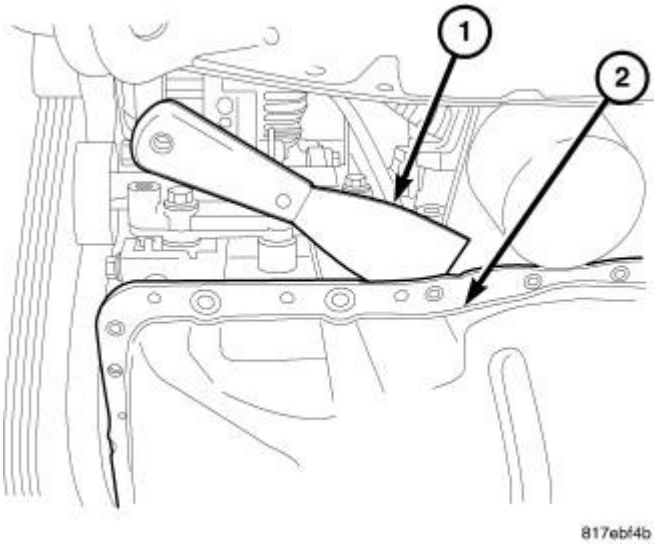

Fig. 195: Oil Pan Removal
Courtesy of CHRYSLER GROUP, LLC

11. Remove the oil pan (2). Refer to **PAN, OIL, REMOVAL**.
12. Remove timing chain cover . Refer to **COVER(S), ENGINE TIMING, REMOVAL**.
13. Remove the timing chain. Refer to **CHAIN AND SPROCKETS, TIMING, REMOVAL**
14. Remove balance shaft module. Refer to **PUMP, ENGINE OIL, REMOVAL**.

 © 2011 Mitchell Repair Information Company, LLC.

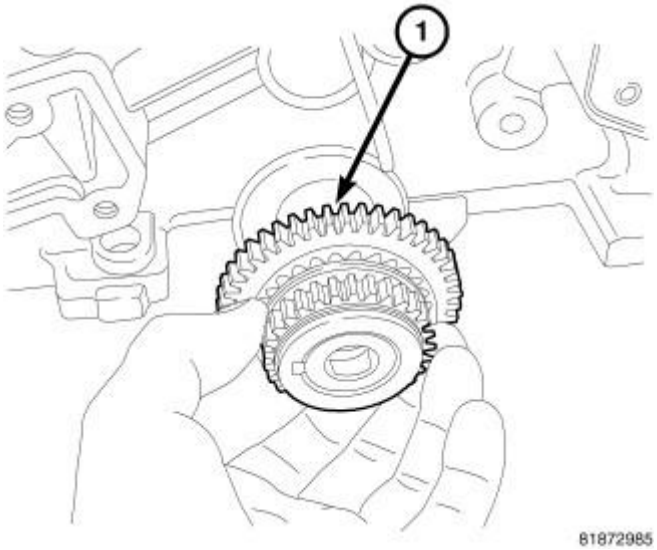

Fig. 196: Crankshaft Sprocket
Courtesy of CHRYSLER GROUP, LLC

15. Remove the crankshaft sprocket (1).

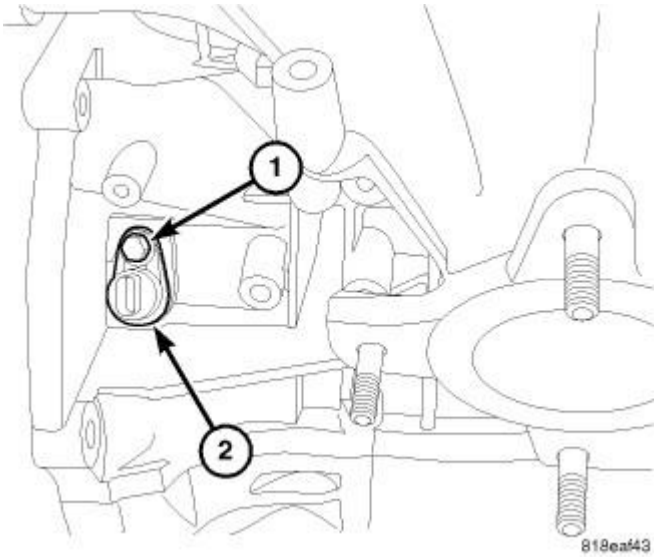

Fig. 197: Crankshaft Position Sensor
Courtesy of CHRYSLER GROUP, LLC

16. Remove crankshaft position sensor retaining bolt (1) and remove sensor (2).
17. Remove ladder frame. Refer to **FRAME, LADDER, REMOVAL**.

 © 2011 Mitchell Repair Information Company, LLC.

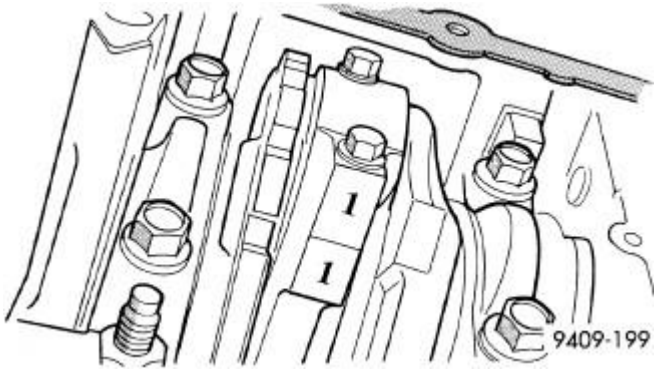

Fig. 198: Identifying Mark On Connecting Rod And Bearing Cap
Courtesy of CHRYSLER GROUP, LLC

NOTE: If piston/connecting rod replacement is necessary, remove cylinder head. Refer to CYLINDER HEAD, REMOVAL.

CAUTION: DO NOT use a number stamp or a punch to mark connecting rods. Damage to connecting rod could occur.

18. Using a permanent ink or paint marker, identify cylinder number on each connecting rod and cap.
19. Remove all connecting rod bolts and caps. Care should be taken not to damage the fracture rod and cap surfaces.

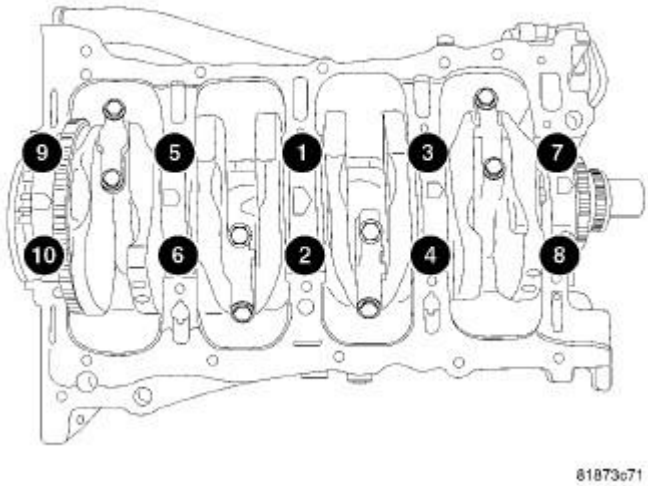

Fig. 199: Main Bearing Cap Torque Sequence
Courtesy of CHRYSLER GROUP, LLC

NOTE: Do not reuse connecting rod bolts.

20. Remove main bearing caps.

 © 2011 Mitchell Repair Information Company, LLC.

CAUTION: Use extreme care when handling crankshaft. Tone wheel damage can occur if crankshaft is mis-handled.

21. Lift out crankshaft from cylinder block. Do not damage the main bearings or journals when removing the crankshaft.

INSPECTION

INSPECTION

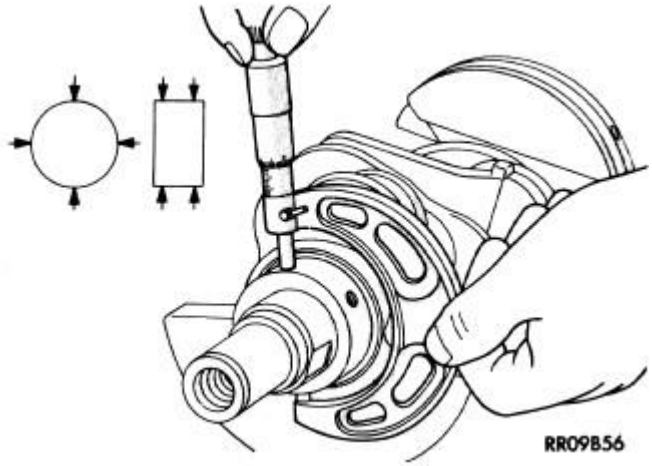

Fig. 200: Crankshaft Journal Measurements - Typical
Courtesy of CHRYSLER GROUP, LLC

The crankshaft main journals should be checked for excessive wear, taper and scoring. Limits of taper on any crankshaft main journals should be held to 0.006 mm (0.00024 in.). Limits of taper on any crankshaft rod journals should be held to 0.005 mm (0.0002 in.). DO NOT nick crank pin or bearing fillets. Limits of out of round on any crankshaft journals should be held to 0.005 mm (0.0002 in). DO NOT nick crank pin or bearing fillets.

INSTALLATION

INSTALLATION

 © 2011 Mitchell Repair Information Company, LLC.

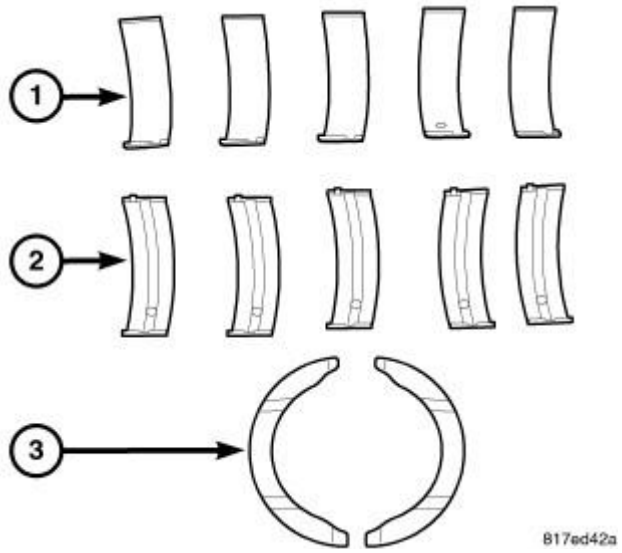

Fig. 201: Bearing Identification
Courtesy of CHRYSLER GROUP, LLC

The crankshaft is supported in five main bearings. All upper bearing shells (2) in the crankcase have oil grooves and holes. All lower bearing shells (1) are smooth. Crankshaft end play is controlled by a two piece thrust bearing (3) on the number three main bearing journal.

1. Clean main bearing cap bolt holes with Mopar® brake parts cleaner or equivalent and blow out with compressed air.
2. Install the main bearing upper (2) shells with the lubrication groove and oil hole in the engine block.
3. Make certain oil holes in block line up with oil hole in bearings and bearing tabs seat in the block tab slots.

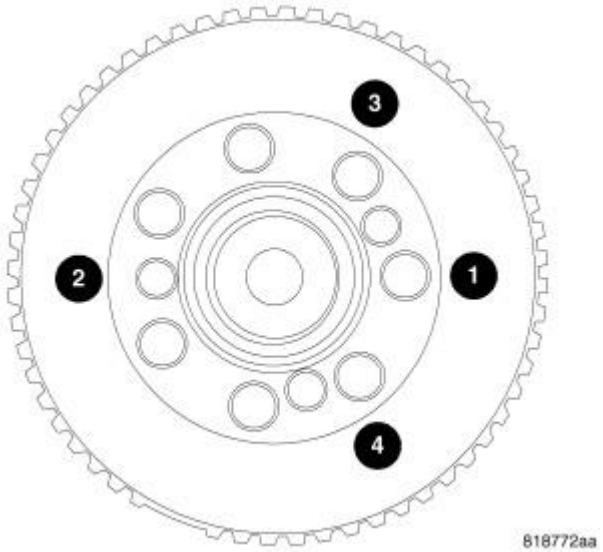

Fig. 202: Target Wheel
Courtesy of CHRYSLER GROUP, LLC

 © 2011 Mitchell Repair Information Company, LLC.

NOTE: If the crankshaft is sent out for machine work, it must be balanced as an assembly with the target ring installed.

4. Clean crankshaft and target ring with Mopar® brake parts cleaner or equivalent and dry with compressed air to ensure that the crankshaft mating surface and target ring mounting holes are free from oil and lock patch debris.

NOTE: Always use NEW mounting screws whether installing original or new target ring.

5. Install **NEW** mounting screws finger tight starting with the #1 location. Make sure engagement occurs with the shoulder of the screws and mounting hole before starting all other screws.
6. Tighten all mounting screws to 13 N.m (110 in. lbs.) in the sequence shown in illustration.

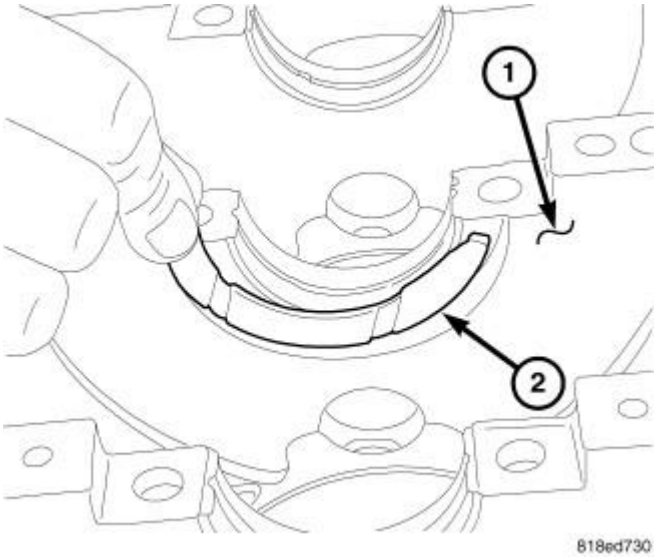

Fig. 203: Installing Thrust Bearing
Courtesy of CHRYSLER GROUP, LLC

NOTE: Lightly apply trans gel to thrust bearings to hold bearings in block.

NOTE: The thrust bearings must be installed with the notches facing the crankshaft.

7. Install thrust bearings (2) in block (1).

CAUTION: Do not get oil on the ladder frame mating surface. It will affect the ability of the RTV to seal the ladder frame to cylinder block.

NOTE: Ensure main bearing cap bolt holes in the block are clean, dry (free of residual oil or coolant), and threads are not damaged.

 © 2011 Mitchell Repair Information Company, LLC.

8. Oil the bearings and journals. Install crankshaft in engine block.

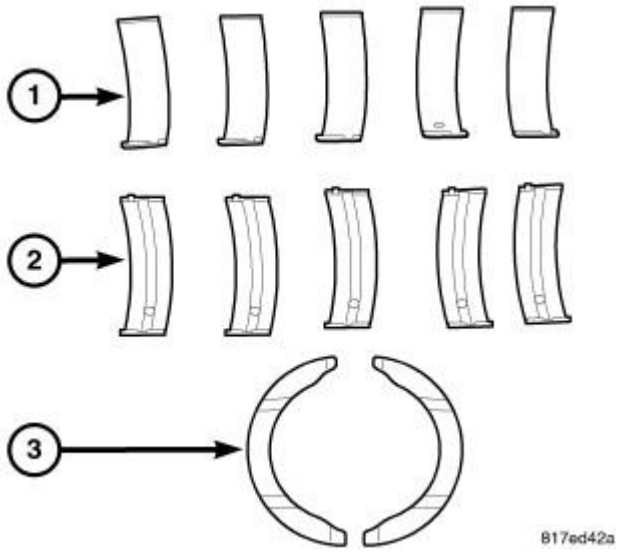

Fig. 204: Bearing Identification
Courtesy of CHRYSLER GROUP, LLC

9. Install lower main bearings (1) into main bearing cap. Make certain the bearing tabs are seated into the bearing cap slots.

NOTE: Main bearing caps are stamped 1 - 5 front to rear. Arrows on the caps must point towards the front of the engine.

10. Install main bearing caps to engine block.
11. Before installing the bolts the threads should be clean and dry.
12. Loosely install main bearing cap bolts.
13. To ensure correct thrust bearing alignment, perform the following steps:
    - Step 1: Rotate crankshaft until number 4 piston is at TDC.
    - Step 2: Move crankshaft rearward to limits of travel.
    - Step 3: Then, move crankshaft forward to limits of travel.
    - Step 4: Wedge an appropriate tool between the rear of the cylinder block and the rear crankshaft counterweight. This will hold the crankshaft in its furthest forward position.

CAUTION: There are different sets main bolts supplied with this engine. Each bolt set has a different torque value and engine damage could result if bolts are not torqued correctly. The bolts are not interchangeable.

 © 2011 Mitchell Repair Information Company, LLC.

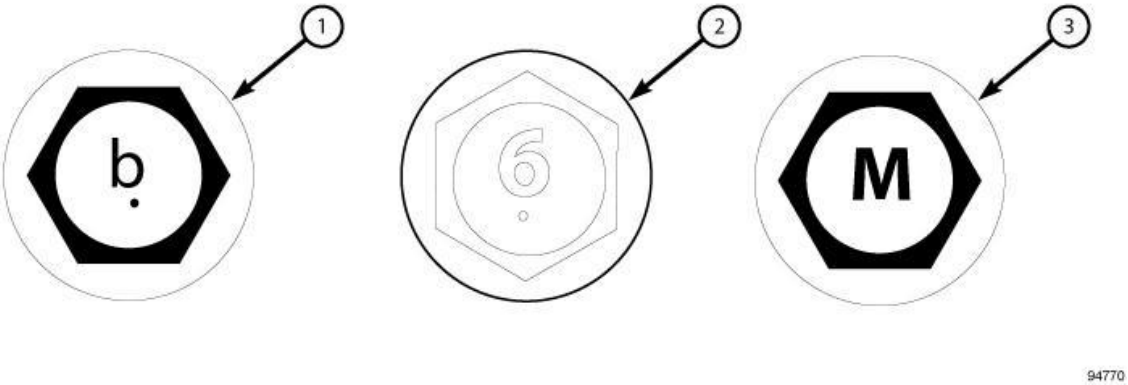

Fig. 205: Main Bolt Identification
Courtesy of CHRYSLER GROUP, LLC

14. If your bolt heads are marked with **b** (1) or **6** (2), go to step 15. If your bolt heads are marked with **M** (3) or any other marking, go to step 16.

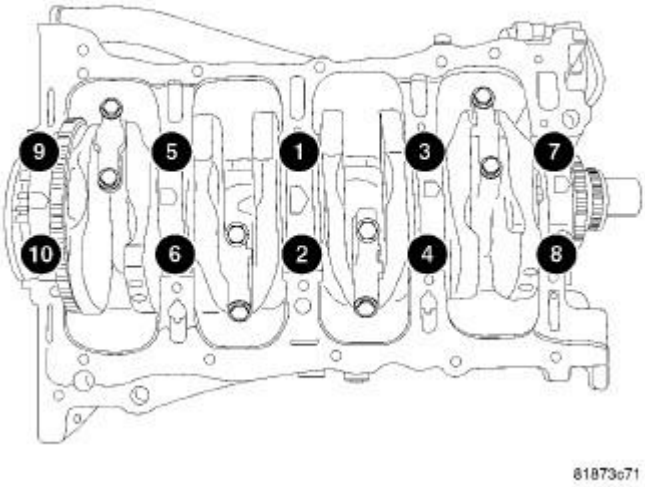

Fig. 206: Main Bearing Cap Torque Sequence
Courtesy of CHRYSLER GROUP, LLC

CAUTION: Before tightening bolts, you must identify the bolt head to obtain the correct torque value. Failure to identify the bolts correctly, could result in improperly tightened bolts which could result in engine damage.

15. Tighten bolts marked with **b** or **6** using the following three step method, in the sequence shown in illustration:
    - Tighten all bolts to 15 N.m (11 ft. lbs.)

 © 2011 Mitchell Repair Information Company, LLC.

- Tighten all bolts to 27 N.m (20 ft. lbs.)
- Tighten all bolts an additional 45°.

16. Tighten bolts marked with **M** using the following three step method, in the sequence shown in illustration:
    - Tighten all bolts to 15 N.m (11 ft. lbs.)
    - Tighten all bolts to 45 N.m (33 ft. lbs.)
    - Tighten all bolts an additional 45°.
17. Remove wedge tool used to hold crankshaft.
18. Check the crankshaft turning torque, it should not exceed 5.6 N.m (50 in. lbs.).
19. Check crankshaft end play. Refer to **STANDARD PROCEDURE - MEASURING CRANKSHAFT END PLAY** .
20. Install connecting rod bearings and caps. **Do Not Reuse Connecting Rod Bolts.** Tighten connecting rod bolts to 20 N.m + 90° (15 ft. lbs.) + 90°. Refer to **ROD, PISTON AND CONNECTING, INSTALLATION**.
21. Install the ladder frame assembly. Refer to **FRAME, LADDER, INSTALLATION**.
22. Install the balance shaft module. Refer to **PUMP, ENGINE OIL, INSTALLATION**.

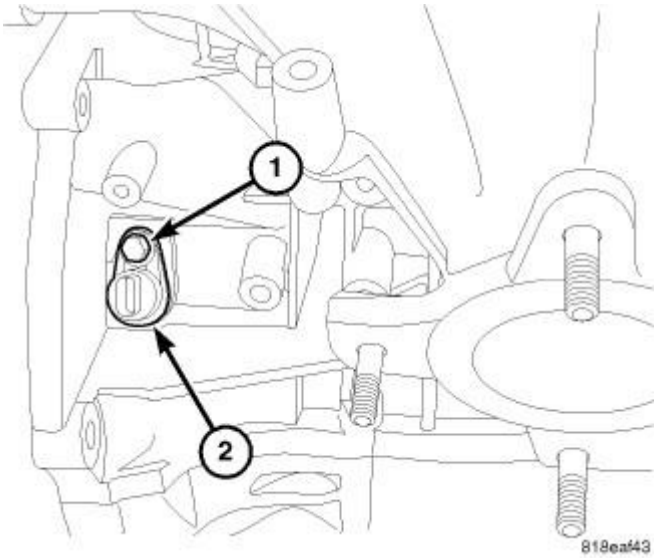

Fig. 207: Crankshaft Position Sensor
Courtesy of CHRYSLER GROUP, LLC

23. Install crankshaft position sensor (2) and tighten bolt (1).
24. Install cylinder head if it was removed. Refer to **CYLINDER HEAD, INSTALLATION**.

 © 2011 Mitchell Repair Information Company, LLC.

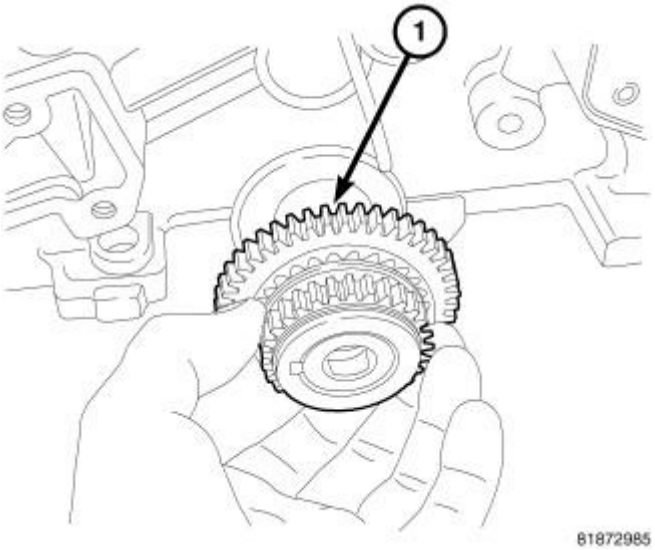

Fig. 208: Crankshaft Sprocket
Courtesy of CHRYSLER GROUP, LLC

25. Install front crankshaft sprocket (1).
26. Install the timing chain. Refer to **CHAIN AND SPROCKETS, TIMING, INSTALLATION**.
27. Install the timing chain front cover . Refer to **COVER(S), ENGINE TIMING, INSTALLATION**.
28. Install the oil pan. Refer to **PAN, OIL, INSTALLATION**.
29. Install rear crankshaft oil seal. Refer to **SEAL, CRANKSHAFT OIL, REAR, INSTALLATION**.
30. Install front crankshaft oil seal. Refer to **SEAL, CRANKSHAFT OIL, FRONT, INSTALLATION**.

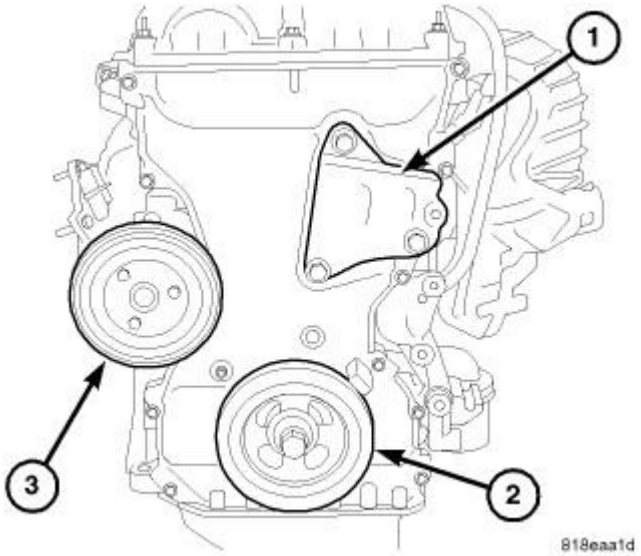

Fig. 209: Right Side Engine Mount Bracket, Crankshaft Damper & Water Pump Pulley
Courtesy of CHRYSLER GROUP, LLC

31. Install engine mount support bracket (1).
32. Install crankshaft vibration damper (2). Refer to **DAMPER, VIBRATION, INSTALLATION**.

 © 2011 Mitchell Repair Information Company, LLC.

33. Install water pump pulley (3).

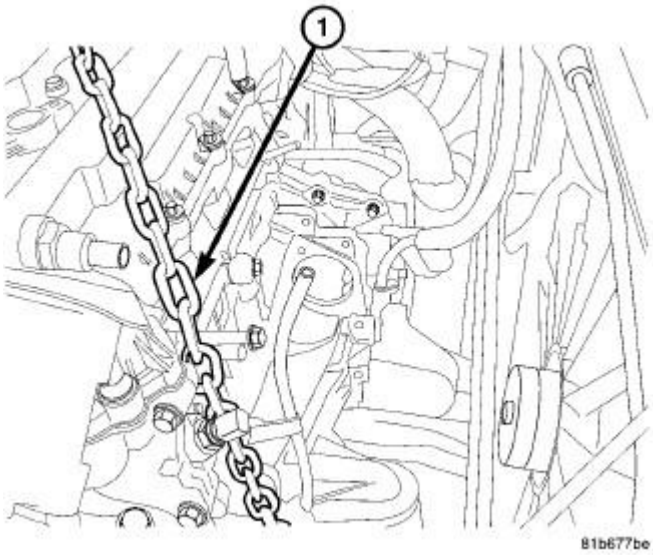

Fig. 210: Lift Chain
Courtesy of CHRYSLER GROUP, LLC

34. Install engine lift chain (1) and remove engine from repair stand.
35. Install crankshaft rear oil seal. Refer to **SEAL, CRANKSHAFT OIL, REAR, INSTALLATION**.
36. Install drive plate/flex plate using **new** bolts. Tighten bolts to 95 N.m (70 ft. lbs.).
37. Attach transaxle to engine. Tighten bellhousing bolts to 101 N.m (75 ft. lbs.).
38. Install the engine assembly into the vehicle. Refer to **INSTALLATION**.

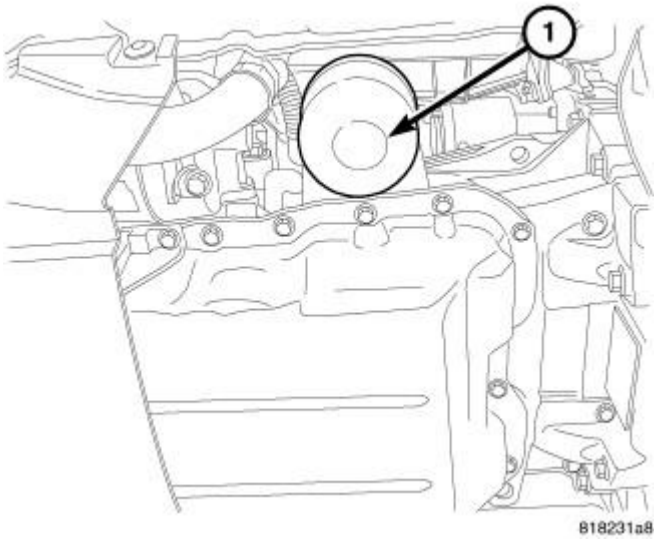

Fig. 211: Oil Filter
Courtesy of CHRYSLER GROUP, LLC

 © 2011 Mitchell Repair Information Company, LLC.

39. Install new oil filter (1) and fill with oil.
40. Fill with coolant. Refer to **STANDARD PROCEDURE** .
41. Start engine and check for leaks.
42. Install engine cover.

DAMPER, VIBRATION

REMOVAL

REMOVAL

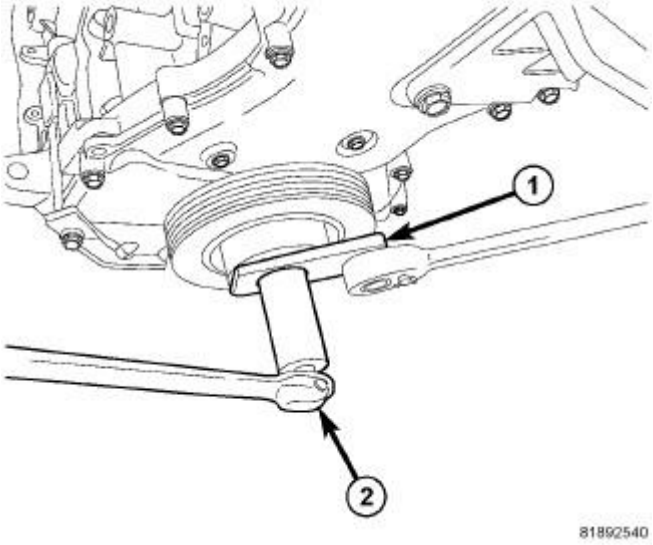

Fig. 212: Damper Removal & Installation
Courtesy of CHRYSLER GROUP, LLC

1. Remove accessory drive belts. Refer to **BELT, SERPENTINE, REMOVAL** .
2. Install Damper holder (special tool #9707, Holder, Vibration Damper) (1).
3. Remove crankshaft damper bolt.
4. Pull damper off crankshaft.

INSTALLATION

INSTALLATION

 © 2011 Mitchell Repair Information Company, LLC.

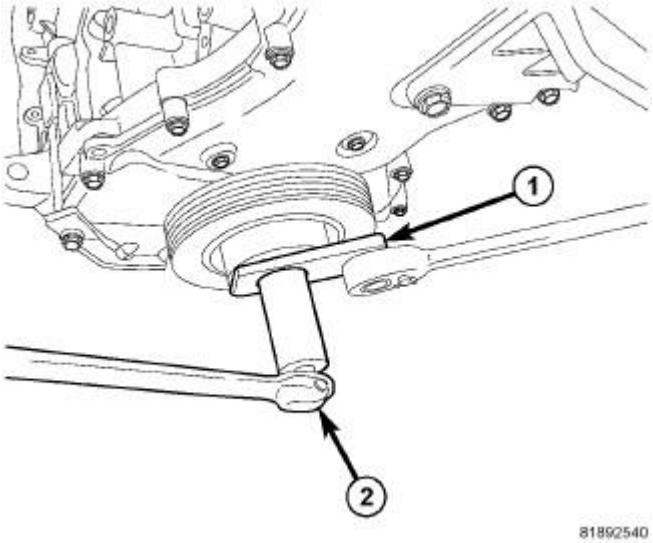

Fig. 213: Damper Removal & Installation
Courtesy of CHRYSLER GROUP, LLC

1. Install crankshaft damper.
2. Apply clean engine oil crankshaft damper bolt threads and between bolt head and washer. Tighten bolt to 210 N.m (155 ft. lbs.).
3. Install accessory drive belts. Refer to **BELT, SERPENTINE, INSTALLATION** .

FLEXPLATE

REMOVAL

REMOVAL

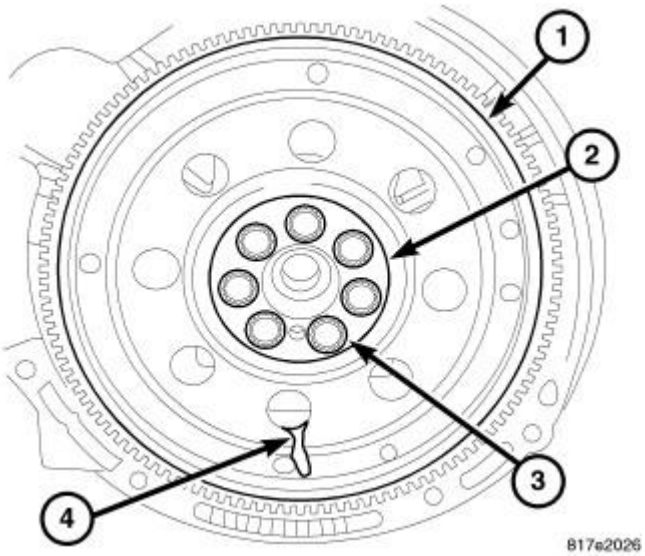

Fig. 214: Flex Plate

 © 2011 Mitchell Repair Information Company, LLC.

Courtesy of CHRYSLER GROUP, LLC

1. Remove transmission. Refer to **BG6, REMOVAL** , **T355, REMOVAL** or **CVT, REMOVAL** .
2. Remove flex plate bolts (3) and discard.
3. Remove washer (2).
4. Remove flex plate (1).

INSTALLATION

INSTALLATION

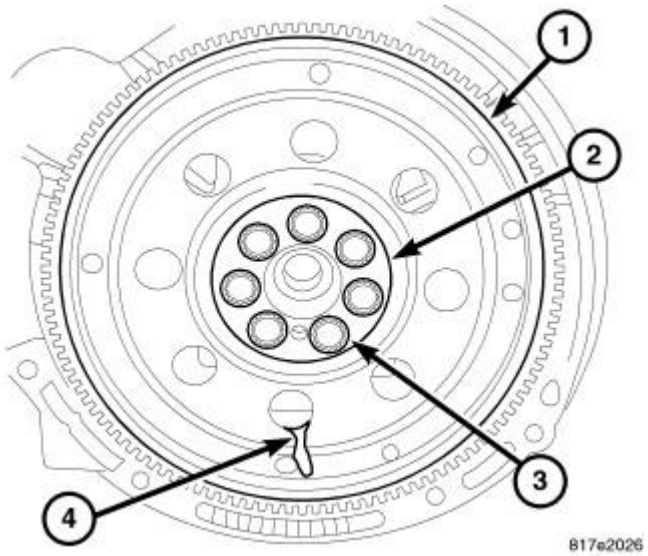

Fig. 215: Flex Plate
Courtesy of CHRYSLER GROUP, LLC

1. Install flex plate (1).
2. Install washer (2).
3. Install **new** flex plate bolts (3) and tighten in a criss-cross pattern to 29 N.m (22 ft. lbs.) plus 51° rotation.
4. Install transaxle. Refer to **BG6, INSTALLATION** , **T355, INSTALLATION** or **CVT, INSTALLATION** .

FRAME, LADDER

REMOVAL

REMOVAL

 © 2011 Mitchell Repair Information Company, LLC.

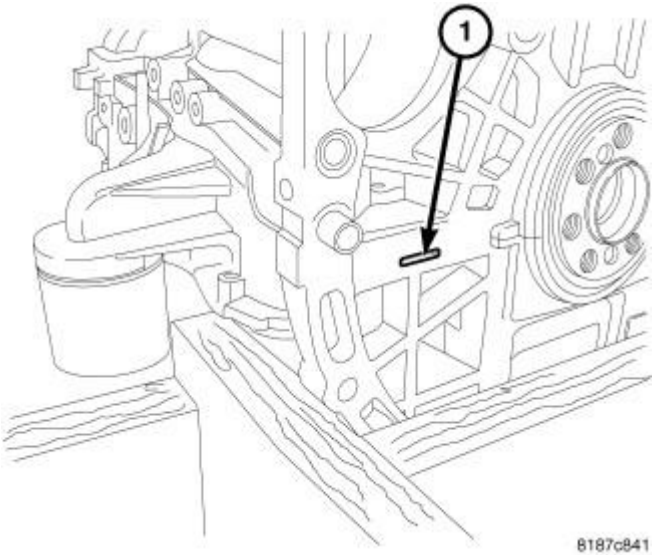

Fig. 216: Pry Point 1
Courtesy of CHRYSLER GROUP, LLC

1. Remove oil pan. Refer to **PAN, OIL, REMOVAL**.
2. Remove balance shaft assembly. Refer to **PUMP, ENGINE OIL, REMOVAL**.
3. Remove ladder frame retaining bolts.
4. Remove ladder frame using pry point cast in the rear of the block (1).

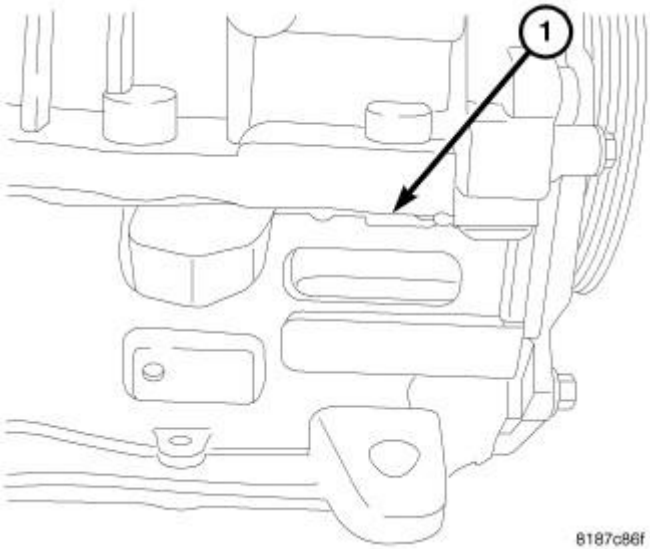

Fig. 217: Pry Point 2
Courtesy of CHRYSLER GROUP, LLC

5. To assist in removing the ladder frame another (1) pry point cast in the right side of the block.

CLEANING

CLEANING

 © 2011 Mitchell Repair Information Company, LLC.

Clean ladder frame with a plastic or wooden scraper and a suitable solvent. Refer to **ENGINE GASKET SURFACE PREPARATION** .

INSTALLATION

INSTALLATION

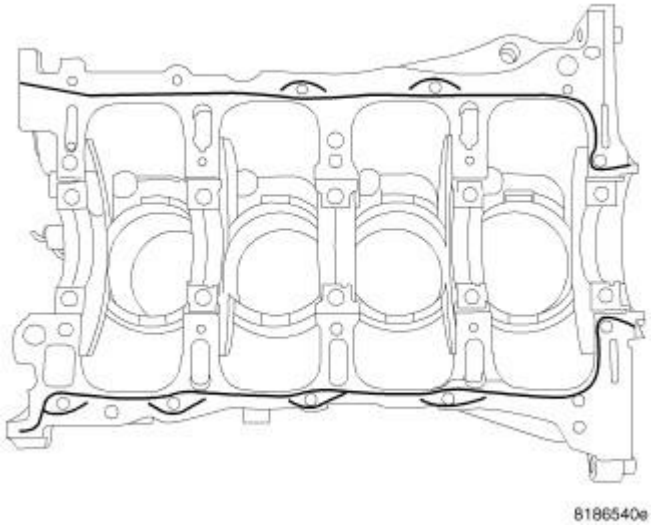

Fig. 218: Sealing Ladder Frame
Courtesy of CHRYSLER GROUP, LLC

NOTE: When using RTV, the sealing surfaces must be clean and free from grease and oil.

NOTE: When using RTV, parts should be assembled in 10 minutes and tighten to final torque within 45 minutes.

1. Apply a 2 mm bead of Mopar® engine sealant RTV or equivalent as shown in illustration.

 © 2011 Mitchell Repair Information Company, LLC.

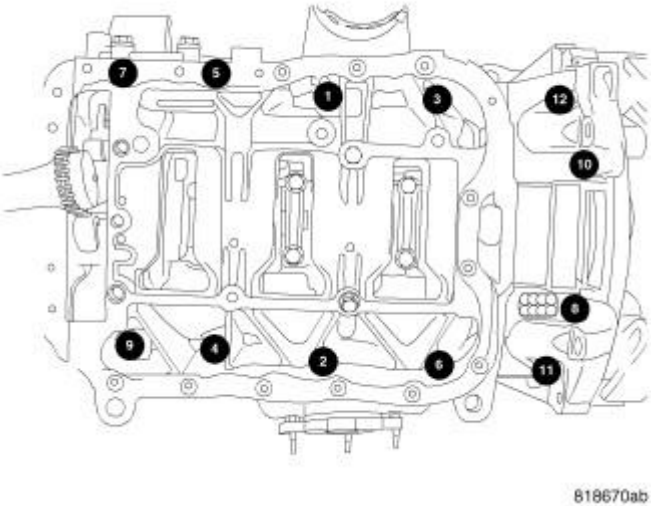

Fig. 219: Ladder Frame Bolts Tightening Sequence
Courtesy of CHRYSLER GROUP, LLC

2. Install bolts and tighten as shown in illustration following a two step method.
   - First: All to 10 N.m (89 in. lbs.).
   - Second: All to 26 N.m (19 ft. lbs.).
3. Install balance shaft module. Refer to **PUMP, ENGINE OIL, INSTALLATION**.
4. Install oil pan. Refer to **PAN, OIL, INSTALLATION**.

RING(S), PISTON

STANDARD PROCEDURE

STANDARD PROCEDURE - PISTON RING - FITTING

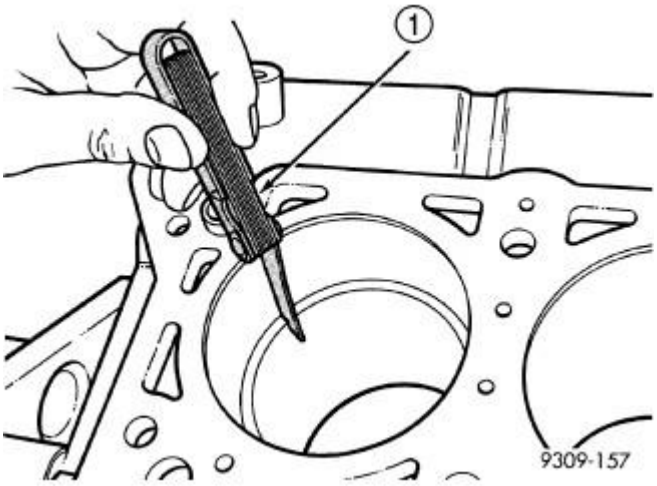

Fig. 220: Check Gap On Piston Rings
Courtesy of CHRYSLER GROUP, LLC

 © 2011 Mitchell Repair Information Company, LLC.

1. Wipe cylinder bore clean. Insert ring and push down with piston to ensure it is square in bore. The ring gap measurement must be made with the ring positioning at least 13 mm (0.50 inch) from bottom of cylinder bore and below the bottom of the oil ring travel where cylinder bore has minimal wear. Check gap with feeler gauge. Refer to Engine **SPECIFICATIONS**.

NOTE: Ring end gap measurements are sensitive to the ring being square in the bore. Care must be used to avoid tilting the rings in cylinder bores when taking measurements.

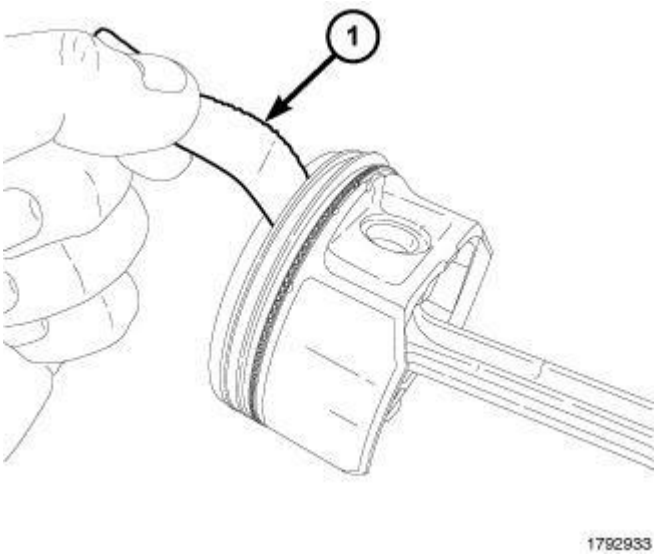

Fig. 221: Piston Ring To Groove Side Clearance
Courtesy of CHRYSLER GROUP, LLC

2. Check piston ring to groove side clearance. Refer to Engine **SPECIFICATIONS**.

CAUTION: Exercise care when using tools on piston. Do not scratch or gouge piston surface or ring grooves as this may cause engine damage.

REMOVAL

REMOVAL

 © 2011 Mitchell Repair Information Company, LLC.

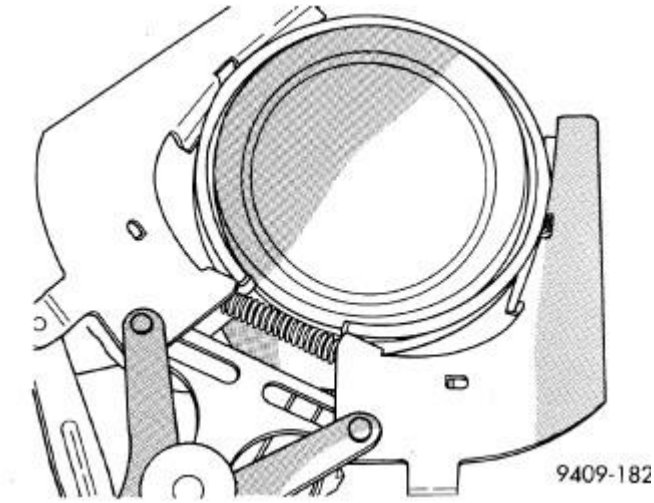

Fig. 222: Piston Rings-Removing And Installing
Courtesy of CHRYSLER GROUP, LLC

1. Using a suitable ring expander, remove upper and intermediate piston rings.
2. Remove the upper oil ring side rail, lower oil ring side rail and then oil ring expander from piston.
3. Clean ring grooves of any carbon deposits.

INSTALLATION

INSTALLATION

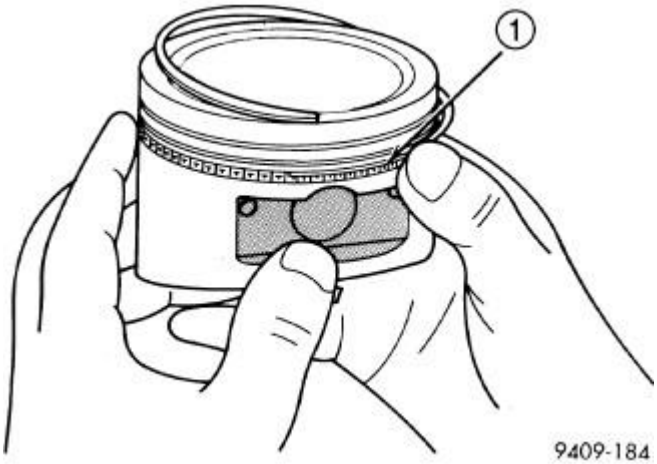

Fig. 223: Installing Side Rail
Courtesy of CHRYSLER GROUP, LLC

NOTE: The identification mark on face of upper and intermediate piston rings must point toward top of piston.

CAUTION: Install piston rings in the following order:

 © 2011 Mitchell Repair Information Company, LLC.

A. Oil ring expander.
B. Upper oil ring side rail.
C. Lower oil ring side rail.
D. No. 2 Intermediate piston ring.
E. No. 1 Upper piston ring.

1. Install oil ring expander.
2. Install upper side rail first and then the lower side rail. Install the side rails by placing one end between the piston ring groove and the oil ring expander. Hold end firmly and press down the portion to be installed until side rail is in position. **Do not use a piston ring expander.**

NOTE: The compression rings are marked Y1 for the upper compression ring and Y2 for the second compression ring. These markings must face upward.

3. Install No. 2 piston ring and then No. 1 piston ring.

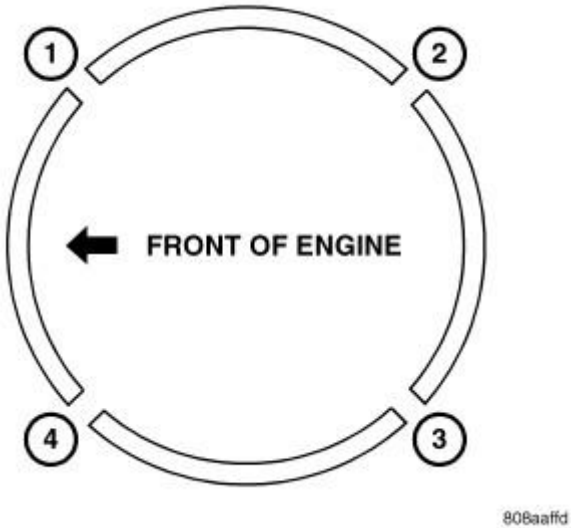

Fig. 224: Identifying Piston Ring End Gap Positions
Courtesy of CHRYSLER GROUP, LLC

4. Position piston ring end gaps as shown in illustration.
5. Position oil ring expander gap at least 45° from the side rail gaps but **not** on the piston pin center or on the thrust direction. Staggering ring gap is important for oil control.

ROD, PISTON AND CONNECTING

DESCRIPTION

DESCRIPTION

The pistons are made of a cast aluminum alloy. The pistons have pressed-in pins attached to forged connecting

 © 2011 Mitchell Repair Information Company, LLC.

rods. The piston pin is offset 0.8 mm (0.0314 in.) towards the thrust side of the piston. The connecting rods are a cracked cap design and are not repairable. The piston with rings, connecting rod and piston pin are serviced as an assembly.

STANDARD PROCEDURE

STANDARD PROCEDURE - PISTON TO CYLINDER BORE FITTING

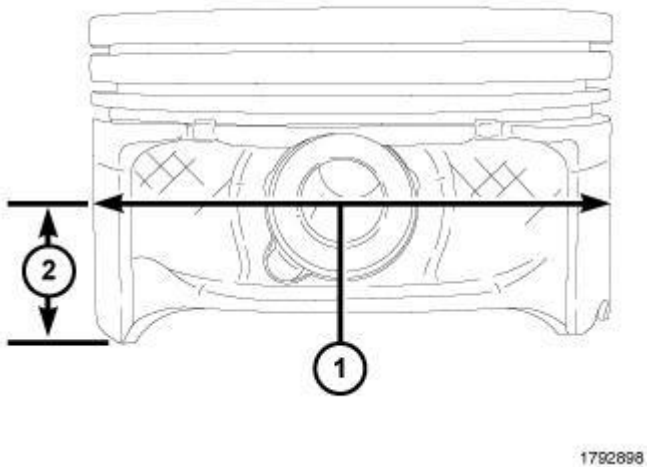

Fig. 225: Identifying Piston Diameter Measurement Location
Courtesy of CHRYSLER GROUP, LLC

NOTE: Pistons and cylinder bores should be measured at normal room temperature, 21°C (70°F).

Piston and cylinder wall must be clean and dry. Piston diameter should be measured 90 degrees to piston pin (1).

1. Measurement should be taken approximately 16 mm (0.629 in.) from the bottom of the skirt (2) as shown in illustration.

 © 2011 Mitchell Repair Information Company, LLC.

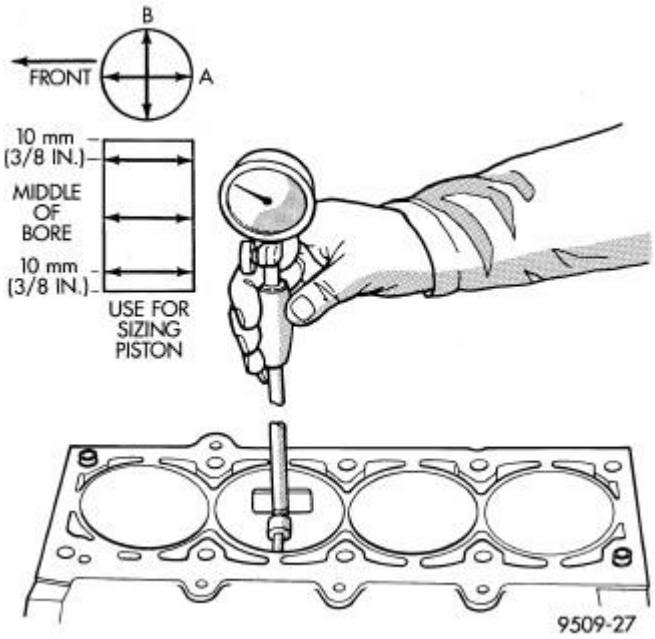

Fig. 226: Checking Cylinder Bore Size
Courtesy of CHRYSLER GROUP, LLC

NOTE: Correct piston to bore clearance must be established in order to assure quiet and economical operation.

2. Cylinder bores should be measured halfway down the cylinder bore and transverse (measurement location B) to the engine crankshaft center line shown in illustration. Refer to **SPECIFICATIONS** .

REMOVAL

REMOVAL

1. Remove the engine. Refer to **REMOVAL**.
2. Remove the cylinder head. Refer to **CYLINDER HEAD, REMOVAL**.
3. Remove the balance shaft module. Refer to **PUMP, ENGINE OIL**.

 © 2011 Mitchell Repair Information Company, LLC.

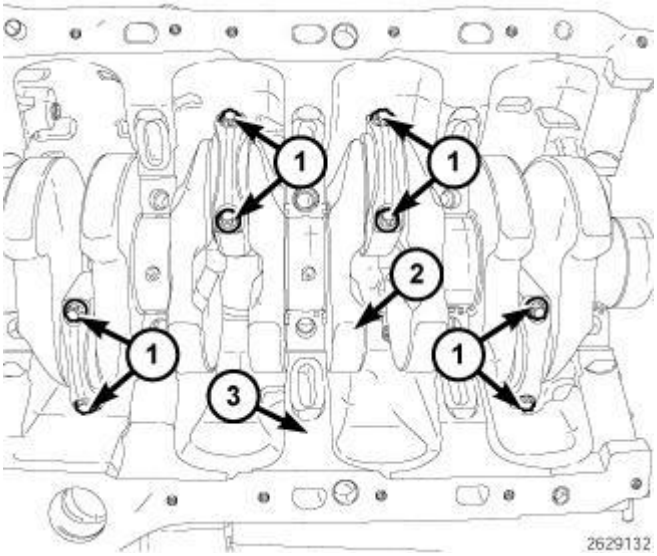

Fig. 227: Identifying Crankshaft, Engine Block, Connecting Rod Bearing Caps & Bolts
Courtesy of CHRYSLER GROUP, LLC

4. Remove bolts (1) and the connecting rod bearing caps.
5. Carefully push the piston through the bore and use care not to damage the oil cooling jet or allow the end of connecting rod to hit the cylinder wall.

INSTALLATION

INSTALLATION

1. Install bearing halves onto the connecting rod and lubricate bearing with clean engine oil.
2. Using a commercially available ring compressor, install the pistons into the cylinder bore. Use care and don't allow the connecting rod to hit the cylinder wall or damage the piston oil cooler jet.

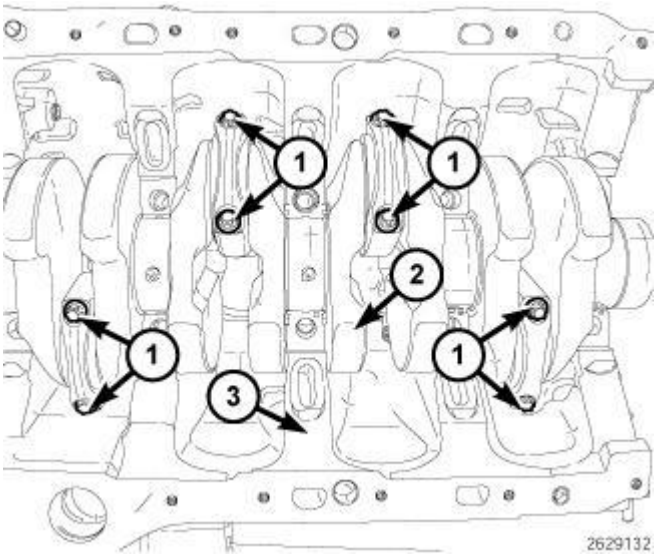

Fig. 228: Identifying Crankshaft, Engine Block, Connecting Rod Bearing Caps & Bolts

 © 2011 Mitchell Repair Information Company, LLC.

Courtesy of CHRYSLER GROUP, LLC

3. Install new rod bearings and check bearing clearance.
4. Install the connecting rod bearing caps.
5. For new connecting rods, tighten bolts to:
   - 5 N.m (44 in. lbs.).
   - 25 N.m (18 ft. lbs.).
   - plus an additional 180°.
6. For used connecting rods, tighten bolts to:
   - 5 N.m (44 in. lbs.).
   - 25 N.m (18 ft. lbs.).
   - plus an additional 90°.

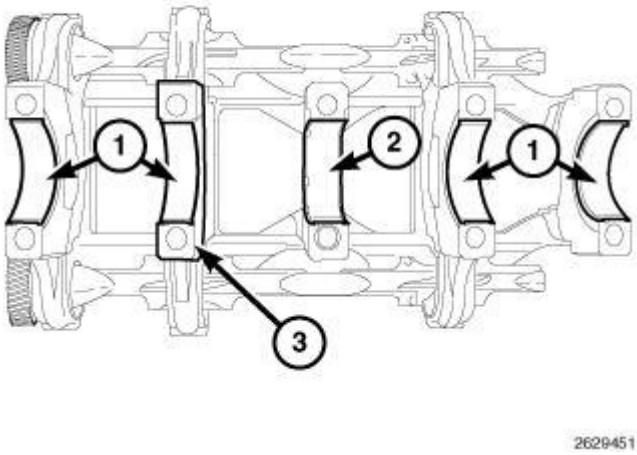

Fig. 229: Installing Bearing Halves Into Bearing Caps
Courtesy of CHRYSLER GROUP, LLC

7. If required, install bearing halves (1 and 2) into bearing caps and lubricate bearing with clean engine oil.
8. Install the balance shaft module and check bearing clearance. Refer to **PUMP, ENGINE OIL**.
9. Install the cylinder head. Refer to **CYLINDER HEAD, INSTALLATION**.
10. Install the engine. Refer to **INSTALLATION**.

SEAL, CRANKSHAFT OIL, FRONT

REMOVAL

REMOVAL

 © 2011 Mitchell Repair Information Company, LLC.

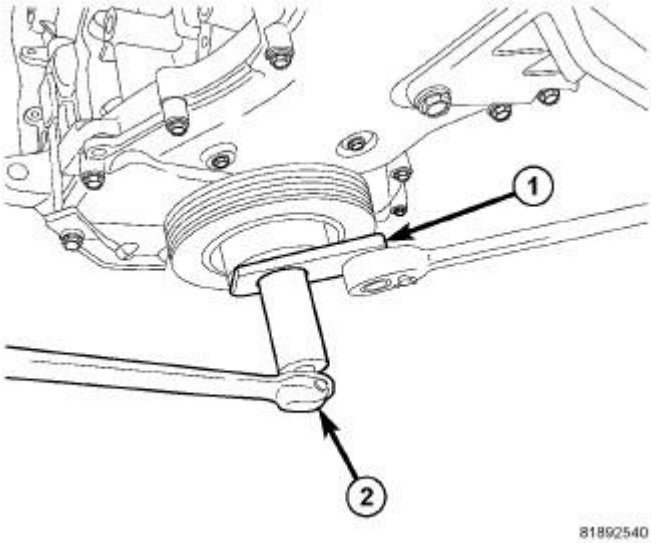

Fig. 230: Damper Removal & Installation
Courtesy of CHRYSLER GROUP, LLC

1. Remove accessory drive belt.
2. Install Damper Holder (special tool #9707, Holder, Vibration Damper) (1) and remove damper retaining bolt.
3. Pull damper off crankshaft.

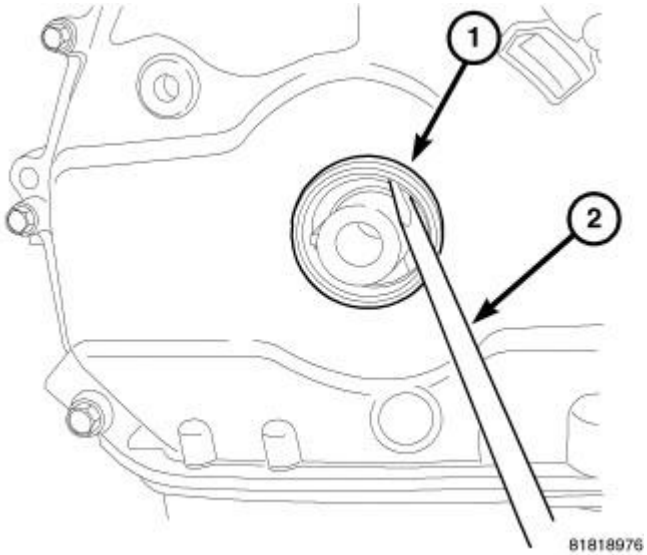

Fig. 231: Front Crankshaft Seal Removal
Courtesy of CHRYSLER GROUP, LLC

4. Remove front crankshaft oil seal (1) by prying out with a screw driver (2). Be careful not to damage the cover seal surface.

INSTALLATION

 © 2011 Mitchell Repair Information Company, LLC.

INSTALLATION

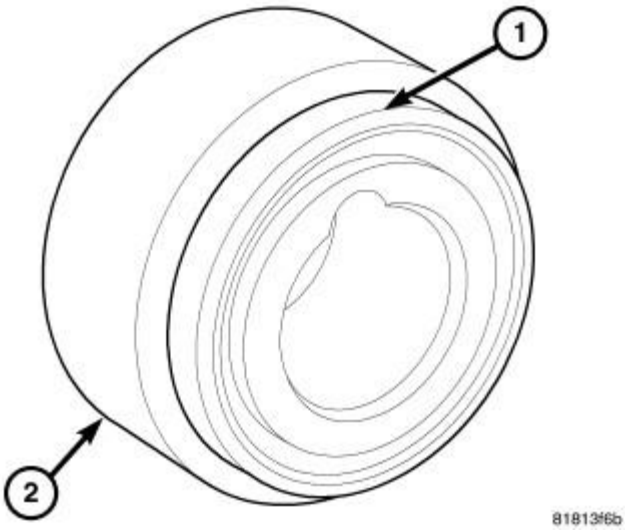

Fig. 232: Crankshaft Oil Seal & Seal Installer 9506
Courtesy of CHRYSLER GROUP, LLC

1. Place seal (1) onto Front Crankshaft Seal Installer (special tool #9506, Installer, Oil Seal) (2) with seal spring towards the inside of engine.

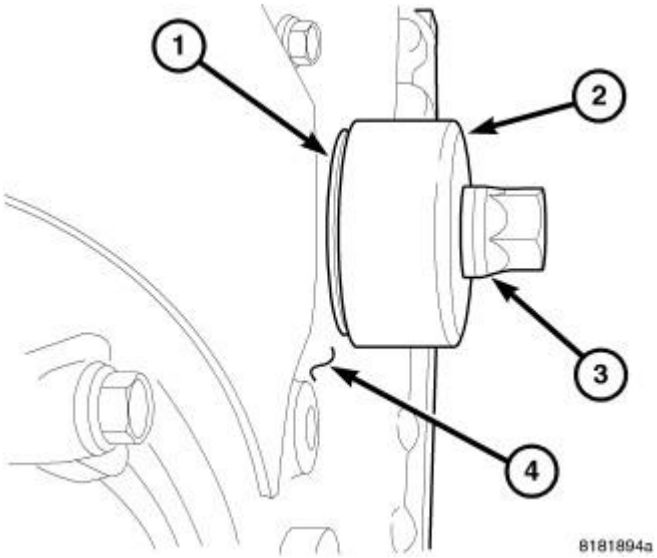

Fig. 233: Installing Front Seal
Courtesy of CHRYSLER GROUP, LLC

2. Install new seal (1) by using Front Crankshaft Seal Installer (special tool #9506, Installer, Oil Seal) (2) and crankshaft damper bolt (3).

 © 2011 Mitchell Repair Information Company, LLC.

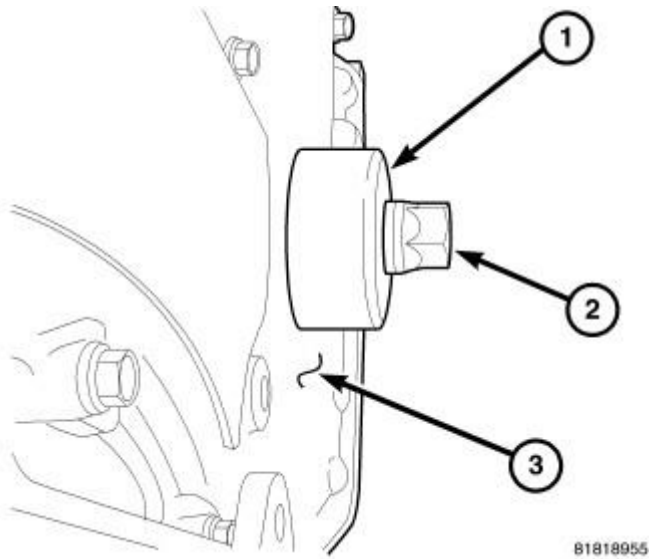

Fig. 234: Front Seal Installed
Courtesy of CHRYSLER GROUP, LLC

3. Press seal into front cover until Front Crankshaft Seal Installer (special tool #9506, Installer, Oil Seal) (1) seats against timing chain cover (3).
4. Remove Front Crankshaft Seal Installer (special tool #9506, Installer, Oil Seal) (1).

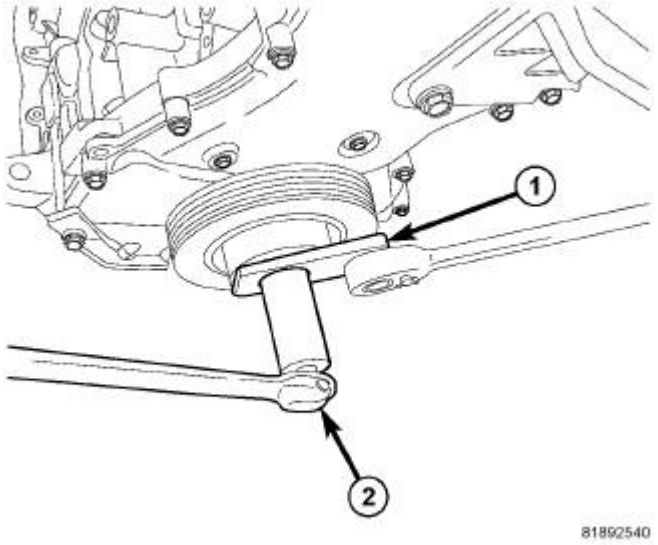

Fig. 235: Damper Removal & Installation
Courtesy of CHRYSLER GROUP, LLC

5. Install crankshaft vibration damper.
6. Oil the bolt threads and between the bolt head and washer.
7. Install damper retaining bolt and Damper Holder (special tool #9707, Holder, Vibration Damper) (1). Tighten bolt to 210 N.m (155 ft. lbs.).

 © 2011 Mitchell Repair Information Company, LLC.

SEAL, CRANKSHAFT OIL, REAR

REMOVAL

REMOVAL

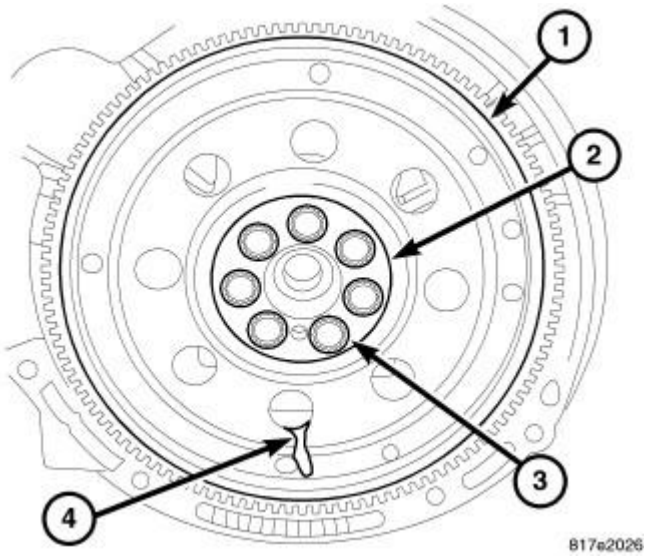

Fig. 236: Flex Plate
Courtesy of CHRYSLER GROUP, LLC

1. Remove transmission and flexplate (1). Refer to **FLEXPLATE, REMOVAL**.

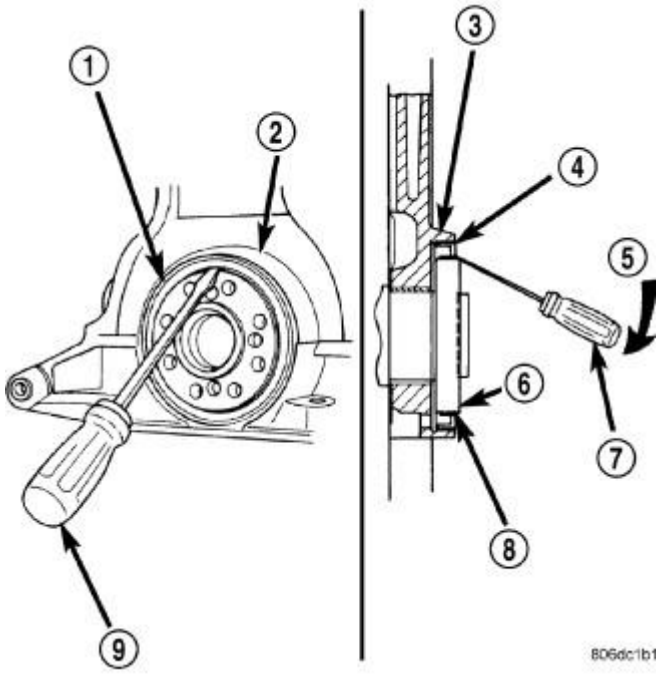

Fig. 237: Rear Crankshaft Oil Seal - Removal
Courtesy of CHRYSLER GROUP, LLC

 © 2011 Mitchell Repair Information Company, LLC.

2. Insert a 3/16 flat bladed screwdriver (7) between the dust lip (8) and the metal case (4) of the crankshaft seal (1). Angle the screwdriver through the dust lip against metal case of the seal. Pry out seal.

CAUTION: Do not permit the screwdriver blade to contact crankshaft seal surface. Contact of the screwdriver blade against crankshaft edge (chamfer) is permitted.

3. Check to make sure the seals garter spring is not on the crankshaft.

INSTALLATION

INSTALLATION

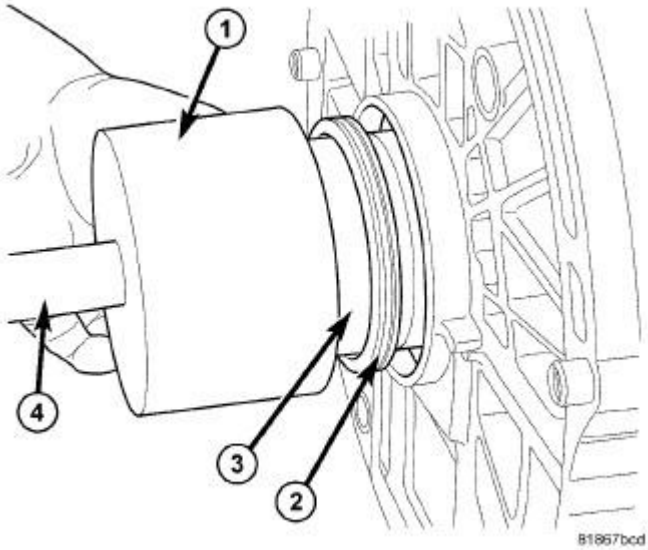

Fig. 238: Driving Seal Into Block Using Seal Driver 9706 And Driver Handle C-4171 Until Seal Driver 9706 Bottoms Out Against Block
Courtesy of CHRYSLER GROUP, LLC

CAUTION: If a burr or scratch is present on the crankshaft edge (chamfer), cleanup with 800 emery cloth to prevent seal damage during installation of new seal. If emery cloth is used, the crankshaft must be cleaned off Mopar® brake parts cleaner.

NOTE: When installing seal, lubricate Seal Guide (special tool #9509, Installer, Oil Seal) with clean engine oil.

1. Place Seal Guide (special tool #9509, Installer, Oil Seal) (3) on crankshaft.
2. Position seal (2) over guide tool. Guide tool should remain on crankshaft during installation of seal. Ensure that the lip of the seal is facing towards the crankcase during installation.
3. Drive the seal into the block using Seal Driver (special tool #9706, Installer, Crankshaft Rear Oil Seal)

 © 2011 Mitchell Repair Information Company, LLC.

(1) and Driver Handle (special tool #C-4171, Driver Handle, Universal) (4) until Seal Driver (special tool #9706, Installer, Crankshaft Rear Oil Seal) bottoms out against the block.

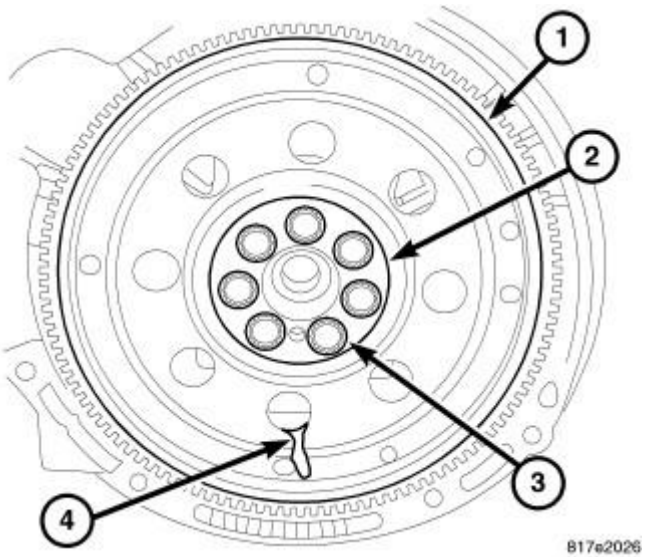

Fig. 239: Flex Plate
Courtesy of CHRYSLER GROUP, LLC

4. Install the flexplate (1) and transmission. Refer to **FLEXPLATE, INSTALLATION**.

ENGINE MOUNTING

DESCRIPTION

DESCRIPTION

The engine mounting system consists of a four-point system utilizing two load-carrying mounts and two torque controlling mounts. The load-carrying mounts are located on each frame rail. The right and left mounts are hydro-elastic mounts. The two torque controlling mounts are attached to a fore/aft member and the front and rear of the engine.

OPERATION

OPERATION

The four-point engine mounting system minimizes the transmission of structure-borne engine noise to the passenger compartment. The load-carrying right and left mounts dampen and isolate vertical motion and vibration. The front and rear mount absorb torque reaction forces and torsional vibrations.

INSULATOR, ENGINE MOUNT, FRONT

REMOVAL

REMOVAL

 © 2011 Mitchell Repair Information Company, LLC.

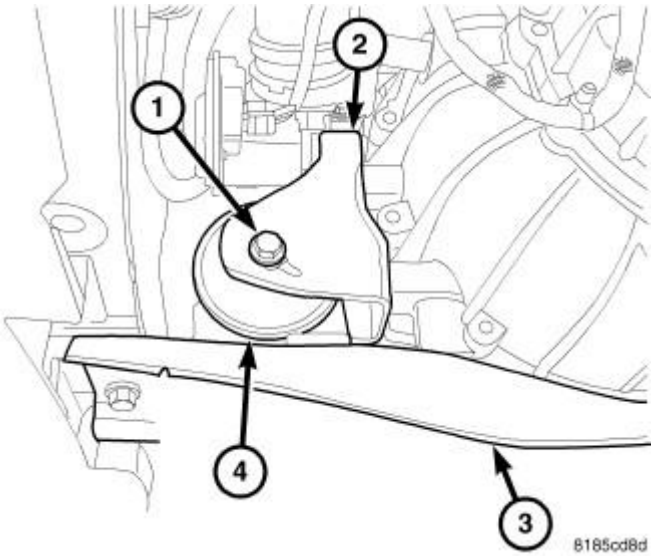

Fig. 240: Through Bolt, Fore Aft Member & Front Mount
Courtesy of CHRYSLER GROUP, LLC

1. Raise vehicle.
2. Remove fore aft member (3) to mount (4) bolts.
3. Remove mount through bolt (1).
4. Remove fore aft member (3) mounting bolts and remove.
5. Remove front mount (4).

INSTALLATION

INSTALLATION

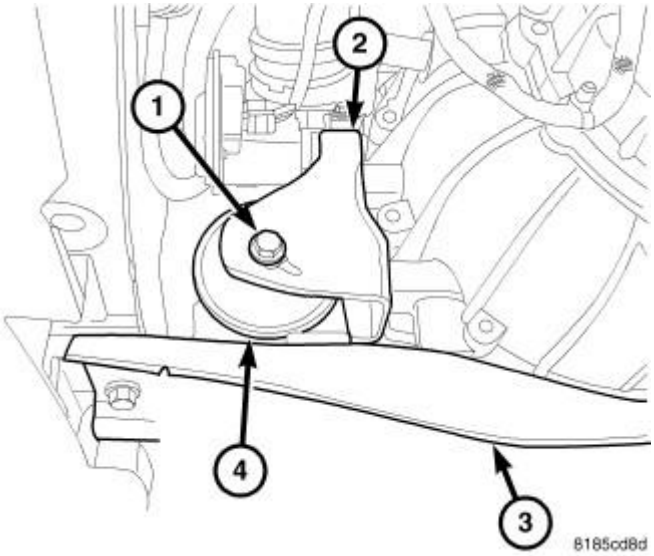

Fig. 241: Through Bolt, Fore Aft Member & Front Mount
Courtesy of CHRYSLER GROUP, LLC

 © 2011 Mitchell Repair Information Company, LLC.

1. Position mount (4) and tighten bolts to 47 N.m (35 ft. lbs.).
2. Install fore aft member (3) and tighten bolts to 100 N.m (74 ft. lbs.).
3. Install mount through bolt (1) and tighten to 47 N.m (35 ft. lbs.).
4. Lower vehicle.

INSULATOR, ENGINE MOUNT, LEFT

REMOVAL

REMOVAL

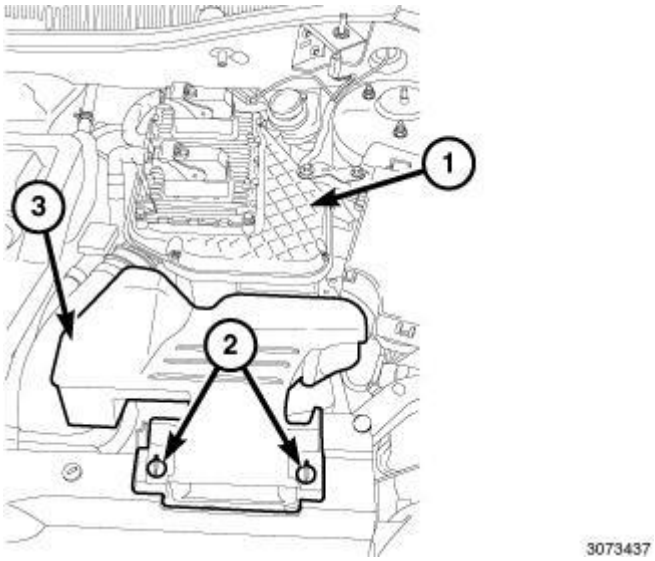

Fig. 242: Retainers, Fresh Air Inlet Duct & Air Cleaner Body
Courtesy of CHRYSLER GROUP, LLC

1. Unlock the retainers (2) and remove the fresh air inlet duct (3) from air cleaner body (1).

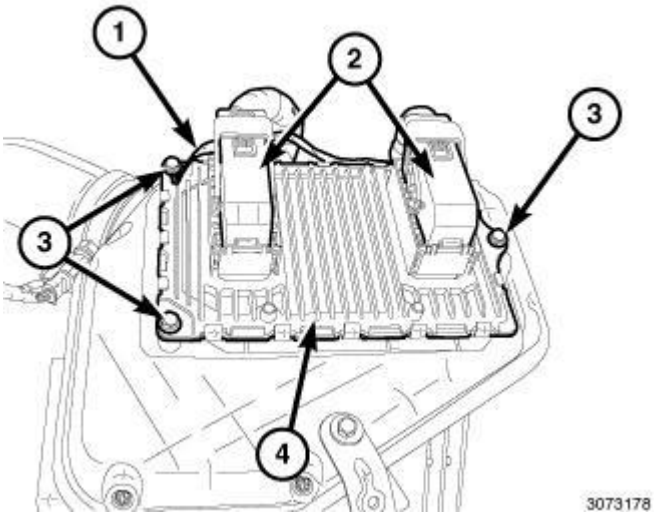

 © 2011 Mitchell Repair Information Company, LLC.

Fig. 243: Electrical Connectors, PCM, Three Mounting Bolts & Ground Wire
Courtesy of CHRYSLER GROUP, LLC

2. Disconnect and isolate the negative battery cable.
3. Unlock and disconnect the electrical connectors (2) from the PCM (4).
4. Remove the mounting bolt (3) and ground wire (1).

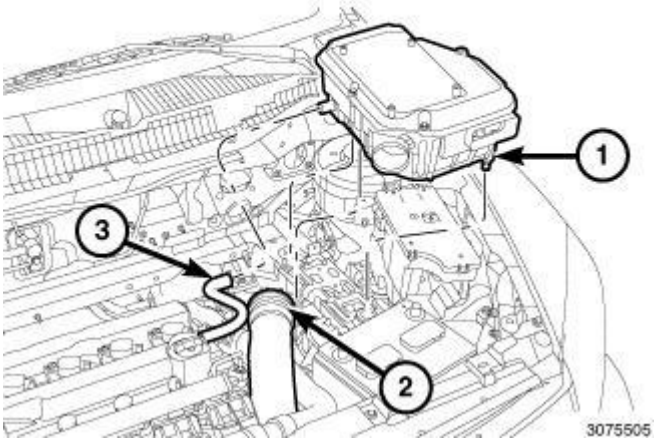

Fig. 244: Air Cleaner Body, Air Inlet Tube & Make-Up Air Hose
Courtesy of CHRYSLER GROUP, LLC

5. Remove the air inlet tube (2) from the air cleaner body (1).
6. Disconnect the make-up air hose (3) from the air cleaner body.
7. Remove the support bracket bolt from the strut tower.
8. Pull upward to disengage the pins from the rubber grommets and remove the air cleaner body (1).

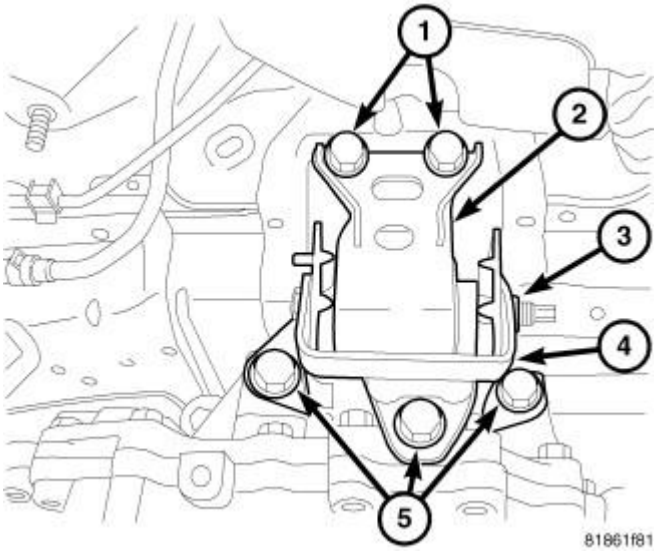

 © 2011 Mitchell Repair Information Company, LLC.

Fig. 245: Left Engine Mount Assembly
Courtesy of CHRYSLER GROUP, LLC

9. Support the transaxle with a suitable jack.
10. Remove the left mount through bolt (3).
11. Remove the left mount bracket to body frame rail fasteners (1).
12. Remove the mount (2).

INSTALLATION

INSTALLATION

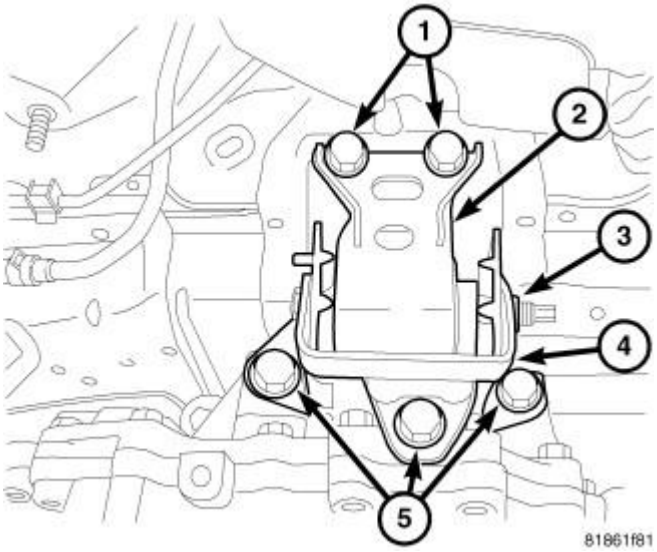

Fig. 246: Left Engine Mount Assembly
Courtesy of CHRYSLER GROUP, LLC

1. Position mount (2) in place.
2. Install left mount to frame rail bolts (1) and torque to 75 N.m (55 ft. lbs.).
3. Install mount through bolt (3) and torque to 100 N.m (74 ft.lbs.).
4. Remove jack.

 © 2011 Mitchell Repair Information Company, LLC.

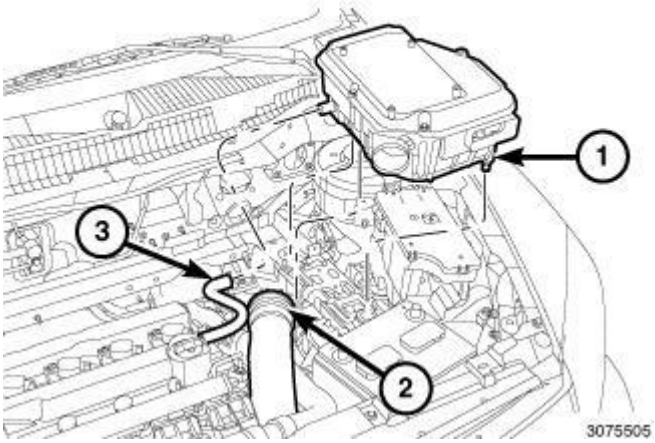

Fig. 247: Air Cleaner Body, Air Inlet Tube & Make-Up Air Hose
Courtesy of CHRYSLER GROUP, LLC

5. Push down on the air cleaner body (1) to engage the pins into the grommets.
6. Install the support bracket bolt to the strut tower and tighten to 10 N.m (89 in. lbs.).
7. Install the air inlet tube (2) to the air cleaner body (1).
8. Connect the make-up air hose (3) to the air cleaner body.

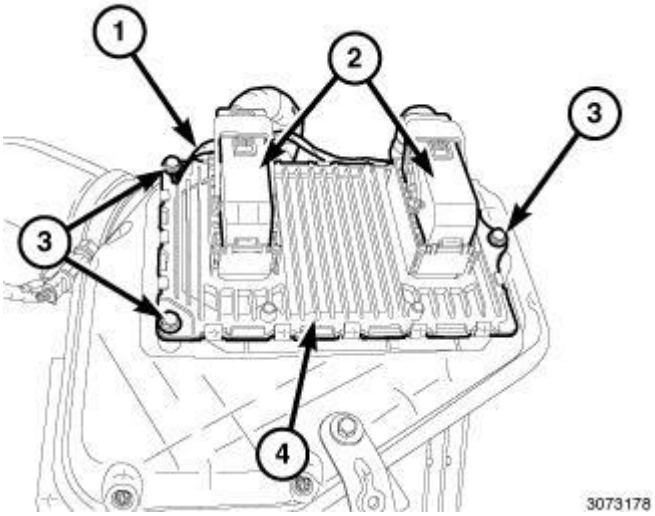

Fig. 248: Electrical Connectors, PCM, Three Mounting Bolts & Ground Wire
Courtesy of CHRYSLER GROUP, LLC

9. Install the mounting bolt (3) with ground wire (1) and tighten to 12 N.m (106 in. lbs.).
10. Connect and lock the electrical connectors (2).

 © 2011 Mitchell Repair Information Company, LLC.

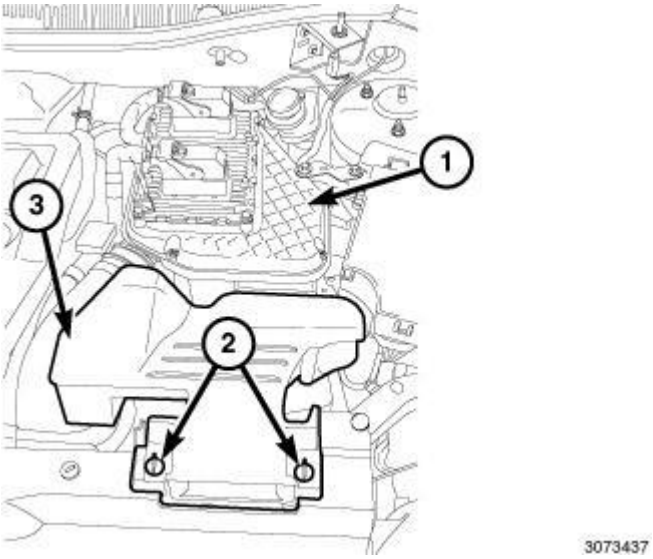

Fig. 249: Retainers, Fresh Air Inlet Duct & Air Cleaner Body
Courtesy of CHRYSLER GROUP, LLC

11. Connect the negative battery cable and tighten nut to 5 N.m (45 in. lbs.).
12. Install the fresh air inlet duct (3) on the air cleaner body (1) and lock the retainers (2).

INSULATOR, ENGINE MOUNT, REAR

REMOVAL

REMOVAL

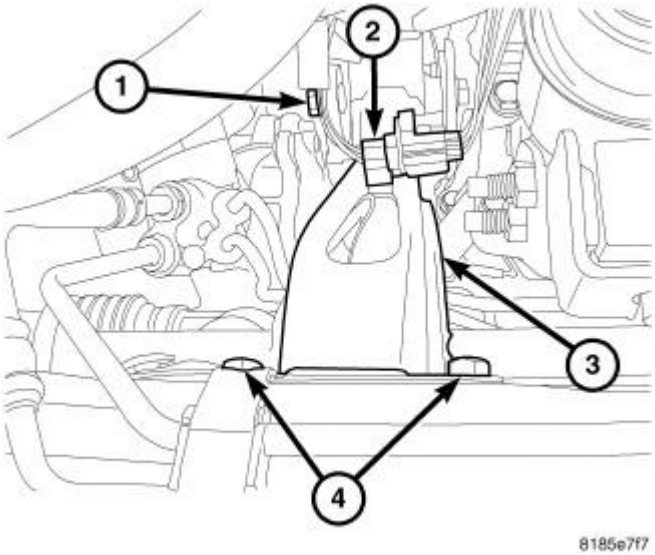

Fig. 250: Rear Mount Through Bolt, Oxygen Sensor Connector, Rear Mount & Rear Mount Retaining Bolts
Courtesy of CHRYSLER GROUP, LLC

1. Remove rear mount retaining bolts (4).
2. Remove rear mount through bolt (1).
3. Remove oxygen sensor connector (2) from mount.
4. Remove rear mount (3).

INSTALLATION

INSTALLATION

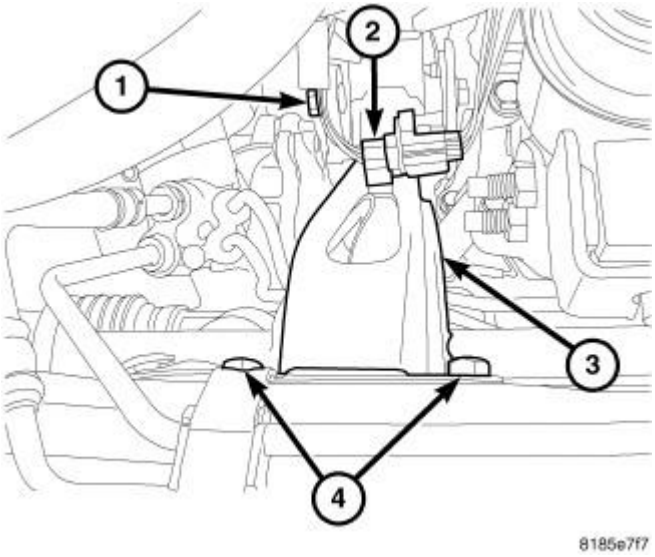

Fig. 251: Rear Mount Through Bolt, Oxygen Sensor Connector, Rear Mount & Rear Mount Retaining Bolts
Courtesy of CHRYSLER GROUP, LLC

1. Position rear mount (3).
2. Install rear mount retaining bolts (4) and tighten to 50 N.m (37 ft. lbs.).
3. Install rear mount through bolt (1) and tighten to 47 N.m (35 ft. lbs.).
4. Install oxygen sensor connector (2) retainer to mount (3).

INSULATOR, ENGINE MOUNT, RIGHT

REMOVAL

REMOVAL

 © 2011 Mitchell Repair Information Company, LLC.

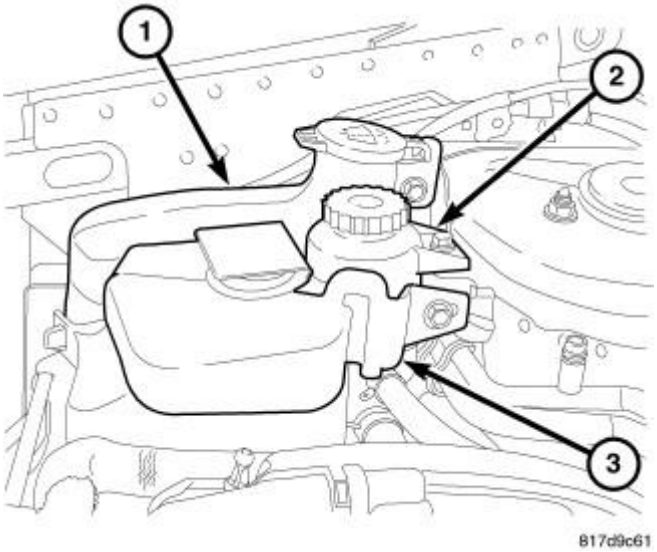

Fig. 252: Windshield Washer Reservoir, Power Steering Reservoir & Coolant Reservoir
Courtesy of CHRYSLER GROUP, LLC

1. Remove coolant reservoir (3) and set aside.
2. Remove power steering reservoir (2) and set aside.
3. Remove windshield washer bottle (1).

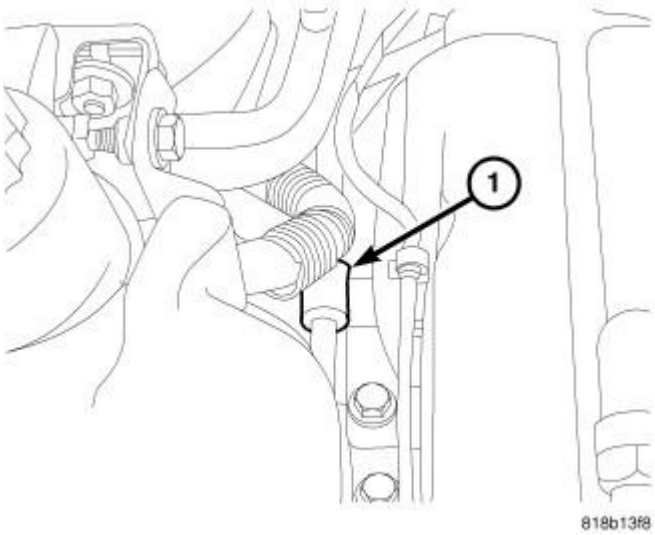

Fig. 253: Power Steering Line Support
Courtesy of CHRYSLER GROUP, LLC

4. Remove power steering line support bracket (1) from engine mount.

 © 2011 Mitchell Repair Information Company, LLC.

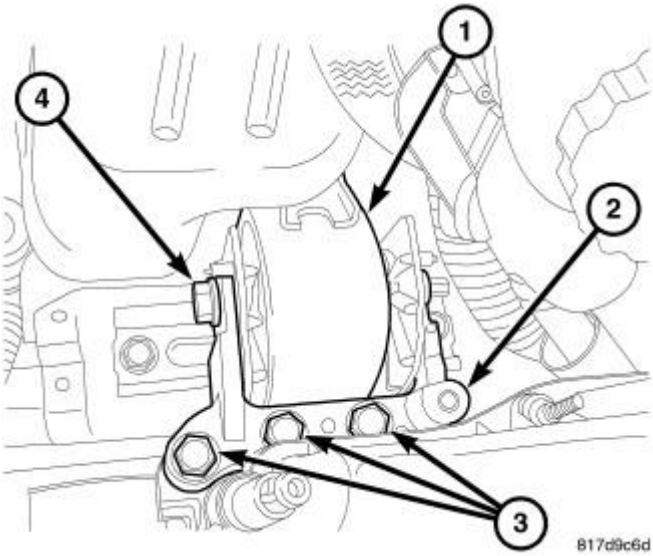

Fig. 254: Right Engine Mount Assembly
Courtesy of CHRYSLER GROUP, LLC

5. Support transaxle with a block of wood and a suitable jack.
6. Remove engine mount through bolt (4).
7. Remove engine mount bracket bolts (3).
8. Remove engine mount retaining bolts.
9. Remove engine mount.

INSTALLATION

INSTALLATION

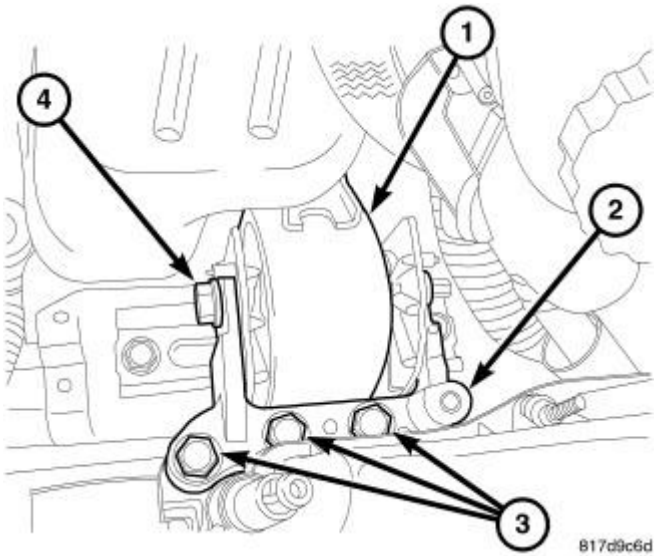

Fig. 255: Right Engine Mount Assembly
Courtesy of CHRYSLER GROUP, LLC

 © 2011 Mitchell Repair Information Company, LLC.

1. Position right engine mount (1).
2. Install engine mount retaining bolts and tighten to 75 N.m (55 ft. lbs.).
3. Install engine mount adapter (2) and tighten bolts (3) to 68 N.m (50 ft. lbs.).
4. Install engine mount through bolt (4) and tighten to 88 N.m (65 ft. lbs.).

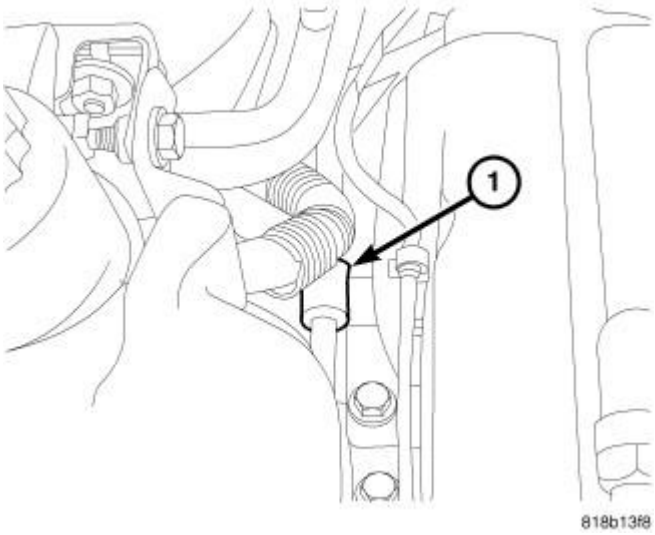

Fig. 256: Power Steering Line Support
Courtesy of CHRYSLER GROUP, LLC

5. Remove jack.
6. Install power steering line support bracket (1) at engine mount.

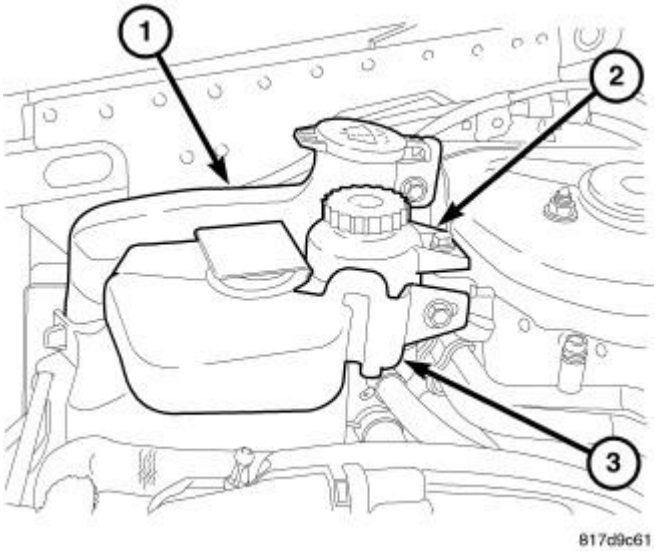

Fig. 257: Windshield Washer Reservoir, Power Steering Reservoir & Coolant Reservoir
Courtesy of CHRYSLER GROUP, LLC

7. Install windshield washer bottle (1).

 © 2011 Mitchell Repair Information Company, LLC.

8. Install power steering reservoir (2).
9. Install coolant reservoir (3).
10. Install engine cover.

LUBRICATION

DESCRIPTION

DESCRIPTION

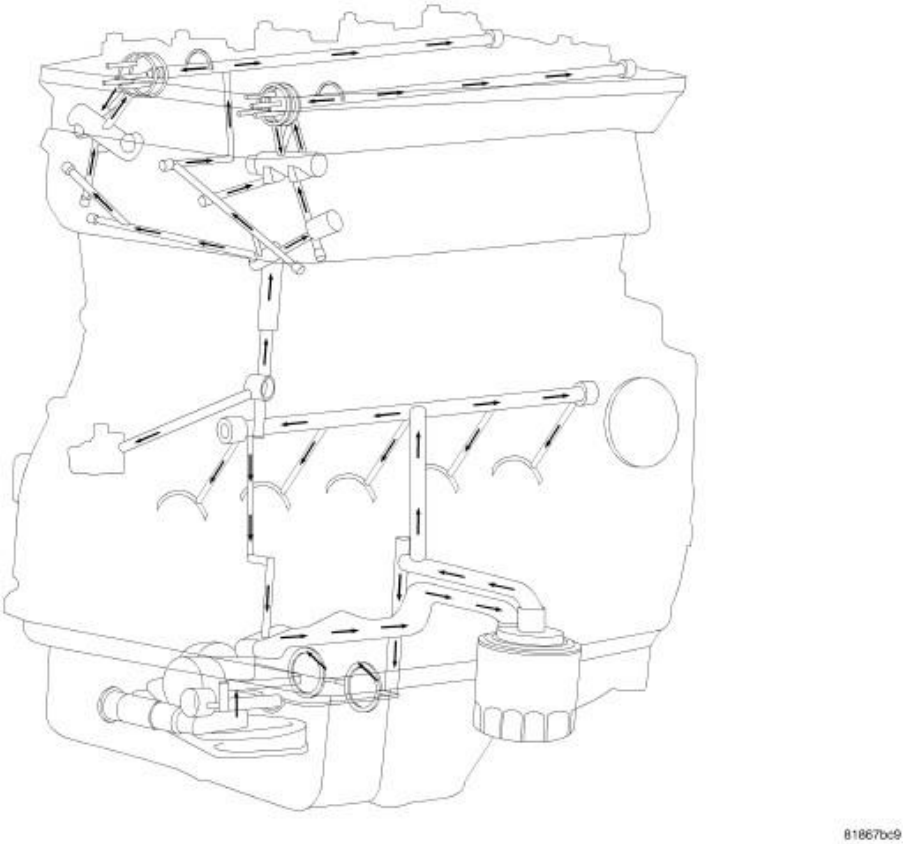

Fig. 258: Oil Flow Diagram
Courtesy of CHRYSLER GROUP, LLC

The lubrication system is a full-flow filtration, pressure feed type. The balance shaft module (BSM) is mounted below the ladder frame and chain driven by the crankshaft. The BSM consists of a non-serviceable pump, oil pressure relief valve, and a non-serviceable balance assembly.

 © 2011 Mitchell Repair Information Company, LLC.

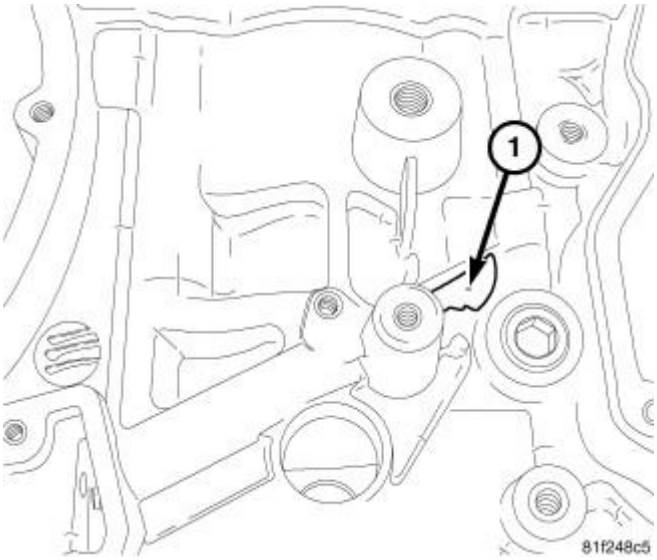

Fig. 259: Oil Hole
Courtesy of CHRYSLER GROUP, LLC

NOTE: Not all blocks have the bolt on timing chain oil squirter. Engine blocks either have a bolt-on oil squirter or a 1.0 mm hole (1) drilled into the oil gallery passage. Engine blocks with the 1.0 mm hole no longer use an oil squirter even though the threaded mounting hole may still be present.

OPERATION

OPERATION

Engine oil is drawn up through the pickup tube and is pressurized by the oil pump and routed through the full-flow filter to the main oil gallery running the length of the cylinder block. A diagonal hole in each bulkhead feeds oil to each main bearing. Drilled passages within the crankshaft route oil from main bearing journals to connecting rod journals. Balance shaft lubrication is provided through an internal oil passage at the #3 bearing location around the BSM mounting bolt. A vertical hole at the number one bulkhead routes pressurized oil through a filter screen and head gasket up to the cylinder head. The oil then divides into three passages; one to the intake cam phaser, one to the exhaust cam phaser and one to the camshafts. The passage to the camshafts divides to feed both of the hollow camshafts at the second cam journal. The rest of cam journals are feed oil through the hollow camshafts. The #1 cam journals are fed oil through the VVT oil passages. Oil passages to the phasers are directed through the OCV (oil control valves) to the #1 journals. The oil then flows through the camshafts then to the cam phasers. Oil returning to the pan from pressurized components supplies lubrication to the valve stems, cam lobes, and tappets. Cylinder bores and wrist pins are splash lubricated from directed slots on the connecting rod thrust collars.

DIAGNOSIS AND TESTING

CHECKING ENGINE OIL PRESSURE

NOTE: Due to restricted access to the oil pressure switch, it is recommended to first check VVT oil pressure at the oil temperature sensor. Refer to DIAGNOSIS AND

 © 2011 Mitchell Repair Information Company, LLC.

TESTING .

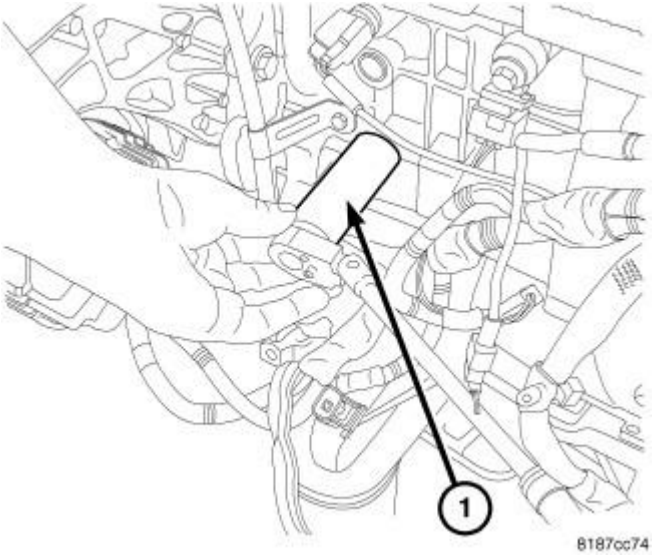

Fig. 260: Oil Sender
Courtesy of CHRYSLER GROUP, LLC

1. Remove the oil pressure switch (1). Refer to **SWITCH, OIL PRESSURE, REMOVAL**.

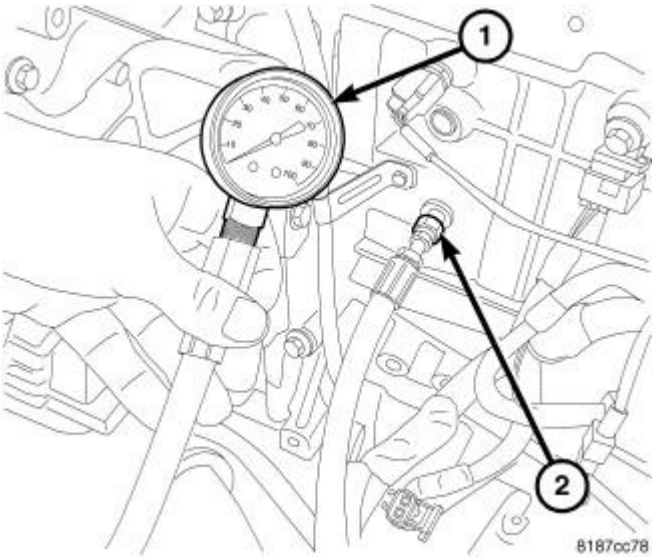

Fig. 261: Oil Pressure Gauge
Courtesy of CHRYSLER GROUP, LLC

CAUTION: Threads in block are 1/8"-28 British Standard Pipe (BSP). Do not install a National Pipe Thread (NPT) threaded adapter, this could crack the cylinder block.

2. Install an 1/8-28 BSP male to 1/8-27 female threaded adapter (2).

 © 2011 Mitchell Repair Information Company, LLC.

3. Install an oil pressure gauge (1).
4. Start engine and record oil pressure.

CAUTION: If oil pressure is 0 at idle, do not perform the 3000 RPM test

5. If oil pressure is 0 at idle, shut off engine. No oil pressure or low oil pressure at the oil pressure switch can be due to the following:
   - Pressure relief valve stuck open.
   - Clogged oil pump pick-up screen.
6. Remove the oil pan and inspect for debris. Refer to **PAN, OIL, REMOVAL**.
7. Remove the oil pressure relief valve. Refer to **VALVE, OIL PRESSURE RELIEF, REMOVAL**.
8. Inspect the oil pressure relief valve. Refer to **INSPECTION** .
9. If pressure relief valve is OK, replace the balance shaft module assembly. Refer to **PUMP, ENGINE OIL, REMOVAL**.

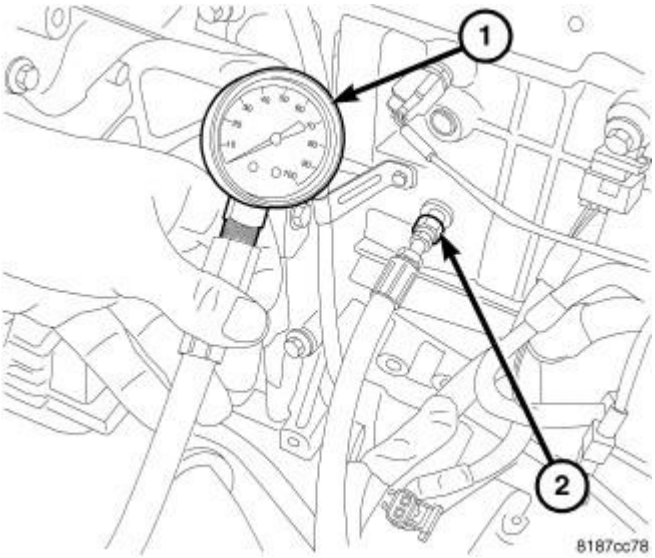

Fig. 262: Oil Pressure Gauge
Courtesy of CHRYSLER GROUP, LLC

10. After test is complete, remove test gauge (1) and fitting (2).

 © 2011 Mitchell Repair Information Company, LLC.

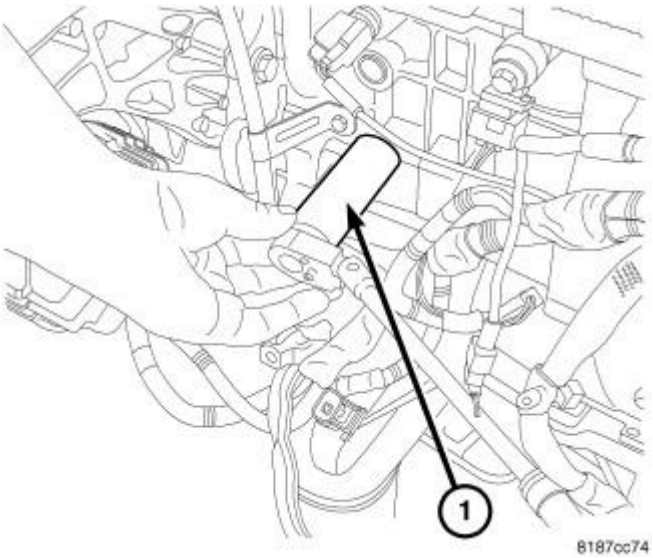

Fig. 263: Oil Sender
Courtesy of CHRYSLER GROUP, LLC

CAUTION: The oil pressure switch has tapered threads, over tightening could crack the engine block.

NOTE: If the oil pressure switch is removed, it must be replaced with a new switch.

11. Install the oil pressure switch and electrical connector. Refer to **SWITCH, OIL PRESSURE, INSTALLATION**.

CHECKING VVT OIL PRESSURE

NOTE: This test can be used to help diagnose VVT faults. Due to restricted access to the oil pressure switch, it is recommended to first perform this procedure to check VVT oil pressure at the oil temperature sensor.

 © 2011 Mitchell Repair Information Company, LLC.

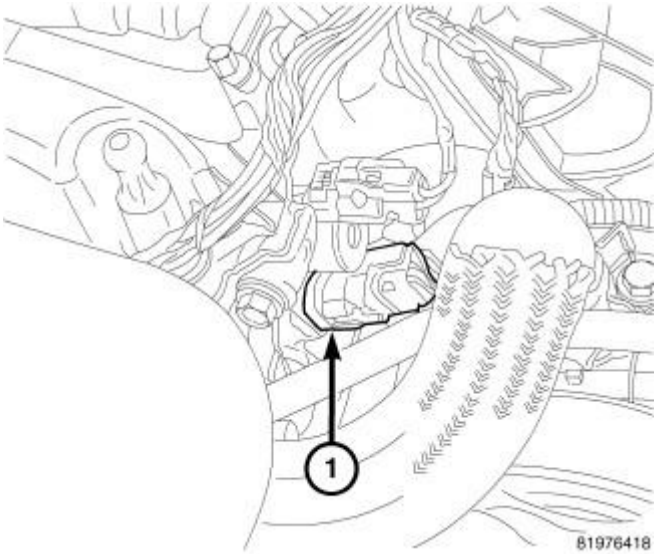

Fig. 264: Oil Temperature Sensor
Courtesy of CHRYSLER GROUP, LLC

NOTE: Anytime the oil temperature sensor is removed, it should be replaced with a new sensor.

1. Disconnect and remove the oil temperature sensor (1). Refer to **SENSOR, OIL TEMPERATURE, REMOVAL**.

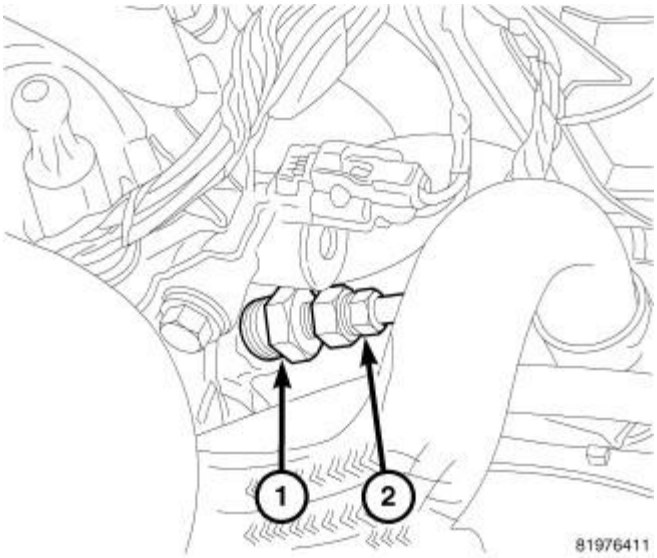

Fig. 265: Oil Pressure Adapter 9879
Courtesy of CHRYSLER GROUP, LLC

CAUTION: Threads in cylinder head are British Standard Pipe (BSP). Do not install a NPT threaded adapter, this could crack the cylinder head.

 © 2011 Mitchell Repair Information Company, LLC.

2. Install threaded adapter (special tool #9879, Adapter, Oil Pressure Test) (1).
3. Install an oil pressure gauge (2).

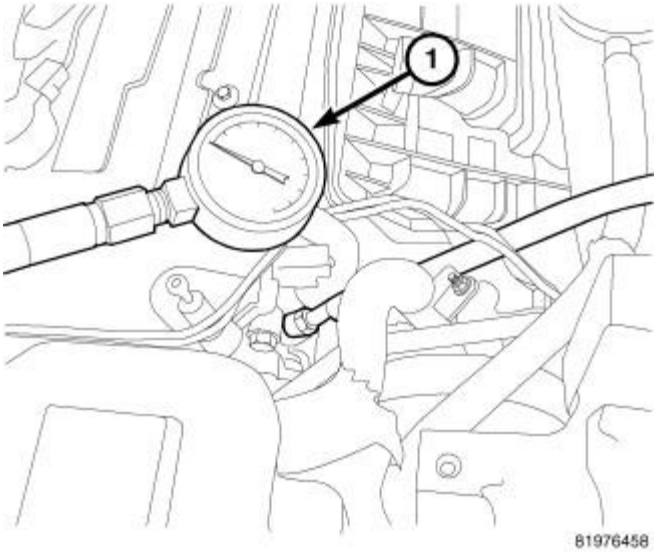

Fig. 266: Oil PSI Gauge
Courtesy of CHRYSLER GROUP, LLC

4. Start engine and record reading on oil pressure gauge (1).

CAUTION: If oil pressure is 0 at idle, do not perform the 3000 RPM test

5. If oil pressure is 0 at idle, shut off engine. No oil pressure or low oil pressure at the oil temperature sensor can be due to the following:
   - Clogged variable valve timing filter screen
   - Pressure relief valve stuck open
   - Clogged oil pump pick-up screen

 © 2011 Mitchell Repair Information Company, LLC.

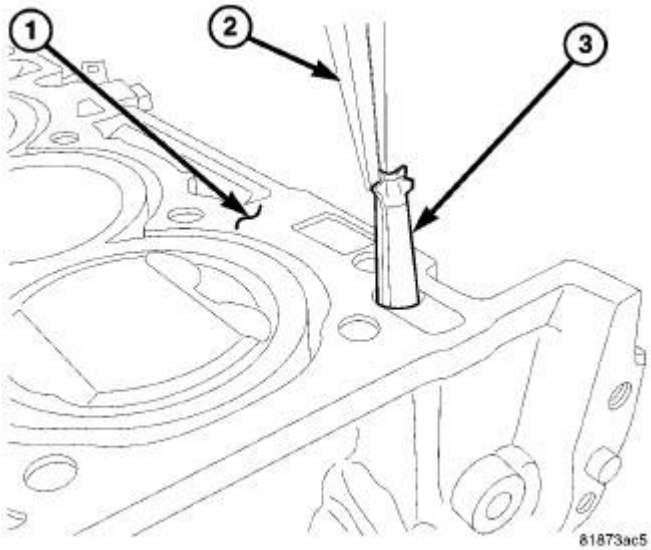

Fig. 267: Variable Valve Timing Filter Screen
Courtesy of CHRYSLER GROUP, LLC

6. To determine if the variable valve timing filter screen is clogged, check engine oil pressure at the oil pressure switch. Refer to **LUBRICATION - DIAGNOSIS AND TESTING** .
7. If oil pressure is acceptable at the oil pressure switch, but low at the oil temperature sensor, remove the cylinder head (1) and inspect the variable valve timing filter screen (3). Refer to **CYLINDER HEAD, REMOVAL**.

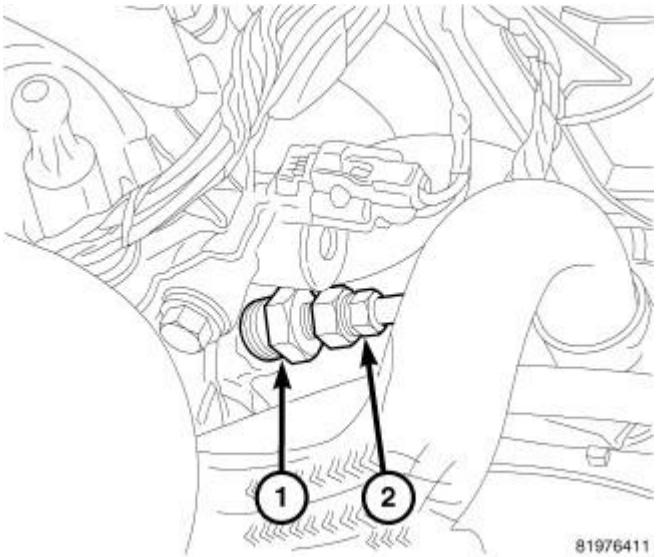

Fig. 268: Oil Pressure Adapter 9879
Courtesy of CHRYSLER GROUP, LLC

8. After test is complete, remove oil pressure gauge (2) and adapter (special tool #9879, Adapter, Oil Pressure Test) (1).

 © 2011 Mitchell Repair Information Company, LLC.

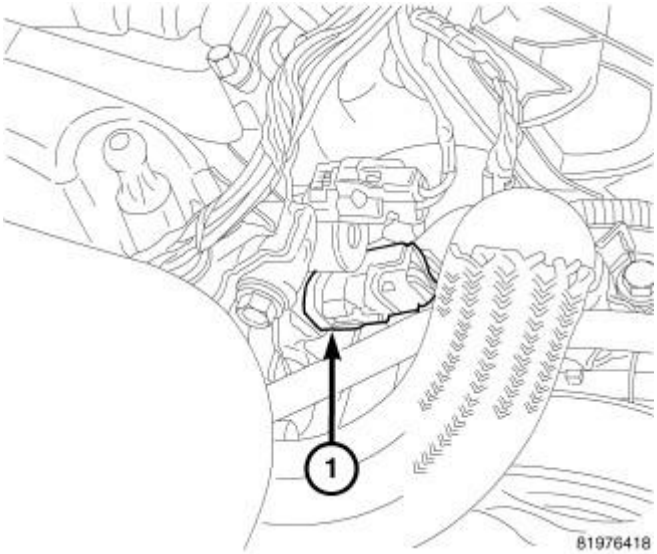

Fig. 269: Oil Temperature Sensor
Courtesy of CHRYSLER GROUP, LLC

9. Install a new oil temperature sensor (1) and connect the electrical connector. Refer to **SENSOR, OIL TEMPERATURE, INSTALLATION**.

CONTROL VALVE, OIL INTAKE

DESCRIPTION

DESCRIPTION

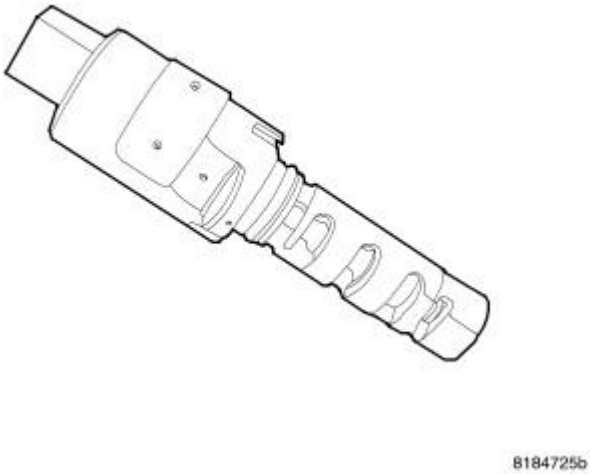

Fig. 270: Solenoid Assembly
Courtesy of CHRYSLER GROUP, LLC

Variable valve timing solenoid assembly. The solenoid receives pulse width modulation signal and the current is controlled within 0 ma to 1000 ma. The spool position is controllable at any position to control supply of oil

 © 2011 Mitchell Repair Information Company, LLC.

between the advance and retard ports.

OPERATION

OPERATION

There is both an Intake and an exhaust camshaft sensor on vehicles equipped with a World Engine. The variable valve timing system used on World Engines requires the exact position of both the intake and exhaust camshaft. The GPEC1 uses camshaft sensor data along with crankshaft data to determine the actual position of the camshafts. Intake and exhaust phaser oil control valves are required on World Engine vehicles using variable valve timing. The oil valves direct oil to the Intake and exhaust phasers. Oil pressure in the phasers moves the camshafts to an advanced or retarded position.

To resolve this inherent conflict between optimum high and low speed valve timing, the GPEC1 controlled engine uses a variable valve timing system. The variable valve timing system advances and retards valve timing by rotating the position of both the intake and exhaust camshafts. With this system, the intake valve opening can range from 80 to 120 crankshaft degrees after Top Dead Center. Likewise, the exhaust valve opening can range from 85 to 120 crankshaft degrees before Top Dead Center. This degree of flexibility provides many benefits, including: Improved Engine Performance, Increased Fuel Economy, Improved Idle Stability and Decreased Engine Emissions. In non operating condition, the camshaft stays in lockpin position of cam phases. This is 120 degrees ATDC for intake camshaft and 120 degrees BTDC for exhaust camshaft.

The variable valve timing system is electronically controlled and hydraulically operated. The GPEC1 receives information from many sensors to determine the optimum valve timing. It then pulse-width modulates oil control valves which direct oil to the cam phasers. The cam phasers use oil pressure to rotate the intake and exhaust camshafts. The rotation of the camshafts is referred to as cam phasing. Before the GPEC1 can begin commanding the camshaft phasing, several enabling conditions must be met:

- The engine oil temperature must be at least -6.6°C (20°F)
- The oil control valve coil temperature must be less than 140°C (284°F)
- Engine speed must be at least 600 to 1000 RPM to achieve minimum oil pressure.
- Battery voltage must be at least 10 volts
- And there must be no camshaft or crankshaft sensor faults, engine timing faults, or oil control valve faults

First we will examine variable valve timing enabling conditions, and then we will take a closer look at the inputs and outputs of the system:

- Accelerator pedal position sensor
- Oil temperature sensor
- Map sensor
- Intake cam sensor
- Exhaust cam sensor
- Crankshaft sensor
- GPEC1
- Exhaust phaser oil control valve

 © 2011 Mitchell Repair Information Company, LLC.

- Intake phaser oil control valve
- Inputs
- Engine control module
- Outputs
- Sensed battery voltage

A minimum oil temperature is required to enable variable valve timing operation. Oil temperature and viscosity also have an impact on the operation of variable valve timing after start-up. Oil is used to control the movement of the camshafts. An incorrect oil viscosity could adversely affect the operation of the system or even render the system inoperative. It may even set a fault code.

The accelerator pedal position sensor indicates how far the driver wants to open the throttle plate. The GPEC1 calculates an initial camshaft set point based on whether the accelerator pedal is at part throttle or wide open throttle.

The MAP sensor provides information regarding engine load.

Sensed battery voltage provides information regarding current system voltage. Sensed battery voltage must be at least 10 volts in order for the oil control valves to function properly.

This information allows the GPEC1 to adjust camshaft timing to achieve the best fuel economy, the best engine performance or a combination of both. The hall-effect crankshaft sensor provides RPM information and determines when the number one piston is approaching Top Dead Center. The sensor generates a signal as the tone wheel, attached to the crankshaft, rotates. The tone wheel has 60 teeth minus two. When the gap, created by the missing teeth passes by the sensor, a signal is produced that indicates the number one piston is at Top Dead Center. The GPEC1 uses crankshaft sensor data along with camshaft data to determine the actual position of the camshaft. There are two hall-effect camshaft sensors on engines equipped with variable valve timing. The GPEC1 uses camshaft sensor data along with crankshaft data to determine the actual position of the camshaft.

The GPEC1 individually controls each valve. It sends a pulse width modulated signal to move a spool within the outer casing of the valve. Depending upon spool movement, oil is directed through the passages to advance or retard cam timing. The oil control valve also has a special cleaning strategy at key-on. The cleaning strategy is known as "debris crush mode". At key-on the GPEC1 cycles the oil control valve on and off several (5) times to crush any debris in the oil control valve and prevent the spool valve from sticking. In non operating condition, the camshaft stays in lockpin position of cam phases. This is 120 degrees ATDC for intake camshaft and 120 degrees BTDC for exhaust camshaft.

There are two oil control valves. One valve directs oil to the intake cam phaser, the other valve directs oil to the exhaust cam phaser. The valves are designed and function in the same manner. The outer casing of each oil valve has five oil passages. A passage for pressurized supply oil. A passage to the advance chamber of the cam phaser. A passage to the retard chamber of the cam phaser. A passage for oil return from the advance chamber of the cam phaser. A passage for oil return from the retard chamber of the cam phaser. Oil flows through the passages and applies pressure to the cam phasers to change cam timing.

There are two cam phasers. One phaser controls the position of the intake camshaft. The other phaser controls the position of the exhaust camshaft. The phasers consist of a sprocket, a rotor vane, and a housing or stator.

 © 2011 Mitchell Repair Information Company, LLC.

The exhaust cam phaser also consists of a front bushing and spring. We will discuss the purpose and function of the bushing and spring later. The housing is bolted and permanently fixed to the camshaft sprocket, while the rotor vane is bolted and permanently fixed to the camshaft. With this design, any movement of the rotor vane in relation to the housing will also move the camshaft. The phaser and sprocket are serviced as an assembly.

Camshaft and crankshaft sensors provide feedback to the GPEC1 regarding the actual position of the camshafts. The GPEC1 then compares the actual camshaft positioning with desired positioning. If the desired positioning is not achieved within a specified time, during the second key cycle a trouble code is set.

There are six new diagnostic trouble codes available to help you determine if the control circuit from the GPEC1 to the oil control valve is intact and operating properly. The codes identify whether the control circuit is open, shorted to ground, or shorted to power. Three trouble codes are related to intake camshaft positioning, the other three codes are specific to exhaust camshaft positioning.

The oil control valve contains both electrical and mechanical components. It is electrically controlled by the GPEC1. The electrical current that energizes the coil results in mechanical motion of the spool valve. It is possible to verify both the electrical and mechanical operation of the valve. The oil control valve consists of a coil that is energized to move a spool within an outer casing. The condition of the coil can be tested with a Digital Volt Ohmmeter or DVOM. With the DVOM set to measure resistance, check the coil for an open, a short to ground, or excessive resistance. The correct resistance value of the coil is between 6 and 8 ohms. The mechanical operation of the oil control valve can be tested using actuator commands on the scan tool. Remove the oil control valve, then navigate to the actuator menu and select the oil control valve. Use commands to activate the valve and watch as the spool valve moves back and forth inside the casing.

Because the cam phasers are hydraulically operated by engine oil, the condition of the oil is very important. The oil must be of the correct viscosity, not obstructed by debris, to maintain correct pressure. Maintaining the correct oil viscosity is critical to the operation of the variable valve timing system. The wrong oil viscosity may cause the variable valve timing to malfunction and trouble codes to set. The correct oil viscosity for this system is 5W20. Oil must be clean, unobstructed and free to flow through the variable valve timing system. Oil could become obstructed in oil passages located in the cylinder head, cylinder block, or even in the oil screen. In the event oil flow is obstructed, further diagnosis or disassembly may be required to pin point the source of the obstruction. The variable valve timing system relies on oil pressure to advance or retard the position of the camshaft. Insufficient oil pressure will adversely affect the operation of variable valve timing. The minimum oil pressure for this system is 15 psi at normal operating temperature.

Though not directly used to change camshaft positioning, the oil screen is an important component of the variable valve timing system. It helps to remove debris going to the variable valve timing components. The oil screen is located in the cylinder block, immediately below the cylinder head. Oil must pass through the oil screen before entering the oil control valve. The cylinder head must be removed to service the oil screen. The intention is not to service the oil screen during vehicle life.

How the cam phaser works. The cam phaser assembly has eight separate chambers; four advance chambers and four retard chambers. When camshaft advance is requested, oil enters all four advance chambers and exerts force on the rotor vane. Because the rotor vane is bolted to the camshaft, the entire camshaft profile moves along with the rotor vane. At the same time, oil is forced out of the retard chambers. When camshaft retard is requested oil enters the retard chambers to move the camshaft in the opposite direction. There is a lock pin on one side of the rotor vane that fits inside a recessed area in the housing. The lock pin ensures that the default position of the intake cam phaser is 120 crankshaft degrees full retard and the default position of the exhaust

 © 2011 Mitchell Repair Information Company, LLC.

cam phaser is 120 crankshaft degrees full advance. When the engine is turned off, rotational force and inertia move the intake camshaft and rotor vane toward the retard position. The exhaust cam phaser includes a spring and bushing to work against the rotational force of the engine, allowing the exhaust cam phaser to lock in the fully advanced position. Under most conditions the cam phasers are returned to lock pin position when the engine is turned off. In the unique condition of an engine stall, which abruptly shuts off the engine, the cam phasers may not return to the lock pin position. In this case, the phasers will return to the lock pin position at the next start-up. Lock pin position is the most ideal cam timing for idle stability. When engine RPM exceeds approximately 600 to 1000 RPM, oil pressure unlocks the pins and variable valve timing resumes. Once enabling conditions are met, the GPEC1 uses input from sensors to calculate optimum valve timing.

There are four preprogrammed modes from which the GPEC1 bases initial valve timing.

- Starting
- Idle or Part throttle
- Wide open throttle
- Limp-in or Default

From each preprogrammed mode, the GPEC1 adjusts valve timing based on operating conditions.

GPEC1 has calculated optimum intake valve timing of 112 degrees after Top Dead Center and optimum exhaust valve timing of 97 degrees before Top Dead Center. The GPEC1 pulse width modulates the oil control valves to advance or retard the camshaft to their desired location. The spool valve inside the intake oil control valve is energized and moves to allow pressurized oil into the advance chambers of the intake cam phaser. At the same time, the spool valve inside the exhaust oil control valve is energized and moves to allow pressurized oil into the retard chambers of the exhaust cam phaser. Oil enters the advance chambers of the intake phaser and the retard chambers of the exhaust phaser. Oil pressure releases the lock pin from its locked position and pushes against the rotor vane. Both the rotor vanes are moved, advancing the intake camshaft and retarding the exhaust camshaft.

REMOVAL

FRONT SOLENOID 1/1

 © 2011 Mitchell Repair Information Company, LLC.

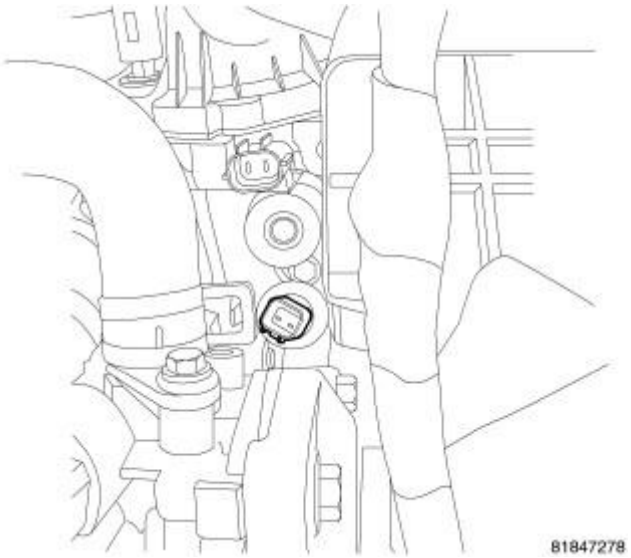

Fig. 271: Oil Pressure Sensor
Courtesy of CHRYSLER GROUP, LLC

1. Disconnect negative battery cable.
2. Remove engine cover.
3. Rotate hose clamp out of way.
4. Disconnect oil pressure sensor electrical connector.
5. Remove oil pressure sensor.
6. Disconnect variable valve timing solenoid electrical connector.

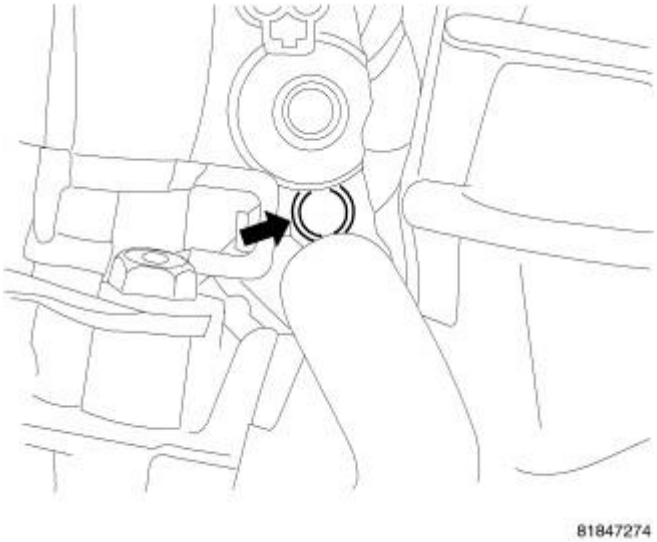

Fig. 272: Solenoid Mounting Bolt
Courtesy of CHRYSLER GROUP, LLC

7. Remove variable valve timing solenoid mounting bolt.

 © 2011 Mitchell Repair Information Company, LLC.

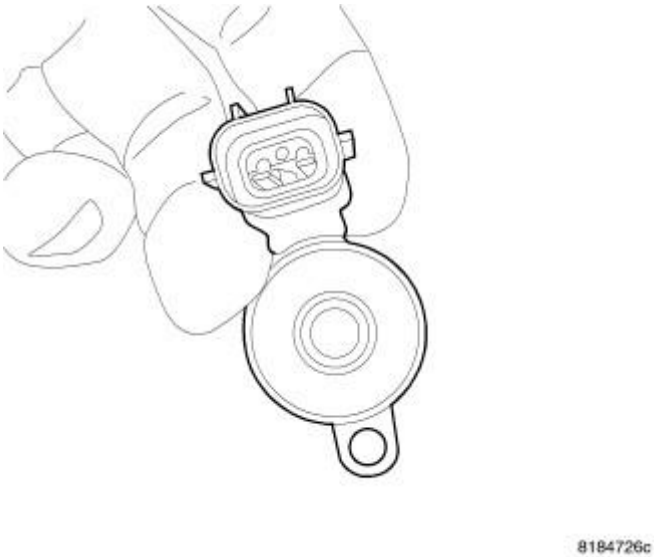

Fig. 273: Solenoid Mounting Tab 1/1
Courtesy of CHRYSLER GROUP, LLC

8. Pull solenoid straight out of cylinder head.

REAR SOLENOID 1/2

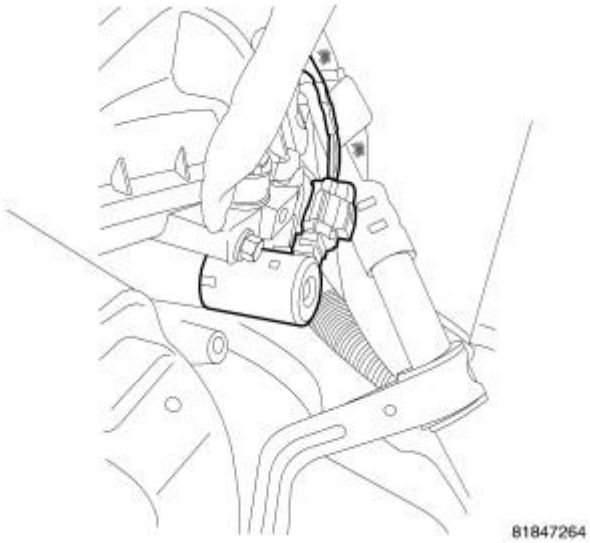

Fig. 274: Solenoid Location 1/2
Courtesy of CHRYSLER GROUP, LLC

1. Disconnect negative battery cable.
2. Remove engine cover.
3. Disconnect variable valve timing solenoid electrical connector.
4. Remove variable valve timing solenoid mounting bolt.

 © 2011 Mitchell Repair Information Company, LLC.

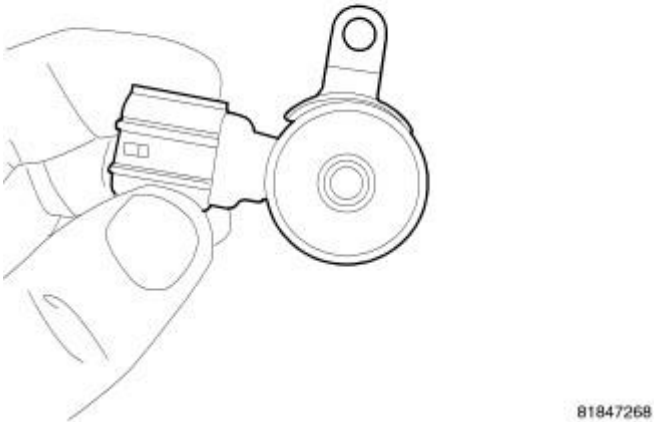

Fig. 275: Solenoid Mounting Tab 1/2
Courtesy of CHRYSLER GROUP, LLC

5. Pull solenoid straight out of cylinder head.

INSTALLATION

FRONT SOLENOID 1/1

Fig. 276: Solenoid Mounting Tab 1/1
Courtesy of CHRYSLER GROUP, LLC

1. Solenoid for front location 1/1. Note mounting tab location is different between front and rear solenoids.

 © 2011 Mitchell Repair Information Company, LLC.

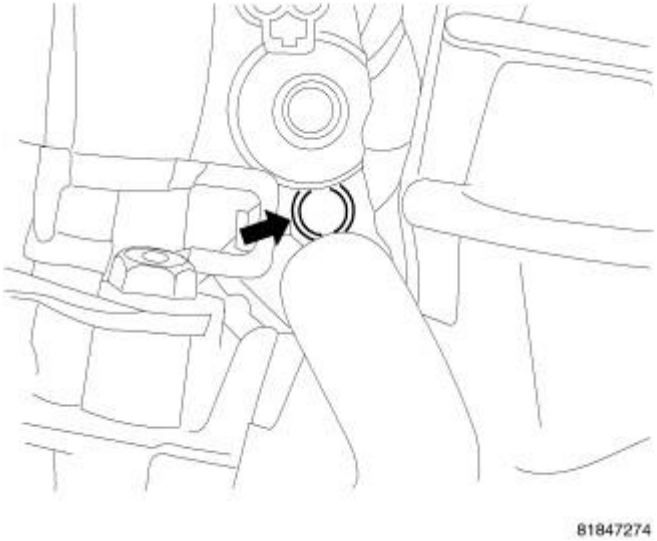

Fig. 277: Solenoid Mounting Bolt
Courtesy of CHRYSLER GROUP, LLC

2. Install solenoid into cylinder head.
3. Install mounting bolt and tighten to 12 N.m (9 ft. lbs.).

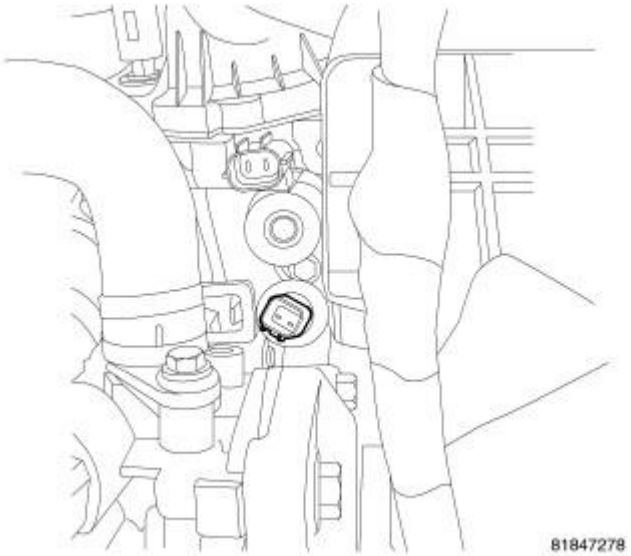

Fig. 278: Oil Pressure Sensor
Courtesy of CHRYSLER GROUP, LLC

4. Install oil pressure sensor.
5. Connect electrical connector to oil pressure sensor.
6. Connect electrical connector to Variable valve timing solenoid.
7. Connect negative battery cable.
8. Install engine cover.

 © 2011 Mitchell Repair Information Company, LLC.

REAR SOLENOID 1/2

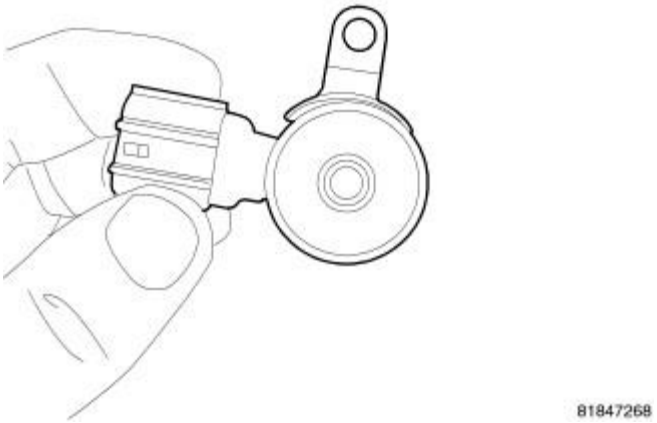

Fig. 279: Solenoid Mounting Tab 1/2
Courtesy of CHRYSLER GROUP, LLC

1. Rear variable valve timing solenoid. Note mounting tab location is different between front and rear solenoids.
2. Install solenoid into cylinder head.
3. Install mounting bolt and tighten to 12 N.m (9 ft. lbs.).
4. Connect electrical connector to Variable valve timing solenoid.

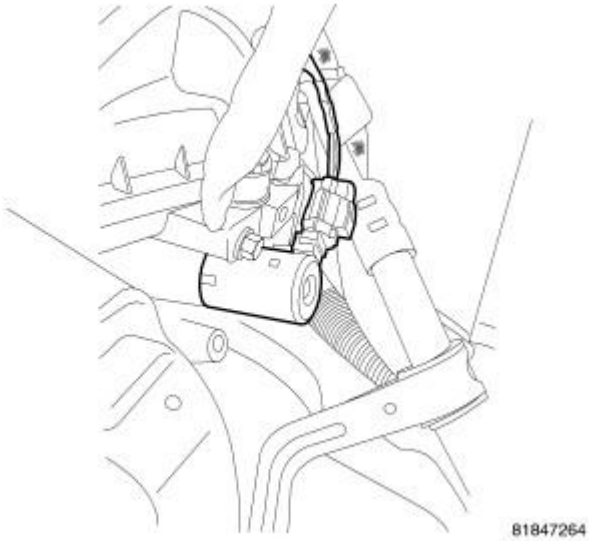

Fig. 280: Solenoid Location 1/2
Courtesy of CHRYSLER GROUP, LLC

5. Connect negative battery cable.
6. Install engine cover.

 © 2011 Mitchell Repair Information Company, LLC.

COOLER, OIL

DESCRIPTION

DESCRIPTION

An engine oil cooler is used on some engine packages. The cooler is a coolant-to-oil type and mounted between the oil filter and oil filter adapter.

REMOVAL

REMOVAL

NOTE: The oil cooler can not be cleaned out. In the event that the engine requires rebuilding or replacement, the oil cooler should be replaced.

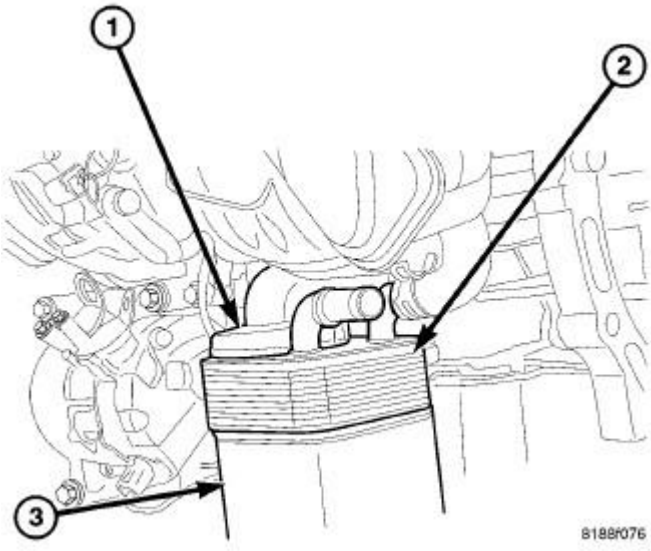

Fig. 281: Oil Cooler
Courtesy of CHRYSLER GROUP, LLC

1. Raise vehicle on hoist.
2. Drain cooling system. Refer to **STANDARD PROCEDURE** .
3. Disconnect oil cooler coolant hoses.
4. Remove oil filter (3).

 © 2011 Mitchell Repair Information Company, LLC.

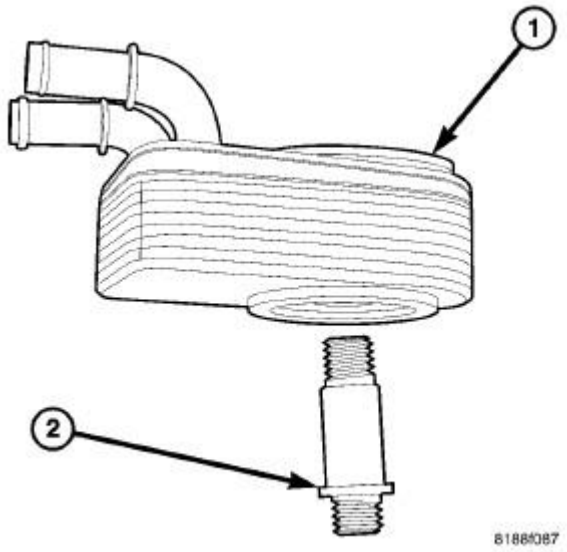

Fig. 282: Oil Cooler & Oil Cooler Connector Bolt
Courtesy of CHRYSLER GROUP, LLC

5. Remove oil cooler connector bolt (2).
6. Remove oil cooler (1).

INSTALLATION

INSTALLATION

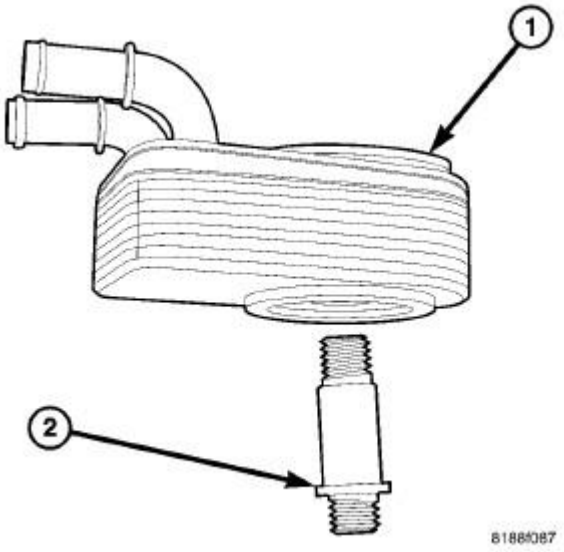

Fig. 283: Oil Cooler & Oil Cooler Connector Bolt
Courtesy of CHRYSLER GROUP, LLC

1. Replace oil cooler seal (1).

 © 2011 Mitchell Repair Information Company, LLC.

2. Lubricate seal and position oil cooler to oil filter adapter, aligning notch to tab.
3. Install oil cooler connector bolt (2). Tighten connector bolt to 49 N.m (36 ft. lbs.).

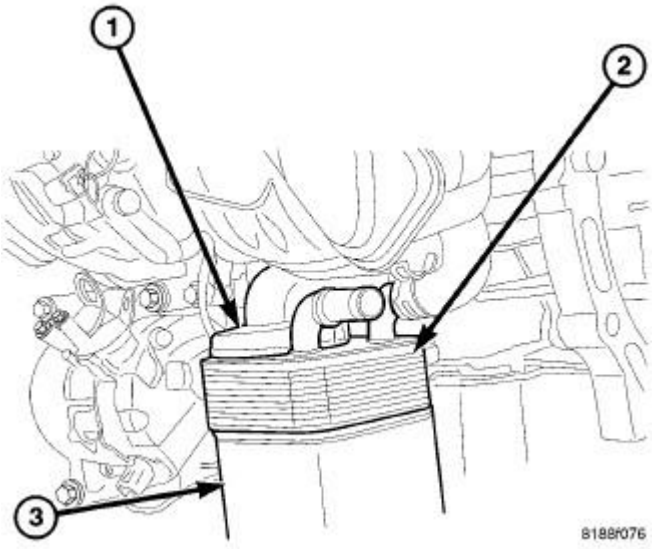

Fig. 284: Oil Cooler
Courtesy of CHRYSLER GROUP, LLC

4. Install oil filter (3).
5. Connect oil cooler coolant hose.
6. Lower vehicle.
7. Fill cooling system. Refer to **STANDARD PROCEDURE** .

FILTER, ENGINE OIL

REMOVAL

REMOVAL

 © 2011 Mitchell Repair Information Company, LLC.

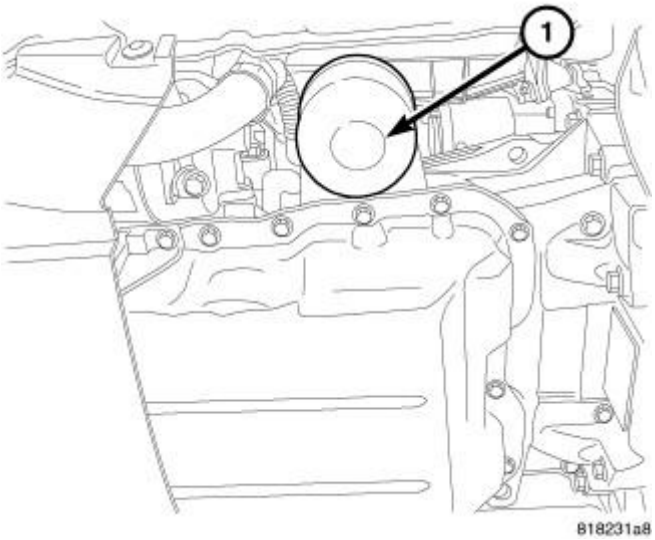

Fig. 285: Oil Filter
Courtesy of CHRYSLER GROUP, LLC

CAUTION: When servicing the oil filter, avoid deforming the filter can by installing the remove/install tool band strap against the can to base lock seam. The lock seam joining the can to the base is reinforced by the base plate.

1. Using a suitable filter wrench, turn oil filter (1) counterclockwise to remove.

INSTALLATION

INSTALLATION

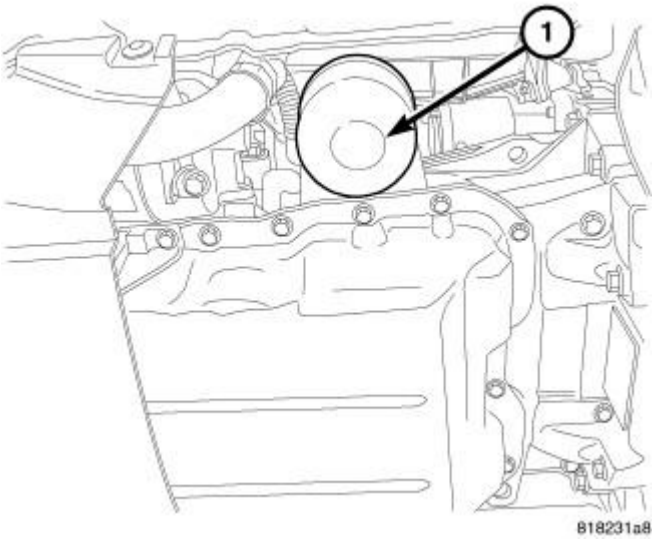

Fig. 286: Oil Filter
Courtesy of CHRYSLER GROUP, LLC

 © 2011 Mitchell Repair Information Company, LLC.

1. Clean and check filter mounting surface. The surface must be smooth, flat and free of debris or pieces of gasket.
2. Lubricate new oil filter gasket.
3. Screw oil filter (1) on until the gasket contacts base. Tighten to 14 N.m (124 in. lbs.).

OIL

STANDARD PROCEDURE

ENGINE OIL AND FILTER CHANGE

WARNING: New or used engine oil can be irritating to the skin. Avoid prolonged or repeated skin contact with engine oil. Contaminants in used engine oil, caused by internal combustion, can be hazardous to your health. Thoroughly wash exposed skin with soap and water. Do not wash skin with gasoline, diesel fuel, thinner, or solvents, health problems can result. Do not pollute, dispose of used engine oil properly. Contact your dealer or government agency for location of collection center in your area.

Change engine oil at mileage and time intervals described in the Maintenance Schedule. Refer to **MAINTENANCE SCHEDULES, DESCRIPTION** .

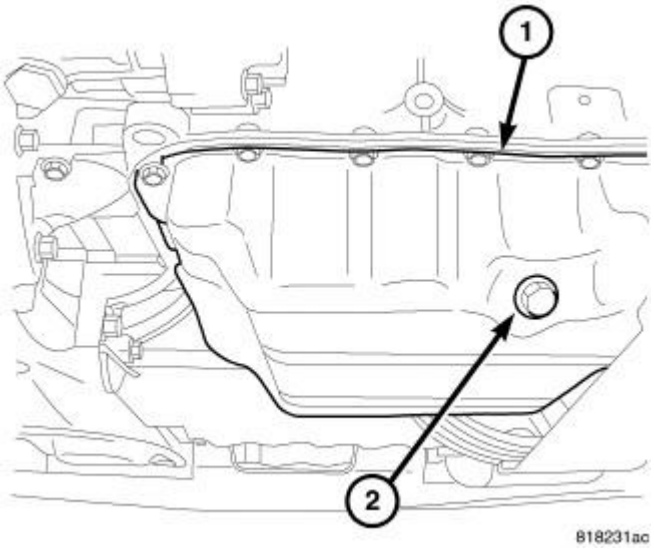

Fig. 287: Oil Drain Plug
Courtesy of CHRYSLER GROUP, LLC

1. Run engine until achieving normal operating temperature.
2. Position the vehicle on a level surface and turn engine off.
3. Remove oil fill cap.
4. Raise vehicle on hoist.
5. Place a suitable oil collecting container under oil pan drain plug (2).

 © 2011 Mitchell Repair Information Company, LLC.

6. Remove oil pan drain plug (2) or and allow oil to drain into collecting container. Inspect drain plug threads for stretching or other damage. Replace drain plug and gasket if damaged.

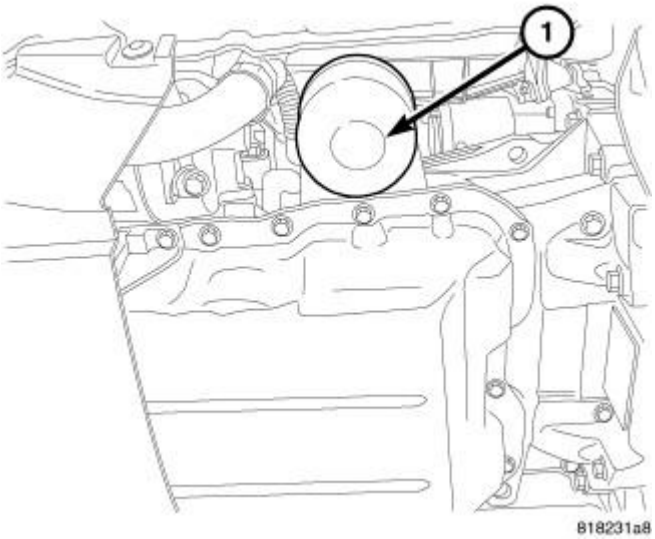

Fig. 288: Oil Filter
Courtesy of CHRYSLER GROUP, LLC

7. Remove oil filter (1). Refer to **FILTER, ENGINE OIL, REMOVAL**.

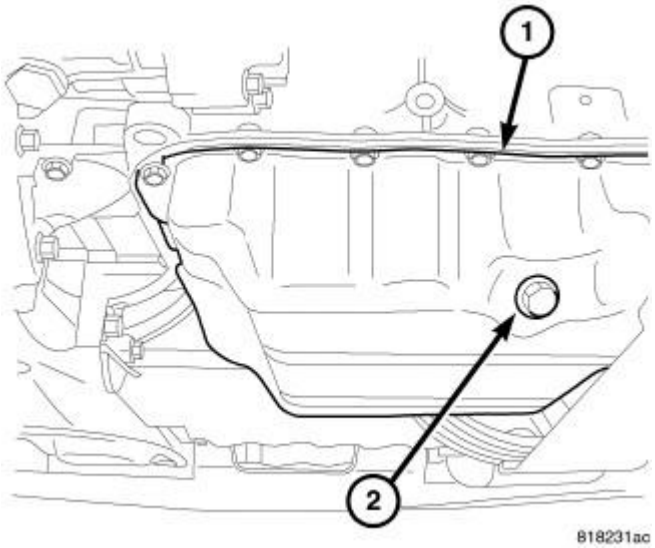

Fig. 289: Oil Drain Plug
Courtesy of CHRYSLER GROUP, LLC

8. Install oil pan drain plug (2) and tighten drain plug to 40 N.m (30 ft. lbs.).

 © 2011 Mitchell Repair Information Company, LLC.

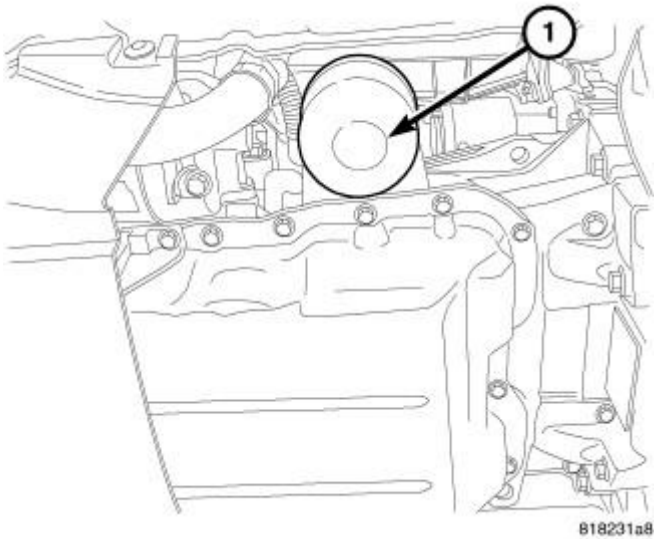

Fig. 290: Oil Filter
Courtesy of CHRYSLER GROUP, LLC

9. Install new oil filter (1). Refer to **FILTER, ENGINE OIL, INSTALLATION**.
10. Lower vehicle and fill crankcase with specified type and amount of engine oil. Refer to **CAPACITIES AND RECOMMENDED FLUIDS, DESCRIPTION** and **CAPACITIES AND RECOMMENDED FLUIDS, SPECIFICATIONS** .
11. Install oil fill cap.
12. Start engine and inspect for leaks.
13. Stop engine and inspect oil level.

OIL FILTER SPECIFICATION

All engines are equipped with a high quality full-flow, disposable type oil filter. Replace oil filter with a Mopar® or the equivalent.

USED ENGINE OIL DISPOSAL

Care should be exercised when disposing used engine oil after it has been drained from a vehicle engine. Refer to the WARNING listed above under **ENGINE OIL AND FILTER CHANGE**.

PAN, OIL

REMOVAL

REMOVAL

 © 2011 Mitchell Repair Information Company, LLC.

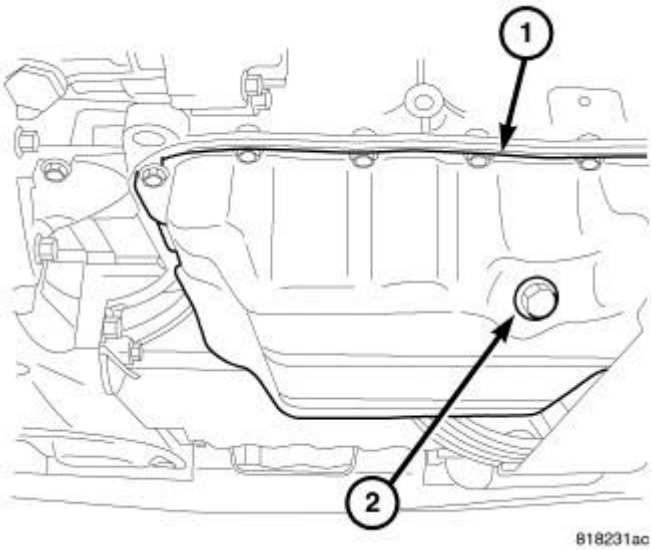

Fig. 291: Oil Drain Plug
Courtesy of CHRYSLER GROUP, LLC

1. Raise vehicle on hoist.
2. Remove oil drain plug (2) and drain the engine oil.
3. Remove accessory drive belt splash shield.

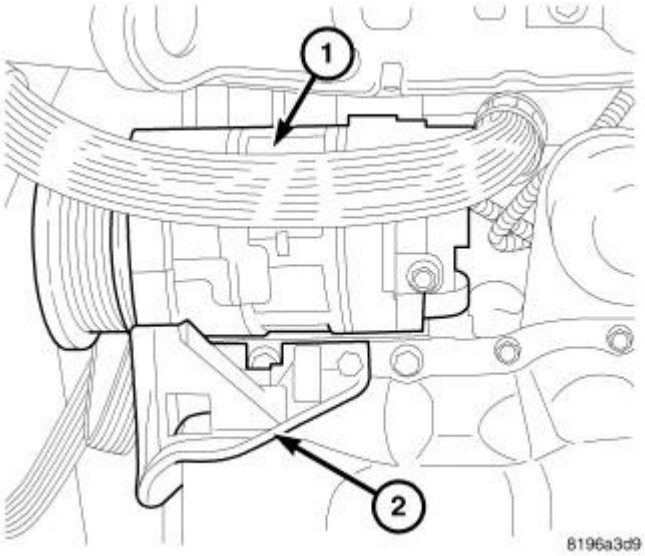

Fig. 292: A/C Compressor
Courtesy of CHRYSLER GROUP, LLC

4. Remove lower A/C compressor mounting bolt (if equipped).
5. Remove A/C mounting bracket (2).

 © 2011 Mitchell Repair Information Company, LLC.

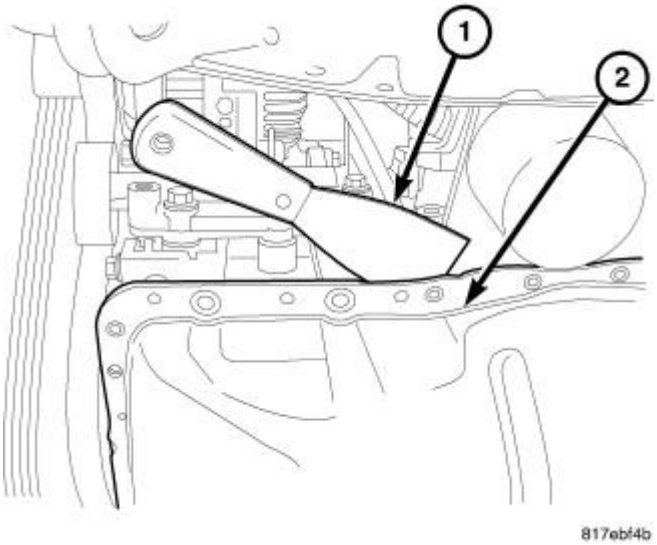

Fig. 293: Oil Pan Removal
Courtesy of CHRYSLER GROUP, LLC

NOTE: Do not use pry points in block to remove oil pan.

6. Remove oil pan retaining bolts.
7. Using a putty knife (1), loosen seal around oil pan (2).
8. Remove oil pan (2).

INSTALLATION

INSTALLATION

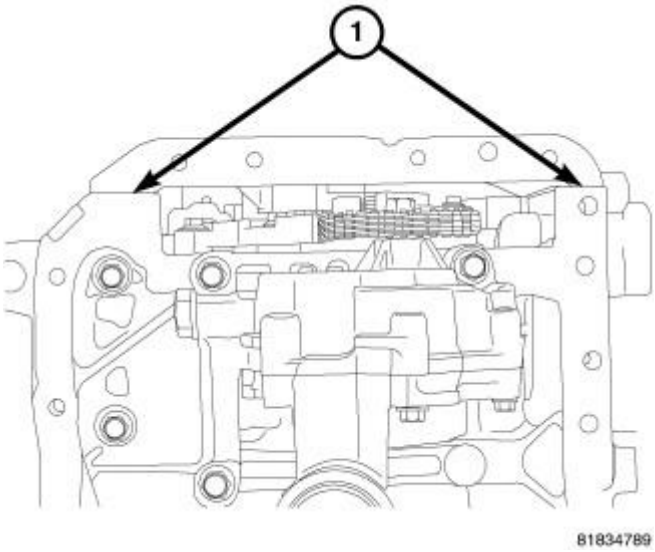

Fig. 294: Sealer Location
Courtesy of CHRYSLER GROUP, LLC

 © 2011 Mitchell Repair Information Company, LLC.

NOTE: Oil pan sealing surfaces must be free of grease or oil.

NOTE: Parts must be assembled within 10 minutes of applying RTV.

1. Apply Mopar® Engine RTV GEN II at the front cover to engine block parting lines (1).

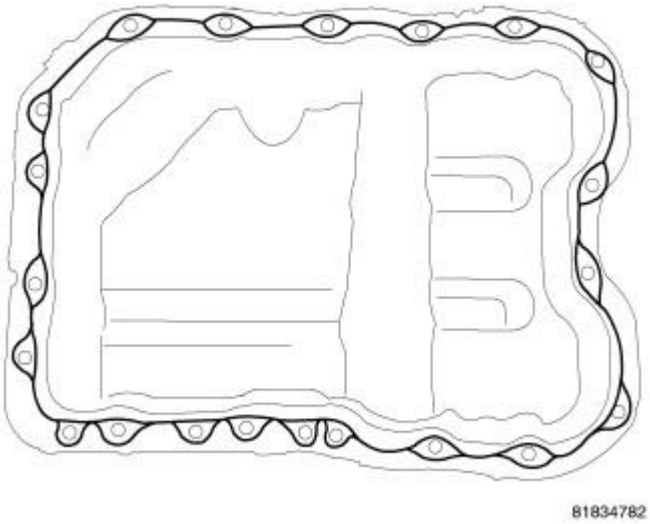

Fig. 295: Sealing Oil Pan
Courtesy of CHRYSLER GROUP, LLC

2. Apply a 2 mm bead of Mopar® Engine RTV GEN II around the oil pan as shown in illustration.
3. Position oil pan and install bolts. Tighten bolts to 12 N.m (105 in. lbs.).

NOTE: The 2 long bolts must be tightened to 22 N.m (195 in.lbs.).

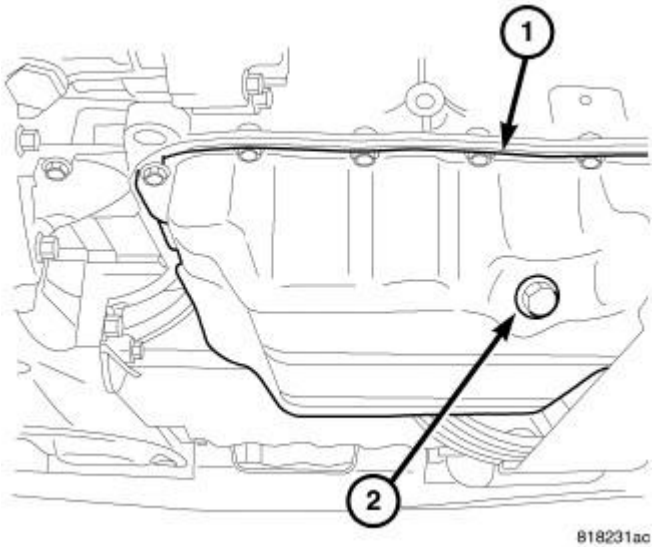

Fig. 296: Oil Drain Plug

 © 2011 Mitchell Repair Information Company, LLC.

Courtesy of CHRYSLER GROUP, LLC

4. Install oil drain plug (2).
5. Lower vehicle and fill engine crankcase with proper oil to correct level.
6. Start engine and check for leaks.

PLUG, OIL

DESCRIPTION

DESCRIPTION

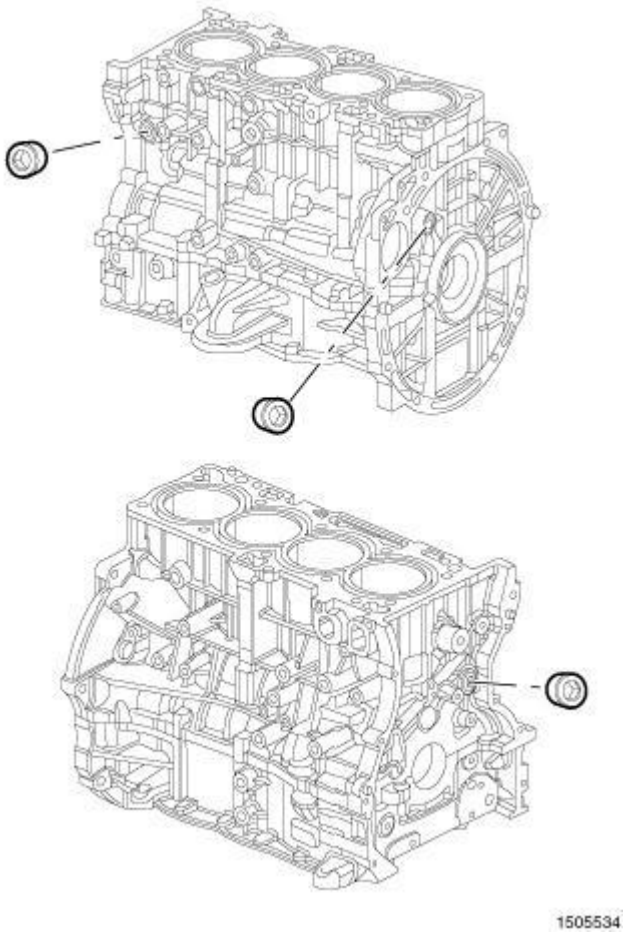

Fig. 297: Tapered Plugs
Courtesy of CHRYSLER GROUP, LLC

The engine block has three tapered plugs sealing the high pressure oil gallery. These threaded plugs do not have a torque specification but instead are installed to a specific depth. Do not attempt to further tighten these plugs, damage to the engine block could result. Whenever these plugs are removed they must be replaced. Service plugs have a lock patch and do not require the application of additional sealant.

REMOVAL

 © 2011 Mitchell Repair Information Company, LLC.

REMOVAL

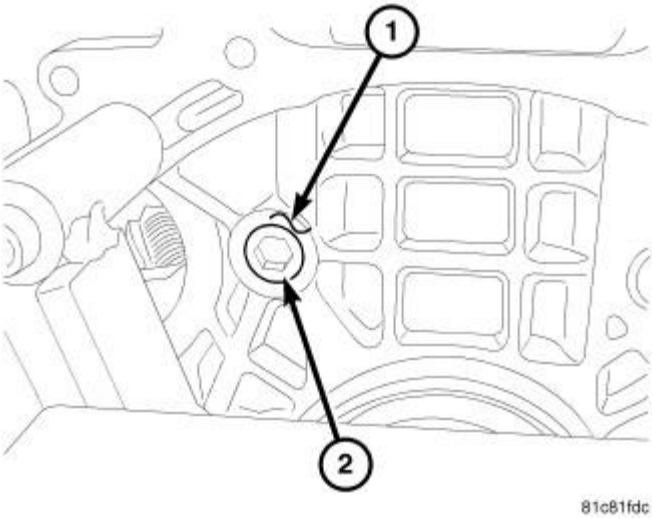

Fig. 298: Gallery Plug
Courtesy of CHRYSLER GROUP, LLC

CAUTION: Excessive use of brake parts cleaner to clean threads in block could cause #5 main bearing failure.

NOTE: Rear plug shown in illustration, other plugs are similar.

1. Remove the plug (2) from the engine block.
2. Use Mopar® Brake Parts Cleaner (or equivalent) sparingly to clean the block.

INSTALLATION

INSTALLATION

 © 2011 Mitchell Repair Information Company, LLC.

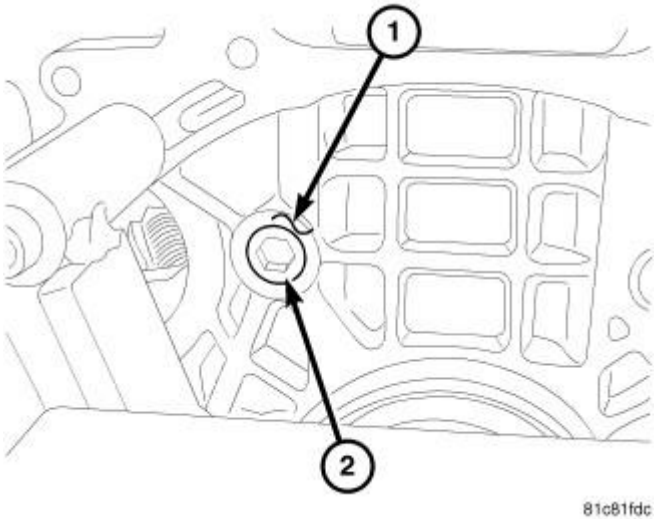

Fig. 299: Gallery Plug
Courtesy of CHRYSLER GROUP, LLC

CAUTION: Excessive use of brake parts cleaner to clean threads in block could cause #5 main bearing failure.

NOTE: Rear plug shown in illustration, other plugs are similar.

1. Use Mopar® Brake Parts Cleaner (or equivalent) sparingly to clean the block.
2. Install the plug (2) flush with the block boss face (1). The plug (2) is correctly installed when it is flush or protruding no more than 1 mm from the block boss face (1).

PUMP, ENGINE OIL

DESCRIPTION

DESCRIPTION

 © 2011 Mitchell Repair Information Company, LLC.

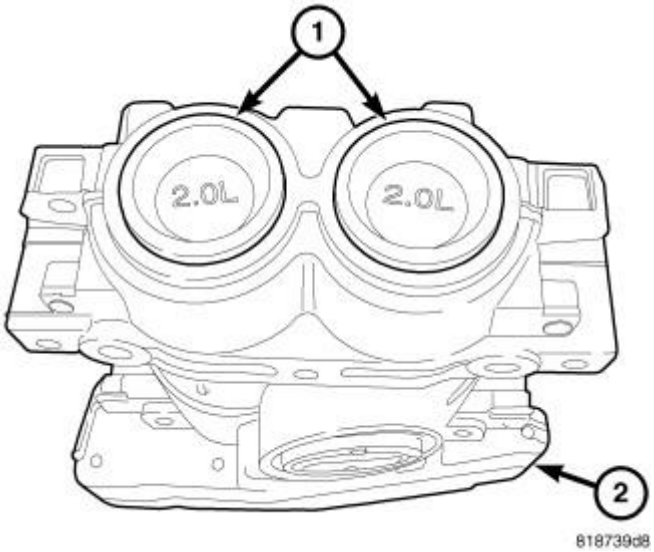

Fig. 300: Balance Shaft Module (BSM) Identification
Courtesy of CHRYSLER GROUP, LLC

The oil pump is integral to the balance shaft module (BSM) (2). The oil pump cannot be disassembled for inspection. The pressure relief valve is serviceable and can be removed and inspected. The BSM can be identified by the plastic end caps (1).

REMOVAL

REMOVAL

YouTube	A multimedia supplement to the instructions contained in this article is available. To view the multimedia example of the condition described go to; **http://www.youtube.com/user/Mitchell1Tips** **then type "A00612695.vid1" into the "Search Channel" box.**

When removing and installing the Balance Shaft/Oil Pump assembly in the vehicle, it is not necessary to align the plated links on the drive chain as long as the reference marks are created during the procedure.

1. Remove the oil pan

   Refer to **PAN, OIL, REMOVAL**.

 © 2011 Mitchell Repair Information Company, LLC.

Fig. 301: Aligning Balance Shaft/Oil Pump Drive Gear And Housing Indicator
Courtesy of CHRYSLER GROUP, LLC

2. Rotate the engine clockwise until the balance shaft/oil pump drive gear and the housing indicator are aligned.

NOTE: **IT IS VERY IMPORTANT THAT THE CRANKSHAFT STAYS STATIONARY DURING THE FOLLOWING STEPS. DO NOT MOVE THE CRANKSHAFT UNTIL THE INSTALLATION PROCEDURE IS COMPLETED.**

3. Clean the balance shaft/oil pump assembly drive gear with Mopar® brake cleaner or similar.

NOTE: **Make sure the gear is clear of any oil to allow for marking.**

 © 2011 Mitchell Repair Information Company, LLC.

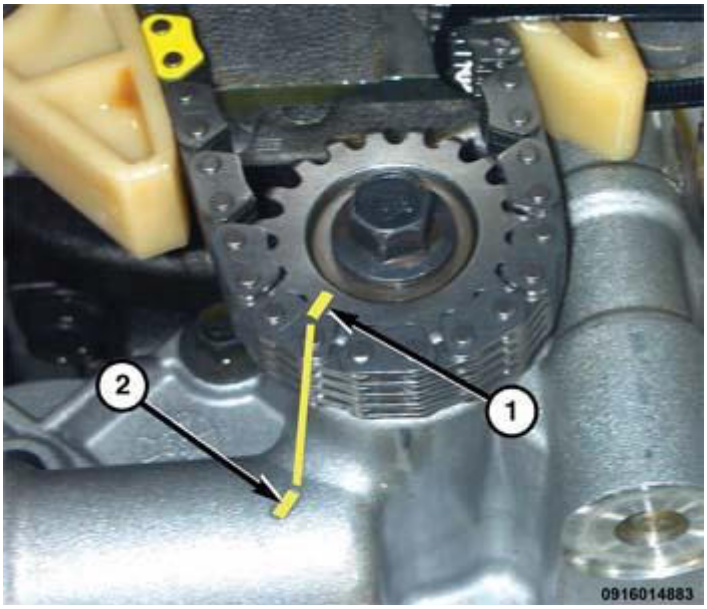

Fig. 302: Oil Pump Chain And Sprocket To Module Body Marks
Courtesy of CHRYSLER GROUP, LLC

4. If the balance shaft/oil pump assembly is being reused, mark the oil pump chain and the sprocket (1) to the module body (2) for reassembly.
5. Install one air-conditioning compressor bracket bolt into the left forward corner thread boss.

NOTE: The bolt will provide a sturdy point to secure a tie strap to hold the tensioner in the compressed position.

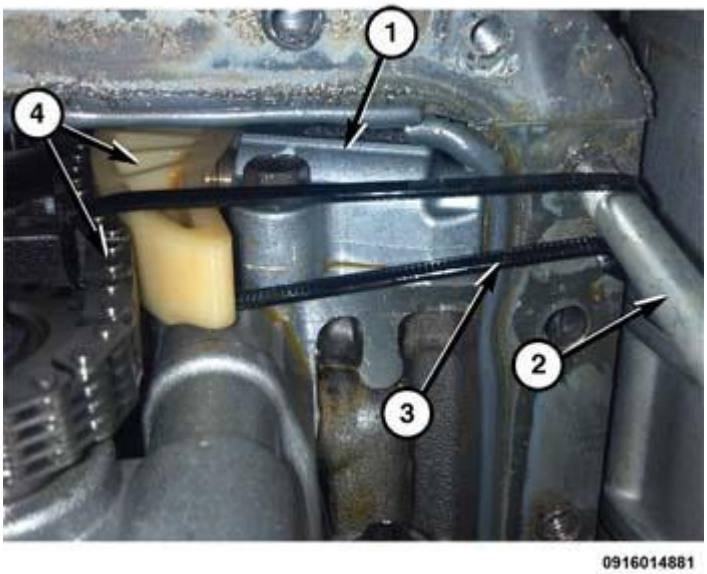

Fig. 303: Positioning Plastic Tie Strap
Courtesy of CHRYSLER GROUP, LLC

 © 2011 Mitchell Repair Information Company, LLC.

6. Position a plastic tie strap (3) around the chain, tensioner (4) and bolt (2) that was previously installed.
7. Push the chain, guide and tensioner (1) to the compressed position.
8. Tighten the tie strap to hold the components together.

NOTE: The tighter the strap, the more room for removal and installation.

9. Remove the balance shaft/oil pump assembly mounting bolts.
10. Remove assembly from the engine by tilting the rear of the balance shaft/oil pump assembly downward while lifting the drive gear out of the chain links.

INSPECTION

INSPECTION

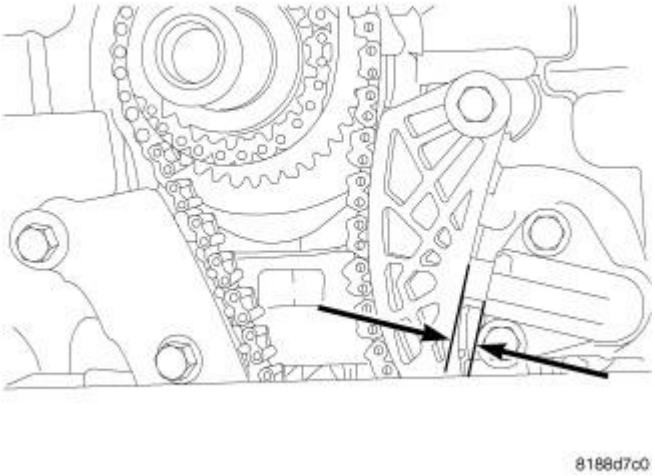

Fig. 304: Oil Pump Chain Stretch
Courtesy of CHRYSLER GROUP, LLC

1. Remove timing chain cover . Refer to **COVER(S), ENGINE TIMING, REMOVAL**.
2. Remove oil pan. Refer to **PAN, OIL, REMOVAL**.
3. Measure the distance between the tensioner body and the guide shoe as shown in illustration.
4. If the distance is 10.1 mm (0.397 in.) or greater, replace the chain.

INSTALLATION

INSTALLATION

YouTube	A multimedia supplement to the instructions contained in this article is available. To view the multimedia example of the condition described go to; **http://www.youtube.com/user/Mitchell1Tips**

 © 2011 Mitchell Repair Information Company, LLC.

	then type "A00612695.vid2" into the "Search Channel" box.

CAUTION: There are two different Balance Shaft Module (BSM) to engine block bolts used. 180 mm bolts with a lock-patch on the threads or 185 mm bolts without lock-patch. Do not reuse the 180 mm bolts. Always discard 180 mm bolts after removing. Failure to replace these bolts can result in engine damage. The 185 mm bolts are reusable. Install the same length bolts that were removed and use either four new 180 mm bolts or four 185 mm bolts.

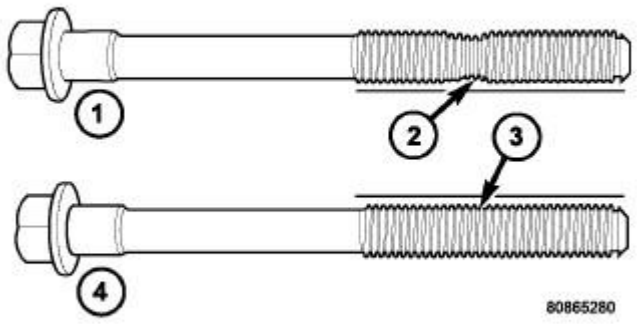

Fig. 305: Checking Cylinder Head Bolts For Stretching (Necking)
Courtesy of CHRYSLER GROUP, LLC

1. The 185 mm (7.283 in.) length bolts must be checked for stretching. Check the bolts with a straight edge for necking (2). If the bolts are necked down, they must be replaced.
2. Clean the balance shaft/oil pump assembly mounting holes with Mopar® brake parts cleaner.
3. Align the marks on the balance shaft/oil pump assembly and drive sprocket.

 © 2011 Mitchell Repair Information Company, LLC.

Fig. 306: Aligning Balance Shaft/Oil Pump Drive Gear And Housing Indicator
Courtesy of CHRYSLER GROUP, LLC

4. With the rear of the balance shaft/oil pump assembly on a slight downward angle, position the gear into the chain links. Make sure the paint marks are aligned.
5. Pivot balance shaft/oil pump assembly upwards and position on ladder frame.

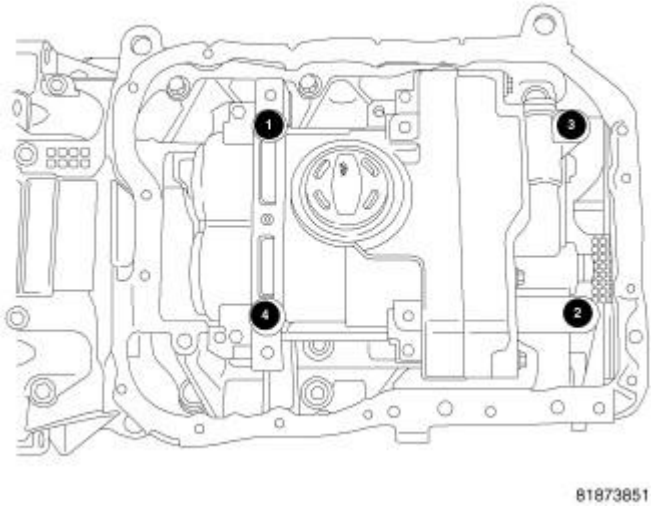

Fig. 307: Balance Shaft Module Torque Sequence
Courtesy of CHRYSLER GROUP, LLC

6. Start balance shaft/oil pump assembly mounting bolts by hand.

NOTE: **Use a three step procedure when tightening balance shaft/oil pump assembly mounting bolts. For new 180 mm bolts, go to step 7. For 185 mm**

 © 2011 Mitchell Repair Information Company, LLC.

bolts, go to step 8.

7. Tighten new 180 mm balance shaft/oil pump assembly mounting bolts as follows:
   a. Tighten to 15 N.m (11 ft. lbs.) in the sequence shown in illustration.
   b. Tighten to 33 N.m (24 ft. lbs.) in the sequence shown in illustration.
   c. Rotate bolts an additional 90° in the sequence shown in illustration.
8. Tighten 185 mm balance shaft/oil pump assembly mounting bolts as follows:
   1. Tighten to 15 N.m (11 ft. lbs.) in the sequence shown in illustration.
   2. Tighten to 29 N.m (22 ft. lbs.) in the sequence shown in illustration.
   3. Rotate bolts an additional 90° in the sequence shown in illustration.

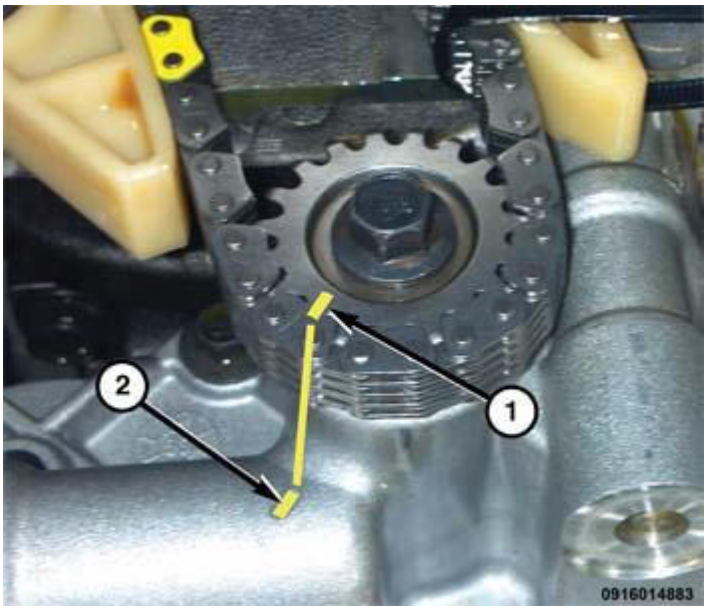

Fig. 308: Oil Pump Chain And Sprocket To Module Body Marks
Courtesy of CHRYSLER GROUP, LLC

9. Double check the alignment marks to ensure the gear (1) and balance shaft/oil pump assembly indicator (2) is aligned.

 © 2011 Mitchell Repair Information Company, LLC.

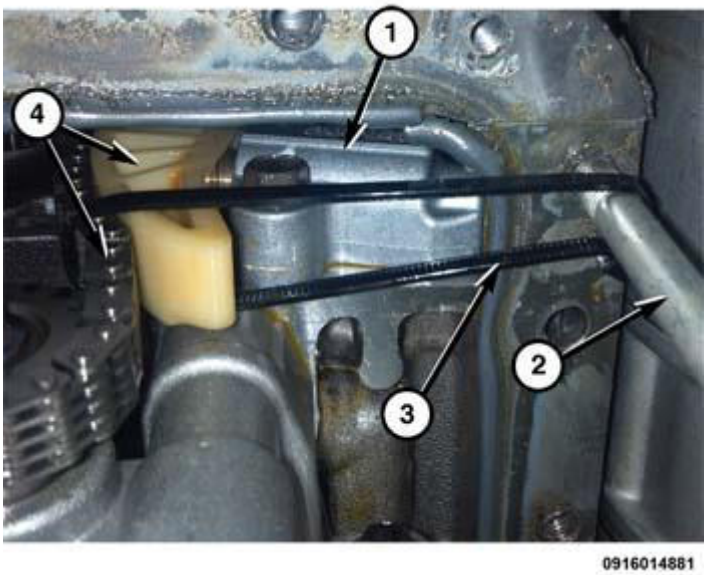

Fig. 309: Positioning Plastic Tie Strap
Courtesy of CHRYSLER GROUP, LLC

10. Remove the tie strap (3).
11. Remove the bracket bolt (2).
12. Inspect that the tensioner (1) has fully extended and applied pressure to the guide and chain (4).
13. Install the oil pan

    Refer to **PAN, OIL, INSTALLATION**.

14. Fill engine with oil.
15. Start engine and check for leaks.

SENSOR, OIL TEMPERATURE

REMOVAL

REMOVAL

 © 2011 Mitchell Repair Information Company, LLC.

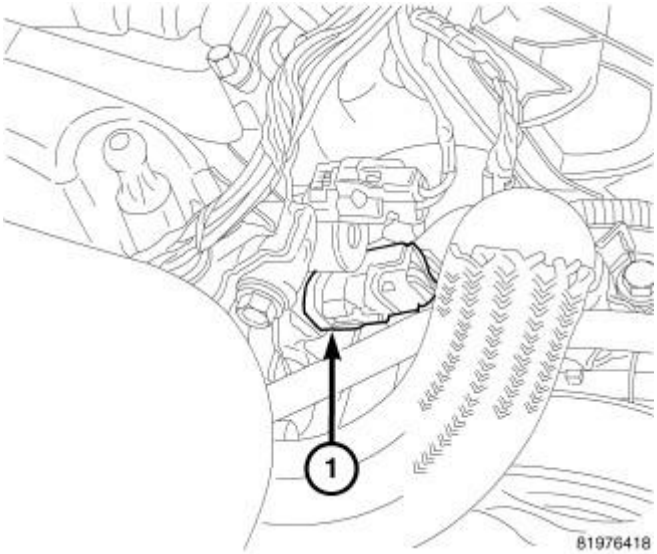

Fig. 310: Oil Temperature Sensor
Courtesy of CHRYSLER GROUP, LLC

1. Disconnect oil temperature sensor (1) electrical connector.
2. Remove sensor (1).

INSTALLATION

INSTALLATION

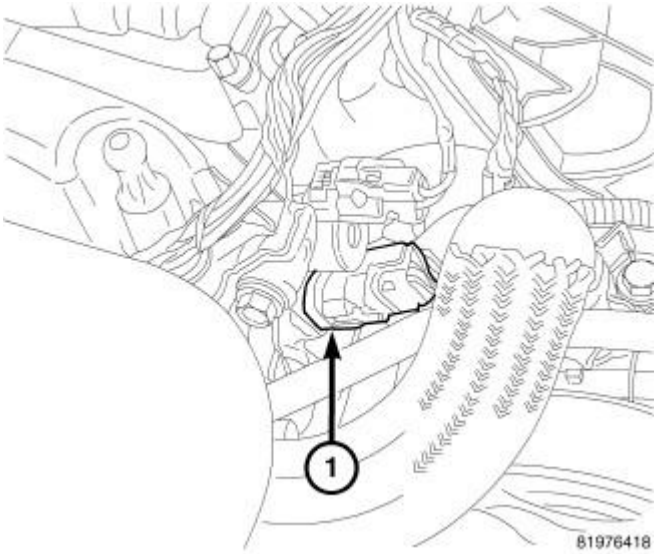

Fig. 311: Oil Temperature Sensor
Courtesy of CHRYSLER GROUP, LLC

1. If re-using the oil temperature sensor, coat the threads with Mopar® thread sealant.
2. Install oil temperature sensor (1). Tighten to 18 N.m (160 in. lbs.).
3. Connect electrical connector.

 © 2011 Mitchell Repair Information Company, LLC.

SWITCH, OIL PRESSURE

DESCRIPTION

DESCRIPTION

The oil pressure switch is located on the left front side of the engine block. The oil pressure switch is a pressure sensitive switch that is activated by the engine's oil pressure (in the main oil gallery). The switch is a two terminal device (one terminal is provided to the wiring harness and the other terminal is the switch's metal housing that screws into the engine block).

OPERATION

OPERATION

The oil pressure switch is normally "Closed." The switch changes from a "Closed" circuit to an "Open" circuit, on increasing pressure of 7 psig. The oil pressure switch changes from an "Open" circuit to a "Closed" circuit, on decreasing pressure, between 2 psig and 4 psig.

REMOVAL

REMOVAL

NOTE: If the oil pressure switch is removed, it must be replaced with a new switch.

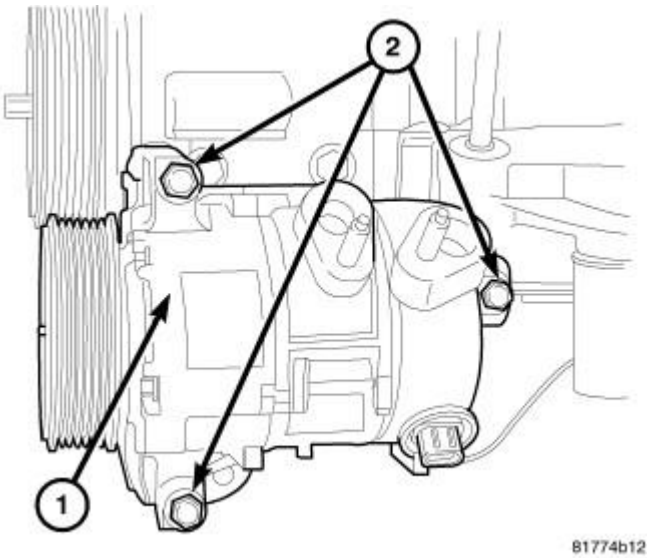

Fig. 312: Removing/Installing A/C Compressor
Courtesy of CHRYSLER GROUP, LLC

1. Disconnect and isolate the negative battery cable.
2. Raise and support the vehicle.
3. Remove the front skid plate, if equipped.
4. Remove the splash shield from the right side frame rail. Refer to **SHIELD, SPLASH, FRONT**

 © 2011 Mitchell Repair Information Company, LLC.

WHEELHOUSE, REMOVAL .

5. Remove the accessory drive belt. Refer to **BELT, SERPENTINE, REMOVAL** .
6. Remove the three bolts (2) and reposition the A/C compressor (1).

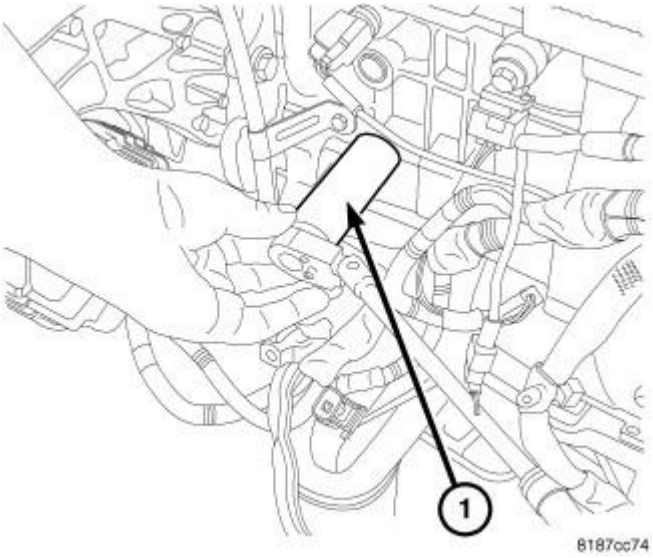

Fig. 313: Oil Sender
Courtesy of CHRYSLER GROUP, LLC

7. Disconnect the oil pressure switch electrical connector.
8. Remove the oil pressure switch using Oil Pressure Socket (special tool #C-4597, Socket, Oil Pressure) (1) or equivalent and discard the switch.

INSTALLATION

INSTALLATION

CAUTION: The oil pressure switch has tapered threads, over tightening could crack the engine block.

 © 2011 Mitchell Repair Information Company, LLC.

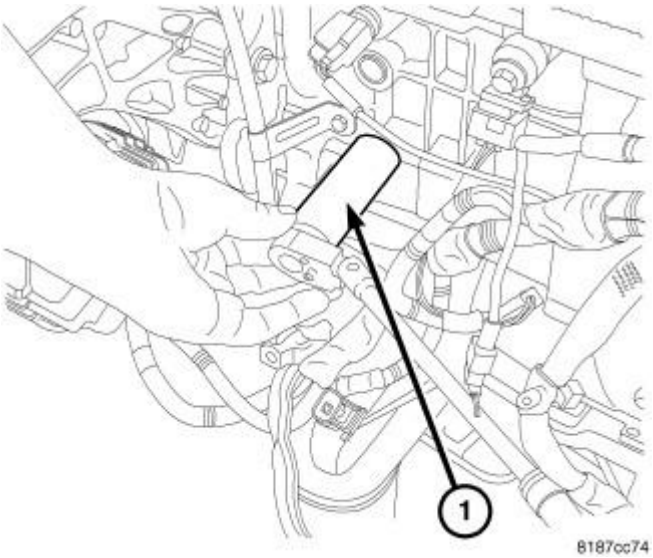

Fig. 314: Oil Sender
Courtesy of CHRYSLER GROUP, LLC

1. Install a new oil pressure switch using Oil Pressure Socket (special tool #C-4597, Socket, Oil Pressure) (1) or equivalent. Tighten switch to 8 N.m (71 in. lbs.).
2. Connect the oil pressure switch electrical connector.

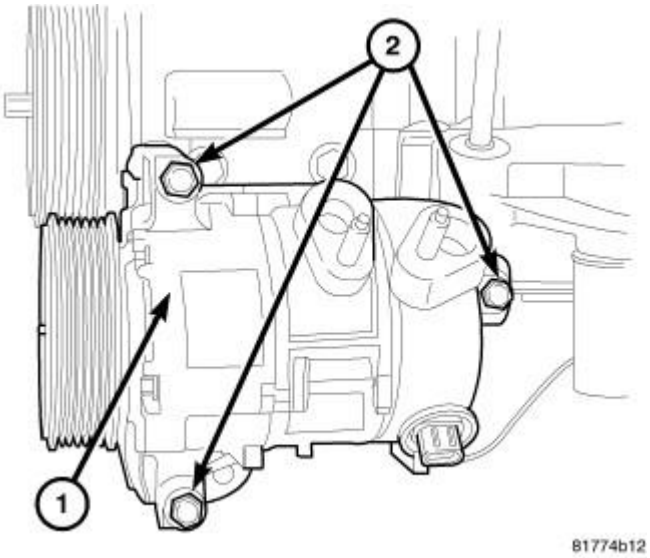

Fig. 315: Removing/Installing A/C Compressor
Courtesy of CHRYSLER GROUP, LLC

3. Position the A/C compressor (1) and install three mounting bolts (2). Tighten bolts to 25 N.m (18 ft. lbs.).
4. Install the accessory drive belt. Refer to **BELT, SERPENTINE, INSTALLATION** .
5. Install the splash shield to the right side frame rail. Refer to **SHIELD, SPLASH, FRONT WHEELHOUSE, INSTALLATION** .
6. Install the front skid plate, if equipped.

 © 2011 Mitchell Repair Information Company, LLC.

7. Reconnect the negative battery cable.

VALVE, OIL PRESSURE RELIEF

REMOVAL

REMOVAL

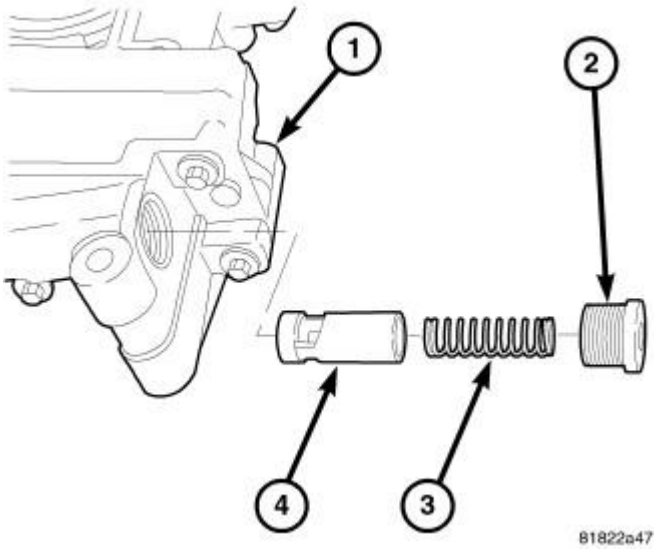

Fig. 316: Oil Pressure Relief Valve
Courtesy of CHRYSLER GROUP, LLC

1. Remove oil pan Refer to **PAN, OIL, REMOVAL**.
2. Remove pressure regulating valve cap (2).
3. Remove pressure regulating valve spring (3) and valve (4).

INSPECTION

INSPECTION

 © 2011 Mitchell Repair Information Company, LLC.

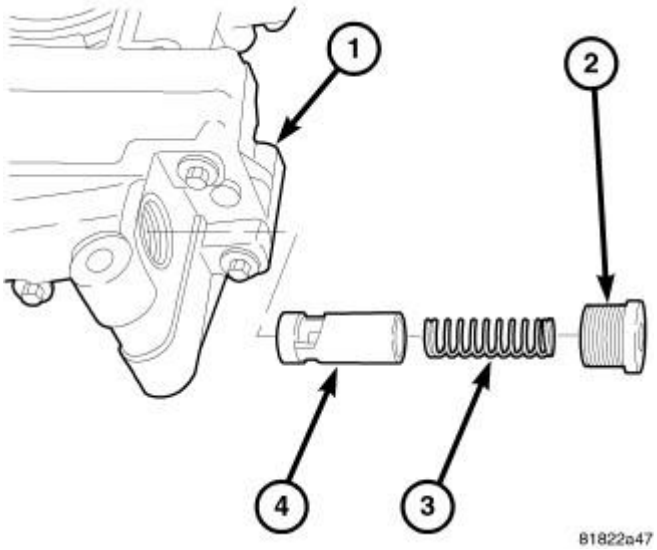

Fig. 317: Oil Pressure Relief Valve
Courtesy of CHRYSLER GROUP, LLC

NOTE: Pressure regulating valve (4) can be serviced separately from the oil pump assembly.

1. Inspect pressure relief valve (4) scoring, gouging, or debris. Replace as needed.
2. Inspect the pressure relief valve bore in the pump for scoring, gouging, or debris.
3. If pump bore is damaged, replace balance shaft module.

INSTALLATION

INSTALLATION

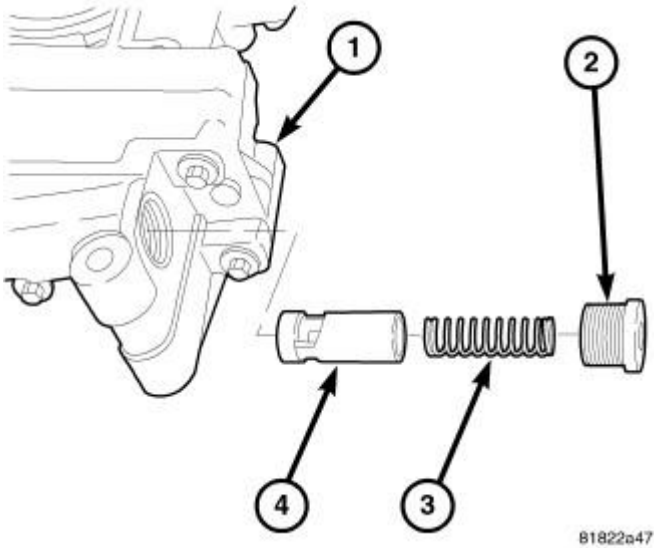

Fig. 318: Oil Pressure Relief Valve
Courtesy of CHRYSLER GROUP, LLC

 © 2011 Mitchell Repair Information Company, LLC.

1. Lightly coat pressure regulating valve with clean engine oil and install valve (4).
2. Install spring (3) and cap (2).
3. Tighten cap to 44 N.m (32 lbs.ft.).

MANIFOLDS

MANIFOLD, EXHAUST

REMOVAL

REMOVAL

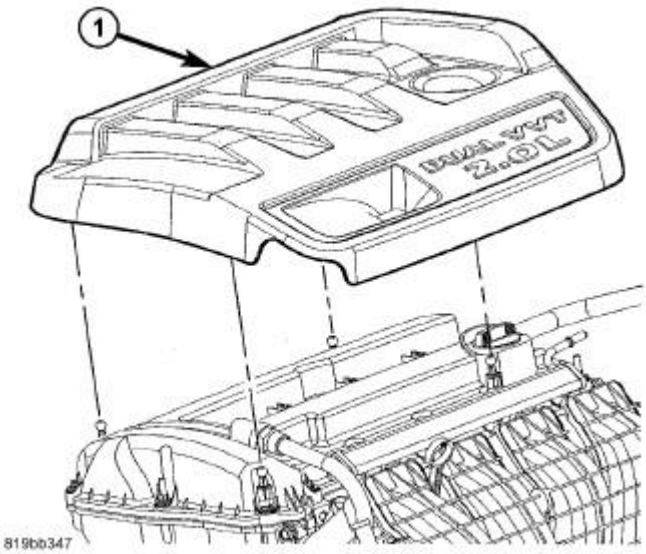

Fig. 319: Engine Cover
Courtesy of CHRYSLER GROUP, LLC

1. Remove engine cover (1).
2. Disconnect negative cable from battery.

 © 2011 Mitchell Repair Information Company, LLC.

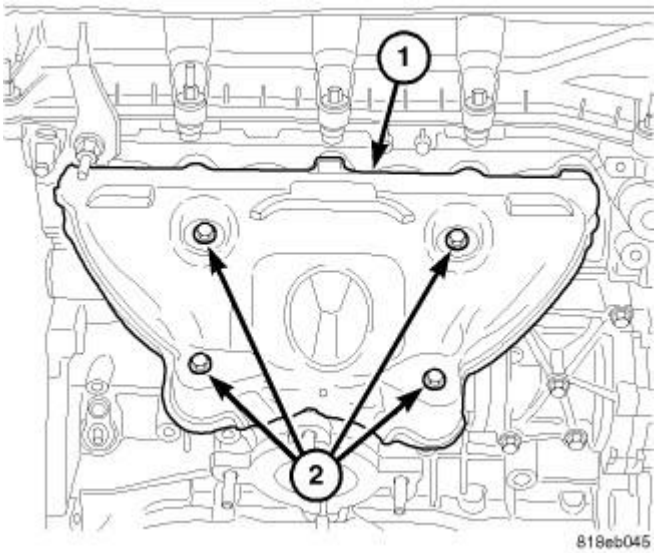

Fig. 320: Exhaust Manifold Heat Shield
Courtesy of CHRYSLER GROUP, LLC

3. Remove bolts attaching upper heat shield.
4. Remove upper heat shield (1).
5. Disconnect exhaust pipe from manifold.

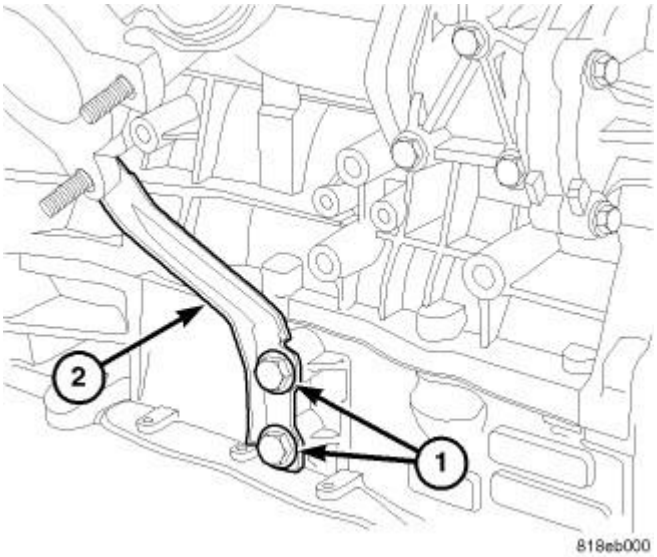

Fig. 321: Exhaust Manifold Support Bracket
Courtesy of CHRYSLER GROUP, LLC

6. Remove manifold support bracket (2).

 © 2011 Mitchell Repair Information Company, LLC.

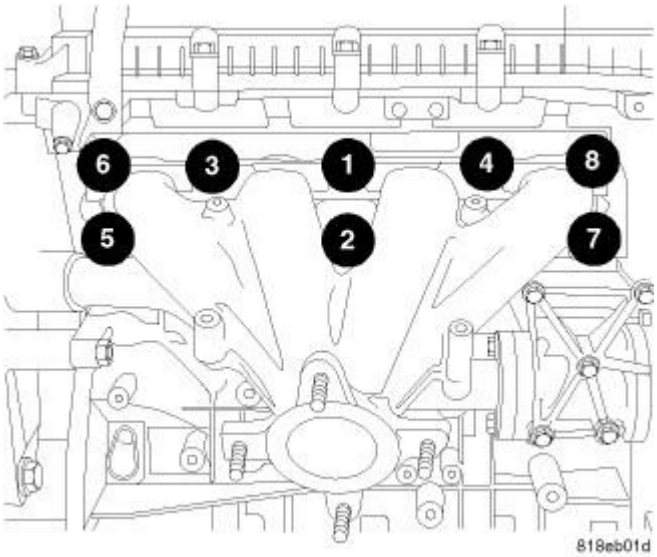

Fig. 322: Exhaust Manifold Retaining Fasteners Tightening Sequence
Courtesy of CHRYSLER GROUP, LLC

7. Disconnect oxygen sensor electrical connector.
8. Remove exhaust manifold retaining fasteners.
9. Remove and discard manifold gasket.

CLEANING

CLEANING

1. Discard gasket (if equipped) and clean all surfaces of manifold and cylinder head.

INSPECTION

INSPECTION

1. Inspect manifold gasket surfaces for flatness with straight edge. Surface must be flat within 0.15 mm per 300 mm (0.006 in. per foot) of manifold length.
2. Inspect manifolds for cracks or distortion. Replace manifold as necessary.

INSTALLATION

INSTALLATION

 © 2011 Mitchell Repair Information Company, LLC.

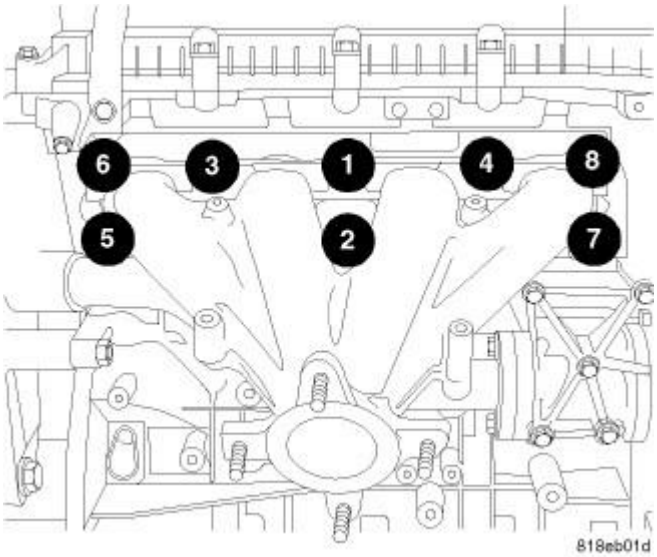

Fig. 323: Exhaust Manifold Retaining Fasteners Tightening Sequence
Courtesy of CHRYSLER GROUP, LLC

1. Install a new exhaust manifold gasket **DO NOT APPLY SEALER** .
2. Tighten the exhaust manifold bolts to 34 N.m (25 ft. lbs.).

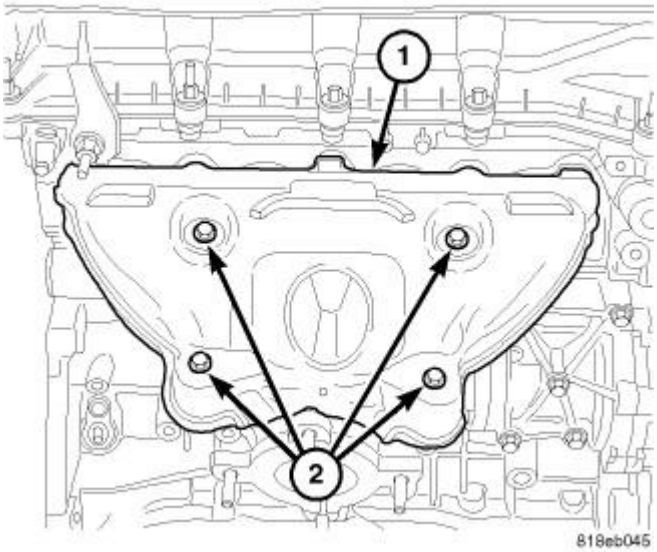

Fig. 324: Exhaust Manifold Heat Shield
Courtesy of CHRYSLER GROUP, LLC

3. Install exhaust manifold heat shields. Tighten bolts to 12 N.m (105 in. lbs.).

 © 2011 Mitchell Repair Information Company, LLC.

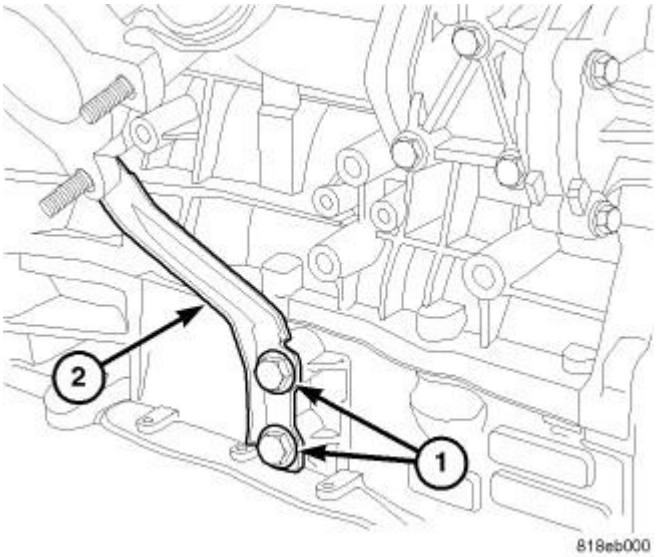

Fig. 325: Exhaust Manifold Support Bracket
Courtesy of CHRYSLER GROUP, LLC

4. Install exhaust manifold support bracket (2).

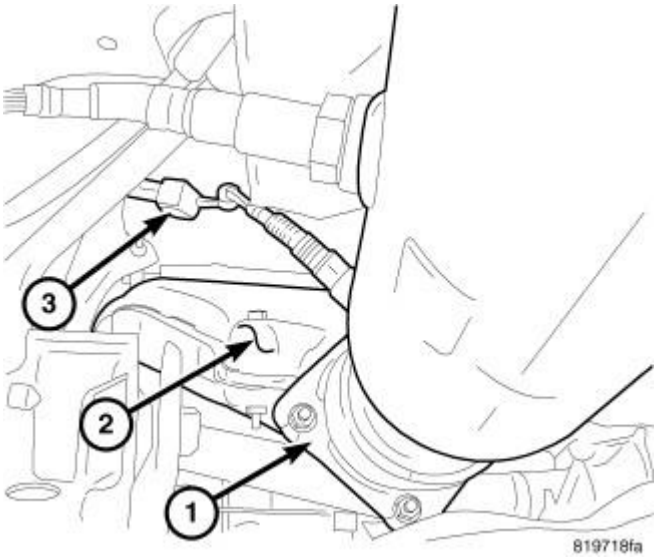

Fig. 326: Exhaust Pipe To Manifold, Heat Shield & Oxygen Sensor Electrical Connector
Courtesy of CHRYSLER GROUP, LLC

5. Install new catalytic converter gasket.
6. Install exhaust pipe to manifold (1). Tighten fasteners to 28 N.m (250 in. lbs.).
7. Connect oxygen sensor electrical connector (3).

 © 2011 Mitchell Repair Information Company, LLC.

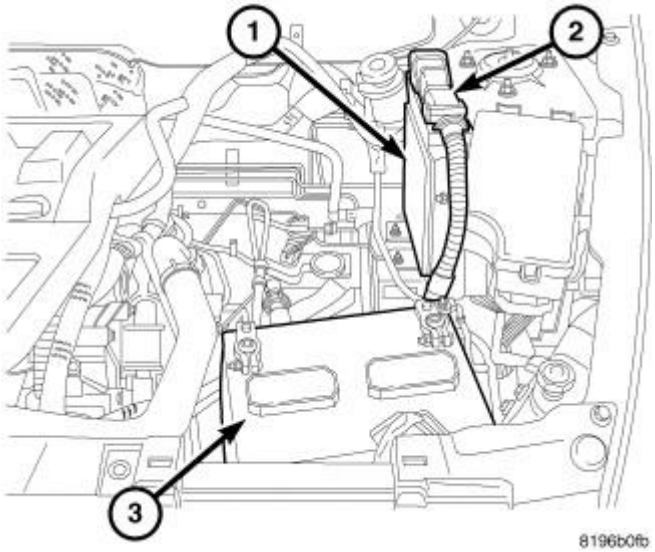

Fig. 327: Battery
Courtesy of CHRYSLER GROUP, LLC

8. Connect negative cable to battery (3).
9. Install engine cover.

MANIFOLD, INTAKE

REMOVAL

REMOVAL

WARNING: Release fuel system pressure before servicing system components. Service vehicles in well ventilated areas and avoid ignition sources. Never smoke while servicing the vehicle.

 © 2011 Mitchell Repair Information Company, LLC.

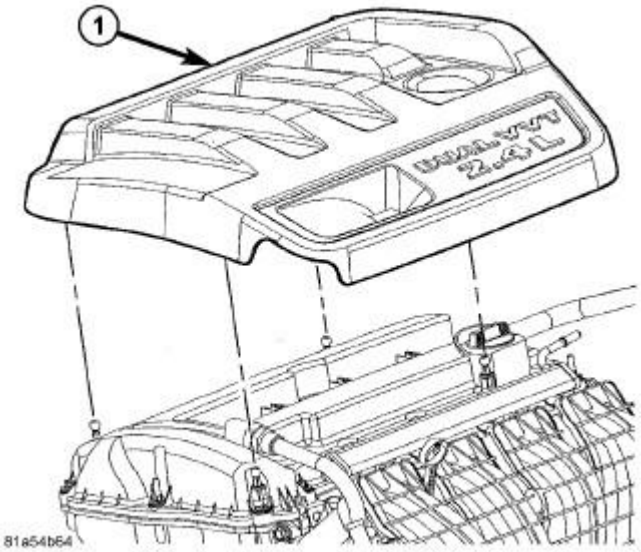

Fig. 328: Engine Cover
Courtesy of CHRYSLER GROUP, LLC

1. Remove the engine cover (1).
2. Perform the fuel system pressure release procedure **before attempting any repairs. Refer to FUEL SYSTEM PRESSURE RELEASE PROCEDURE .**

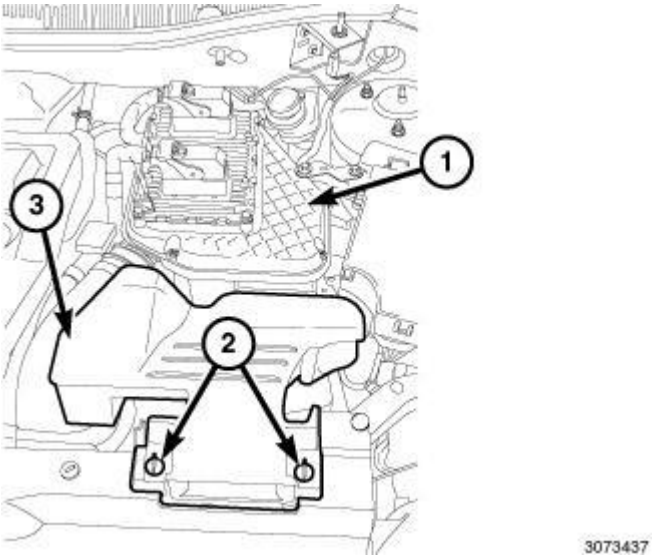

Fig. 329: Retainers, Fresh Air Inlet Duct & Air Cleaner Body
Courtesy of CHRYSLER GROUP, LLC

3. Unlock the retainers (2) and remove the fresh air inlet duct (3) from air cleaner body (1).

 © 2011 Mitchell Repair Information Company, LLC.

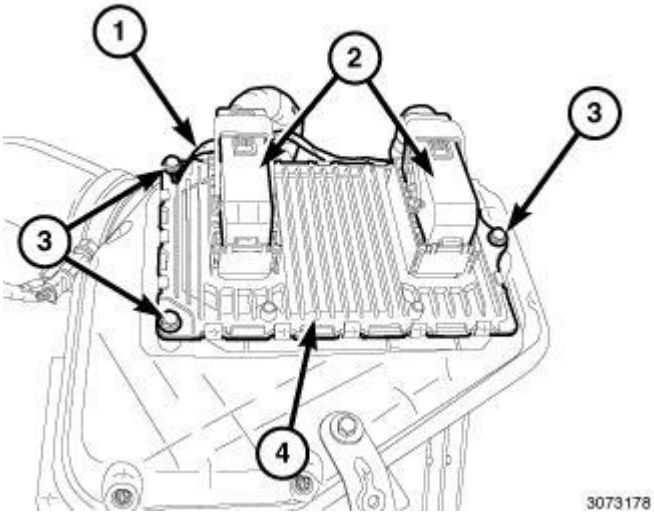

Fig. 330: Electrical Connectors, PCM, Three Mounting Bolts & Ground Wire
Courtesy of CHRYSLER GROUP, LLC

4. Disconnect and isolate the negative battery cable.
5. Unlock and disconnect the electrical connectors (2) from the PCM (4).
6. Remove the mounting bolt (3) and ground wire (1).

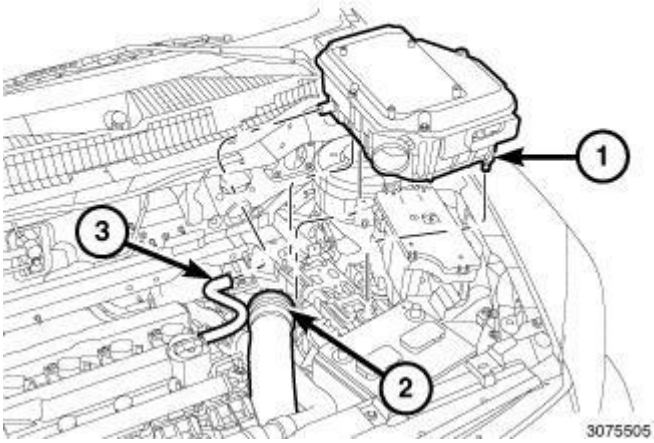

Fig. 331: Air Cleaner Body, Air Inlet Tube & Make-Up Air Hose
Courtesy of CHRYSLER GROUP, LLC

7. Remove the air inlet tube (2) from the air cleaner body (1).
8. Disconnect the make-up air hose (3) from the air cleaner body.
9. Remove the support bracket bolt from the strut tower.
10. Pull upward to disengage the pins from the rubber grommets and remove the air cleaner body (1).

 © 2011 Mitchell Repair Information Company, LLC.

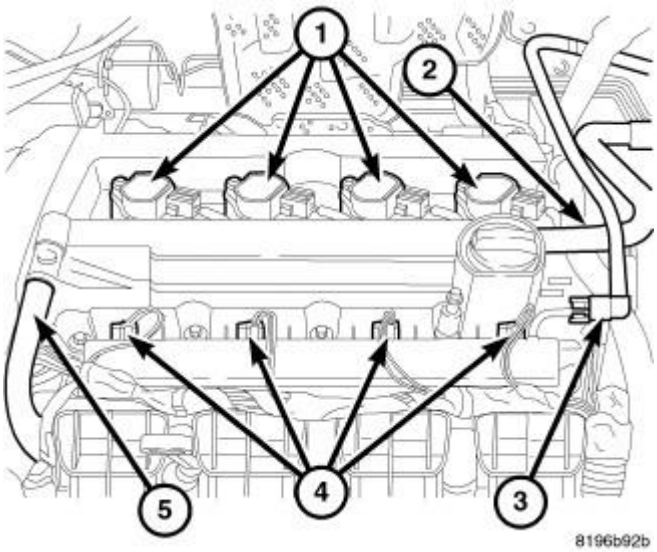

Fig. 332: Ignition Coils, Air Hose, Fuel Line, Injectors & PCV Hose
Courtesy of CHRYSLER GROUP, LLC

11. Disconnect the fuel line (3) from the fuel rail. Refer to **FITTING, QUICK CONNECT** .
12. Remove fuel injector electrical connectors (4).
13. Remove fuel rail retaining bolts and remove fuel rail.

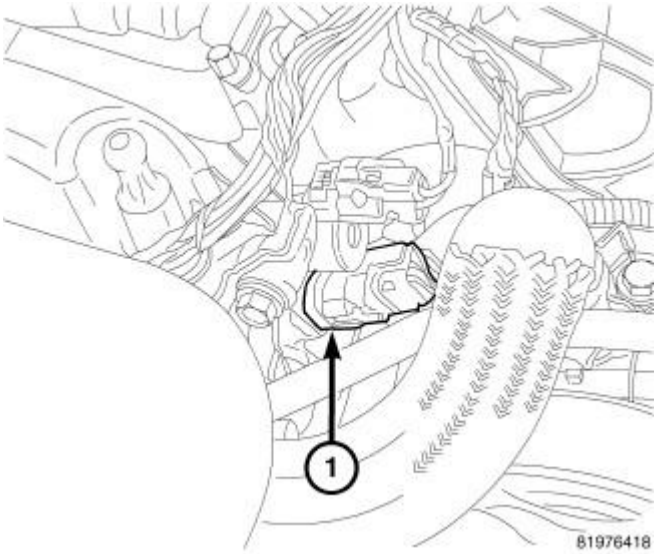

Fig. 333: Oil Temperature Sensor
Courtesy of CHRYSLER GROUP, LLC

14. Disconnect the oil temperature sensor (1).
15. Disconnect the variable valve timing solenoid electrical connector.
16. Disconnect the intake camshaft position sensor electrical connector.
17. Position the harness out of the way.

 © 2011 Mitchell Repair Information Company, LLC.

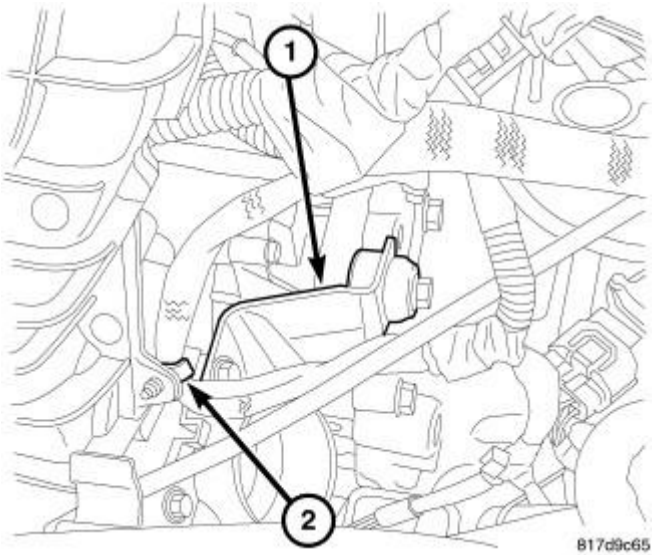

Fig. 334: Throttle Body Support
Courtesy of CHRYSLER GROUP, LLC

18. Remove the throttle body support bracket (1).
19. Disconnect the electronic throttle control electrical connector.
20. Remove the wiring harness retainer from the intake manifold (2).
21. Disconnect the MAP sensor electrical connector.
22. Disconnect the vacuum lines from the intake manifold.

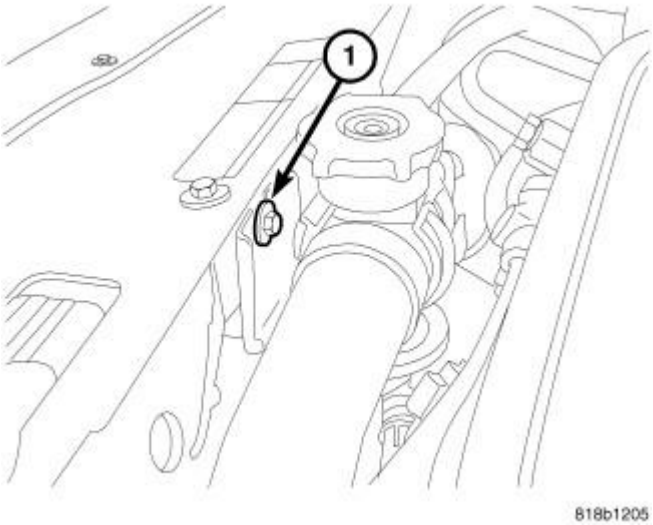

Fig. 335: Radiator Hose Support
Courtesy of CHRYSLER GROUP, LLC

23. Remove the upper radiator hose retaining bracket (1).

 © 2011 Mitchell Repair Information Company, LLC.

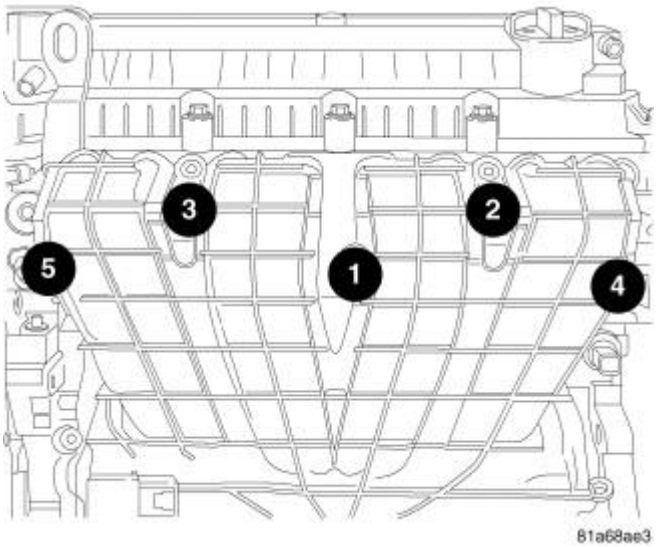

Fig. 336: Intake Manifold Bolt Removal & Tightening Sequence
Courtesy of CHRYSLER GROUP, LLC

24. Remove intake manifold retaining bolts.
25. Remove intake manifold.

INSPECTION

INSPECTION

1. Inspect manifold for cracks, distortion, or mounting surface warpage. Replace manifold if necessary.
2. Inspect manifold gasket for surface damage or excessive swelling. Replace gaskets as necessary.

INSTALLATION

INSTALLATION

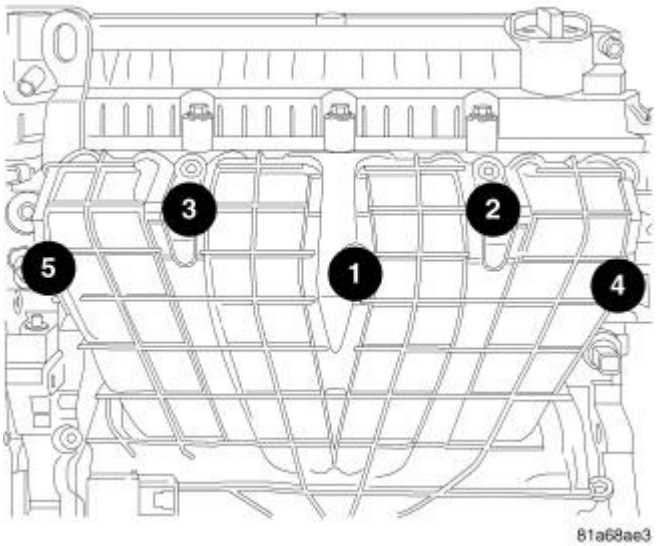

 © 2011 Mitchell Repair Information Company, LLC.

Fig. 337: Intake Manifold Bolt Removal & Tightening Sequence
Courtesy of CHRYSLER GROUP, LLC

1. Clean all gasket surfaces.
2. Replace intake manifold gasket.
3. Install intake manifold, tighten bolts to 25 N.m (220 in. lbs.).

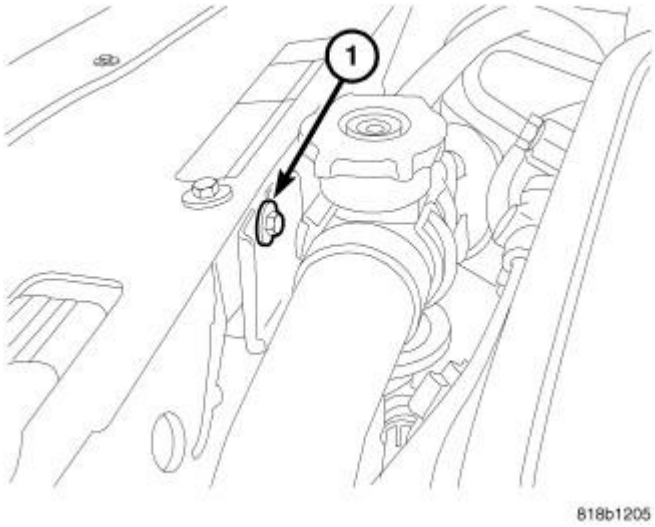

Fig. 338: Radiator Hose Support
Courtesy of CHRYSLER GROUP, LLC

4. Install the upper radiator hose retaining bracket (1).

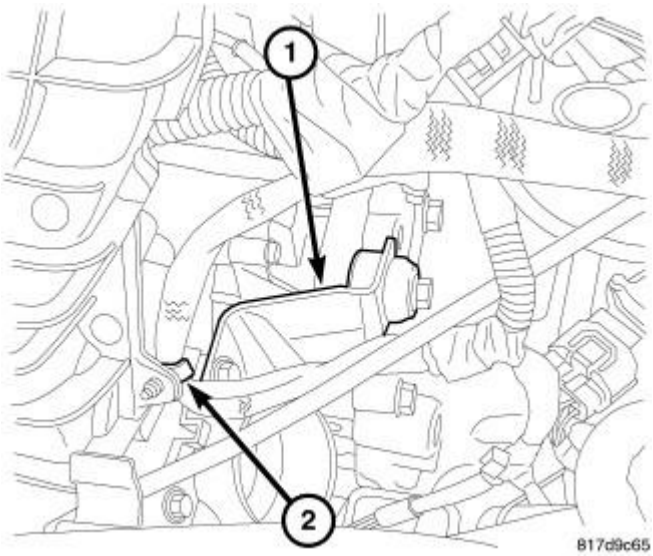

Fig. 339: Throttle Body Support
Courtesy of CHRYSLER GROUP, LLC

5. Install the throttle body support bracket (1).

 © 2011 Mitchell Repair Information Company, LLC.

6. Connect the electronic throttle control electrical connector.
7. Install the wiring harness retainer to the intake manifold (2).
8. Connect the MAP sensor electrical connector.
9. Connect the vacuum lines to the intake manifold.

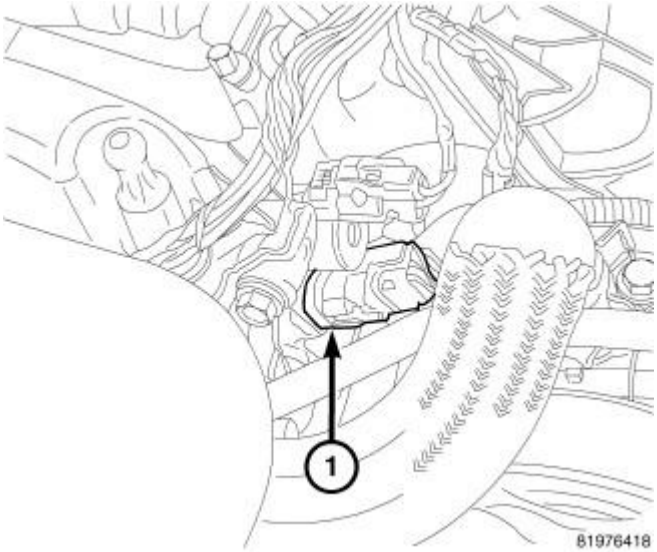

Fig. 340: Oil Temperature Sensor
Courtesy of CHRYSLER GROUP, LLC

10. Connect the oil temperature sensor (1).
11. Connect the variable valve timing solenoid electrical connector.
12. Connect the intake camshaft position sensor electrical connector.

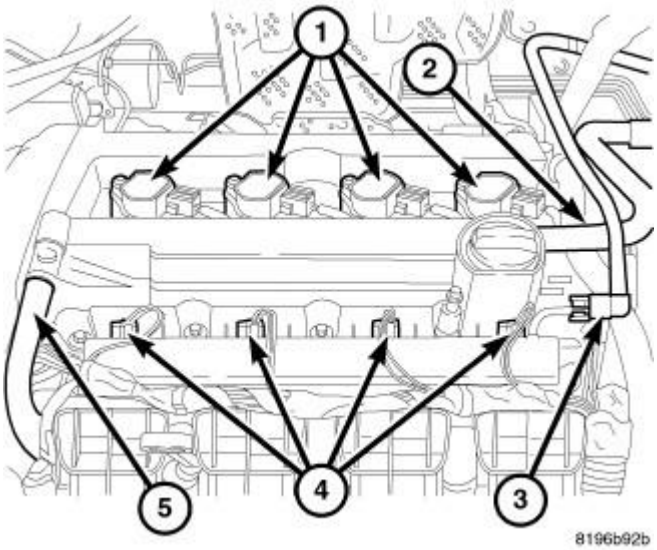

Fig. 341: Ignition Coils, Air Hose, Fuel Line, Injectors & PCV Hose
Courtesy of CHRYSLER GROUP, LLC

 © 2011 Mitchell Repair Information Company, LLC.

13. Install the fuel rail assembly to intake manifold. Tighten bolts to 23 N.m (200 in. lbs.).
14. Connect fuel injector electrical connectors (4).
15. Inspect quick connect fittings for damage, replace if necessary. Refer to **FITTING, QUICK CONNECT** . Connect fuel supply hose (3) to fuel rail assembly. Check connection by pulling on connector to insure it locked into position.

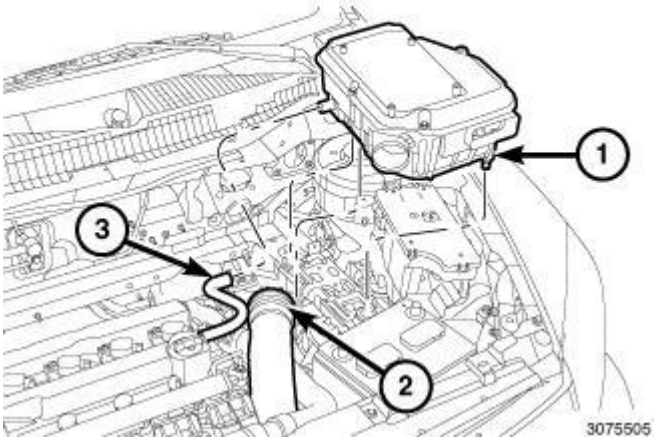

Fig. 342: Air Cleaner Body, Air Inlet Tube & Make-Up Air Hose
Courtesy of CHRYSLER GROUP, LLC

16. Push down on the air cleaner body (1) to engage the pins into the grommets.
17. Install the support bracket bolt to the strut tower and tighten to 10 N.m (89 in. lbs.).
18. Install the air inlet tube (2) to the air cleaner body (1).
19. Connect the make-up air hose (3) to the air cleaner body.

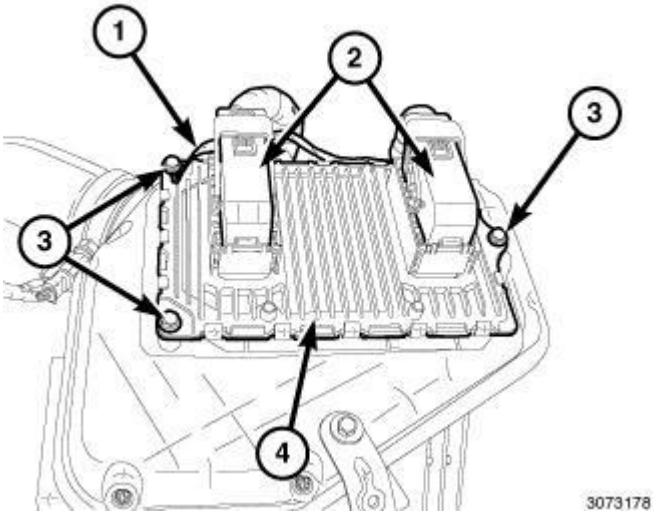

Fig. 343: Electrical Connectors, PCM, Three Mounting Bolts & Ground Wire

 © 2011 Mitchell Repair Information Company, LLC.

Courtesy of CHRYSLER GROUP, LLC

20. Install the mounting bolt (3) with ground wire (1) and tighten to 12 N.m (106 in. lbs.).
21. Connect and lock the electrical connectors (2).

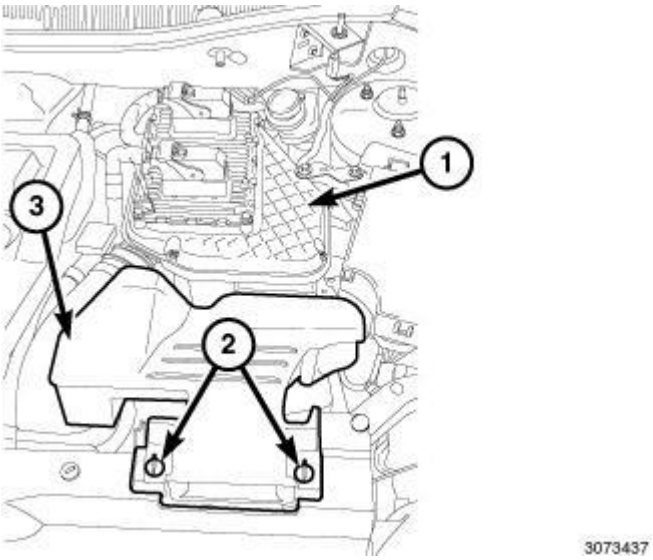

Fig. 344: Retainers, Fresh Air Inlet Duct & Air Cleaner Body
Courtesy of CHRYSLER GROUP, LLC

22. Connect the negative battery cable and tighten nut to 5 N.m (45 in. lbs.).
23. Install the fresh air inlet duct (3) on the air cleaner body (1) and lock the retainers (2).

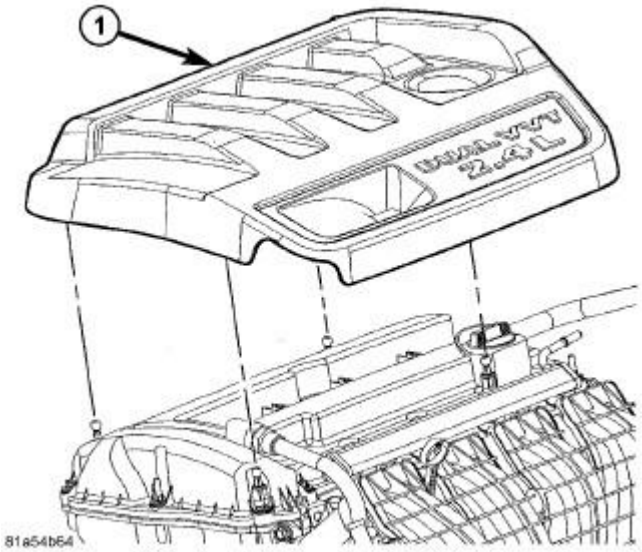

Fig. 345: Engine Cover
Courtesy of CHRYSLER GROUP, LLC

24. Install the engine cover (1).

 © 2011 Mitchell Repair Information Company, LLC.

VALVE TIMING

DESCRIPTION

DESCRIPTION

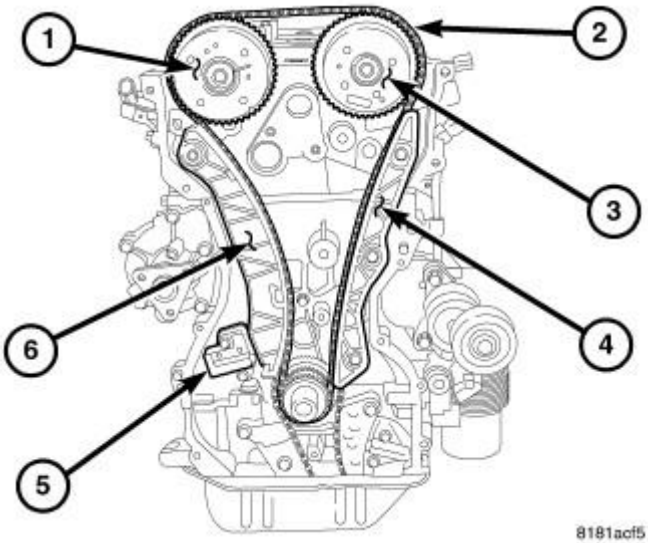

Fig. 346: Timing Drive System
Courtesy of CHRYSLER GROUP, LLC

The timing drive system consists of the following:

- Timing Chain (2)
- Camshaft Sprockets (1, 3)
- Crankshaft Sprocket
- Right Timing Chain Guide (Moveable) (6)
- Left Timing Chain Guide (Fixed) (4)
- Timing Chain Tensioner (5)

The camshaft sprockets are attached to the cam phasers which are attached to the front of the camshafts and are used with the timing chain and crankshaft sprocket to turn the camshafts. The camshaft position sensors target is part of the camshafts and is used with the camshaft position sensors to provide the PCM with valvetrain position information.

The timing chain tensioner is installed in the right side of the engine block. Using engine oil pressure, the tensioner applies constant pressure to the right side (movable) timing chain guide, which in turn applies pressure to the timing chain. Also as the tensioner extends, it rachet locks in position to provide constant timing chain tension.

STANDARD PROCEDURE

STANDARD PROCEDURE - VALVE TIMING VERIFICATION

 © 2011 Mitchell Repair Information Company, LLC.

CAUTION: Painted or colored chain links are used during initial engine assembly and can not be relied upon for valve timing verification. These markings are in different locations for early production, late production and service parts. Only use TDC marks, cylinder head cover sealing surface and camshaft sprocket marks to verify valve timing or engine damage may result.

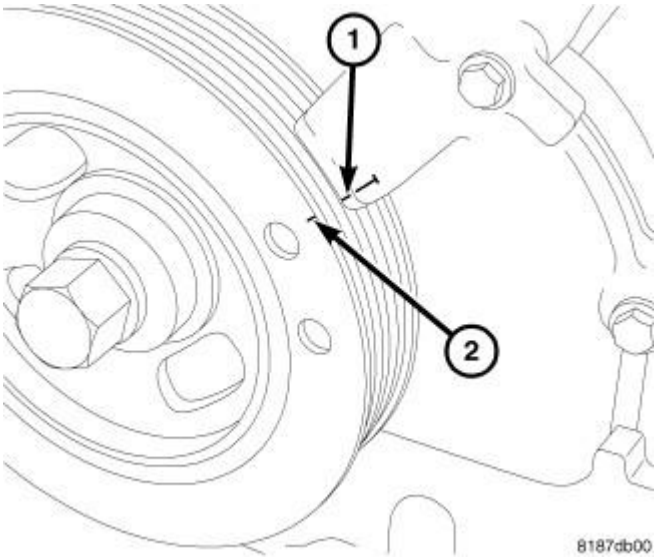

Fig. 347: Setting Engine To Top Dead Center
Courtesy of CHRYSLER GROUP, LLC

1. Remove engine cover.
2. Remove cylinder head cover. Refer to **COVER(S), CYLINDER HEAD, REMOVAL**.
3. Set engine to TDC (1, 2).

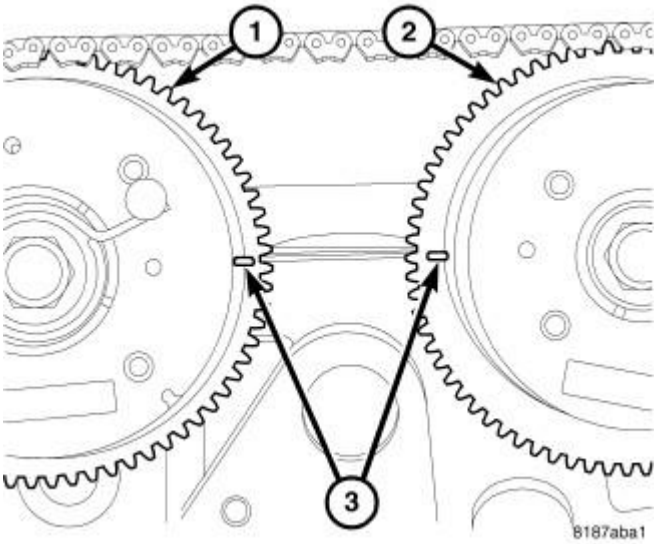

Fig. 348: Camshaft Timing
Courtesy of CHRYSLER GROUP, LLC

 © 2011 Mitchell Repair Information Company, LLC.

4. The marks on the camshaft sprockets (3) should be in line with the cylinder head cover sealing surface.
5. Install cylinder head cover . Refer to **COVER(S), CYLINDER HEAD, INSTALLATION**.
6. Install the engine cover.

CHAIN AND SPROCKETS, TIMING

REMOVAL

TIMING CHAIN

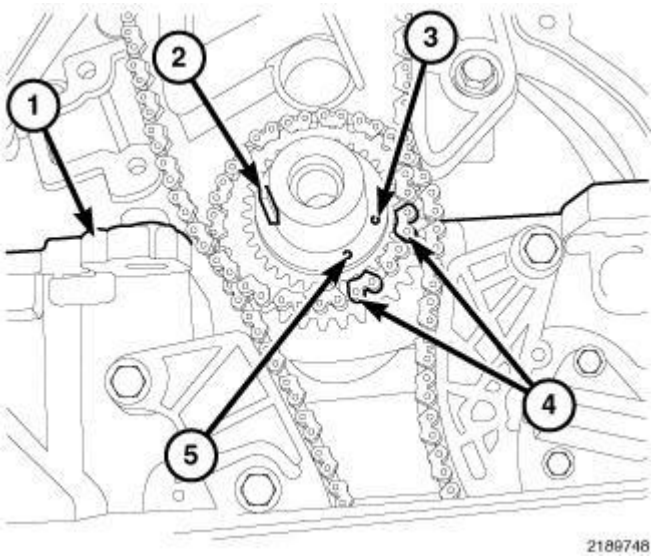

Fig. 349: Crankshaft Timing Marks
Courtesy of CHRYSLER GROUP, LLC

1. Remove timing chain cover . Refer to **COVER(S), ENGINE TIMING, REMOVAL**.

NOTE: **The crankshaft timing mark (3) or (5) can be in one of two locations depending on whether the engine is early production (5), late production (3) or assembled with service parts (3). In all cases the keyway (2) will always be in the 9:00 position, in line with the ladder frame mounting surface (1) when the engine is at TDC.**

2. Verify that the engine is still set to TDC.

NOTE: **If the timing chain plated links can no longer be seen, the timing chain links corresponding to the timing marks must be marked prior to removal if the chain is to be reused.**

3. Mark chain link (4) corresponding to crankshaft timing mark (3) or (5).

 © 2011 Mitchell Repair Information Company, LLC.

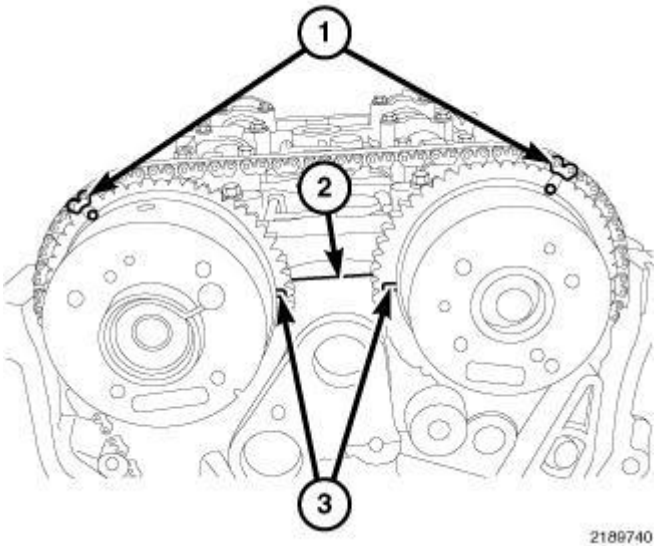

Fig. 350: Timing Chain Timing Marks
Courtesy of CHRYSLER GROUP, LLC

4. With the engine still set to TDC, verify that the marks on the camshaft sprockets (3) are in line with the cylinder head cover sealing surface (2). If the marks do not line up, the timing chain is not correctly installed.
5. Mark chain link (1) corresponding to camshaft timing mark.

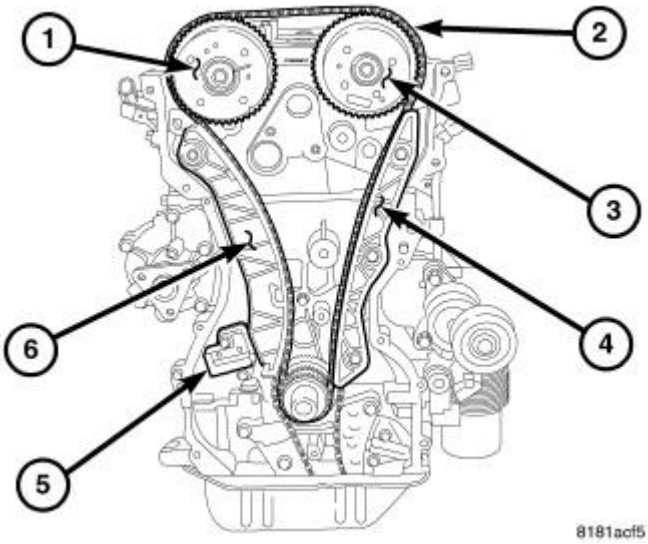

Fig. 351: Timing Drive System
Courtesy of CHRYSLER GROUP, LLC

6. Remove timing chain tensioner (5). Refer to **TENSIONER, ENGINE TIMING, REMOVAL**.
7. Remove timing chain (2).

CAMSHAFT SPROCKET(S)

 © 2011 Mitchell Repair Information Company, LLC.

NOTE: **Camshaft phasers and camshaft sprockets are supplied as an assembly, do not attempt to disassemble.**

Refer to camshaft phaser removal . Refer to **CAMSHAFT, ENGINE, REMOVAL**.

CRANKSHAFT SPROCKET

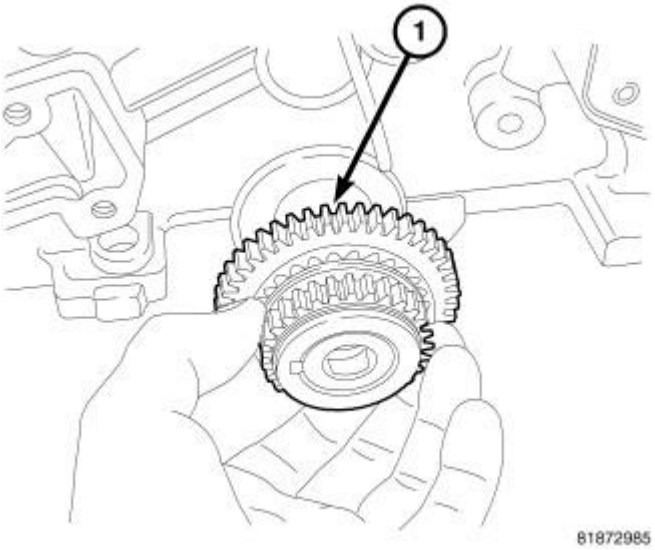

Fig. 352: Crankshaft Sprocket
Courtesy of CHRYSLER GROUP, LLC

1. Remove timing chain. Refer to **CHAIN AND SPROCKETS, TIMING, REMOVAL**.
2. Remove oil pan. Refer to **PAN, OIL, REMOVAL**.
3. Remove oil pump drive chain tensioner.
4. Remove oil pump drive chain.
5. Remove crankshaft sprocket (1).

INSPECTION

INSPECTION

 © 2011 Mitchell Repair Information Company, LLC.

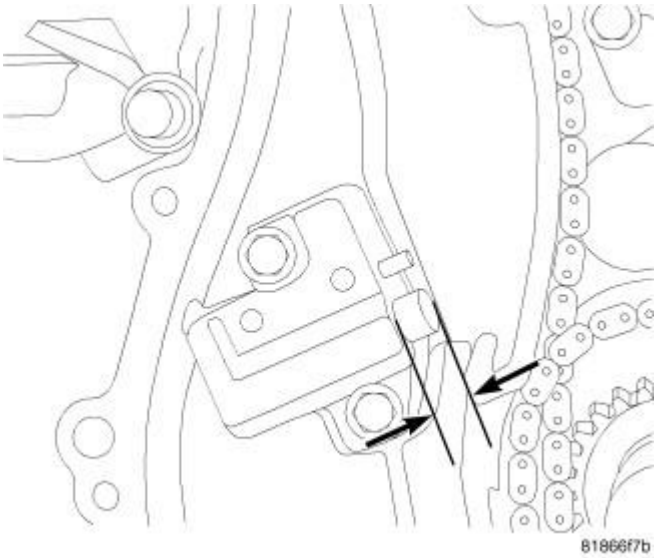

Fig. 353: Checking Timing Chain Stretch
Courtesy of CHRYSLER GROUP, LLC

Inspect timing chain for stretching prior to removal.

1. Rotate engine while watching timing chain tensioner plunger. When the plunger reaches its maximum travel stop rotating engine.
2. Measure the distance from the tensioner body and the edge of the chain guide as shown in illustration.
3. If the distance is greater than 20.5 mm (0.81 in.) inspect guide shoes for excessive wear.
4. If guides are okay, replace timing chain.

INSTALLATION

CRANKSHAFT SPROCKET

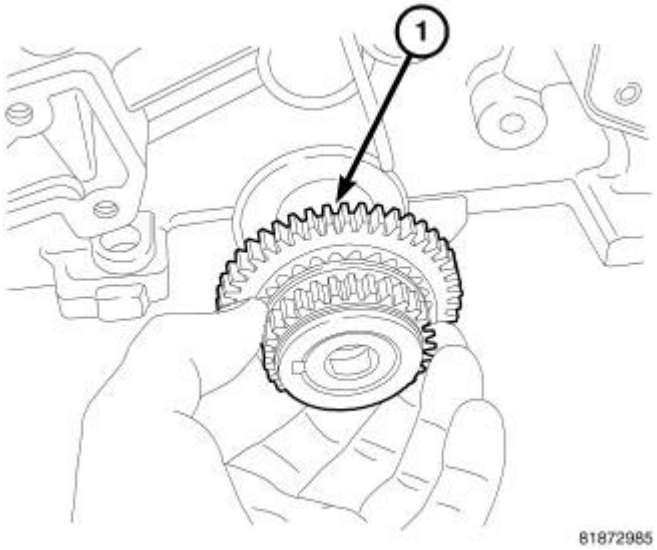

Fig. 354: Crankshaft Sprocket

 © 2011 Mitchell Repair Information Company, LLC.

Courtesy of CHRYSLER GROUP, LLC

1. Install crankshaft sprocket (1) onto crankshaft.

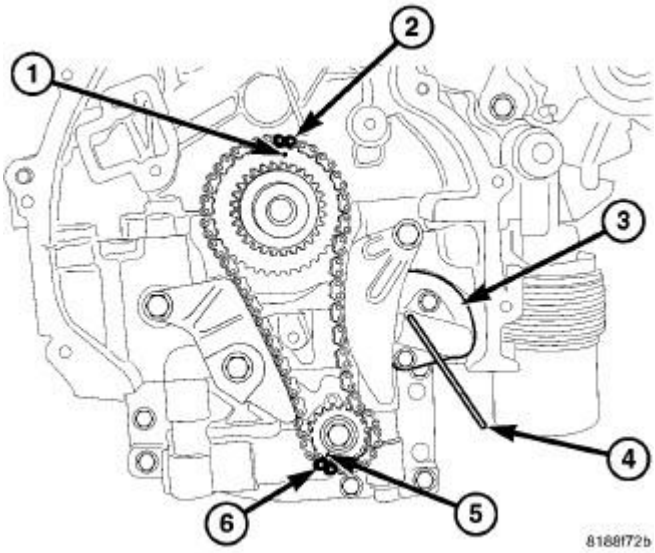

Fig. 355: BSM Tensioner
Courtesy of CHRYSLER GROUP, LLC

2. Install oil pump drive chain. Verify that Oil pump is correctly timed (1, 2, 5, 6).

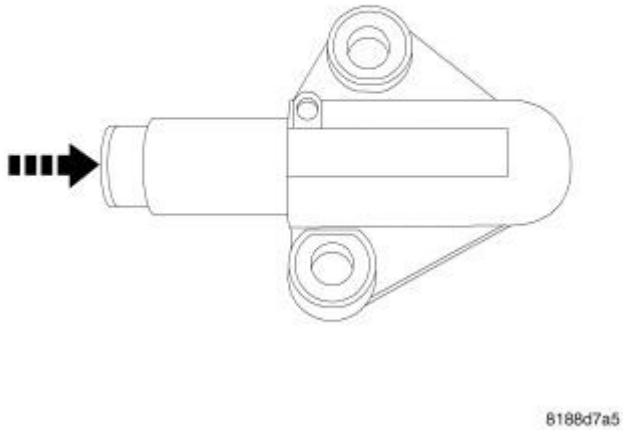

Fig. 356: Oil Pump Tensioner Reset
Courtesy of CHRYSLER GROUP, LLC

3. Reset oil pump drive chain tensioner by pushing plunger inward and install tensioner pin (special tool #8514, Pins, Tensioner).

 © 2011 Mitchell Repair Information Company, LLC.

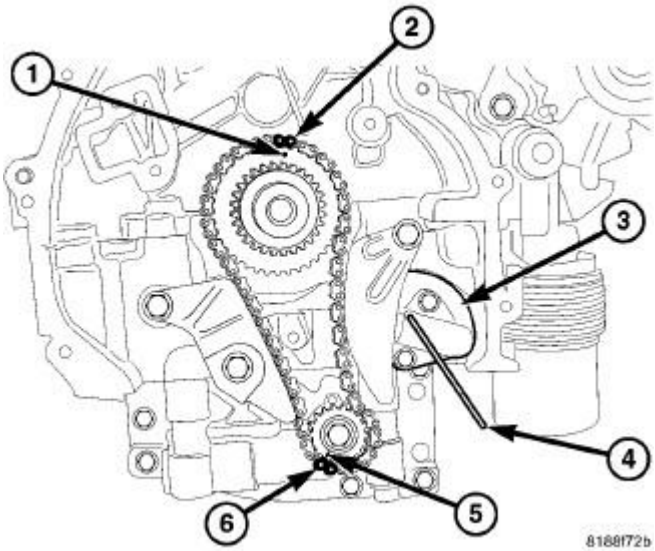

Fig. 357: BSM Tensioner
Courtesy of CHRYSLER GROUP, LLC

4. Install oil pump drive chain tensioner (3) and remove Tensioner Pin (special tool #8514, Pins, Tensioner) (4).
5. Install timing chain. Refer to **CHAIN AND SPROCKETS, TIMING, INSTALLATION**.
6. Install oil pan. Refer to **PAN, OIL, INSTALLATION**.
7. Fill engine with oil. Refer to **OIL, STANDARD PROCEDURE** .
8. Start engine and check for leaks.

CAMSHAFT SPROCKET(S)

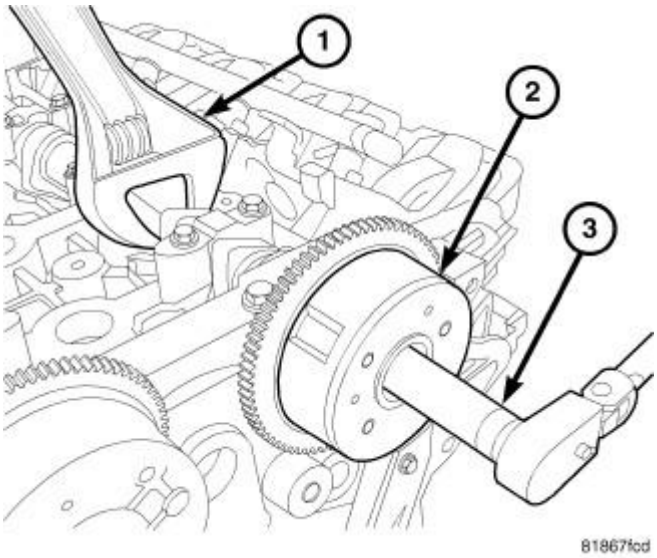

Fig. 358: Removing & Installing Cam Phaser
Courtesy of CHRYSLER GROUP, LLC

 © 2011 Mitchell Repair Information Company, LLC.

NOTE: **The camshaft sprockets and the camshaft phasers are an assembly and cannot be serviced separately.**

CAUTION: **Do not use an impact wrench to tighten camshaft sprocket bolts. Damage to the camshaft-to-sprocket locating dowel pin and camshaft phaser may occur.**

1. Refer to Camshaft phaser (2) installation . Refer to **CAMSHAFT, ENGINE, INSTALLATION**.

TIMING CHAIN

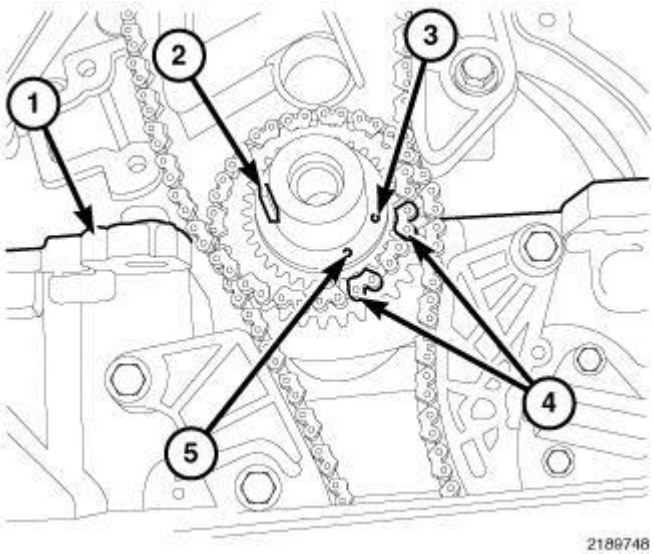

Fig. 359: Crankshaft Timing Marks
Courtesy of CHRYSLER GROUP, LLC

NOTE: **The crankshaft timing mark (3) or (5) can be in one of two locations depending on whether the engine is early production (5), late production (3) or assembled with service parts (3). In all cases the keyway (2) will always be in the 9:00 position, in line with the ladder frame mounting surface (1) when the engine is at TDC.**

1. Verify that the engine is still set to TDC.

 © 2011 Mitchell Repair Information Company, LLC.

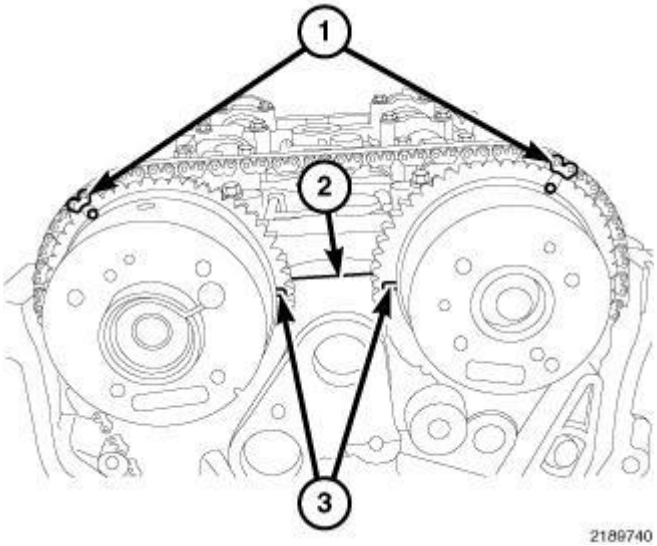

Fig. 360: Timing Chain Timing Marks
Courtesy of CHRYSLER GROUP, LLC

2. Align camshaft timing marks (3) so they are facing each other and in line with the cylinder head cover sealing surface (2).
3. Install timing chain so plated (or marked) links on chain align with timing marks on camshaft sprockets (1).

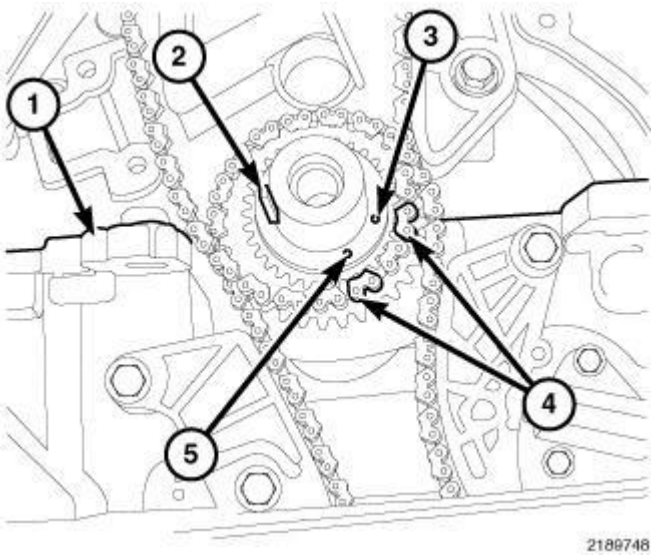

Fig. 361: Crankshaft Timing Marks
Courtesy of CHRYSLER GROUP, LLC

4. Align timing mark on the crankshaft sprocket (3) or (5) with the plated (or marked) link (4) on the timing chain. Position chain so slack will be on the tensioner side.

 © 2011 Mitchell Repair Information Company, LLC.

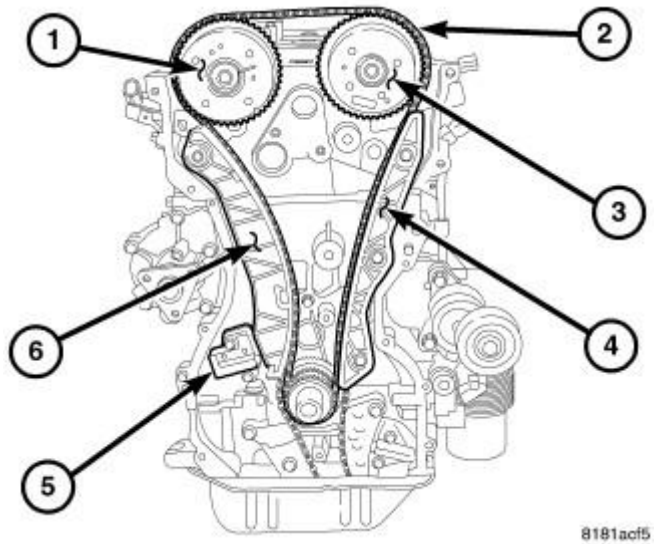

Fig. 362: Timing Drive
Courtesy of CHRYSLER GROUP, LLC

NOTE: Keep the slack in the timing chain on the tensioner side.

5. Install the timing chain tensioner (5) Refer to **TENSIONER, ENGINE TIMING, INSTALLATION**.

   Rotate the crankshaft CLOCKWISE two complete revolutions until the crankshaft is repositioned at the TDC position with the key way at the 9 o'clock position.

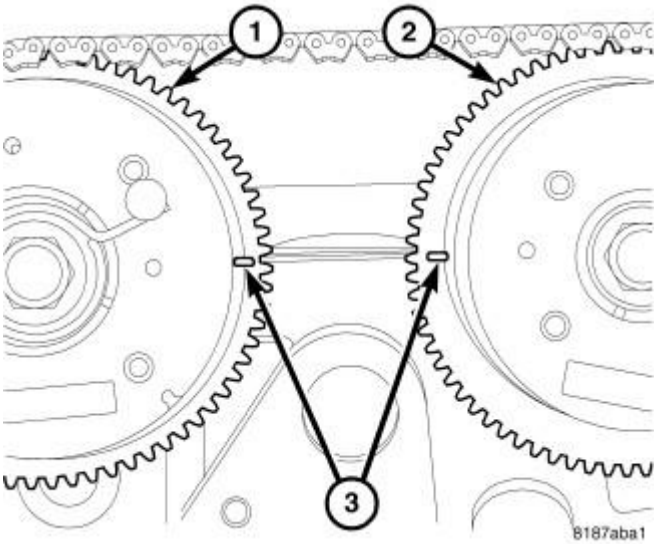

Fig. 363: Camshaft Timing
Courtesy of CHRYSLER GROUP, LLC

6. Verify that the camshafts timing marks (3) are in the proper position and in line with the cylinder head cover sealing surface. If the marks do not line up, the timing chain is not correctly installed.
7. Install front timing chain cover . Refer to **COVER(S), ENGINE TIMING, INSTALLATION**.

8. Connect negative battery cable.
9. Operate engine until it reaches normal operating temperature. Check oil and cooling systems for correct fluid levels.

COVER(S), ENGINE TIMING

REMOVAL

REMOVAL

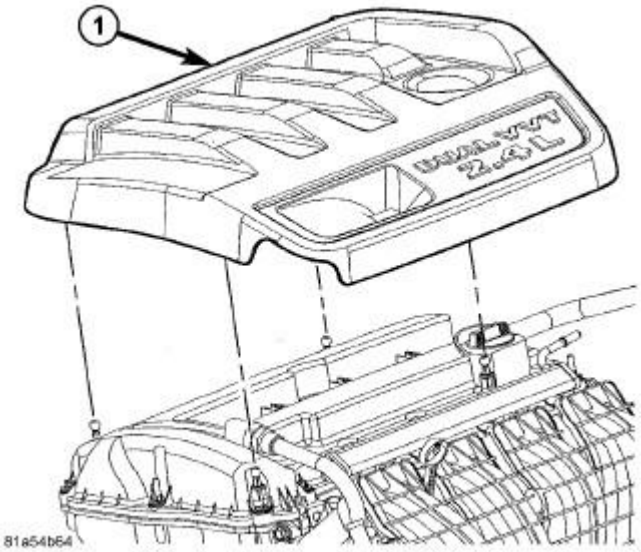

Fig. 364: Engine Cover
Courtesy of CHRYSLER GROUP, LLC

1. Remove engine cover (1) by pulling upward.
2. Perform fuel pressure bleed procedure. Refer to **FUEL SYSTEM PRESSURE RELEASE PROCEDURE** .
3. Disconnect and isolate the negative battery cable.

 © 2011 Mitchell Repair Information Company, LLC.

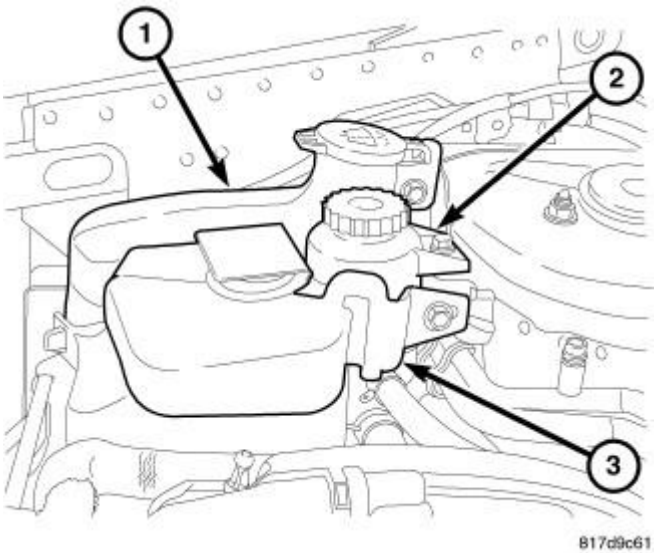

Fig. 365: Windshield Washer Bottle, Power Steering Reservoir & Coolant Reservoir
Courtesy of CHRYSLER GROUP, LLC

4. Remove coolant recovery bottle (3). Refer to **BOTTLE, COOLANT RECOVERY, REMOVAL** .
5. Remove and reposition power steering reservoir (2).
6. Remove windshield washer bottle (1). Refer to **RESERVOIR, WINDSHIELD WASHER, REMOVAL** .
7. Remove accessory drive belt. Refer to **BELT, SERPENTINE, REMOVAL** .

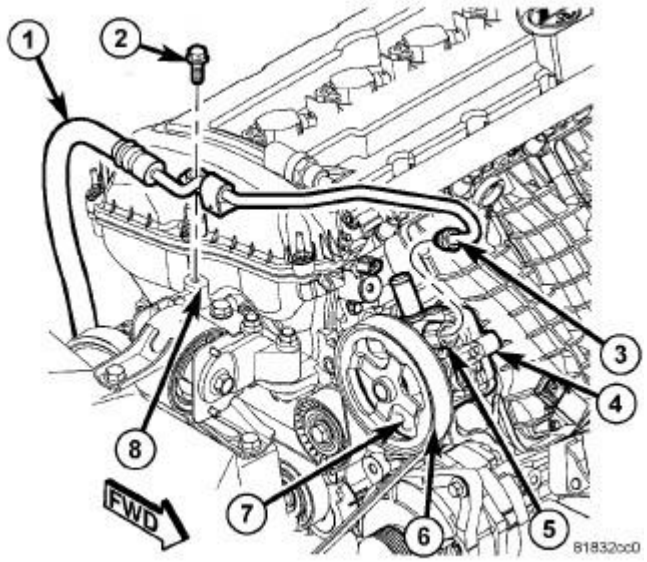

Fig. 366: Power Steering Pressure Hose
Courtesy of CHRYSLER GROUP, LLC

8. Remove power steering hose hold down (2).

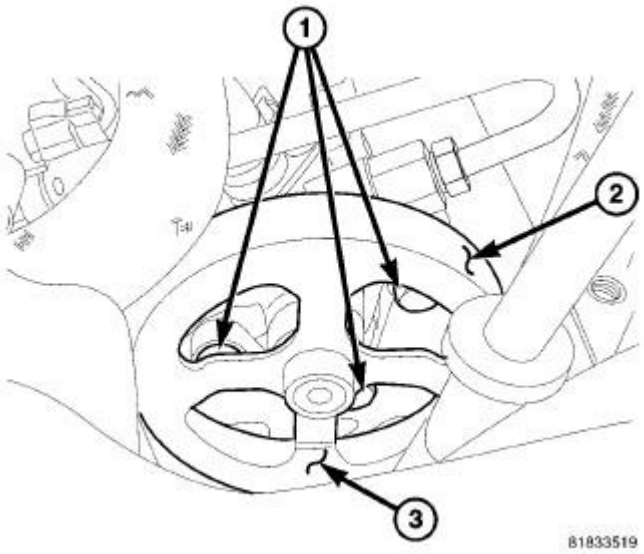

Fig. 367: Power Steering Pump Bolts & Pulley
Courtesy of CHRYSLER GROUP, LLC

9. Remove the three power steering pump mounting bolts (1) through the openings in the pulley (3) and reposition the pump.

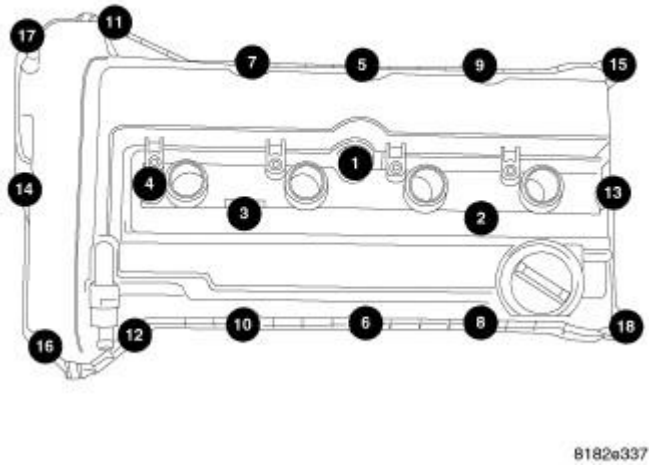

Fig. 368: Removing/Installing Cylinder Head Cover Bolts In Sequence
Courtesy of CHRYSLER GROUP, LLC

10. Remove the cylinder head cover. Refer to **COVER(S), CYLINDER HEAD, REMOVAL**.
11. Remove ignition coils from cylinder head cover.

 © 2011 Mitchell Repair Information Company, LLC.

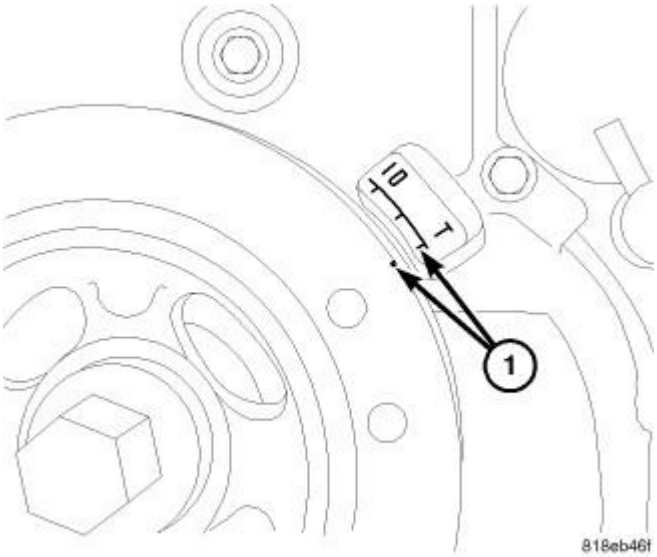

Fig. 369: Setting Engine To Top Dead Center
Courtesy of CHRYSLER GROUP, LLC

12. Raise and support the vehicle. Refer to **HOISTING, STANDARD PROCEDURE** .
13. Remove the right lower splash shield. Refer to **SHIELD, SPLASH, FRONT WHEELHOUSE, REMOVAL** .
14. Set engine to TDC (1).

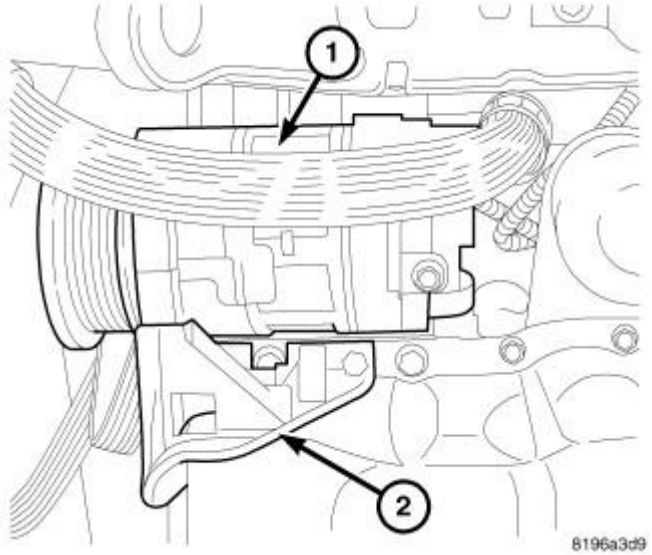

Fig. 370: A/C Compressor
Courtesy of CHRYSLER GROUP, LLC

15. Remove lower A/C compressor bolts if equipped.
16. Remove lower A/C compressor mount (2) if equipped.

 © 2011 Mitchell Repair Information Company, LLC.

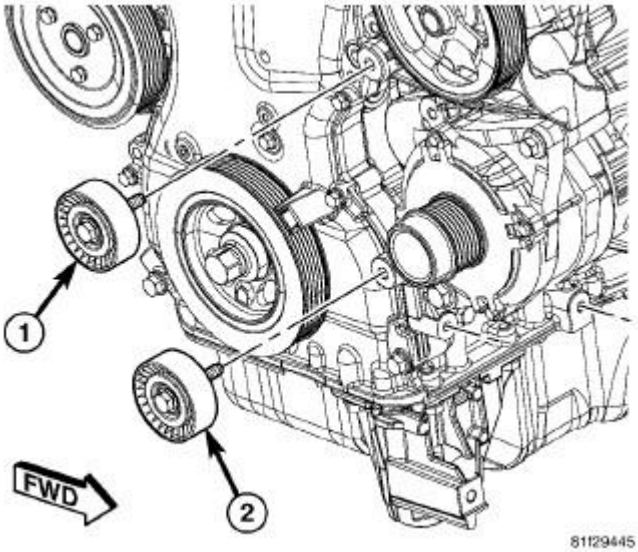

Fig. 371: Removing/Installing Accessory Drive Belt Upper & Lower Idler Pulley
Courtesy of CHRYSLER GROUP, LLC

17. Remove accessory drive belt lower idler pulley (2).

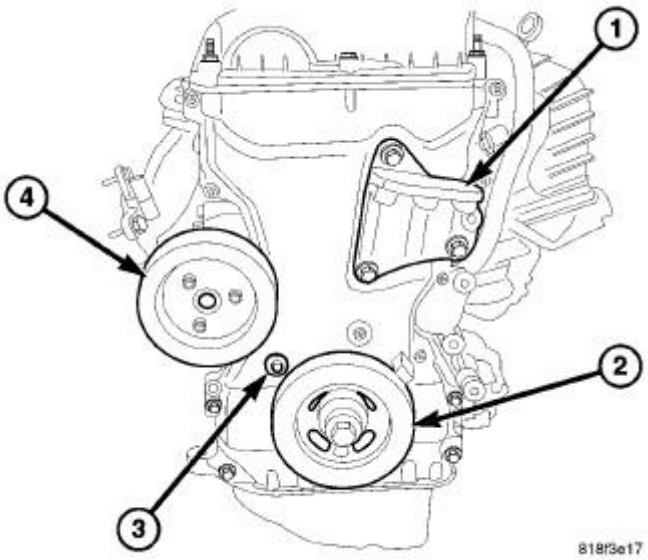

Fig. 372: Engine Front
Courtesy of CHRYSLER GROUP, LLC

18. Remove crankshaft damper (2). Refer to **DAMPER, VIBRATION, REMOVAL**.
19. Remove three bolts and water pump pulley (4) from water pump.
20. Remove lower bolt from right side engine mount bracket (1).

 © 2011 Mitchell Repair Information Company, LLC.

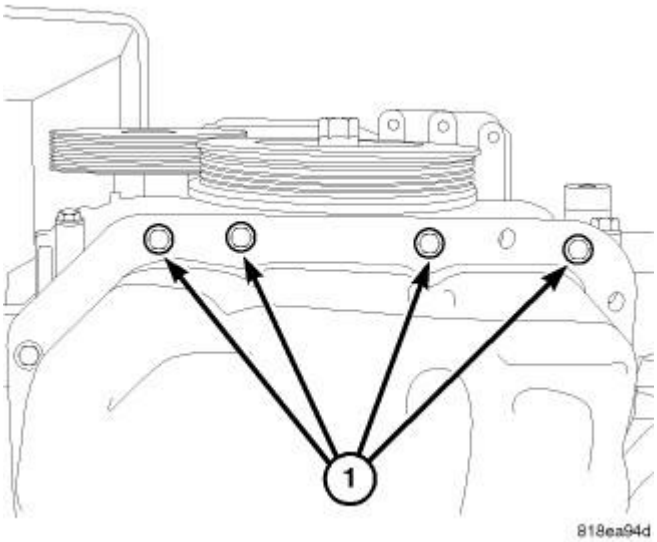

Fig. 373: Timing Chain Cover Lower Bolts
Courtesy of CHRYSLER GROUP, LLC

21. Remove timing chain cover lower bolts (1).
22. Lower vehicle.
23. Support engine with suitable jack.

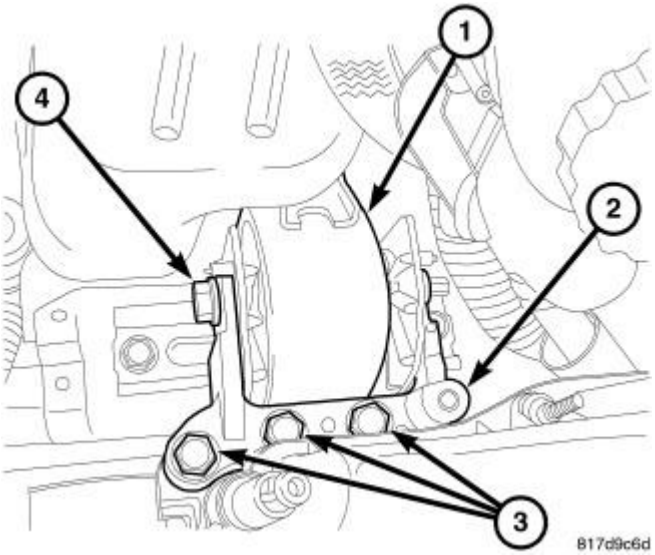

Fig. 374: Right Engine Mount Assembly
Courtesy of CHRYSLER GROUP, LLC

24. Remove right engine mount through bolt (4).
25. Remove right engine mount to mount bracket bolts (3).
26. Remove right engine mount adapter (2).

 © 2011 Mitchell Repair Information Company, LLC.

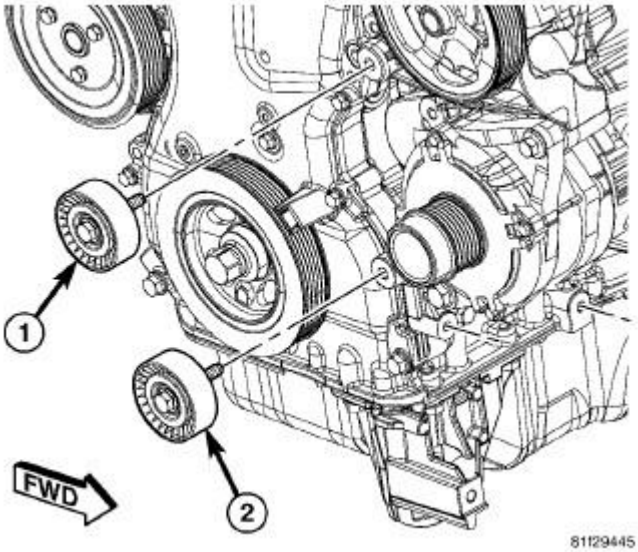

Fig. 375: Removing/Installing Accessory Drive Belt Upper & Lower Idler Pulley
Courtesy of CHRYSLER GROUP, LLC

27. Remove accessory drive upper idler pulley (1).

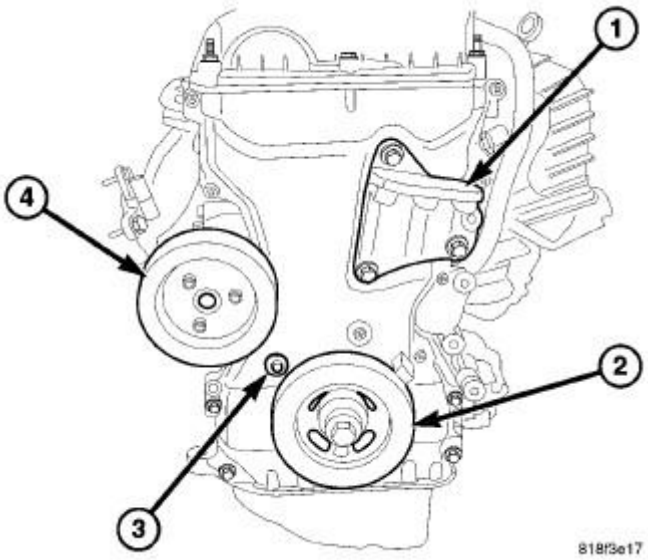

Fig. 376: Right Side Engine Mount Bracket, Crankshaft Damper & Water Pump Pulley
Courtesy of CHRYSLER GROUP, LLC

28. Remove right upper engine mount bracket (1).
29. Remove accessory drive belt tensioner.
30. Remove timing chain cover retaining bolts.

 © 2011 Mitchell Repair Information Company, LLC.

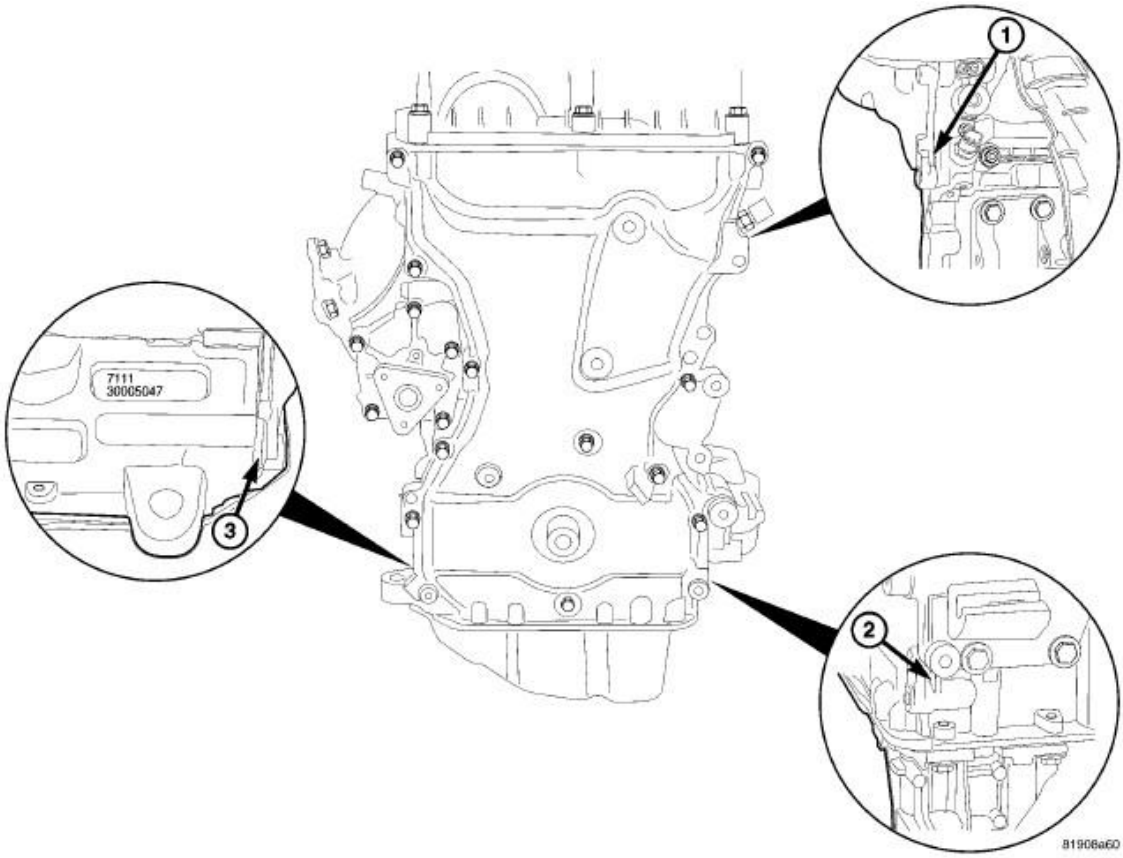

Fig. 377: Timing Chain Cover Pry Points
Courtesy of CHRYSLER GROUP, LLC

31. Remove timing chain cover using pry points (1, 2, 3).

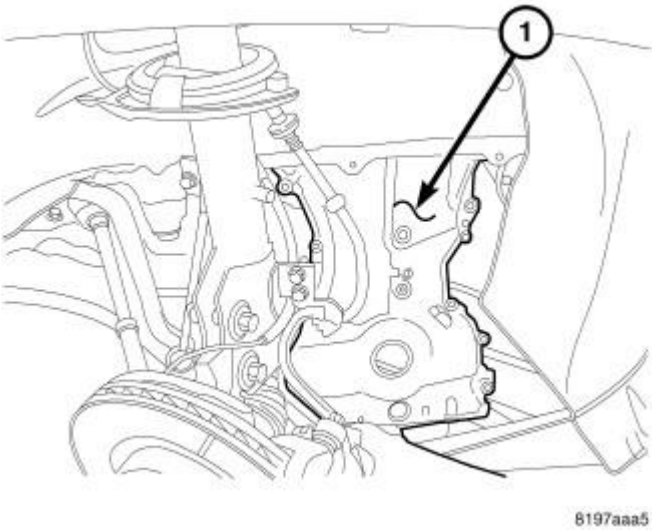

Fig. 378: Timing Chain Cover Removal & Installation
Courtesy of CHRYSLER GROUP, LLC

32. Remove timing chain cover (1) out through the bottom of the vehicle.

INSTALLATION

INSTALLATION

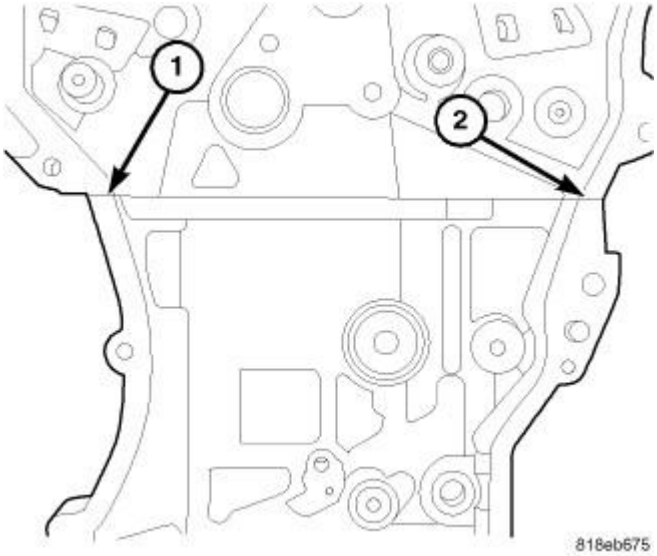

Fig. 379: Front Cover Upper T-Joints
Courtesy of CHRYSLER GROUP, LLC

NOTE: When using RTV, the sealing surfaces must be clean and free from grease and oil.

NOTE: When using RTV, parts should be assembled in 10 minutes and tighten to final torque within 45 minutes.

1. Clean all sealing surfaces. Refer to **ENGINE GASKET SURFACE PREPARATION** .
2. Apply Mopar® engine sealant RTV (or equivalent) as shown in illustration at the cylinder head to block parting line (1, 2).

 © 2011 Mitchell Repair Information Company, LLC.

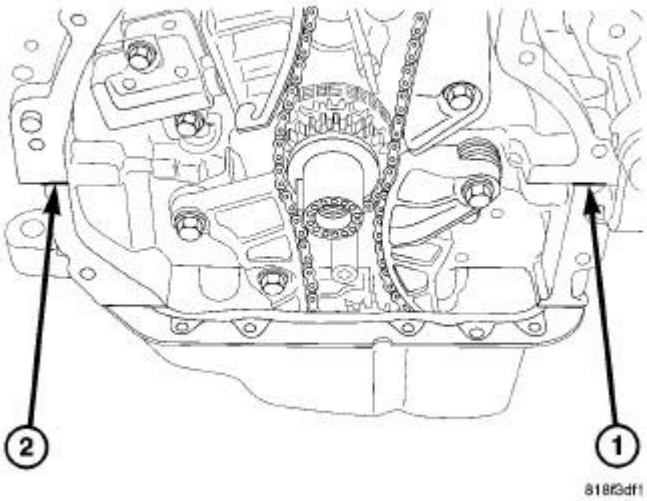

Fig. 380: Lower T-Joints
Courtesy of CHRYSLER GROUP, LLC

3. Apply Mopar® engine sealant RTV (or equivalent) as shown in illustration at the ladder frame to block parting line (1, 2).

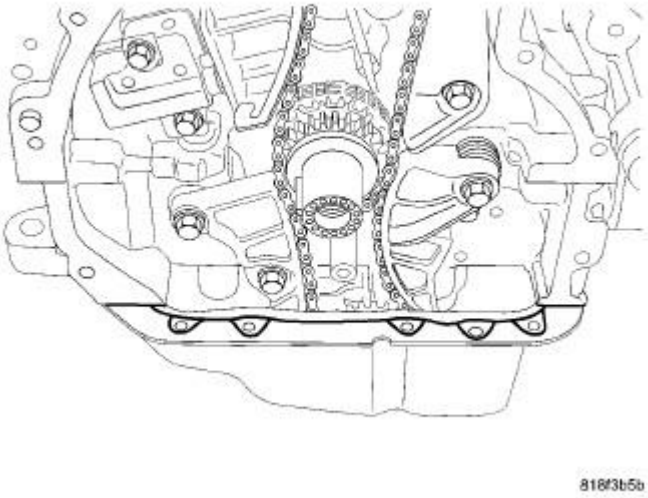

Fig. 381: Sealing Oil Pan
Courtesy of CHRYSLER GROUP, LLC

4. Apply Mopar® engine sealant RTV (or equivalent) as shown in illustration in the corner of the oil pan and block.
5. Apply 2 mm bead of Mopar® engine sealant RTV (or equivalent) to the oil pan as shown in illustration.

 © 2011 Mitchell Repair Information Company, LLC.

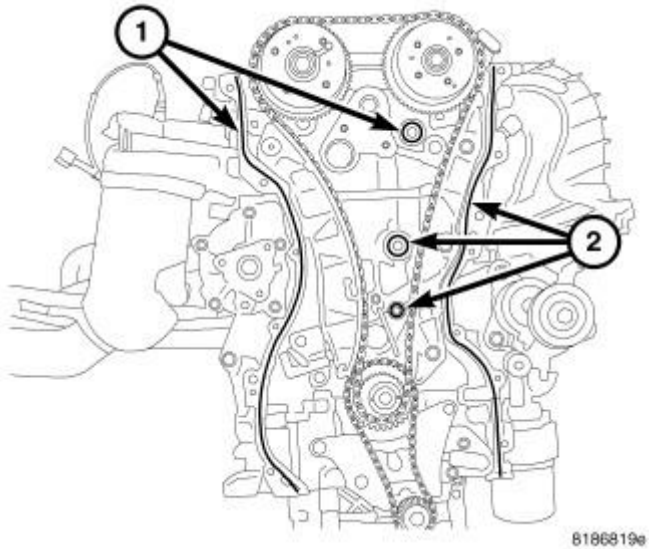

Fig. 382: Timing Chain Cover Sealing
Courtesy of CHRYSLER GROUP, LLC

6. Apply 2 mm bead of Mopar® engine sealant RTV (or equivalent) to the engine block (1, 2) as shown in illustration.

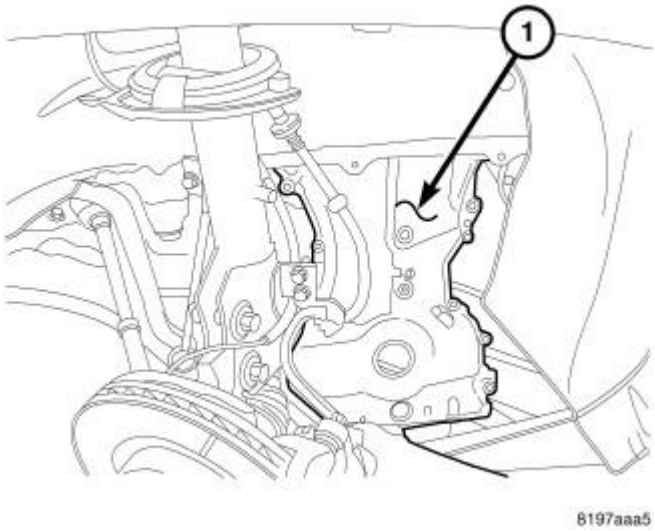

Fig. 383: Timing Chain Cover Removal & Installation
Courtesy of CHRYSLER GROUP, LLC

7. Install timing chain cover (1) upwards from under the vehicle.
8. Install timing chain cover upper retaining bolts and tighten M6 bolts to 9 N.m (80 in. lbs.) and M8 bolts to 26 N.m (230 in. lbs.).
9. Install accessory drive belt tensioner. Tighten bolt to 24 N.m (212 in. lbs.).

 © 2011 Mitchell Repair Information Company, LLC.

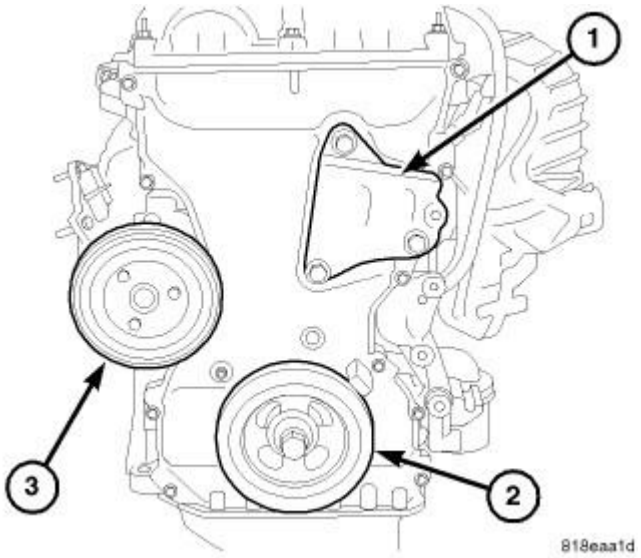

Fig. 384: Engine Mount Support Bracket, Crankshaft Vibration Damper & Water Pump Pulley
Courtesy of CHRYSLER GROUP, LLC

10. Install right engine mount bracket (1). Tighten bolts to 50 N.m (37 ft. lbs.).

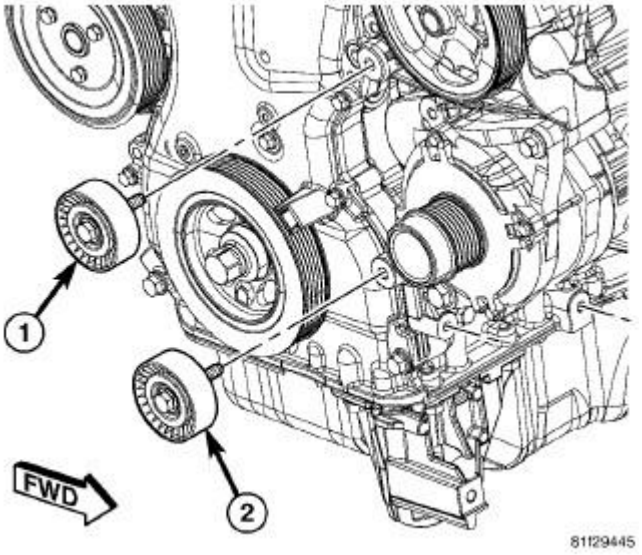

Fig. 385: Removing/Installing Accessory Drive Belt Upper & Lower Idler Pulley
Courtesy of CHRYSLER GROUP, LLC

11. Install accessory drive belt upper idler pulley (1). Tighten bolt to 48 N.m (35 ft. lbs.).

 © 2011 Mitchell Repair Information Company, LLC.

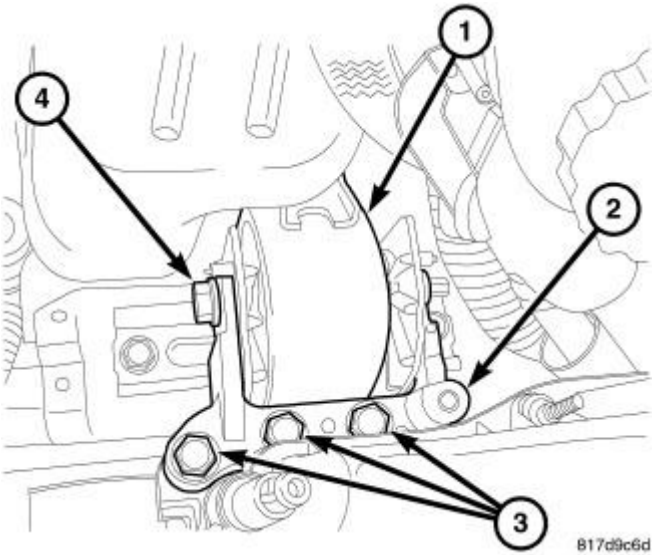

Fig. 386: Right Engine Mount Assembly
Courtesy of CHRYSLER GROUP, LLC

12. Install engine mount adapter (2) and tighten bolts (3) to 68 N.m (50 ft. lbs.).
13. Install engine mount through bolt (4) and tighten to 88 N.m (65 ft. lbs.).
14. Remove jack from under engine.

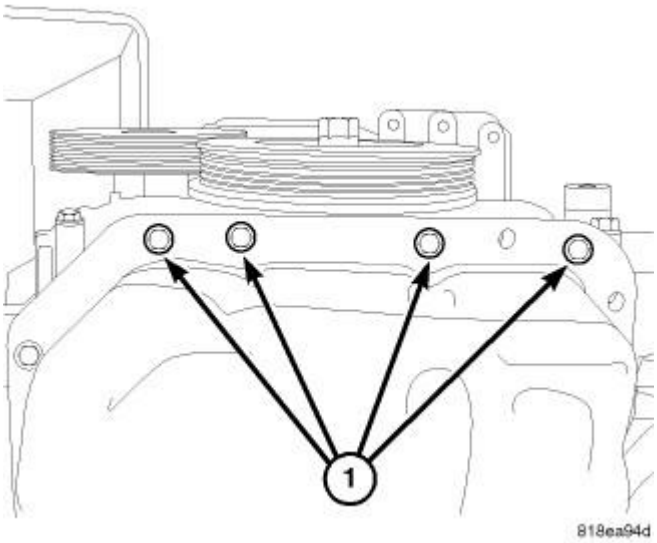

Fig. 387: Timing Chain Cover Lower Bolts
Courtesy of CHRYSLER GROUP, LLC

15. Raise and support the vehicle. Refer to **HOISTING, STANDARD PROCEDURE** .
16. Install oil pan to timing chain cover lower retaining bolts (1) and tighten M6 bolts to 9 N.m (80 in. lbs.).

 © 2011 Mitchell Repair Information Company, LLC.

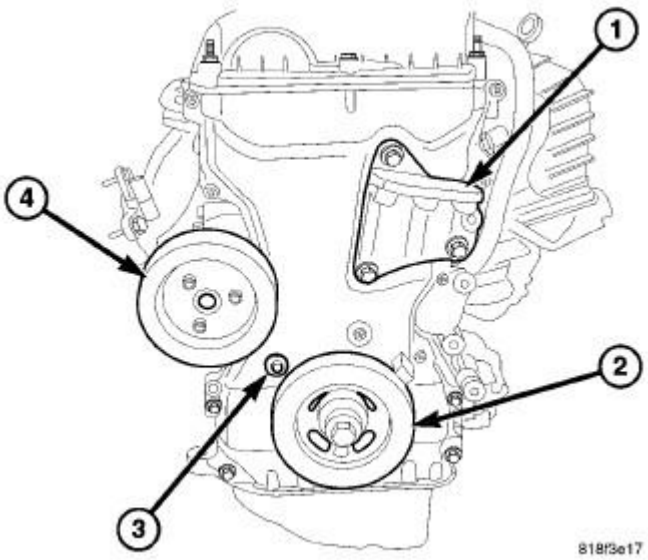

Fig. 388: Right Side Engine Mount Bracket, Crankshaft Damper & Water Pump Pulley
Courtesy of CHRYSLER GROUP, LLC

17. Install water pump pulley (4) and tighten three bolts to 9 N.m (80 in. lbs.).
18. Install crankshaft damper (2) Refer to **DAMPER, VIBRATION, INSTALLATION**.

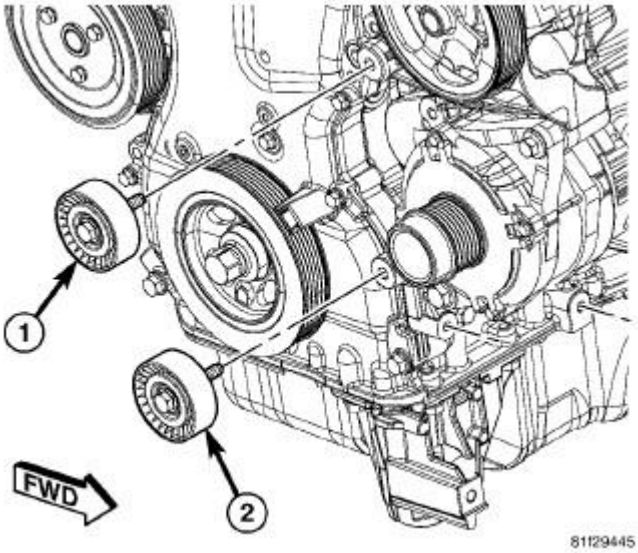

Fig. 389: Removing/Installing Accessory Drive Belt Upper & Lower Idler Pulley
Courtesy of CHRYSLER GROUP, LLC

19. Install accessory drive belt lower idler pulley (2). Tighten bolt to 48 N.m (35 ft. lbs.).

 © 2011 Mitchell Repair Information Company, LLC.

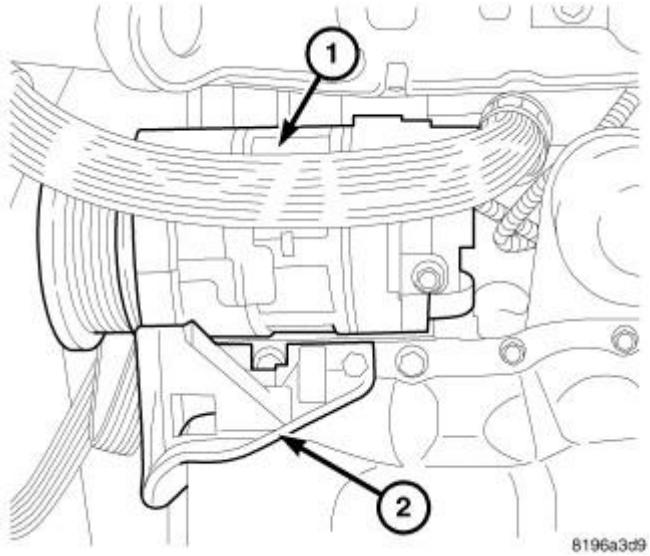

Fig. 390: A/C Compressor
Courtesy of CHRYSLER GROUP, LLC

20. Install lower A/C compressor mounting bracket (2). Tighten the bolts to 24 N.m (18 ft. lbs.).
21. Install A/C compressor (1). Tighten the bolts to 25 N.m (18 ft. lbs.).
22. Install right lower splash shield. Refer to **SHIELD, SPLASH, FRONT WHEELHOUSE, INSTALLATION** .
23. Lower vehicle.

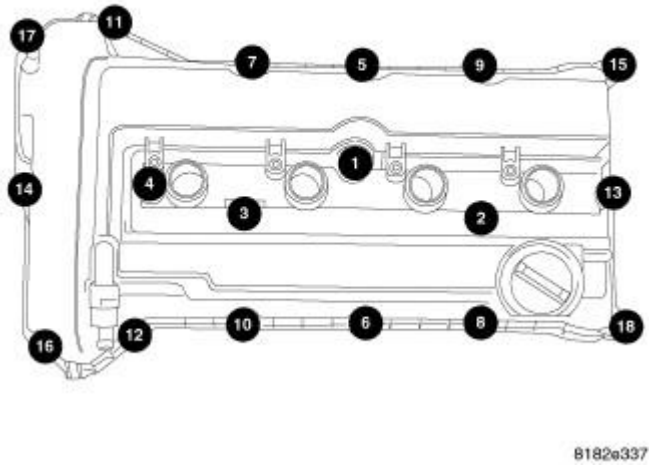

Fig. 391: Remove/Install Cylinder Head Cover Bolts In Sequence
Courtesy of CHRYSLER GROUP, LLC

24. Install cylinder head cover and ignition coils . Refer to **COVER(S), CYLINDER HEAD, INSTALLATION**.

 © 2011 Mitchell Repair Information Company, LLC.

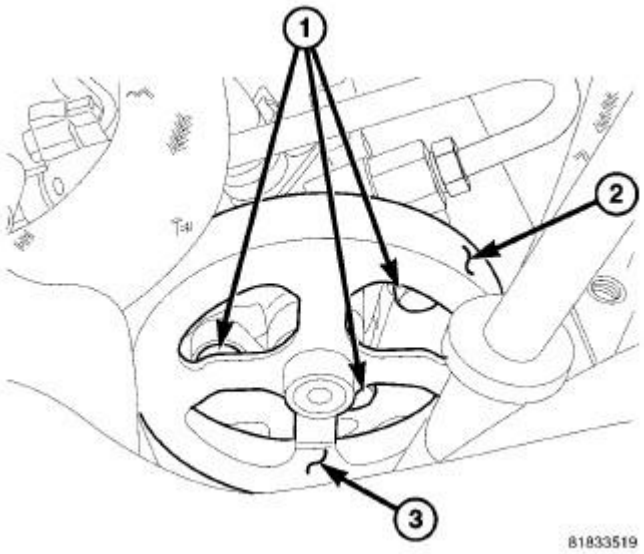

Fig. 392: Power Steering Pump Bolts & Pulley
Courtesy of CHRYSLER GROUP, LLC

25. Place the power steering pump in mounting position. Install the three bolts (1) through openings in the pulley (3). Tighten the mounting bolts (1) to 26 N.m (19 ft. lbs.).

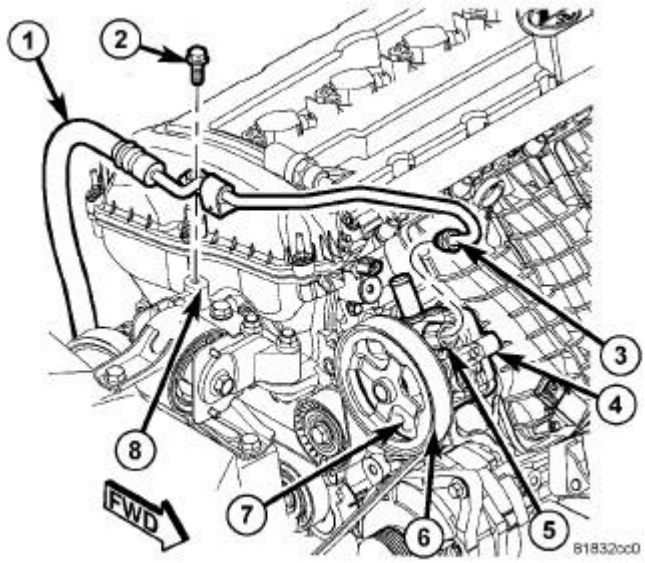

Fig. 393: Power Steering Pressure Hose
Courtesy of CHRYSLER GROUP, LLC

26. Install the power steering hose hold down (2).
27. Install accessory drive belt. Refer to **BELT, SERPENTINE, INSTALLATION** .

 © 2011 Mitchell Repair Information Company, LLC.

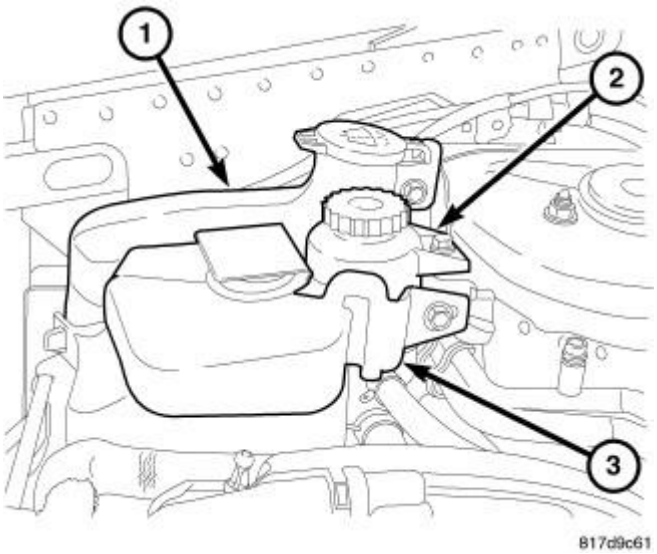

Fig. 394: Windshield Washer Reservoir, Power Steering Reservoir & Coolant Reservoir
Courtesy of CHRYSLER GROUP, LLC

28. Install power steering pump reservoir (2). Tighten mounting screw to 12 N.m (106 in. lbs.).
29. Install windshield washer reservoir (1).
30. Install coolant recovery reservoir (3). Tighten mounting bolts to 4 N.m (35 in. lbs.).

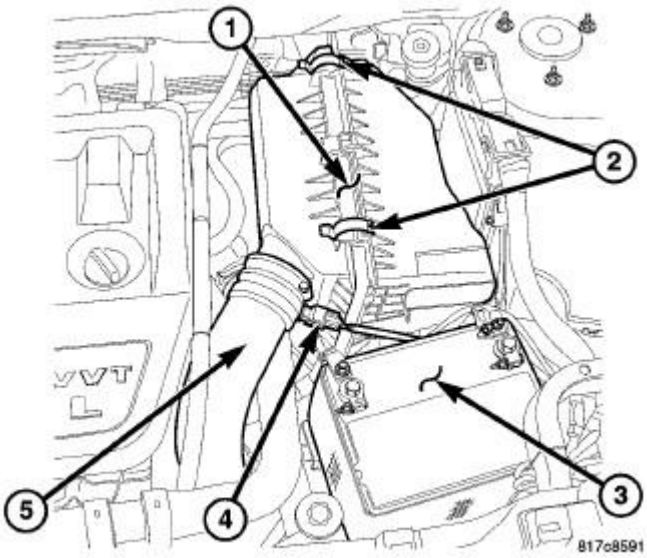

Fig. 395: Air Cleaner Housing
Courtesy of CHRYSLER GROUP, LLC

31. Install clean air hose (5) and air cleaner housing (1). Refer to **BODY, AIR CLEANER, INSTALLATION**.
32. Install air cleaner housing inlet.
33. Connect negative battery cable.

 © 2011 Mitchell Repair Information Company, LLC.

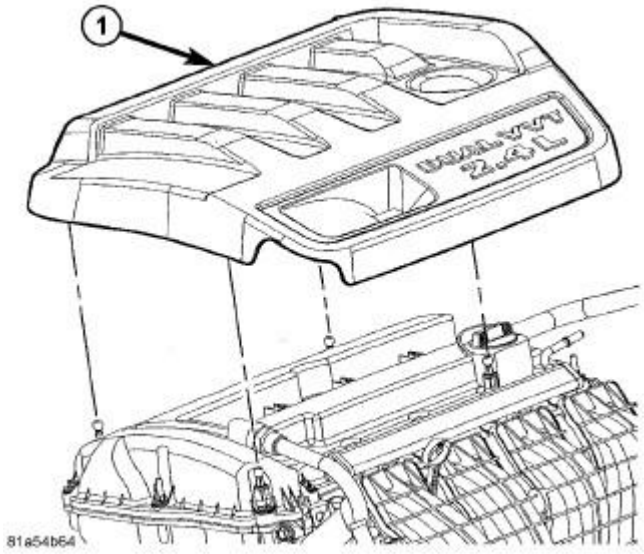

Fig. 396: Engine Cover
Courtesy of CHRYSLER GROUP, LLC

34. Operate engine until it reaches normal operating temperature. Check oil system for leaks and correct fluid level.
35. Install engine cover (1).

TENSIONER, ENGINE TIMING

REMOVAL

REMOVAL

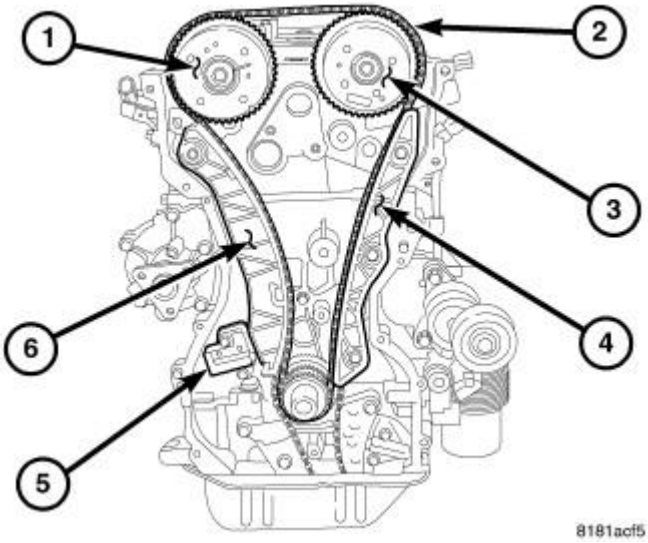

Fig. 397: Timing Drive System
Courtesy of CHRYSLER GROUP, LLC

 © 2011 Mitchell Repair Information Company, LLC.

1. Remove the engine timing cover. Refer to **COVER(S), ENGINE TIMING, REMOVAL**.

NOTE: Tensioner will not come apart during removal.

2. Remove timing chain tensioner retaining bolts and remove tensioner (5).

INSTALLATION

INSTALLATION

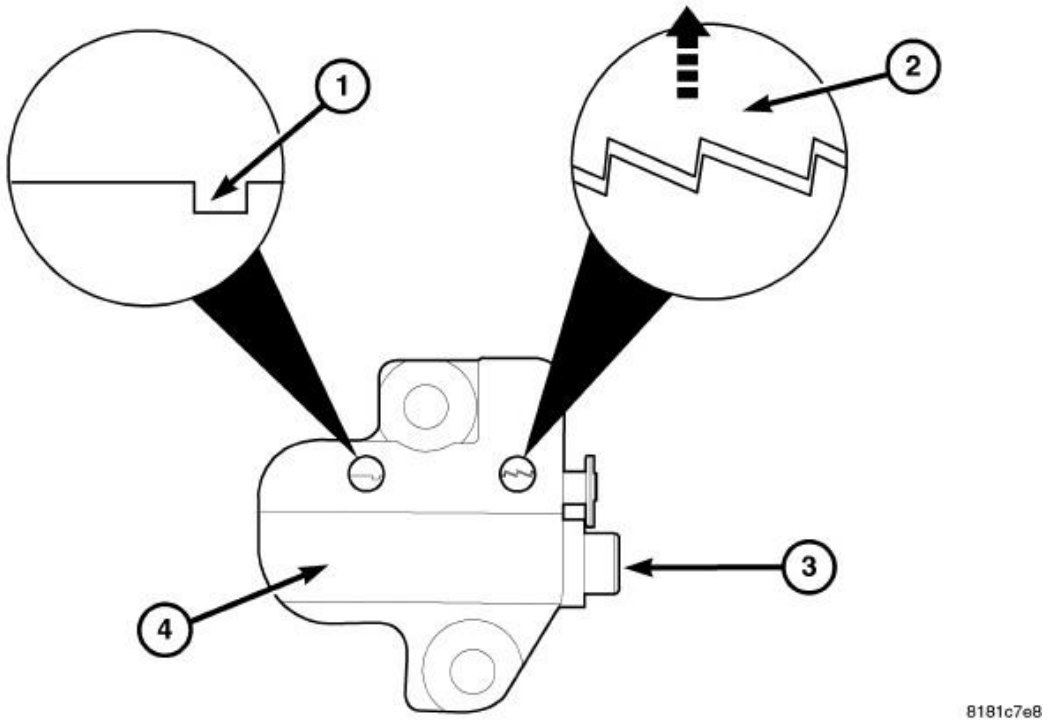

Fig. 398: Tensioner Reset
Courtesy of CHRYSLER GROUP, LLC

1. Reset timing chain tensioner (4) by lifting up on ratchet (2) and pushing plunger (3) inward towards the tensioner body (4). Insert Tensioner Pin (special tool #8514, Pins, Tensioner) into slot (1) to hold tensioner plunger in the retracted position.

 © 2011 Mitchell Repair Information Company, LLC.

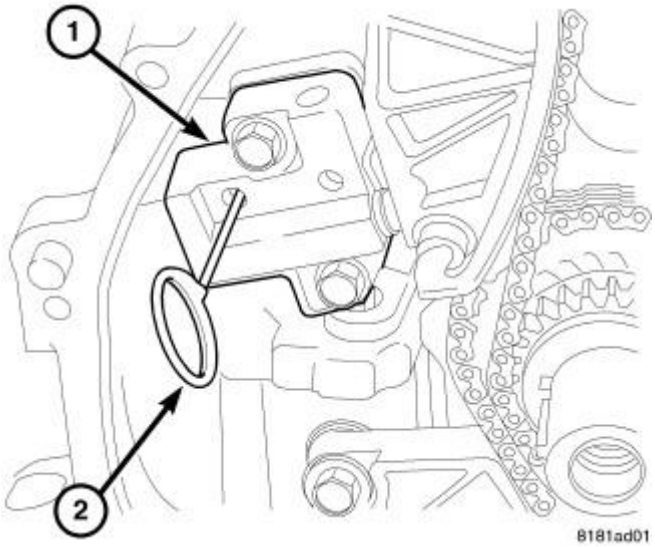

Fig. 399: Timing Chain Tensioner
Courtesy of CHRYSLER GROUP, LLC

NOTE: Keep the slack in the timing chain on the tensioner side.

2. Install timing chain tensioner (1) and tighten bolts to 12 N.m (105 in. lbs.).
3. Remove timing Tensioner Pin (special tool #8514, Pins, Tensioner) (2).
4. Install the engine timing cover Refer to **COVER(S), ENGINE TIMING, INSTALLATION**.

 © 2011 Mitchell Repair Information Company, LLC.