2008 ENGINE

3.0L TD - Service Information - Grand Cherokee

DESCRIPTION

3.0L DIESEL ENGINE

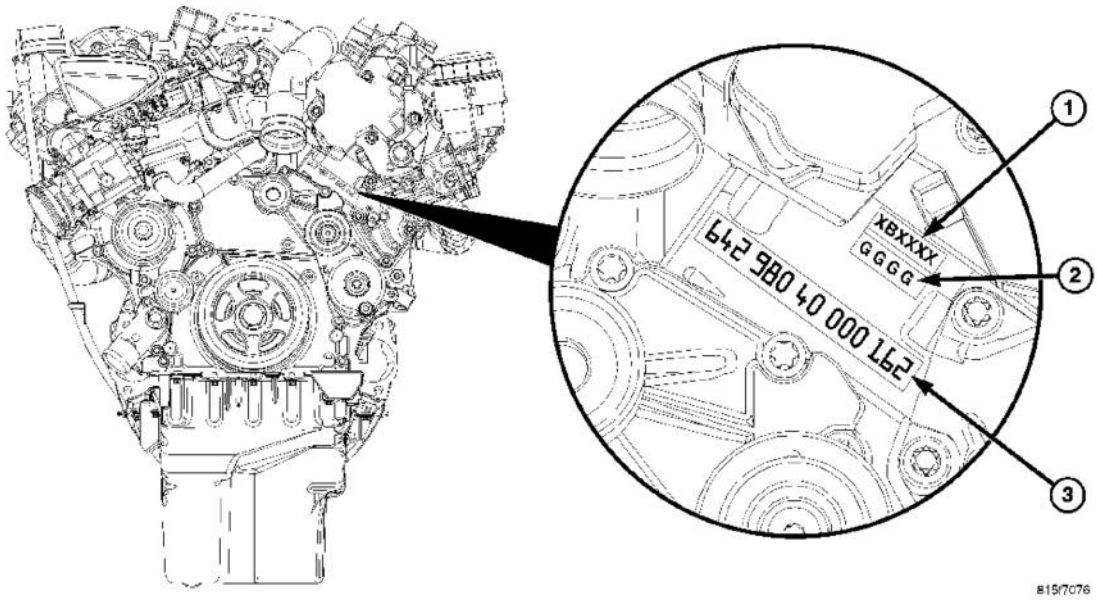

Fig. 1: 3.0L V-6 Diesel Engine Identification Locations
Courtesy of CHRYSLER LLC

1 - CYLINDER BORE TOLERANCE IDENTIFICATION
2 - MAIN BEARING TOLERANCE IDENTIFICATION
3 - ENGINE IDENTIFICATION AND SERIAL NUMBER

The 3.0L (183 C.I.D.) six - cylinder "common rail" direct injection engine is a 72°, overhead valve design. The engine utilize a cast aluminum cylinder block molded around cast iron piston sleeves. The engine has aluminum cross flow cylinder heads, four valves per cylinder, central injectors and dual overhead camshafts. The 3.0L is turbocharged, intercooled, and also equipped with a EGR cooler.

Additional features are:

Finger Follower Actuated Valves with Hydraulic Adjusters
Counter Rotating Balance Shaft
Oil Jet Cooled Pistons
Swirl Intake Ports
Chain driven D.O.H.C. per bank of cylinders, with 4 valves per cylinder

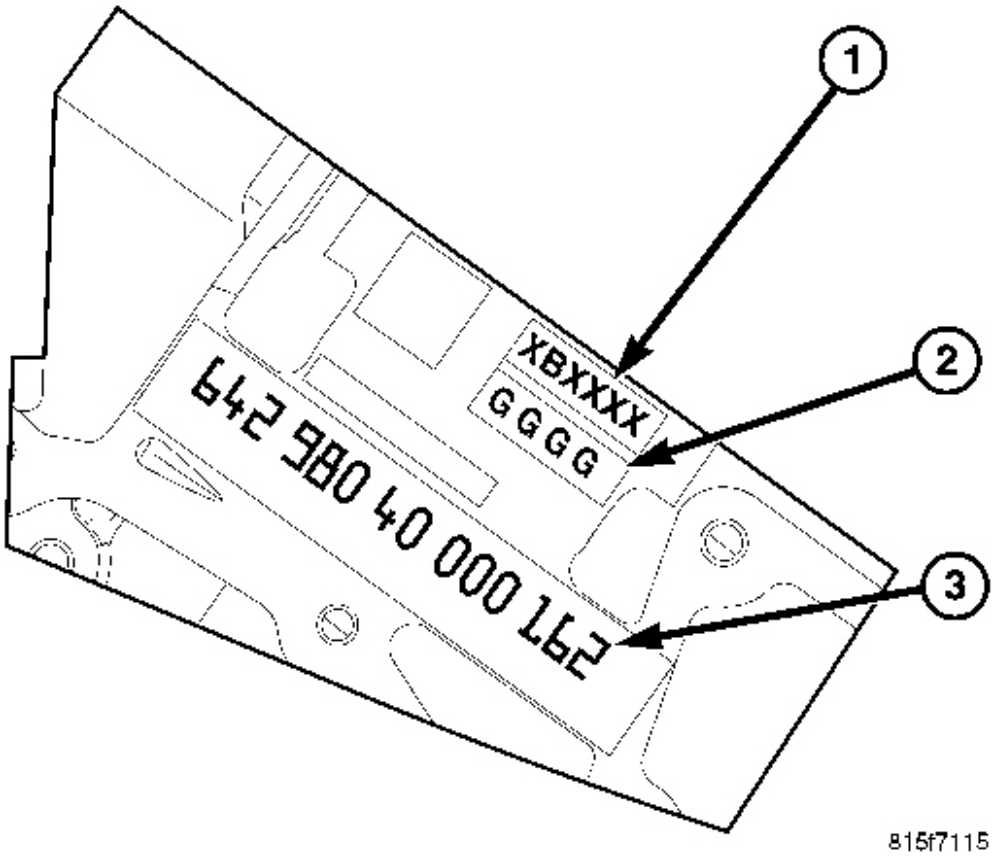

Fig. 2: Engine Identification Markings
Courtesy of CHRYSLER LLC

1 - CYLINDER BORE IDENTIFICATION
2 - MAIN BEARING IDENTIFICATION
3 - ENGINE IDENTIFICATION AND SERIAL NUMBER

The engine identification stamp (3) for the 3.0L is located on the left side of the engine block, below the high pressure pump along with the 4 digit main bearing identifying stamp (2) and the 6 digit cylinder bore identifying stamp (1).

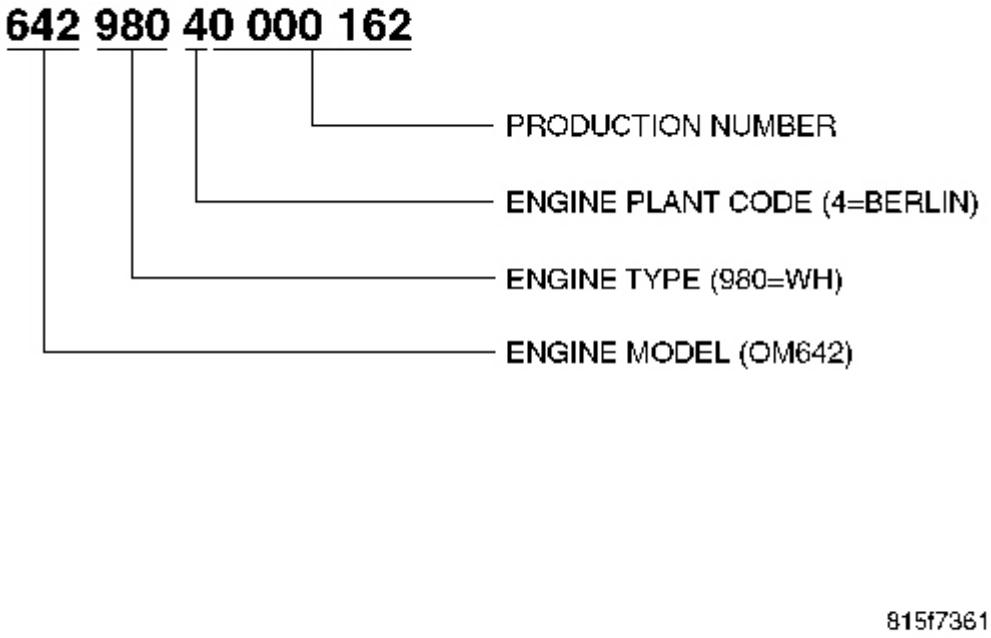

Fig. 3: Engine Number Code Description
Courtesy of CHRYSLER LLC

The engine identification number encompasses the production number, engine plant code, engine type and engine model.

3.0L DIESEL ENGINE - ENGINE COVER

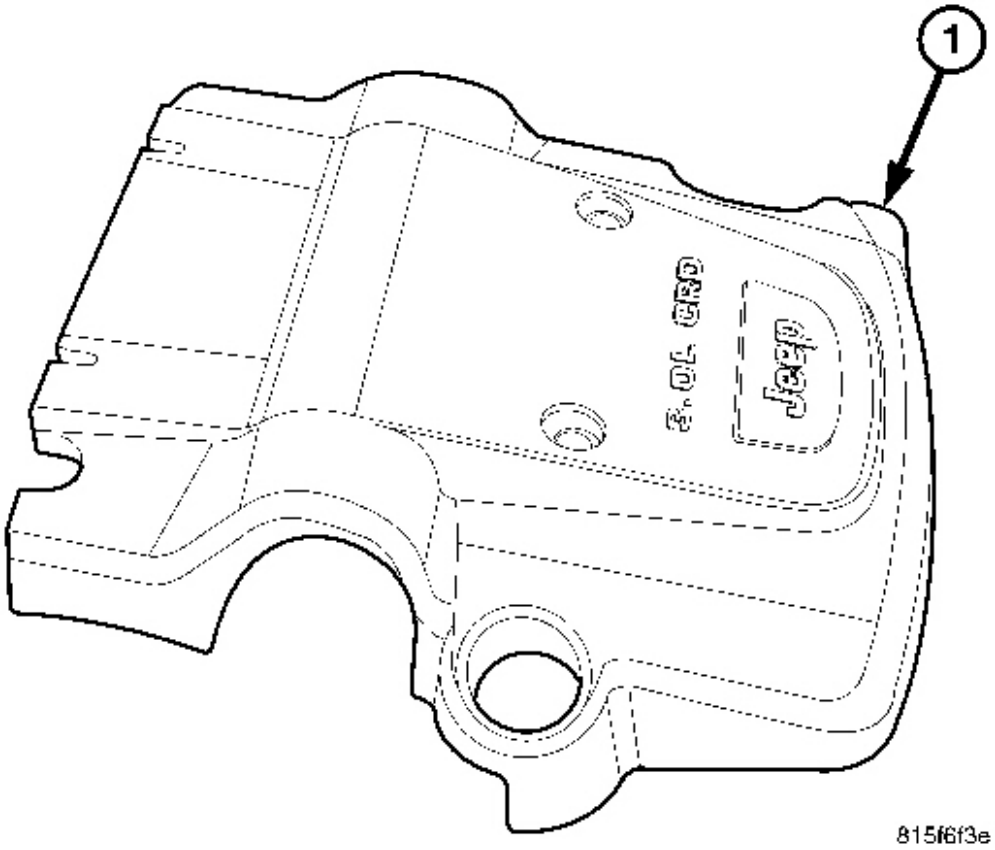

Fig. 4: Engine Cover
Courtesy of CHRYSLER LLC

1 - ENGINE COVER

The insulated engine cover (1) is made of composite material and used cosmetically to cover the top of the engine and greatly reduce engine noise. Three brackets secure the cover to the engine.

DIAGNOSIS AND TESTING

3.0L DIESEL ENGINE - ENGINE DIAGNOSIS - MECHANICAL

CONDITION	POSSIBLE CAUSES	CORRECTION
LUBRICATING OIL PRESSURE	1. Low oil level.	1. (a) Check and fill with clean engine oil.

LOW		(b) Check for a severe oil leak, worn rings (burning oil), oil leaking from the turbocharger to the intake, or other root causes for low oil level.
	2. Oil viscosity thin, diluted or wrong specification.	2. (a) Verify the correct engine oil is being used.
		(b) Look for reduced viscosity from fuel dilution.
	3. Improperly operating pressure switch/gauge.	3. Verify the pressure switch is functioning correctly. If not, replace switch/gauge.
	4. Relief valve stuck open.	4. Check/replace valve.
	5. If cooler was replaced, shipping plugs may have been left in cooler	5. Check/remove shipping plugs.
	6. Worn oil pump.	6. Check and replace oil pump.
	7. Suction tube loose or seal leaking.	7. Check and replace seal.
	8. Loose main bearing cap.	8. Check and install new bearing. Tighten cap to proper torque.
	9. Worn bearings or wrong bearings installed.	9. Inspect and replace connecting rod or main bearings. Check and replace directed piston cooling nozzles.
	10. Directed piston cooling nozzles under piston, bad fit into main carrier.	10. Check directed piston cooling nozzles position.
	12. Loose directed piston cooling nozzle.	12. Tighten directed piston cooling nozzle.
LUBRICATING OIL PRESSURE TOO HIGH	1. Pressure switch/gauge not operating properly.	1. Verify pressure switch is functioning correctly. If not, replace switch/gauge.
	2. Engine running too cold.	2. Coolant Temperature Below Normal
	3. Oil viscosity too thick.	3. Make sure the correct oil is being used.
	4. Oil pressure relief valve stuck closed or binding	4. Check and replace valve.
LUBRICATING OIL LOSS	1. External leaks.	1. Visually inspect for oil leaks. Repair as required.
	2. Crankcase overfilled.	2. Verify that the correct dipstick is being used.
	3. Incorrect oil specification or viscosity.	3. (a) Make sure the correct oil is being used.
		(b) Look for reduced viscosity from dilution with fuel.
		(c) Review/reduce oil change intervals.
	4. Oil cooler leak	4. Check and replace the oil cooler.
	5. High blow-by forcing oil out the breather.	5. Check the breather tube area for signs of oil loss. Perform the required repairs.
	6. Turbocharger leaking oil to the air	6. Inspect the air ducts for evidence of oil

	intake.	transfer. Repair as required (slight oil residue is normal).
COMPRESSION KNOCKS	1. Air in the fuel system.	1. Identify location of air leak and repair. Do not bleed high pressure fuel system.
	2. Poor quality fuel or water/gasoline contaminated fuel.	2. Verify by operating from a temporary tank with good fuel. Clean and flush the fuel tank. Replace fuel/water separator filter.
	3. Engine overloaded.	3. Verify the engine load rating is not being exceeded.
	4. Improperly operating injectors.	4. Check and replace misfiring/inoperative injectors.
EXCESSIVE VIBRATION	1. Loose or broken engine mounts.	1. Replace engine mounts.
	2. Damaged fan or improperly operating accessories.	2. Check and replace the vibrating components.
	3. Improperly operating vibration damper	3. Inspect/replace vibration damper.
	4. Improperly operating balance shaft	4. Inspect/replace balance shaft.
	5. Improperly operating electronically controlled viscous fan drive.	5. Inspect/replace fan drive.
	6. Worn or damaged generator bearing.	6. Check/replace generator.
	7. Flywheel housing misaligned.	7. Check/correct flywheel alignment.
	8. Loose or broken power component.	8. Inspect the crankshaft and rods for damage that causes an unbalance condition. Repair/replace as required.
	9. Worn or unbalanced driveline components.	9. Check/repair driveline components.
EXCESSIVE ENGINE NOISES	1. Drive belt squeal, insufficient tension or abnormally high loading.	1. Check the automatic tensioner and inspect the drive belt. Make sure water pump, tensioner pulley, fan hub, generator and power steering pump turn freely.
	2. Intake air or exhaust leaks.	2. Refer to Excessive Exhaust Smoke. See **DIAGNOSIS AND TESTING**.
	3. Excessive valve lash.	3. Adjust valves. Make sure the rocker arms are not bent. Replace bent or severely worn components.
	4. Turbocharger noise.	4. Check turbocharger impeller and turbine wheel for housing contact. Repair/replace as required.
	5. Gear train noise.	5. Visually inspect and measure gear backlash. Replace gears as required.
	6. Power function knock.	6. Check/replace rod and main bearings.

3.0L DIESEL ENGINE - SMOKE DIAGNOSIS CHARTS

The following charts include possible causes and corrections for **excess or abnormal** exhaust smoke. Small amounts of exhaust smoke (at certain times) are to be considered normal for a diesel powered engine.

EXCESSIVE BLACK SMOKE	
POSSIBLE CAUSE	**CORRECTION**
Air filter dirty or plugged.	Check and replace the filter if necessary.
Air intake system restricted.	Check entire air intake system including all hoses and tubes for restrictions, collapsed parts or damage. Repair/replace as necessary.
Air Leak in Intake System.	Check entire air intake system including all hoses and tubes for collapse, cracks, loose clamps, or holes in rubber ducts. Also check intake manifold for loose mounting hardware.
Diagnostic Trouble Codes (DTC's) active or multiple, intermittent DTC's.	Refer to the appropriate Engine ELECTRICAL DIAGNOSTIC article .
Engine Control Module (ECM) has incorrect calibration.	Refer to the appropriate Engine ELECTRICAL DIAGNOSTIC article .
Exhaust system restriction is above specifications.	Check exhaust pipes for damage/restrictions. Repair as necessary.
Fuel grade is not correct or fuel quality is poor.	Temporarily change fuel brands and note condition. Change brand if necessary.
Fuel injection pump malfunctioning.	A DTC may have been set. If so, refer to the appropriate Engine ELECTRICAL DIAGNOSTIC article .
Fuel injector malfunctioning.	A DTC may have been set. Perform "Injector Classification Programming" using scan tool. Also refer to the appropriate Engine ELECTRICAL DIAGNOSTIC article and, Return Fuel Quantity Test.
Fuel injector lower washer doubled or missing.	Remove and inspect injector washer.
Fuel return system restricted.	Check fuel return lines for restriction.
Intake manifold restricted.	Remove restriction.
Manifold Air Pressure (Boost) Sensor or sensor circuit malfunctioning.	A DTC should have been set. Refer to the appropriate Engine ELECTRICAL DIAGNOSTIC article .
Turbocharger air intake restriction.	Remove restriction.
Turbocharger damaged.	Refer to **EXHAUST SYSTEM AND TURBOCHARGER** for Diagnostic Procedures
Turbocharger has excess build up on compressor wheel or diffuser vanes.	Refer to **EXHAUST SYSTEM AND TURBOCHARGER** for Diagnostic Procedures
Turbocharger wheel clearance out of specification.	Refer to **EXHAUST SYSTEM AND TURBOCHARGER** for Diagnostic Procedures

EXCESSIVE WHITE SMOKE	

POSSIBLE CAUSE	CORRECTION
Air in fuel supply: Possible leak in fuel supply side.	Inspect fuel system
Coolant leaking into combustion chamber.	Perform pressure test of cooling system.
Diagnostic Trouble Codes (DTC's) active or multiple, intermittent DTC's.	Refer to the appropriate Engine ELECTRICAL DIAGNOSTIC article .
In very cold ambient temperatures, engine block heater is malfunctioning (if equipped).	Refer to In-Block Heater
Engine coolant temperature sensor malfunctioning.	A DTC should have been set. Refer to the appropriate Engine ELECTRICAL DIAGNOSTIC article . Also check thermostat operation.
Engine Control Module (ECM) has incorrect calibration.	A DTC should have been set. Refer to the appropriate Engine ELECTRICAL DIAGNOSTIC article .
Fuel filter plugged.	Refer to the appropriate Engine ELECTRICAL DIAGNOSTIC article for fuel system testing.
Fuel grade not correct or fuel quality is poor.	Temporarily change fuel brands and note condition. Change brand if necessary.
Fuel injector malfunctioning.	A DTC should have been set. Perform "Injector Identification Programming" or "Cylinder Cutout Test" using scan tool to isolate individual cylinders. Also refer to the appropriate Engine ELECTRICAL DIAGNOSTIC article .
Fuel injector hold-down(s) loose.	Replace the copper washer(s) (shim) and tighten to specifications.
Fuel injector protrusion not correct.	Check washer (shim) at bottom of fuel injector for correct thickness.
Fuel injection pump malfunctioning.	A DTC should have been set. Refer to the appropriate Engine ELECTRICAL DIAGNOSTIC article .
Fuel supply side restriction.	Refer to the appropriate Engine ELECTRICAL DIAGNOSTIC article for fuel system testing.
Intake manifold air temperature sensor malfunctioning.	A DTC should have been set. Refer to the appropriate Engine ELECTRICAL DIAGNOSTIC article .
Intake manifold heater circuit not functioning correctly in cold weather.	A DTC should have been set. Refer to the appropriate Engine ELECTRICAL DIAGNOSTIC article . Also check heater elements for correct operation.
Intake manifold heater elements not functioning correctly in cold weather.	A DTC should have been set if heater elements are malfunctioning. Refer to the appropriate Engine ELECTRICAL DIAGNOSTIC article .
Internal engine damage (scuffed cylinder).	Analyze engine oil and inspect oil filter to locate area of probable damage.
Restriction in fuel supply side of fuel system.	Refer to the appropriate Engine ELECTRICAL DIAGNOSTIC article for fuel system testing.

EXCESSIVE BLUE SMOKE	
POSSIBLE CAUSE	**CORRECTION**
Dirty air cleaner or restricted turbocharger intake duct.	Check Air Cleaner Housing for debris and replace filter as necessary
Air leak in boost system between turbocharger compressor outlet and intake manifold.	Service charge air system.
Obstruction in exhaust manifold.	Remove exhaust manifold and inspect for blockage.
Restricted turbocharger drain tube.	Remove turbocharger drain tube and remove obstruction.
Crankcase ventilation system plugged.	Inspect oil separator system for function and clear drain back hole in cylinder head cover/intake manifold
Valve seals are worn, brittle, or improperly installed.	Replace valve stem oil seals
Valve stems or guides are worn.	Remove valves and inspect valves and guides.
Broken or Improperly installed piston rings.	Tear down engine and inspect piston rings.
Excessive piston ring end gap.	Remove pistons and measure piston ring end gap.
Excessive cylinder liner wear and taper.	Remove pistons and measure cylinder liner wear and taper.
Cylinder damage.	Remove pistons and inspect cylinder liner for cracks or porosity. Repair with new cylinder liner if necessary.
Piston damage.	Remove pistons and inspect for cracks, holes. Measure piston for out-of-round and taper.
Turbocharger failure.	Refer to **EXHAUST SYSTEM AND TURBOCHARGER**

STANDARD PROCEDURE

3.0L DIESEL ENGINE - FORM-IN-PLACE GASKETS AND SEALERS

There are numerous places where form-in-place gaskets are used on the engine. Care must be taken when applying form-in-place gaskets to assure obtaining the desired results.**Do not use form-in-place gasket material unless specified.** Bead size, continuity, and location are of great importance. Too thin a bead can result in leakage while too much can result in spill-over which can break off and obstruct fluid feed lines. A continuous bead of the proper width is essential to obtain a leak-free gasket.

There are numerous types of form-in-place gasket materials that are used in the engine area. Mopar® Engine RTV GEN II, Mopar® ATF-RTV, and Mopar® Gasket Maker gasket materials, each have different properties and can not be used in place of the other.

MOPAR® ENGINE RTV GEN II

Mopar® Engine RTV GEN II is used to seal components exposed to engine oil. This material is a specially designed black silicone rubber RTV that retains adhesion and sealing properties when exposed to engine oil.

Moisture in the air causes the material to cure. This material is available in three ounce tubes and has a shelf life of one year. After one year this material will not properly cure. Always inspect the package for the expiration date before use.

MOPAR® ATF RTV

Mopar® ATF RTV is a specifically designed black silicone rubber RTV that retains adhesion and sealing properties to seal components exposed to automatic transmission fluid, engine coolants, and moisture. This material is available in three ounce tubes and has a shelf life of one year. After one year this material will not properly cure. Always inspect the package for the expiration date before use.

MOPAR® GASKET MAKER

Mopar® Gasket Maker is an anaerobic type gasket material. The material cures in the absence of air when squeezed between two metallic surfaces. It will not cure if left in the uncovered tube. The anaerobic material is for use between two machined surfaces. Do not use on flexible metal flanges.

MOPAR® GASKET SEALANT

Mopar® Gasket Sealant is a slow drying, permanently soft sealer. This material is recommended for sealing threaded fittings and gaskets against leakage of oil and coolant. Can be used on threaded and machined parts under all temperatures. This material is used on engines with multi-layer steel (MLS) cylinder head gaskets. This material also will prevent corrosion. Mopar® Gasket Sealant is available in a 13 oz. aerosol can or 4oz./16 oz. can w/applicator.

FORM-IN-PLACE GASKET AND SEALER APPLICATION

Assembling parts using a form-in-place gasket requires care but it's easier than using precut gaskets.

Mopar® Gasket Maker material should be applied sparingly 1 mm (0.040 in.) diameter or less of sealant to one gasket surface. Be certain the material surrounds each mounting hole. Excess material can easily be wiped off. Components should be torqued in place within 15 minutes. The use of a locating dowel is recommended during assembly to prevent smearing material off the location.

Mopar® Engine RTV GEN II or ATF RTV gasket material should be applied in a continuous bead approximately 3 mm (0.120 in.) in diameter. All mounting holes must be circled. For corner sealing, a 3.17 or 6.35 mm (1/8 or 1/4 in.) drop is placed in the center of the gasket contact area. Uncured sealant may be removed with a shop towel. Components should be torqued in place while the sealant is still wet to the touch (within 10 minutes). The usage of a locating dowel is recommended during assembly to prevent smearing material off the location.

Mopar® Gasket Sealant in an aerosol can should be applied using a thin, even coat sprayed completely over both surfaces to be joined, and both sides of a gasket. Then proceed with assembly. Material in a can w/applicator can be brushed on evenly over the sealing surfaces. Material in an aerosol can should be used on engines with multi-layer steel gaskets.

3.0L DIESEL ENGINE - HYDROSTATIC LOCK

CAUTION: DO NOT use the starter motor to rotate the crankshaft. Severe damage could occur.

When an engine is suspected of hydrostatic lock (regardless of what caused the problem), follow the steps below.

1. Disconnect the negative cable(s) from the battery.
2. Inspect air cleaner, induction system, and intake manifold to ensure system is dry and clear of foreign material.
3. Place a shop towel around the fuel injectors to catch any fluid that may possibly be under pressure in the cylinder head. Remove the fuel injectors. Refer to **REMOVAL** .

CAUTION: DO NOT use the starter motor to rotate the crankshaft. Severe damage could occur.

4. With all injectors removed, rotate the crankshaft using the crankshaft.
5. Identify the fluid in the cylinders (coolant, fuel, oil, etc.).
6. Be sure all fluid has been removed from the cylinders.
7. Repair engine or components as necessary to prevent this problem from occurring again.
8. Squirt a small amount of engine oil into the cylinders to lubricate the walls. This will prevent damage on restart.
9. Install fuel injectors. Refer to **INSTALLATION** .
10. Drain engine oil. Remove and discard the oil filter.
11. Install the drain plug. Tighten the plug to 50 N.m (37 ft. lbs.) torque.
12. Install a new oil filter and tighten to 10 N.m 88 in. lbs.) torque.
13. Fill engine crankcase with the specified amount and grade of oil. Refer to **SPECIFICATIONS** .
14. Connect the negative cable(s) to the battery.
15. Start the engine, allow to warm, turn engine off and check for any leaks.

3.0L DIESEL ENGINE - REPAIR DAMAGED OR WORN THREADS

CAUTION: Be sure that the tapped holes maintain the original center line.

Damaged or worn threads can be repaired. Essentially, this repair consists of:

Drilling out worn or damaged threads.
Tapping the hole with a special Heli-Coil Tap, or equivalent.
Installing an insert into the tapped hole to bring the hole back to its original thread size.

REMOVAL

3.0L DIESEL ENGINE

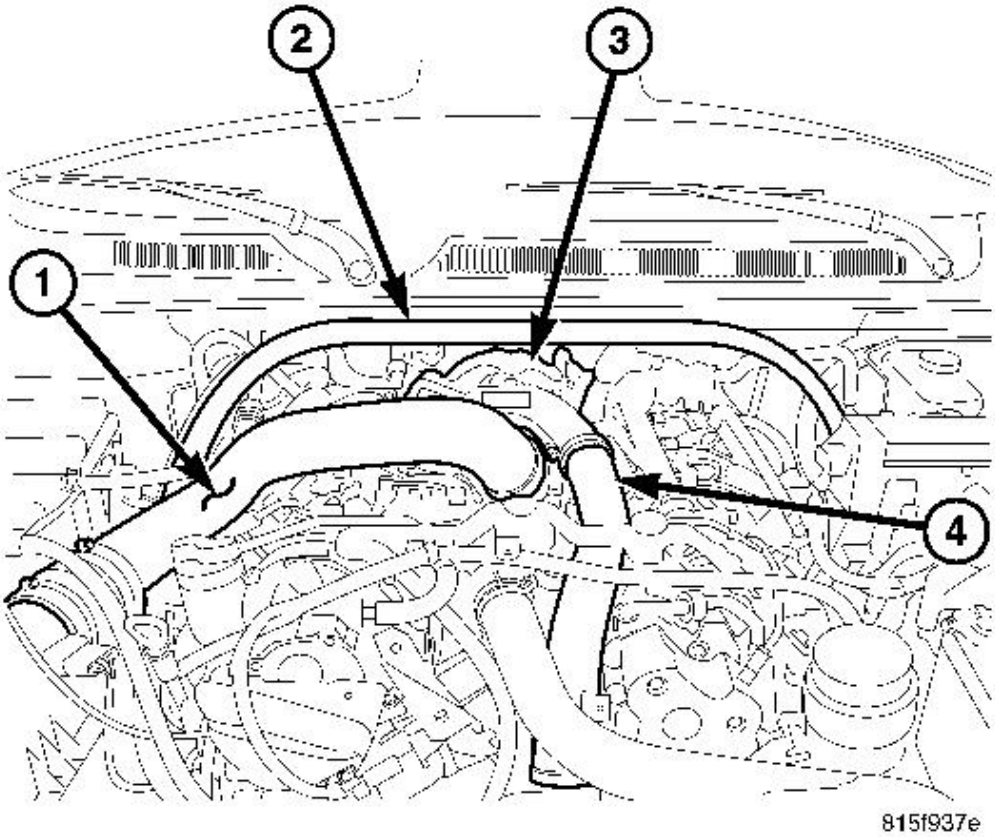

Fig. 5: Strut Tower Support, Air Cleaner Outlet Tube, Turbocharger & Charge Air Inlet Tube
Courtesy of CHRYSLER LLC

1 - AIR CLEANER OUTLET TUBE
2 - STRUT TOWER SUPPORT
3 - TURBOCHARGER
4 - CHARGE AIR INLET TUBE

1. Disconnect negative battery cable.
2. Drain cooling system.
3. Evacuate air conditioning.
4. Remove the strut tower support (2).

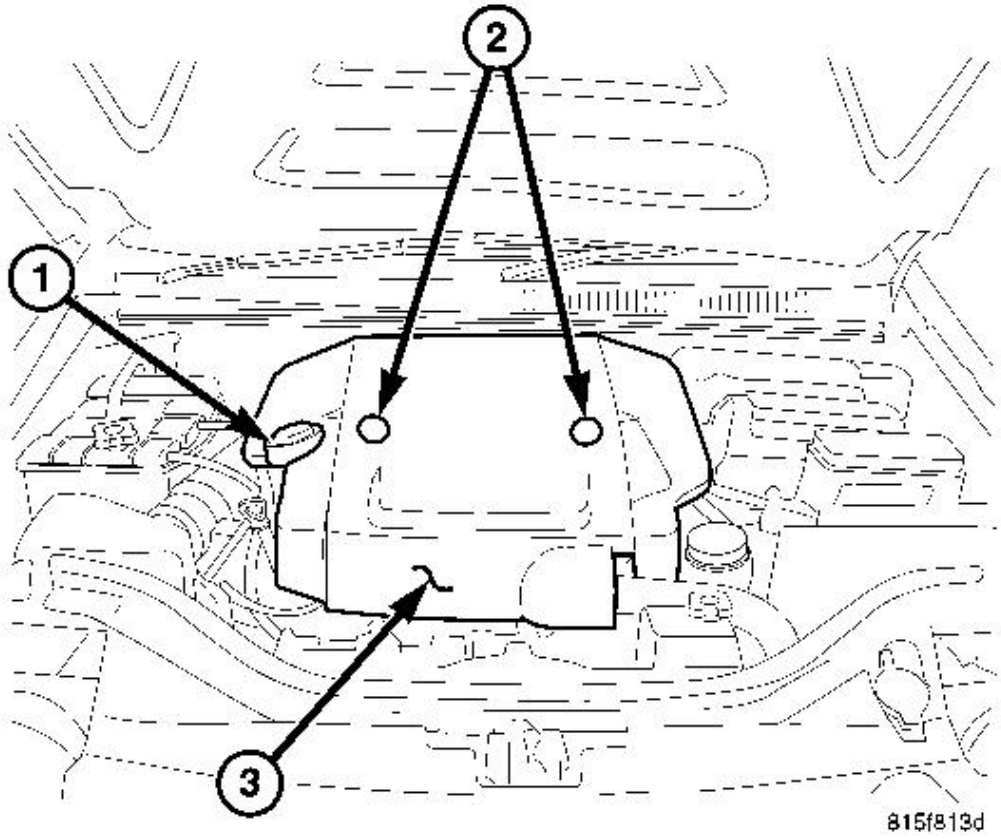

Fig. 6: Oil Filler Cap, Cover Fasteners & Engine Cover
Courtesy of CHRYSLER LLC

1 - OIL FILLER CAP
2 - COVER FASTENERS
3 - ENGINE COVER

5. Remove engine cover (3).
6. Remove air cleaner housing. See **REMOVAL**.

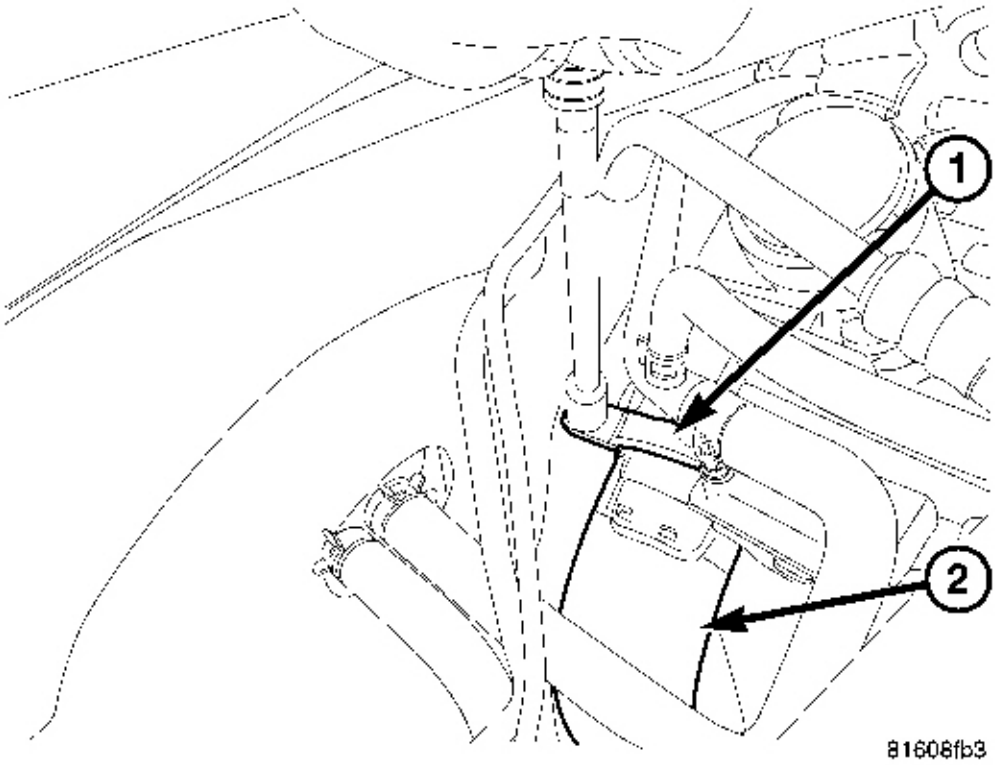

Fig. 7: Clamp & Catalytic Converter
Courtesy of CHRYSLER LLC

1 - CLAMP
2 - CATALYTIC CONVERTER

7. Remove lower catalytic converter to upper catalytic converter clamp (1) behind right cylinder head.
8. Raise and support the vehicle.
9. Remove front splash shield.
10. Drain power steering at cooling fan, cap lines and set aside.

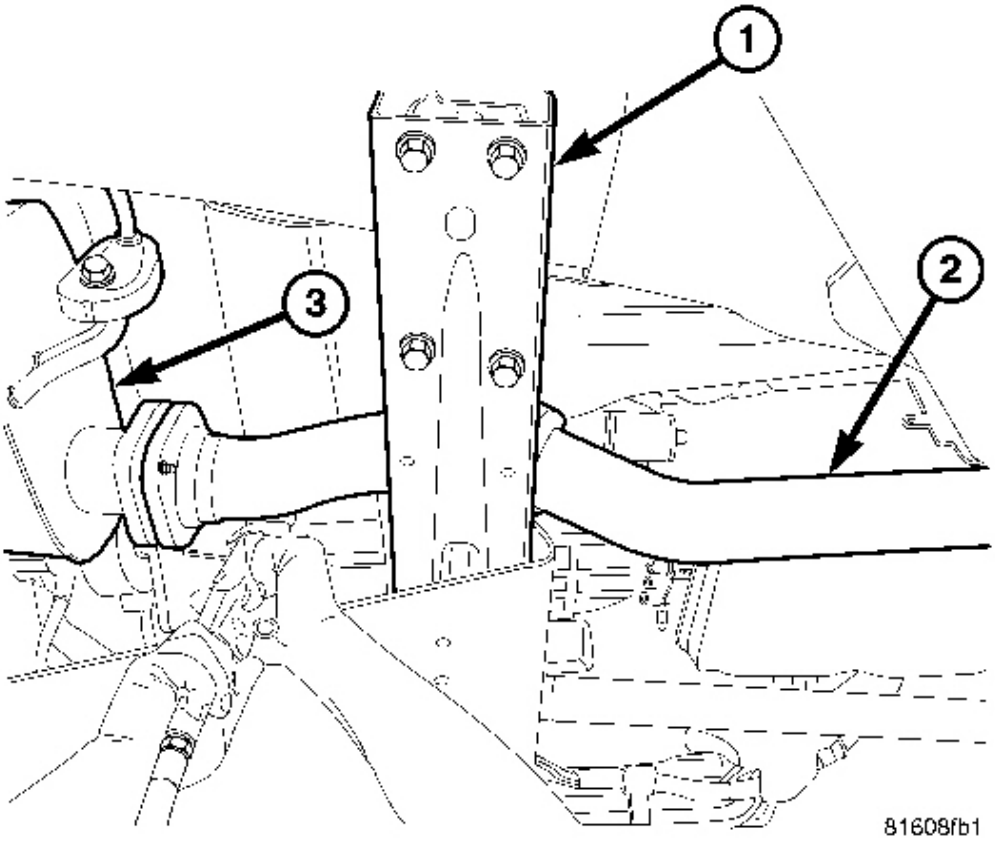

Fig. 8: Cross Over, Front Exhaust Pipe & Muffler
Courtesy of CHRYSLER LLC

1 - CROSS OVER 2 - FRONT EXHAUST PIPE 3 - MUFFLER

11. Remove catalytic converter clamp from exhaust pipe (2).
12. Remove transfer case splash shield.
13. Disconnect the front exhaust pipe (2) at muffler (3).
14. Remove the catalytic converter and front exhaust pipe (2).

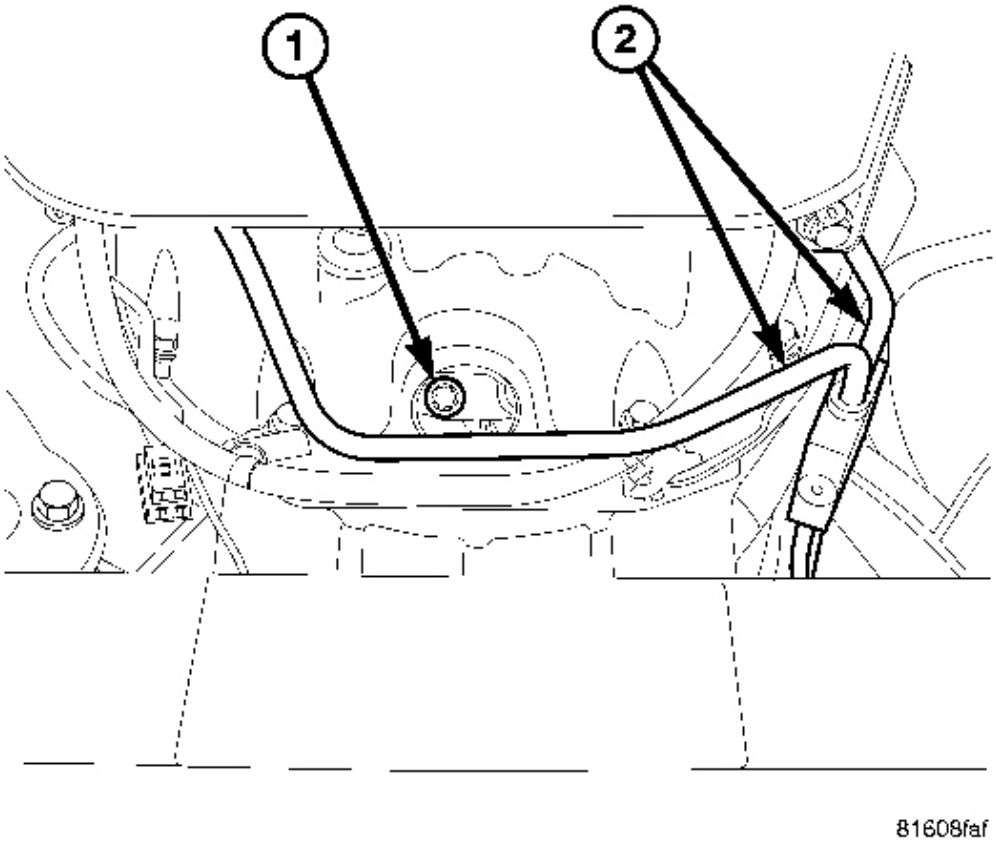

Fig. 9: Torque Converter Bolts & Transmission Cooler Lines
Courtesy of CHRYSLER LLC

1 - TORQUE CONVERTER BOLTS
2 - TRANSMISSION COOLER LINES

15. Paint mark the flex plate to torque converter relation and remove the torque converter bolts (1) through the access hole.

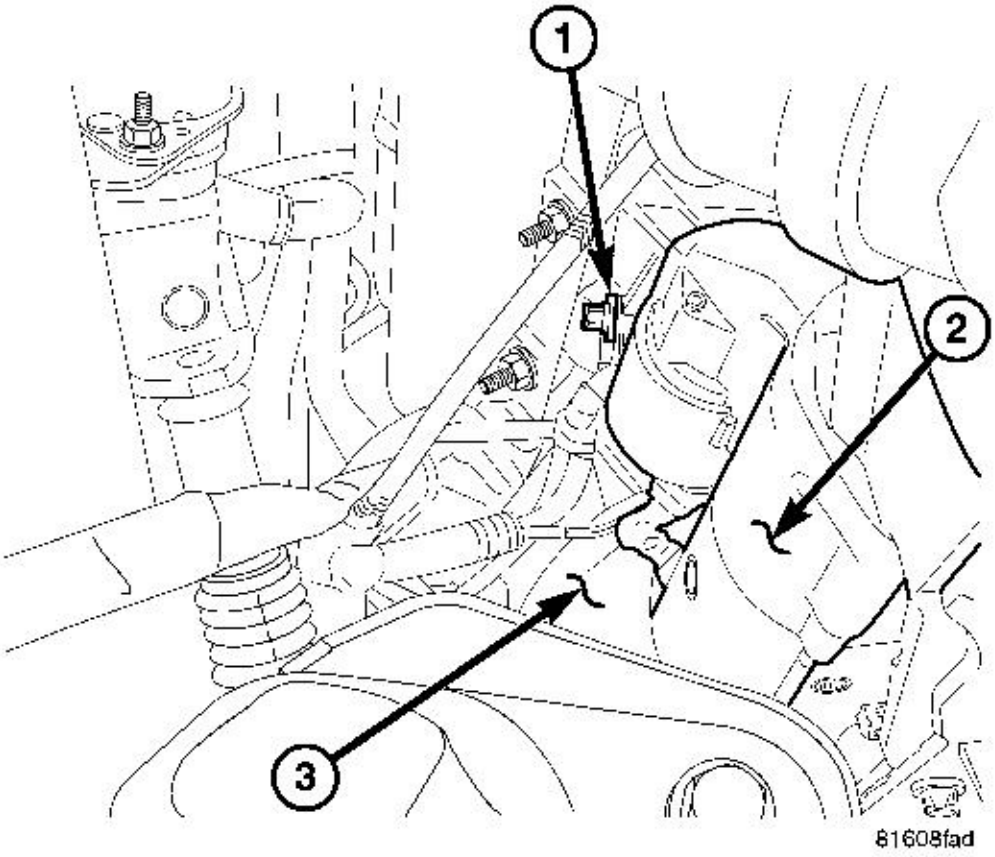

Fig. 10: Engine Wiring Harness Ground, Starter & Left Engine Mount
Courtesy of CHRYSLER LLC

1 - ENGINE WIRING HARNESS GROUND
2 - STARTER
3 - LEFT ENGINE MOUNT

16. Support the transmission with a transmission jack and remove the transfer case cross over bolts from frame.
17. Carefully lower the transmission enough to gain access to the upper transmission to engine mounting bolts, and remove accessible bolts.
18. Raise transmission, install the transfer case cross over bolts, and remove transmission jack.
19. Disconnect the transmission wiring harness at transmission and route wiring harness toward the starter.
20. Remove remaining transmission to engine bolts.

21. Disconnect the engine ground strap (1) in front of the starter (2).

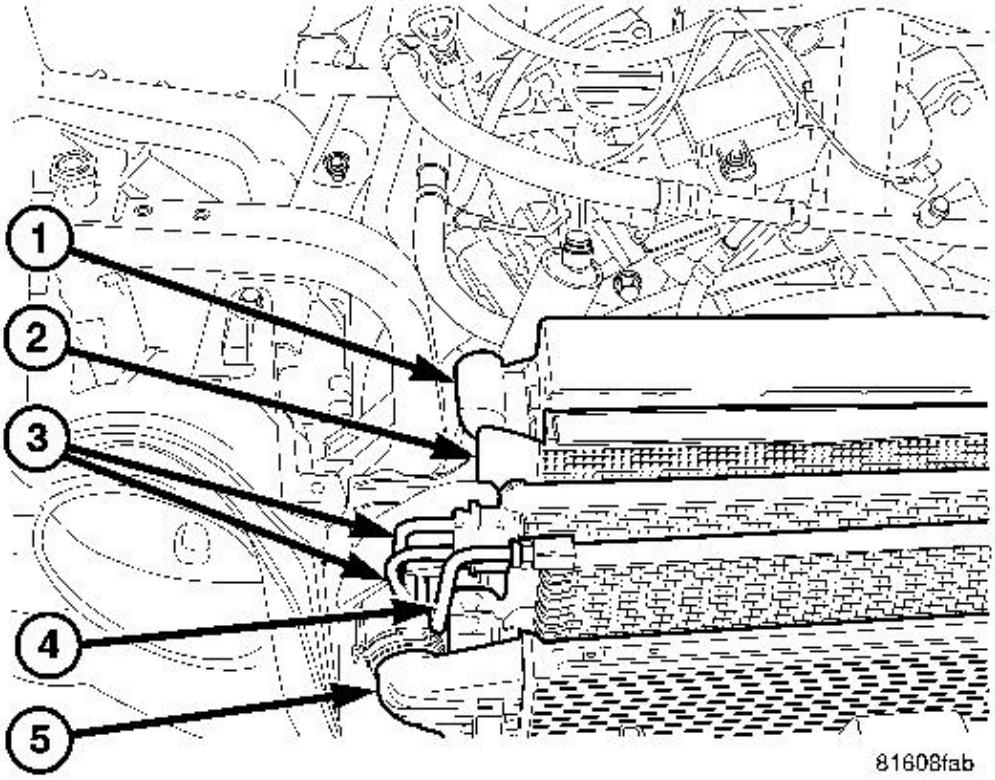

Fig. 11: Radiator, A/C Condenser, Transmission Cooler, Power Steering Cooler & Charge Air Cooler
Courtesy of CHRYSLER LLC

1 - RADIATOR
2 - A/C CONDENSER
3 - TRANSMISSION COOLER
4 - POWER STEERING COOLER
5 - CHARGE AIR COOLER

22. Loosen both engine mount through bolts.
23. Remove the lower radiator hose.
24. Remove the front axle housing. Refer to **REMOVAL** .
25. Lower the vehicle.

26. Remove the front grille and radiator upper core support. Remove the hood latch and position aside.
27. Remove the front core support brackets.
28. Remove the charge air inlet hose (5).
29. Remove the charge air outlet hose (5).
30. Disconnect the power steering reservoir hose to pump, at the reservoir.
31. Disconnect the suction/discharge lines at the condenser and accumulator.
32. Disconnect the transmission cooler (3) and power steering cooler lines (4) at the coolant module.
33. Position the radiator (1) deflectors aside and remove coolant module to core support fasteners.
34. Remove cooler module assembly.

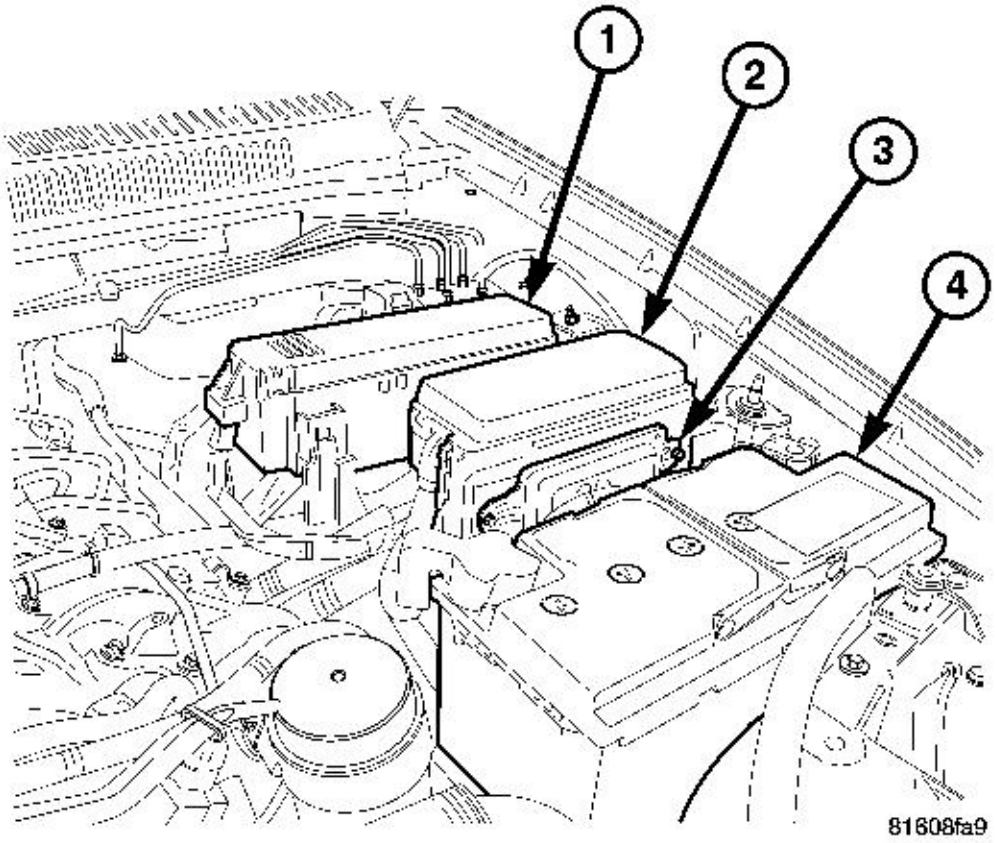

Fig. 12: Power Distribution Center, Relay Center, Front Control Module & Battery
Courtesy of CHRYSLER LLC

1 - POWER DISTRIBUTION CENTER (PDC)

2 - RELAY CENTER
3 - FRONT CONTROL MODULE (ECM)
4 - BATTERY

35. Remove the battery (4) and tray.
36. Remove the power distribution center (PDC) (1) from the bracket and remove the bracket.
37. Disconnect the PCM (3) and route the engine wiring harness on top of the engine.
38. Route engine wiring aside and disconnect the starter wiring.
39. Unplug air conditioning (AC) compressor wiring at compressor, route the transmission harness forward, and place the harness on top of the engine.

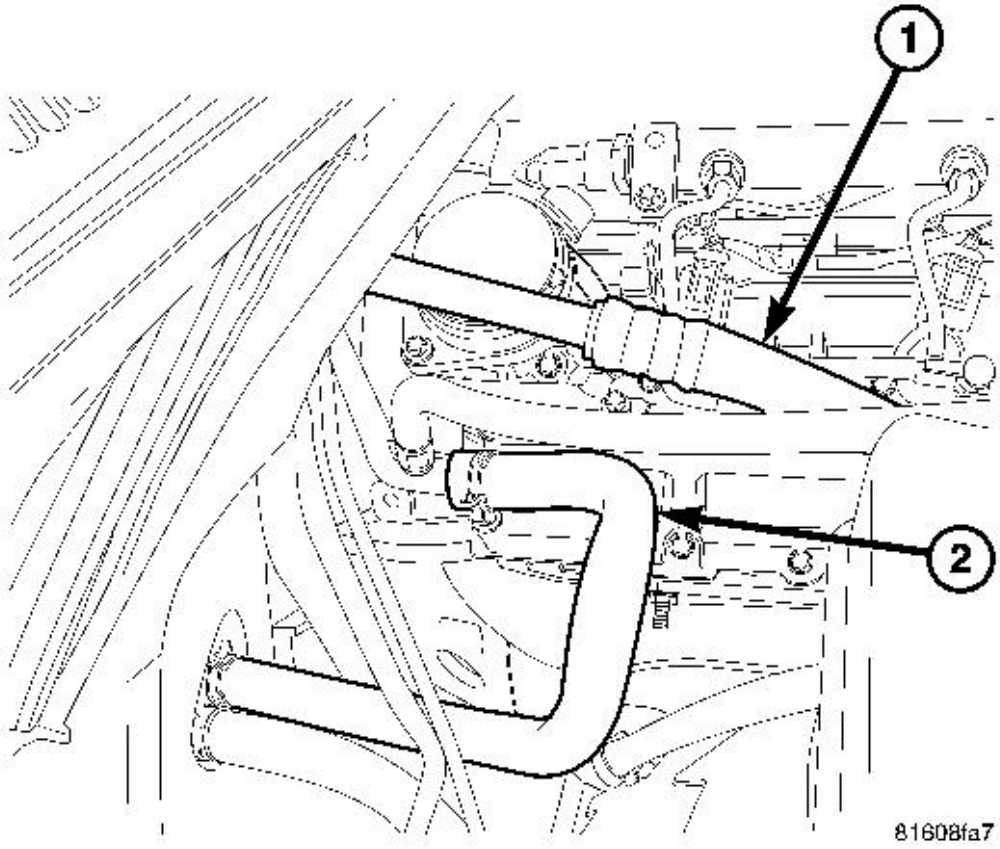

Fig. 13: A/C Lines & Heater Hose
Courtesy of CHRYSLER LLC

1 - LOW PRESSURE A/C HOSE
2 - HOSE AND JUNCTION

40. Disconnect the generator wiring harness, and position aside.
41. Disconnect the vacuum hose at the vacuum pump, and set aside.
42. Disconnect the wiring harness connectors from the PDC.
43. Disconnect the heater hose (2) at cooler tube on the right cylinder head.
44. Disconnect the coolant by-pass hose (2) at the cooler tube on the right cylinder head.
45. Disconnect the coolant hose, at the outer housing, by the generator.
46. Disconnect the A/C lines (1) at the expansion valve.
47. Remove the engine cover mounting bracket.
48. Remove the transmission oil level indicator tube retaining bolt.

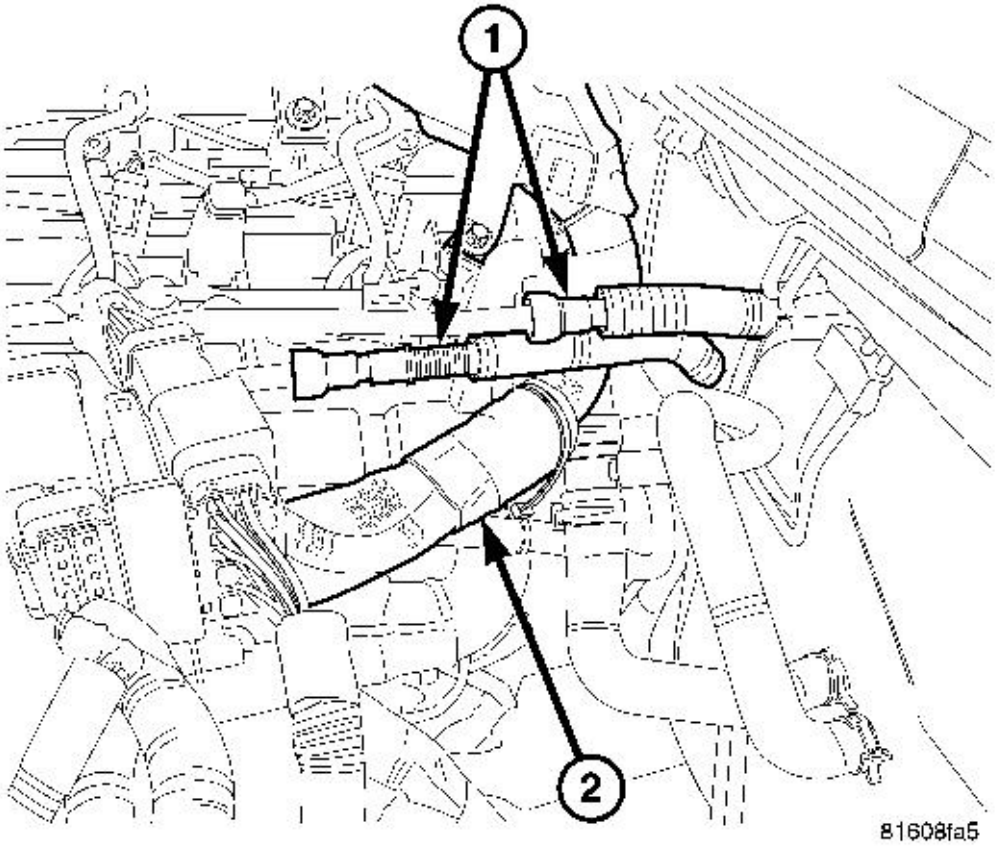

Fig. 14: Fuel Tank Supply & Rear Engine Wiring Harness

Courtesy of CHRYSLER LLC

1 - FUEL SUPPLY AND RETURN LINES FROM FUEL TANK 2 - MAIN ENGINE WIRING HARNESS

49. Loosen front axle vent tube from wiring harness and position aside.
50. Disconnect the fuel lines from the fuel pipe using special tool #6507.

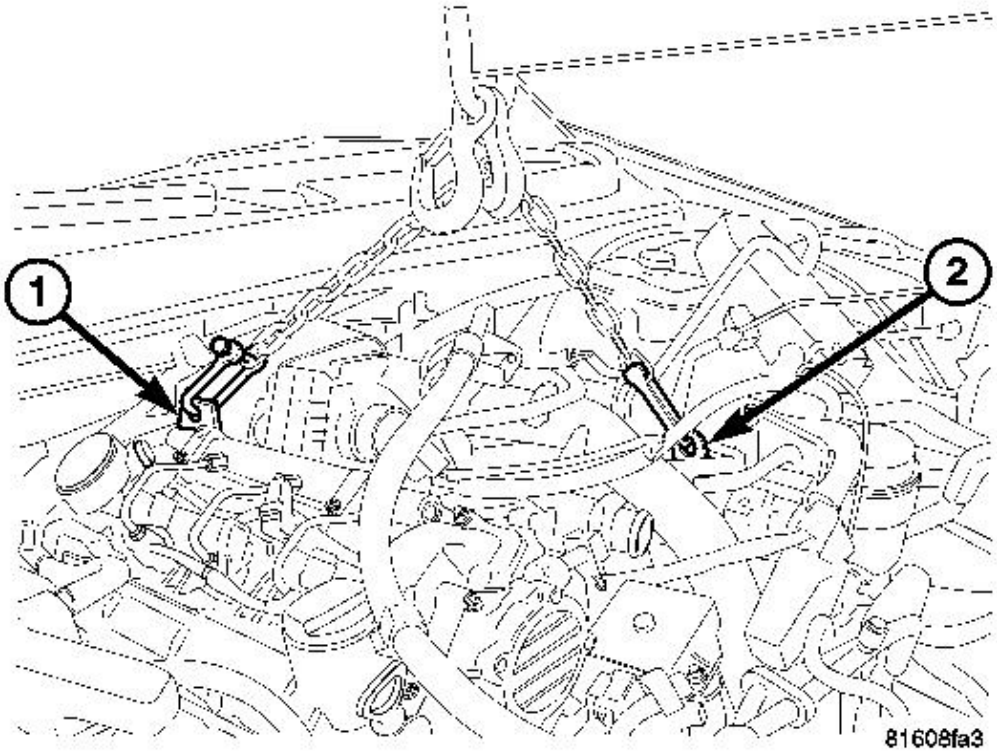

Fig. 15: Engine Lifting Points
Courtesy of CHRYSLER LLC

1 - REAR ENGINE LIFT WITH CLEVIS CONNECTOR 2 - FRONT ENGINE LIFT WITH CLEVIS CONNECTOR

51. Remove upper turbocharger heat shield.
52. Connect engine lift chain to engine lift fixtures.
53. Support the transmission with a floor jack.

54. Lift the weight of the engine off of the engine mounts (1,2).
55. Remove right engine mount from engine.
56. Remove left engine mount from engine.
57. Remove engine from vehicle.

3.0L DIESEL ENGINE - ENGINE COVER

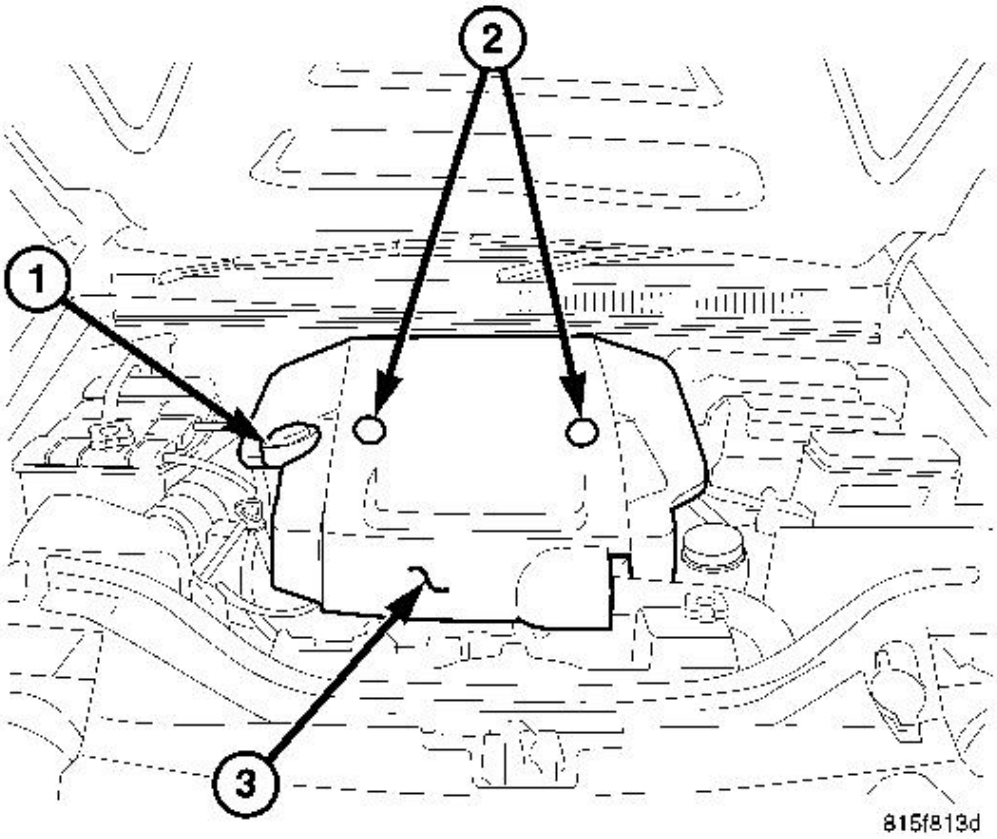

Fig. 16: Oil Filler Cap, Cover Fasteners & Engine Cover
Courtesy of CHRYSLER LLC

1 - OIL FILLER CAP
2 - COVER FASTENERS
3 - ENGINE COVER

1. Remove the engine oil cap (1).

2. Remove the fasteners (2).
3. Pull the cover (1) forward and away from the rear mounting brackets.

INSTALLATION

3.0L DIESEL ENGINE

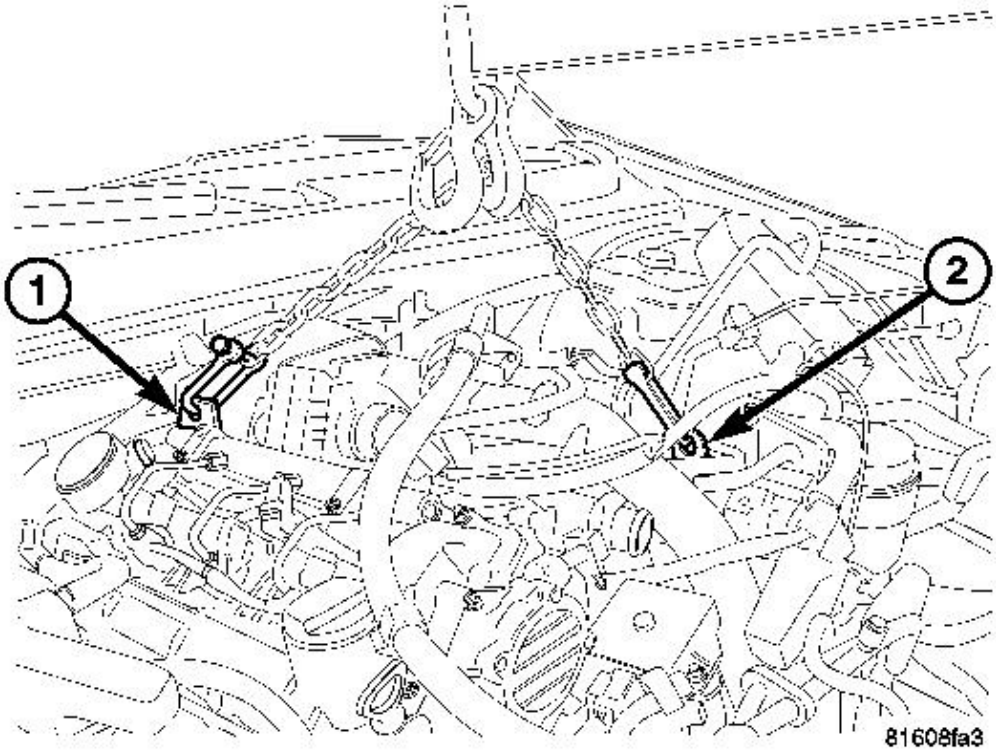

Fig. 17: Engine Lifting Points
Courtesy of CHRYSLER LLC

1 - REAR ENGINE LIFT WITH CLEVIS CONNECTOR
2 - FRONT ENGINE LIFT WITH CLEVIS CONNECTOR

1. Carefully align the engine assembly in the engine bay area and align with the transmission, **Do Not** lower the engine.

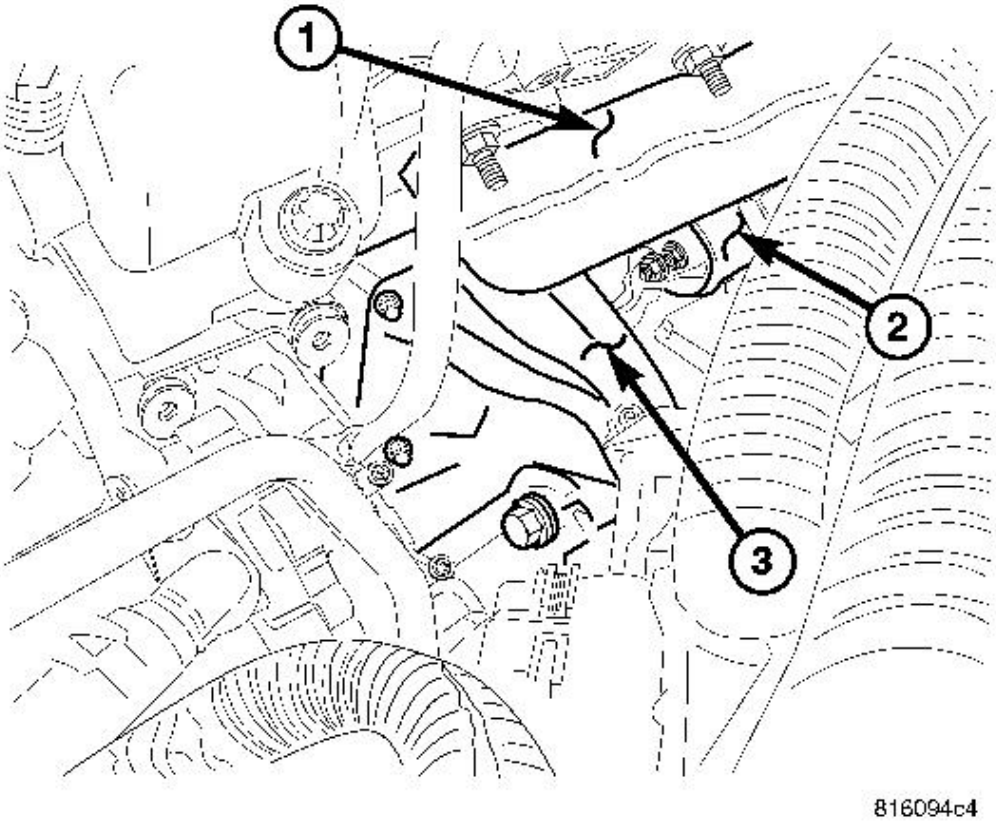

Fig. 18: Left Engine Manifold, Starter & Left Engine Mount
Courtesy of CHRYSLER LLC

1 - LEFT EXHAUST MANIFOLD
2 - STARTER
3 - LEFT ENGINE MOUNT

2. Install left engine mount (3) to engine. Tighten bolts to 35 N.m (26 ft. lbs.).

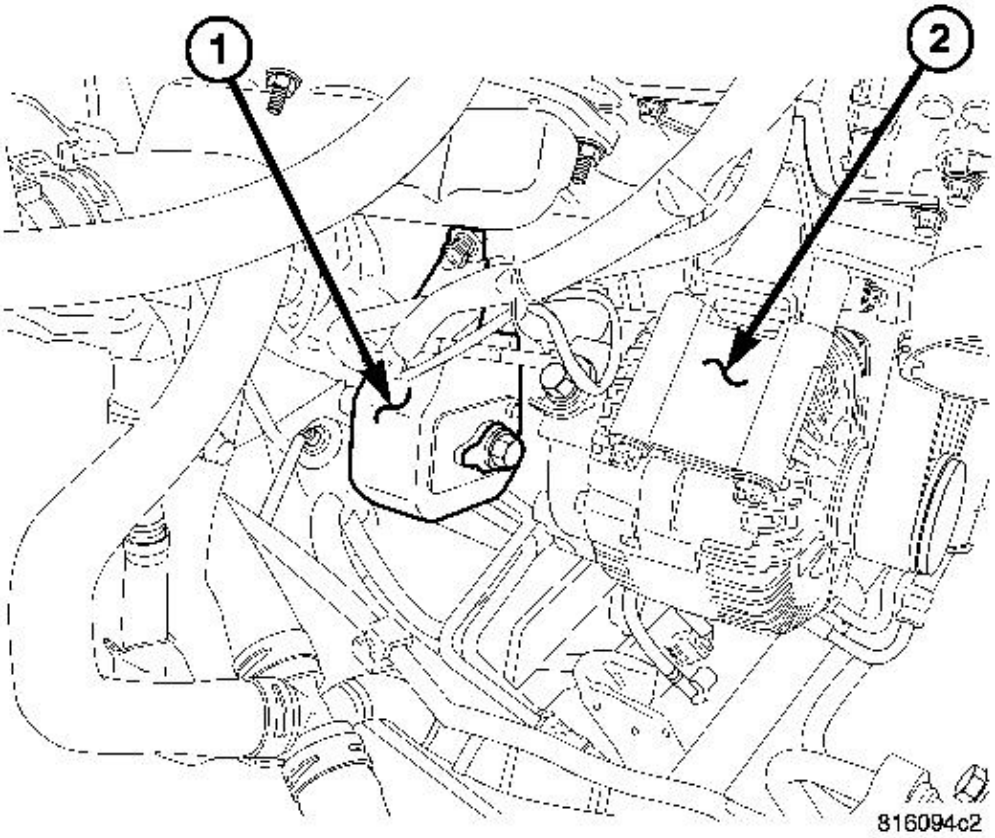

Fig. 19: Right Engine Mount & Generator
Courtesy of CHRYSLER LLC

1 - RIGHT ENGINE MOUNT 2 - GENERATOR

3. Install right engine mount to engine (1). Tighten bolts to 35 N.m (26 ft. lbs.).

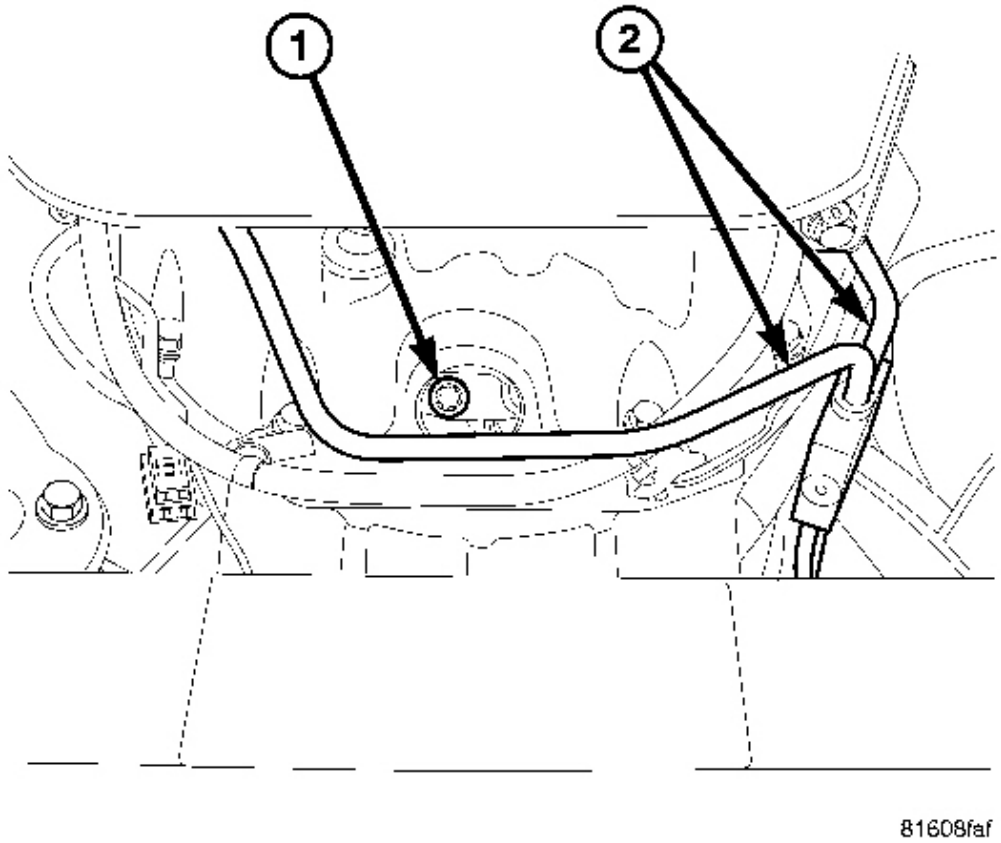

Fig. 20: Torque Converter Bolts & Transmission Cooler Lines
Courtesy of CHRYSLER LLC

1 - TORQUE CONVERTER BOLTS 2 - TRANSMISSION COOLER LINES

4. Align the engine to transmission, and lower the engine mounts into position.
5. Remove engine lifting device.
6. Route the transmission wiring harness through to the rear of the engine.
7. Raise and support the vehicle.
8. Install accessible engine to transmission housing bolts. Tighten bolts to 68 N.m (50 ft. lbs.).
9. Support the transmission and remove the rear transmission crossmember retaining bolts.
10. Lower the transmission and install the upper transmission to engine fasteners. Tighten bolts to 68 N.m (50 ft. lbs.).

11. Raise the transmission and install the transmission crossmember.
12. Install the flex plate to torque converter bolts (1).
13. Tighten engine mount through bolts to 30 N.m (22 ft. lbs.).

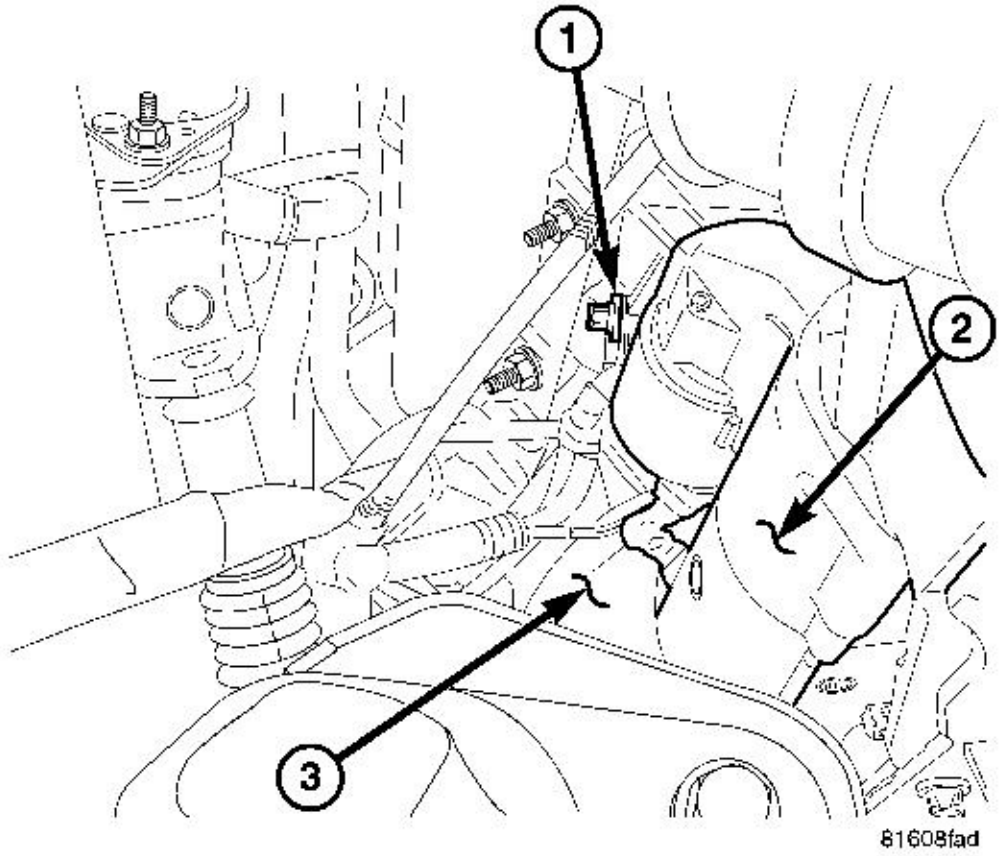

Fig. 21: Engine Wiring Harness Ground, Starter & Left Engine Mount
Courtesy of CHRYSLER LLC

1 - ENGINE WIRING HARNESS GROUND
2 - STARTER
3 - LEFT ENGINE MOUNT

14. Install the engine ground wire above the starter (1). Tighten bolt to 14 N.m (10 ft. lbs.).
15. Install the starter wiring.

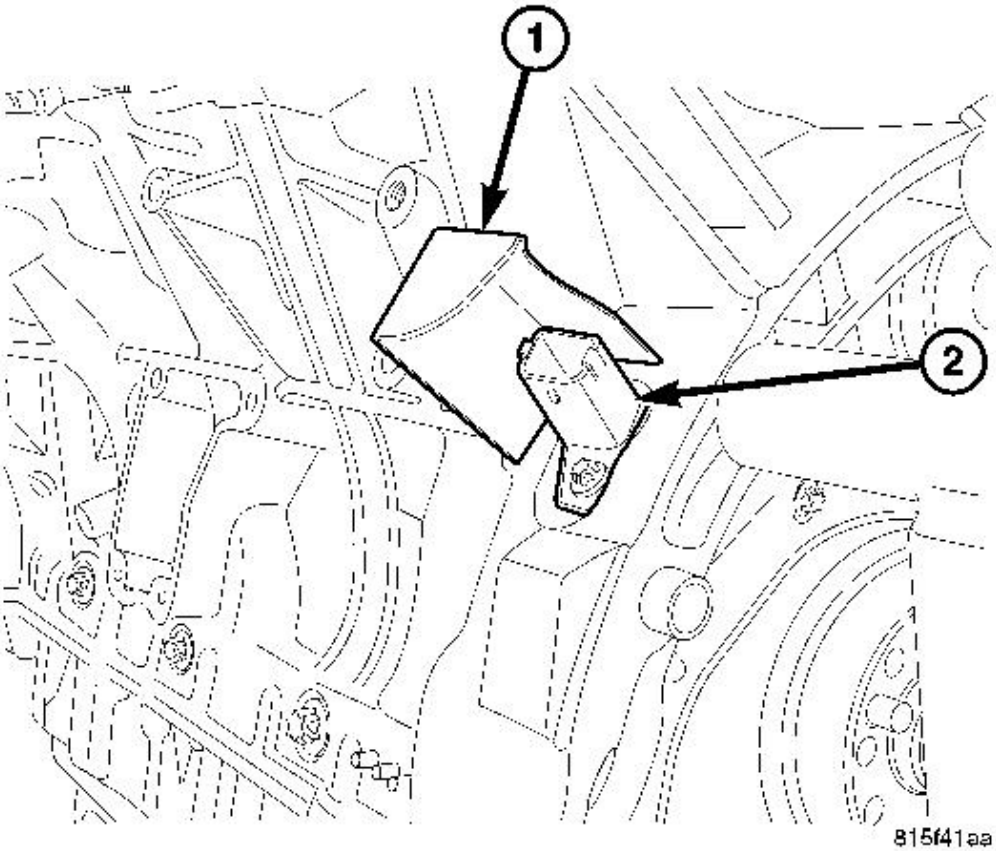

Fig. 22: Head Shield & Crankshaft Position Sensor
Courtesy of CHRYSLER LLC

1 - HEAT SHIELD
2 - CRANKSHAFT POSITION SENSOR

16. Connect the crankshaft sensor (2) wiring harness connector.
17. Route the transmission wiring harness and make necessary sensor connections at the transmission.
18. Install the front axle housing. Refer to **INSTALLATION** .

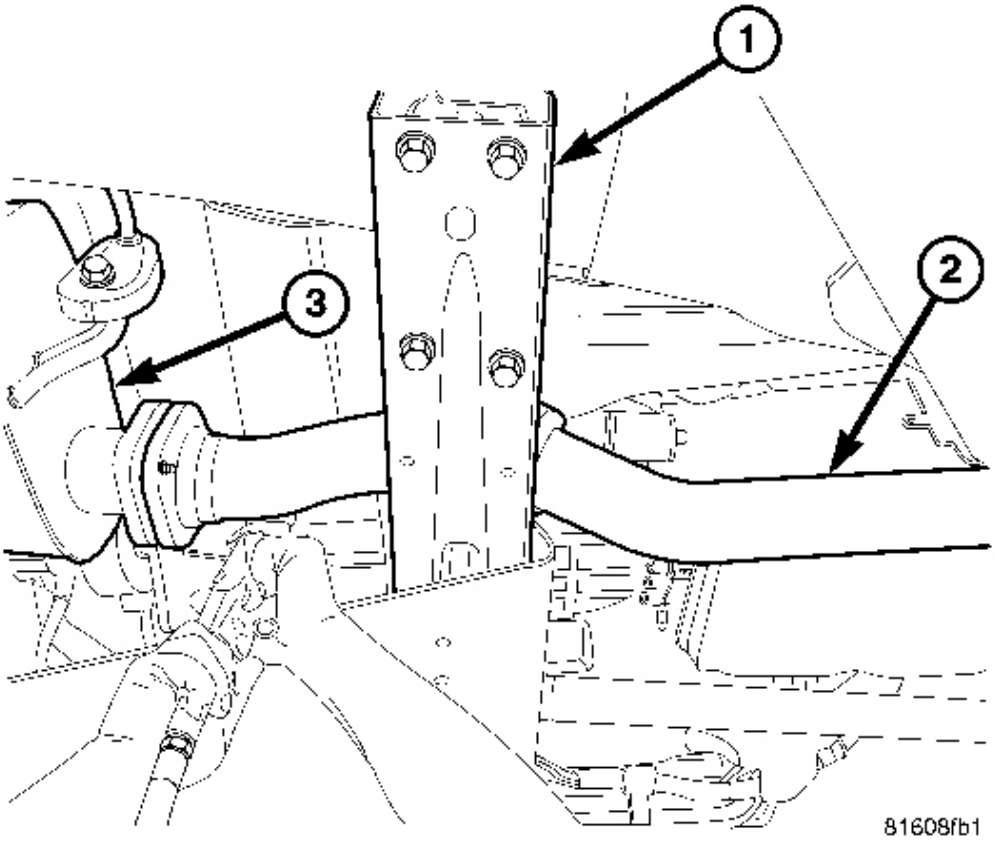

Fig. 23: Cross Over, Front Exhaust Pipe & Muffler
Courtesy of CHRYSLER LLC

1 - CROSS OVER
2 - FRONT EXHAUST PIPE
3 - MUFFLER

19. Install the catalytic converter and front exhaust pipe (2).
20. Install the transfer case shield.
21. Lower the vehicle.

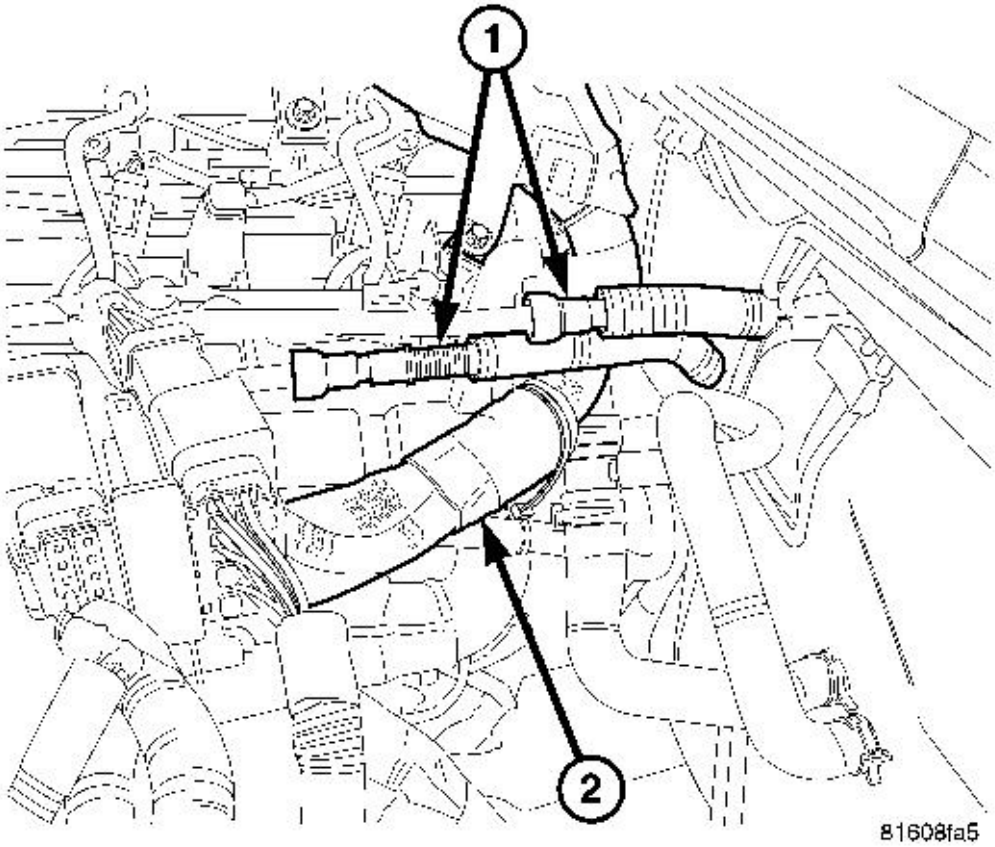

Fig. 24: Fuel Tank Supply & Rear Engine Wiring Harness
Courtesy of CHRYSLER LLC

1 - FUEL SUPPLY AND RETURN LINES FROM FUEL TANK
2 - MAIN ENGINE WIRING HARNESS

22. Install the fuel supply and return lines to the fuel pipe.

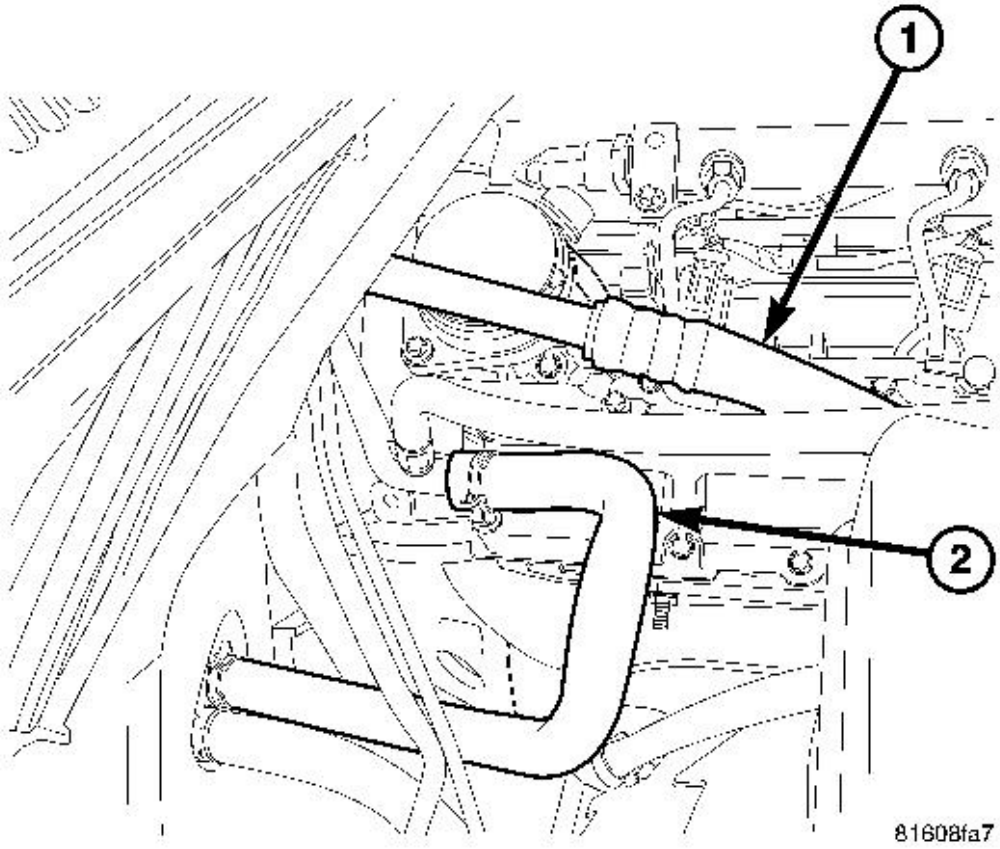

Fig. 25: A/C Lines & Heater Hose
Courtesy of CHRYSLER LLC

1 - LOW PRESSURE A/C HOSE 2 - HOSE AND JUNCTION

23. Attach the axle vent tube to the wiring harness.
24. Secure the transmission oil level indicator.
25. Install the engine cover bracket.
26. Connect the A/C lines (1) at the expansion valve.
27. Connect the coolant hose, at the outer housing, by the generator.
28. Connect the coolant by-pass hose at the cooler tube (2) on the right cylinder head.
29. Connect the heater hose, at the cooler tube (2) on the right cylinder head.

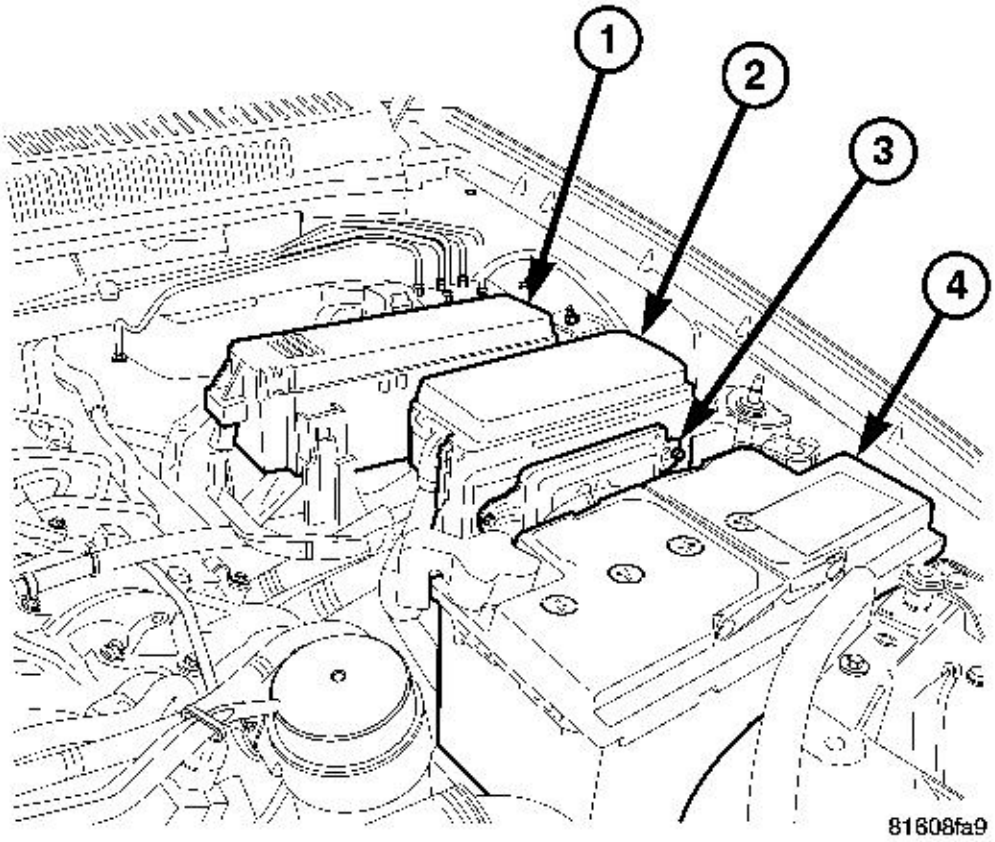

Fig. 26: Power Distribution Center, Relay Center, Front Control Module & Battery
Courtesy of CHRYSLER LLC

1 - POWER DISTRIBUTION CENTER (PDC)
2 - RELAY CENTER
3 - FRONT CONTROL MODULE (ECM)
4 - BATTERY

30. Connect the wiring harness connectors to the PDC (1).
31. Connect the vacuum hose to the vacuum pump.
32. Connect the generator wiring.
33. Connect the A/C compressor wiring harness connector.
34. Connect the PCM wiring harness connectors.
35. Install the PDC (1) bracket and mount the PDC (1).

NOTE: Do Not connect the negative battery cable when installing the battery.

36. Install the battery (4) and tray.

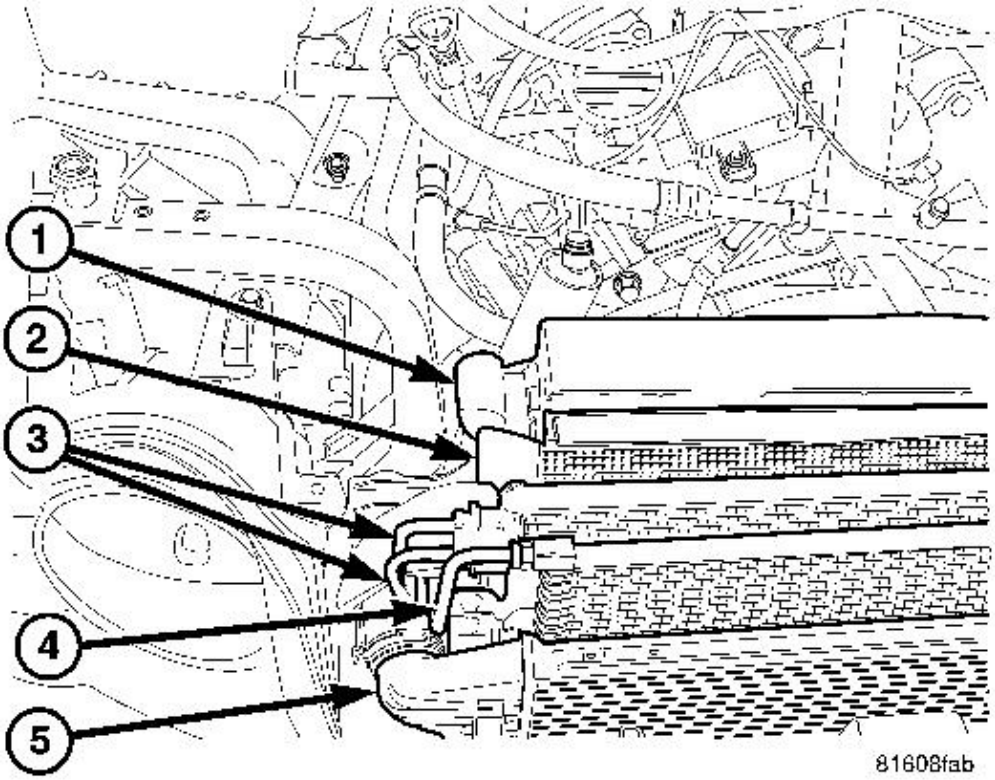

Fig. 27: Radiator, A/C Condenser, Transmission Cooler, Power Steering Cooler & Charge Air Cooler
Courtesy of CHRYSLER LLC

1 - RADIATOR
2 - A/C CONDENSER
3 - TRANSMISSION COOLER
4 - POWER STEERING COOLER
5 - CHARGE AIR COOLER

37. Install the coolant module assembly.
38. Connect the transmission cooler (3) and power steering cooler (4) lines to the coolant module.

39. Connect the suction/discharge lines at the A/C condenser and accumulator.
40. Connect the power steering reservoir hose to pump, at the reservoir.
41. Install the charge air inlet and outlet hoses at cooler (5).
42. Install the front core support bracket.
43. Install the front grille and upper radiator core support bracket with the hood latch.
44. Raise and support the vehicle.

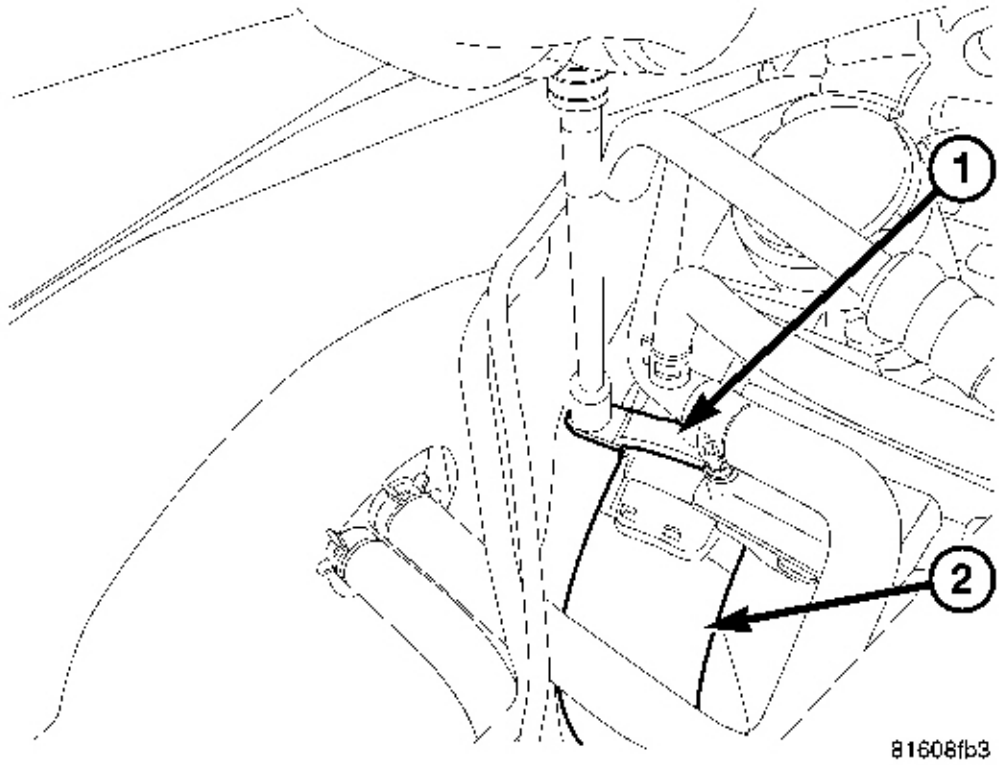

Fig. 28: Clamp & Catalytic Converter
Courtesy of CHRYSLER LLC

1 - CLAMP
2 - CATALYTIC CONVERTER

45. Install the power steering hydraulic lines at cooling fan. Refer to **INSTALLATION** .
46. Install the lower radiator hose.
47. Lower the vehicle.

48. Install lower catalytic converter exhaust clamp (1) behind right cylinder head. See **Fig. 28**.

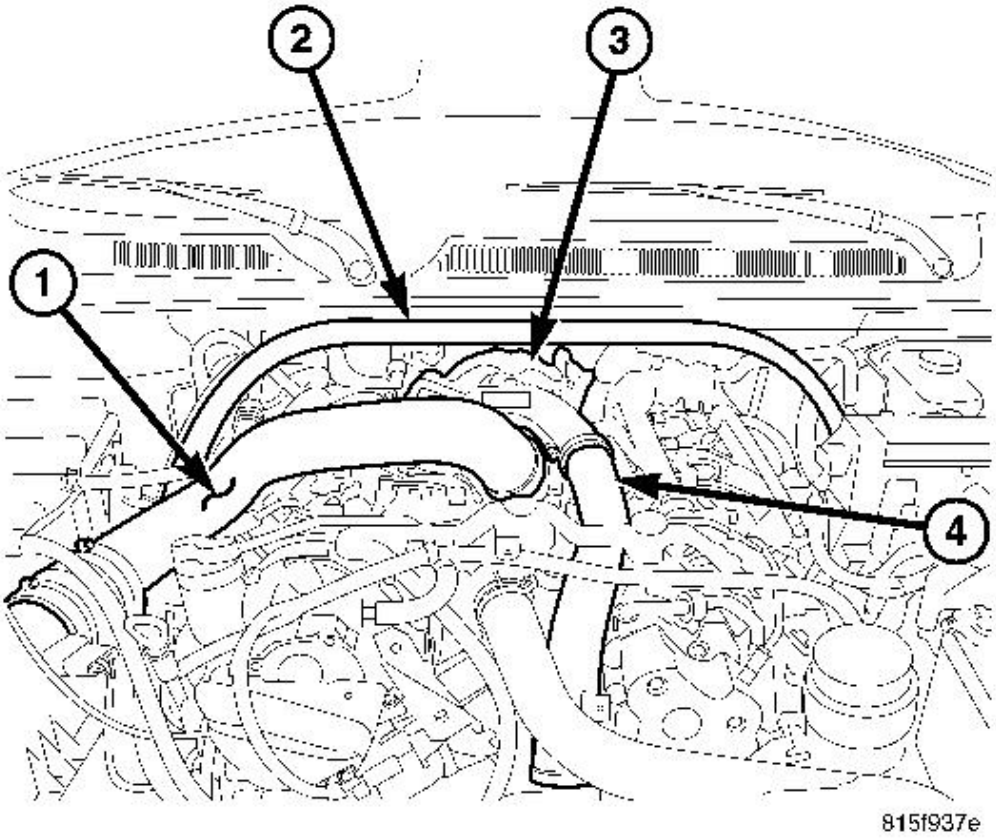

Fig. 29: Strut Tower Support, Air Cleaner Outlet Tube, Turbocharger & Charge Air Inlet Tube
Courtesy of CHRYSLER LLC

1 - AIR CLEANER OUTLET TUBE
2 - STRUT TOWER SUPPORT
3 - TURBOCHARGER
4 - CHARGE AIR INLET TUBE

49. Install the turbocharger (3) upper heat shield.
50. Install air cleaner housing and connect the air cleaner outlet tube (1) to the turbocharger.
51. Install the strut tower support (2).
52. Fill all appropriate fluid levels.

53. Evacuate and recharge air conditioning.
54. Connect the negative battery cable.

WARNING: High-pressure fuel lines deliver fuel under extreme pressure from the injection pump to the injectors. This maybe as high as 1350 bar (19,580 psi). Use extreme caution when inspecting for high-pressure fuel leaks. Inspect high-pressure fuel leaks with a sheet of cardboard. Wear safety goggles and adequate protective clothing when servicing fuel system. Fuel under this amount of pressure can penetrate skin causing serious or fatal injury.

55. Start engine, allow to warm, turn engine off and inspect for leaks.
56. Bleed power steering system using the scan tool procedure.
57. Install lower splash shields.

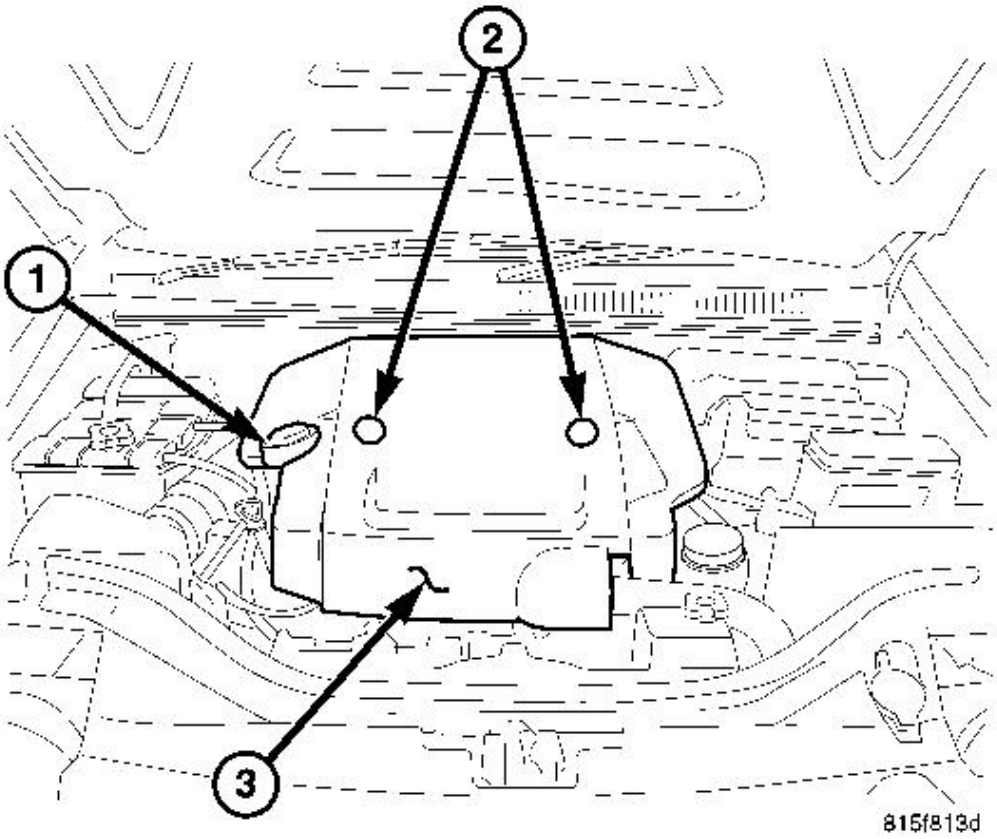

Fig. 30: Oil Filler Cap, Cover Fasteners & Engine Cover
Courtesy of CHRYSLER LLC

1 - OIL FILLER CAP
2 - COVER FASTENERS
3 - ENGINE COVER

58. Install engine cover (3).

3.0L DIESEL ENGINE - ENGINE COVER

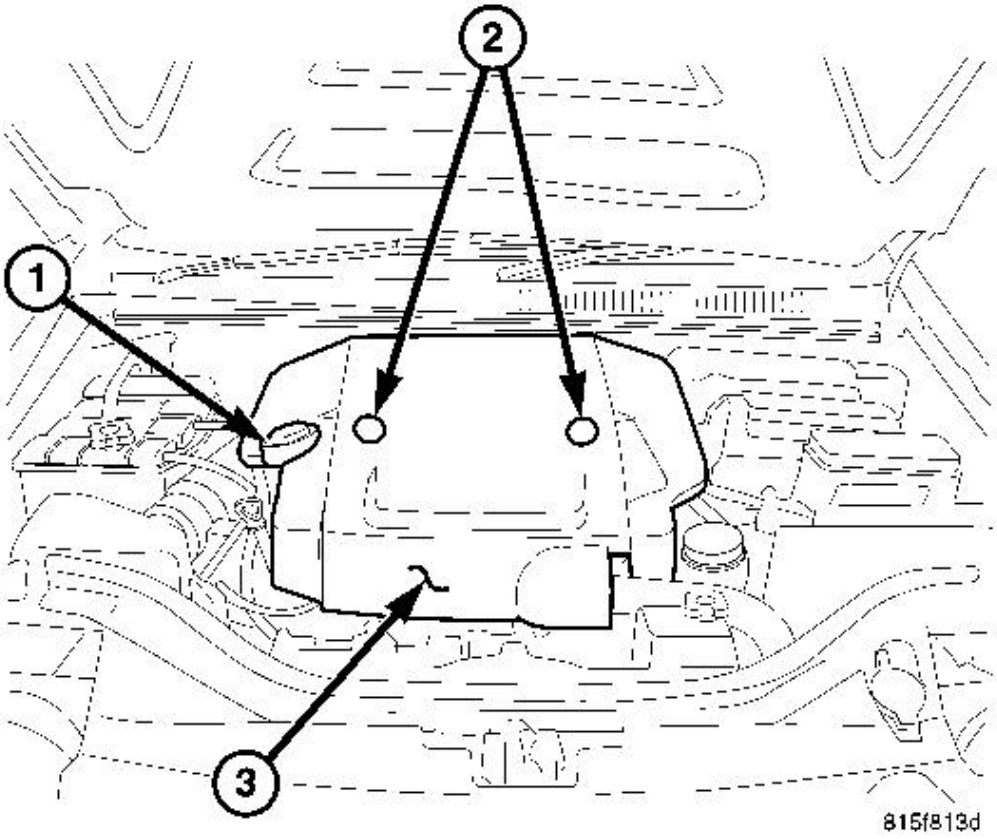

Fig. 31: Oil Filler Cap, Cover Fasteners & Engine Cover
Courtesy of CHRYSLER LLC

1 - OIL FILLER CAP

2 - COVER FASTENERS
3 - ENGINE COVER

1. Align the rear of the engine cover (3) with the rear mounting bracket slots and seat the cover into the bracket.
2. Push down on the cover (3) and install the fasteners (2).
3. Tighten fasteners to 5 N.m (44 in. lbs.).
4. Install the oil cap (1).

SPECIFICATIONS

3.0L DIESEL ENGINE - TORQUE

ENGINE BLOCK

DESCRIPTION	SPECIFICATIONS		-
	Newton Meters	Inch Pounds	Foot Pounds
Lower Oil Pan	12	160	-
Oil Drain Plug	30	265	22
Upper Oil Pan (M6)	14	124	10
Upper Oil Pan (M8)	20	177	14
Oil Pan To Timing Cover	14	124	10
Upper Oil Pan to Crankcase On Transmission Side	20	177	15
Bolt, oil pump cap with oil pipe to oil pump	12	106	-
Oil Pump	19	168	14
Oil Level Sensor Bracket	M6x8.8 - 8	70	-
	M6x10.9 - 12	106	-
Connecting Rod	1st stage short arm - 15	1st stage short arm -132	11
	2nd stage long arm - 20	2nd stage long arm - 177	15
	Stage 3 short arm - 30	Stage 3 short arm - 265	22
	Stage 4 long arm - 40	Stage 4 long arm - 354	29
	Stage 5 short arm - 40	Stage 5 short arm - 354	36
	Stage 6 long arm - 90 Degrees	Stage 6 long arm - 90 Degrees	Stage 6 long arm - 90 Degrees
	Stage 7 short arm - 90 Degrees	Stage 7 short arm - 90 Degrees	Stage 7 short arm - 90 Degrees
	Stage 8 long arm - 90 Degrees	Stage 8 long arm - 90 Degrees	Stage 8 long arm - 90 Degrees
Bolt, crankshaft bearing cap to crankshaft bearing body	Stage 1 - 35	309	25
	Stage 2- 95 Degrees	Stage 2- 95 Degrees	Stage 2- 95 Degrees

	Stage 3 - 95 Degrees	Stage 3 - 95 Degrees	Stage 3 - 95 Degrees
Lateral bolt, crankcase to crankcase bearing cap	Stage 1 - 53	309	39
	Stage 2 - 95 Degrees	Stage 2 - 95 Degrees	Stage 2 - 95 Degrees
Oil Jet	8	70	-
Rear cover	Stage 1 - 8	70	-
	Stage 2 - 10	88	-
Balance Shaft	35	309	26
Timing Chain Tensioning Rail Guide Pin	17	150	12
Timing Chain Slide Rail Guide Pin	17	150	12
Timing Chain Tensioner	80	708	59
Dual Mass Flywheel	Stage 1 - 45	398	33
	Stage 2 - 90 Degrees	Stage 2 - 90 Degrees	Stage 2 - 90 Degrees

CYLINDER HEAD

DESCRIPTION	SPECIFICATIONS		-
	Newton Meters	**Inch Pounds**	**Foot Pounds**
Intake Manifold	16	141	12
Fuel Filter Bracket	6	53	-
Swirl Valve Acutator	8	70	-
Cylinder Head Cover	Stage 1 - 4	35	-
	Stage 2 - 6	53	-
	Stage 3 - 8	70	-
Camshaft Drive Gear Bolts	18	159	13
Cylinder Head Bolts (M8)	20	177	15
Cylinder Head Bolts (M10)	Stage 1 - 10	88	10
	Stage 2 - 60	531	44
	Stage 3 - 90 Degrees	Stage 3 - 90 Degrees	Stage 3 - 90 Degrees
	Stage 4 - 90 Degrees	Stage 4 - 90 Degrees	Stage 4 - 90 Degrees
	Stage 5 - 90 Degrees	Stage 5 - 90 Degrees	Stage 5 - 90 Degrees
Cylinder Head Bolt Length When New	205 mm		
Cylinder Head Bolt Max. length	207 mm		
Camshaft Retainer On Cylinder Head	8	70	-
Rail pressure sensor on rail	14	123	10
Bolt, tensioning claw to	Stage 1 - 7	62	-

injector	Stage 2 - 180 Degrees	Stage 2 - 180 Degrees	Stage 2 - 180 Degrees
Oil Separator Cover	14	123	10
Nut, exhaust manifold to cylinder head	25	221	18
Stud bolt, exhaust manifold to cylinder head	20	177	15
Flange connection, exhaust manifold or front exhaust pipes to exhaust collector	Stage 1 - 20	177	15
	Stage 2 - 90 Degrees	Stage 2 - 90 Degrees	Stage 2 - 90 Degrees
Bolt, exhaust line to exhaust collector pipe/turbocharger	20	177	15
EGR Cooler	12	106	-

FRONT OF THE ENGINE

DESCRIPTION	SPECIFICATIONS		-
	Newton Meters	**Inch Pounds**	**Foot Pounds**
Vacuum Pump	9	80	-
Nut for high-pressure pump drive pinion gear	70	619	51
Bolt, high pressure pump to cylinder head	14	123	10
Fuel line on cylinder head cover/lifting eye/charge air manifold	M6x12 - 9	80	-
	M6x15 - 14	123	10
Connecting line between left and right rail	27	239	20
Pressure line on high pressure pump	33	292	24
Pressure line of high-pressure pump to rail	27	239	20
Pressure line union nut on rail	27	239	20
Pressure line union nut on injector	33	292	24
Bolt, rail to cylinder head	14	124	10
Bolt, retaining clamp of high-pressure line to cylinder head cover	14	124	10
Bolt connecting quantity control valve to high pressure pump housing flange	7	62	-

High pressure fitting on the high pressure pump	55	486	40
EGR Throttle Valve	9	79	-
Upper Idler Pulley	28	247	20
Bolt, poly-V-belt tensioning device to crankcase	58	513	43
Bolt, power steering oil reservoir to cylinder head cover and oil filter	14	123	10
Oil Filter Cap	25	221	18
Timing Case Cover To Crankcase	10	88	-
Crankshaft Damper	Stage 1 - 210	-	154
	Stage 2 - 180 degrees	Stage 2 - 180 degrees	Stage 2 - 180 degrees
Oil Filter Housing	14	123	10
Bracket to oil filter housing and cylinder head cover	14	123	10
Oil Cooler	12	106	-
Bolt connecting coolant pump housing to crankcase	10	88	-
Bolt, coolant thermostat housing to charge air manifold	9	79	-
High pressure fitting on the high pressure pump	55	40	354
Nut to high-pressure pump drive gear	70	51	451
Bolt, high-pressure pump to cylinder head	14	10	88
Pressure line on high-pressure pump	33	24	212

TURBOCHARGER AND EXHAUST

DESCRIPTION	SPECIFICATIONS		-
	Newton Meters	**Inch Pounds**	**Foot Pounds**
Turbocharger To Intake Manifold	10	88	-
Exhausts Tube At Turbocharger	Stage 1 - 20	177	15
	Stage 2 - 90 Degrees	Stage 2 - 90 Degrees	Stage 2 - 90 Degrees
Turbocharger Oil Feed Line At Crankcase	12	106	-

Turbocharger Oil Feed at Turbocharger	Stage 1 - 10	88	-
	Stage 2 - 30	265	22
Exhaust Pipe Support	30	265	22
Turbocharger Heat Shield to Bracket	8	70	-
Turbocharger Shield to Exhaust Collector	10	88	-
Bolt, engine charge air channel of turbocharger to charge air distribution pipe	8	70	-
Engine charge air duct upstream of charge air cooler on bracket	8	70	-
Bolt, engine charge air duct bracket to cylinder head	8	70	-
Bolt, charge air manifold to engine support	8	70	-
Bracket, throttle valve actuator to cylinder head	9	79	-
Throttle valve actuator bracket and throttle valve actuator coupling flange	10	88	-
Throttle valve actuator on mixing chamber	5	44	-
Bolt, muffler to mixing chamber	8	70	-
Exhaust gas recirculation pipe to charge air distribution line	13	115	-
Exhaust gas recirculation pipe to exhaust collector	Stage 1 - 10	Stage 1 - 88	-
	Stage 2 - 90 Degrees	Stage 2 - 90 Degrees	Stage 2 - 90 Degrees
Union nut connecting pressure line to diesel particulate filter	45	398	33
Bolt for clamping plates of pressure lines	10	88	-
Clamp connecting diesel particulate filter to catalytic converter	35	309	26
Clamp connecting diesel particulate filter to rear muffler	45	398	33
Clamp connecting diesel	45	398	33

particulate filter to front muffler			

ENGINE MOUNTING

DESCRIPTION	SPECIFICATIONS		-
	Newton Meters	Inch Pounds	Foot Pounds
Bolt, front engine mount to engine support	58	513	42
Bolt, rear engine mount to transmission	40	354	29
Bolt, rear engine mount to transmission carrier M8	30	265	22
Bolt, rear engine mount to transmission carrier M10	58	513	42
Bolt connecting engine support to left crankcase	20	177	14
Bolt connecting engine support to right crankcase	20	177	14

3.0L DIESEL ENGINE - ENGINE SPECIFICATIONS

GENERAL DESCRIPTION

DESCRIPTION	SPECIFICATION
Displacement 3.0L	3.0L (2985 cc) (182 CID)
Bore	83 mm (3.26 in.)
Stroke	92 mm (3.62)
Compression Ratio	18 :1
Weight	215Kg (474 Lbs.)
Power	160Kw (215 HP) @ 4200 RPM
Torque	510 N.m (376 Ft. Lbs.) @ 1800 RPM
Idle Speed - Warm	620 RPM
Belt Tension	Automatic Belt Tensioner
Thermostat Opening	80°C ± 2°C (176°F ± 36°F)
Cooling System Capacity	13.3 Liters (14 qts.)
Engine Oil Capacity	9.5L (10 Qt.) W/Filter Change
Timing System	Chain Driven Dual Overhead Camshafts
Air Intake	Dry Filter With Turbocharger and Charge Air Cooler
Fuel Supply	Electric Pump In The Fuel Tank
Fuel System	Direct Fuel Injection Common Rail System
Combustion Cycle	4 Stroke

Compression Tolerance Or New Value	27 - 32 bar (392 - 464 psi)
Cylinder Compression Difference Between Cylinders	3 Bar (43.5 psi.)
Cylinder Leak Tightness Permissible Total Loss	Approx. 25%
Cylinder Leak Tightness Permissible Loss At Valves And Cylinder Head Gasket	Approx. 10%
Cylinder Leak Tightness Permissible Loss At Pistons And Piston Rings	Approx. 20%
Cooling System	Water Cooling
Injection Pump	CP3 2nd. Generation Common Rail System
Injection Order	1-4-2-5-3-6
Lubrication	Pressure Lubricated By Rotary Pump
Oil Pressure 80°C (176°F)	1.1 Bar (16 psi.) at Idle 3.6 Bar (52 psi) at 3200 RPM
Engine Rotation	Clockwise Viewed From Front Cover

CRANKSHAFT

DESCRIPTION	SPECIFICATION	
	Metric	Standard
Crankshaft Main Bearing Cap Bolts	-	
Thread Diameter	11 mm	.43 in
Length When New	66 mm	2.5985 in.
Maximum Length	67.8 mm	2.6693 in.
Crankshaft Journal Diameter	-	
Nominal Diameter	75.940 - 75.965 mm	2.98 - 2.99 in.
First Repair Size	75.960 - 75.965 mm	2.9906 - 2.9908 in.
Second Repair Size	75.955 - 75.960 mm	2.9904 - 2.9906 in.
Third Repair Size	75.950 - 75.955 mm	2.9902 - 2.9904 in.
Fourth Repair Size	75.945 - 75.950 mm	2.99 - 2.9902 in.
Fifth Repair Size	75.940 - 75.945 mm	2.9898 - 2.99 in.
Crankshaft Journal Width At Fit Bearing	-	
Identification Colorless/0	29.500 - 29.533 mm	1.16 - 1.163 in.
Red/1	29.600 - 29.633 mm	1.164 - 1.166 in.
Standard Dimension For Main Bearing Shells In Crankcase Upper And Lower Sections - Diameter 70.00 Mm (2.755 in.)	-	
Bearing shell thickness (Replacement part additional number (color coding blue) - 52)	2.250 - 2.255 mm	0.0886 - 0.0876 in.
Bearing shell thickness	2.255 - 2.260 mm	0.0876 - 0.089 in.

(Replacement part additional number (color coding yellow) - 54)		
Bearing shell thickness (Replacement part additional number (color coding red) - 56)	2.260 - 2.265 mm	0.089 - 0.0892 in.
Bearing shell thickness (Replacement part additional number (color coding white) - 57)	2.265 - 2.270 mm	0.089 - 0.0894 in.
Bearing shell thickness (Replacement part additional number (color coding purple) - 58)	2.270 - 2.275 mm	0.0894 - 0.0896 in.
Crankshaft Bearing Clearance (When New)	0.029 - 0.056 mm	0.0012 - 0.0023 in.
Axial play of crankshaft	0.100 - 0.254 mm	0.004 - 0.01 in.

CYLINDER HEAD

DESCRIPTION	SPECIFICATION	
	Metric	Standard
Height Of Cylinder Head Without Camshaft Housing	-	
When new	128.35 - 128.65 mm	5.0532 - 5.065 in.
Wear limit after machining	NA	NA
Valve Setback With New Valves And New Valve Seat Rings	-	
Exhaust valve	0.7 - 1.1 mm	0.0276 - 0.0434 in.
Intake valve	1.0 - 1.4 mm	0.0394 - 0.0552 in.
Flatness Of The Separating Surface Of The Cylinder Head	0.05 mm	.002 in.
Cylinder Head Bolts	-	
Thread Diameter	12 mm	NA
Length When New	205 mm	8.0709 in.
Maximum Length	207 mm	8.1496 in.

VIBRATION DAMPER

DESCRIPTION	SPECIFICATION	
	Metric	Standard
Permissible Difference At Vibration Damper	-	
Radial runout	0.4 mm	0.158 in.
Axial runout	0.4 mm	0.158 in.

CYLINDER BORE

DESCRIPTION	SPECIFICATION	
	Metric	Standard
Cylinder Liner Diameter	-	
Standard dimensions	83.009 mm	3.268 in
Group code letter A	83.000 - 83.006 mm	3.2678 - 3.268 in.
Group code letter X	83.006 - 83.012 mm	3.268 - 3.2682 in.
Group code letter B	83.012 - 83.018 mm	3.2682 - 3.2685 in.
1st repair size	83.050 mm	3.2697 in.
2nd repair size	83.100 mm	3.272 in.
Cylinder Liner	-	
Wear limit in longitudinal and transverse direction	0.20 mm	0.0079 in.
Permissible difference for cylinder shape (when new)	0.000 - 0.007 mm	0.000 -.0003 in.
Wear limit	0.05 mm	0.0002 in.
Permissible difference for rectangularity related to cylinder height	0.05 mm	0.0002 in.
Basic peak-to-valley height (R3Z)	0.002 - 0.005 mm	0.0001 - 0.0002 in.
Maximum peak-to-valley height (Rmax)	0.011 mm	0.0005 in.
Honing angle	40 - 60°	40 - 60°

CRANKCASE

DESCRIPTION	SPECIFICATION	
	Metric	Standard
Crankshaft Bearing	-	
Basic bore diameter	80.000 - 80.522 mm	3.1496 - 3.1702 in.
1st stage blue (Code number 52)	80.500 - 80.507 mm	3.1693 - 3.1696 in.
2nd stage yellow (Code number 54)	80.507 - 80.514 mm	3.1696 - 3.1699 in.
3rd stage red (Code number 56)	80.514 - 80.522 mm	3.1699 - 3.1702 in.
Basic Bore Width At Fit Bearing	24.979 - 25.000 mm	0.9835 - 0.9843 in.
Permissible Out-Of-Roundness And Conicity Of Basic Bore	0.02 mm	0.0008 in.
Crankcase	-	
Peak-to-valley height (Rz) top contact surface	0.015 - 0.025 mm	0.0006 - 0.001 in.
Waviness (Wt) of top contact surface	0.001 - 0.007 mm	0.0001 - 0.0003 in
Unevenness of contact surface in longitudinal direction	0.03 mm	0.0012 in.
Unevenness of contact surface in	0.03 mm	0.0012 in.

transverse direction		
Variation of parallelism of top contact surface to bottom in longitudinal direction	NA	NA

CAMSHAFT

DESCRIPTION	SPECIFICATION	
	Metric	Standard
Cylinder Head On Right Valve Timing At 2 mm Valve Lift And A New Timing Chain	-	
Inlet valve opens after TDC	19.6°	19.6°
Inlet valve closes after BDC	5.6°	5.6°
Outlet valve opens after TDC	17.9°	17.9°
Outlet valve closes after BDC	27.9°	27.9°
Cylinder Head On Right Valve Timing At 2 mm Valve Lift And Used Timing Chain	-	
Inlet valve opens after TDC	21.5°	21.5°
Inlet valve closes after BDC	3.7°	3.7°
Outlet valve opens after TDC	16.0°	16.0°
Outlet valve closes after BDC	26.0°	26.0°
Cylinder Head On Left Valve Timing At 2 mm Valve Lift And A New Timing Chain	-	
Inlet valve opens after TDC	20.7°	20.7°
Inlet valve closes after BDC	4.5°	4.5°
Outlet valve opens after TDC	16.8°	16.8°
Outlet valve closes after BDC	26.8°	26.8°
Cylinder Head On Left Valve Timing At 2 mm Valve Lift And Used Timing Chain	-	
Inlet valve opens after TDC	21.5°	21.5°
Inlet valve closes after BDC	3.7°	3.7°
Outlet valve opens after TDC	16.0°	16.0°
Outlet valve closes after BDC	26.0°	26.0°

VALVES

DESCRIPTION	SPECIFICATION	
	Metric	Standard
Valve Disk Diameter	-	
Exhaust	25.3 - 25.5 mm	0.9961 - 1.004 in.
Intake	28.4 - 28.6 mm	1.1182 - 1.126 in.

Height Of Valve Disk	-	-
Exhaust	1.4 - 1.6 mm	0.0552 - 0.063 in.
Intake	1.3 - 1.5 mm	0.0512 - 0.0591
Valve Seat Face Angle	-	
Exhaust	45° (+ 0.5°)	45° (+ 0.5°)
Intake	45° (+ 0.5°)	45° (+ 0.5°)
Valve Seat Back-cut Angle	-	
Exhaust	30° (±15')	30° (±15')
Intake	30° (±15')	30° (±15')
Valve Stem Diameter	-	
Exhaust	5.945 - 5.975 mm	0.2341 - 0.2353 in.
Intake	5.960 - 5.975 mm	0.2347 - 0.2353 in.
Length Of Valve	-	
Exhaust	102.1 - 102.5 mm	4.0197 - 4.0355 in.
Intake	102.1 - 102.5 mm	4.0197 - 4.0355 in.

PISTONS

DESCRIPTION	SPECIFICATION	
	Metric	Standard
Piston Projection With New Crankcase	0.53 - 0.77 mm	0.0209-0.0304
Piston projection (a) with machined crankcase	NA	NA
Piston Diameter	-	
Piston group A	82.833 - 82.839 mm	3.2612 - 3.2614 in.
Piston group X	82.838 - 82.846 mm	3.2614 - 3.2617 in.
Piston group B	82.845 - 82.851 mm	3.2617 - 3.2619 in.
1st repair size (Piston group +5)	82.876 - 82.890 mm	3.2629 - 3.2634 in.
2nd repair size (Piston group +10)	82.926 - 82.940 mm	3.2648 - 3.2654 in.

PISTON RINGS

DESCRIPTION	SPECIFICATION	
	Metric	Standard
Piston Ring End Clearance	-	
Groove 1	0.12 - 0.16 mm	0.0048 - 0.0063 in.
Groove 2	0.065 - 0.110 mm	0.0026 - 0.0044 in.
Groove 3	0.03 - 0.07 mm	0.0012 - 0.0028 in.
Piston Ring End Gap	-	
Groove 1	0.12 - 0.16 mm	0.0048 - 0.0063
Groove 2	0.065 - 0.110 mm	0.0026 - 0.0044
Groove 3	0.03 - 0.07 mm	0.0012 - 0.0028
Dimensions Of The Piston Rings	-	

Keystone ring	NA	NA
Taper-faced ring	NA	NA
Bevel-edged ring	NA	NA
Piston Ring Height	-	
Bevel-edged ring (DSF-ring)	83 X 2.0 X 3.4 mm	3.2678 X 0.0788 X 0.1339 in.
Taper-faced ring (M-ring)	83 X 2.0 X 3.45 mm	3.2678 x 0.0788 x 0.1359 in.
Double sided half-keystone ring (DT-ring)	83 X 2.0 X 3.4 mm	3.2678 X 0.0788 X 0.1339 in.

CONNECTING RODS

DESCRIPTION	SPECIFICATION	
	Metric	**Standard**
Connecting Rod Bolt	-	-
Thread diameter	8 mm	0.315 in.
Shank length when new	47 mm	1.8504 in.
Maximum shank length	48 mm	1.8898 in.
Distance From Center Of Connecting Rod Bearing Bore To Connecting Rod Bushing Bore	167.97 - 168.03 mm	6.613 - 6.6154 in.
Width Of Connecting Rod At Connecting Rod Bearing Bore	17.90 - 18.10 mm	0.7048 - 0.7126 in.
Width Of Connecting Rod At Connecting Rod Bushing Bore	21.94 - 22.00 mm	0.8638 - 0.8662 in.
Connecting Rod Bushing Inner	30.038 - 30.044 mm	1.1826 - 1.1829 in.
Connecting Rod Bushing Outer Diameter	32.500 - 32.525 mm	1.2796 - 1.2806 in.
Piston Pin Play In Connecting Rod Bushing	0.028 - 0.034 mm	0.0012 - 0.0014 in.
Peak-To-Valley Height (Rz) Of Connecting Rod Bushing On Inside	5 mm	0.1969 in.
Connecting Rod Bearing Shell Basic Bore	67.600 - 67.614 mm	2.6615 - 2.662 in.
Permissible Out-Of-Roundness And Concentricity Of Basic Bore	0.020 mm	0.0008 in.
Permissible Twist Of Connecting Rod Bearing Bore To Connecting Rod Bush Bore Over A Length Of 100 mm	0.1 mm	0.004 in.
Permissible Variation Of Axial Parallelism Of Connecting rod Bearing Bore To Connecting rod Bushing Bore Over A Length Of 100 mm	0.045 mm	0.0018 in.

Permissible Difference In Weight Of Complete Connecting Rod Of An Engine	2 grams	0.07 oz.

SPECIAL TOOLS

3.0L DIESEL ENGINE

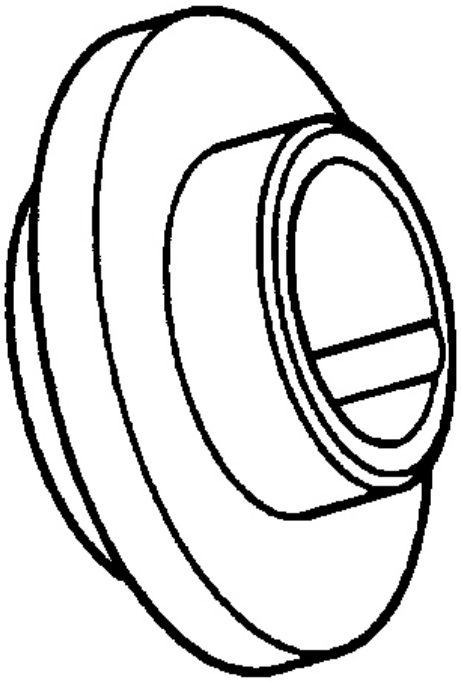

80e49185

Fig. 32: #8936 Front Crankshaft Seal Installer

Courtesy of CHRYSLER LLC

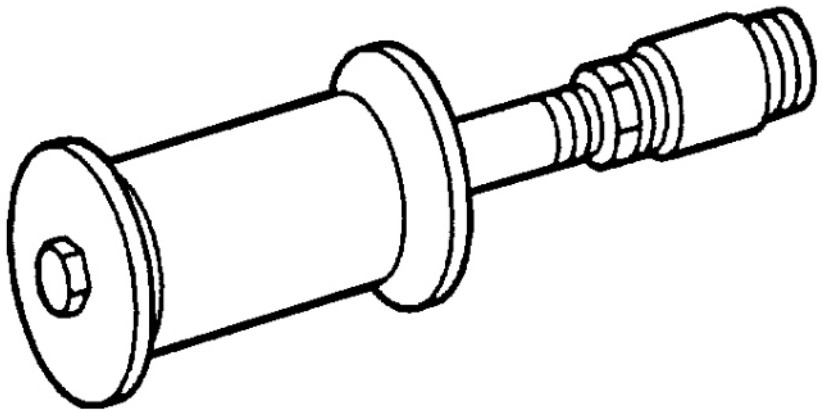

80e492f2

Fig. 33: #8937 Slide Hammer
Courtesy of CHRYSLER LLC

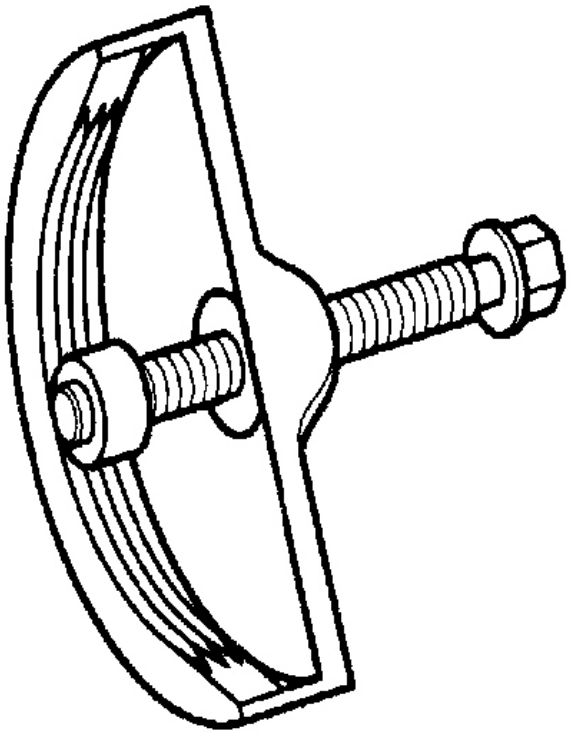

80e492e4

Fig. 34: #8940 Vibration Damper Remover
Courtesy of CHRYSLER LLC

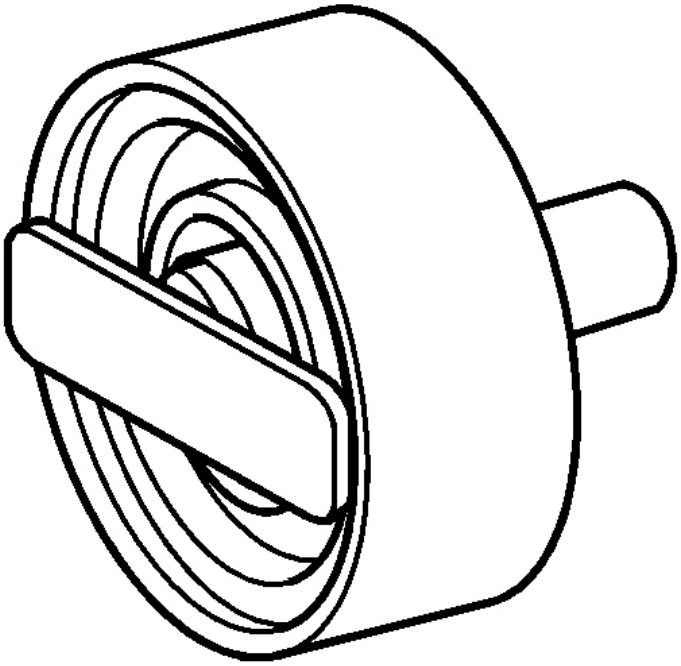

80e49274

Fig. 35: #8944 Rear Main Seal Installer
Courtesy of CHRYSLER LLC

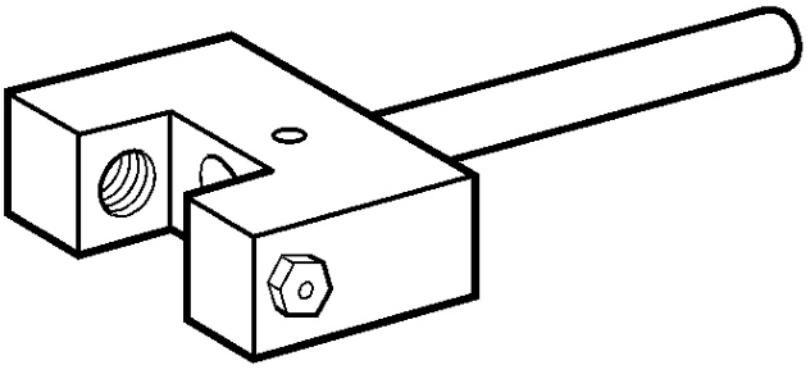

80e49289

Fig. 36: Tool, Chain Separator - 8948
Courtesy of CHRYSLER LLC

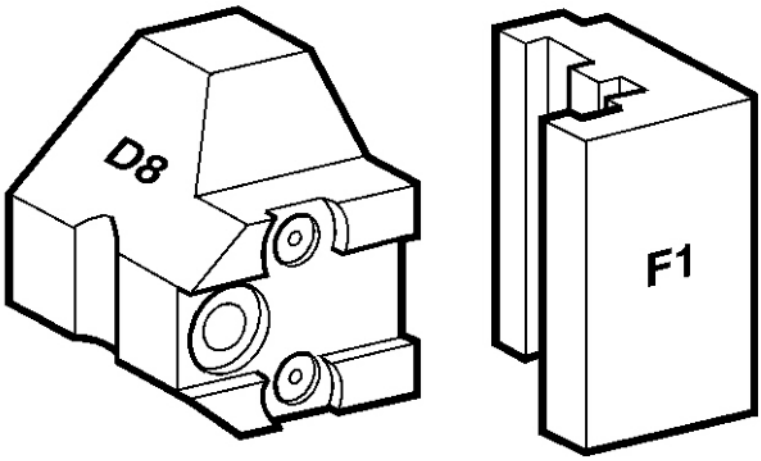

80e492bd

Fig. 37: Piece, Thrust - 8949A
Courtesy of CHRYSLER LLC

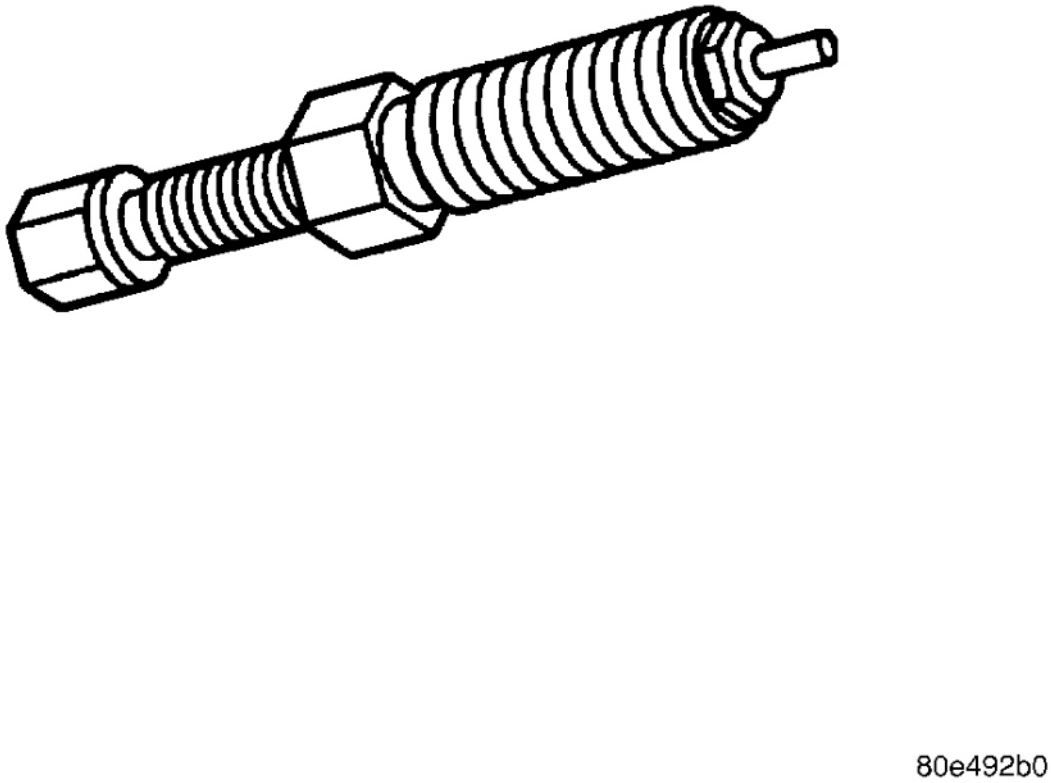

Fig. 38: Screw, Pressing - 8950
Courtesy of CHRYSLER LLC

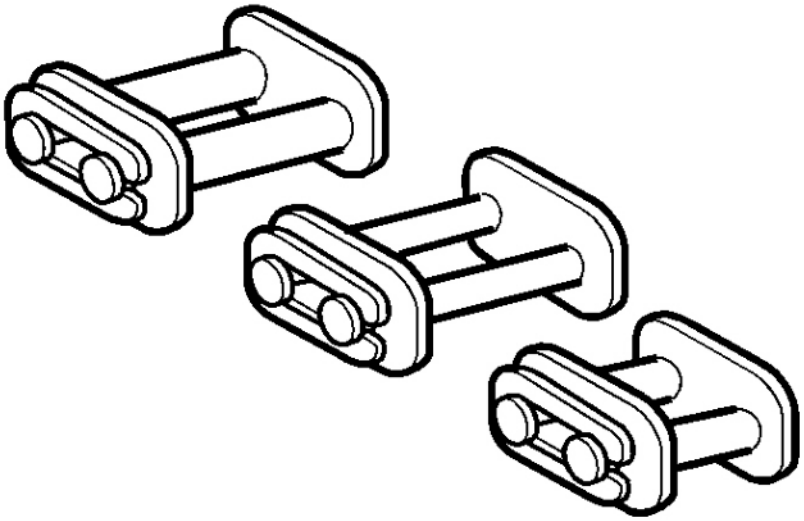

80e492a7

Fig. 39: #8951 Assembly Links
Courtesy of CHRYSLER LLC

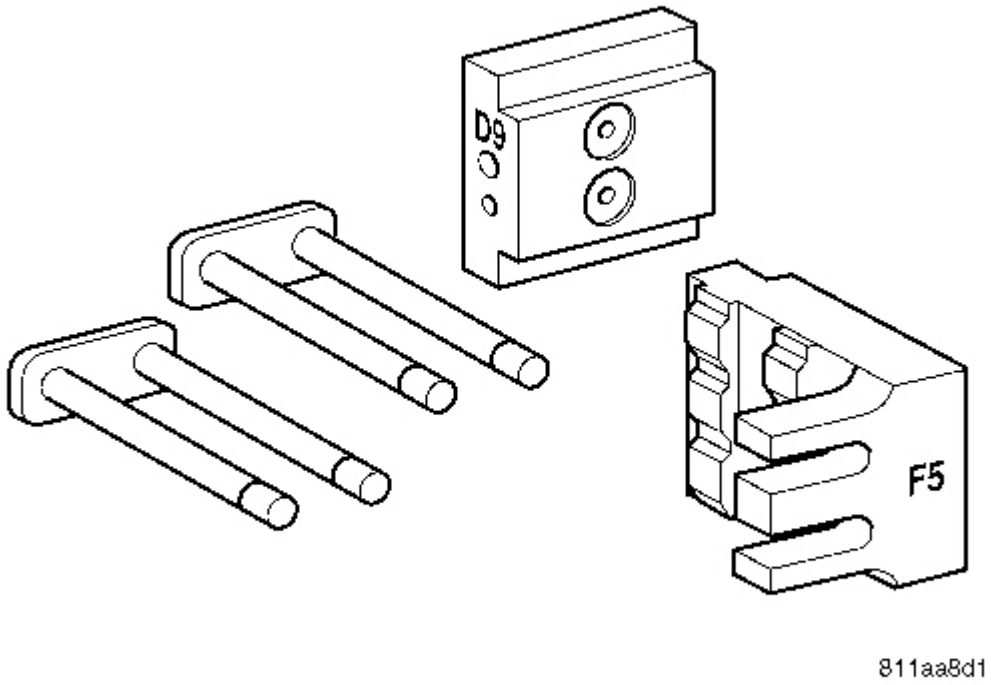

Fig. 40: Inserts, Assembly - 8952A
Courtesy of CHRYSLER LLC

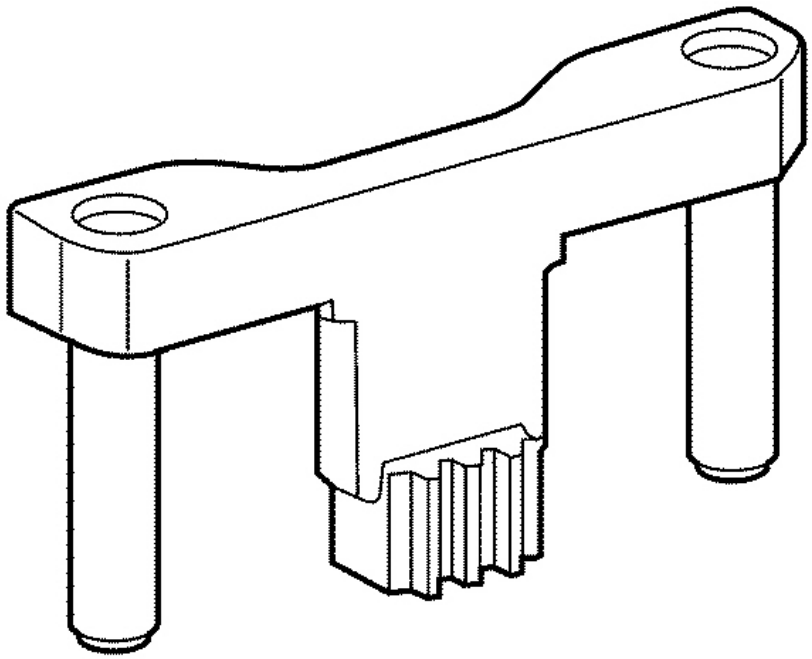

810db0a2

Fig. 41: Tool, Flywheel Locking - 9102
Courtesy of CHRYSLER LLC

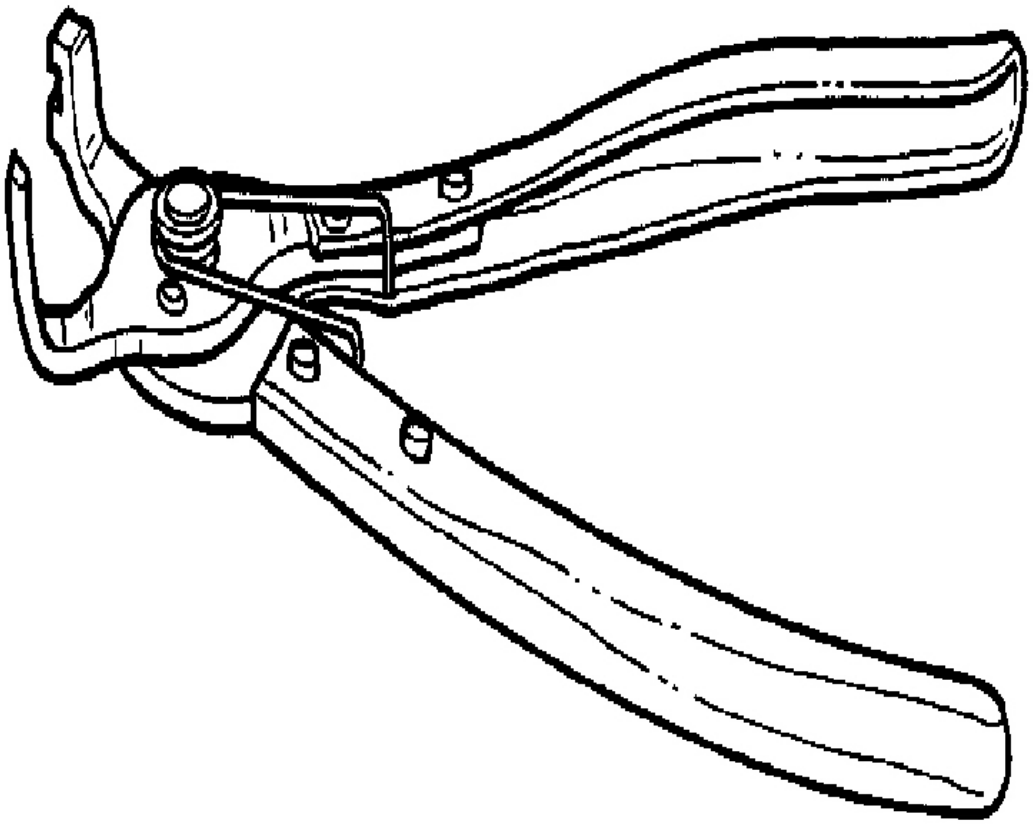

Fig. 42: Fuel Line Pliers-9539
Courtesy of CHRYSLER LLC

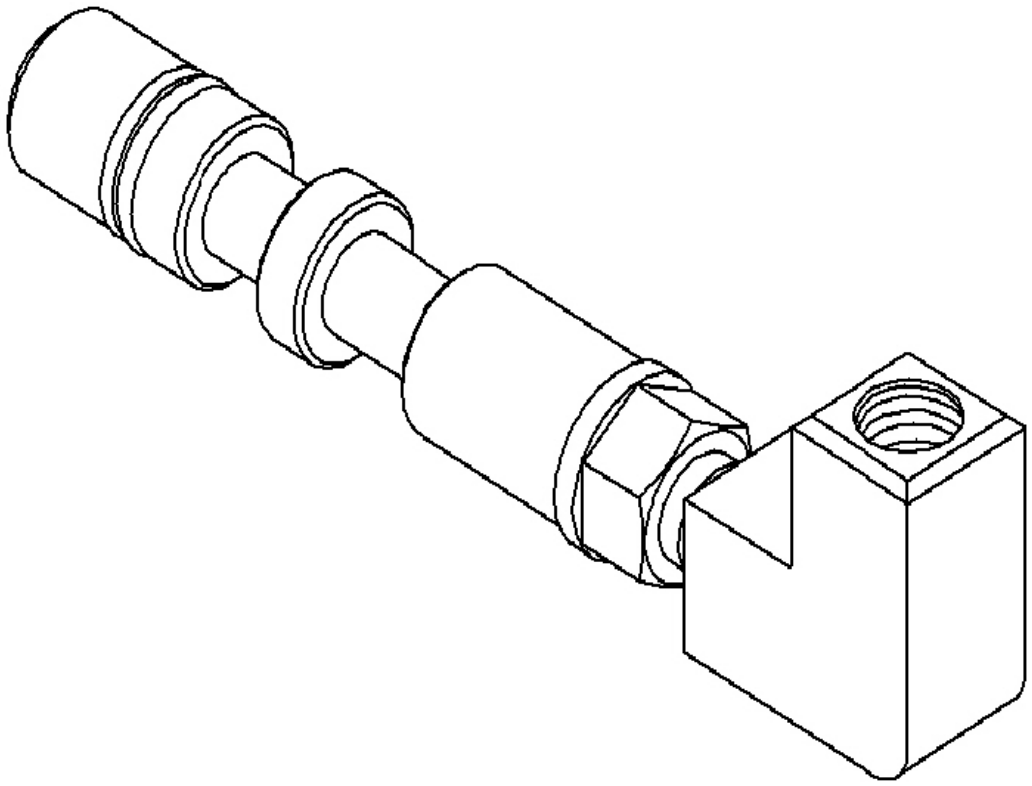

Fig. 43: #9543 Adapter
Courtesy of CHRYSLER LLC

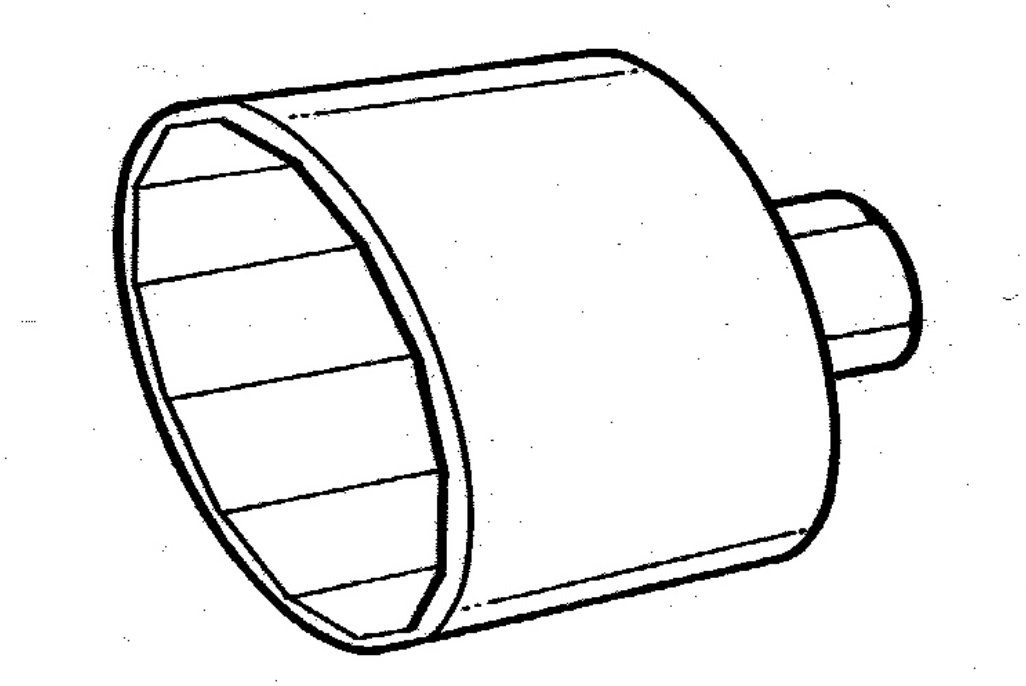

Fig. 44: Wrench, Oil Filter Cap - 9551
Courtesy of CHRYSLER LLC

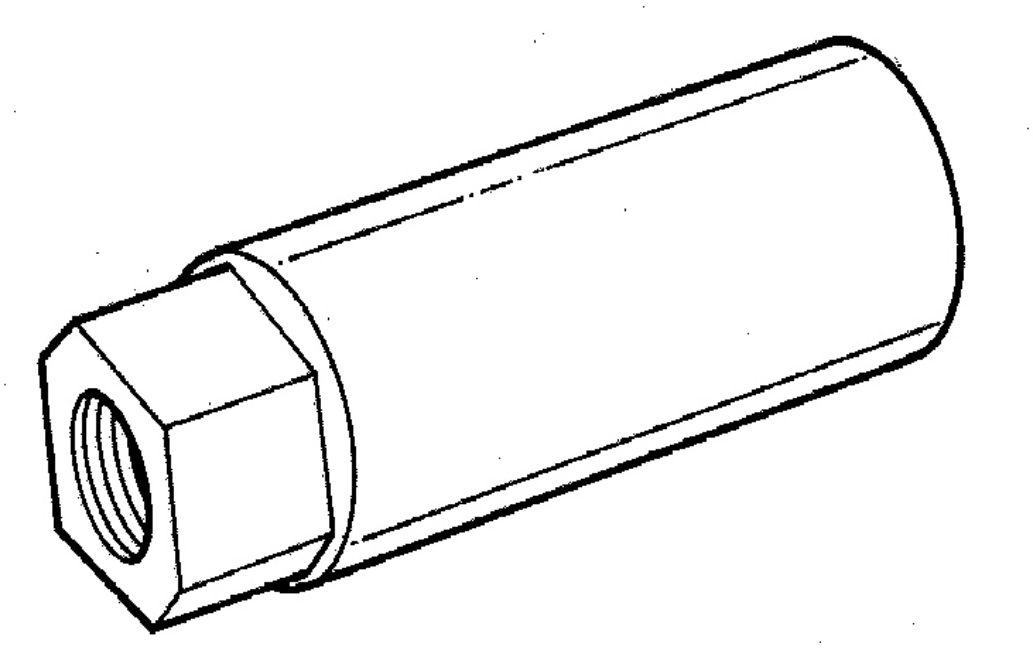

Fig. 45: Remover, Fuel Injector - 9552
Courtesy of CHRYSLER LLC

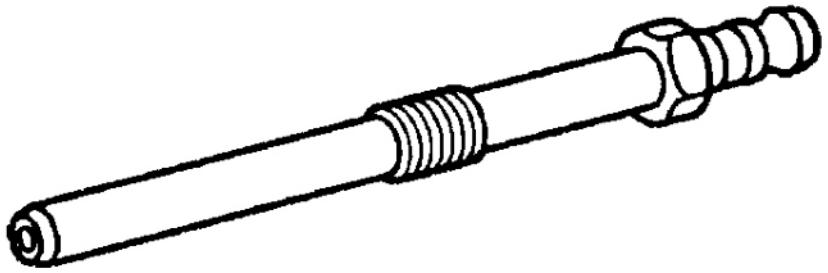

80e492e9

Fig. 46: Adapter, Compression Tester - 9553
Courtesy of CHRYSLER LLC

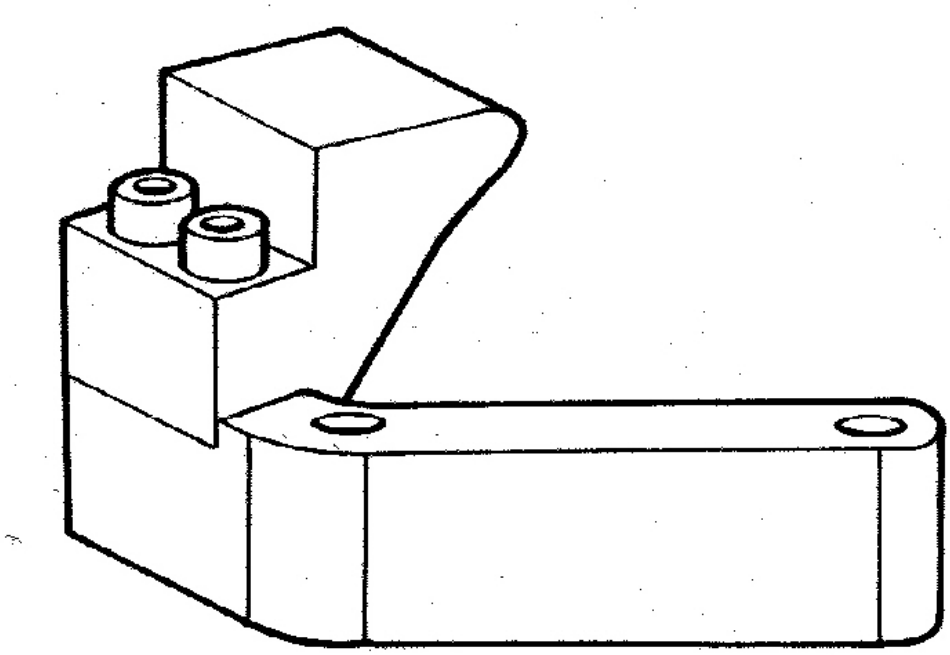

Fig. 47: Guide, Timing Chain - 9554
Courtesy of CHRYSLER LLC

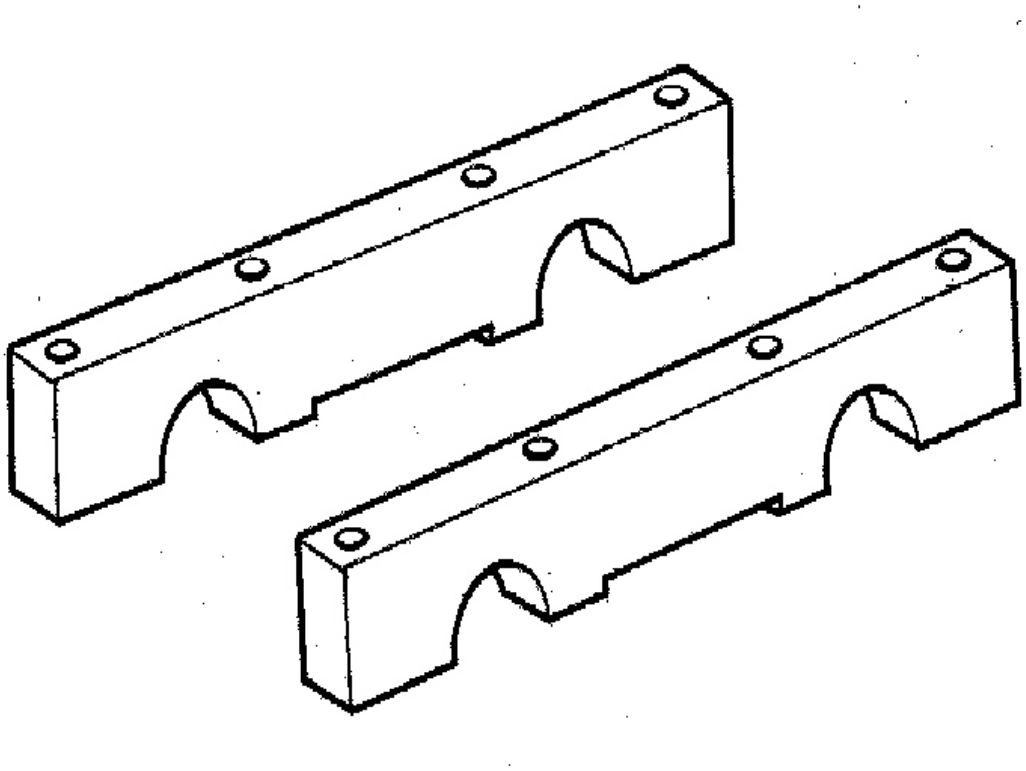

Fig. 48: Retainer, Camshafts - 9555
Courtesy of CHRYSLER LLC

SYSTEM-AIR INTAKE

REMOVAL

MIXING CHAMBER

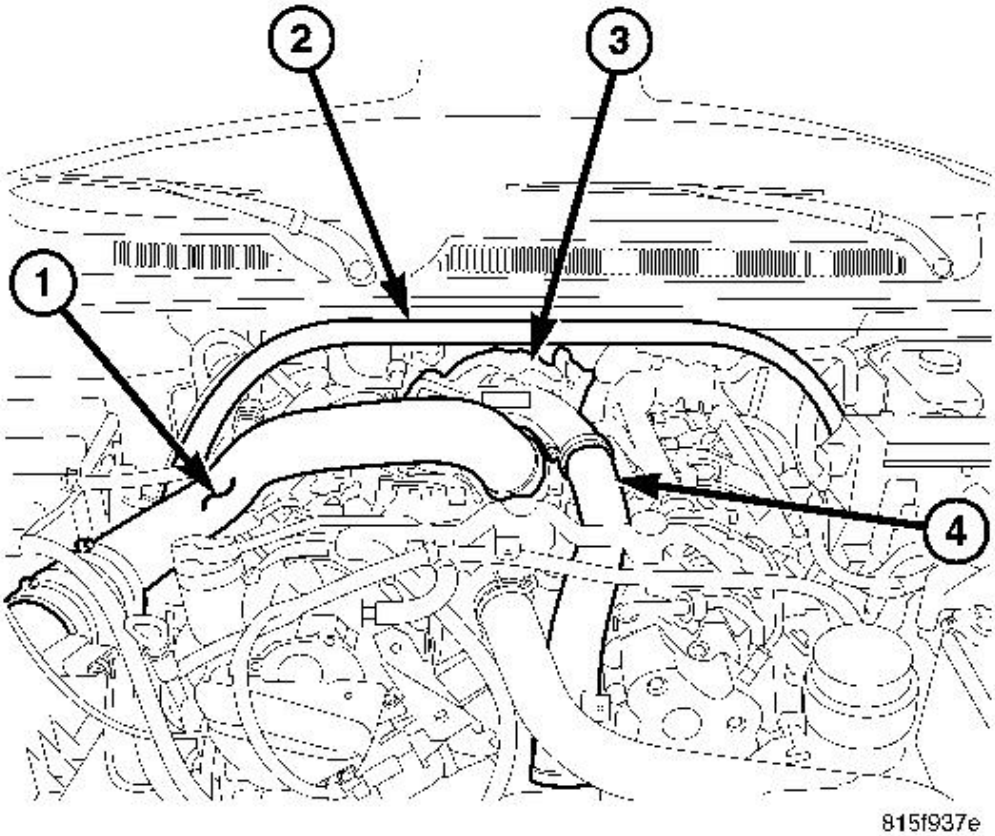

Fig. 49: Strut Tower Support, Air Cleaner Outlet Tube, Turbocharger & Charge Air Inlet Tube
Courtesy of CHRYSLER LLC

1 - AIR CLEANER OUTLET TUBE
2 - STRUT TOWER SUPPORT
3 - TURBOCHARGER
4 - CHARGE AIR INLET TUBE

1. Remove the engine cover. See **REMOVAL**.
2. Remove the intake air tube (1).

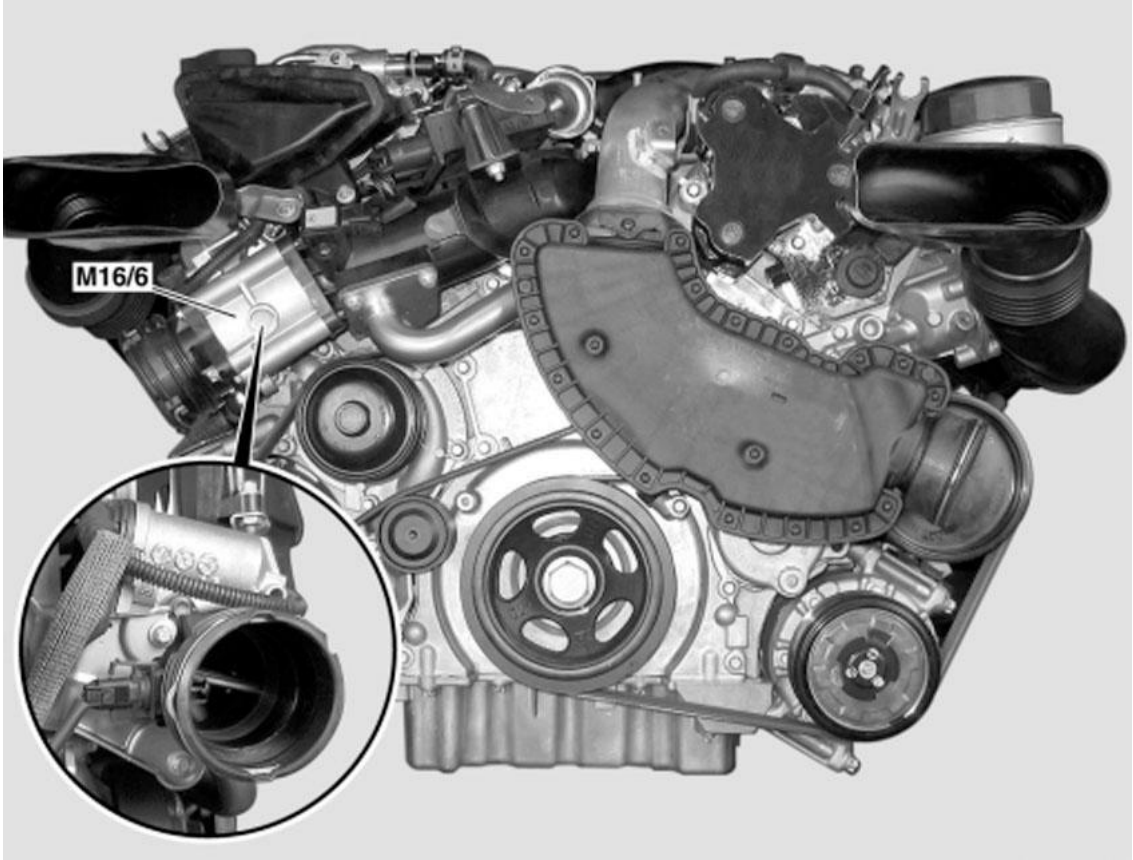

Fig. 50: Mixing Chamber
Courtesy of CHRYSLER LLC

3. Remove the mixing chamber (1).

ELEMENT - AIR CLEANER

REMOVAL

ELEMENT-AIR CLEANER

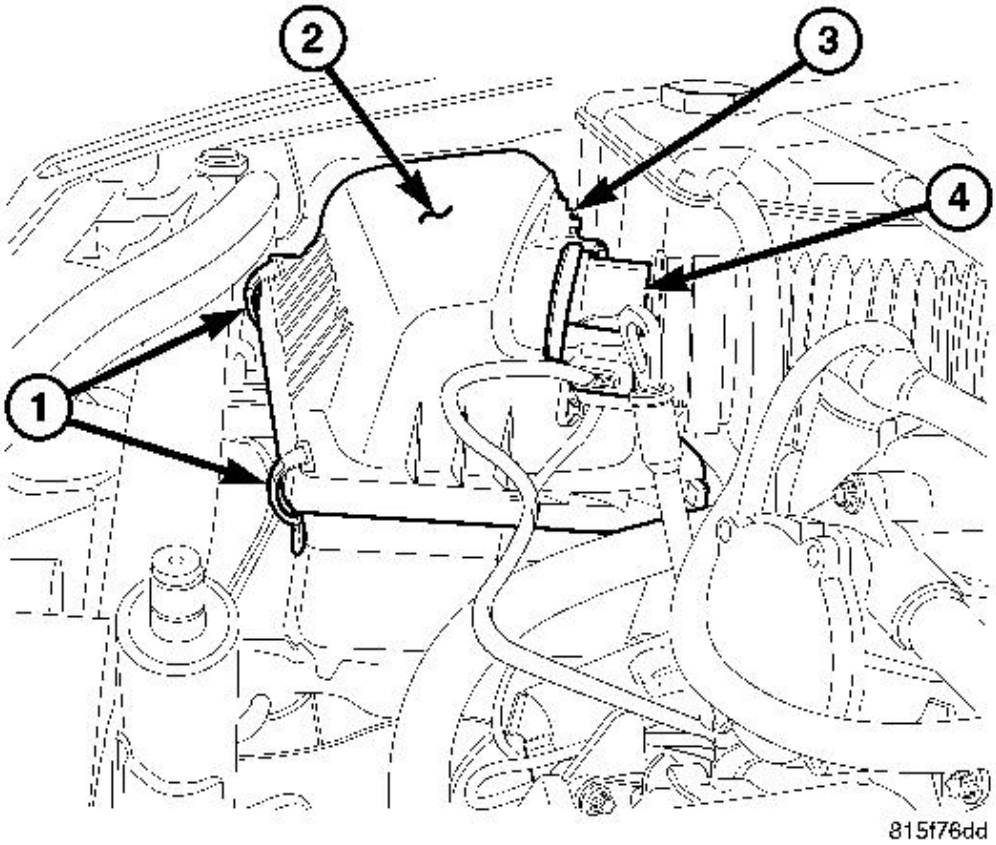

Fig. 51: Air Cleaner Cover And Components
Courtesy of CHRYSLER LLC

1 - SPRING CLIPS
2 - COVER
3 - AIR PRESSURE SENSOR
4 - MAF SENSOR

NOTE: Housing removal is not necessary for element (filter) replacement.

1. Disconnect the negative battery cable.
2. Disconnect the mass air flow (MAF) (4) and air pressure sensor (3) electrical connectors.
3. Pry up 2 spring clips (1) from front of housing cover (2), (spring clips retain cover to housing). See **Fig. 51**.

4. Release housing cover (2) from locating tabs located on rear of housing, and lift cover.

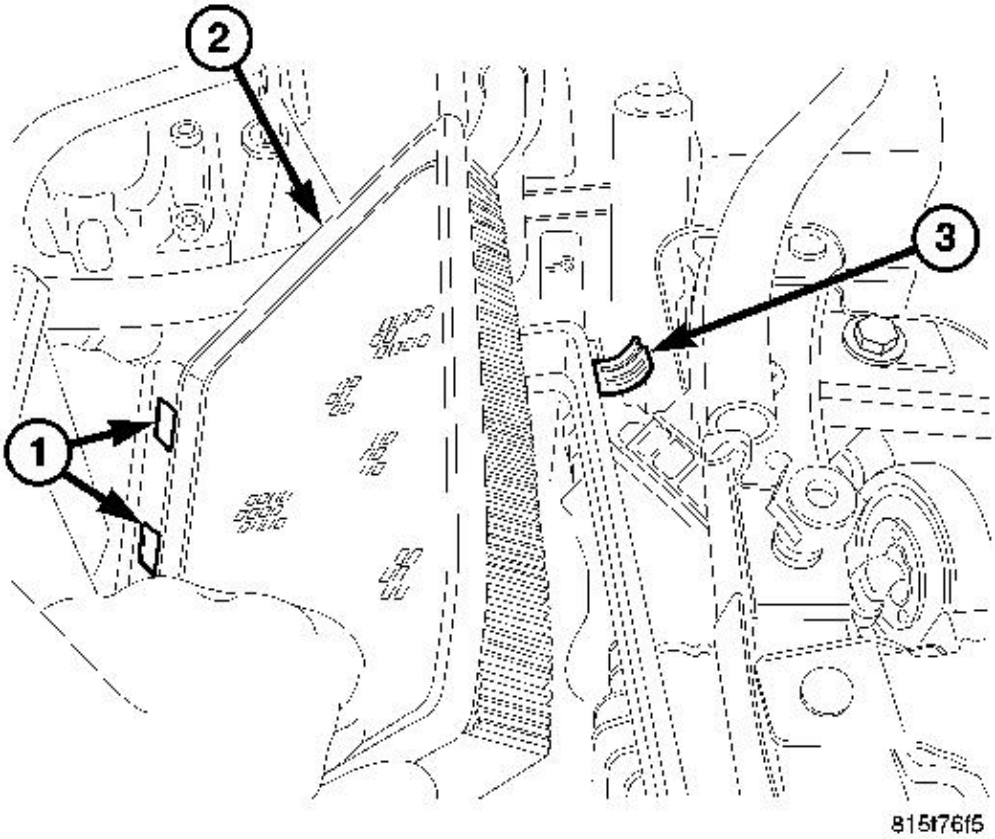

Fig. 52: Air Cleaner Element, Locating Tabs & Spring Clip
Courtesy of CHRYSLER LLC

1 - LOCATING TABS
2 - AIR CLEANER ELEMENT
3 - SPRING CLIP

5. Remove air cleaner element (2) from housing. See **Fig. 52**.

INSTALLATION

ELEMENT-AIR CLEANER

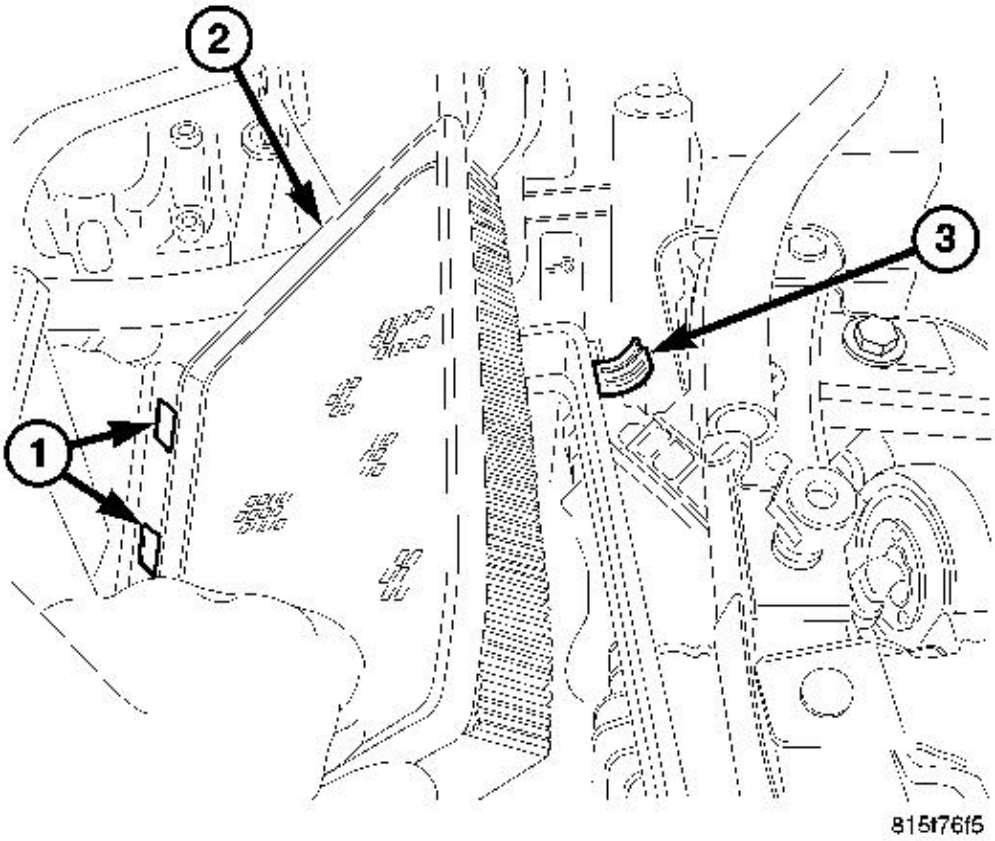

Fig. 53: Air Cleaner Element, Locating Tabs & Spring Clip
Courtesy of CHRYSLER LLC

1 - LOCATING TABS
2 - AIR CLEANER ELEMENT
3 - SPRING CLIP

NOTE: **Clean housing and inspect the gasket for damage before installing a clean filter. Replace as necessary.**

1. Install element into housing (2). See **Fig. 53**.
2. Position housing cover into rear housing locating tabs (1) and seat cover onto housing.

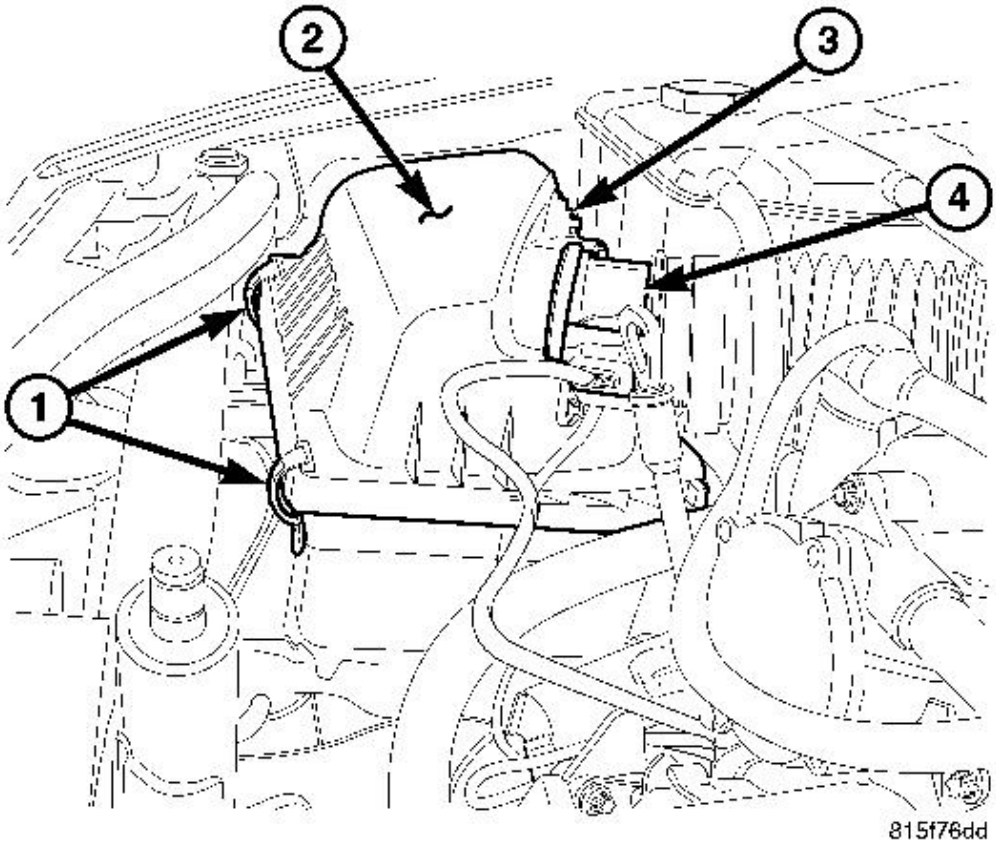

Fig. 54: Air Cleaner Cover And Components
Courtesy of CHRYSLER LLC

1 - SPRING CLIPS
2 - COVER
3 - AIR PRESSURE SENSOR
4 - MAF SENSOR

3. Pry up spring clips (1) and lock cover to housing. See **Fig. 54**.
4. Connect air intake duct and tighten clamp to 5 N.m (44 in. lbs.).
5. Connect the MAF (4) and air pressure sensor (3) electrical connectors.
6. Connect the negative battery cable.

HOUSING - AIR CLEANER

REMOVAL

HOUSING-AIR CLEANER

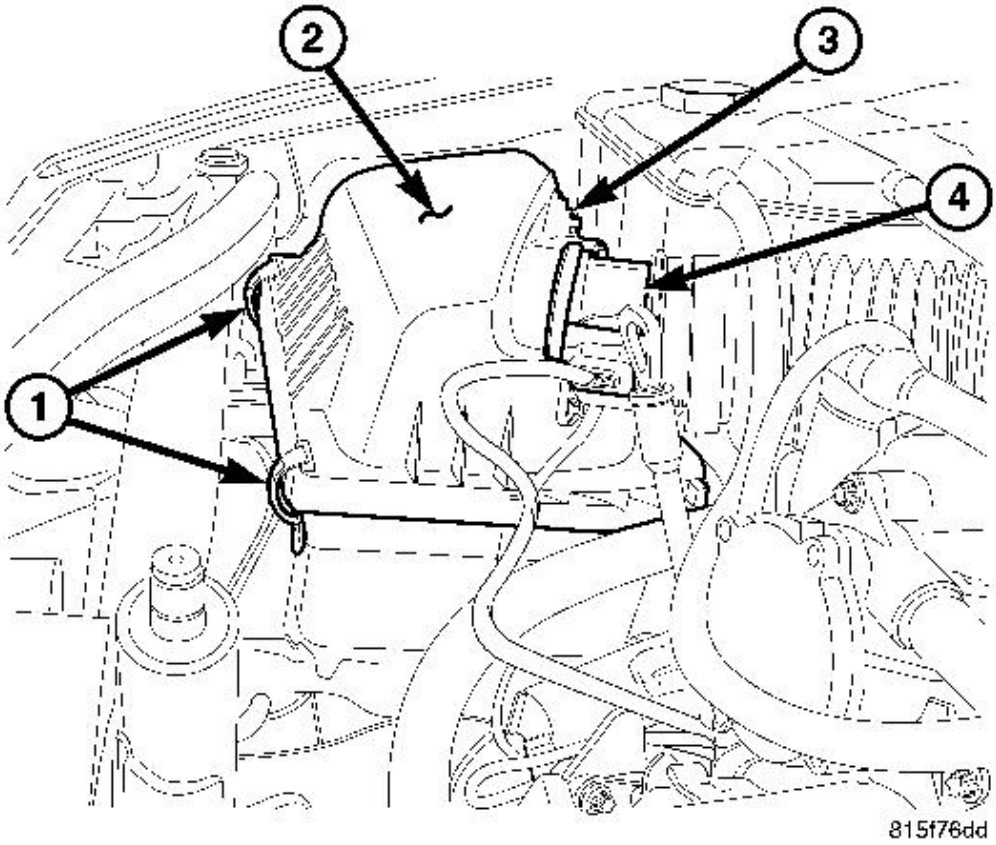

Fig. 55: Air Cleaner Cover And Components
Courtesy of CHRYSLER LLC

1 - SPRING CLIPS
2 - COVER
3 - AIR PRESSURE SENSOR
4 - MAF SENSOR

1. Disconnect the negative battery cable.
2. Disconnect the MAF (4) and air pressure sensor (3) electrical connectors. See **Fig. 55**.
3. Remove the air outlet hose from the air cleaner assembly.

4. Pry up two spring clips (1) from front of housing cover (2) (spring clips retain cover to housing).
5. Release housing cover (2) from locating tabs located on rear of housing, and remove cover (2).
6. Remove the rear lower housing to fender well fastener.
7. Remove the air inlet duct.
8. Pulling upward, remove the air cleaner housing.

Intake Air Tube

1. Remove the CCV hose at Oil separator. (During removal of the CCV hose do NOT disconnect CCV hose at the Air Tube)
2. Loosen the clamp on the Airbox outlet flex hose end.
3. Loosen the clamp on the Turbo inlet end.
4. Remove the retaining fastener.
5. Remove the intake air tube and ensure that Orange seal is not rolled or damaged.

NOTE: Any incorrect installation or miss alignment of the air tube can result oil leaks.

INSTALLATION

HOUSING-AIR CLEANER

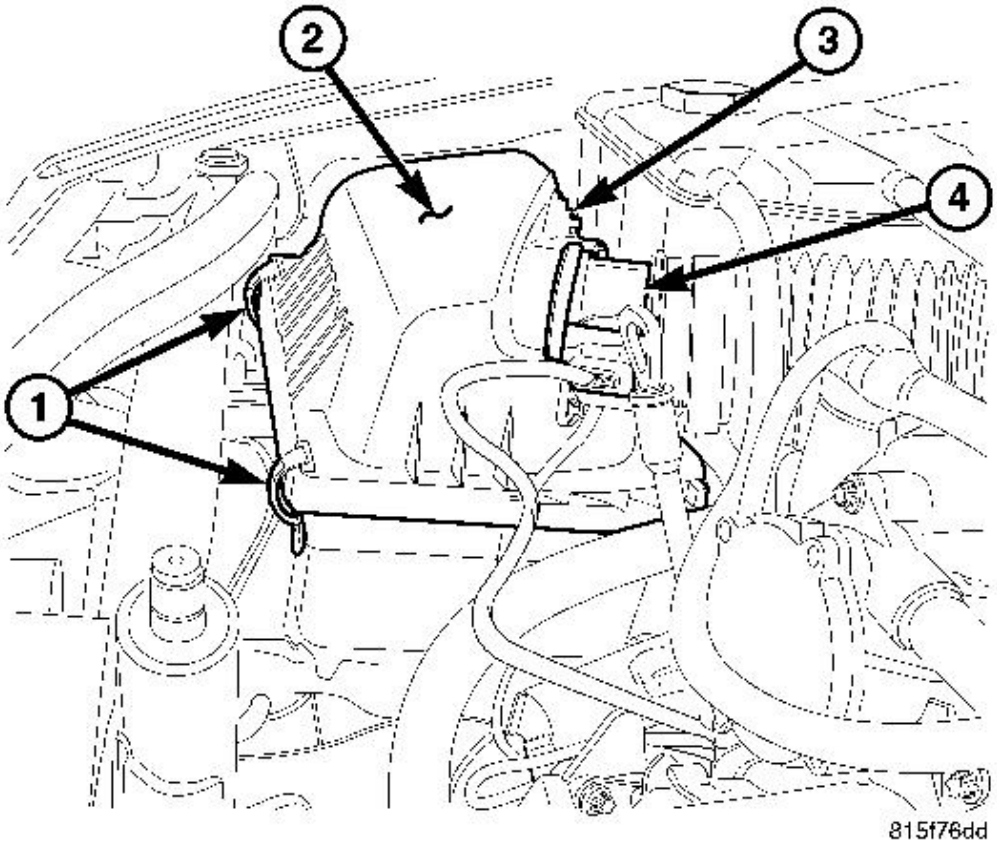

Fig. 56: Air Cleaner Cover And Components
Courtesy of CHRYSLER LLC

1 - SPRING CLIPS
2 - COVER
3 - AIR PRESSURE SENSOR
4 - MAF SENSOR

1. Position the lower housing and attach the air inlet duct.
2. Install the lower housing to fender well fastener. Tighten fastener to 5 N.m (44 in. lbs.).
3. Install the air cleaner element.
4. Position housing cover (2) into housing locating tabs.
5. Pry up spring clips (1) and lock cover (2) to housing.
6. Install the air outlet tube. Tighten clamp to 5 N.m (44 in. lbs.).

7. Connect the MAF (4) and air pressure sensor (3) wire harness connectors. See **Fig. 56**.
8. Connect the negative battery cable.
9. Before tightening any clamps or fasteners perform the following.

NOTE: Incorrect installation or miss alignment of the air tube can result oil leaks.

10. Slide Air Inlet tube flex hose over airbox outlet fitting.
11. Slide air Inlet tube over Turbo inlet fitting ensure that Orange seal is not rolled and is proper positioned.
12. Install retaining fastener located approximately 1 - 2 inches down stream of the airbox flex hose and tighten to specified torque. This will hold the tube in the proper position so that the clamps can now be tightened.
13. Tighten clamp on the Turbo inlet end first to the proper specified torque. Over torque of the clamp may result in breakage of the air tube
14. Tighten clamp on the Airbox outlet flex hose end to the proper specified torque. Over torque of the clamp may result in breakage of the air tube
15. Attach CCV hose at Oil separator. (During removal of the CCV hose do NOT disconnect CCV hose at the Air Tube)

HEAD-CYLINDER

DESCRIPTION

HEAD-CYLINDER

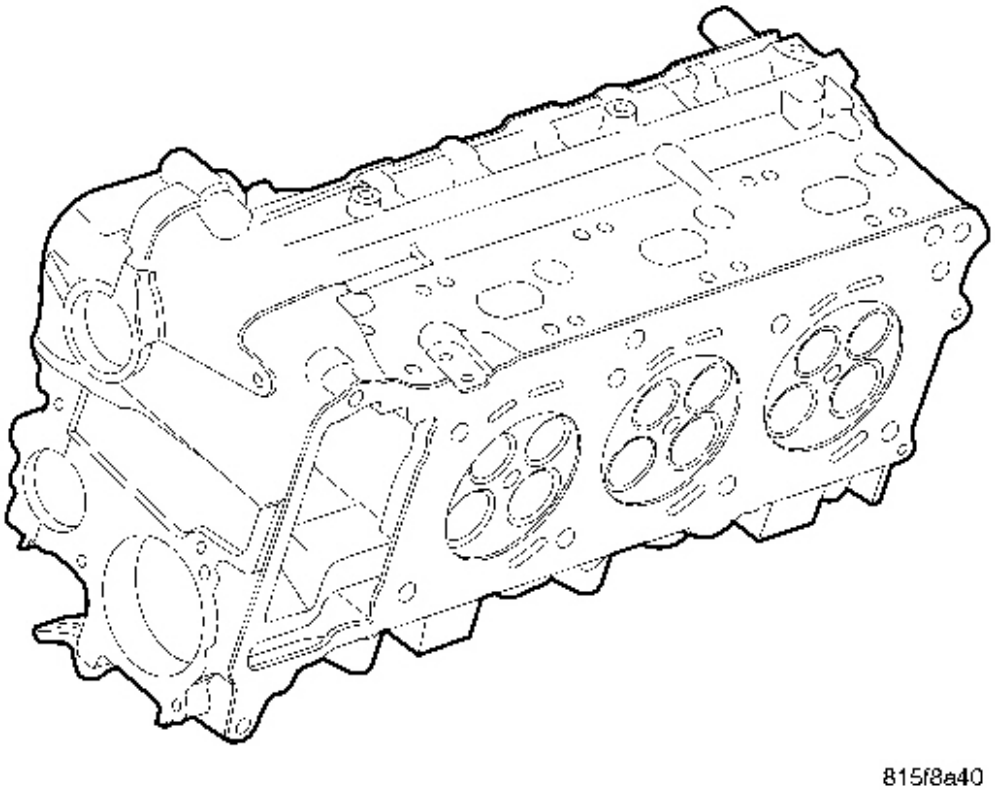

Fig. 57: Cylinder Head
Courtesy of CHRYSLER LLC

The cylinder heads on the 3.0L V-6 Diesel Engine must withstand high thermal and mechanical loads due to the high specific output and combustion peak pressures of up to 175 bar (2,540 psi). The cylinder heads are of a cross-flow design and have the following features:

High-Strength Cast Aluminum Alloy Construction.
Four Valves per Cylinder.
Roller Finger Followers/Lifter Assemblies.
Pressed-in Valve Guides and Valve Seats.

The 3.0L aluminum, overhead valve cylinder heads are made of high strength aluminum alloy and are each equipped with two camshafts, roller finger followers/lifter assemblies and four valve technology. The cylinder head itself is not resurfacable. The cylinder head uses a Multi-layered Steel gasket for sealing.

The valve seats and valve guides are not serviceable. The position of the valves in relation to the cylinder head

surface is measured to determine if excessive wear exists. This dimension is referred to as valve setback. Refer to the Service Information for the proper procedure. If the setback dimension is less than what is specified, replace the cylinder head.

STANDARD PROCEDURE

CYLINDER HEAD BOLT INSPECTION

1. Measure cylinder head bolts between points shown.

Cylinder Head Bolts -	Thread Diameter	12 mm
	Length When New	205 mm
	Maximum Length	207 mm

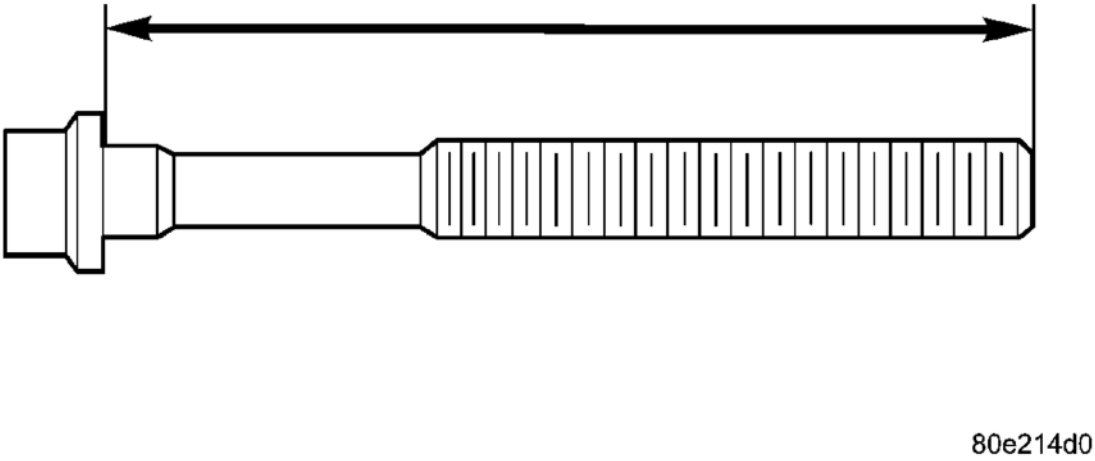

Fig. 58: Measuring Cylinder Head Bolts
Courtesy of CHRYSLER LLC

2. If the cylinder head bolt length is greater than the maximum allowable measurement, replace the cylinder head bolts.

REMOVAL

CYLINDER HEAD - LEFT

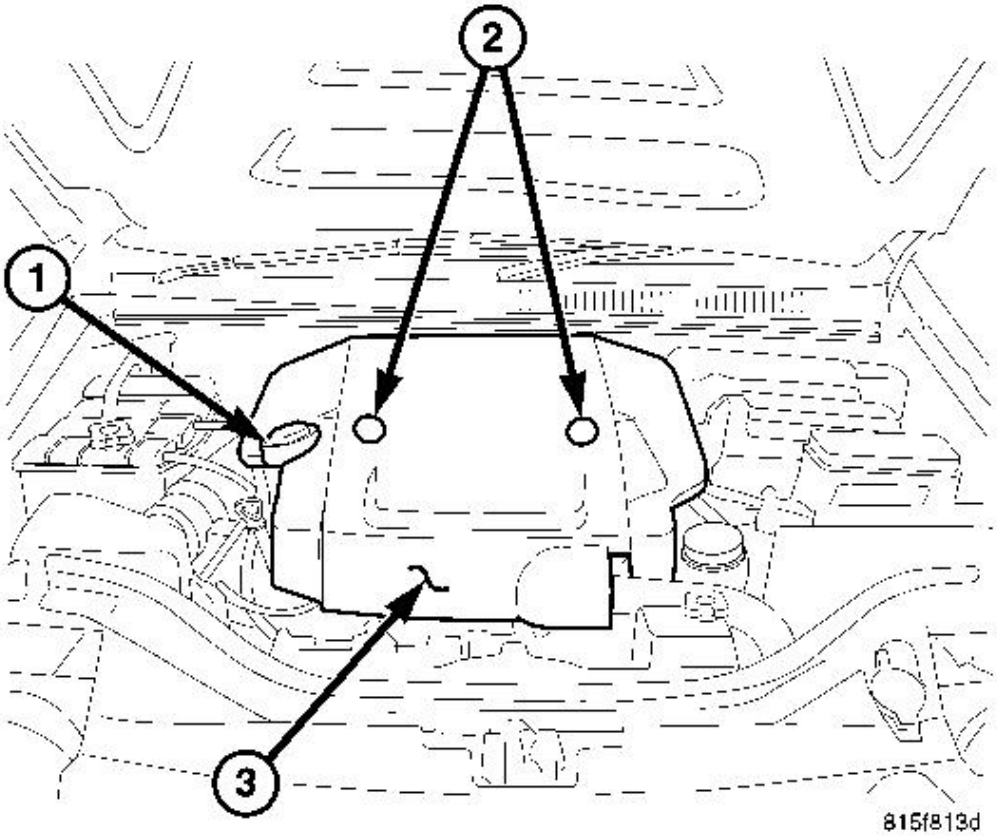

Fig. 59: Oil Filler Cap, Cover Fasteners & Engine Cover
Courtesy of CHRYSLER LLC

1 - OIL FILLER CAP
2 - COVER FASTENERS
3 - ENGINE COVER

1. Disconnect negative battery cable.
2. Remove engine cover (3) and brackets.

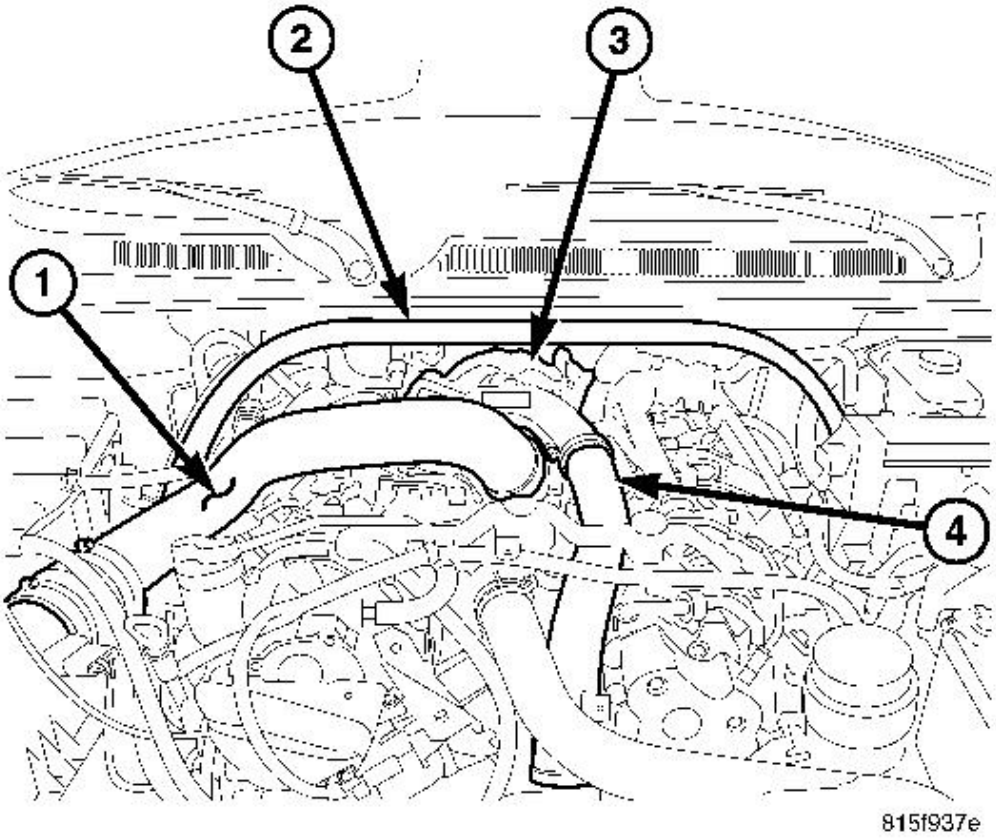

Fig. 60: Strut Tower Support, Air Cleaner Outlet Tube, Turbocharger & Charge Air Inlet Tube
Courtesy of CHRYSLER LLC

1 - AIR CLEANER OUTLET TUBE
2 - STRUT TOWER SUPPORT
3 - TURBOCHARGER
4 - CHARGE AIR INLET TUBE

3. Remove the strut tower support (2).
4. Remove the air cleaner outlet tube (1).
5. Remove the charge air inlet tube (4).
6. Drain cooling system.
7. Disconnect the vacuum hose at the vacuum pump and set aside.
8. Remove upper radiator hose.

9. Disconnect the coolant reservoir hose at thermostat housing and set aside.

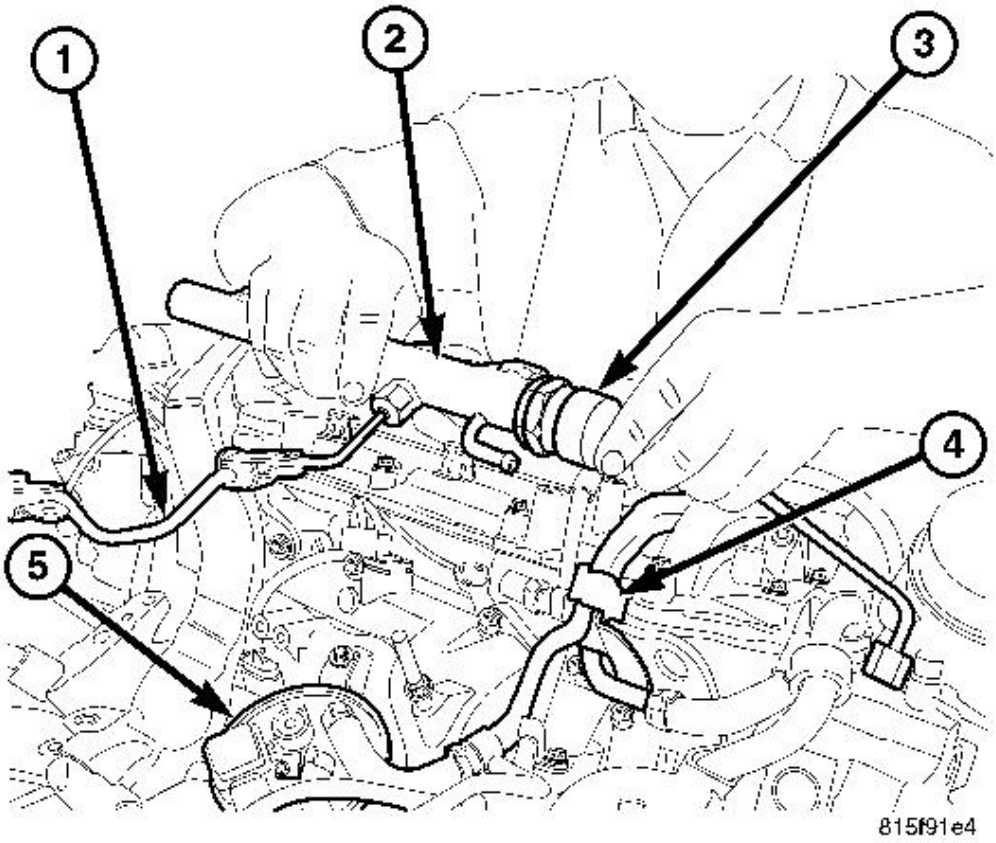

Fig. 61: Left Fuel Rail Components
Courtesy of CHRYSLER LLC

1 - FUEL RAIL TRANSFER LINE
2 - LEFT FUEL RAIL
3 - FUEL RAIL SOLENOID
4 - LOW FUEL PRESSURE SUPPLY AND RETURN LINE JUNCTION
5 - FUEL FILTER

10. Disconnect the fuel supply and return hose quick connects at the left cylinder head cover.
11. Loosen the high pressure fuel pipes at the fuel rail (2) and disconnect the high pressure fuel pipes at the left injectors.
12. Disconnect the high pressure fuel line at the high pressure pump.

13. Disconnect the fuel rail solenoid (3) wiring harness connector and remove the left fuel rail (2) along with the fuel rail transfer pipe (1).
14. Remove the low pressure fuel supply and return pipe bundle (4) fasteners.

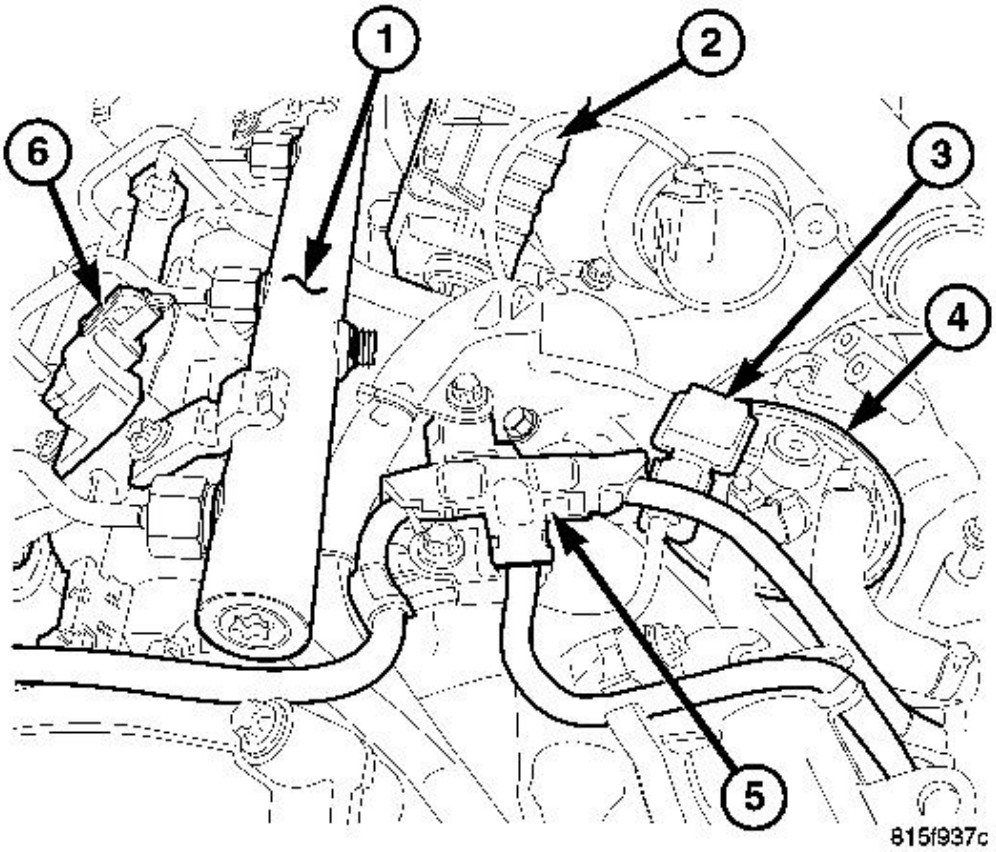

Fig. 62: Right Fuel Rail, Turbocharger Servo Motor, Water In Fuel Sensor, Fuel Filter, Return Fuel Hose Bundle & Camshaft Position Sensor
Courtesy of CHRYSLER LLC

1 - RIGHT FUEL RAIL
2 - TURBOCHARGER SERVO MOTOR
3 - WATER IN FUEL SENSOR
4 - FUEL FILTER
5 - RETURN FUEL HOSE BUNDLE
6 - CAMSHAFT POSITION SENSOR

15. Disconnect the right fuel rail pressure sensor and remove the fuel rail.
16. Disconnect the camshaft position sensor (CMP) (6), the right fuel injector wiring harness connectors, the right return fuel hoses from the injectors.
17. Remove the return fuel bundle fasteners (5).
18. Disconnect the water in fuel sensor (3) (if equipped) and the turbocharger servo motor (2) harness connectors.
19. Remove the fuel filter (4) bracket fasteners.
20. Disconnect the fuel return hose bundle (5), engine ground strap, at the right front of the intake manifold.

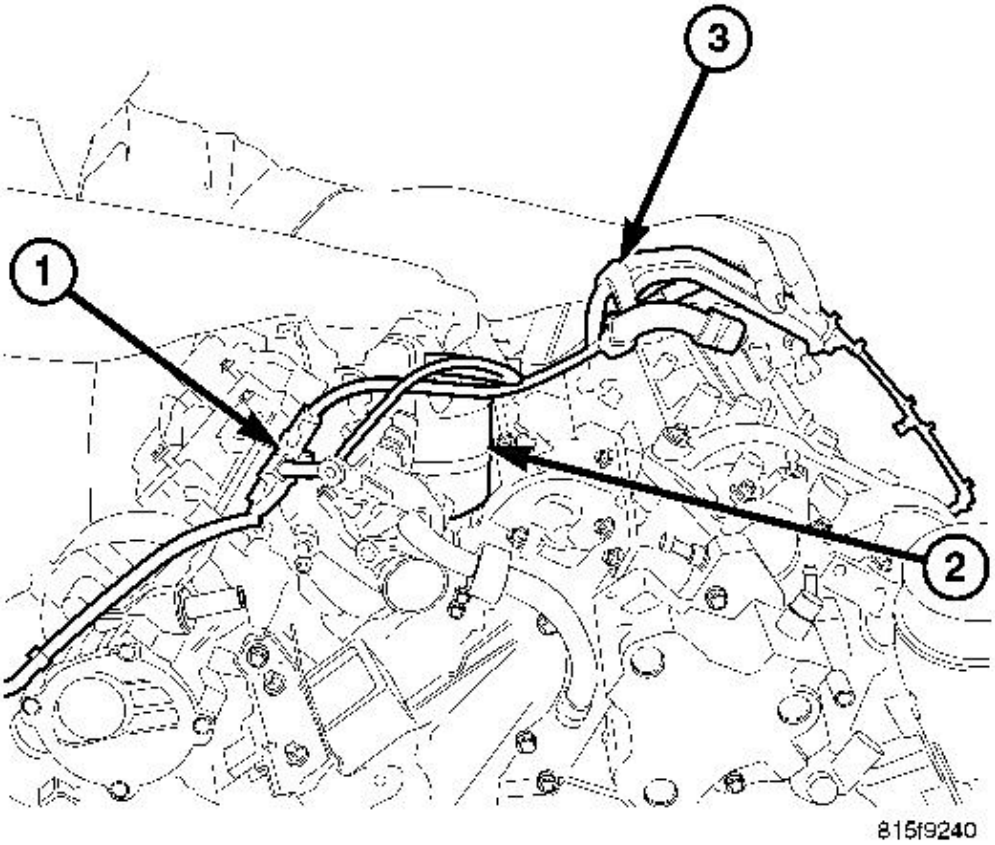

Fig. 63: Fuel Filter, Lines And Hoses
Courtesy of CHRYSLER LLC

1 - RETURN FUEL HOSE BUNDLE
2 - FUEL FILTER

3 - LOW PRESSURE FUEL SUPPLY AND RETURN PIPE

NOTE: **Fuel filter assembly, hoses and lines may seep fuel. Capture any fuel spillage and store in appropriately marked containers.**

21. Remove the fuel filter (2), hose (1) and pipe (3) assemblies and position aside. See **Fig. 63**.

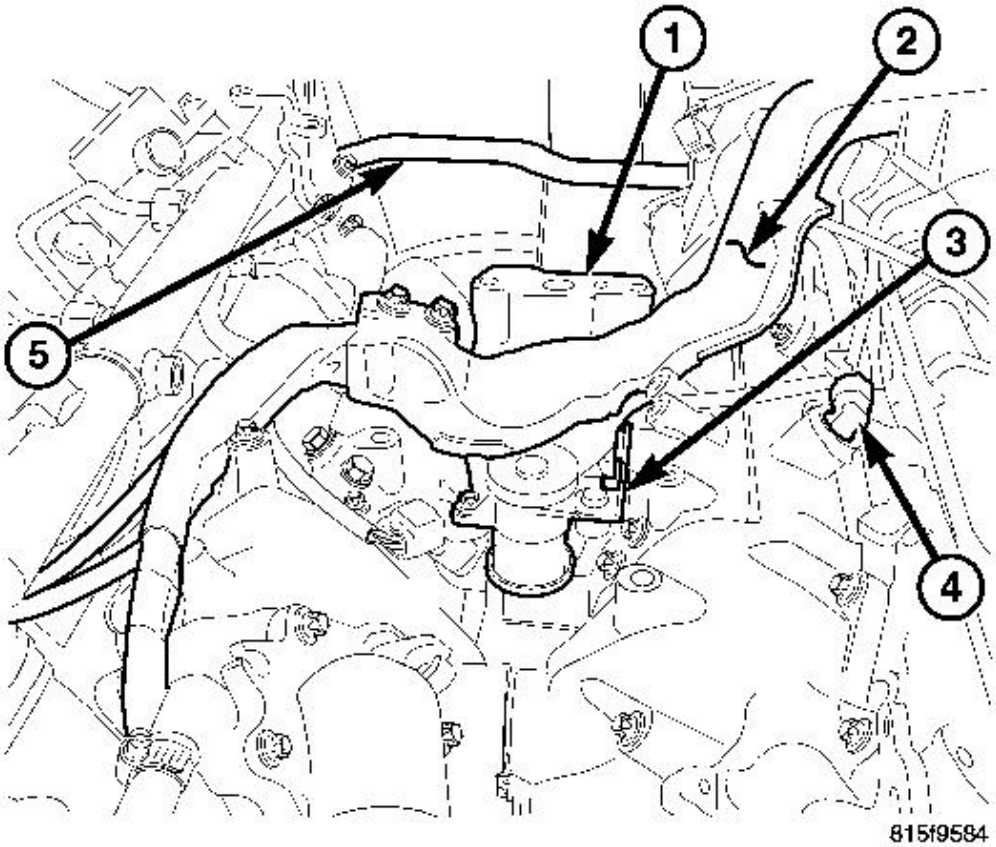

Fig. 64: Turbocharger Oil Housing Adapter, Main Engine Wiring Harness, Swirl Valve Actuator & Coolant Temperature Sensor
Courtesy of CHRYSLER LLC

1 - TURBOCHARGER OIL HOUSING Adapter
2 - MAIN ENGINE WIRING HARNESS
3 - SWIRL VALVE ACTUATOR
4 - COOLANT TEMPERATURE SENSOR

22. Remove the turbocharger. Refer to **REMOVAL** .

NOTE: Observe the way the engine oil supply and return ports in the turbocharger Adapter housing align to the engine block for oil flow through the turbocharger. Failure to do so will result in immediate turbocharger failure.

23. Remove turbocharger oil housing Adapter (1).
24. Disconnect the swirl valve actuator (3), glow plugs, EGR pressure sensor and coolant temperature sensor (4) wiring harness connector.
25. Remove the main engine wiring harness (2) fasteners and position the harness aside.

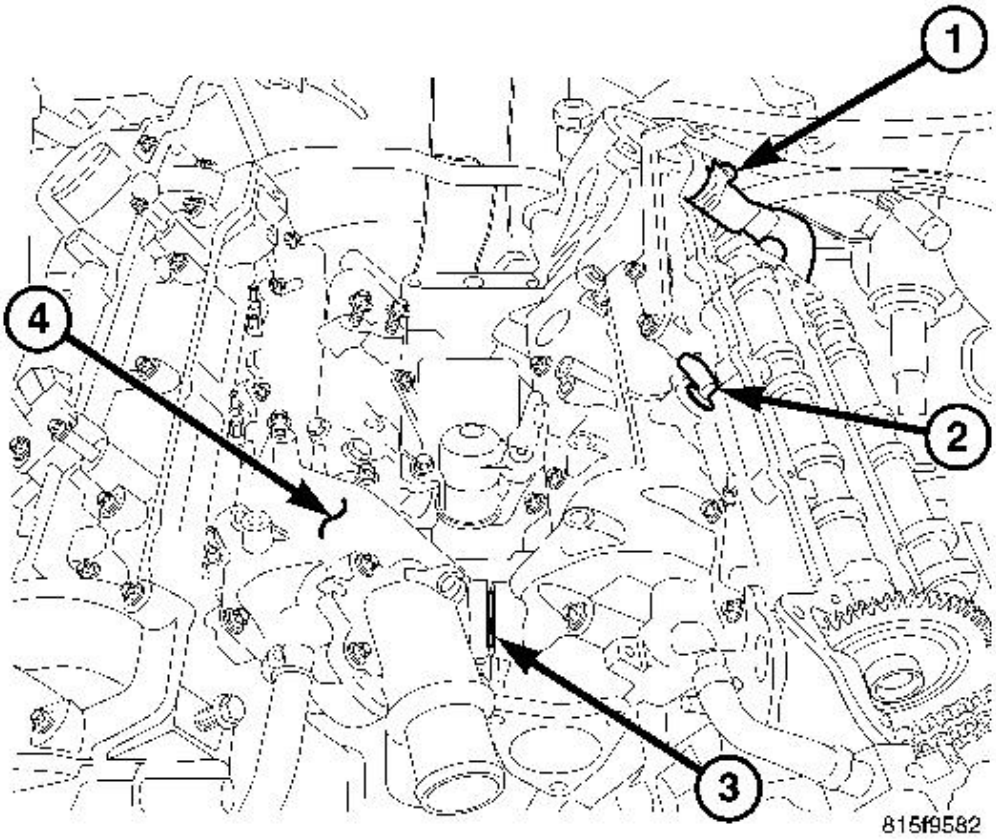

Fig. 65: EGR Coolant Pipe, Coolant Temperature Sensor, Intake Coolant Passage & Intake Manifold
Courtesy of CHRYSLER LLC

1 - EGR COOLANT PIPE
2 - COOLANT TEMPERATURE SENSOR
3 - INTAKE COOLANT PASSAGE
4 - INTAKE MANIFOLD

26. Disconnect the EGR coolant pipe (1) from the rear of the EGR housing.
27. Remove the EGR valve.

NOTE: **The intake manifold is of the split design meaning that there are two halves. Whenever the intake manifold is removed, inspect the shared coolant passage (3) in the front of the intake manifold for leaks, repair as necessary.**

28. Remove the intake manifold.

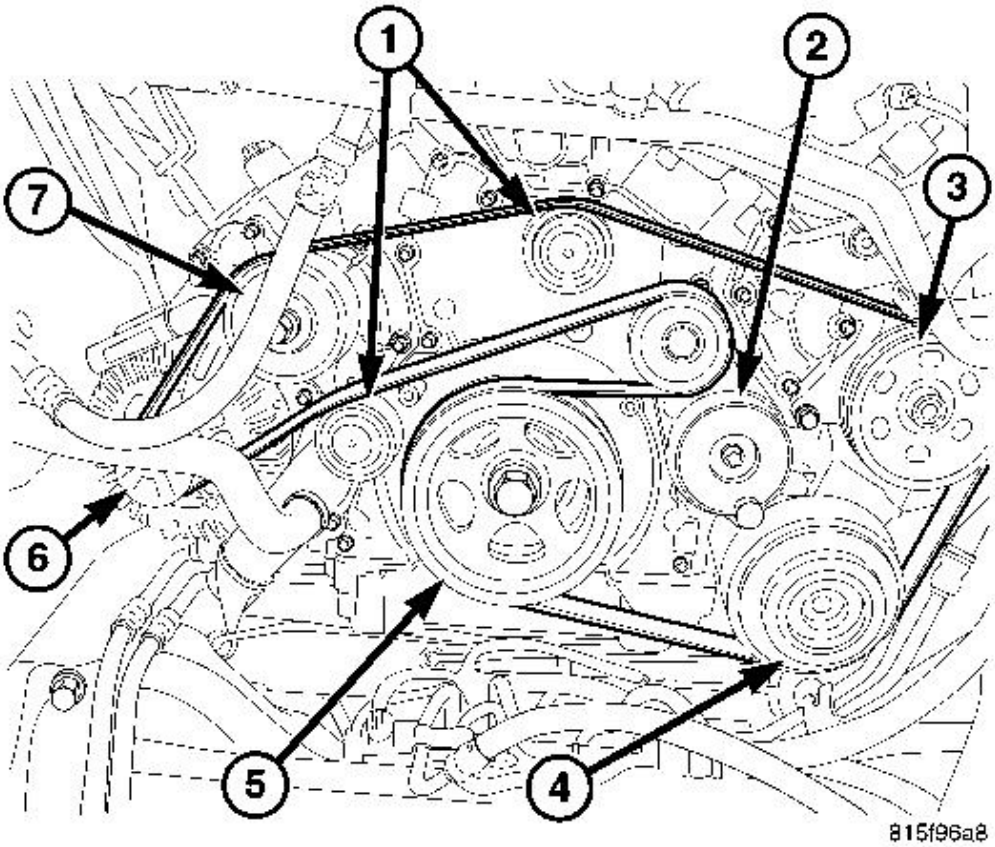

Fig. 66: Accessory Drive Belt Routing
Courtesy of CHRYSLER LLC

1 - IDLER PULLEYS
2 - DRIVE BELT TENSIONER
3 - POWER STEERING PUMP
4 - AIR CONDITIONING COMPRESSOR
5 - VIBRATION DAMPER
6 - GENERATOR
7 - WATER PUMP

29. Remove the accessory drive belt.
30. Remove the two idler pulleys (1).
31. Remove the belt tensioner (2).

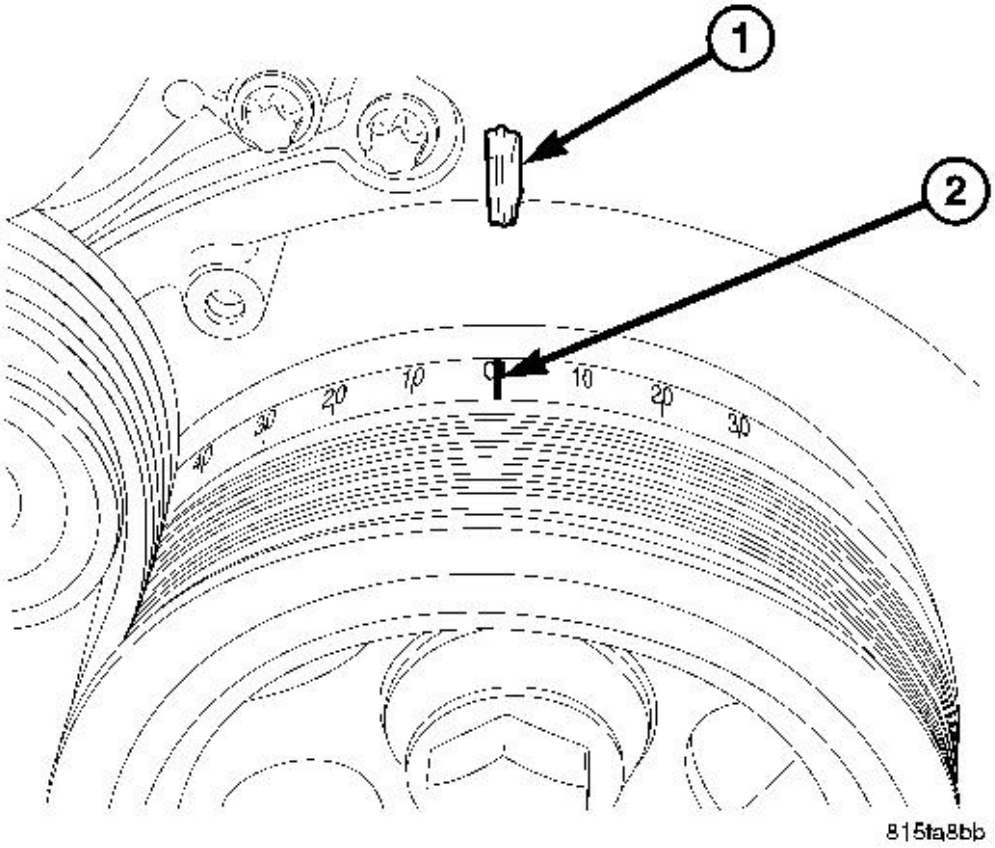

Fig. 67: Identifying Timing Cover And Damper TDC Marks
Courtesy of CHRYSLER LLC

1 - TDC MARK ON TIMING COVER
2 - VIBRATION DAMPER TDC MARK

32. Rotate the engine by the vibration damper bolt, to TDC.
33. Raise and support the vehicle.
34. Remove right side starter blank.
35. Disconnect the hydraulic cooling fan lines and capture the fluid in a approved and clearly marked container.

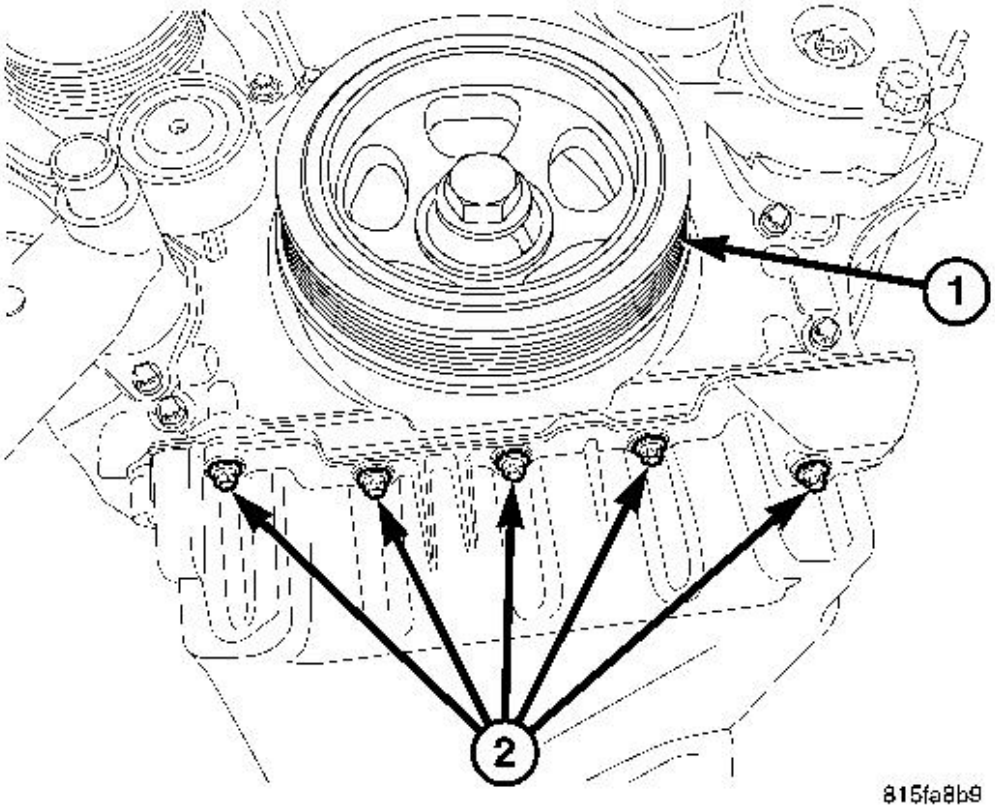

Fig. 68: Vibration Damper & Front Oil Pan Bolts
Courtesy of CHRYSLER LLC

1 - VIBRATION DAMPER

2 - OIL PAN BOLTS

36. Remove the front oil pan retaining bolts (2).
37. Lower the vehicle.

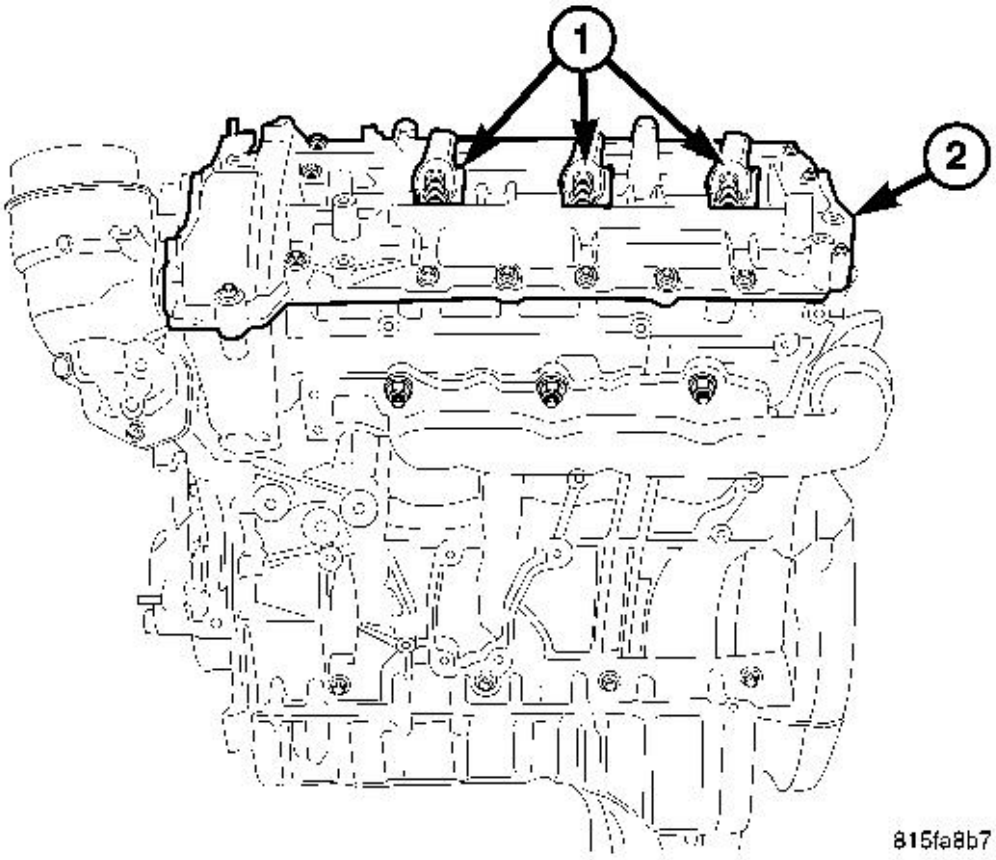

Fig. 69: Fuel Injector Body & Left Fuel Injectors
Courtesy of CHRYSLER LLC

38. Remove the left rear heater hose retainer.
39. Remove the left fuel injectors (1).
40. Disconnect the vacuum supply hose.
41. Remove the oil filter housing bracket.

CAUTION: The timing cover is sealed with Mopar® sealant that may be difficult

when separating components. If the component are difficult to separate heat the sealed edges or area with a heat gun. DO NOT use any heat source that works with flame.

42. Remove the left cylinder head cover.

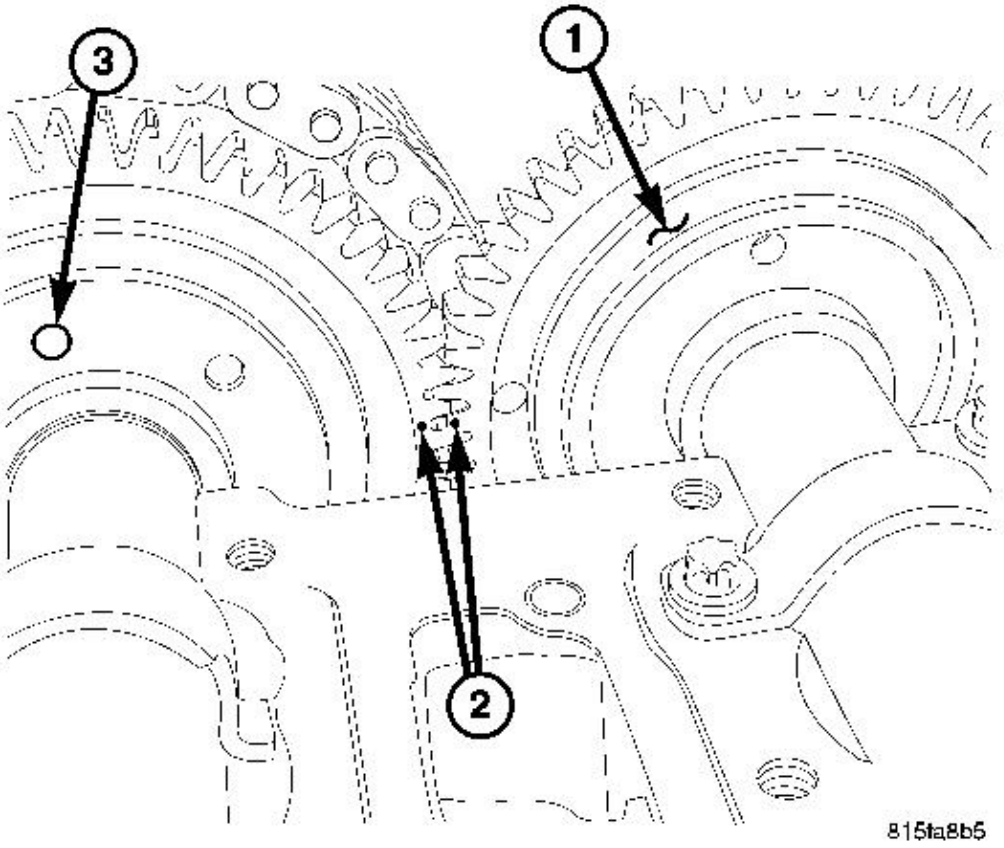

Fig. 70: Camshaft Gear Alignment
Courtesy of CHRYSLER LLC

1 - CAMSHAFT GEAR
2 - CAMSHAFT GEAR ALIGNMENT MARKS
3 - CAMSHAFT DRIVE GEAR DOWEL POSITION

43. Observe the left camshaft gear alignment marks (2) on the rear of the camshaft gears (1,3). If they are together, continue with the next step. If the left camshaft alignment marks (2) are separated, rotate the

engine by the vibration damper another 360 degrees, until camshaft marks (2) align together and the vibration damper reaches TDC.

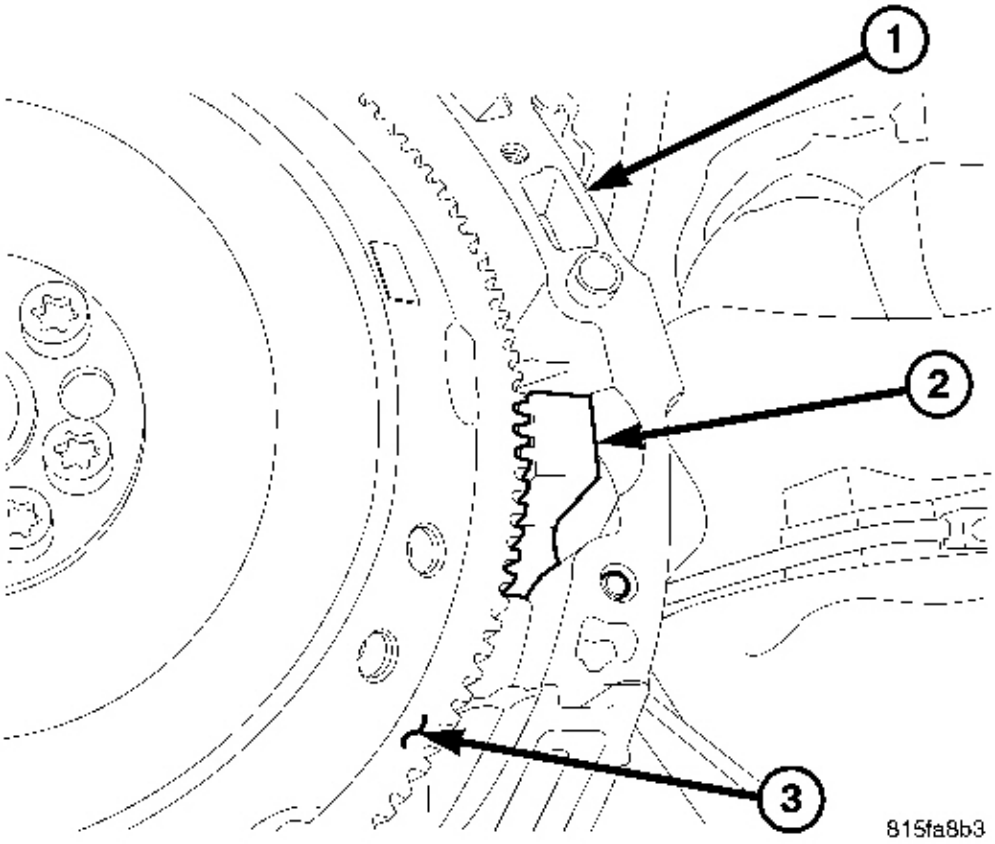

Fig. 71: Engine Block, Special Tool #9102 & Flex Plate
Courtesy of CHRYSLER LLC

1 - ENGINE BLOCK
2 - SPECIAL TOOL #9102
3 - FLEX PLATE

44. Raise and support the vehicle.
45. Install special tool #9102 crankshaft lock into the starter access blank.
46. Lower the vehicle.

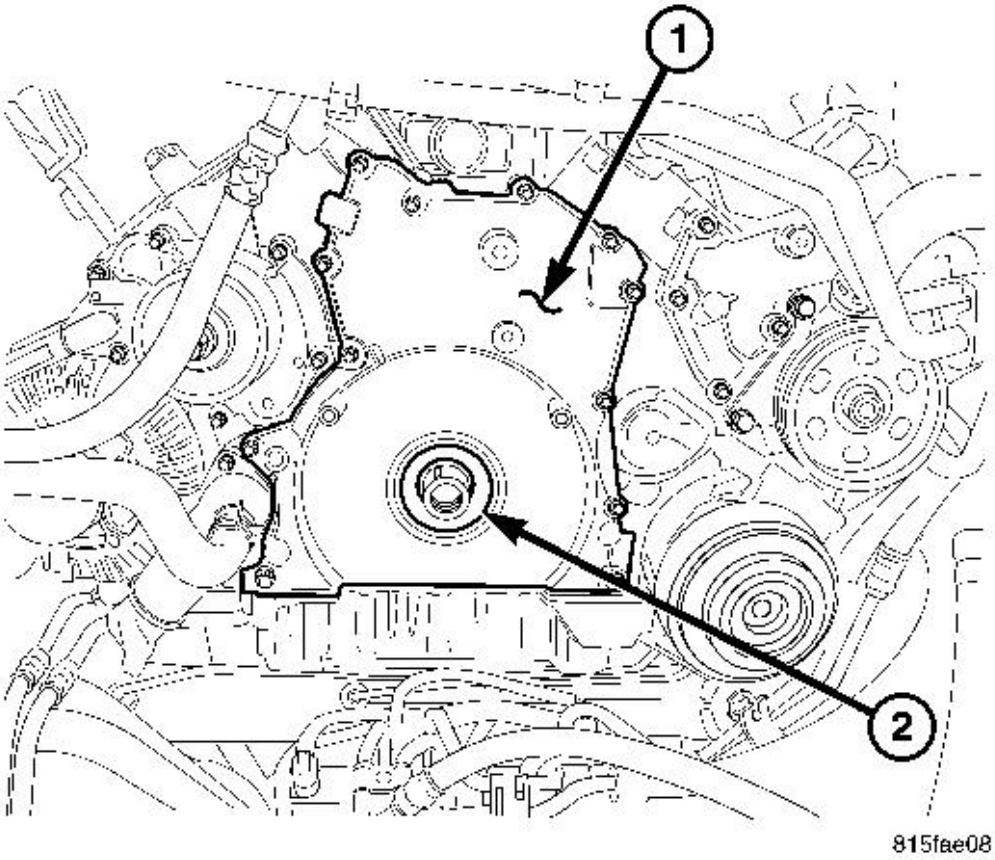

Fig. 72: Front Timing Cover & Crankshaft Seal
Courtesy of CHRYSLER LLC

1 - TIMING CHAIN COVER
2 - FRONT CRANKSHAFT SEAL

47. Remove the cooling fan module.
48. Remove the vibration damper.

CAUTION: The timing cover is sealed with Mopar® sealant that may be difficult when separating components. If the component are difficult to separate heat the sealed edges or area with a heat gun. DO NOT use any heat source that works with flame.

49. Remove front timing chain cover.

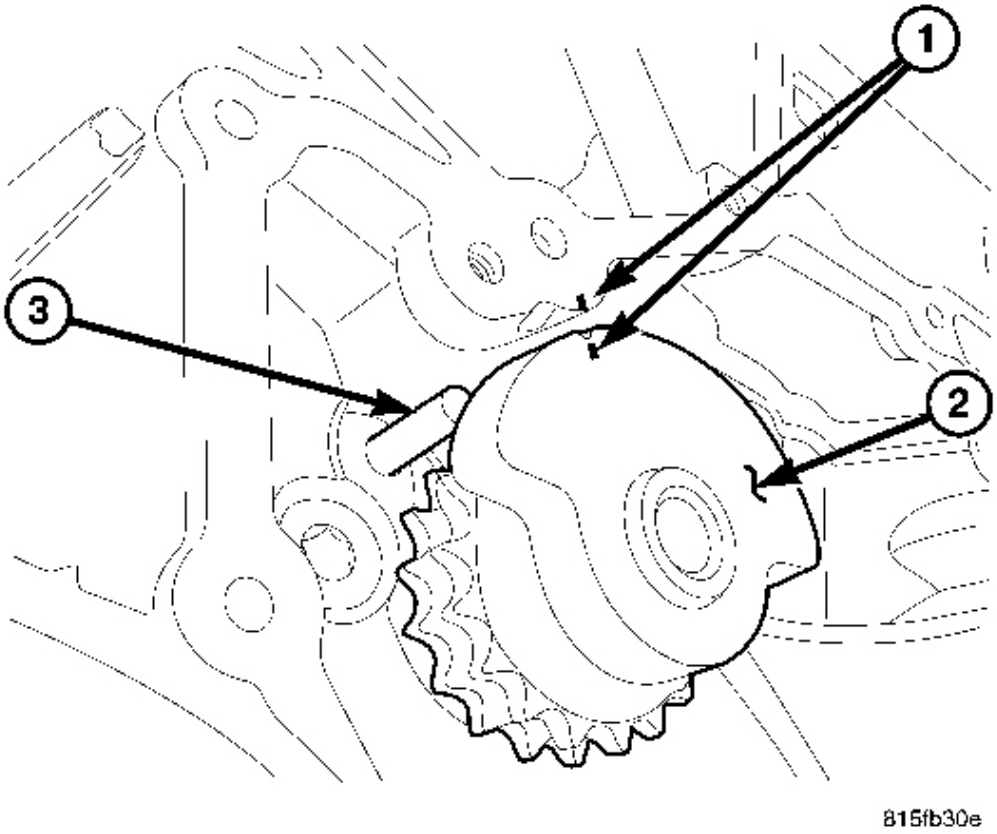

Fig. 73: Balance Shaft Indexing
Courtesy of CHRYSLER LLC

1 - PAINT MARK OR SCRIBE
2 - BALANCE SHAFT
3 - TIMING CHAIN OILING JET

50. Paint mark or scribe the balance shaft (2) position to the engine block (1) and timing chain.
51. Paint mark or scribe the timing chain to crankshaft gear and camshaft drive gear relation.
52. Raise and support the vehicle.
53. Remove special tool #9102 crankshaft locking tool.
54. Lower the vehicle.

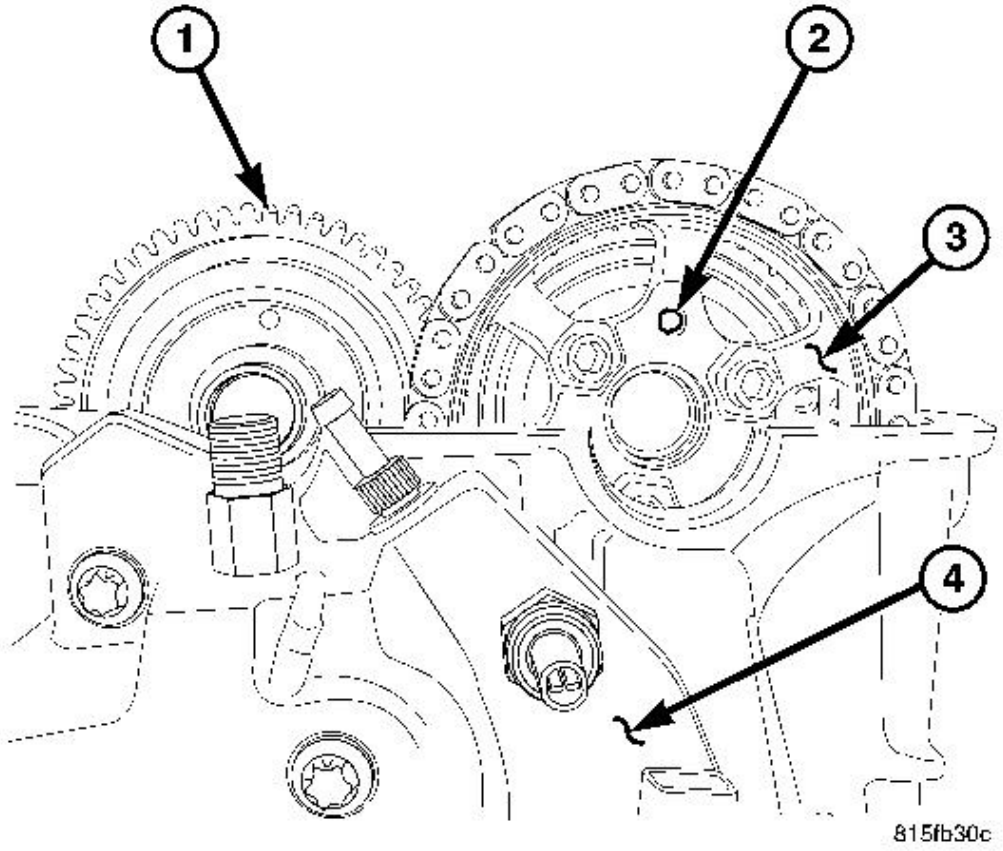

Fig. 74: Left Exhaust Camshaft Drive Gear Alignment Dowel
Courtesy of CHRYSLER LLC

1 - LEFT INTAKE CAMSHAFT
2 - LEFT EXHAUST CAMSHAFT DRIVE GEAR ALIGNMENT DOWEL
3 - LEFT EXHAUST CAMSHAFT DRIVE GEAR
4 - HIGH PRESSURE FUEL INJECTION PUMP

55. Remove the high pressure fuel pump (4). Refer to **REMOVAL** .
56. Rotate the engine and remove the left camshaft drive gear (3) lower bolt.

NOTE: **The left exhaust camshaft drive gear (3) dowel pin should align at approximately the 12 O'clock position when viewing through the camshaft seal access hole.**

57. Rotate the engine back to TDC and check the alignment marks at the balance shaft, camshaft gear and crankshaft gear.

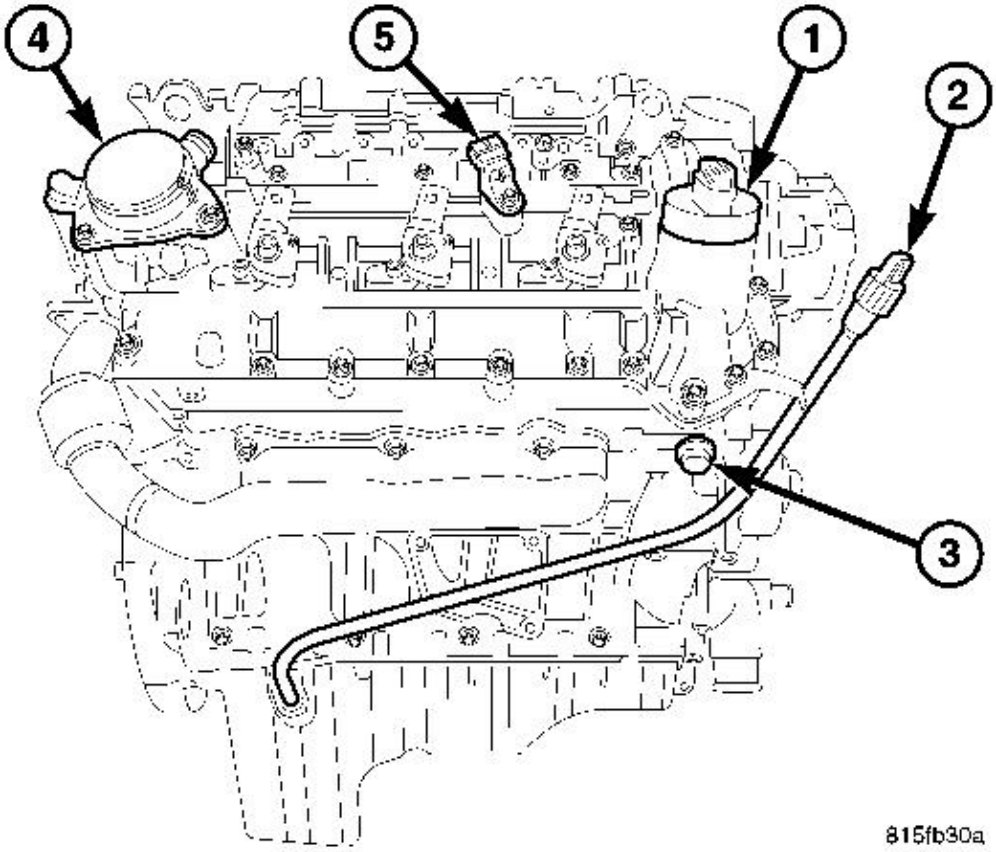

Fig. 75: Engine Oil Cap, Oil Level Indicator, Timing Chain Tensioner, Oil Separator Assembly & Camshaft Position Sensor
Courtesy of CHRYSLER LLC

1 - ENGINE OIL CAP
2 - OIL LEVEL INDICATOR
3 - TIMING CHAIN TENSIONER
4 - OIL SEPARATOR ASSEMBLY
5 - CAMSHAFT POSITION SENSOR

58. Remove the timing chain tensioner (3). See **Fig. 75**.

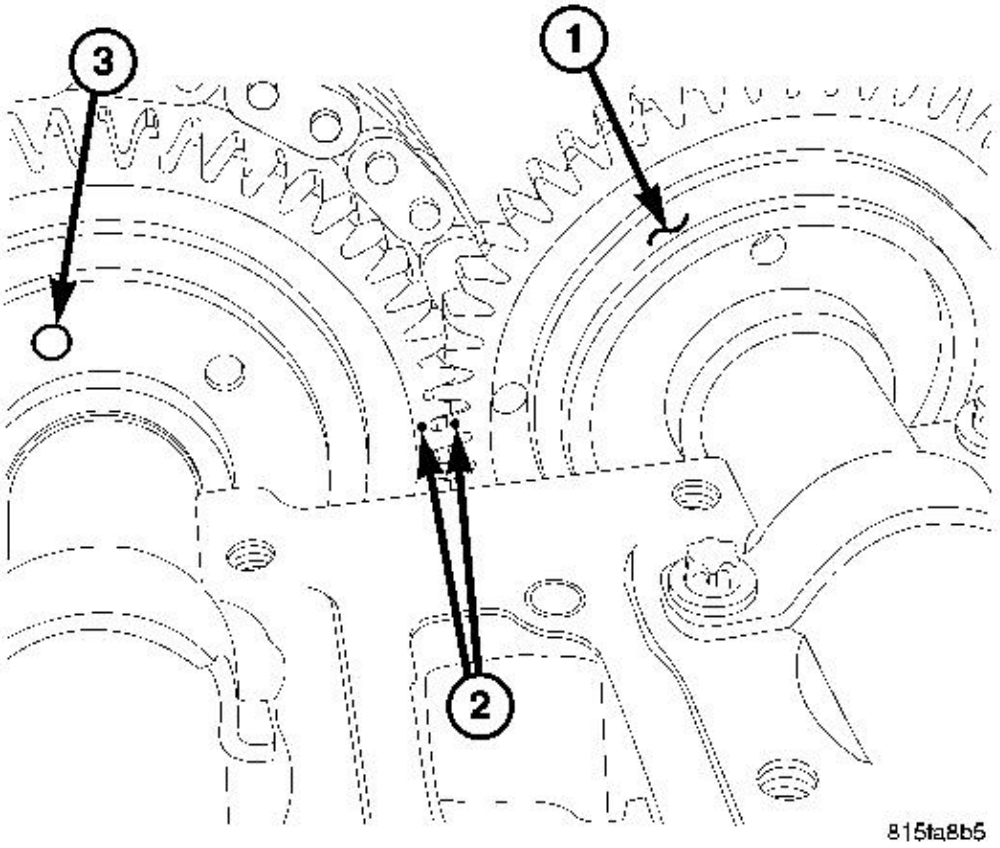

Fig. 76: Camshaft Gear Alignment
Courtesy of CHRYSLER LLC

1 - CAMSHAFT GEAR
2 - CAMSHAFT GEAR ALIGNMENT MARKS
3 - CAMSHAFT DRIVE GEAR DOWEL POSITION

59. Remove the remaining left camshaft drive gear (3) retaining bolts. See **Fig. 76**.
60. Separate the left camshaft drive gear (3) and chain from camshaft.

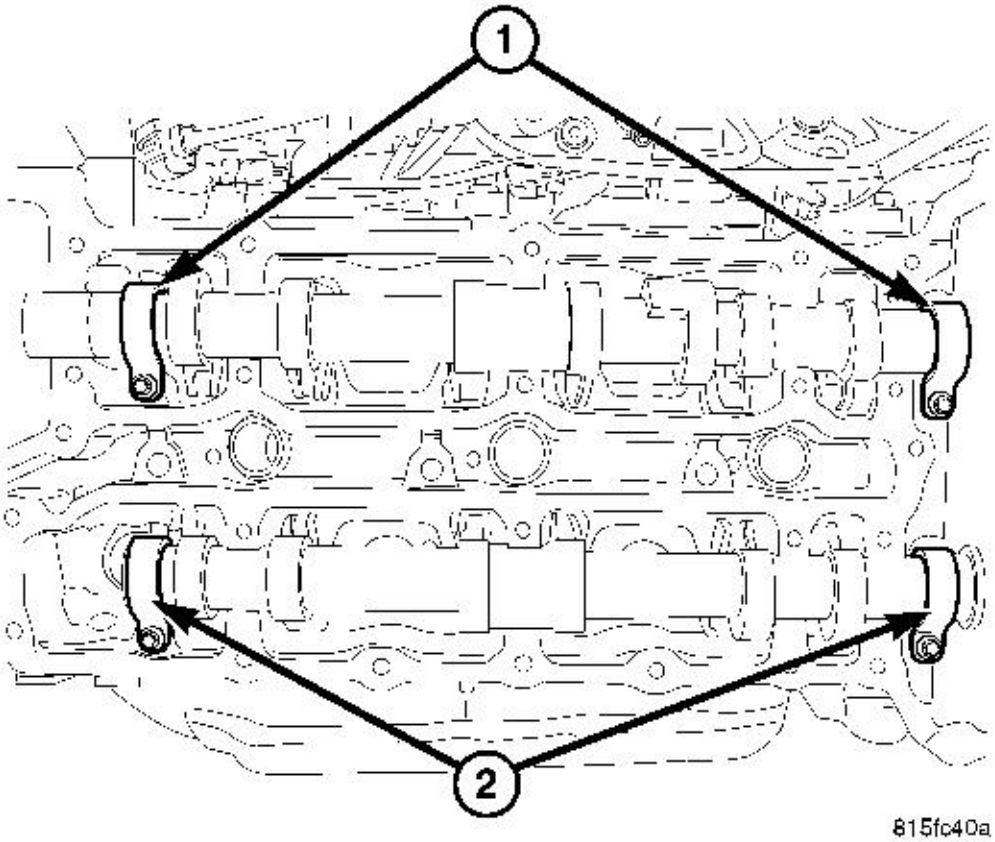

Fig. 77: Intake/Exhaust Camshaft Retainers
Courtesy of CHRYSLER LLC

1 - INTAKE CAMSHAFT RETAINERS 2 - EXHAUST CAMSHAFT RETAINERS

NOTE: **Followers and tappets assemblies must be installed in same location as removed.**

61. Remove the left camshaft retainers (1 and 2) and camshafts.
62. Remove the left camshaft drive gear.

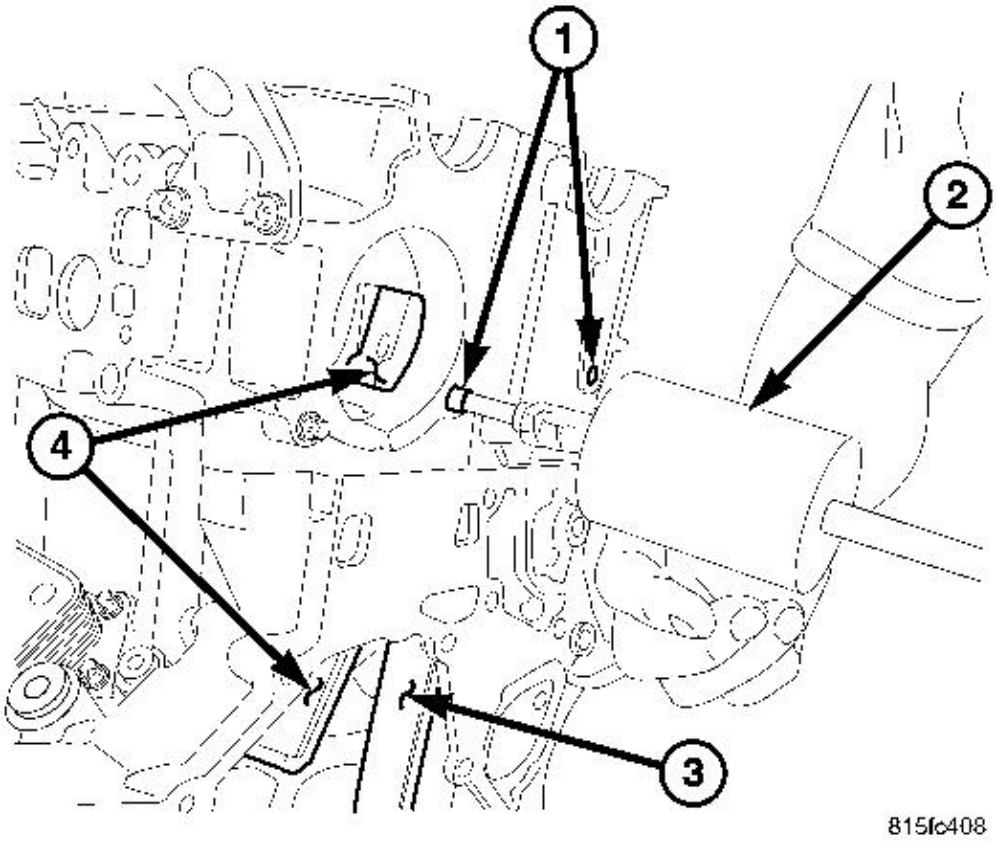

Fig. 78: Guide Pin, Slide Hammer & Lower/Upper Timing Chain Guide
Courtesy of CHRYSLER LLC

1 - GUIDE PIN
2 - SLIDE HAMMER
3 - LOWER TIMING CHAIN GUIDE
4 - UPPER TIMING CHAIN GUIDE

63. Using a slide hammer (2) and a screw, remove the left upper timing chain guide (4) retaining pin (1).
64. Using a slide hammer and a screw, remove the left lower timing chain guide retaining pin (1).

NOTE: **If the engine is in the vehicle, use a bolt and a 2" long tube. Put the bolt in the tube and thread the bolt into the retaining pin (1). Tighten the bolt to pull the retaining pin out of the cylinder head and into the tube.**

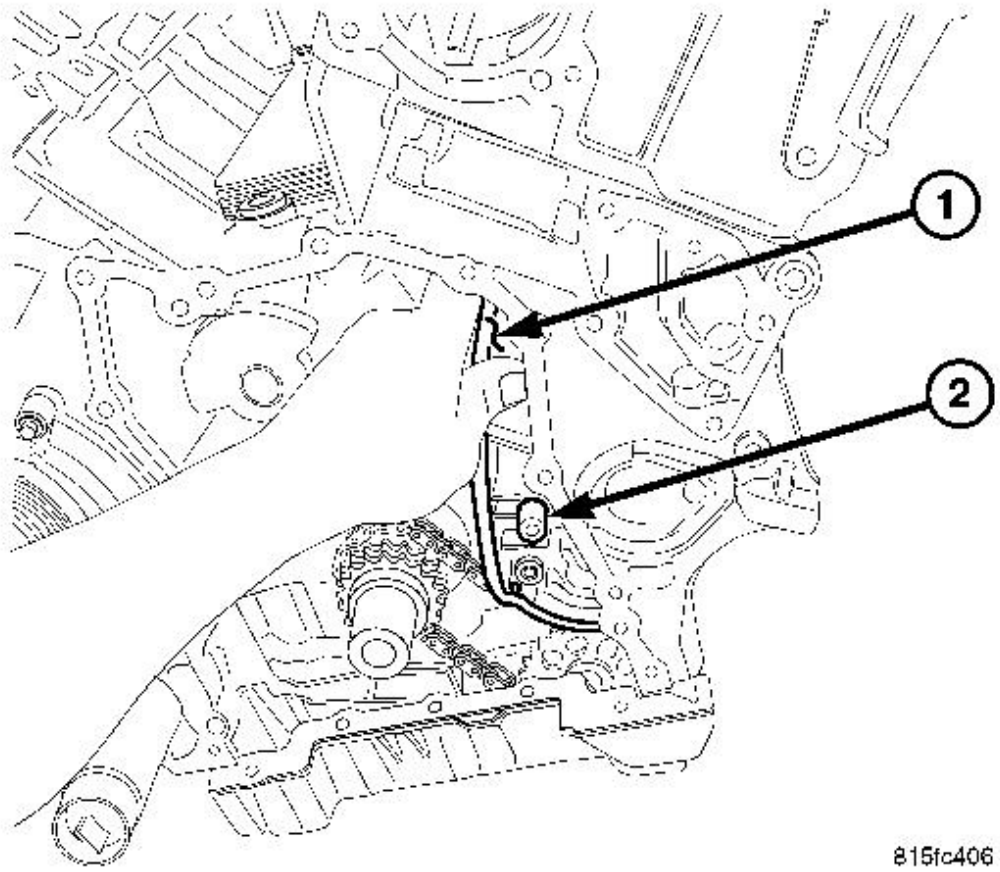

Fig. 79: Left Lower Timing Chain Guide And Fastener
Courtesy of CHRYSLER LLC

1 - LEFT LOWER TIMING CHAIN GUIDE 2 - FASTENER

65. Remove the left lower timing chain guide fastener (2) and guide (1).

NOTE: **Do Not store the cylinder head on the sealing surface. The glow plugs protrude into the cylinder surface area and may be damaged.**

66. Remove the left cylinder head glow plugs.
67. Remove cylinder head and gasket from engine block.

CYLINDER HEAD - RIGHT

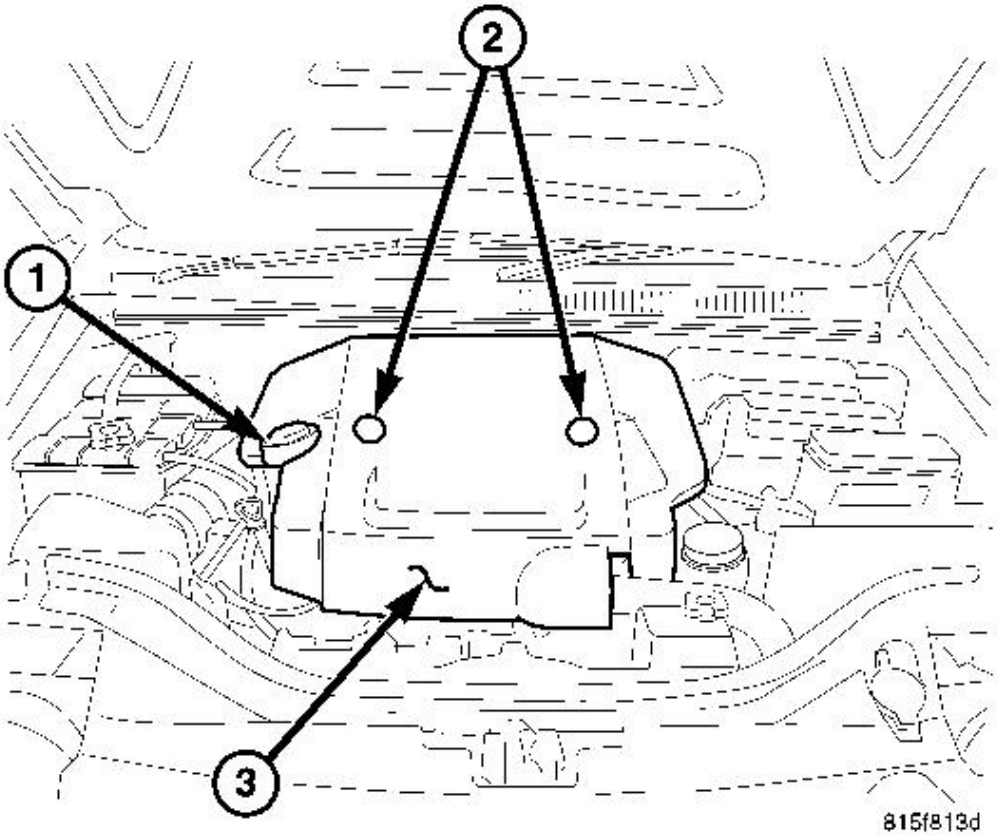

Fig. 80: Oil Filler Cap, Cover Fasteners & Engine Cover
Courtesy of CHRYSLER LLC

1 - OIL FILLER CAP
2 - COVER FASTENERS
3 - ENGINE COVER

1. Disconnect negative battery cable.
2. Remove engine cover (3) and brackets.

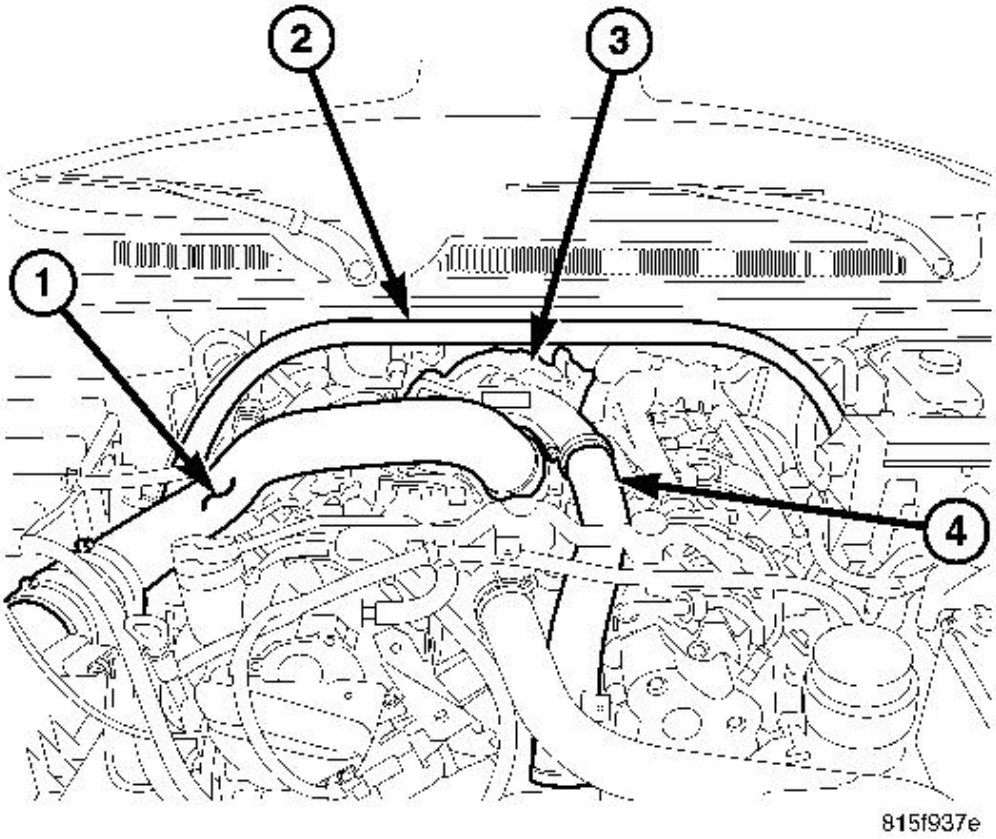

Fig. 81: Strut Tower Support, Air Cleaner Outlet Tube, Turbocharger & Charge Air Inlet Tube
Courtesy of CHRYSLER LLC

1 - AIR CLEANER OUTLET TUBE
2 - STRUT TOWER SUPPORT
3 - TURBOCHARGER
4 - CHARGE AIR INLET TUBE

3. Remove the strut tower support (2).
4. Drain cooling system.

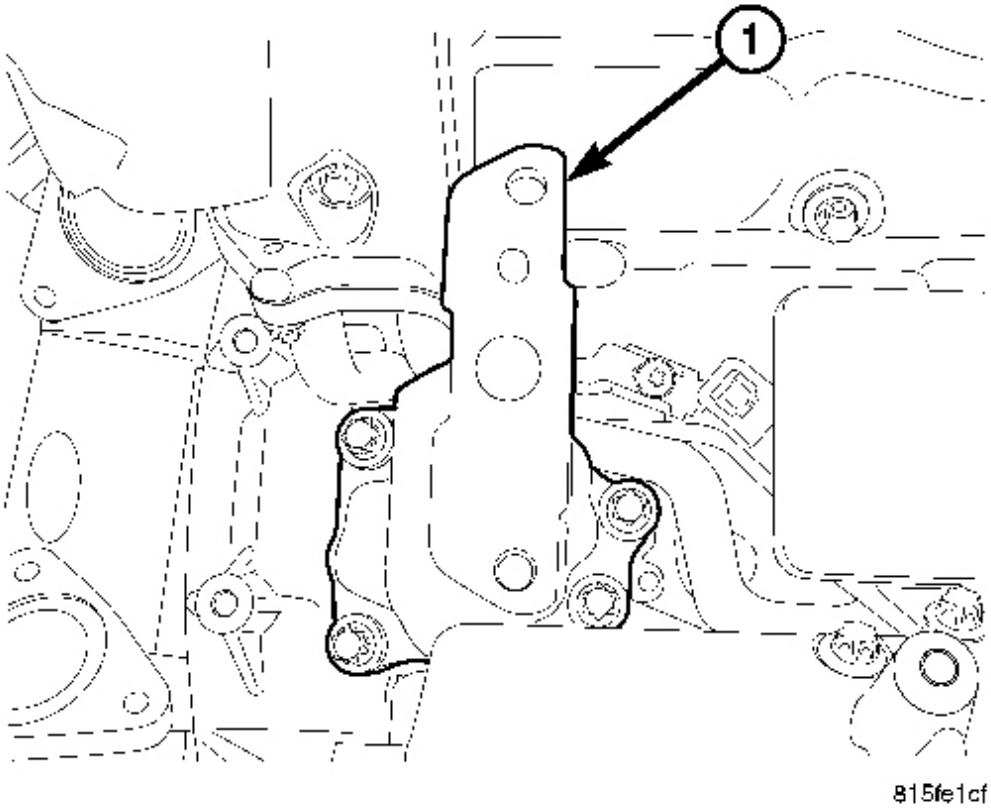

Fig. 82: Turbocharger Adapter
Courtesy of CHRYSLER LLC

1 - TURBOCHARGER Adapter
2 - SWIRL VALVE ACTUATOR

5. Remove the turbocharger. Refer to **REMOVAL** .

NOTE: **Observe the way the engine oil supply and return ports in the turbocharger Adapter align to the engine block for oil flow through the turbocharger. Failure to do so will result in immediate turbocharger failure.**

6. Remove turbocharger oil housing Adapter (1).

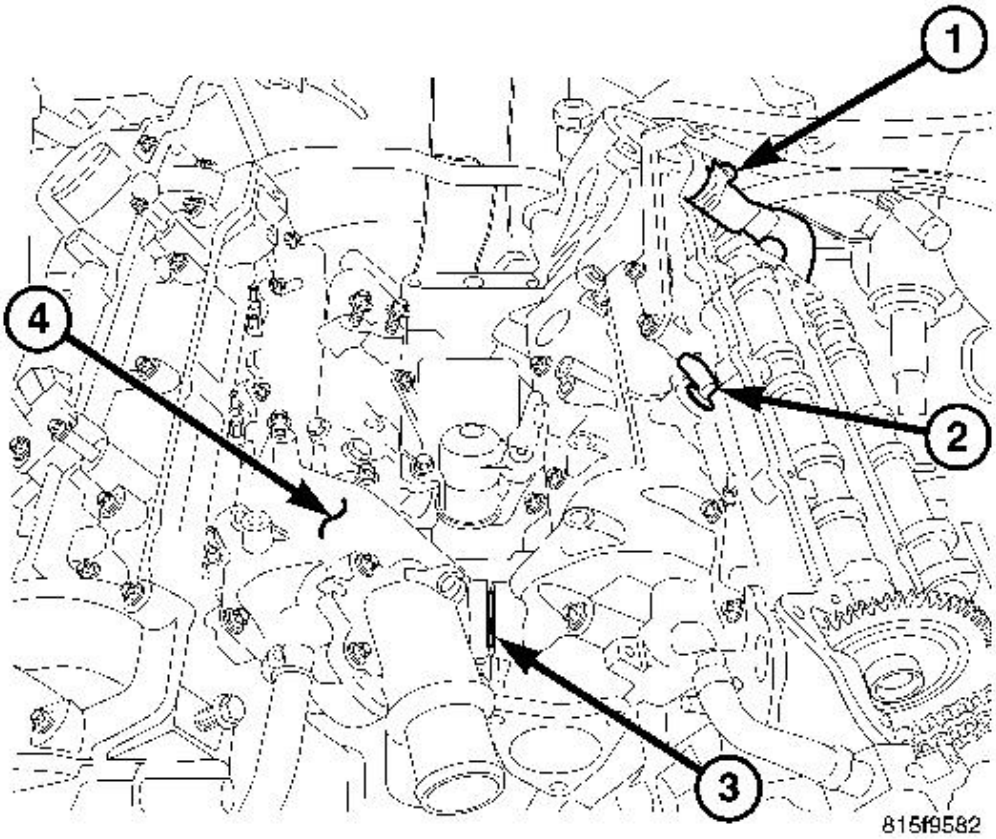

Fig. 83: EGR Coolant Pipe, Coolant Temperature Sensor, Intake Coolant Passage & Intake Manifold
Courtesy of CHRYSLER LLC

1 - EGR COOLANT PIPE
2 - COOLANT TEMPERATURE SENSOR
3 - INTAKE COOLANT PASSAGE
4 - INTAKE MANIFOLD

7. Remove the intake manifold.

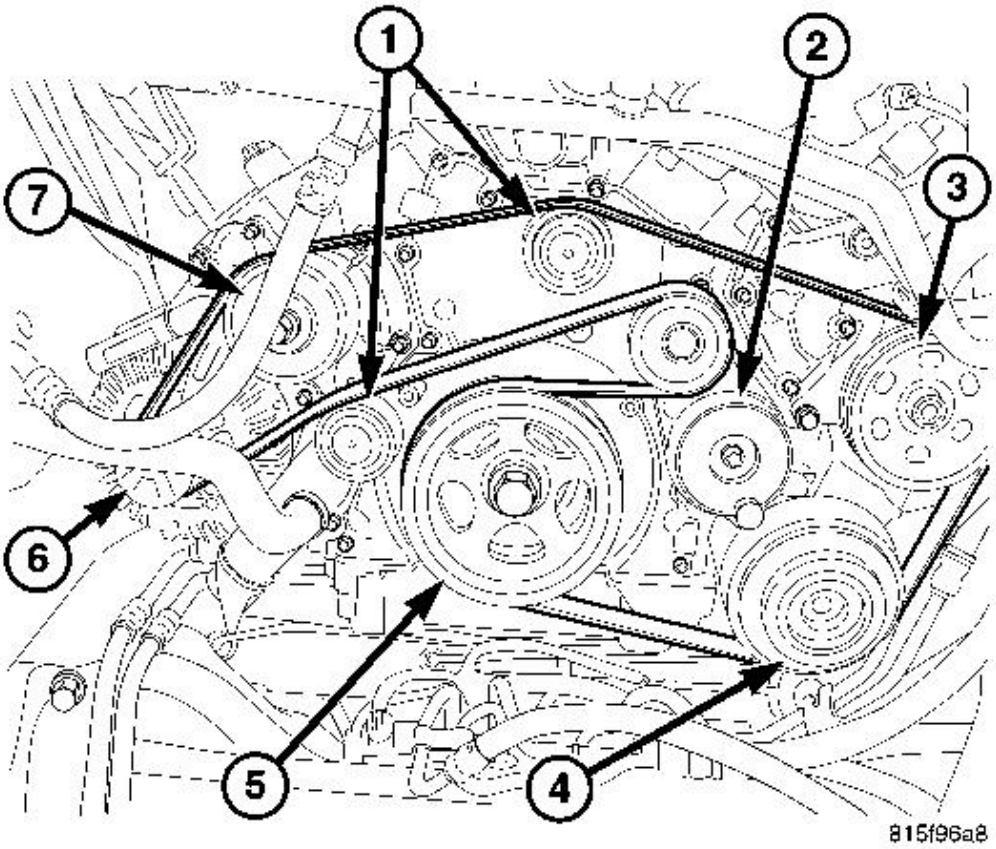

Fig. 84: Accessory Drive Belt Routing
Courtesy of CHRYSLER LLC

1 - IDLER PULLEYS
2 - DRIVE BELT TENSIONER
3 - POWER STEERING PUMP
4 - AIR CONDITIONING COMPRESSOR
5 - VIBRATION DAMPER
6 - GENERATOR
7 - WATER PUMP

8. Remove the accessory drive belt.
9. Remove the two idler pulleys (1).
10. Remove the belt tensioner (2).

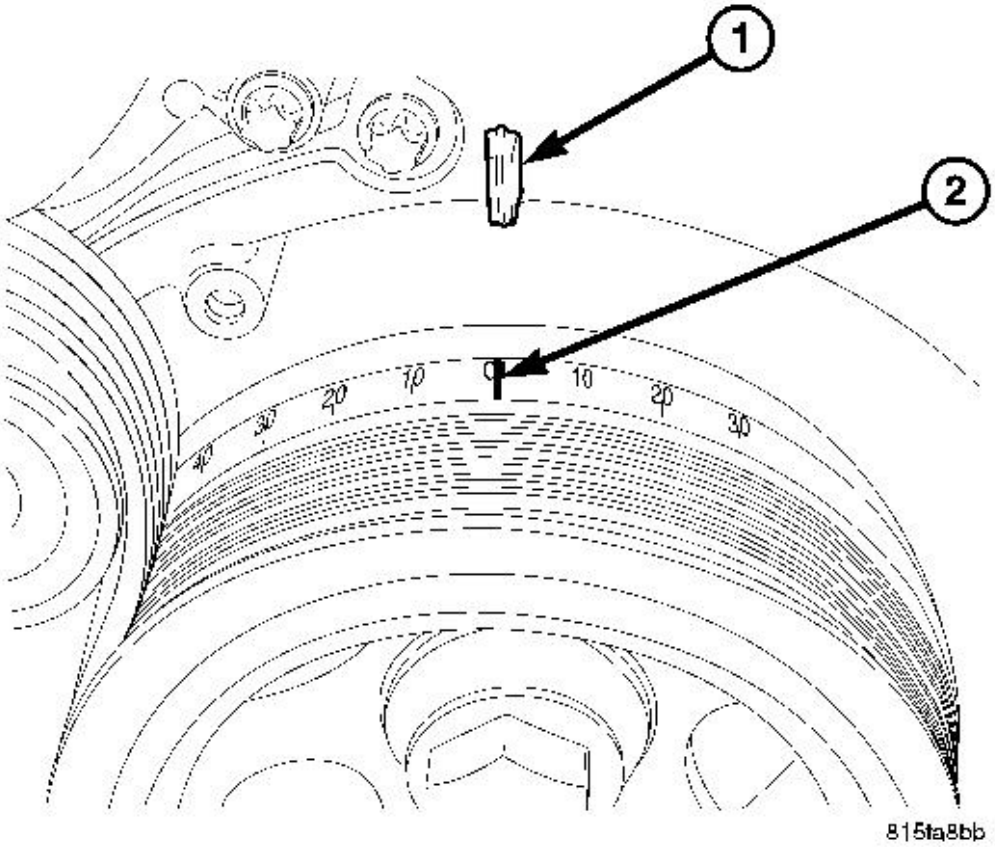

Fig. 85: Identifying Timing Cover And Damper TDC Marks
Courtesy of CHRYSLER LLC

1 - TDC MARK ON TIMING COVER 2 - VIBRATION DAMPER TDC MARK

11. Rotate the engine by the vibration damper bolt, to TDC.
12. Raise and support the vehicle.
13. Remove right side starter blank.
14. Disconnect the hydraulic cooling fan lines and capture the fluid in a approved and clearly marked container.

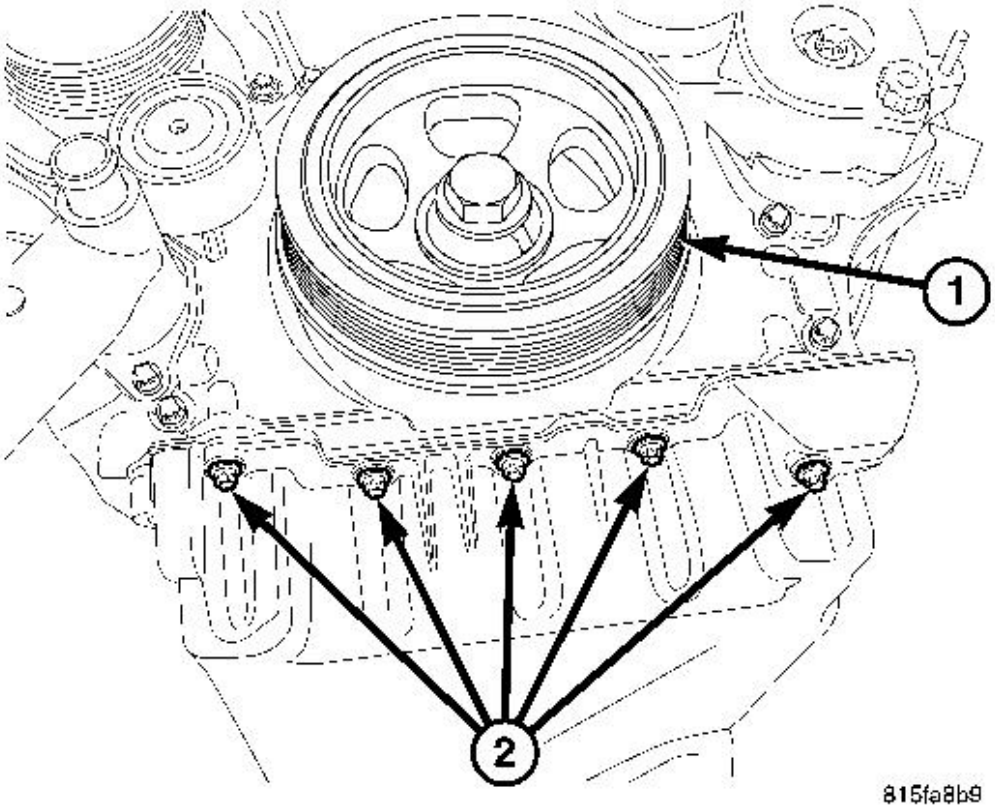

Fig. 86: Vibration Damper & Front Oil Pan Bolts
Courtesy of CHRYSLER LLC

1 - VIBRATION DAMPER
2 - OIL PAN BOLTS

15. Remove the front oil pan retaining bolts. See **Fig. 86**.
16. Lower the vehicle.

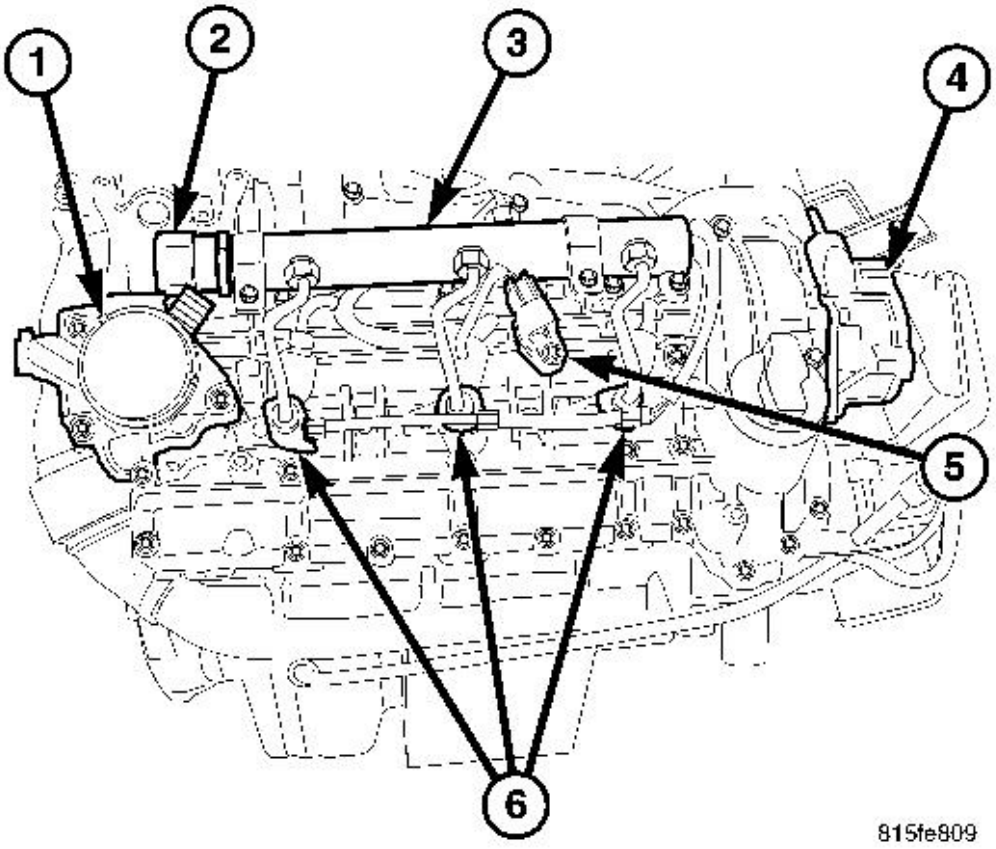

Fig. 87: Breather/Oil Separator, Fuel Rail Pressure Sensor, Fuel Rail, Vacuum Pump, Camshaft Position Sensor & Fuel Injectors
Courtesy of CHRYSLER LLC

1 - BREATHER/OIL SEPARATOR
2 - FUEL RAIL PRESSURE SENSOR
3 - FUEL RAIL
4 - VACUUM PUMP
5 - CAMSHAFT POSITION SENSOR
6 - FUEL INJECTORS

17. Remove the breather/oil separator (1) assembly from the right cylinder head cover.
18. Remove the right fuel injectors (6).
19. Remove the fuel rail (3).

20. Disconnect the vacuum supply hose from the vacuum pump (4).
21. Remove the vacuum pump (4).

CAUTION: Exercise caution when servicing the cylinder head covers. If a cylinder head cover is damaged, the cylinder head must also be replaced. Do not rotate the engine without special cam holding tools #9555 if cylinder head covers are removed.

NOTE: If the cylinder head cover is difficult to remove, DO NOT PRY or damage the cover. Use a heat gun to warm the sealing surface until the cover can be removed.

22. Remove the right cylinder head cover.

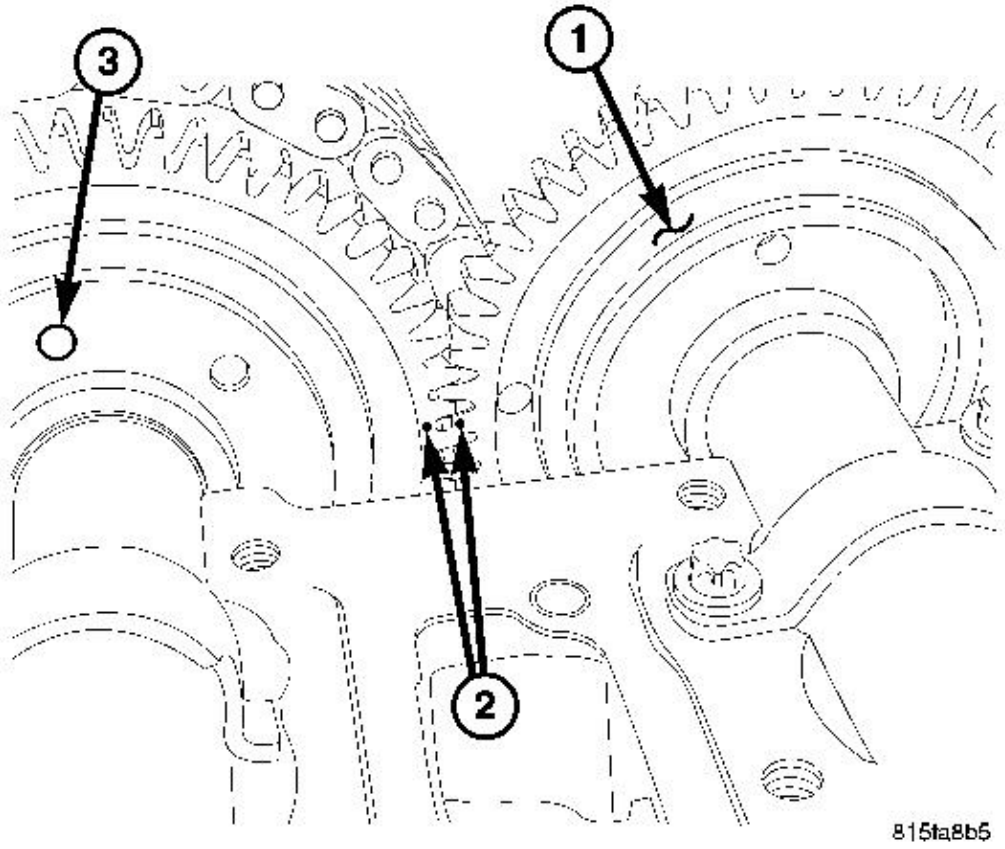

Fig. 88: Camshaft Gear Alignment

Courtesy of CHRYSLER LLC

1 - CAMSHAFT GEAR 2 - CAMSHAFT GEAR ALIGNMENT MARKS 3 - CAMSHAFT DRIVE GEAR DOWEL POSITION

23. Observe the right camshaft gear alignment marks (2). If they are together, continue with the next step. If the right camshaft alignment marks are separated, rotate the engine by the vibration damper until camshaft marks align together and the vibration damper reaches TDC.

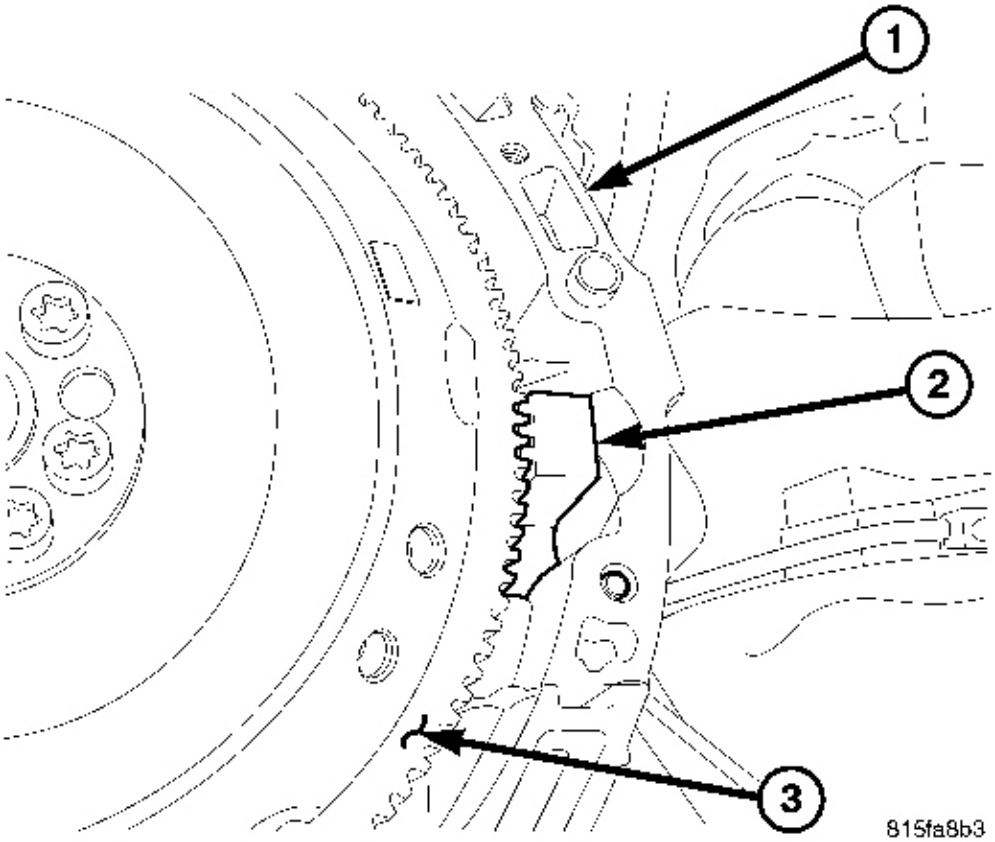

Fig. 89: Engine Block, Special Tool #9102 & Flex Plate
Courtesy of CHRYSLER LLC

1 - ENGINE BLOCK 2 - SPECIAL TOOL #9102

3 - FLEX PLATE

24. Raise and support the vehicle.
25. Install special tool #9102 crankshaft lock (2).

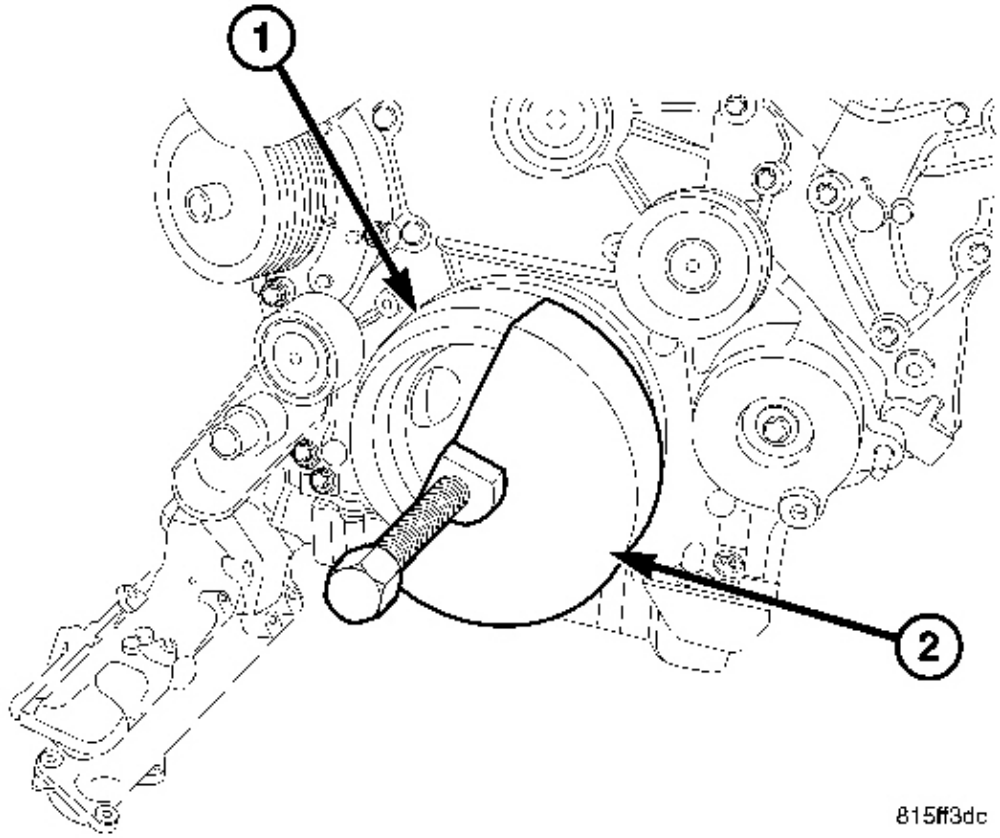

Fig. 90: Vibration Damper And Special Tool # 9944
Courtesy of CHRYSLER LLC

1 - VIBRATION DAMPER 2 - SPECIAL TOOL #9944

26. Lower the vehicle.
27. Remove the cooling fan module.
28. Remove the vibration damper (1) using special tool # 9944 (2).

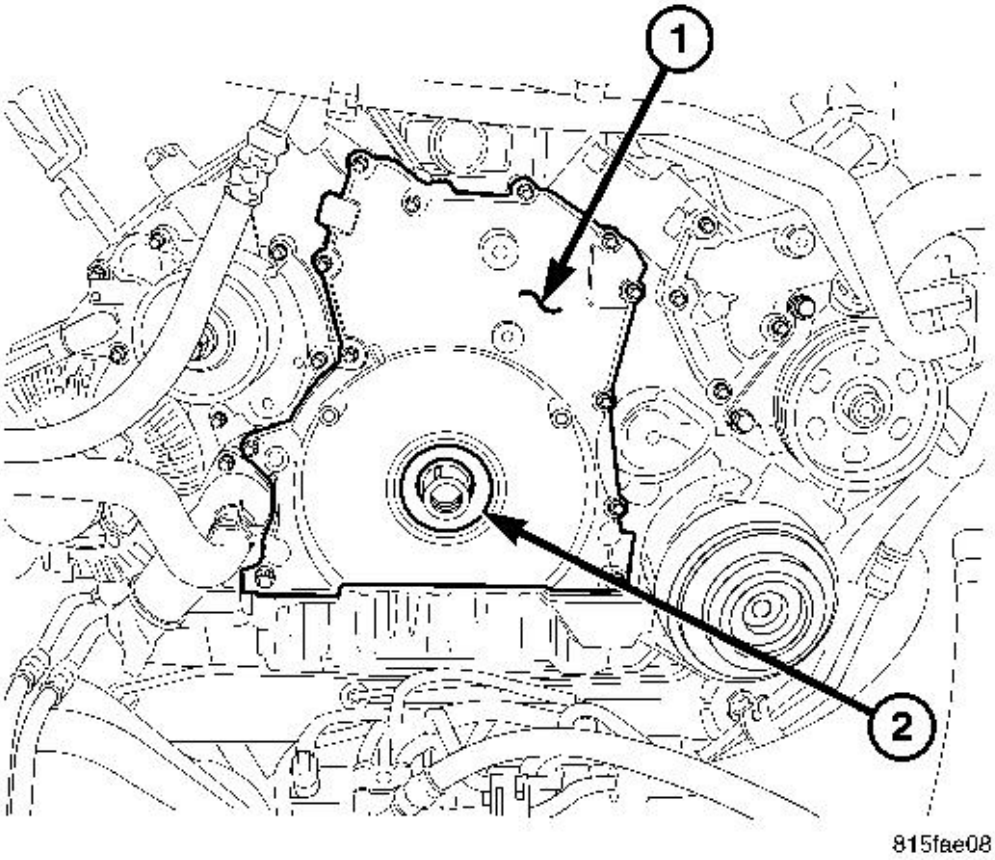

Fig. 91: Front Timing Cover & Crankshaft Seal
Courtesy of CHRYSLER LLC

1 - TIMING CHAIN COVER
2 - FRONT CRANKSHAFT SEAL

29. Remove front timing chain cover (1).

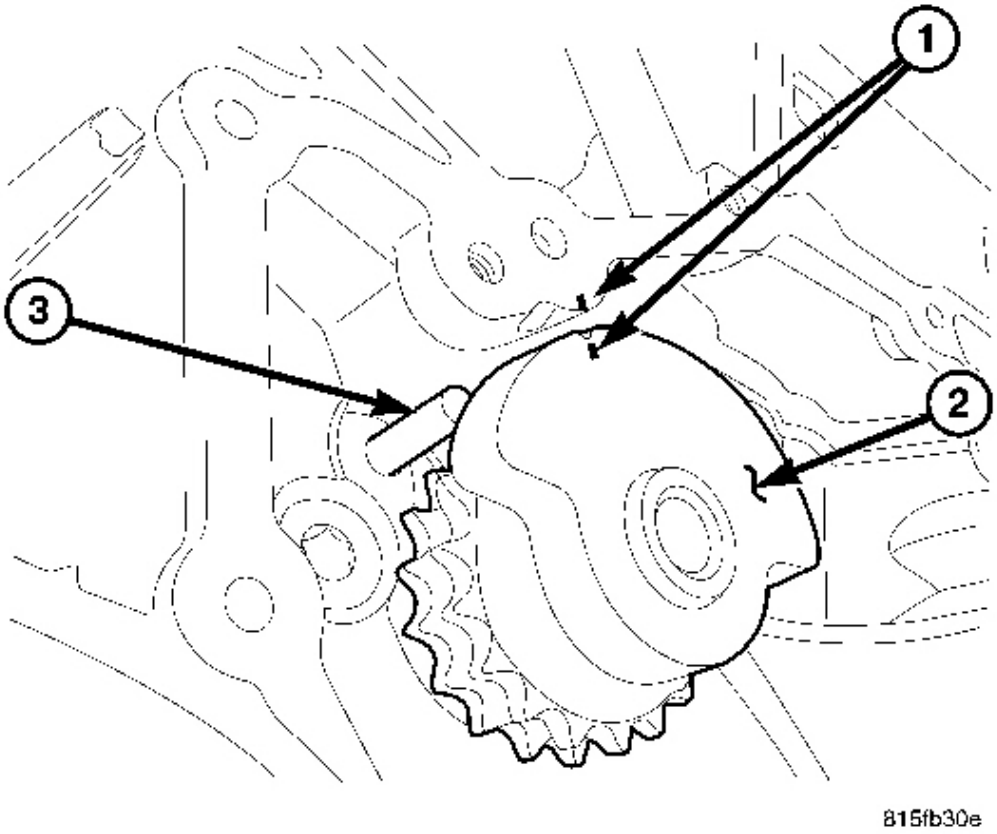

Fig. 92: Balance Shaft Indexing
Courtesy of CHRYSLER LLC

1 - PAINT MARK OR SCRIBE
2 - BALANCE SHAFT
3 - TIMING CHAIN OILING JET

30. Paint mark or scribe the balance shaft (2) position to the engine block and timing chain.
31. Paint mark or scribe the timing chain to crankshaft gear and camshaft drive gear relation.

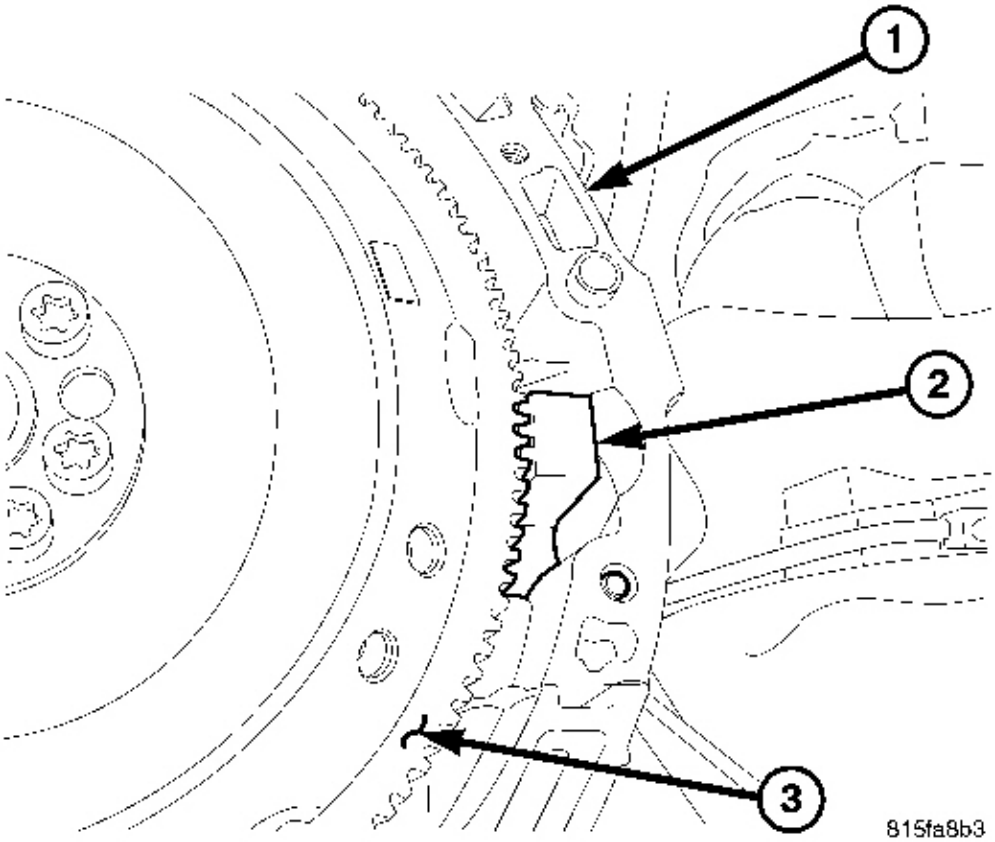

Fig. 93: Engine Block, Special Tool #9102 & Flex Plate
Courtesy of CHRYSLER LLC

1 - ENGINE BLOCK 2 - SPECIAL TOOL #9102 3 - FLEX PLATE

32. Raise and support the vehicle.
33. Remove special tool #9102 crankshaft locking tool (2).
34. Lower the vehicle.

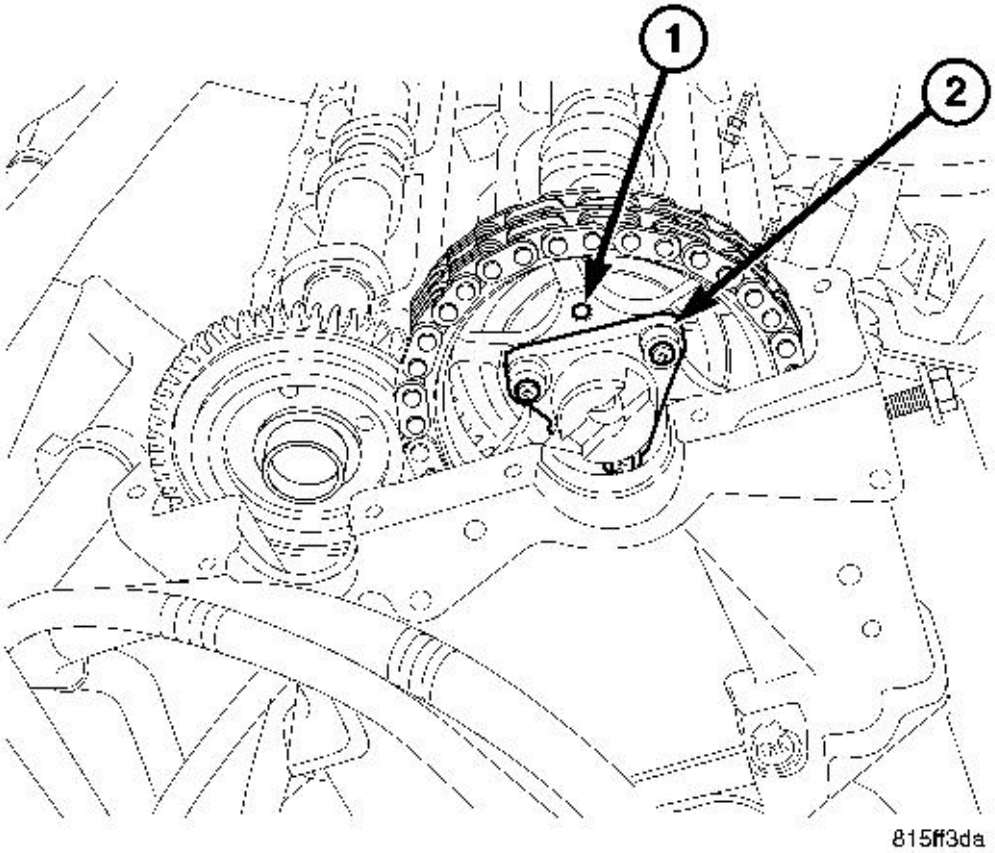

Fig. 94: Right Intake Camshaft Drive Gear Alignment Dowel & Vacuum Pump Drive
Courtesy of CHRYSLER LLC

1 - RIGHT CAMSHAFT DRIVE GEAR ALIGNMENT DOWEL
2 - VACUUM PUMP DRIVE

35. Rotate the engine and remove the right camshaft drive gear (1) lower bolt.
36. Rotate the engine back to TDC and check the alignment marks at the balance shaft, camshaft gear and crankshaft gear.

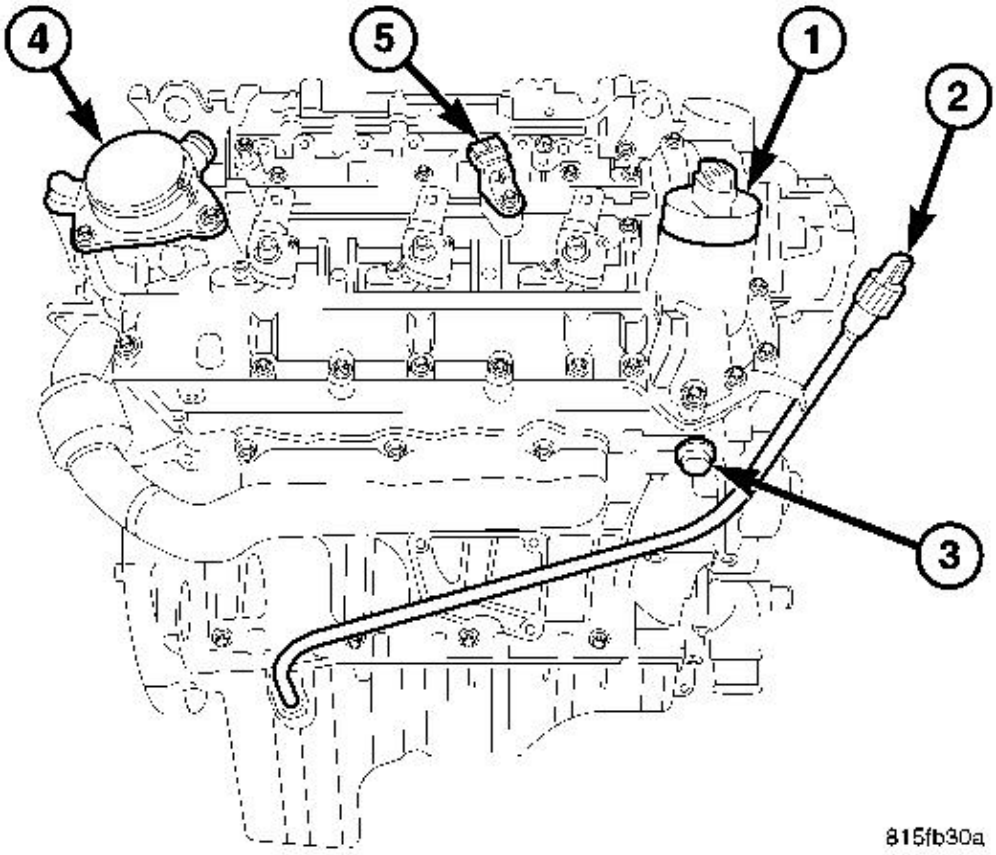

Fig. 95: Engine Oil Cap, Oil Level Indicator, Timing Chain Tensioner, Oil Separator Assembly & Camshaft Position Sensor
Courtesy of CHRYSLER LLC

1 - ENGINE OIL CAP
2 - OIL LEVEL INDICATOR
3 - TIMING CHAIN TENSIONER
4 - OIL SEPARATOR ASSEMBLY
5 - CAMSHAFT POSITION SENSOR

37. Remove the timing chain tensioner (3).

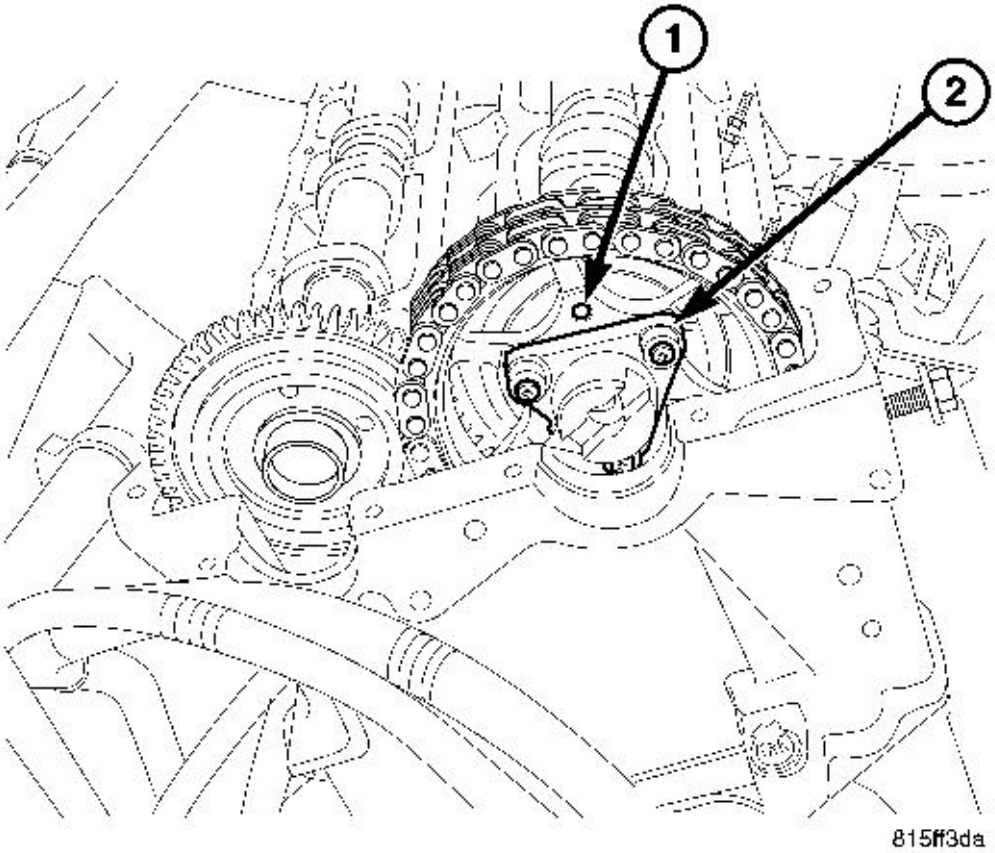

Fig. 96: Right Intake Camshaft Drive Gear Alignment Dowel & Vacuum Pump Drive
Courtesy of CHRYSLER LLC

1 - RIGHT CAMSHAFT DRIVE GEAR ALIGNMENT DOWEL
2 - VACUUM PUMP DRIVE

38. Remove the remaining right camshaft drive gear (1) retaining bolts.
39. Separate the right camshaft drive gear (1) and chain from camshaft.
40. Remove the right camshaft drive gear (1).

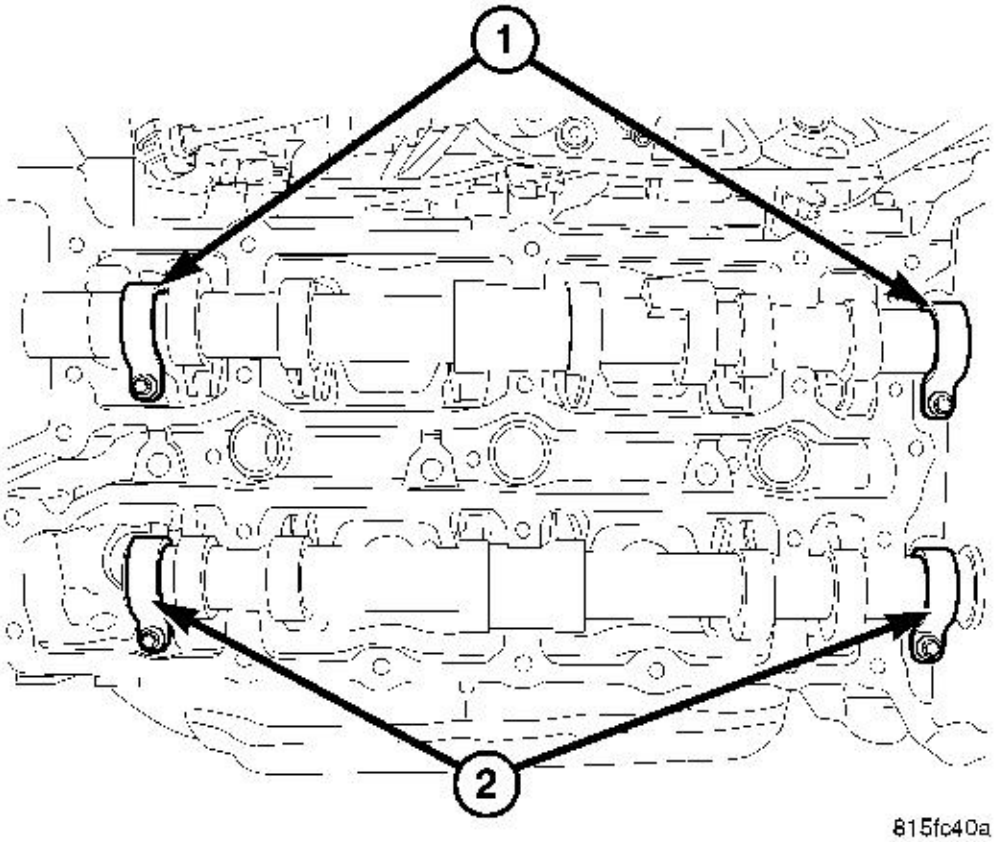

Fig. 97: Intake/Exhaust Camshaft Retainers
Courtesy of CHRYSLER LLC

1 - INTAKE CAMSHAFT RETAINERS 2 - EXHAUST CAMSHAFT RETAINERS

41. Remove the right camshafts retainers (1,2) and camshafts.

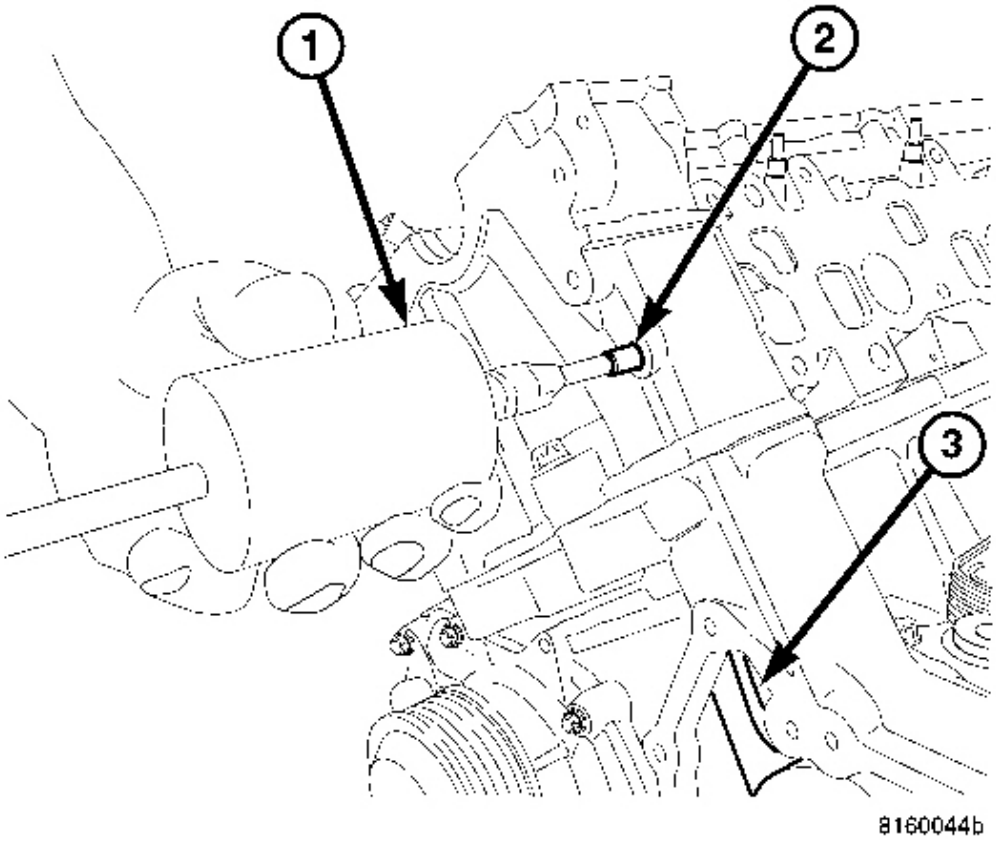

Fig. 98: Removing Right Upper Timing Chain Upper Guide
Courtesy of CHRYSLER LLC

1 - SLIDE HAMMER
2 - RETAINING PIN
3 - UPPER TIMING CHAIN GUIDE

42. Remove the right upper timing chain upper guide (3).

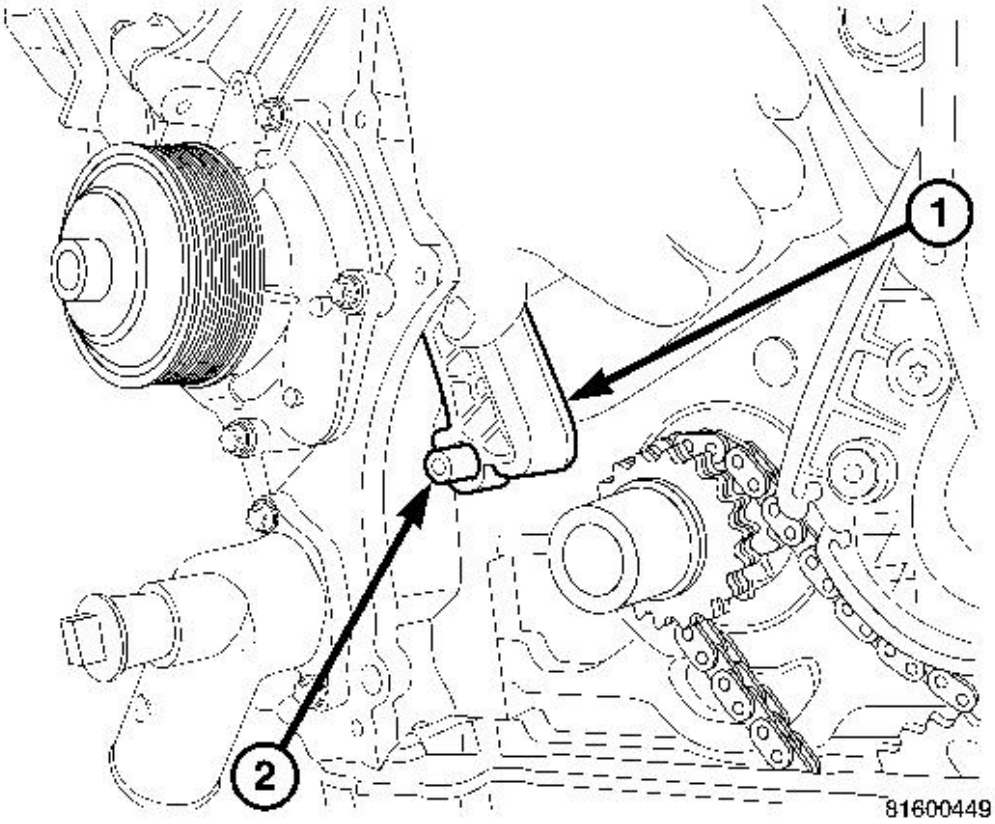

Fig. 99: Removing Right Lower Timing Chain Guide
Courtesy of CHRYSLER LLC

1 - RIGHT LOWER TIMING CHAIN GUIDE 2 - RETAINING BOLT

43. Remove the right lower timing chain guide (1).

NOTE: **Followers and tappets assemblies must be installed in same location as removed.**

NOTE: **Do Not store the cylinder head on the sealing surface. The glow plugs protrude into the cylinder surface area and may be damaged.**

44. Remove the right cylinder head glow plugs.

45. Remove cylinder head and gasket from engine block.

CLEANING

CYLINDER HEAD - CLEANING

Thoroughly clean the engine cylinder head and cylinder block mating surfaces. Clean the intake and exhaust manifold and engine cylinder head mating surfaces. Clean the injector bores. Remove all gasket material and carbon.

Check to ensure that no fuel injector washer seals are left in the injector bores.

Check to ensure that no coolant or foreign material has fallen into the tappet bore area.

Remove the carbon deposits from the combustion chambers and top of the pistons.

INSPECTION

CYLINDER HEAD-INSPECTION

Use a straightedge and feeler gauge to check the flatness of the engine cylinder head and engine block mating surfaces.

The minimum cylinder head thickness is 128.35 mm (5.0532 in.).

INSTALLATION

CYLINDER HEAD - LEFT

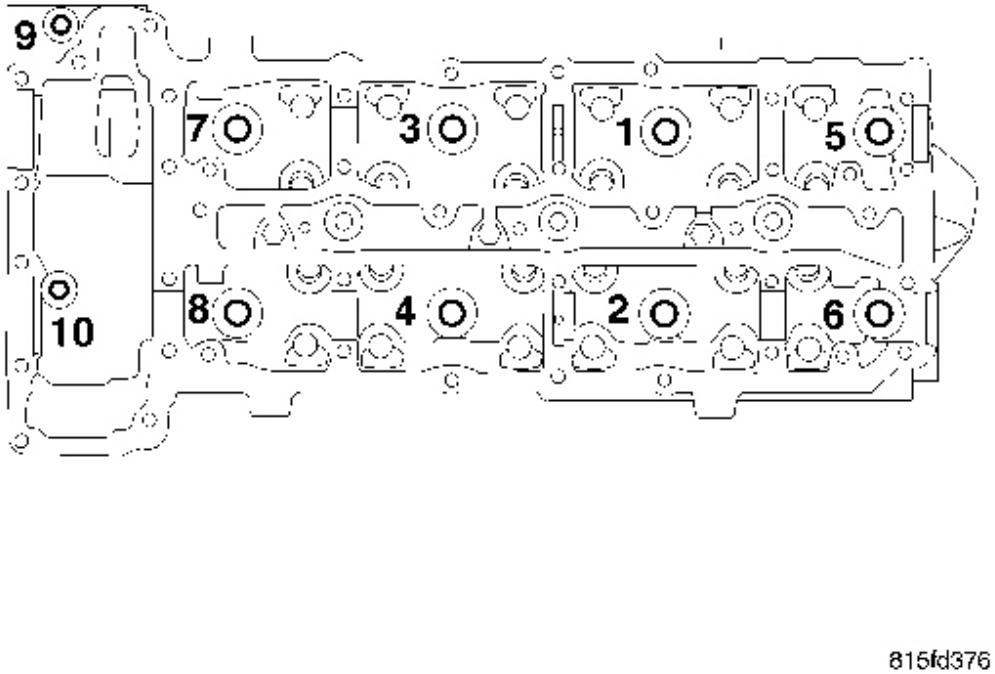

Fig. 100: Cylinder Head Tightening Sequence
Courtesy of CHRYSLER LLC

CAUTION: Inspect and measure all cylinder head bolt lengths. If out of specification, replace as necessary. See STANDARD PROCEDURE.

1. Clean and inspect gasket mating surfaces. See **CLEANING**.
2. Position correct head gasket on engine block.
3. Place cylinder head on engine block.

CAUTION: If new cylinder head bolts are used, do not lubricate the new cylinder head bolts. They already are coated with an anti scuff treatment.

4. Tighten cylinder head bolts following procedure below.
   a. Tighten M12 cylinder head bolts 1 through 8, in the sequence shown to 60 N.m (44 ft. lbs.).
   b. Tighten M8 bolts 9 and 10 to 20 N.m (177 in. lbs.).
   c. Tighten M12 cylinder head bolts 1 through 8, in the sequence shown an additional 90 degrees.
   d. Recheck and tighten M8 bolts 9 and 10 to 20 N.m (177 in. lbs.).

e. And then again, Tighten M12 cylinder head bolts 1 through 8, in the sequence shown an additional 90 degrees.

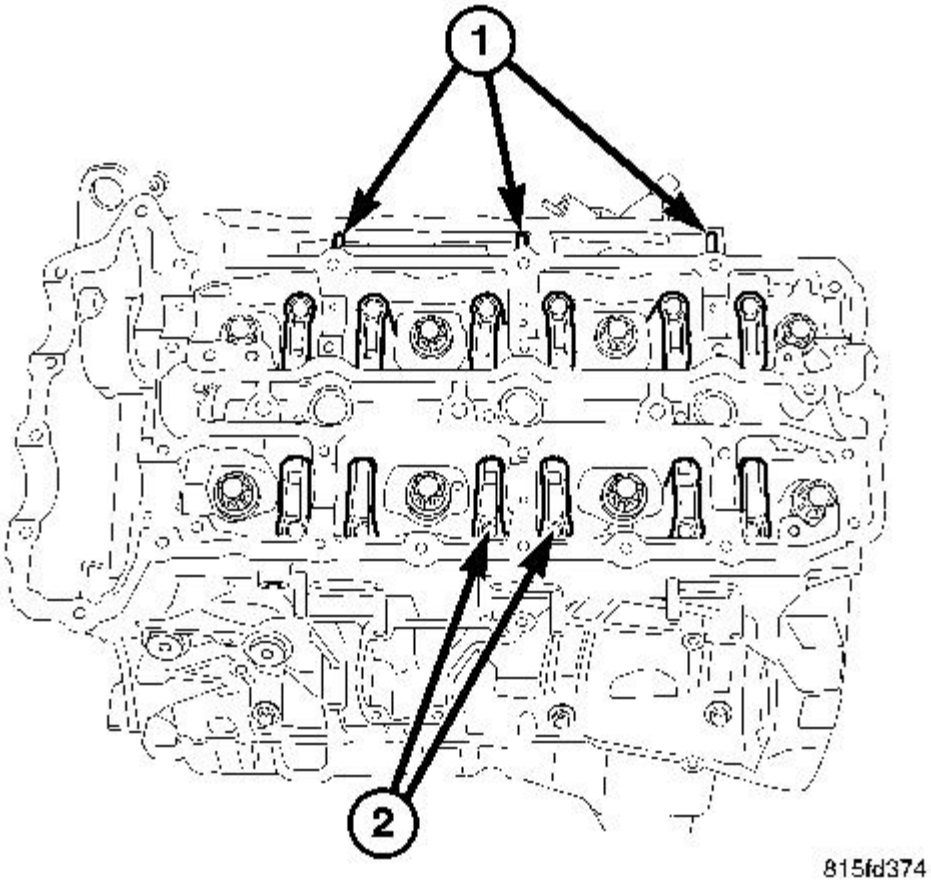

Fig. 101: Glow Plugs & Tappet/Camshaft Follower Assembly
Courtesy of CHRYSLER LLC

1 - GLOW PLUGS 2 - TAPPET/CAMSHAFT FOLLOWER ASSEMBLY

NOTE: Followers and tappets assemblies must be installed in same location as removed.

5. Install the followers (2) and tappets (2) into their original positions.

6. Install the glow plugs (1). Tighten glow plugs (1) to 15 N.m (133 in. lbs.).

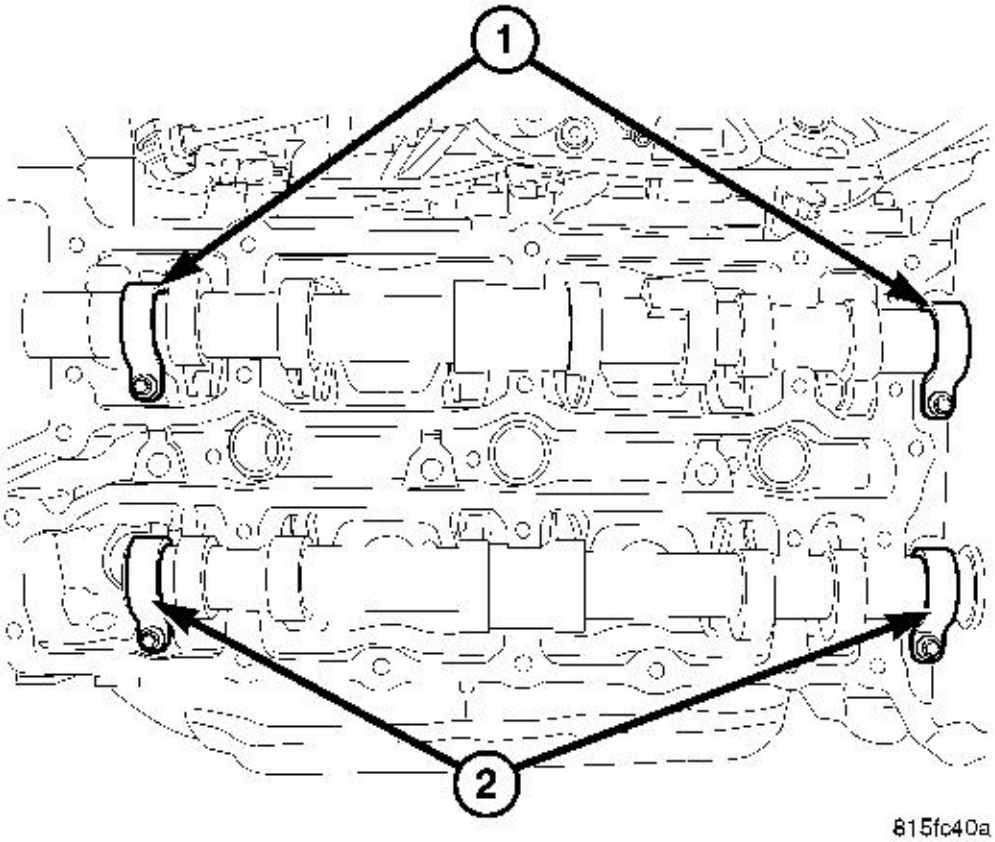

Fig. 102: Intake/Exhaust Camshaft Retainers
Courtesy of CHRYSLER LLC

1 - INTAKE CAMSHAFT RETAINERS 2 - EXHAUST CAMSHAFT RETAINERS

7. Install the left exhaust camshaft. Tighten the retaining (2) fasteners to 8 N.m (71 in. lbs.).
8. Install the left intake camshaft. Tighten the retaining (1) fasteners to 8 N.m (71 in. lbs.).

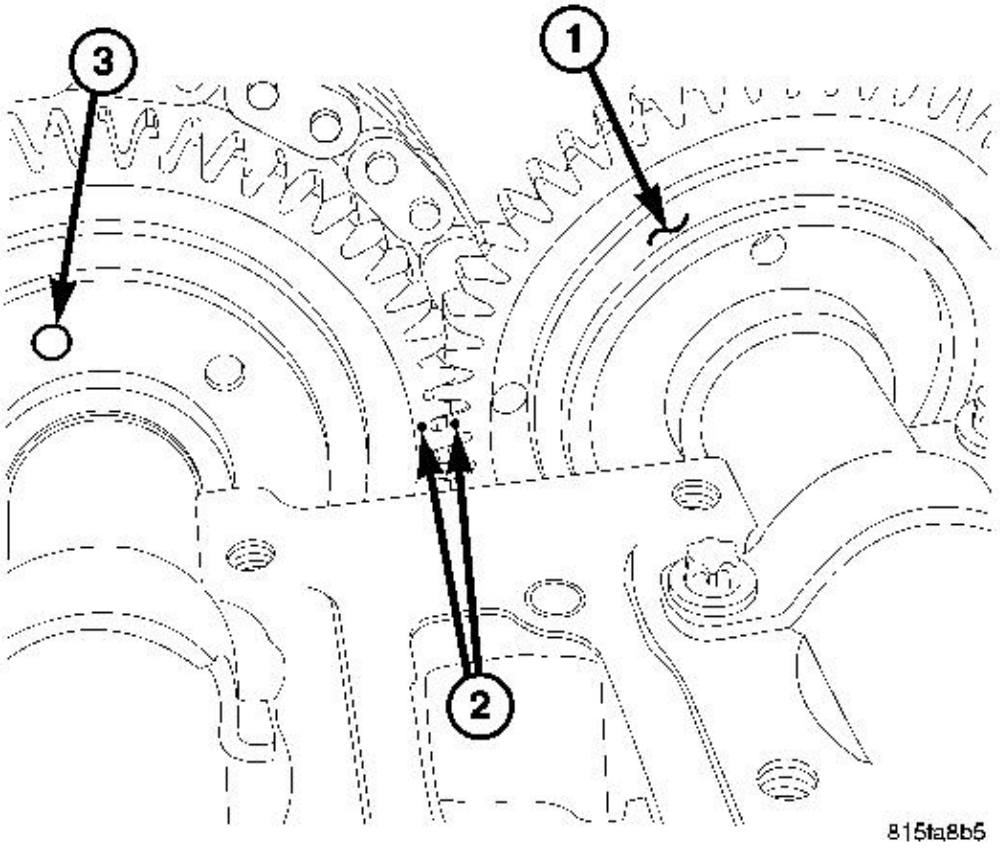

Fig. 103: Camshaft Gear Alignment
Courtesy of CHRYSLER LLC

1 - CAMSHAFT GEAR
2 - CAMSHAFT GEAR ALIGNMENT MARKS
3 - CAMSHAFT DRIVE GEAR DOWEL POSITION

NOTE: **Care must be taken to assure the proper exhaust camshaft to intake camshaft alignment is maintained. Before mating the drive gear to the camshaft gear a quick check will find the exhaust camshaft drive gear dowel (3) in the 12 O'clock position when viewed through the camshaft seal access hole.**

9. Align the camshaft marks (2) so the alignment marks are facing each other.
10. Insert the timing chain, through the cylinder head, and on to the camshaft drive gear.

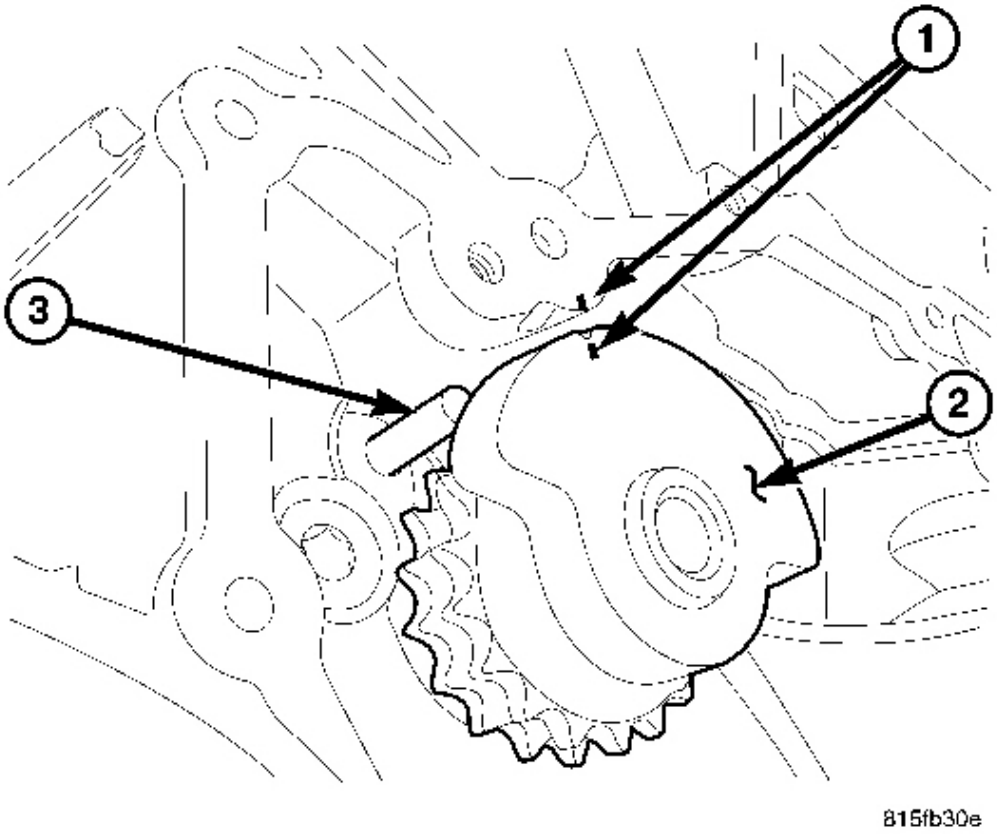

Fig. 104: Balance Shaft Indexing
Courtesy of CHRYSLER LLC

1 - PAINT MARK OR SCRIBE
2 - BALANCE SHAFT
3 - TIMING CHAIN OILING JET

11. Align the balance shaft (2) with the scribe or paint mark.
12. Once the camshaft drive gear is mated with the timing chain, install the camshaft drive gear on to the camshaft and assure the balance shaft is aligned properly.

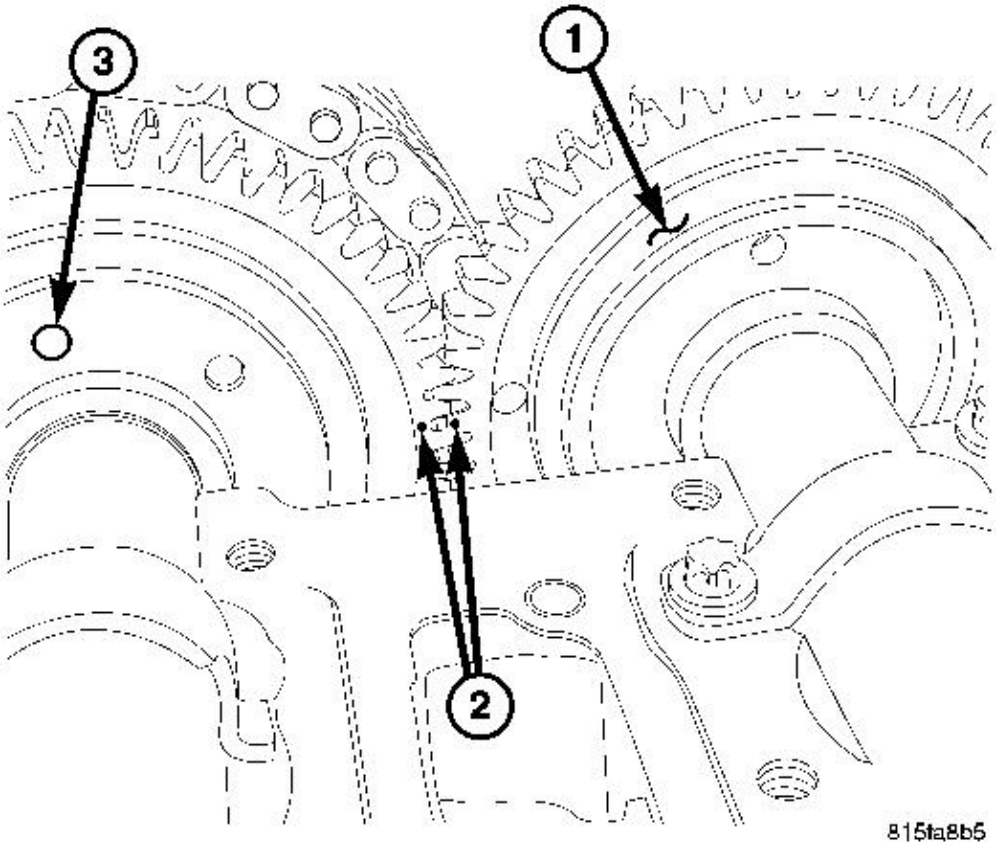

Fig. 105: Camshaft Gear Alignment
Courtesy of CHRYSLER LLC

1 - CAMSHAFT GEAR
2 - CAMSHAFT GEAR ALIGNMENT MARKS
3 - CAMSHAFT DRIVE GEAR DOWEL POSITION

13. Install the upper two of the three camshaft drive gear bolts.

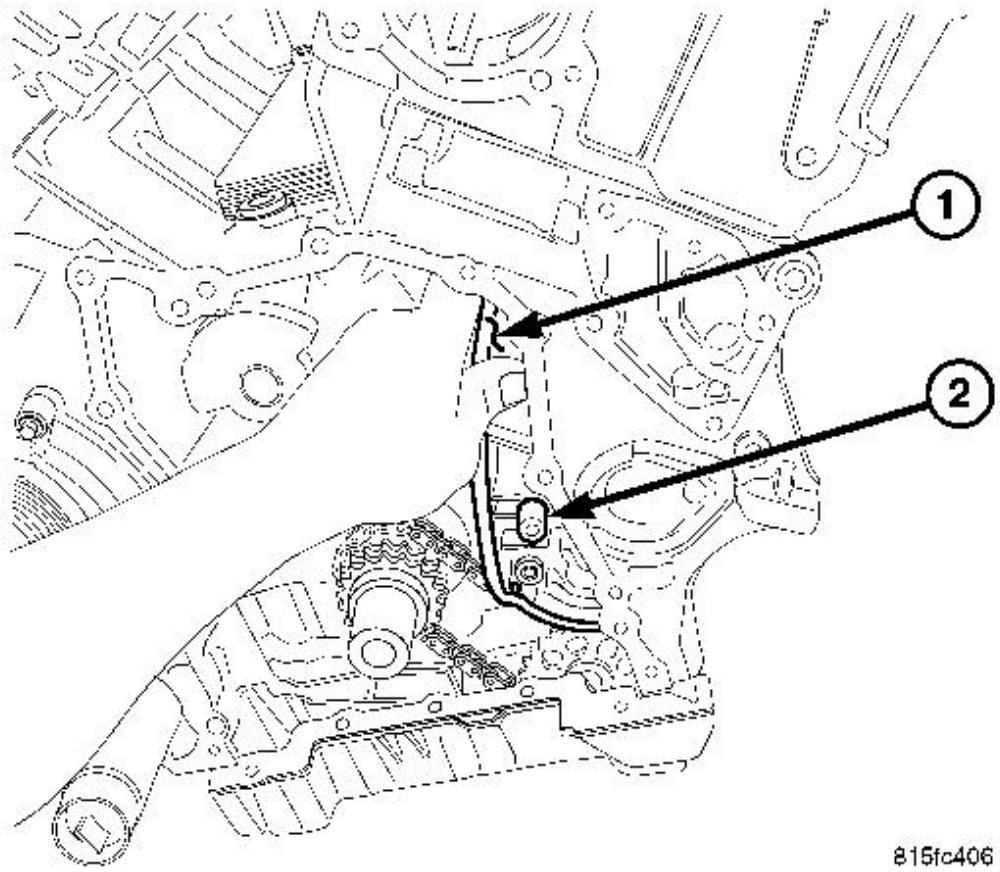

Fig. 106: Left Lower Timing Chain Guide And Fastener
Courtesy of CHRYSLER LLC

1 - LEFT LOWER TIMING CHAIN GUIDE 2 - FASTENER

14. Install the left lower timing chain guide (1).

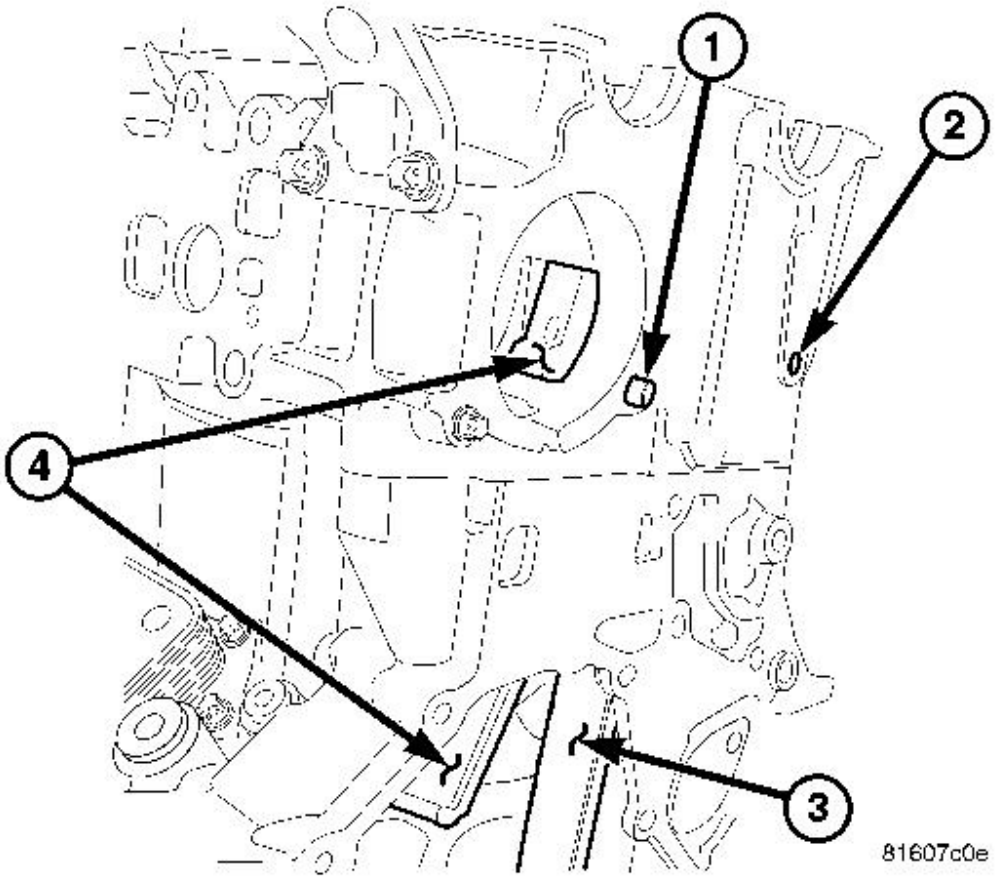

Fig. 107: Upper/Lower Timing Chain Guides & Pins
Courtesy of CHRYSLER LLC

1 - UPPER TIMING CHAIN GUIDE PIN
2 - LOWER TIMING CHAIN GUIDE PIN
3 - LOWER TIMING CHAIN GUIDE
4 - UPPER TIMING CHAIN GUIDE

15. Install the left upper timing chain guide (4).

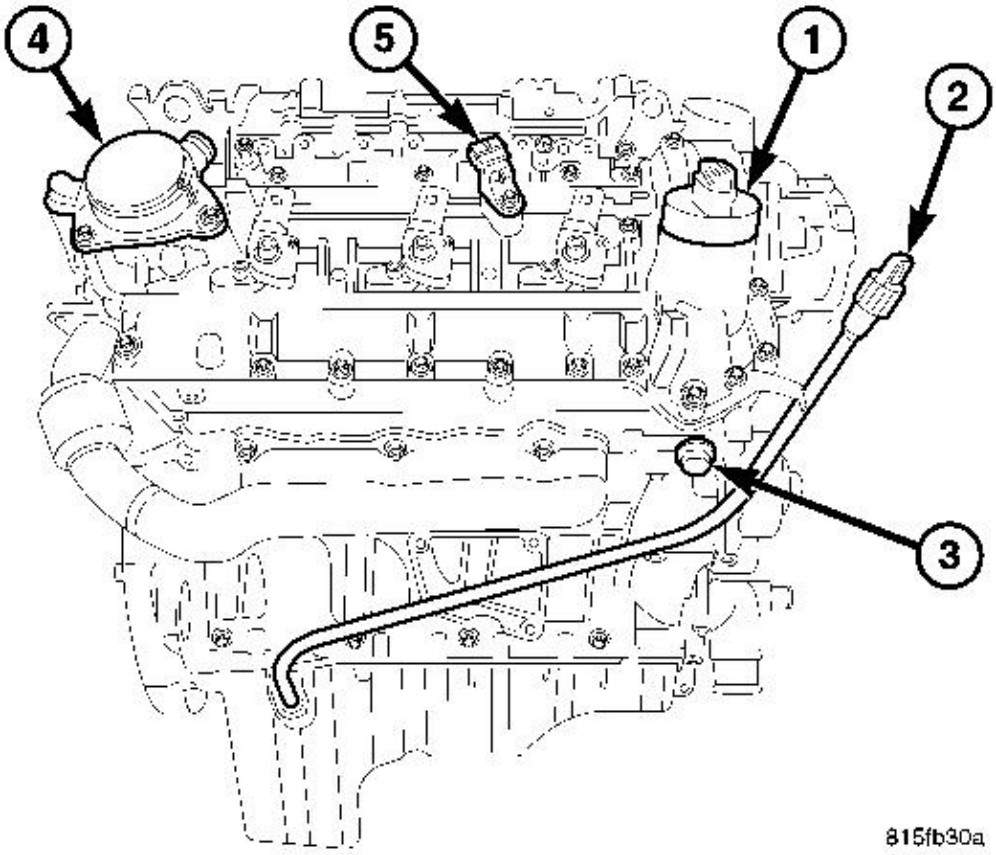

Fig. 108: Engine Oil Cap, Oil Level Indicator, Timing Chain Tensioner, Oil Separator Assembly & Camshaft Position Sensor
Courtesy of CHRYSLER LLC

1 - ENGINE OIL CAP
2 - OIL LEVEL INDICATOR
3 - TIMING CHAIN TENSIONER
4 - OIL SEPARATOR ASSEMBLY
5 - CAMSHAFT POSITION SENSOR

16. Install the timing chain tensioner (3).

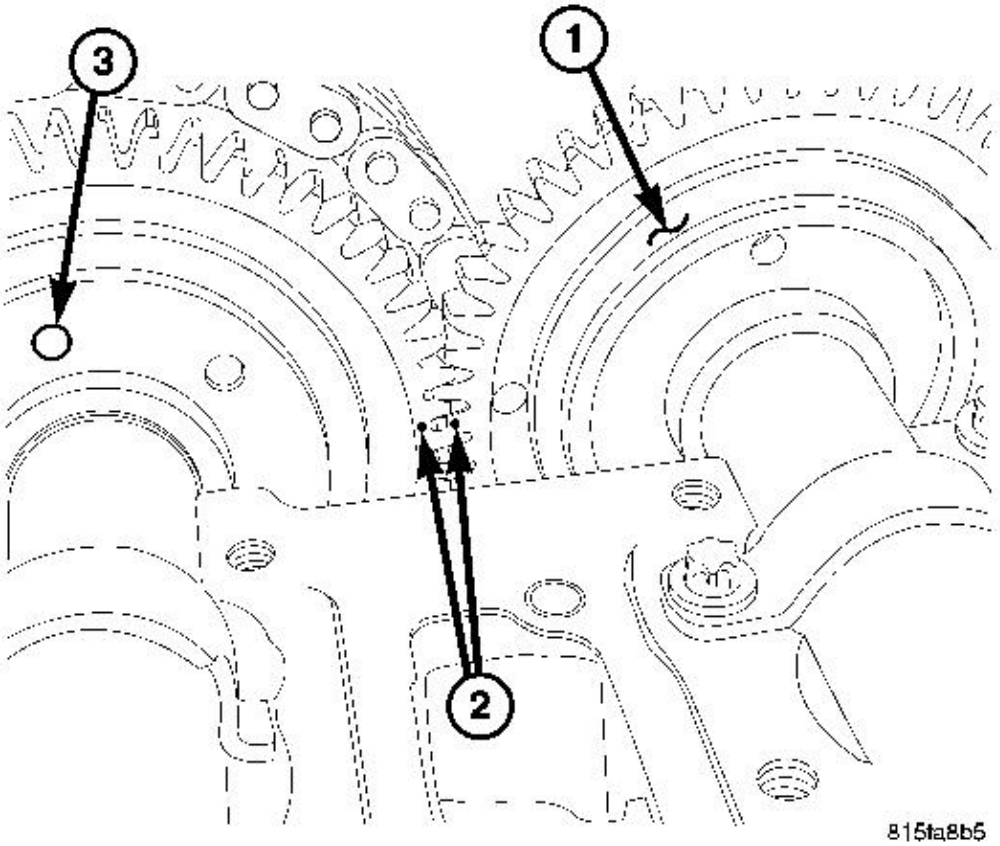

Fig. 109: Camshaft Gear Alignment
Courtesy of CHRYSLER LLC

1 - CAMSHAFT GEAR
2 - CAMSHAFT GEAR ALIGNMENT MARKS
3 - CAMSHAFT DRIVE GEAR DOWEL POSITION

17. Rotate the engine by the vibration damper bolt enough to gain access to the third camshaft drive gear bolt hole.
18. Install the third camshaft drive gear retaining bolt and tighten the bolt to 18 N.m (13 ft. lbs.).

WARNING: **If the camshaft, balance shaft and or crankshaft alignment marks are not aligned properly immediate damage to the engine will occur. If the camshafts, balance shaft and or crankshaft do not align properly after rotating the engine to the original starting point, STOP and**

begin the alignment procedure again.

19. Rotate the engine back to TDC by the vibration damper bolt until the crankshaft, camshaft and balance shaft align TDC again.

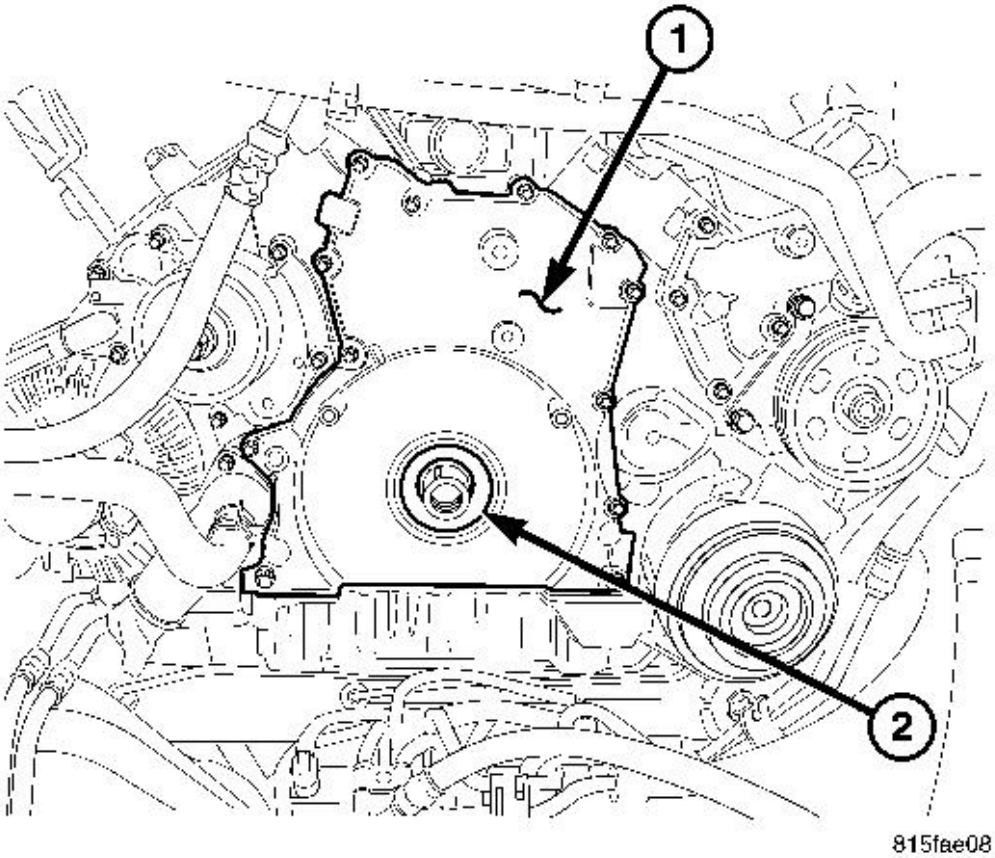

Fig. 110: Front Timing Cover & Crankshaft Seal
Courtesy of CHRYSLER LLC

1 - TIMING CHAIN COVER
2 - FRONT CRANKSHAFT SEAL

WARNING: **Check that all the timing chain fits properly on all the timing gears. Failure to do so will result in immediate engine damage.**

20. Apply a 1.5mm continuous bead of Mopar Engine Sealant RTV around the diameter of the timing chain cover (1) and Install the cover (1). Tighten the bolts to 8.4 N.m (74 in. lbs.).
21. Raise and support the vehicle.

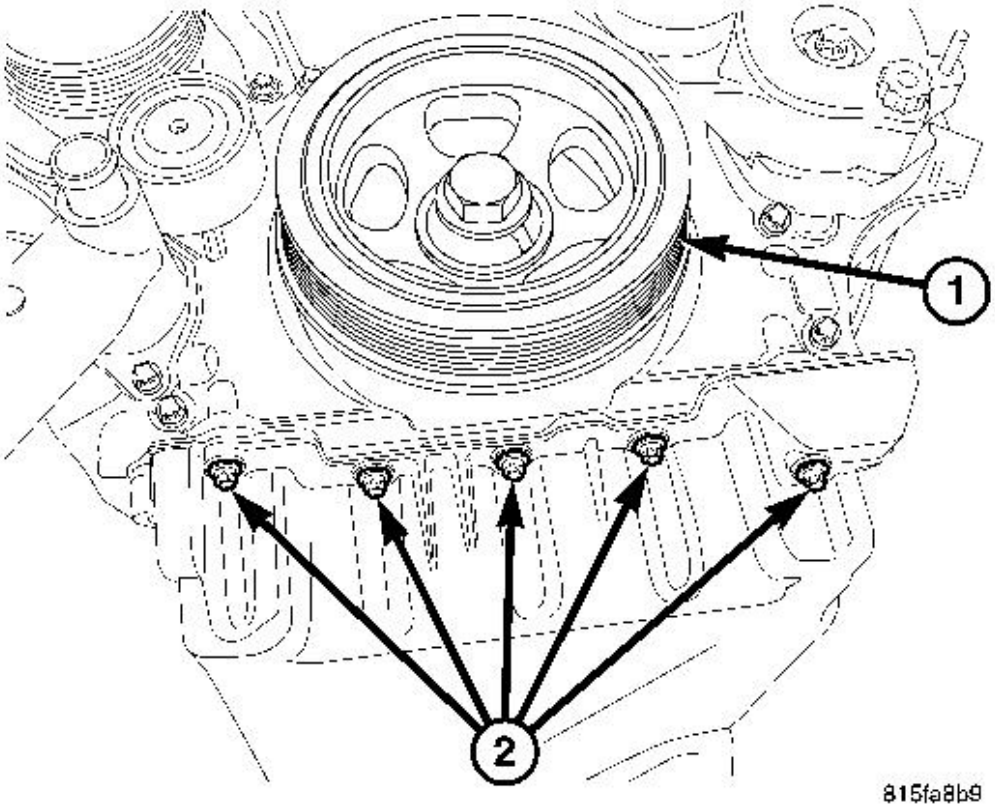

Fig. 111: Vibration Damper & Front Oil Pan Bolts
Courtesy of CHRYSLER LLC

1 - VIBRATION DAMPER
2 - OIL PAN BOLTS

22. Install the 5 front oil pan to timing cover bolts. Tighten the bolts to 20 N.m (177 in. lbs.).

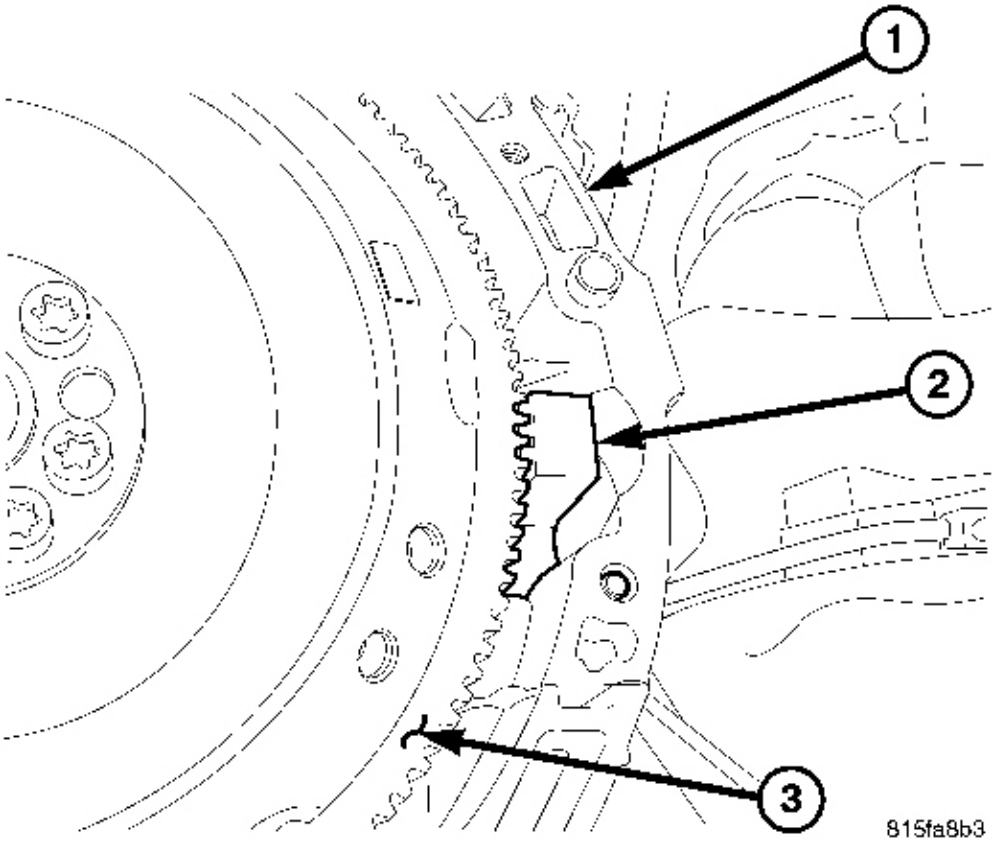

Fig. 112: Engine Block, Special Tool #9102 & Flex Plate
Courtesy of CHRYSLER LLC

1 - ENGINE BLOCK 2 - SPECIAL TOOL #9102 3 - FLEX PLATE

23. Install special tool #9102 crankshaft lock (2) into the starter access blank.
24. Lower the vehicle.

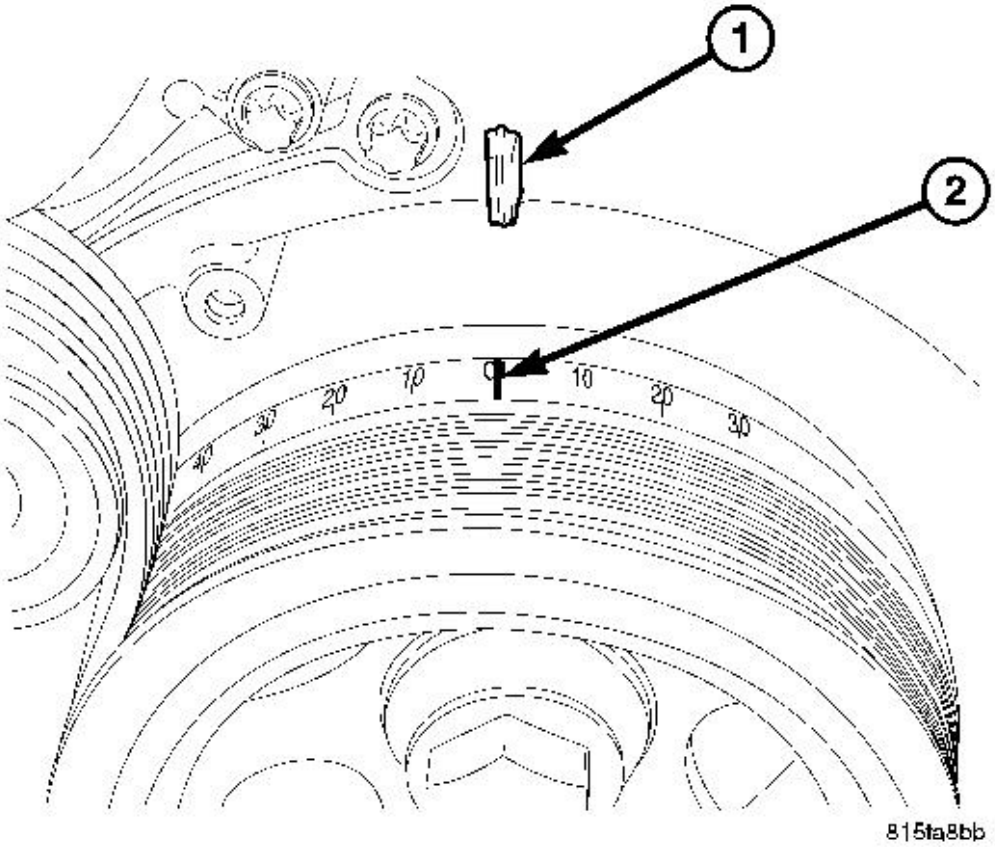

Fig. 113: Identifying Timing Cover And Damper TDC Marks
Courtesy of CHRYSLER LLC

1 - TDC MARK ON TIMING COVER
2 - VIBRATION DAMPER TDC MARK

25. Install the vibration damper. Tighten the bolts to 200 N.m (148 ft. lbs.) and then an additional 90°.

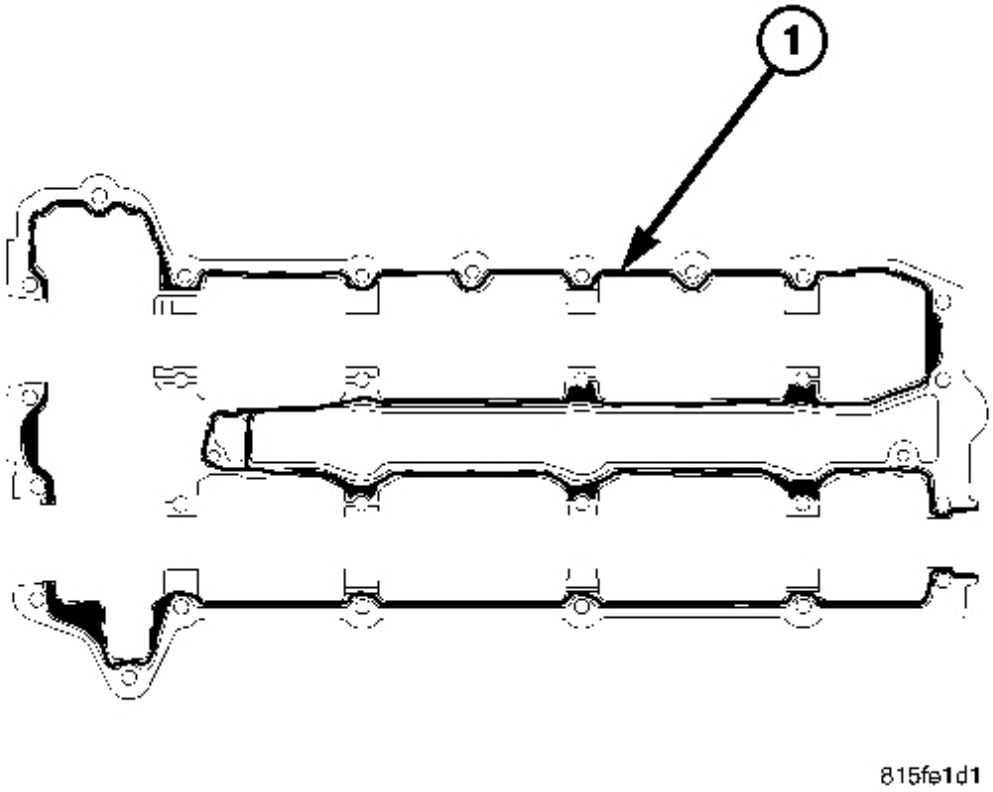

Fig. 114: Applying Cylinder Head Cover Sealant
Courtesy of CHRYSLER LLC

1 - 1.5MM MOPAR ENGINE SEALANT RTV

NOTE: Care must be taken not to get any engine sealer on the camshaft journals.

26. Apply a 1.5mm continuous bead of Mopar Engine Sealant RTV (1) around the diameter of the left cylinder head cover, and install the cover with new camshaft seals.

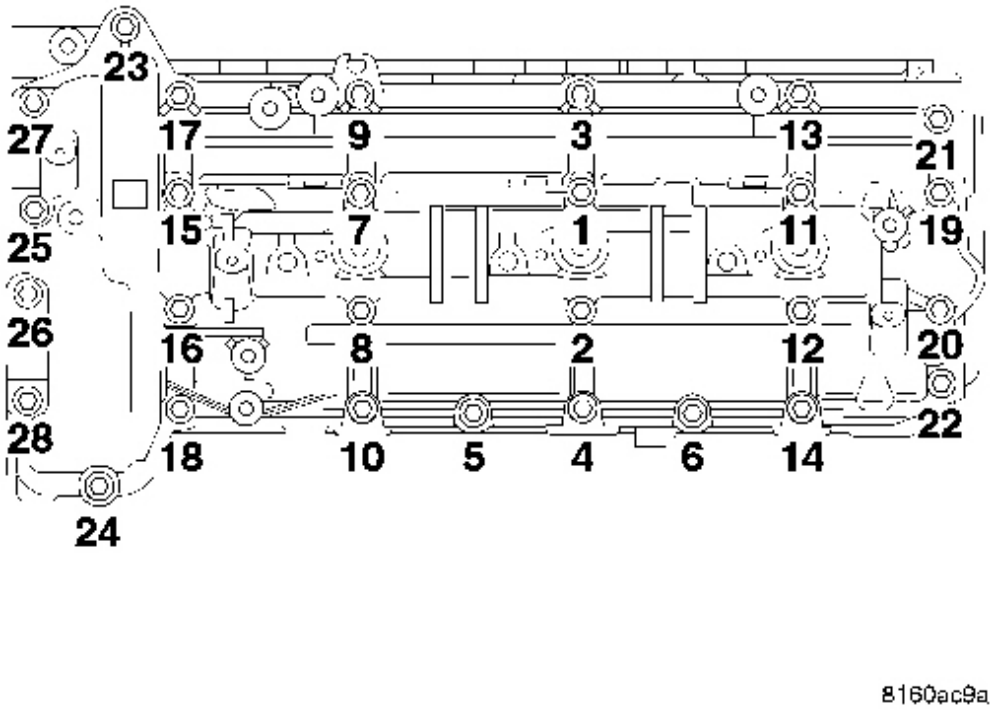

Fig. 115: Left Cylinder Head Cover Tightening Sequence
Courtesy of CHRYSLER LLC

27. Tighten the bolts in three stages following the sequence provided. First to 4 N.M (35 in. lbs.), then to 6 N.M (53 in. lbs.), and then to 8.4 N.M (75 in. lbs.).

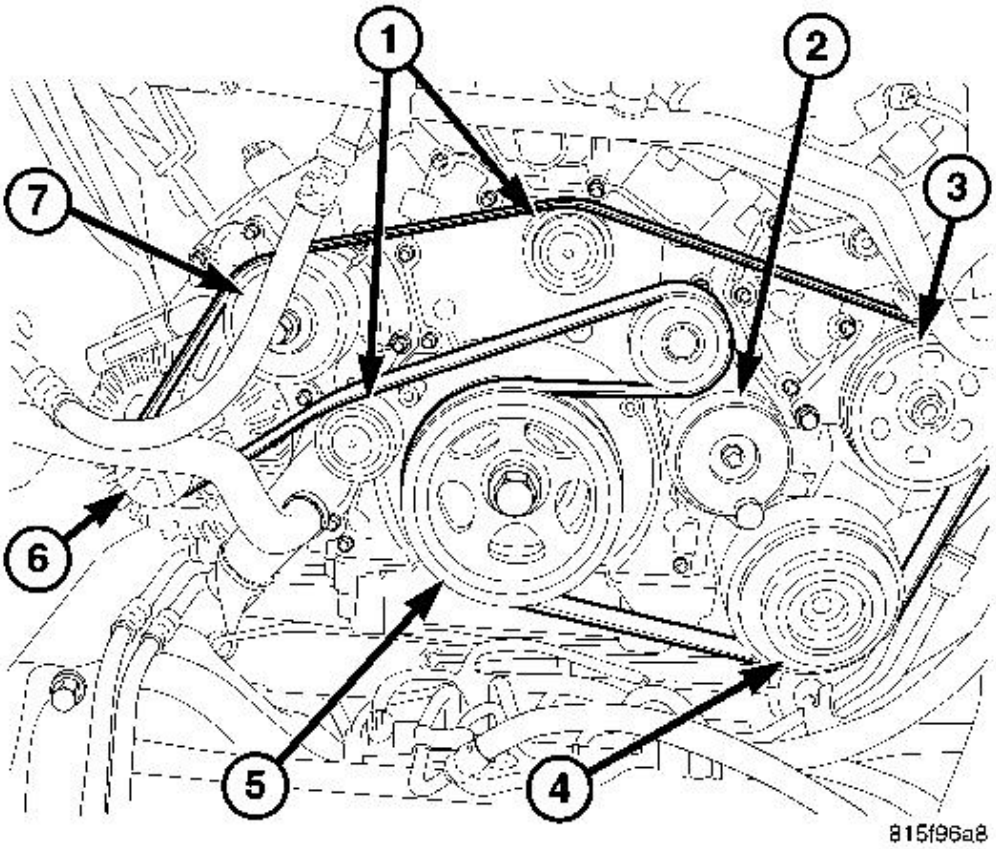

Fig. 116: Accessory Drive Belt Routing
Courtesy of CHRYSLER LLC

1 - IDLER PULLEYS
2 - DRIVE BELT TENSIONER
3 - POWER STEERING PUMP
4 - AIR CONDITIONING COMPRESSOR
5 - VIBRATION DAMPER
6 - GENERATOR
7 - WATER PUMP

28. Install the oil filter housing bracket. Tighten the bolts to 13.8 N.m (122 in. lbs.).
29. Install the high pressure pump. Tighten bolts to 13.5 N.m (120 in. lbs.).
30. Install the belt idler pulleys (1). Tighten the bolts to 58 N.m (43 ft. lbs.).

31. Install the drive belt tensioner (2). Tighten the bolts to 58 N.m (43 ft. lbs.).
32. Install the drive belt.

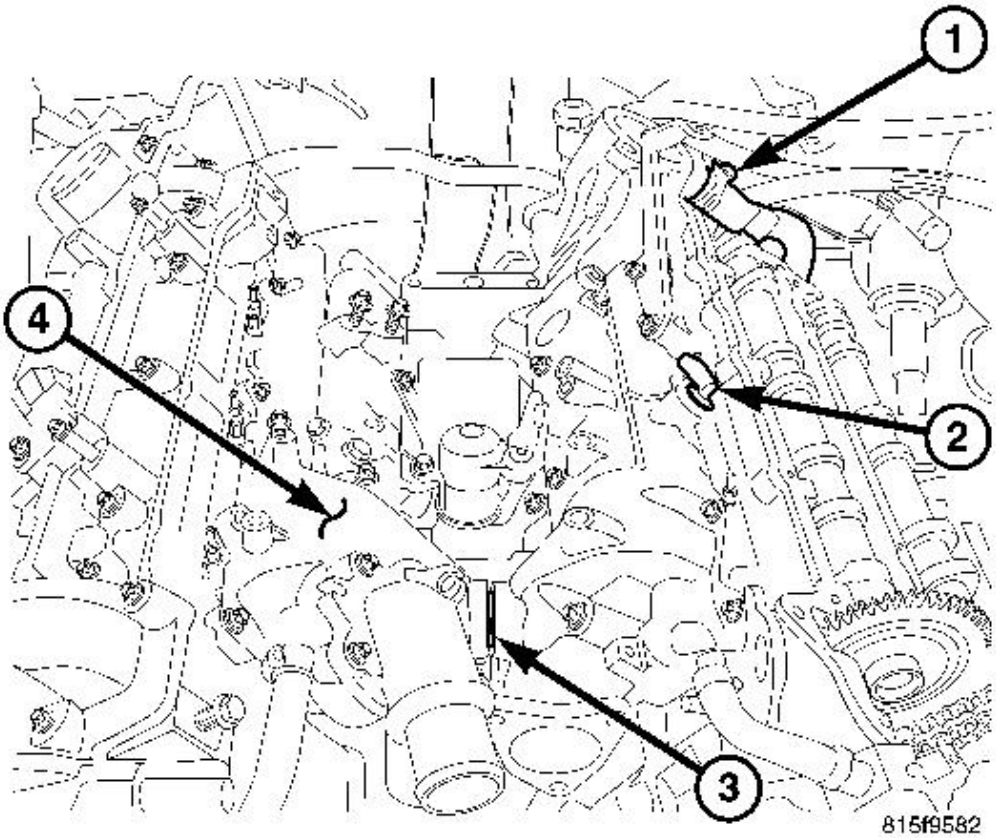

Fig. 117: EGR Coolant Pipe, Coolant Temperature Sensor, Intake Coolant Passage & Intake Manifold
Courtesy of CHRYSLER LLC

1 - EGR COOLANT PIPE
2 - COOLANT TEMPERATURE SENSOR
3 - INTAKE COOLANT PASSAGE
4 - INTAKE MANIFOLD

CAUTION: The right intake manifold upper thermostat housing bolts should be tightened to 8.4 N.m (74 in. lbs.).

33. Install the intake manifold (4). Tighten bolts to 16 N.m (142 in. lbs.), starting in the middle and tightening in a cross pattern outward until reaching the upper thermostat bolts on the right front manifold.
34. Tighten the upper thermostat bolts on the right cylinder head to 8.4 N.m (74 in.lbs.).

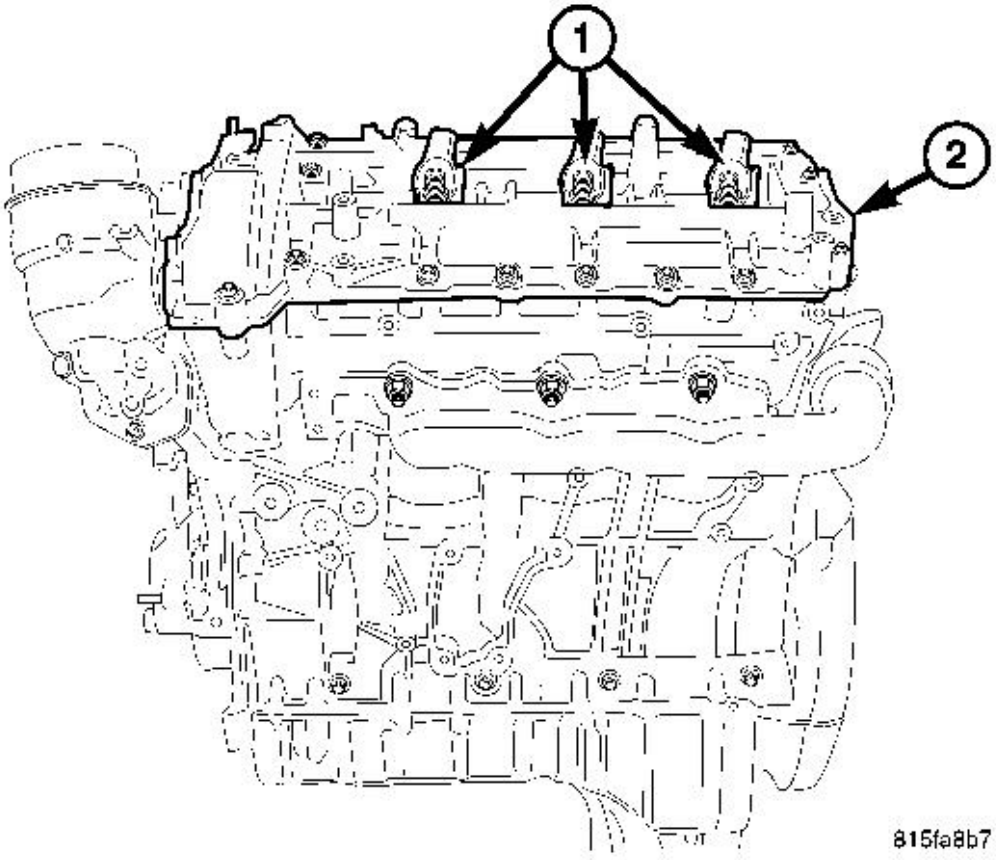

Fig. 118: Fuel Injector Body & Left Fuel Injectors
Courtesy of CHRYSLER LLC

CAUTION: The fuel injector sealing washers MUST be replaced. DO NOT use the old sealing washers or double the sealing washers.

35. Lubricate the fuel injector body (1), install the left fuel injectors (1) and new lower sealing washers.

CAUTION: The injector retaining claw bolts are torque to yield and must always be replaced.

36. Install the injector retaining claws and tighten the bolts to 7 N.m plus 180 °(62 in. lbs. plus 180°).

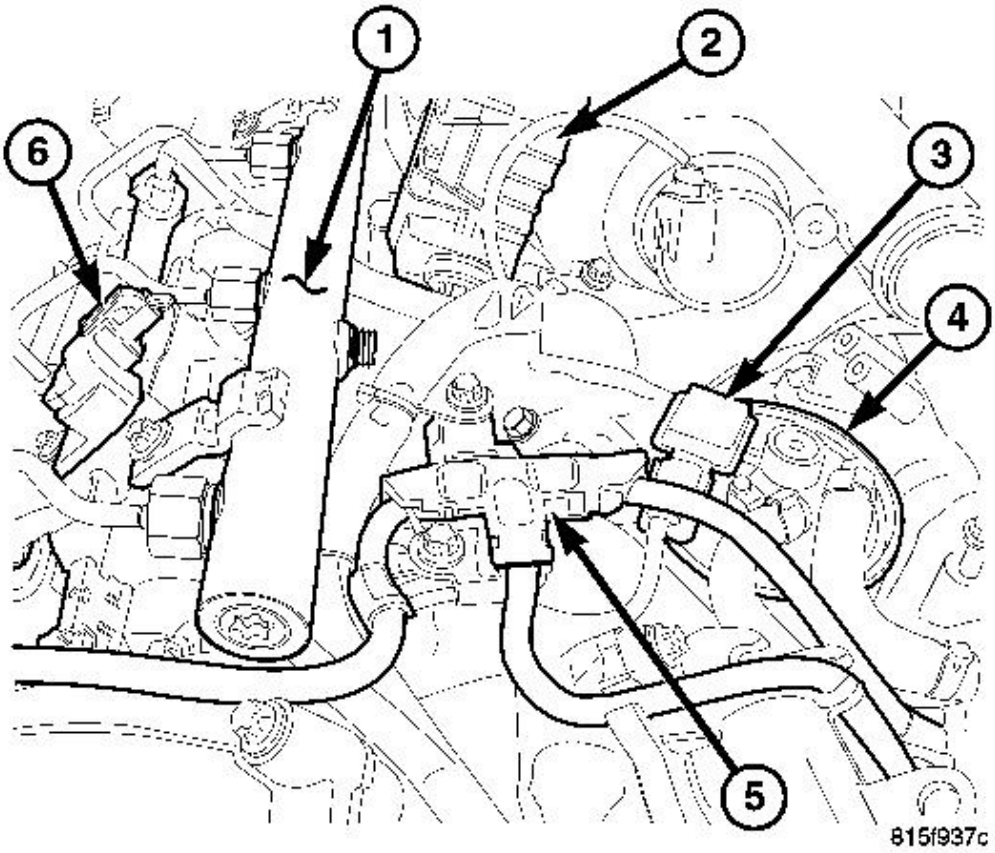

Fig. 119: Right Fuel Rail, Turbocharger Servo Motor, Water In Fuel Sensor, Fuel Filter, Return Fuel Hose Bundle & Camshaft Position Sensor
Courtesy of CHRYSLER LLC

1 - RIGHT FUEL RAIL
2 - TURBOCHARGER SERVO MOTOR
3 - WATER IN FUEL SENSOR
4 - FUEL FILTER
5 - RETURN FUEL HOSE BUNDLE
6 - CAMSHAFT POSITION SENSOR

37. Properly route and install the fuel return hoses (5) and connect them to the injectors.

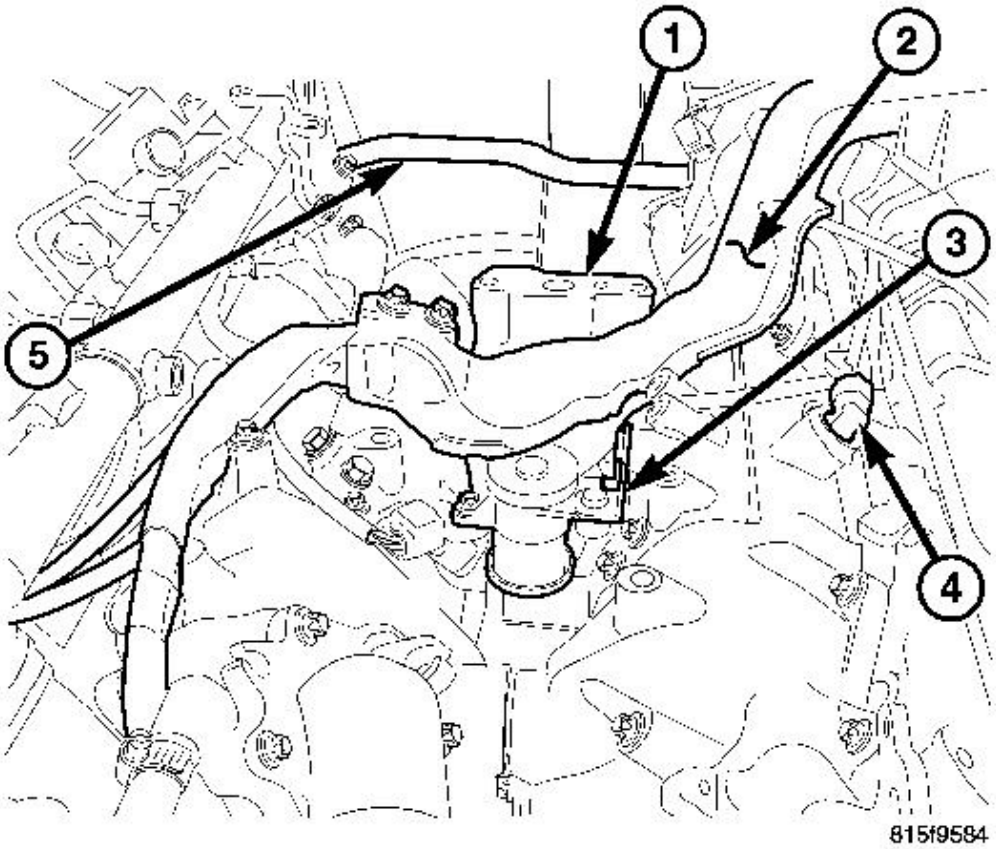

Fig. 120: Turbocharger Oil Housing Adapter, Main Engine Wiring Harness, Swirl Valve Actuator & Coolant Temperature Sensor
Courtesy of CHRYSLER LLC

1 - TURBOCHARGER OIL HOUSING Adapter
2 - MAIN ENGINE WIRING HARNESS
3 - SWIRL VALVE ACTUATOR
4 - COOLANT TEMPERATURE SENSOR

38. Properly route and connect the engine harness.

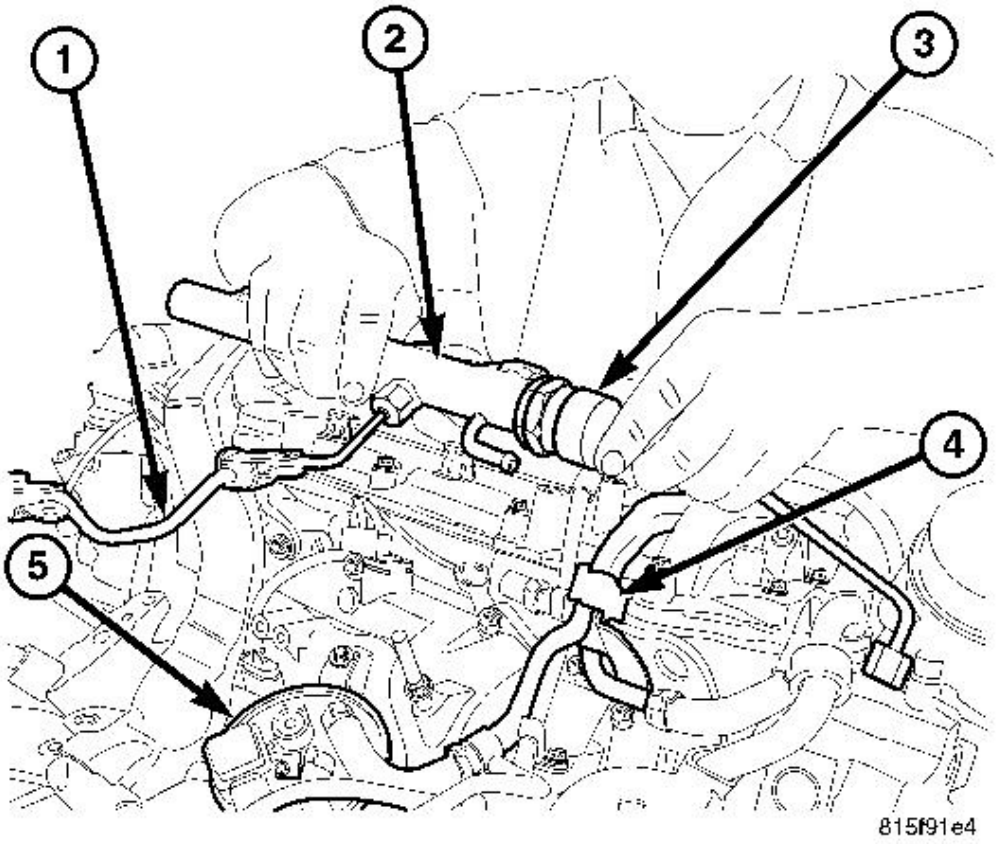

Fig. 121: Left Fuel Rail Components
Courtesy of CHRYSLER LLC

1 - FUEL RAIL TRANSFER LINE
2 - LEFT FUEL RAIL
3 - FUEL RAIL SOLENOID
4 - LOW FUEL PRESSURE SUPPLY AND RETURN LINE JUNCTION
5 - FUEL FILTER

39. Install the fuel rail (2). Tighten the bolts to 14 N.m (10 ft. lbs.).

CAUTION: Inspect the fuel lines for wear or damage, look closely around the flange area. Replace as necessary. DO NOT over tighten.

40. Install the high pressure fuel lines, including the fuel rail equalizing line. Tighten the line nuts to 27 N.m

(20 ft. lbs.)

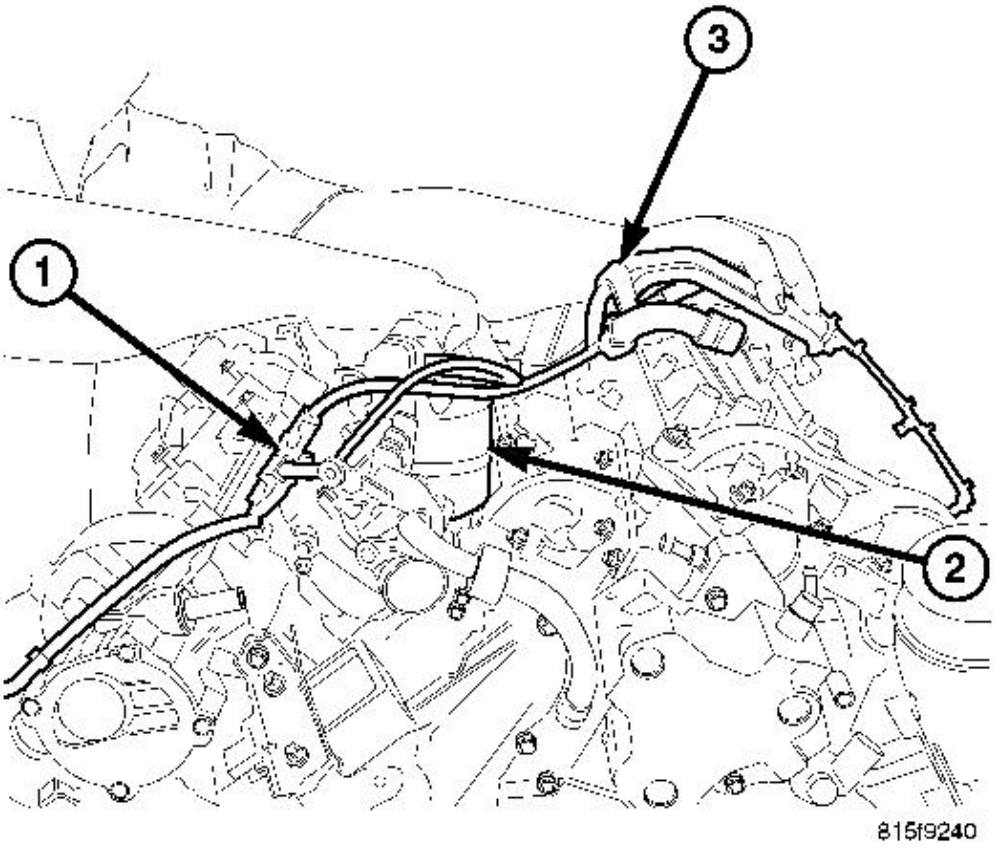

Fig. 122: Fuel Filter, Lines And Hoses
Courtesy of CHRYSLER LLC

1 - RETURN FUEL HOSE BUNDLE
2 - FUEL FILTER
3 - LOW PRESSURE FUEL SUPPLY AND RETURN PIPE

41. Install the fuel filter (2) and connect the harnesses (1) and hoses (3).

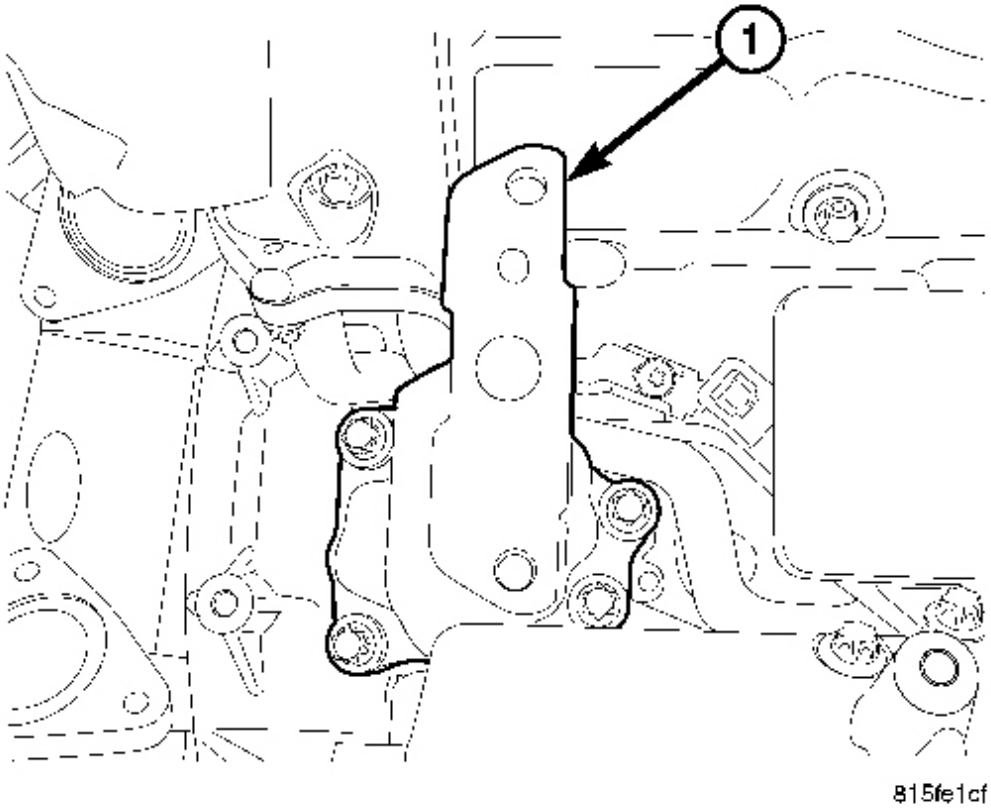

Fig. 123: Turbocharger Adapter
Courtesy of CHRYSLER LLC

1 - TURBOCHARGER Adapter
2 - SWIRL VALVE ACTUATOR

CAUTION: Care must be taken when installing the turbocharger oil housing Adapter (1). The gasket MUST be aligned properly with the oil housing passages or immediate damage to the turbocharger will occur.

42. Install the turbocharger oil housing Adapter (1) with the gasket tabs secured to the Adapter (1) Tighten bolts to 12 N.m (9 ft. lbs.).
43. Install the turbocharger. Refer to **INSTALLATION** .

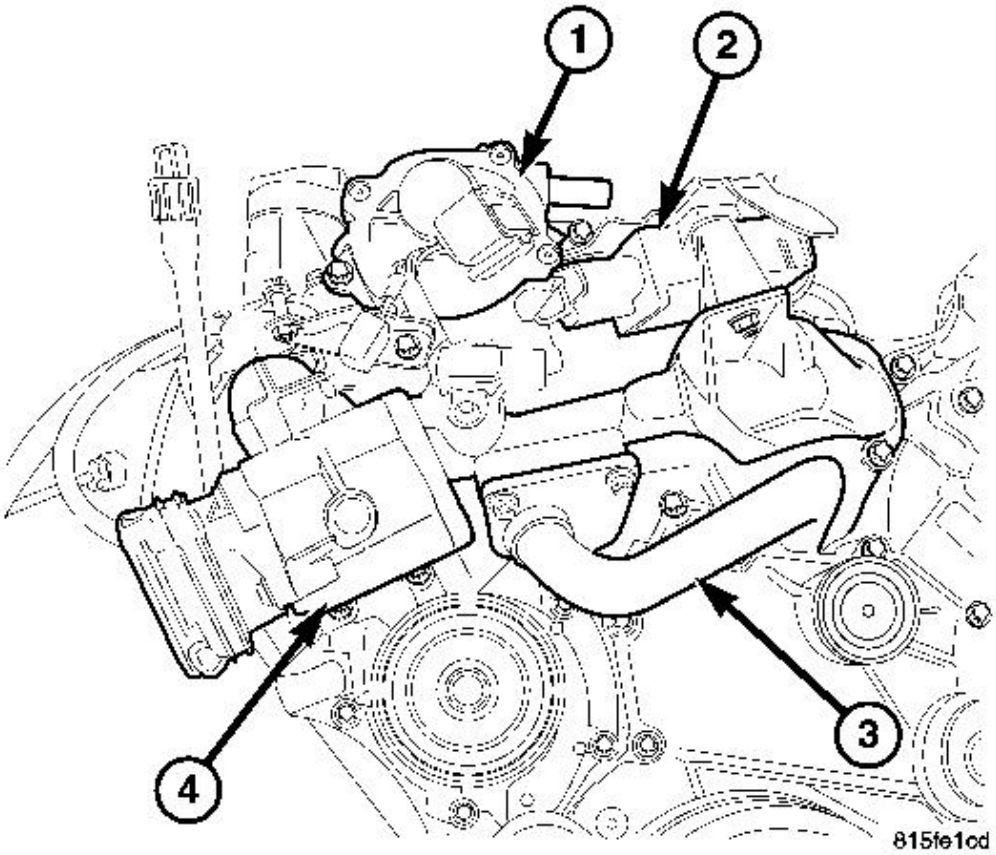

Fig. 124: Vacuum Pump, Glow Plug Relay, EGR Cooler & Air Control Valve
Courtesy of CHRYSLER LLC

1 - VACUUM PUMP
2 - GLOW PLUG RELAY
3 - EGR COOLER
4 - AIR CONTROL VALVE

44. Install the air control valve and resonator.

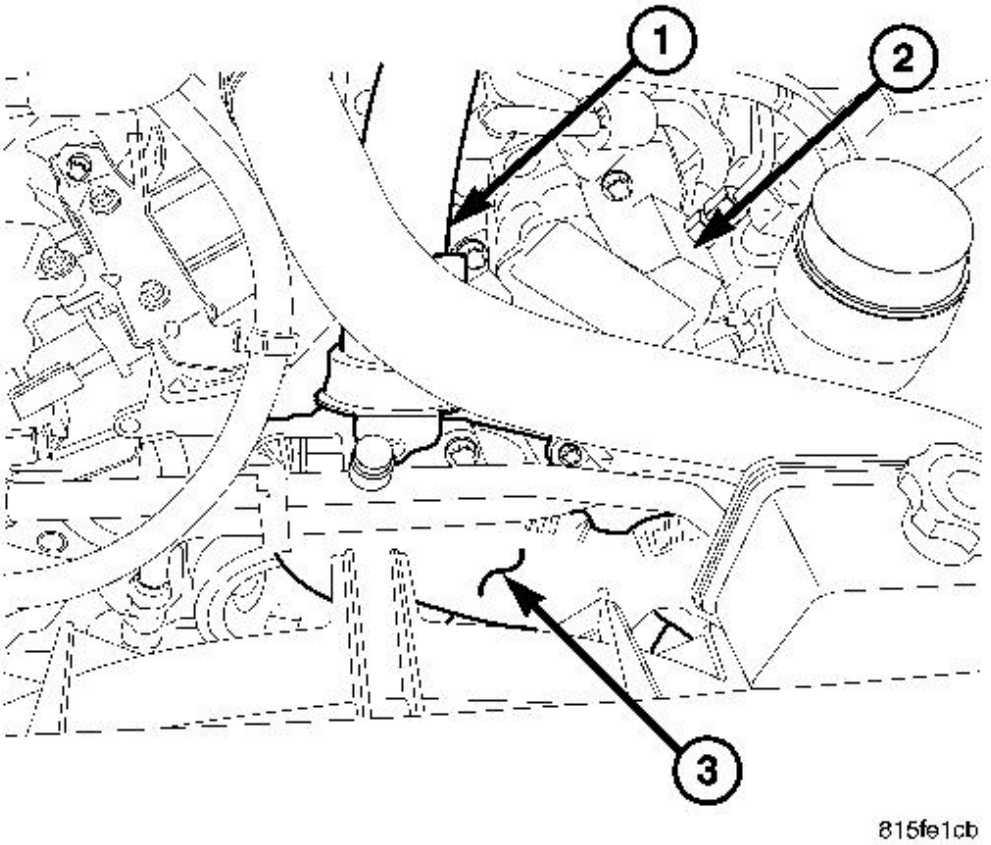

Fig. 125: Charge Air Cooler Inlet Pipe, High Pressure Injection Pump & Charge Air Cooler Inlet Resonator
Courtesy of CHRYSLER LLC

1 - CHARGE AIR COOLER INLET PIPE
2 - HIGH PRESSURE INJECTION PUMP
3 - CHARGE AIR COOLER INLET RESONATOR

45. Install the charge air cooler inlet pipe and resonator.

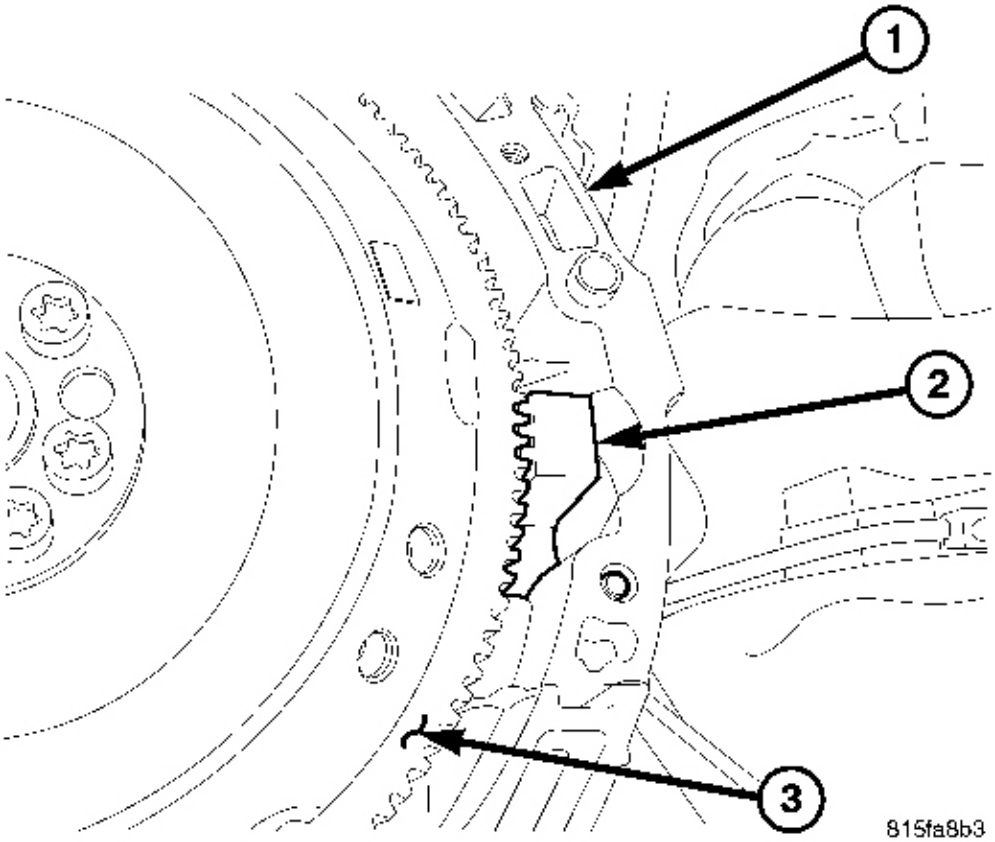

Fig. 126: Engine Block, Special Tool #9102 & Flex Plate
Courtesy of CHRYSLER LLC

1 - ENGINE BLOCK 2 - SPECIAL TOOL #9102 3 - FLEX PLATE

46. Install the cooling fan module.
47. Install the heater hose bracket and secure hoses.
48. Connect the vacuum pump supply hose.
49. Raise and support the vehicle.
50. Remove special tool #9102 crankshaft lock (2).
51. Install the starter blank.

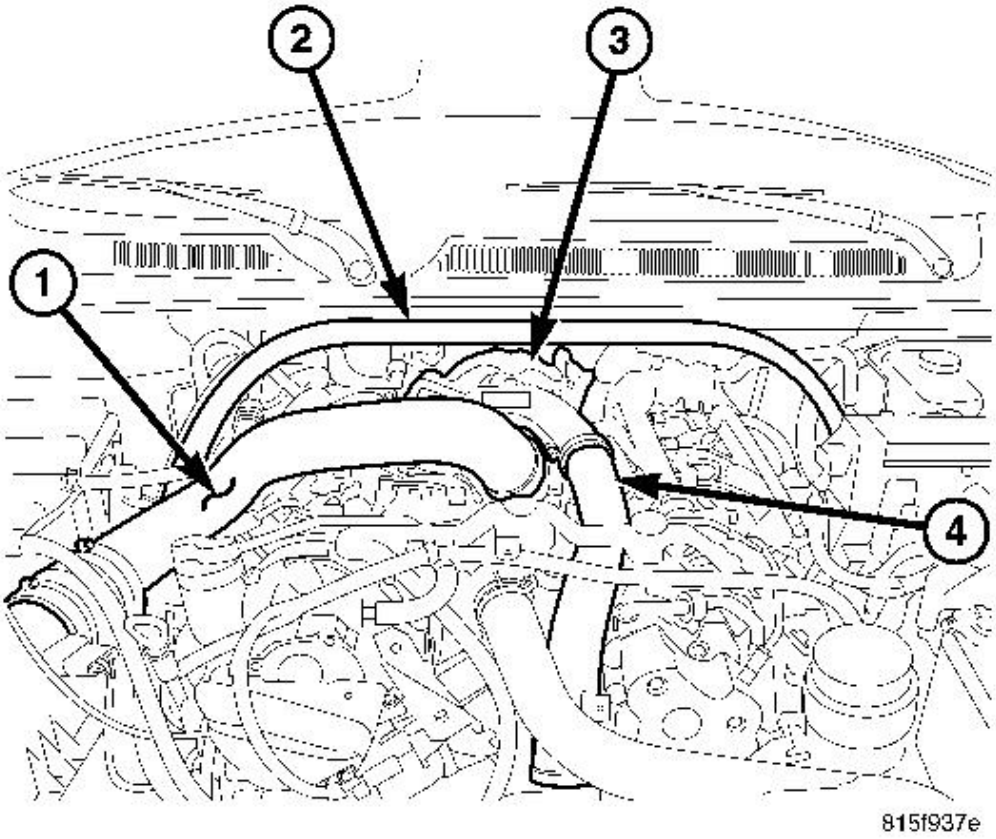

Fig. 127: Strut Tower Support, Air Cleaner Outlet Tube, Turbocharger & Charge Air Inlet Tube
Courtesy of CHRYSLER LLC

1 - AIR CLEANER OUTLET TUBE
2 - STRUT TOWER SUPPORT
3 - TURBOCHARGER
4 - CHARGE AIR INLET TUBE

52. Connect the cooling fan hydraulic lines.
53. Lower the vehicle.
54. Fill the cooling system.
55. Fill power steering system.
56. Install the strut tower support (2).
57. Connect the negative battery cable.

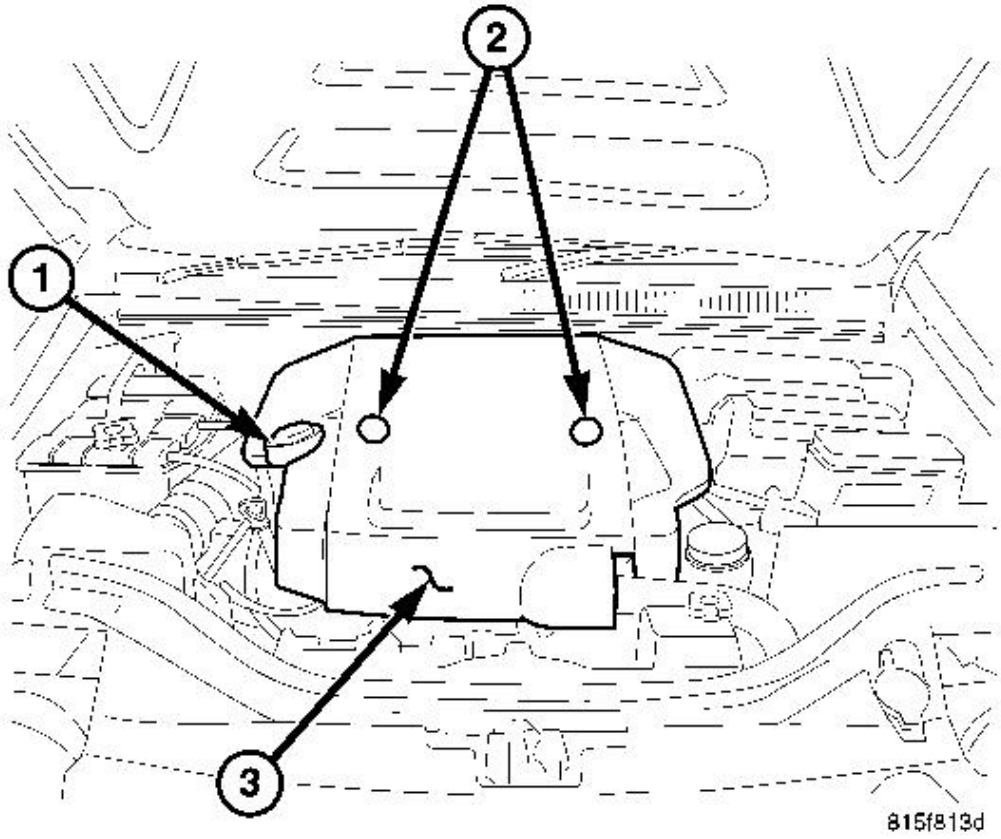

Fig. 128: Oil Filler Cap, Cover Fasteners & Engine Cover
Courtesy of CHRYSLER LLC

1 - OIL FILLER CAP
2 - COVER FASTENERS
3 - ENGINE COVER

WARNING: **High-pressure fuel lines deliver fuel under extreme pressure from the injection pump to the injectors. This maybe as high as 1350 bar (19,580 psi). Use extreme caution when inspecting for high-pressure fuel leaks. Inspect high-pressure fuel leaks with a sheet of cardboard. Wear safety goggles and adequate protective clothing when servicing fuel system. Fuel under this amount of pressure can penetrate skin causing serious or fatal injury.**

58. Start engine, allow to warm, turn engine off and inspect for leaks

59. Purge the air from the power steering system using the scan tool.
60. Install the engine cover brackets and engine cover.

CYLINDER HEAD - RIGHT

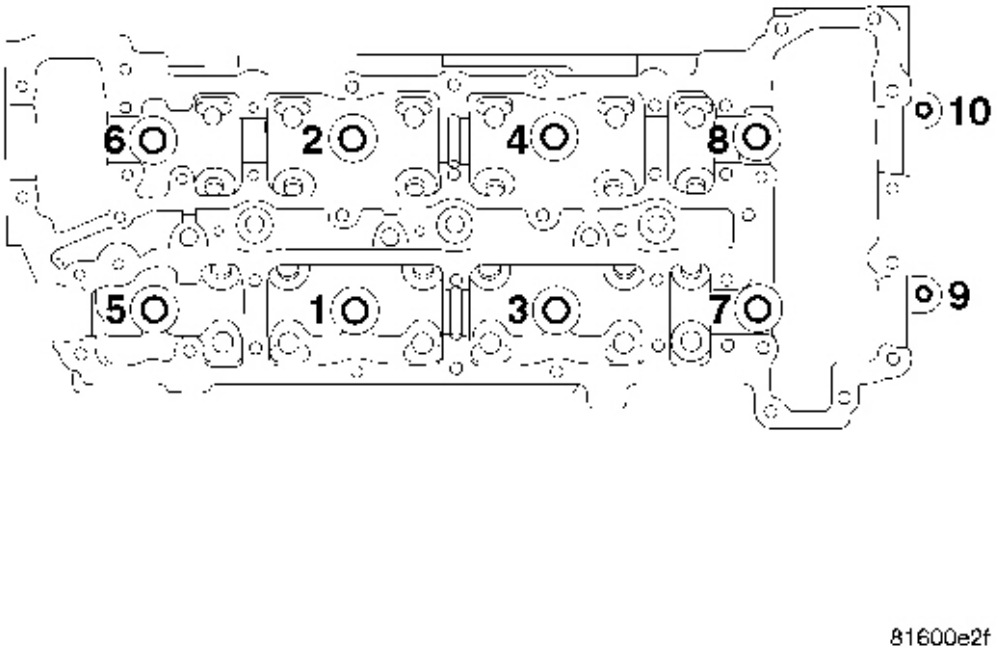

Fig. 129: Right Cylinder Head Tightening Sequence
Courtesy of CHRYSLER LLC

CAUTION: Inspect and measure all cylinder head bolt lengths. If out of specification, replace as necessary. See STANDARD PROCEDURE.

1. Clean and inspect gasket mating surfaces.
2. Position head gasket on engine block. Be sure the coolant passages align (part number should be facing up).
3. Place cylinder head on engine block.

CAUTION: Inspect and measure all cylinder head bolt lengths. If out of specification, replace as necessary. See STANDARD PROCEDURE. Do Not lubricate new cylinder head bolts. They already are coated

with an anti scuff treatment.

4. Tighten cylinder head bolts following procedure below.
   a. Tighten M12 cylinder head bolts 1 through 8, in the sequence shown to 60 N.m (44 ft. lbs.).
   b. Tighten bolts 9 and 10 to 20 N.m (177 in. lbs.).
   c. Tighten 12 mm cylinder head bolts, 1 through 8, in sequence shown, an additional 90 degrees.
   d. Recheck and tighten M8 bolts 9 and 10 to 20 N.m (177 in. lbs.).
   e. And then again, tighten M12 cylinder head bolts, 1 through 8, in sequence an additional 90 degrees.

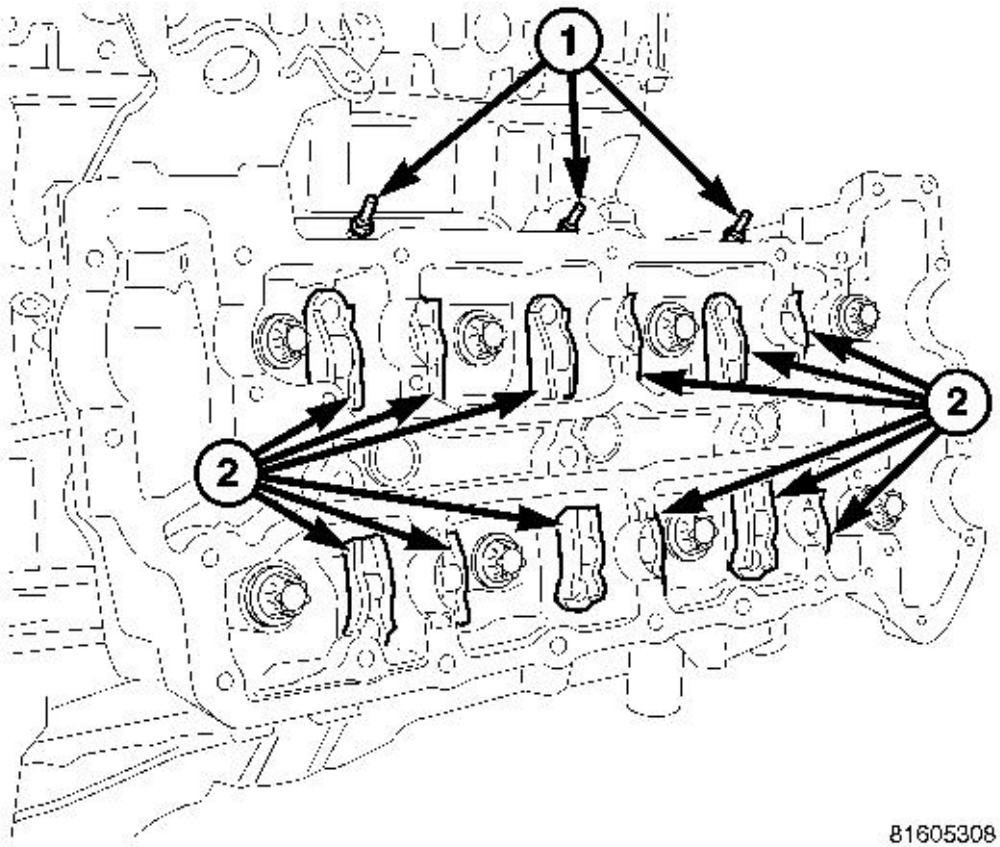

Fig. 130: Right Tappet/Camshaft Follower Assembly & Glow Plugs
Courtesy of CHRYSLER LLC

1 - GLOW PLUGS
2 - TAPPET/CAMSHAFT FOLLOWER ASSEMBLY

NOTE: **Followers and tappets assemblies must be installed in same location as removed.**

5. Install the followers (2) and tappets (2) into their original positions.
6. Install the glow plugs (1). Tighten glow plugs to 12.5 N.m (100 in. lbs.).

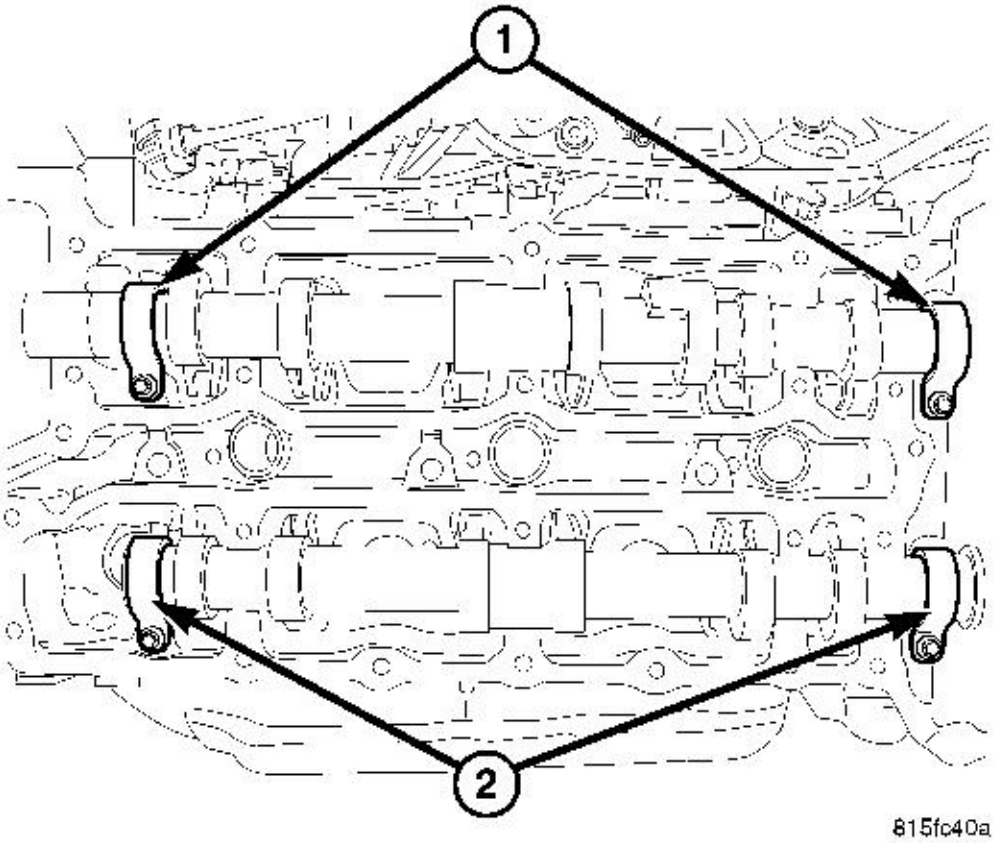

Fig. 131: Intake/Exhaust Camshaft Retainers
Courtesy of CHRYSLER LLC

1 - INTAKE CAMSHAFT RETAINERS 2 - EXHAUST CAMSHAFT RETAINERS

7. Install the right exhaust camshaft. Tighten the retaining fasteners to 8 N.m (71 in. lbs.).
8. Install the right intake camshaft. Tighten the retaining fasteners to 8 N.m (71 in. lbs.).

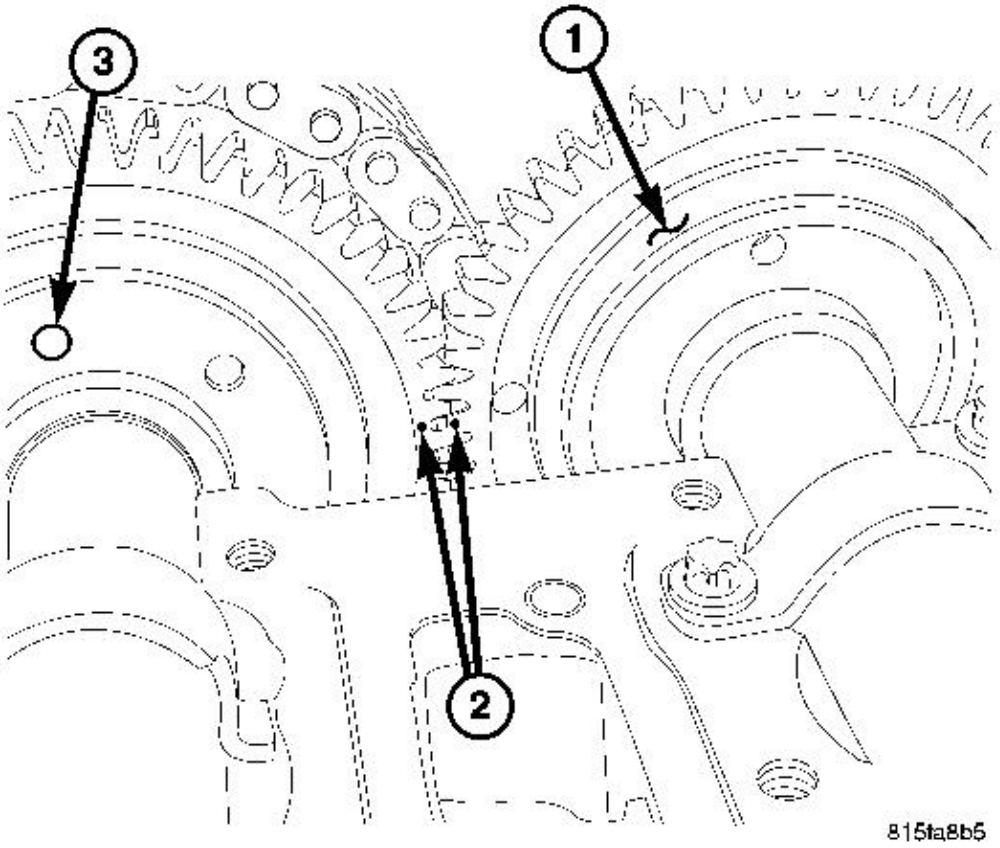

Fig. 132: Camshaft Gear Alignment
Courtesy of CHRYSLER LLC

1 - CAMSHAFT GEAR
2 - CAMSHAFT GEAR ALIGNMENT MARKS
3 - CAMSHAFT DRIVE GEAR DOWEL POSITION

NOTE: **Care must be taken to assure the proper exhaust camshaft to intake camshaft alignment.**

9. Align the camshaft marks so the alignment marks are facing each other.
10. Insert the timing chain, through the cylinder head, and on to the camshaft drive gear.

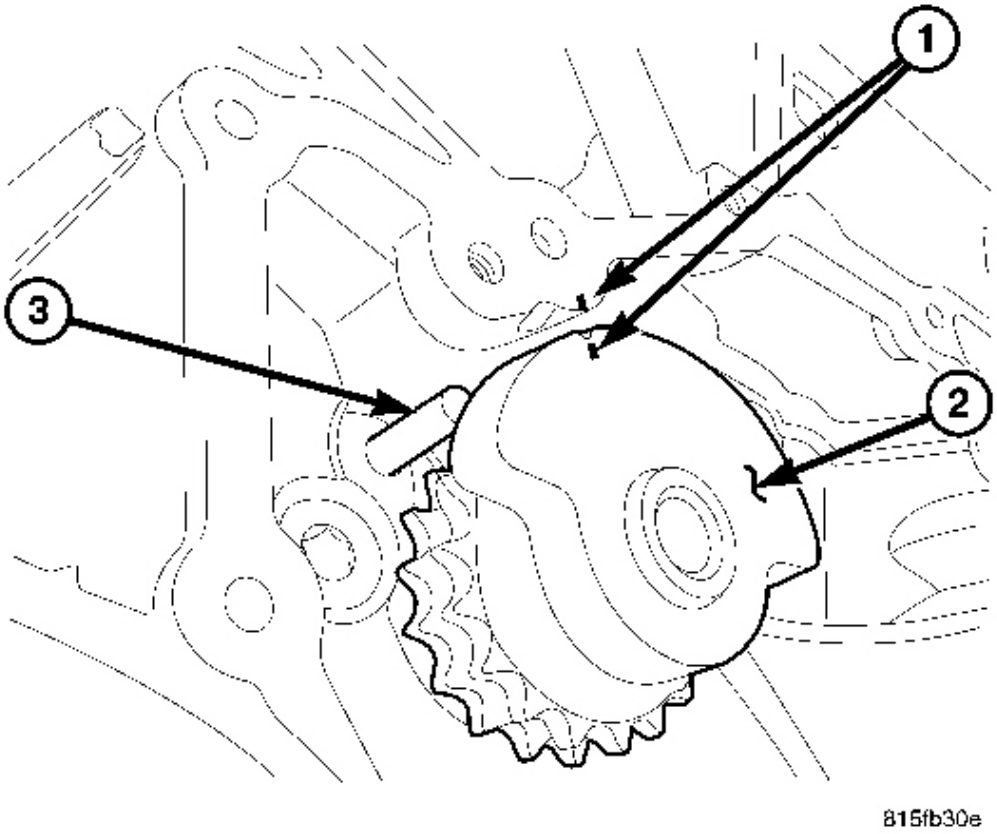

Fig. 133: Balance Shaft Indexing
Courtesy of CHRYSLER LLC

1 - PAINT MARK OR SCRIBE
2 - BALANCE SHAFT
3 - TIMING CHAIN OILING JET

11. Align the balance shaft with the scribe or paint mark.
12. Once the camshaft drive gear is mated with the timing chain, install the camshaft drive gear on to the camshaft and assure the balance shaft is aligned properly.

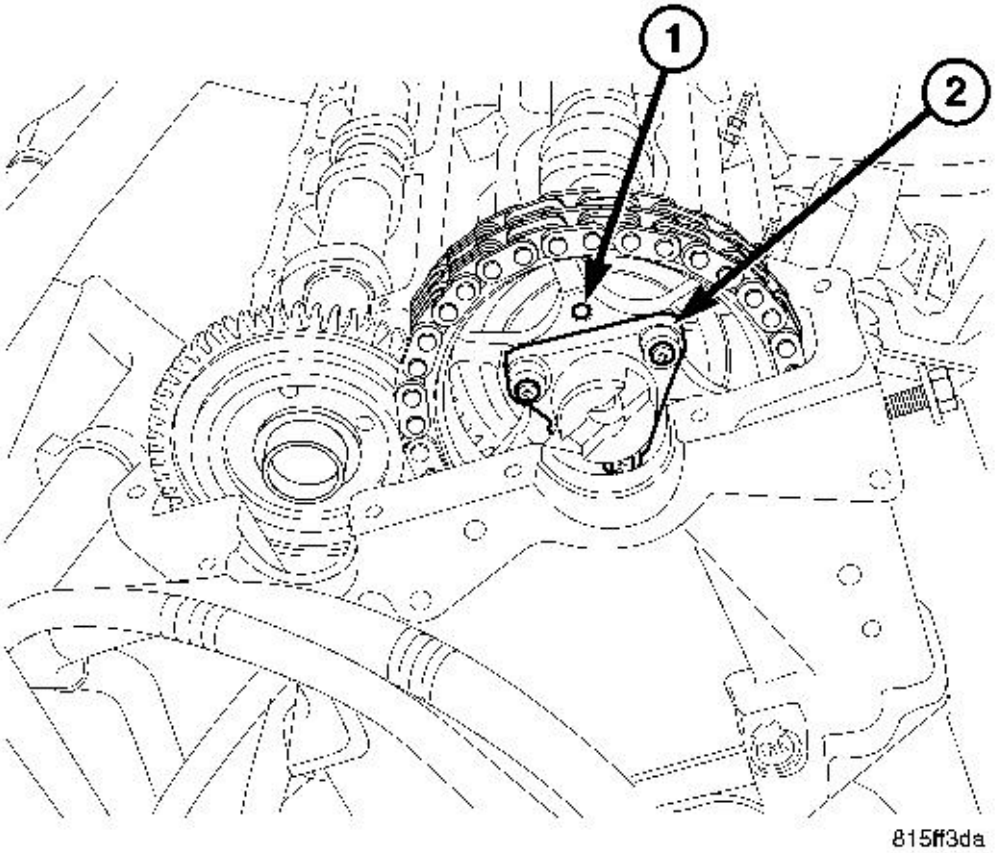

Fig. 134: Right Intake Camshaft Drive Gear Alignment Dowel & Vacuum Pump Drive
Courtesy of CHRYSLER LLC

1 - RIGHT CAMSHAFT DRIVE GEAR ALIGNMENT DOWEL
2 - VACUUM PUMP DRIVE

13. Install the upper two of the three camshaft drive gear bolts.

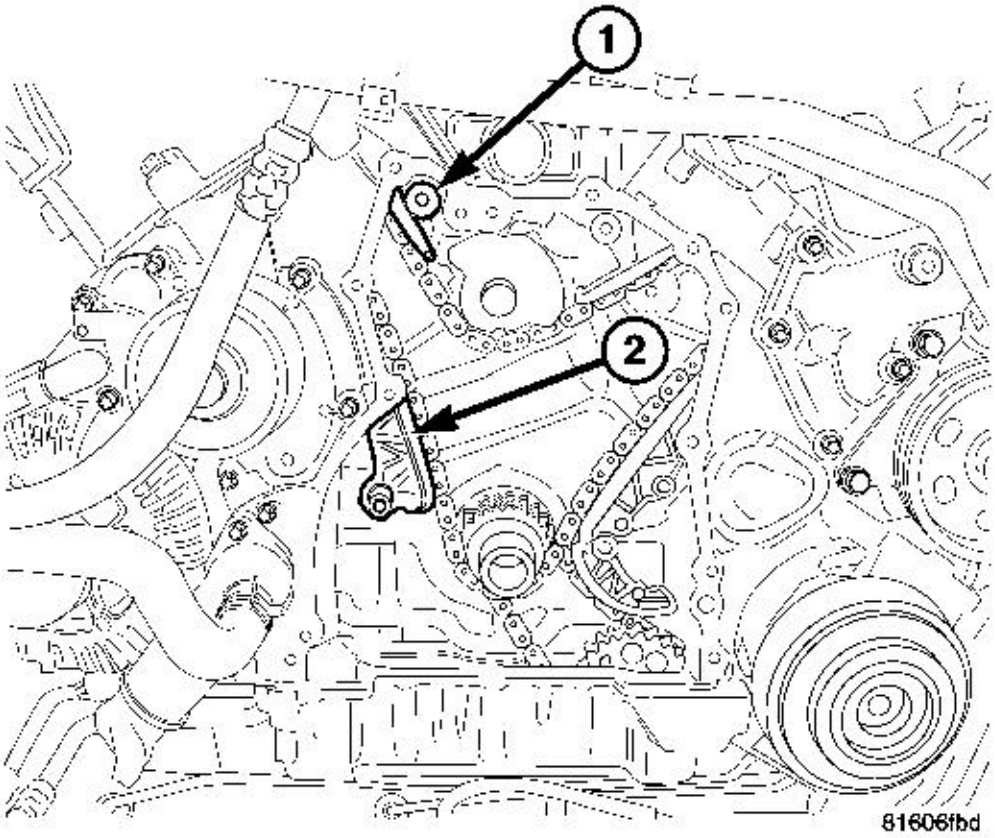

Fig. 135: Upper/Lower Timing Chain Guides
Courtesy of CHRYSLER LLC

1 - UPPER TIMING CHAIN GUIDE
2 - LOWER TIMING CHAIN GUIDE

14. Install the right lower timing chain guide (2), seat the guide pin at the top, and tighten the guide bolt to 12 N.m (9 ft. lbs.).
15. Install the right upper timing chain guide (1), seat the guide pin at the top, and tighten the guide bolt to 12N.m (9 ft. lbs.).

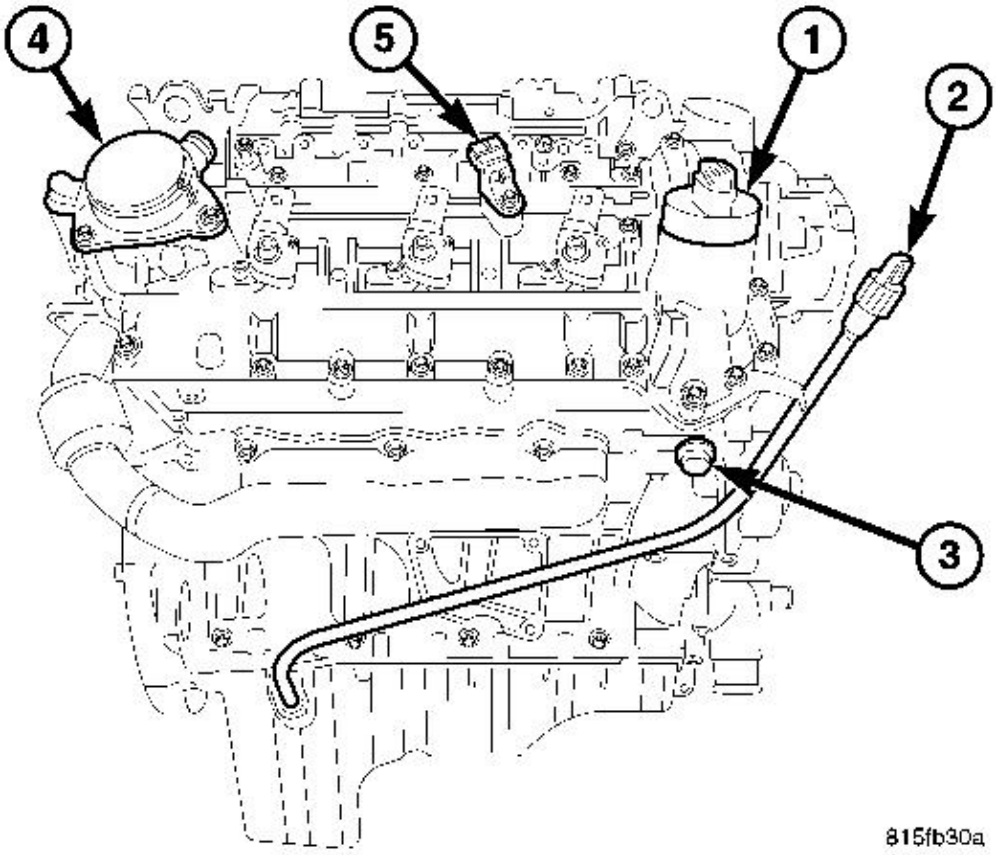

Fig. 136: Engine Oil Cap, Oil Level Indicator, Timing Chain Tensioner, Oil Separator Assembly & Camshaft Position Sensor
Courtesy of CHRYSLER LLC

1 - ENGINE OIL CAP
2 - OIL LEVEL INDICATOR
3 - TIMING CHAIN TENSIONER
4 - OIL SEPARATOR ASSEMBLY
5 - CAMSHAFT POSITION SENSOR

16. Install the timing chain tensioner (3).

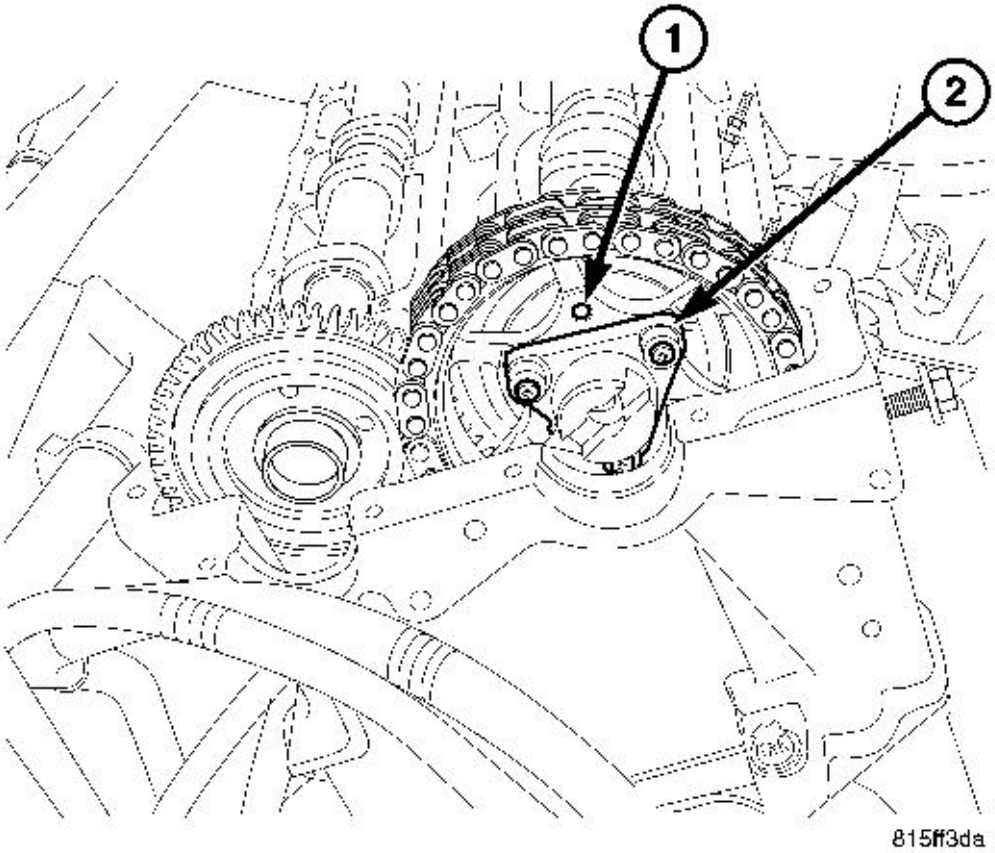

Fig. 137: Right Intake Camshaft Drive Gear Alignment Dowel & Vacuum Pump Drive
Courtesy of CHRYSLER LLC

1 - RIGHT CAMSHAFT DRIVE GEAR ALIGNMENT DOWEL
2 - VACUUM PUMP DRIVE

17. Rotate the engine by the vibration damper bolt enough to gain access to the third camshaft bolt hole.
18. Install the third camshaft drive gear retaining bolt and tighten the bolt to 18 N.m (13 ft. lbs.).

WARNING: If the camshaft, balance shaft and or crankshaft alignment marks are not aligned properly, immediate damage to the engine will occur. If the camshafts, balance shaft and or crankshaft do not align properly after rotating the engine to the original starting point, STOP and begin the alignment procedure again.

19. Rotate the engine back to TDC by the vibration damper bolt until the crankshaft, camshaft and balance shaft align TDC again.
20. Tighten the two remaining camshaft drive gear bolts to 18 N.m (13 ft. lbs.).

WARNING: Check that all the timing chain fits properly on all the timing gears. Failure to do so will result in immediate engine damage.

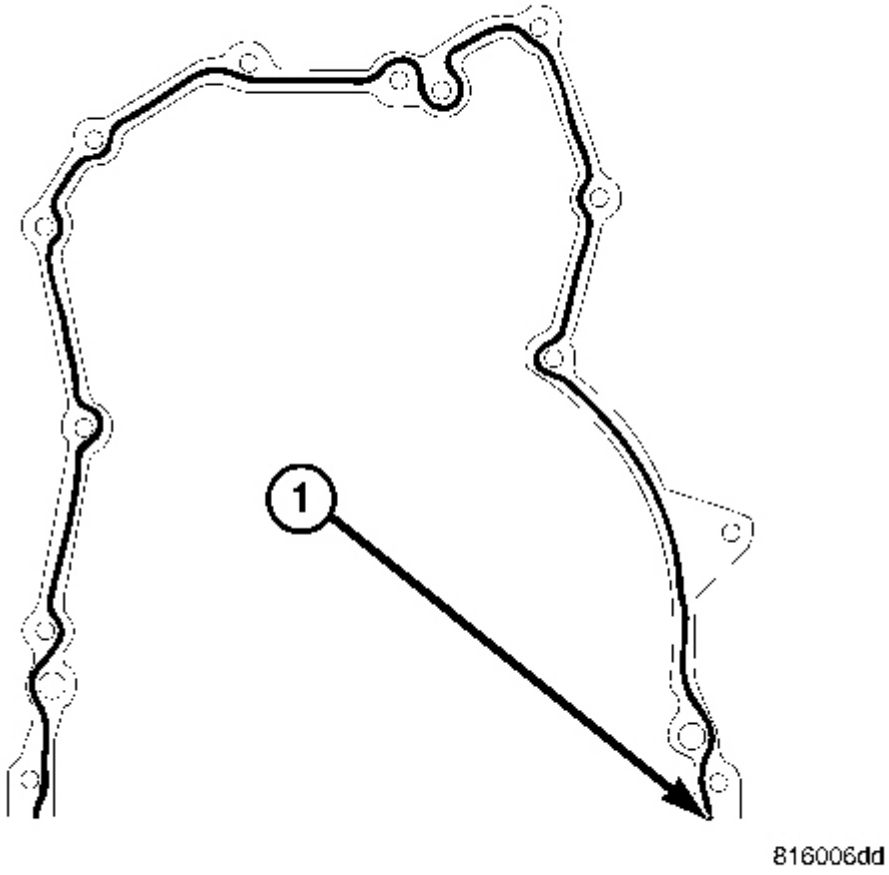

Fig. 138: Timing Cover Sealing
Courtesy of CHRYSLER LLC

1 - 1.5MM BEAD OF MOPAR ENGINE SEALANT RTV

21. Add a 1.5 mm continuous bead of Mopar Engine Sealant RTV (1) to the timing chain cover and the front

portion of the oil pan, then install the timing chain cover. Tighten the bolts to 8.5 N.m (74 in. lbs.).

22. Raise and support the vehicle.

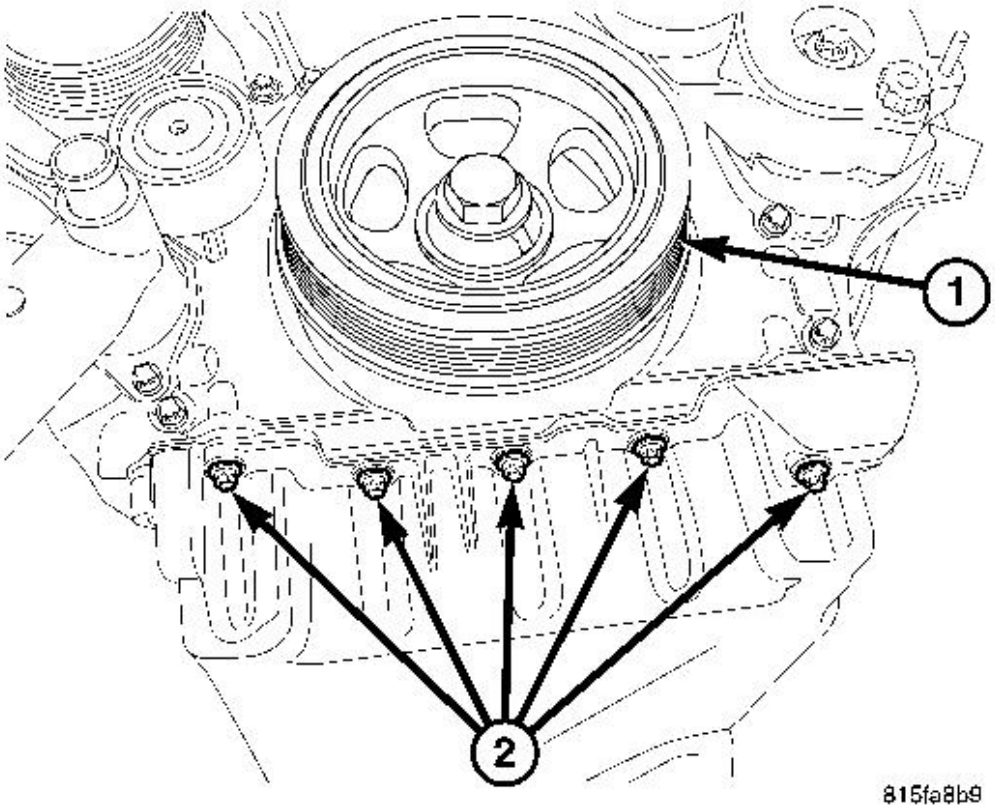

Fig. 139: Vibration Damper & Front Oil Pan Bolts
Courtesy of CHRYSLER LLC

1 - VIBRATION DAMPER
2 - OIL PAN BOLTS

23. Install the 5 front oil pan (2) to timing cover bolts. Tighten the bolts to 20 N.m (177 in. lbs.).

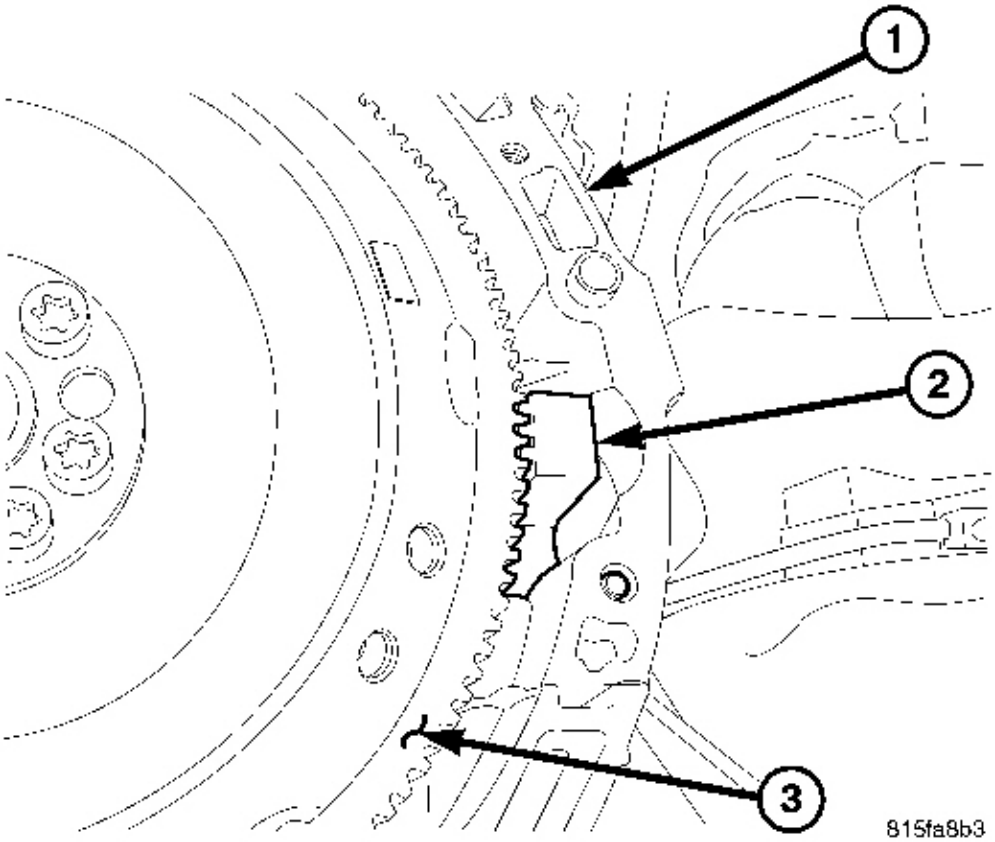

Fig. 140: Engine Block, Special Tool #9102 & Flex Plate
Courtesy of CHRYSLER LLC

1 - ENGINE BLOCK 2 - SPECIAL TOOL #9102 3 - FLEX PLATE

24. Install special tool # 9102 crankshaft lock (2).
25. Lower the vehicle.
26. Install the vibration damper. Tighten the bolts to 200 N.m (148 ft. lbs.). and then an additional 90°.

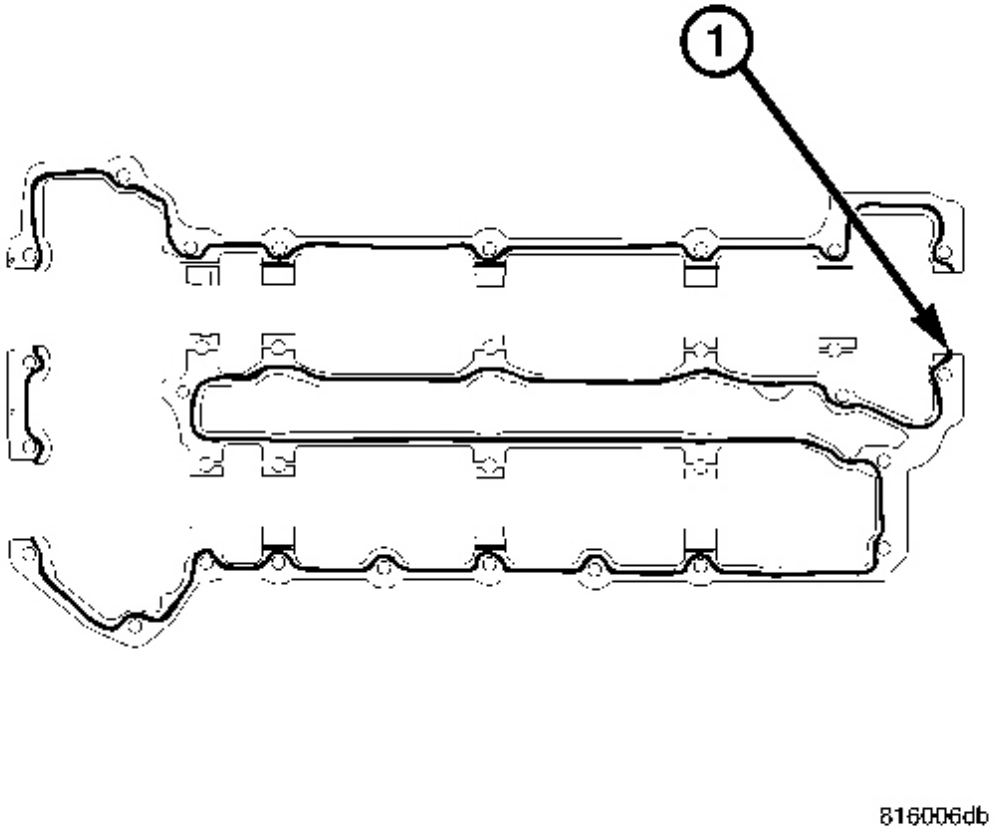

Fig. 141: Applying Cylinder Head Cover Sealant
Courtesy of CHRYSLER LLC

1 - 1.5 MM MOPAR ENGINE SEALANT RTV

NOTE: Care must be taken not to get any engine sealer on the camshaft journals.

27. Add a 1.5 mm continuous bead of Mopar Engine Sealant RTV (1) to the cylinder head cover, then install the right cylinder head cover along with a new camshaft seal.

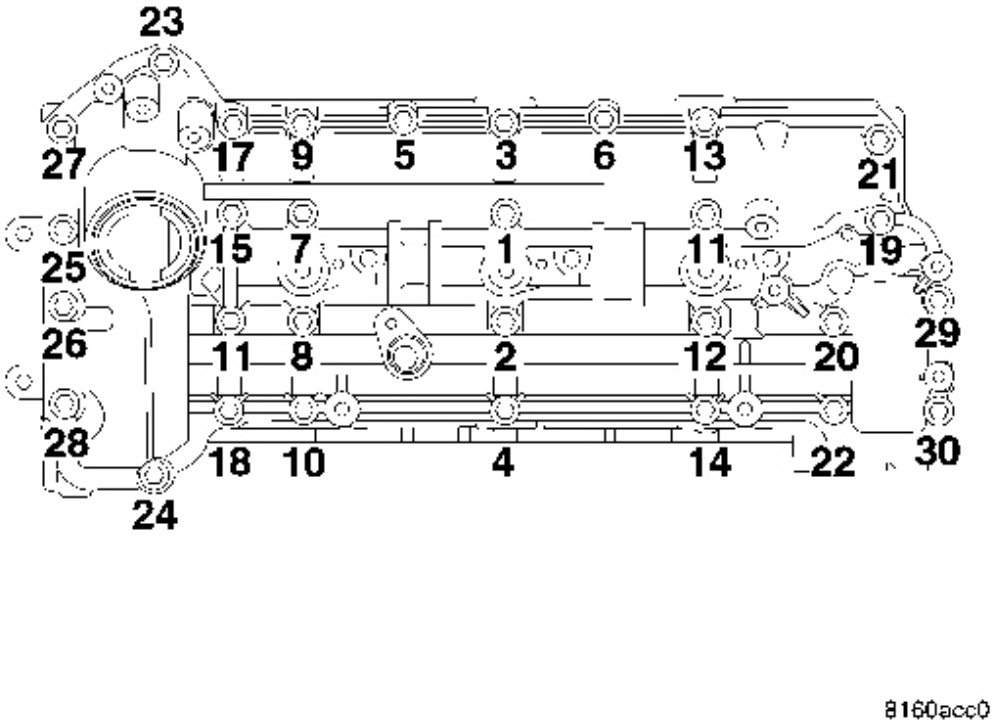

Fig. 142: Right Cylinder Head Cover Bolt Tightening Sequence
Courtesy of CHRYSLER LLC

28. Tighten the bolts in three stages following the sequence provided. First to 4 N.m (35 in. lbs.), then to 6 N.M (53 in. lbs.) and then to 8.5 N.m (75 in. lbs.).

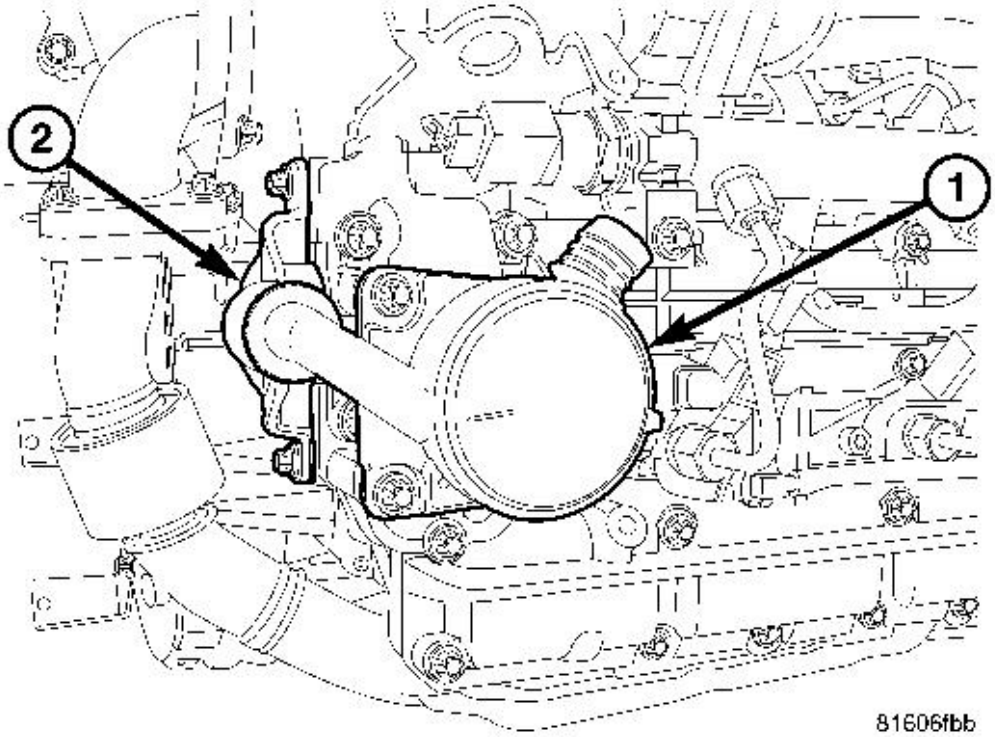

Fig. 143: Oil Separator Housing & Adapter
Courtesy of CHRYSLER LLC

1 - OIL SEPARATOR HOUSING
2 - OIL SEPARATOR HOUSING Adapter

29. Install the oil separator (1) and housing Adapter (2) with new camshaft seal. Tighten the bolts to 11 N.m (97 in. lbs.). See **Fig. 143**.

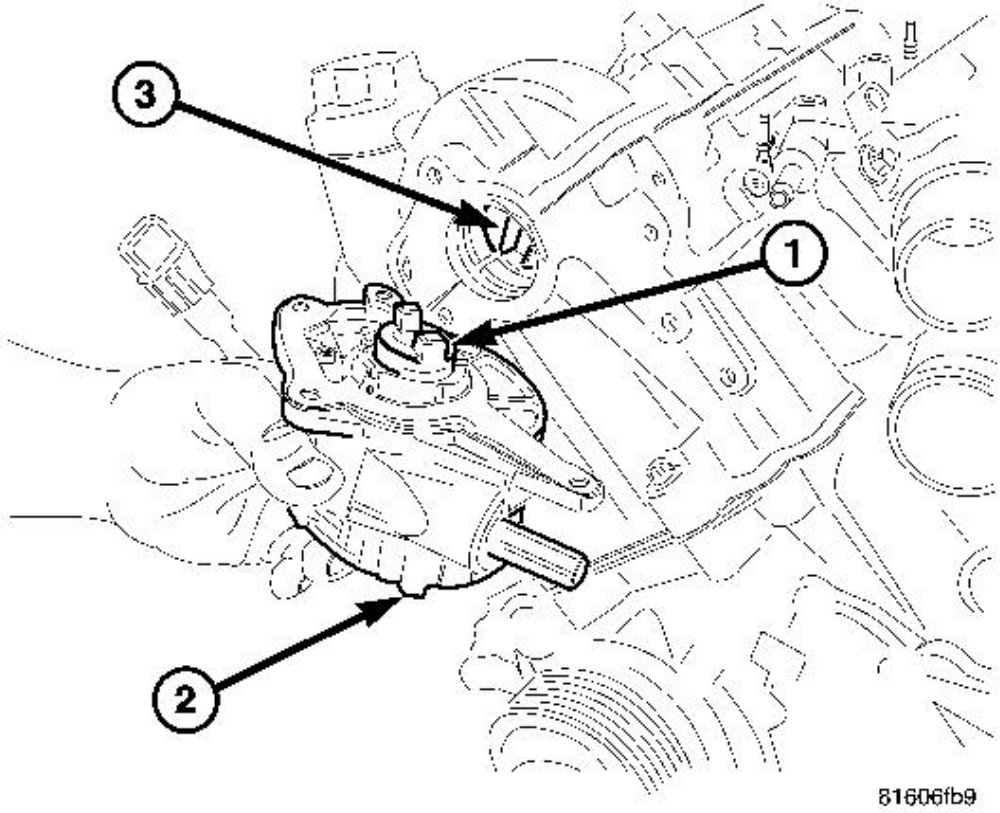

Fig. 144: Vacuum Pump Gear, Vacuum Pump & Right Intake Camshaft Drive Gear
Courtesy of CHRYSLER LLC

1 - VACUUM PUMP GEAR
2 - VACUUM PUMP
3 - RIGHT INTAKE CAMSHAFT DRIVE GEAR

30. Align the pump drive gear (1) with the camshaft drive gear (3) and install the vacuum pump (2) with new gasket. Tighten bolts to 9 N.m (7 ft. lbs.).

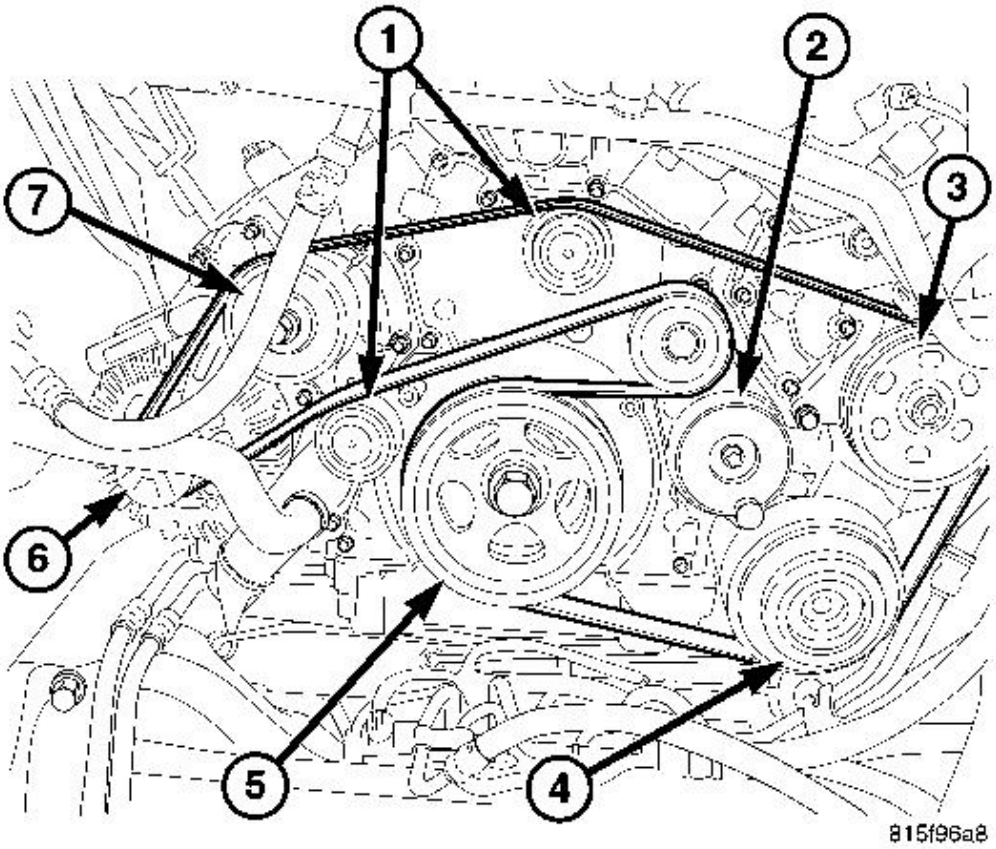

Fig. 145: Accessory Drive Belt Routing
Courtesy of CHRYSLER LLC

1 - IDLER PULLEYS
2 - DRIVE BELT TENSIONER
3 - POWER STEERING PUMP
4 - AIR CONDITIONING COMPRESSOR
5 - VIBRATION DAMPER
6 - GENERATOR
7 - WATER PUMP

31. Install the belt idler pulleys (1) Tighten the bolts to 58 N.m (43 ft. lbs.).
32. Install the accessory drive belt tensioner (2). Tighten the bolts to 58 N.m (43 ft. lbs.).
33. Install the accessory drive belt.

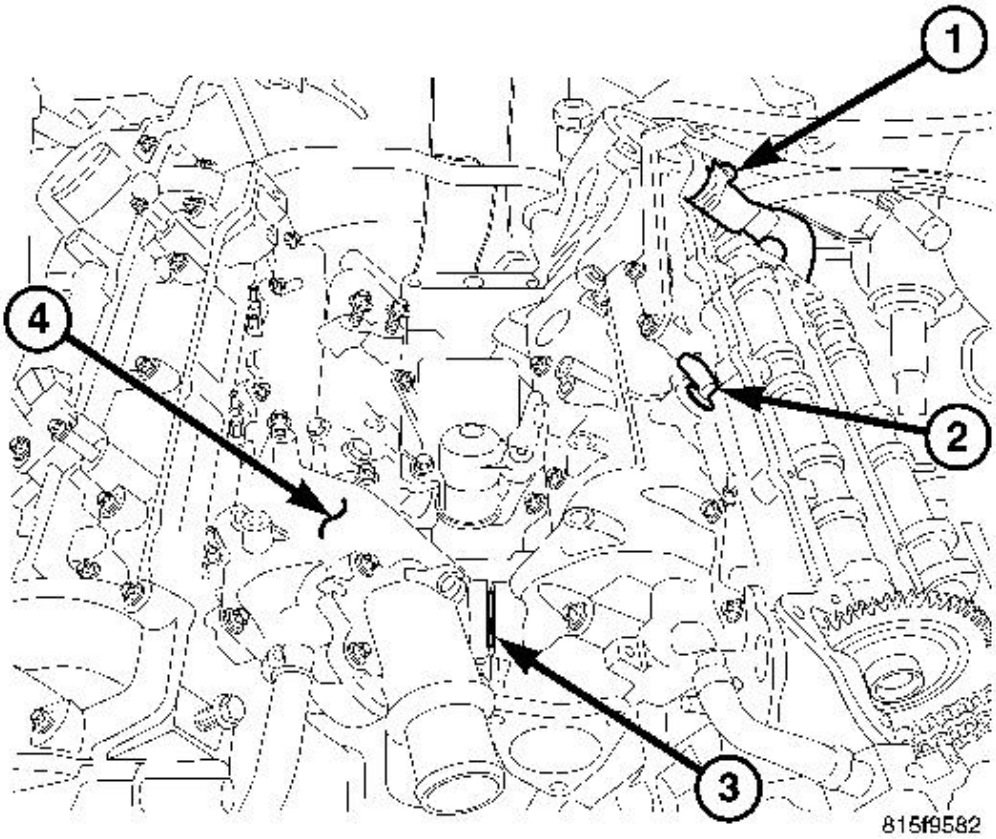

Fig. 146: EGR Coolant Pipe, Coolant Temperature Sensor, Intake Coolant Passage & Intake Manifold
Courtesy of CHRYSLER LLC

1 - EGR COOLANT PIPE
2 - COOLANT TEMPERATURE SENSOR
3 - INTAKE COOLANT PASSAGE
4 - INTAKE MANIFOLD

CAUTION: The right intake manifold upper thermostat housing bolts should be tightened to 8.5 N.m (74 in. lbs.).

34. Install the intake manifold (4). Tighten bolts to 16 N.m (142 in. lbs.), starting in the middle and tightening in a cross pattern outward until reaching the upper thermostat bolts on the right front manifold.
35. Tighten the upper thermostat bolts on the right cylinder head to 8.5 N.m (74 in.lbs.).

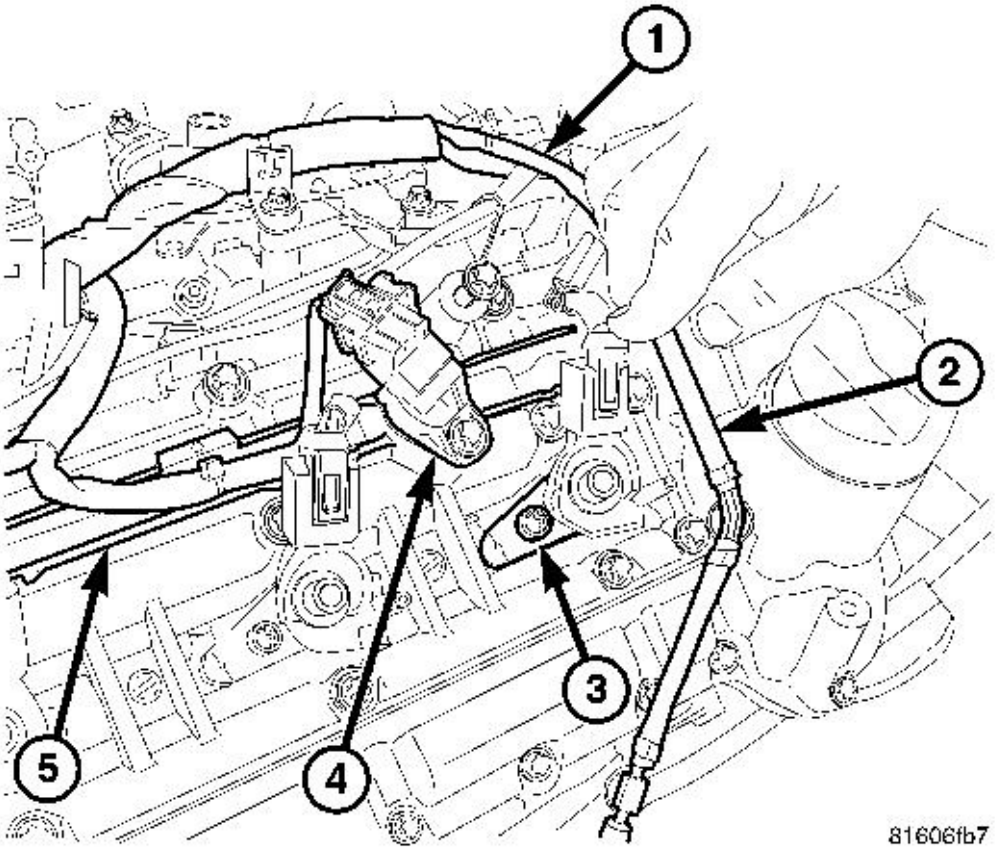

Fig. 147: Fuel Injector, Harness, Camshaft Position Sensor And Return Hose
Courtesy of CHRYSLER LLC

1 - MAIN ENGINE WIRING HARNESS
2 - RIGHT FUEL INJECTOR FUEL RETURN HOSE
3 - FUEL INJECTOR RETAINING
4 - CAMSHAFT POSITION SENSOR
5 - ENGINE HARNESS ROUTING PATH

CAUTION: The fuel injector sealing washers MUST be replaced. DO NOT use the old sealing washers or double the sealing washers. DO NOT apply injector body lubricant near the injector nozzles.

36. Lubricate the fuel injector body, install the right fuel injectors and new sealing washers.

CAUTION: The fuel injector retaining claw bolts are torque to yield and must always be replaced. Refer to WARNING .

37. Install the injector retaining claws (3) and tighten the bolts to 7 N.m, plus 180° (62 in. lbs, plus 180°).
38. Properly route and install the fuel return hoses (2) and connect them to the injectors.
39. Properly route and connect the engine harness (1).

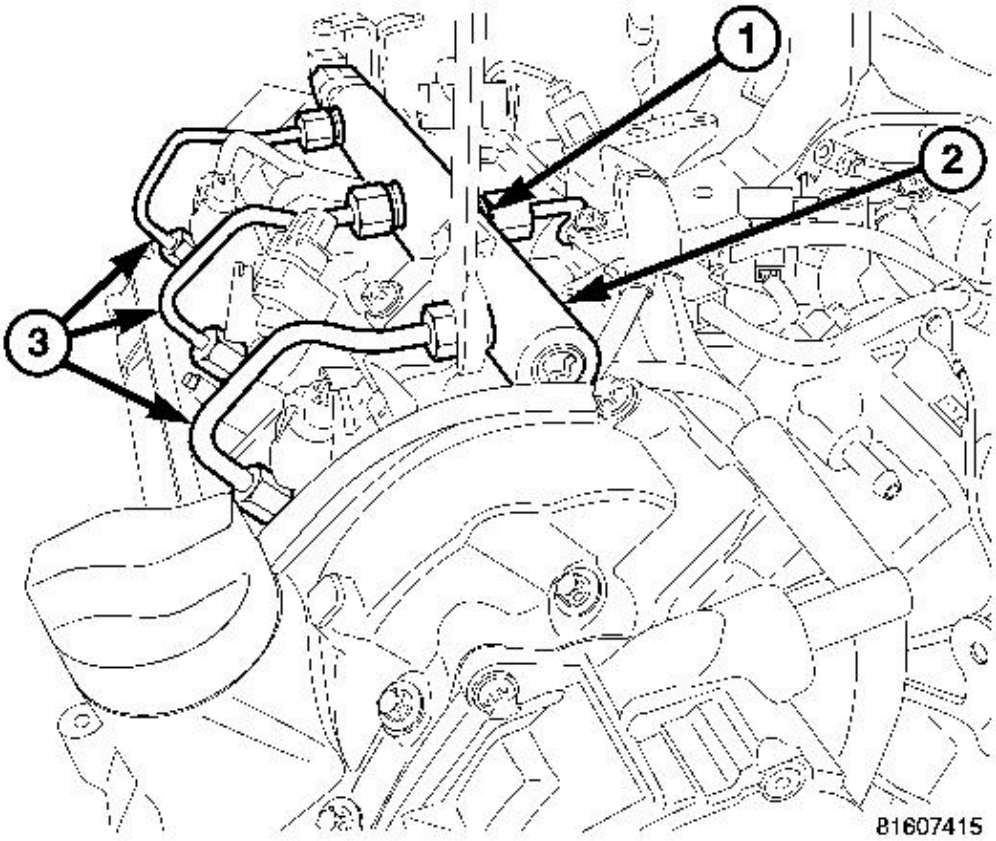

Fig. 148: Fuel Rail Transfer Line, Right Fuel Rail & High Pressure Fuel Lines
Courtesy of CHRYSLER LLC

1 - FUEL RAIL TRANSFER LINE
2 - RIGHT FUEL RAIL
3 - HIGH PRESSURE FUEL LINES

40. Install the fuel rail (2). Tighten the bolts to 27 N.m (20 ft. lbs.).

CAUTION: Inspect the fuel lines for wear or damage, look closely around the flange area. Replace as necessary. DO NOT over tighten.

41. Install the high pressure fuel lines (3), including the fuel rail transfer line (1). Tighten the line nuts to 33 N.m (24 ft. lbs.).
42. Install the fuel filter and connect the harnesses and hoses using Fuel Line Pliers 9539 Hose Clamp pliers.

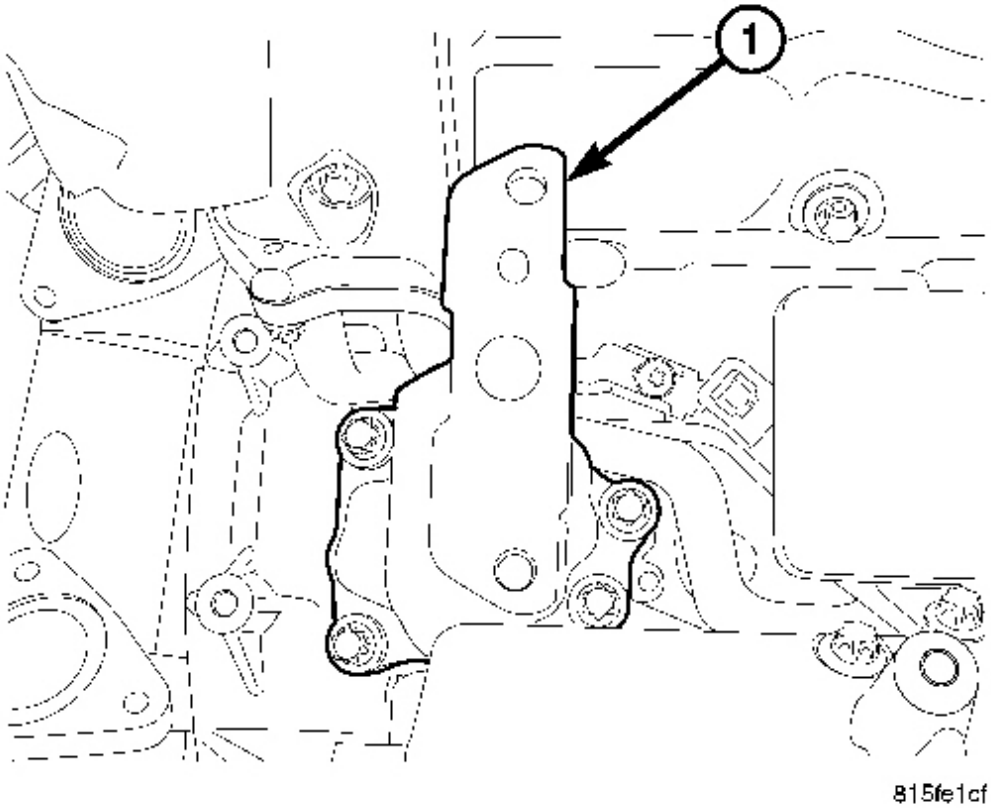

Fig. 149: Turbocharger Adapter
Courtesy of CHRYSLER LLC

1 - TURBOCHARGER Adapter
2 - SWIRL VALVE ACTUATOR

CAUTION: Care must be taken when installing the turbocharger oil housing Adapter. The gasket MUST be aligned properly with the oil housing

passages or immediate damage to the turbocharger will occur.

43. Install the turbocharger oil housing Adapter with the gasket tabs secured to the Adapter. Tighten bolts to 12 N.m (9 ft. lbs.).
44. Install the turbocharger. Refer to **INSTALLATION** .

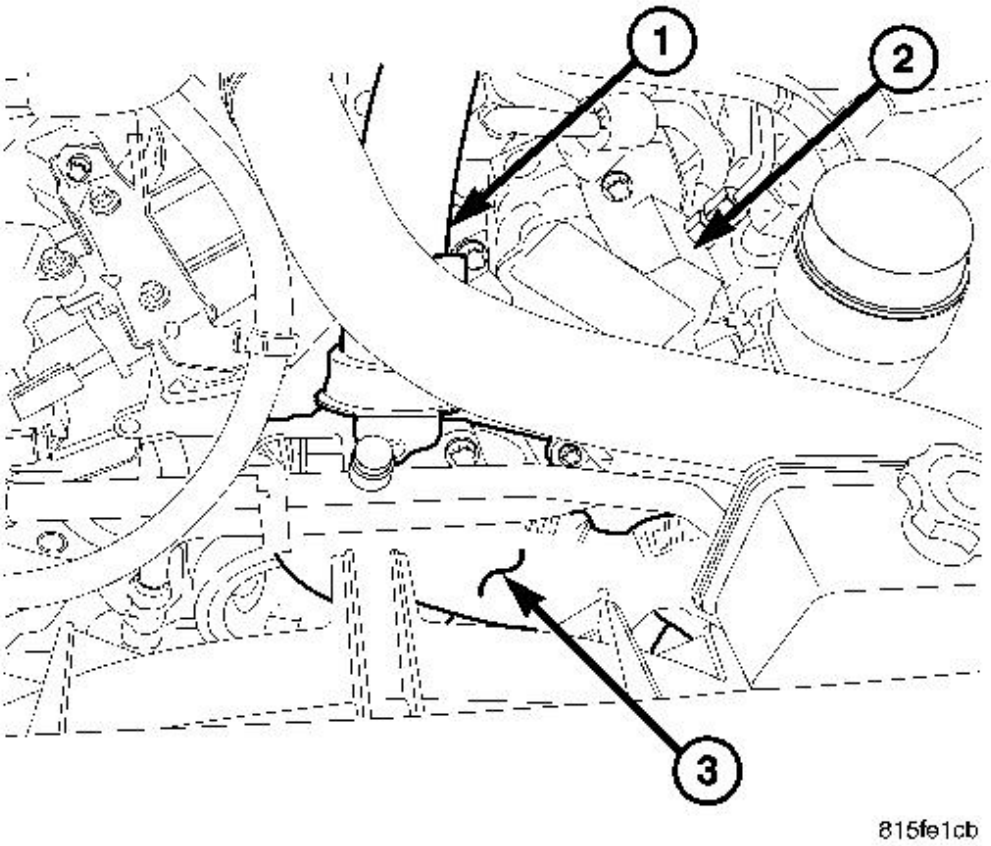

Fig. 150: Charge Air Cooler Inlet Pipe, High Pressure Injection Pump & Charge Air Cooler Inlet Resonator
Courtesy of CHRYSLER LLC

1 - CHARGE AIR COOLER INLET PIPE
2 - HIGH PRESSURE INJECTION PUMP
3 - CHARGE AIR COOLER INLET RESONATOR

45. Install the charge air inlet pipe (1) and resonator (3).

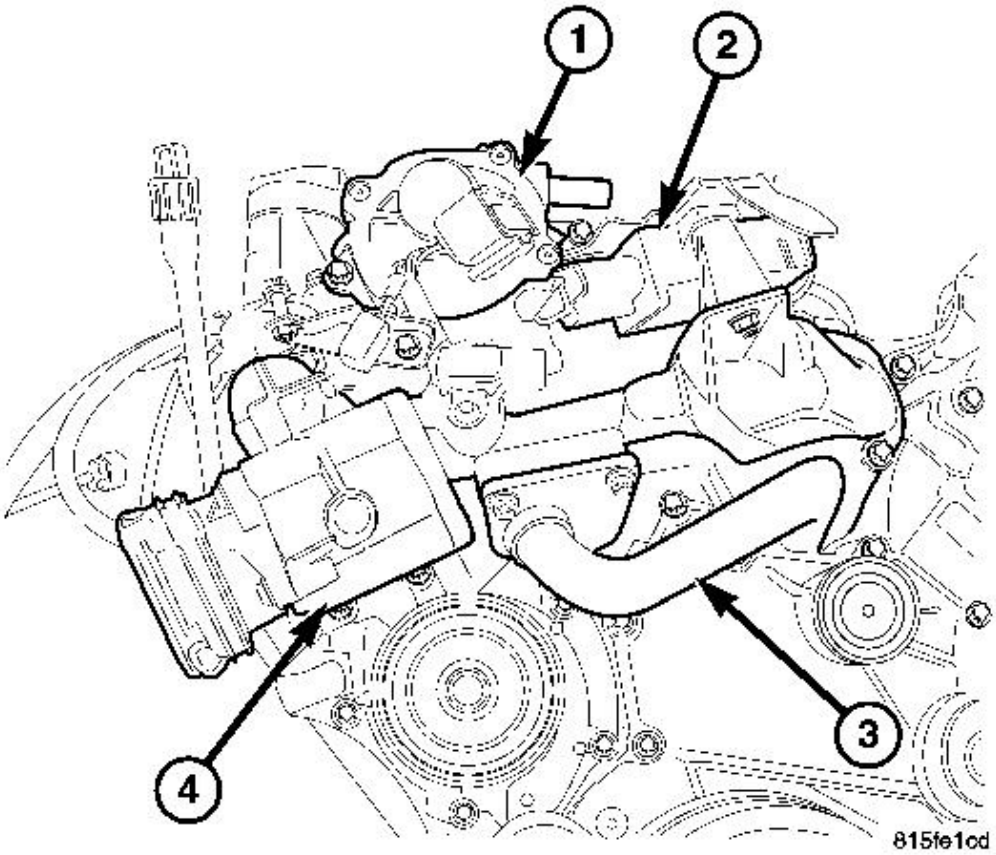

Fig. 151: Vacuum Pump, Glow Plug Relay, EGR Cooler & Air Control Valve
Courtesy of CHRYSLER LLC

1 - VACUUM PUMP
2 - GLOW PLUG RELAY
3 - EGR COOLER
4 - AIR CONTROL VALVE

46. Install the air control valve and resonator (4).

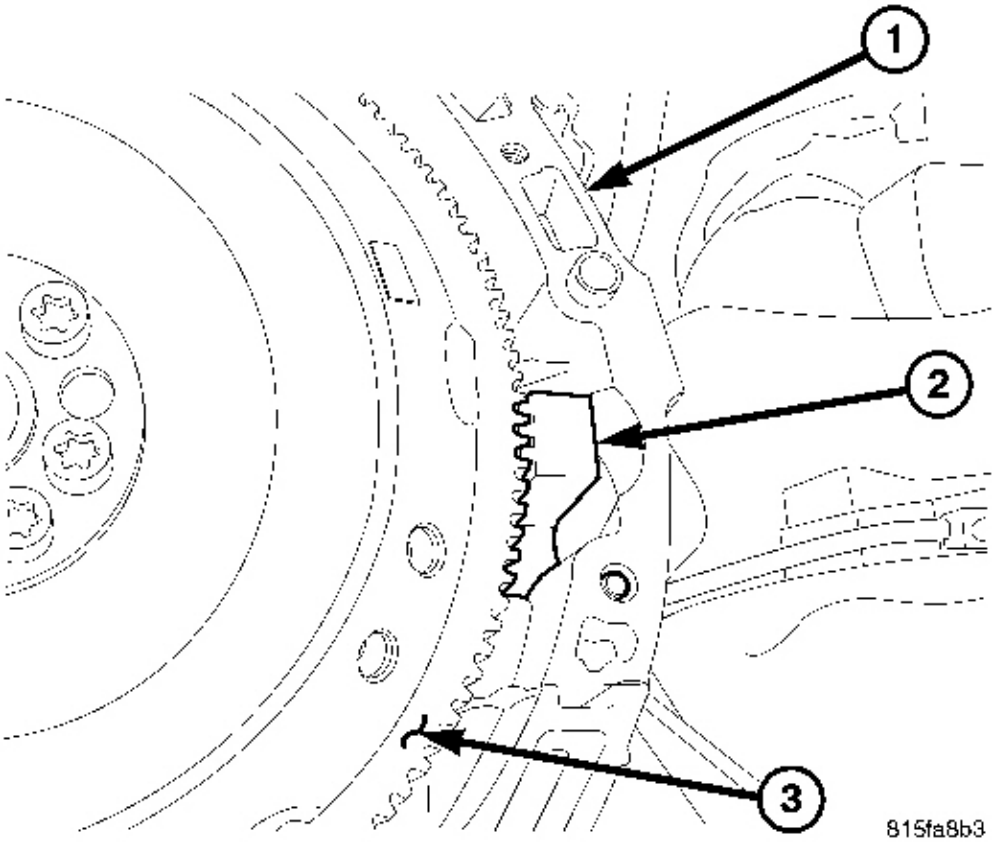

Fig. 152: Engine Block, Special Tool #9102 & Flex Plate
Courtesy of CHRYSLER LLC

1 - ENGINE BLOCK 2 - SPECIAL TOOL #9102 3 - FLEX PLATE

47. Install the cooling fan module.
48. Connect the vacuum pump supply hose.
49. Raise and support the vehicle.
50. Remove special tool #9102 crankshaft lock (2).
51. Install the starter blank.
52. Connect the cooling fan hydraulic lines.
53. Lower the vehicle.

54. Fill the cooling system.
55. Fill power steering system.

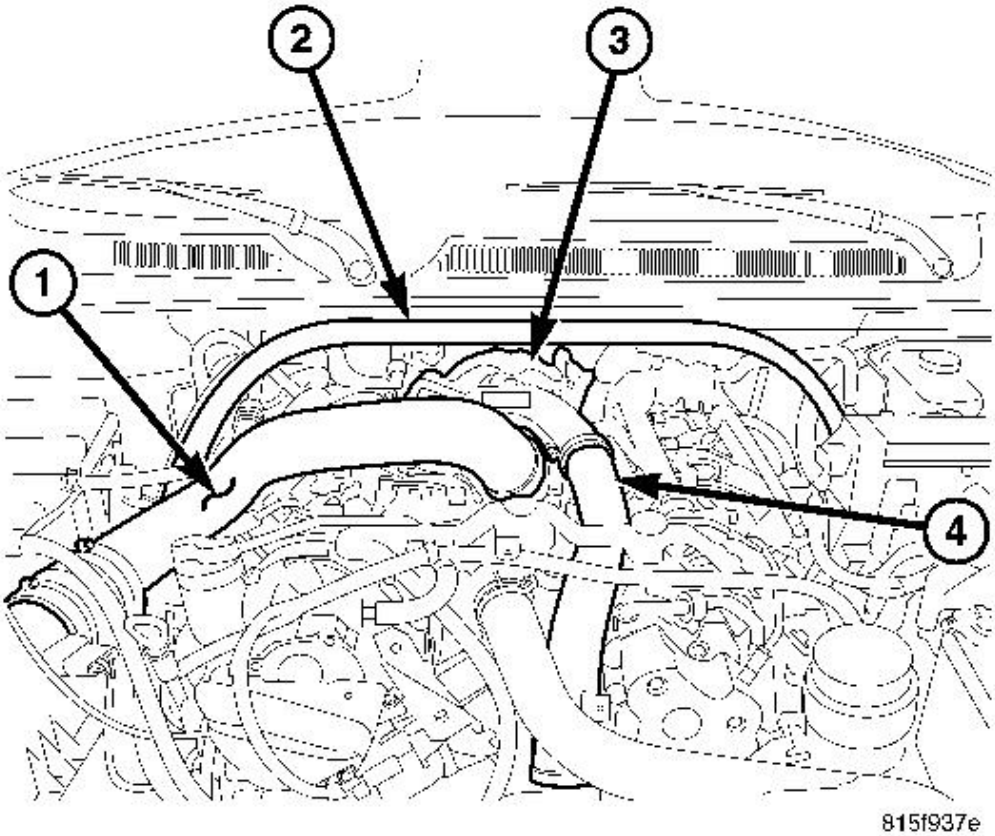

Fig. 153: Strut Tower Support, Air Cleaner Outlet Tube, Turbocharger & Charge Air Inlet Tube
Courtesy of CHRYSLER LLC

1 - AIR CLEANER OUTLET TUBE
2 - STRUT TOWER SUPPORT
3 - TURBOCHARGER
4 - CHARGE AIR INLET TUBE

56. Install the strut tower support (2).
57. Connect the negative battery cable.

WARNING: High-pressure fuel lines deliver fuel under extreme pressure from

the injection pump to the injectors. This maybe as high as 1350 bar (19,580 psi). Use extreme caution when inspecting for high-pressure fuel leaks. Inspect high-pressure fuel leaks with a sheet of cardboard. Wear safety goggles and adequate protective clothing when servicing fuel system. Fuel under this amount of pressure can penetrate skin causing serious or fatal injury.

58. Start engine, allow to warm, turn engine off and inspect for leaks
59. Purge the air from the power steering system using the scan tool.

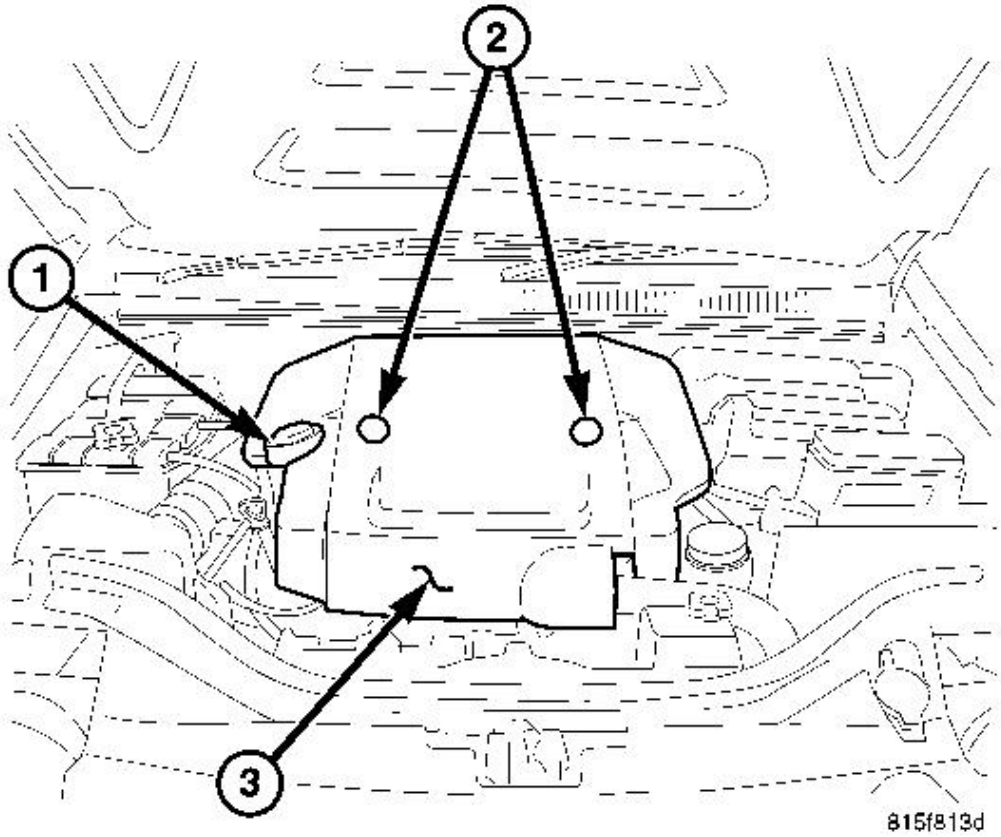

Fig. 154: Oil Filler Cap, Cover Fasteners & Engine Cover
Courtesy of CHRYSLER LLC

1 - OIL FILLER CAP
2 - COVER FASTENERS

3 - ENGINE COVER

60. Install the engine cover brackets and engine cover (3).

SEAL(S) - CAMSHAFT OIL

REMOVAL

CAMSHAFT OIL SEAL - RIGHT

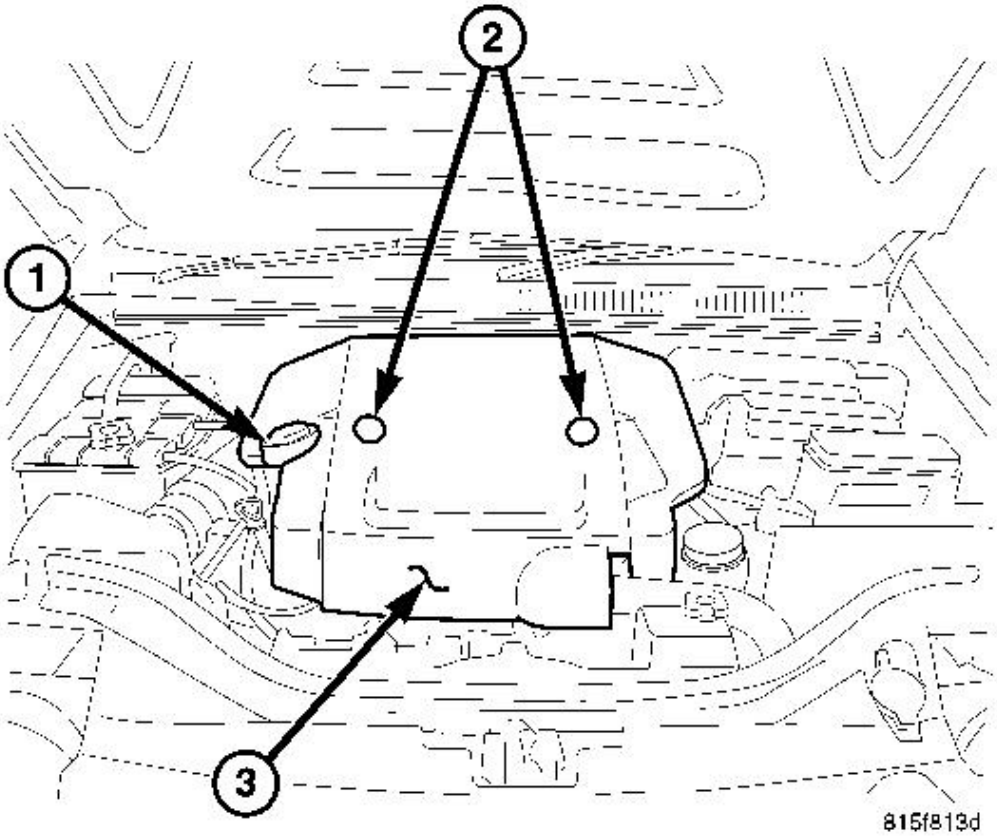

Fig. 155: Oil Filler Cap, Cover Fasteners & Engine Cover
Courtesy of CHRYSLER LLC

1 - OIL FILLER CAP
2 - COVER FASTENERS
3 - ENGINE COVER

1. Disconnect the negative battery cable.
2. Remove the engine cover (3). See **Fig. 155**.

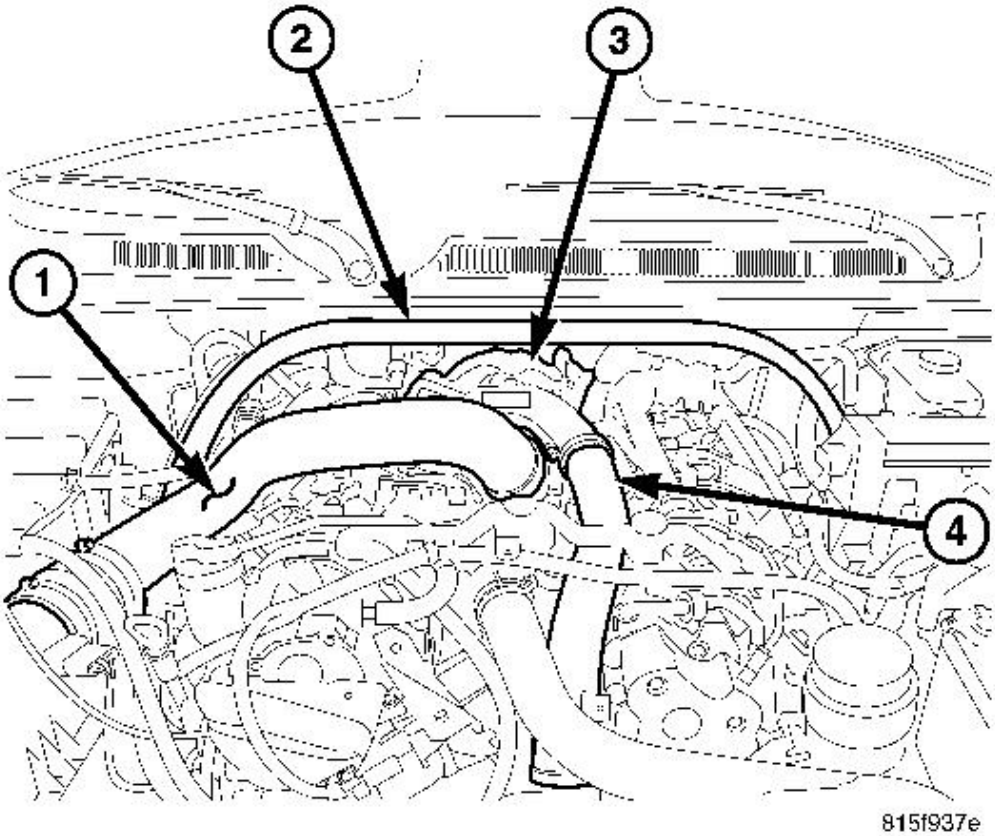

Fig. 156: Strut Tower Support, Air Cleaner Outlet Tube, Turbocharger & Charge Air Inlet Tube
Courtesy of CHRYSLER LLC

1 - AIR CLEANER OUTLET TUBE
2 - STRUT TOWER SUPPORT
3 - TURBOCHARGER
4 - CHARGE AIR INLET TUBE

3. Remove the strut tower support (2). See **Fig. 156**.

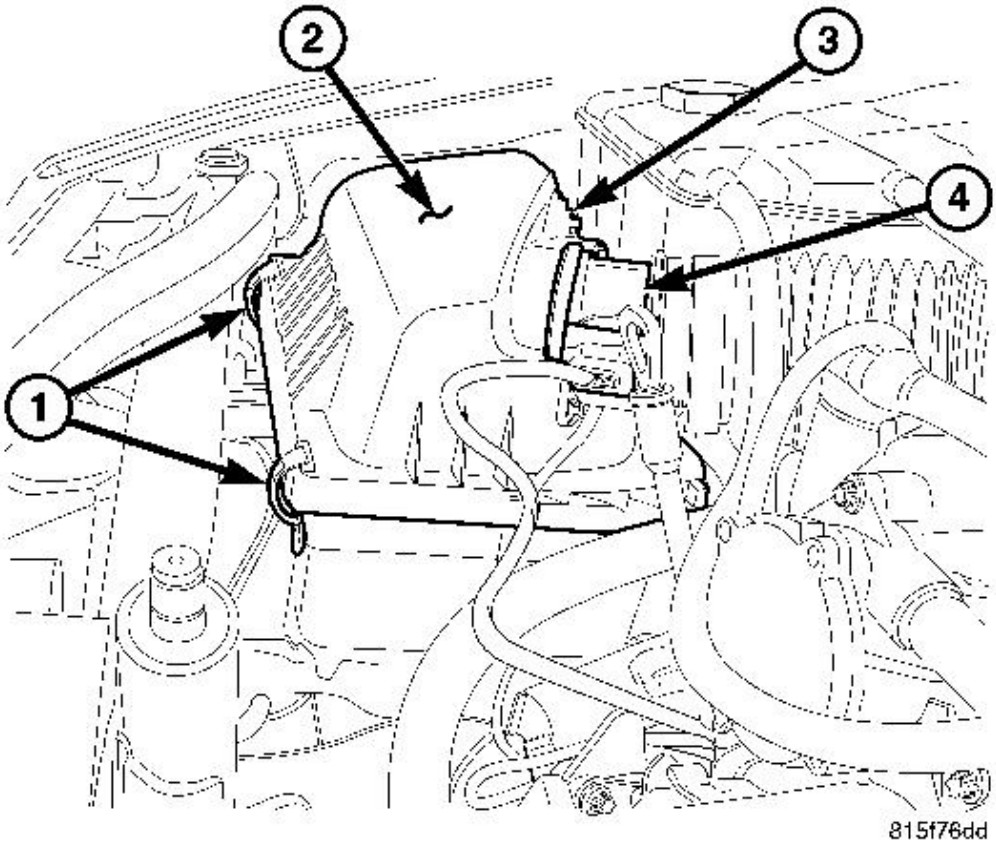

Fig. 157: Air Cleaner Cover And Components
Courtesy of CHRYSLER LLC

1 - SPRING CLIPS
2 - COVER
3 - AIR PRESSURE SENSOR
4 - MAF SENSOR

4. Remove the air inlet tube to the turbocharger along with the air cleaner cover (2). See **Fig. 157**.

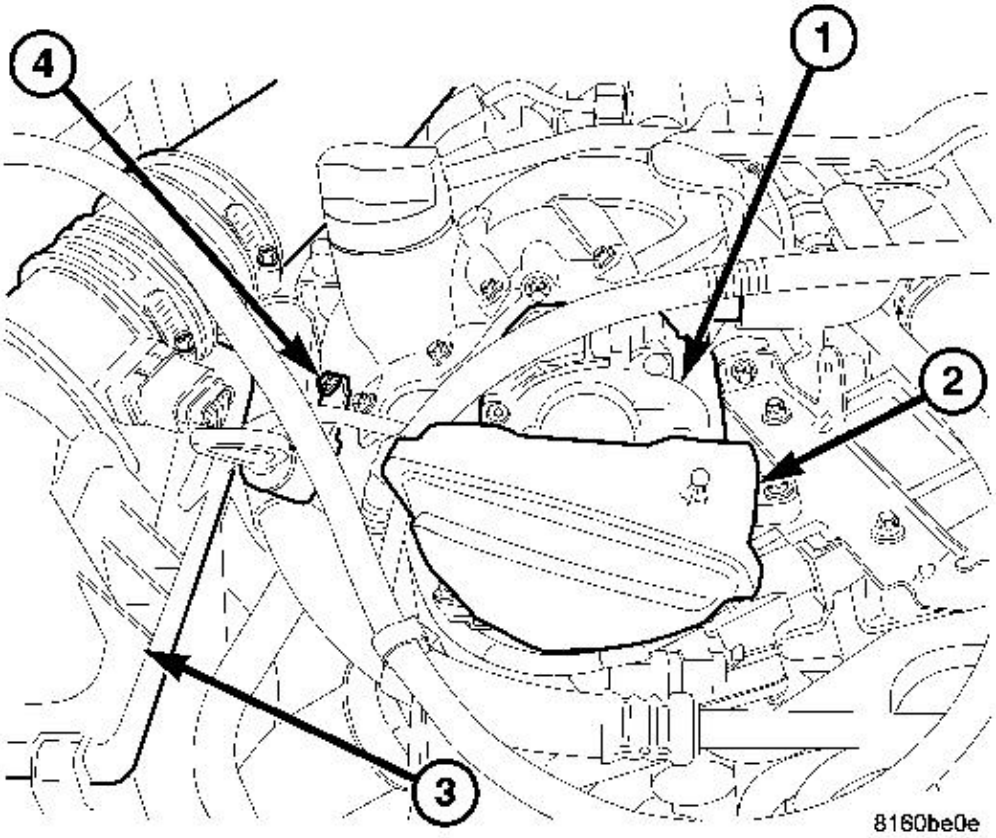

Fig. 158: Vacuum Pump, Resonator, Air Cleaner Cover & Oil Level Indicator Tube Fastener
Courtesy of CHRYSLER LLC

1 - VACUUM PUMP
2 - RESONATOR
3 - AIR CLEANER COVER
4 - OIL LEVEL INDICATOR TUBE FASTENER

5. Remove the air control valve resonator (2).
6. Remove the vacuum pump (1). See **Fig. 158**.
7. Remove the oil level indicator fastener (4).

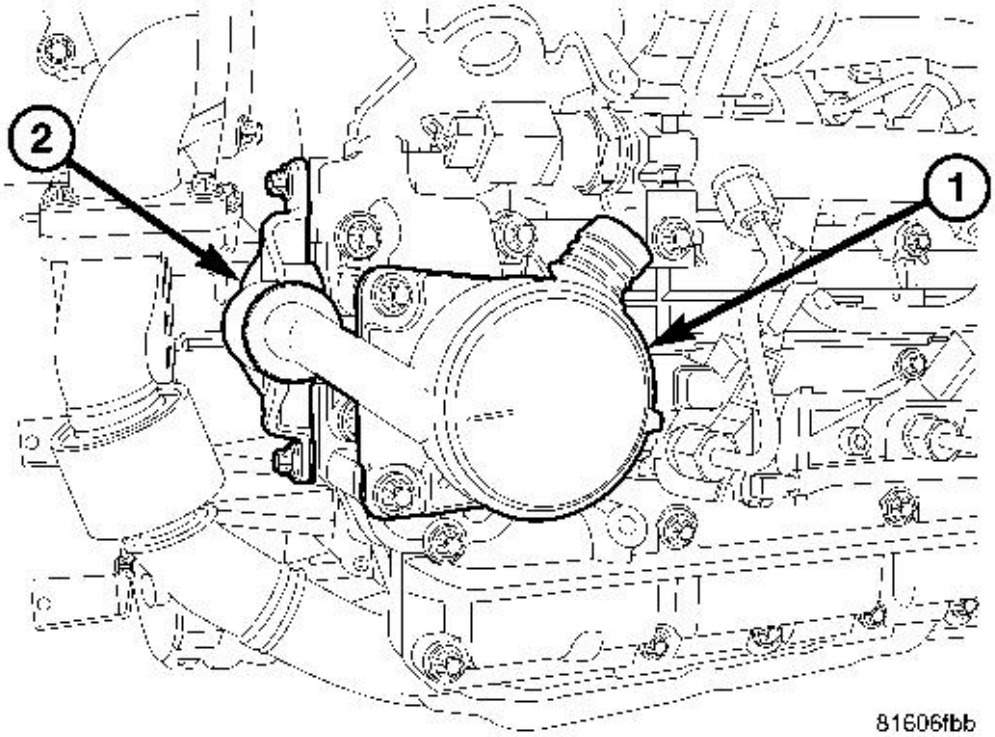

Fig. 159: Oil Separator Housing & Adapter
Courtesy of CHRYSLER LLC

1 - OIL SEPARATOR HOUSING
2 - OIL SEPARATOR HOUSING Adapter

8. Remove the oil separator (1) and rear housing Adapter (2). See **Fig. 159**.

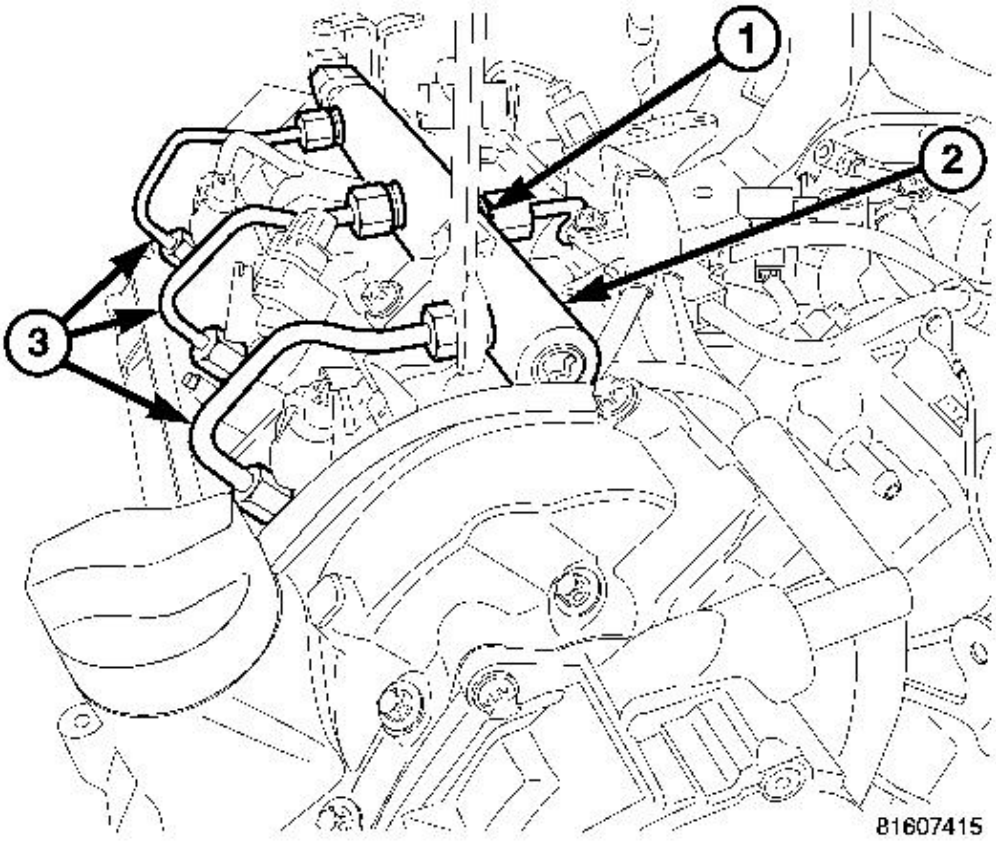

Fig. 160: Fuel Rail Transfer Line, Right Fuel Rail & High Pressure Fuel Lines
Courtesy of CHRYSLER LLC

1 - FUEL RAIL TRANSFER LINE
2 - RIGHT FUEL RAIL
3 - HIGH PRESSURE FUEL LINES

9. Remove the injector cover.
10. Remove the fuel rail (2).
11. Remove the high pressure fuel lines at the injectors (3).
12. Disconnect the return fuel hose from the injectors.
13. Disconnect the fuel injector and camshaft position sensor wiring harness connectors and set aside.
14. Remove the injectors.

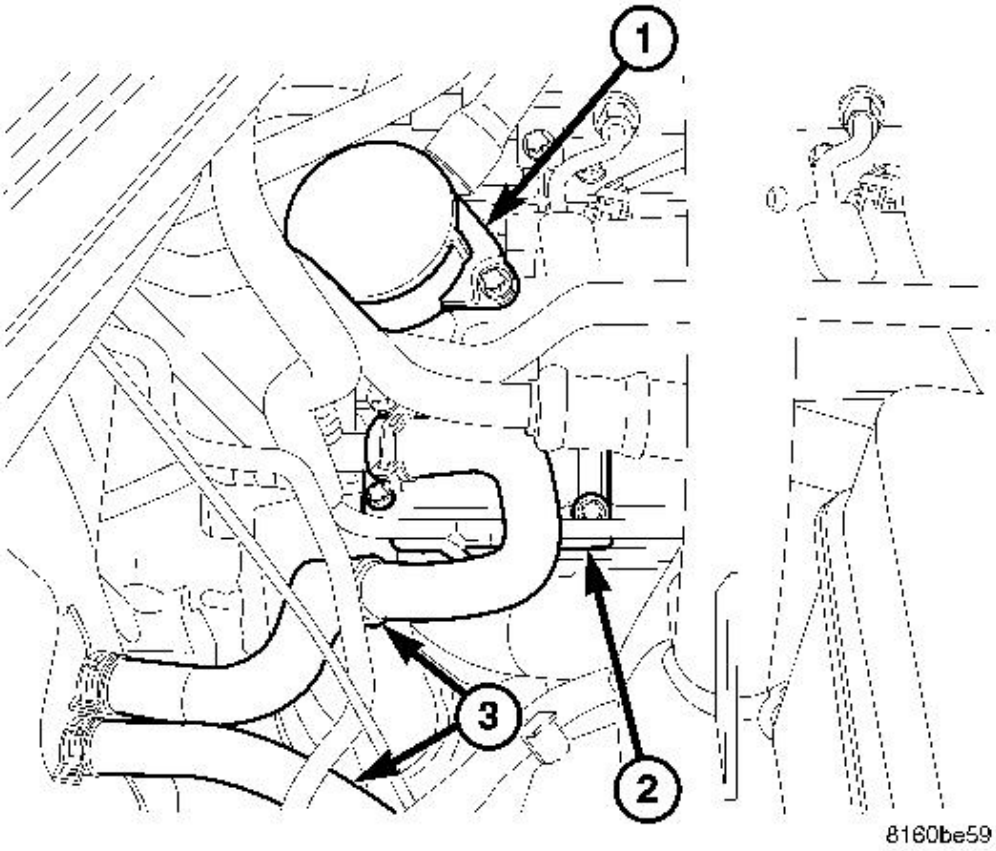

Fig. 161: Identifying Oil Separator, Heater Hose With Bracket
Courtesy of CHRYSLER LLC

1 - OIL SEPARATOR
2 - HEATER HOSE BRACKET
3 - HEATER HOSES

15. Disconnect the heater hose bracket from the cylinder head cover.

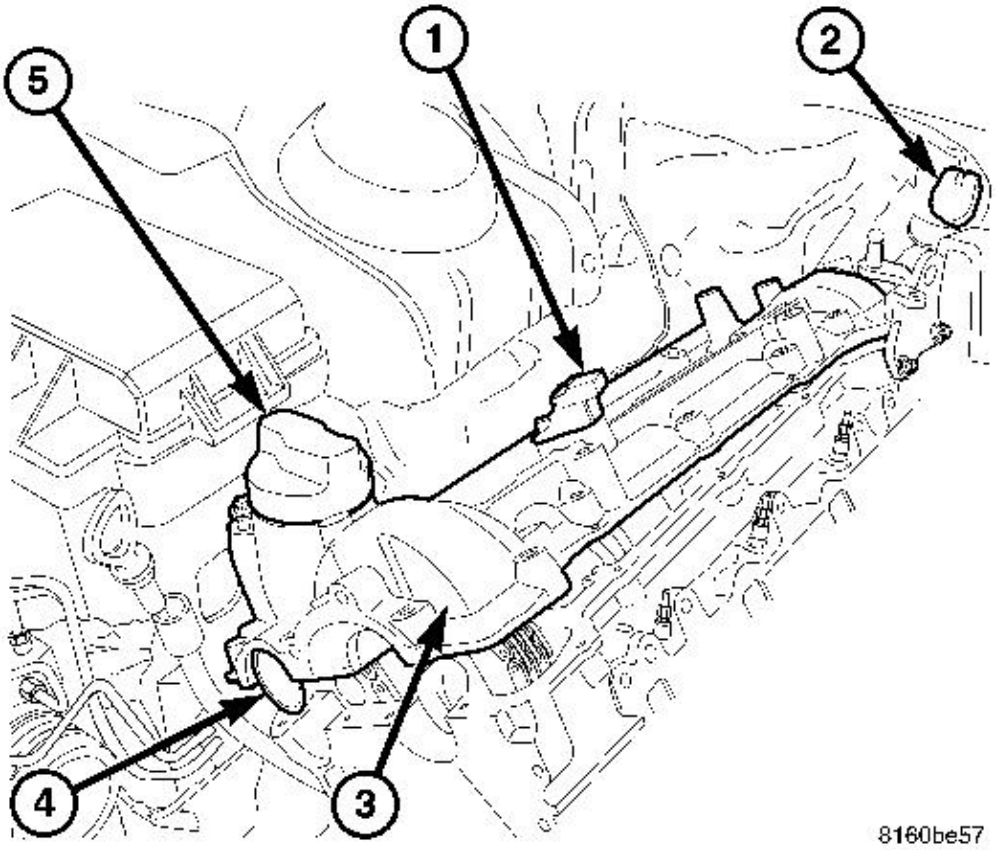

Fig. 162: Camshaft Position Sensor, Transmission Level Indicator Tube, Right Cylinder Head Cover, Right Front Camshaft Seal & Engine Oil Cap
Courtesy of CHRYSLER LLC

1 - CAMSHAFT POSITION SENSOR
2 - TRANSMISSION LEVEL INDICATOR TUBE
3 - RIGHT CYLINDER HEAD COVER
4 - RIGHT FRONT CAMSHAFT SEAL
5 - ENGINE OIL CAP

16. Disconnect the vacuum pump supply hose pipe at the front of the cylinder head cover.
17. Remove the transmission tube (2) fastener at the engine cover bracket.

CAUTION: Care must be taken not to damage the cylinder head cover. If the sealant is difficult to separate, use a hand held heat gun and warm

the area thoroughly along the sealer bead.

NOTE: The rear camshaft seal in located inside the oil separator housing Adapter assembly.

18. Remove the cylinder head cover (3) and front seal (4). See **Fig. 162**.

SEAL- CAMSHAFT OIL - LEFT

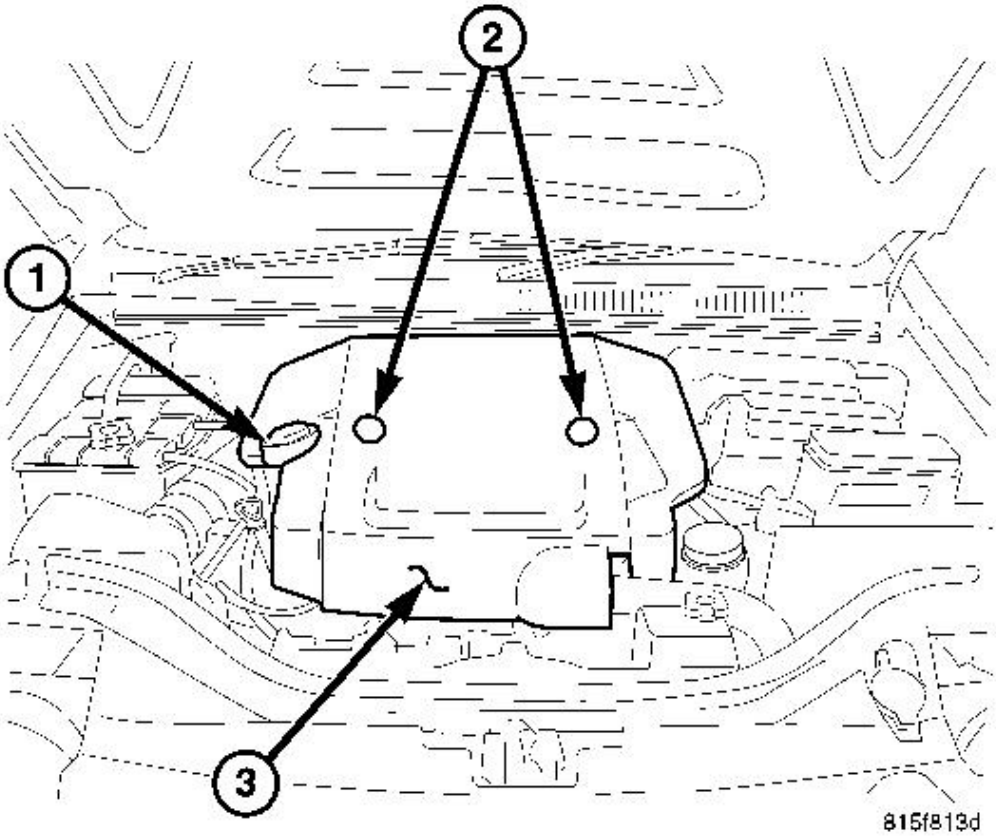

Fig. 163: Oil Filler Cap, Cover Fasteners & Engine Cover
Courtesy of CHRYSLER LLC

1 - OIL FILLER CAP
2 - COVER FASTENERS
3 - ENGINE COVER

1. Disconnect negative battery cable.
2. Remove the engine cover (3) and bracket. See **Fig. 163**.

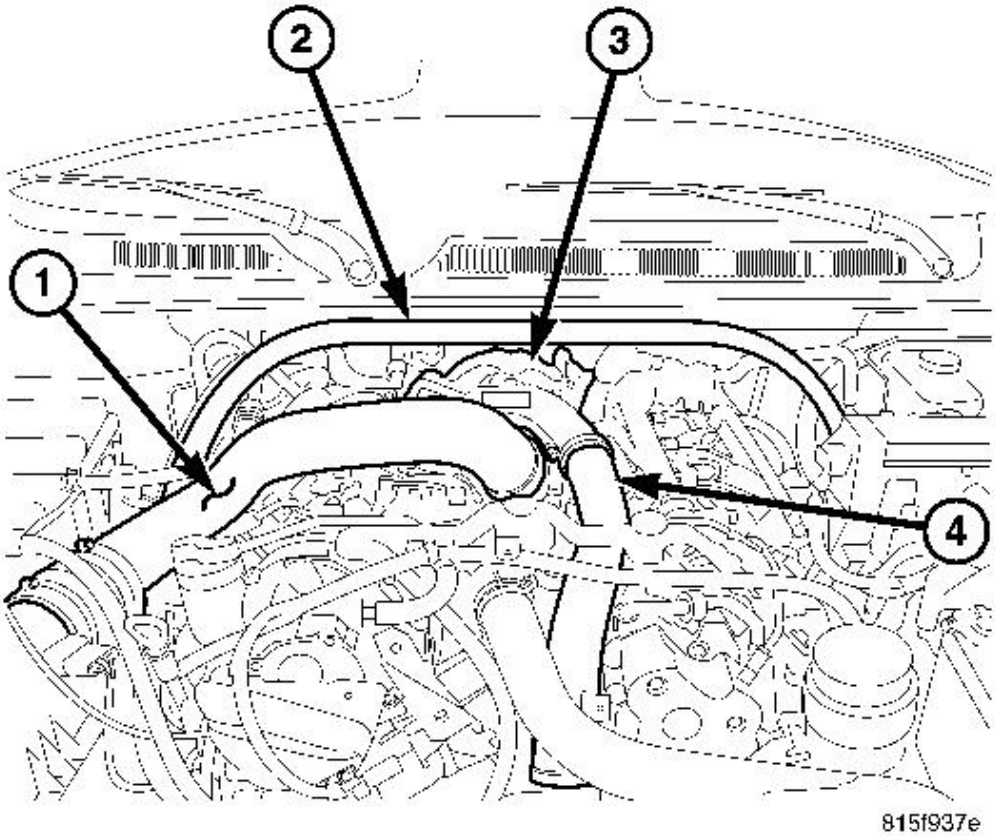

Fig. 164: Strut Tower Support, Air Cleaner Outlet Tube, Turbocharger & Charge Air Inlet Tube
Courtesy of CHRYSLER LLC

1 - AIR CLEANER OUTLET TUBE
2 - STRUT TOWER SUPPORT
3 - TURBOCHARGER
4 - CHARGE AIR INLET TUBE

3. Remove the strut tower support (2). See **Fig. 164**.

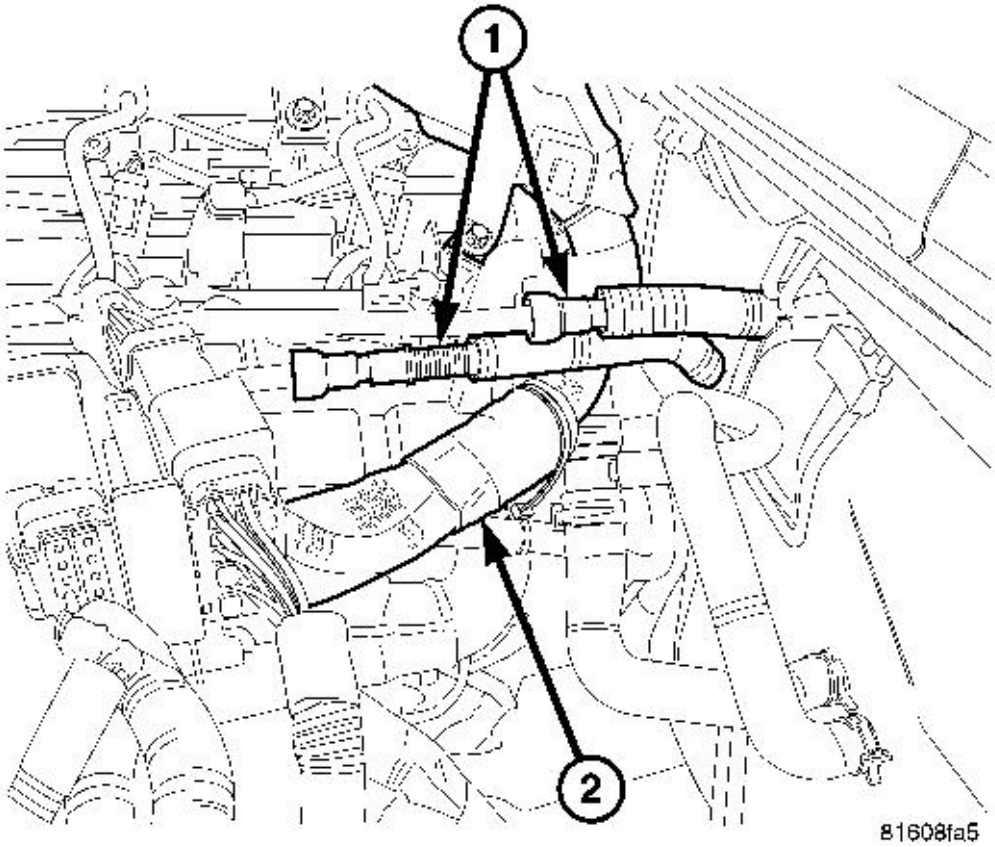

Fig. 165: Fuel Tank Supply & Rear Engine Wiring Harness
Courtesy of CHRYSLER LLC

1 - FUEL SUPPLY AND RETURN LINES FROM FUEL TANK
2 - MAIN ENGINE WIRING HARNESS

4. Disconnect the fuel tank supply (1) and return lines (1) from the fuel line bundle. See **Fig. 165**.
5. Separate the rear engine wiring harness (2) and hold downs at cylinder head cover.

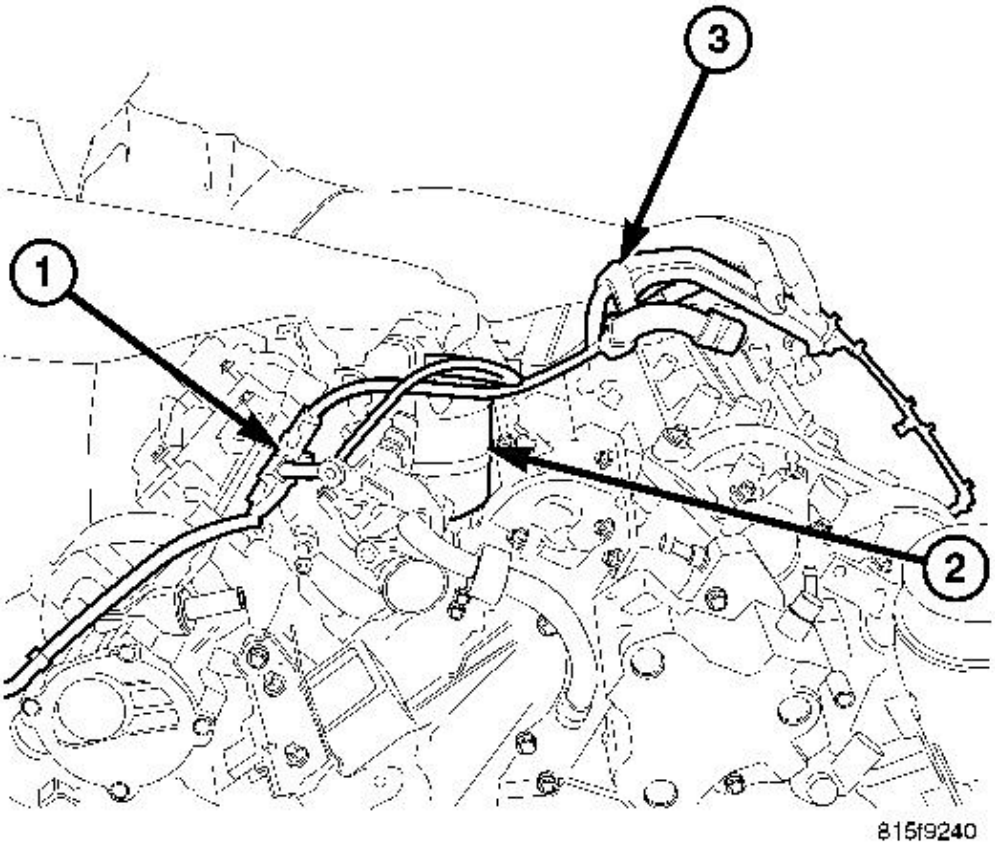

Fig. 166: Fuel Filter, Lines And Hoses
Courtesy of CHRYSLER LLC

1 - RETURN FUEL HOSE BUNDLE
2 - FUEL FILTER
3 - LOW PRESSURE FUEL SUPPLY AND RETURN PIPE

6. Separate the fuel supply line at the high pressure pump and fuel filter.
7. Remove the high pressure fuel line from the high pressure pump to the fuel rail.

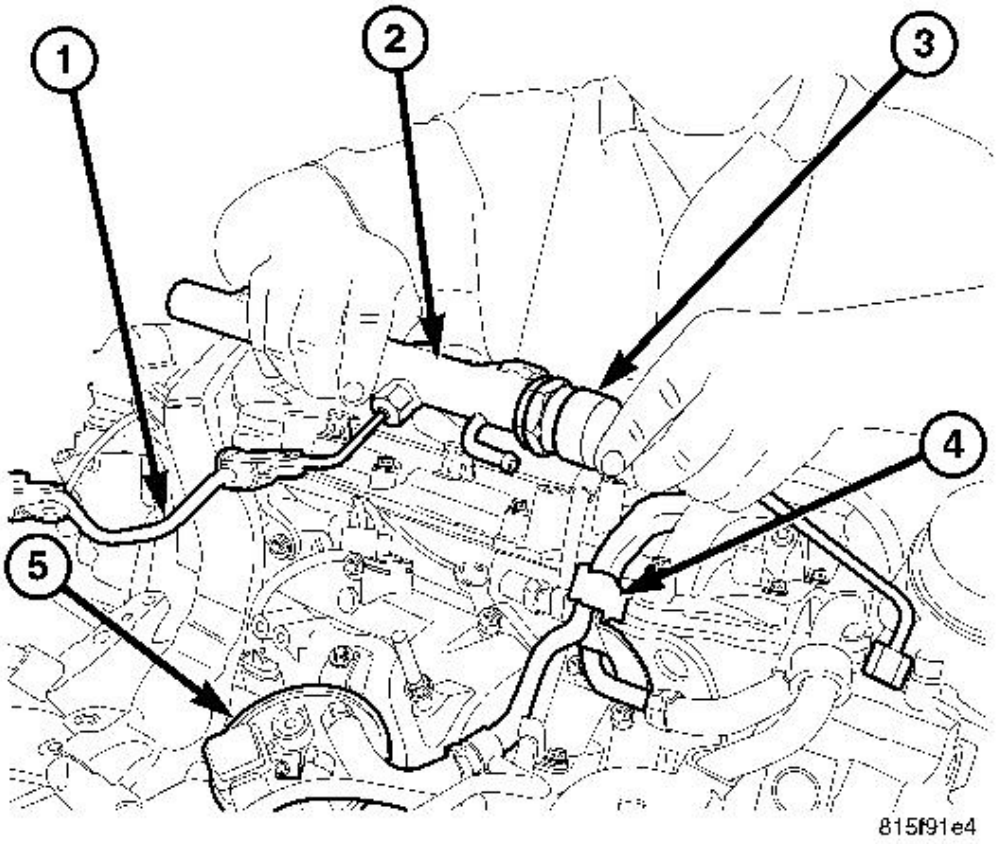

Fig. 167: Left Fuel Rail Components
Courtesy of CHRYSLER LLC

1 - FUEL RAIL TRANSFER LINE
2 - LEFT FUEL RAIL
3 - FUEL RAIL SOLENOID
4 - LOW FUEL PRESSURE SUPPLY AND RETURN LINE JUNCTION
5 - FUEL FILTER

8. Remove the high pressure lines from the fuel rail to fuel injectors.
9. Disconnect the fuel injector electrical connectors.
10. Remove the oil filter housing to engine cover bracket.
11. Lift up on the center of the return fuel line connector and separate the return fuel hose from fuel injectors.
12. Remove the fuel rail (2). See **Fig. 167**.

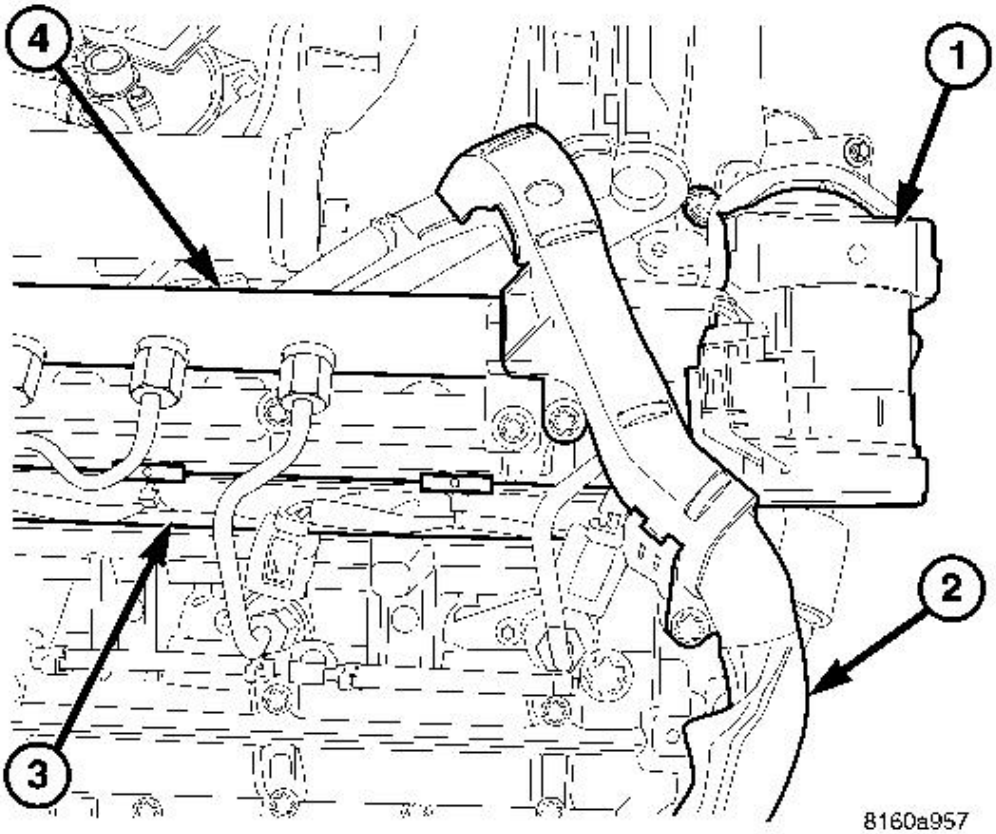

Fig. 168: Exhaust Gas Recirculation (EGR) Valve, Main Engine Wiring Harness, Fuel Injector Wiring Harness & Left Fuel Rail
Courtesy of CHRYSLER LLC

1 - EXHAUST GAS RECIRCULATION (EGR) VALVE
2 - MAIN ENGINE WIRING HARNESS
3 - FUEL INJECTOR WIRING HARNESS
4 - LEFT FUEL RAIL

13. Remove the engine harness retainers and fasteners (2). See **Fig. 168**.
14. Remove the EGR valve (1).

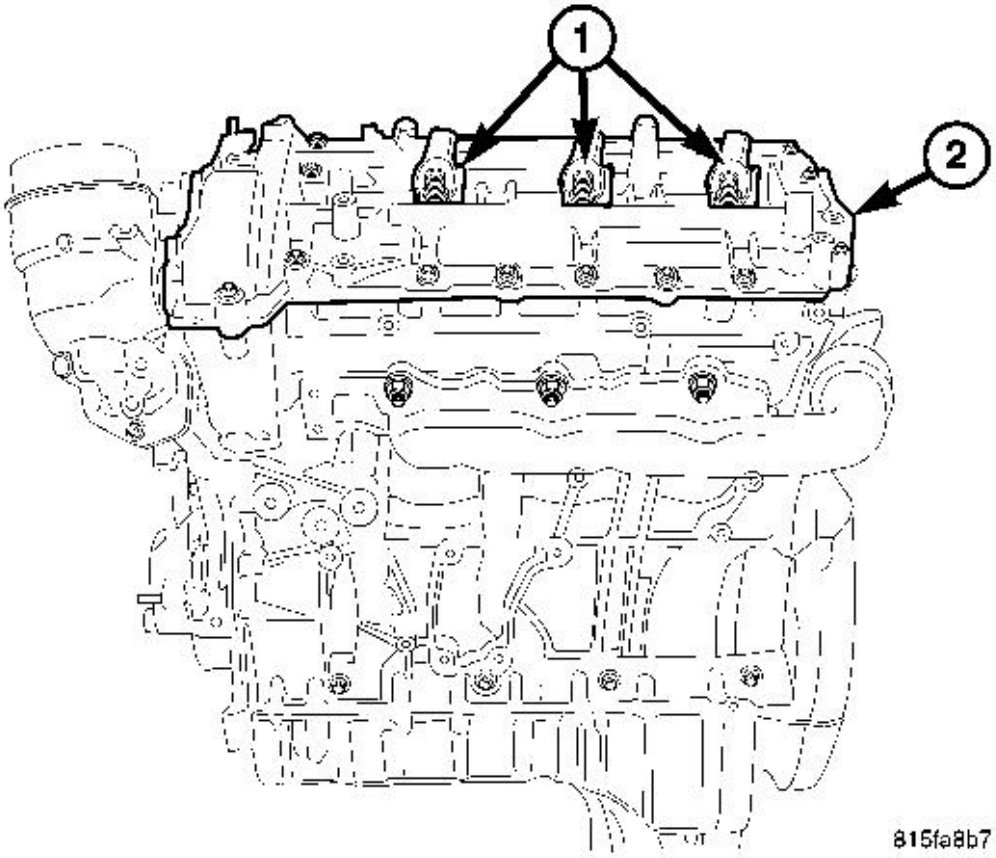

Fig. 169: Fuel Injector Body & Left Fuel Injectors
Courtesy of CHRYSLER LLC

15. Remove the fuel injectors (1). See **Fig. 169**.
16. Remove the power brake booster hose and set aside.
17. Remove the cylinder head cover (2) fasteners, note the different size fasteners for assembly.

CAUTION: Care must be taken not to damage the cylinder head cover. If the sealant is difficult to separate, use a hand held heat gun and warm the area thoroughly along the sealer bead.

18. Remove the cylinder head cover (2).

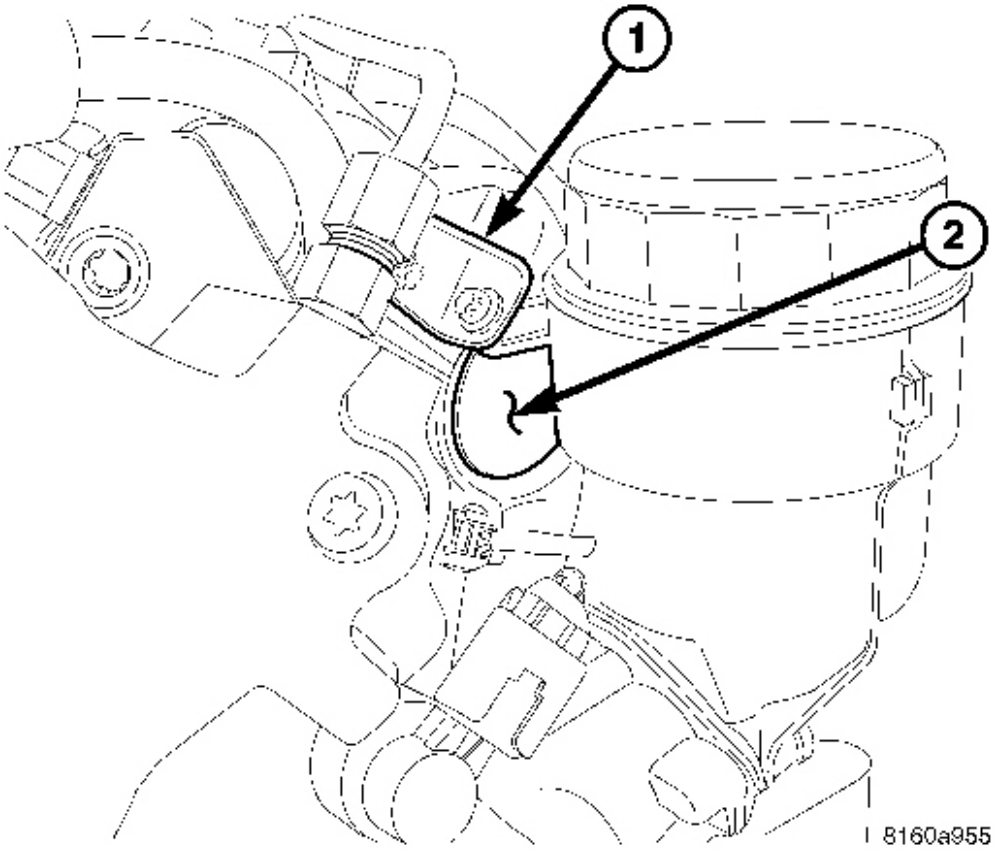

Fig. 170: Left Front Camshaft Oil Seal & Oil Filter Housing Bracket
Courtesy of CHRYSLER LLC

1 - OIL FILTER HOUSING BRACKET 2 - LEFT FRONT CAMSHAFT OIL SEAL

19. Remove the front camshaft oil seal (2).

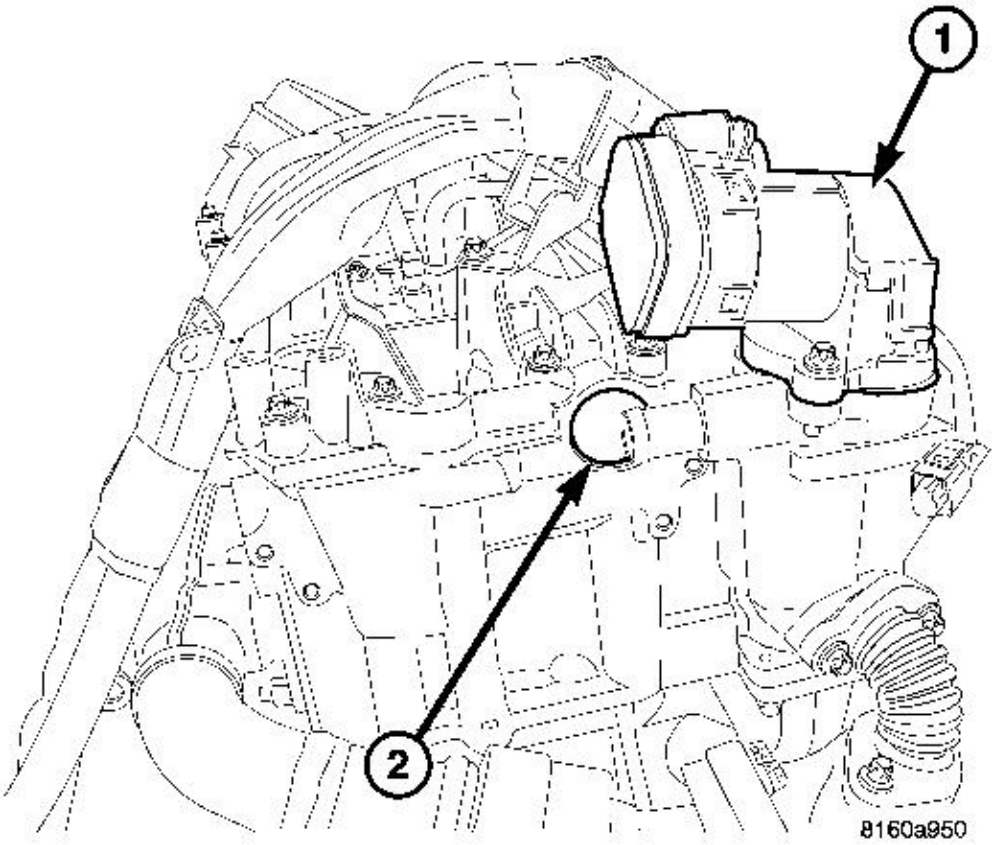

Fig. 171: Left Rear Camshaft Oil Seal & EGR Valve
Courtesy of CHRYSLER LLC

1 - EGR VALVE 2 - LEFT REAR CAMSHAFT OIL SEAL

20. Remove the left rear camshaft oil seal (2).

INSTALLATION

CAMSHAFT OIL SEAL - LEFT

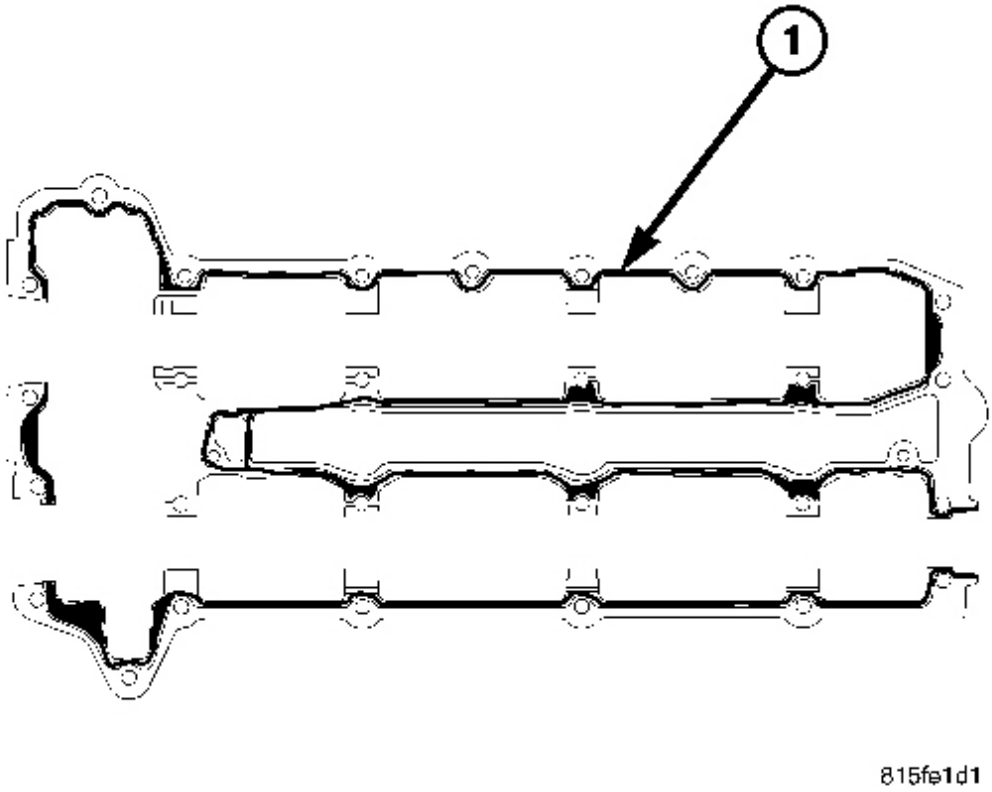

Fig. 172: Applying Cylinder Head Cover Sealant
Courtesy of CHRYSLER LLC

1 - 1.5MM MOPAR ENGINE SEALANT RTV

1. Clean all mating surfaces.

NOTE: Care must be taken not to get any engine sealer on the camshaft journals.

2. Add a 1.5 mm bead of Mopar® Sealant (1) to the cylinder head cover.

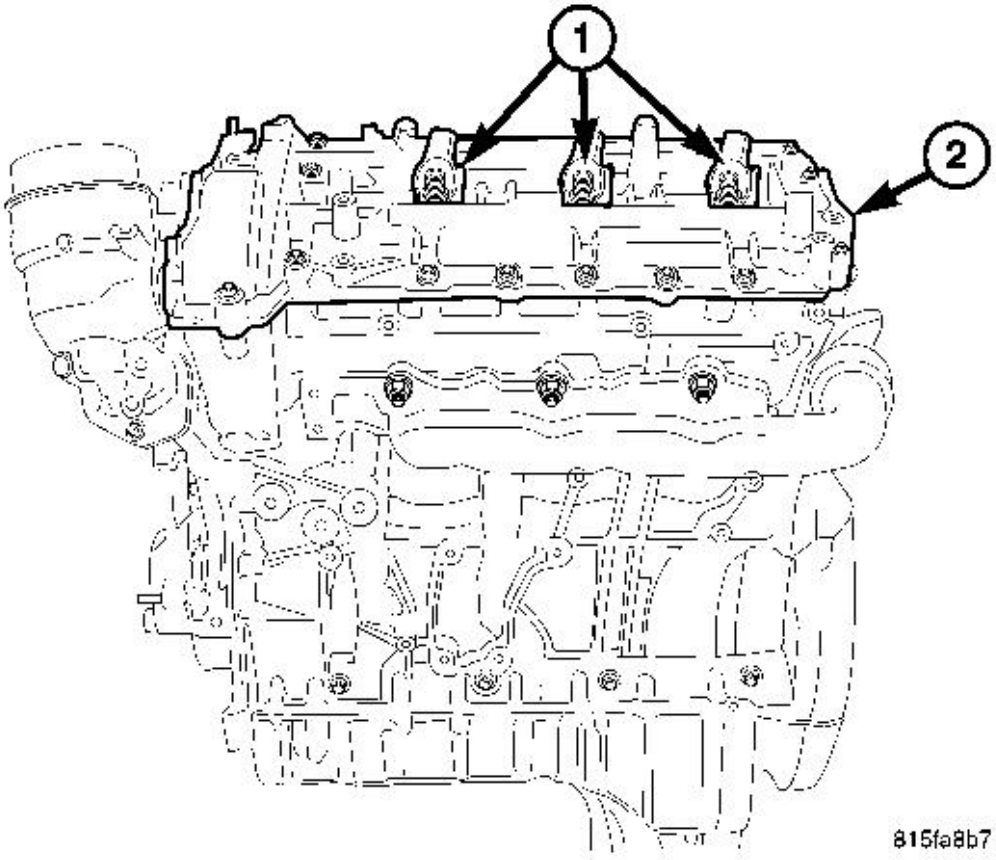

Fig. 173: Fuel Injector Body & Left Fuel Injectors
Courtesy of CHRYSLER LLC

3. Place the camshaft seals into position within the cylinder head.
4. Install the cylinder head cover.

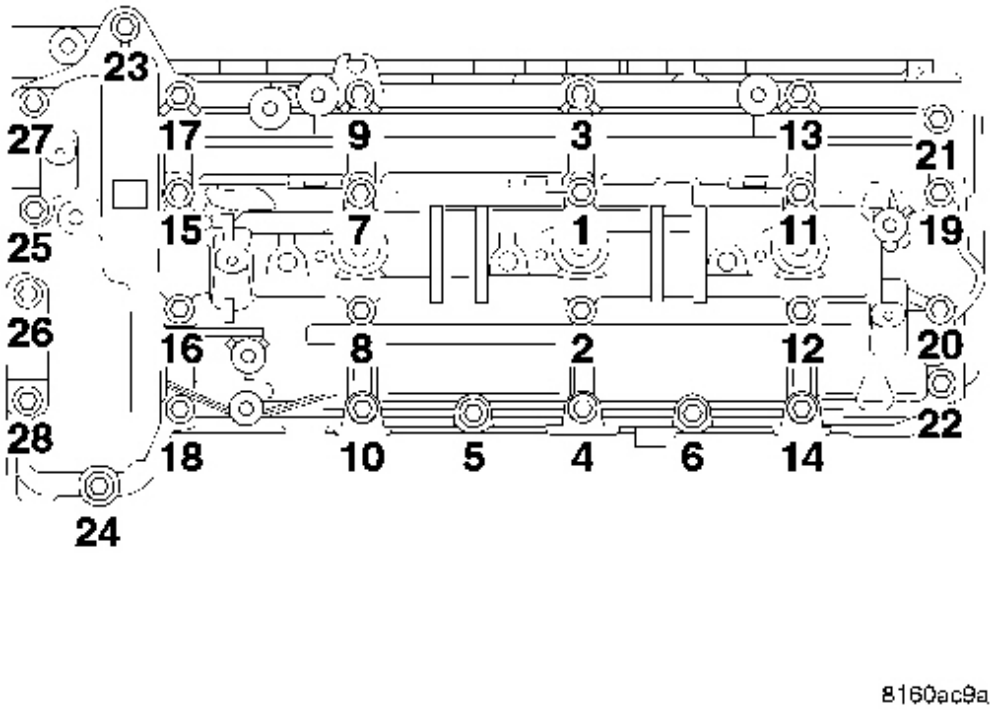

Fig. 174: Left Cylinder Head Cover Tightening Sequence
Courtesy of CHRYSLER LLC

5. Tighten the bolts in three stages following the sequence provided. First to 4 N.m (35 in. lbs.), then to 6 N.m (53 in. lbs.), and then to 8.4 N.M (75 in. lbs.).

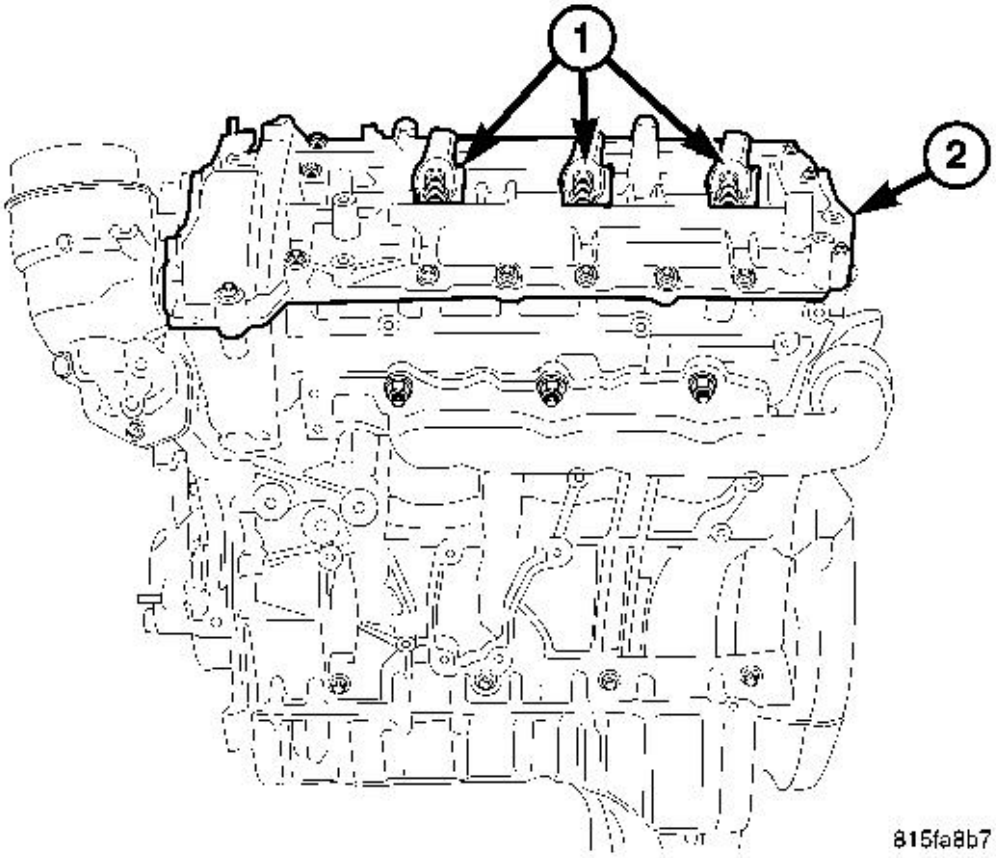

Fig. 175: Fuel Injector Body & Left Fuel Injectors
Courtesy of CHRYSLER LLC

CAUTION: The fuel injector sealing washers MUST be replaced. DO NOT use the old sealing washers or double the sealing washers.

NOTE: Care must be taken not to apply any lubricant to the fuel injector nozzles.

6. Lubricate the fuel injector bodies and install the fuel injectors (1). See **Fig. 175**. Install the injector retaining claws and tighten the bolts to 7 N.m plus 180 °(62 in. lbs. plus 180°).

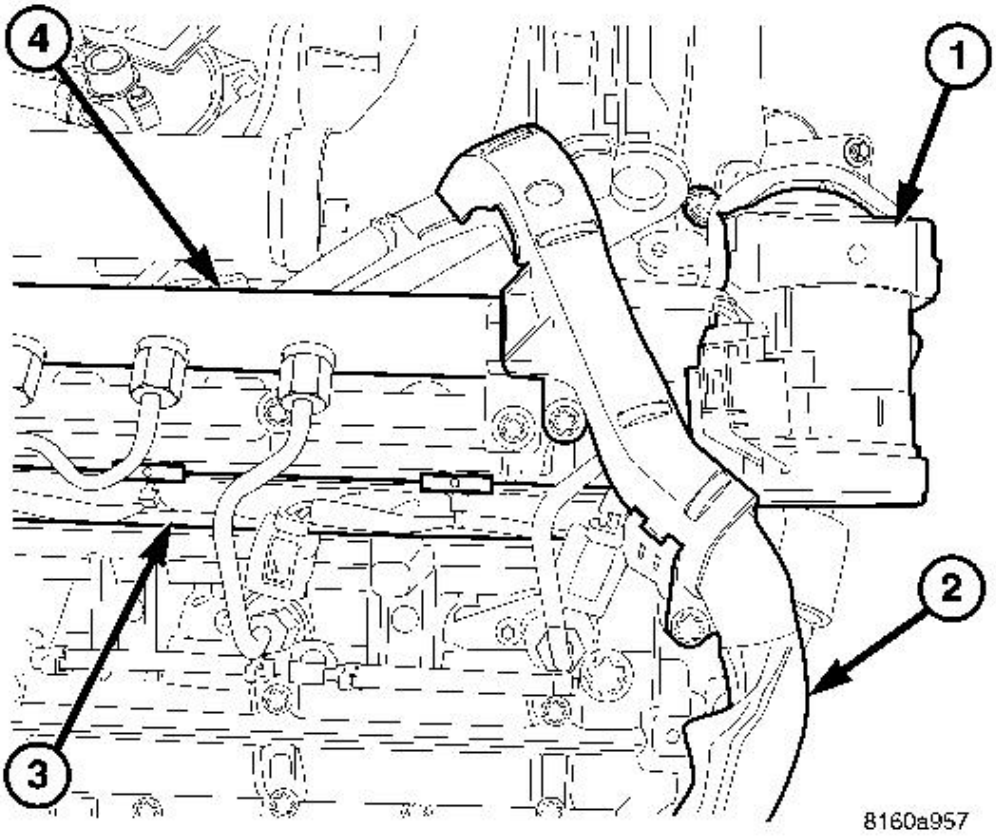

Fig. 176: Exhaust Gas Recirculation (EGR) Valve, Main Engine Wiring Harness, Fuel Injector Wiring Harness & Left Fuel Rail
Courtesy of CHRYSLER LLC

1 - EXHAUST GAS RECIRCULATION (EGR) VALVE
2 - MAIN ENGINE WIRING HARNESS
3 - FUEL INJECTOR WIRING HARNESS
4 - LEFT FUEL RAIL

7. Install the EGR valve (1). See **Fig. 176**.
8. Install the engine harness fasteners (2), route the return fuel hose, and injector harness.
9. Install the fuel rail (4) and high pressure lines.
10. Install the left rear engine cover bracket.
11. Connect the injector electrical connectors and return fuel hoses.

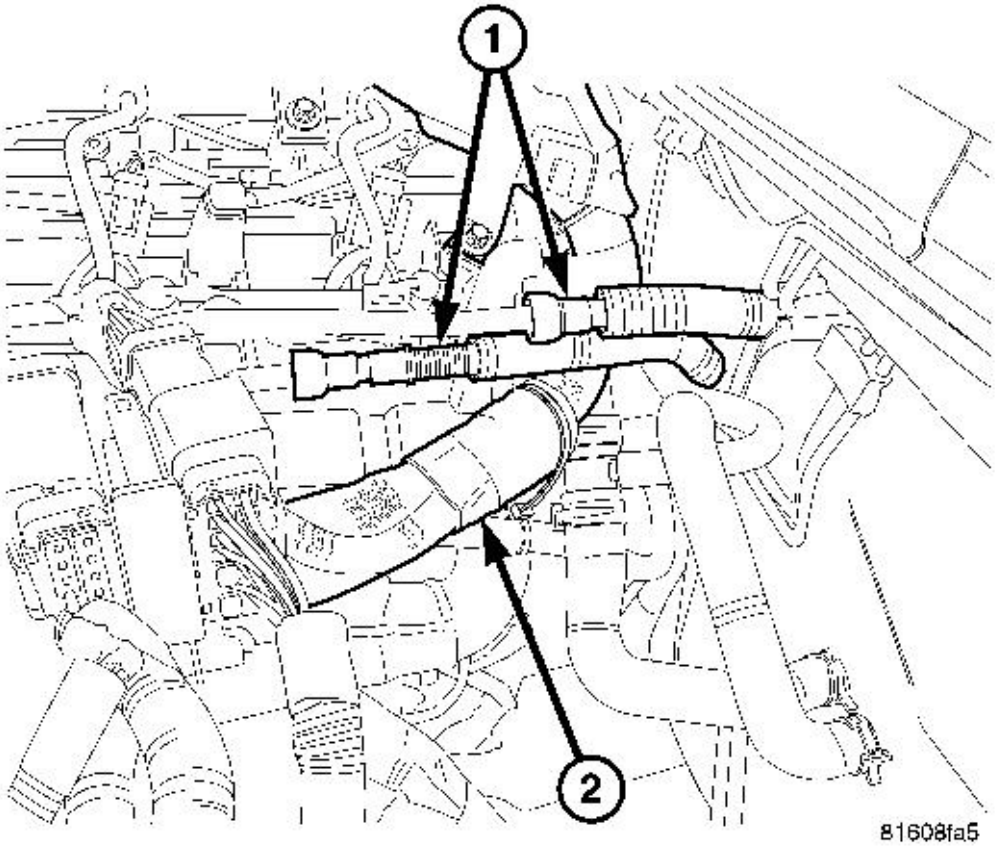

Fig. 177: Fuel Tank Supply & Rear Engine Wiring Harness
Courtesy of CHRYSLER LLC

1 - FUEL SUPPLY AND RETURN LINES FROM FUEL TANK
2 - MAIN ENGINE WIRING HARNESS

12. Install the high pressure fuel line from the high pressure pump to the fuel rail.
13. Install the fuel supply pipe bundle, reclamp at the high pressure pump and fuel filter.
14. Connect the fuel tank supply and return hoses (1) at fuel pipe bundle. See **Fig. 177**.

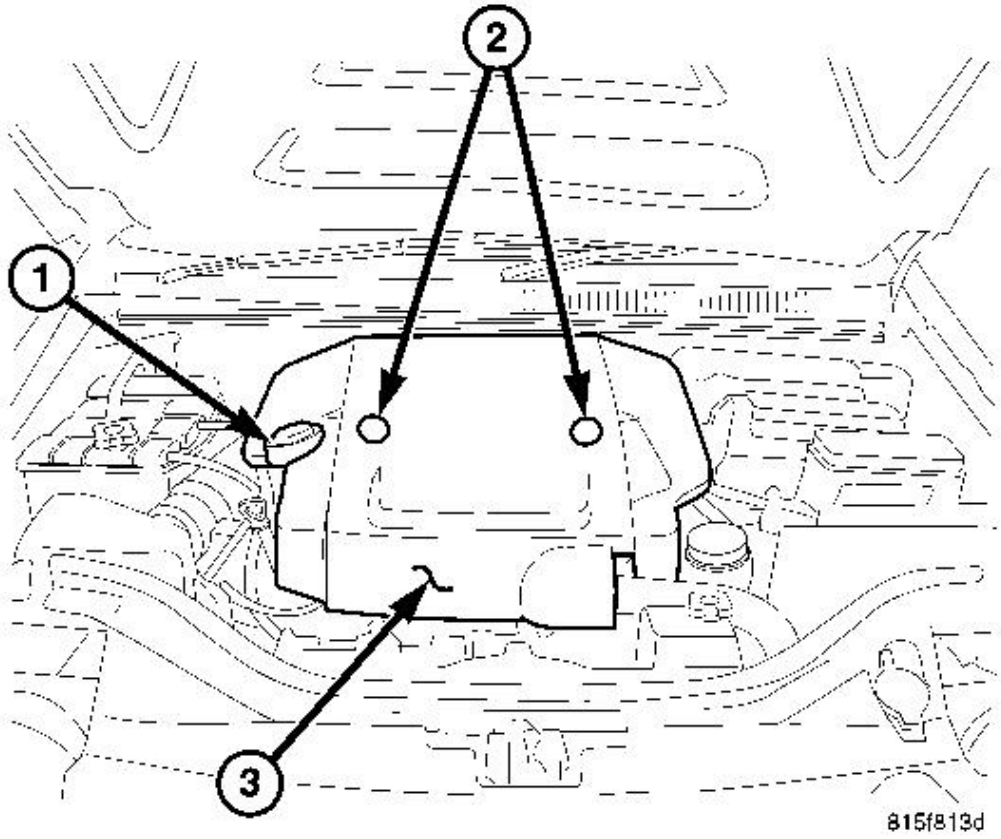

Fig. 178: Oil Filler Cap, Cover Fasteners & Engine Cover
Courtesy of CHRYSLER LLC

1 - OIL FILLER CAP
2 - COVER FASTENERS
3 - ENGINE COVER

15. Install the engine cover (3) and bracket. See **Fig. 178**.
16. Connect the negative battery cable.

WARNING: High-pressure fuel lines deliver fuel under extreme pressure from the injection pump to the injectors. This maybe as high as 1350 bar (19,580 psi). Use extreme caution when inspecting for high-pressure fuel leaks. Inspect high-pressure fuel leaks with a sheet of cardboard. Wear safety goggles and adequate protective clothing

when servicing fuel system. Fuel under this amount of pressure can penetrate skin causing serious or fatal injury.

17. Start engine, allow to warm, turn engine off and inspect for leaks.

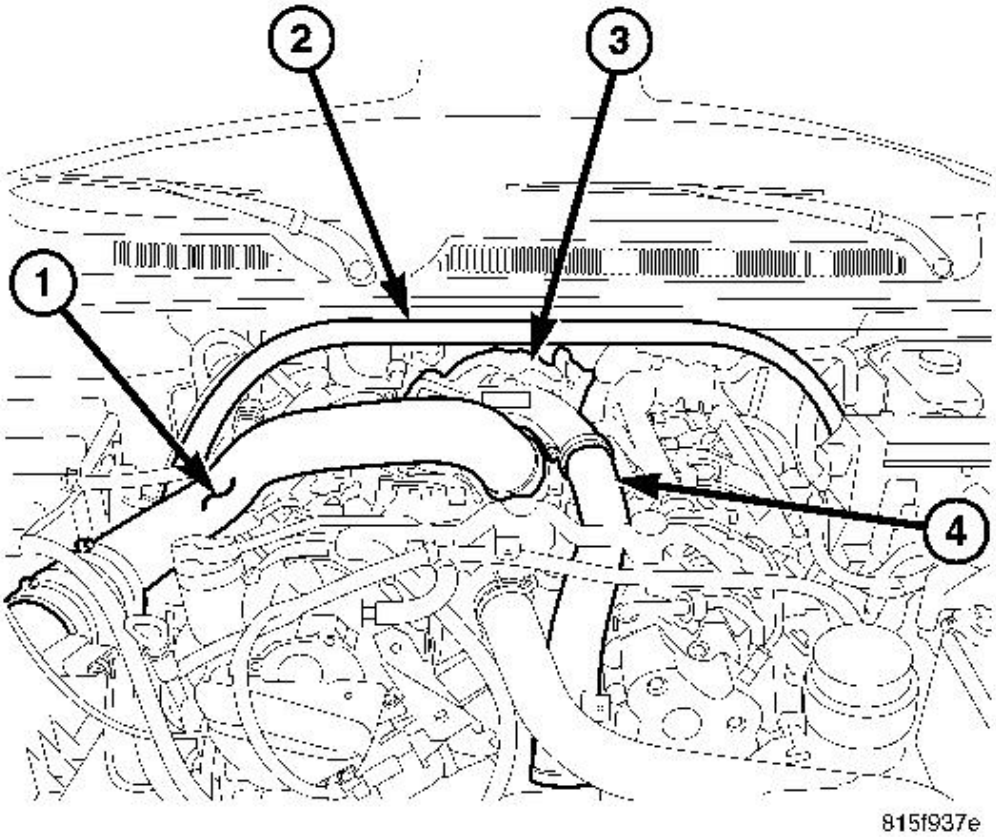

Fig. 179: Strut Tower Support, Air Cleaner Outlet Tube, Turbocharger & Charge Air Inlet Tube
Courtesy of CHRYSLER LLC

1 - AIR CLEANER OUTLET TUBE
2 - STRUT TOWER SUPPORT
3 - TURBOCHARGER
4 - CHARGE AIR INLET TUBE

18. Install the strut tower support (2). See **Fig. 179**.

CAMSHAFT OIL SEAL - RIGHT

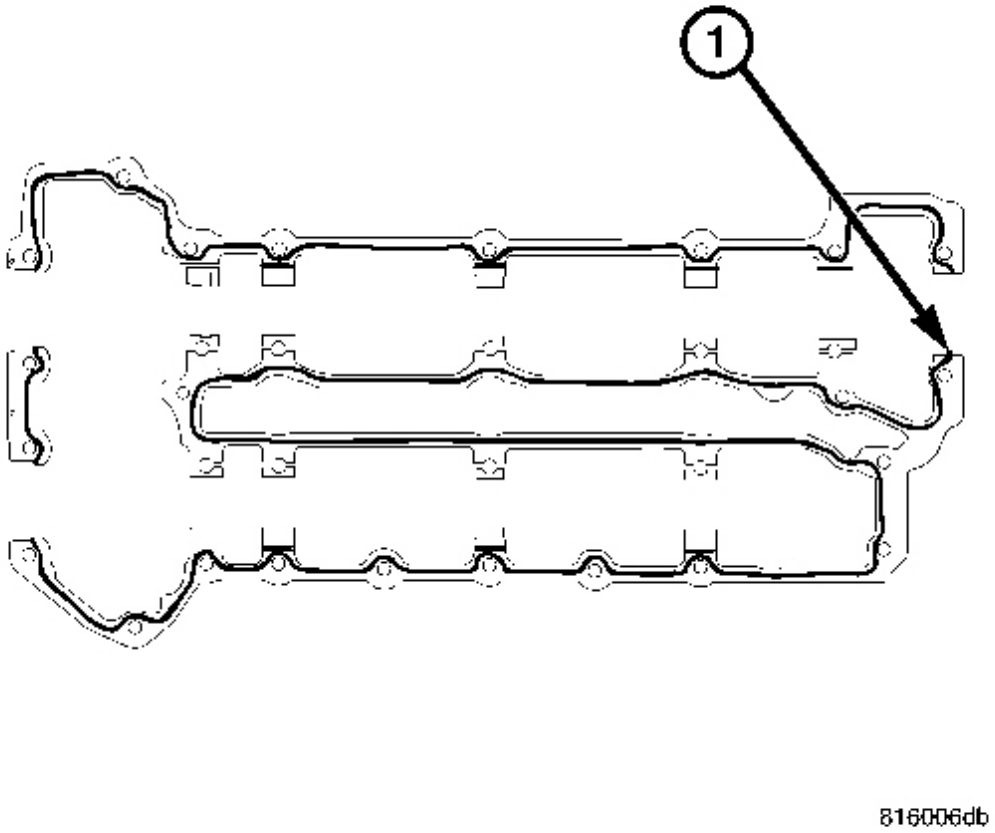

Fig. 180: Applying Cylinder Head Cover Sealant
Courtesy of CHRYSLER LLC

1 - 1.5 MM MOPAR ENGINE SEALANT RTV

1. Clean all mating surfaces.

NOTE: Care must be taken not to get any engine sealer on the camshaft journals.

2. Apply a 1.5 mm bead of Mopar® Engine RTV Sealant (1) to the cylinder head cover. See **Fig. 180**.

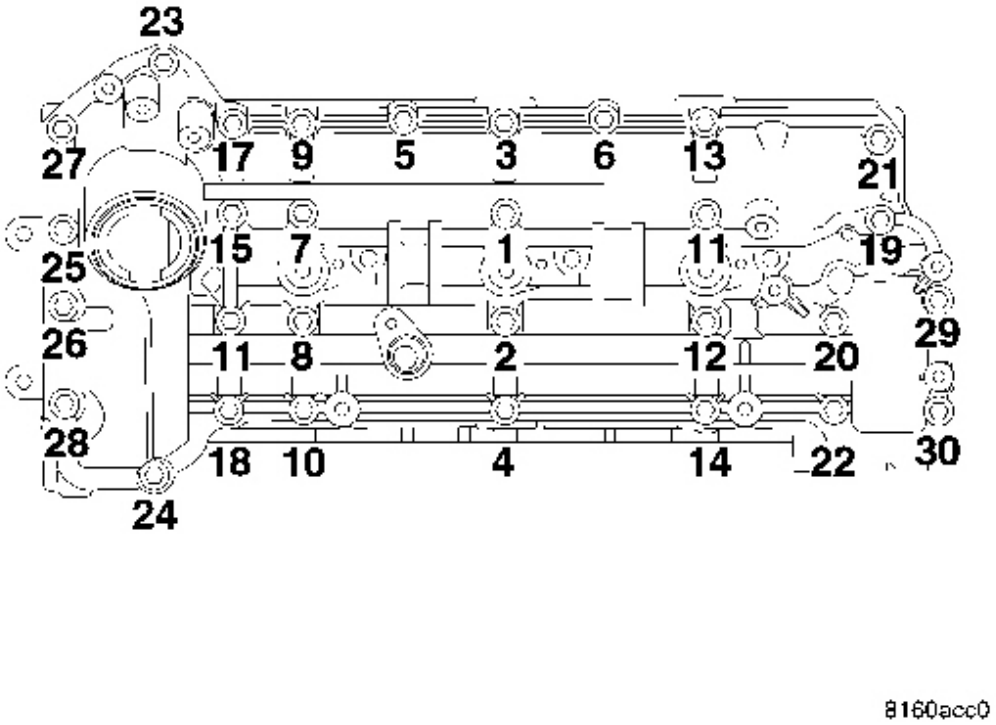

Fig. 181: Right Cylinder Head Cover Bolt Tightening Sequence
Courtesy of CHRYSLER LLC

3. Place the camshaft seal into position.
4. Install the cylinder head cover. Tighten the bolts in three stages following the sequence provided. First to 4 N.m (35 in. lbs.), then to 6 N.m (53 in. lbs.), and then to 8.4 N.m (75 in. lbs.).

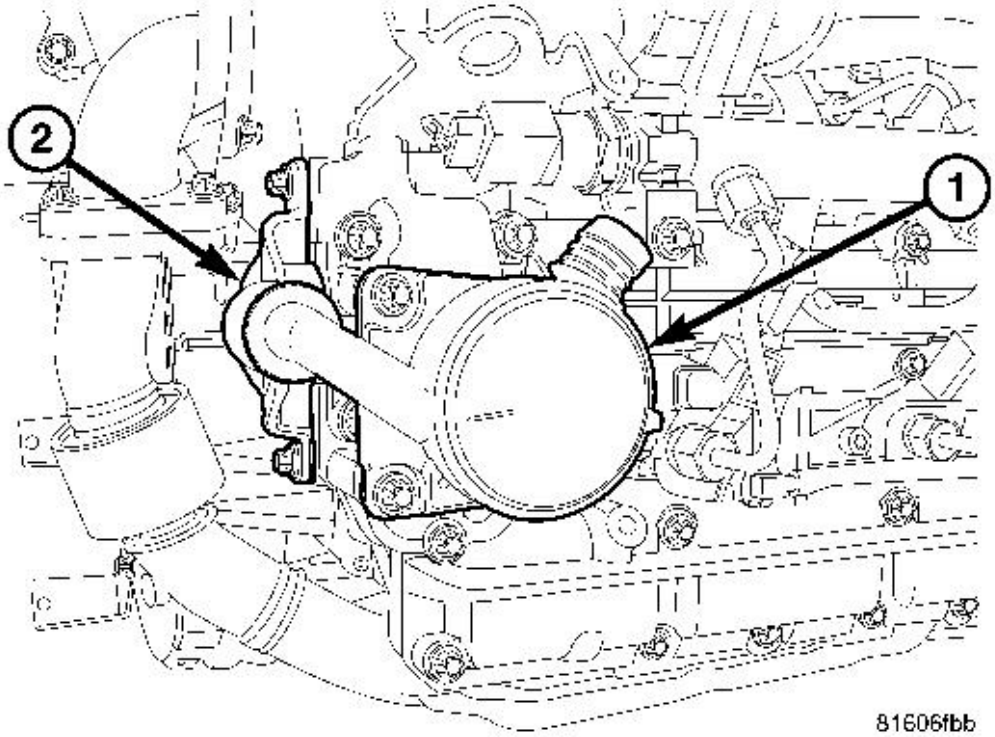

Fig. 182: Oil Separator Housing & Adapter
Courtesy of CHRYSLER LLC

1 - OIL SEPARATOR HOUSING
2 - OIL SEPARATOR HOUSING Adapter

5. Install the oil separator housing Adapter (2) with new camshaft seal. Tighten fasteners to 9 N.m (7 ft. lbs.).
6. Install the oil separator (1). Tighten fasteners to 9 N.m (7 ft. lbs.).

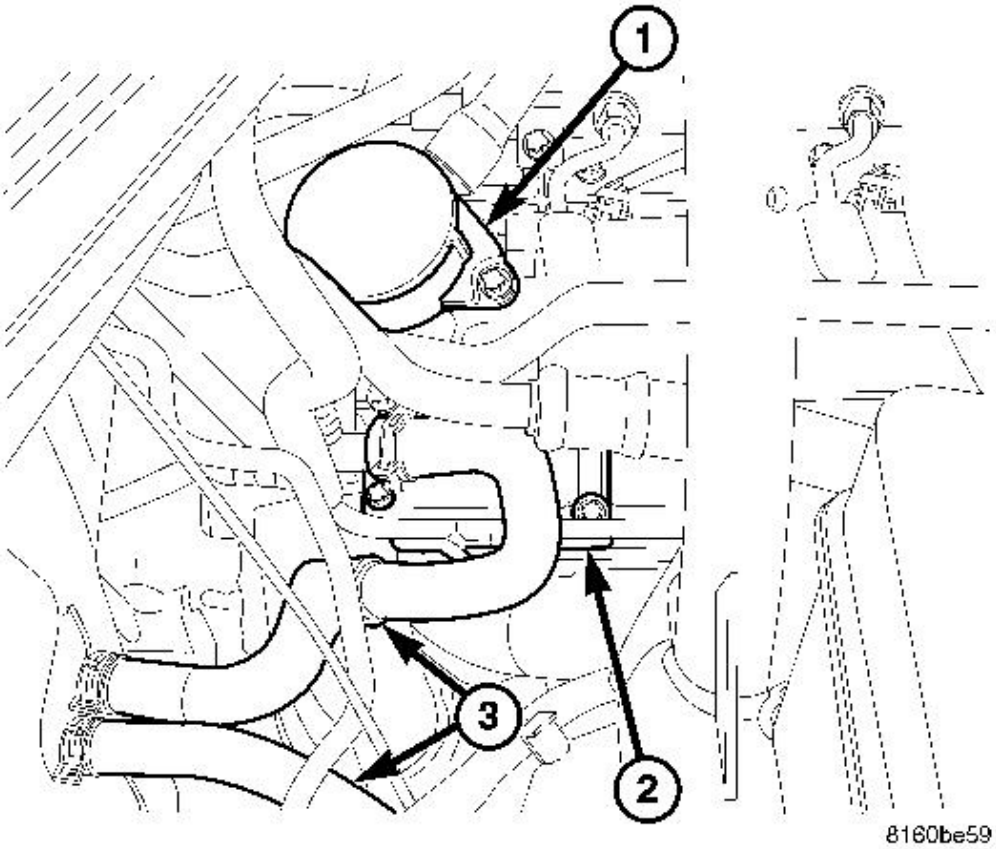

Fig. 183: Identifying Oil Separator, Heater Hose With Bracket
Courtesy of CHRYSLER LLC

1 - OIL SEPARATOR
2 - HEATER HOSE BRACKET
3 - HEATER HOSES

7. Secure the transmission tube fastener to the engine cover bracket.
8. Secure the heater hose bracket (2) to the cylinder head cover. See **Fig. 183**.

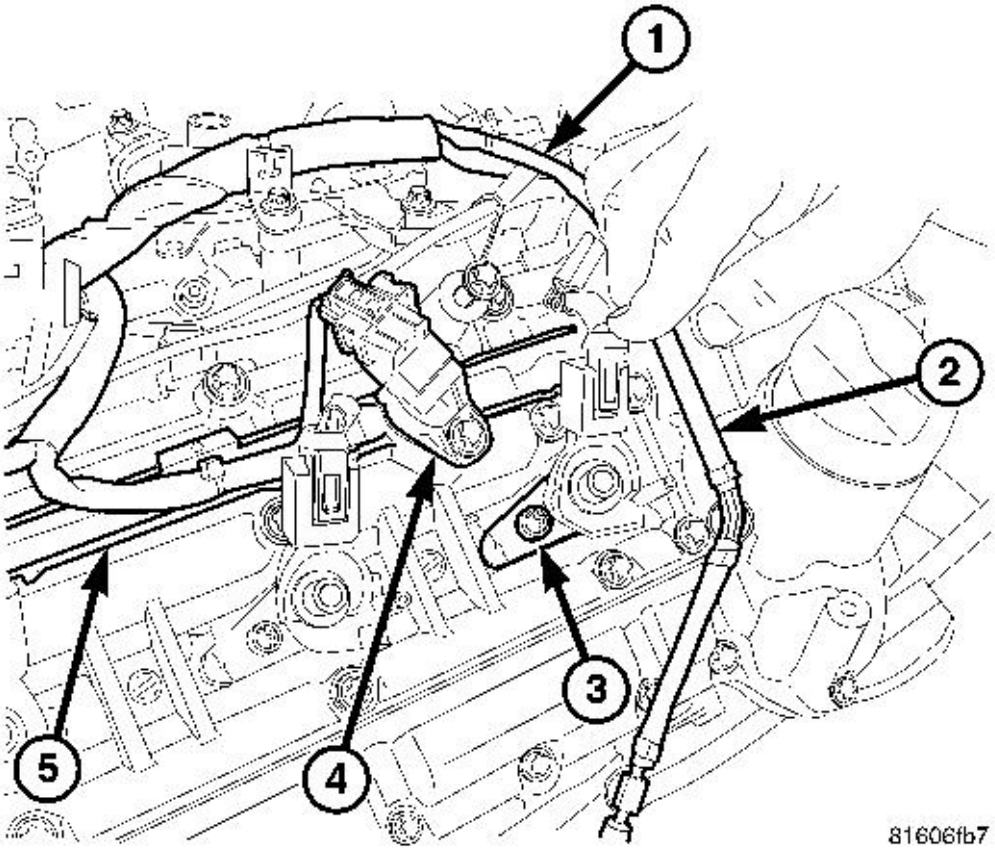

Fig. 184: Fuel Injector, Harness, Camshaft Position Sensor And Return Hose
Courtesy of CHRYSLER LLC

1 - MAIN ENGINE WIRING HARNESS
2 - RIGHT FUEL INJECTOR FUEL RETURN HOSE
3 - FUEL INJECTOR RETAINING
4 - CAMSHAFT POSITION SENSOR
5 - ENGINE HARNESS ROUTING PATH

9. Secure the vacuum pump hose pipe to the cylinder head cover.
10. Install the fuel injectors. Tighten hold down fasteners (3) to 7 N.m, plus 180° (62 in. lbs, plus 180°).
11. Connect the camshaft position sensor (4) and fuel injector wiring harness connectors.
12. Connect the return fuel hose (2) to each injector.
13. Install the fuel rail, high pressure fuel lines and injector cover.

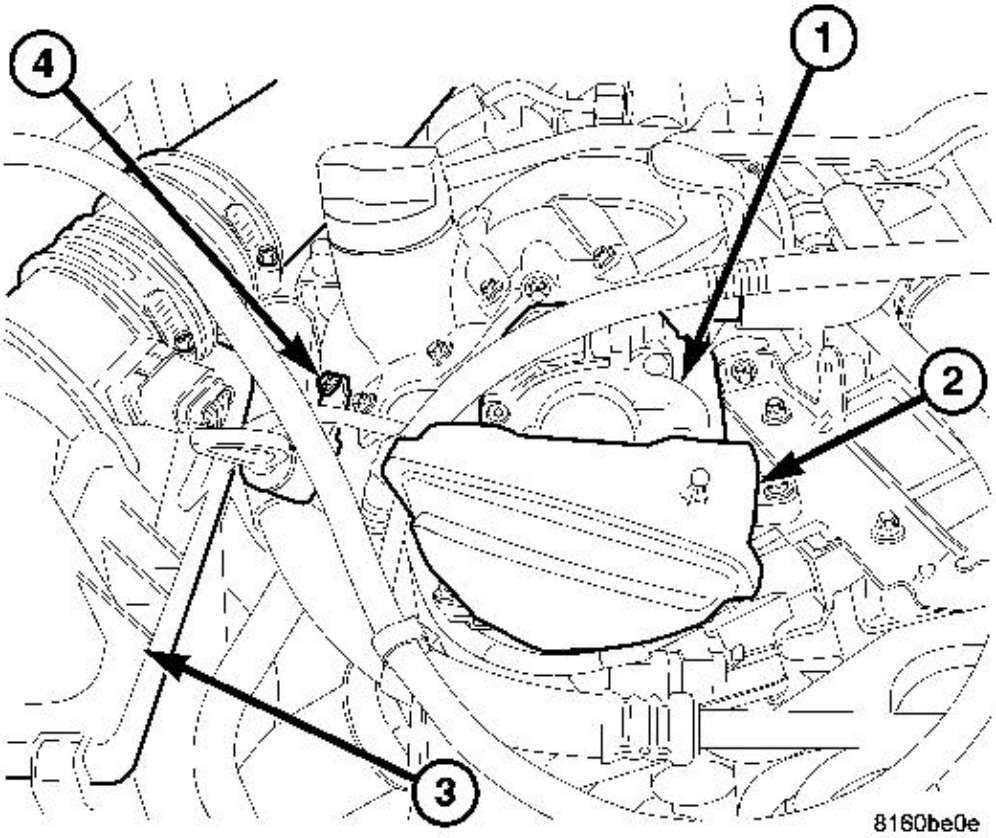

Fig. 185: Vacuum Pump, Resonator, Air Cleaner Cover & Oil Level Indicator Tube Fastener
Courtesy of CHRYSLER LLC

1 - VACUUM PUMP
2 - RESONATOR
3 - AIR CLEANER COVER
4 - OIL LEVEL INDICATOR TUBE FASTENER

14. Secure the engine oil indicator tube (4) to the cylinder head. Tighten fastener to 11 N.m (8 ft. lbs.).
15. Install the vacuum pump (1).
16. Install the air control valve resonator (2).

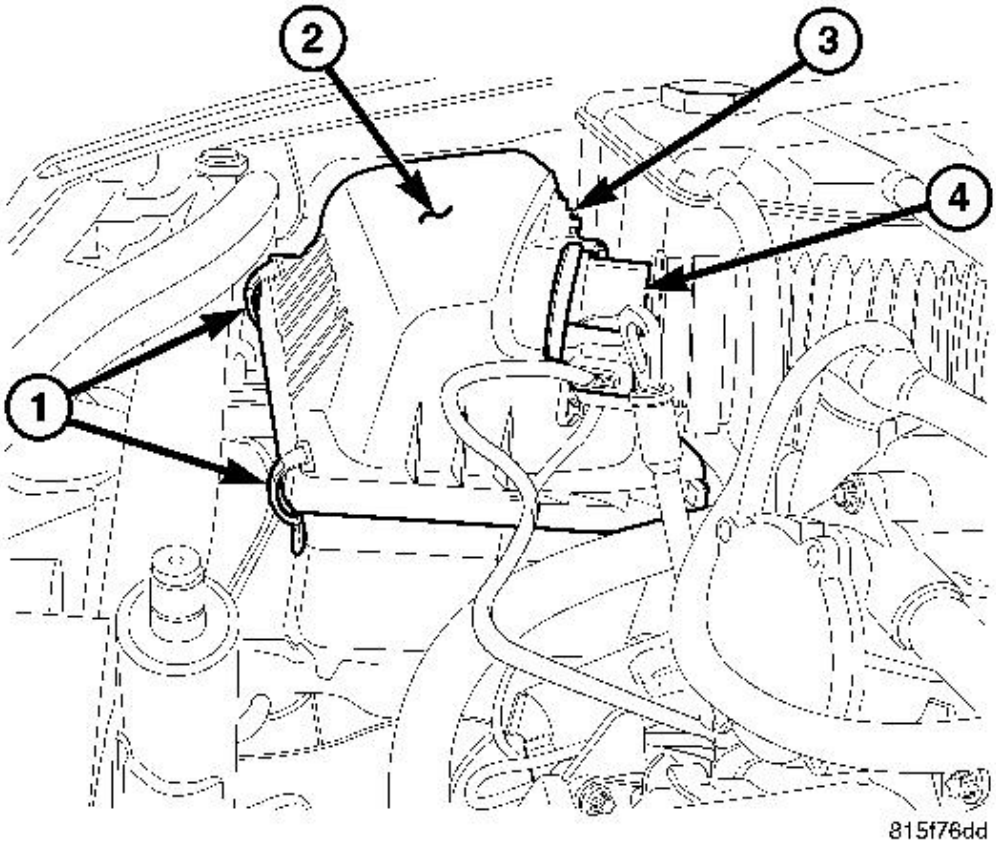

Fig. 186: Air Cleaner Cover And Components
Courtesy of CHRYSLER LLC

1 - SPRING CLIPS
2 - COVER
3 - AIR PRESSURE SENSOR
4 - MAF SENSOR

17. Install the air cleaner outlet tube to the turbocharger and secure the air cleaner housing cover (2). See **Fig. 186**.

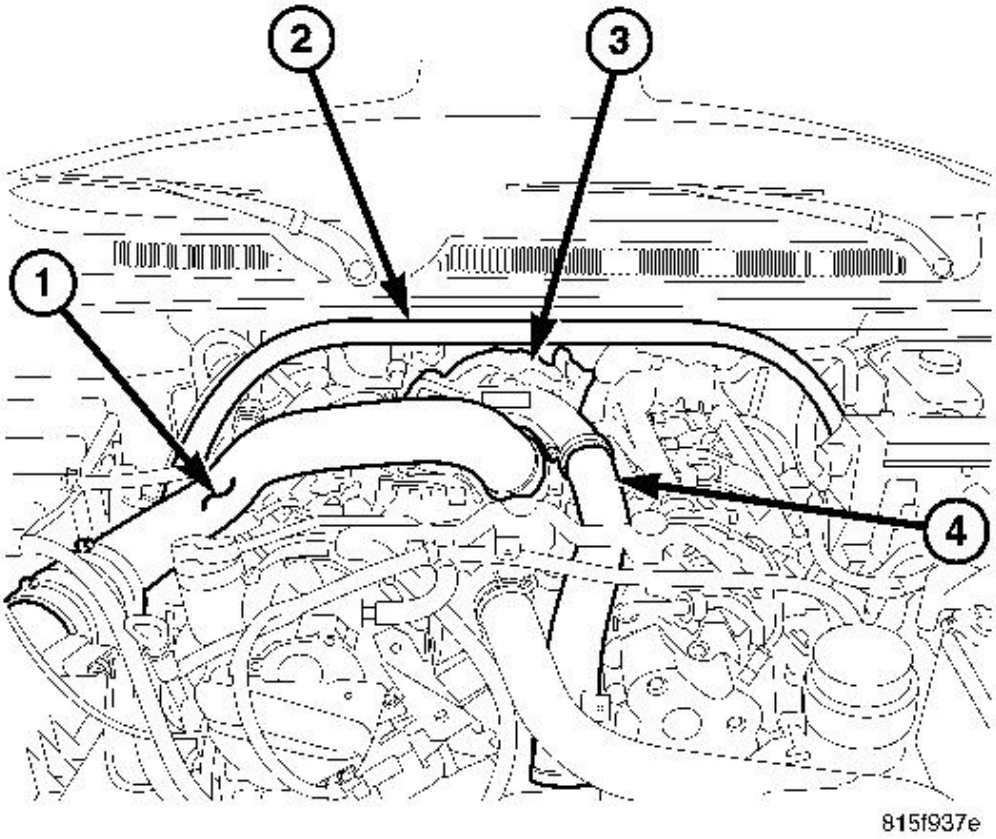

Fig. 187: Strut Tower Support, Air Cleaner Outlet Tube, Turbocharger & Charge Air Inlet Tube
Courtesy of CHRYSLER LLC

1 - AIR CLEANER OUTLET TUBE
2 - STRUT TOWER SUPPORT
3 - TURBOCHARGER
4 - CHARGE AIR INLET TUBE

18. Install the strut tower support (2). See **Fig. 187**.

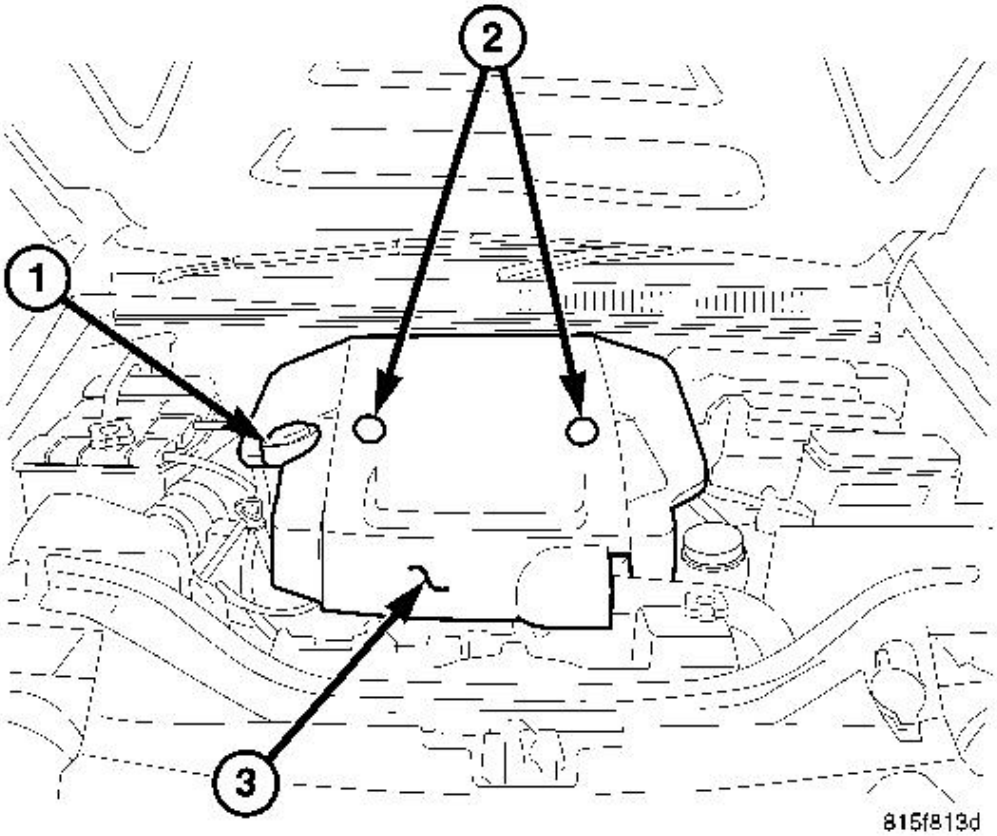

Fig. 188: Oil Filler Cap, Cover Fasteners & Engine Cover
Courtesy of CHRYSLER LLC

1 - OIL FILLER CAP
2 - COVER FASTENERS
3 - ENGINE COVER

19. Connect the negative battery cable.

WARNING: **High-pressure fuel lines deliver fuel under extreme pressure from the injection pump to the injectors. This maybe as high as 1350 bar (19,580 psi). Use extreme caution when inspecting for high-pressure fuel leaks. Inspect high-pressure fuel leaks with a sheet of cardboard. Wear safety goggles and adequate protective clothing when servicing fuel system. Fuel under this amount of pressure can penetrate skin causing serious or fatal injury.**

20. Start engine, allow to warm, turn engine off and inspect for leaks.
21. Install the engine cover.

CAMSHAFT(S)

DESCRIPTION

CAMSHAFTS

The camshafts are multiple-piece components with six machined lobes that are mounted to a hollow shaft with an interference fit. The cam lobes are induction hardened. Each camshaft has four bearing journals except for the right-bank intake camshaft. Due to the longer length needed to accommodate the centrifugal oil separator, the right-bank intake camshaft has five bearing journals. The camshaft journals have the same diameter and are supplied with oil pressure through lubrication passages in the cylinder head journals. The cylinder head covers provide the upper bearing support for the camshafts. Each camshaft contains two retaining brackets, which prevent the camshafts from coming out of their journals when the cylinder head covers are removed. The retaining brackets are not designed to hold the camshafts if the engine is be rotated without the cylinder head covers. Special tool #9555 must be installed if the engine is rotated without the cylinder head covers.

OPERATION

CAMSHAFT(S)

Each cylinder has two intake and two exhaust valves, and one glow plug. Valve lash is controlled by hydraulic lifter/roller finger followers inside the cylinder head, in bores under the camshafts. The finger followers transfer the camshaft lobe movement into vertical valve movement. The valve moves by the lobe of the camshaft pressing down on the finger follower roller.

The finger followers are located on top of the hydraulic lifters and the valves. The finger followers are not held rigidly into position; instead, they are held in position by resting on top of the valve and the hydraulic lifter pivoting ball. A holding clip secures the finger follower to the hydraulic lifter.

WARNING: When the hydraulic lash adjusters are removed from the engine, they must be stored upright and in clean conditions. Install the finger followers and hydraulic lifters in the same location as removed.

WARNING: Replacement of the camshaft will also require replacement of the finger followers and hydraulic lifters.

REMOVAL

CAMSHAFT(S) - LEFT CYLINDER HEAD

1. Disconnect negative battery cable. Refer to **REMOVAL** .

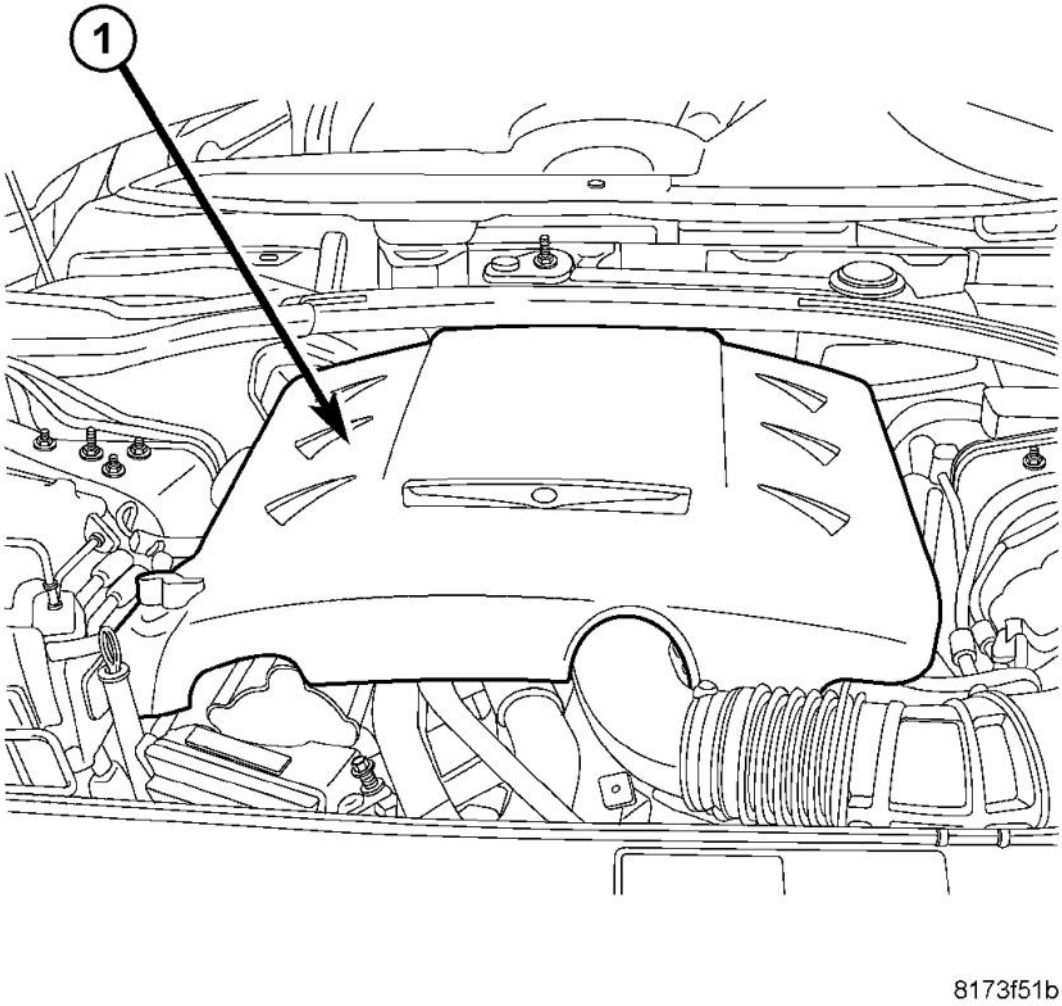

Fig. 189: Engine Appearance Cover
Courtesy of CHRYSLER LLC

2. Remove engine cover.

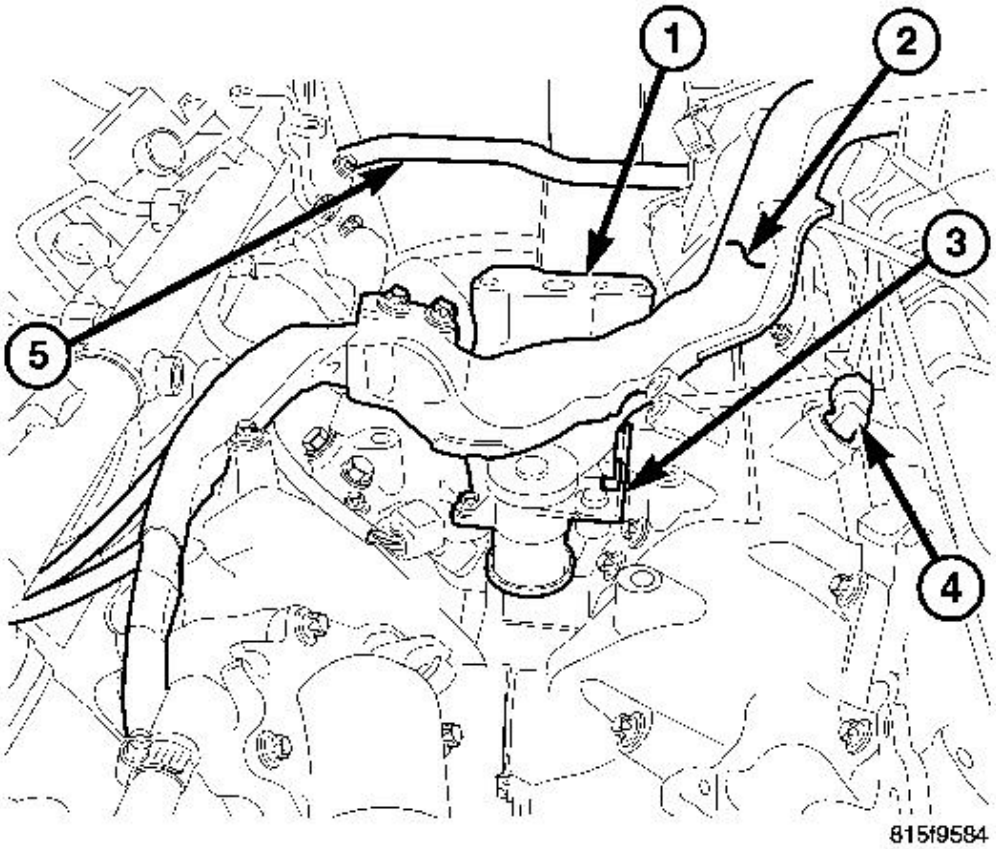

Fig. 190: Turbocharger Oil Housing Adapter, Main Engine Wiring Harness, Swirl Valve Actuator & Coolant Temperature Sensor
Courtesy of CHRYSLER LLC

1 - TURBOCHARGER OIL HOUSING Adapter
2 - MAIN ENGINE WIRING HARNESS
3 - SWIRL VALVE ACTUATOR
4 - COOLANT TEMPERATURE SENSOR

3. Rotate the engine to TDC using the vibration damper bolt.
4. Remove the main engine wiring harness retainers at the rear of the cylinder head cover.
5. Remove the EGR valve.
6. Remove the charge air inlet tube.
7. Disconnect the fuel line hoses at the fuel rail, high pressure pump using 9539 Pliers.

8. Disconnect the fuel lines at the left cylinder head.

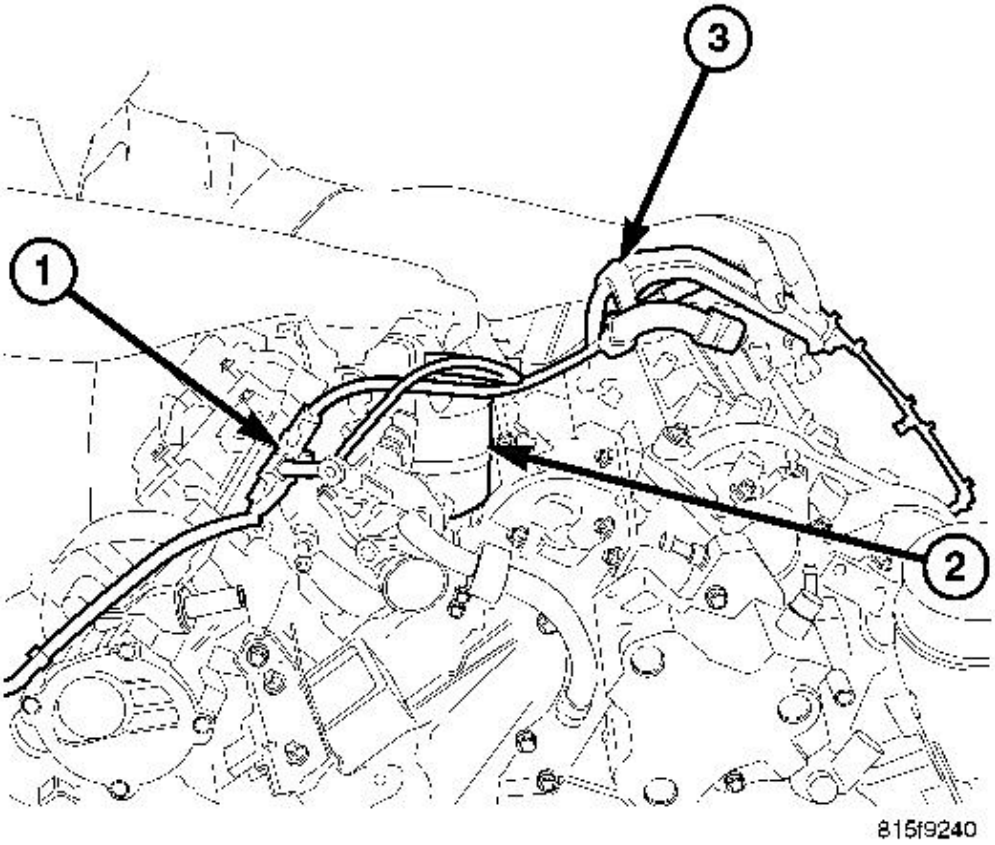

Fig. 191: Fuel Filter, Lines And Hoses
Courtesy of CHRYSLER LLC

1 - RETURN FUEL HOSE BUNDLE
2 - FUEL FILTER
3 - LOW PRESSURE FUEL SUPPLY AND RETURN PIPE

9. Remove the fuel pipe bundle and set aside.
10. Remove the oil filter housing support bracket.
11. Remove the cylinder head cover.

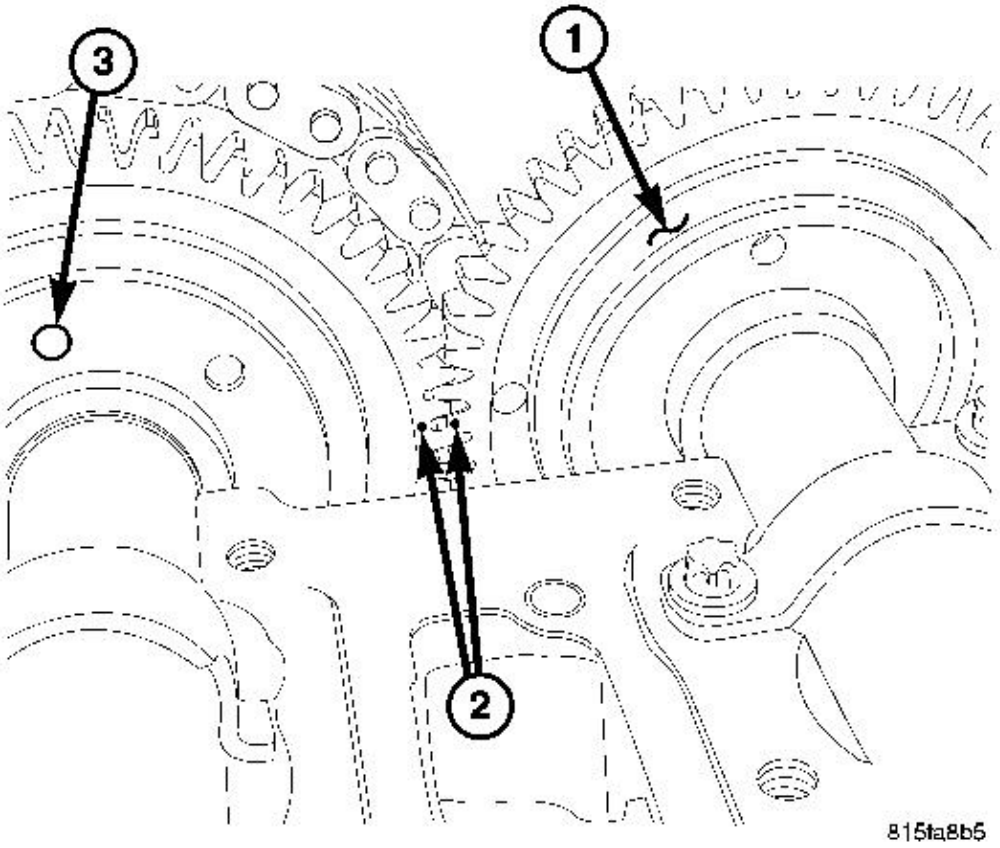

Fig. 192: Camshaft Gear Alignment
Courtesy of CHRYSLER LLC

1 - CAMSHAFT GEAR
2 - CAMSHAFT GEAR ALIGNMENT MARKS
3 - CAMSHAFT DRIVE GEAR DOWEL POSITION

NOTE: **The left exhaust camshaft gear alignment mark is located in the gear tooth valley. The left intake camshaft gear mark is located on the outside of the tooth.**

12. Check the camshaft timing gears for alignment. The alignment marks should be touching and the exhaust camshaft drive gear alignment pin should be located at approximately 12 o'clock, when viewed from the front camshaft seal.
13. Rotate the engine by the vibration damper bolt, past TDC to gain access to the lower camshaft drive gear

bolt, and remove the bolt.

14. Rotate the engine back to TDC and check camshaft gear alignment.

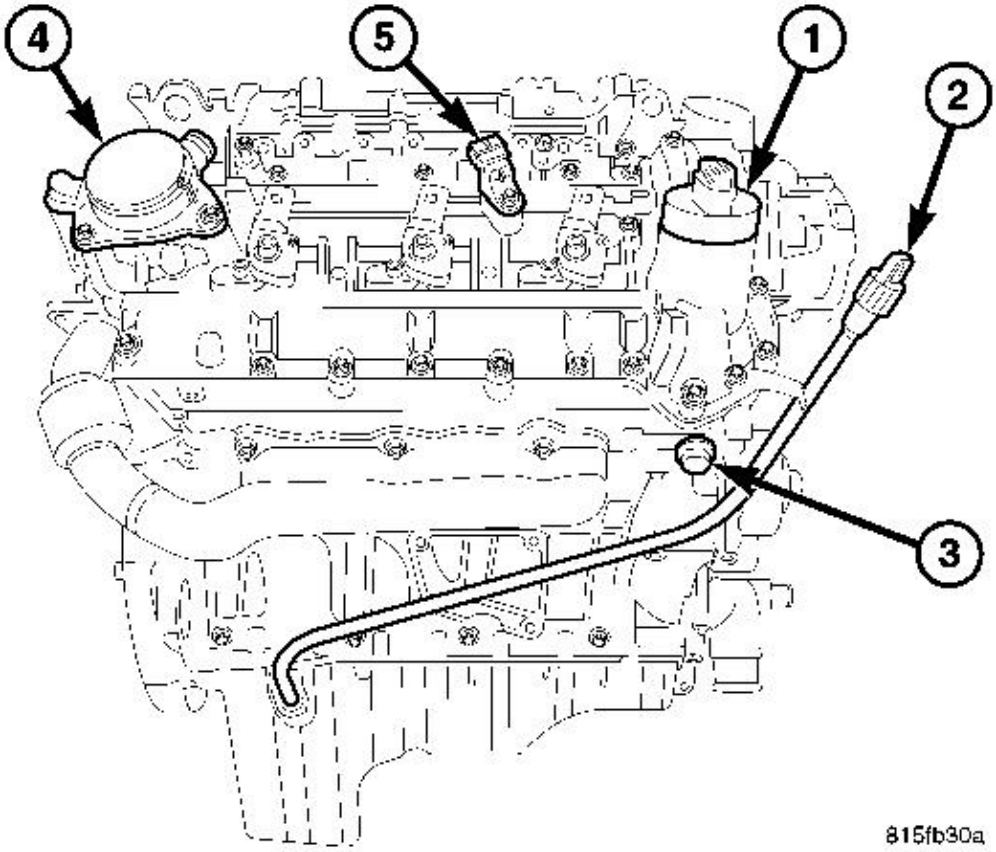

Fig. 193: Engine Oil Cap, Oil Level Indicator, Timing Chain Tensioner, Oil Separator Assembly & Camshaft Position Sensor
Courtesy of CHRYSLER LLC

1 - ENGINE OIL CAP
2 - OIL LEVEL INDICATOR
3 - TIMING CHAIN TENSIONER
4 - OIL SEPARATOR ASSEMBLY
5 - CAMSHAFT POSITION SENSOR

15. Remove the timing chain tensioner (3).
16. Paint mark or scribe the timing chain to drive gear relation.

17. Tie strap the timing chain to drive gear.
18. Remove the remaining camshaft drive gear bolts and separate the drive gear from camshaft gear.

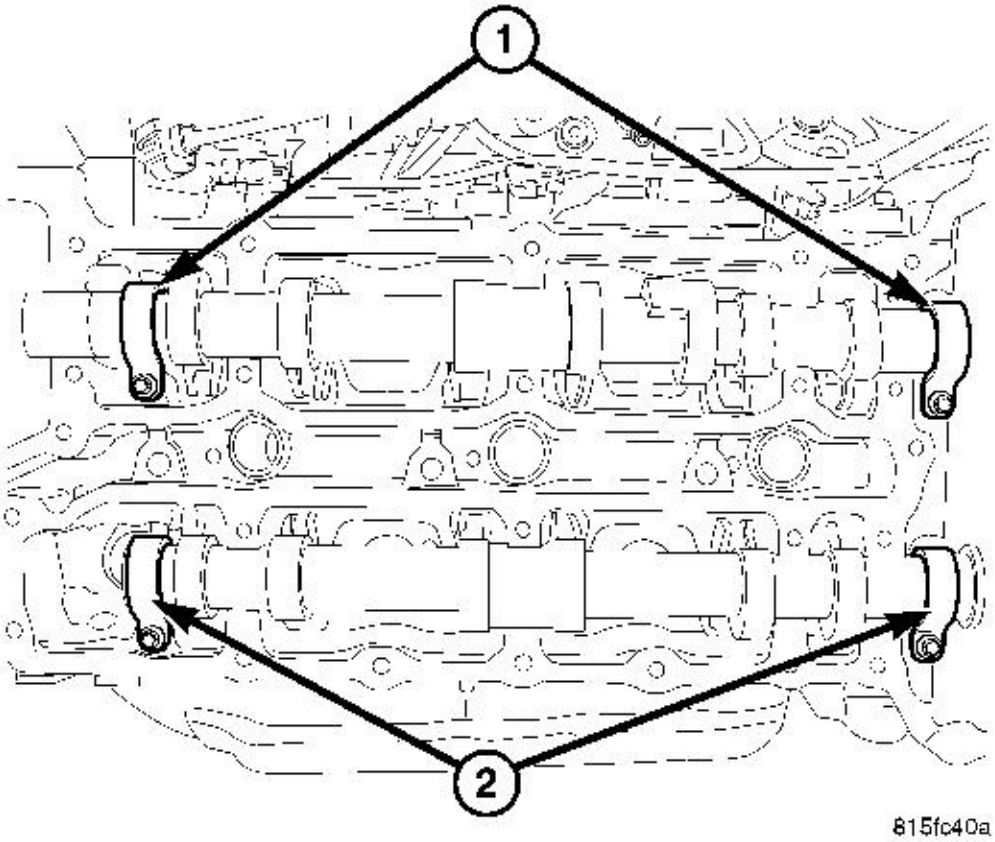

Fig. 194: Intake/Exhaust Camshaft Retainers
Courtesy of CHRYSLER LLC

1 - INTAKE CAMSHAFT RETAINERS 2 - EXHAUST CAMSHAFT RETAINERS

19. Remove the intake and exhaust camshaft retainers.
20. Remove the left cylinder head camshafts.

CAMSHAFT(S) - RIGHT CYLINDER HEAD

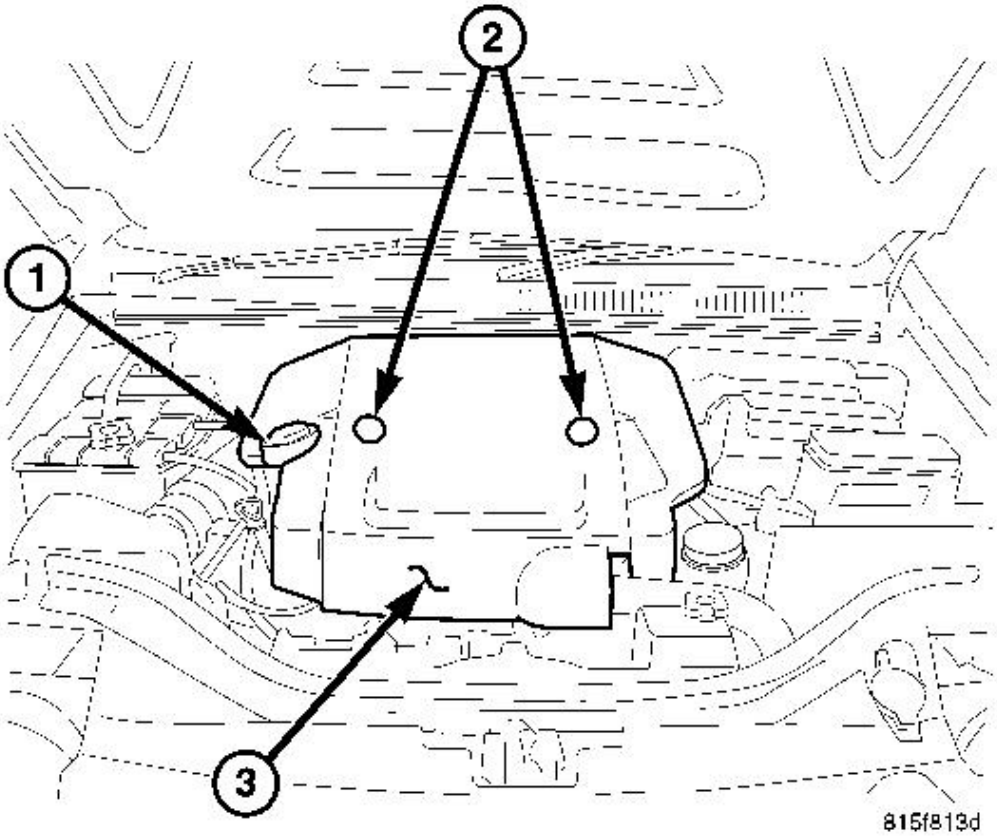

Fig. 195: Oil Filler Cap, Cover Fasteners & Engine Cover
Courtesy of CHRYSLER LLC

1 - OIL FILLER CAP
2 - COVER FASTENERS
3 - ENGINE COVER

1. Disconnect negative battery cable. Refer to **REMOVAL** .
2. Remove engine cover.
3. Rotate the engine to TDC using the vibration damper bolt.

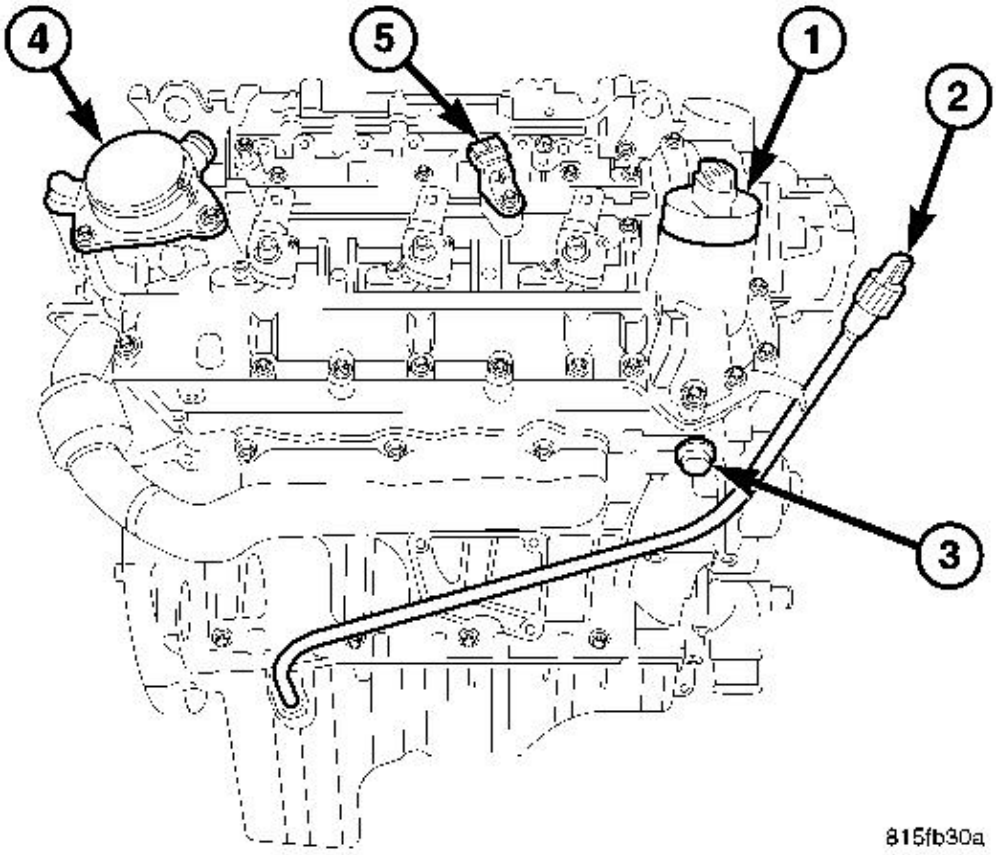

Fig. 196: Engine Oil Cap, Oil Level Indicator, Timing Chain Tensioner, Oil Separator Assembly & Camshaft Position Sensor
Courtesy of CHRYSLER LLC

1 - ENGINE OIL CAP
2 - OIL LEVEL INDICATOR
3 - TIMING CHAIN TENSIONER
4 - OIL SEPARATOR ASSEMBLY
5 - CAMSHAFT POSITION SENSOR

4. Remove the intake air resonator.
5. Remove the vacuum pump.
6. Remove the oil level indicator tube (2) retaining bolt at the right cylinder head cover.
7. Remove the crankcase breather assembly (4) from the right cylinder head cover.

8. Remove the cylinder head cover. See **REMOVAL**)

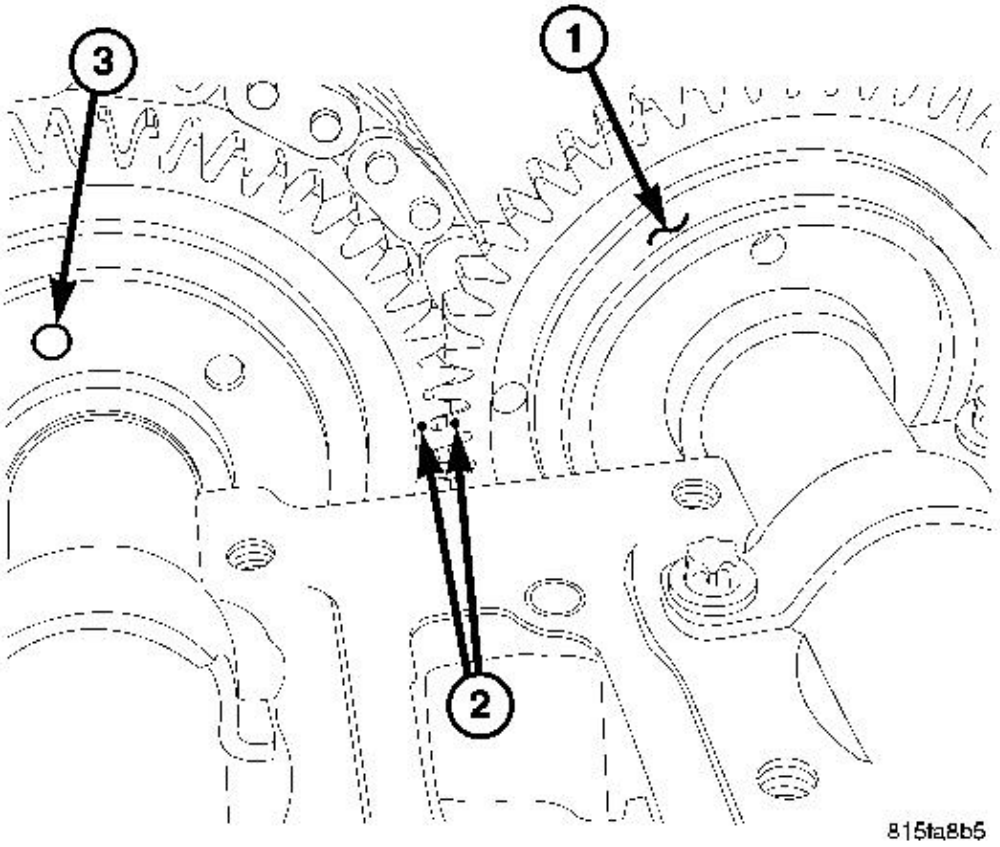

Fig. 197: Camshaft Gear Alignment
Courtesy of CHRYSLER LLC

1 - CAMSHAFT GEAR
2 - CAMSHAFT GEAR ALIGNMENT MARKS
3 - CAMSHAFT DRIVE GEAR DOWEL POSITION

NOTE: **The right exhaust camshaft gear alignment mark is located in the gear tooth valley. The left intake camshaft gear mark is located on the outside of the tooth.**

9. Check the camshaft timing gears for alignment. The alignment marks should be touching and the exhaust camshaft drive gear alignment pin should be located at approximately 12 o'clock, when viewed from the

front camshaft seal.

10. Rotate the engine by the vibration damper bolt, past TDC to gain access to the lower camshaft drive gear bolt, and remove the bolt.
11. Rotate the engine back to TDC and check camshaft gear alignment.

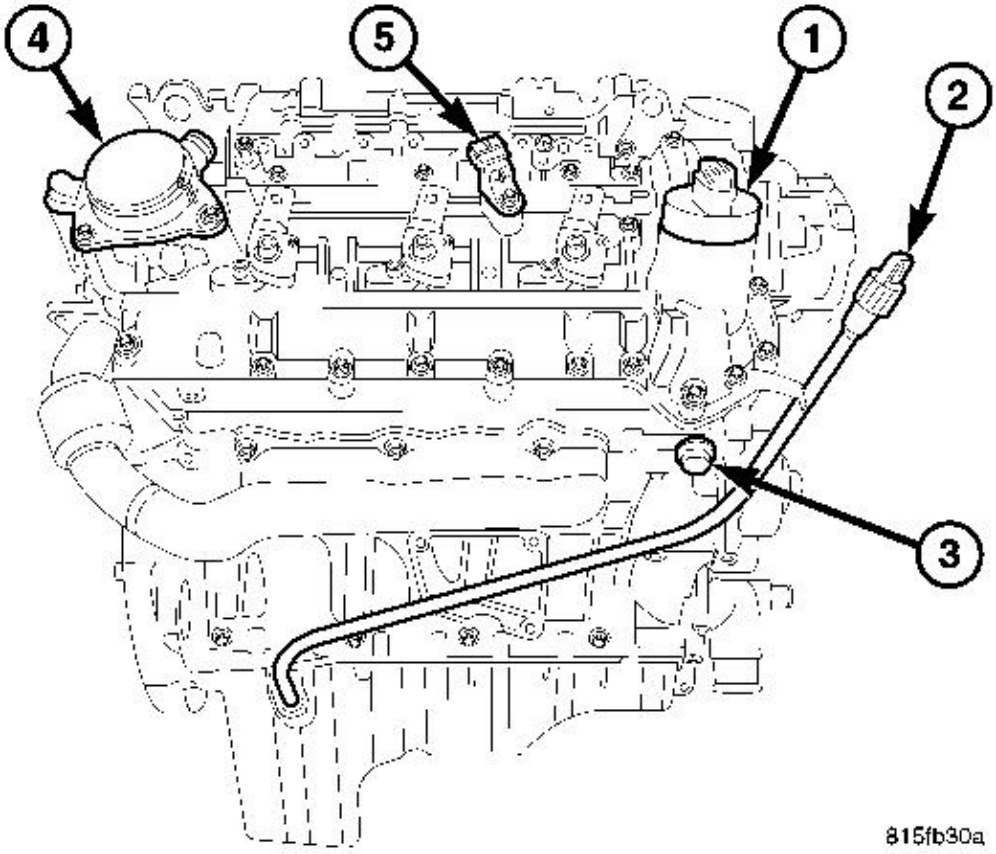

Fig. 198: Engine Oil Cap, Oil Level Indicator, Timing Chain Tensioner, Oil Separator Assembly & Camshaft Position Sensor
Courtesy of CHRYSLER LLC

1 - ENGINE OIL CAP
2 - OIL LEVEL INDICATOR
3 - TIMING CHAIN TENSIONER
4 - OIL SEPARATOR ASSEMBLY
5 - CAMSHAFT POSITION SENSOR

12. Remove the timing chain tensioner (3).

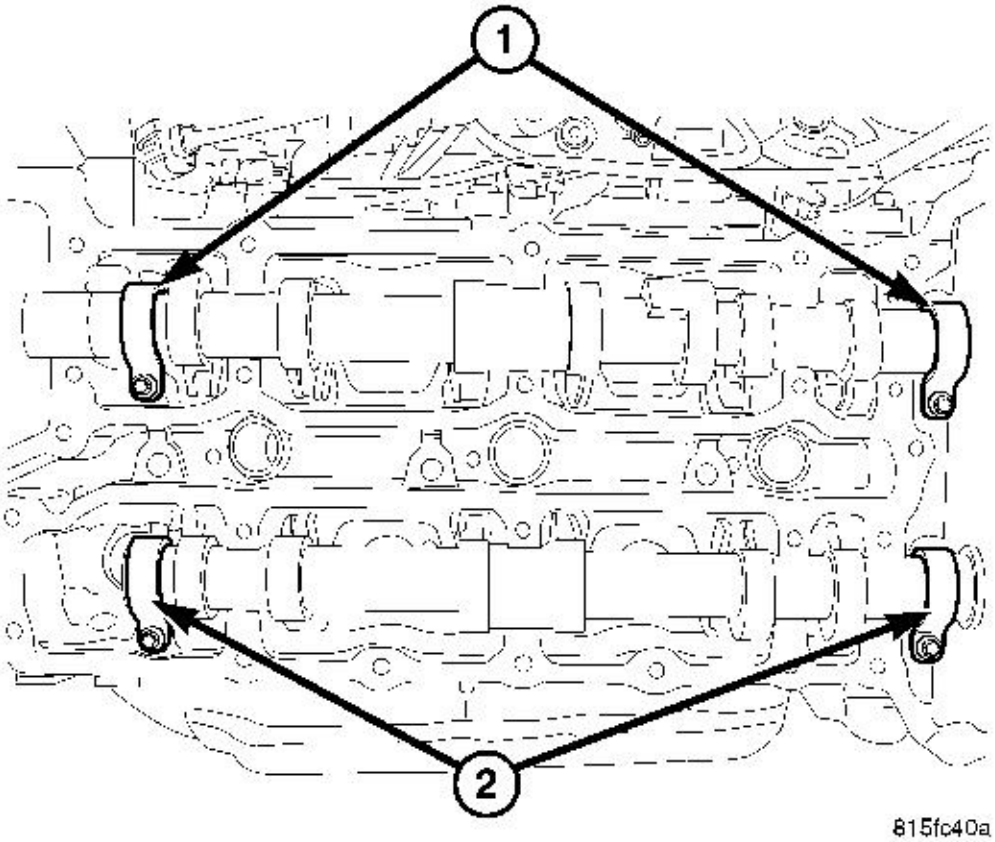

Fig. 199: Intake/Exhaust Camshaft Retainers
Courtesy of CHRYSLER LLC

1 - INTAKE CAMSHAFT RETAINERS 2 - EXHAUST CAMSHAFT RETAINERS

13. Paint mark or scribe the timing chain to drive gear relation.
14. Tie strap the timing chain to drive gear.
15. Remove the remaining camshaft drive gear bolts and separate the drive gear from camshaft gear.
16. Remove the intake and exhaust camshaft retainers.
17. Remove the left cylinder head camshafts.

INSTALLATION

CAMSHAFT(S) - LEFT

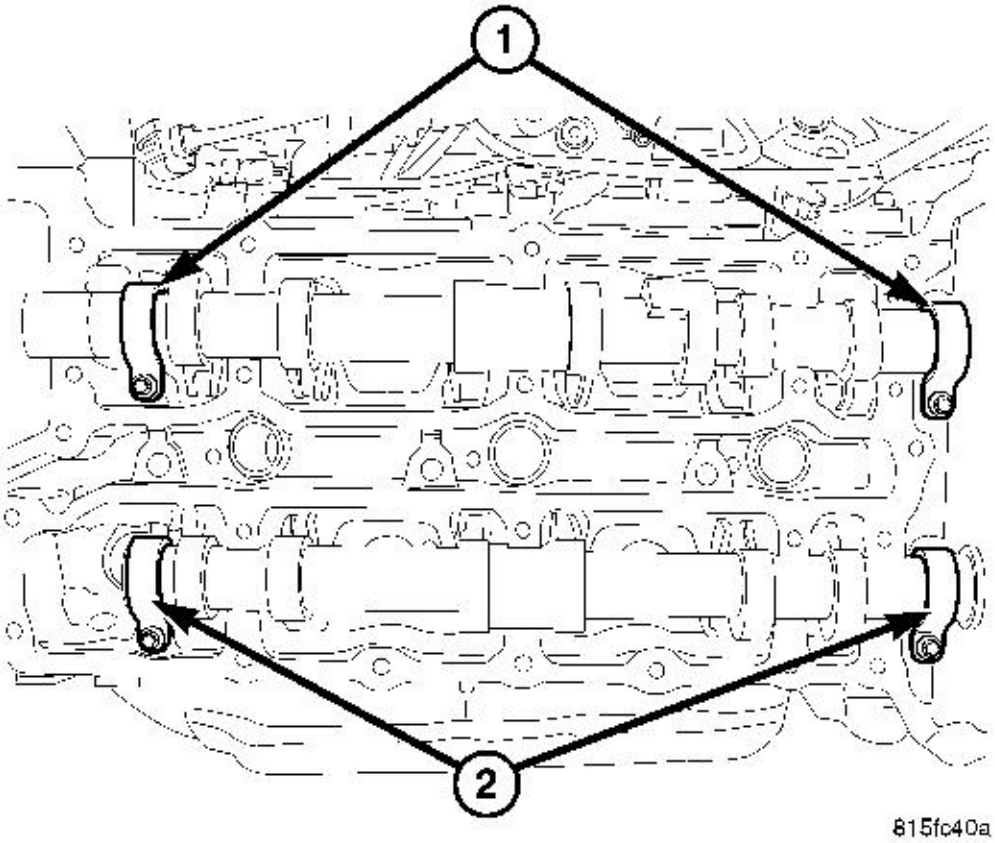

Fig. 200: Intake/Exhaust Camshaft Retainers
Courtesy of CHRYSLER LLC

1 - INTAKE CAMSHAFT RETAINERS
2 - EXHAUST CAMSHAFT RETAINERS

1. Clean all mating surfaces.
2. Lubricate camshafts with Mopar® Engine Oil Supplement, or equivalent.
3. Carefully install camshafts onto cylinder head journals and align the camshaft gear timing marks.
4. Install the camshaft retainers and tighten each retaining bolt to 9 N.m (80 in. lbs.).

NOTE: **If the camshaft endplay is not within specification, replace the cylinder head and cylinder head cover.**

5. After camshafts are properly installed in cylinder head cover check end play of camshafts with a dial indicator.

NOTE: **The left exhaust camshaft gear alignment mark is located in the gear tooth valley. The left intake camshaft gear mark is located on the outside of the tooth. The alignment marks should be touching and the exhaust camshaft drive gear alignment pin should be located at approximately 12 o'clock, when viewed from the front camshaft seal.**

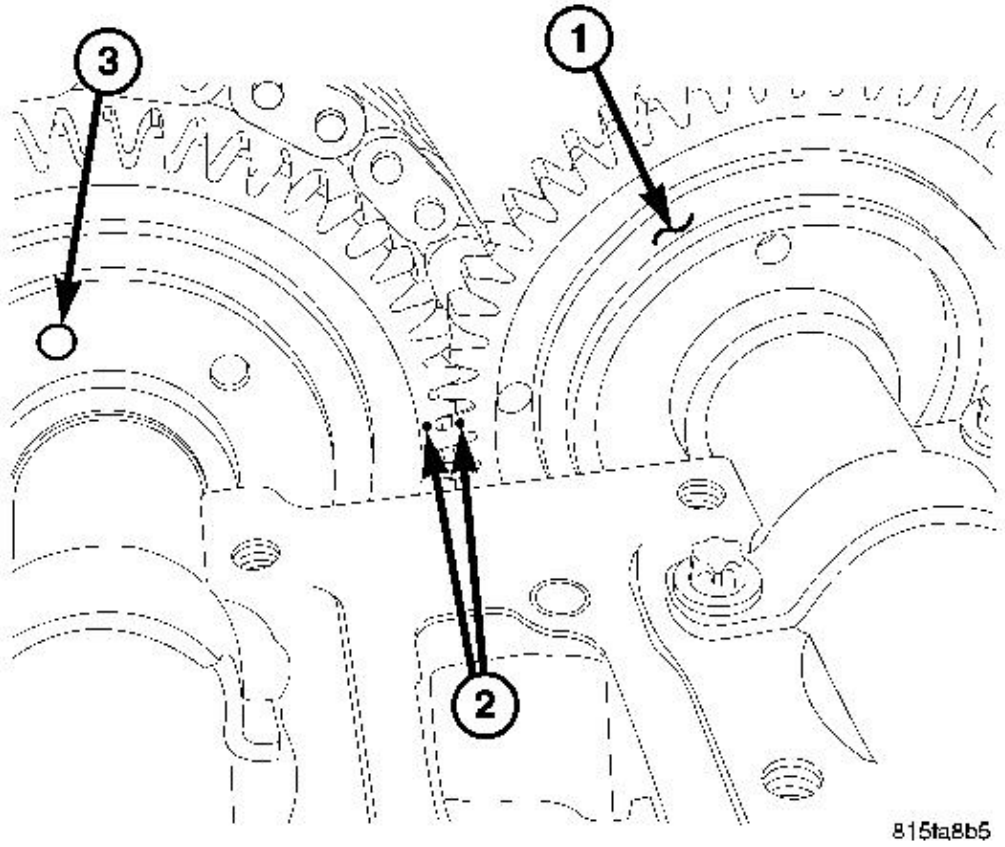

Fig. 201: Camshaft Gear Alignment
Courtesy of CHRYSLER LLC

1 - CAMSHAFT GEAR
2 - CAMSHAFT GEAR ALIGNMENT MARKS
3 - CAMSHAFT DRIVE GEAR DOWEL POSITION

6. Assure the proper positioning of the camshaft gear alignment marks and install the camshaft driven gear onto the exhaust camshaft alignment dowel.
7. Install two of the drive gear bolts. Tighten the bolts to 18 N.m (13 ft. lbs.).
8. Assure proper positioning of the timing chain to drive gear paint or scribe marks and remove the tie strap.
9. Rotate the engine by the vibration damper bolt enough to install the third camshaft drive gear bolt. Tighten the bolt to 18 N.m (13 ft. lbs.).
10. Rotate the engine back to TDC and check camshaft gear alignment.

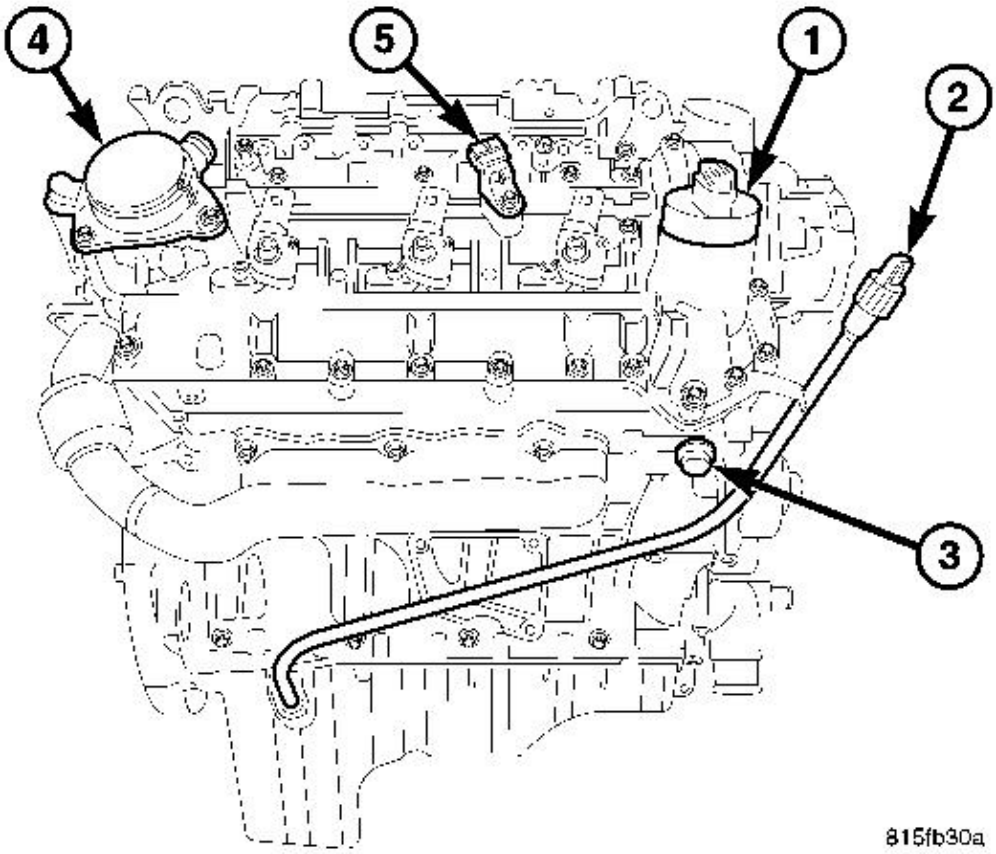

Fig. 202: Engine Oil Cap, Oil Level Indicator, Timing Chain Tensioner, Oil Separator Assembly & Camshaft Position Sensor
Courtesy of CHRYSLER LLC

1 - ENGINE OIL CAP
2 - OIL LEVEL INDICATOR

3 - TIMING CHAIN TENSIONER
4 - OIL SEPARATOR ASSEMBLY
5 - CAMSHAFT POSITION SENSOR

11. Install the timing chain tensioner.

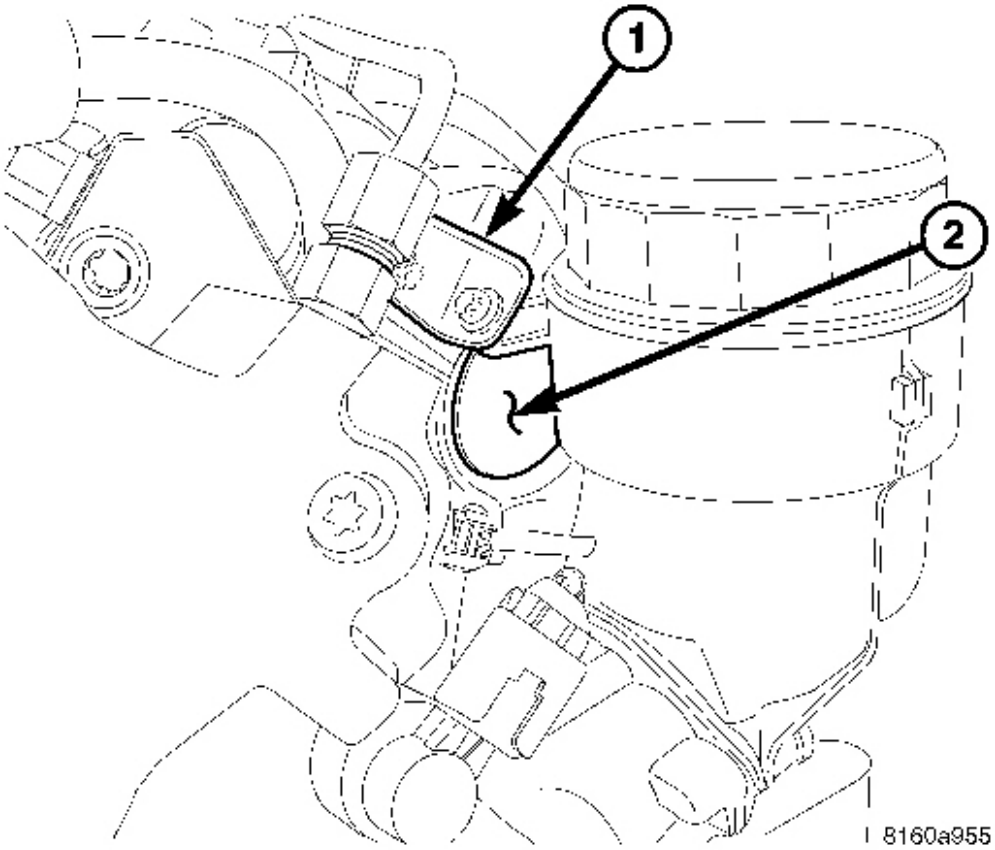

Fig. 203: Left Front Camshaft Oil Seal & Oil Filter Housing Bracket
Courtesy of CHRYSLER LLC

1 - OIL FILTER HOUSING BRACKET
2 - LEFT FRONT CAMSHAFT OIL SEAL

12. Install the left front camshaft oil seal (2).

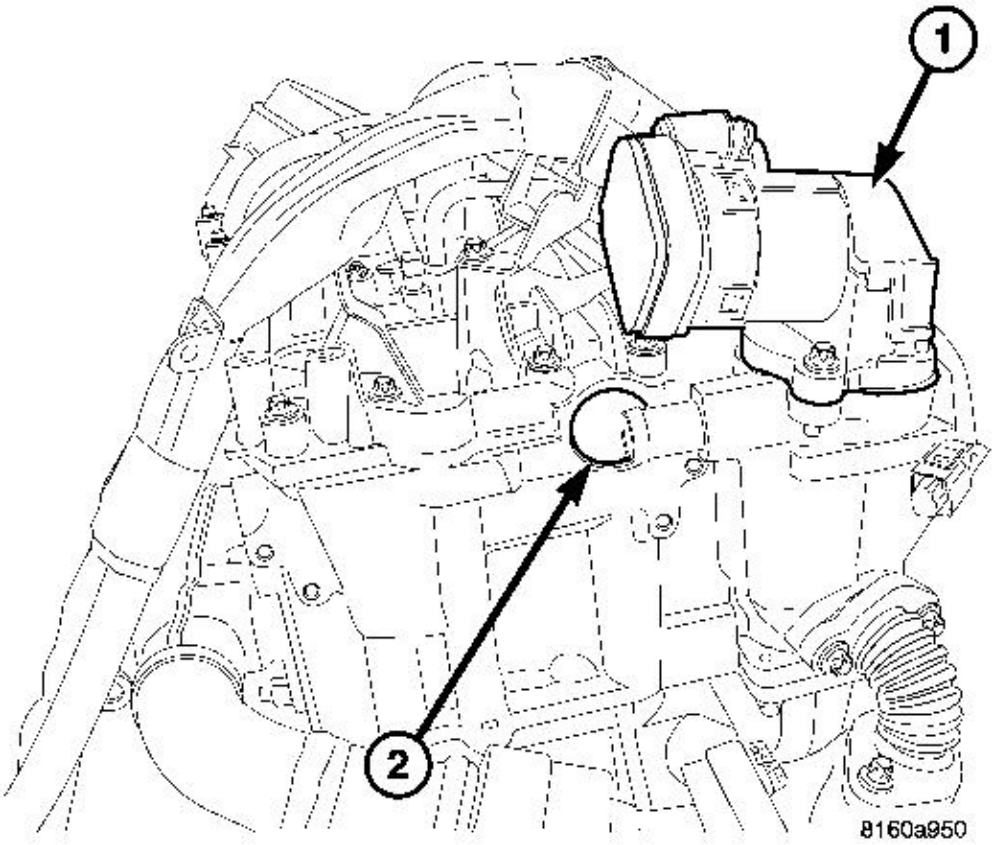

Fig. 204: Left Rear Camshaft Oil Seal & EGR Valve
Courtesy of CHRYSLER LLC

1 - EGR VALVE 2 - LEFT REAR CAMSHAFT OIL SEAL

13. Install the left rear camshaft oil seal (2).

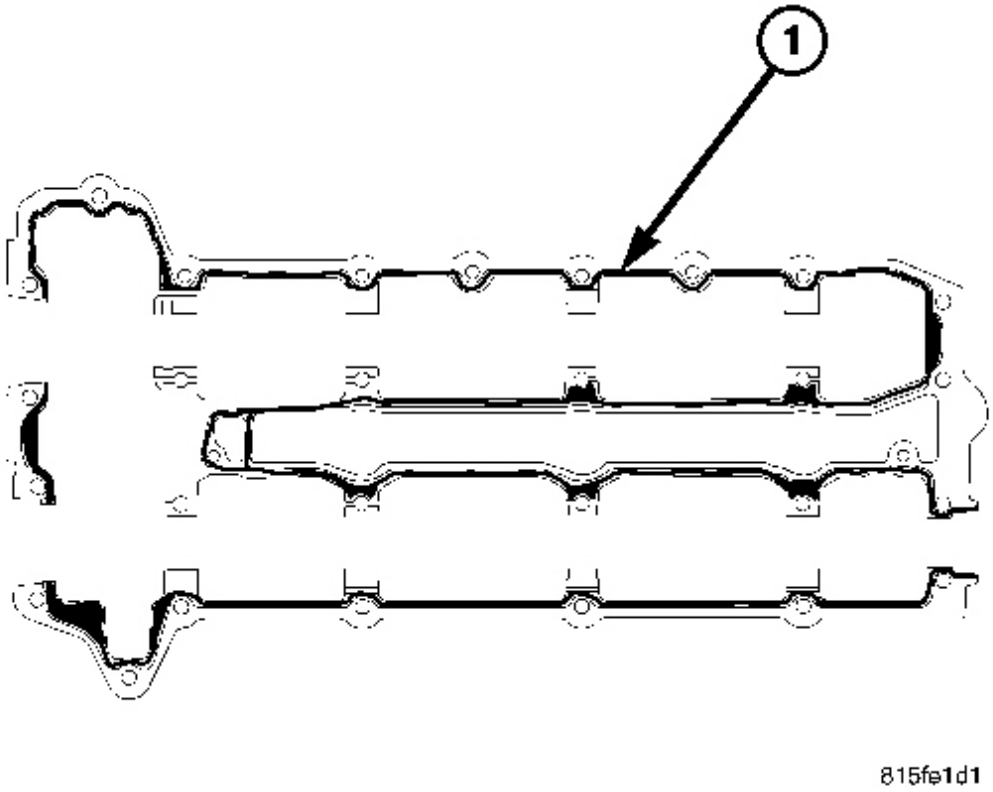

Fig. 205: Applying Cylinder Head Cover Sealant
Courtesy of CHRYSLER LLC

1 - 1.5MM MOPAR ENGINE SEALANT RTV

14. Clean and inspect all sealing surfaces.

NOTE: **Care must be taken not to get any engine sealant on the camshaft journals of the cylinder head cover.**

15. Install a 1/8 in bead of Mopar Engine RTV Gen II sealant to the underside of the cylinder head cover. See **STANDARD PROCEDURE**.

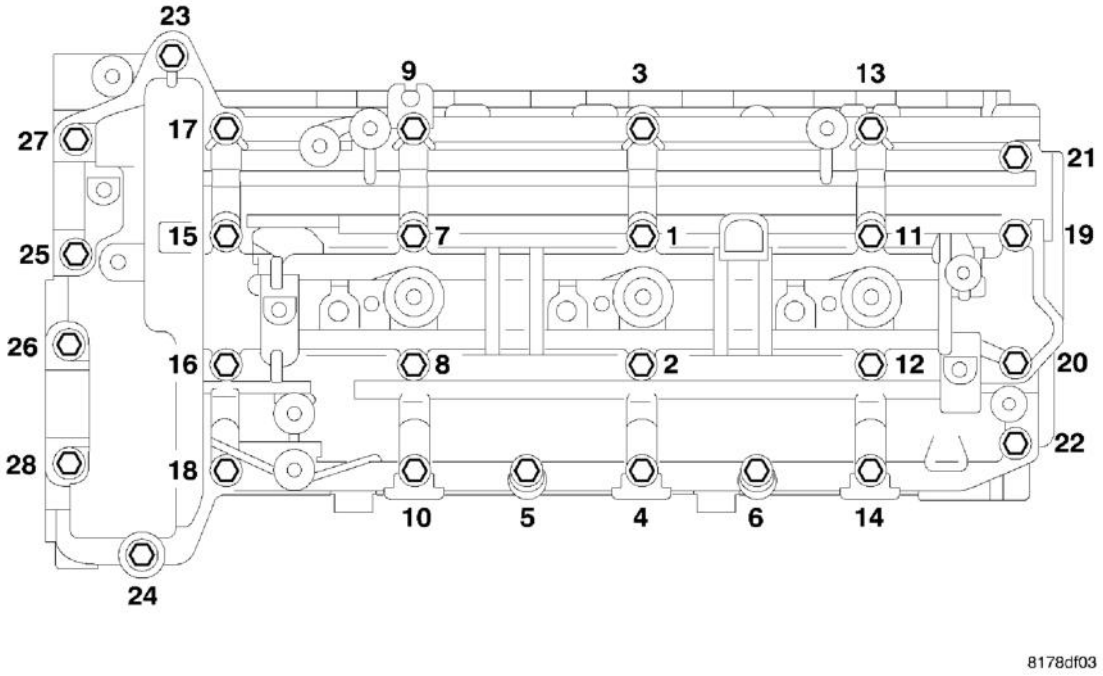

Fig. 206: Cylinder Head Cover Bolts Tightening Sequence
Courtesy of CHRYSLER LLC

16. Carefully position the cylinder head cover and install the bolts into their original position.

CAUTION: The cylinder head cover bolts are different lengths. Do not use the wrong length bolts or engine damage may result.

17. Tighten cylinder head cover bolts in sequence, first to 4 N.m (35 in. lbs.), and then repeat the sequence to 8.4 N.m (75 in. lbs).

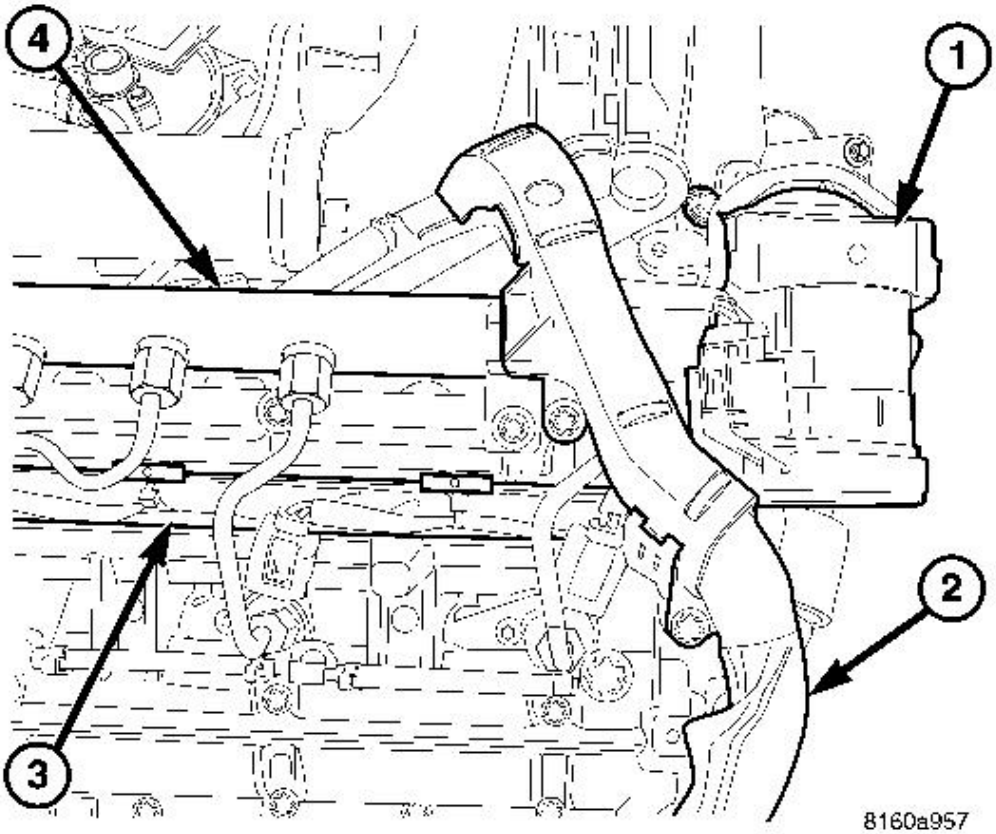

Fig. 207: Exhaust Gas Recirculation (EGR) Valve, Main Engine Wiring Harness, Fuel Injector Wiring Harness & Left Fuel Rail
Courtesy of CHRYSLER LLC

1 - EXHAUST GAS RECIRCULATION (EGR) VALVE
2 - MAIN ENGINE WIRING HARNESS
3 - FUEL INJECTOR WIRING HARNESS
4 - LEFT FUEL RAIL

18. Install the EGR valve.

CAUTION: The fuel injector sealing washers MUST be replaced. DO NOT use the old sealing washers or double the sealing washers.

NOTE: Care must be taken not to apply any lubricant to the fuel injector nozzles.

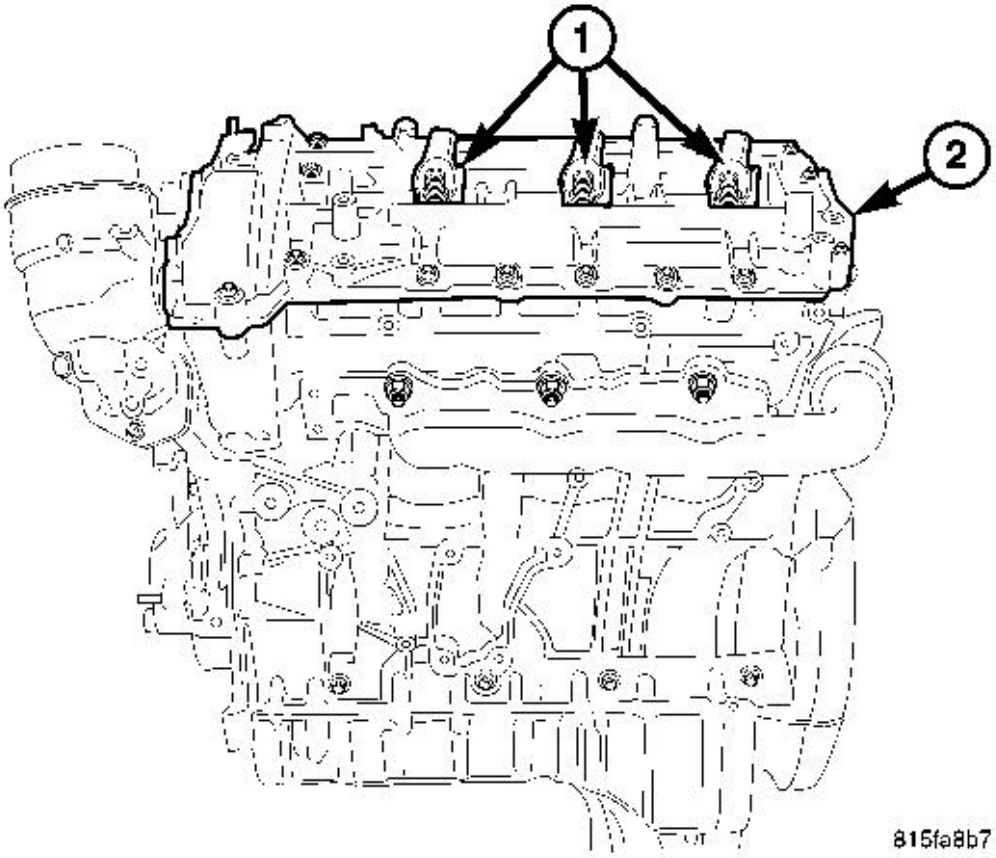

Fig. 208: Fuel Injector Body & Left Fuel Injectors
Courtesy of CHRYSLER LLC

19. Install the fuel injectors (1). Tighten the injector retaining claw bolt to 7 N.m (5 ft. lbs.) and then an additional 180°.
20. Re-position and secure the engine harness.
21. Install the left fuel rail. Tighten the fuel rail bolts to 11 N.m (8 in. lbs.).
22. Position the return fuel lines and secure to the injectors. Push down on the release lock tab to secure.
23. Connect the fuel injector electrical connectors.
24. Install the left rear engine cover bracket.

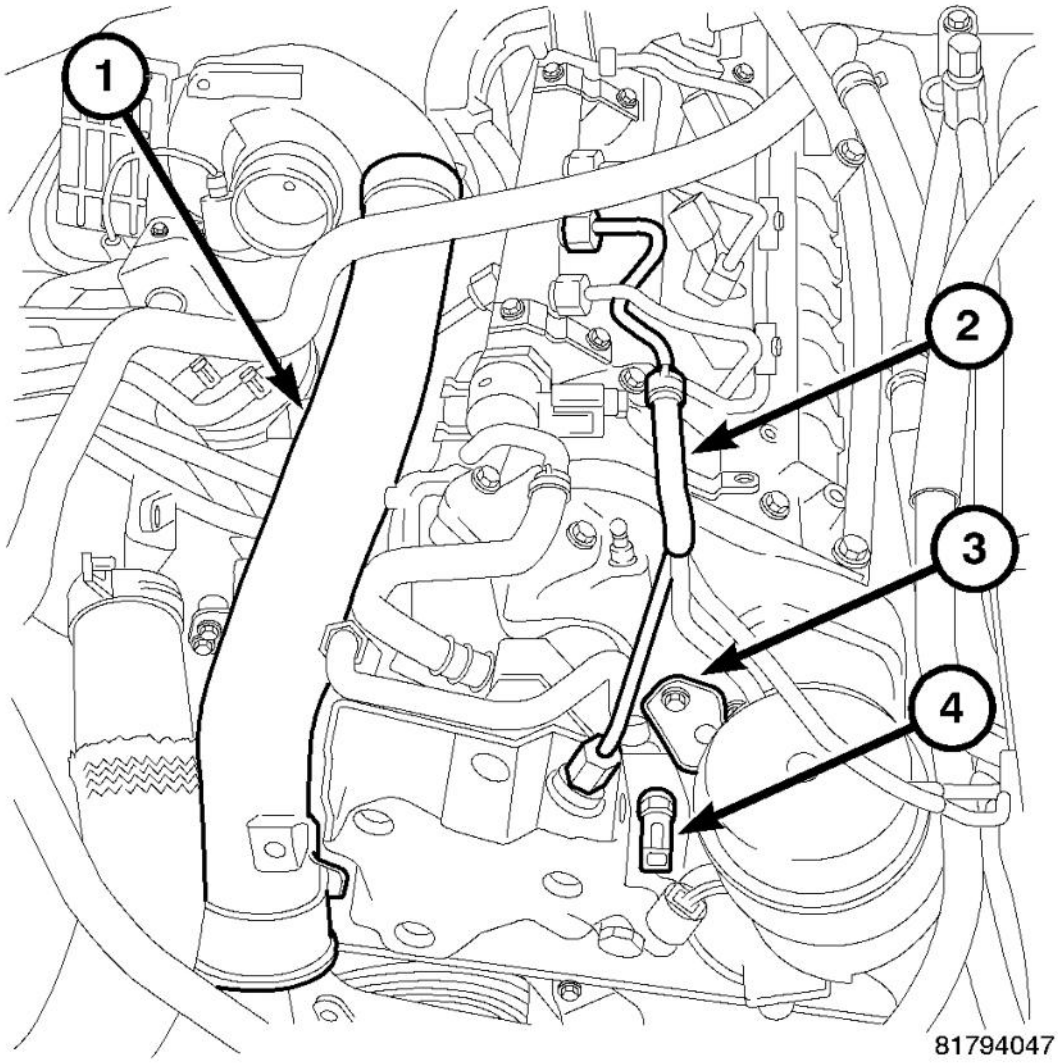

Fig. 209: Turbo Outlet To Intercooler Inlet Air Tube, High Pressure Line, Bracket & Fuel Temperature Sensor Connector
Courtesy of CHRYSLER LLC

25. Install the high pressure fuel lines from the fuel rail to injectors. Tighten the line connections to 27 N.m (20 ft. lbs.).
26. Install the fuel line from the high pressure pump to the left fuel rail. Tighten the retaining bolt to 30 N.m (22 ft. lbs.).
27. Install the fuel supply line to the fuel filter and high pressure pump.
28. Connect both fuel lines at the high pressure pump.

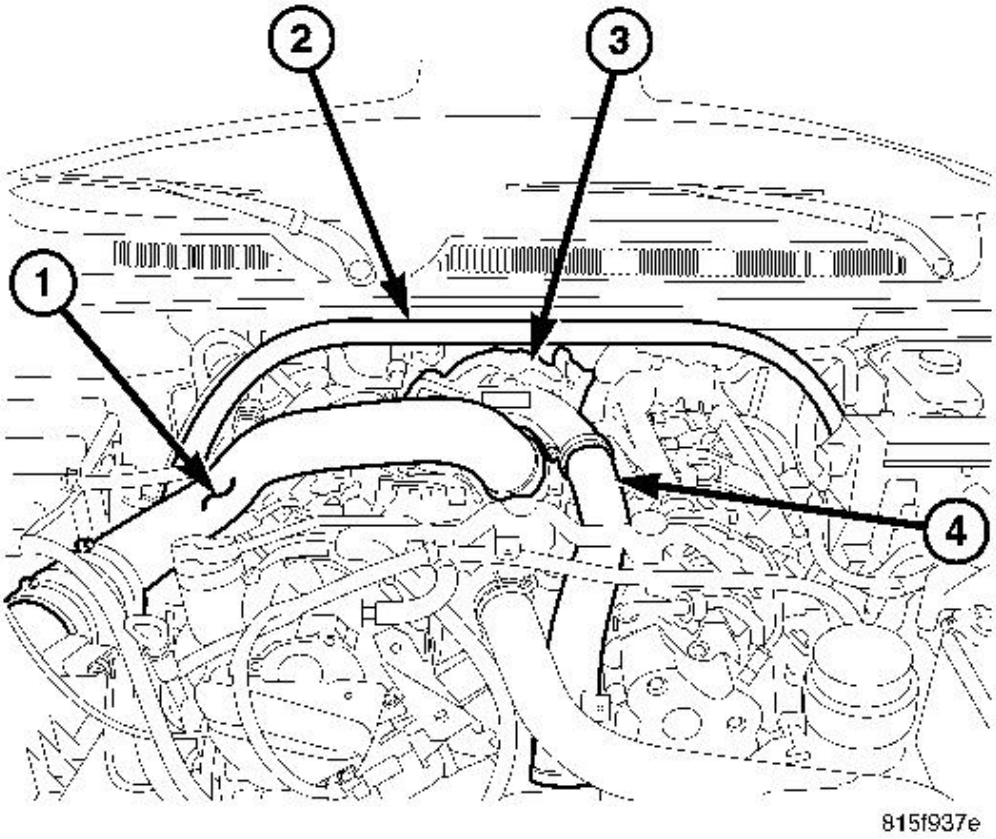

Fig. 210: Strut Tower Support, Air Cleaner Outlet Tube, Turbocharger & Charge Air Inlet Tube
Courtesy of CHRYSLER LLC

1 - AIR CLEANER OUTLET TUBE
2 - STRUT TOWER SUPPORT
3 - TURBOCHARGER
4 - CHARGE AIR INLET TUBE

29. Install the air filter housing and tube.
30. Connect the negative battery cable.

WARNING: High-pressure fuel lines deliver fuel under extreme pressure from the injection pump to the injectors. This maybe as high as 1350 bar (19,580 psi). Use extreme caution when inspecting for high-pressure fuel leaks. Inspect high-pressure fuel leaks with a sheet of

cardboard. Wear safety goggles and adequate protective clothing when servicing fuel system. Fuel under this amount of pressure can penetrate skin causing serious or fatal injury.

31. Start the engine, run until warm, turn engine off and inspect for leaks.

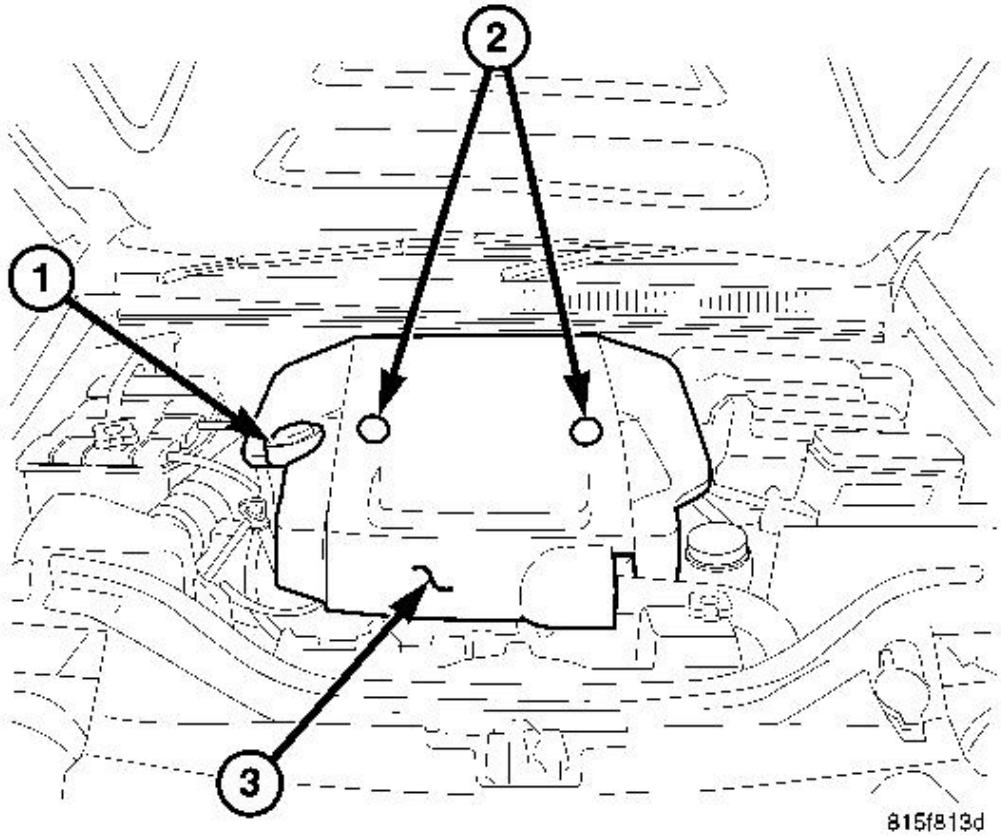

Fig. 211: Oil Filler Cap, Cover Fasteners & Engine Cover
Courtesy of CHRYSLER LLC

1 - OIL FILLER CAP
2 - COVER FASTENERS
3 - ENGINE COVER

32. Install the engine cover.
33. Connect negative battery cable.

WARNING: High-pressure fuel lines deliver fuel under extreme pressure from the injection pump to the injectors. This maybe as high as 1350 bar (19,580 psi). Use extreme caution when inspecting for high-pressure fuel leaks. Inspect high-pressure fuel leaks with a sheet of cardboard. Wear safety goggles and adequate protective clothing when servicing fuel system. Fuel under this amount of pressure can penetrate skin causing serious or fatal injury.

34. Start engine, allow to warm, turn engine off and inspect for leaks.

CAMSHAFT(S) - RIGHT CYLINDER HEAD

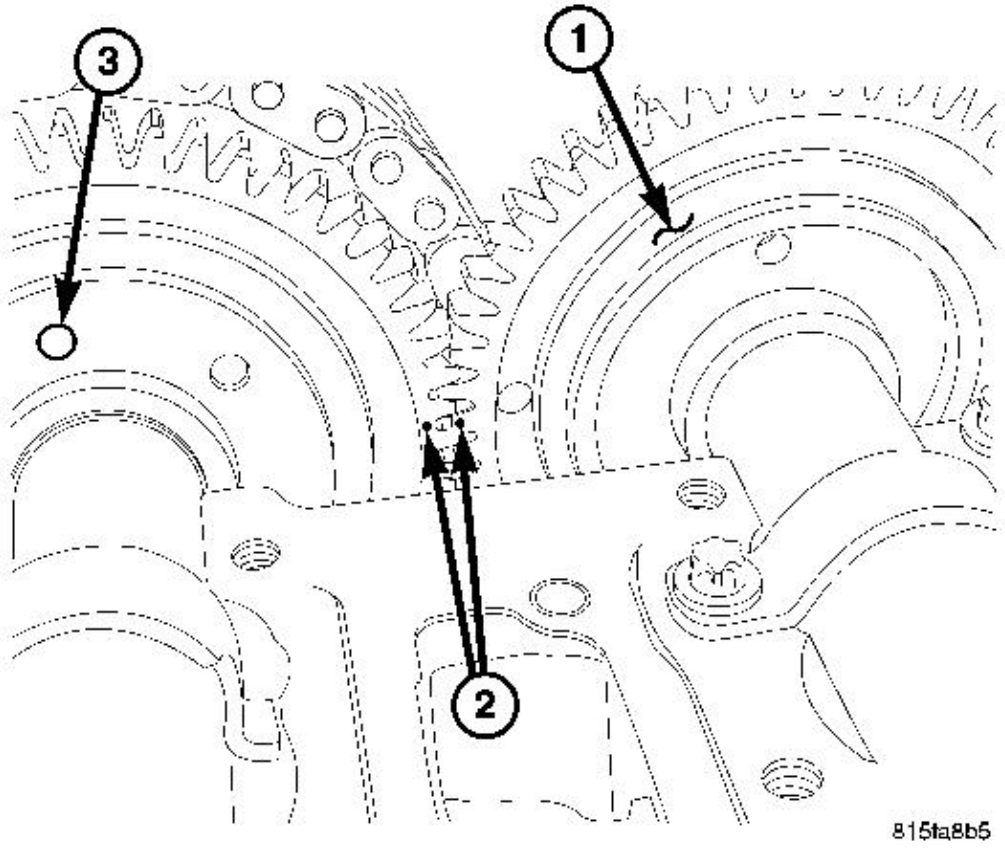

Fig. 212: Camshaft Gear Alignment
Courtesy of CHRYSLER LLC

1 - CAMSHAFT GEAR

2 - CAMSHAFT GEAR ALIGNMENT MARKS
3 - CAMSHAFT DRIVE GEAR DOWEL POSITION

1. Clean all mating surfaces.
2. Lubricate camshafts with Mopar® Engine Oil Supplement, or equivalent.
3. Carefully install camshafts onto cylinder head journals and align the camshaft gear timing marks.

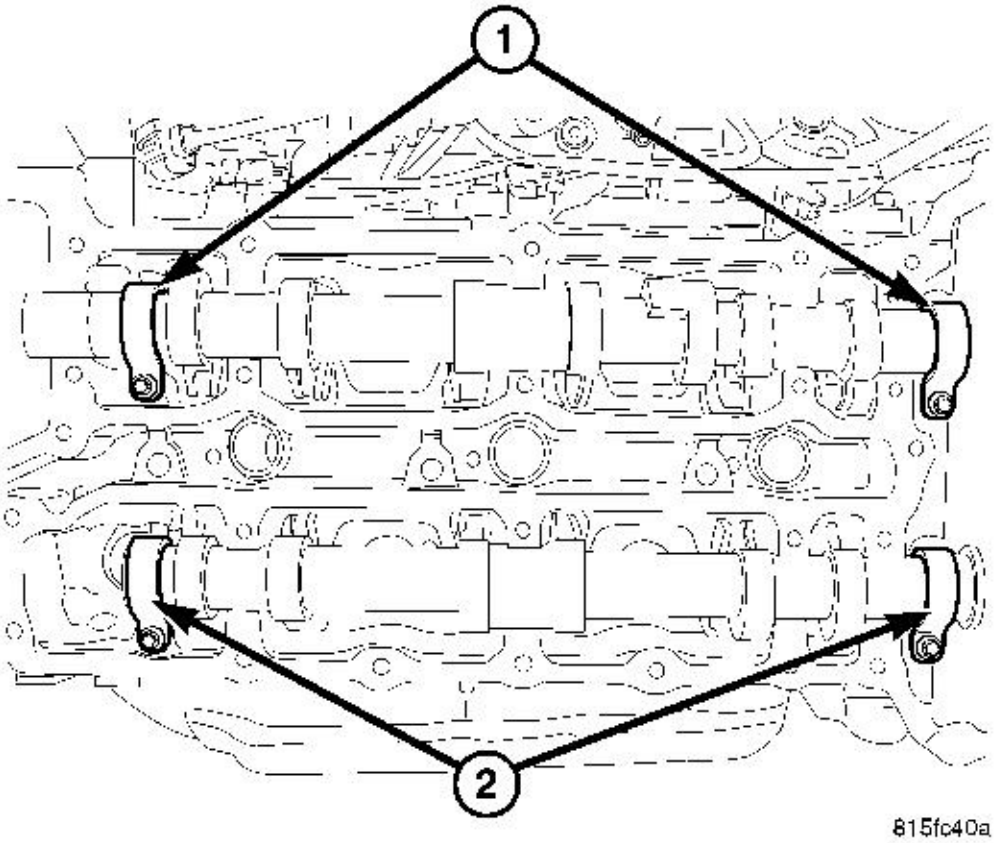

Fig. 213: Intake/Exhaust Camshaft Retainers
Courtesy of CHRYSLER LLC

1 - INTAKE CAMSHAFT RETAINERS
2 - EXHAUST CAMSHAFT RETAINERS

4. Install the camshaft retainers and tighten each retaining bolt to 9 N.m (80 in. lbs.).

NOTE: **If the camshaft endplay is not within specification, replace the cylinder head and cylinder head cover.**

5. After camshafts are properly installed in cylinder head cover check end play of camshafts with a dial indicator.

NOTE: **The right exhaust camshaft gear alignment mark is located in the gear tooth valley. The right intake camshaft gear mark is located on the outside of the tooth. The alignment marks should be touching and the exhaust camshaft drive gear alignment pin should be located at approximately 12 o'clock, when viewed from the front camshaft seal.**

6. Assure the proper positioning of the camshaft gear alignment marks and install the camshaft driven gear onto the exhaust camshaft alignment dowel.

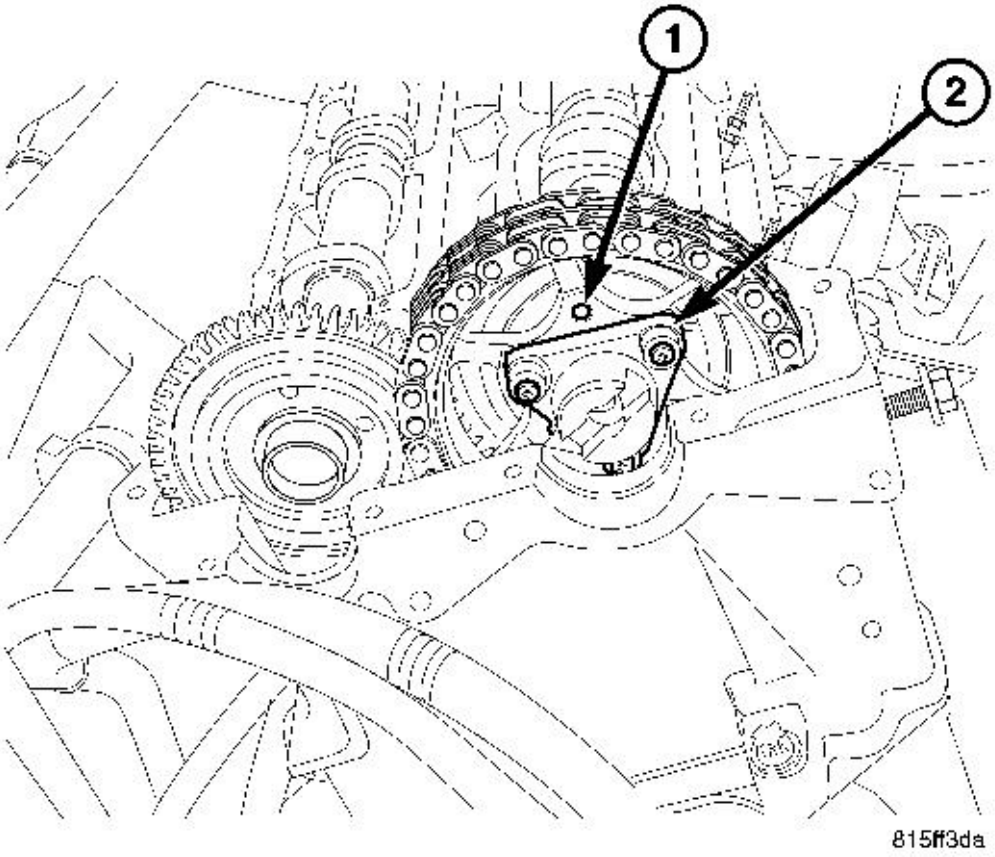

Fig. 214: Right Intake Camshaft Drive Gear Alignment Dowel & Vacuum Pump Drive
Courtesy of CHRYSLER LLC

1 - RIGHT CAMSHAFT DRIVE GEAR ALIGNMENT DOWEL
2 - VACUUM PUMP DRIVE

7. Install two of the drive gear bolts. Tighten the bolts to 18 N.m (13 ft. lbs.).
8. Assure proper positioning of the timing chain to drive gear paint or scribe marks and remove the tie strap.
9. Rotate the engine by the vibration damper bolt enough to install the third camshaft drive gear bolt. Tighten the bolt to 18 N.m (13 ft. lbs.).
10. Rotate the engine back to TDC and check camshaft gear alignment.

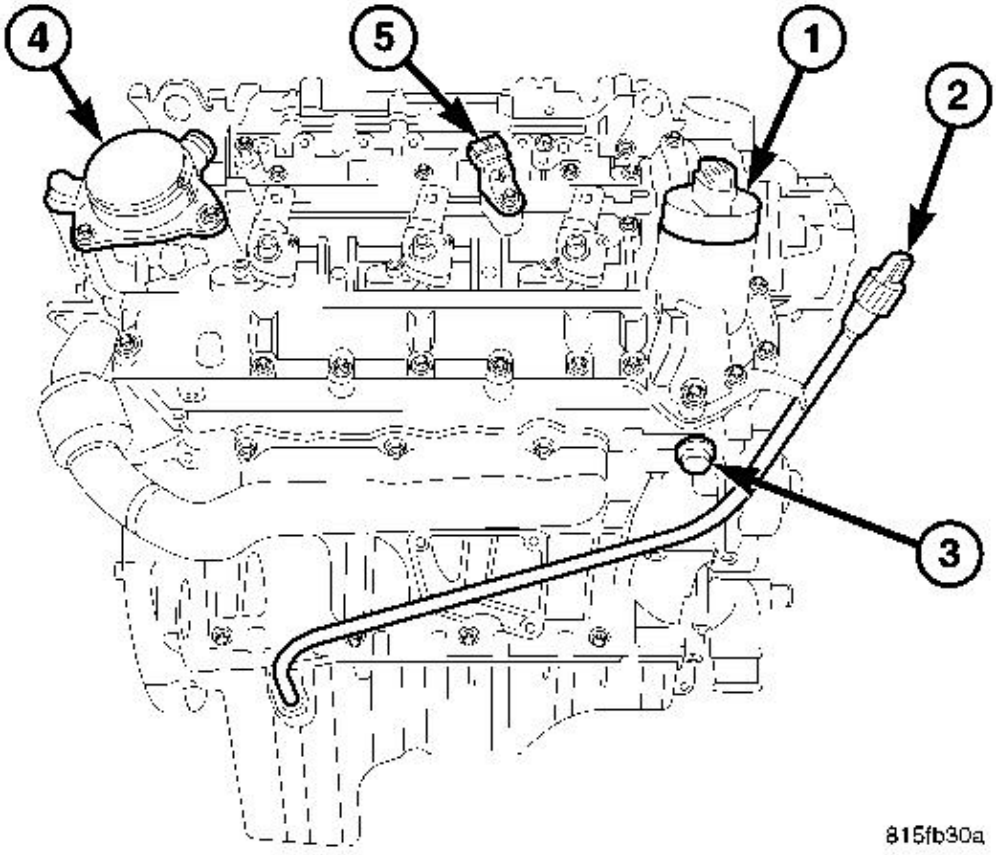

Fig. 215: Engine Oil Cap, Oil Level Indicator, Timing Chain Tensioner, Oil Separator Assembly & Camshaft Position Sensor
Courtesy of CHRYSLER LLC

1 - ENGINE OIL CAP
2 - OIL LEVEL INDICATOR
3 - TIMING CHAIN TENSIONER
4 - OIL SEPARATOR ASSEMBLY
5 - CAMSHAFT POSITION SENSOR

11. Install the timing chain tensioner (3).

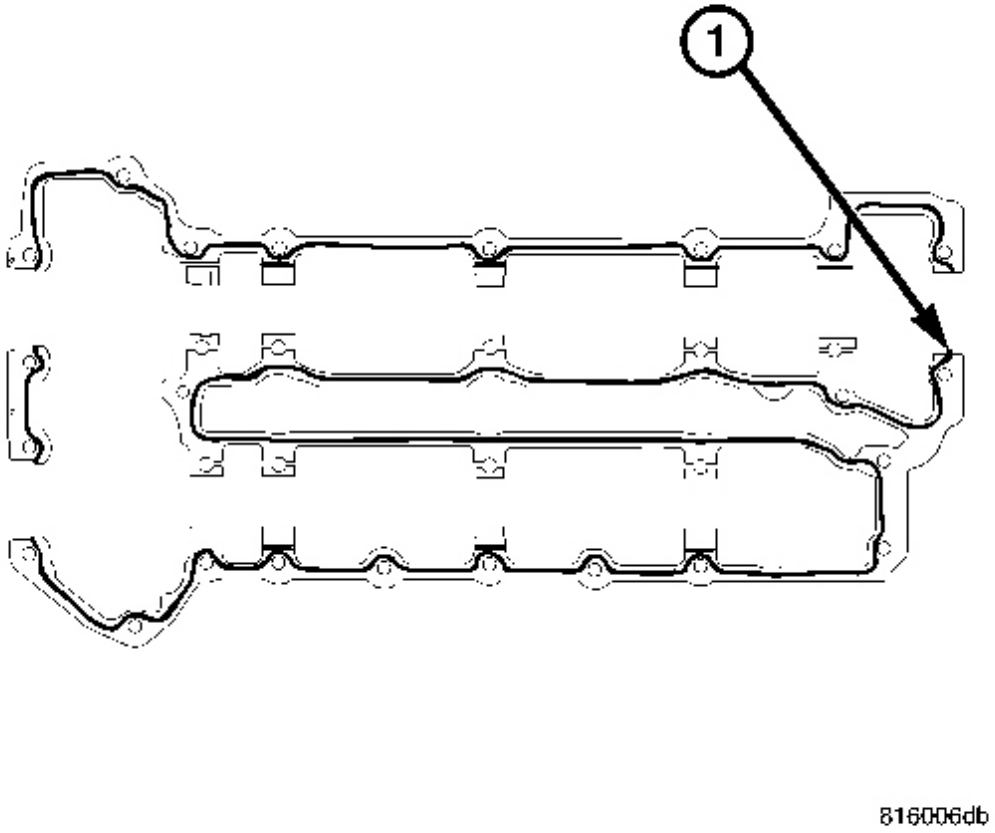

Fig. 216: Applying Cylinder Head Cover Sealant
Courtesy of CHRYSLER LLC

1 - 1.5 MM MOPAR ENGINE SEALANT RTV

NOTE: Care must be taken not to get any engine sealer on the camshaft journals.

12. Clean all mating surfaces.
13. Apply a 1.5 mm bead of Mopar® Engine RTV Sealant (1) to the cylinder head cover. See **Fig. 216**.

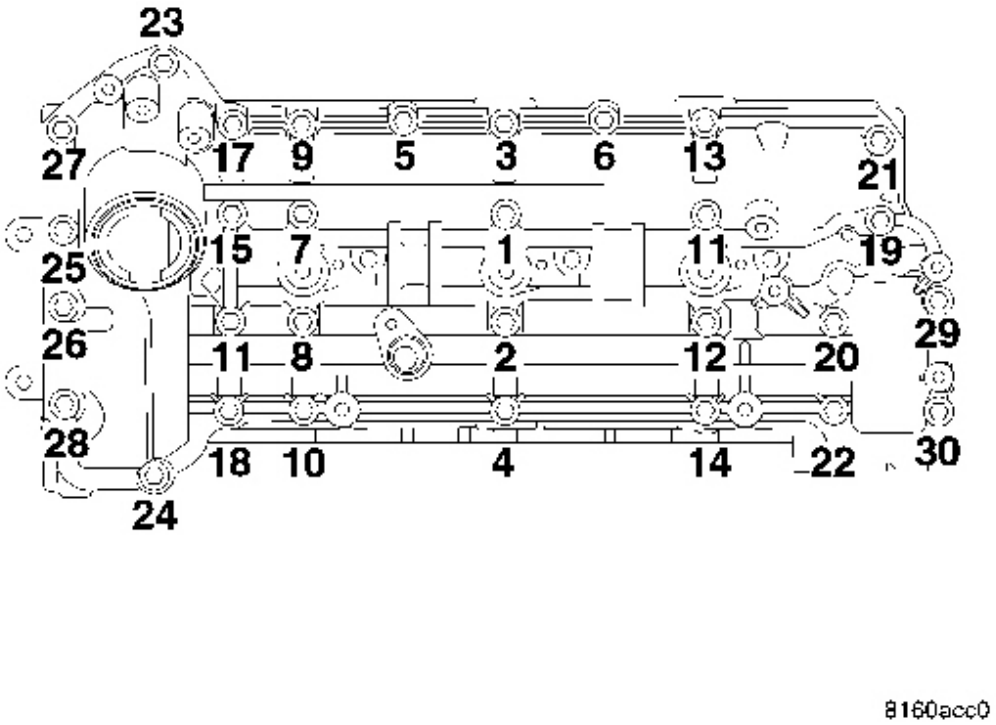

Fig. 217: Right Cylinder Head Cover Bolt Tightening Sequence
Courtesy of CHRYSLER LLC

14. Place the camshaft seal into position.
15. Install the cylinder head cover. Tighten the bolts in three stages following the sequence provided. First to 4 N.m (35 in. lbs.), then to 6 N.m (53 in. lbs.), and then to 8.4 N.m (75 in. lbs.).

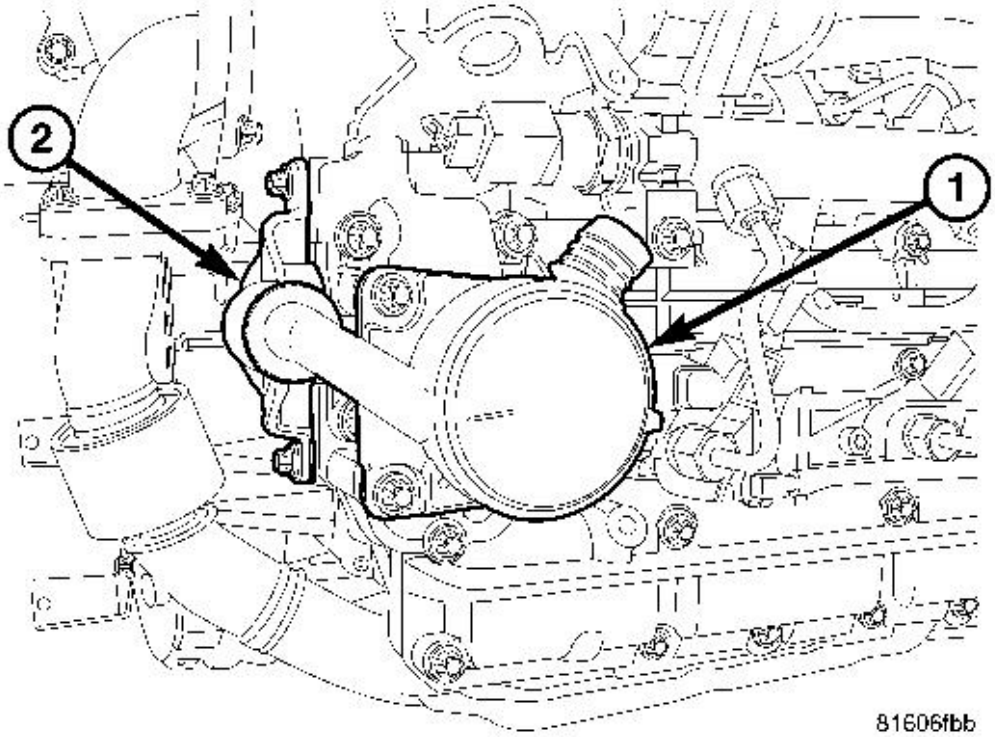

Fig. 218: Oil Separator Housing & Adapter
Courtesy of CHRYSLER LLC

1 - OIL SEPARATOR HOUSING
2 - OIL SEPARATOR HOUSING Adapter

16. Install the oil separator housing Adapter (2) with new camshaft seal. Tighten fasteners to 9 N.m (7 ft. lbs.).
17. Install the oil separator (1). Tighten fasteners to 9 N.m (7 ft. lbs.).

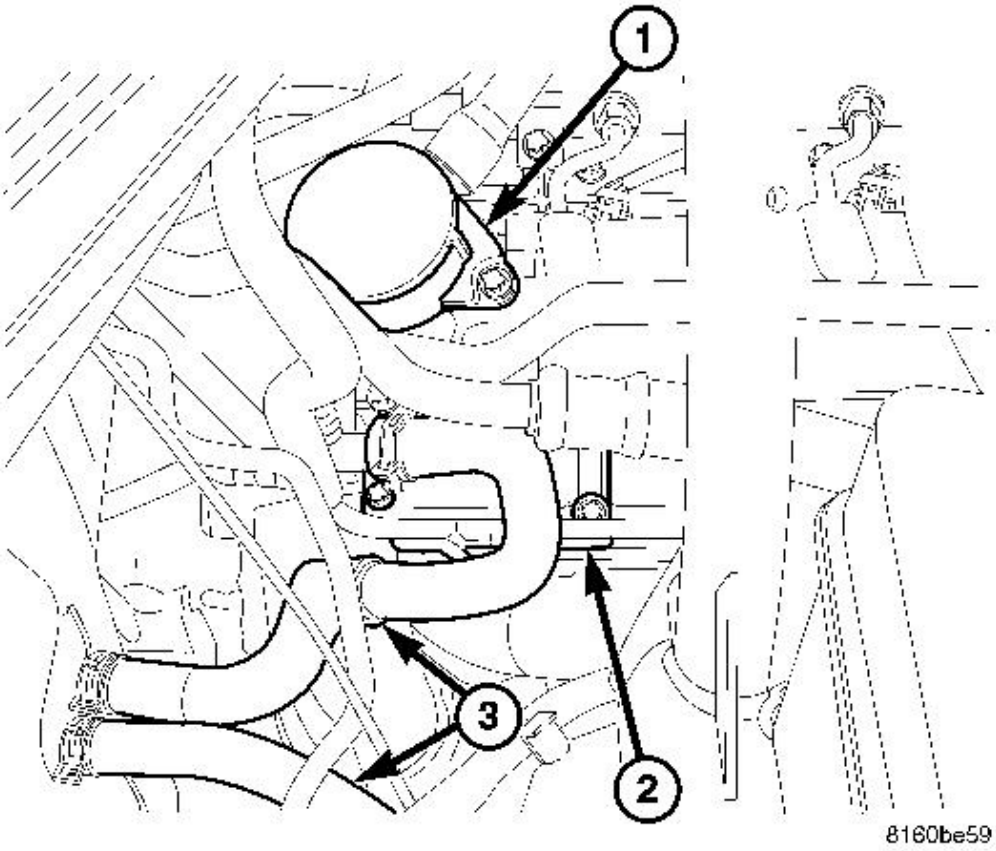

Fig. 219: Identifying Oil Separator, Heater Hose With Bracket
Courtesy of CHRYSLER LLC

1 - OIL SEPARATOR
2 - HEATER HOSE BRACKET
3 - HEATER HOSES

18. Secure the transmission tube fastener to the engine cover bracket.
19. Secure the heater hose bracket (2) to the cylinder head cover. See **Fig. 219**.

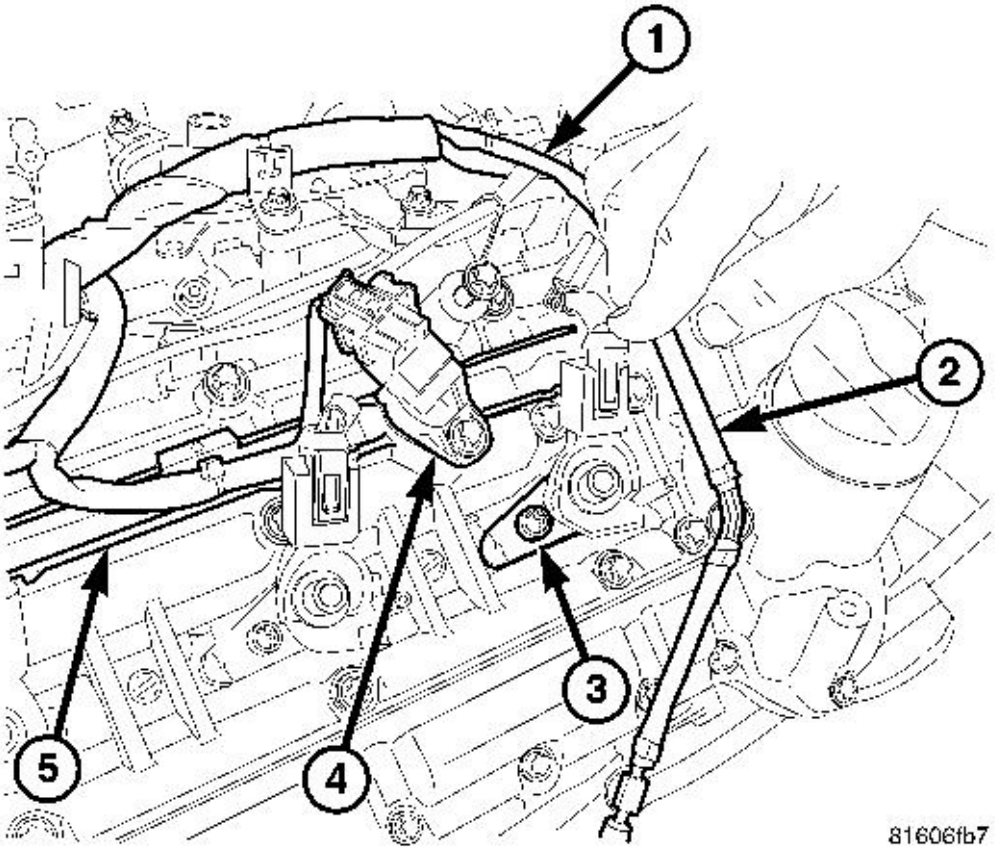

Fig. 220: Fuel Injector, Harness, Camshaft Position Sensor And Return Hose
Courtesy of CHRYSLER LLC

1 - MAIN ENGINE WIRING HARNESS
2 - RIGHT FUEL INJECTOR FUEL RETURN HOSE
3 - FUEL INJECTOR RETAINING
4 - CAMSHAFT POSITION SENSOR
5 - ENGINE HARNESS ROUTING PATH

20. Secure the vacuum pump hose pipe to the cylinder head cover.
21. Install the fuel injectors. Tighten hold down fasteners (3) to 7 N.m, plus 180° (62 in. lbs, plus 180°).
22. Connect the camshaft position sensor (4) and fuel injector wiring harness connectors.
23. Connect the return fuel hose (2) to each injector.
24. Install the fuel rail, high pressure fuel lines and injector cover.

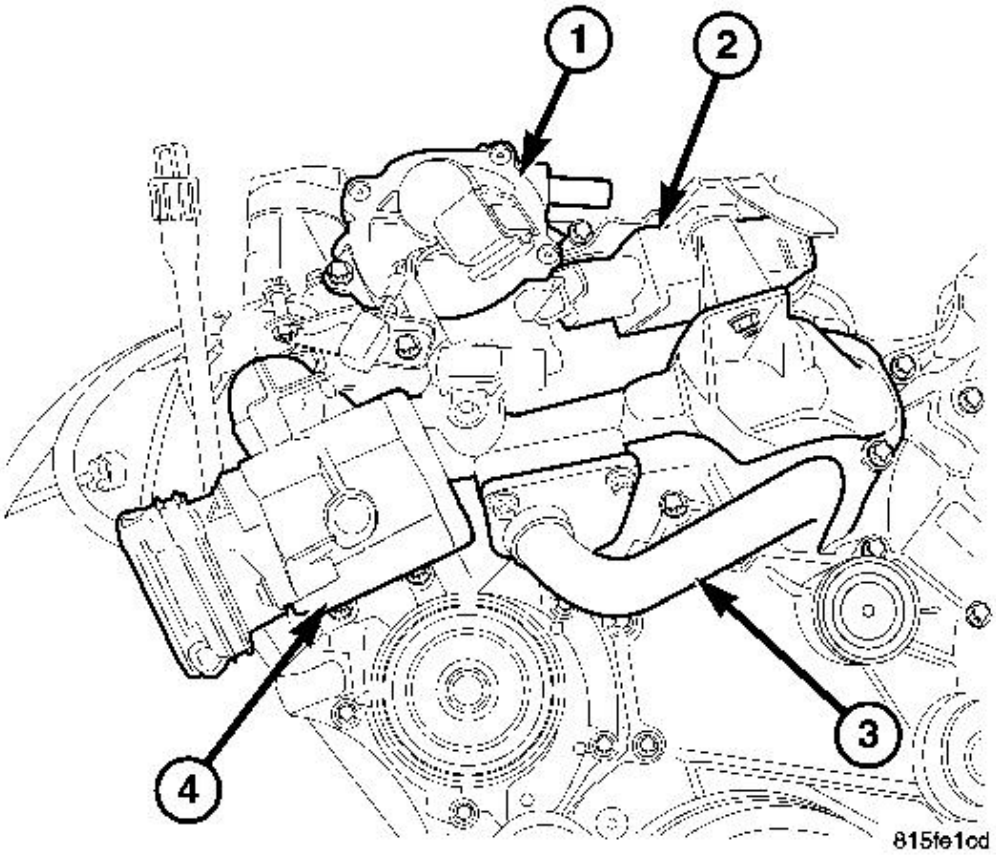

Fig. 221: Vacuum Pump, Glow Plug Relay, EGR Cooler & Air Control Valve
Courtesy of CHRYSLER LLC

1 - VACUUM PUMP
2 - GLOW PLUG RELAY
3 - EGR COOLER
4 - AIR CONTROL VALVE

25. Secure the oil dipstick tube to the cylinder head. Tighten fastener to 11 N.m (8 in. lbs.).
26. Install the vacuum pump (1).
27. Install the air control valve resonator (2).

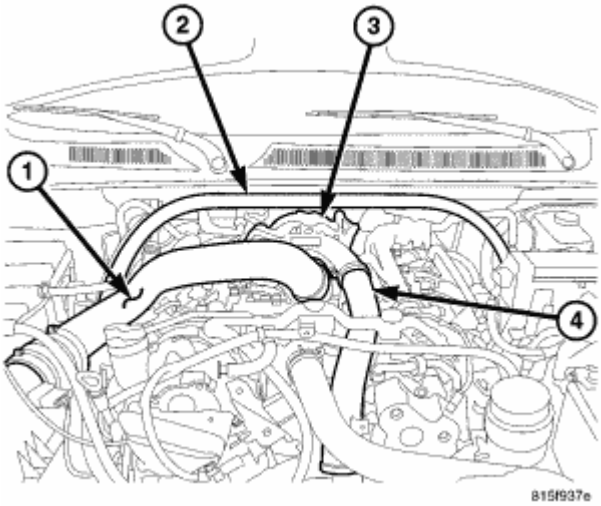

Fig. 222: Air Cleaner Outlet Tube, Strut Tower Support, Turbocharger & Charge Air Inlet Tube
Courtesy of CHRYSLER LLC

1 - AIR CLEANER OUTLET TUBE
2 - STRUT TOWER SUPPORT
3 - TURBOCHARGER
4 - CHARGE AIR INLET TUBE

28. Install the air cleaner outlet tube to the turbocharger and secure the air cleaner housing cover.

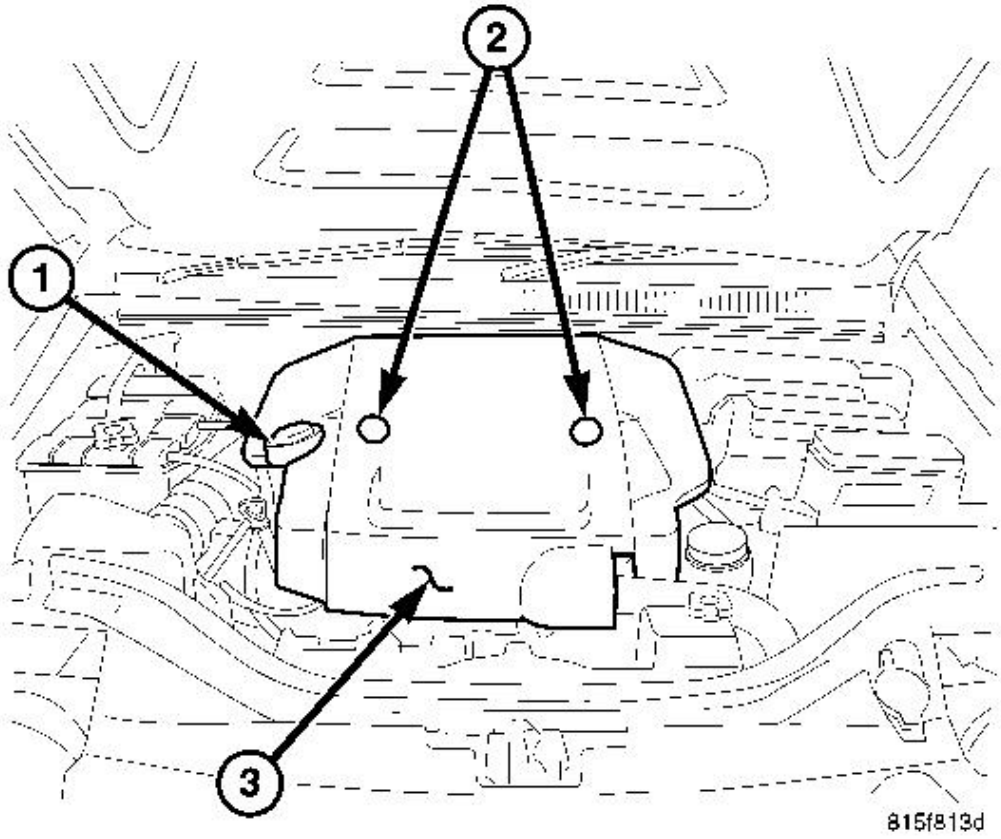

Fig. 223: Oil Filler Cap, Cover Fasteners & Engine Cover
Courtesy of CHRYSLER LLC

1 - OIL FILLER CAP
2 - COVER FASTENERS
3 - ENGINE COVER

29. Install the engine cover.
30. Connect negative battery cable. Refer to **REMOVAL** .
31. Start engine, allow to warm, turn engine off and inspect for leaks. Refer to **WARNING** .

COVER - CYLINDER HEAD

DESCRIPTION

COVER - CYLINDER HEAD

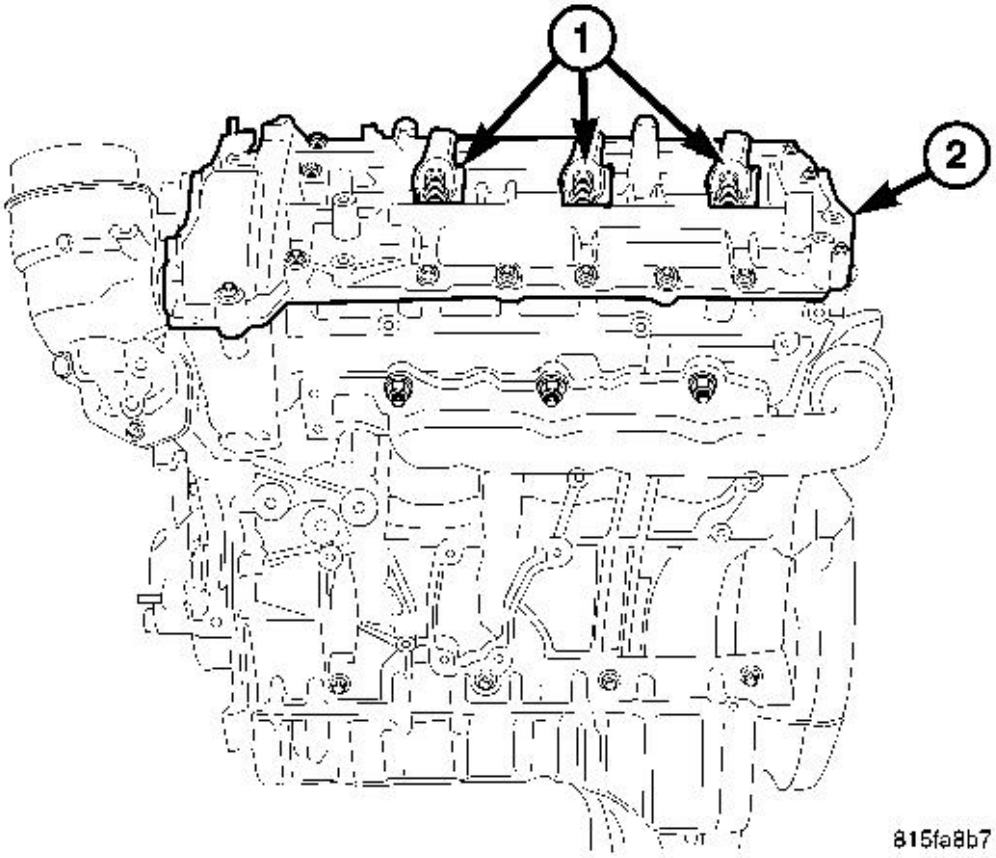

Fig. 224: Fuel Injector Body & Left Fuel Injectors
Courtesy of CHRYSLER LLC

The 3.0L cylinder head covers are made of cast aluminum and incorporate a oil drain back hole for the crankcase ventilation (CCV) system. The covers serve as engine noise inhibitors and are specifically designed to act as camshaft main caps and thrust washers. Care must be taken when sealing the cover as too much sealant, or sealant installed improperly may effect camshaft main cap clearances.

REMOVAL

CYLINDER HEAD COVER - LEFT

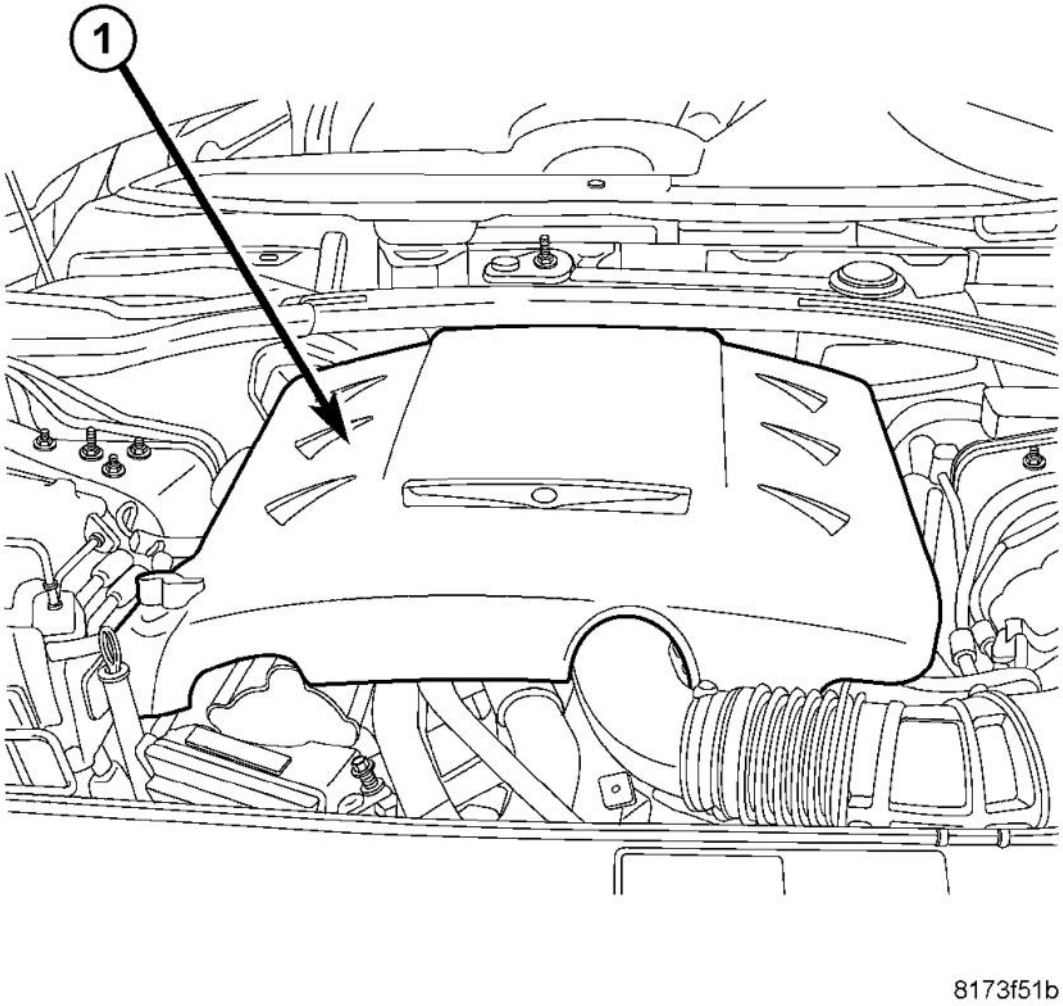

Fig. 225: Engine Appearance Cover
Courtesy of CHRYSLER LLC

1. Disconnect negative battery cable. Refer to **REMOVAL** .
2. Remove engine cover (1) and bracket.

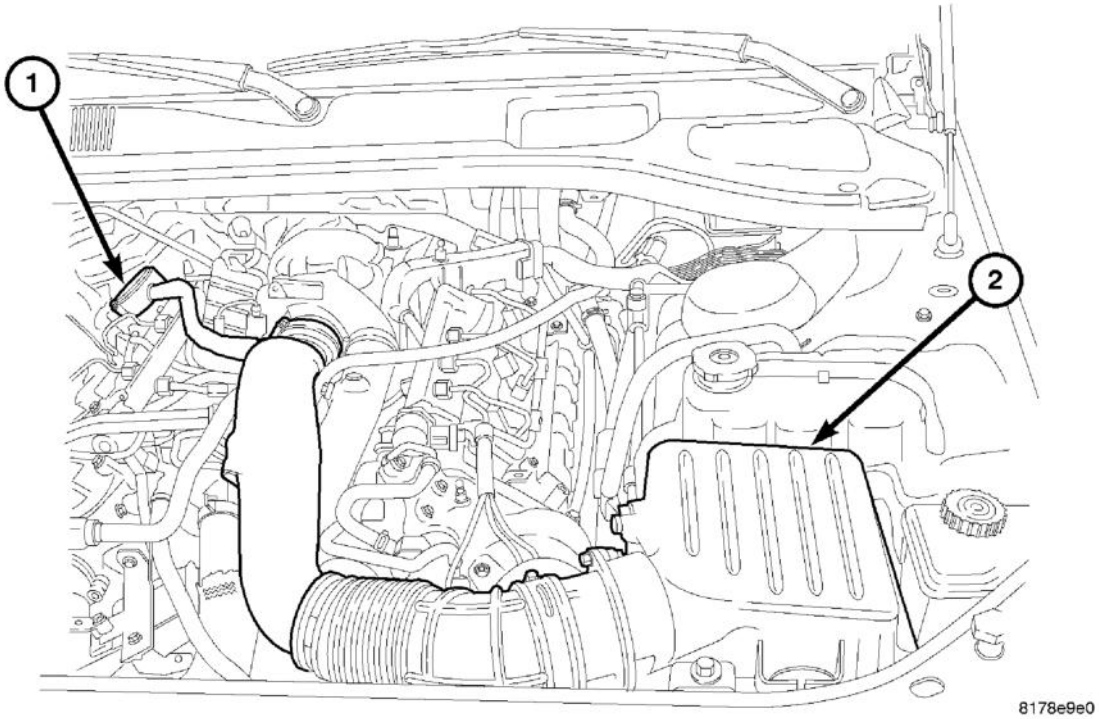

Fig. 226: Air Cleaner Cover & Inlet Tube To Turbocharger
Courtesy of CHRYSLER LLC

3. Remove air cleaner cover (2) and inlet tube to turbocharger.

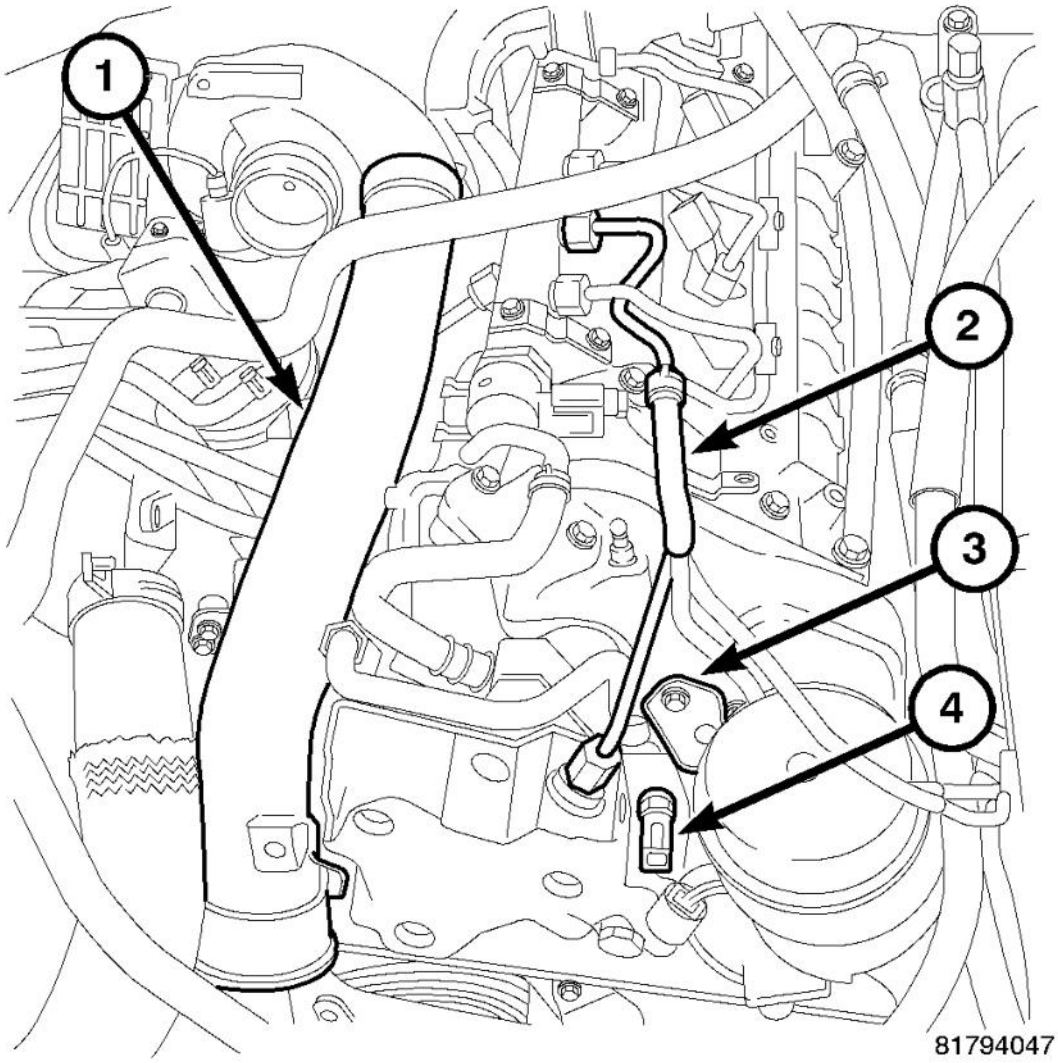

Fig. 227: Turbo Outlet To Intercooler Inlet Air Tube, High Pressure Line, Bracket & Fuel Temperature Sensor Connector
Courtesy of CHRYSLER LLC

4. Remove the high pressure line (2) from the fuel pump and the fuel rail.
5. Remove the bracket (3) from the oil filter housing.
6. Disconnect the fuel temperature sensor connector (4).
7. Disconnect the fuel quantity solenoid connector.
8. Remove the wiring harness retaining bolts and position the engine harness aside.
9. Remove the bolts from the intercooler air chamber.
10. Remove the turbo outlet to intercooler inlet air tube (1).

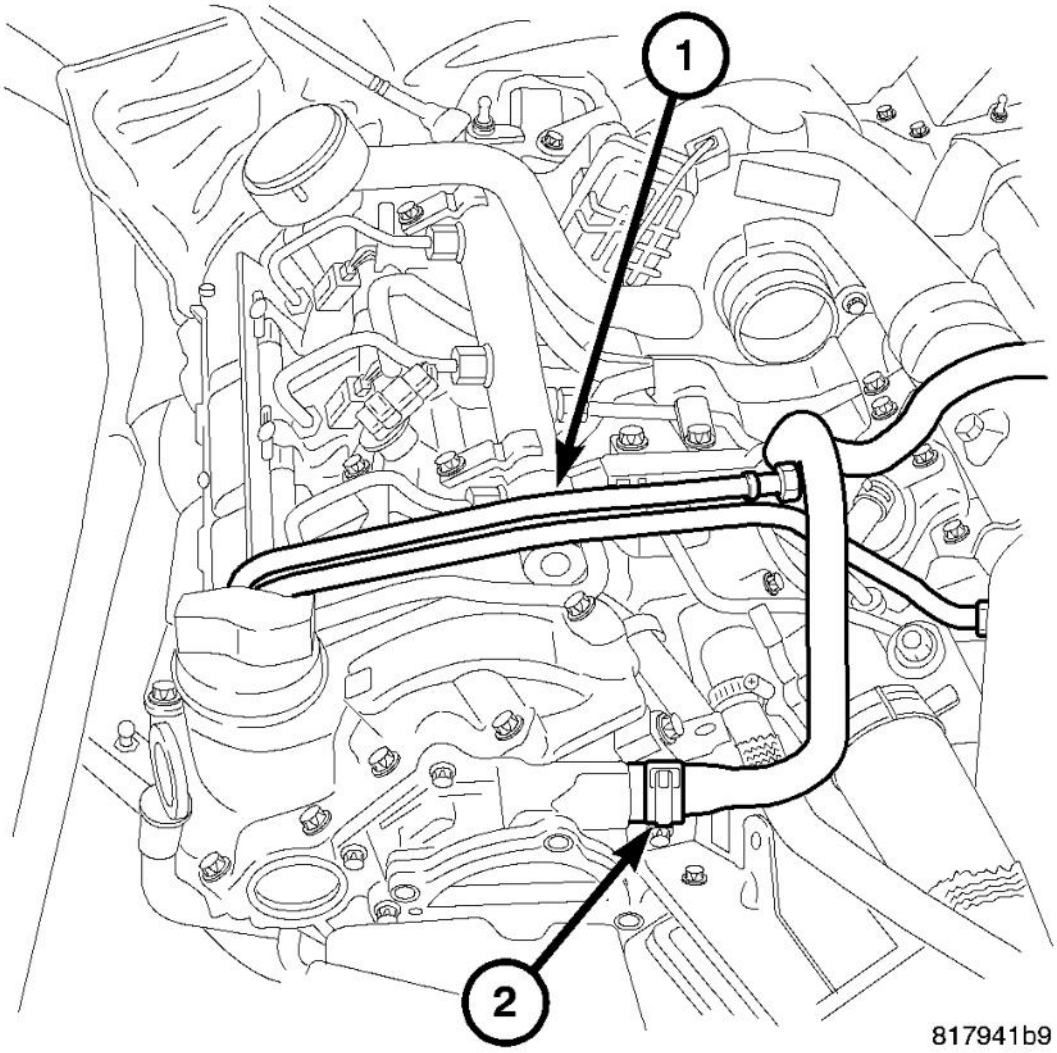

Fig. 228: Power Brake Booster Vacuum Line & Fuel Lines
Courtesy of CHRYSLER LLC

11. Remove the power brake booster vacuum line (2) from the vacuum pump and position aside.
12. Disconnect the power feed line from the alternator and position aside.
13. Remove the supply and return fuel lines (1).

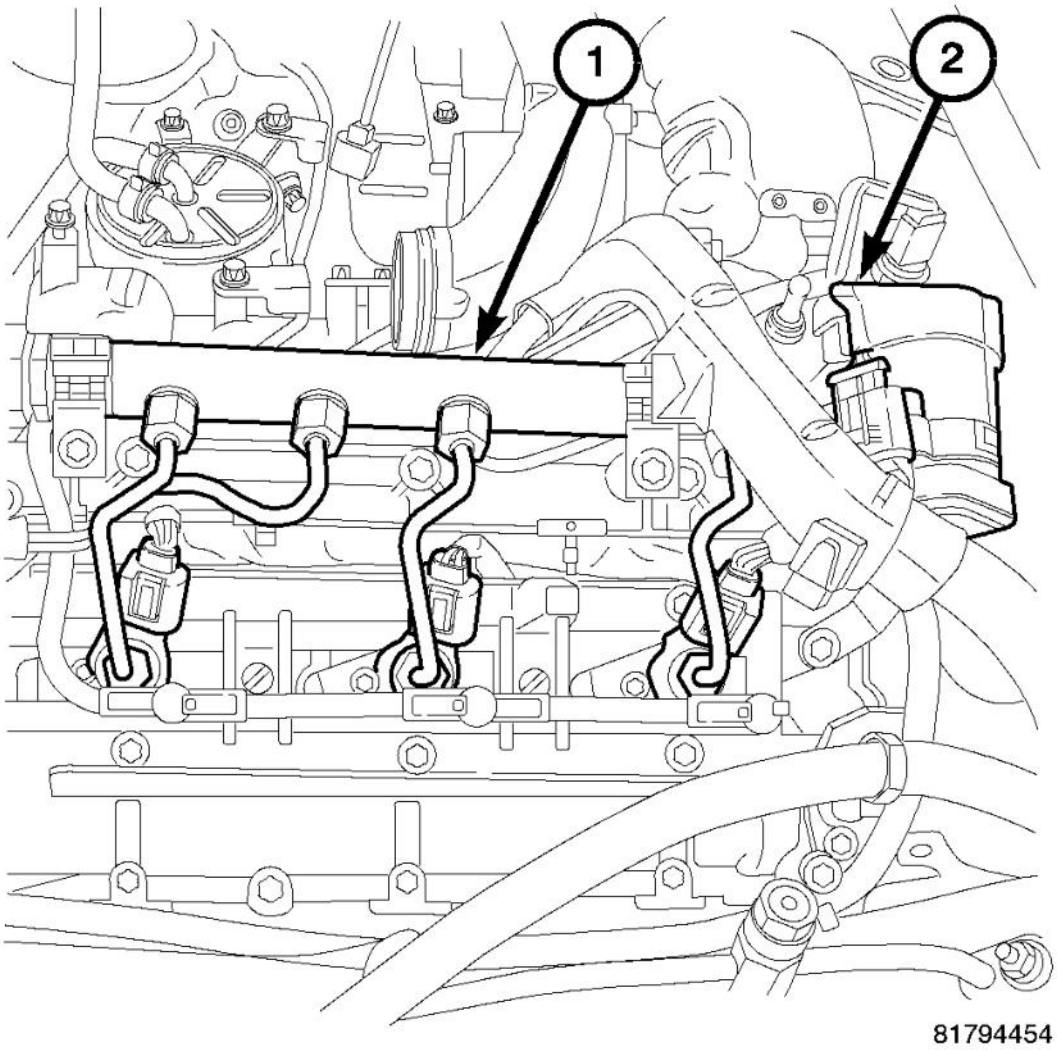

Fig. 229: EGR Valve & Fuel Injectors
Courtesy of CHRYSLER LLC

1 - Fuel Injectors
2 - EGR Valve

14. Disconnect the EGR solenoid connector.
15. Remove the EGR valve (2).
16. Disconnect the fuel injector electrical connectors.
17. Remove the fuel injector wiring harness from the cylinder head cover and position aside.
18. Remove the left cylinder head fuel return line.
19. Remove the high pressure fuel lines from the fuel injectors.

20. Remove the fuel injectors (1).

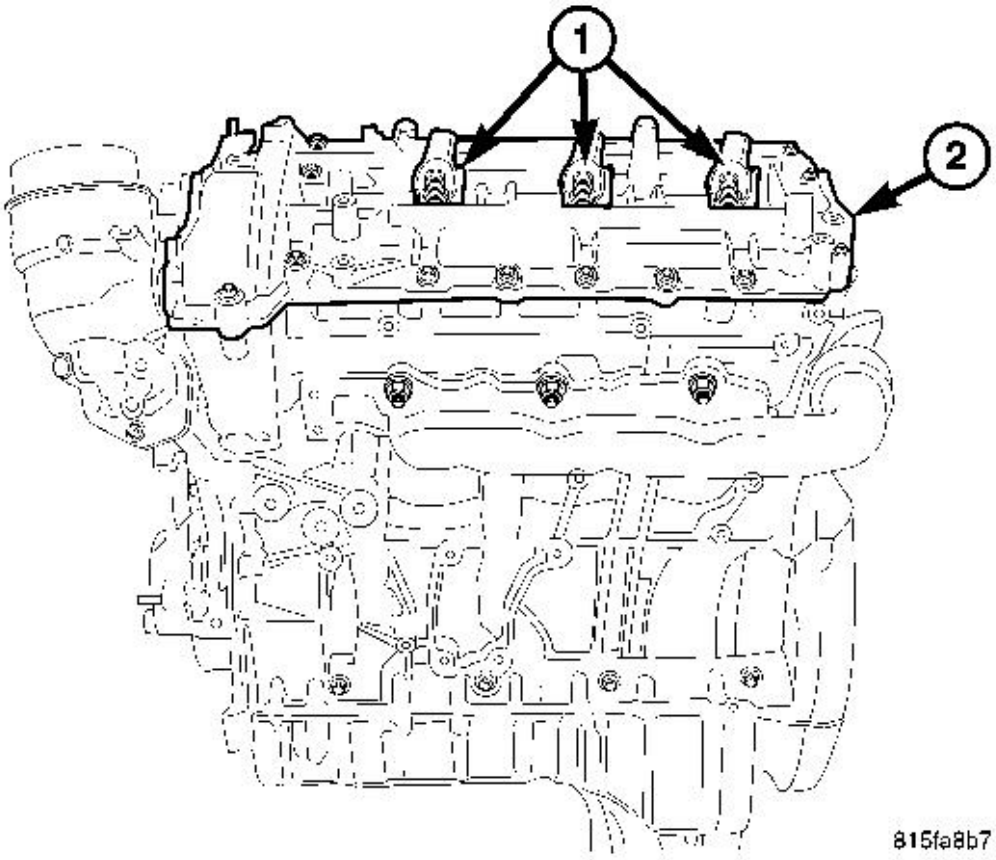

Fig. 230: Fuel Injector Body & Left Fuel Injectors
Courtesy of CHRYSLER LLC

CAUTION: Care must be taken when removing the cylinder head cover. The cover is the camshaft retainer and end play interface. Do not pry on the cylinder head cover tabs.

CAUTION: The cylinder head cover is sealed with Mopar sealant that may be difficult when separating components. If the component are difficult to separate heat the sealed edges or area with a heat gun. DO NOT use any heat source that works with flame.

NOTE: **Note the different length cylinder head cover bolts and their position for assembly purposes.**

21. Remove the cylinder head cover (2) fasteners and cover.

CYLINDER HEAD COVER - RIGHT

CAUTION: **Care must be taken when removing the cylinder head cover. The cover is the camshaft retainer and end play interface. Do not pry on the cylinder head cover tabs.**

CAUTION: **The cylinder head cover is sealed with Mopar sealant that may be difficult when separating components. If the component are difficult to separate heat the sealed edges or area with a heat gun. DO NOT use any heat source that works with flame.**

NOTE: **Note the different length cylinder head cover bolts and their position for assembly purposes.**

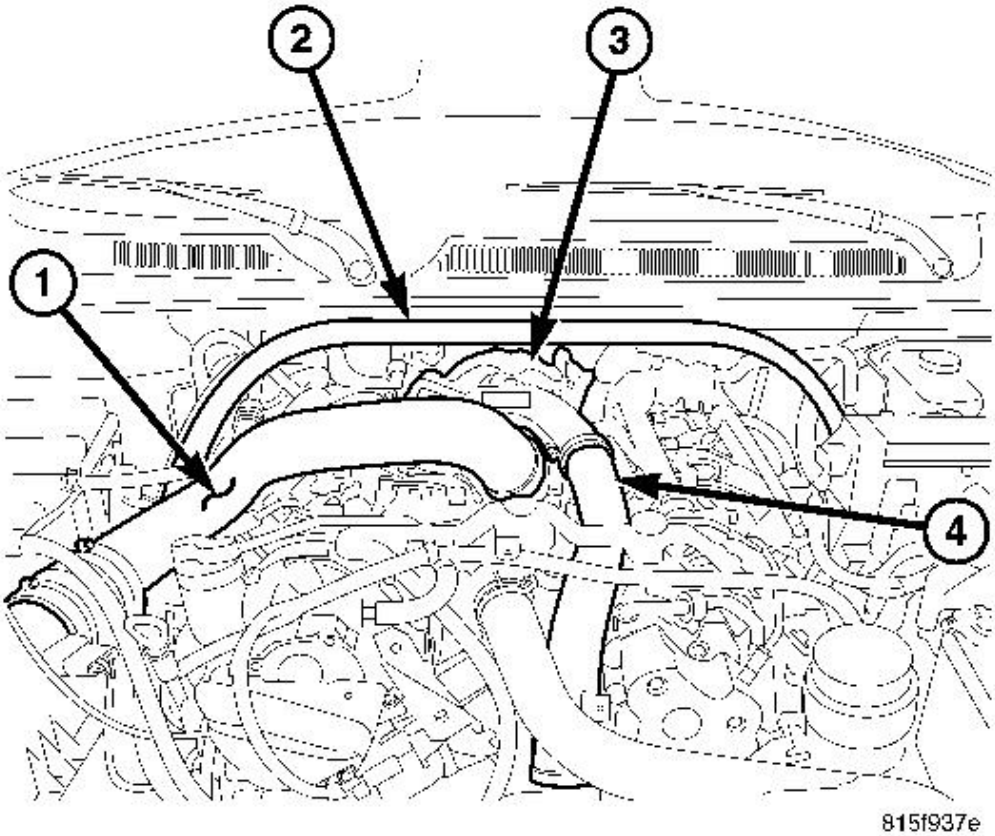

Fig. 231: Strut Tower Support, Air Cleaner Outlet Tube, Turbocharger & Charge Air Inlet Tube
Courtesy of CHRYSLER LLC

1 - AIR CLEANER OUTLET TUBE
2 - STRUT TOWER SUPPORT
3 - TURBOCHARGER
4 - CHARGE AIR INLET TUBE

1. Disconnect the negative battery cable. Refer to **REMOVAL** .
2. Position the coolant reservoir aside. Refer to **REMOVAL** .
3. Remove the strut tower support.

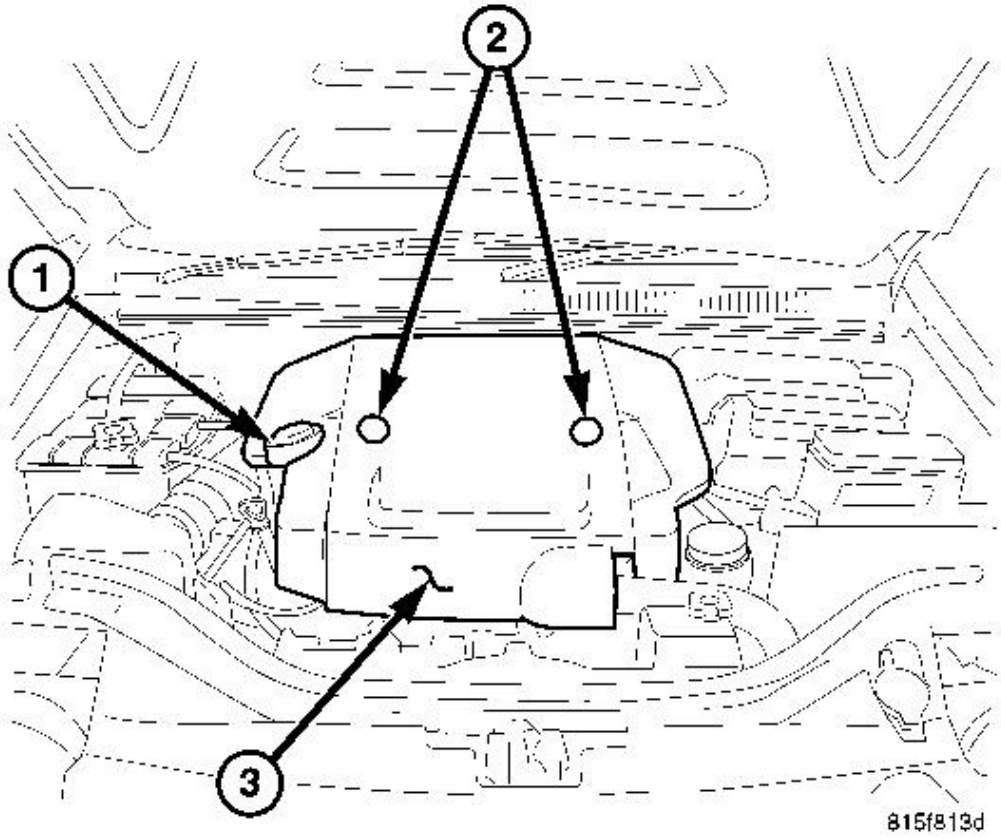

Fig. 232: Oil Filler Cap, Cover Fasteners & Engine Cover
Courtesy of CHRYSLER LLC

1 - OIL FILLER CAP
2 - COVER FASTENERS
3 - ENGINE COVER

4. Remove engine cover.

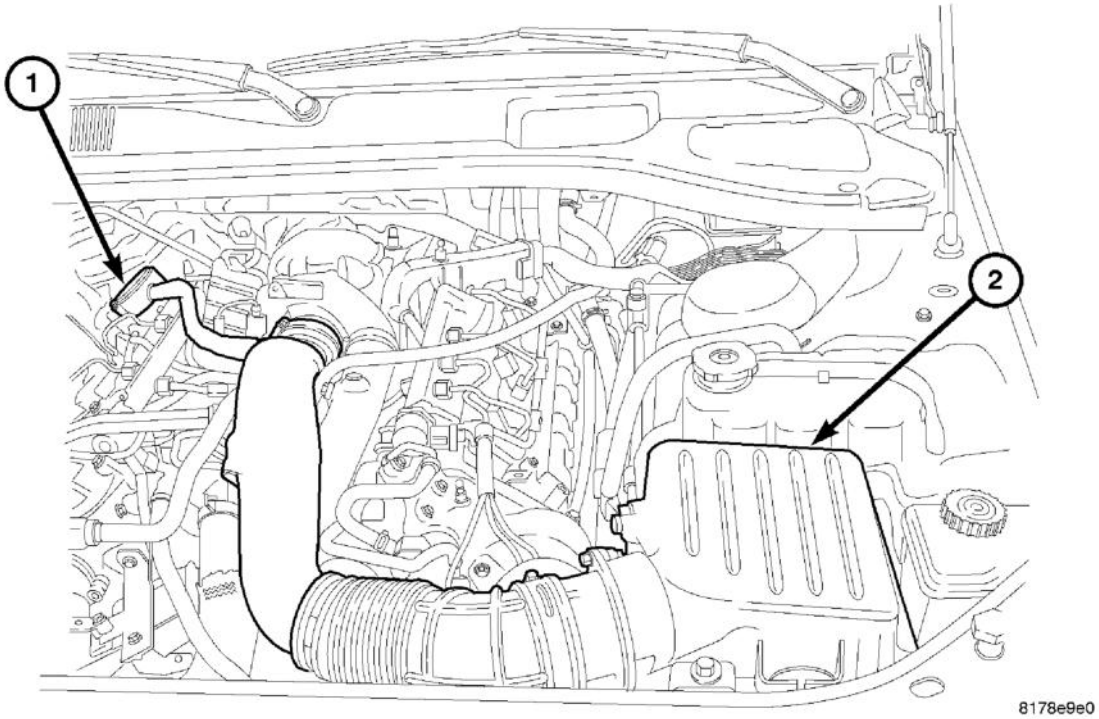

Fig. 233: Air Cleaner Cover & Inlet Tube To Turbocharger
Courtesy of CHRYSLER LLC

5. Remove engine cover front bracket.
6. Remove air cleaner cover and inlet tube to turbocharger.
7. Remove engine cover right rear bracket.

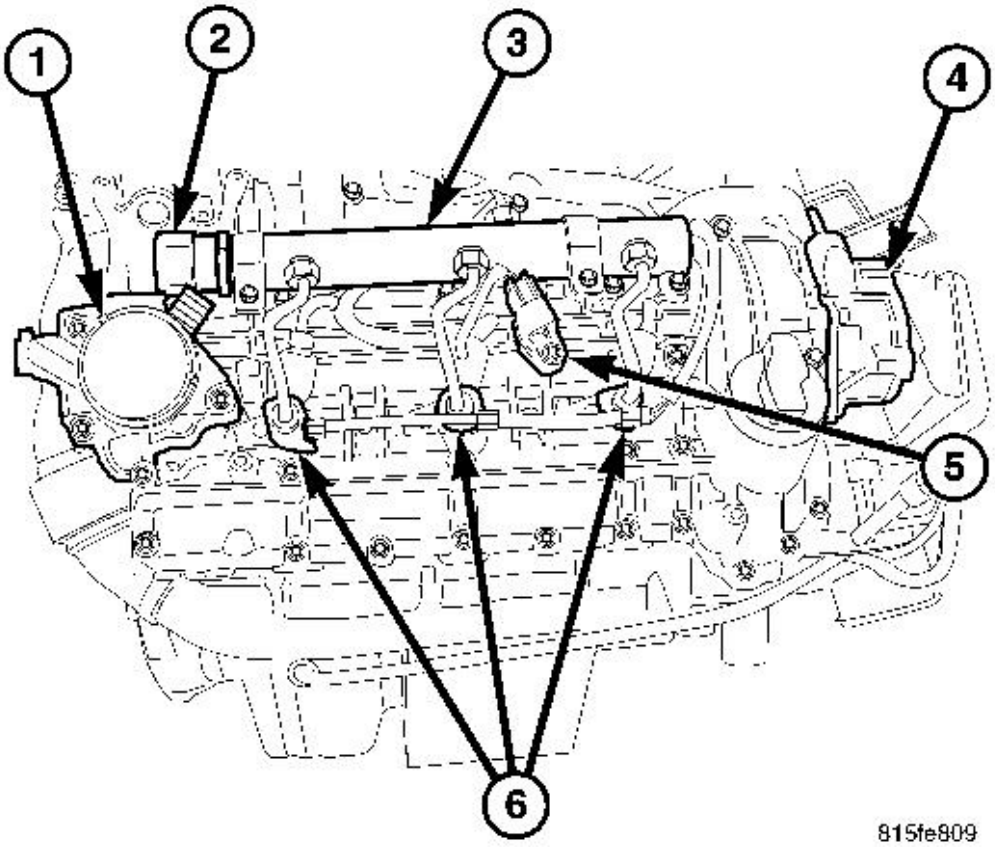

Fig. 234: Breather/Oil Separator, Fuel Rail Pressure Sensor, Fuel Rail, Vacuum Pump, Camshaft Position Sensor & Fuel Injectors
Courtesy of CHRYSLER LLC

1 - BREATHER/OIL SEPARATOR
2 - FUEL RAIL PRESSURE SENSOR
3 - FUEL RAIL
4 - VACUUM PUMP
5 - CAMSHAFT POSITION SENSOR
6 - FUEL INJECTORS

8. Remove the crankcase ventilation valve (CCV) and breather tube.
9. Disconnect the fuel return line.
10. Disconnect the fuel supply and return lines at the right cylinder head cover.

11. Disconnect the camshaft position sensor (CMP) and fuel injector wiring and position the right engine wiring harness aside.

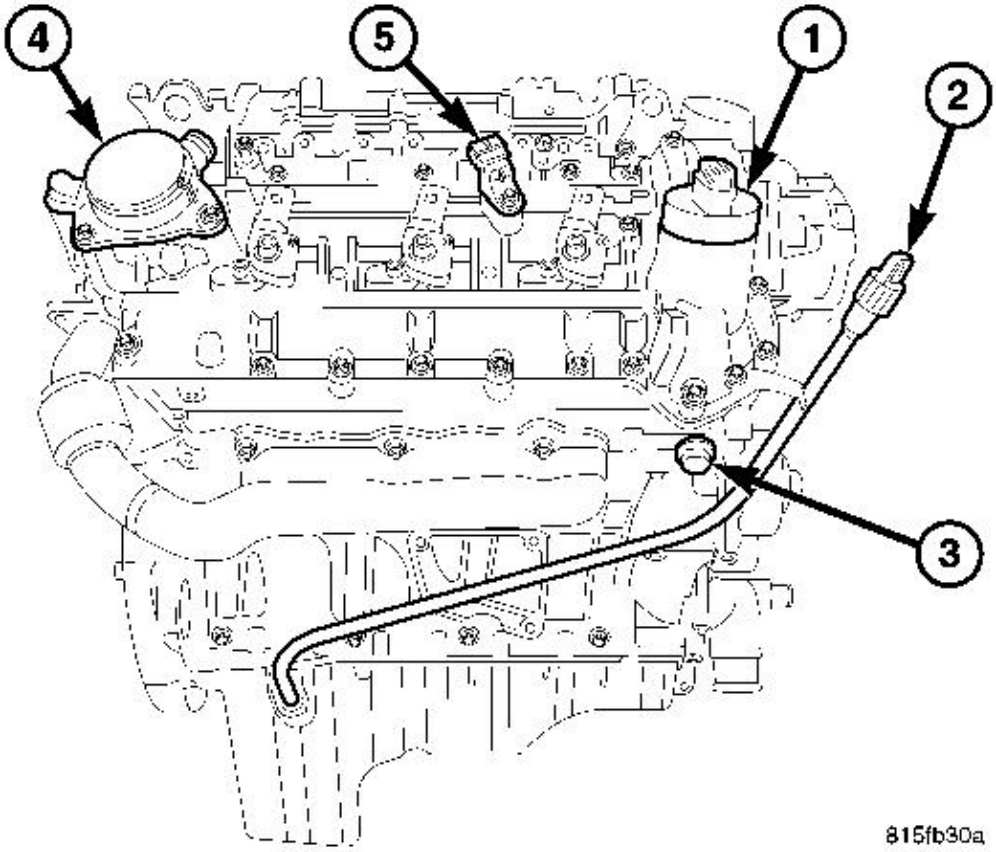

Fig. 235: Engine Oil Cap, Oil Level Indicator, Timing Chain Tensioner, Oil Separator Assembly & Camshaft Position Sensor
Courtesy of CHRYSLER LLC

1 - ENGINE OIL CAP
2 - OIL LEVEL INDICATOR
3 - TIMING CHAIN TENSIONER
4 - OIL SEPARATOR ASSEMBLY
5 - CAMSHAFT POSITION SENSOR

12. Pull out on the fuel injector return fuel hose retainers, disconnect the hoses and position aside.
13. Remove the right fuel injectors. Refer to **REMOVAL** .

14. Remove the air conditioning (A/C)/heater hose bracket.
15. Remove the oil level indicator tube retaining bolt.

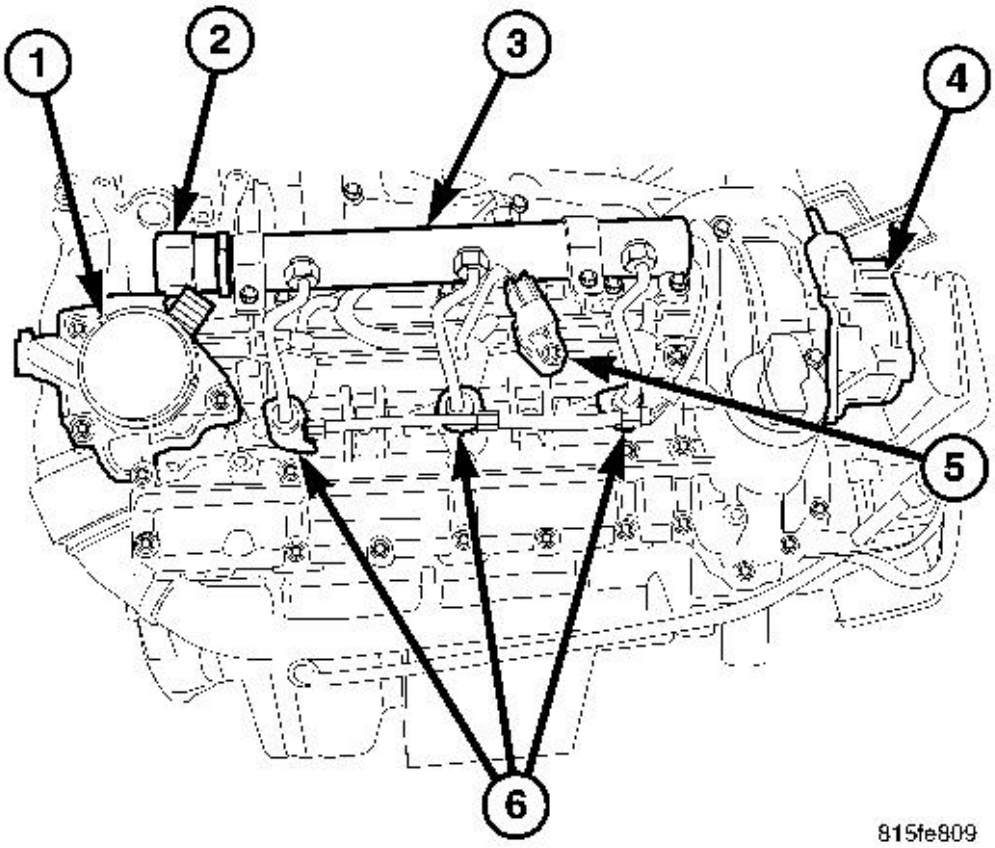

Fig. 236: Breather/Oil Separator, Fuel Rail Pressure Sensor, Fuel Rail, Vacuum Pump, Camshaft Position Sensor & Fuel Injectors
Courtesy of CHRYSLER LLC

1 - BREATHER/OIL SEPARATOR
2 - FUEL RAIL PRESSURE SENSOR
3 - FUEL RAIL
4 - VACUUM PUMP
5 - CAMSHAFT POSITION SENSOR
6 - FUEL INJECTORS

16. Remove the EGR air control valve assembly resonator.

17. Remove the vacuum pump (4).
18. Remove the cylinder head cover retaining bolts and remove cover.

INSTALLATION

CYLINDER HEAD COVER - LEFT

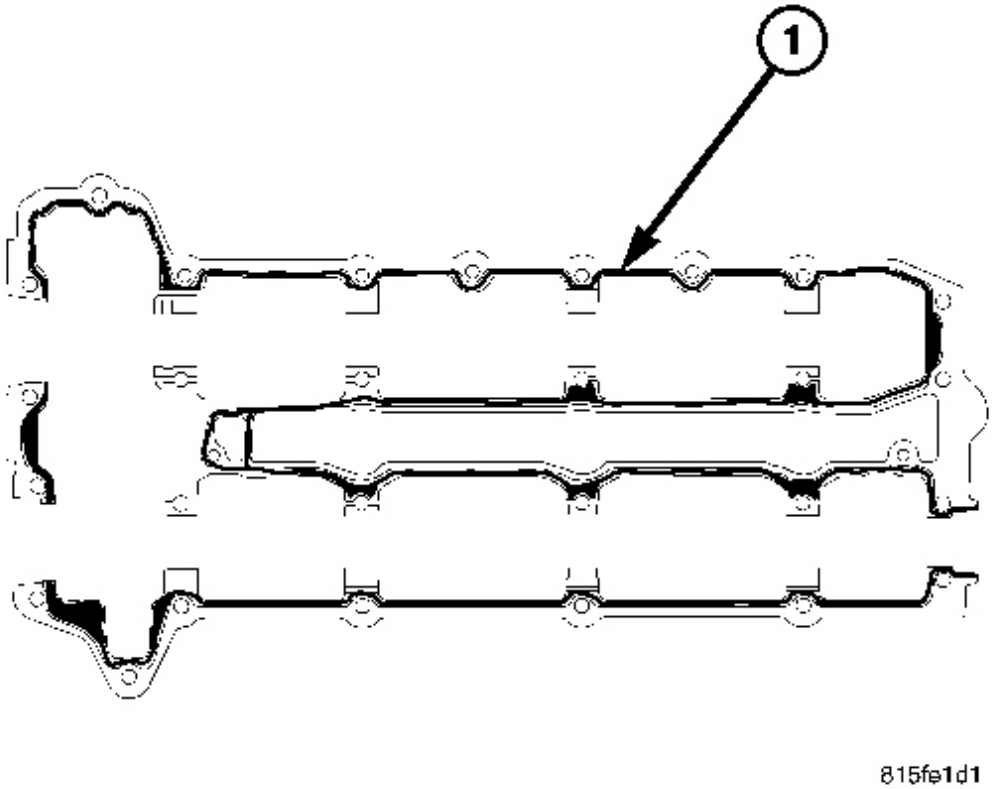

Fig. 237: Applying Cylinder Head Cover Sealant
Courtesy of CHRYSLER LLC

1 - 1.5MM MOPAR ENGINE SEALANT RTV

1. Clean and inspect all sealing surfaces.

NOTE: **Care must be taken not to get any engine sealant on the camshaft journals of the cylinder head cover.**

2. Install a 1/8 in bead of Mopar® Engine RTV Gen II sealant to the underside of the cylinder head cover. See **STANDARD PROCEDURE**.

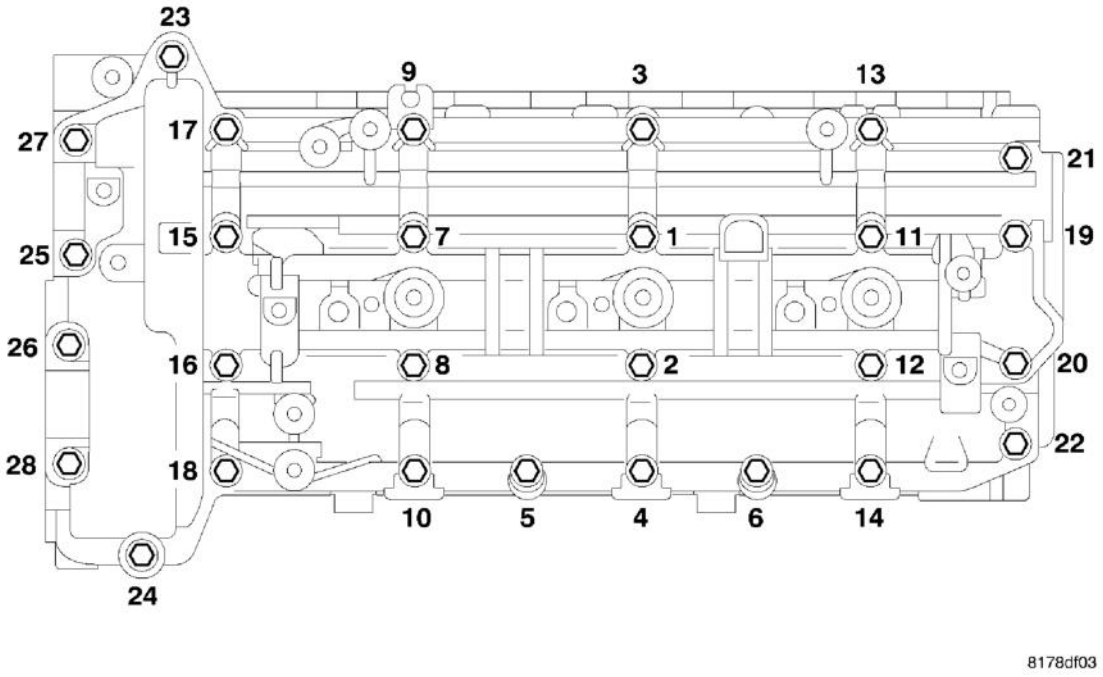

Fig. 238: Cylinder Head Cover Bolts Tightening Sequence
Courtesy of CHRYSLER LLC

3. Carefully position the cylinder head cover and install the bolts into their original position.

CAUTION: The cylinder head cover bolts are different lengths. Do not use the wrong length bolts or engine damage may result.

4. Tighten cylinder head cover bolts in sequence, first to 4 N.m (35 in. lbs.), and then repeat the sequence to 8.4 N.m (75 in. lbs).

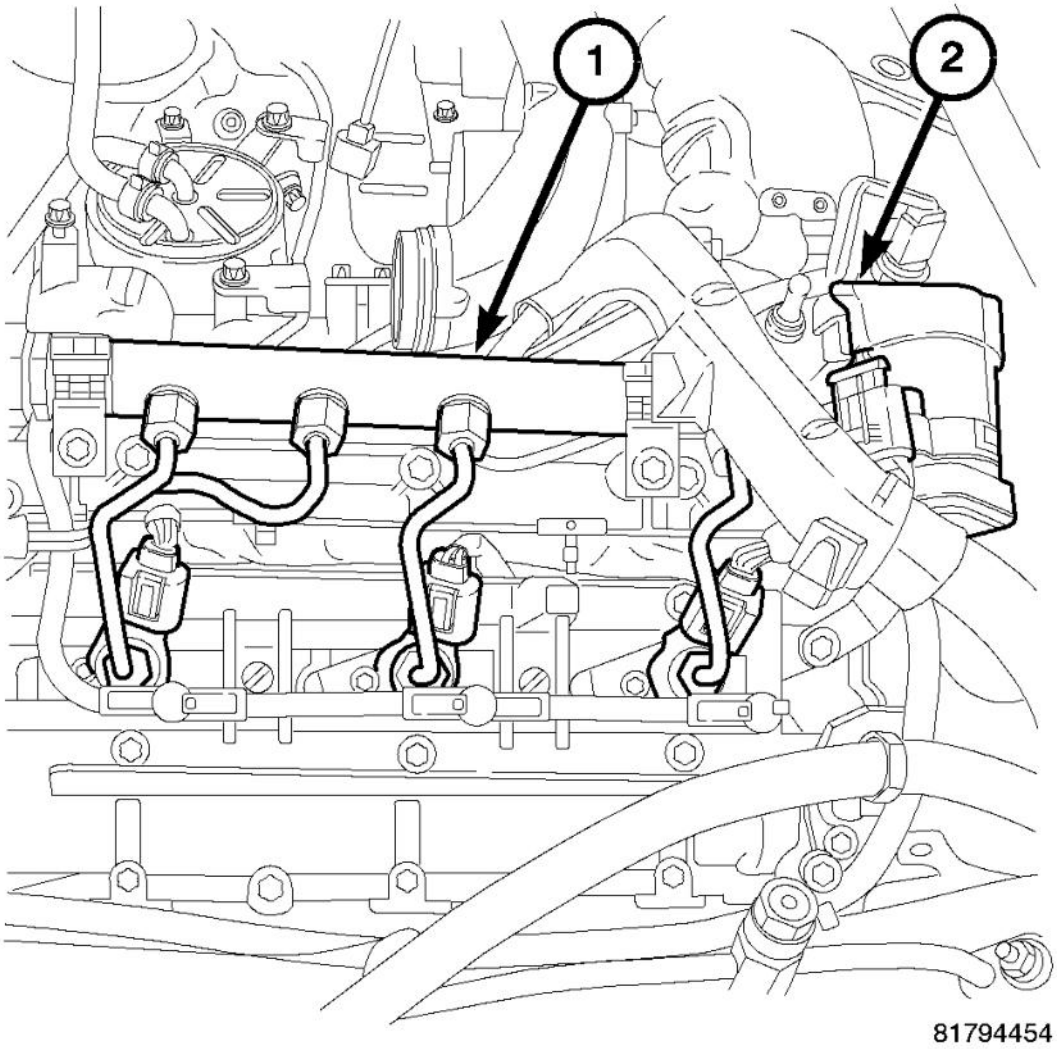

Fig. 239: EGR Valve & Fuel Injectors
Courtesy of CHRYSLER LLC

1 - Fuel Injectors
2 - EGR Valve

5. Install the EGR valve.

CAUTION: The fuel injector sealing washers MUST be replaced. DO NOT use the old sealing washers or double the sealing washers.

NOTE: Care must be taken not to apply any lubricant to the fuel injector nozzles.

6. Install the fuel injectors. Tighten the injector retaining claw bolt to 7 N.m (5 ft. lbs.) and then an additional 180 degrees.
7. Re-position and secure the engine harness.
8. Install the left fuel rail. Tighten the fuel rail bolts to 11 N.m (8 in. lbs.).
9. Position the return fuel lines and secure to the injectors. Push down on the release lock tab to secure.
10. Connect the fuel injector electrical connectors.
11. Install the left rear engine cover bracket.

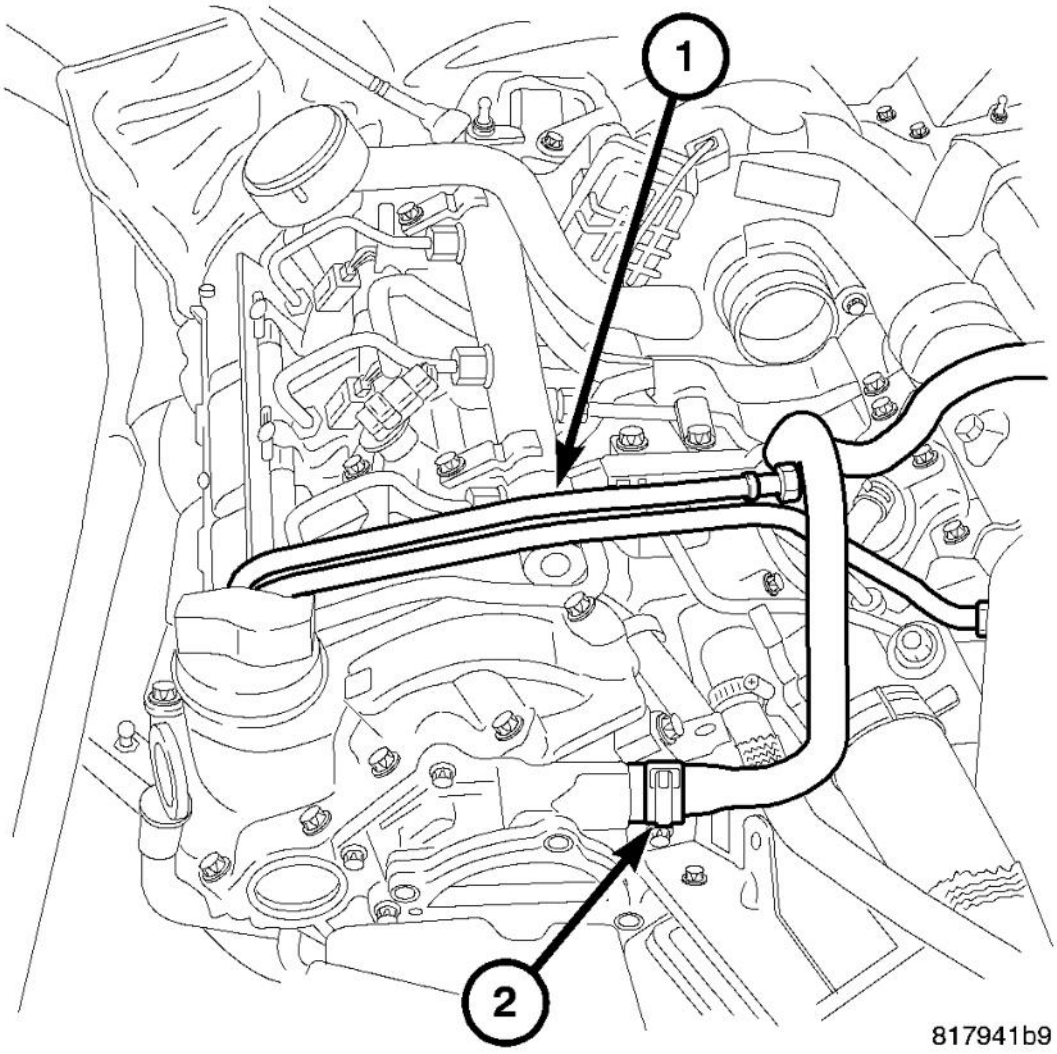

Fig. 240: Power Brake Booster Vacuum Line & Fuel Lines
Courtesy of CHRYSLER LLC

12. Install the high pressure fuel lines from the fuel rail to injectors. Tighten the line connections to 27 N.m

(20 ft. lbs.).

13. Install the fuel line from the high pressure pump to the left fuel rail. Tighten the retaining bolt to 30 N.m (22 ft. lbs.).
14. Install the fuel supply line to the fuel filter and high pressure pump.
15. Connect both fuel lines at the high pressure pump.

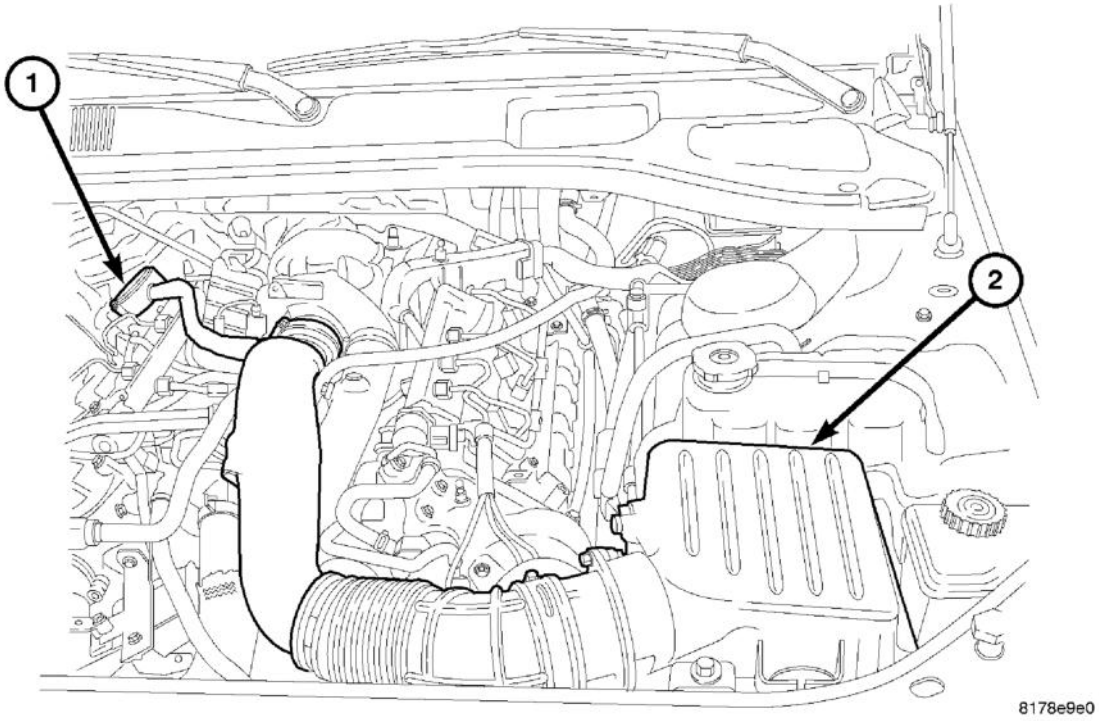

Fig. 241: Air Cleaner Cover & Inlet Tube To Turbocharger
Courtesy of CHRYSLER LLC

16. Install the air filter housing and tube.
17. Connect the negative battery cable.
18. Start the engine, run until warm, turn engine off and inspect for leaks).

WARNING: **Under no circumstances should gasoline be mixed with diesel fuel (not even during winter). The high pressure pump is lubricated by diesel fuel. Immediate fuel system damage may occur causing replacement and flushing of the complete diesel fuel system. High pressure pump seizure will cause metal particles to spread through out the fuel circuit. All cdi fuel system components connected to the fuel circuit will have to be exchanged and the lines flushed.**

CYLINDER HEAD COVER - RIGHT

1. Clean and inspect all sealing surfaces.

NOTE: Care must be taken not to get any engine sealant on the camshaft journals of the cylinder head cover.

2. Install a 1/8 in bead of Mopar Engine RTV Gen II sealant to the underside of the cylinder head cover. See **STANDARD PROCEDURE**.

CAUTION: The cylinder head cover bolts are different lengths. Make sure to install the bolts into their original position.

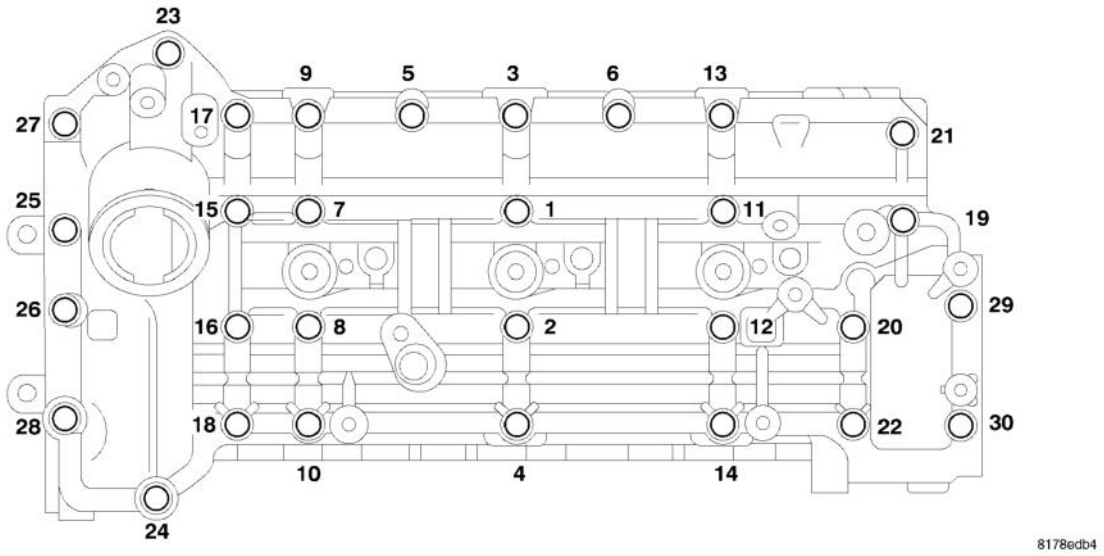

Fig. 242: Cylinder Head Cover Bolts Tightening Torque Sequence
Courtesy of CHRYSLER LLC

3. Carefully position the cylinder head cover and install the bolts into their original position.
4. Tighten cylinder head cover bolts in sequence, first to 4 N.m (35 in. lbs.), and then repeat the sequence to 8.4 N.m (75 in. lbs).

CAUTION: Make sure to replace the lower copper washer seal on the injector. DO NOT re-use the old seal, DO NOT double the seals.

5. Install the fuel injectors. Tighten the retaining claw bolts to 7 N.m (5 ft. lbs.) and then an additional 180°.
6. Install the CCV housing. Tighten the fasteners to 14 N.m (124 in. lbs.).
7. Install the vacuum pump. Tighten the fasteners to 9 N.m (80 in. lbs.).
8. Install the EGR air control valve resonator. Tighten the fasteners to 9 N.m (80 in. lbs.).
9. Install the oil level indicator tube fastener. Tighten the bolt to 11 N.m (97 in. lbs.).
10. Install the AC/heater hose bracket. Tighten the bolts to 9 N.m (80 in. lbs.).
11. Install the fuel rail. Tighten bolts to 9 N.m (80 ft. lbs.).

NOTE: **Inspect all fuel lines for damage or wear. Replace as necessary. DO NOT over tighten the fuel line nuts.**

12. Install the fuel injector high pressure lines. Tighten line nuts to 33 N.m (24 ft. lbs.).
13. Position the engine wiring harness and connect the CMP, fuel rail pressure sensor and fuel injectors.
14. Connect the fuel return hoses to fuel injectors, pushing down on the hose retainers.
15. Install the air cleaner cover and inlet tube.
16. Install the rear engine cover bracket.
17. Connect the CCV hose to air inlet tube and connect the CCV heater wiring harness connector.
18. Install the engine cover.
19. Install the strut tower support.
20. Install the coolant reservoir.
21. Connect the negative battery cable.

WARNING: **High-pressure fuel lines deliver fuel under extreme pressure from the injection pump to the injectors. This maybe as high as 1350 bar (19,580 psi). Use extreme caution when inspecting for high-pressure fuel leaks. Inspect high-pressure fuel leaks with a sheet of cardboard. Wear safety goggles and adequate protective clothing when servicing fuel system. Fuel under this amount of pressure can penetrate skin causing serious or fatal injury.**

22. Start engine, allow to warm, turn engine off and inspect for leaks.

ARMS - ROCKER

DESCRIPTION

ROCKER ARMS

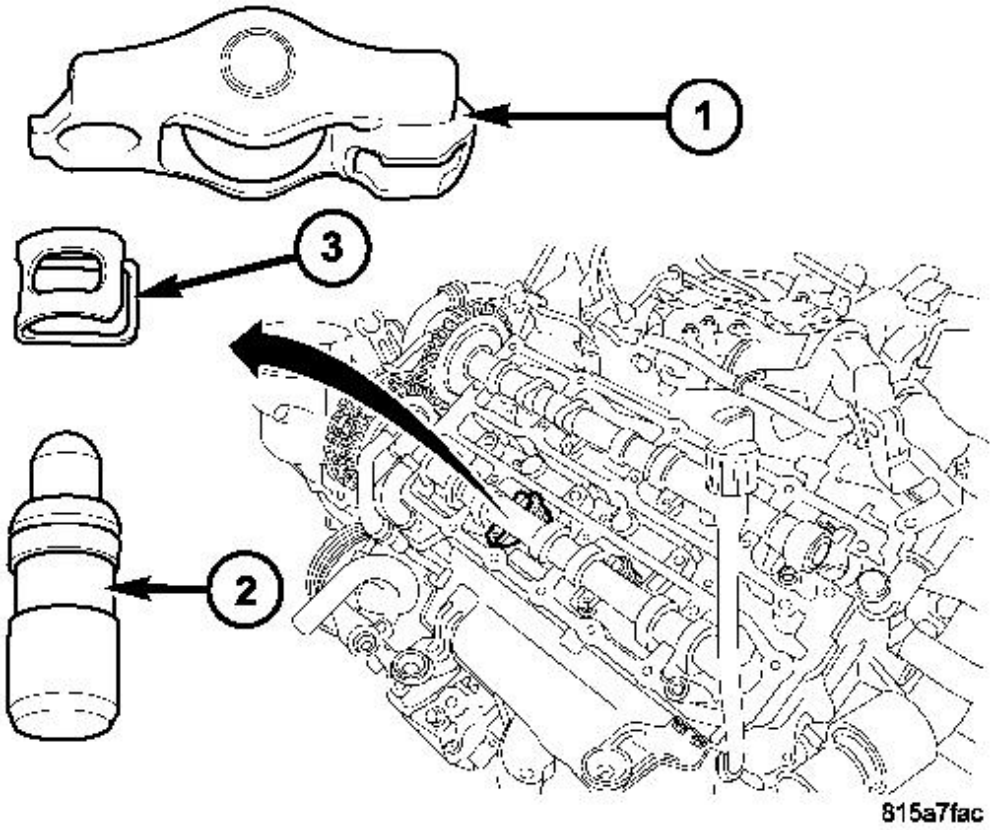

Fig. 243: Rocker Arm, Hydraulic Lifter & Retaining Clip
Courtesy of CHRYSLER LLC

1 - ROCKER ARM
2 - HYDRAULIC LIFTER
3 - RETAINING CLIP

The rocker arms (1) are located on the top of the hydraulic lifters (2) and the valves. The rocker arms are not held rigidly into position; instead they are held in position by resting on top of the valve and the hydraulic lifter pivoting ball. A holding clip (3) secures the rocker arm to the hydraulic lifter.

OPERATION

ROCKER ARMS

The rocker arms are used as a link between the camshaft and valves. As the camshaft rotates, the lobes of the

camshafts apply downward pressure on the rocker arms. This pressure is then transmitted to the valves which causes the valves to open.

REMOVAL

ROCKER ARMS

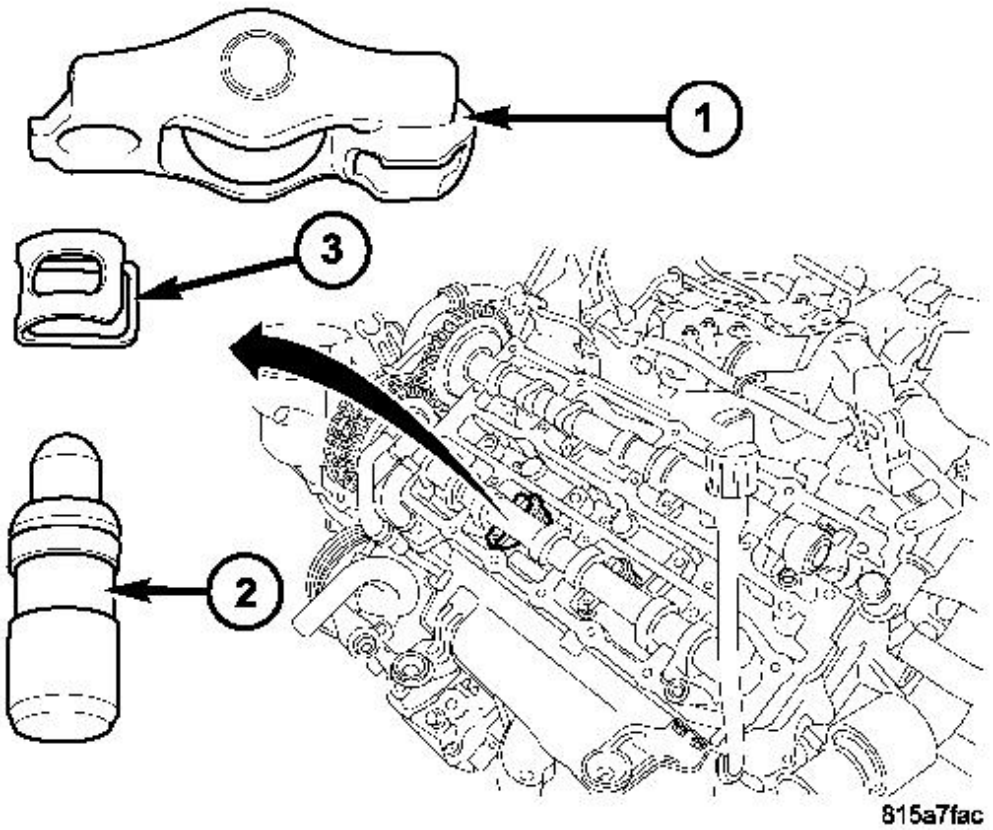

Fig. 244: Rocker Arm, Hydraulic Lifter & Retaining Clip
Courtesy of CHRYSLER LLC

1 - ROCKER ARM
2 - HYDRAULIC LIFTER
3 - RETAINING CLIP

1. Remove the appropriate camshafts. See **REMOVAL**.
2. Remove the rocker arm (1) and lifter (2) assembly.

NOTE: **When the hydraulic lifters are removed from the engine, they must be stored upright and in clean conditions.**

3. Separate the rocker arm from the lifter.

INSTALLATION

ROCKER ARMS

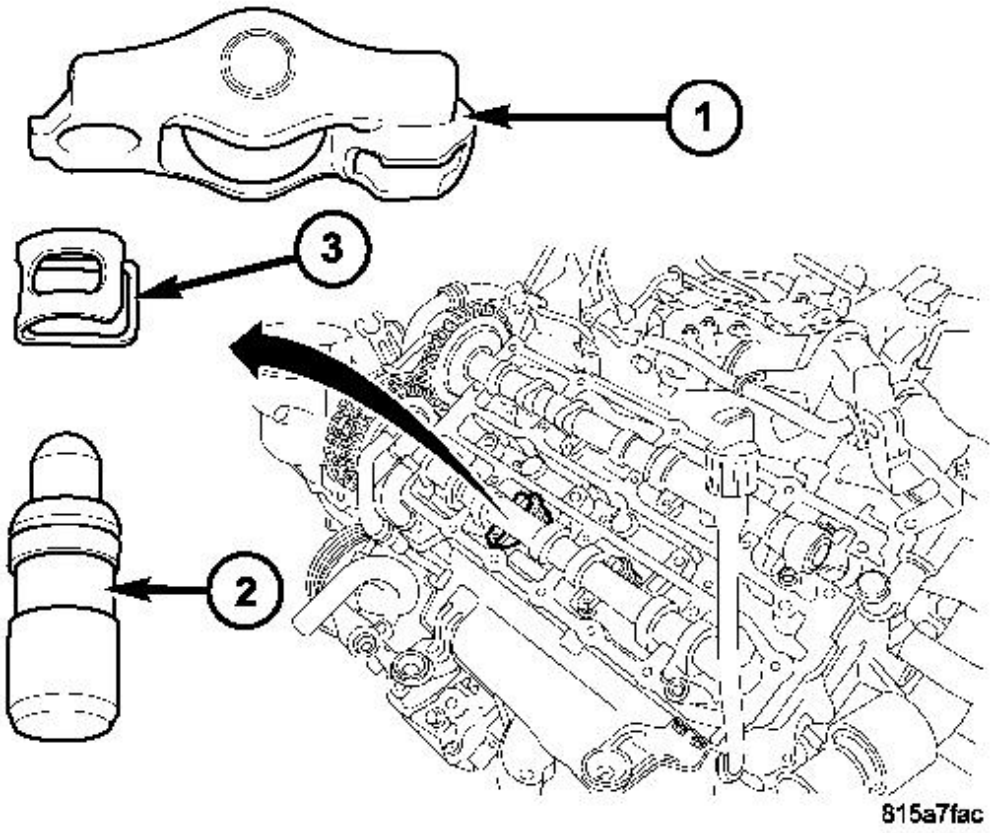

Fig. 245: Rocker Arm, Hydraulic Lifter & Retaining Clip
Courtesy of CHRYSLER LLC

1 - ROCKER ARM
2 - HYDRAULIC LIFTER
3 - RETAINING CLIP

1. Assemble the rocker arm (1) to the hydraulic lifter (2) with the retaining clip (3).
2. Install the rocker arm and lifter assembly onto the cylinder head.
3. Install the camshaft(s). See **INSTALLATION**.

LIFTERS - HYDRAULIC

DESCRIPTION

HYDRAULIC LIFTERS

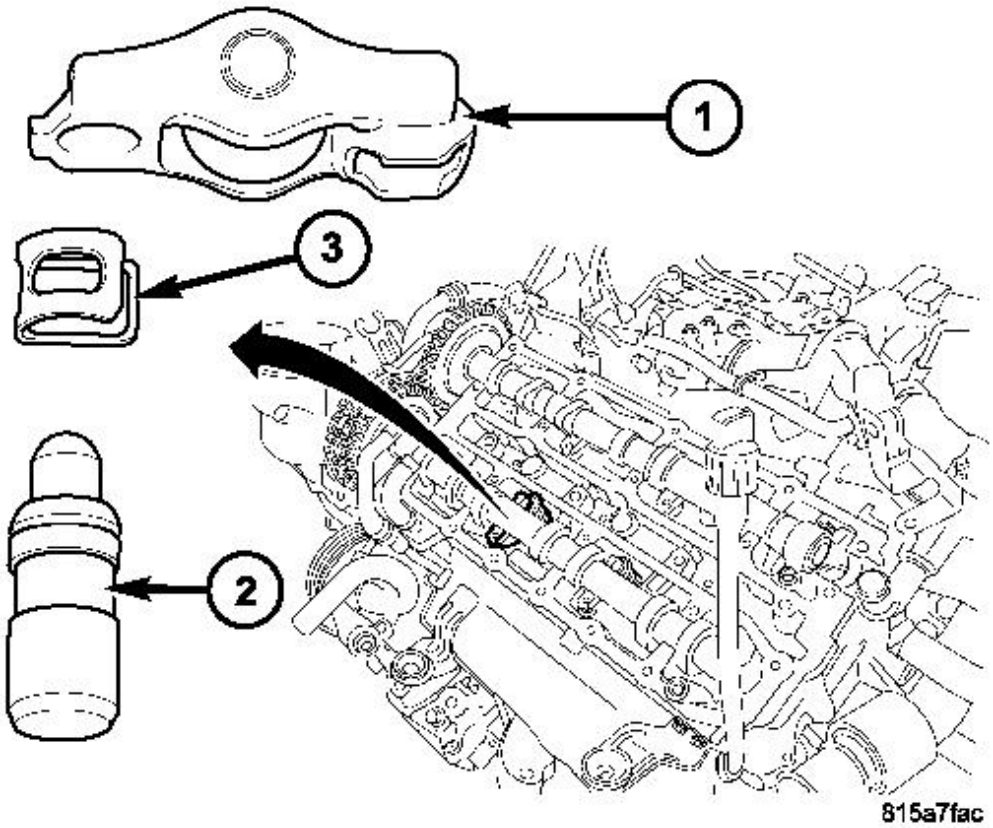

Fig. 246: Rocker Arm, Hydraulic Lifter & Retaining Clip
Courtesy of CHRYSLER LLC

1 - ROCKER ARM 2 - HYDRAULIC LIFTER

3 - RETAINING CLIP

Valve lash is controlled by hydraulic lifters (2) located inside the cylinder head, in tappet bores below the camshafts.

REMOVAL

HYDRAULIC LIFTERS

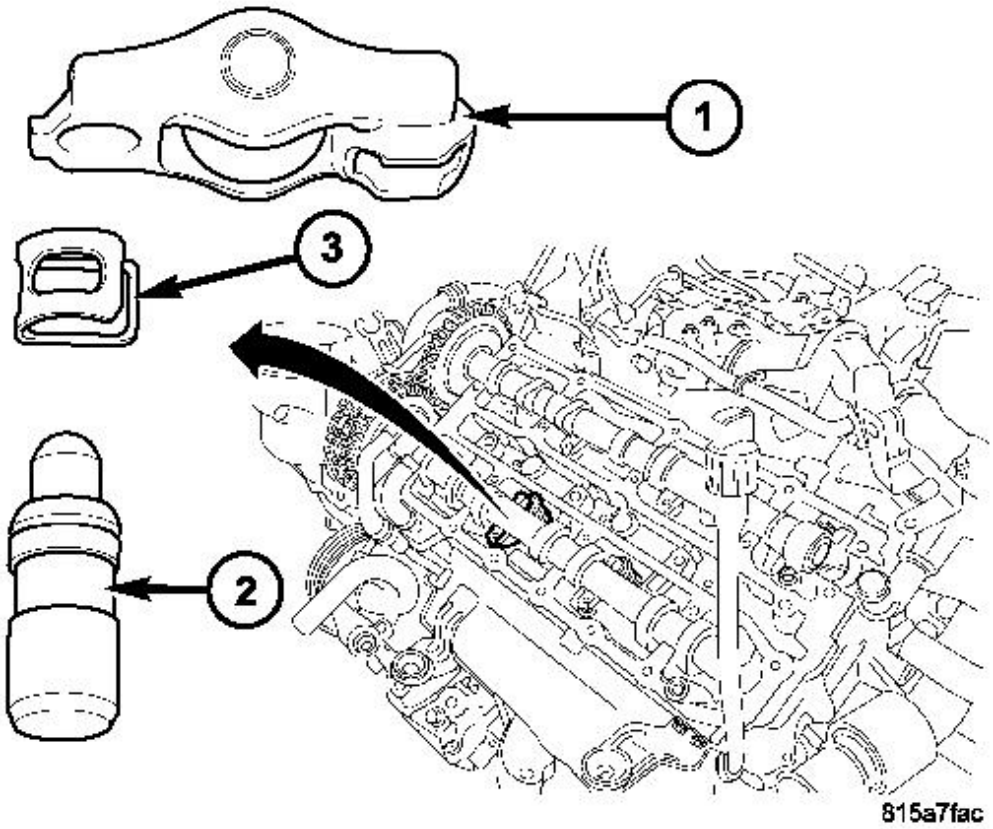

Fig. 247: Rocker Arm, Hydraulic Lifter & Retaining Clip
Courtesy of CHRYSLER LLC

1 - ROCKER ARM
2 - HYDRAULIC LIFTER
3 - RETAINING CLIP

1. Remove the appropriate camshafts. See **REMOVAL**.
2. Remove the rocker arm (1) and lifter (2) assembly.

NOTE: When the hydraulic lifters are removed from the engine, they must be stored upright and in clean conditions.

3. Separate the lifter from the rocker arm.

INSPECTION

HYDRAULIC LIFTER

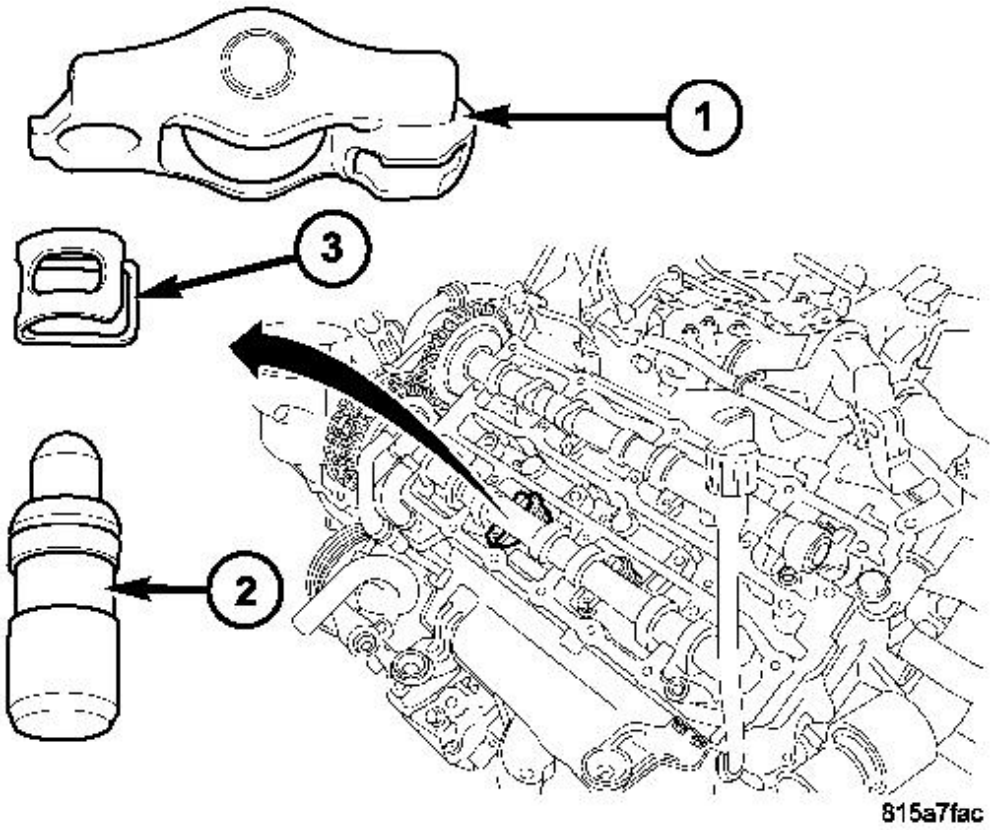

Fig. 248: Rocker Arm, Hydraulic Lifter & Retaining Clip
Courtesy of CHRYSLER LLC

1 - ROCKER ARM

2 - HYDRAULIC LIFTER
3 - RETAINING CLIP

1. Clean each lifter assembly in cleaning solvent to remove all varnish and sludge deposits. Inspect for indications of scuffing on the side and base of each lifter body (2).
2. Squeeze the lifter and be sure that the spring returns the lifter to its correct position.
3. Inspect the retaining clip (3) and rocker arm (1) roller for damage or excessive wear.
4. Replace any worn or damaged components.

INSTALLATION

HYDRAULIC LIFTERS

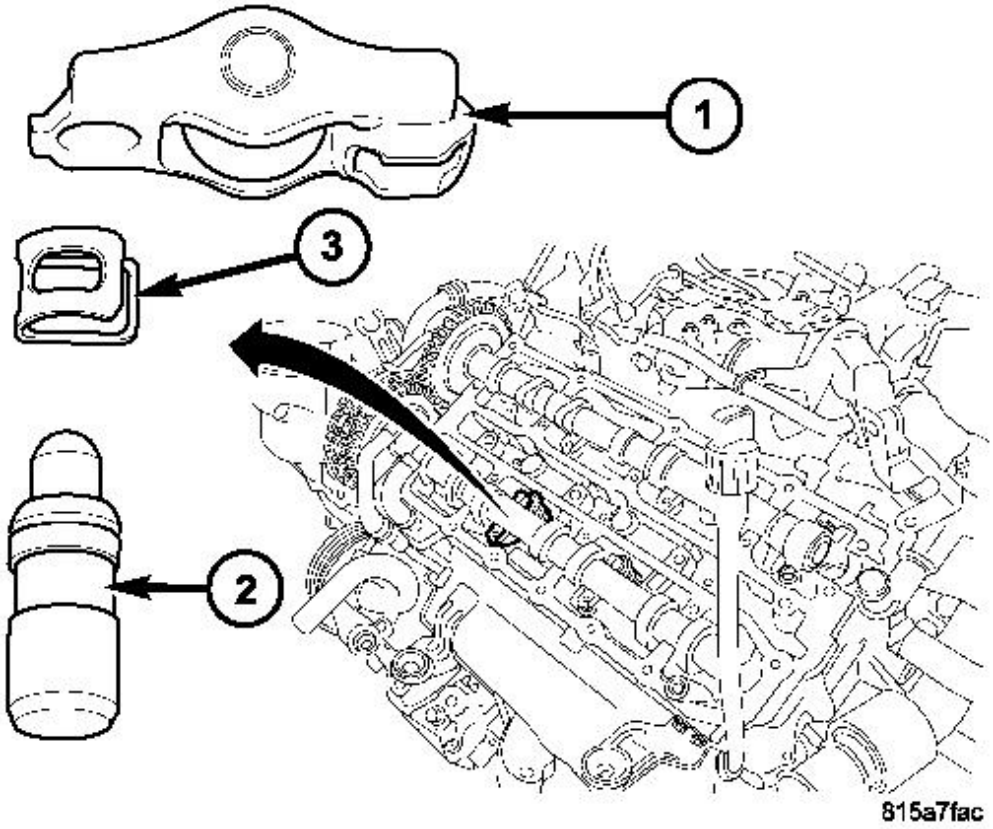

Fig. 249: Rocker Arm, Hydraulic Lifter & Retaining Clip
Courtesy of CHRYSLER LLC

1 - ROCKER ARM 2 - HYDRAULIC LIFTER 3 - RETAINING CLIP

CAUTION: When the hydraulic lash adjusters are removed from the engine, they must be stored upright and in clean conditions. Install the finger followers and hydraulic lifters in the same location as removed.

CAUTION: Replacement of the camshaft will also require replacement of the finger followers and hydraulic lifters.

1. Assemble the hydraulic lifter (2) to the rocker arm (1) with the retaining clip (3).
2. Install the rocker arm and lifter assembly onto the cylinder head.
3. Install the camshaft(s). See **INSTALLATION**.

INTAKE/EXHAUST VALVES & SEATS

STANDARD PROCEDURE

VALVE SEALS IN-VEHICLE

1. Disconnect the negative battery cable.
2. Remove the intake manifold/cylinder head cover. See **REMOVAL**.

NOTE: Rocker arms and lifters must be kept in order of removal and stored in the up right position.

3. Position the rocker arms aside. See **REMOVAL**.

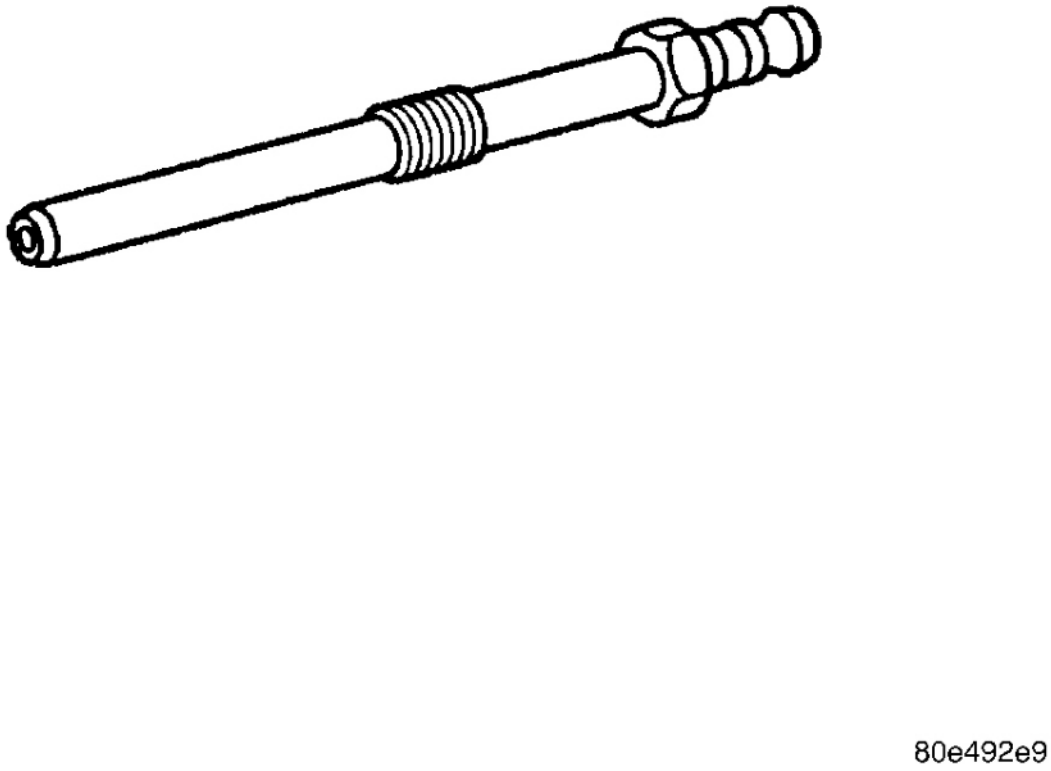

Fig. 250: Adapter, Compression Tester - 9553
Courtesy of CHRYSLER LLC

4. Install special tool 9553, compression tester Adapter, into the injector hole and retain with an injector hold down bolt.
5. Connect a regulated shop air supply to 9295 and pressurize the cylinder.
6. Place shop towels around the working area of the cylinder head to prevent valve locks from accidently entering the engine.

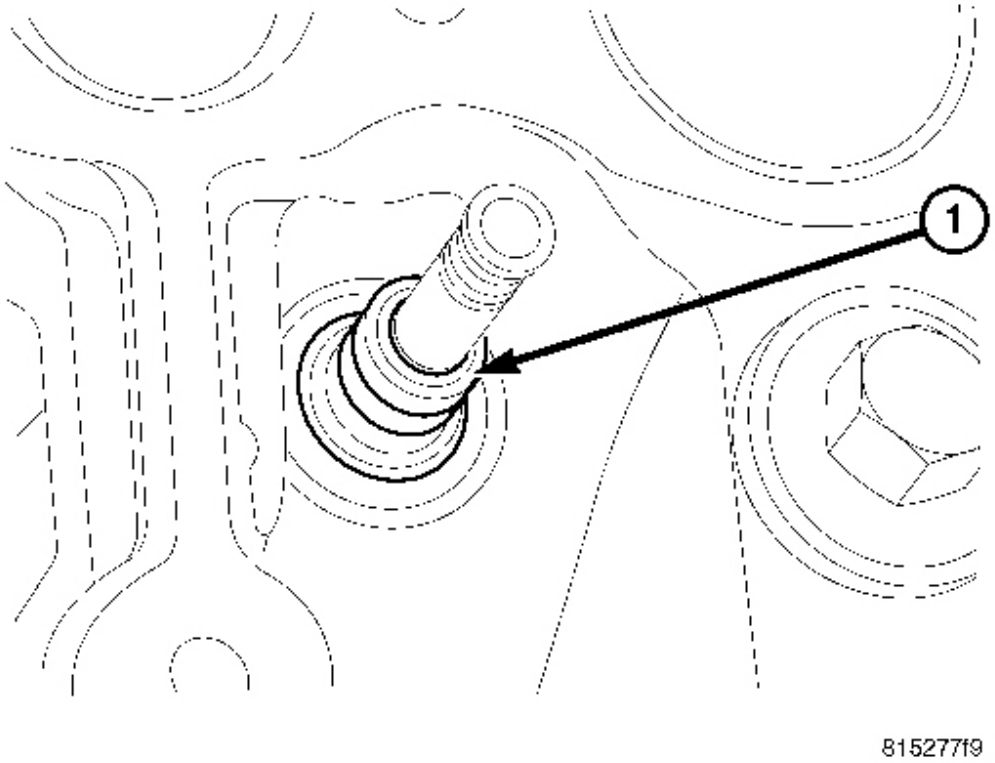

Fig. 251: Valve Seal
Courtesy of CHRYSLER LLC

7. Using Adapter MD998772A-15 Adapter, collapse the valve spring and remove the locks.
8. Remove the valve spring assembly.
9. Remove the valve seal.
10. Repeat this procedure for all cylinders.

VALVE SERVICE

This procedure is done with the engine cylinder head removed from the block.

DISASSEMBLY

1. Remove the engine cylinder head from the cylinder block. See **REMOVAL**.
2. Use Valve Spring Compressor Tool and compress each valve spring.
3. Remove the valve locks, retainers, and springs.

4. Use a smooth stone or a jewelers file to remove any burrs on the top of the valve stem, especially around the groove for the locks.
5. Remove the valves, and place them in a rack in the same order as removed.

VALVE CLEANING

1. Clean all carbon deposits from the combustion chambers, valve ports, valve stems, valve stem guides and head.
2. Clean all residue and gasket material from the engine cylinder head machined gasket surface.

INSPECTION

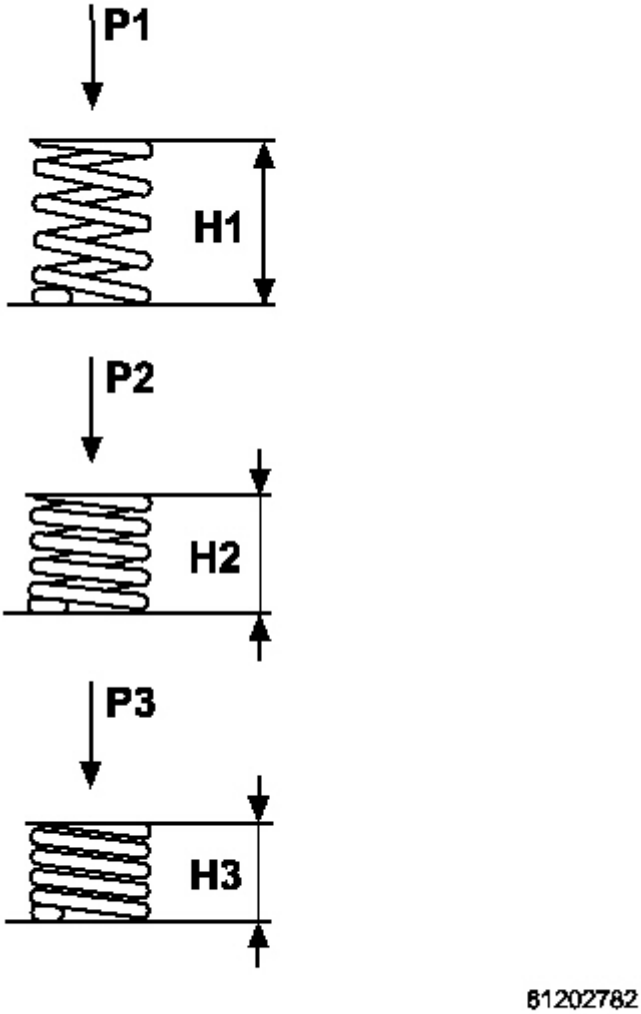

Fig. 252: Valve Spring Inspection Chart
Courtesy of CHRYSLER LLC

1. Inspect for cracks in the combustion chambers and valve ports.
2. Inspect for cracks on the exhaust seat.
3. Inspect for cracks in the gasket surface at each coolant passage.
4. Inspect valves for burned, cracked or warped heads.
5. Inspect for scuffed or bent valve stems.
6. Replace valves displaying any damage.

7. Check valve spring height.

VALVE SEAT REFACING

1. Install a pilot of the correct size in the valve guide bore. Reface the valve seat to the specified angle with a good dressing stone. Remove only enough metal to provide a smooth finish.
2. Use tapered stones to obtain the specified seat width when required.

VALVE GUIDES

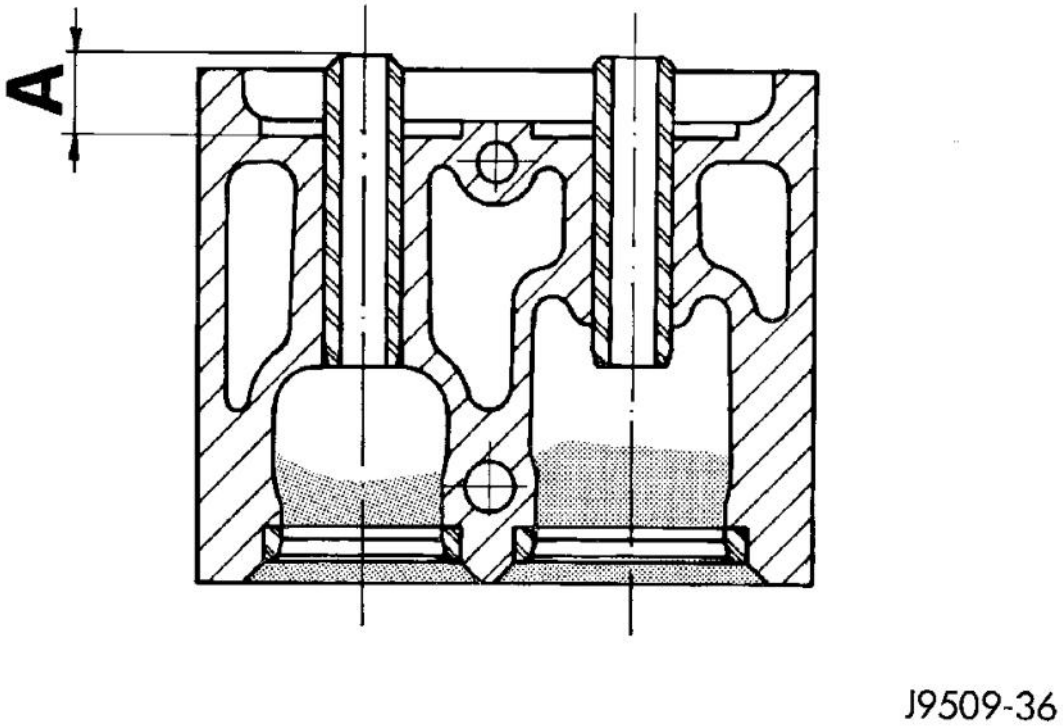

Fig. 253: Valve Guide Height
Courtesy of CHRYSLER LLC

1. Valve Guides height requirement.
2. Measurement A: 16.50 - 17.00 mm. Measurement B : 14.50 - 15.00 mm.

VALVE STEM-TO-GUIDE CLEARANCE MEASUREMENT

1. Measure and record internal diameter of valve guides. Valve guide internal diameter is 6.0 to 6.012 mm (0.2362 to 0.2366 in.).
2. Measure valve stems and record diameters. Intake valve stem diameter 5.952 to 5.97 mm (0.2343 to 0.2350 in). Exhaust valve stem diameter 5.942 to 5.96 mm (0.2339 to 0.2346 in).

3. Subtract diameter of valve stem from internal diameter of its respective valve guide to obtain valve stem clearance in valve guide. Clearance of inlet valve stem in valve guide is 0.03 to 0.06 mm (.0011 to.0023 in). Clearance of exhaust valve stem in valve guide is 0.04 to 0.07 mm (.0015 to.0027 in).
4. If valve stem clearance in valve guide exceeds tolerances, new valve guides must be installed.

BLOCK - ENGINE

DESCRIPTION

ENGINE BLOCK

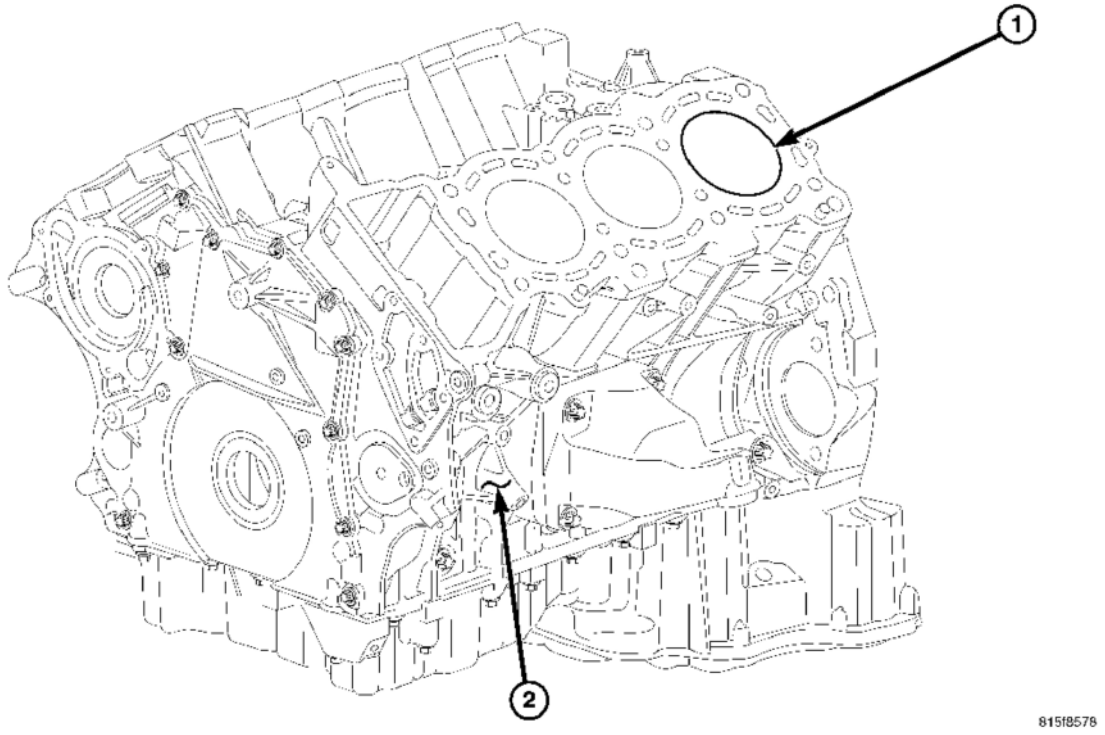

Fig. 254: 3.0L Engine Block Cast Iron Piston Sleeves & Cast Aluminum Cylinder Block
Courtesy of CHRYSLER LLC

The 3.0L engine utilizes a cast aluminum cylinder block (2) molded around cast iron piston sleeves (1). The cylinder angle is 72 degrees with cylinder spacing at 106 mm (4.173 in.). The cylinder block (2) has increased rigidity that reduces structural flexing, plus a fractured connecting rod cap design that can not distort connecting rod cap fit. The liner (1) surface is honed to a cross hatch angle between 40°-60°. See **Fig. 254**.

There is a stamped cylinder liner grading identification number located on the left front of the engine block, below the high pressure pump location. This identification mark (A, X, or B) is used for piston selection. For example, an "X" cylinder liner can use an "A", "X" or "B" piston. An "A" cylinder liner can only use an "A" or an "X" piston, and a "B" cylinder liner can only use a "X" or a "B" cylinder liner.

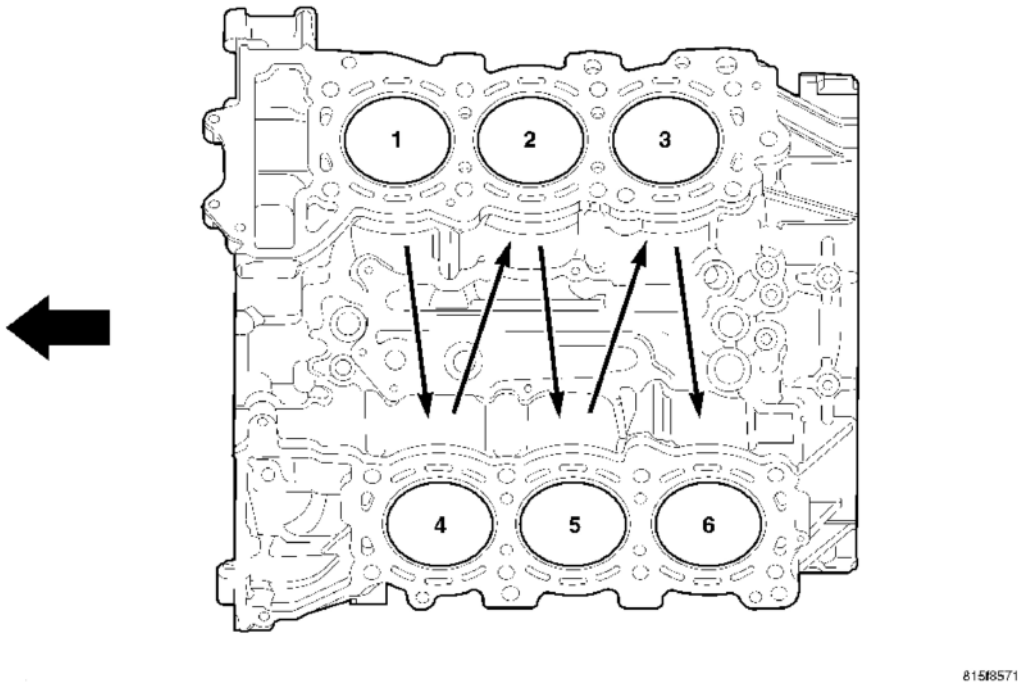

Fig. 255: Injection Order
Courtesy of CHRYSLER LLC

Cylinders are numbered front to back, beginning with the right bank. The right bank cylinders are numbered 1, 2, 3. The left bank cylinders 4, 5, 6. The injection order of the engine is 1-4-2-5-3-6.

CRANKSHAFT

DESCRIPTION

CRANKSHAFT

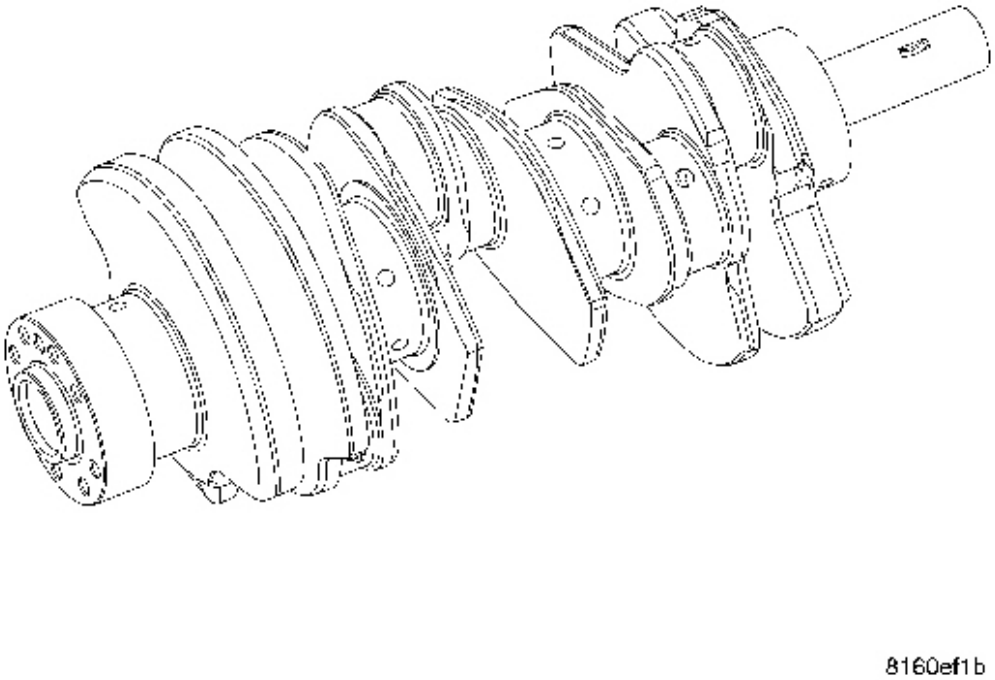

Fig. 256: Crankshaft
Courtesy of CHRYSLER LLC

1 - CRANKSHAFT

The crankshaft (1) for the 3.0L is a forged steel type design with four main bearing journals. The third crankshaft support controls crankshaft thrust. The bearing identification for the upper crankshaft main journals is etched into the engine block below the high pressure pump and the proper lower bearing selection can be found etched in the front of the crankshaft. See **Fig. 256**.

OPERATION

CRANKSHAFT

The crankshaft transfers force generated by combustion within the cylinder bores to the flexibility. The crankshaft has six separate throws arranged at different angles (splayed) to reduce second order free movements of inertia. Following the injection order 1-4-2-5-3-6, the crankshaft throw angles alternate between 48° and 192°.

In the injection order, together with the splayed throws and the 72° V-block, produce injection intervals of 120° (even fire). After ignition TDC of cylinder number 1, the crankshaft turns 120° to reach TDC of cylinder

number 4. The 120° angle (even fire) is the result of the 48° throw angle plus the 72° cylinder block angle.

STANDARD PROCEDURE

CHECKING CRANKSHAFT END PLAY

1. Mount a dial indicator to a stationary point at rear of engine. Locate the probe perpendicular against the rear of the crankshaft.
2. Move the crankshaft all the way to the front of its travel.
3. Zero the dial indicator.
4. Move the crankshaft all the way to the rear of it's travel and record the reading on the dial indicator. For crankshaft end play clearances refer to the **CRANKSHAFT**

MEASURE CRANKSHAFT AND BLOCK JOURNALS

NOTE: After any bearing damage occurred, remove all debris which is present in the main oil gallery, connecting rod bores, and in the crankshaft and oil galleries. Include removal of the inserting steel ball of the main oil gallery before cleaning.

1. Remove crankshaft.
2. Clean all engine parts thoroughly.

CAUTION: Replace all of the connecting rods when ever any of the rod cap bolts are loosened or bearing caps are removed

3. Inspect crankshaft, replace as necessary.
4. Inspect crankcase for damage.
5. Inspect crankshaft main bearing caps for damage.
6. Install the crankshaft main bearing caps and check for out of round. Replace as necessary.
7. Remove the main bearing caps and install the crankshaft with the correct selected bearings.

NOTE: Radial mounting of the main bearings of standard size crankshaft is possible by assigning the color-coded bearing shells. The upper main bearings can be identified by the four digit mark etched on the engine block below the high pressure pump. The lower main bearings can be identified by the code etched on the front of the crankshaft hub.

ASSIGNING CRANKSHAFT MAIN BEARING SHELLS

The upper main bearings can be identified by the four digit mark etched in the block below the high pressure pump. The lower main bearings can be identified by the code etched on the front of the crankshaft hub. This color code indicates which bearing shell halves are to be used.

1. Select the correct bearing shells based upon the crankcase and crankshaft identification marks.

2. Mount crankshaft axially using the thinnest thrust washer.
3. Inspect crankshaft end play. If the crankshaft end play is out of specification, remove the crankshaft and install the larger thrust shim. Repeat the procedure until crankshaft end play is within specification.
4. Mount the crankshaft axially again and check each main bearing oil clearance with plastigage. For bearing clearance specifications, see **CRANKSHAFT**.

REMOVAL

CRANKSHAFT

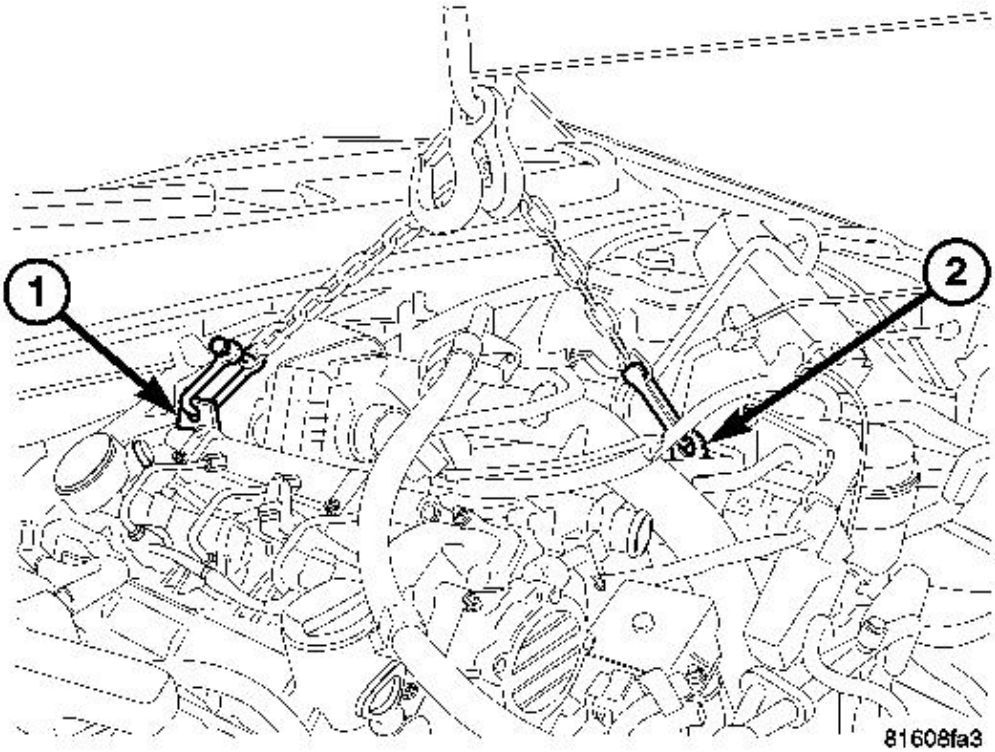

Fig. 257: Engine Lifting Points
Courtesy of CHRYSLER LLC

1 - REAR ENGINE LIFT WITH CLEVIS CONNECTOR
2 - FRONT ENGINE LIFT WITH CLEVIS CONNECTOR

1. Remove the engine cover.
2. Remove the engine from the vehicle. See **REMOVAL**.

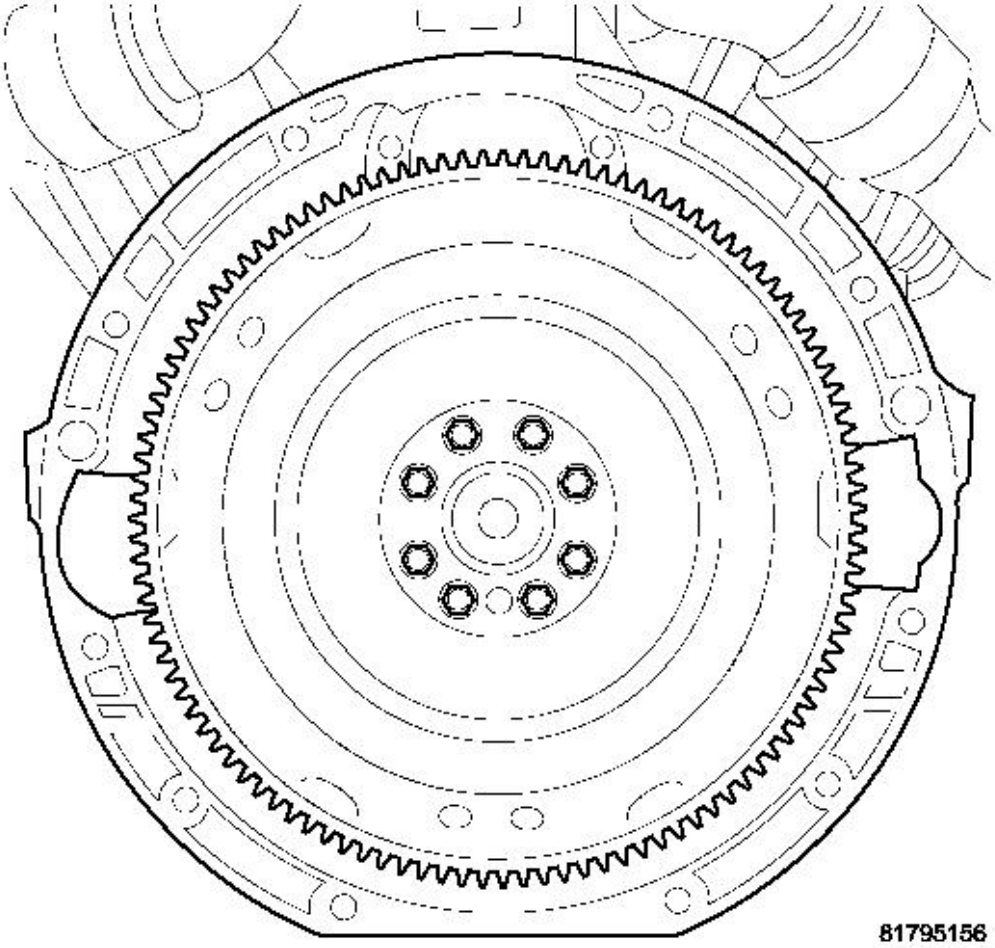

Fig. 258: Flex Plate
Courtesy of CHRYSLER LLC

3. Remove the flex plate.

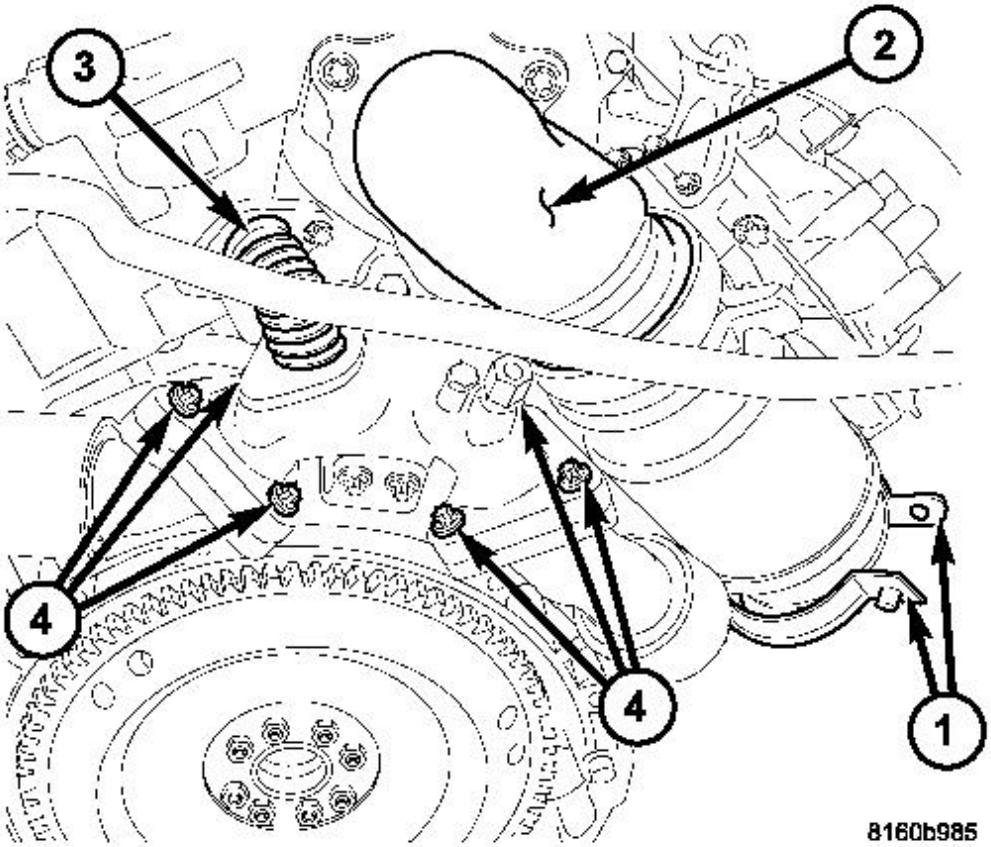

Fig. 259: Removing/Installing Air Intake, Turbo & Exhaust System Components
Courtesy of CHRYSLER LLC

4. Remove the turbocharger.

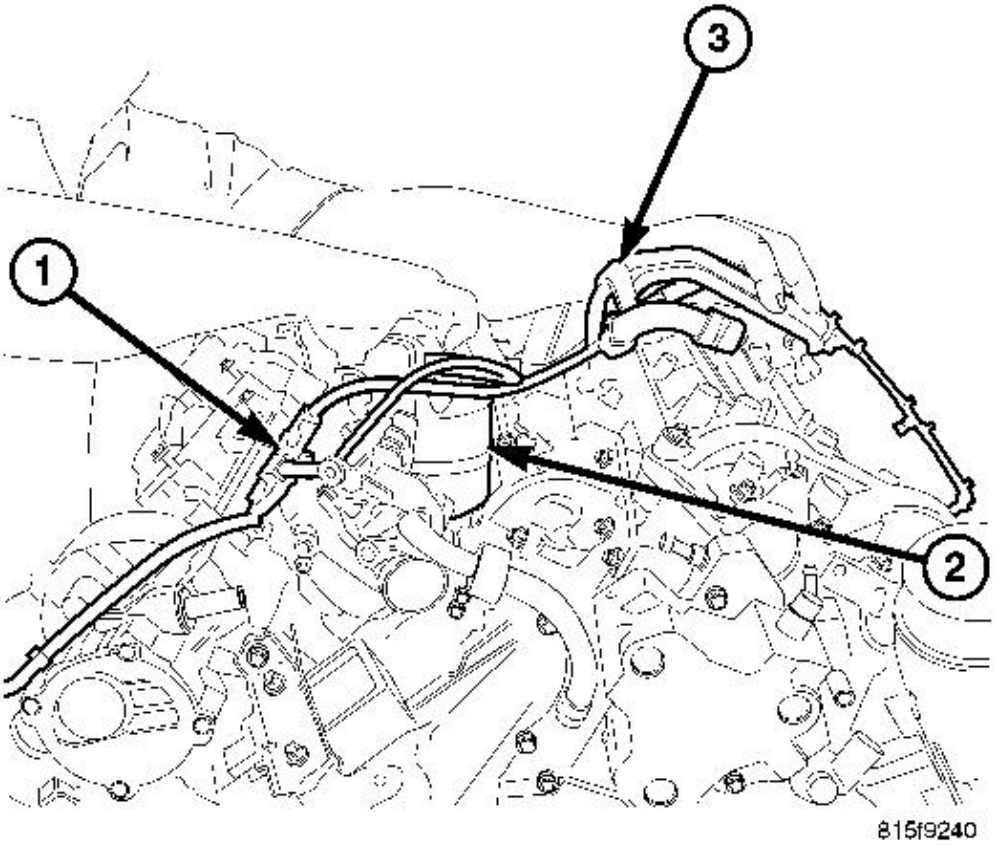

Fig. 260: Fuel Filter, Lines And Hoses
Courtesy of CHRYSLER LLC

1 - RETURN FUEL HOSE BUNDLE
2 - FUEL FILTER
3 - LOW PRESSURE FUEL SUPPLY AND RETURN PIPE

5. Remove the fuel filter.
6. Remove the fuel rails and lines.

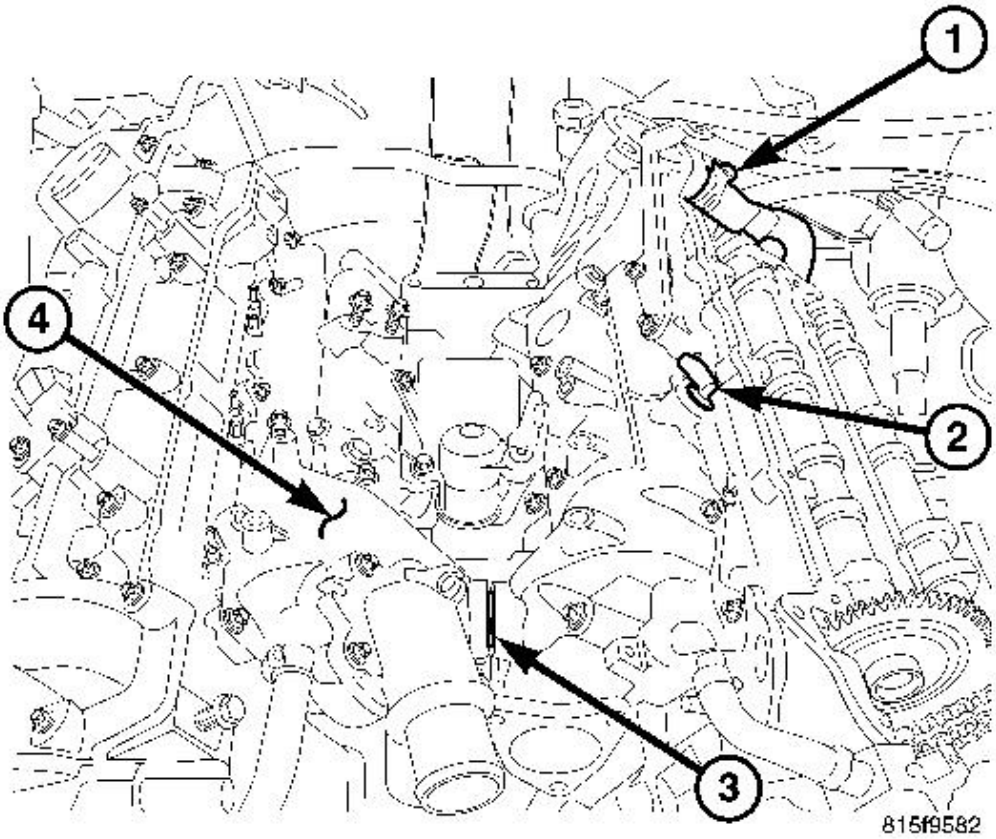

Fig. 261: EGR Coolant Pipe, Coolant Temperature Sensor, Intake Coolant Passage & Intake Manifold
Courtesy of CHRYSLER LLC

1 - EGR COOLANT PIPE
2 - COOLANT TEMPERATURE SENSOR
3 - INTAKE COOLANT PASSAGE
4 - INTAKE MANIFOLD

7. Remove the intake manifold.

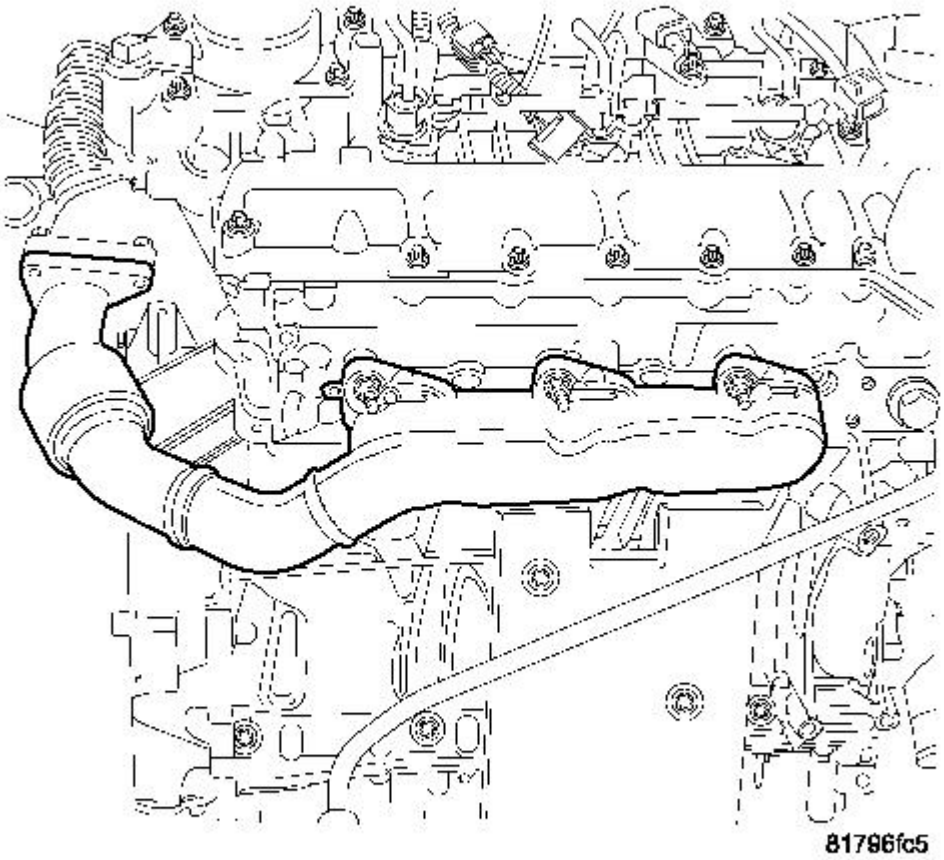

Fig. 262: Right Exhaust Manifold
Courtesy of CHRYSLER LLC

8. Remove the exhaust manifolds.
9. Remove the oil filter assembly.
10. Remove the water pump.
11. Remove the air flow control valve assembly.

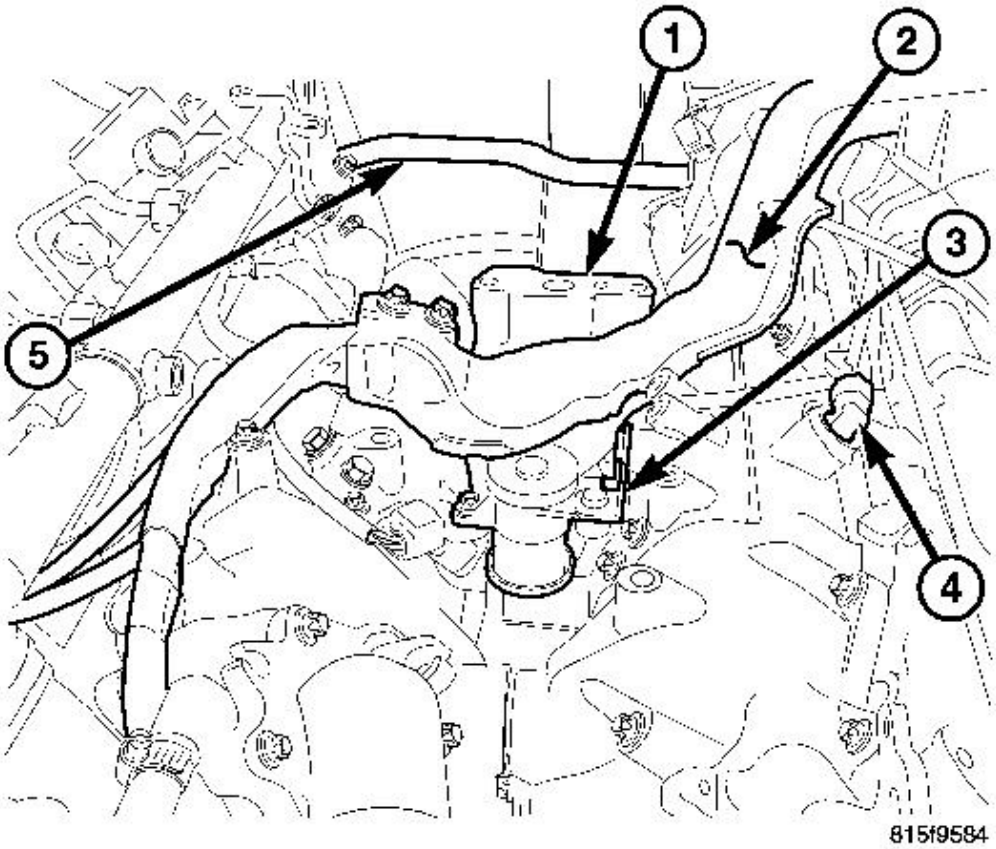

Fig. 263: Turbocharger Oil Housing Adapter, Main Engine Wiring Harness, Swirl Valve Actuator & Coolant Temperature Sensor
Courtesy of CHRYSLER LLC

1 - TURBOCHARGER OIL HOUSING Adapter
2 - MAIN ENGINE WIRING HARNESS
3 - SWIRL VALVE ACTUATOR
4 - COOLANT TEMPERATURE SENSOR

12. Disconnect and remove the engine harness.

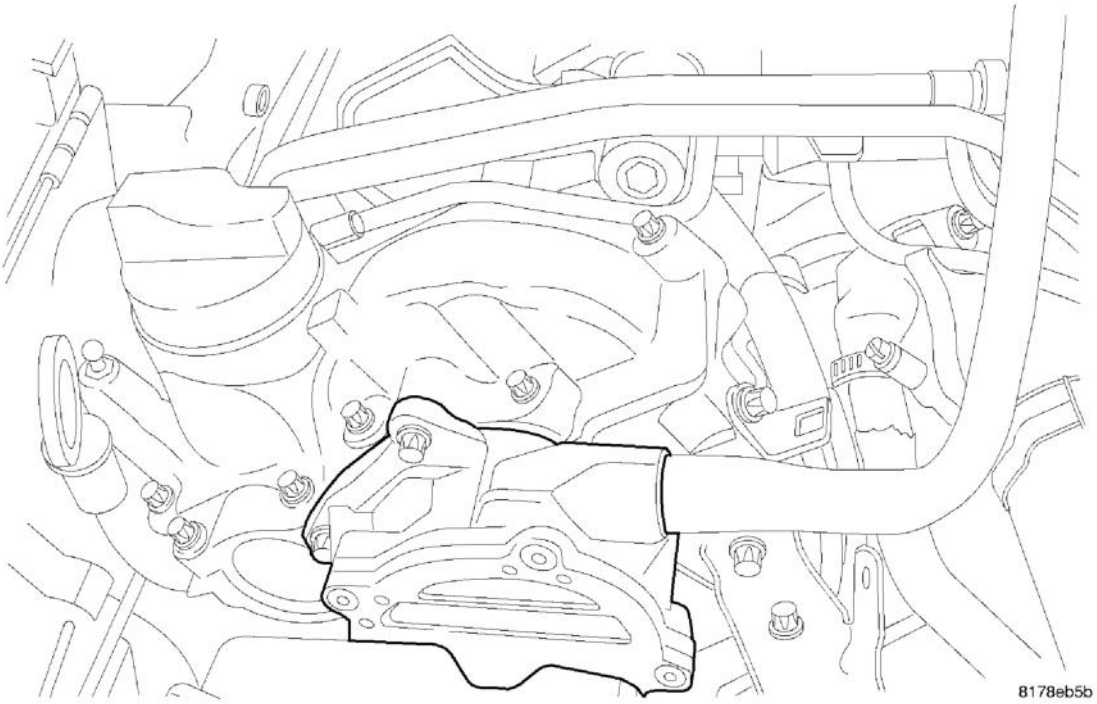

Fig. 264: Vacuum Pump
Courtesy of CHRYSLER LLC

13. Remove the vacuum pump.

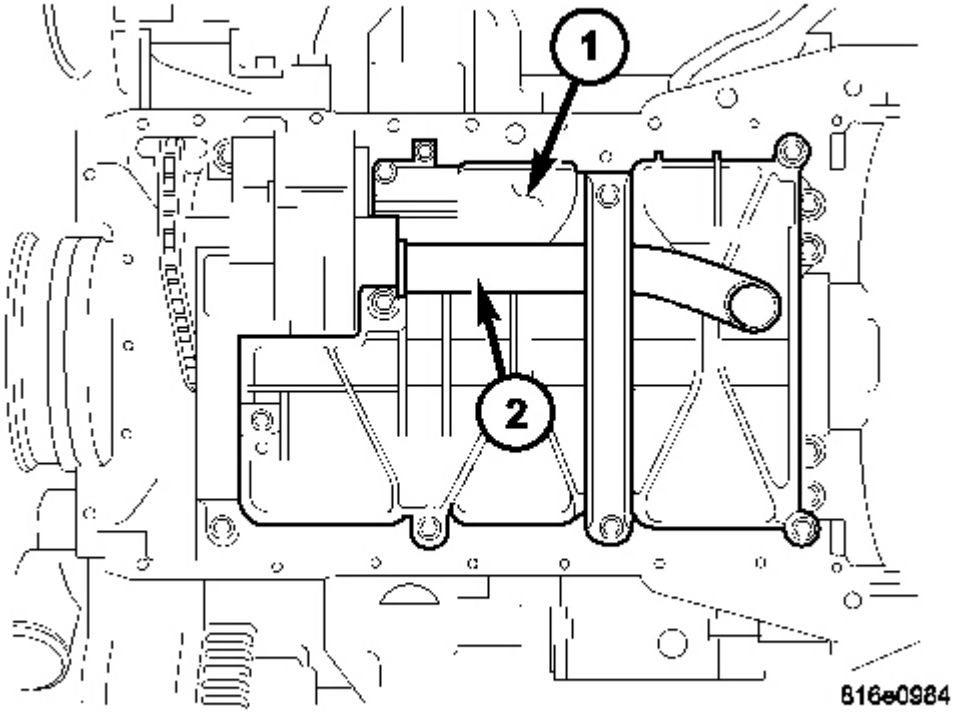

Fig. 265: Timing Chain Cover & Front Crankshaft Seal
Courtesy of CHRYSLER LLC

14. Remove the windage tray and lower oil pan. See **REMOVAL**.
15. Remove the oil pump pickup tube. See **REMOVAL**.
16. Remove the upper oil pan. See **REMOVAL**.
17. Remove the oil pump. See **REMOVAL**.

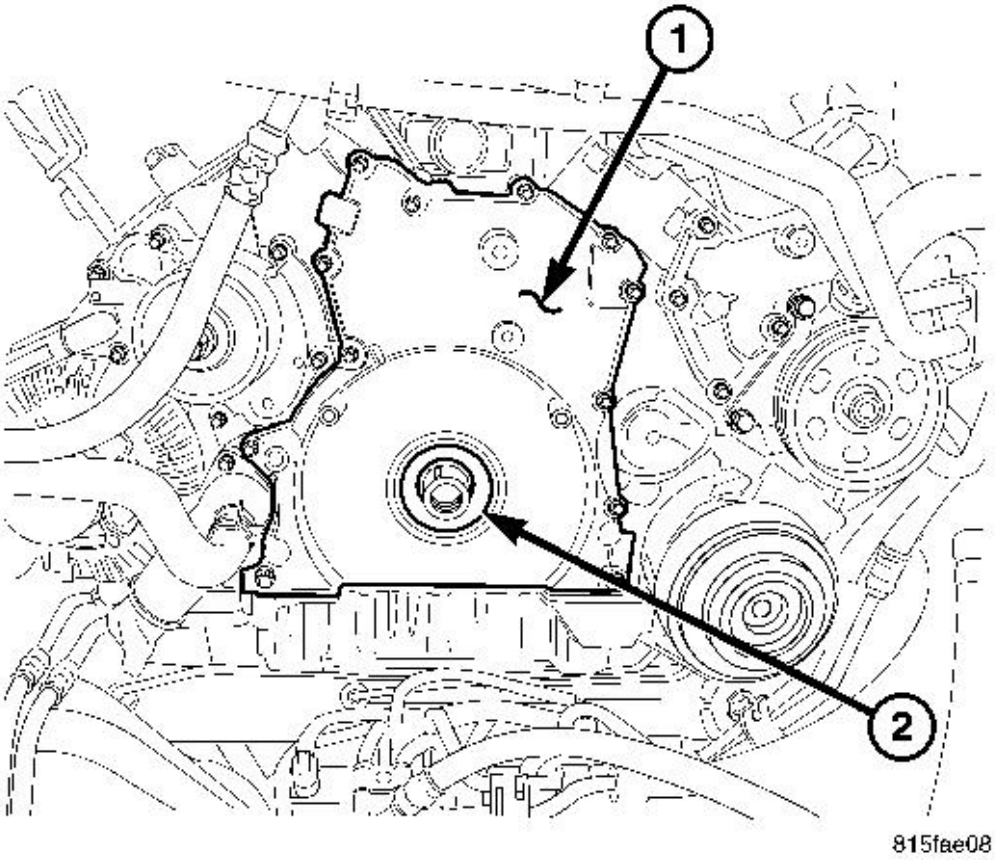

Fig. 266: Front Timing Cover & Crankshaft Seal
Courtesy of CHRYSLER LLC

1 - TIMING CHAIN COVER
2 - FRONT CRANKSHAFT SEAL

18. Remove the timing chain cover. See **REMOVAL**.
19. Remove the timing chains.
20. Remove the timing chain tensioner. See **REMOVAL**.
21. Remove the right cylinder head. See **REMOVAL**.
22. Remove the left cylinder head. See **REMOVAL**.

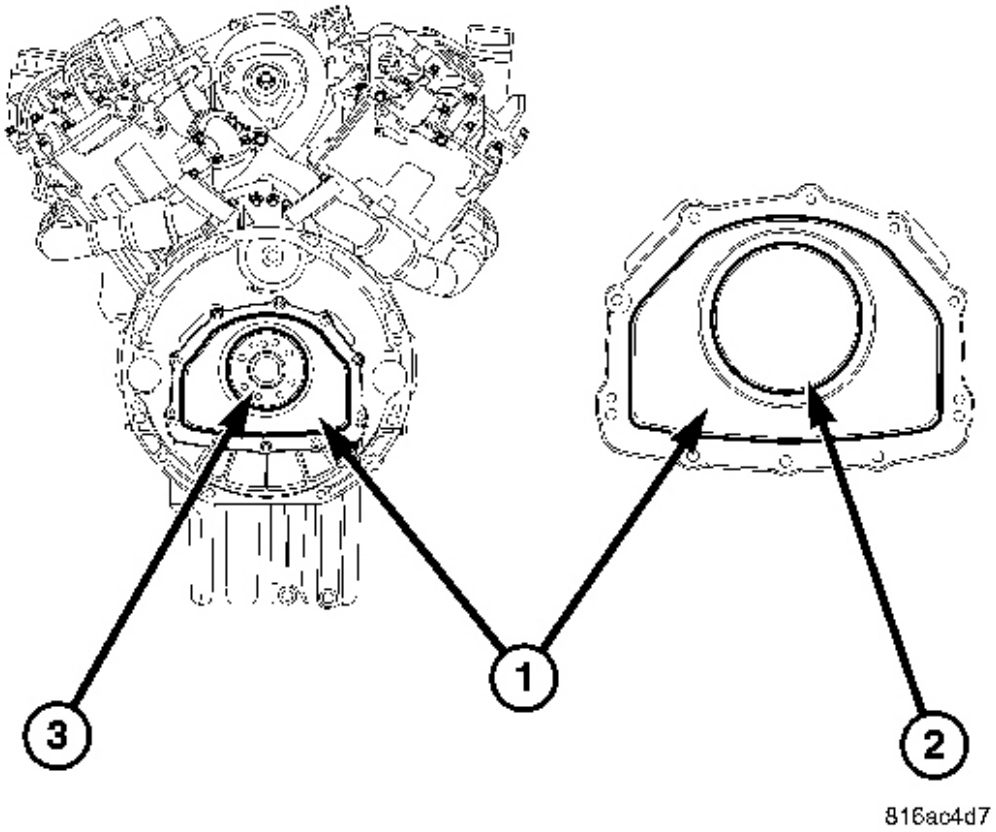

Fig. 267: Rear Main Seal, Rear Main Seal Carrier & Crankshaft
Courtesy of CHRYSLER LLC

23. Remove the crankshaft oil seal.

CAUTION: Do not allow the connecting rods to nick or score the crankshaft during assembly or disassembly.

CAUTION: Do not allow the connecting rods to touch the oil jets. Serious engine damage can occur if the oil jets are bent or misaligned.

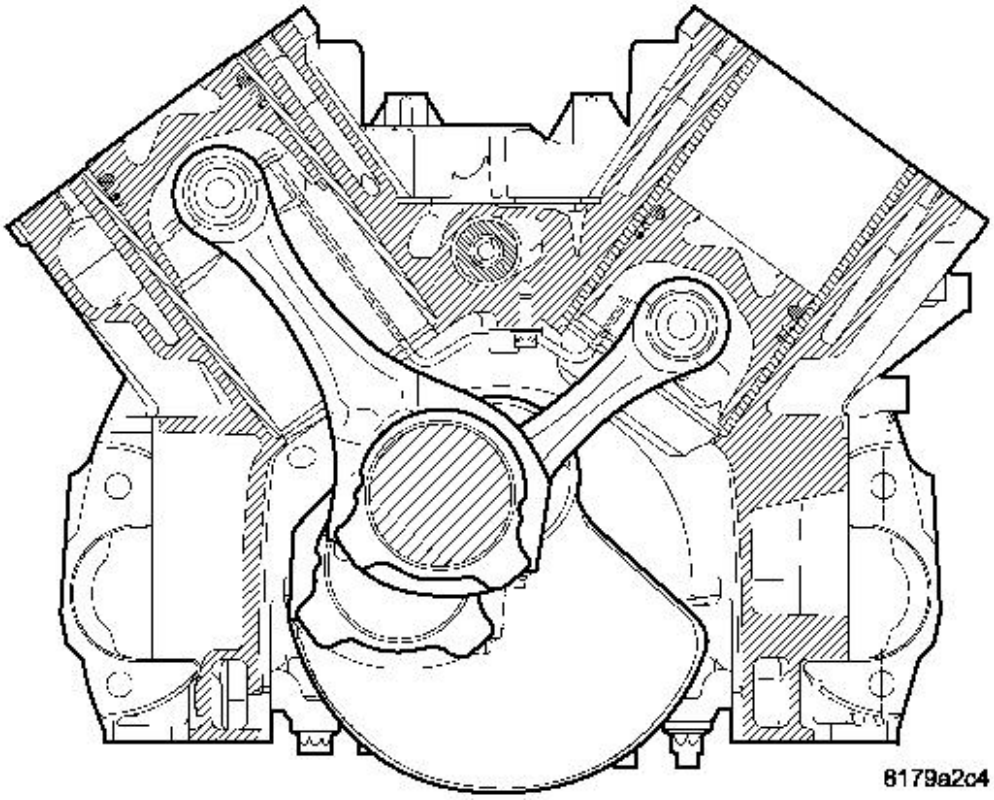

Fig. 268: Block Cutaway
Courtesy of CHRYSLER LLC

24. Remove the pistons and connecting rods. See **REMOVAL**.
25. Remove the oil jets. See **REMOVAL**.

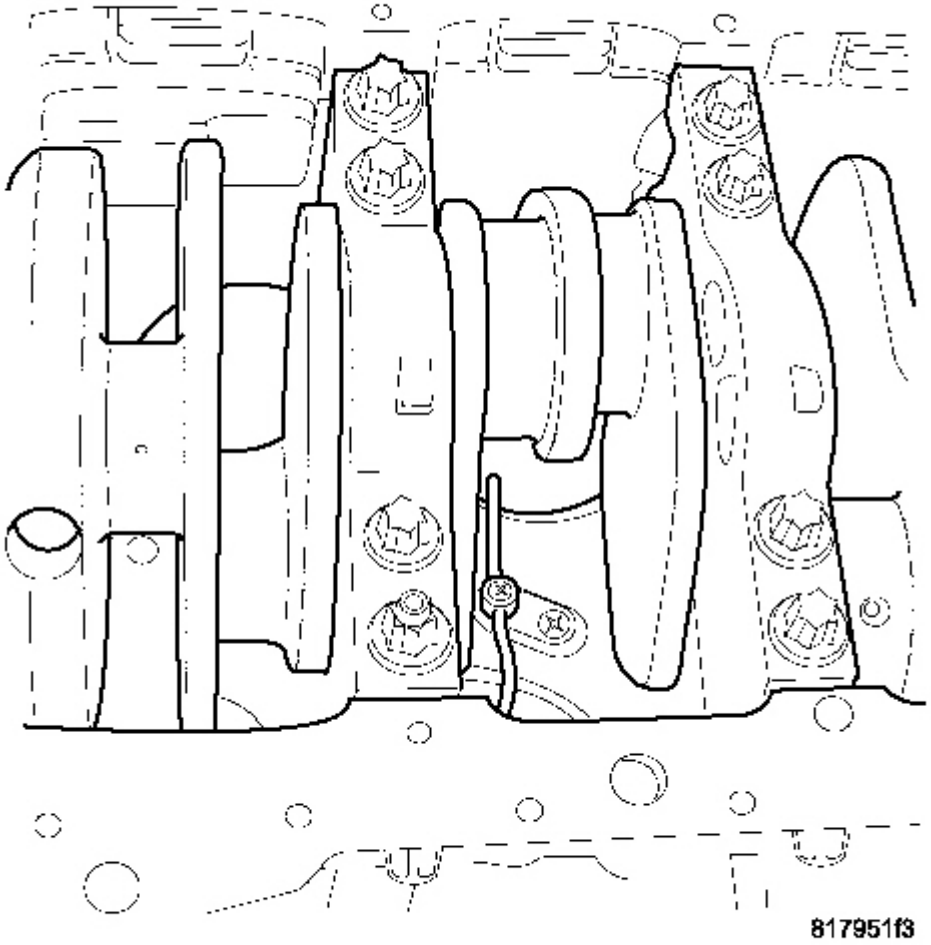

Fig. 269: Identifying Crankshaft Main Bearing Caps, Crankshaft, Thrust Washer & Crankshaft Bearings
Courtesy of CHRYSLER LLC

26. Remove the crankshaft main bearing caps.
27. Remove the crankshaft.
28. Remove the thrust washer.
29. Remove the crankshaft bearings.

INSTALLATION

CRANKSHAFT

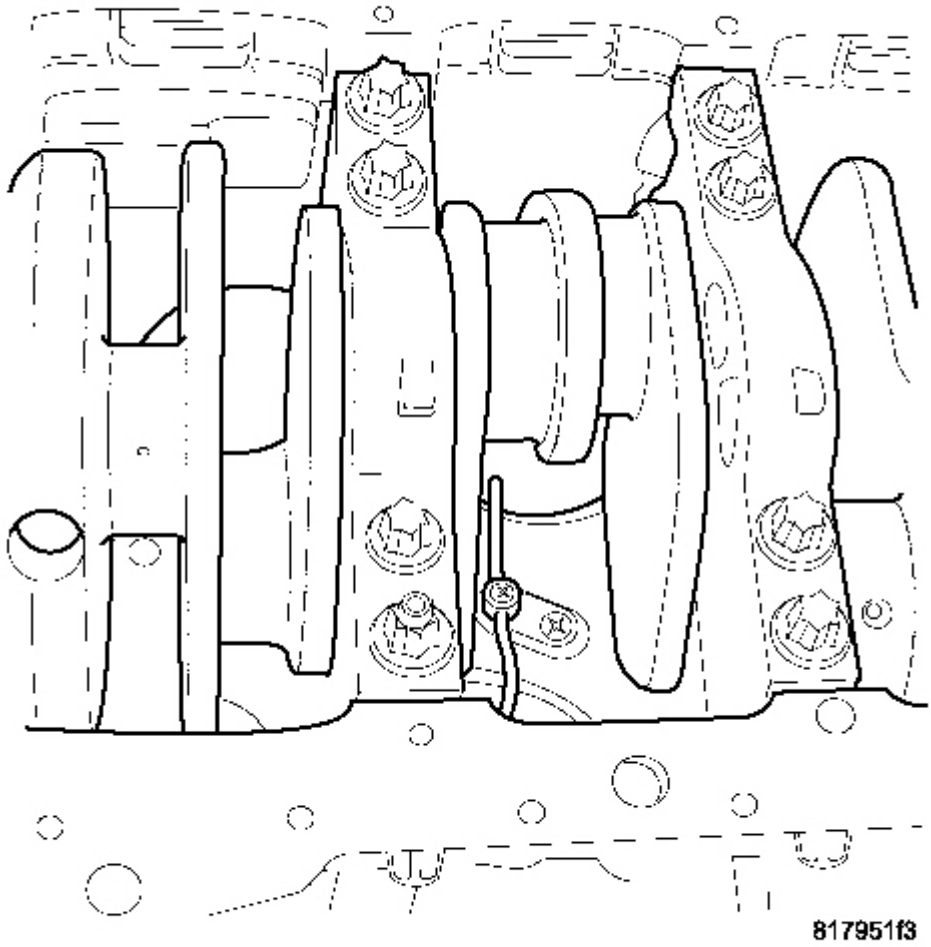

Fig. 270: Identifying Crankshaft Main Bearing Caps, Crankshaft, Thrust Washer & Crankshaft Bearings
Courtesy of CHRYSLER LLC

1. Clean all sealing and mating surfaces. Be sure that the sealing and mating surfaces are free of oil and debris.

   NOTE: If any bearing damage has occurred, remove all debris from the connecting rod bores, crankshaft, and oil galleries. Remove the steel ball from the main oil gallery before cleaning.

2. Inspect the crankshaft and bearings. Replace as necessary. See **STANDARD PROCEDURE**.

3. Install the crankshaft bearings and the top half of the crankshaft thrust bearing.
4. Position the crankshaft.
5. Position and install the main bearing caps.
6. Install the lower half of the crankshaft thrust bearing.
7. Measure the main bearing cap bolts. Replace any bolt that is not within specification.
8. Using the correct torque sequence, torque the main bearing caps to 44 N.M. (33 lb. ft.).
9. Check the crankshaft end play. See **STANDARD PROCEDURE**.
10. The crankshaft should turn freely. If the crankshaft does not turn freely loosen and re-torque the bearing caps.

CAUTION: Replace all of the connecting rods when ever any of the rod cap bolts are loosened or bearing caps are removed

CAUTION: When installing the pistons and connecting rods do not allow the connecting rod to score or mark the crankshaft.

CAUTION: Do not allow the connecting rod to bend or dent the oil jet. Serious engine damage may result from a misaligned oil jet.

11. Install the pistons and connecting rods.

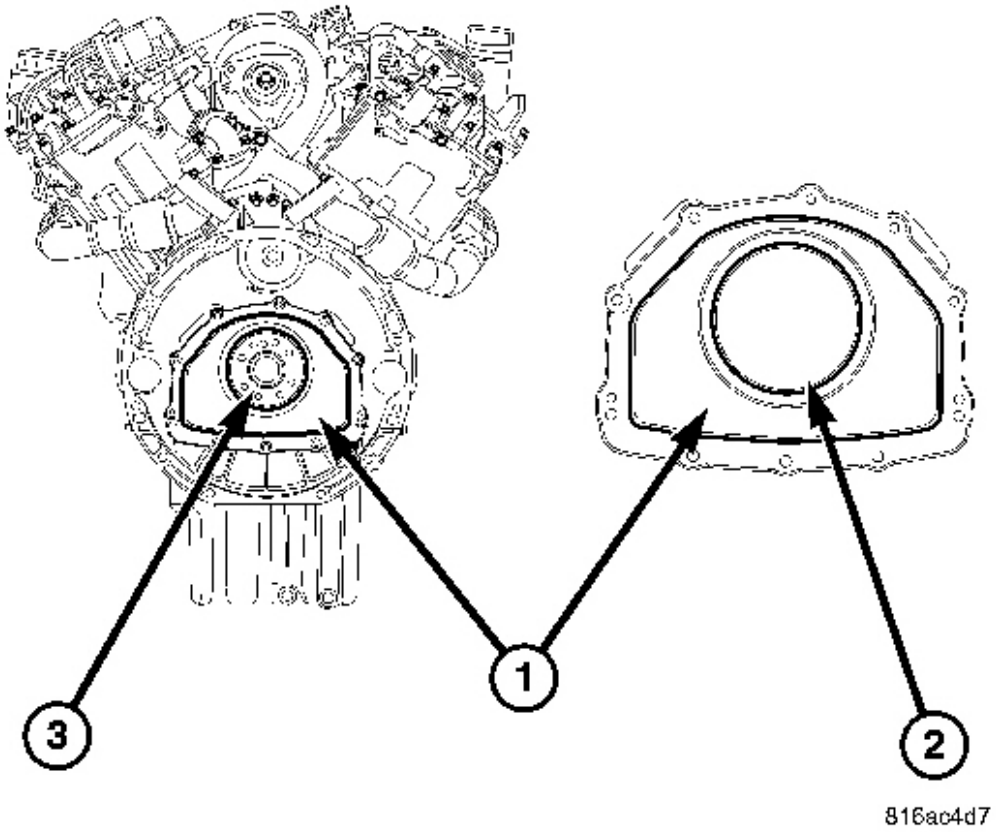

Fig. 271: Rear Main Seal, Rear Main Seal Carrier & Crankshaft
Courtesy of CHRYSLER LLC

12. Install the rear crankshaft oil seal.

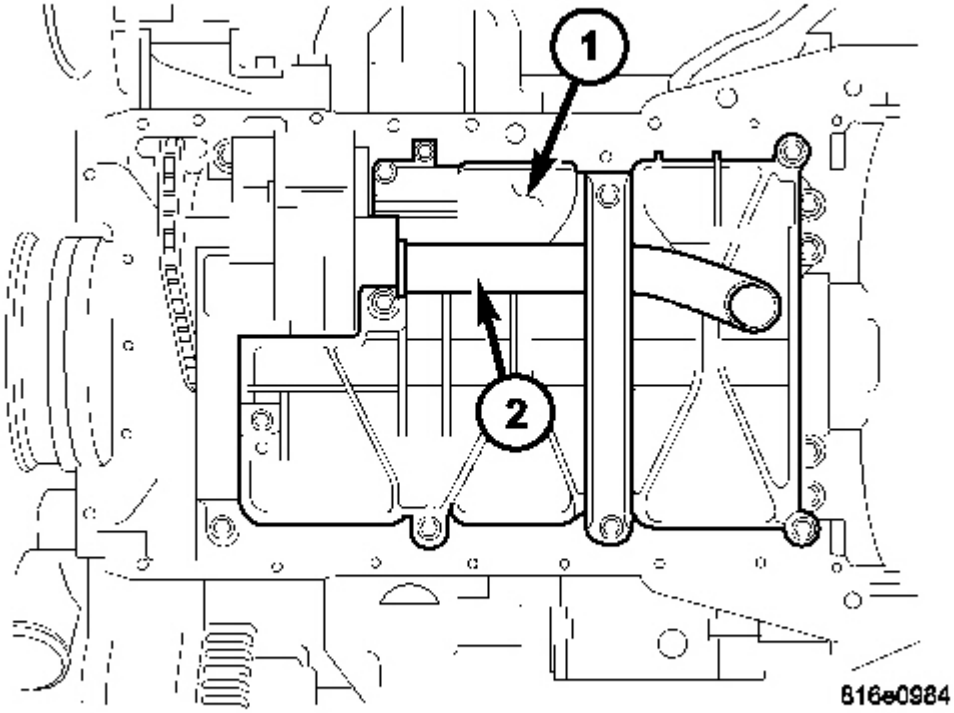

Fig. 272: Timing Chain Cover & Front Crankshaft Seal
Courtesy of CHRYSLER LLC

13. Install the oil pump. See **INSTALLATION**.
14. Install the oil pump chain.
15. Position the timing chains on the crankshaft.
16. Install the windage tray.
17. Install the right cylinder head. See **INSTALLATION**.
18. Install the left cylinder head. See **INSTALLATION**.

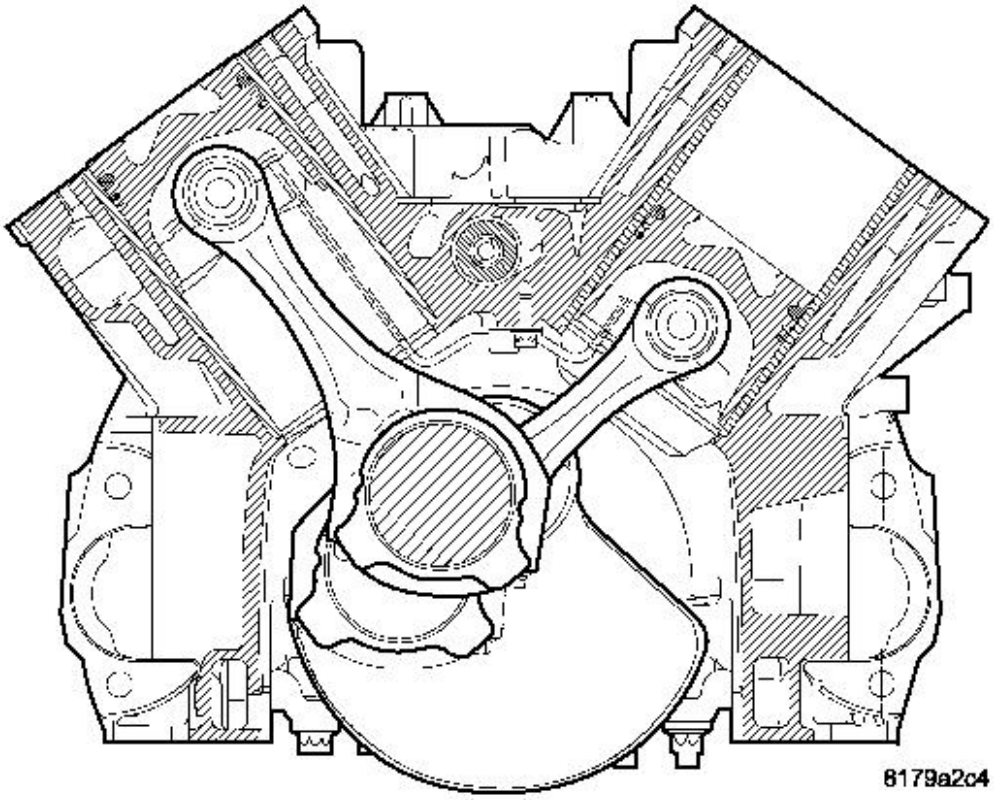

Fig. 273: Block Cutaway
Courtesy of CHRYSLER LLC

19. Install the timing chain sprockets to the camshafts.
20. Set the engine timing.
21. Install the camshaft cover on the left cylinder head.
22. Install the camshaft cover on the right cylinder head.

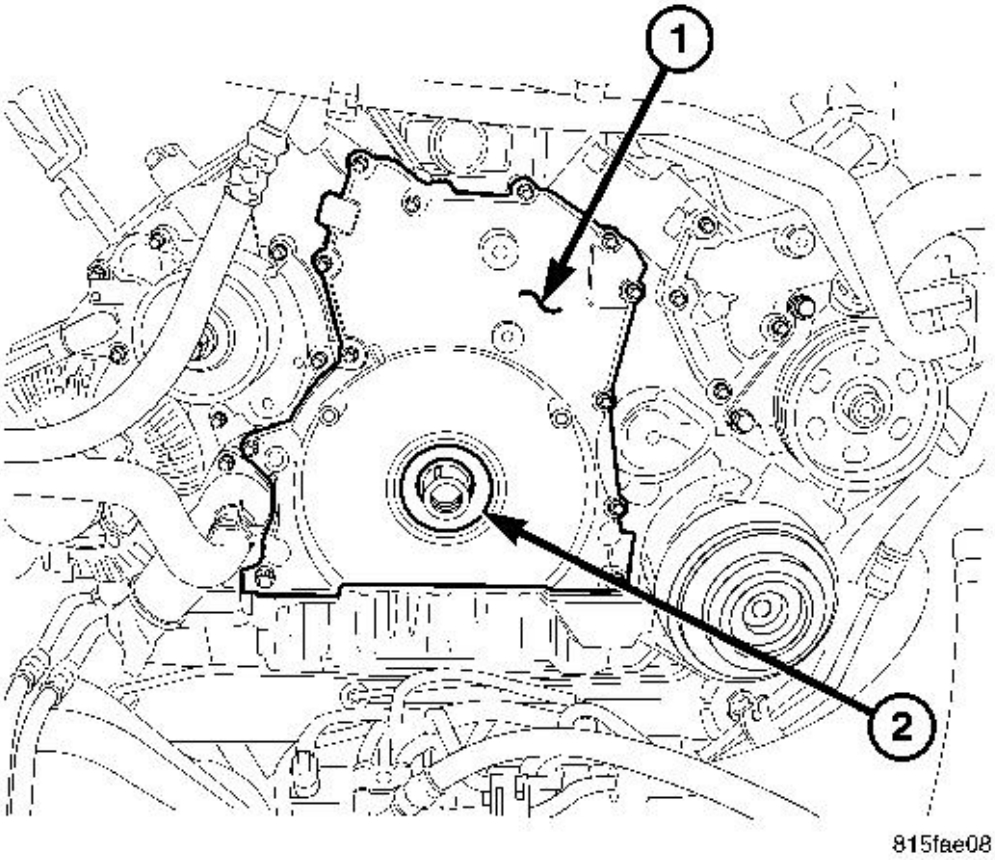

Fig. 274: Front Timing Cover & Crankshaft Seal
Courtesy of CHRYSLER LLC

1 - TIMING CHAIN COVER
2 - FRONT CRANKSHAFT SEAL

23. Install the upper oil pan.
24. Install the lower oil pan (if equipped).

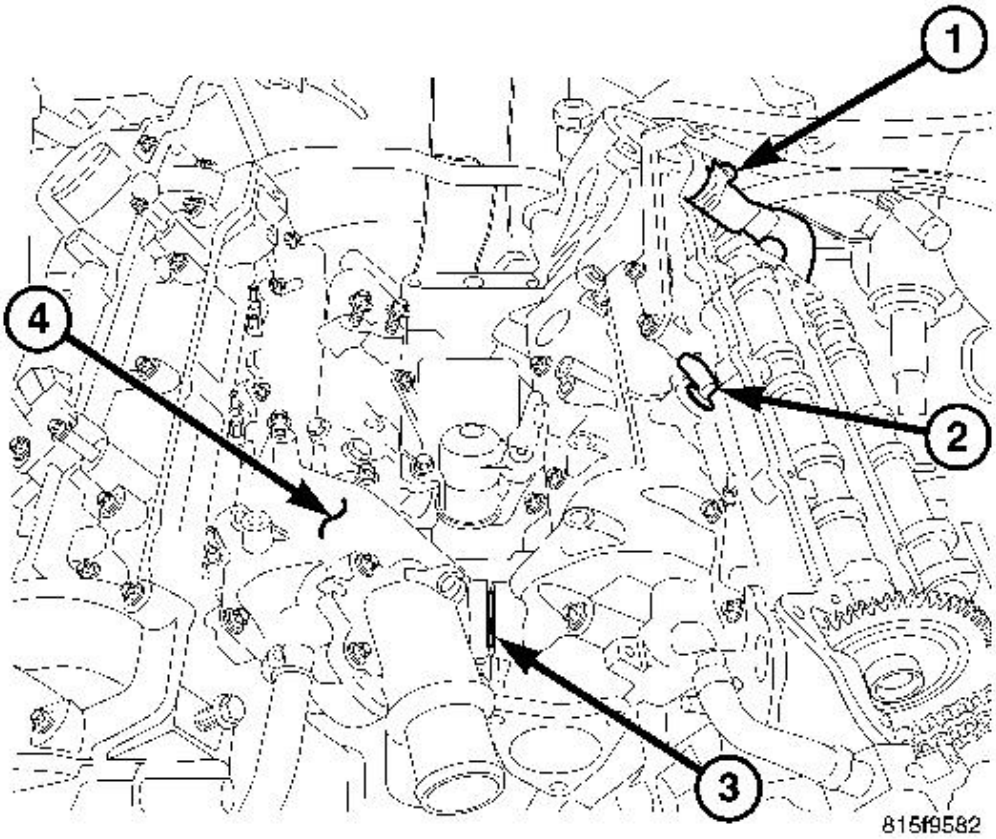

Fig. 275: EGR Coolant Pipe, Coolant Temperature Sensor, Intake Coolant Passage & Intake Manifold
Courtesy of CHRYSLER LLC

1 - EGR COOLANT PIPE
2 - COOLANT TEMPERATURE SENSOR
3 - INTAKE COOLANT PASSAGE
4 - INTAKE MANIFOLD

25. Install the intake manifold. See **INSTALLATION**.

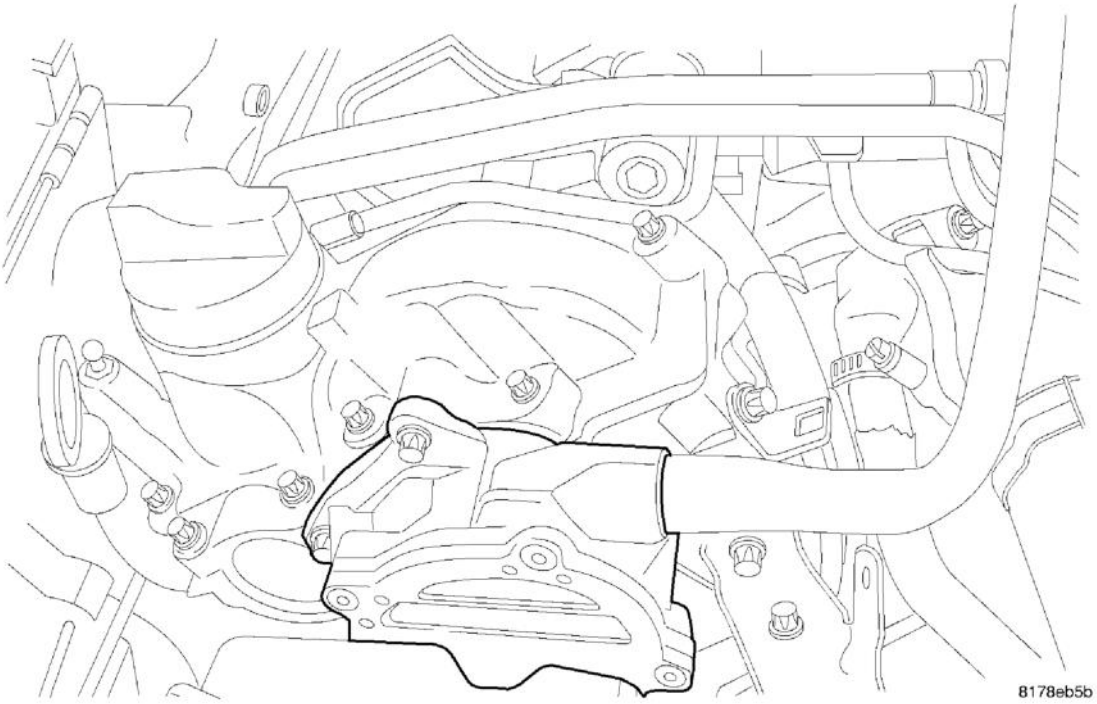

Fig. 276: Vacuum Pump
Courtesy of CHRYSLER LLC

26. Install the vacuum pump.

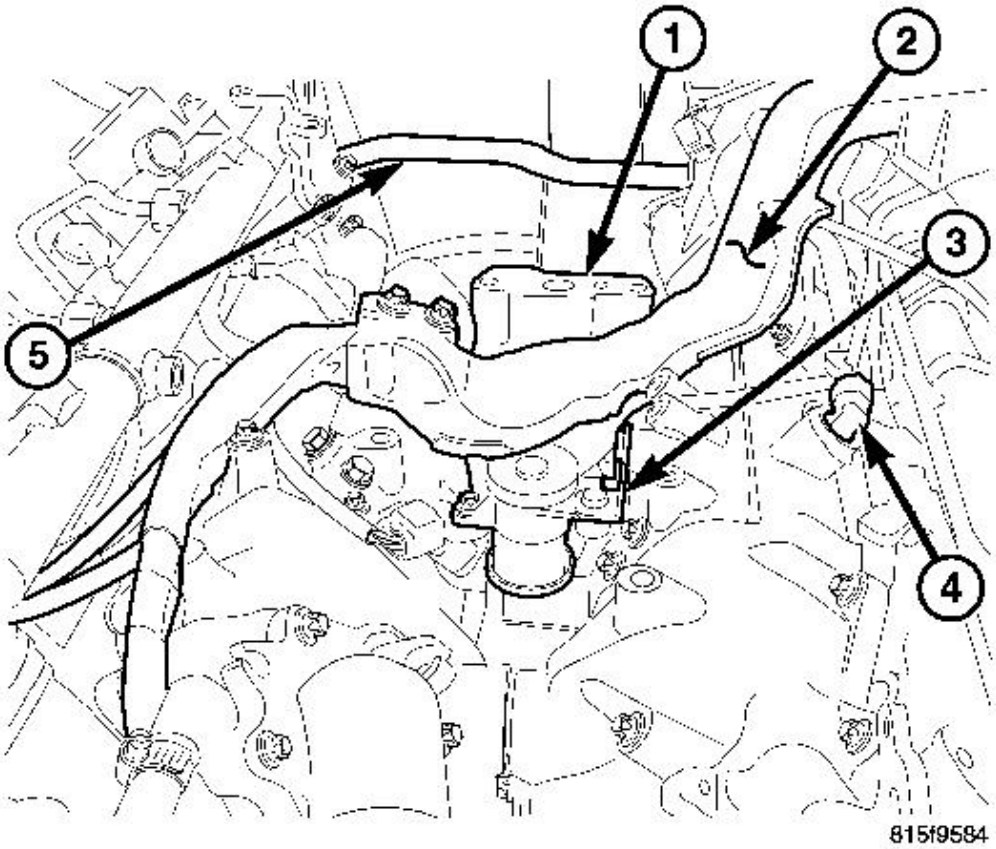

Fig. 277: Turbocharger Oil Housing Adapter, Main Engine Wiring Harness, Swirl Valve Actuator & Coolant Temperature Sensor
Courtesy of CHRYSLER LLC

1 - TURBOCHARGER OIL HOUSING Adapter
2 - MAIN ENGINE WIRING HARNESS
3 - SWIRL VALVE ACTUATOR
4 - COOLANT TEMPERATURE SENSOR

27. Install and connect the engine harness.

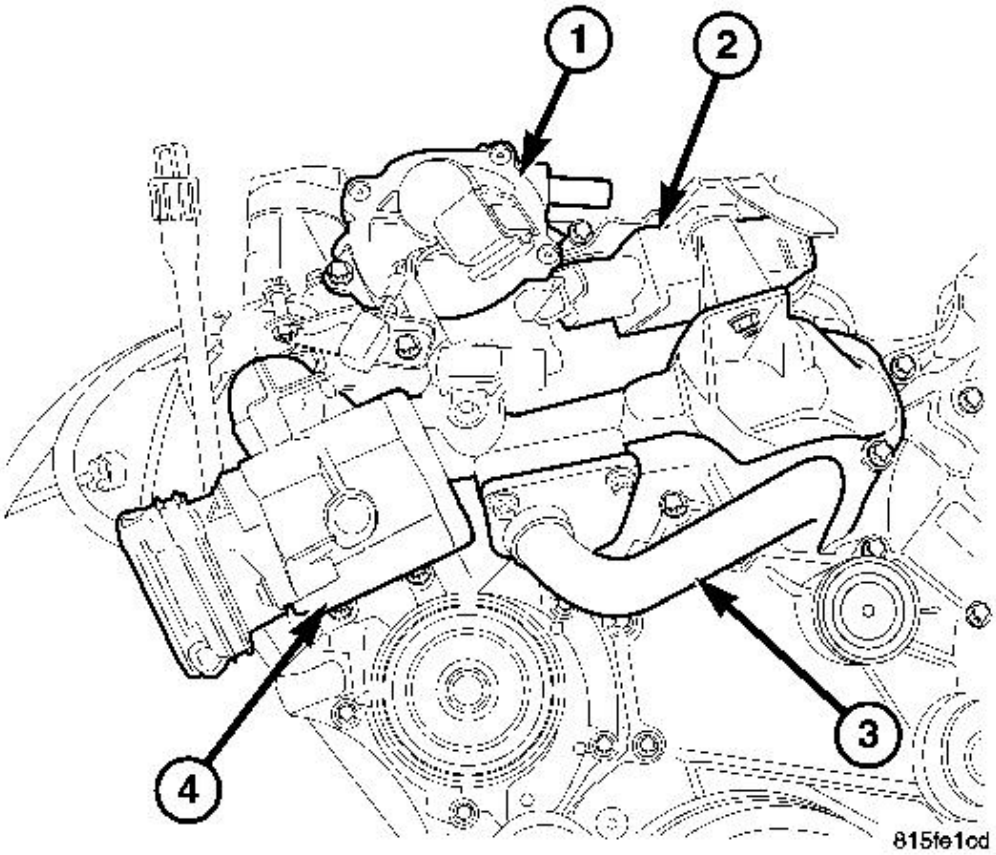

Fig. 278: Vacuum Pump, Glow Plug Relay, EGR Cooler & Air Control Valve
Courtesy of CHRYSLER LLC

1 - VACUUM PUMP
2 - GLOW PLUG RELAY
3 - EGR COOLER
4 - AIR CONTROL VALVE

28. Install the air flow control valve assembly.
29. Install the water pump.

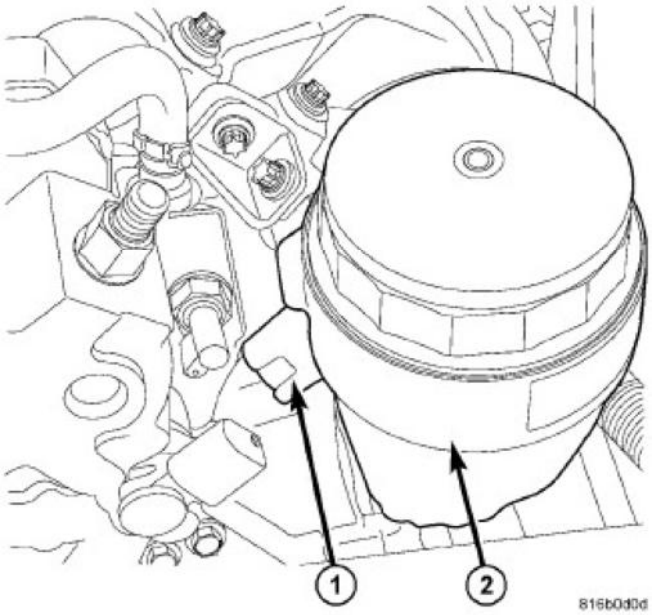

Fig. 279: Oil Filter Housing
Courtesy of CHRYSLER LLC

30. Install the oil filter assembly.

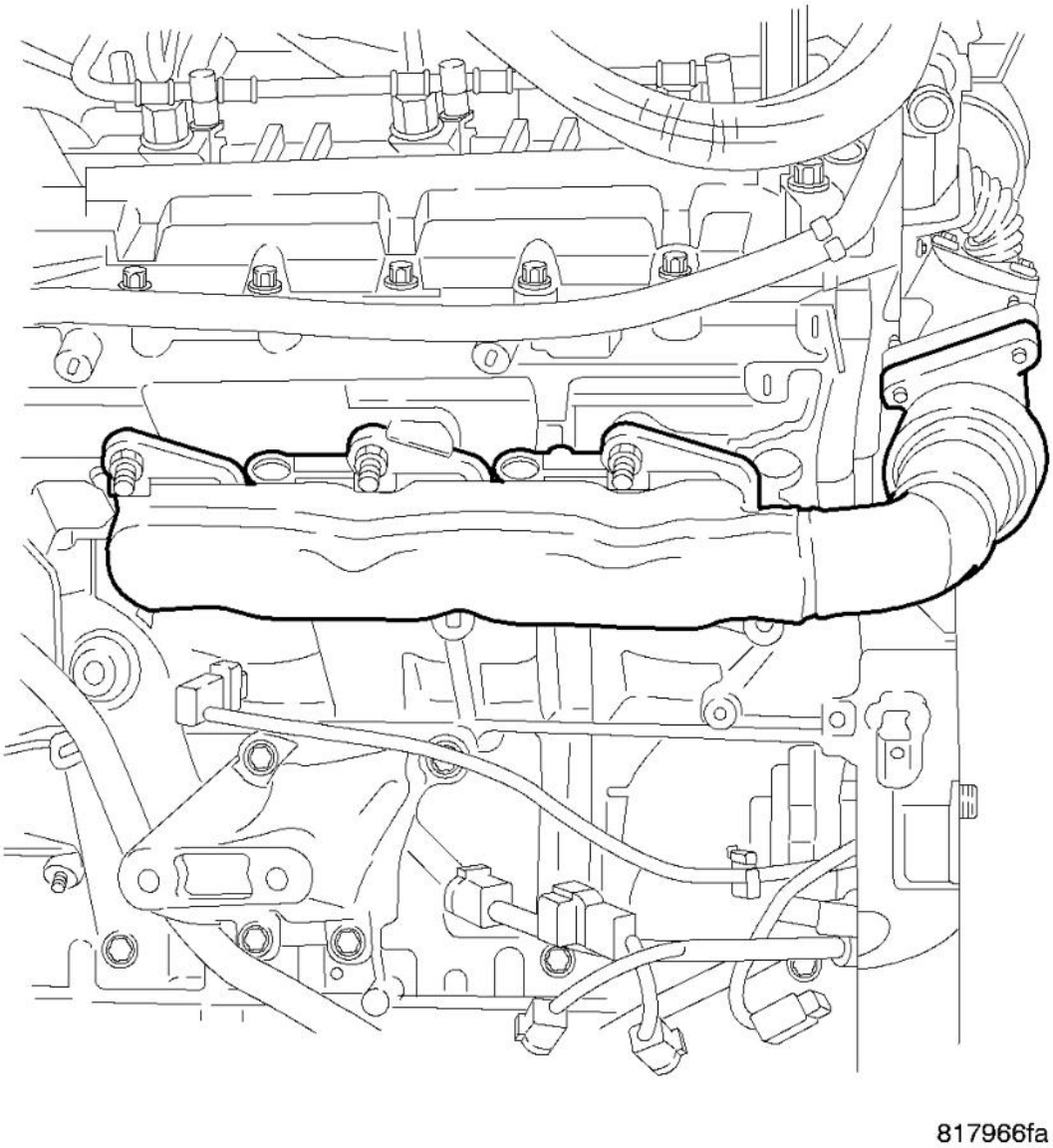

Fig. 280: Exhaust Manifold - Left
Courtesy of CHRYSLER LLC

31. Install the left exhaust manifold. See **INSTALLATION**.
32. Install the right exhaust manifold. See **INSTALLATION**.

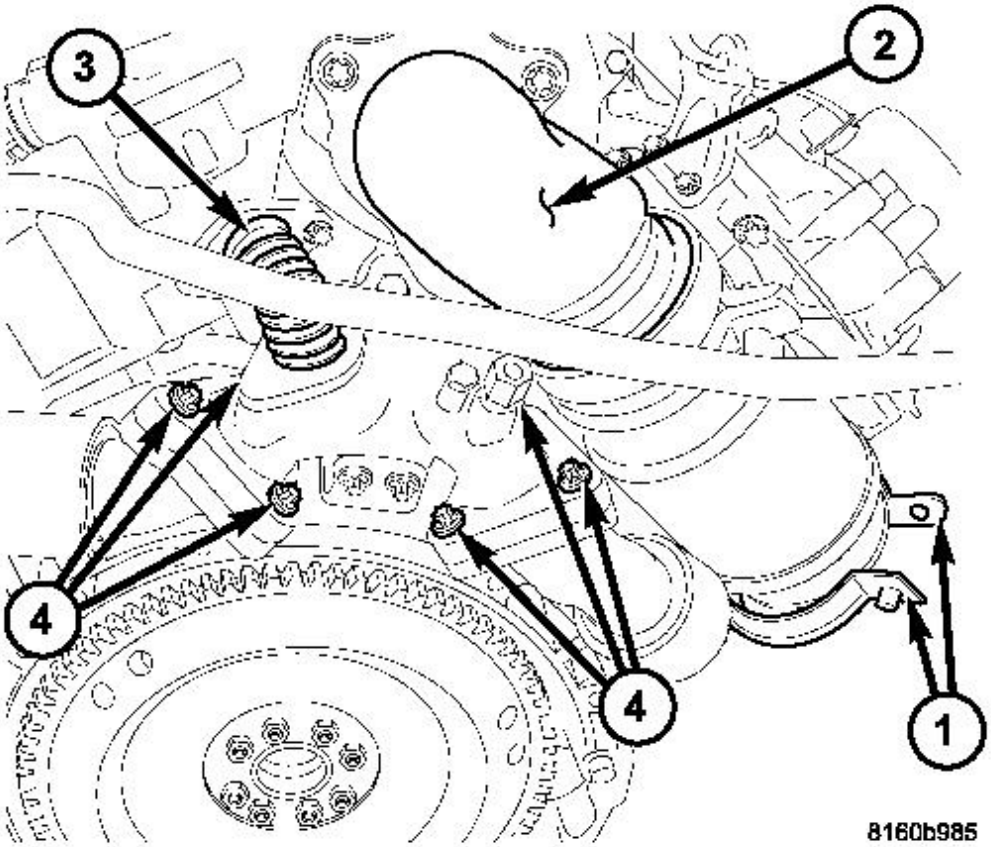

Fig. 281: Removing/Installing Air Intake, Turbo & Exhaust System Components
Courtesy of CHRYSLER LLC

33. Install the turbocharger. Refer to **INSTALLATION** .

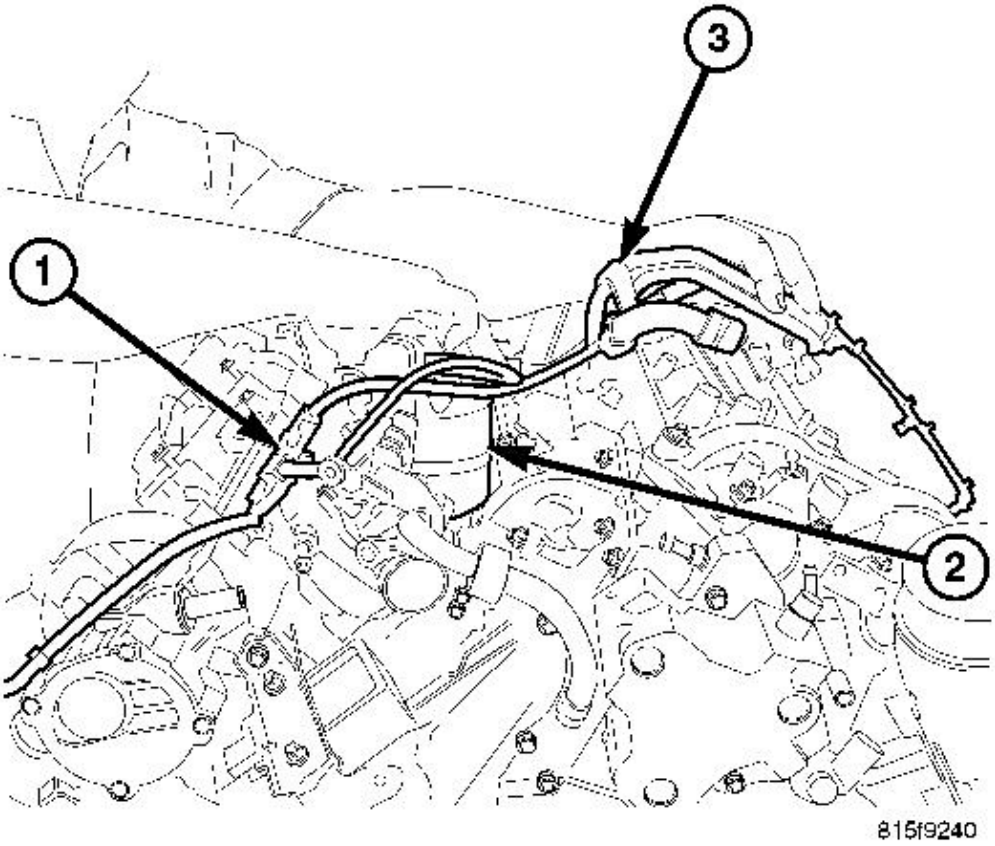

Fig. 282: Fuel Filter, Lines And Hoses
Courtesy of CHRYSLER LLC

1 - RETURN FUEL HOSE BUNDLE
2 - FUEL FILTER
3 - LOW PRESSURE FUEL SUPPLY AND RETURN PIPE

34. Install the fuel rails and lines.

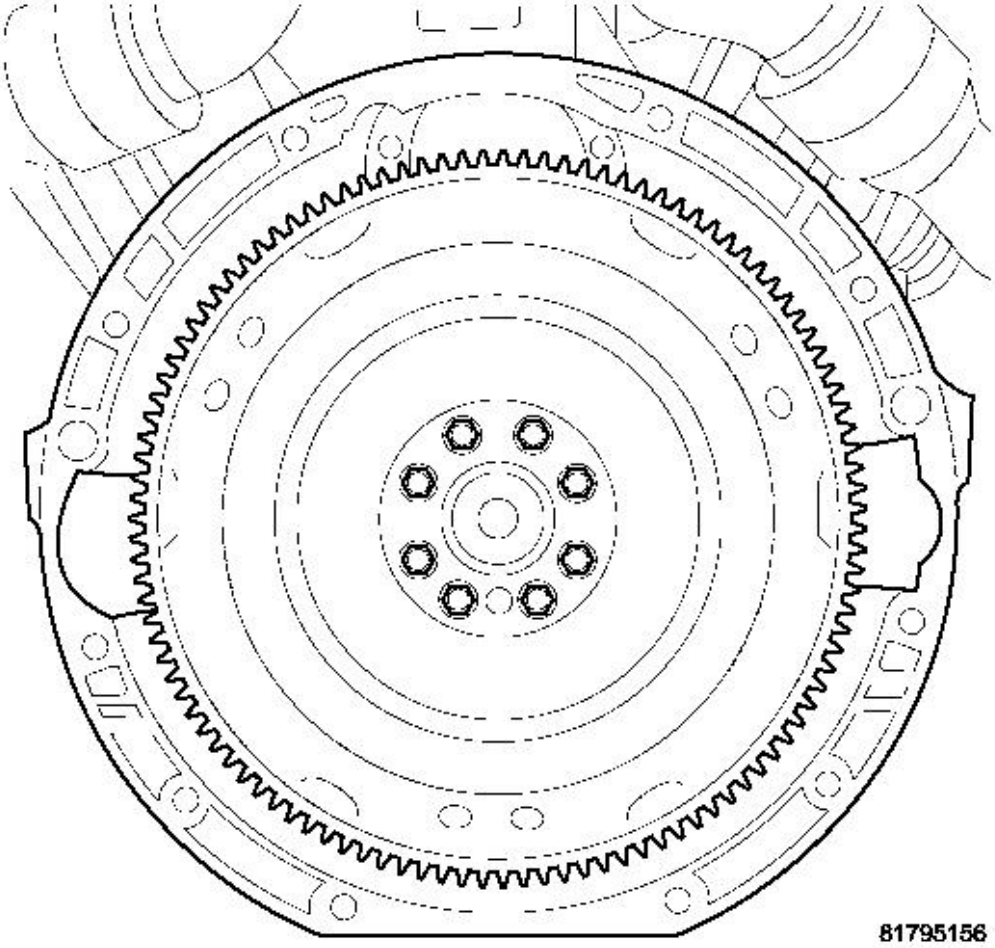

Fig. 283: Flex Plate
Courtesy of CHRYSLER LLC

35. Install the flex plate. See **INSTALLATION**.

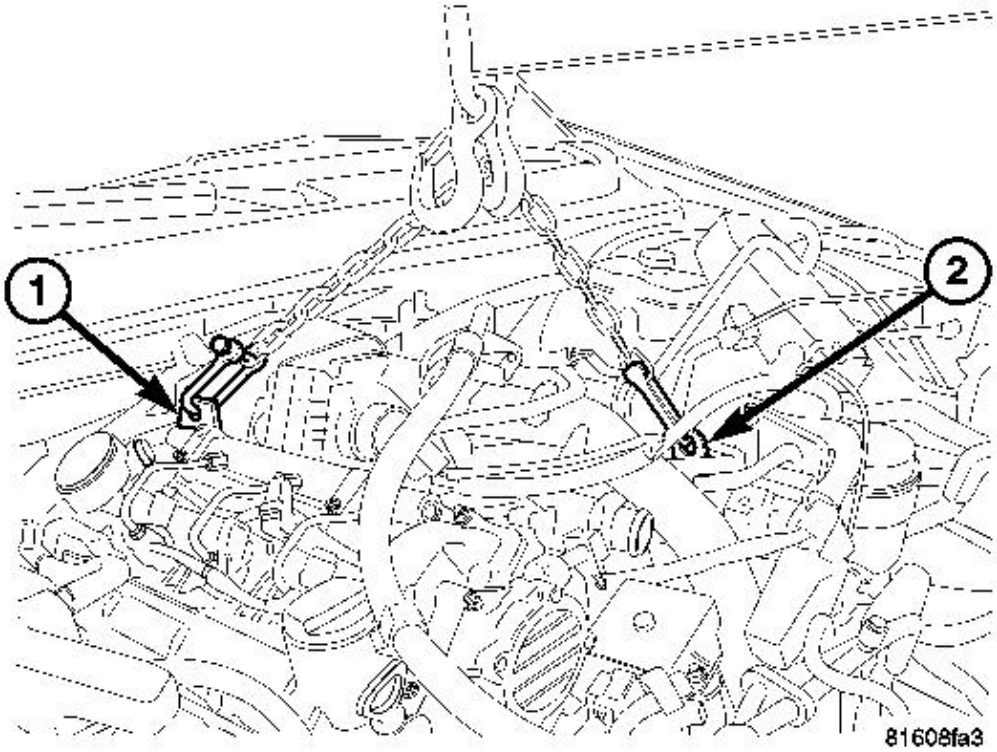

Fig. 284: Engine Lifting Points
Courtesy of CHRYSLER LLC

1 - REAR ENGINE LIFT WITH CLEVIS CONNECTOR
2 - FRONT ENGINE LIFT WITH CLEVIS CONNECTOR

36. Install engine in vehicle. See **INSTALLATION**.
37. Fill engine oil with proper oil to correct level. Refer to **SPECIFICATIONS** .
38. Start the engine and check for leaks.

BEARINGS - CRANKSHAFT MAIN

DESCRIPTION

MAIN BEARING CAPS

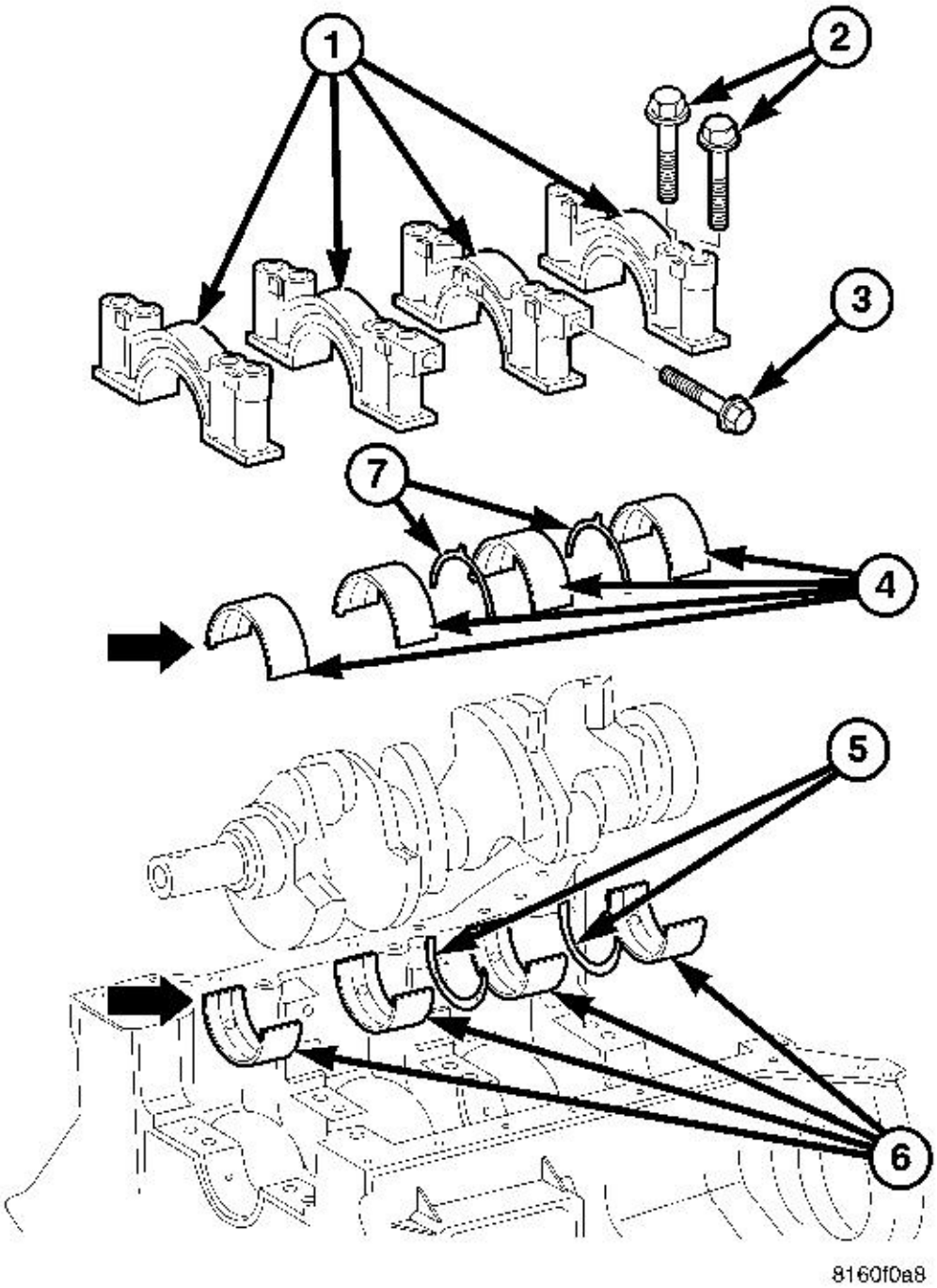

Fig. 285: Crankshaft Main Bearings And Caps
Courtesy of CHRYSLER LLC

1 - MAIN CAP
2 - BOLTS
3 - BOLTS
4 - LOWER CRANKSHAFT MAIN BEARINGS
5 - THRUST WASHERS
6 - UPPER CRANKSHAFT MAIN BEARINGS
7 - THRUST WASHERS

The bottom of the cylinder block has provisions for mounting the main bearing caps and the oil jets. Four main bearing caps (1) made of gray cast iron are bolted to the cylinder block. Each main bearing cap has six mounting bolts, four vertical and two horizontal. The horizontal (cross) bolts add increased rigidity to the cylinder block.

The number three main bearing cap serves as the thrust washer (5) location. See **Fig. 285**.

The upper main bearings have a bi-metal construction and feature oil supply holes and center grooves for lubrication of the main journals. The lower main bearings have tri-metal construction to provide strength where it is needed.

MAIN BEARING SELECTION

Stage	Color	Bearing Thickness	Applies To
1	Blue	2.250mm-2.255mm (0.0886-0.0888 in.)	Upper and Lower Bearings
2	Yellow	2.255mm-2.260mm (0.0888-0.0890 in.)	Upper and Lower Bearings
3	Red	2.260mm-2.265mm (0.0890-0.0892 in.)	Upper and Lower Bearings
4	White	2.265mm-2.270mm (0.0892-0.0894 in.)	Lower Bearings
5	Violet	2.270mm-2.275mm (0.0894-0.0896 in.)	Lower Bearings

The upper main bearings are available in three different thicknesses and the lower bearings in five. A color coded mark on the side of the bearing is used to identify it's thickness. Each color coded bearing is matched to it's respective journal. The select fit is obtained by matching the color coded bearings to grade identification marks on the cylinder block and crankshaft. Letters marked on the cylinder block identify the color of each upper-half main bearing, while letters marked on the front end of the crankshaft indicate the color of each lower half main bearing.

SEAL - CRANKSHAFT OIL - FRONT

REMOVAL

CRANKSHAFT OIL SEAL - FRONT

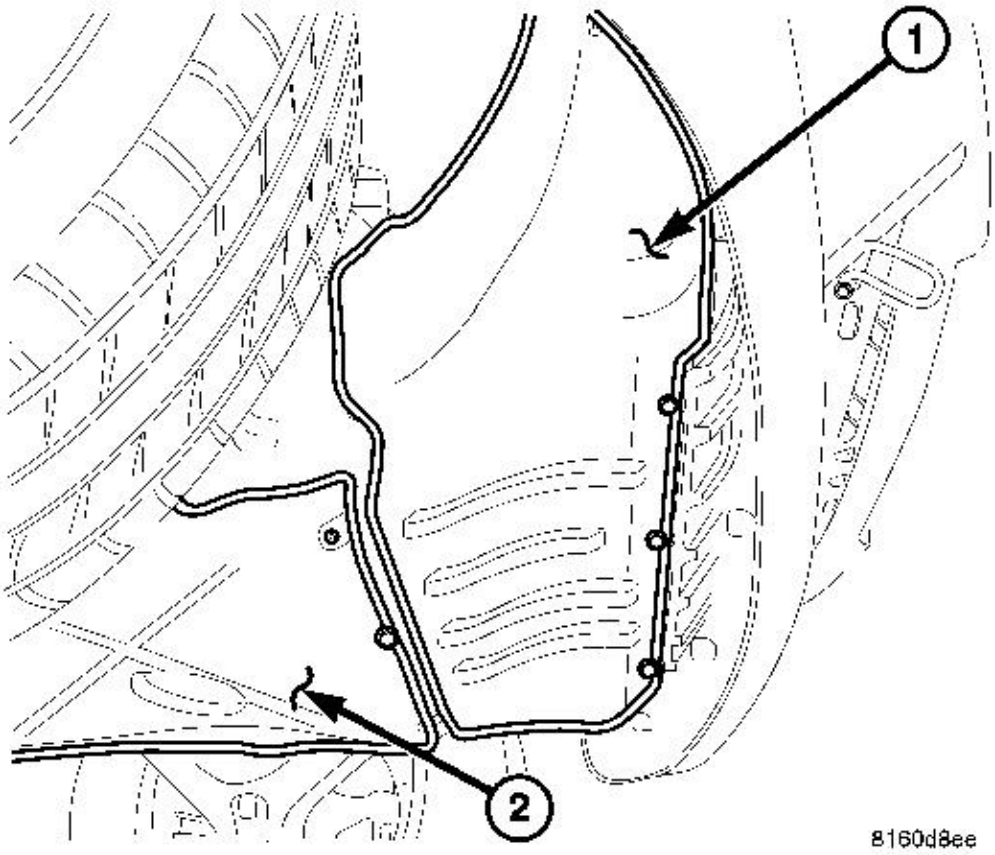

Fig. 286: Front/Intermediate Splash Shields
Courtesy of CHRYSLER LLC

1 - FRONT SPLASH SHIELD
2 - INTERMEDIATE SPLASH SHIELD

1. Disconnect negative battery cable.
2. Raise and support the vehicle.
3. Remove both front lower splash shields.

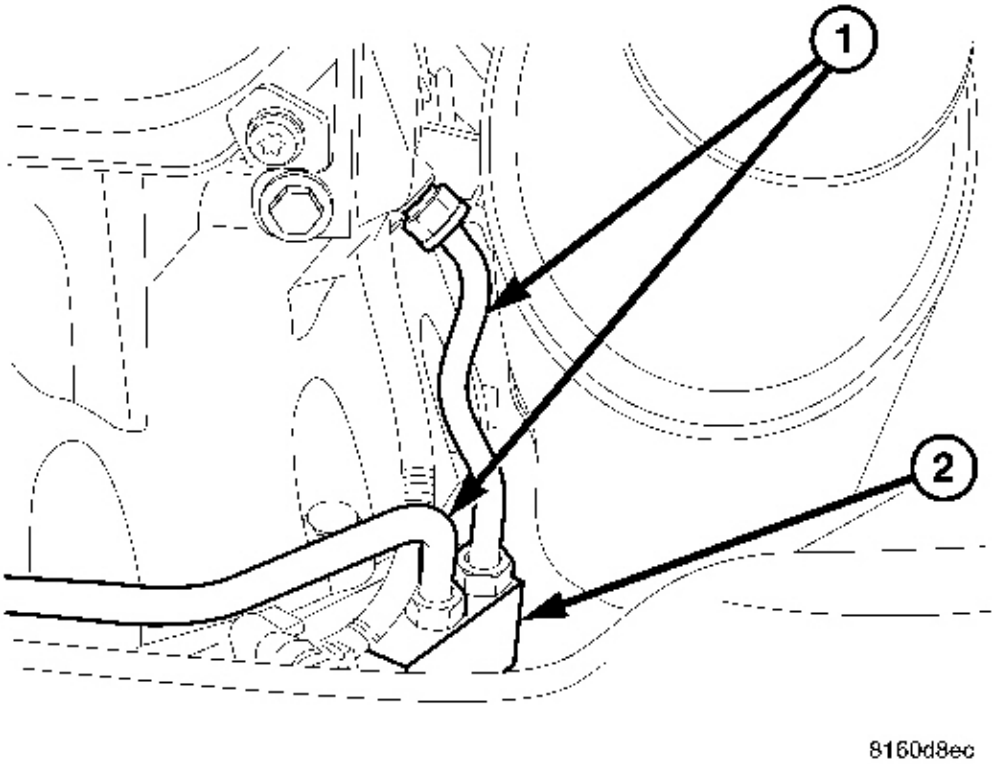

Fig. 287: Transmission Cooler Lines & Thermo-Block
Courtesy of CHRYSLER LLC

1 - TRANSMISSION COOLER LINES
2 - THERMO-BLOCK

4. Remove the transmission thermal bypass valve and the cooler lines between the block and transmission.

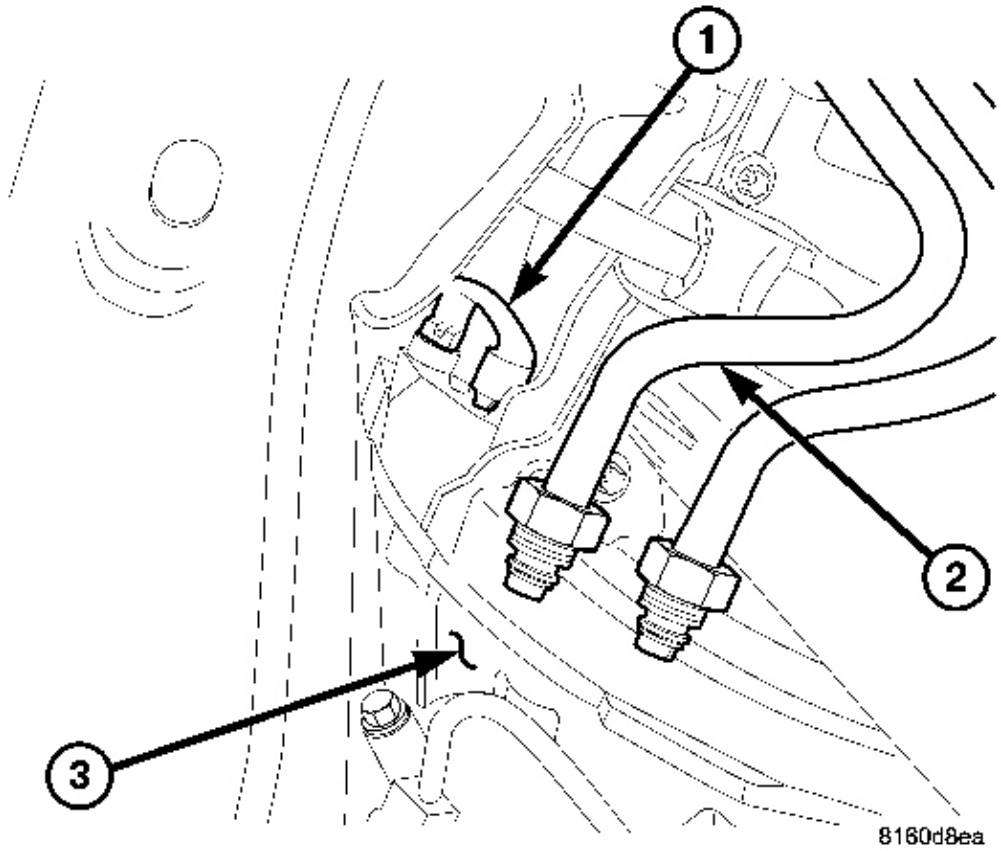

Fig. 288: #9102 Crankshaft Lock, Transmission Cooler Lines & Transmission
Courtesy of CHRYSLER LLC

1 - #9102 CRANKSHAFT LOCK 2 - TRANSMISSION COOLER LINES 3 - TRANSMISSION

5. Remove the starter blank.
6. Install # 9102 flywheel locking tool. See **Fig. 288**.

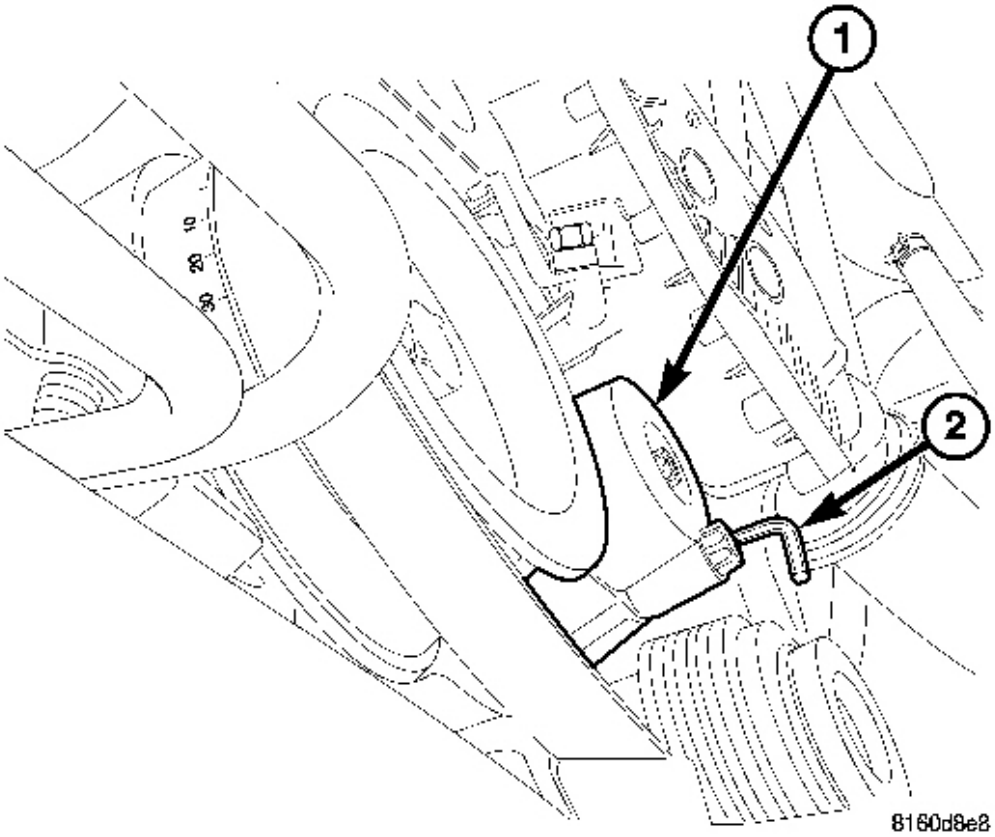

Fig. 289: Drive Belt Tensioner & Drift/Pin
Courtesy of CHRYSLER LLC

1 - DRIVE BELT TENSIONER 2 - DRIFT OR PIN

7. Release the accessory drive belt tension by resetting the drive belt tensioner and installing a retaining pin.

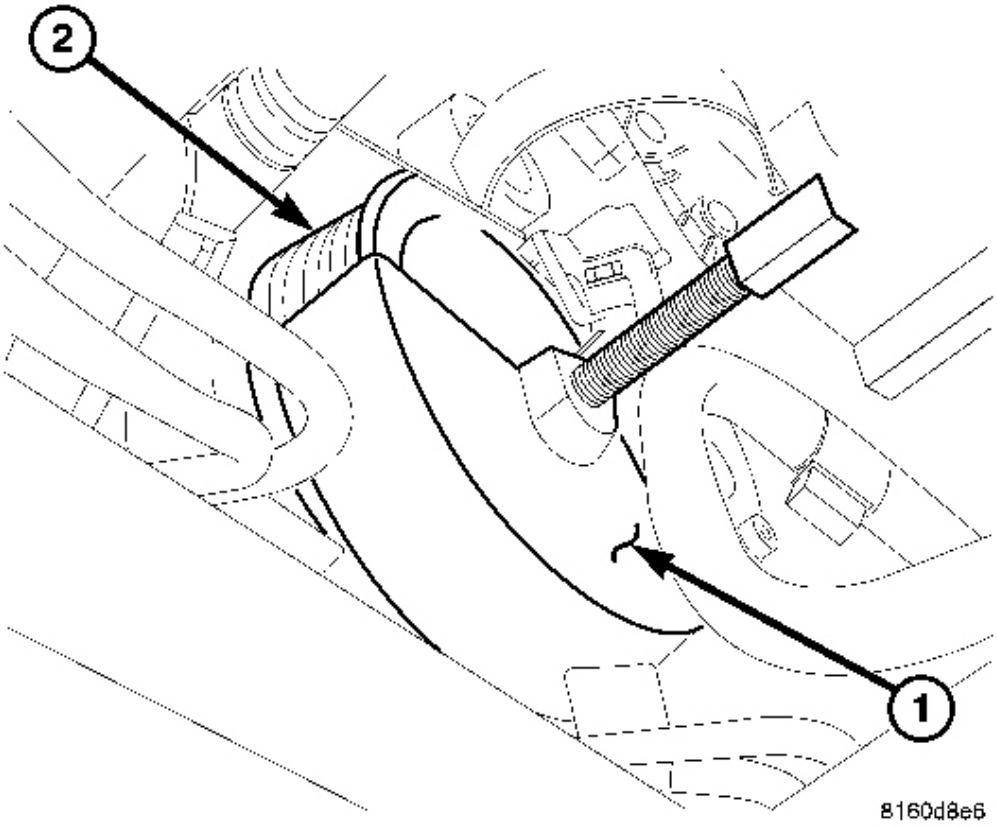

Fig. 290: Special Tool #9544 & Vibration Damper
Courtesy of CHRYSLER LLC

1 - SPECIAL TOOL #9544
2 - VIBRATION DAMPER

8. Remove the vibration damper bolt.
9. Install special tool #9544 (1) vibration damper puller. See **Fig. 290**.
10. Remove the vibration damper (2).

CAUTION: Care must be taken when removing the crankshaft seal. DO NOT damage or gouge the timing chain cover.

11. Using suitable seal puller, remove the front crankshaft seal.

INSTALLATION

CRANKSHAFT OIL SEAL - FRONT

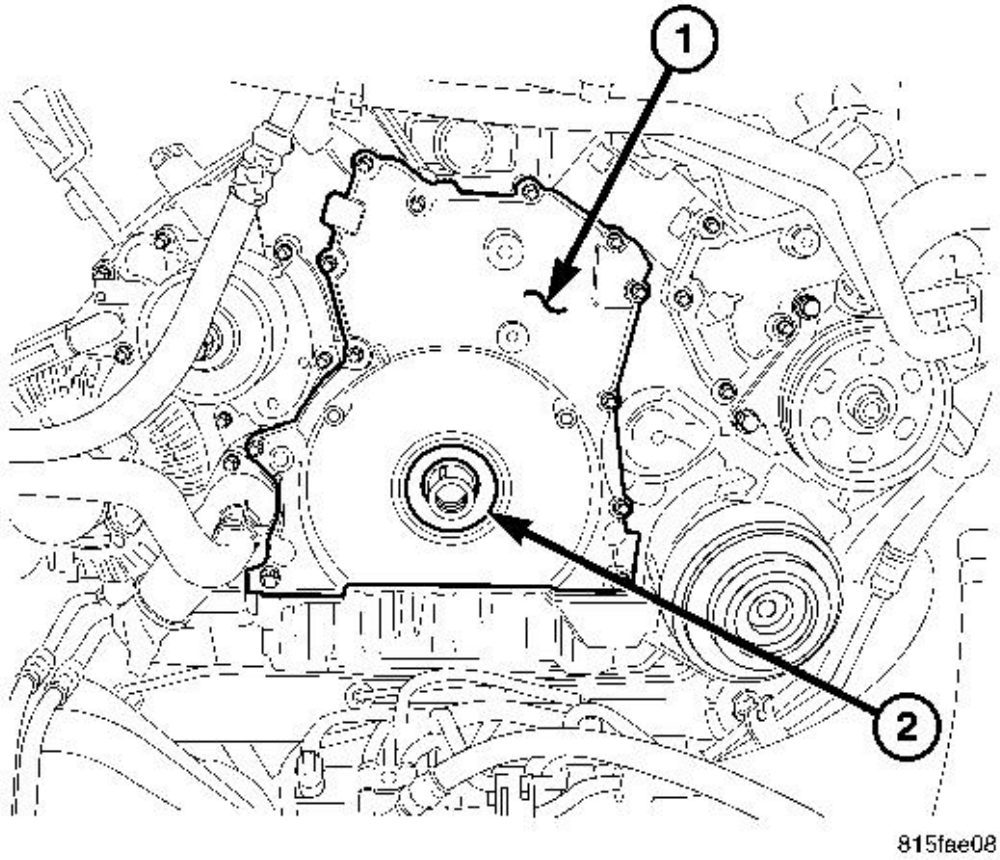

Fig. 291: Front Timing Cover & Crankshaft Seal
Courtesy of CHRYSLER LLC

1 - TIMING CHAIN COVER
2 - FRONT CRANKSHAFT SEAL

NOTE: To prevent potential oil leaks, DO NOT touch the front crankshaft inner seal. Always handle the seal from the outer diameter.

1. Clean timing chain cover (1) seal surface.

NOTE: Keep seal centered in the timing chain cover at all times.

2. Install crankshaft oil seal (2) using Installer 8936A. See **Fig. 291**.
3. Align the alignment key in the crankshaft with the key way in the damper and install the vibration damper. Torque bolt to 304 N.m, plus 90° (224 ft.lbs, plus 90°).

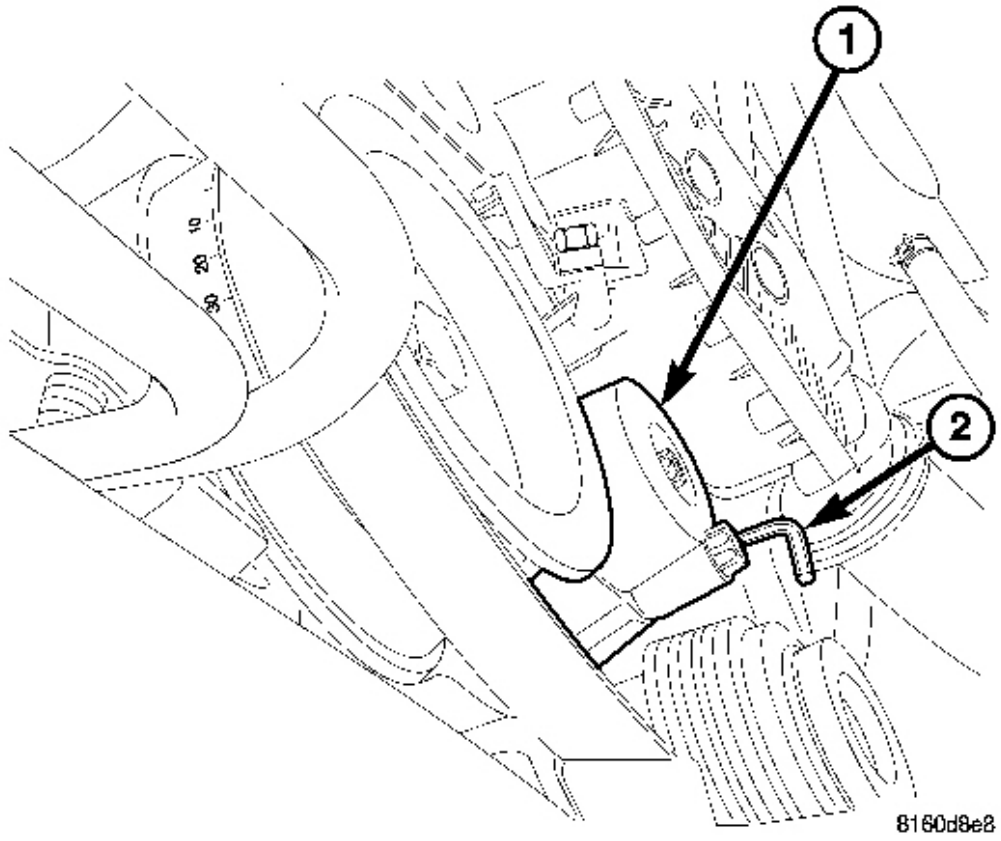

Fig. 292: Drive Belt Tensioner & Drift/Pin
Courtesy of CHRYSLER LLC

1 - DRIVE BELT TENSIONER 2 - DRIFT OR PIN

4. Position the drive belt back onto the pulleys and release the belt tensioner.

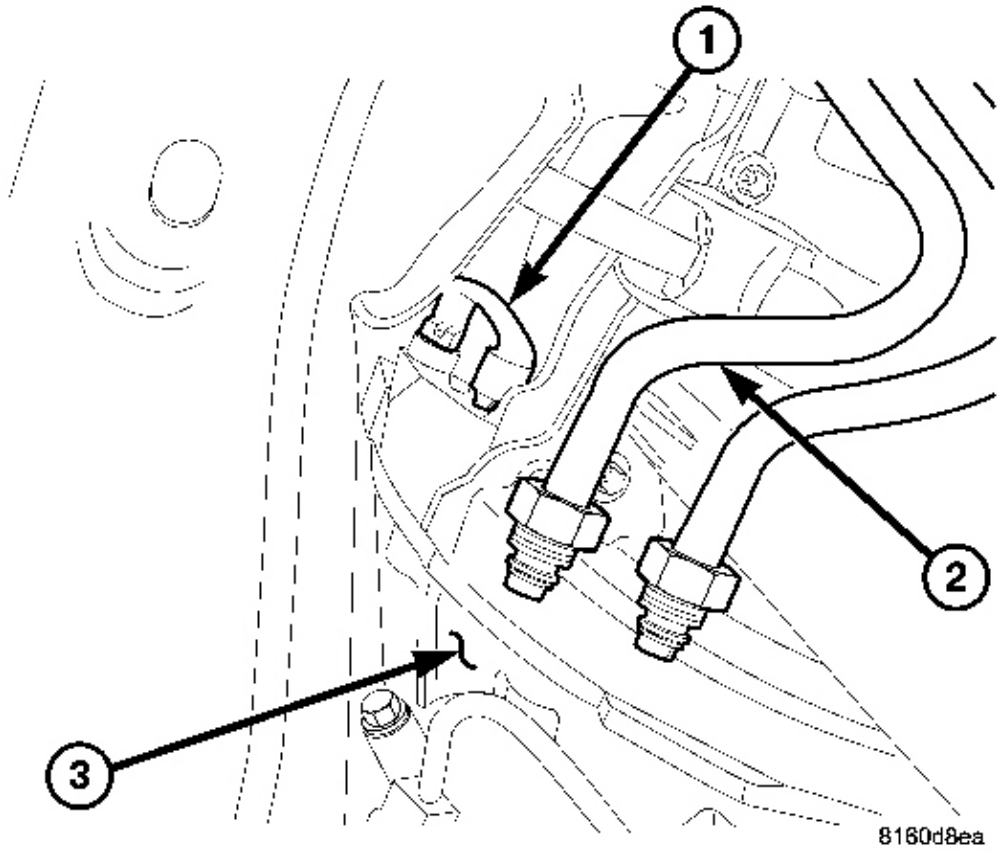

Fig. 293: #9102 Crankshaft Lock, Transmission Cooler Lines & Transmission
Courtesy of CHRYSLER LLC

1 - #9102 CRANKSHAFT LOCK 2 - TRANSMISSION COOLER LINES 3 - TRANSMISSION

5. Remove #`9102 flywheel locking tool. See **Fig. 293**.

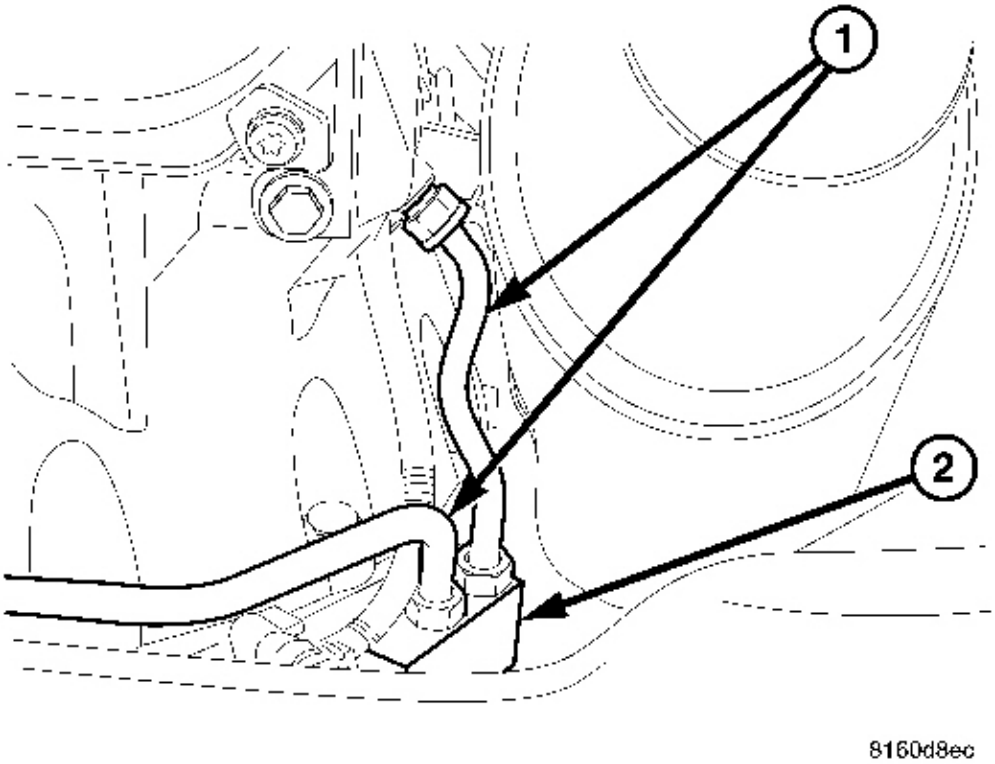

Fig. 294: Transmission Cooler Lines & Thermo-Block
Courtesy of CHRYSLER LLC

1 - TRANSMISSION COOLER LINES
2 - THERMO-BLOCK

6. Install the transmission thermal bypass valve (2) and transmission cooler lines (1). See **Fig. 294**.

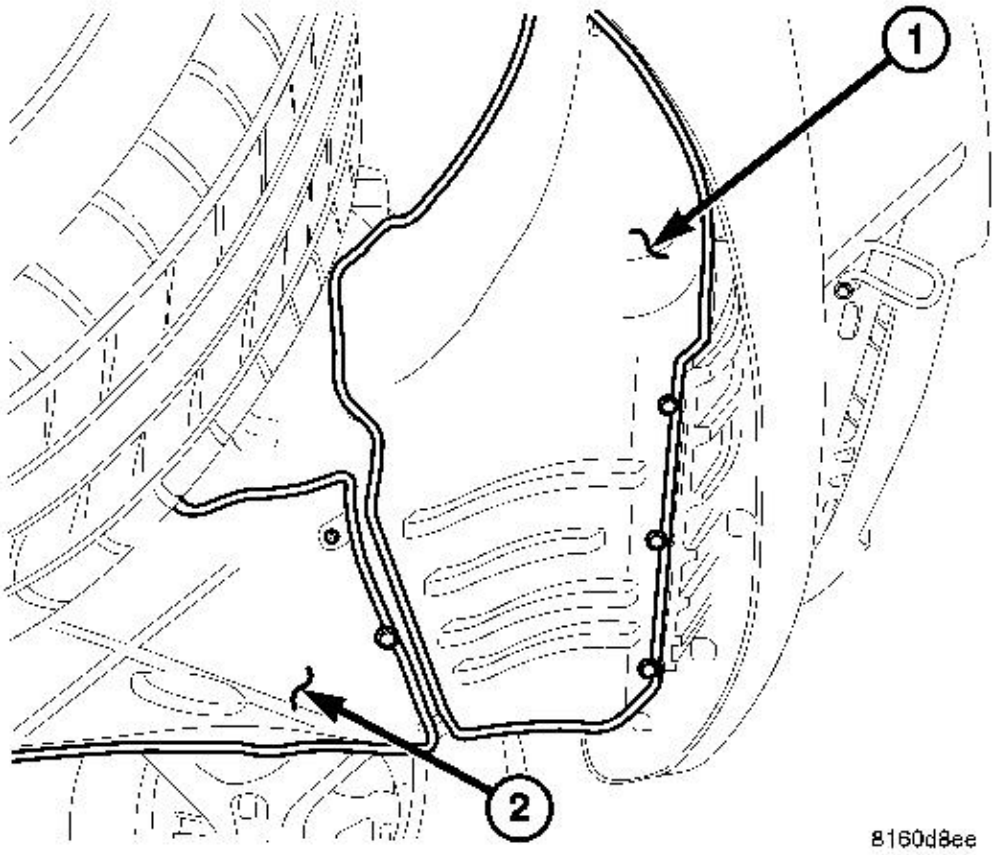

Fig. 295: Front/Intermediate Splash Shields
Courtesy of CHRYSLER LLC

1 - FRONT SPLASH SHIELD
2 - INTERMEDIATE SPLASH SHIELD

7. Install the intermediate (2) and front (1) underbody splash shields. See **Fig. 295**.
8. Lower the vehicle.
9. Connect negative battery cable.

SEAL - CRANKSHAFT OIL - REAR

DESCRIPTION

CRANKSHAFT OIL SEAL-REAR

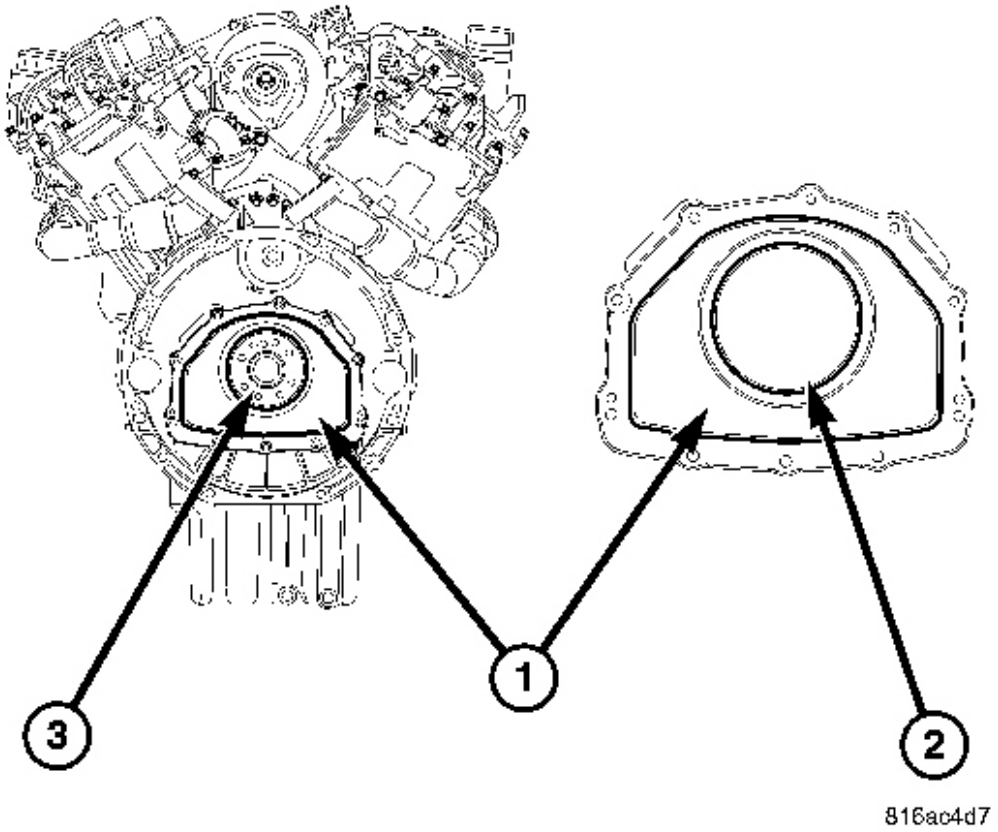

Fig. 296: Rear Main Seal, Rear Main Seal Carrier & Crankshaft
Courtesy of CHRYSLER LLC

WARNING: **NOTE: When servicing the oil pan, the transmission and flex plate must be removed to access the rear main seal carrier fasteners.**

The rear main seal carrier (1) is located behind the flex plate. The rear main seal carrier is bolted to the cylinder block and oil pan. The rear main seal (2) is molded to the carrier and is not serviceable. The rear main seal carrier must be replaced if an oil leak or seepage occurs.

REMOVAL

CRANKSHAFT OIL SEAL - REAR

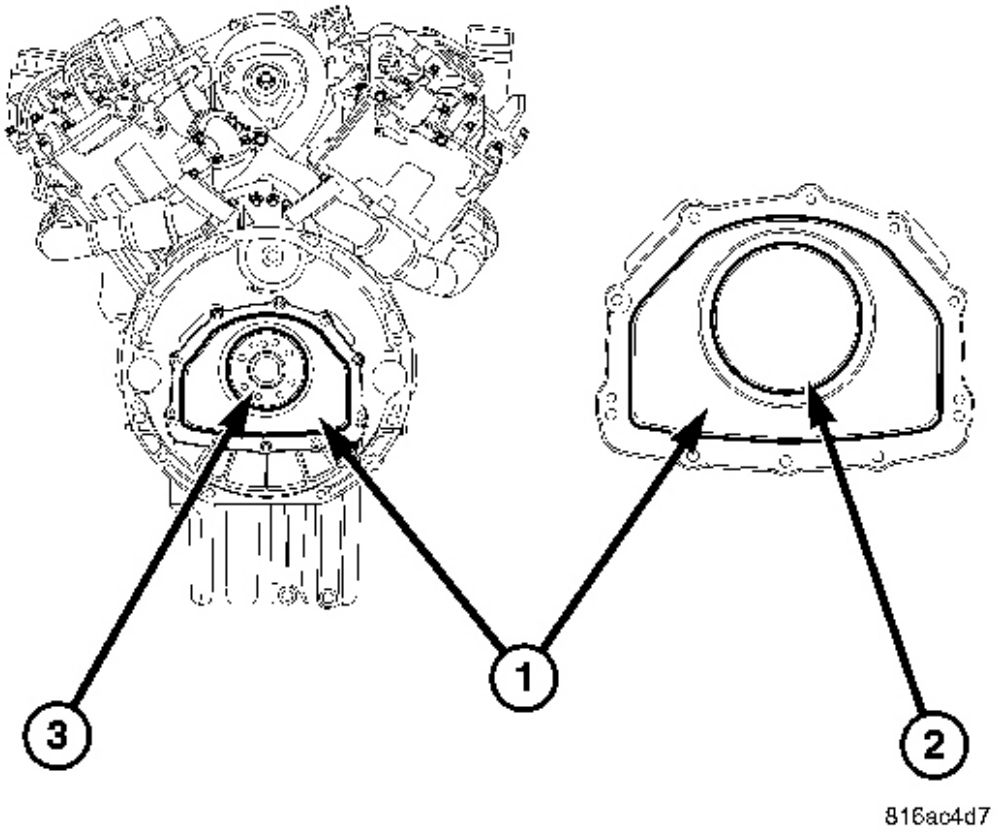

Fig. 297: Rear Main Seal, Rear Main Seal Carrier & Crankshaft
Courtesy of CHRYSLER LLC

1. Remove the transmission. Refer to **REMOVAL** .
2. Remove the bolts holding the flex plate to the crankshaft (3).
3. Remove the flex plate.
4. Remove the bolts holding the rear main seal carrier (1) to the engine block and oil pan.
5. Remove the rear main seal carrier (1) from the engine block and oil pan.
6. Clean sealant residue from the engine block and oil pan.

INSTALLATION

CRANKSHAFT OIL SEAL - REAR

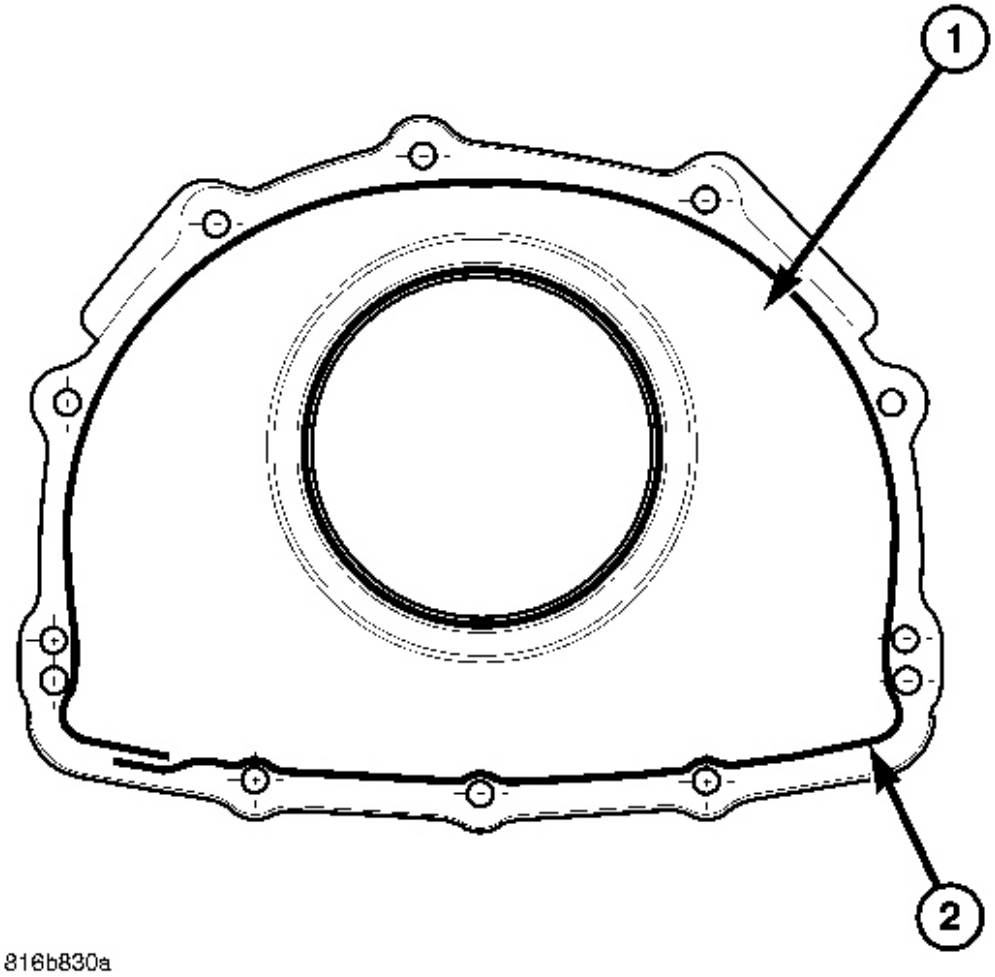

Fig. 298: Sealant Application Pattern
Courtesy of CHRYSLER LLC

1. Apply sealant 1.5 mm (.059 in) wide, MOPAR Engine Sealant/RTV Silicone Rubber Adhesive (2) to the rear main seal carrier (1). Install the rear oil seal cover within 10 minutes after applying sealing compound. Do not spread the sealing bead. Only use the approved sealing compound in the Service Information. Clean sealing surfaces and apply sealing compound to the marked line with a bead thickness of 1.5 ± 0.5 mm (0.059 ± 0.020 in.).

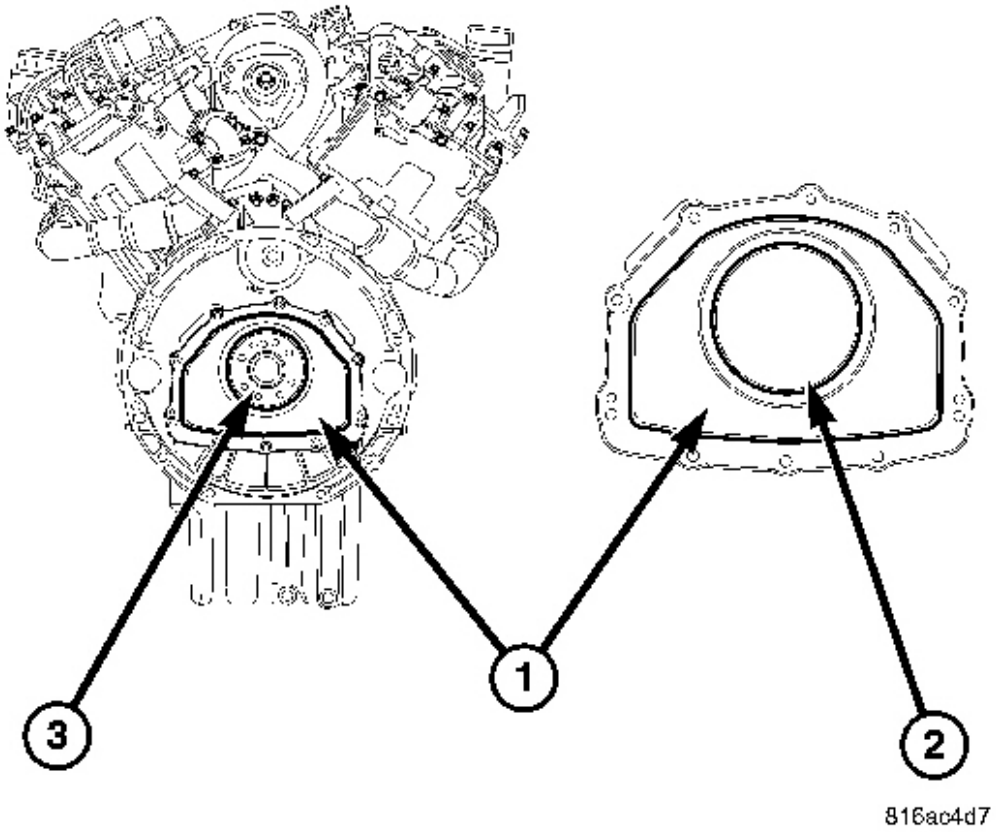

Fig. 299: Rear Main Seal, Rear Main Seal Carrier & Crankshaft
Courtesy of CHRYSLER LLC

2. Install the rear main seal carrier (1) to the engine block and oil pan.
3. Install the bolts holding the rear main seal carrier (1) to the engine block and oil pan. Torque the bolts to 8 N.m (70 in. lbs.) and then to 10 N.m (88 in. lbs.).
4. Install the flex plate. See **INSTALLATION**.
5. Install the transmission. Refer to **INSTALLATION** .

FLEXPLATE

DESCRIPTION

DESCRIPTION

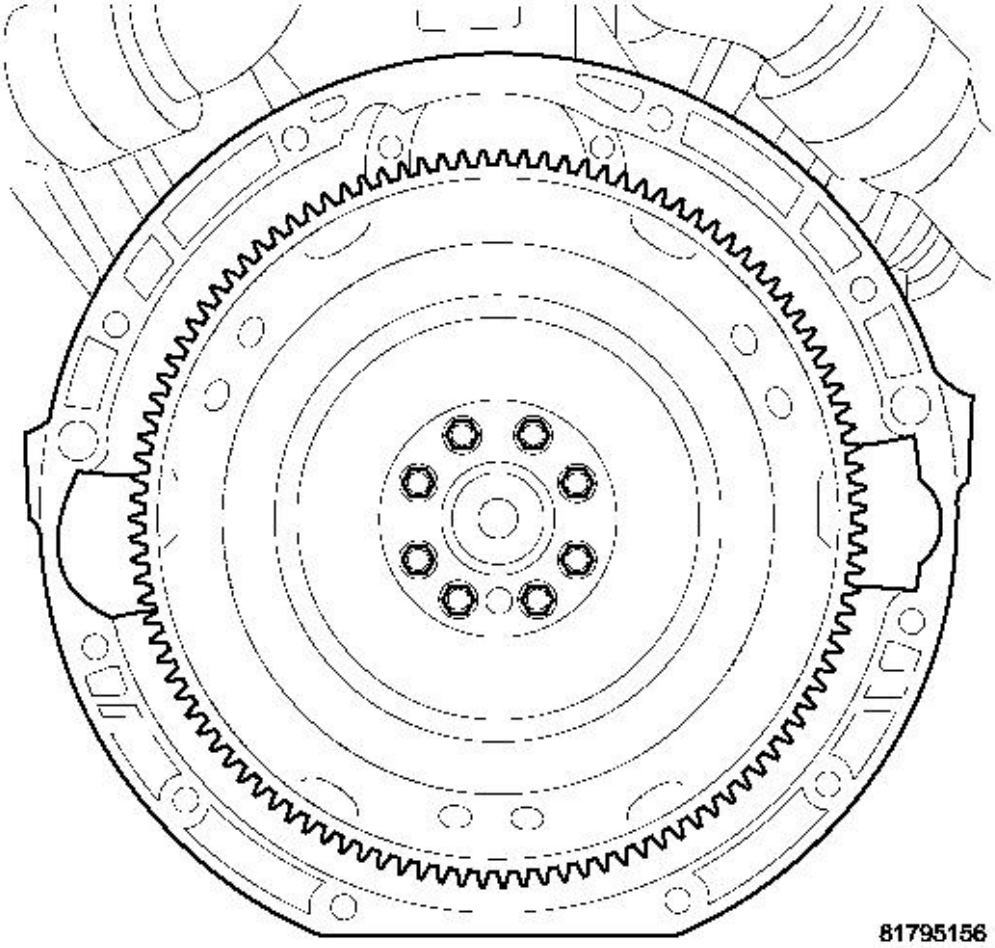

Fig. 300: Flex Plate
Courtesy of CHRYSLER LLC

The flex plate is fastened to the crankshaft and can only be installed one way. The crankshaft has a dowel locating pin that is used to align the flex plate. The stamped-steel flex plate has a segment ring to provide engine speed and crankshaft position information to the Engine Control Module (ECM). The crankshaft position sensor is mounted next to the segment ring and sends electrical pulses to the ECM. The segment ring contains 58 segments and a gap with two missing segments (the 59th and 60th) for the detection of TDC of cylinder No.1.

REMOVAL

FLEX PLATE

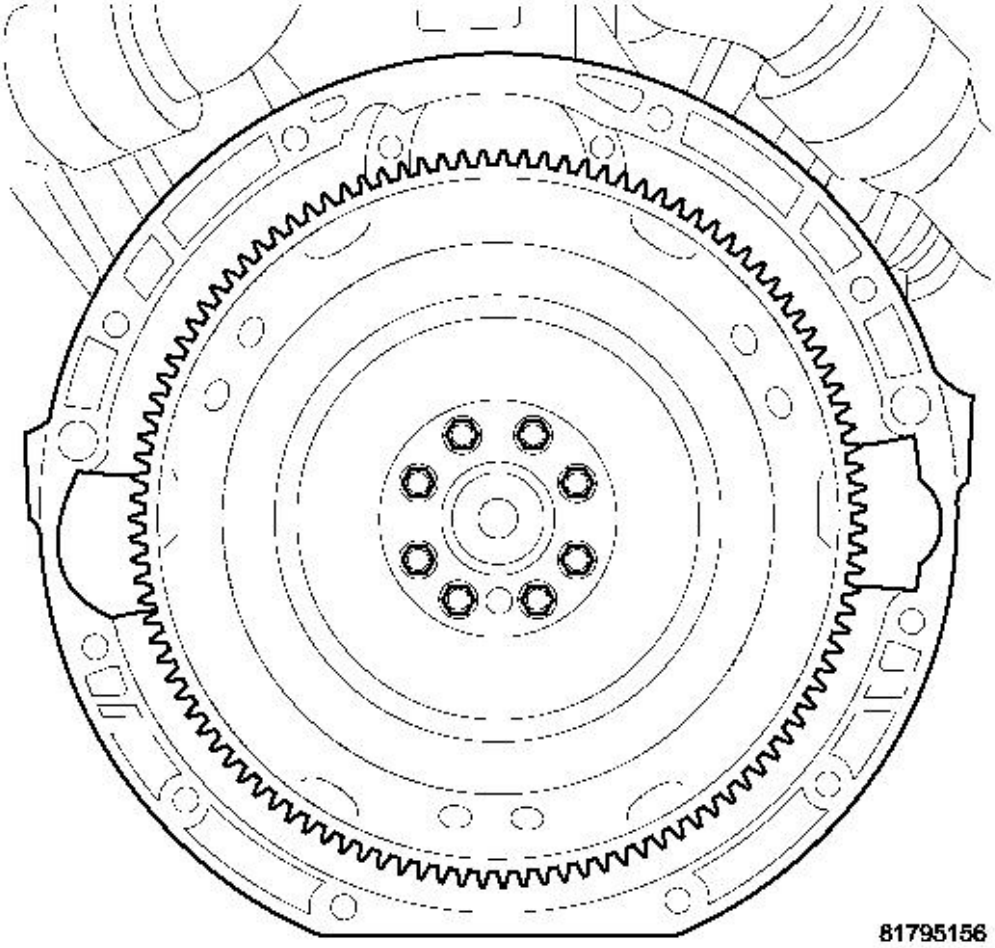

Fig. 301: Flex Plate
Courtesy of CHRYSLER LLC

1. Remove the transmission. Refer to **REMOVAL** .
2. Paint mark the flex plate hub to flex plate relation.
3. Remove the flex plate bolts and flex plate.
4. Inspect flex plate for damage.

INSTALLATION

FLEX PLATE

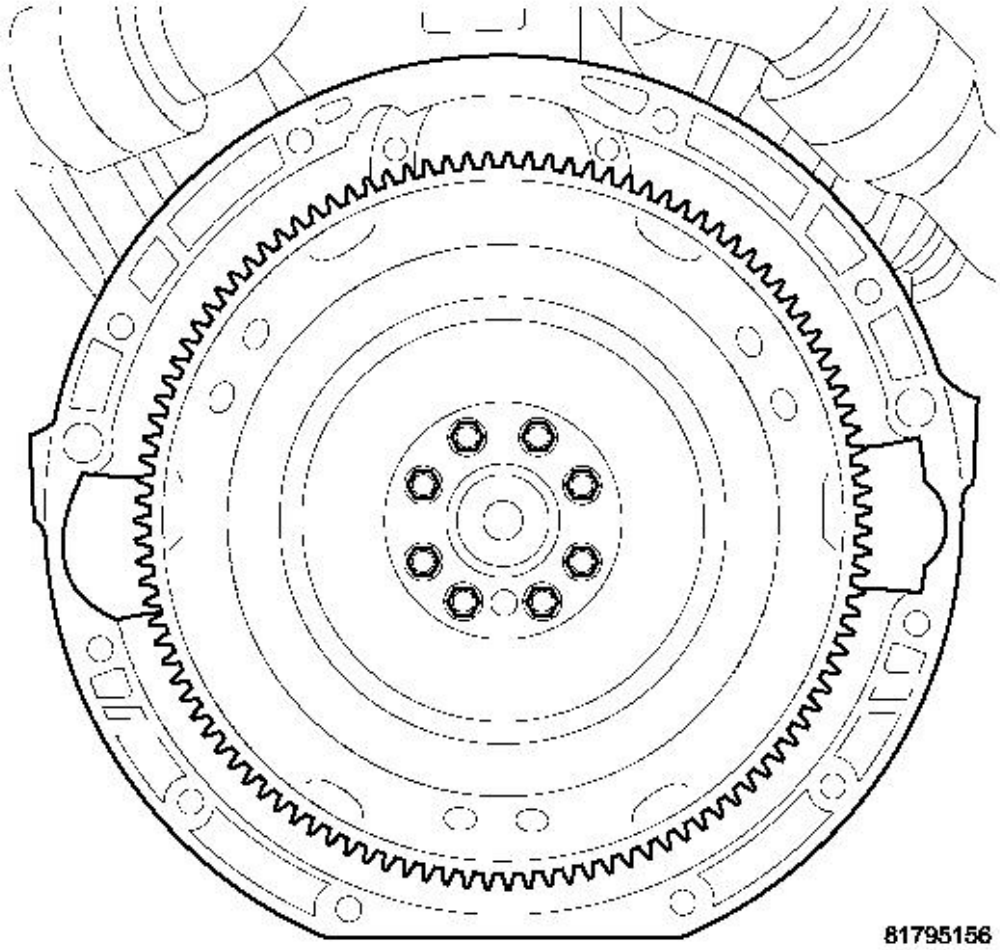

Fig. 302: Flex Plate
Courtesy of CHRYSLER LLC

NOTE: **Do Not lubricate new bolts as they are already coated with an anti-scuff treatment.**

Align the flex plate to hub paint marks, where applicable.

1. Install the flex plate locating pin.
2. Install the flex plate to the hub and install the fasteners. Tighten the flex plate fasteners in a cross sequence to 44 N.m (32.5 ft. lbs.).
3. Install the transmission. Refer to **INSTALLATION** .

LINERS - CYLINDER

DESCRIPTION

CYLINDER LINERS

The cylinder liners used in the 3.0L engine are made of cast iron and molded into the aluminum engine block. There are three size cylinder liners used and they are identified by the markings "A", "X", or "B" on the engine block below the high pressure pump. These markings are used to match piston size with cylinder bore size.

A group of letters located on the machined surface of the cylinder block, above the engine identification number, identifies the dimensional tolerance of each cylinder bore. The standard diameter of the cylinder bore is 83.009 mm (3.2681 in). The manufacturing tolerance is ± 0.009 mm (± 0.00035 in). Three cylinder bore groups are assigned within the 0.018 mm (0.0007 in) tolerance:

Code letter A-includes cylinder bore sizes 83.000-83.006 mm (3.2677-3.2680 in)

Code letter X-includes cylinder bore sizes 83.006-83.012 mm (3.2680-3.2682 in)

Code letter B-includes cylinder bore sizes 83.012-83.018 mm (3.2682-3.2684 in)

WARNING: **The cylinder liners are not serviceable and no repair stages are specified. Oversize pistons are not available. The cylinder block must be replaced if a cylinder liner is out of specifications.**

INSPECTION

CYLINDER LINERS

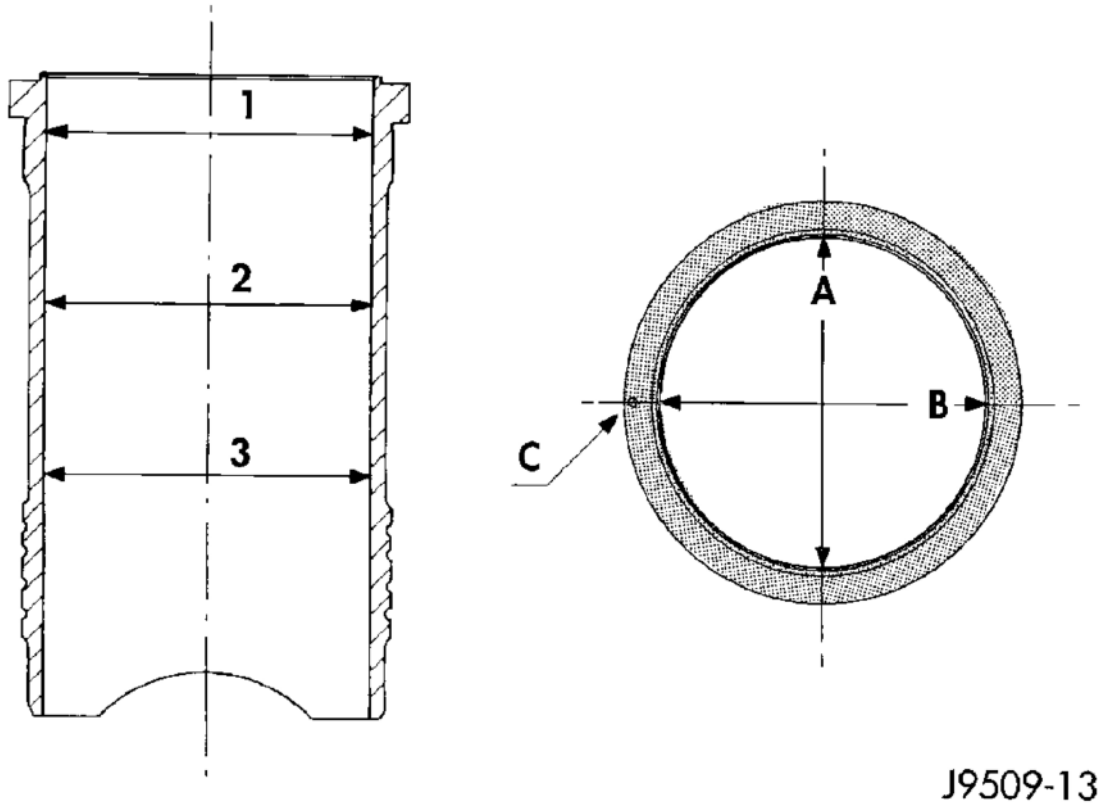

Fig. 303: Liner Inspection
Courtesy of CHRYSLER LLC

The cylinder walls should be checked for out-of-round and taper with a dial bore gauge. If the cylinder walls are badly scuffed or scored, replace the engine block.

Measure the cylinder bore at three levels in directions A and B. Top measurement should be 10 mm (3/8 in.) down and bottom measurement should be 10 mm (3/8 in.) up from the bottom bore.

ROD - PISTON AND CONNECTING

DESCRIPTION

PISTON AND CONNECTING ROD

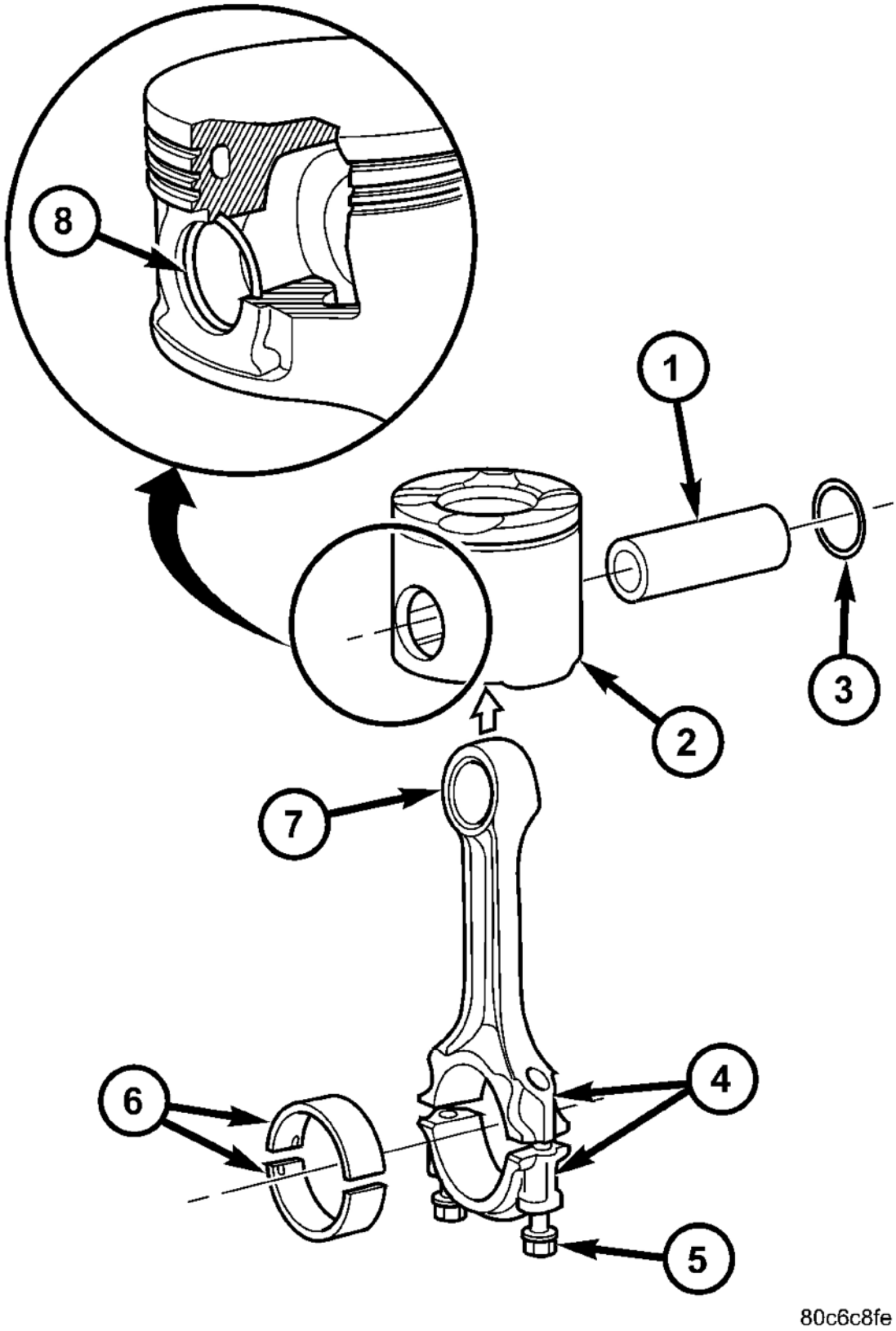

Fig. 304: Piston And Connecting Rod Assembly
Courtesy of CHRYSLER LLC

1 - PISTON PIN
2 - PISTON
3 - SNAP RING
4 - PAINTED CONNECTING ROD ALIGNMENT NUMBERS
5 - CONNECTING ROD BOLT
6 - CONNECTING ROD BEARING
7 - CONNECTING ROD
8 - SNAP RING

CAUTION: If the connecting rod bolts are ever loosened, replace all of the connecting rods.

The pistons are made of a high strength aluminum alloy and have an oval shape to reduce friction and noise. The piston crown consists of a combustion bowl and four recesses machined for the valves. Circlips secure a full floating piston pin. The piston pin is offset 0.4 mm (0.016 in) toward the piston's major thrust surface to reduce slap. The pistons have a phosphated surface treatment and the piston skirts have a graphite treatment for scuff resistance. The piston skirts have notches to provide the necessary clearance for the oil jets when the pistons are at BDC.

STANDARD PROCEDURE

PISTON RING FITTING

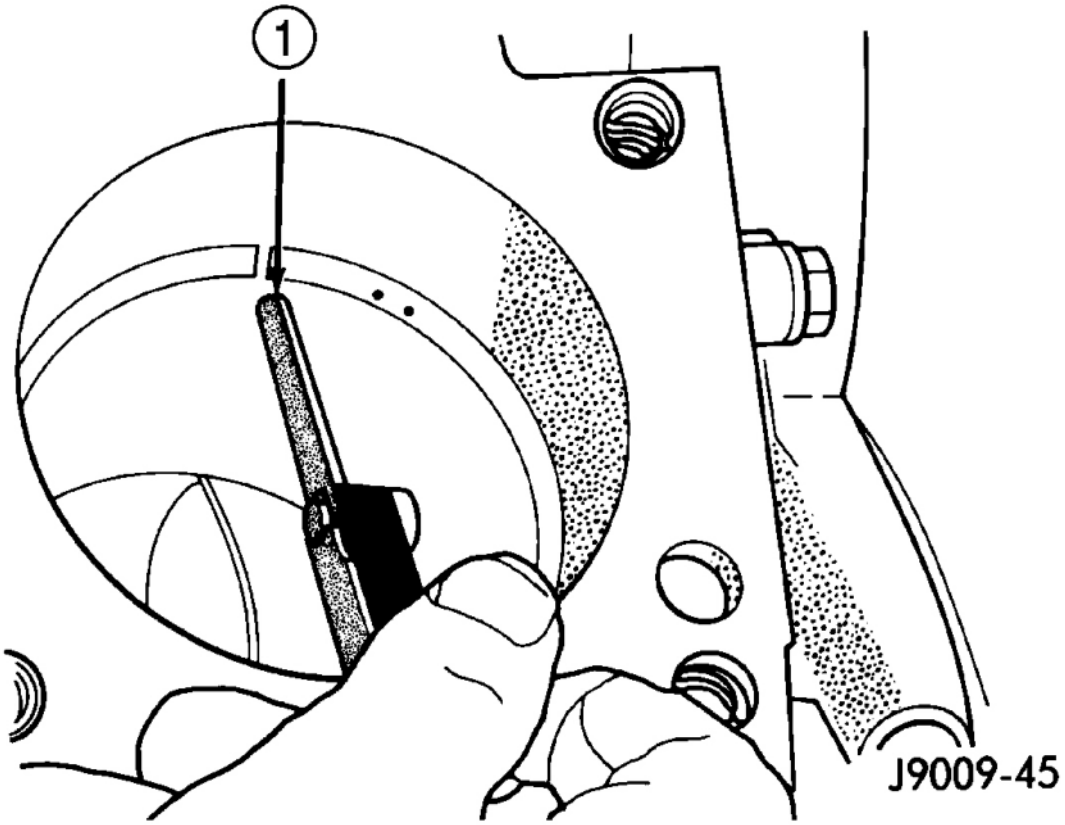

Fig. 305: Ring End Gap Measurement
Courtesy of CHRYSLER LLC

1 - FEELER GAUGE

1. Wipe cylinder bore clean. Insert ring and push down with piston to ensure it is square in bore. The ring gap measurement must be made with the ring positioning at least 12 mm (0.50 in.) from bottom of cylinder bore. Check gap with feeler gauge (1). Top compression ring gap.40 to.55mm (.015in to.0217 in.). Second compression ring gap.25mm to.50mm (.0099 to.0197 in.). Oil control ring gap.20 to.40mm (.0079 to.0158 in.).
2. If ring gaps exceed dimension given, new rings, piston and cylinder boring may be necessary. Keep piston rings in piston sets.

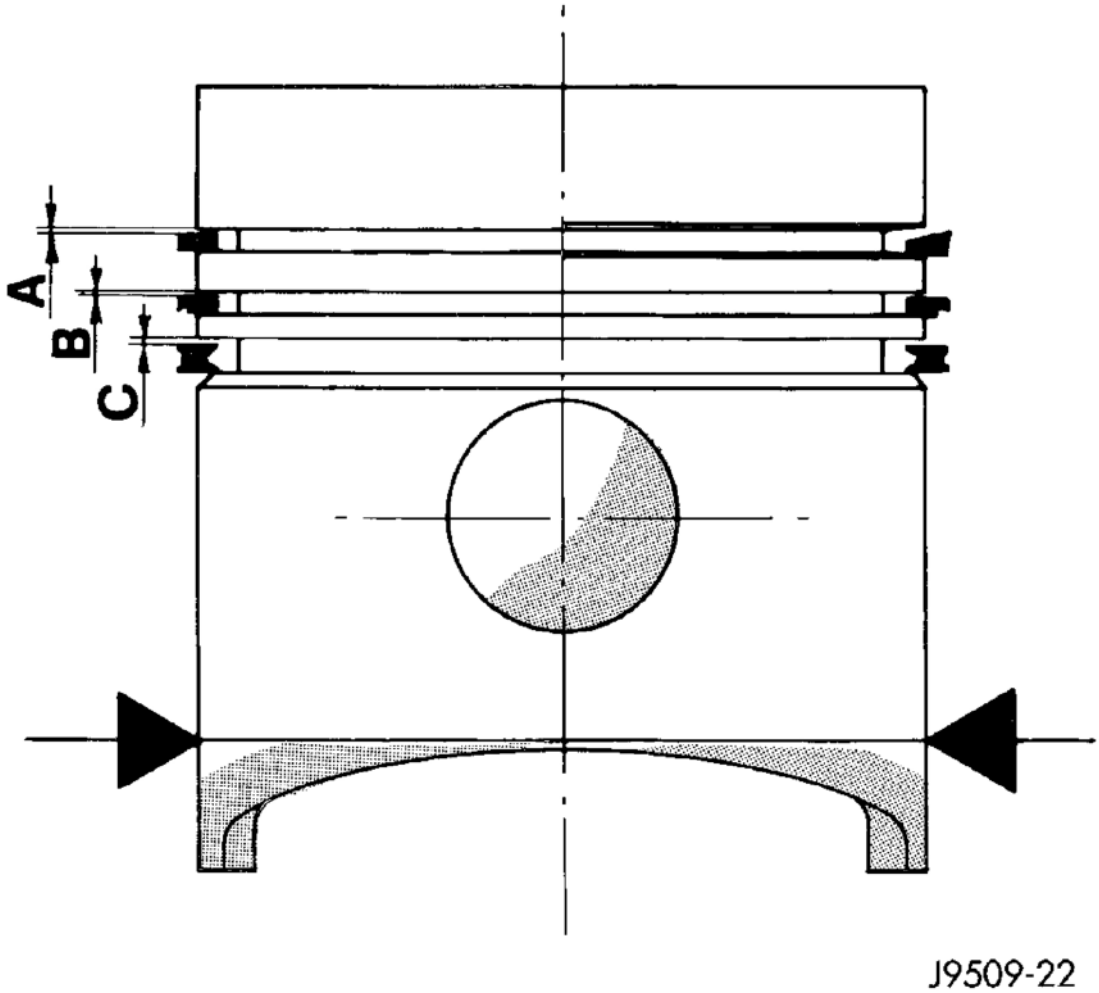

Fig. 306: Piston Ring To Groove Clearance
Courtesy of CHRYSLER LLC

3. Check piston ring to groove clearance. Top compression ring gap 0.12 to 0.16 mm (.0048 to.0063 in.) (A). Second compression ring gap 0.065 to 0.110 mm (.0026 to.0044 in.) (B). Oil control ring gap 0.03 to 0.07 mm (.0012 to.0028 in.) (C).

REMOVAL

PISTON AND CONNECTING ROD

NOTE: Both the connecting rod and the connecting rod cap are paint marked to aid during assembly. Paint marks disappear after time. If the rod and the cap are not marked with paint, paint mark or scribe them before disassembly.

1. Disconnect negative battery cable.
2. Remove cylinder head. See **REMOVAL**.

3. Raise vehicle on hoist.
4. Remove oil pan. See **REMOVAL**.
5. Remove oil pump pickup tube. See **REMOVAL**.
6. Remove top ridge of cylinder bores with a ridge reamer before removing pistons from cylinder block. **Be sure to keep top of pistons covered during this operation.**
7. Piston and connecting rods must be removed from top of cylinder block. Rotate crankshaft so that each connecting rod is centered in cylinder bore.

NOTE: Be careful not to nick or scratch crankshaft journals

8. After removal, install bearing cap on the mating rod and mark pistons with matching cylinder number when removed from engine block.

PISTON PIN - REMOVAL

1. Secure connecting rods in a soft jawed vice.
2. Remove 2 snap rings securing piston pin.
3. Push piston pin out of piston and connecting rod.

PISTON RING - REMOVAL

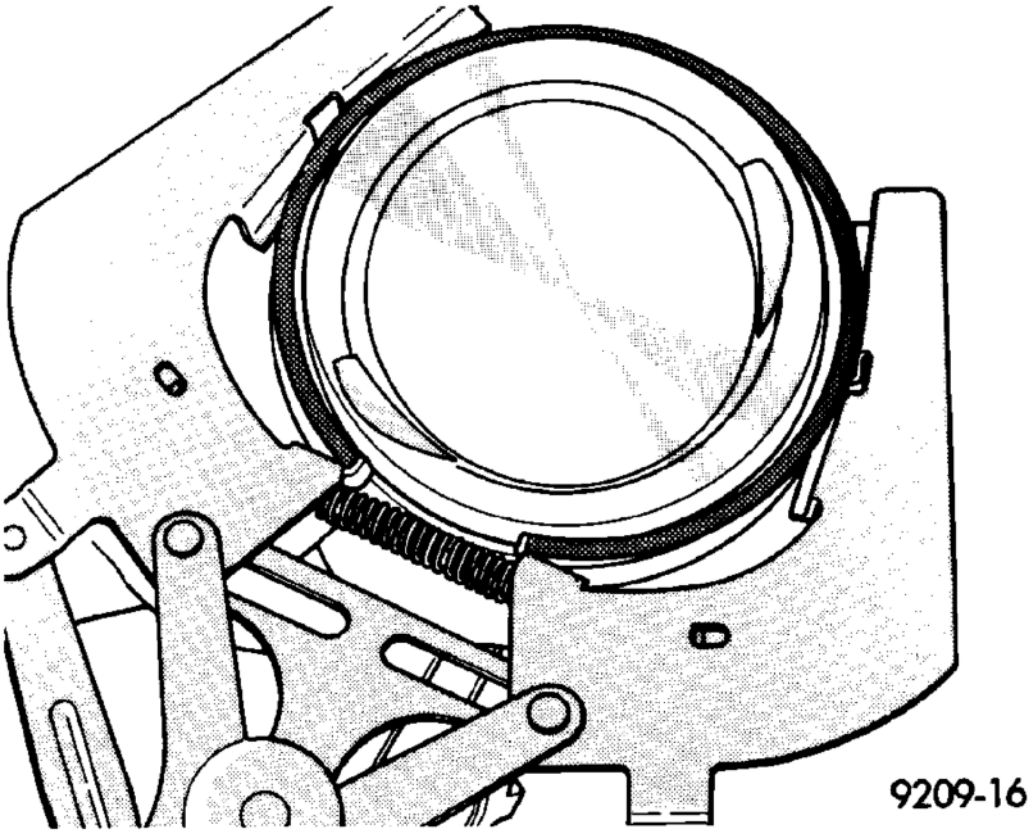

Fig. 307: Piston Rings - Removal/Installation
Courtesy of CHRYSLER LLC

1. ID mark on face of top and second piston rings must point toward piston crown.
2. Using a suitable ring expander, remove top and second piston rings.
3. Remove upper oil ring side rail, lower oil ring side rail and then the oil expander from piston.
4. Carefully clean carbon from piston crowns, skirts and ring grooves ensuring the 4 oil holes in the oil control ring groove are clear.

INSPECTION

PISTON & CONNECTING ROD

PISTONS

1. Check piston pin bores in piston for roundness. Make 3 checks at 120° intervals. Maximum out of roundness.020 mm (.0008 in.).
2. The piston diameter should be measured approximately 10mm (.394 in.) up from the base.
3. Skirt wear should not exceed 0.1 mm (.00039 in.).
4. The clearance between the cylinder liner and piston should not exceed 0.010-0.022 mm (.0003 -.0008 in.).

PISTON PINS

1. Measure the diameter of piston pin in the center and both ends. Refer to the **CONNECTING RODS**

CONNECTING RODS

CAUTION: Connecting rods must be replaced once the end caps are loosened. All six must have the same weight and the same number. Replacement connecting rods will only be supplied in sets of six. When assembling the connecting rod, be sure to paint mark or scribe mark each of the connecting rods and caps before installation, for alignment purposes later.

NOTE: Do Not lubricate the new connecting rod bolts. They are already coated with a anti scuff treatment.

Connecting rods are supplied in sets of six since they all must be of the same weight category. Max allowable weight difference is 5 gr.

1. Assemble bearing shells and bearing caps to their respective connecting rods ensuring that the serrations on the cap and reference marks are aligned.
2. Tighten connecting cap bolts to 20 N.m (15 ft. lbs.).
3. Without loosening connecting rod bolts, tighten all bolts to 40 N.m (30 ft.lbs.).
4. Using a torque angle gauge, tighten each bolt an additional 90°.

DAMPER - VIBRATION

REMOVAL

VIBRATION DAMPER

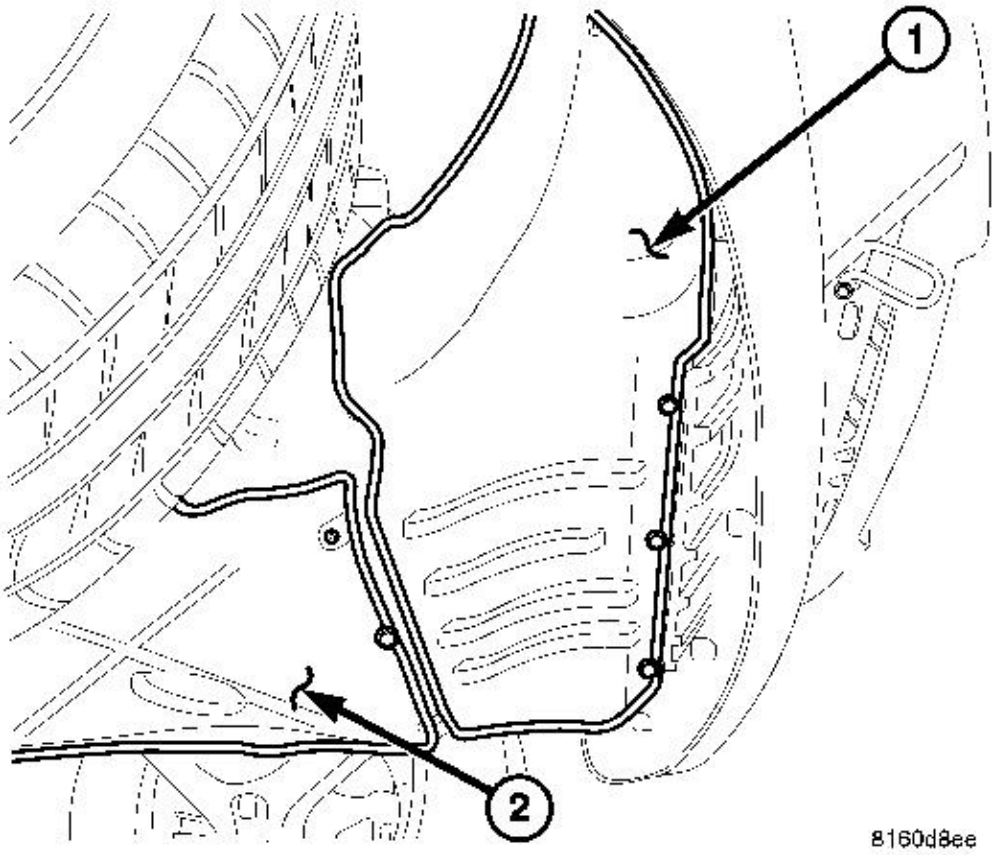

Fig. 308: Front/Intermediate Splash Shields
Courtesy of CHRYSLER LLC

1 - FRONT SPLASH SHIELD
2 - INTERMEDIATE SPLASH SHIELD

1. Disconnect negative battery cable.
2. Raise and support the vehicle.
3. Remove both front lower splash shields (1,2). See **Fig. 308**.

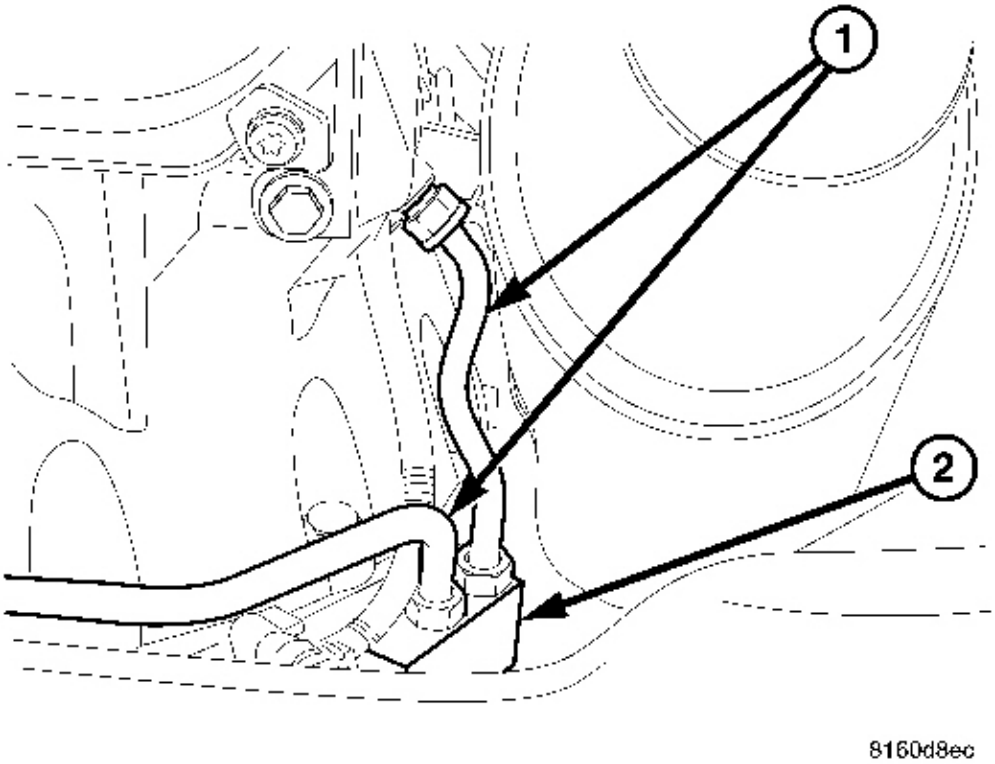

Fig. 309: Transmission Cooler Lines & Thermo-Block
Courtesy of CHRYSLER LLC

1 - TRANSMISSION COOLER LINES
2 - THERMO-BLOCK

4. Remove the transmission thermal bypass valve (2), and the cooler lines (1) between the block (2) and transmission. See **Fig. 309**.

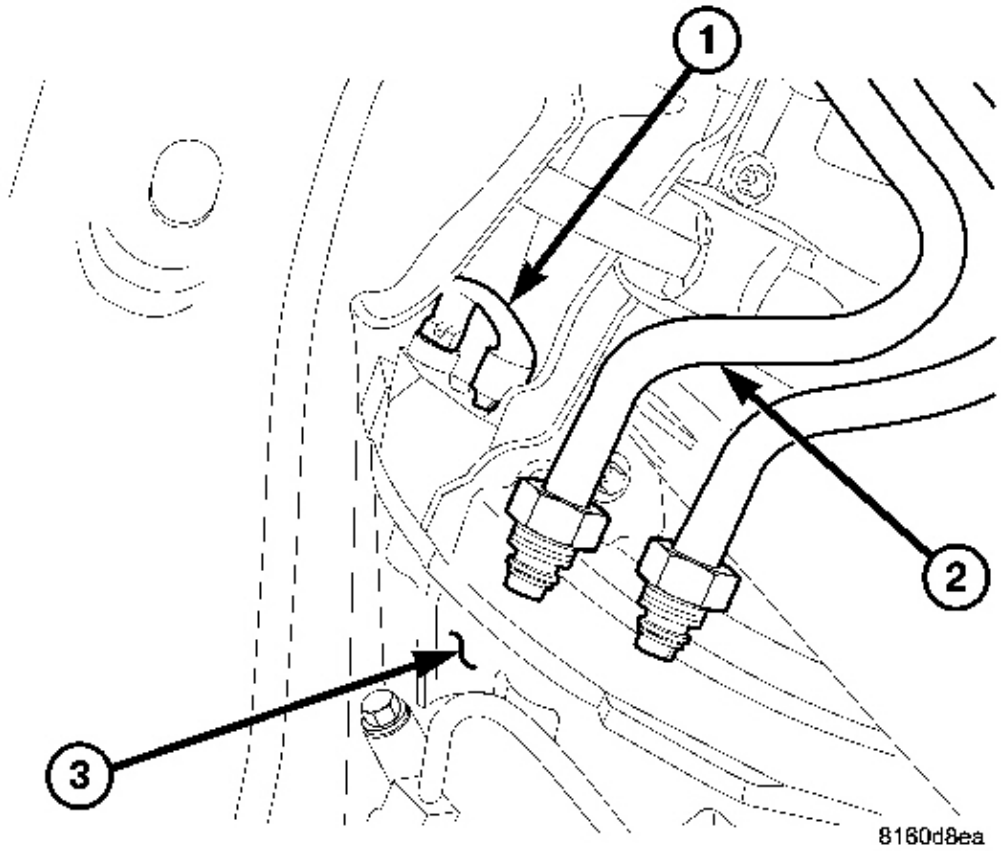

Fig. 310: #9102 Crankshaft Lock, Transmission Cooler Lines & Transmission
Courtesy of CHRYSLER LLC

1 - #9102 CRANKSHAFT LOCK
2 - TRANSMISSION COOLER LINES
3 - TRANSMISSION

5. Remove the starter blank.
6. Install special tool #9102 flywheel locking tool. See **Fig. 310**.

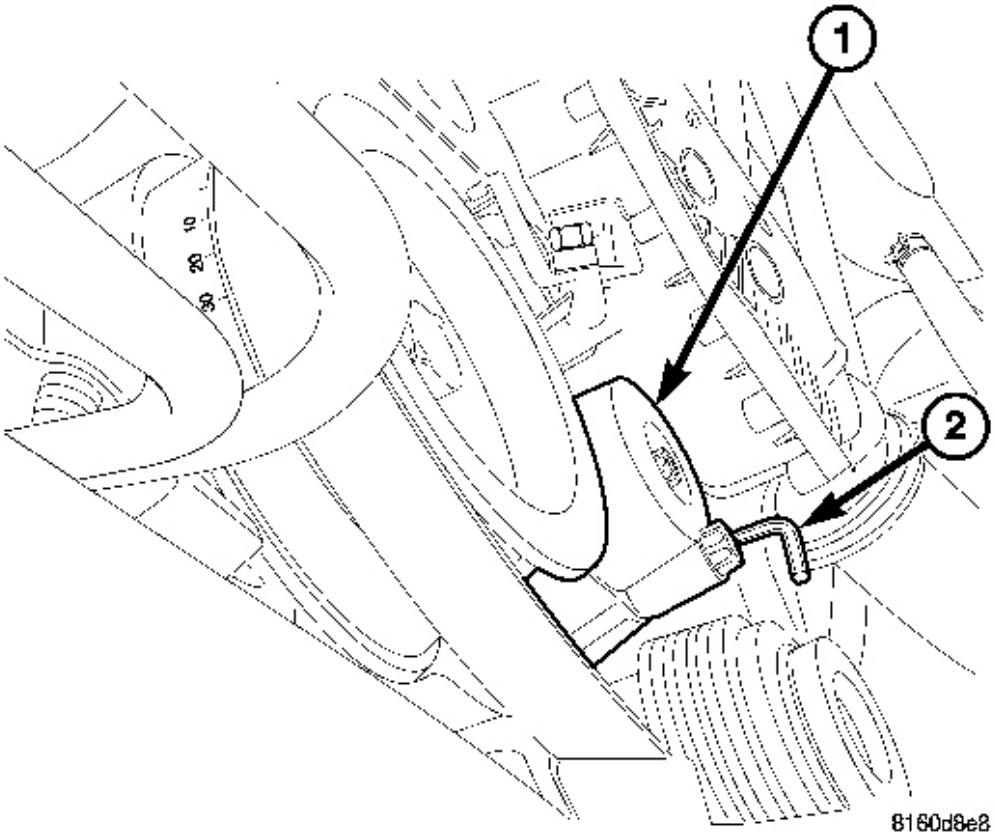

Fig. 311: Drive Belt Tensioner & Drift/Pin
Courtesy of CHRYSLER LLC

1 - DRIVE BELT TENSIONER 2 - DRIFT OR PIN

7. Release the accessory drive belt tension by resetting the drive belt tensioner (1) and installing a retaining pin. See **Fig. 311**.

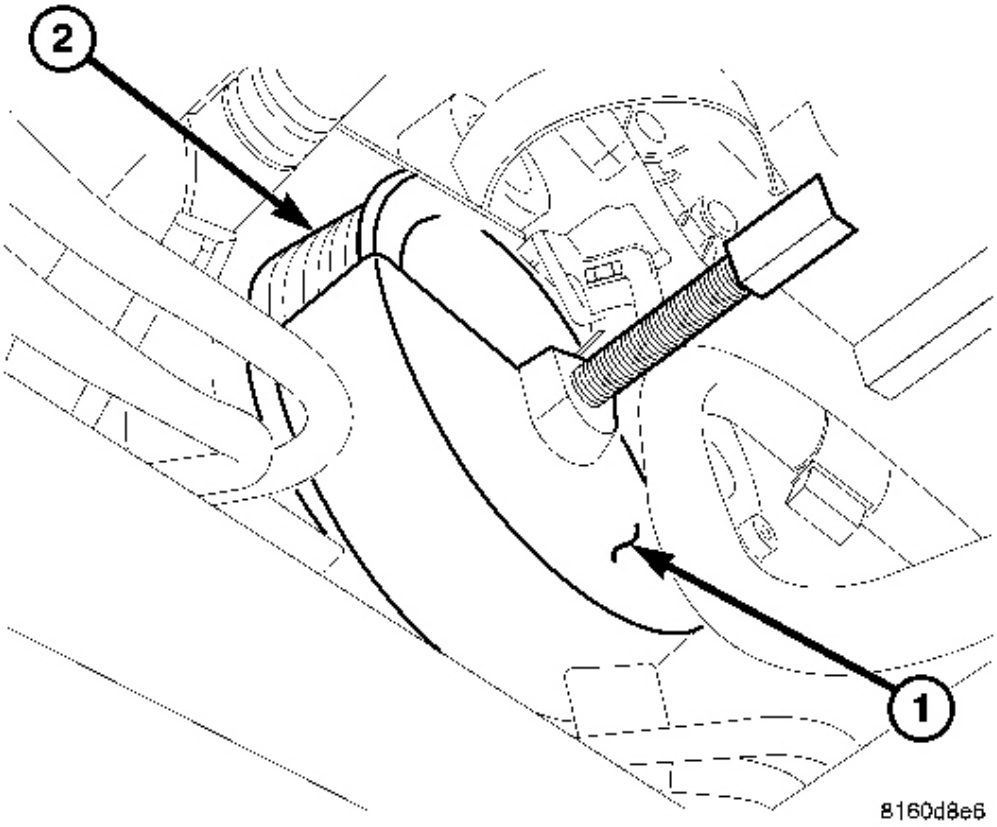

Fig. 312: Special Tool #9544 & Vibration Damper
Courtesy of CHRYSLER LLC

1 - SPECIAL TOOL #9544
2 - VIBRATION DAMPER

8. Remove the vibration damper (2) bolt.
9. Install special tool #9544 vibration damper puller (1). See **Fig. 312**.

CAUTION: Care must be taken when removing the damper. DO NOT damage or gouge the front crankshaft seal

10. Remove the vibration damper (2).

INSTALLATION

VIBRATION DAMPER

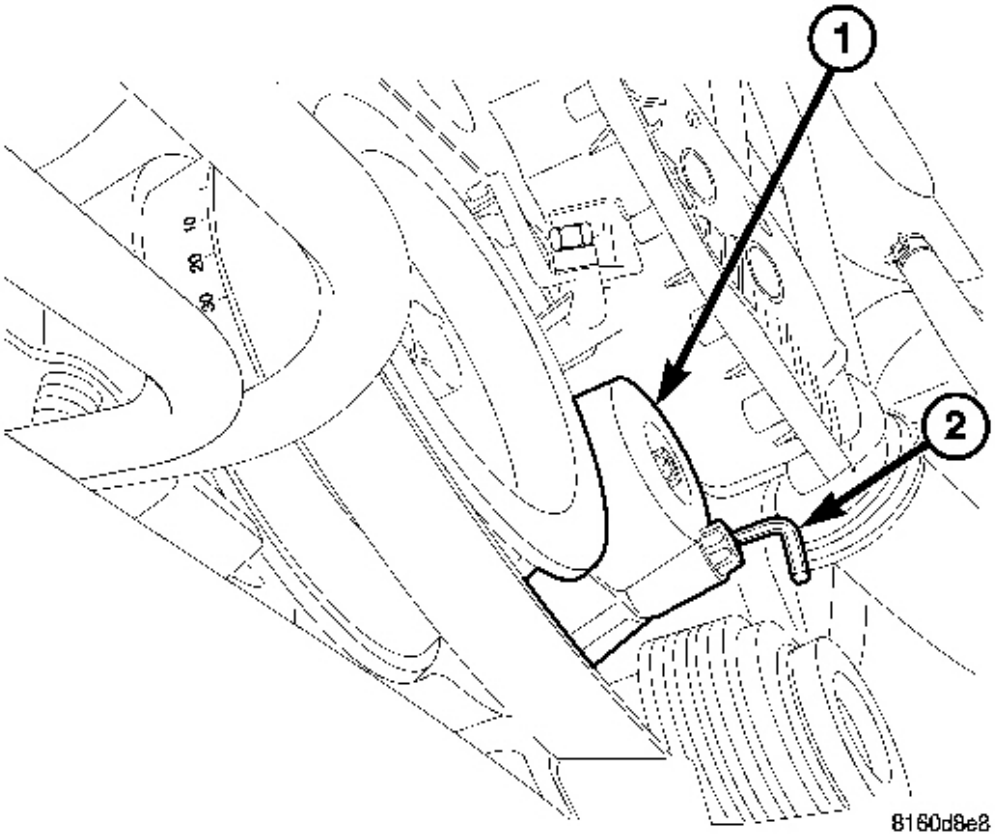

Fig. 313: Drive Belt Tensioner & Drift/Pin
Courtesy of CHRYSLER LLC

1 - DRIVE BELT TENSIONER
2 - DRIFT OR PIN

NOTE: To prevent potential oil leaks, DO NOT touch the front crankshaft inner seal.

1. Align the alignment key in the crankshaft with the key way in the damper and install the vibration damper. Tighten the bolt to 304 N.m, plus 90 degrees (224 ft. lbs. plus 90 degrees).
2. Position the drive belt back onto the pulleys and release the belt tensioner (1). See **Fig. 313**.

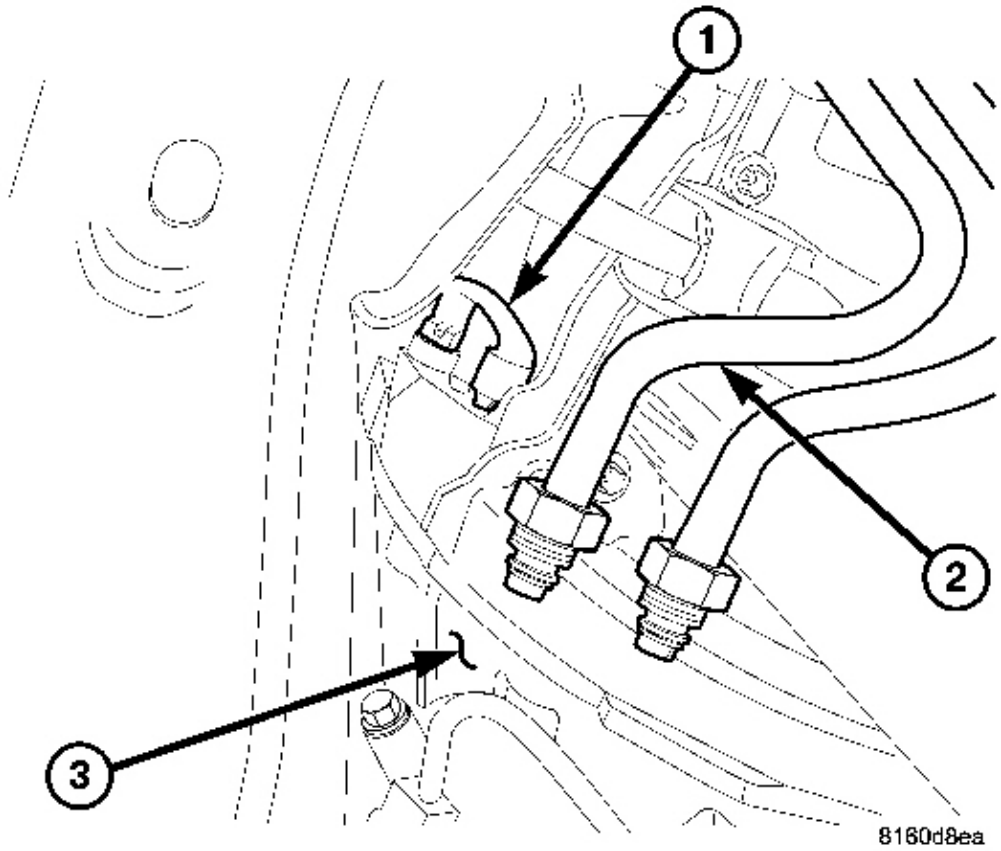

Fig. 314: #9102 Crankshaft Lock, Transmission Cooler Lines & Transmission
Courtesy of CHRYSLER LLC

1 - #9102 CRANKSHAFT LOCK 2 - TRANSMISSION COOLER LINES 3 - TRANSMISSION

3. Remove special tool #9102 flywheel locking tool (1). See **Fig. 314**.

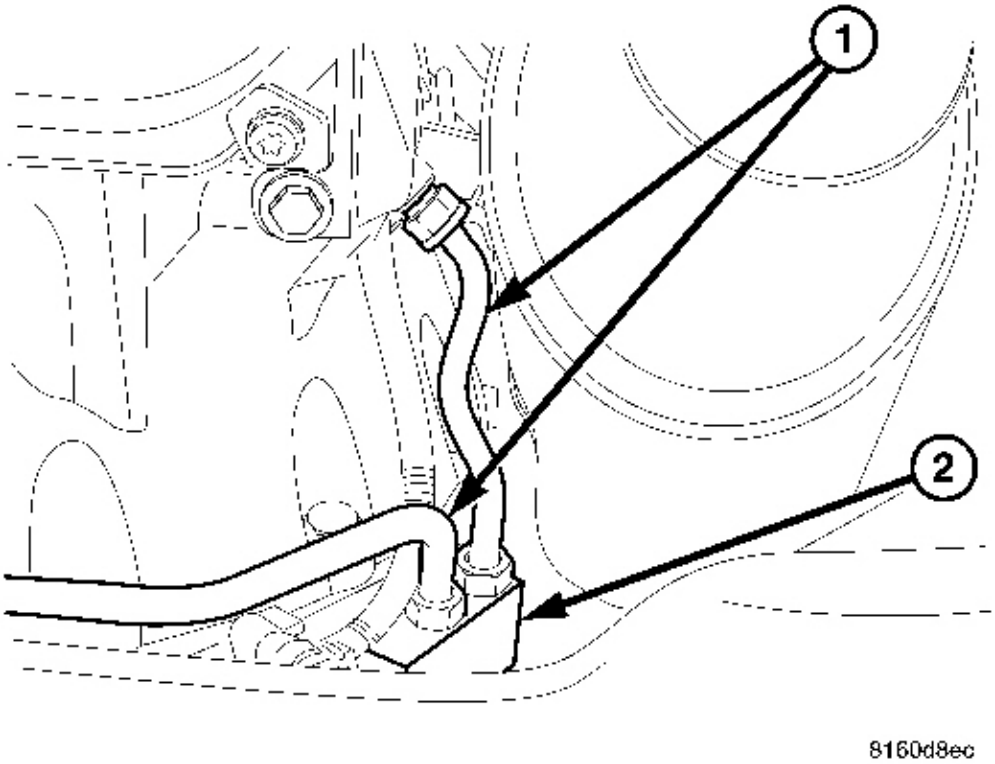

Fig. 315: Transmission Cooler Lines & Thermo-Block
Courtesy of CHRYSLER LLC

1 - TRANSMISSION COOLER LINES
2 - THERMO-BLOCK

4. Install the transmission thermal bypass valve (2) and transmission cooler lines (1). See **Fig. 315**.

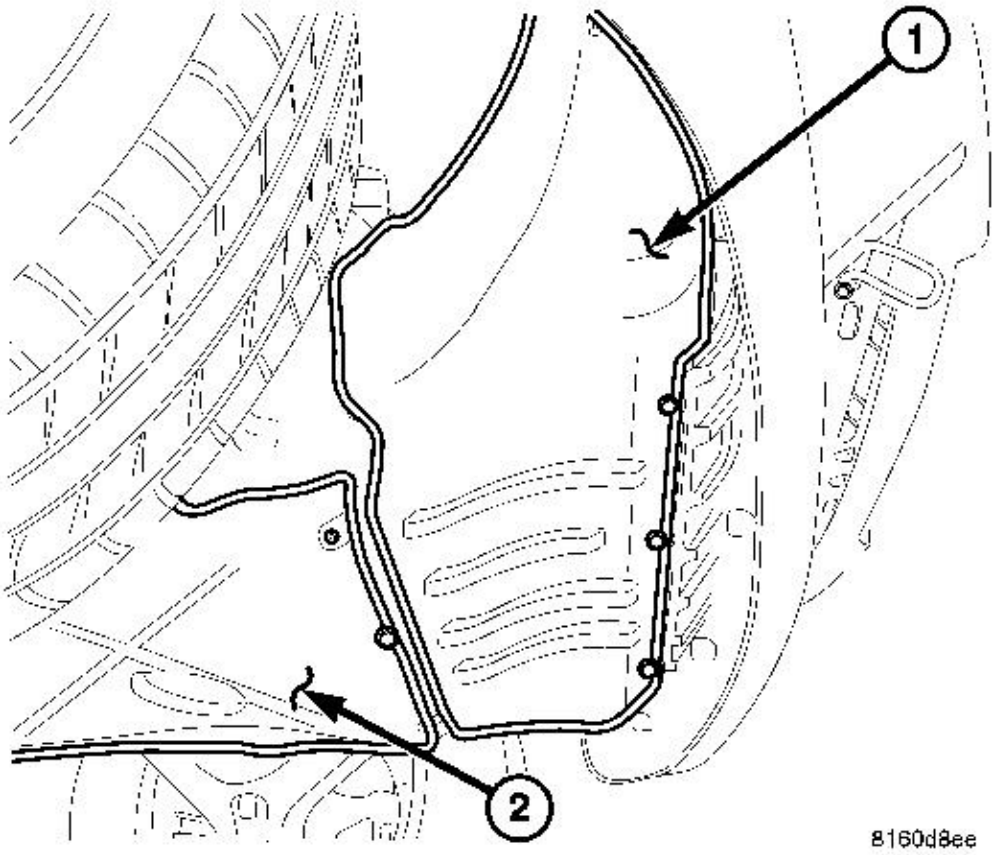

Fig. 316: Front/Intermediate Splash Shields
Courtesy of CHRYSLER LLC

1 - FRONT SPLASH SHIELD
2 - INTERMEDIATE SPLASH SHIELD

5. Install the intermediate (2) and front (1) underbody splash shields. See **Fig. 316**.
6. Lower the vehicle.
7. Connect negative battery cable.

PUMP - VACUUM

DESCRIPTION

VACUUM PUMP

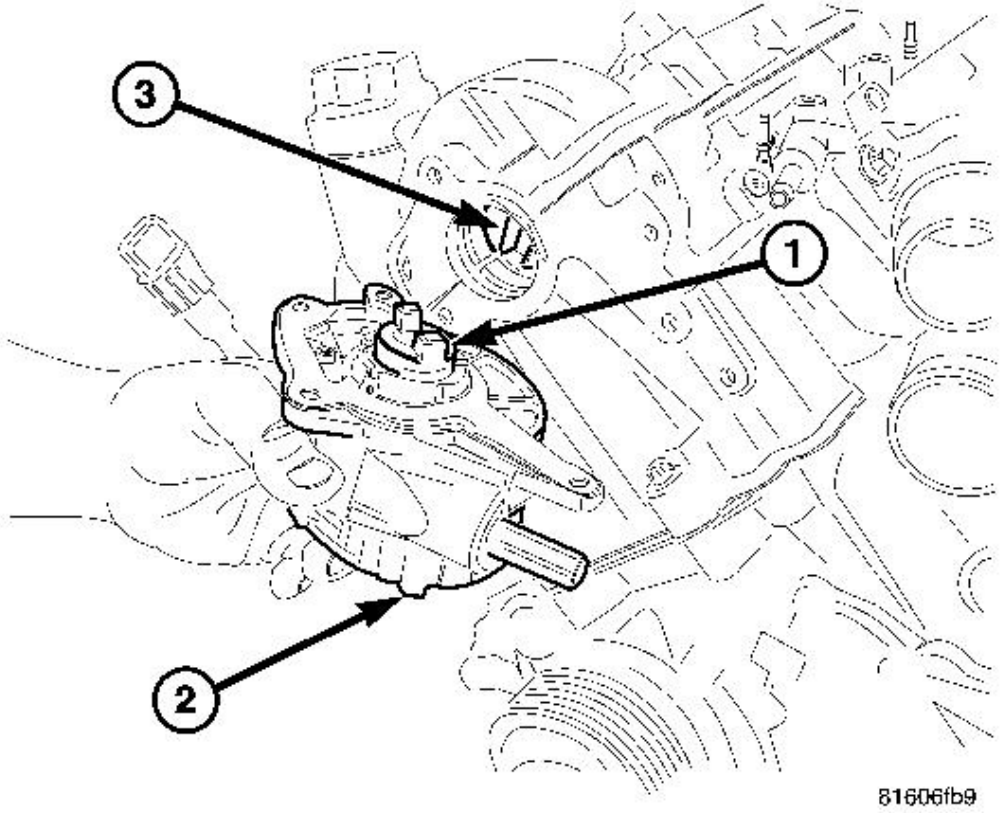

Fig. 317: Vacuum Pump Gear, Vacuum Pump & Right Intake Camshaft Drive Gear
Courtesy of CHRYSLER LLC

1 - VACUUM PUMP GEAR
2 - VACUUM PUMP
3 - RIGHT INTAKE CAMSHAFT DRIVE GEAR

The vacuum pump is a constant displacement, vane-type pump. Vacuum is generated by vanes mounted in the pump rotor. The rotor is located in the pump housing and is pressed onto the pump shaft.

The vacuum pump operates by a slotted extension attached to the vacuum pump shaft. The vacuum pump shaft slotted extension fits into, and is driven by, the exhaust camshaft gear.

The vacuum pump rotating components are internally lubricated and the vacuum pump has no serviceable parts. Do not disassemble or attempt to repair the pump.

OPERATION

VACUUM PUMP

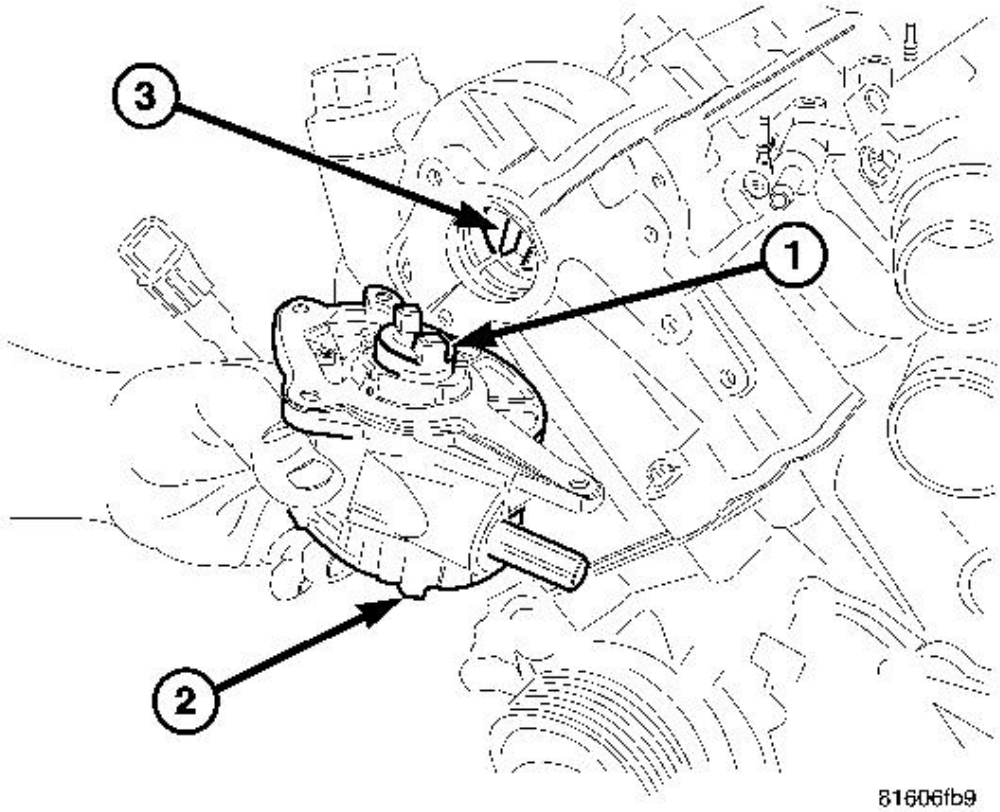

Fig. 318: Vacuum Pump Gear, Vacuum Pump & Right Intake Camshaft Drive Gear
Courtesy of CHRYSLER LLC

1 - VACUUM PUMP GEAR
2 - VACUUM PUMP
3 - RIGHT INTAKE CAMSHAFT DRIVE GEAR

Vacuum pump output is transmitted to the Heater, Electronic, Vacuum, Air Conditioner (HEVAC) and brake vacuum booster, systems through a supply hose. The hose is connected to an outlet port on the pump housing and uses an in-line check valve to retain system vacuum when vehicle is not running.

Pump output ranges from a minimum of 8.5 to 25 inches vacuum.

The pump rotor and vanes are rotated by the slotted pump drive gear which fits into the camshaft drive gear.

REMOVAL

VACUUM PUMP

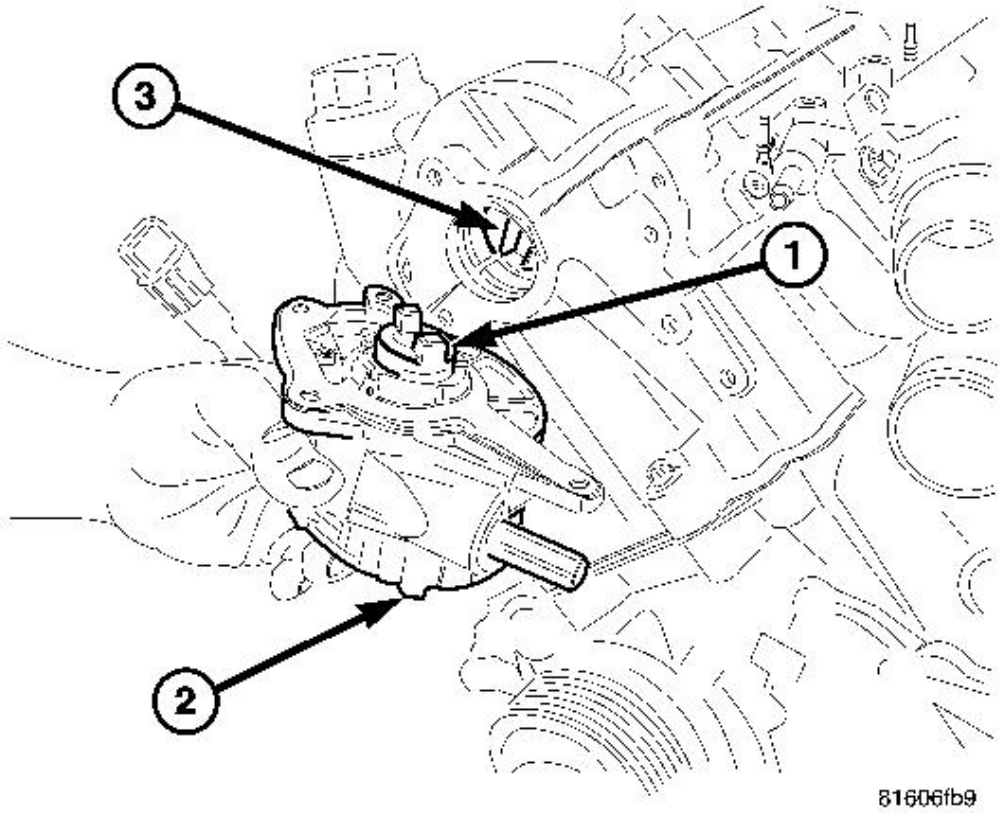

Fig. 319: Vacuum Pump Gear, Vacuum Pump & Right Intake Camshaft Drive Gear
Courtesy of CHRYSLER LLC

1 - VACUUM PUMP GEAR
2 - VACUUM PUMP
3 - RIGHT INTAKE CAMSHAFT DRIVE GEAR

1. Disconnect negative battery cable.
2. Remove vacuum line at vacuum pump.

NOTE: Observe position of driver on rear of pump.

3. Remove vacuum pump and seals.
4. Clean all sealing surfaces.

INSTALLATION

VACUUM PUMP

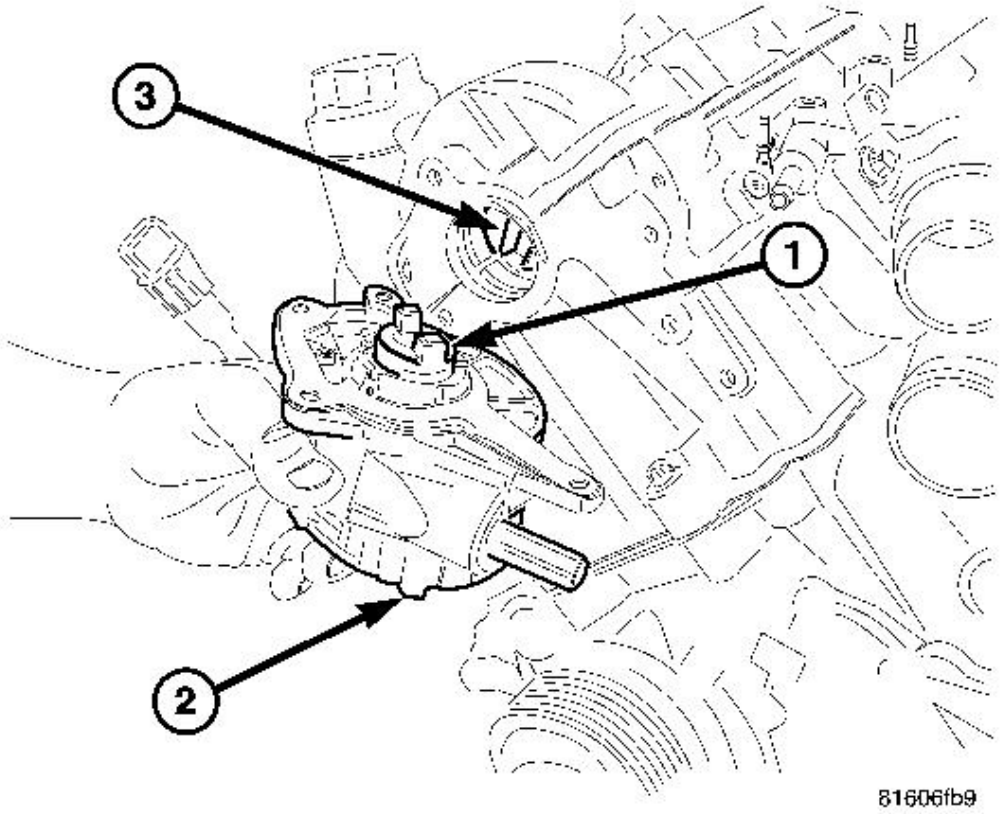

Fig. 320: Vacuum Pump Gear, Vacuum Pump & Right Intake Camshaft Drive Gear
Courtesy of CHRYSLER LLC

1 - VACUUM PUMP GEAR
2 - VACUUM PUMP
3 - RIGHT INTAKE CAMSHAFT DRIVE GEAR

1. Clean all sealing surfaces.
2. Position driver on rear of pump and install vacuum pump with new seals. Tighten bolts to 14 N.m (124 in.

lbs.).

3. Install vacuum line to vacuum pump.
4. Connect negative battery cable.

WARNING: Use extreme caution when the engine is operating. Do not stand in a direct line with the fan. Do not put your hands near the pulleys, belts or fan. Do not wear loose clothes.

5. Start the engine and inspect for leaks.

MOUNTING - ENGINE

MOUNT - LEFT

REMOVAL

LEFT ENGINE MOUNT

Fig. 321: Engine Mount - Left
Courtesy of CHRYSLER LLC

1. Disconnect the negative battery cable. Refer to **REMOVAL** .
2. Remove the engine cover. See **REMOVAL**.
3. Remove the engine cover brackets and transmission tube retainer.
4. Remove the battery and battery tray.
5. Remove power distribution center (PDC) from bracket and set aside.
6. Remove PDC bracket.
7. Reposition engine wiring harness.

8. Raise and support the vehicle.
9. Loosen both right and left engine mount through bolts.
10. Lower the vehicle.
11. Install clevis brackets through engine lifting fixtures.
12. Install engine lifting chain to clevis brackets.
13. Install engine lift and hoist engine.
14. Remove the left engine mount retaining bolts
15. Remove the engine mount.

INSTALLATION

LEFT ENGINE MOUNT

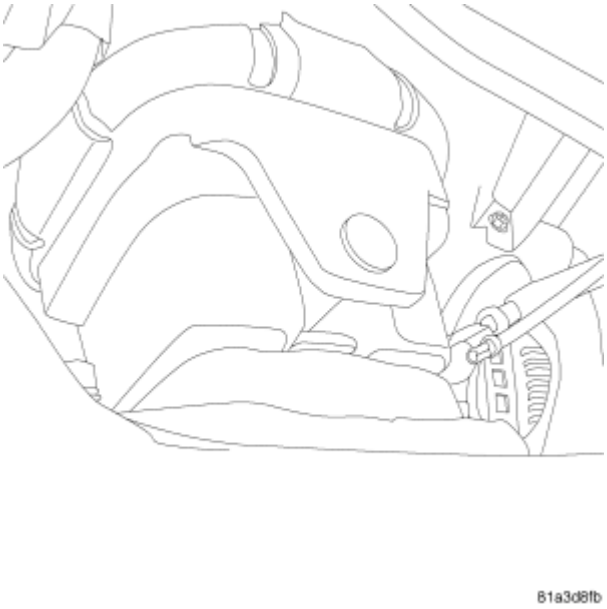

Fig. 322: Left Engine Mount
Courtesy of CHRYSLER LLC

1. Position and install the engine mount to engine bolts. Tighten bolts to 58 N.m (42 lbs. ft.).
2. Lower the engine and remove the engine hoist with chain.
3. Raise and support the vehicle.
4. Install the engine mount through bolts. Tighten bolts to 110 N.m (82 lbs. ft.).
5. Install the splash shield.
6. Lower the vehicle.
7. Install the power distribution center (PDC) bracket and PDC.
8. Install the battery tray and battery.
9. Install the engine cover bracket and secure the transmission tube.
10. Install the engine cover front bracket.

11. Install the engine cover.
12. Install the front structural bracket.
13. Install the coolant recovery container.
14. Connect the negative battery cable.

MOUNT - RIGHT

REMOVAL

RIGHT ENGINE MOUNT

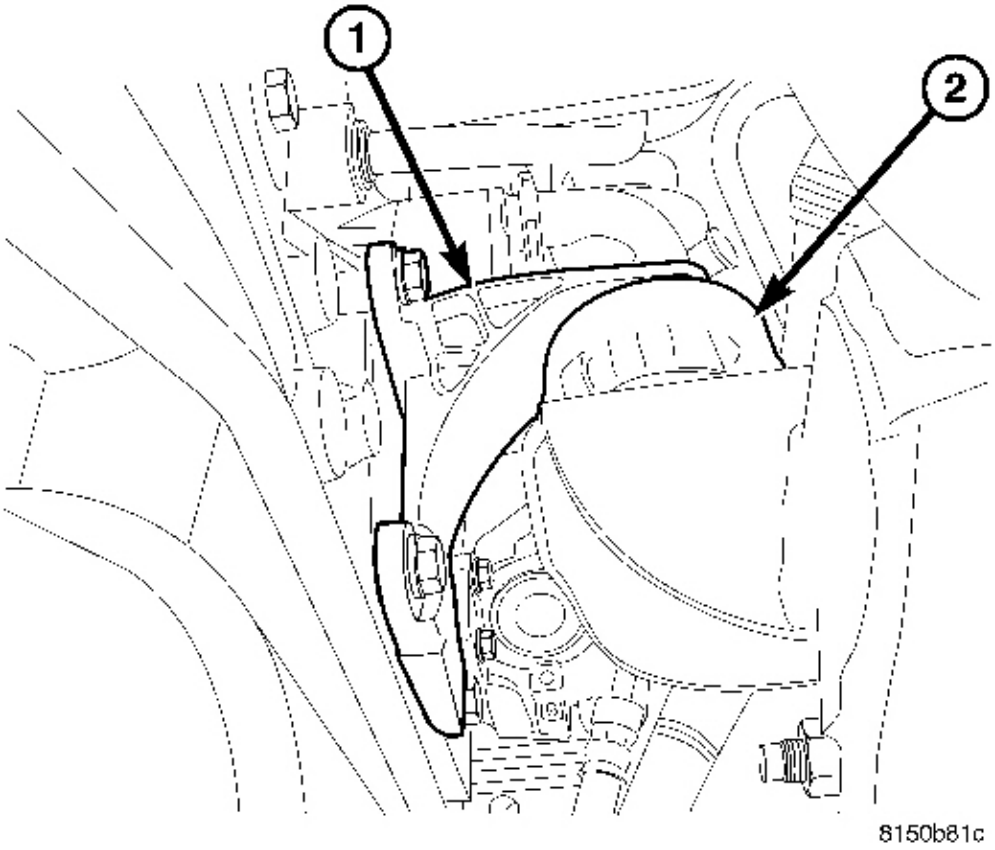

Fig. 323: Right Engine Mount Bracket & Right Engine Mount
Courtesy of CHRYSLER LLC

1 - RIGHT ENGINE MOUNT BRACKET

2 - RIGHT ENGINE MOUNT

1. Disconnect the negative battery cable.
2. Remove the engine cover.
3. Remove the front engine cover bracket.
4. Separate the transmission level indicator tube from bracket and remove the rear engine cover bracket.
5. Install clevis bracket to engine lift brackets.
6. Install engine lifting chain through clevis brackets.
7. Raise and support the vehicle.
8. Remove the skid plate.
9. Drain engine oil.
10. Loosen both engine mount through bolts.
11. Lower the vehicle.
12. Remove the oil level indicator tube.

NOTE: Care must be taken not to crush the turbocharger against the windshield cowl when raising and supporting the engine.

13. Connect an engine lift and support the engine.
14. Remove the engine mount retaining bolts.
15. Remove the engine mount.

INSTALLATION

RIGHT ENGINE MOUNT

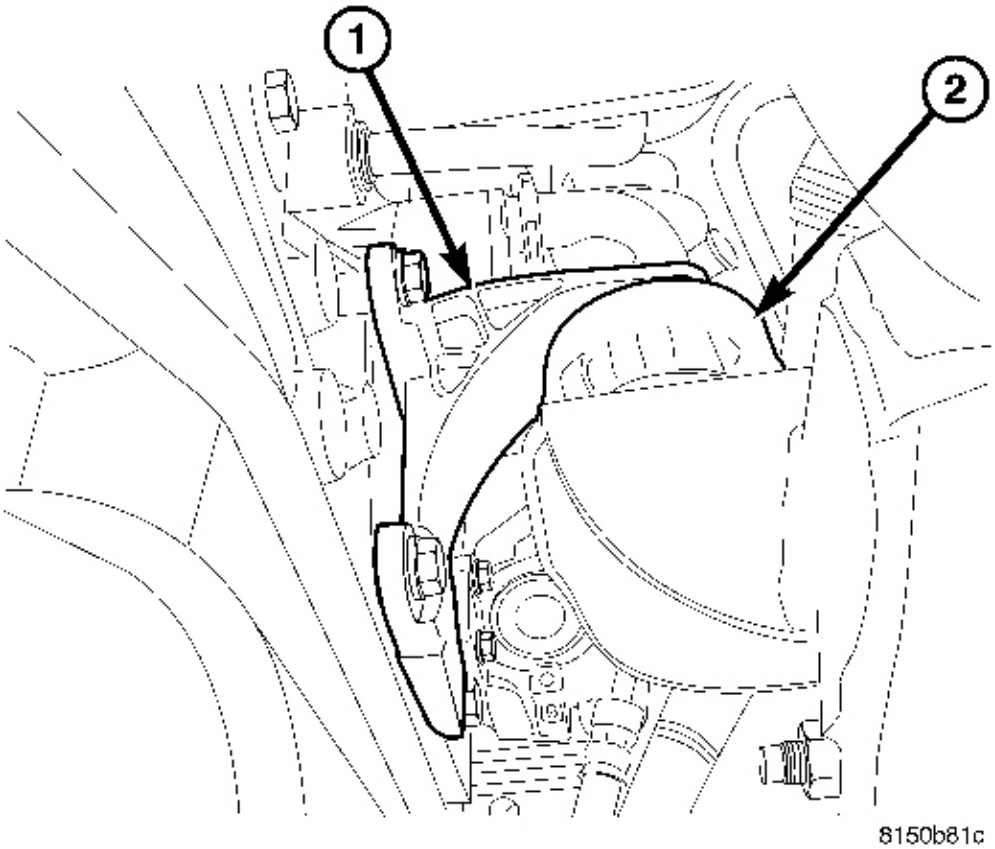

Fig. 324: Right Engine Mount Bracket & Right Engine Mount
Courtesy of CHRYSLER LLC

1 - RIGHT ENGINE MOUNT BRACKET
2 - RIGHT ENGINE MOUNT

1. Position and install the engine mount to engine bolts. Tighten bolts to 58 N.m (42 lbs. ft.).
2. Lower the engine and remove the lifting fixtures.
3. Install the oil level indicator tube.
4. Raise and support the vehicle.
5. Tighten the engine mount through bolts to 110 N.m (81 ft. lbs.).
6. Install the skid plate.
7. Lower the vehicle.
8. Install the rear engine cover bracket and secure the transmission level indicator tube.

9. Install the front engine cover bracket.
10. Fill the engine with the correct viscosity oil to the proper level.
11. Connect the negative battery cable.
12. Install the engine cover.

LUBRICATION

DESCRIPTION

OIL CIRCUIT

An efficient and acoustically optimized chain drive external gear pump is used for supply.

Oil is circulated through a high volume primary oil filter on the engine to one of the oil/water coolers in the "V" of the engine. The oil cooler maintains a maximum oil temperature of 140° C (284°F).

After the oil cooler, the oil is directed into the balance shaft tunnel that at the same time is the primary oil duct of the crankcase. Short passages lead to the crankshaft main bearings. The inlet pressurized piston oil injectors are located directly on the main oil channel and are supplied there.

Front mounted passages supply the cylinder heads. The hydraulically loaded chain tensioner is supplied via the right cylinder head in the direction of travel.

The oil supply and return of the turbo charger is integrated in the cast steel turbo charger carrier.

WARNING: **Any time the oil is drained and filled it is critical to wait 15 minutes before starting the engine.**

WARNING: **Before checking the engine oil level turn the engine off and wait 15 minutes for the oil to return to the oil pan.**

OIL

DESCRIPTION

OIL

Refer to the **LUBRICATION & MAINTENANCE** for oil specifications.

FILTER - OIL

REMOVAL

OIL FILTER

1. Using special tool 9551, unscrew the oil filter cap.
2. Remove clean and inspect cap gasket, replace as necessary.
3. Remove and discard the oil filter.

INSTALLATION

OIL FILTER

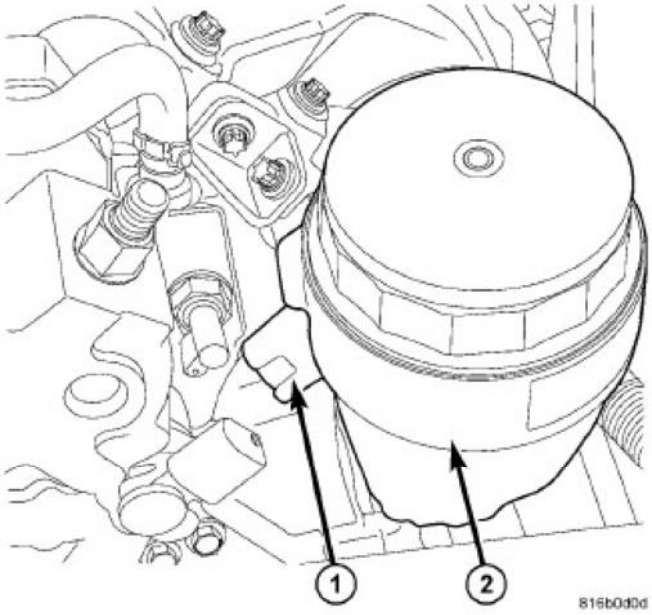

Fig. 325: Oil Filter Housing
Courtesy of CHRYSLER LLC

WARNING: Any time the oil is drained and filled it is critical to wait 15 minutes before starting the engine.

WARNING: Before checking the engine oil level turn the engine off and wait 15 minutes for the oil to return to the oil pan.

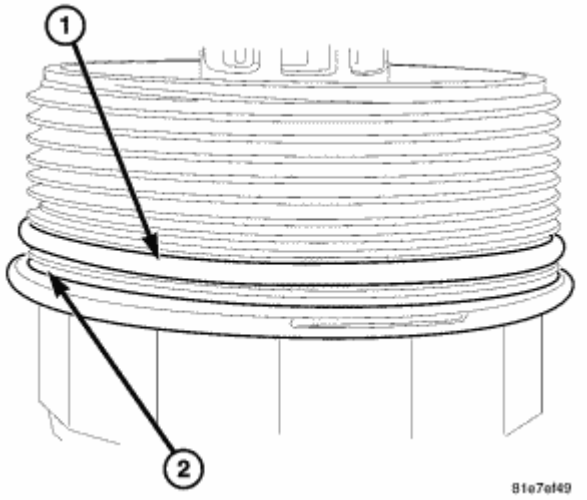

Fig. 326: O-Ring Location
Courtesy of CHRYSLER LLC

1. Inspect oil filter cap gasket, lubricate with clean engine oil. Make sure the oil filter cap O-ring is in the correct location (1).
2. Install oil filter.
3. Screw oil filter cap to housing and tighten to 25 N.m (18 lbs. ft.) using 9551 Oil Filter Socket. Adjust oil level as necessary.

PAN - OIL

REMOVAL

OIL PAN

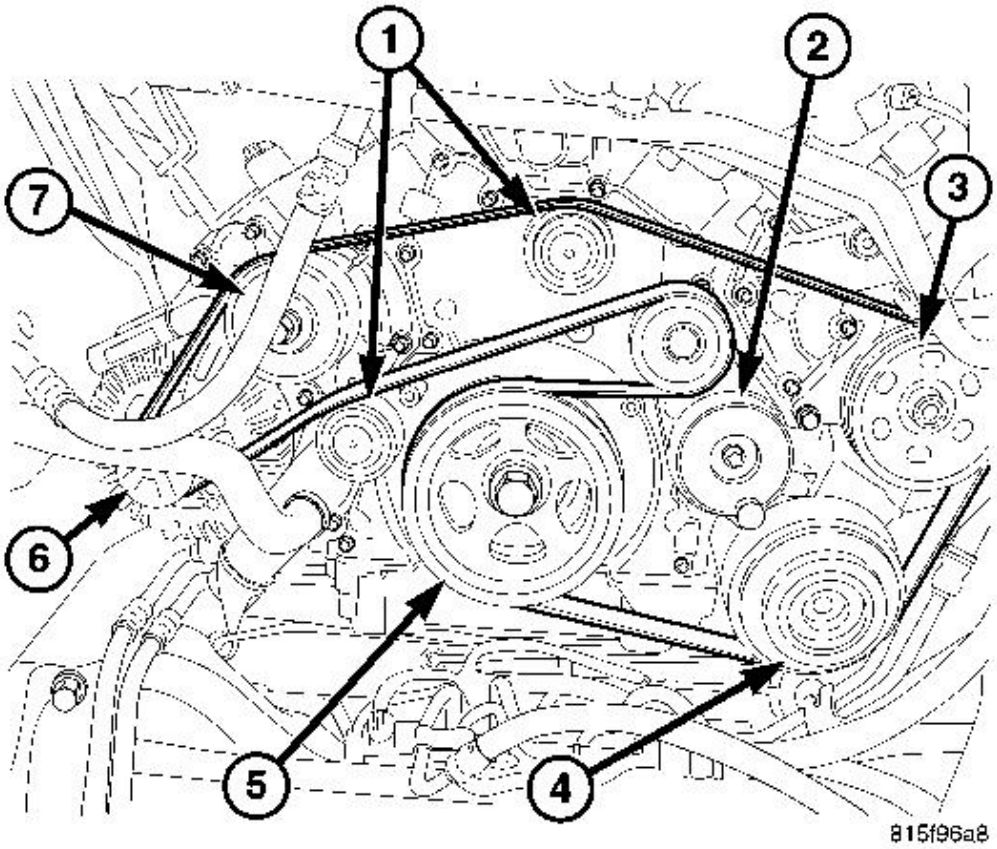

Fig. 327: Accessory Drive Belt Routing
Courtesy of CHRYSLER LLC

1 - IDLER PULLEYS
2 - DRIVE BELT TENSIONER
3 - POWER STEERING PUMP
4 - AIR CONDITIONING COMPRESSOR
5 - VIBRATION DAMPER
6 - GENERATOR
7 - WATER PUMP

1. Disconnect negative battery cable. Refer to **REMOVAL** .
2. Remove the accessory belt.

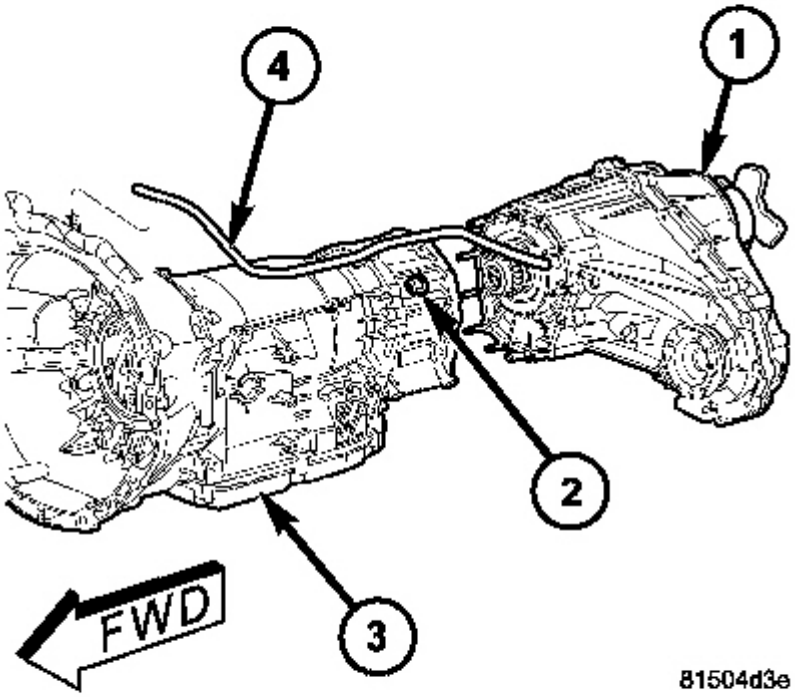

Fig. 328: Removing/Installing Transfer Case
Courtesy of CHRYSLER LLC

3. Remove the transfer case. Refer to **REMOVAL** for NV140. Refer to **REMOVAL** for NV146. Refer to **REMOVAL** for NV245.
4. Remove the transmission. Refer to **REMOVAL** .

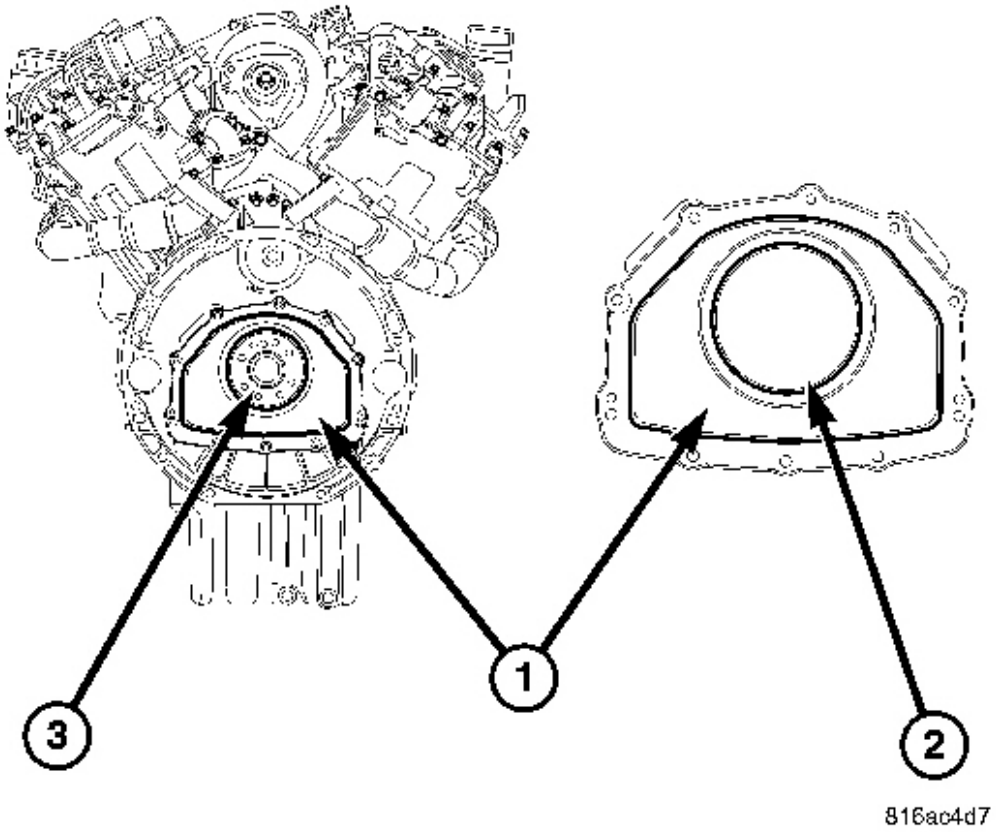

Fig. 329: Rear Main Seal, Rear Main Seal Carrier & Crankshaft
Courtesy of CHRYSLER LLC

5. Remove the flex plate. See **REMOVAL**.

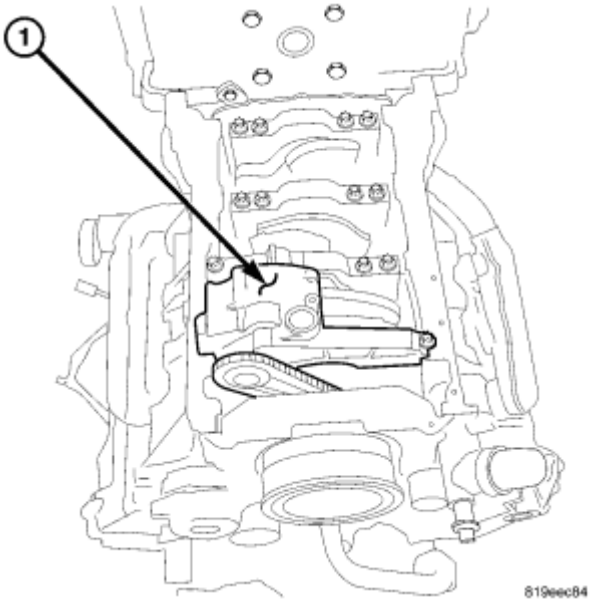

Fig. 330: Oil Pump
Courtesy of CHRYSLER LLC

6. Remove the 5 bolts on the bottom of the rear main seal carrier.
7. Remove oil pan bolts.
8. Remove the oil pan.

INSTALLATION

OIL PAN

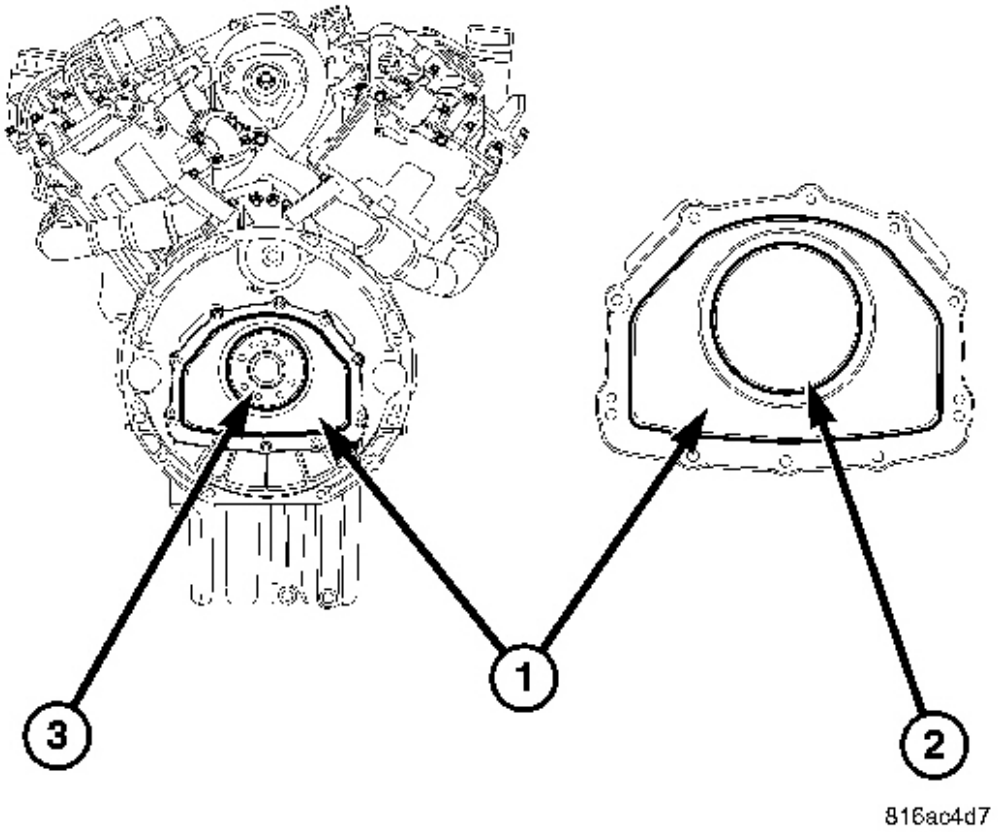

Fig. 331: Rear Main Seal, Rear Main Seal Carrier & Crankshaft
Courtesy of CHRYSLER LLC

NOTE: Sealing surfaces must be free of a gasket material and oil residue.

NOTE: If installing a new oil pan, exchange the oil temperature sensor and the oil level sensor.

1. Install the bolts holding the rear main seal carrier (1) to the oil pan. Torque the bolts to 9 N.m (7 ft. lbs.).

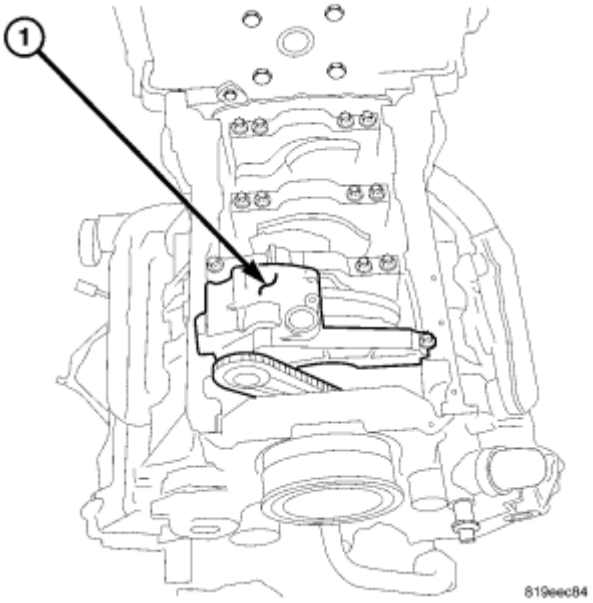

Fig. 332: Oil Pump
Courtesy of CHRYSLER LLC

2. Push the oil pan against the transmission and tighten transmission to oil pan bolts first, including the rear main seal carrier bolts.
3. Tighten the oil pan bolts to 12 N.m (106 lbs.in.). Tighten the transmission to oil pan bolts to 20 N.m (177 in. lbs.).

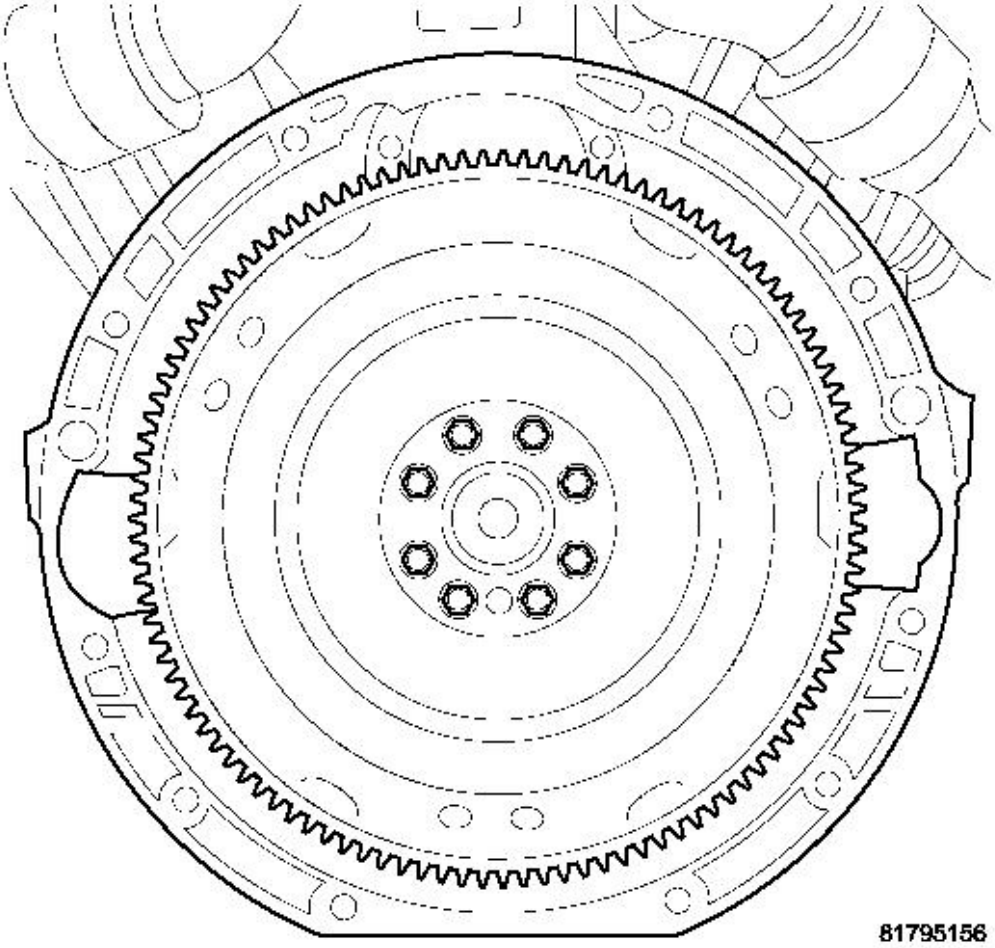

Fig. 333: Flex Plate
Courtesy of CHRYSLER LLC

4. Install the flex plate.
5. Install the transmission.
6. Lower the vehicle and install the oil level indicator tube.
7. Fill the oil pan to the appropriate level with the correct viscosity engine oil.
8. Connect the negative battery cable.
9. Start the engine, allow to warm.

WARNING: **Any time the oil is drained and filled it is very important to wait 15 minutes before starting the engine.**

WARNING: Before checking the engine oil level turn the engine off and wait 15 minutes for the oil to return to the oil pan.

10. Turn engine off and inspect for leaks.
11. Install the skid plate.

VALVE - OIL PRESSURE RELIEF

DESCRIPTION

OIL PRESSURE RELIEF VALVE

The oil pressure relief valve is integral to the oil pump and is not serviceable.

OIL PRESSURE SENDING UNIT

DESCRIPTION

OIL PRESSURE SENDING UNIT

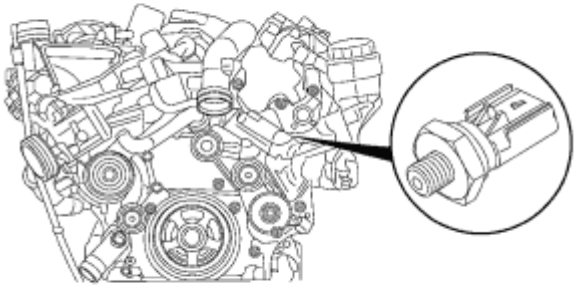

Fig. 334: Oil Pressure Sensor
Courtesy of CHRYSLER LLC

The engine oil pressure sensor is mounted on the front of the oil filter housing. The sensor provides an output voltage to the ECM that corresponds to the engine oil pressure. Under certain operating conditions, for example low oil pressure, it may be necessary for the ECM to increase the engine idle speed to ensue adequate engine lubrication.

The engine oil pressure sensor is a three wire sensor with a threaded pressure port. The pressure port is mounted

to the oil filter housing through an access hole. An aluminum seal ring seals the engine oil pressure sensor to the oil filter housing.

OPERATION

OIL PRESSURE SENSOR

The engine oil pressure sensor receives a 5- volt reference from the ECM. The sensor ground is also provided by the ECM. The sensor output voltage varies from 0.5 to 4.5 volts depending on engine oil pressure.

REMOVAL

OIL PRESSURE SENSOR

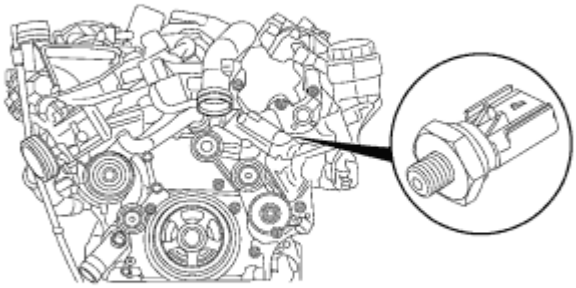

Fig. 335: Oil Pressure Sensor
Courtesy of CHRYSLER LLC

1. Open hood and disconnect negative battery cable.
2. Disconnect engine oil pressure sensor connector.
3. Remove engine oil pressure sensor from the engine.

INSTALLATION

OIL PRESSURE SENSOR

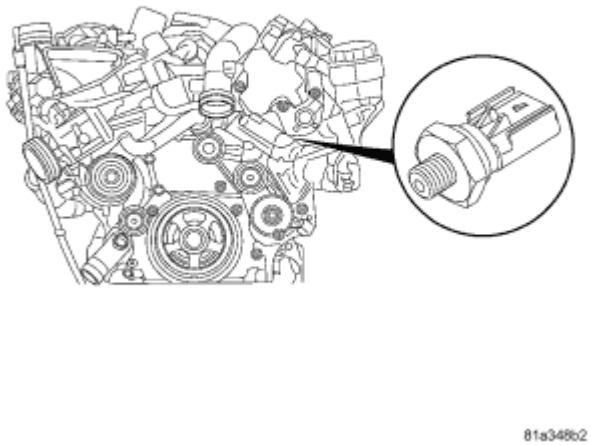

Fig. 336: Oil Pressure Sensor
Courtesy of CHRYSLER LLC

1. Install the engine oil pressure sensor to the engine. Torque sensor to 15 N.m (11 ft. lbs.).
2. Connect engine oil pressure sensor electrical connector to the sensor.
3. Add engine oil and check engine oil level as needed.
4. Connect the negative battery cable.
5. Start vehicle and inspect for leaks.

PUMP - OIL

REMOVAL

OIL PUMP

1. Remove oil pan. See **REMOVAL**.

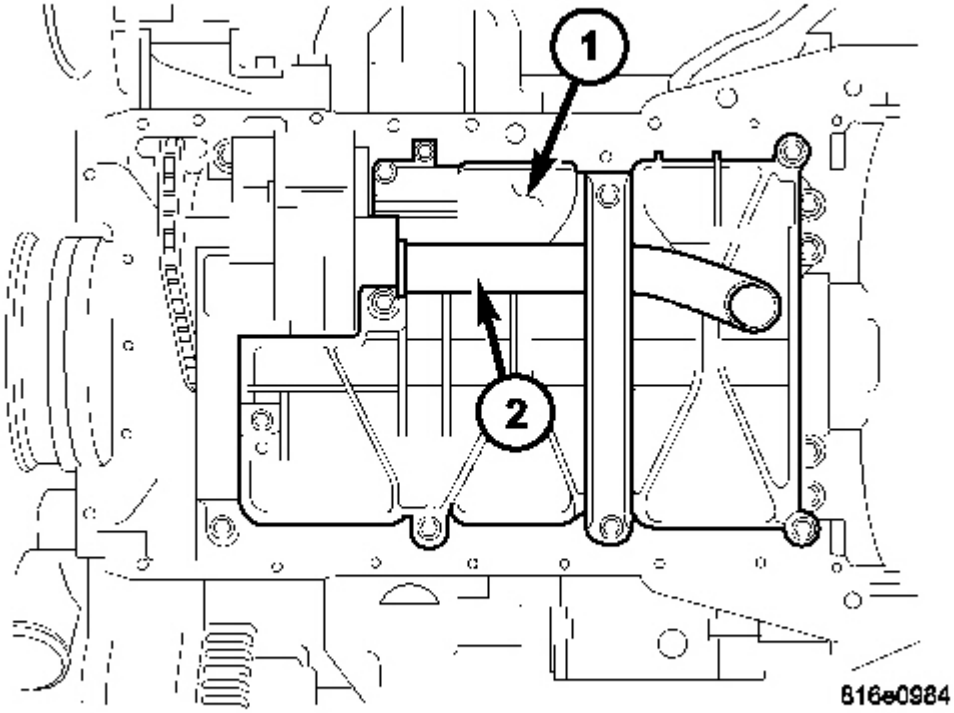

Fig. 337: Timing Chain Cover & Front Crankshaft Seal
Courtesy of CHRYSLER LLC

2. Remove fasteners at the oil pump cover.

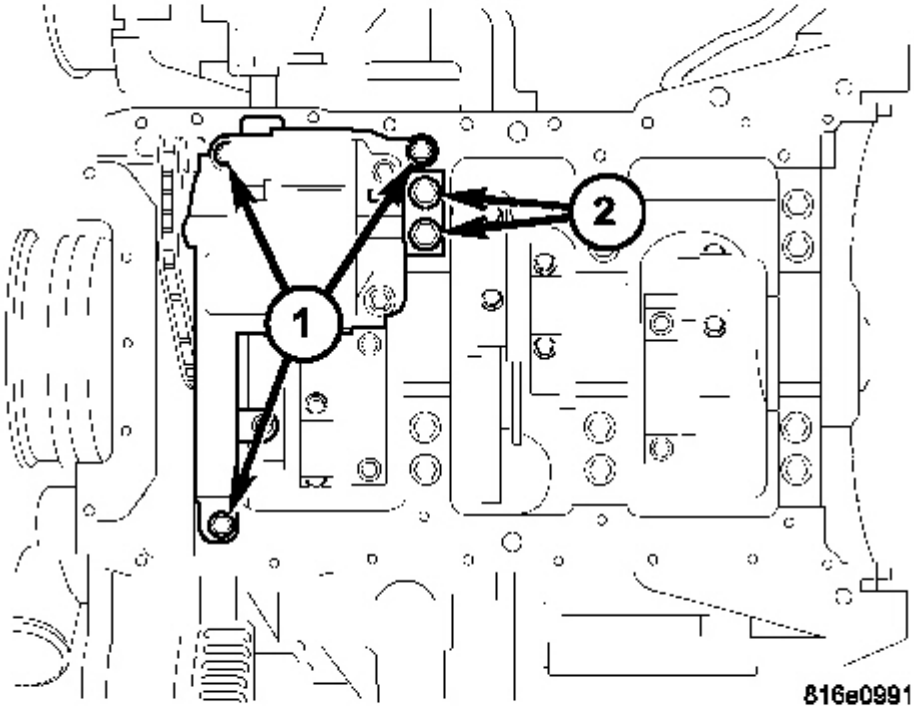

Fig. 338: Oil Pump Fasteners
Courtesy of CHRYSLER LLC

3. Remove oil pump fasteners (1).
4. Remove oil pump from the crankcase.

OIL PUMP PICKUP TUBE

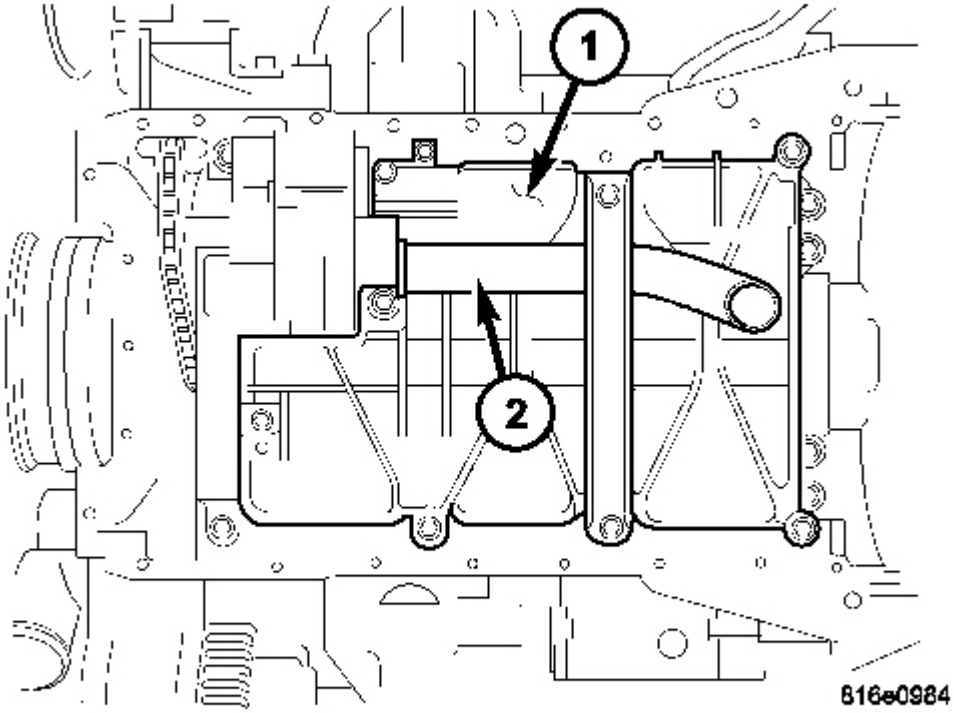

Fig. 339: Timing Chain Cover & Front Crankshaft Seal
Courtesy of CHRYSLER LLC

1. Disconnect negative battery cable.
2. Raise vehicle on hoist.
3. Remove oil pan. See **REMOVAL**.
4. Remove oil pump pickup tube retaining bolt and pull pickup tube from engine block. Discard O-rings.

INSTALLATION

OIL PUMP

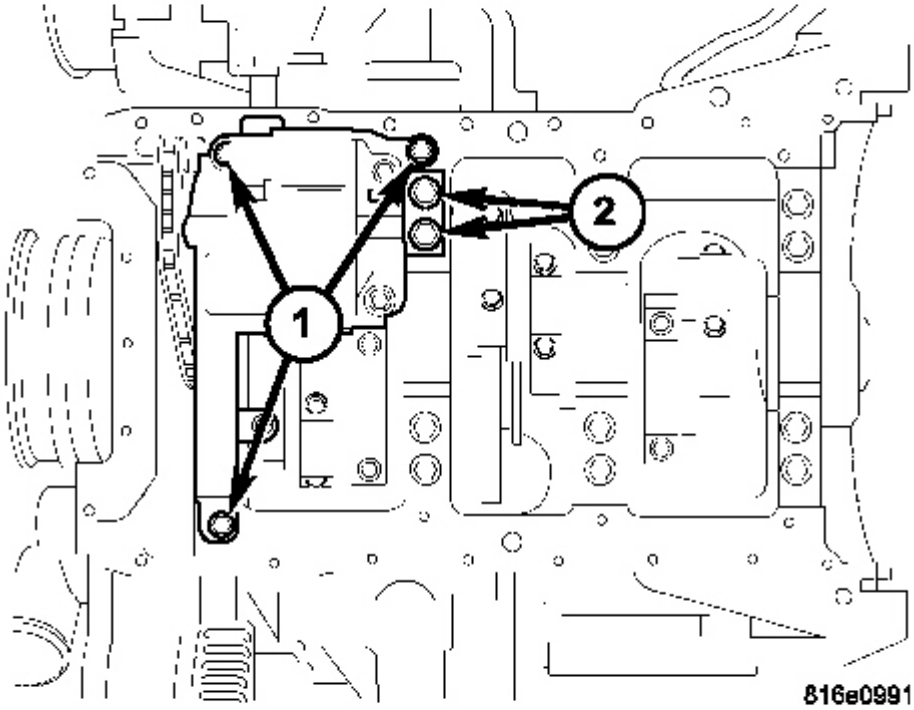

Fig. 340: Oil Pump Fasteners
Courtesy of CHRYSLER LLC

1. Clean the strainer of the oil pump and replace sealing ring. Fill oil pump with engine oil so that oil is delivered when first starting engine.
2. Install the oil pump.

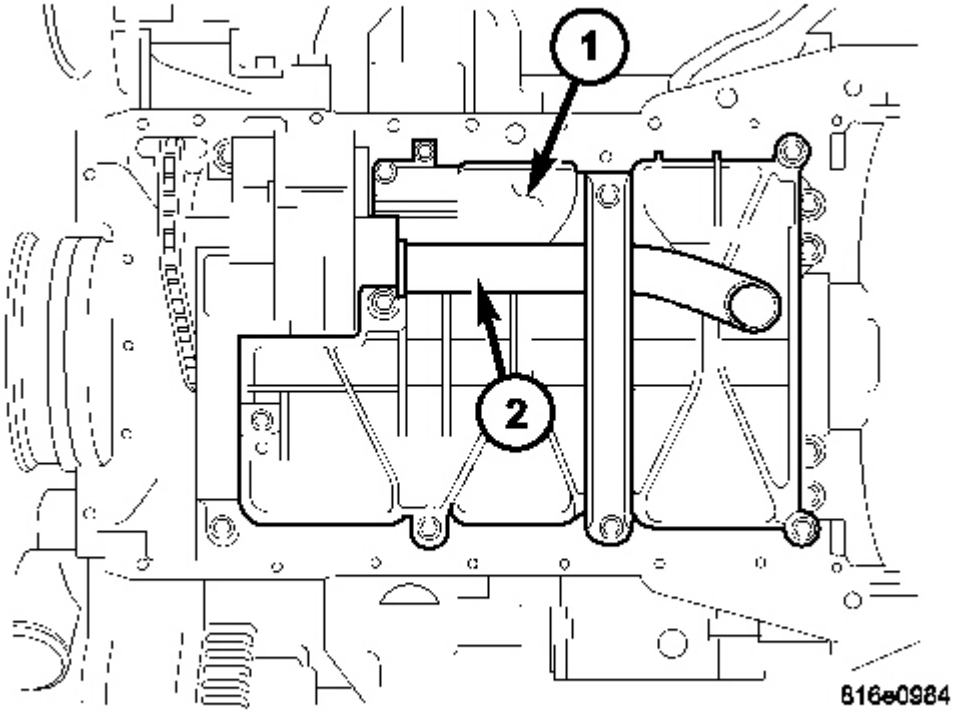

Fig. 341: Timing Chain Cover & Front Crankshaft Seal
Courtesy of CHRYSLER LLC

3. Install fastener for oil pump. Torque fastener to 19 N.m (14 ft. lbs.).
4. Install fastener for oil pump cover (1) with oil pipe (2) to oil pump. Torque fastener to 12 N.m (9 ft. lbs.).
5. Install bracket to the oil pump. Torque fastener to 9 N.m (7 ft. lbs.).

WARNING: **Any time the oil is drained and filled it is critical to wait 15 minutes before starting the engine.**

WARNING: **Before checking the engine oil level turn the engine off and wait 15 minutes for the oil to return to the oil pan.**

6. Install oil pan. See **INSTALLATION**.

OIL PUMP PICKUP TUBE

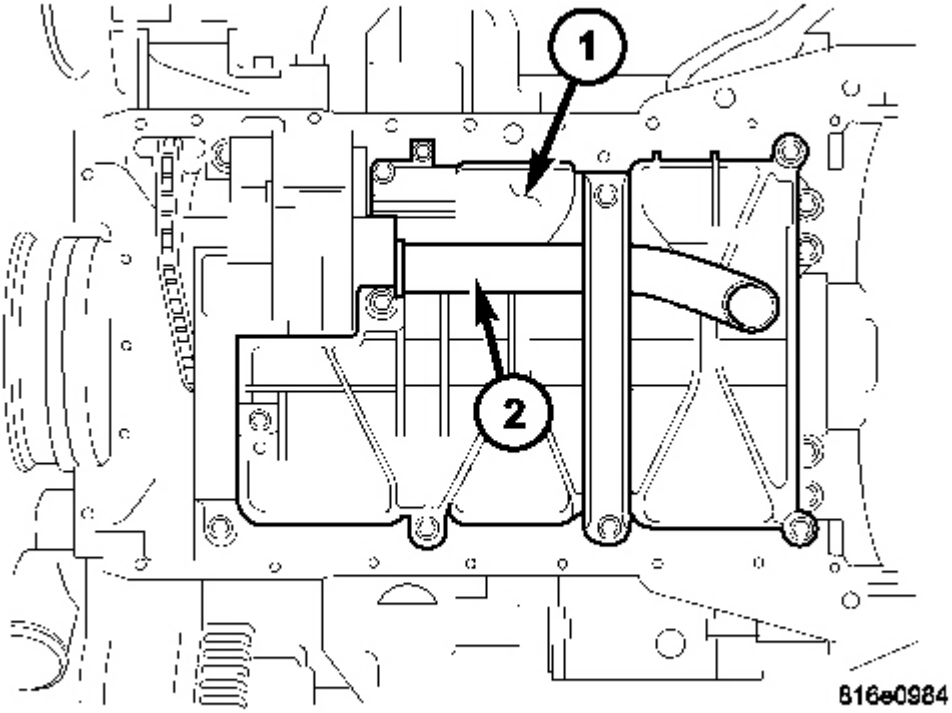

Fig. 342: Timing Chain Cover & Front Crankshaft Seal
Courtesy of CHRYSLER LLC

1. Lubricate o-rings on oil pump pickup tube with engine oil.
2. Install pickup tube in engine block and install retaining bolt. Torque bolt to 32.4 N.m. (24 ft.lbs.).
3. Install oil pan. See **INSTALLATION**.
4. Refill engine oil to proper level.
5. Connect negative battery cable.

JET - OIL

DESCRIPTION

OIL JET

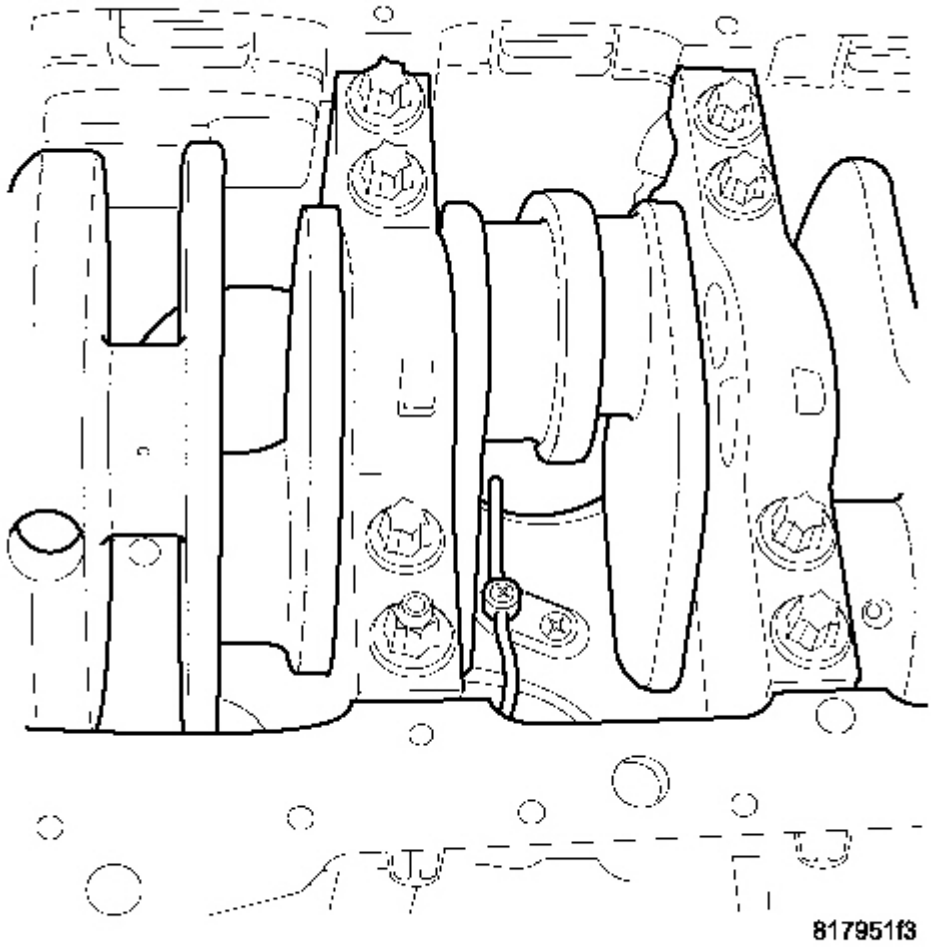

Fig. 343: Identifying Crankshaft Main Bearing Caps, Crankshaft, Thrust Washer & Crankshaft Bearings
Courtesy of CHRYSLER LLC

Three dual-nozzle oil jets are bolted to the cylinder block underneath the main oil gallery. The jets connect with an oil-tight fit to the main gallery through lubrication passages. Each oil jet helps cool two opposite pistons. Proper oil jet alignment is important. Each nozzle is designed to alternatively spray oil through both cooling galleries within the piston. The oil spray is aimed at one of the cooling galleries as the piston approaches TDC. As the piston approaches BDC, the oil spray is aimed at the adjacent cooling gallery.

REMOVAL

OIL JET

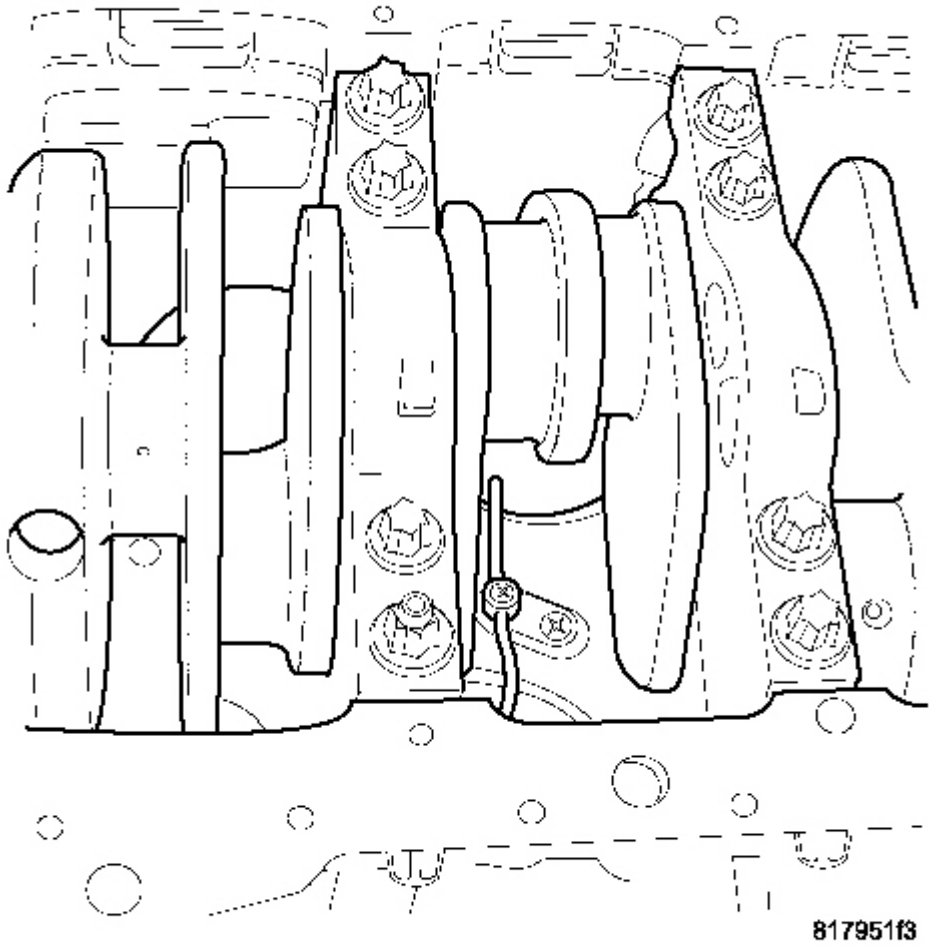

Fig. 344: Identifying Crankshaft Main Bearing Caps, Crankshaft, Thrust Washer & Crankshaft Bearings
Courtesy of CHRYSLER LLC

CAUTION: Use caution when removing and installing oil jets. Damage to oil jet nozzle could cause severe engine damage. Care must be taken not to damage the crankshaft tone ring when removing cylinder number four oil jet.

1. Disconnect negative battery cable.
2. Raise vehicle on hoist.
3. Remove oil pan.
4. Remove oil jet retaining bolt and remove oil jet from engine block.

INSTALLATION

OIL JET

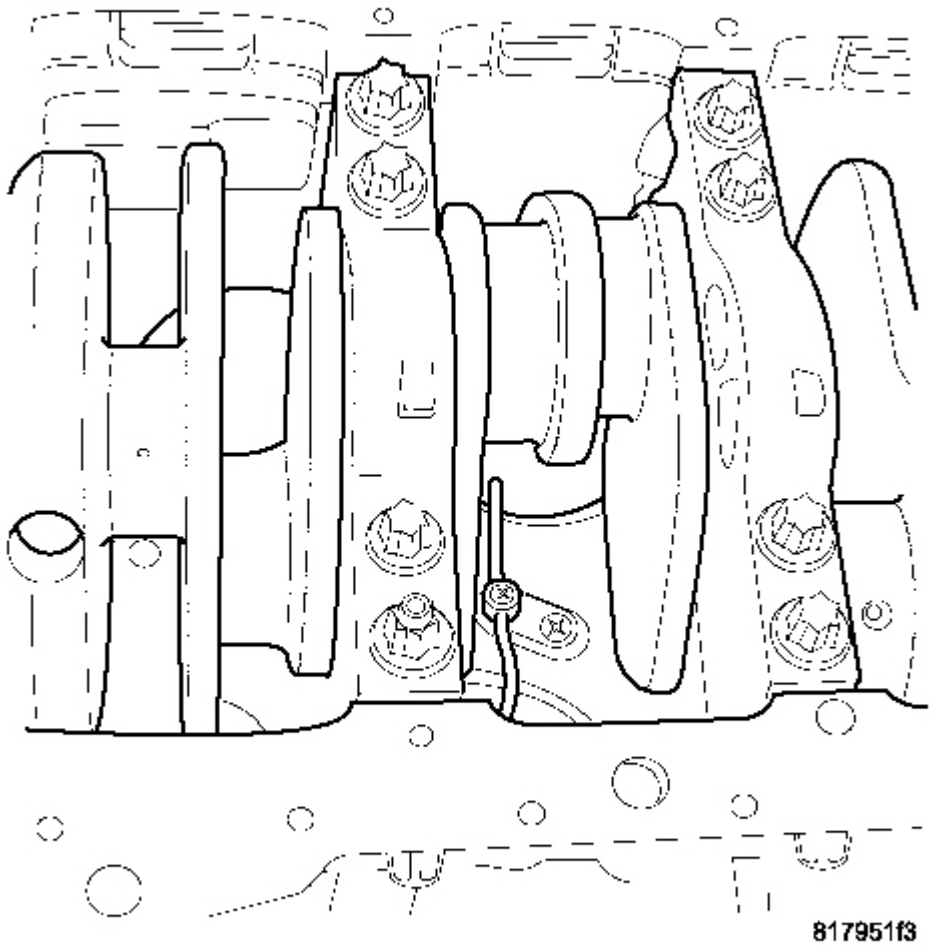

Fig. 345: Identifying Crankshaft Main Bearing Caps, Crankshaft, Thrust Washer & Crankshaft Bearings
Courtesy of CHRYSLER LLC

CAUTION: Use caution when removing and installing oil jets. Damage to oil jet nozzle could cause severe engine damage.

1. Install oil jet in engine block

2. Install oil jet retaining bolt. Torque bolt to 11N.m.(96 in.lbs.).
3. Install oil pan.
4. Fill engine oil to proper level.
5. Connect negative battery cable.

PCV

DESCRIPTION

PCV

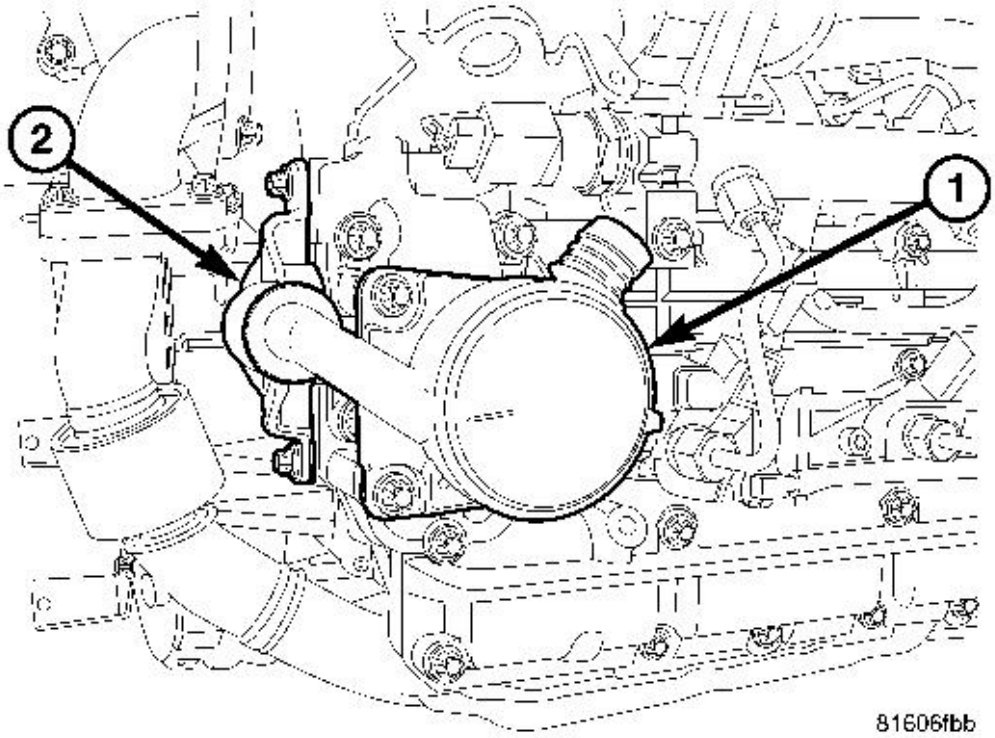

Fig. 346: Oil Separator Housing & Adapter
Courtesy of CHRYSLER LLC

1 - OIL SEPARATOR HOUSING 2 - OIL SEPARATOR HOUSING Adapter

Located on the rear of the right cylinder head cover is a positive crankcase ventilation (PCV) valve (1). Internal

engine vapor is captured, the solid particulates are separated by a diffuser located on the right exhaust camshaft, and the vapor is reused during the combustion process.

REMOVAL

PCV

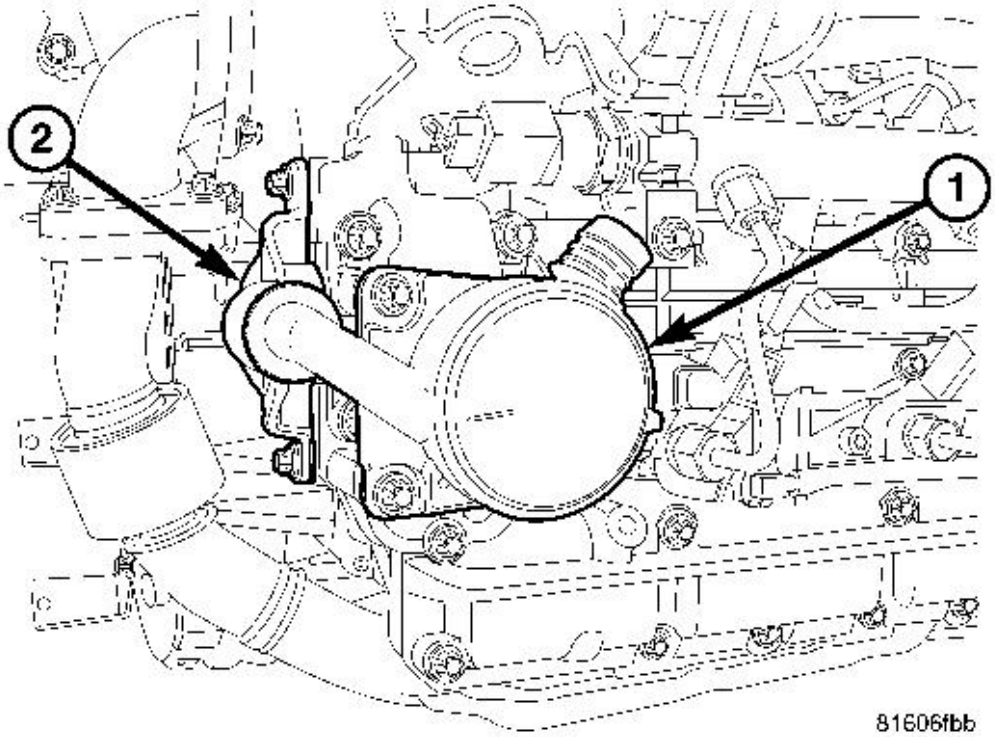

Fig. 347: Oil Separator Housing & Adapter
Courtesy of CHRYSLER LLC

1 - OIL SEPARATOR HOUSING
2 - OIL SEPARATOR HOUSING Adapter

1. Remove the engine cover.

NOTE: Inspect the oil drain back access hole in the cylinder head cover to assure that it is free of obstruction.

2. Remove the oil separator fasteners and oil separator.

INSTALLATION

PCV

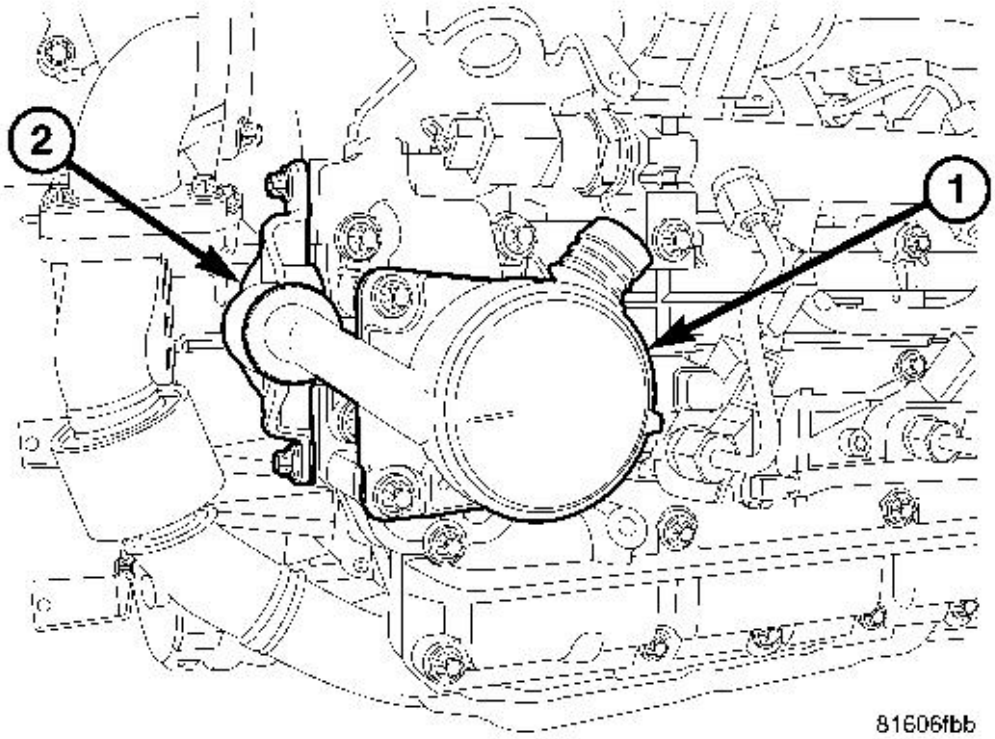

Fig. 348: Oil Separator Housing & Adapter
Courtesy of CHRYSLER LLC

1 - OIL SEPARATOR HOUSING
2 - OIL SEPARATOR HOUSING Adapter

NOTE: **Inspect the oil drain back access hole in the cylinder head cover to assure that it is free of obstruction.**

1. Lubricate the Positive Crankcase Ventilation (PCV) o-rings with clean engine oil.
2. Carefully position and push down on the PCV to seat.
3. Install the PCV retaining fasteners. Tighten fasteners to 10.8 N.m (96 in. lbs.).

COOLER - OIL

DESCRIPTION

OIL COOLER

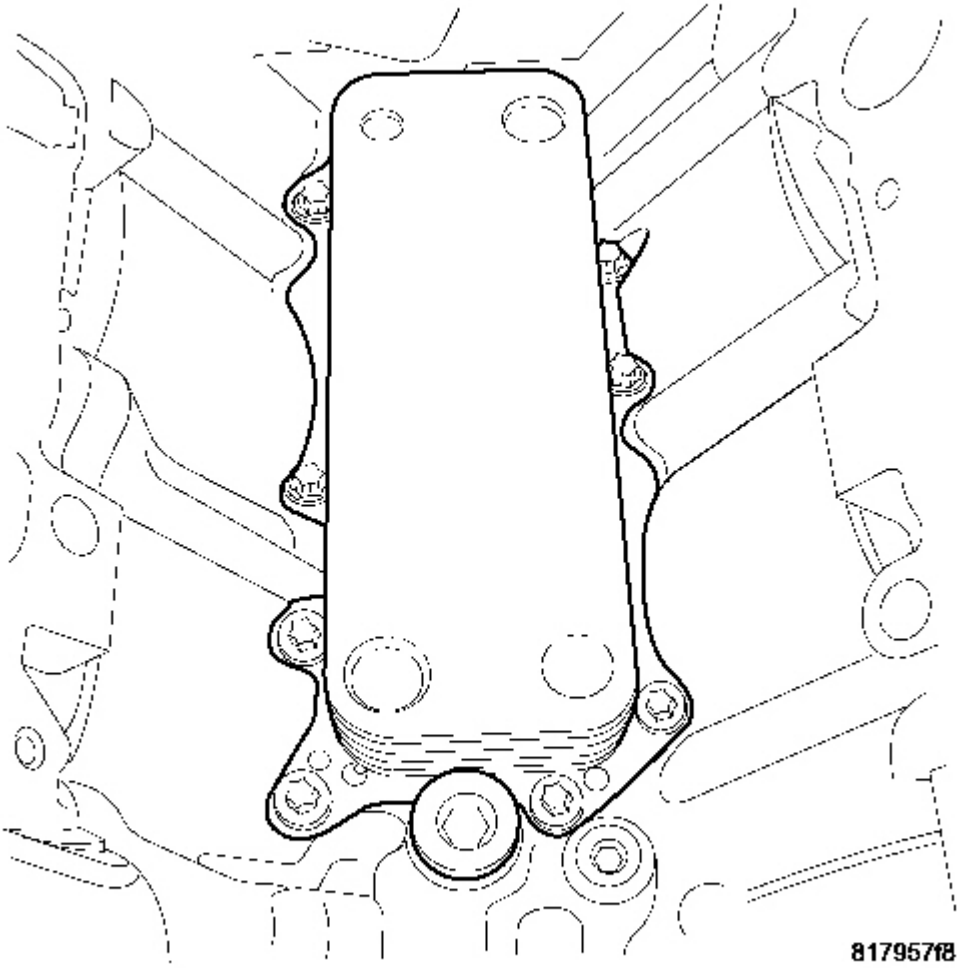

Fig. 349: Heat Exchanger
Courtesy of CHRYSLER LLC

Engine coolant is used to cool the oil. A plate-style external heat exchanger is located in the valley of the cylinder block, below the EGR cooler. Two gaskets seal the oil cooler to the cylinder block. Replace the gaskets whenever the oil cooler is removed or replaced. The oil is fed to the oil cooler through the oil filter. With a maximum cooling power of 15 kW (51,200 BTU), the oil cooler ensures the maximum oil temperature does not exceed 135°C (275°F). After the oil cooler, the oil is fed to the balance shaft tunnel, which is simultaneously the main oil gallery of the cylinder block.

REMOVAL

OIL COOLER

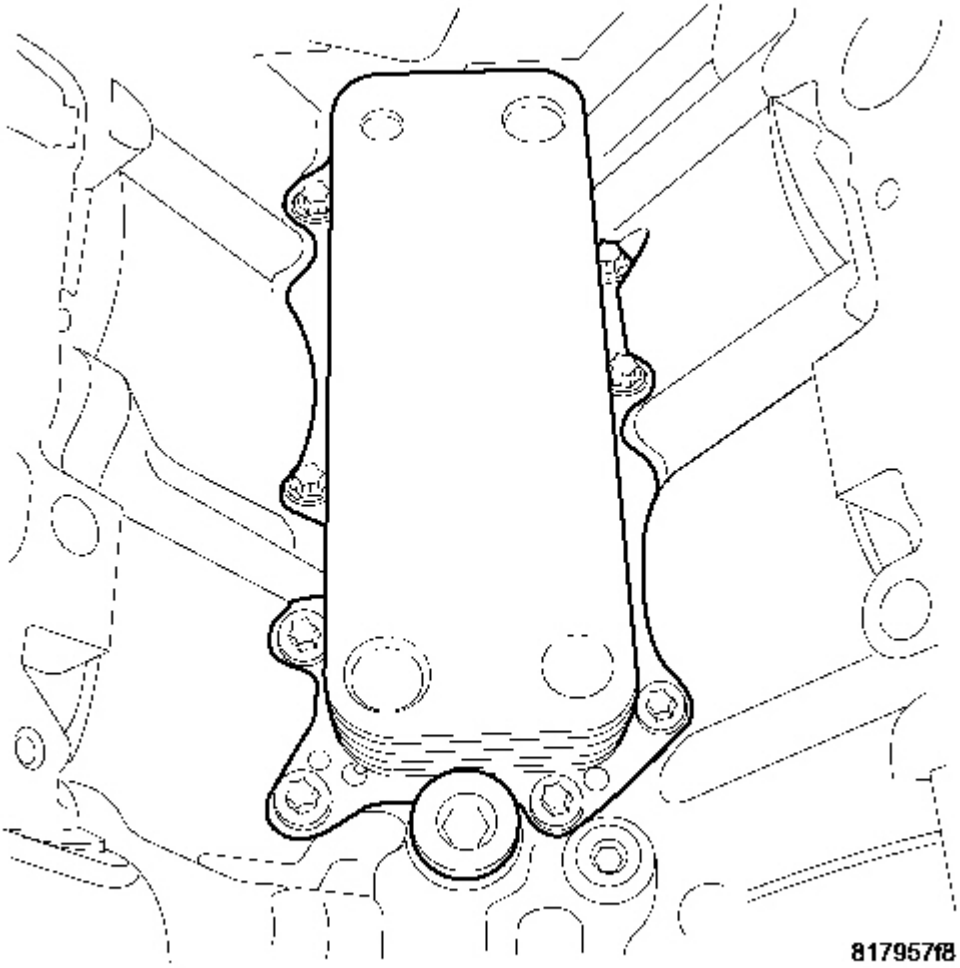

Fig. 350: Heat Exchanger
Courtesy of CHRYSLER LLC

1. Disconnect the negative battery cable.
2. Drain the cooling system.
3. Remove the air cleaner assembly. See **REMOVAL**.
4. Remove the coolant reservoir and hoses.
5. Remove the charge air cooler hose between turbocharger and cooler.

6. Remove the turbocharger. Refer to **REMOVAL** .
7. Remove the lower radiator hose at the water pump housing assembly.
8. Remove the water pump housing assembly.
9. Remove the engine oil cooler.

INSTALLATION

OIL COOLER

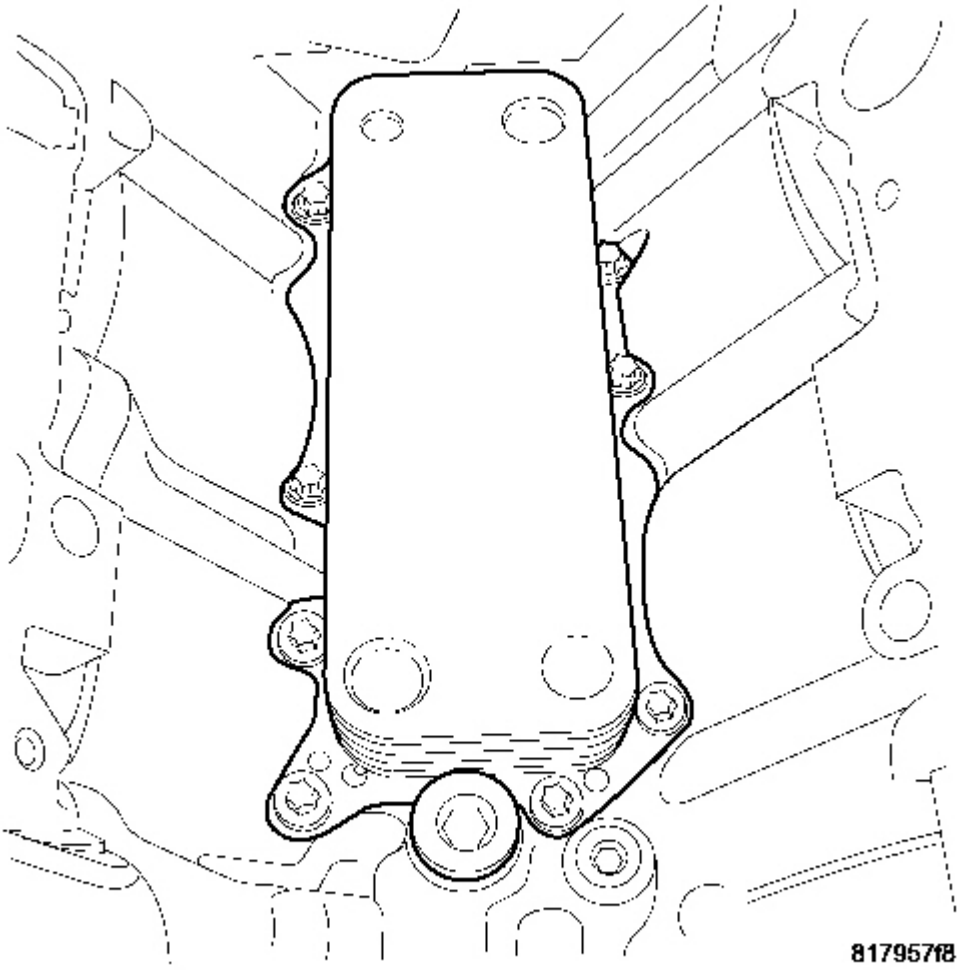

Fig. 351: Heat Exchanger
Courtesy of CHRYSLER LLC

1. Clean all engine mating surfaces.
2. Position the oil cooler and gasket. Install the fasteners and tighten to 10.8 N.m (96 in. lbs.).
3. Install the water pump housing assembly with new gasket. Tighten fasteners to 24.5 N.m (18 ft. lbs.).
4. Install the oil cooler coolant hose.
5. Install the power steering reservoir.
6. Install heater hoses at housing.
7. Install lower radiator hose at housing.
8. Install the charge air hose.
9. Install coolant reservoir and hoses.
10. Install the turbocharger. Refer to **INSTALLATION** .
11. Install air cleaner assembly. See **INSTALLATION**.
12. Fill the coolant system
13. Connect the negative battery cable
14. Start engine, run until warm, turn the engine off, and inspect for leaks.

OIL LEVEL INDICATOR TUBE

REMOVAL

REMOVAL

1. Remove the generator bolts and position the generator aside.
2. Remove the upper oil level indicator tube bolt.
3. Remove the lower oil level indicator tube bolt.
4. Remove the oil level indicator tube.

INSTALLATION

INSTALLATION

1. Install the oil level indicator tube.
2. Install the lower oil level indicator tube bolt.
3. Install the upper oil level indicator tube bolt.
4. Position the generator and install the generator bolts.

MANIFOLDS

MANIFOLD - INTAKE

DESCRIPTION

INTAKE MANIFOLD

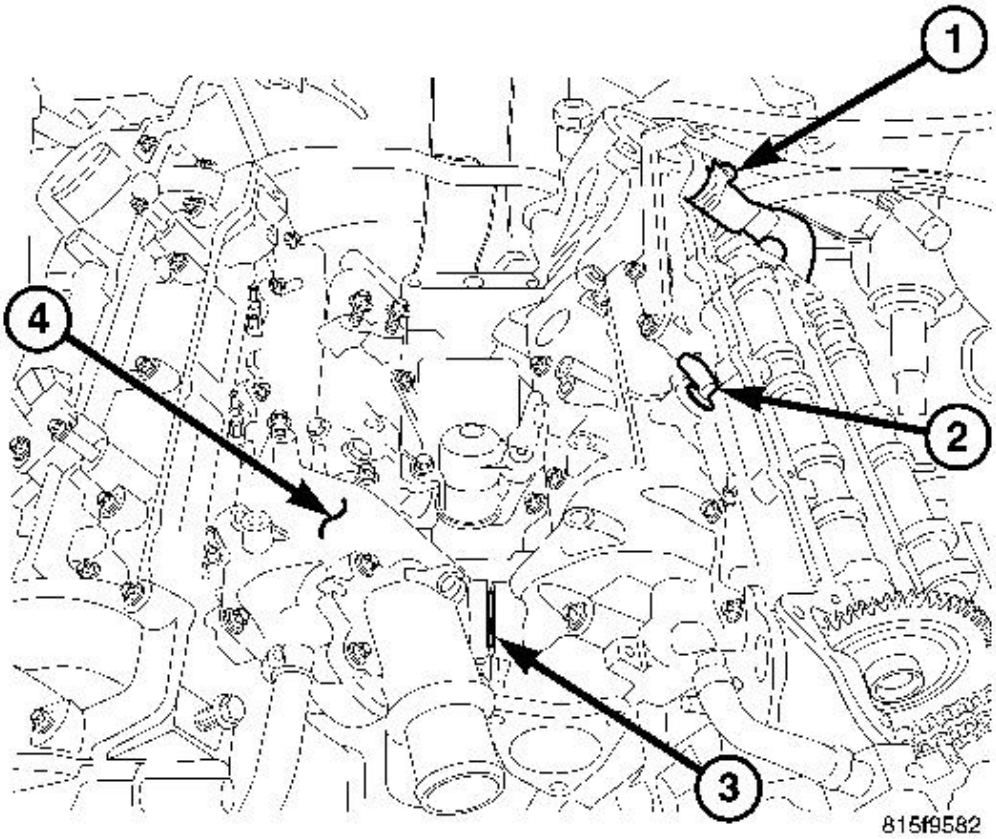

Fig. 352: EGR Coolant Pipe, Coolant Temperature Sensor, Intake Coolant Passage & Intake Manifold
Courtesy of CHRYSLER LLC

1 - EGR COOLANT PIPE
2 - COOLANT TEMPERATURE SENSOR
3 - INTAKE COOLANT PASSAGE
4 - INTAKE MANIFOLD

The aluminum intake manifold is a two piece design joined by a frontal cross coolant passage. Incorporated into the intake manifold assemblies are swirl and charge air channels. The swirl channels have blades that are electronically controlled by PWM signals from the ECM via a swirl valve actuator. In their normal resting position the swirl valves are open. Charge air and cooled EGR exhaust gasses are combined within the intake manifold. The swirl valve assembly assists in the mixing of these inlet airs within the cylinder. The swirl valves themselves are not serviceable separately, should a failure occur, the intake manifold must be replaced.

REMOVAL

INTAKE MANIFOLD

1. Disconnect negative battery cable. Refer to **REMOVAL** .
2. Remove the engine cover. See **REMOVAL**.
3. Drain the cooling system.
4. Remove the coolant reservoir an position aside.
5. Remove the strut tower support.

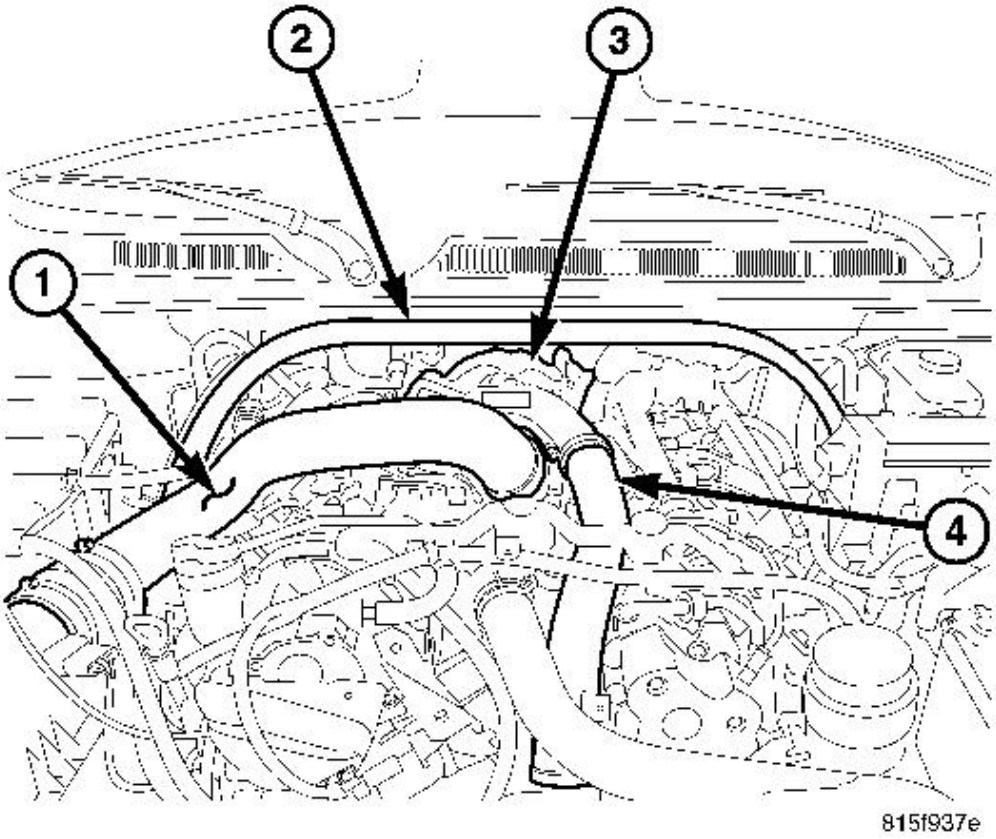

Fig. 353: Strut Tower Support, Air Cleaner Outlet Tube, Turbocharger & Charge Air Inlet Tube
Courtesy of CHRYSLER LLC

1 - AIR CLEANER OUTLET TUBE
2 - STRUT TOWER SUPPORT
3 - TURBOCHARGER
4 - CHARGE AIR INLET TUBE

6. Remove the air cleaner housing cover and air inlet tube (1).
7. Remove the charge air outlet tube (4).
8. Remove the right rear engine cover bracket and disconnect the transmission oil level indicator tube retaining bolt.
9. Remove the turbo charger. Refer to **REMOVAL** .

CAUTION: Observe the position of the turbocharger oil passage housing and gasket. Failure to properly position the gasket during assembly will result in immediate turbocharger failure after assembly.

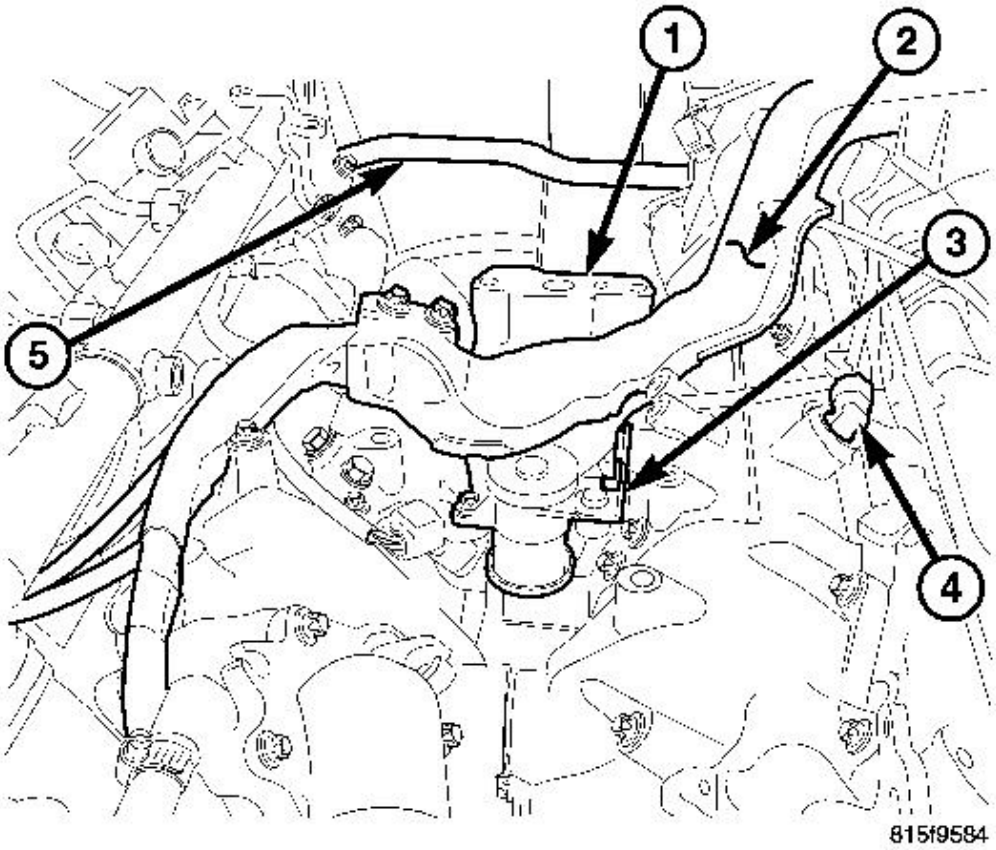

Fig. 354: Turbocharger Oil Housing Adapter, Main Engine Wiring Harness, Swirl Valve Actuator & Coolant Temperature Sensor
Courtesy of CHRYSLER LLC

1 - TURBOCHARGER OIL HOUSING Adapter
2 - MAIN ENGINE WIRING HARNESS
3 - SWIRL VALVE ACTUATOR
4 - COOLANT TEMPERATURE SENSOR

10. Remove the turbocharger oil housing Adapter (1) and gasket.
11. Remove the EGR tube to the left cylinder head.
12. Disconnect the coolant hose at the EGR housing.
13. Disconnect the EGR and EGR temperature sensor wiring harness connectors.
14. Disconnect the swirl valve module wiring harness connector.
15. Remove the left fuel rail and high pressure lines.
16. Remove the right fuel rail and high pressure lines.
17. Disconnect the fuel return hoses at the injectors.
18. Disconnect the return fuel hose harness and position aside.
19. Remove fuel rail transfer line.
20. Remove the fuel filter assembly.
21. Remove the fuel filter supply and return pipe harness and position aside.
22. Remove the glow plug module.
23. Remove the EGR air control valve assembly.

CAUTION: Do Not rest the intake manifold on the swirl valve actuator. Care must be taken when handling the swirl valve assembly.

24. Remove the intake manifold and gasket.

INSTALLATION

EXHAUST MANIFOLD

NOTE: Before installation, clean cylinder heads and intake manifold surfaces.

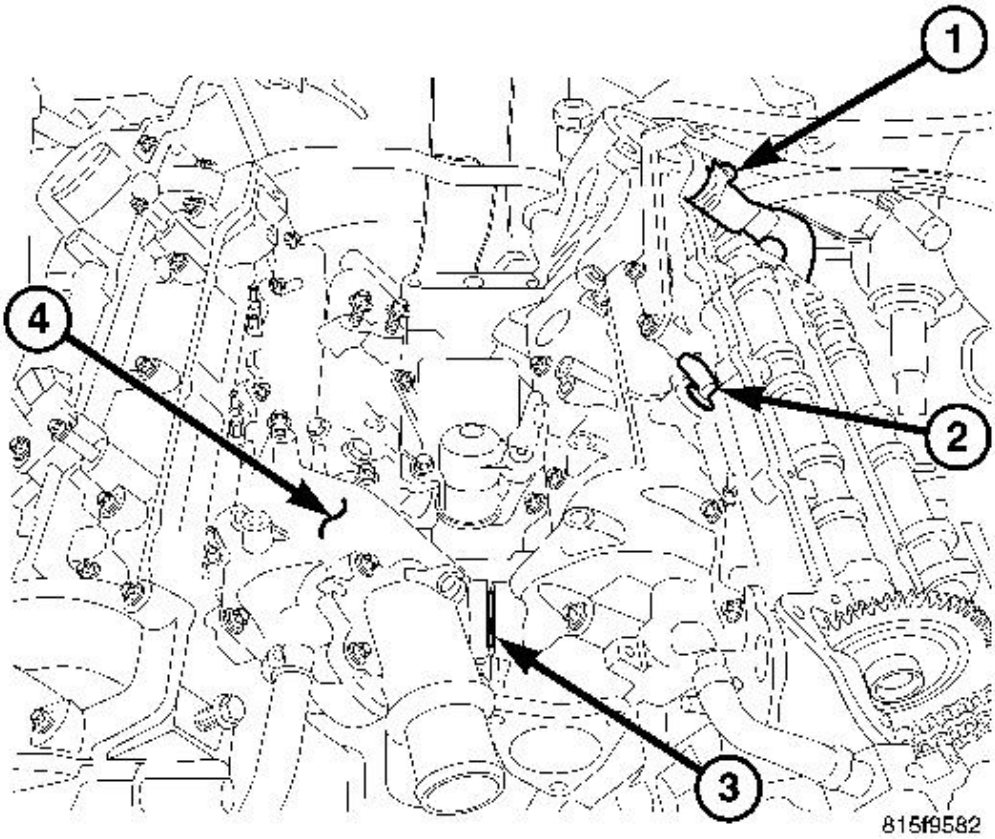

Fig. 355: EGR Coolant Pipe, Coolant Temperature Sensor, Intake Coolant Passage & Intake Manifold
Courtesy of CHRYSLER LLC

1 - EGR COOLANT PIPE
2 - COOLANT TEMPERATURE SENSOR
3 - INTAKE COOLANT PASSAGE
4 - INTAKE MANIFOLD

1. Properly position the intake manifold gasket and install the intake manifold.

CAUTION: The right intake manifold upper thermostat housing bolts should be tightened to 8.4 N.m (74 in. lbs.).

2. Tighten bolts to 16 N.m (142 in. lbs.), starting in the middle and tightening in a cross pattern outward until reaching the upper thermostat bolts on the right front manifold.

3. Tighten the upper thermostat bolts on the right cylinder head to 8.4 N.m (74 in.lbs.).

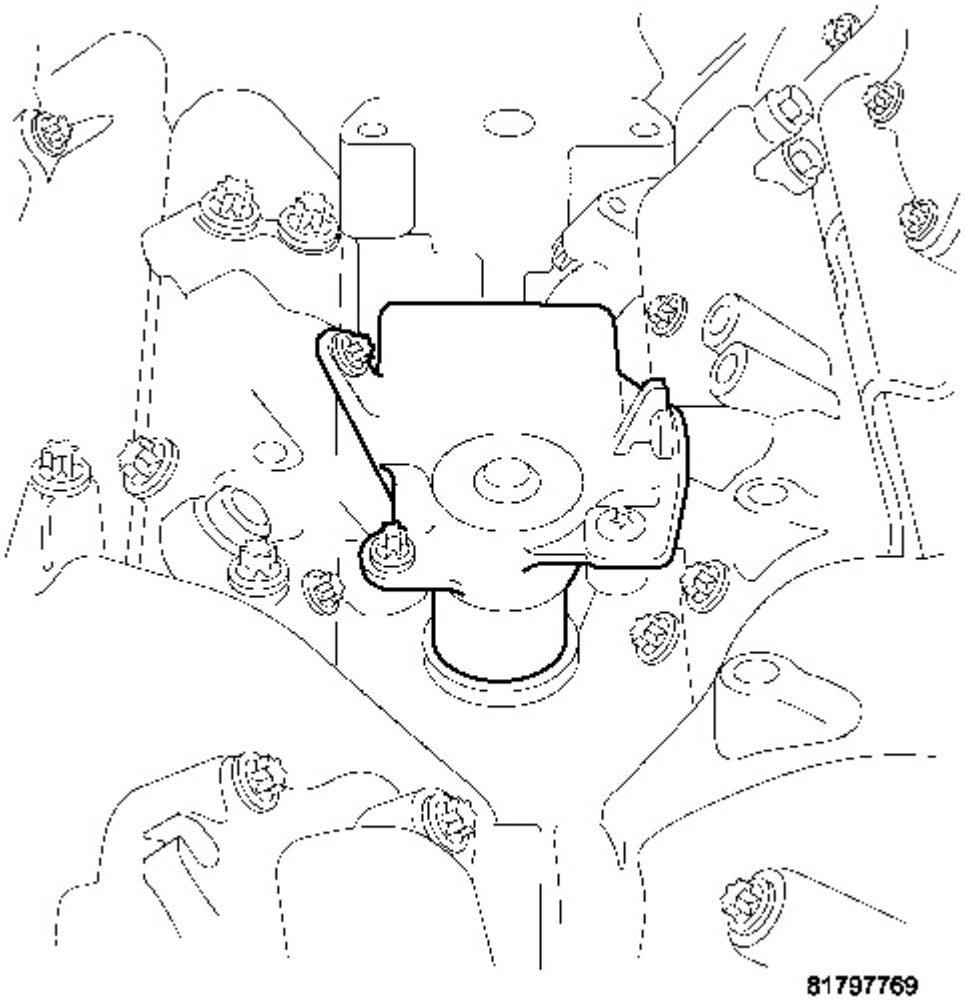

Fig. 356: Swirl Valve Actuator
Courtesy of CHRYSLER LLC

4. Install the fuel filter.
5. Position and install the fuel filter supply and return pipe harness.
6. Position and install the fuel injector return fuel hose harness.
7. Position and properly route the engine wiring harness.
8. Install the left fuel rail. Tighten bolts to 27 N.m (20 ft. lbs.).

NOTE: Inspect the fuel lines, especially around the barrel ends for damage. Replace as necessary.

9. Install the fuel rail transfer line along with the right fuel rail. Tighten fuel rail bolts to 27 N.m (20 ft. lbs.), and fuel pipe to 33N.m (24 ft. lbs.).
10. Install the fuel injector high pressure lines. Tighten lines to 27 N.m (20 ft. lbs.).
11. Connect the swirl valve motor electrical connector.

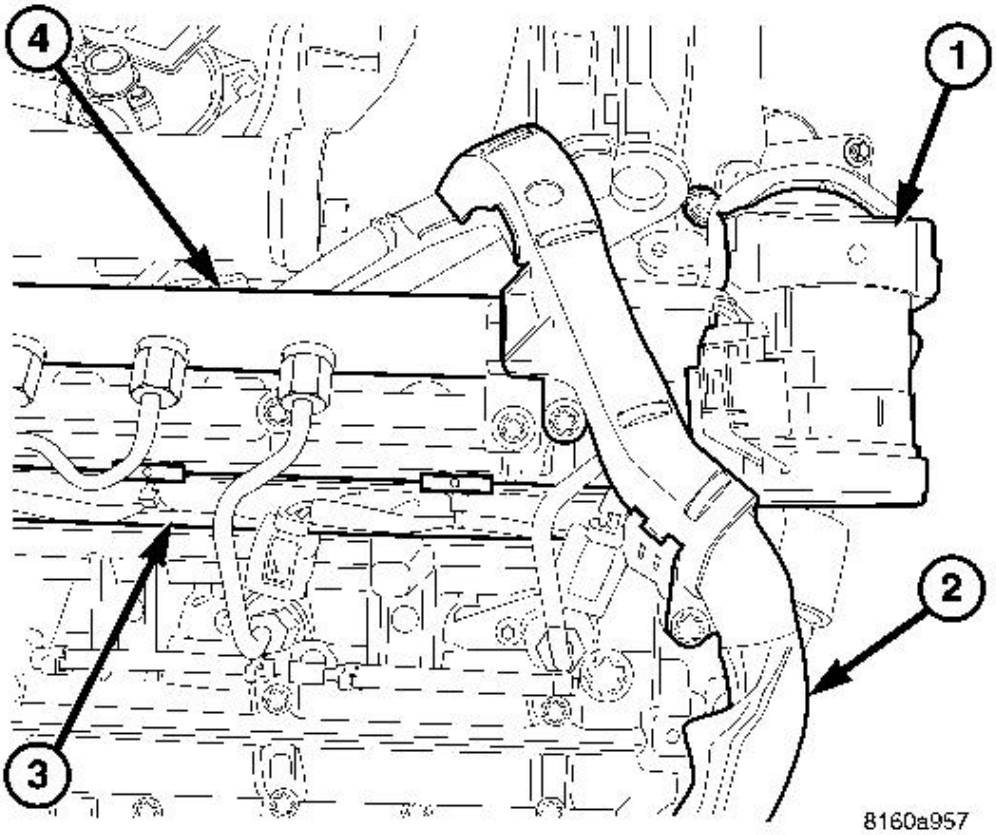

Fig. 357: Exhaust Gas Recirculation (EGR) Valve, Main Engine Wiring Harness, Fuel Injector Wiring Harness & Left Fuel Rail
Courtesy of CHRYSLER LLC

1 - EXHAUST GAS RECIRCULATION (EGR) VALVE
2 - MAIN ENGINE WIRING HARNESS
3 - FUEL INJECTOR WIRING HARNESS

4 - LEFT FUEL RAIL

12. Connect the EGR and EGR temperature sensor wiring harness connectors.
13. Connect the coolant hose at the EGR housing.
14. Install the EGR tube to the EGR housing.

CAUTION: Observe the positioning of the oil housing to block gasket. This gasket must be attached to the housing and both oil passages aligned properly. Failure to do so will result in immediate turbocharger damage upon start up.

15. Install the turbocharger oil housing Adapter.
16. Install the turbocharger. Refer to **INSTALLATION** .
17. Install the right rear engine cover bracket and connect the transmission oil level indicator tube.
18. Install the charge air outlet tube.
19. Install the EGR air control valve assembly.
20. Install the glow plug module.

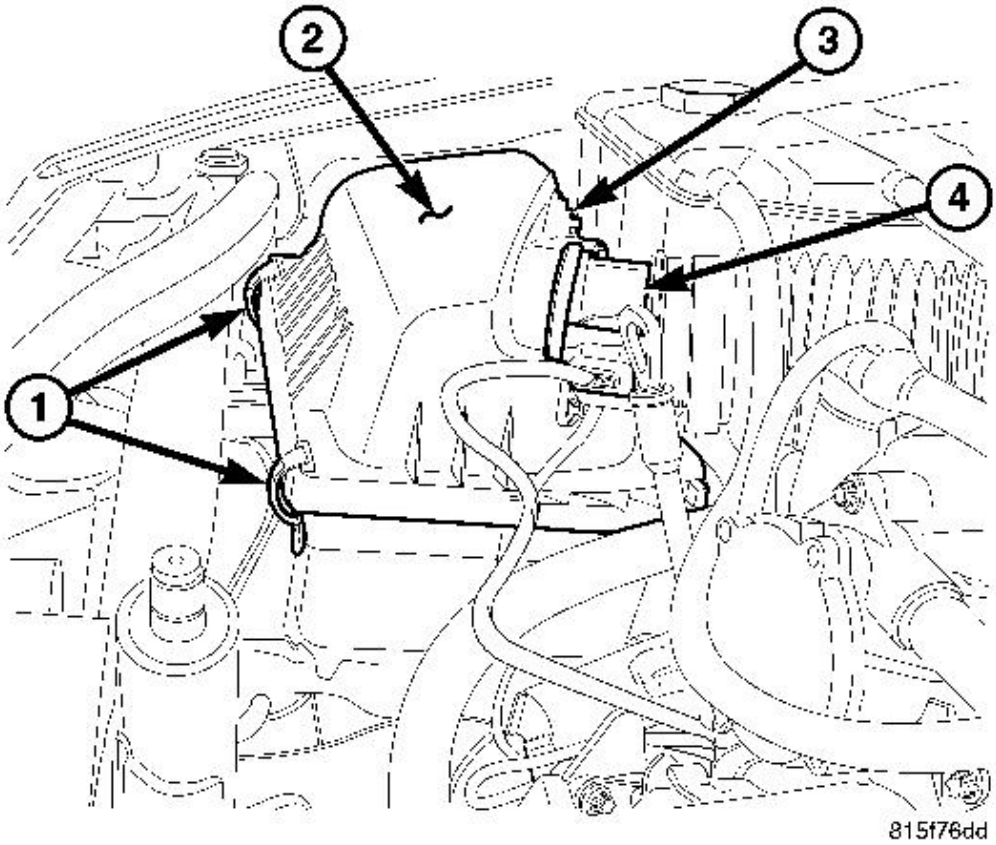

Fig. 358: Air Cleaner Cover And Components
Courtesy of CHRYSLER LLC

1 - SPRING CLIPS
2 - COVER
3 - AIR PRESSURE SENSOR
4 - MAF SENSOR

21. Install the air cleaner cover and air inlet tube.
22. Install the engine cover.
23. Install the strut tower support.
24. Fill the engine with coolant.
25. Connect the negative battery cable.

WARNING: High-pressure fuel lines deliver fuel under extreme pressure from the injection pump to the injectors. This maybe as high as 1350 bar (19,580 psi). Use extreme caution when inspecting for high-pressure fuel leaks. Inspect high-pressure fuel leaks with a sheet of cardboard. Wear safety goggles and adequate protective clothing when servicing fuel system. Fuel under this amount of pressure can penetrate skin causing serious or fatal injury.

26. Start the engine, allow to warm, turn the engine off and inspect for leaks.

MANIFOLD - EXHAUST

REMOVAL

EXHAUST MANIFOLD - LEFT

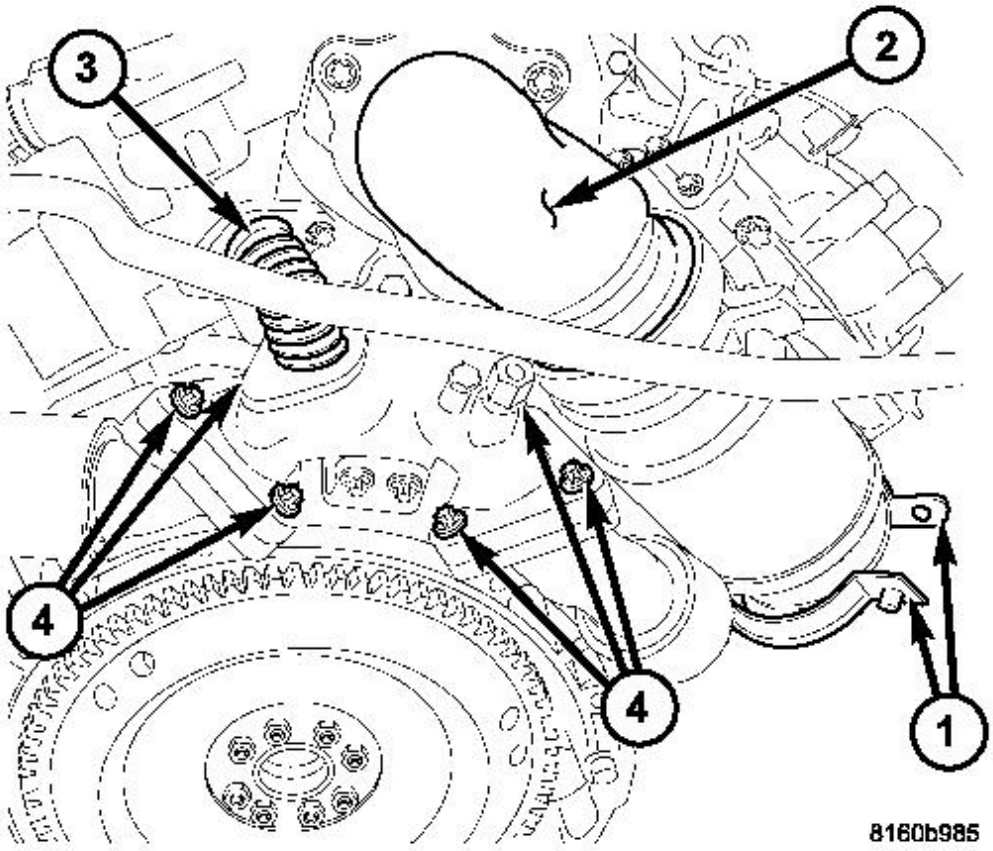

Fig. 359: Removing/Installing Air Intake, Turbo & Exhaust System Components
Courtesy of CHRYSLER LLC

1. Disconnect negative battery cable. Refer to **REMOVAL** .
2. Remove the engine cover. See **REMOVAL**.
3. Remove the turbo heat shield.
4. Remove the EGR tube (3).
5. Remove the exhaust elbow (4) at the turbo.

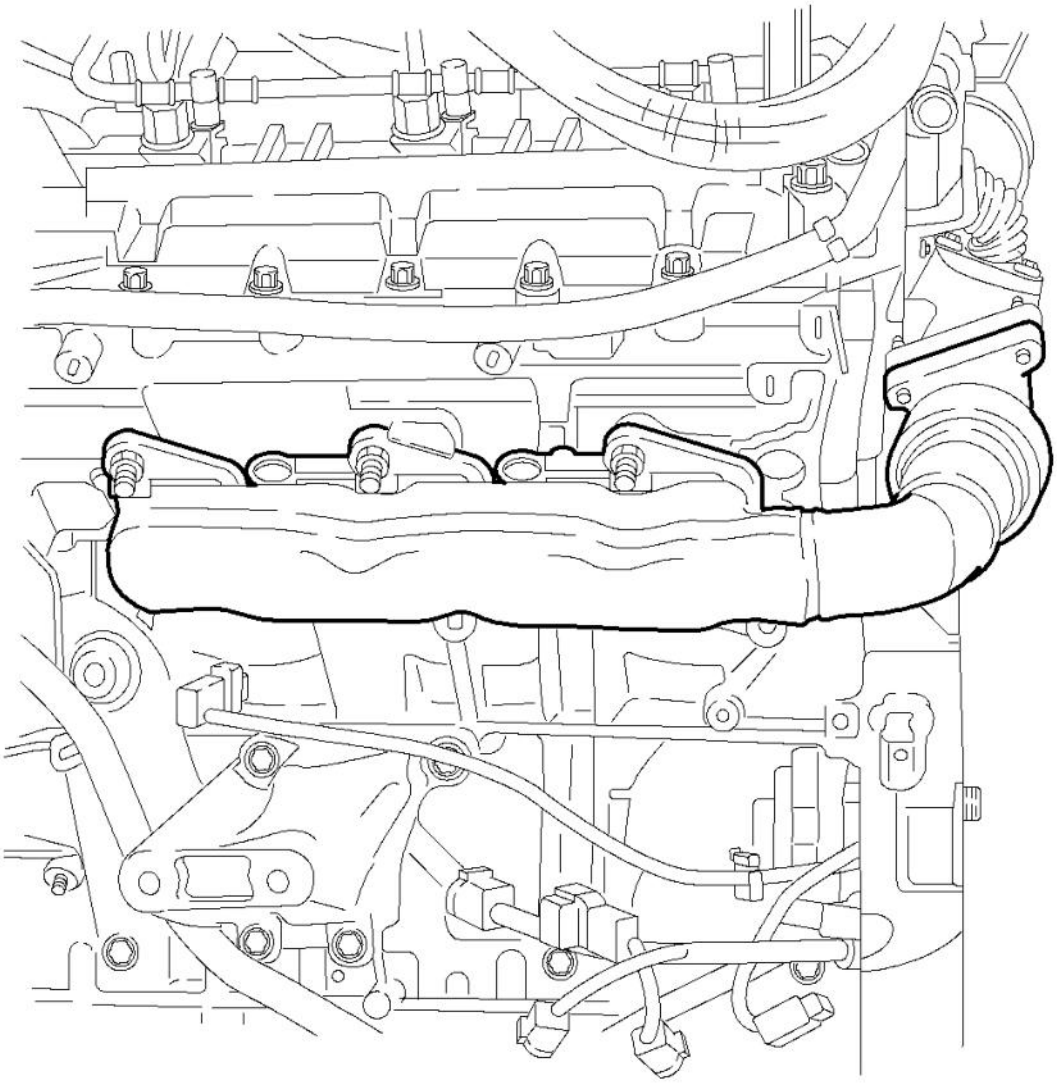

Fig. 360: Exhaust Manifold - Left

Courtesy of CHRYSLER LLC

6. Remove the left exhaust manifold.

EXHAUST MANIFOLD - RIGHT

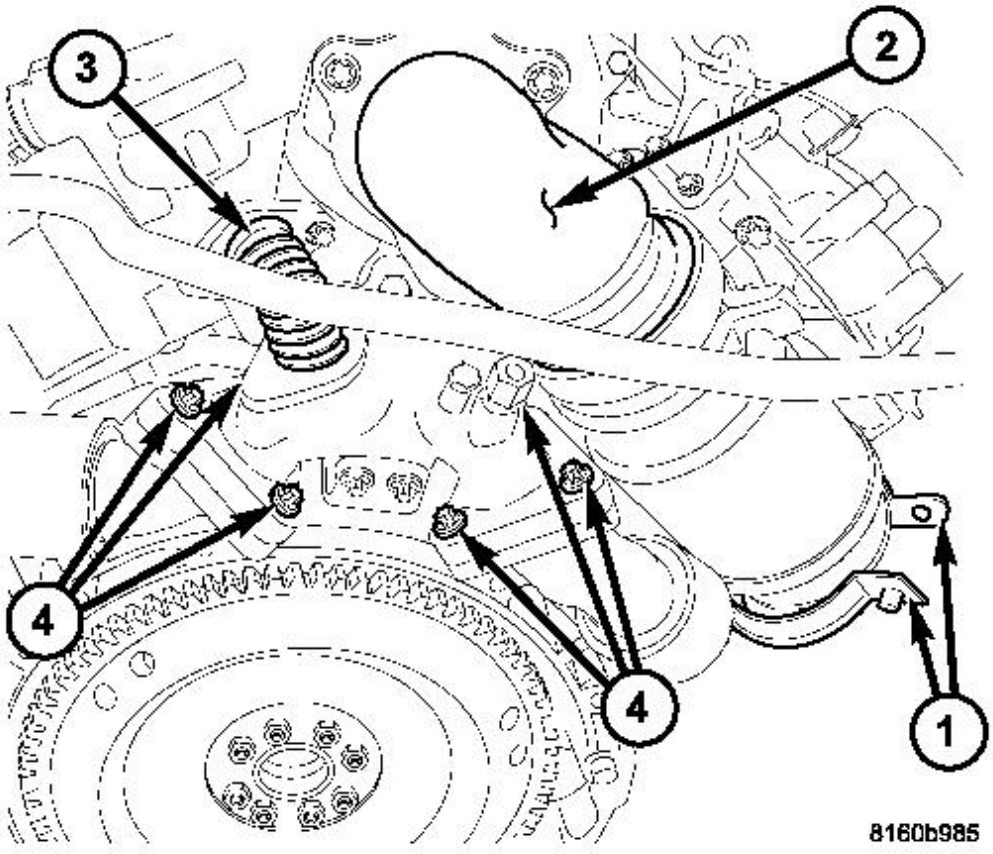

Fig. 361: Removing/Installing Air Intake, Turbo & Exhaust System Components
Courtesy of CHRYSLER LLC

1. Disconnect negative battery cable. Refer to **REMOVAL** .
2. Remove the engine cover. See **REMOVAL**.
3. Remove the turbo heat shield.
4. Remove the exhaust elbow (4) at the turbo.

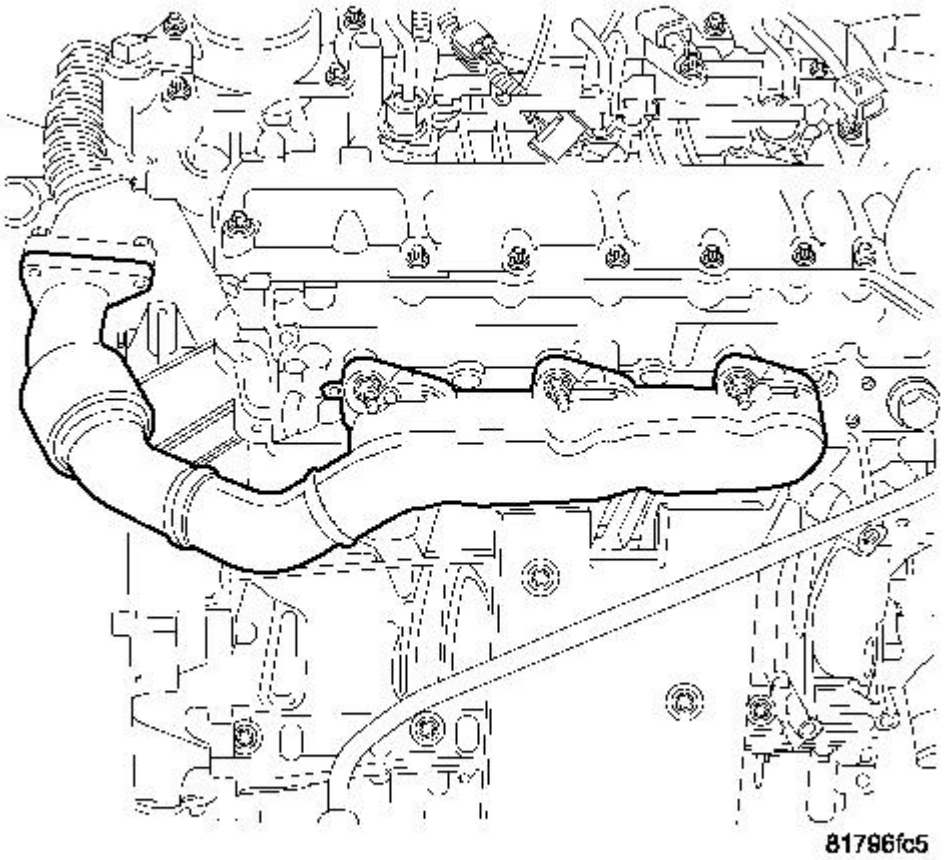

Fig. 362: Right Exhaust Manifold
Courtesy of CHRYSLER LLC

5. Remove the right exhaust manifold.

INSTALLATION

EXHAUST MANIFOLD - LEFT

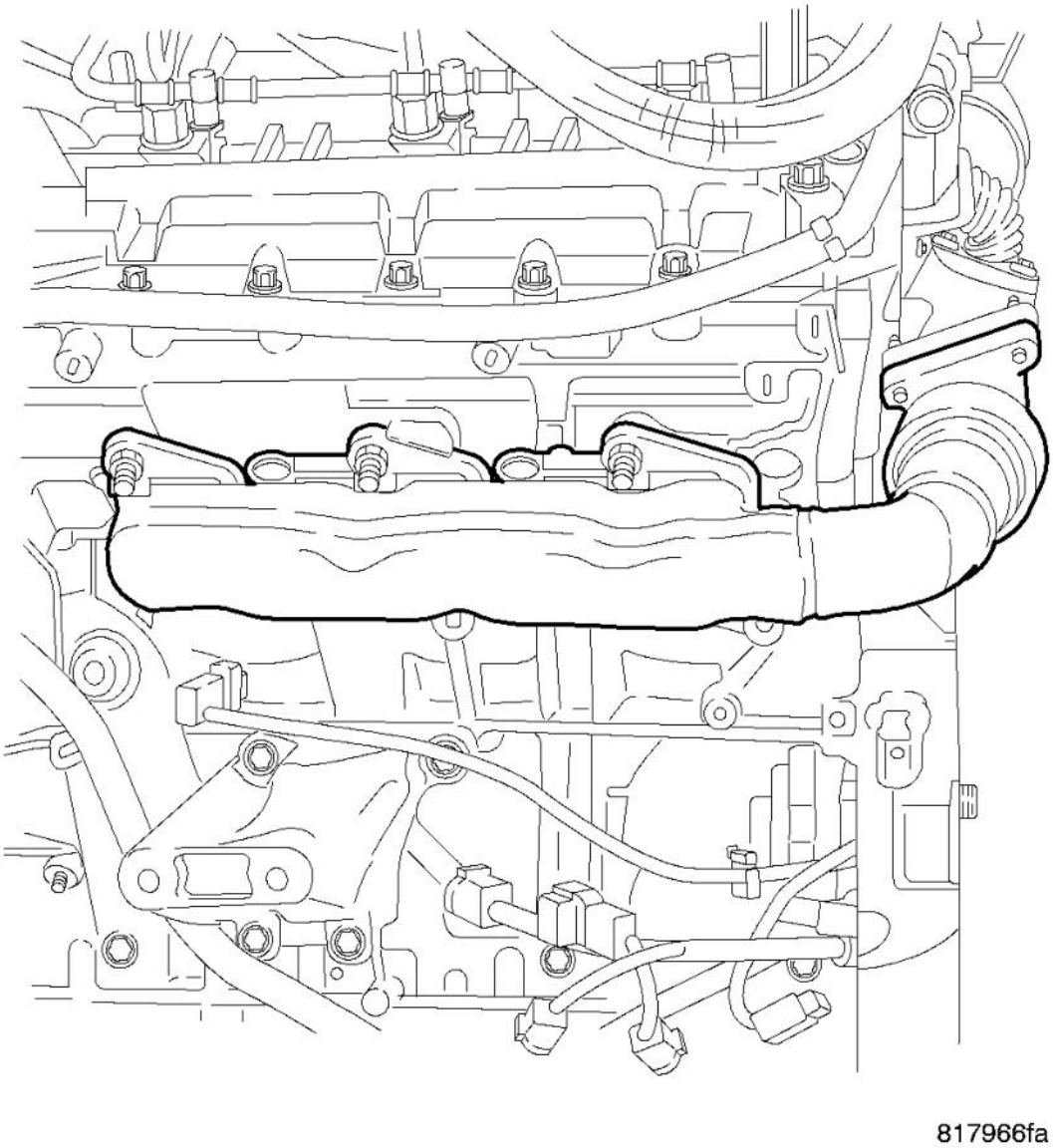

Fig. 363: Exhaust Manifold - Left
Courtesy of CHRYSLER LLC

1. Discard the old gasket and clean the cylinder head and manifold sealing surfaces.
2. Install a new exhaust manifold gasket.
3. Install the left exhaust manifold to cylinder head nuts. Torque the nuts to 25 Nm (222 in. lbs.)

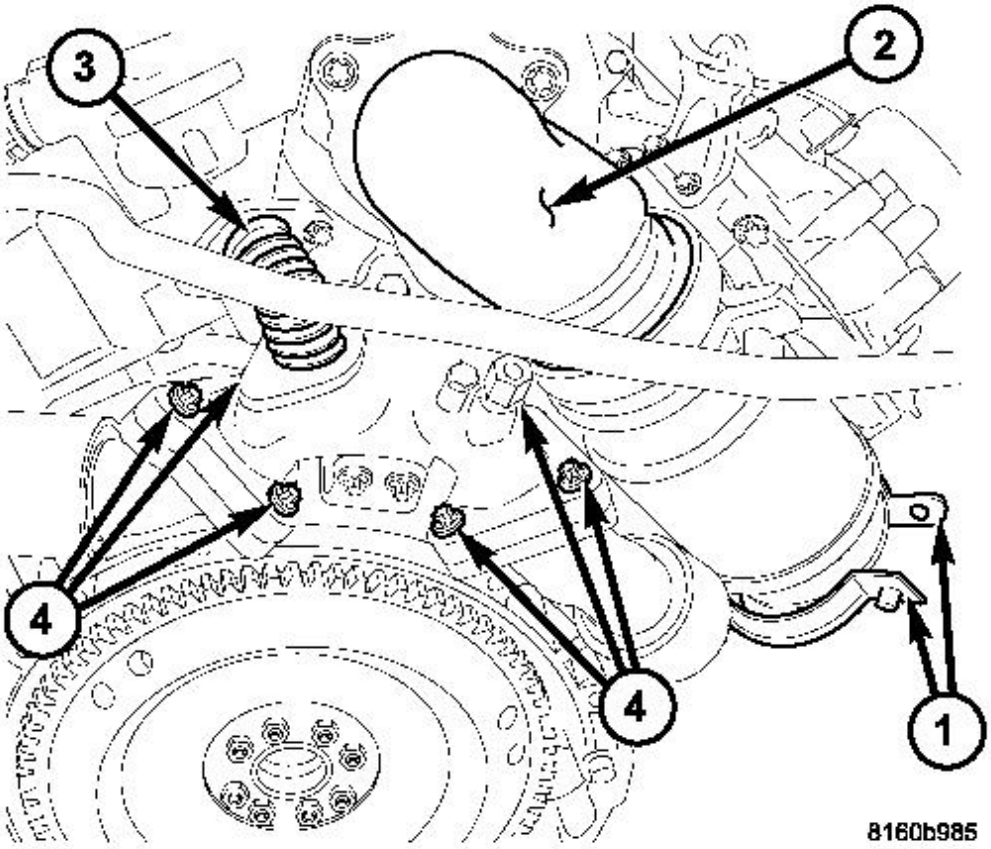

Fig. 364: Removing/Installing Air Intake, Turbo & Exhaust System Components
Courtesy of CHRYSLER LLC

4. Install the exhaust elbow to turbocharger bolts. Torque to 20 Nm (177 in. lbs.). and then add another 90° of rotation.
5. Install the turbocharger heat shield. Torque to 10 Nm (88 in. lbs.).
6. Install the engine cover. See **INSTALLATION**.
7. Connect the negative battery cable. Refer to **INSTALLATION** .

EXHAUST MANIFOLD - RIGHT

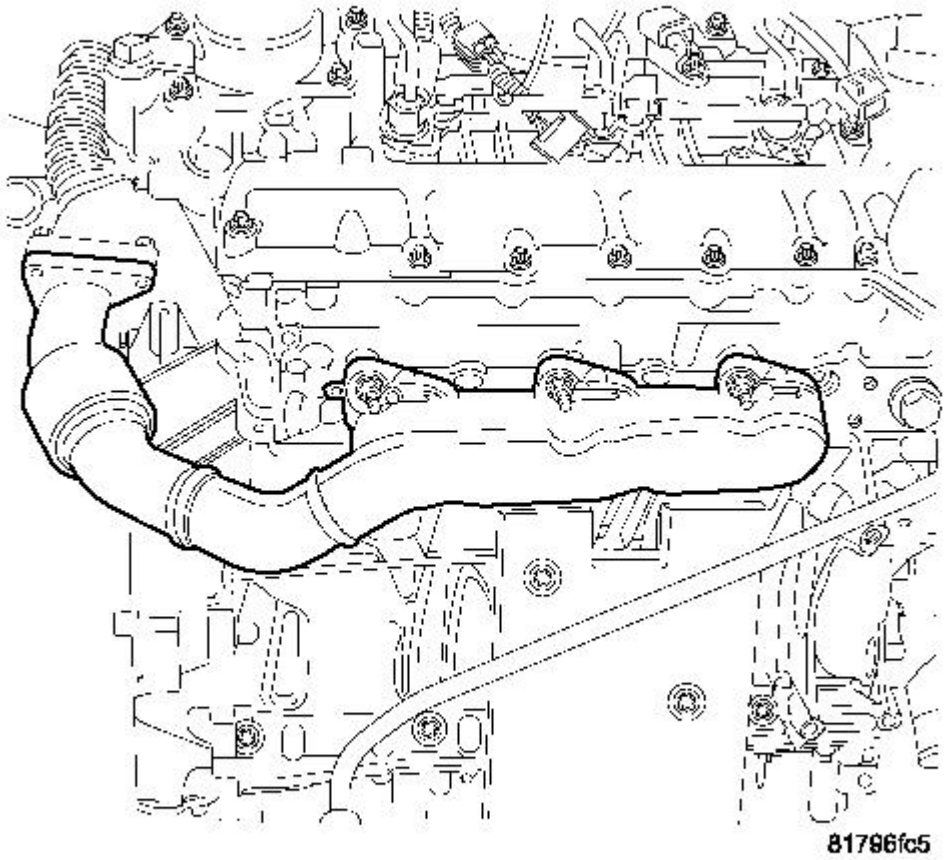

Fig. 365: Right Exhaust Manifold
Courtesy of CHRYSLER LLC

1. Discard the old gasket and clean the cylinder head and manifold sealing surfaces.
2. Install a new exhaust manifold gasket.
3. Install the right exhaust manifold to cylinder head nuts. Torque the nuts to 25 Nm (222 in. lbs.)

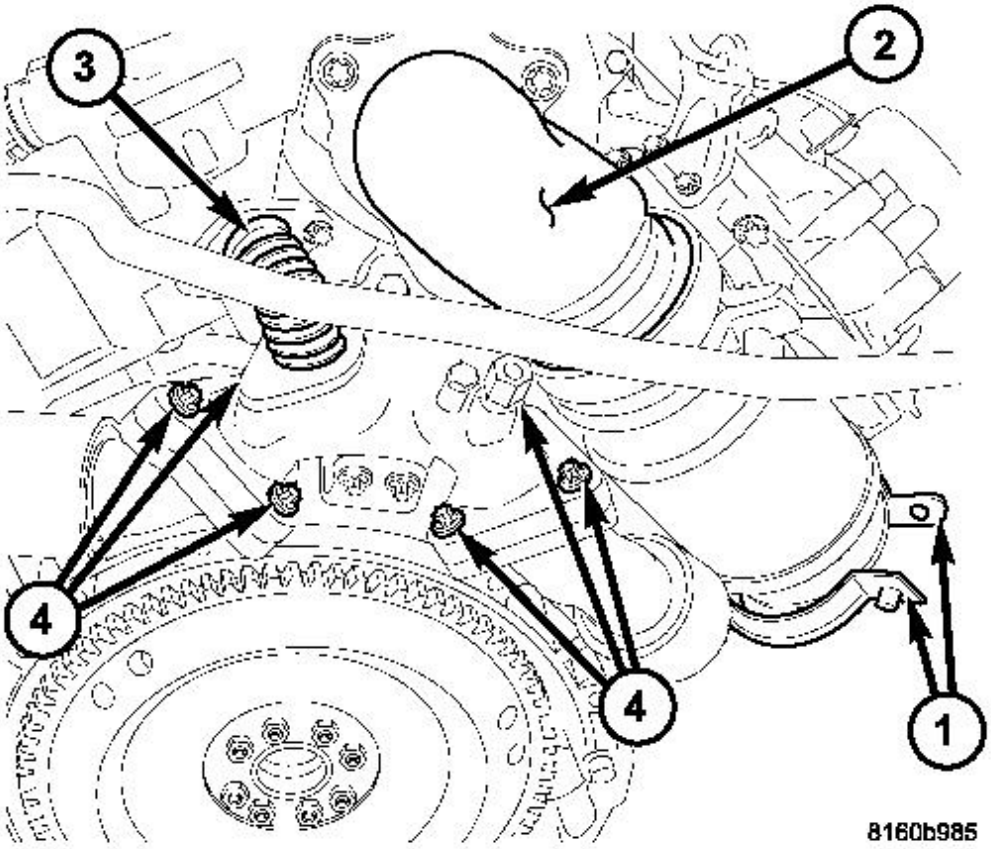

Fig. 366: Removing/Installing Air Intake, Turbo & Exhaust System Components
Courtesy of CHRYSLER LLC

4. Install the exhaust elbow to turbocharger bolts. Torque to 20 Nm (177 in. lbs.). and then add another 90° of rotation.
5. Install the strut tower brace.
6. Install the engine cowl. Refer to **INSTALLATION** .
7. Install the engine cover. See **INSTALLATION**.
8. Connect the negative battery cable. Refer to **INSTALLATION** .

LINKAGE - SWIRL VALVE

DESCRIPTION

DESCRIPTION

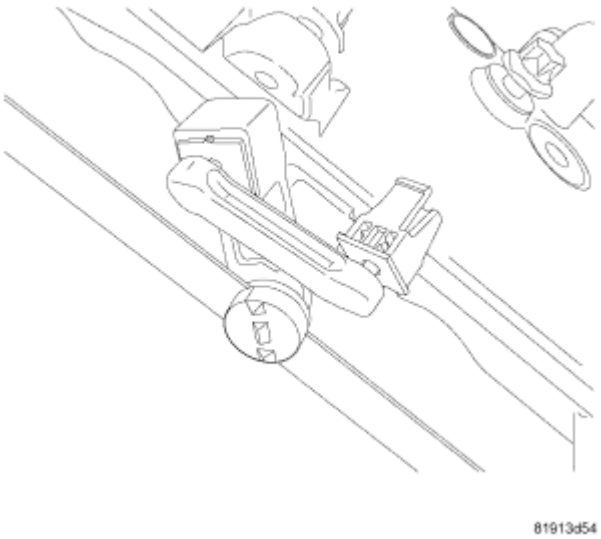

Fig. 367: Swirl Valve Linkage
Courtesy of CHRYSLER LLC

The swirl valve linkage links the swirl valves in the intake manifold to the swirl valve actuator.

The swirl valve linkage has two different style clips. The square clip (1) is a two piece design, and the round clip (2) is a one piece design.

REMOVAL

REMOVAL

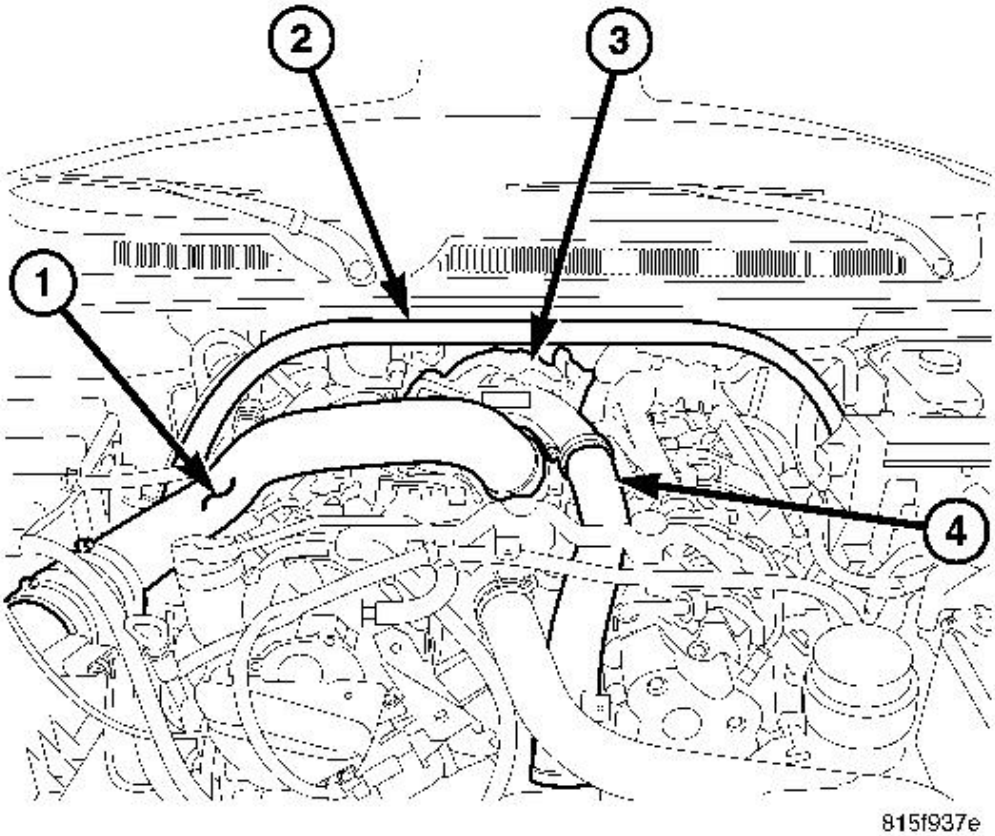

Fig. 368: Strut Tower Support, Air Cleaner Outlet Tube, Turbocharger & Charge Air Inlet Tube
Courtesy of CHRYSLER LLC

1 - AIR CLEANER OUTLET TUBE
2 - STRUT TOWER SUPPORT
3 - TURBOCHARGER
4 - CHARGE AIR INLET TUBE

1. Disconnect the negative battery cable. Refer to **REMOVAL** .
2. Remove the engine cover. See **REMOVAL**.
3. Remove the air cleaner assembly. See **REMOVAL**.
4. Remove the air charge resonator.
5. Remove the air charge outlet tube (4).
6. Remove the vapor control valve.

7. Drain the coolant. Refer to **STANDARD PROCEDURE** .
8. Remove the belly pan.

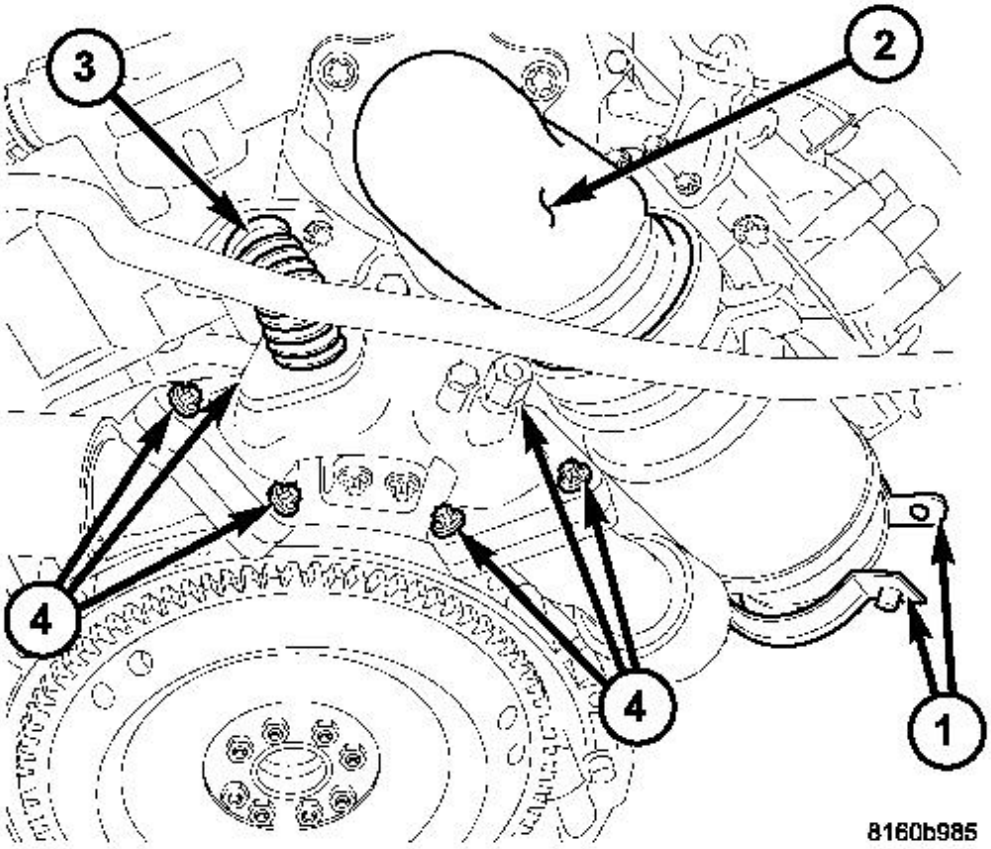

Fig. 369: Removing/Installing Air Intake, Turbo & Exhaust System Components
Courtesy of CHRYSLER LLC

9. Remove the turbocharger. Refer to **REMOVAL** .
10. Remove the EGR tube (3).

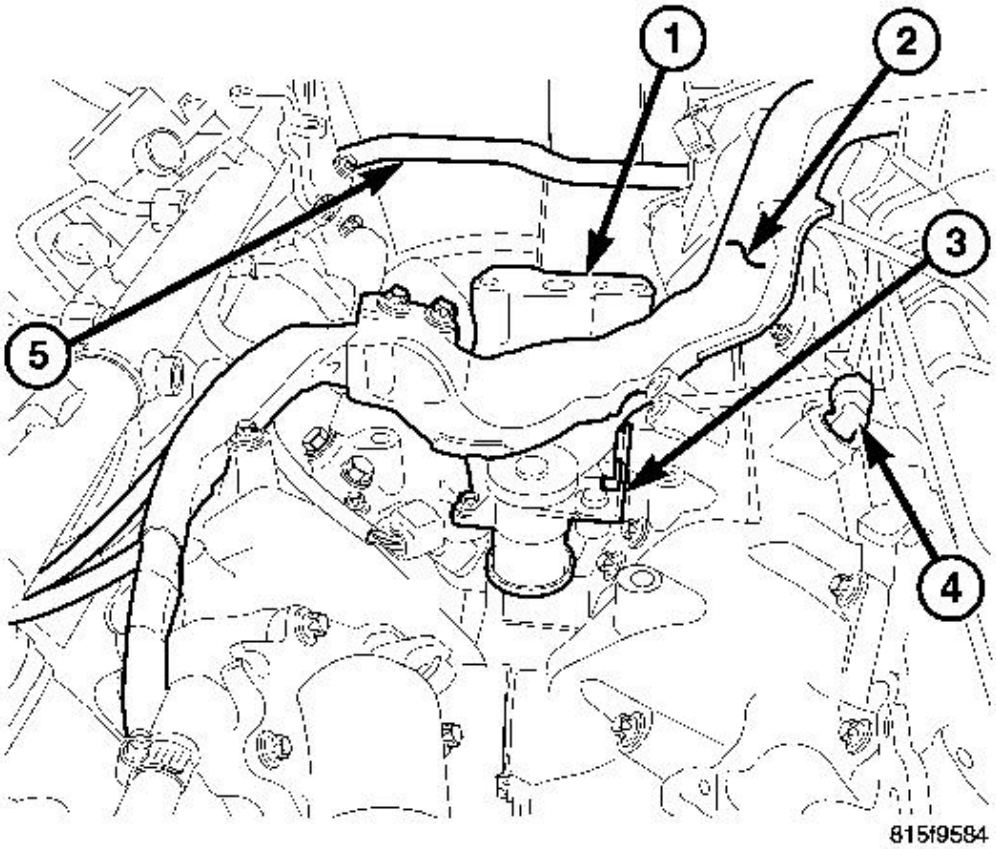

Fig. 370: Turbocharger Oil Housing Adapter, Main Engine Wiring Harness, Swirl Valve Actuator & Coolant Temperature Sensor
Courtesy of CHRYSLER LLC

1 - TURBOCHARGER OIL HOUSING Adapter
2 - MAIN ENGINE WIRING HARNESS
3 - SWIRL VALVE ACTUATOR
4 - COOLANT TEMPERATURE SENSOR

11. Remove the oil housing adapter (1).
12. Remove the rear engine lift bracket at the intake manifold.
13. Remove the front engine lift bracket at the cylinder heads.

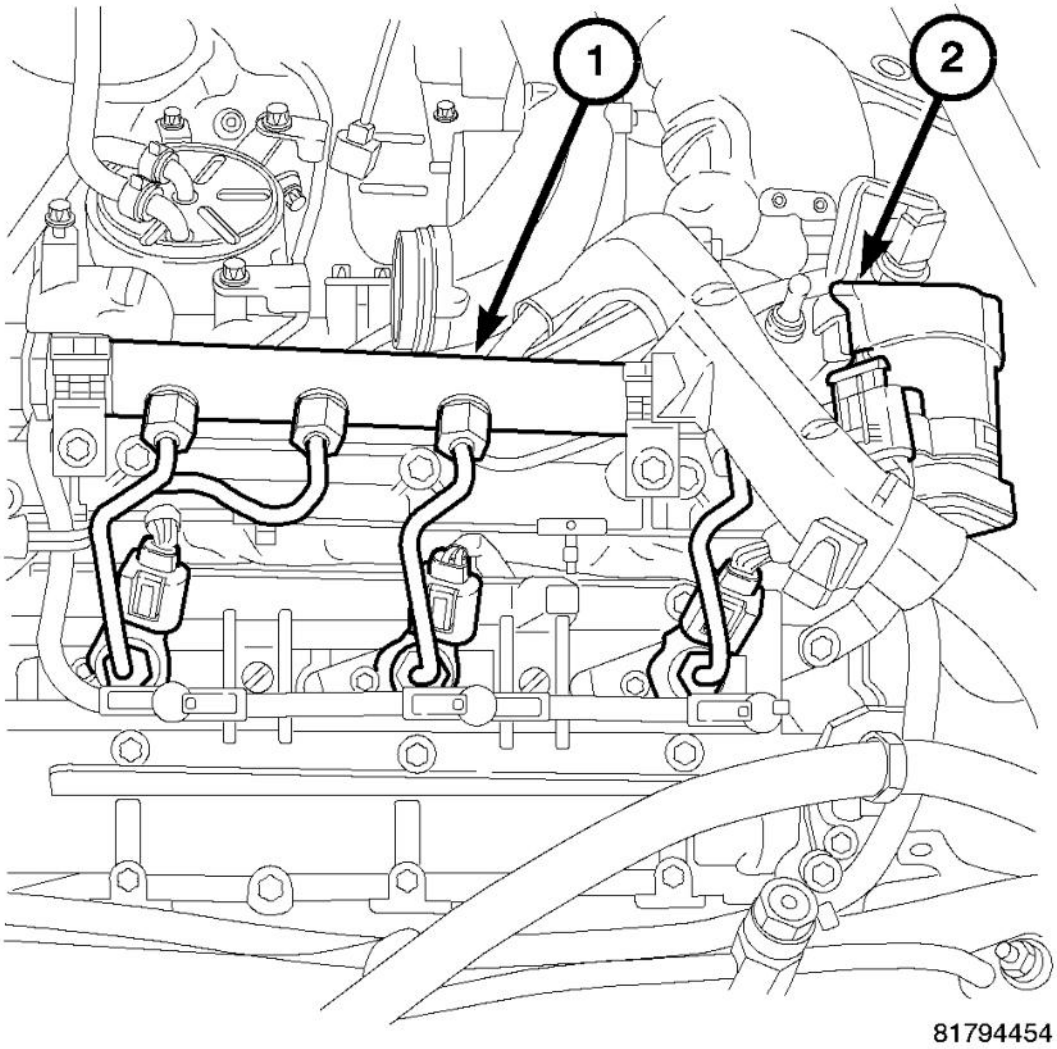

Fig. 371: EGR Valve & Fuel Injectors
Courtesy of CHRYSLER LLC

1 - Fuel Injectors
2 - EGR Valve

14. Remove the left fuel rail and lines. Refer to **REMOVAL** .
15. Remove the right fuel rail and lines. Refer to **REMOVAL** .

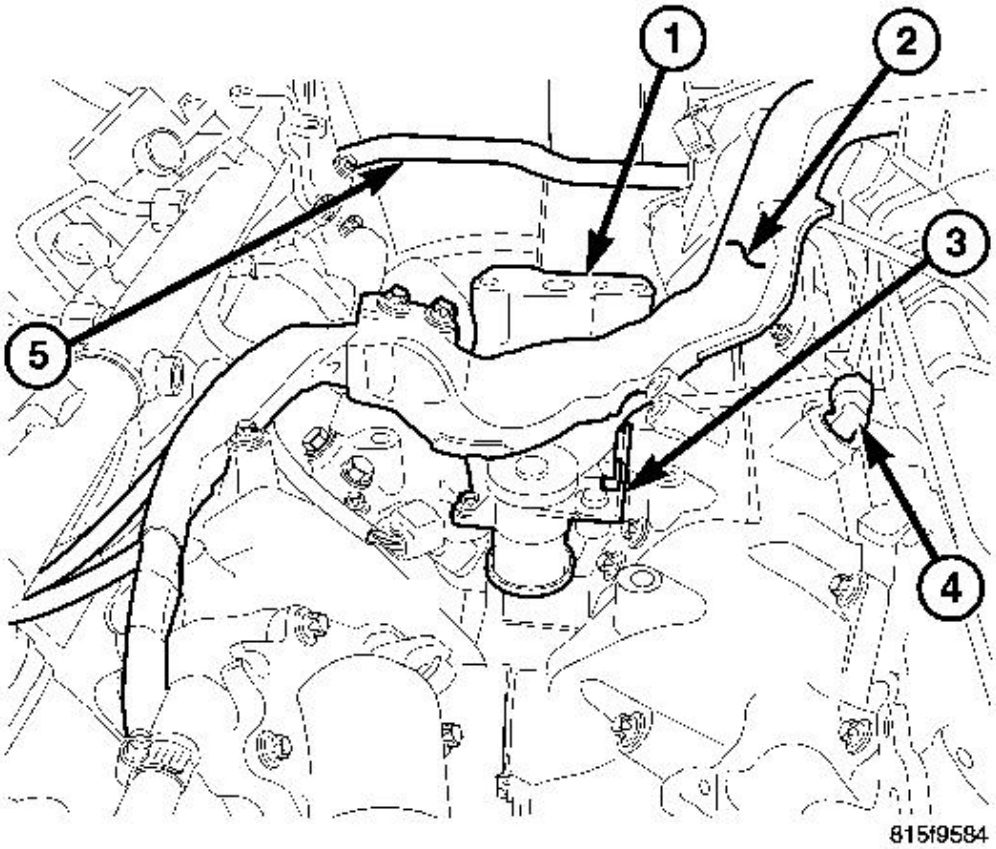

Fig. 372: Turbocharger Oil Housing Adapter, Main Engine Wiring Harness, Swirl Valve Actuator & Coolant Temperature Sensor
Courtesy of CHRYSLER LLC

1 - TURBOCHARGER OIL HOUSING Adapter
2 - MAIN ENGINE WIRING HARNESS
3 - SWIRL VALVE ACTUATOR
4 - COOLANT TEMPERATURE SENSOR

16. Disconnect the engine harness (2) and position aside.
17. Remove the swirl port actuator (3).
18. Remove the heater hose at the EGR valve.
19. Remove the EGR control assembly.

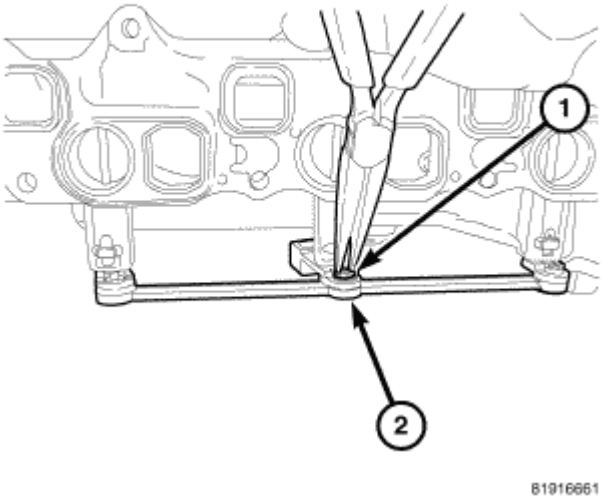

Fig. 373: Removing/Installing Swirl Valve Linkage Clips
Courtesy of CHRYSLER LLC

20. Remove the coolant hose at the thermostat housing.
21. Remove the glow plug module.
22. Remove the throttle control assembly.
23. Remove the intake manifold.
24. Loosen the EGR cooler bolts to gain access to the swirl valve linkage clips.
25. Remove the swirl valve linkage clips (2).

INSTALLATION

INSTALLATION

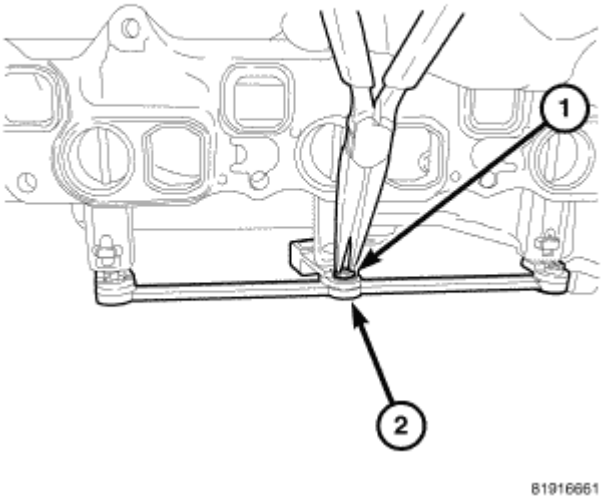

Fig. 374: Removing/Installing Swirl Valve Linkage Clips
Courtesy of CHRYSLER LLC

1. Install the round clips (2) into the swirl valve linkage.
2. Clean the intake manifold sealing surfaces.
3. Install new intake manifold gaskets.

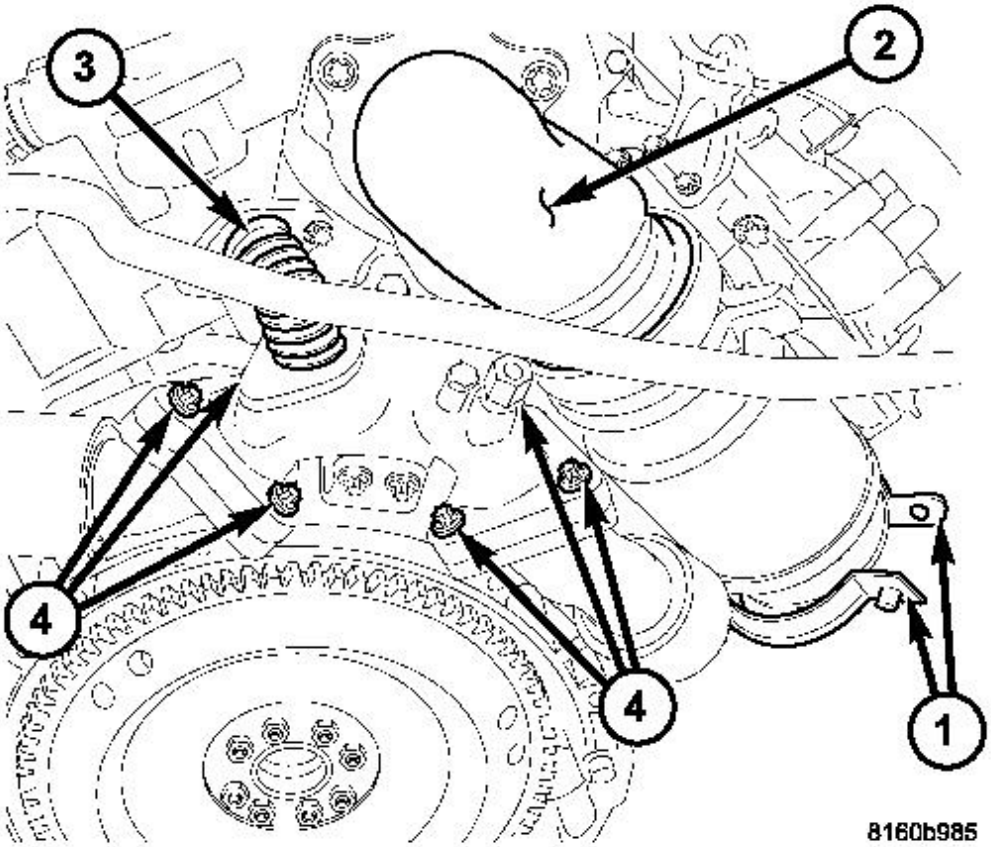

Fig. 375: Removing/Installing Air Intake, Turbo & Exhaust System Components
Courtesy of CHRYSLER LLC

4. Install the EGR cooler.
5. Position the intake manifold and torque to 20.34 N.m (180 lbs. in.)
6. Install the throttle control assembly.
7. Instal the glow plug module.
8. Install the coolant hose at the thermostat housing.
9. Install the EGR control assembly.
10. Install the EGR control assembly chamber retaining bolts.
11. Install the EGR control assembly retaining bracket.

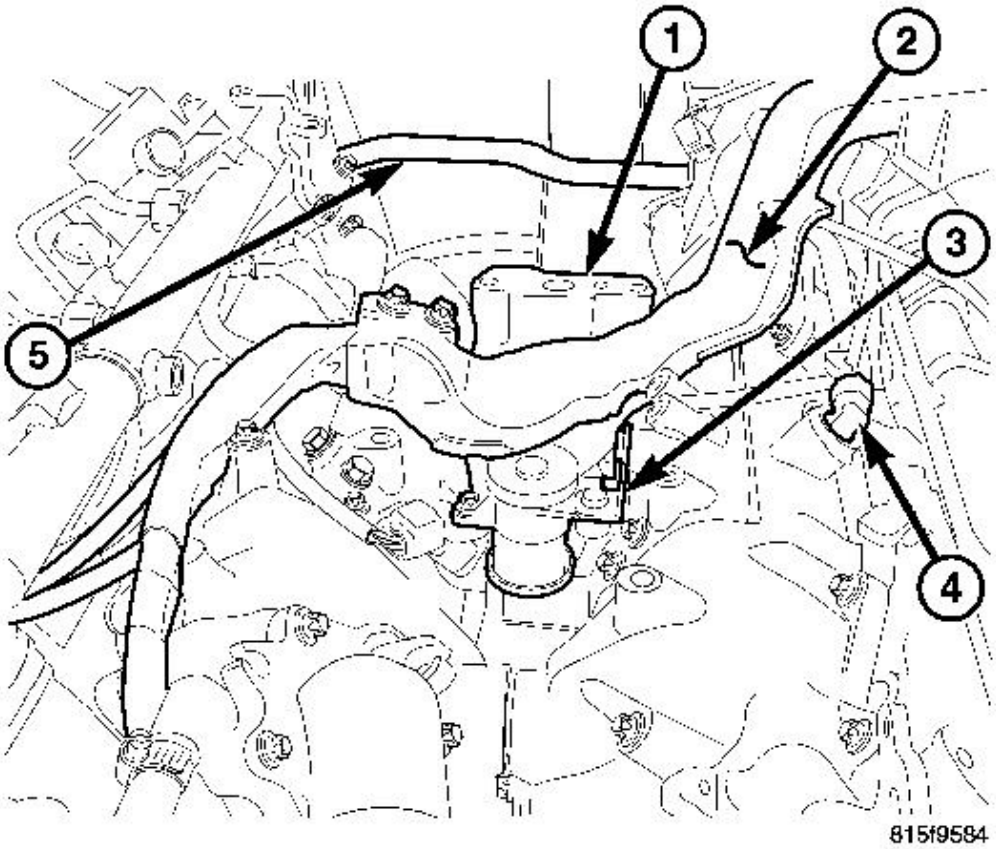

Fig. 376: Turbocharger Oil Housing Adapter, Main Engine Wiring Harness, Swirl Valve Actuator & Coolant Temperature Sensor
Courtesy of CHRYSLER LLC

1 - TURBOCHARGER OIL HOUSING Adapter
2 - MAIN ENGINE WIRING HARNESS
3 - SWIRL VALVE ACTUATOR
4 - COOLANT TEMPERATURE SENSOR

12. Install the swirl valve actuator. See **INSTALLATION**.
13. Install the fuel filter assembly. Refer to **INSTALLATION** .
14. Install the fuel lines. Refer to **INSTALLATION** .
15. Position and connect the engine harness.
16. Install the front lifting bracket.

17. Install rear lifting bracket.
18. Install the EGR tube.
19. Install the turbocharger. Refer to **INSTALLATION** .
20. Install the engine compartment lower silencer.
21. Fill the cooling system. Refer to **STANDARD PROCEDURE** .
22. Install the vapor control valve.
23. Instal the charge air outlet tube (4).
24. Install the charge air resonator.
25. Install the air cleaner assembly. See **INSTALLATION**.
26. Install the engine cover. See **INSTALLATION**.
27. Connect the batteries. Refer to **INSTALLATION** .

ACTUATOR - SWIRL VALVE

DESCRIPTION

DESCRIPTION

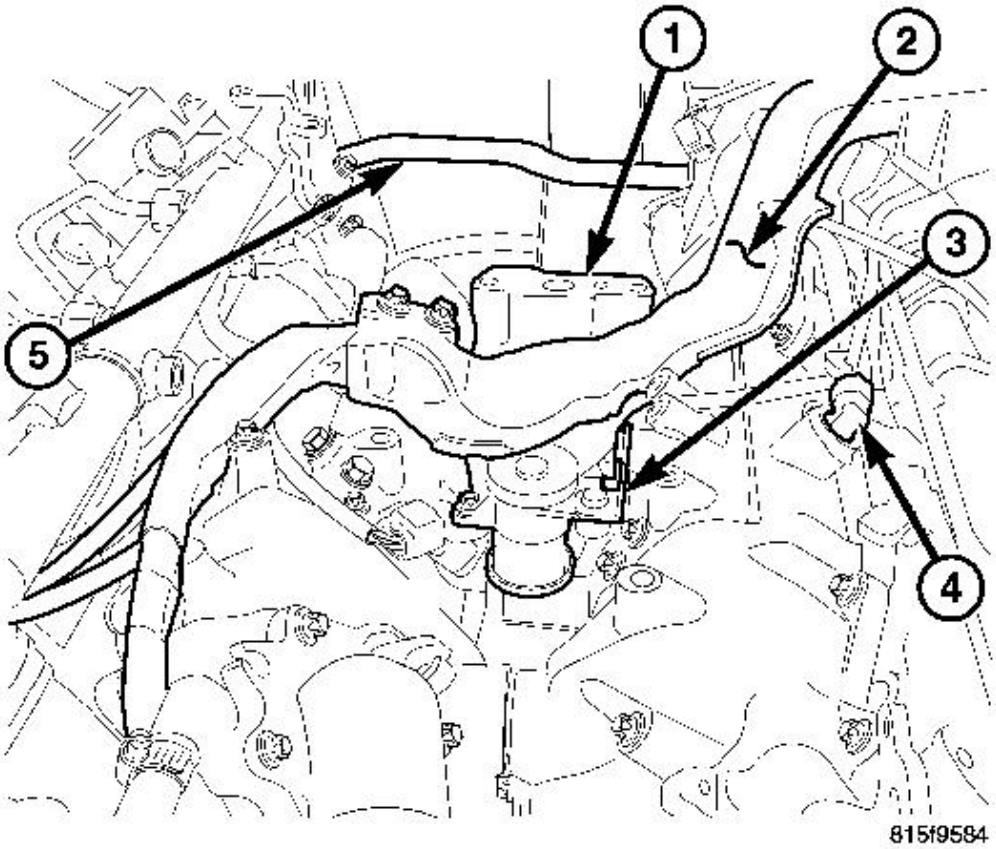

Fig. 377: Turbocharger Oil Housing Adapter, Main Engine Wiring Harness, Swirl Valve Actuator & Coolant Temperature Sensor
Courtesy of CHRYSLER LLC

1 - TURBOCHARGER OIL HOUSING Adapter
2 - MAIN ENGINE WIRING HARNESS
3 - SWIRL VALVE ACTUATOR
4 - COOLANT TEMPERATURE SENSOR

The intake manifolds feature swirl intake ports to reduce particulates at low engine speeds. Each cylinder incorporates one swirl port and one charge port. The swirl ports can be closed by the swirl valves. The valves are connected together via a linkage which is operated by the swirl valve actuator.

The swirl valves are normally open by spring tension. The spring is integral with the swirl valve actuator. In the lower engine speed and load range, the swirl valves are closed by the swirl valve actuator. The entire air mass flows through the charge ports only, which results in greater swirling. The increased swirling produces uniform

combustion for better engine performance and reduction of particulates. As rotational speed and load increases, the swirl valves open, so that optimal swirling and the required air mass are provided for the current operating conditions.

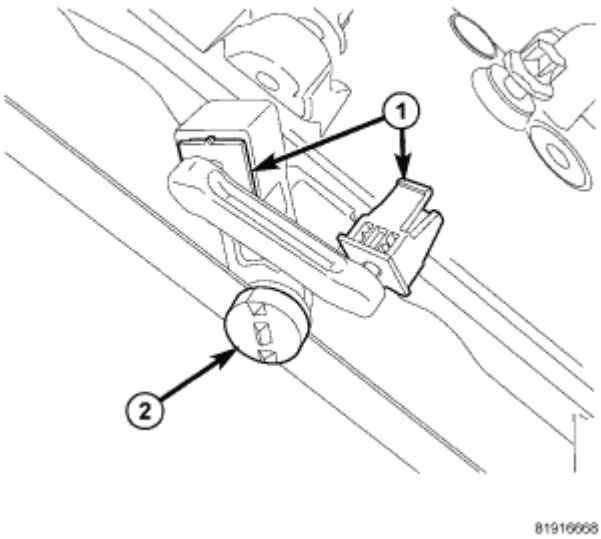

Fig. 378: Square Clip & Round Clip
Courtesy of CHRYSLER LLC

The linkage between the swirl valve actuator and the intake manifold has two different style clips. The square clip (1) is a two piece design, and the round clip (2) is a one piece design.

REMOVAL

REMOVAL

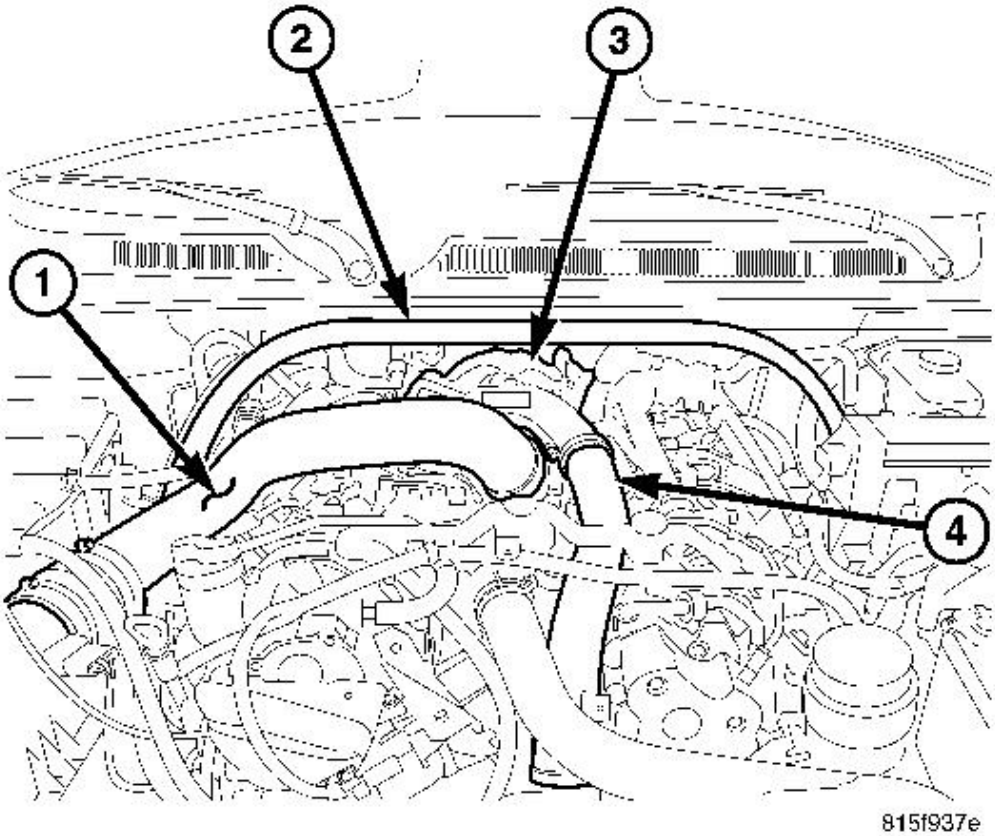

Fig. 379: Strut Tower Support, Air Cleaner Outlet Tube, Turbocharger & Charge Air Inlet Tube
Courtesy of CHRYSLER LLC

1 - AIR CLEANER OUTLET TUBE
2 - STRUT TOWER SUPPORT
3 - TURBOCHARGER
4 - CHARGE AIR INLET TUBE

1. Disconnect negative battery cable. Refer to **REMOVAL** .
2. Remove the engine cover. See **REMOVAL**.
3. Drain the coolant. Refer to **STANDARD PROCEDURE** .
4. Remove the cowl. Refer to **REMOVAL** .
5. Remove the strut tower support (2).
6. Remove the intake air housing and tube. See **REMOVAL**.

7. Remove the charge air cooler tube (4).
8. Remove the resonator.
9. Remove the EGR tube.

CAUTION: Observe the position of the turbocharger oil passage housing and gasket. Failure to properly position the gasket during assembly will result in immediate turbocharger failure after assembly.

10. Remove the turbocharger (3). Refer to **REMOVAL** .

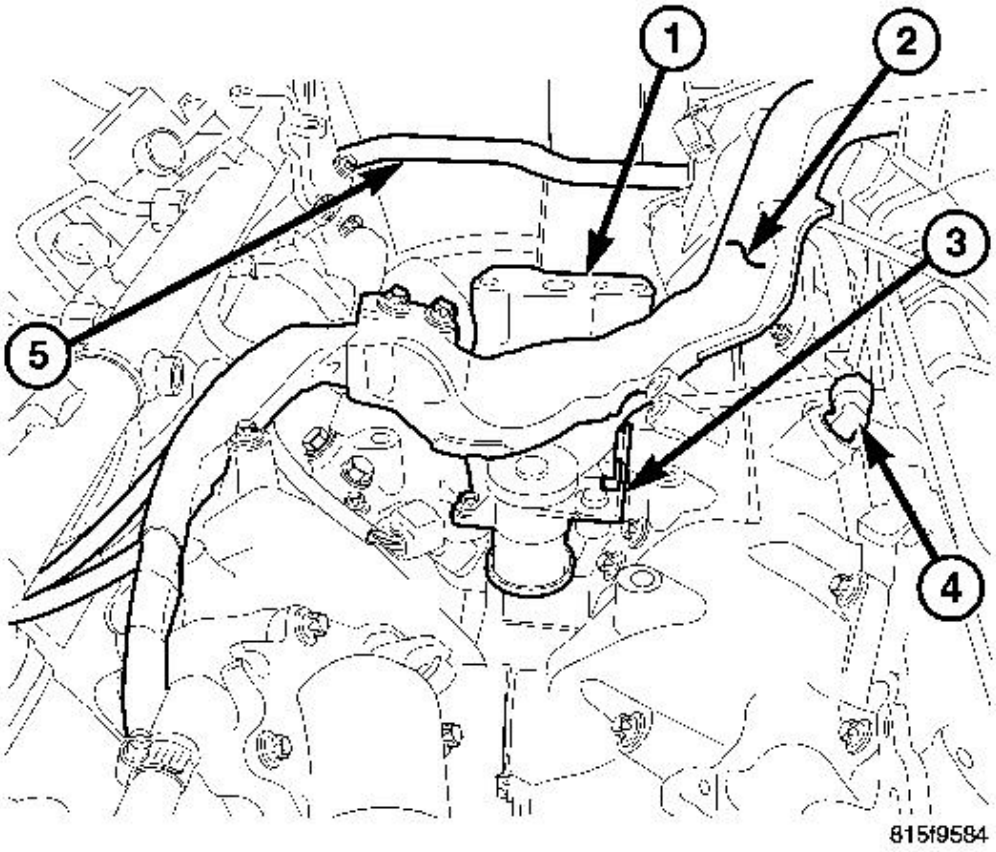

Fig. 380: Turbocharger Oil Housing Adapter, Main Engine Wiring Harness, Swirl Valve Actuator & Coolant Temperature Sensor
Courtesy of CHRYSLER LLC

1 - TURBOCHARGER OIL HOUSING Adapter

2 - MAIN ENGINE WIRING HARNESS
3 - SWIRL VALVE ACTUATOR
4 - COOLANT TEMPERATURE SENSOR

11. Disconnect the engine harness and position aside.
12. Disconnect the swirl valve actuator connector.
13. Remove the swirl valve actuator (3) clips.
14. Remove the swirl valve actuator.

INSTALLATION

INSTALLATION

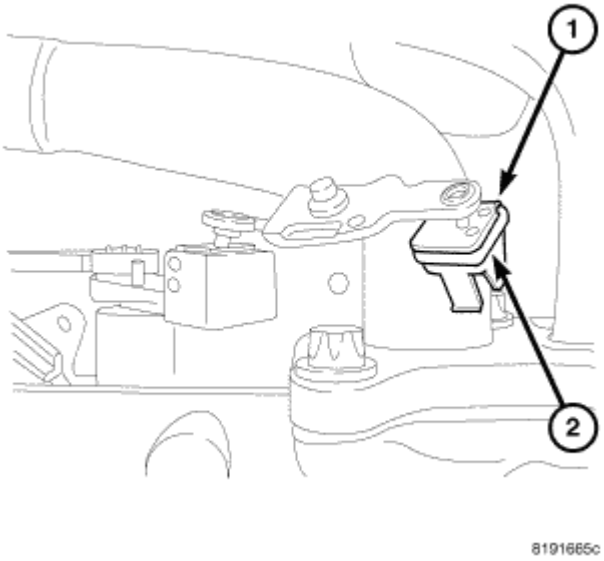

Fig. 381: Clip & O-Ring
Courtesy of CHRYSLER LLC

1. Assemble the two halves of the square clip around the actuator arm, and place a 5/16" O-ring (2) around the base of the clip (1) to hold it together.

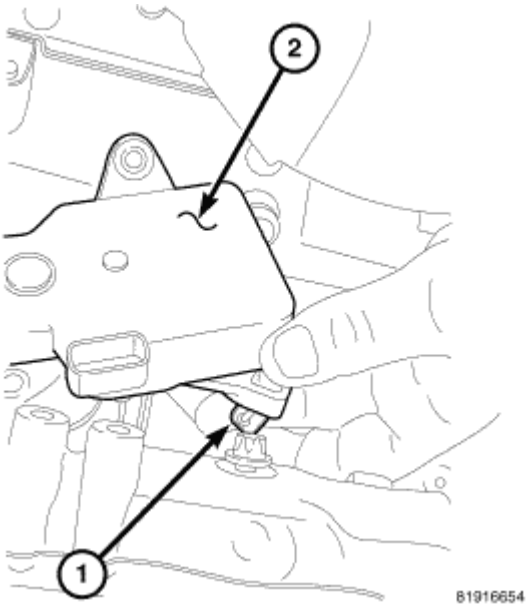

Fig. 382: Positioning Clip Into Actuator Arm And Pushing Clip Partially Into Arm
Courtesy of CHRYSLER LLC

2. Position the clip into the actuator arm and push the clip partially into the arm.

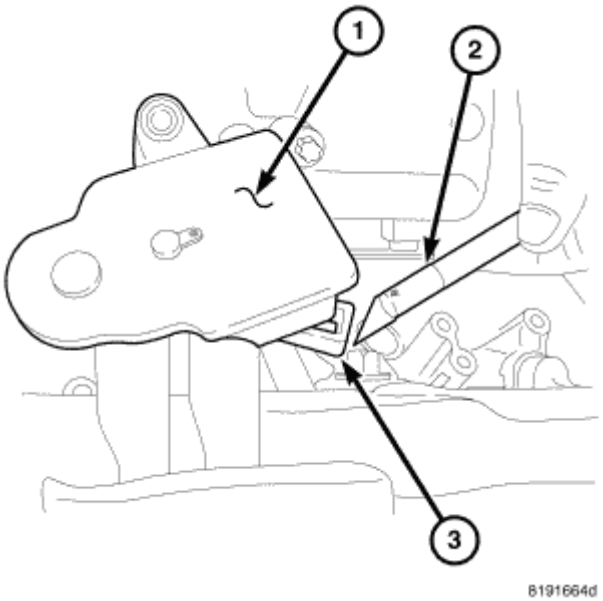

Fig. 383: Cutting O-Ring And Pressing Clip Rest Of Way Into Actuator Arm
Courtesy of CHRYSLER LLC

3. Cut the O-ring and press the clip the rest of the way into the actuator arm. Make sure the clip clicks into place.

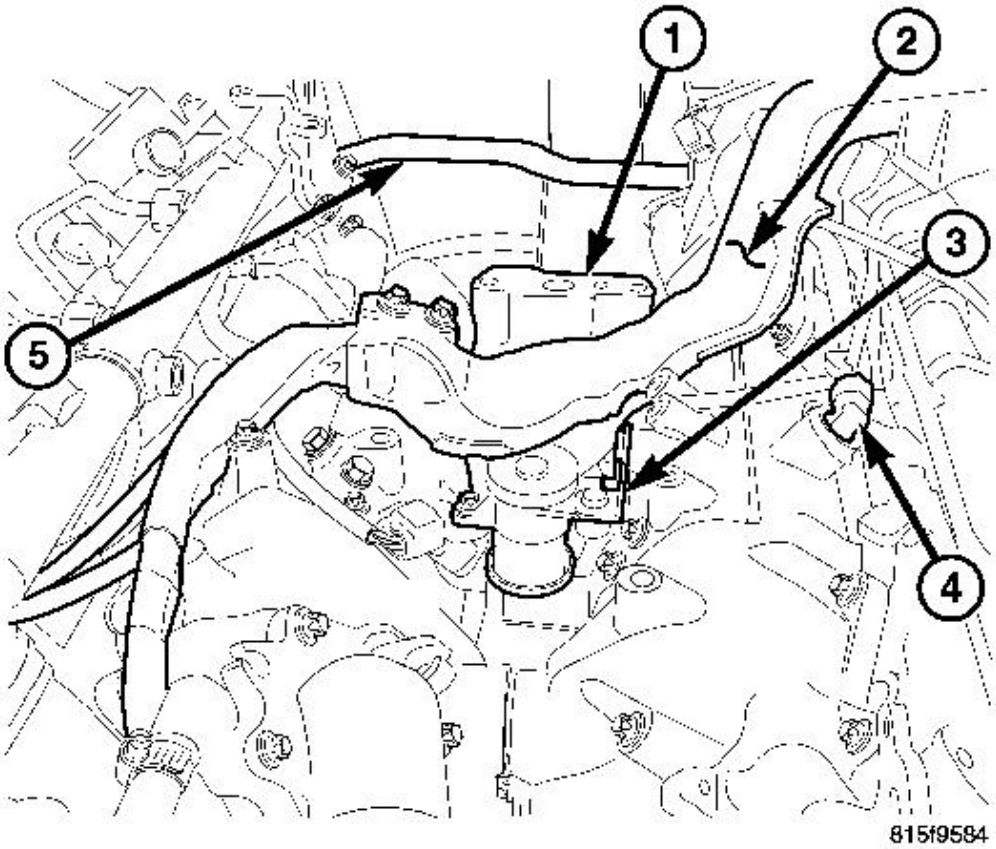

Fig. 384: Turbocharger Oil Housing Adapter, Main Engine Wiring Harness, Swirl Valve Actuator & Coolant Temperature Sensor
Courtesy of CHRYSLER LLC

1 - TURBOCHARGER OIL HOUSING Adapter
2 - MAIN ENGINE WIRING HARNESS
3 - SWIRL VALVE ACTUATOR
4 - COOLANT TEMPERATURE SENSOR

4. Install the swirl valve actuator. Tighten the bolts to 8 N.M. (44 lbs. in.).
5. Connect the swirl valve connector.
6. Position and connect the engine harness.

CAUTION: Observe the position of the turbocharger oil passage housing and gasket. Failure to properly position the gasket during assembly will

result in immediate turbocharger failure after assembly.

7. Install the turbocharger. Refer to **INSTALLATION** .

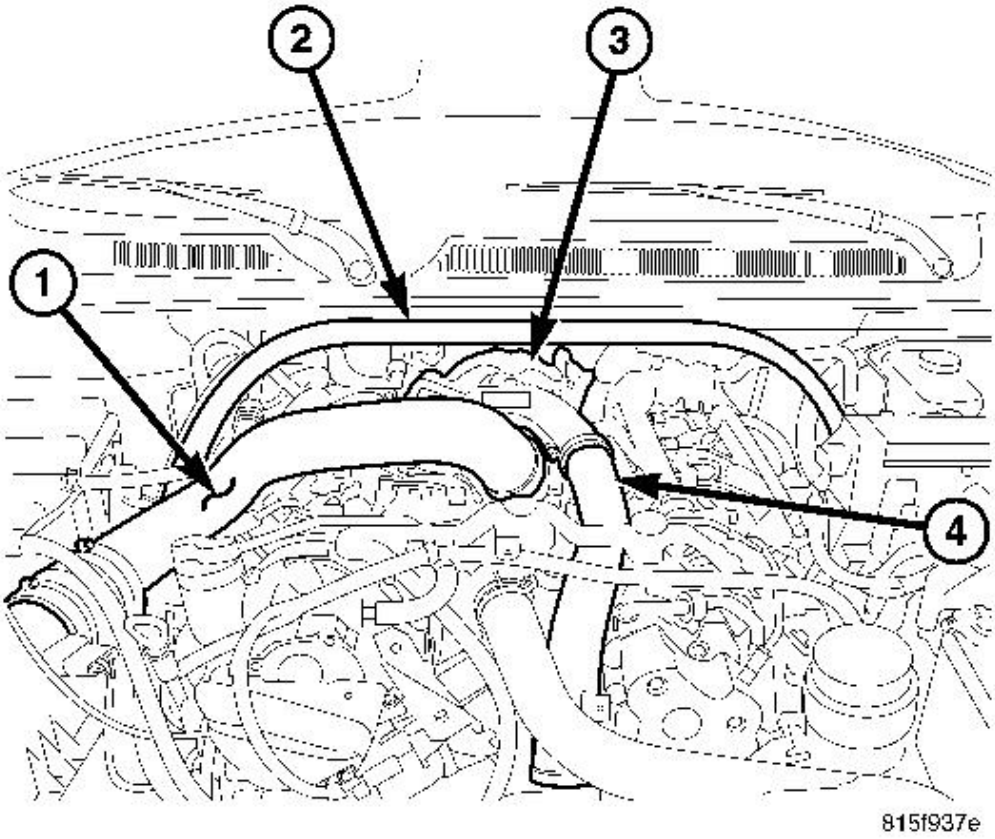

Fig. 385: Strut Tower Support, Air Cleaner Outlet Tube, Turbocharger & Charge Air Inlet Tube
Courtesy of CHRYSLER LLC

1 - AIR CLEANER OUTLET TUBE
2 - STRUT TOWER SUPPORT
3 - TURBOCHARGER
4 - CHARGE AIR INLET TUBE

8. Install the EGR tube.
9. Install the resonator.
10. Install the charge air cooler tube (4).

11. Install the air cleaner housing and air tube. See **INSTALLATION**.
12. Install the strut tower support (2).
13. Install the cowl trim panel. Refer to **INSTALLATION** .
14. Fill the cooling system. Refer to **STANDARD PROCEDURE** .
15. Install the engine cover. See **INSTALLATION**.
16. Connect the battery. Refer to **INSTALLATION** .

TIMING-VALVE

COVER - TIMING CHAIN

REMOVAL

TIMING CHAIN COVER

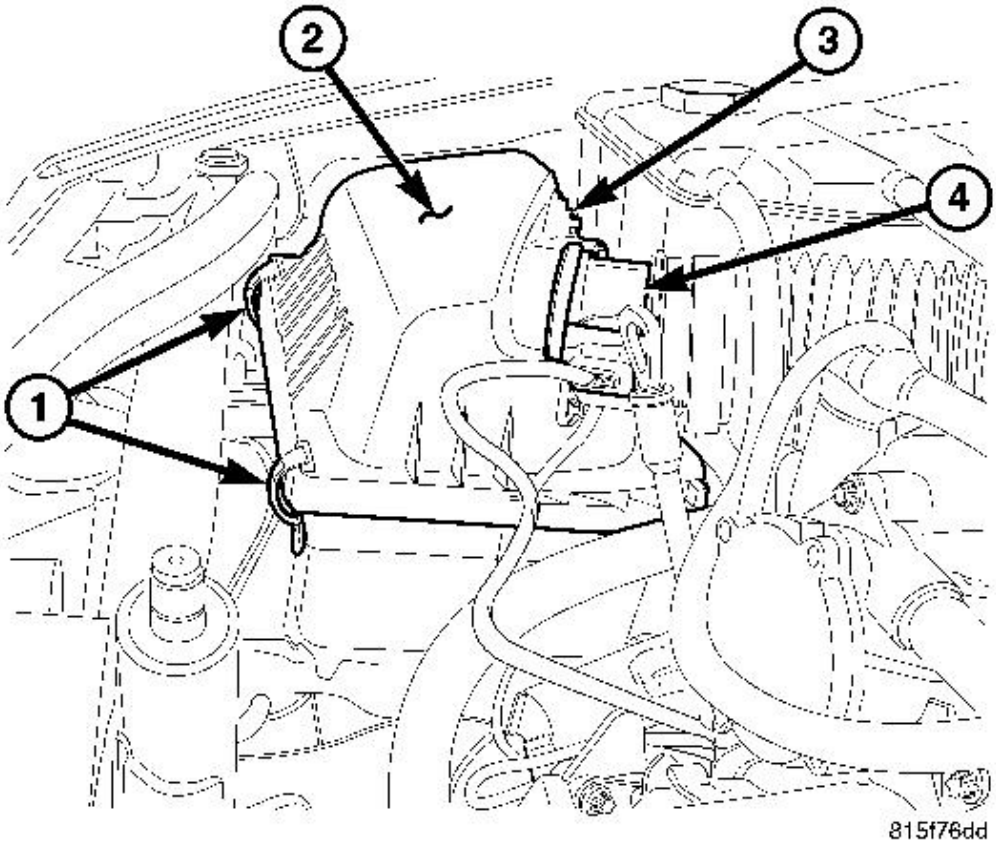

Fig. 386: Air Cleaner Cover And Components
Courtesy of CHRYSLER LLC

1 - SPRING CLIPS
2 - COVER
3 - AIR PRESSURE SENSOR
4 - MAF SENSOR

1. Disconnect negative battery cable. Refer to **REMOVAL** .
2. Remove the engine cover.
3. Remove the front engine cover bracket.
4. Raise and support the vehicle.
5. Drain the power steering into a suitable and appropriately marked container.
6. Remove the power steering hose between the pump and cooling fan.
7. Remove the power steering hose between the cooling fan and suspension.
8. Remove the lower cooling fan module retaining bolts.
9. Disconnect the cooling fan wiring harness connector.
10. Remove the power steering line between the retainer and cooling fan module.
11. Remove the front splash shield.

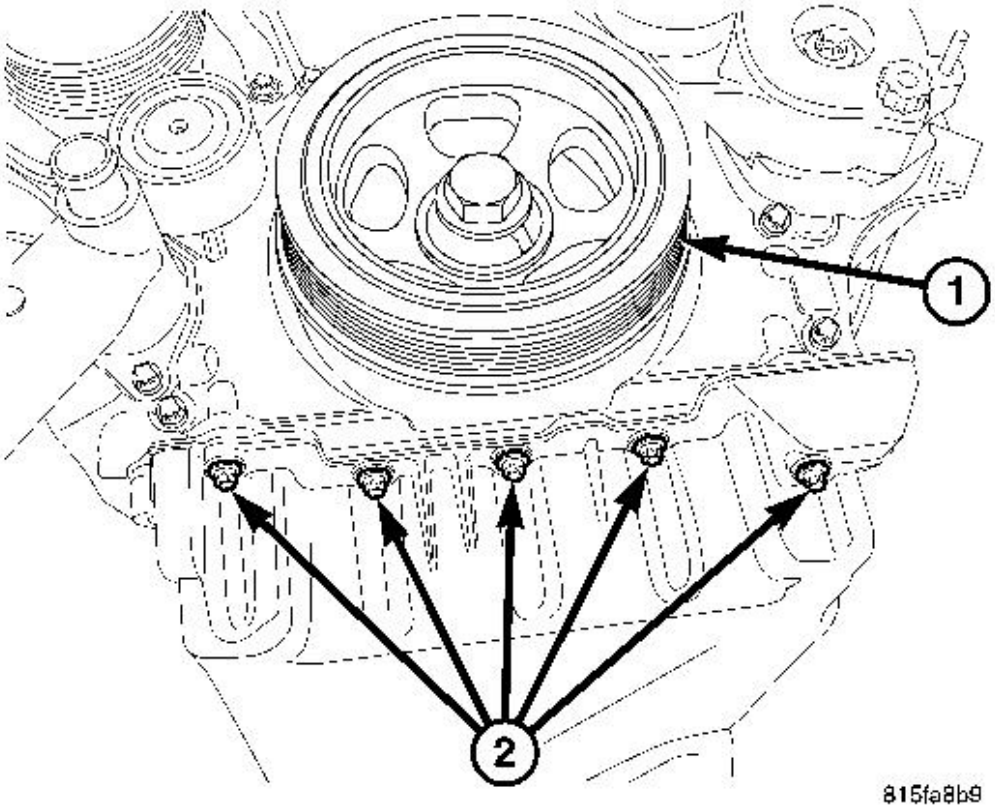

Fig. 387: Vibration Damper & Front Oil Pan Bolts
Courtesy of CHRYSLER LLC

1 - VIBRATION DAMPER
2 - OIL PAN BOLTS

12. Remove the front oil pan to timing cover bolts.
13. Lower the vehicle.
14. Remove the hoses at the power steering reservoir.
15. Remove the cooling fan module upper bolts and remove the fan assembly.
16. Remove the charge air outlet tube.

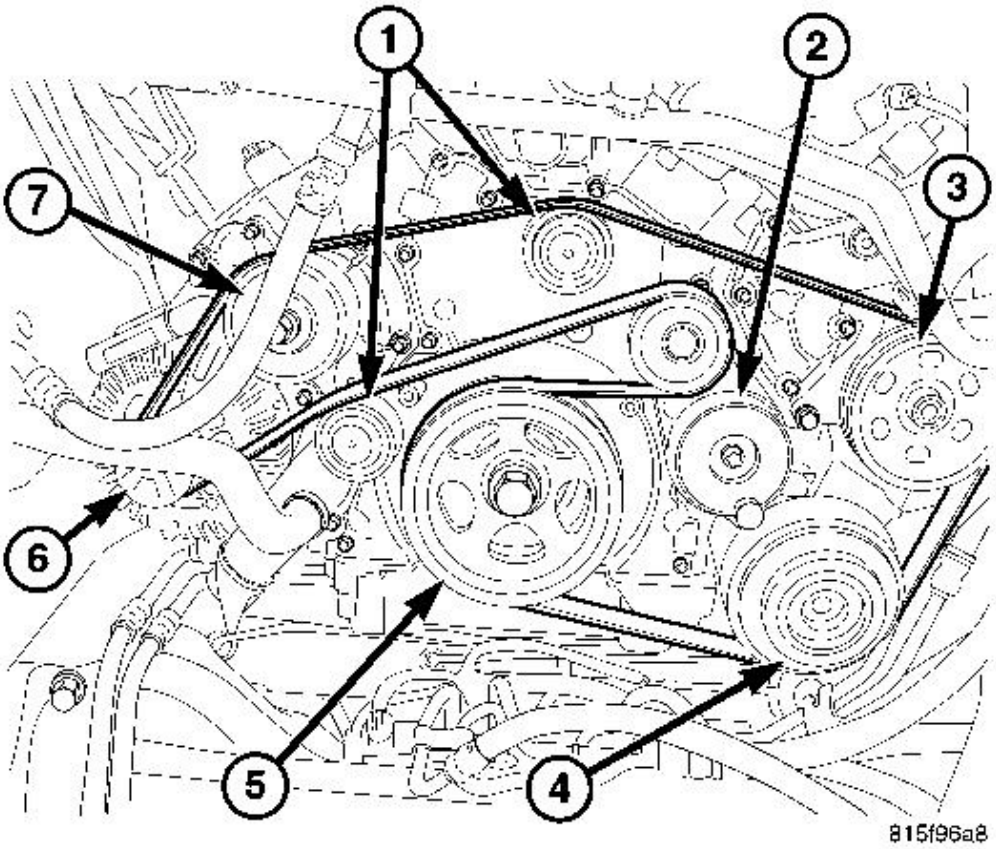

Fig. 388: Accessory Drive Belt Routing
Courtesy of CHRYSLER LLC

1 - IDLER PULLEYS
2 - DRIVE BELT TENSIONER
3 - POWER STEERING PUMP
4 - AIR CONDITIONING COMPRESSOR
5 - VIBRATION DAMPER
6 - GENERATOR
7 - WATER PUMP

17. Remove the accessory drive belt.
18. Disconnect the charge air inlet hose at the EGR air control valve.
19. Remove the glow plug module.

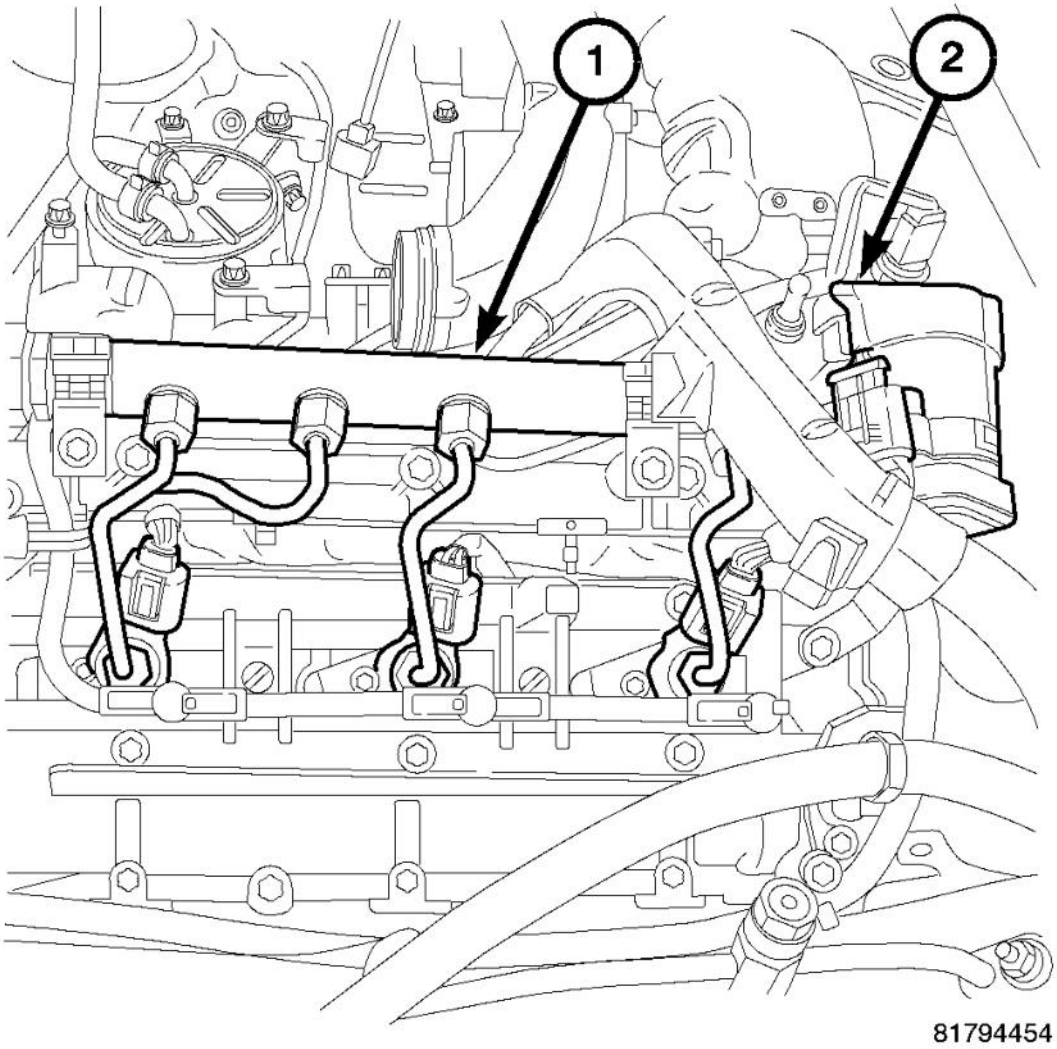

Fig. 389: EGR Valve & Fuel Injectors
Courtesy of CHRYSLER LLC

1 - Fuel Injectors
2 - EGR Valve

20. Remove the EGR air control valve.
21. Remove both accessory drive belt idler pulleys.
22. Remove the accessory drive belt tensioner.
23. Rotate the engine to TDC by the crankshaft bolt.

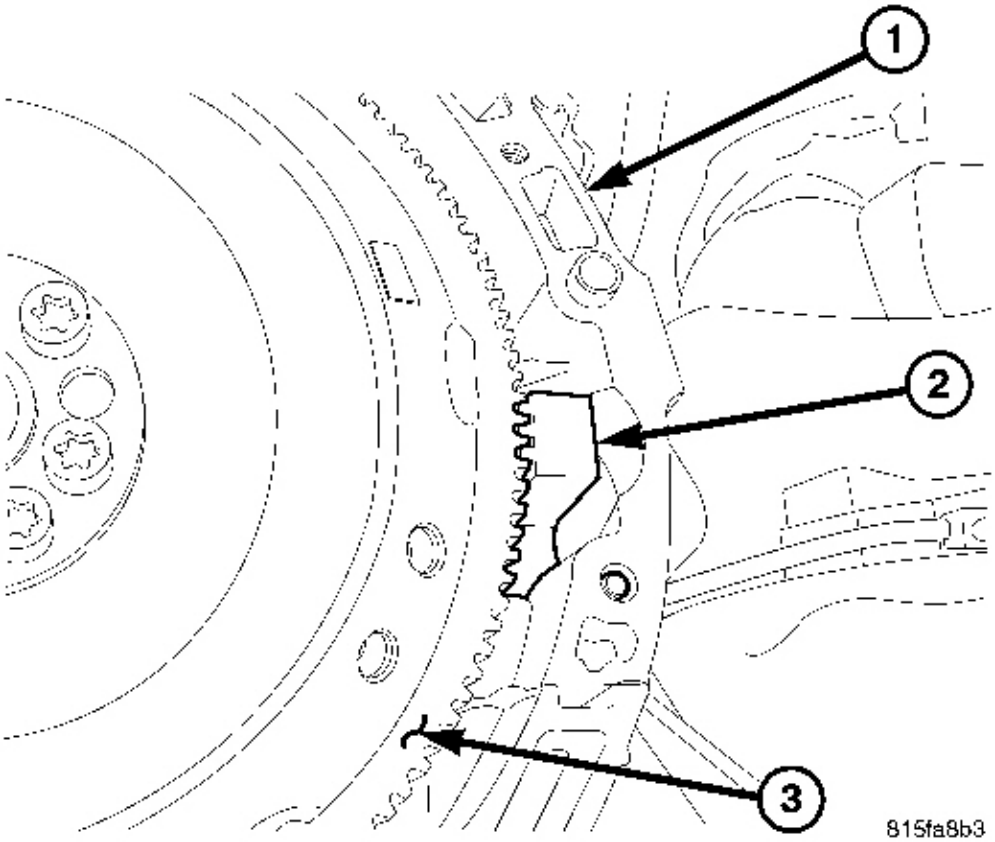

Fig. 390: Engine Block, Special Tool #9102 & Flex Plate
Courtesy of CHRYSLER LLC

1 - ENGINE BLOCK 2 - SPECIAL TOOL #9102 3 - FLEX PLATE

24. Raise and support the vehicle.
25. Remove the starter blank.
26. Install special tool 9102 crankshaft lock.
27. Lower the vehicle.

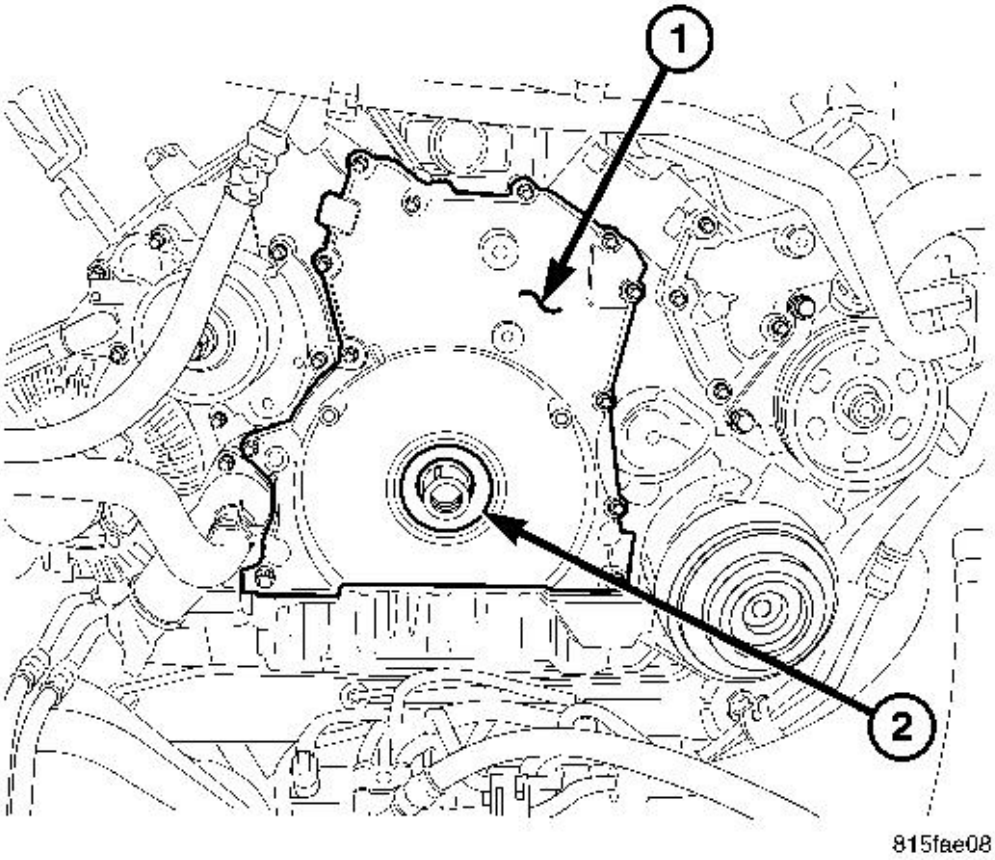

Fig. 391: Front Timing Cover & Crankshaft Seal
Courtesy of CHRYSLER LLC

1 - TIMING CHAIN COVER
2 - FRONT CRANKSHAFT SEAL

28. Remove the vibration damper and pulley.
29. Remove the front timing cover seal.
30. Remove the front timing cover bolts and cover.

INSTALLATION

TIMING CHAIN COVER

NOTE: Component mating surfaces must be clean and free of all oil residue.

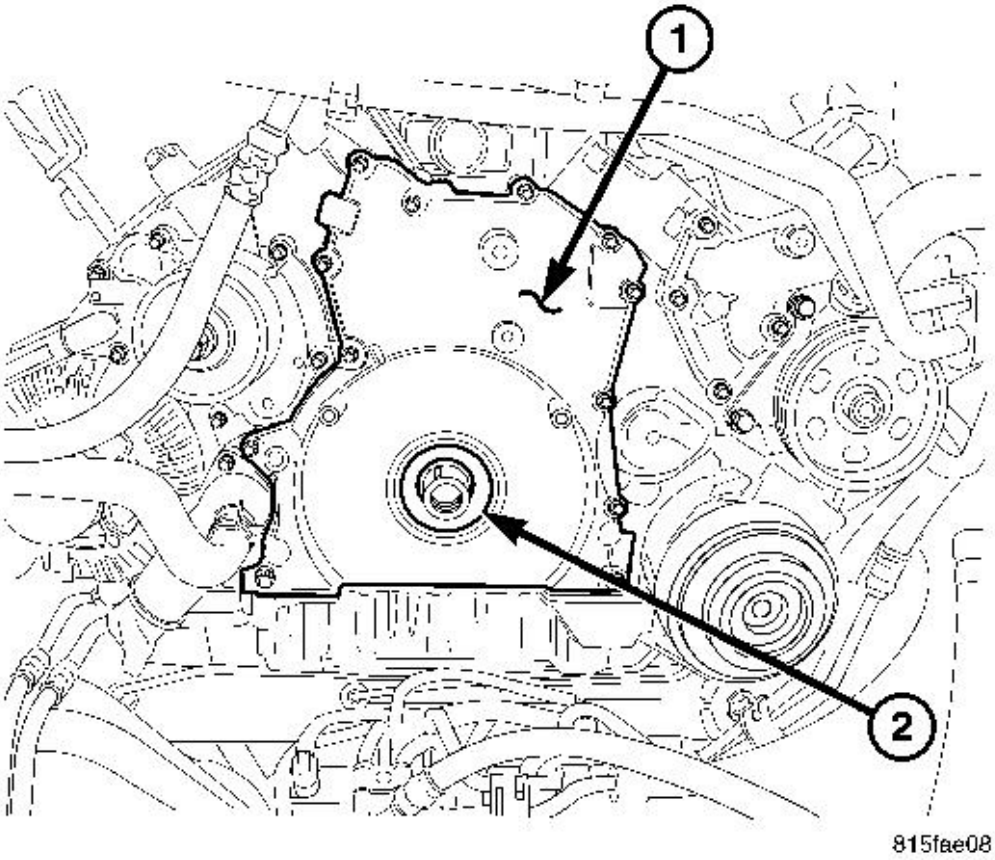

Fig. 392: Front Timing Cover & Crankshaft Seal
Courtesy of CHRYSLER LLC

1 - TIMING CHAIN COVER 2 - FRONT CRANKSHAFT SEAL

1. Install the front crankshaft seal in the timing cover (1).
2. Install the timing cover (1). Tighten bolts to 9 N.m (7 ft. lbs.).
3. Raise and support the vehicle.

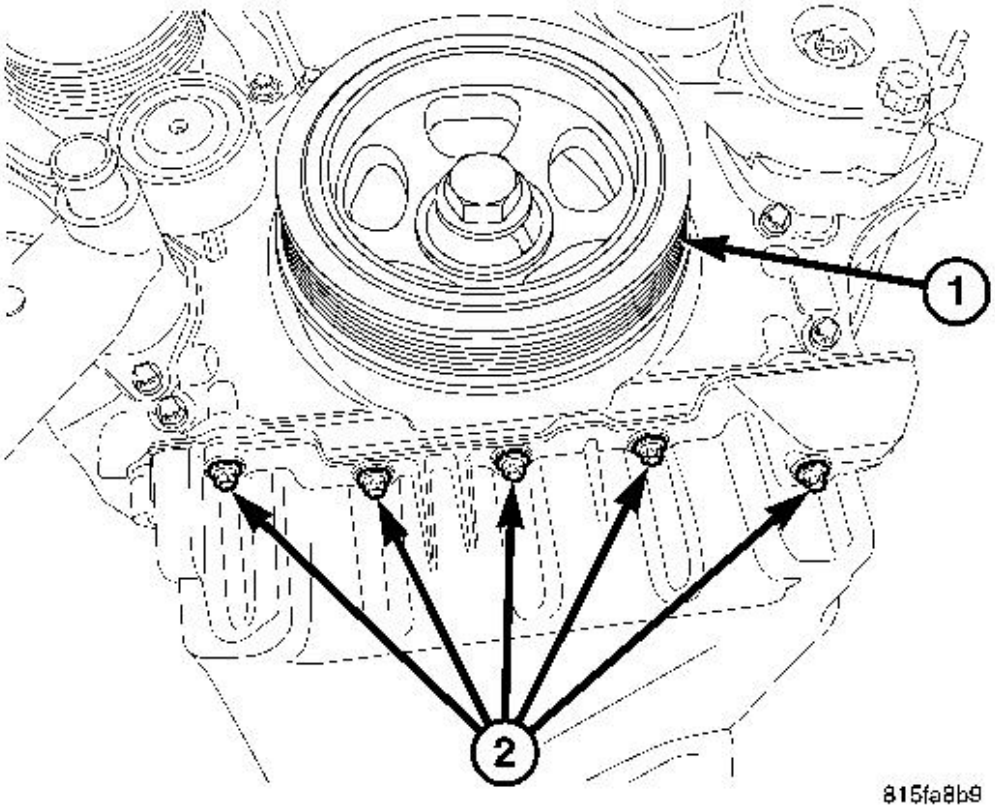

Fig. 393: Vibration Damper & Front Oil Pan Bolts
Courtesy of CHRYSLER LLC

1 - VIBRATION DAMPER
2 - OIL PAN BOLTS

4. Install the front oil pan bolts. Tighten bolts to 14 N.m (10 ft. lbs.).
5. Lower the vehicle.

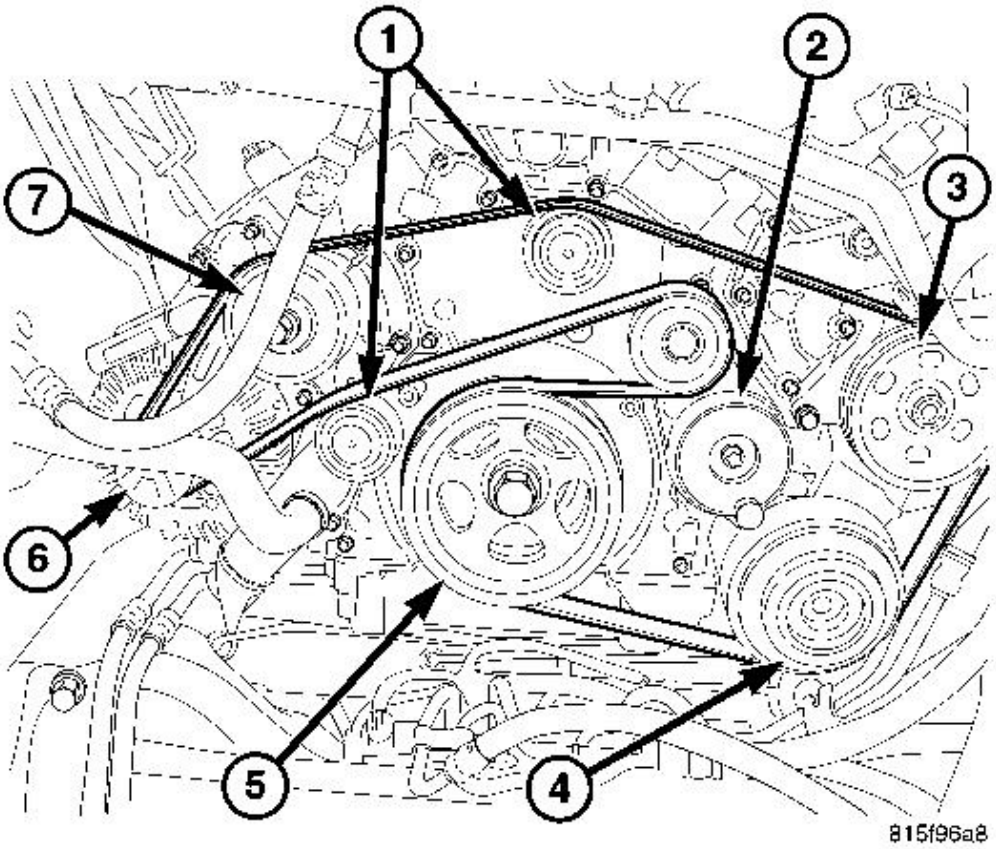

Fig. 394: Accessory Drive Belt Routing
Courtesy of CHRYSLER LLC

1 - IDLER PULLEYS
2 - DRIVE BELT TENSIONER
3 - POWER STEERING PUMP
4 - AIR CONDITIONING COMPRESSOR
5 - VIBRATION DAMPER
6 - GENERATOR
7 - WATER PUMP

6. Install the vibration damper and pulley. Tighten bolt to 200 N.m (148 ft. lbs.), and then an additional 90°
7. Install the accessory drive belt tensioner. Tighten bolt to 58 N.m (43 ft. lbs.).
8. Install the idler pulleys. Tighten bolts to 58 N.m (43 ft. lbs.).

9. Install the accessory drive belt.

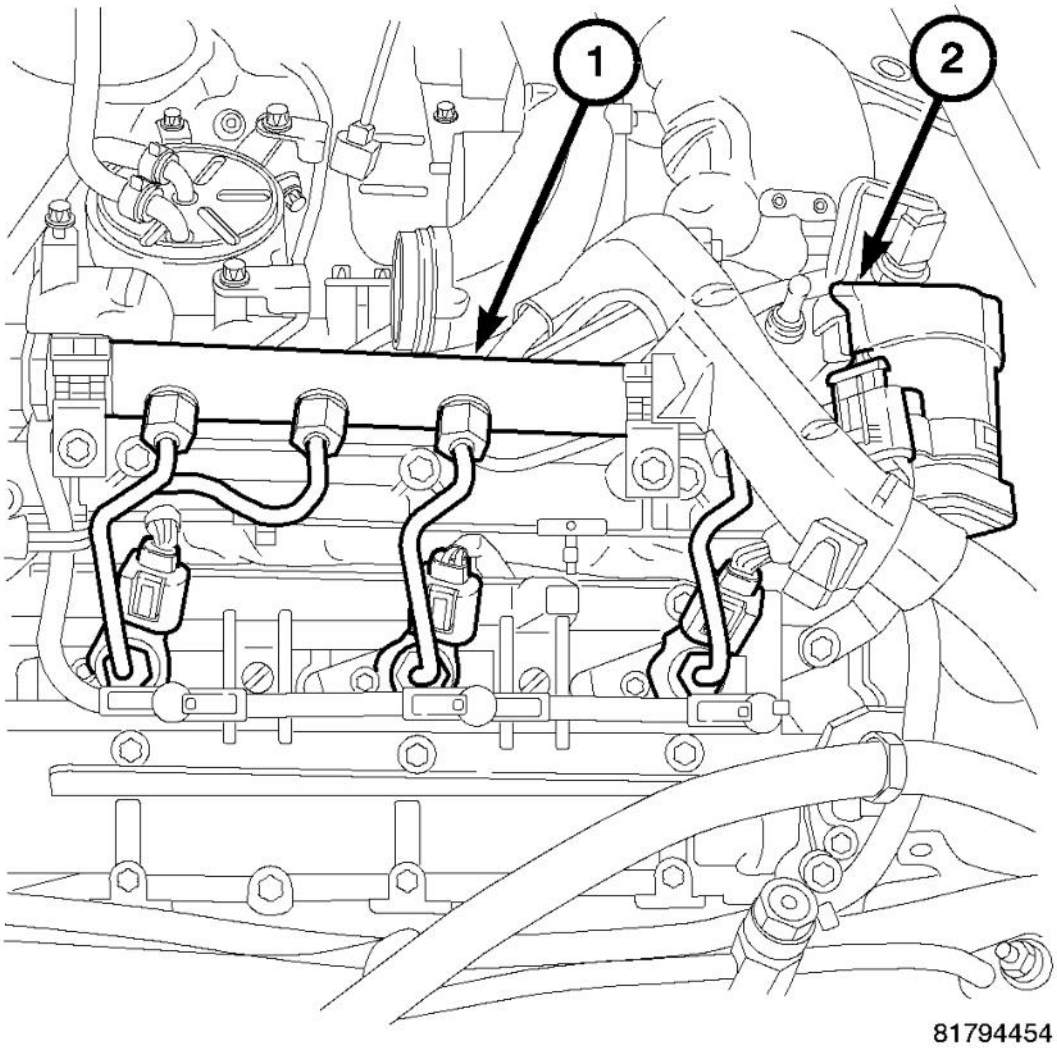

Fig. 395: EGR Valve & Fuel Injectors
Courtesy of CHRYSLER LLC

1 - Fuel Injectors
2 - EGR Valve

10. Install the EGR air control valve assembly.
11. Install the glow plug module.
12. Install the charge air outlet tube.
13. Install the cooling fan module. Tighten upper bolts to 14 N.m (10 ft. lbs.).

14. Raise and support the vehicle.

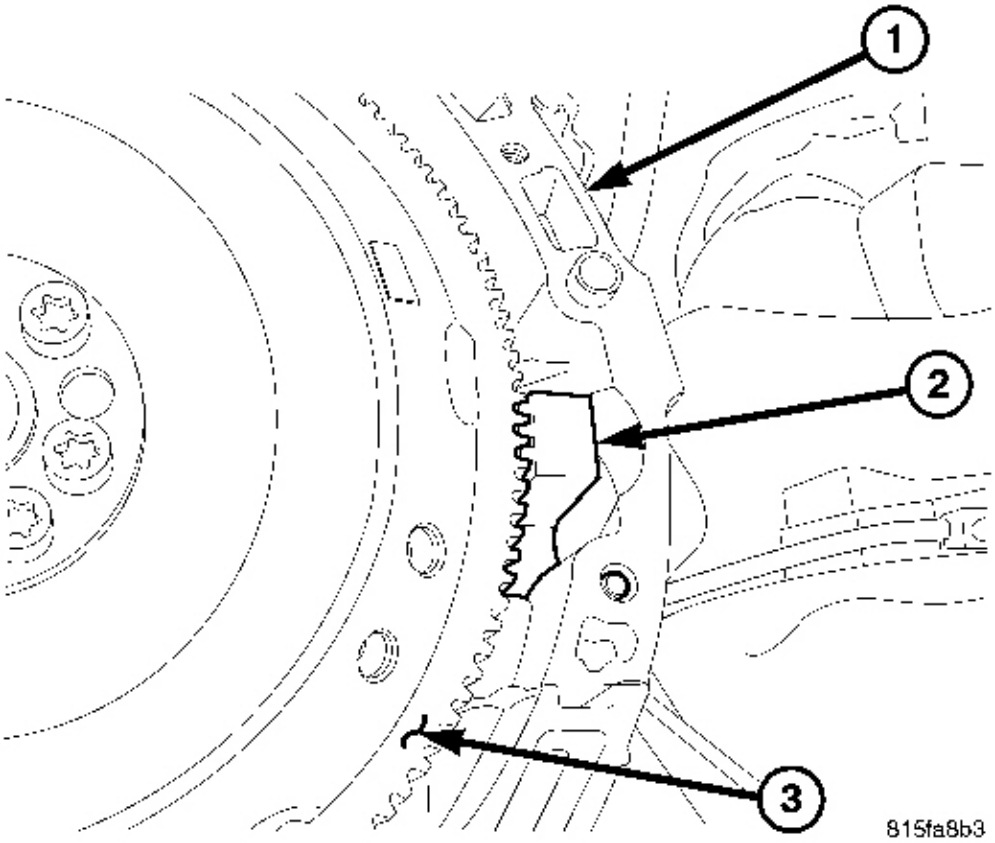

Fig. 396: Engine Block, Special Tool #9102 & Flex Plate
Courtesy of CHRYSLER LLC

1 - ENGINE BLOCK 2 - SPECIAL TOOL #9102 3 - FLEX PLATE

15. Remove special tool 9102 crankshaft lock.
16. Install the starter blank.
17. Install the lower cooling fan module bolts. Tighten lower bolts to 14 N.m (10 ft. lbs.).
18. Install the power steering line between the retainer and cooling fan module.
19. Connect the cooling fan wiring harness connector.

20. Install the power steering hose between the cooling fan and suspension.
21. Install the power steering hose between the pump and cooling fan.
22. Install the front skid plate.
23. Lower the vehicle.
24. Install the hoses at the power steering reservoir.
25. Fill the power steering reservoir.

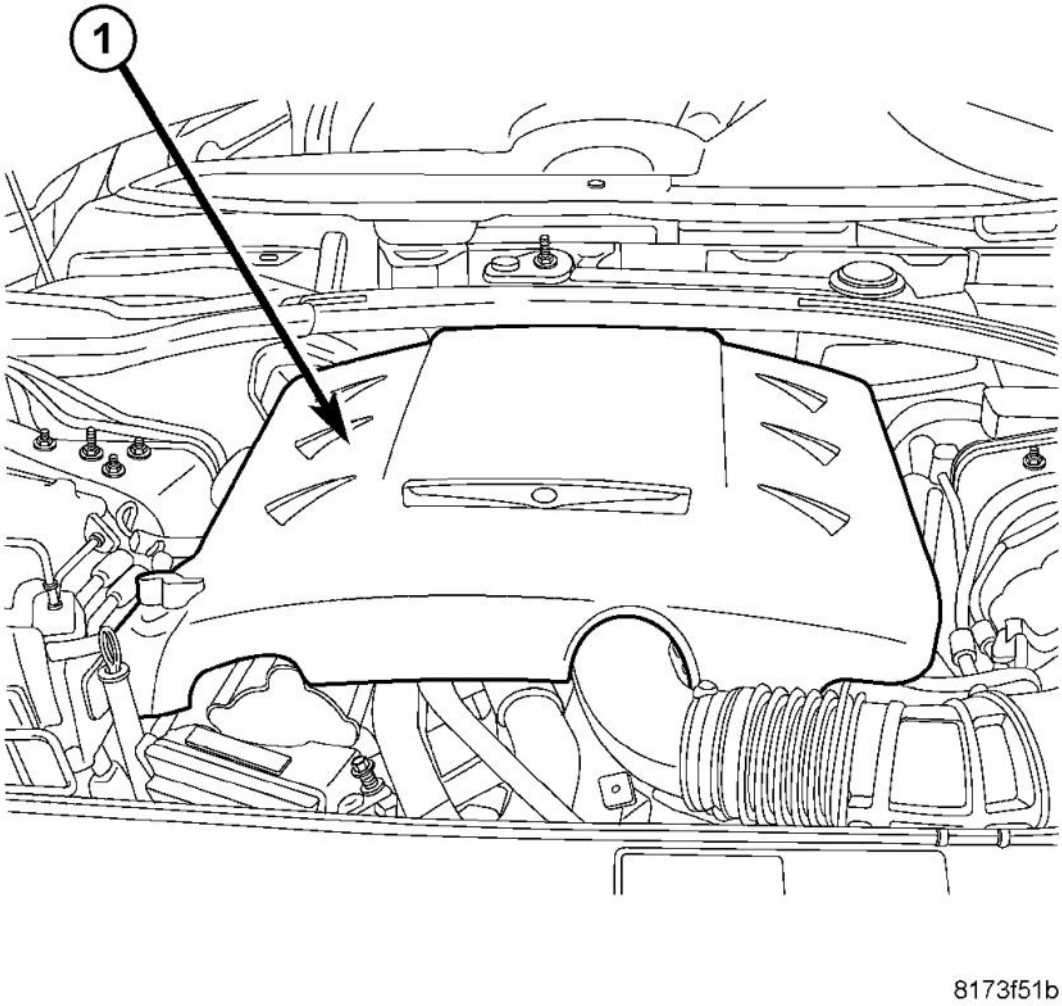

Fig. 397: Engine Appearance Cover
Courtesy of CHRYSLER LLC

26. Install the front engine cover bracket.
27. Install the engine cover.
28. Connect the negative battery cable.

29. Purge the air from the power steering system before starting by raising the vehicle and rotating the steering wheel back and forth 20 times.
30. Start the engine and follow the bleed procedure with the scan tool.
31. Turn engine off and inspect for leaks.

SPROCKETS - TIMING CHAIN AND

REMOVAL

GUIDE - TIMING CHAIN - UPPER

NOTE: When servicing the timing chain guides, both the upper and the lower guide should be replaced in pairs.

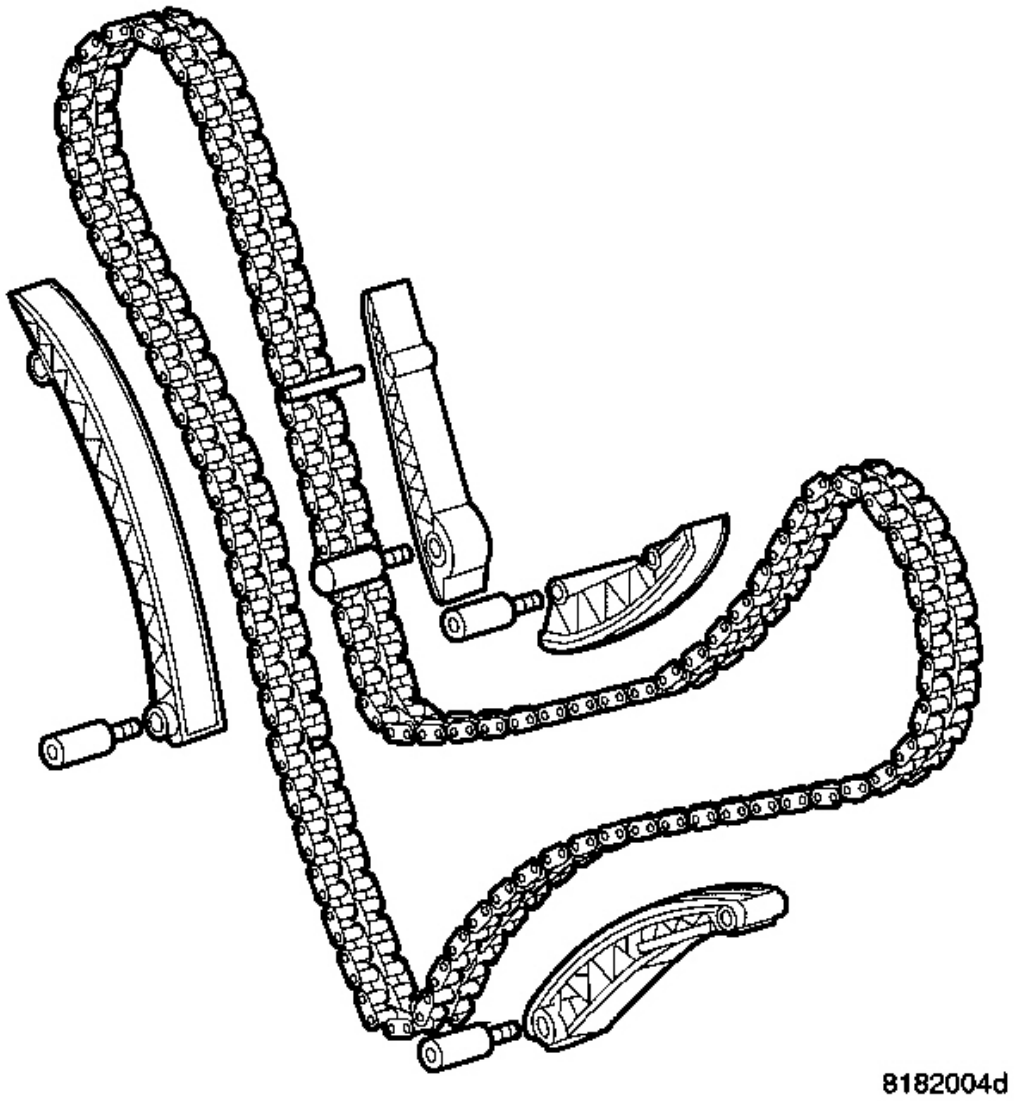

Fig. 398: Timing Chain And Guides
Courtesy of CHRYSLER LLC

1. Disconnect negative battery cable. Refer to **REMOVAL** .
2. Remove the left cylinder head cover. See **REMOVAL**.
3. Remove the right cylinder head cover. See **REMOVAL**.
4. Remove the timing chain cover. See **REMOVAL**.

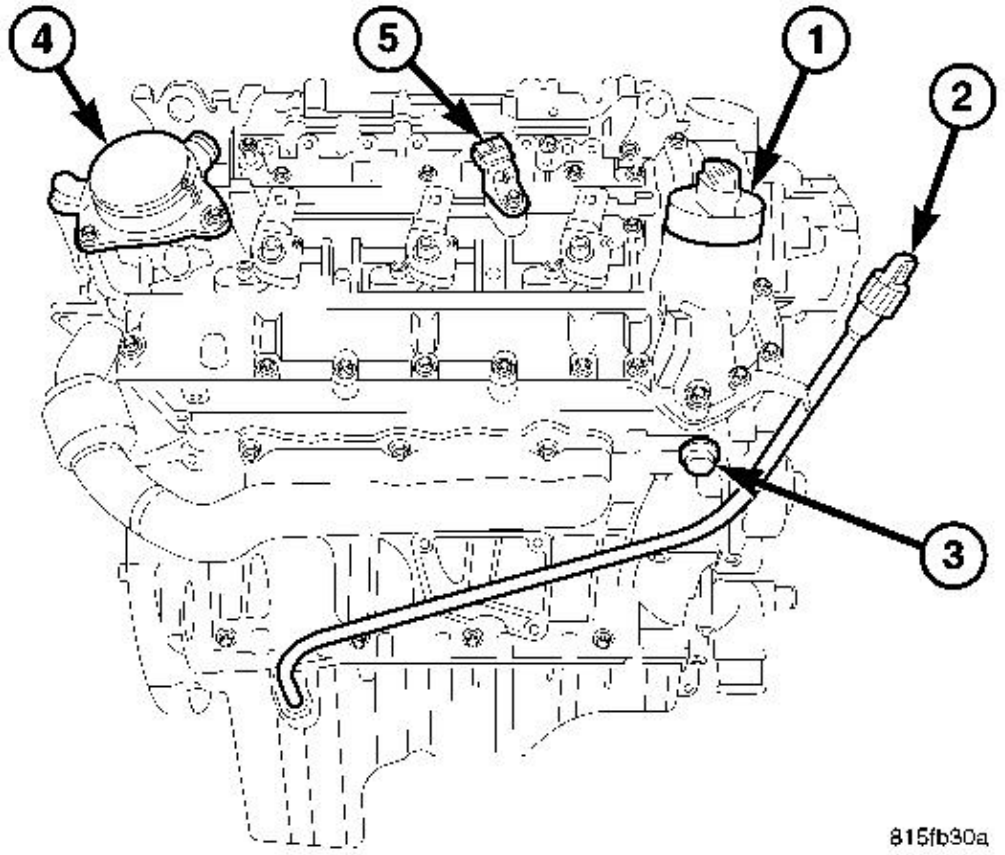

Fig. 399: Engine Oil Cap, Oil Level Indicator, Timing Chain Tensioner, Oil Separator Assembly & Camshaft Position Sensor
Courtesy of CHRYSLER LLC

1 - ENGINE OIL CAP
2 - OIL LEVEL INDICATOR
3 - TIMING CHAIN TENSIONER
4 - OIL SEPARATOR ASSEMBLY
5 - CAMSHAFT POSITION SENSOR

5. Remove the timing chain tensioner (3).

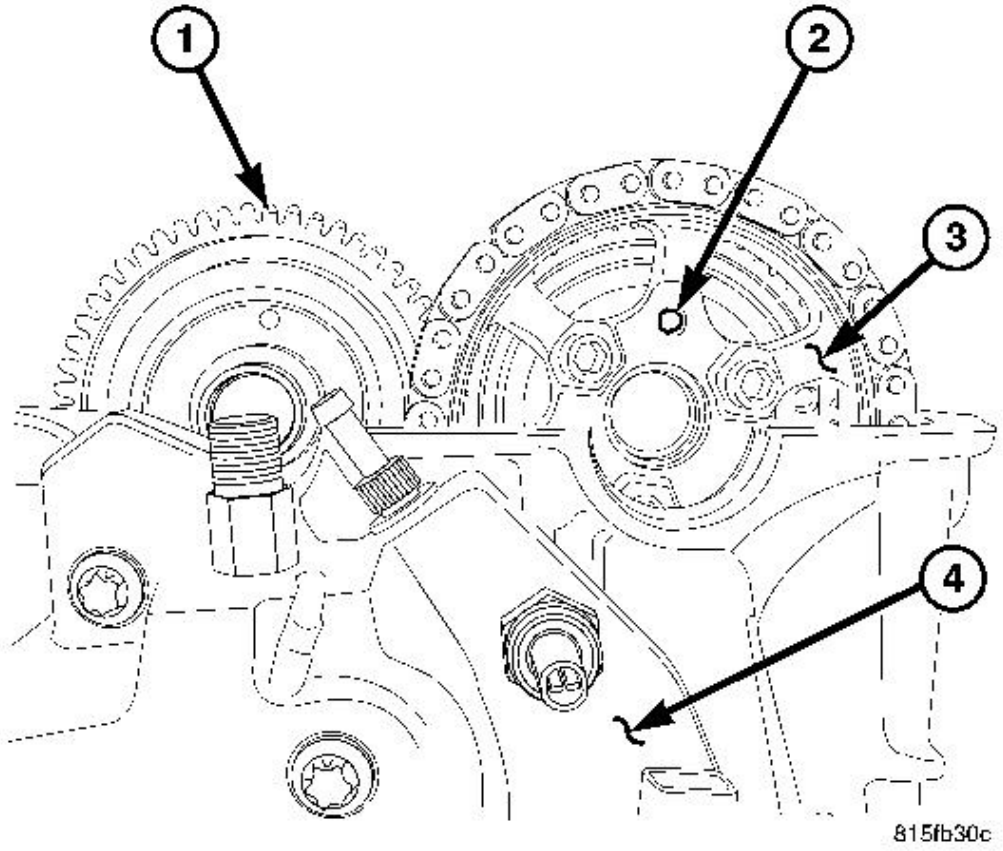

Fig. 400: Left Exhaust Camshaft Drive Gear Alignment Dowel
Courtesy of CHRYSLER LLC

1 - LEFT INTAKE CAMSHAFT
2 - LEFT EXHAUST CAMSHAFT DRIVE GEAR ALIGNMENT DOWEL
3 - LEFT EXHAUST CAMSHAFT DRIVE GEAR
4 - HIGH PRESSURE FUEL INJECTION PUMP

6. Rotate the engine and remove the right camshaft drive gear lower bolt.
7. Rotate the engine back to TDC and check the alignment marks at the balance shaft, camshaft gear and crankshaft gear.
8. Remove the remaining right camshaft drive gear retaining bolts.
9. Separate the right camshaft drive gear and chain from camshaft.
10. Remove the right camshaft drive gear.

11. Secure the chain so that there is slack at the timing chain guides but the chain remains on the crankshaft gear.

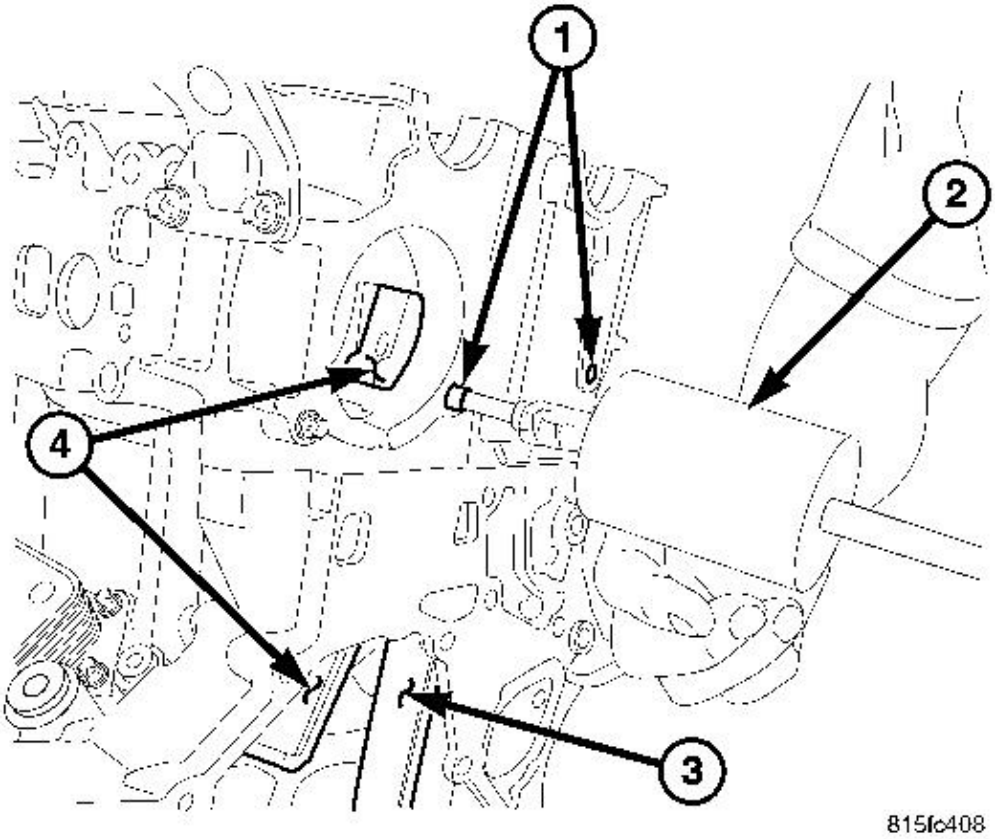

Fig. 401: Guide Pin, Slide Hammer & Lower/Upper Timing Chain Guide
Courtesy of CHRYSLER LLC

1 - GUIDE PIN
2 - SLIDE HAMMER
3 - LOWER TIMING CHAIN GUIDE
4 - UPPER TIMING CHAIN GUIDE

12. Cut a small section of tubing, with an inner diameter of the tube that is larger than the outer diameter of the timing chain guide pin, 25 mm (1 inch) in length.
13. Place the tube over the timing chain guide pin and thread a bolt into the timing chain guide pin in the right cylinder head. Tighten the bolt until the guide pin is removed from the cylinder head.

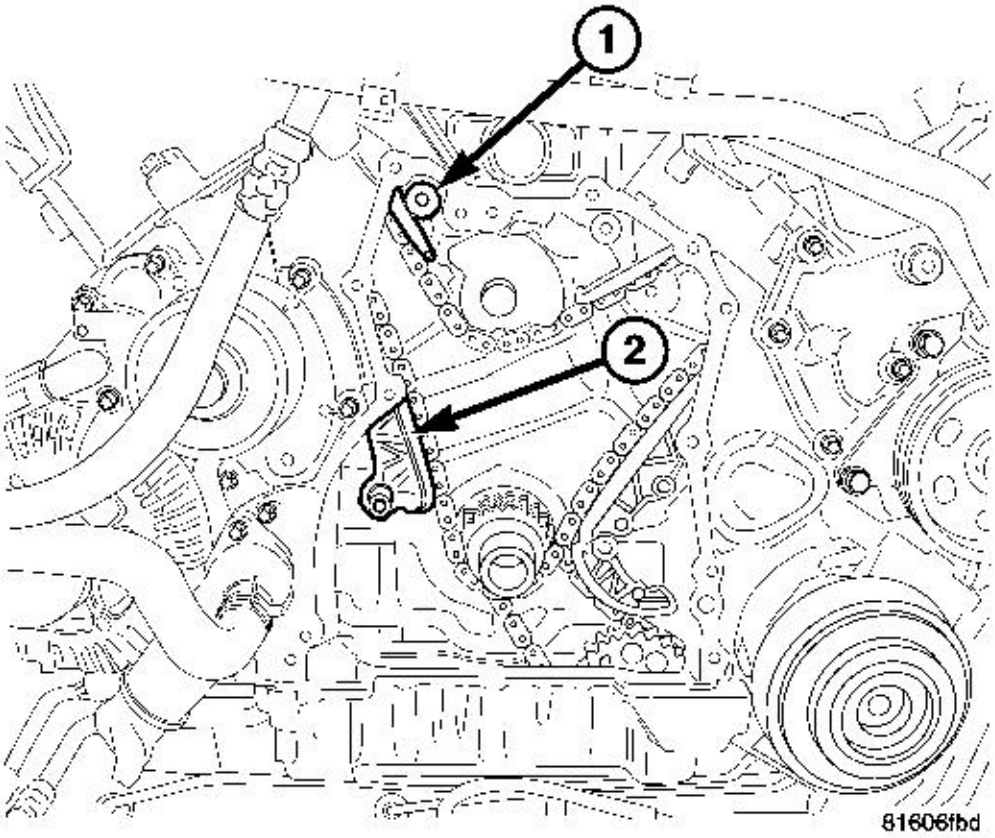

Fig. 402: Upper/Lower Timing Chain Guides
Courtesy of CHRYSLER LLC

1 - UPPER TIMING CHAIN GUIDE
2 - LOWER TIMING CHAIN GUIDE

14. Remove the bolt for the left upper timing chain.
15. Remove the upper timing chain guide from the left cylinder head.
16. Remove the bolt for the right upper timing chain.
17. Remove the upper timing chain guide in the right cylinder head.

TIMING CHAIN

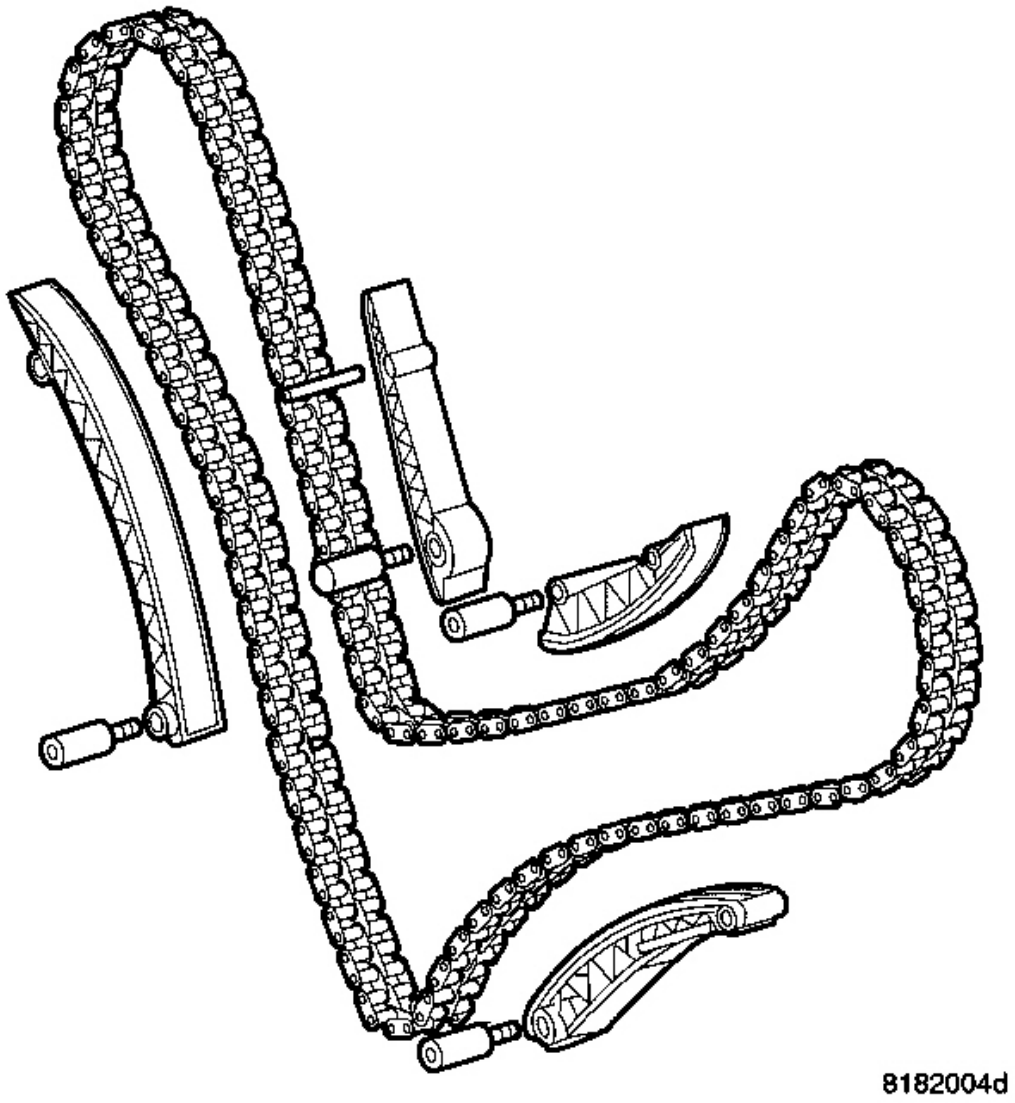

Fig. 403: Timing Chain And Guides
Courtesy of CHRYSLER LLC

To check the timing chain for wear and stretch, remove the right-bank cylinder head cover and position the engine at TDC of cylinder number one Lock the camshafts with special tool 8929 - Locking Pins. The timing marks on the camshaft gears must face each other. Rotate the engine in the direction of rotation only and do not turn back otherwise measurement errors can result. With the camshafts locked, check the position of the vibration damper. The chain stretch is measured by the number of crankshaft degrees past the TDC mark. The timing chain is OK when the belt pulley is at the marking at max. 11° after TDC with locked camshafts. Replace the timing chain has stretched beyond specifications.

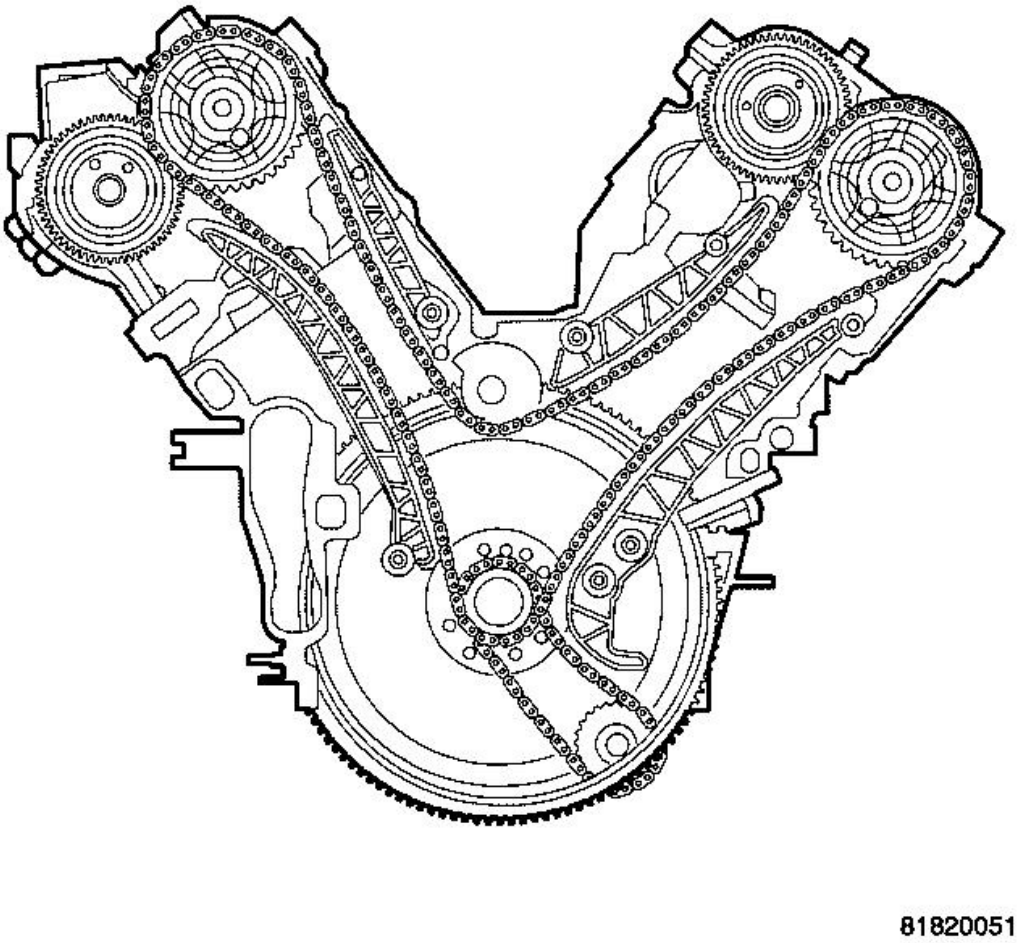

Fig. 404: Timing
Courtesy of CHRYSLER LLC

1. Disconnect negative battery cable. Refer to **REMOVAL** .
2. Remove the right cylinder head cover. See **REMOVAL**.
3. Make sure the crankshaft is turned to the TDC. Verify TDC of the crankshaft by lining up the mark on the front cover with the mark on the crankshaft damper.
4. Make sure that the timing marks on the back of the camshafts are horizontal and pointing at each other.
5. Remove the timing chain tensioner.

NOTE: **Cover the timing chain area. Care must be taken not to drop any repair debris or pieces into the engine when separating the timing chain links.**

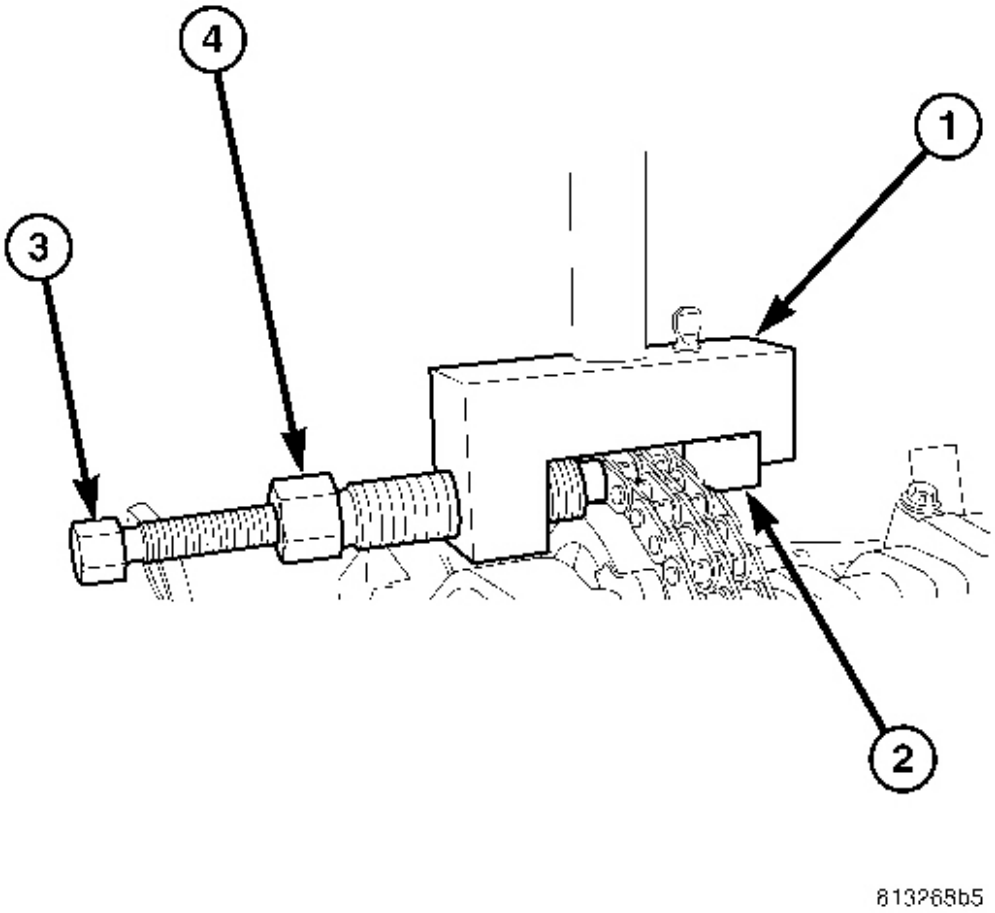

Fig. 405: Special Tools 9312-1, Insert, Thrust Pin & Spindle
Courtesy of CHRYSLER LLC

1 - SPECIAL TOOL #9312-1
2 - SPECIAL TOOL #9312-13 - INSERT
3 - SPECIAL TOOL #9312-3 - THRUST PIN
4 - SPECIAL TOOL #9312-4 - SPINDLE

6. Install special tool # 9554 using two of the cylinder head cover bolts.
7. Assemble special tool #9312-1 using 9312-3 and 9312-4. Install insert #9312-13 and retain with screw provided.

CAUTION: Care must be taken not to drop the timing chain plates into the

engine once the timing chain is separated.

NOTE: When installing special tool #9312-1 onto timing chain link, be sure to back off the smaller nut of the thrust pin #9312-3 until the pin is recessed inside of the spindle, #9312-4. Screw the thrust spindle #9312-4 in until it is seated and aligned properly over the rivet of the timing chain.

NOTE: When fitting the thrust spindle, ensure that the thrust pin is positioned at the left timing chain pin of a chain link.

NOTE: Cover the timing chain area. Care must be taken not to drop any repair debris or pieces into the engine when separating the timing chain links.

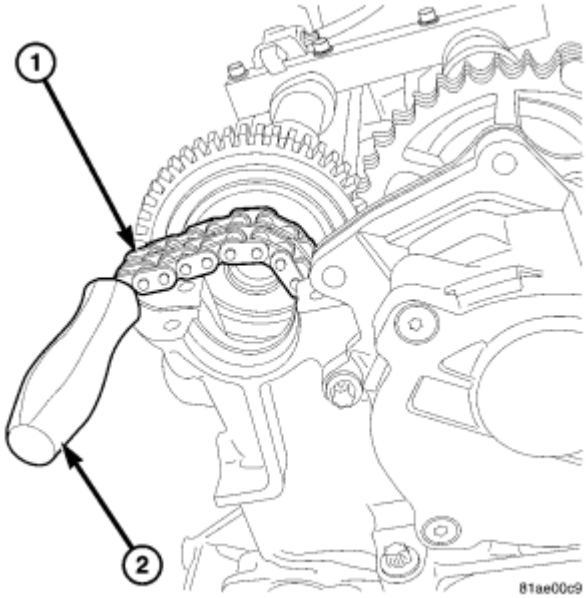

Fig. 406: Preventing Chain From Falling
Courtesy of CHRYSLER LLC

8. Carefully turn the thrust pin #9312-13 of special tool #9312-1 clockwise while holding the handle until the rivet is pressed out and the chain is separated. Discard the loose link and plates.
9. Use a small screwdriver to prevent the timing chain from slipping into the engine.

NOTE: One whole timing chain link must be removed.

CAUTION: IT IS ESSENTIAL that the installation procedure for the timing chain is followed exactly. Failure to do so will result in severe engine damage.

TIMING CHAIN TENSIONING RAIL

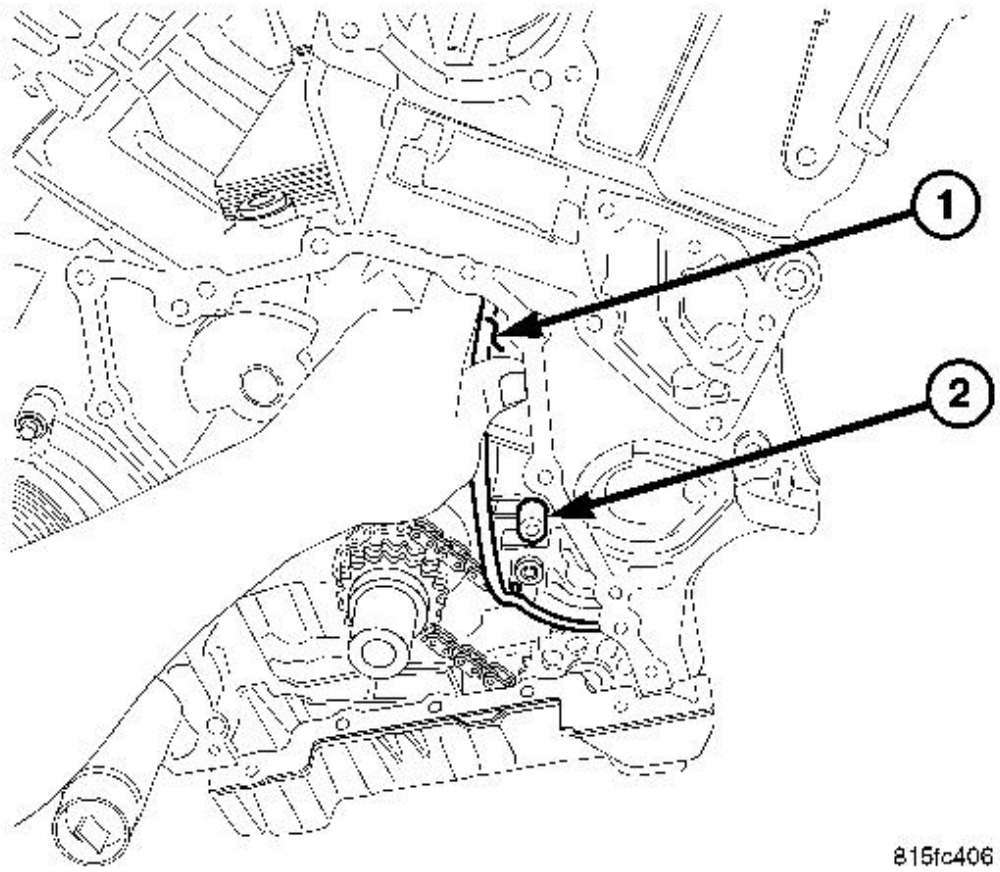

Fig. 407: Left Lower Timing Chain Guide And Fastener
Courtesy of CHRYSLER LLC

1 - LEFT LOWER TIMING CHAIN GUIDE 2 - FASTENER

1. Disconnect negative battery cable.
2. Remove cylinder head. See **REMOVAL**.
3. Remove timing chain cover. See **REMOVAL**.

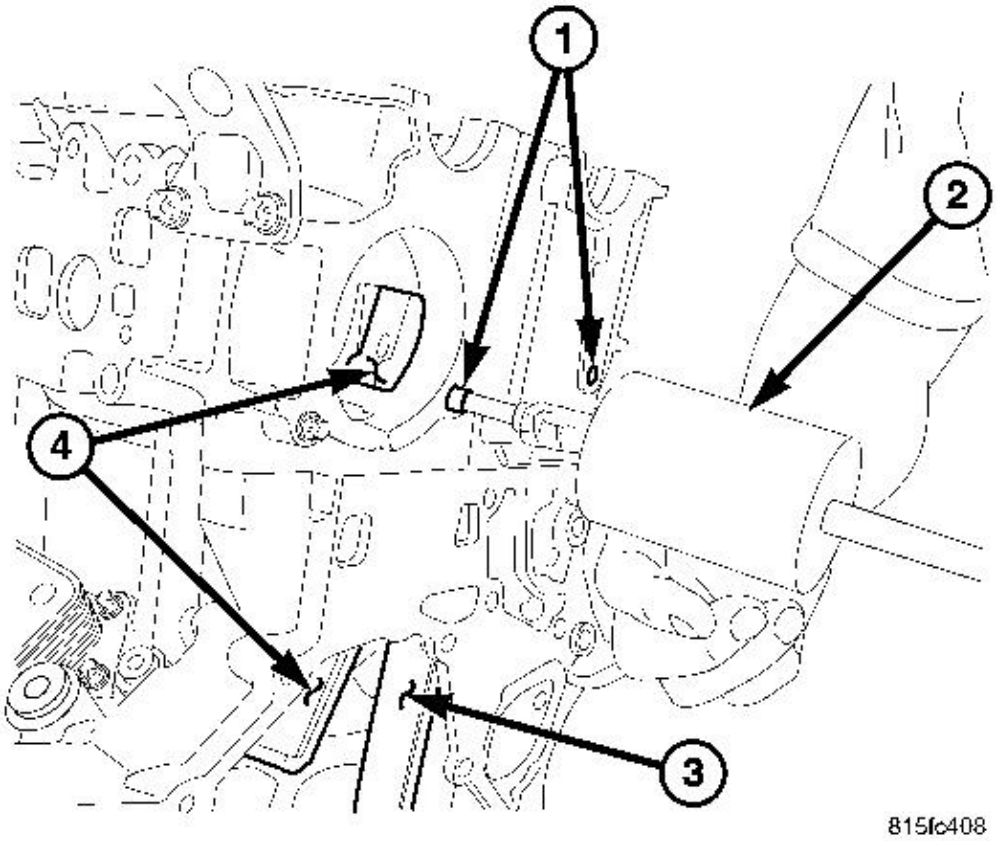

Fig. 408: Guide Pin, Slide Hammer & Lower/Upper Timing Chain Guide
Courtesy of CHRYSLER LLC

1 - GUIDE PIN
2 - SLIDE HAMMER
3 - LOWER TIMING CHAIN GUIDE
4 - UPPER TIMING CHAIN GUIDE

4. Remove the timing chain guide pin.
5. Remove the timing chain retaining bolt.
6. Remove the timing chain tensioner.

INSPECTION

TIMING CHAIN STRETCH PROCEDURE

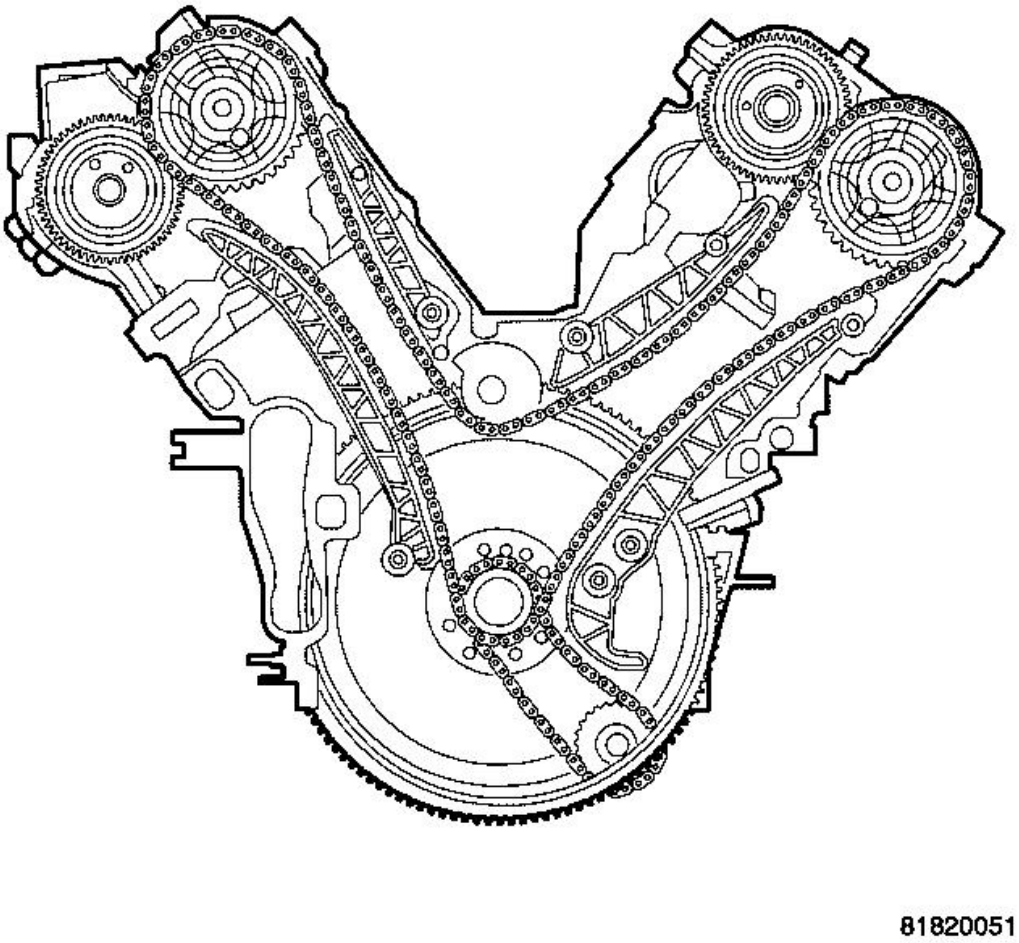

Fig. 409: Timing
Courtesy of CHRYSLER LLC

1. Remove the left cylinder head cover. See **REMOVAL**.
2. Remove the right cylinder head cover. See **REMOVAL**.

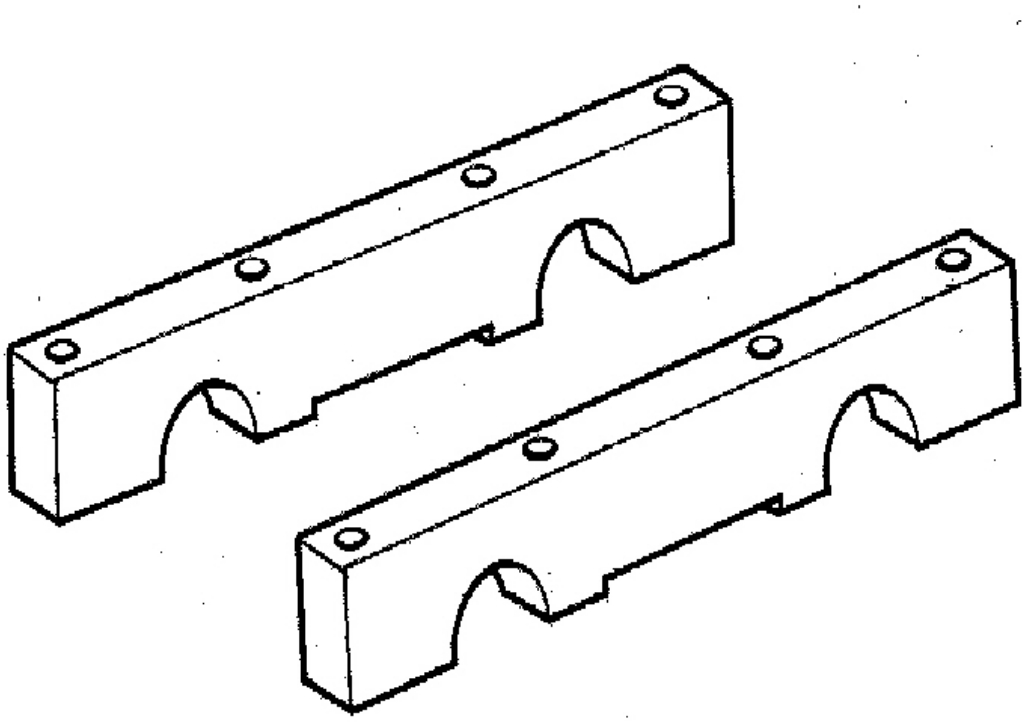

Fig. 410: Retainer, Camshafts - 9555
Courtesy of CHRYSLER LLC

3. Install the camshaft retainers.

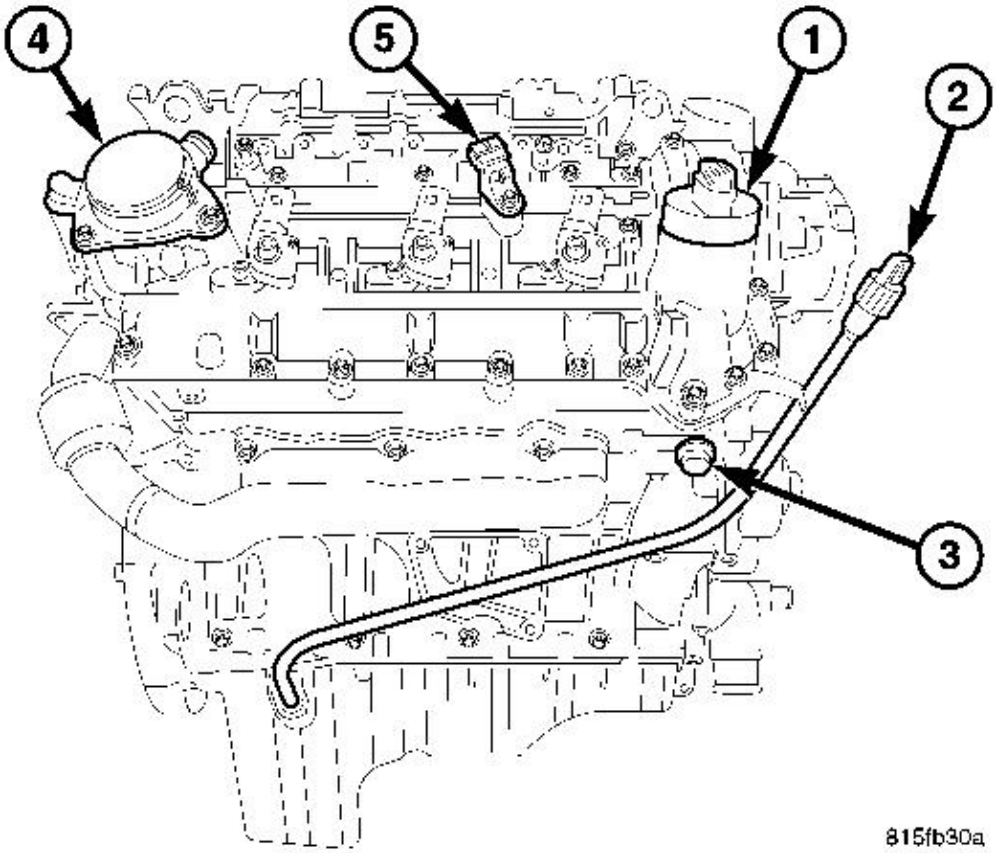

Fig. 411: Engine Oil Cap, Oil Level Indicator, Timing Chain Tensioner, Oil Separator Assembly & Camshaft Position Sensor
Courtesy of CHRYSLER LLC

1 - ENGINE OIL CAP
2 - OIL LEVEL INDICATOR
3 - TIMING CHAIN TENSIONER
4 - OIL SEPARATOR ASSEMBLY
5 - CAMSHAFT POSITION SENSOR

4. Make sure that the timing chain cover is fully seated.

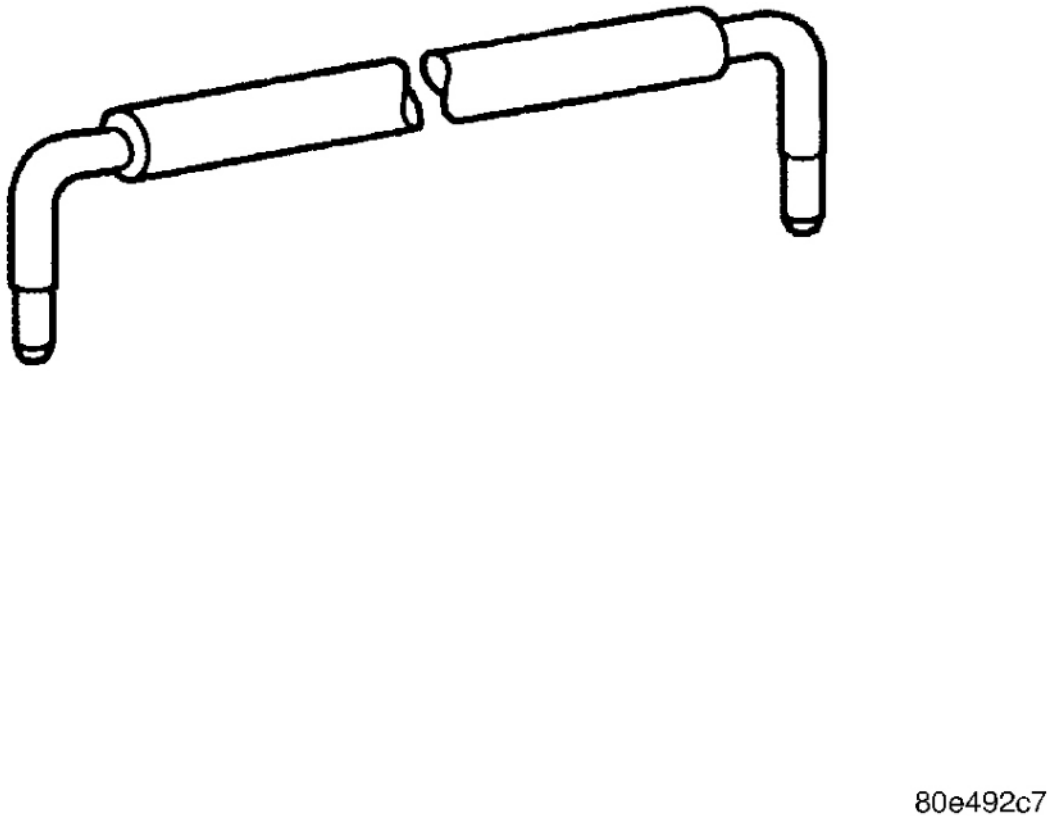

Fig. 412: #8929 Camshaft Locking Pin
Courtesy of CHRYSLER LLC

5. Rotate the crankshaft clockwise until the crankshaft is at TDC and the camshaft locking pins can be installed.
6. With the locking pins installed, turn the crankshaft clockwise until the timing chain is completely tight. If the marks on the crankshaft damper exceed 11 degrees, replace the timing chain.

INSTALLATION

GUIDE - TIMING CHAIN - UPPER

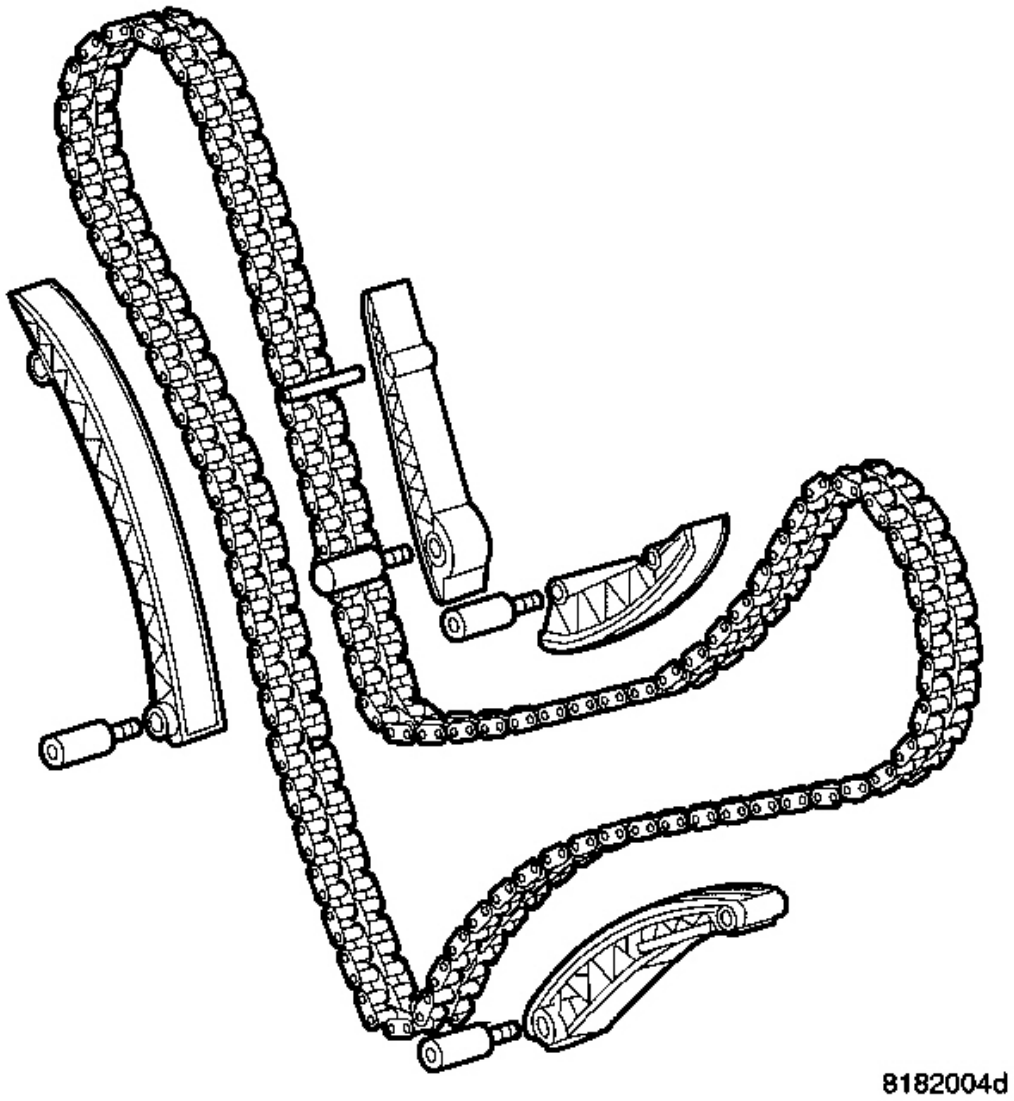

Fig. 413: Timing Chain And Guides
Courtesy of CHRYSLER LLC

NOTE: **Carefully clean all mating surfaces with appropriate solvents to assure that no grease or oil is present during reassembly.**

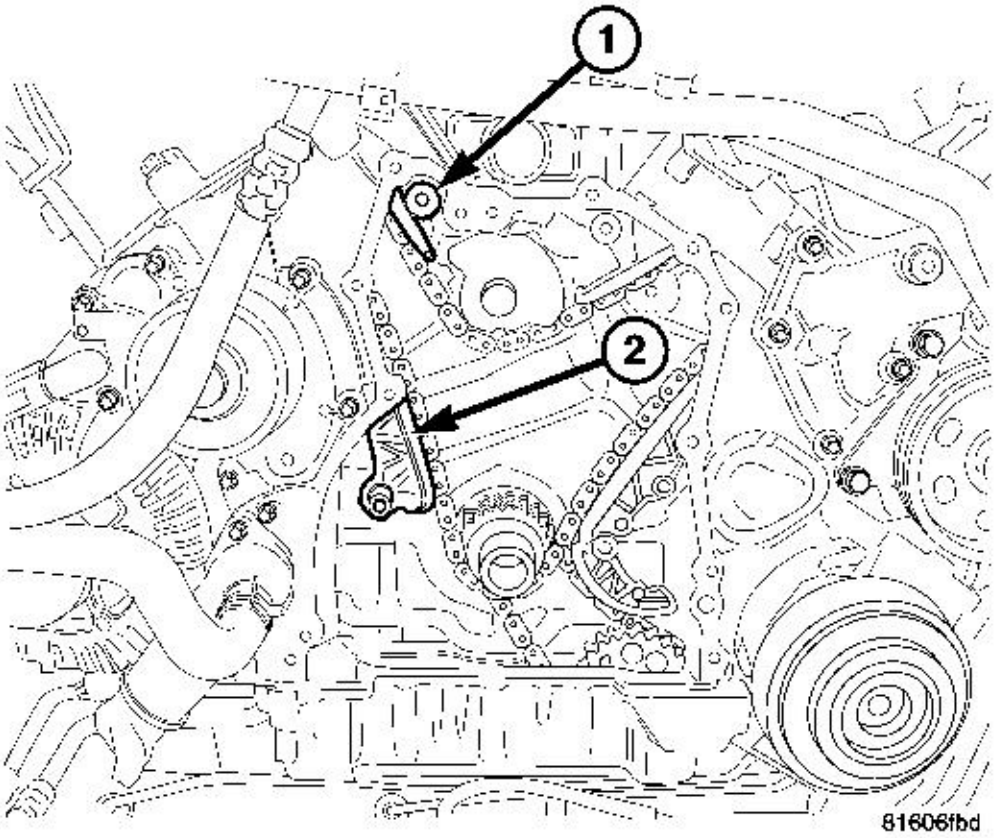

Fig. 414: Upper/Lower Timing Chain Guides
Courtesy of CHRYSLER LLC

1 - UPPER TIMING CHAIN GUIDE
2 - LOWER TIMING CHAIN GUIDE

1. Install the right side upper timing chain guide and bolt (1).
2. Install the upper timing chain guide pin in the right cylinder head.
3. Install the left side upper timing chain guide and bolt.
4. Install the upper timing chain guide pin in the left cylinder head.

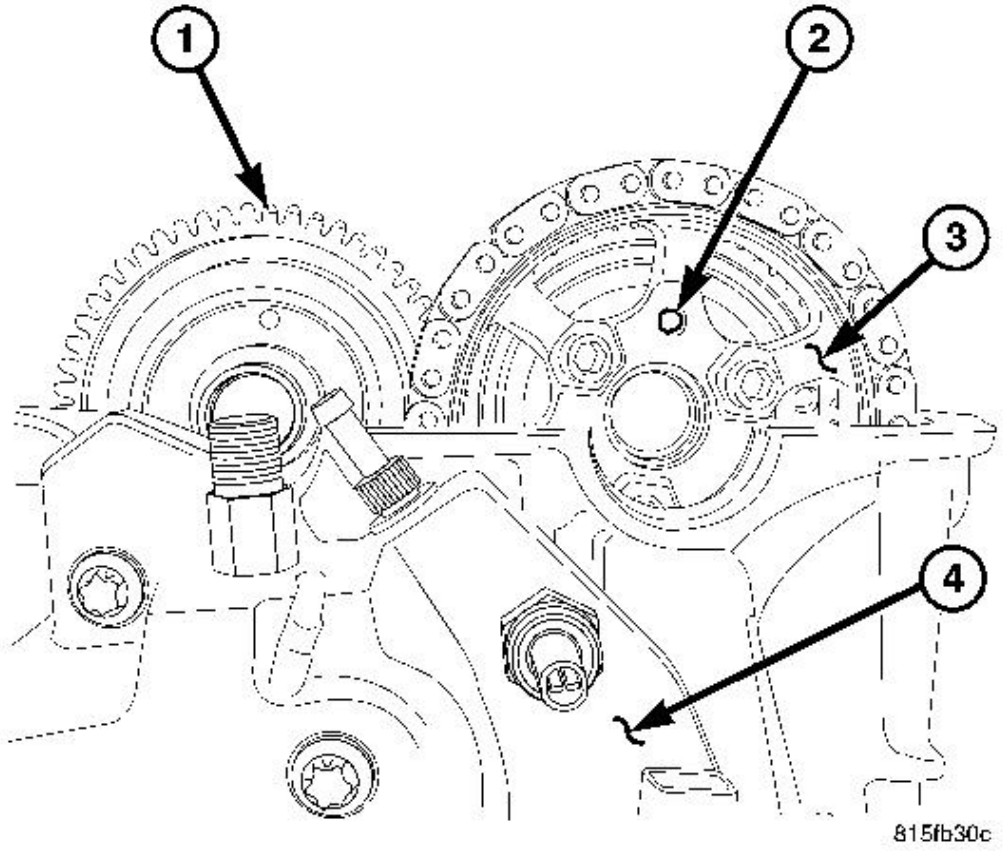

Fig. 415: Left Exhaust Camshaft Drive Gear Alignment Dowel
Courtesy of CHRYSLER LLC

1 - LEFT INTAKE CAMSHAFT
2 - LEFT EXHAUST CAMSHAFT DRIVE GEAR ALIGNMENT DOWEL
3 - LEFT EXHAUST CAMSHAFT DRIVE GEAR
4 - HIGH PRESSURE FUEL INJECTION PUMP

5. Install the camshaft drive gear on the exhaust camshaft in the right cylinder head.
6. Install the upper two bolts into the camshaft drive gear and tighten to 18 N.m (159 lbs.in.).

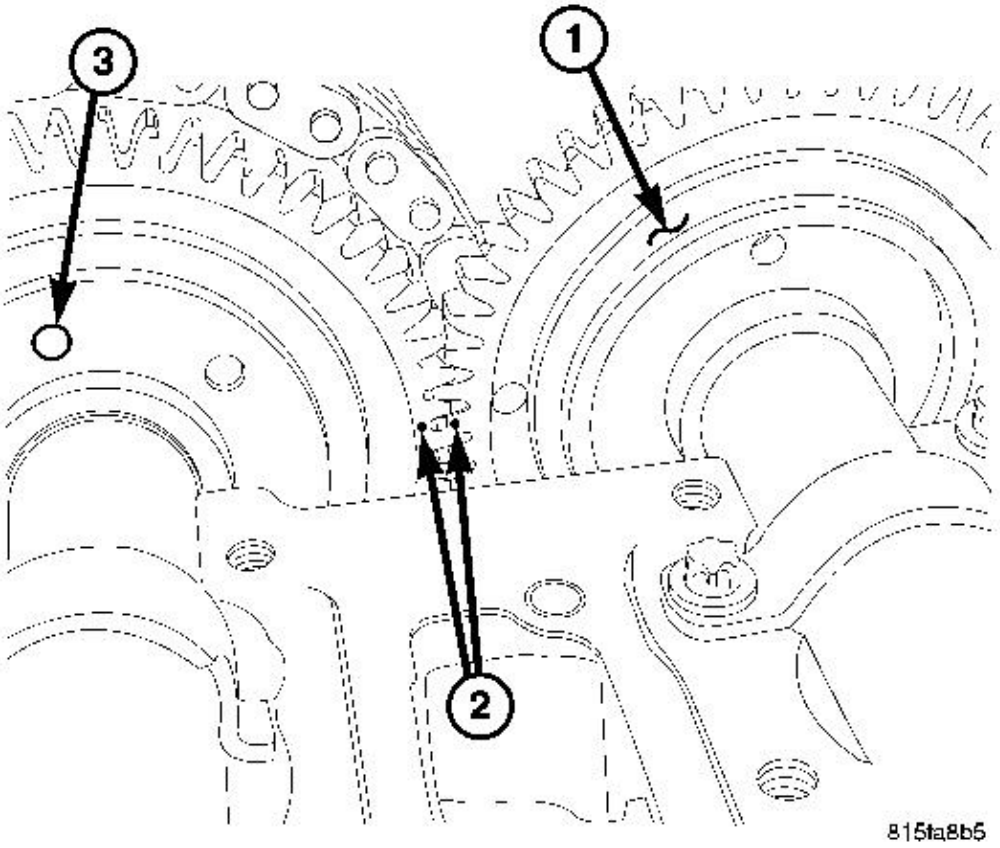

Fig. 416: Camshaft Gear Alignment
Courtesy of CHRYSLER LLC

1 - CAMSHAFT GEAR
2 - CAMSHAFT GEAR ALIGNMENT MARKS
3 - CAMSHAFT DRIVE GEAR DOWEL POSITION

7. Be sure that all of the timing marks are correctly aligned.
8. Rotate the engine and install the lower bolt into the camshaft drive gear. Tighten to 18 N.m (159 lbs.in.).

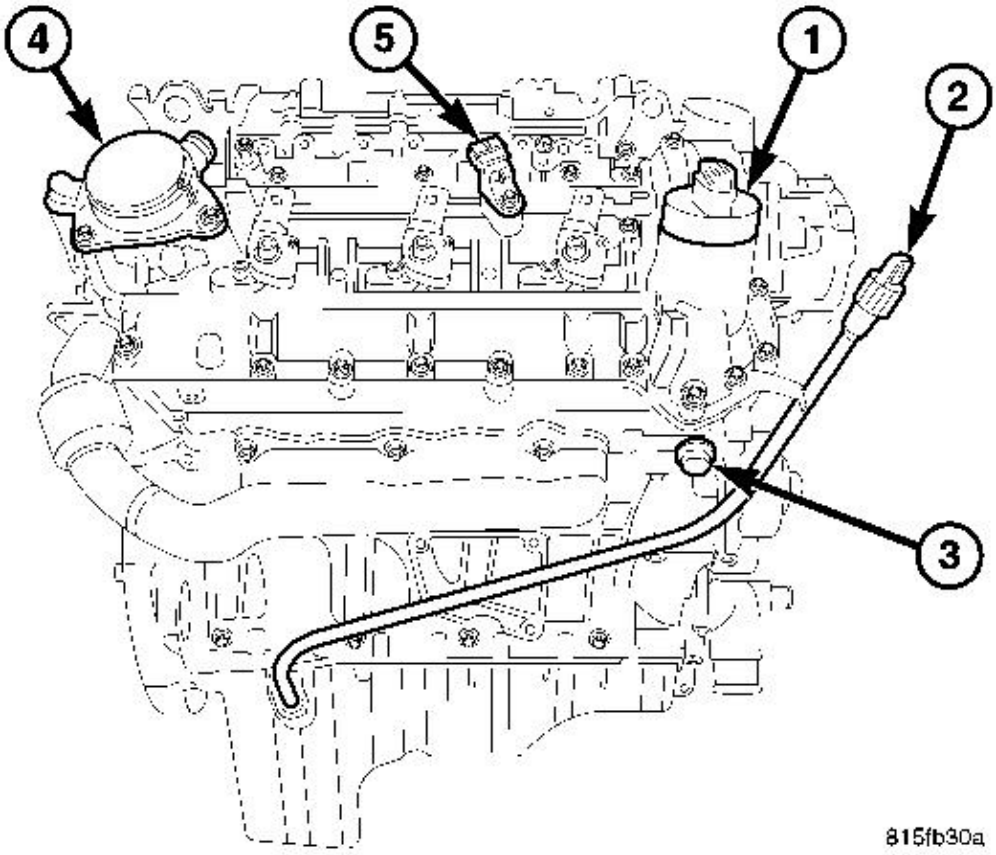

Fig. 417: Engine Oil Cap, Oil Level Indicator, Timing Chain Tensioner, Oil Separator Assembly & Camshaft Position Sensor
Courtesy of CHRYSLER LLC

1 - ENGINE OIL CAP
2 - OIL LEVEL INDICATOR
3 - TIMING CHAIN TENSIONER
4 - OIL SEPARATOR ASSEMBLY
5 - CAMSHAFT POSITION SENSOR

9. Install the timing chain tensioner and torque to 80 N.m (59 lbs. ft.)
10. Install the timing cover. See **INSTALLATION**.
11. Install oil pan bolts. Tighten M6 bolts to 9 N.m (80 lbs. in.) and M8 bolts to 20 N.m (15 lbs. ft.).
12. Reconnect negative battery cable. Refer to **INSTALLATION** .

WARNING: USE EXTREME CAUTION WHEN THE ENGINE IS OPERATING. DO NOT STAND IN A DIRECT LINE WITH THE FAN. DO NOT PUT YOUR HANDS NEAR THE PULLEYS, BELTS OR FAN. DO NOT WEAR LOOSE CLOTHES.

13. Start the engine, allow to warm, turn engine off and inspect for leaks. Care must be take to observe the fuel system warnings.

TIMING CHAIN TENSIONING RAIL

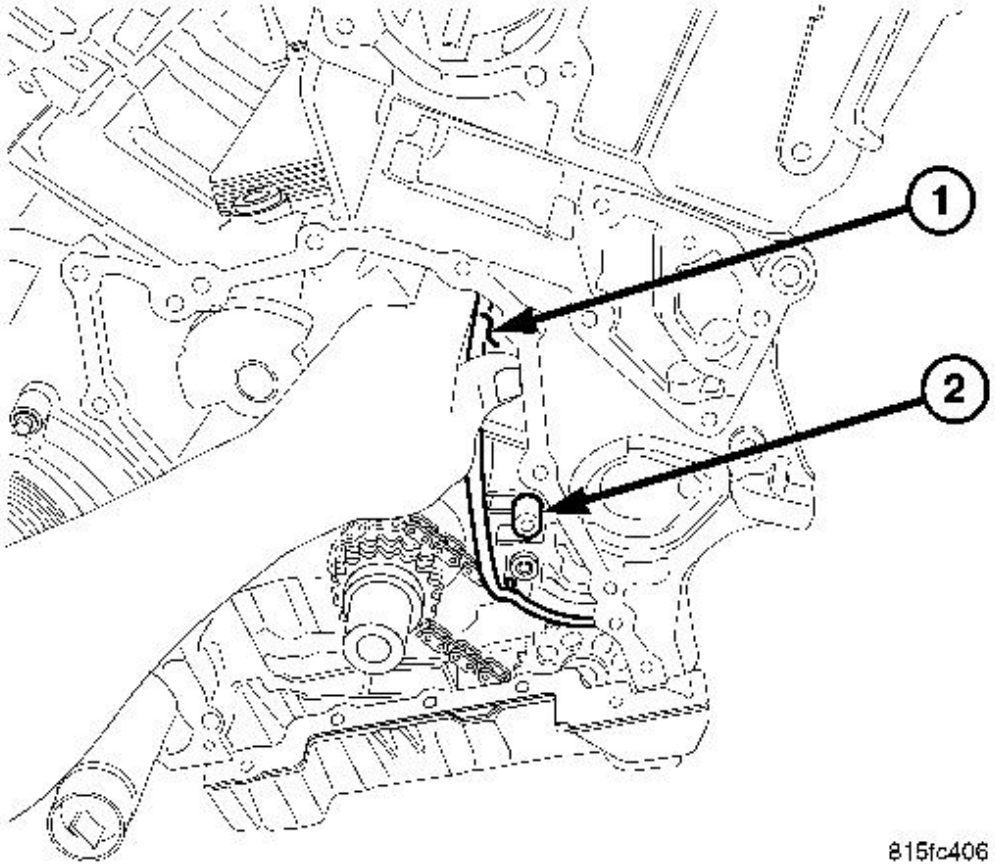

Fig. 418: Left Lower Timing Chain Guide And Fastener
Courtesy of CHRYSLER LLC

1 - LEFT LOWER TIMING CHAIN GUIDE
2 - FASTENER

NOTE: Carefully clean all mating surfaces with appropriate solvents to assure that no grease or oil is present during reassembly.

1. Install tensioning rail on bearing pin
2. Install the timing chain tensioner retaining bolt. Tighten to 12 N.m (106 lbs. in.)
3. Install timing cover. See **INSTALLATION**.
4. Install oil pan and bolts. Tighten M6 bolts to 9 N.m (80 lbs. in.) and M8 bolts to 20 N.m (15 lbs. ft.).
5. Install cylinder head. See **INSTALLATION**.
6. Install the cylinder head covers. See **INSTALLATION**
7. Reconnect negative battery cable.

WARNING: Use extreme caution when the engine is operating. Do not put your hands near the pulleys, belts or fan. Do not wear loose clothes.

8. Start the engine and inspect for leaks. Care must be taken to observe the fuel system warnings.

ADJUSTMENTS

TIMING CHAIN

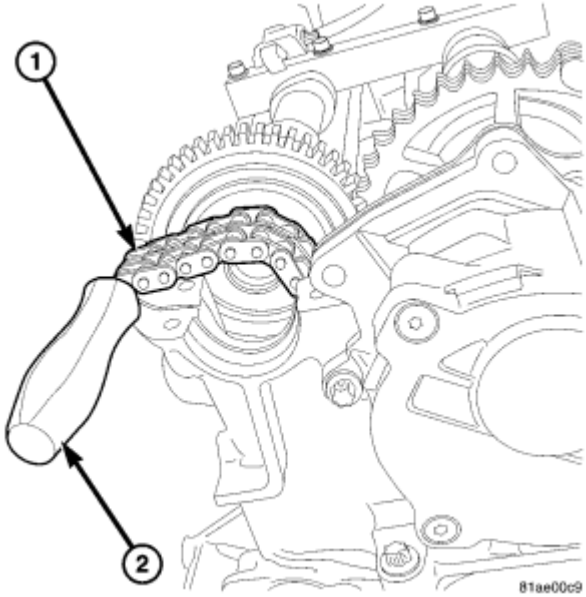

Fig. 419: Preventing Chain From Falling
Courtesy of CHRYSLER LLC

CAUTION: IT IS ESSENTIAL that the installation procedure is followed exactly. Failure to do so will result in severe engine damage.

CAUTION: Cover timing case recesses to prevent foreign material from entering

engine.

1. Use a small screwdriver to prevent the timing chain from slipping down into the engine.

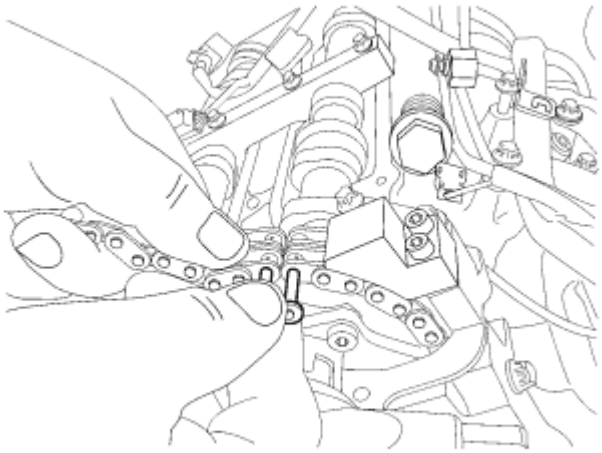

Fig. 420: Connecting Timing Chain Oil Hole Side Up And Old Timing Chain With Assembly Link
Courtesy of CHRYSLER LLC

CAUTION: Always install the new timing chain with the oil holes pointing up. Failure to do so will result in severe engine damage.

2. Connect new timing chain, oil hole side up and old timing chain with the assembly link.

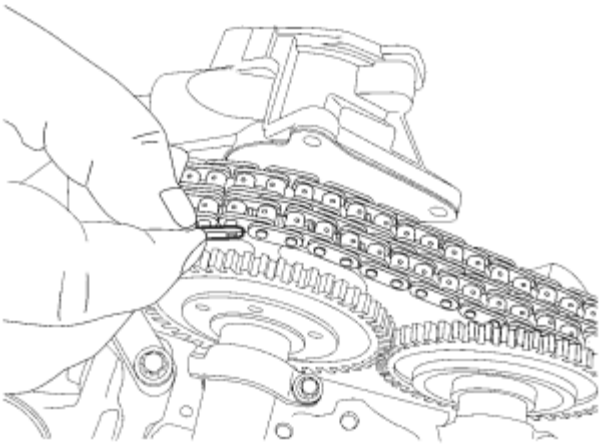

Fig. 421: Placing Baking Plate On Back Side Of Master Link

Courtesy of CHRYSLER LLC

3. Place the baking plate on the back side of the master link.

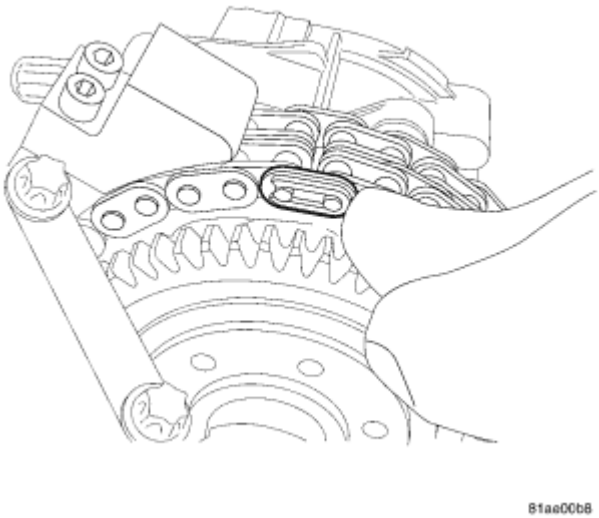

Fig. 422: Placing Master Link Clip On Master Link
Courtesy of CHRYSLER LLC

4. Place the master link clip on the master link.

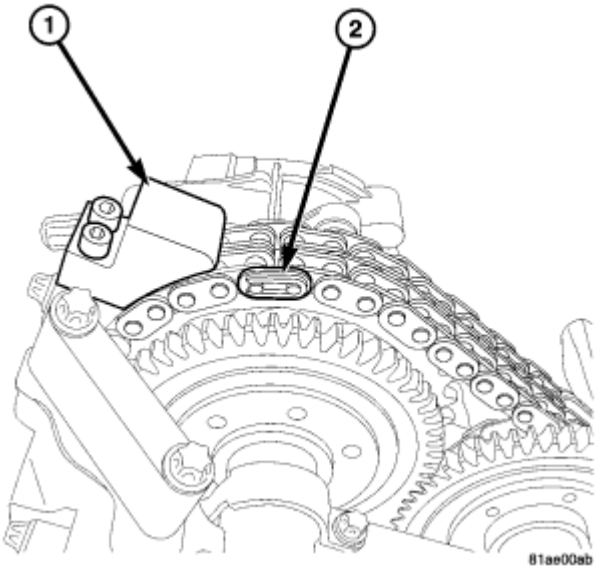

Fig. 423: Master Link Clip Installed
Courtesy of CHRYSLER LLC

NOTE: Always keep new timing chain meshed with camshaft sprocket.

CAUTION: DO NOT CRANK ENGINE and DO NOT ROTATE ENGINE BACKWARD. Engine rotation is clockwise, as you are looking at the engine. Rotate engine at crankshaft only.

NOTE: With the timing cover and special tools in place, the timing chain can not jump time while being fed through the engine. As the engine is rotated the timing chain may appear to slip as the valve springs move the camshafts.

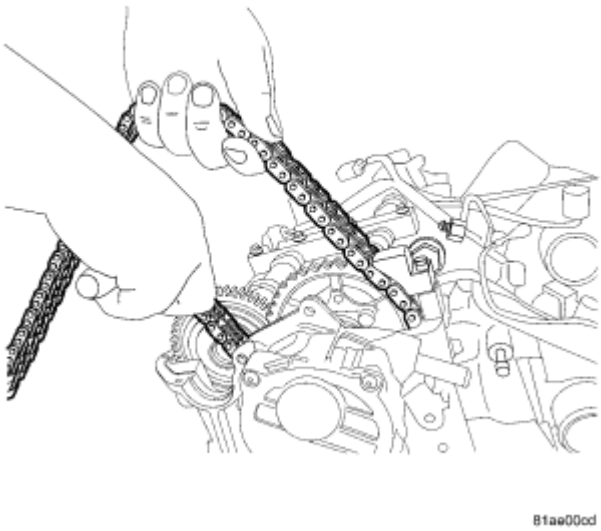

Fig. 424: Feeding Chains Through
Courtesy of CHRYSLER LLC

NOTE: Draw out the end of old timing chain evenly as it becomes free, to the same extent that new timing chain is drawn in.

5. Draw in new timing chain with the oil holes facing up, by rotating the crankshaft slowly in direction of rotation of engine.
6. Rotate the engine until the ends of the new timing chain meet and can be connected.

NOTE: Assembly link is only an assembly aid and NOT designed for engine running.

7. Remove assembly locking element, assembly outer plate and assembly link.
8. Insert new riveted link with the oil hole up, and new middle plate into ends of timing chain using the guide link to hold the middle plate in position.

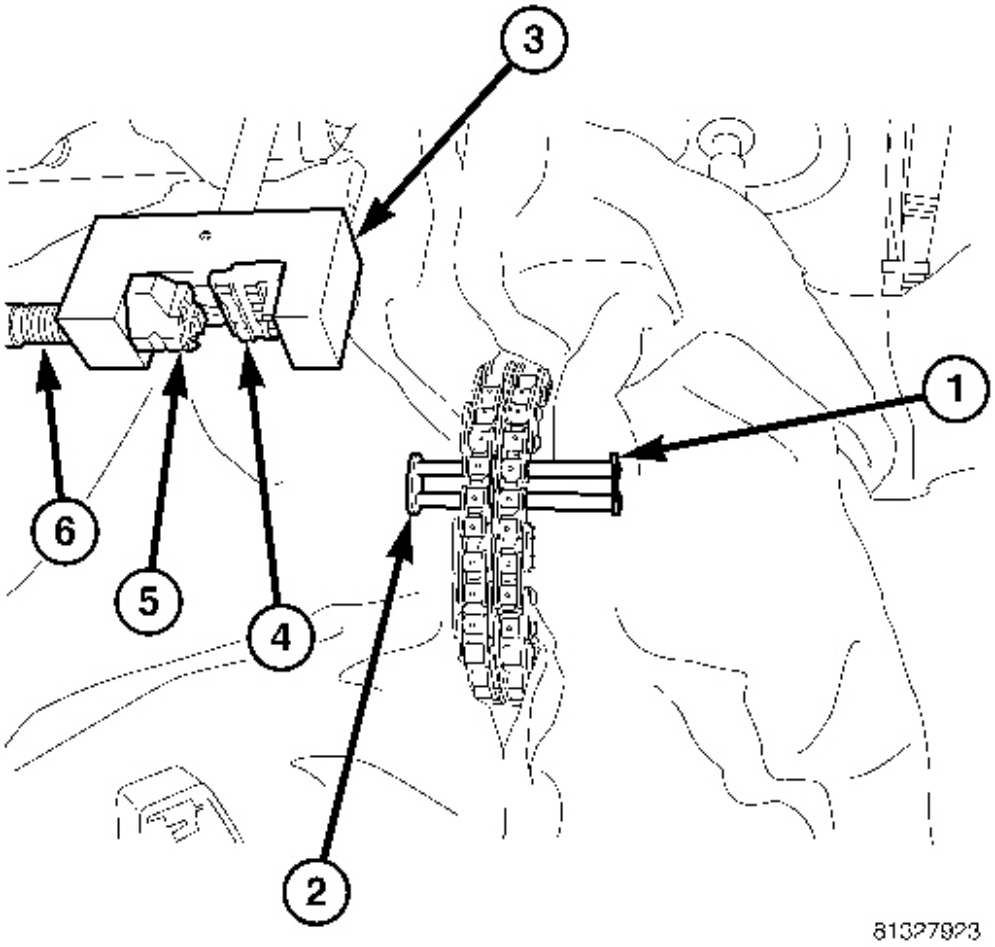

Fig. 425: Inserting New Timing Chain Link
Courtesy of CHRYSLER LLC

1 - GUIDE LINK
2 - NEW LINK
3 - SPECIAL TOOL #9312-1
4 - TOOL INSERT #9312-7
5 - TOOL INSERT #9312-10
6 - THRUST PIN #9312-4

NOTE: **When assembling riveting tool, piece #9312-7 is secured by a screw and #9312-10 can move loosely on thrust spindle**

9. Assemble riveting tool by inserting pieces #9312-7 and #9312-10.

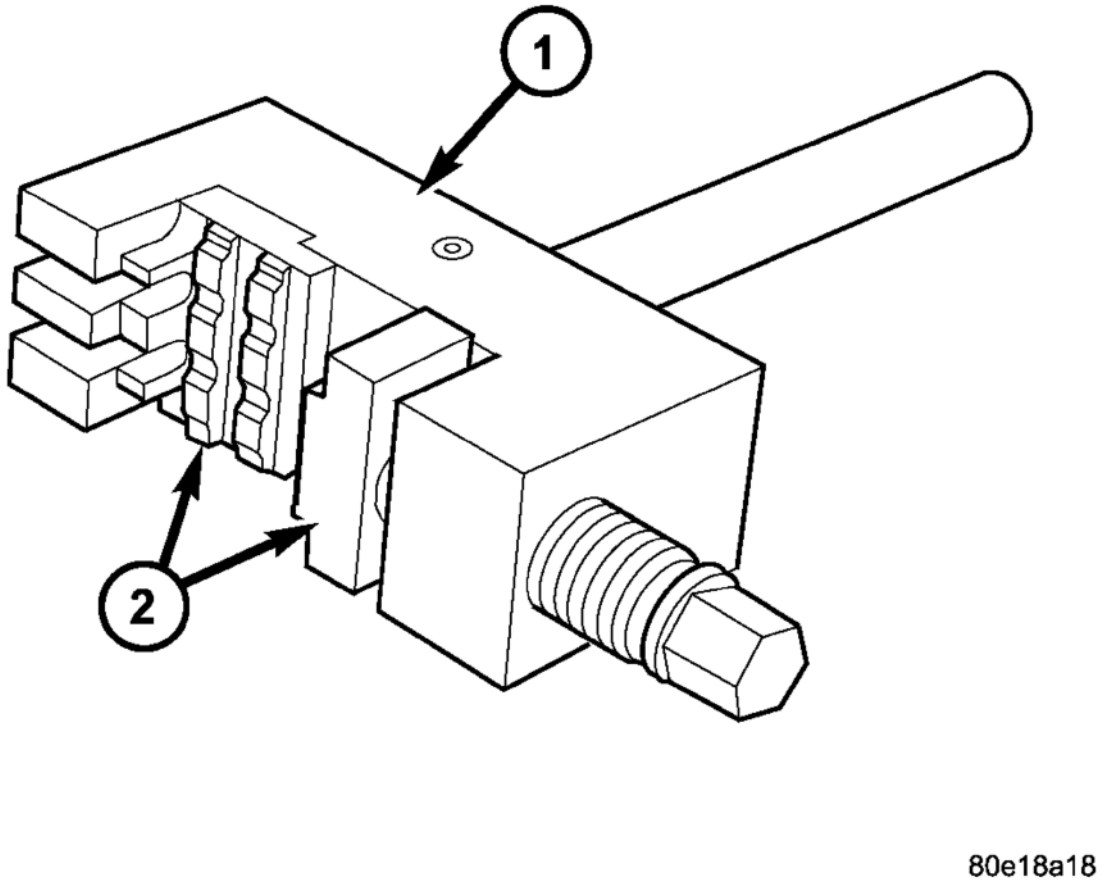

Fig. 426: Installing Assembly Inserts Into Riveting Tool
Courtesy of CHRYSLER LLC

1 - SPECIAL TOOL #9312-1 2 - SPECIAL TOOL #9312-7 and 9312-10

NOTE: Ensure that the riveted link and riveting tool are aligned.

10. Press in new riveted link as far as the stop.

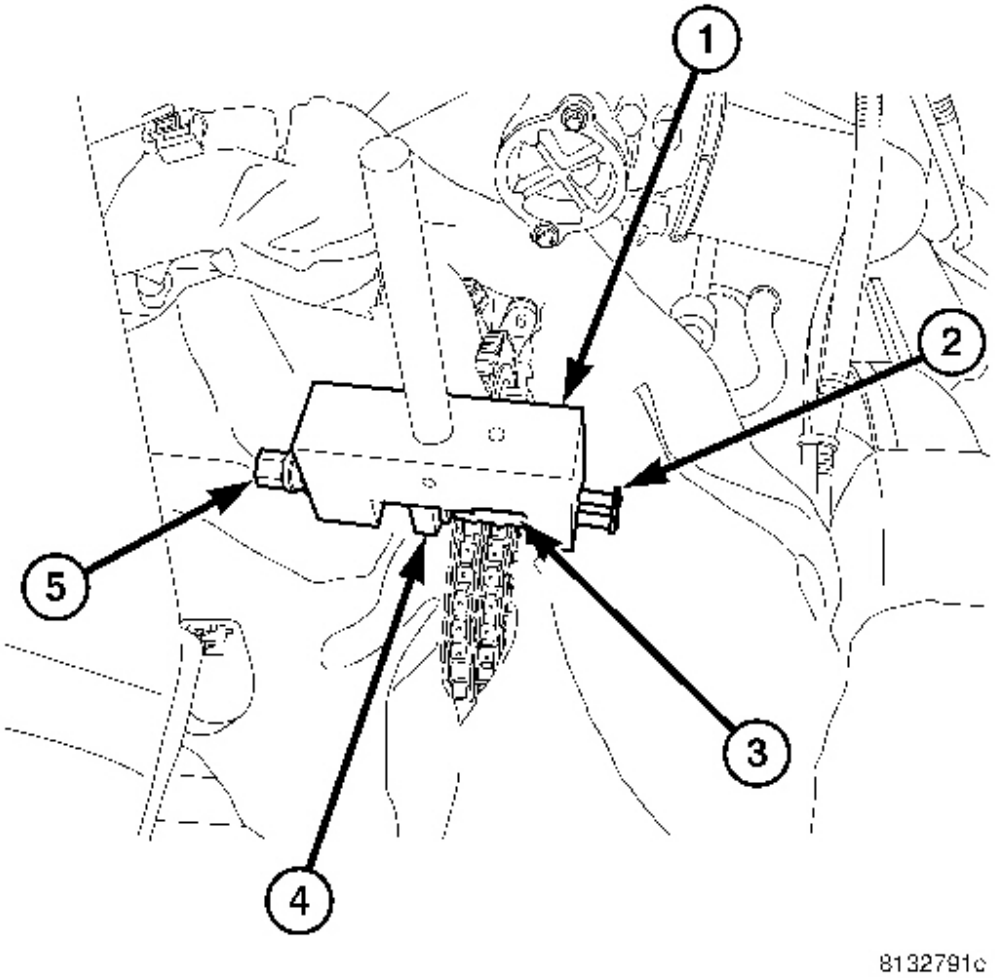

Fig. 427: Pressing New Rivet Link
Courtesy of CHRYSLER LLC

1 - SPECIAL TOOL #9312-1
2 - GUIDE LINK
3 - SPECIAL TOOL INSERT 9#312-7
4 - SPECIAL TOOL INSERT #9312-10
5 - THRUST SPINDLE #9312-4

11. Remove guide link and riveting tool to change inserts.
12. Install insert 9312-8a on riveting tool.

NOTE: The outer plate is held magnetically by riveting tool.

13. Insert new outer plate into the moving assembly insert.
14. Position riveting tool so that spacer webs of the guide are side by side.
15. Ensure that riveted link and outer plate are aligned.

NOTE: When turning spindle of riveting tool, be sure that pins of riveted link are inserted into holes of outer plate

16. Screw in spindle of riveting tool until firm resistance is felt.

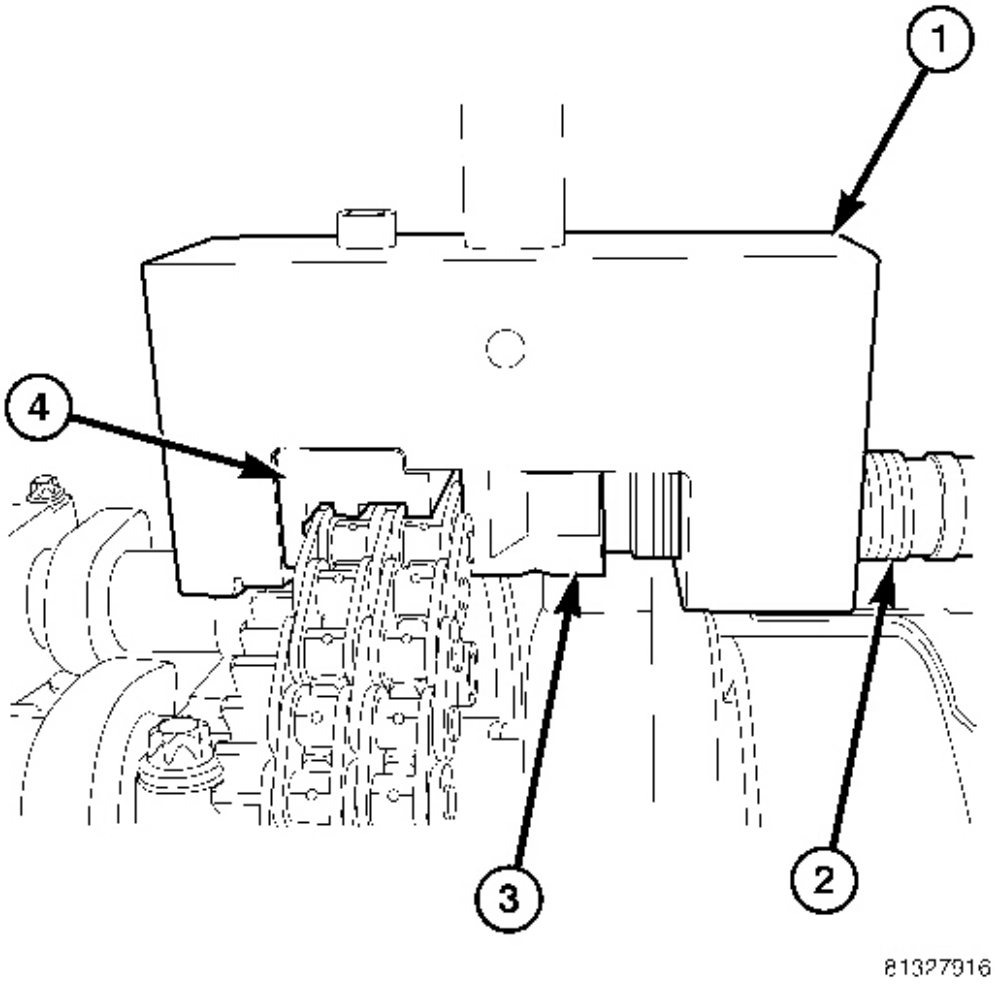

Fig. 428: Outer Plate Installation
Courtesy of CHRYSLER LLC

1 - SPECIAL TOOL #9312-1
2 - THRUST SPINDLE #9312-4
3 - TOOL INSERT #9312-8
4 - TOOL INSERT #9312-6

17. Remove riveting tool.
18. Install moving assembly insert #9312-a11 to #9312-1.
19. Position riveting tool exactly over middle of pin.
20. Tighten riveting tool spindle to end of travel.
21. Repeat procedure for both riveting pins.

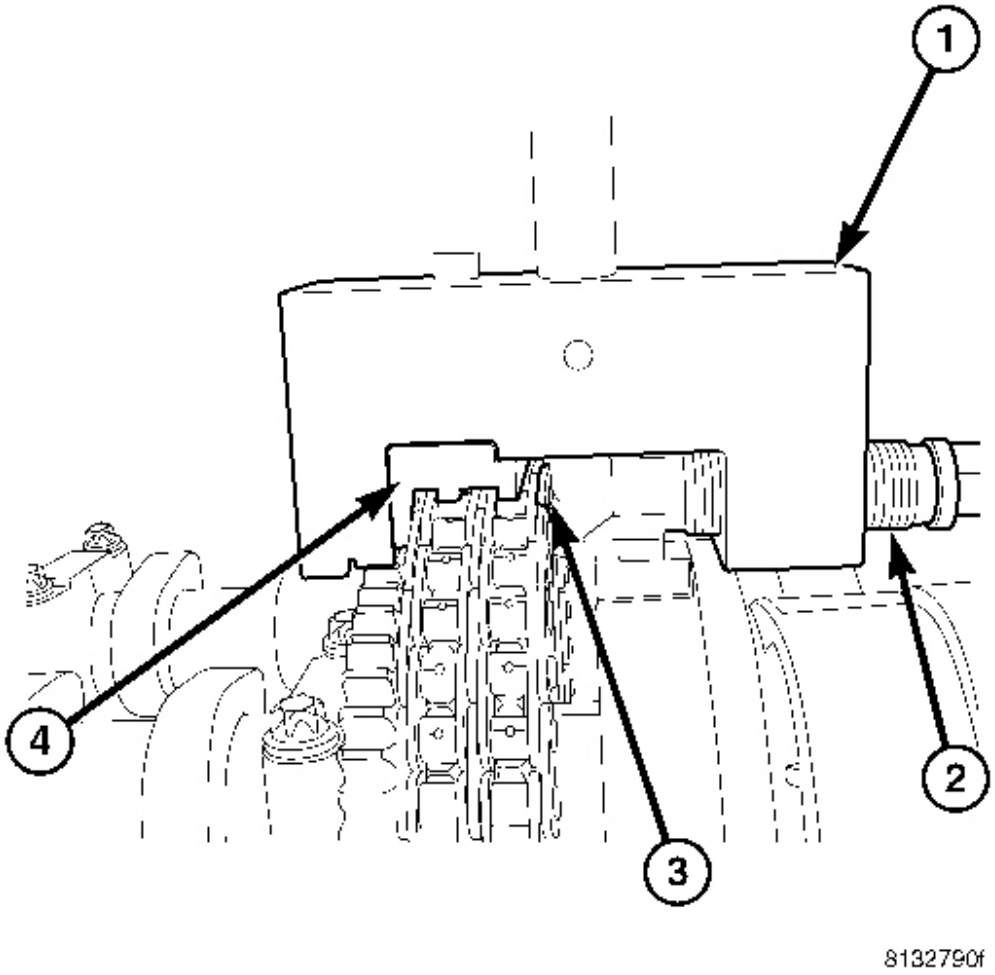

Fig. 429: Riveting Link Pins
Courtesy of CHRYSLER LLC

1 - SPECIAL TOOL #9312-1
2 - THRUST SPINDLE
3 - RIVETING PROFILE
4 - INSERT 9312-6

22. Inspect riveting, re-rivet if required.

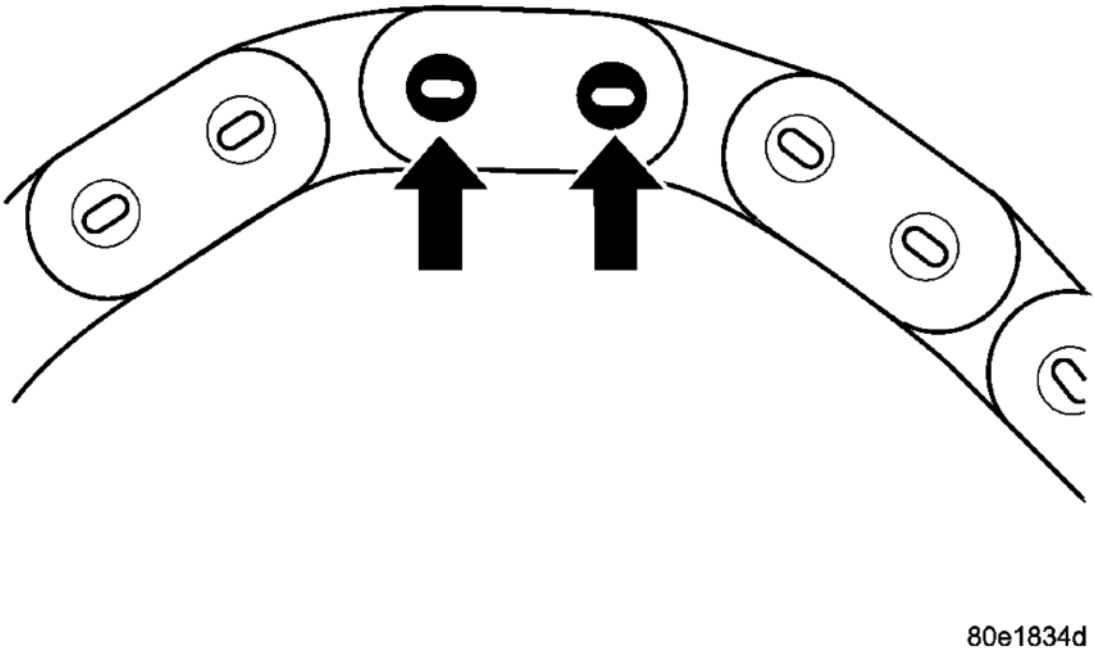

Fig. 430: Rivet Inspection
Courtesy of CHRYSLER LLC

23. Install cylinder head cover. See **INSTALLATION**.
24. Install engine cover. See **INSTALLATION**.
25. Connect negative battery cable.
26. Start engine and inspect for leaks. Care must be taken to observe the fuel system warnings.

TENSIONER - TIMING CHAIN

DESCRIPTION

TENSIONER - TIMING CHAIN

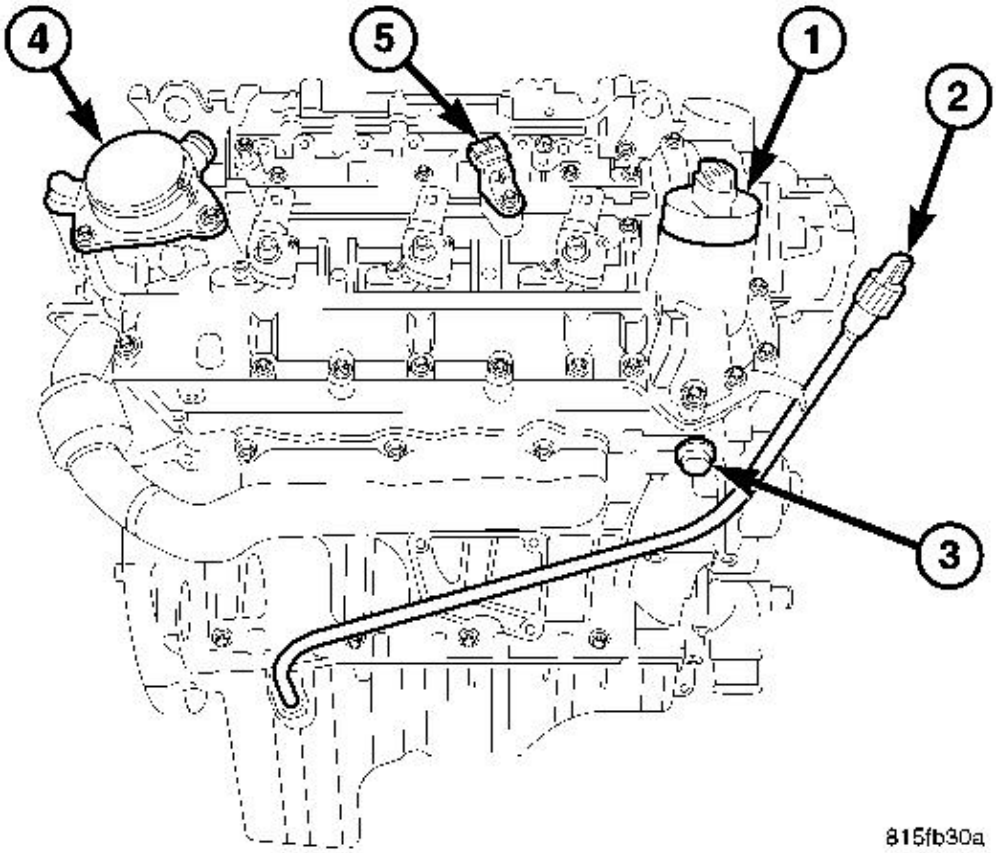

Fig. 431: Engine Oil Cap, Oil Level Indicator, Timing Chain Tensioner, Oil Separator Assembly & Camshaft Position Sensor
Courtesy of CHRYSLER LLC

1 - ENGINE OIL CAP
2 - OIL LEVEL INDICATOR
3 - TIMING CHAIN TENSIONER
4 - OIL SEPARATOR ASSEMBLY
5 - CAMSHAFT POSITION SENSOR

The timing chain tensioner is located on the right cylinder head. The tensioner is hydraulically operated with the adjusting portion riding on the right timing chain guide. Hydraulic support for the tensioner is supplied by forward oil passages in the right cylinder head.

REMOVAL

TIMING CHAIN TENSIONER

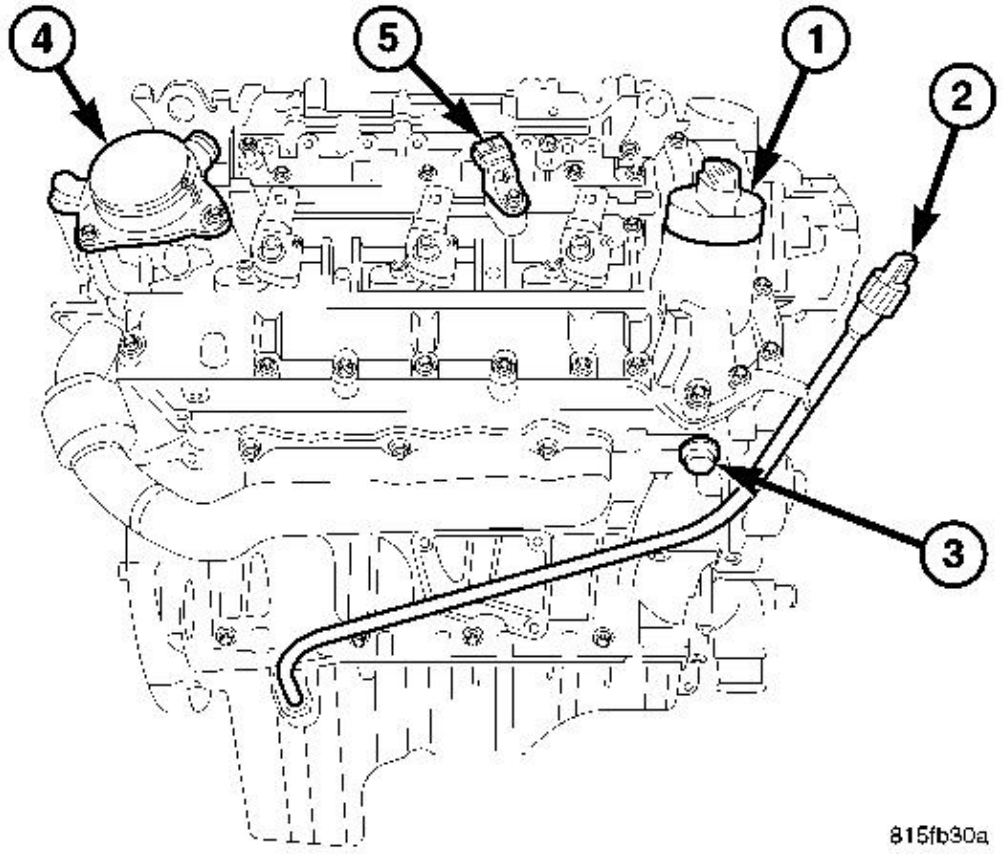

Fig. 432: Engine Oil Cap, Oil Level Indicator, Timing Chain Tensioner, Oil Separator Assembly & Camshaft Position Sensor
Courtesy of CHRYSLER LLC

1 - ENGINE OIL CAP
2 - OIL LEVEL INDICATOR
3 - TIMING CHAIN TENSIONER
4 - OIL SEPARATOR ASSEMBLY
5 - CAMSHAFT POSITION SENSOR

1. Disconnect negative battery cable. Refer to **REMOVAL** .
2. Open hood.
3. Remove engine cover. See **REMOVAL**.

4. Remove the engine intake air duct.
5. Remove air cleaner housing. See **REMOVAL**.
6. Remove the cable strap from the engine wiring harness.
7. Remove the timing chain tensioner.

INSTALLATION

TIMING CHAIN TENSIONER

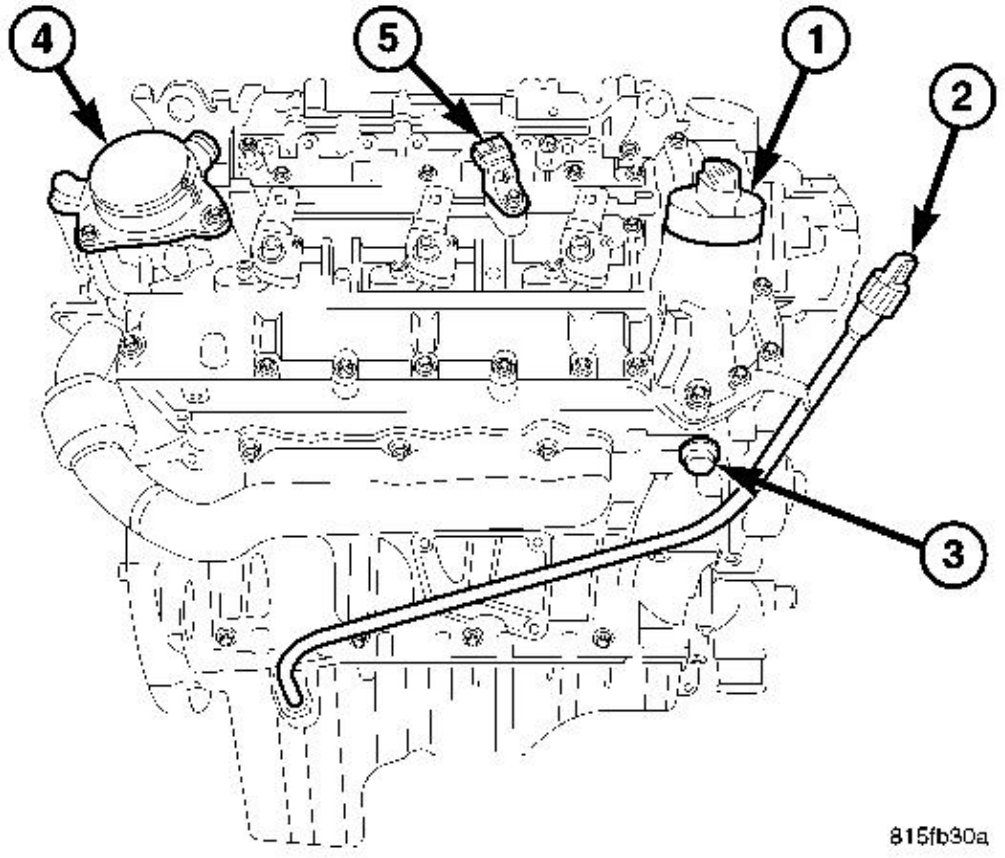

Fig. 433: Engine Oil Cap, Oil Level Indicator, Timing Chain Tensioner, Oil Separator Assembly & Camshaft Position Sensor
Courtesy of CHRYSLER LLC

1 - ENGINE OIL CAP
2 - OIL LEVEL INDICATOR

3 - TIMING CHAIN TENSIONER
4 - OIL SEPARATOR ASSEMBLY
5 - CAMSHAFT POSITION SENSOR

NOTE: Carefully clean all mating surfaces with appropriate solvents to assure that no grease or oil is present during reassembly.

1. Install timing chain tensioner with new gasket. Tighten to 80 N.m (59 lbs.ft.).
2. Install cable strap on the engine wiring harness.
3. Install air cleaner housing.
4. Install intake air duct.
5. Reconnect negative battery cable.

WARNING: Use extreme caution when the engine is operating. Do not put your hands near the pulleys, belts or fan. Do not wear loose clothes.

6. Start the engine and inspect for leaks.

BALANCE SHAFT

REMOVAL

REMOVAL

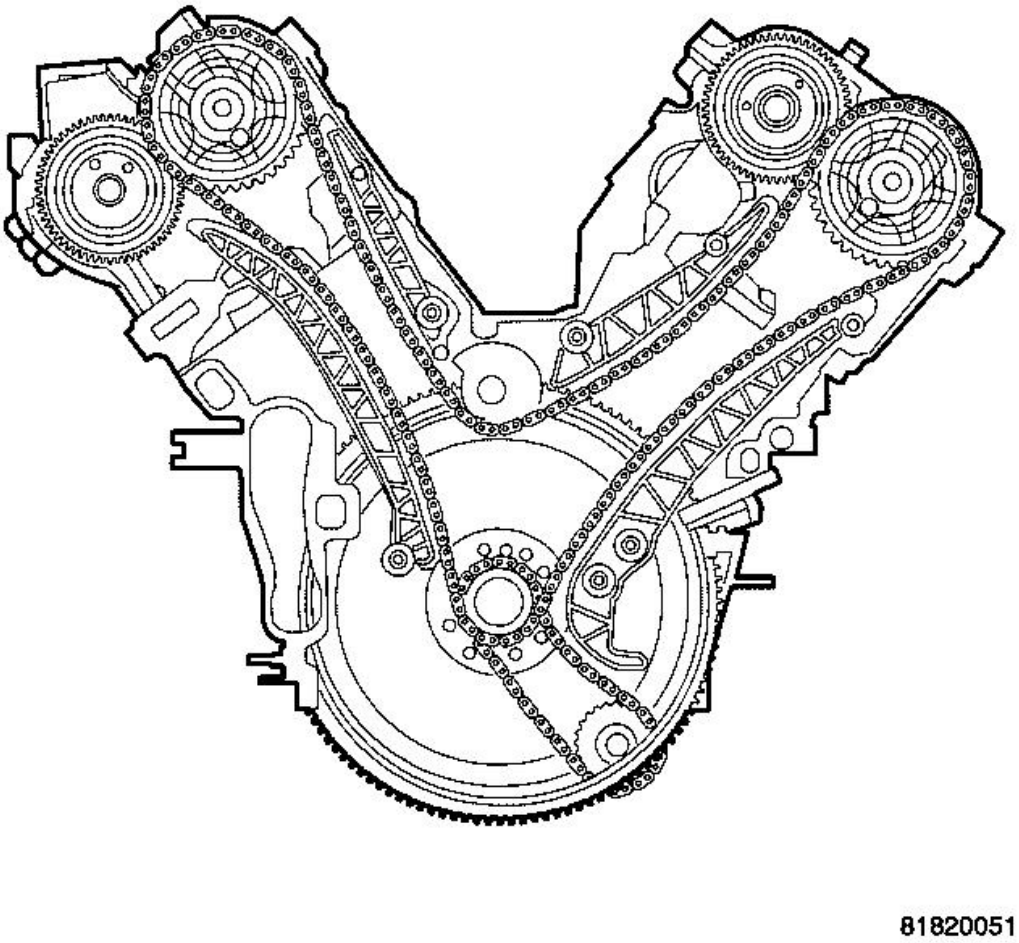

Fig. 434: Timing Chain
Courtesy of CHRYSLER LLC

1. Disconnect the battery. Refer to **INSTALLATION** .
2. Remove the transmission and torque converter. Refer to **INSTALLATION** .
3. Position piston 1 to TDC.

NOTE: **To set piston #1 to Top Dead Center (TDC), Rotate the engine at the crankshaft in the running direction. The markings on the camshaft sprockets must be positioned opposite each other. The markings on the camshaft sprockets must be aligned with the cylinder head and lie on the left side. The TDC marking on the vibration damper must be aligned with the stay on the timing case cover.**

4. Remove the timing chain cover. See **REMOVAL**. - REMOVAL)

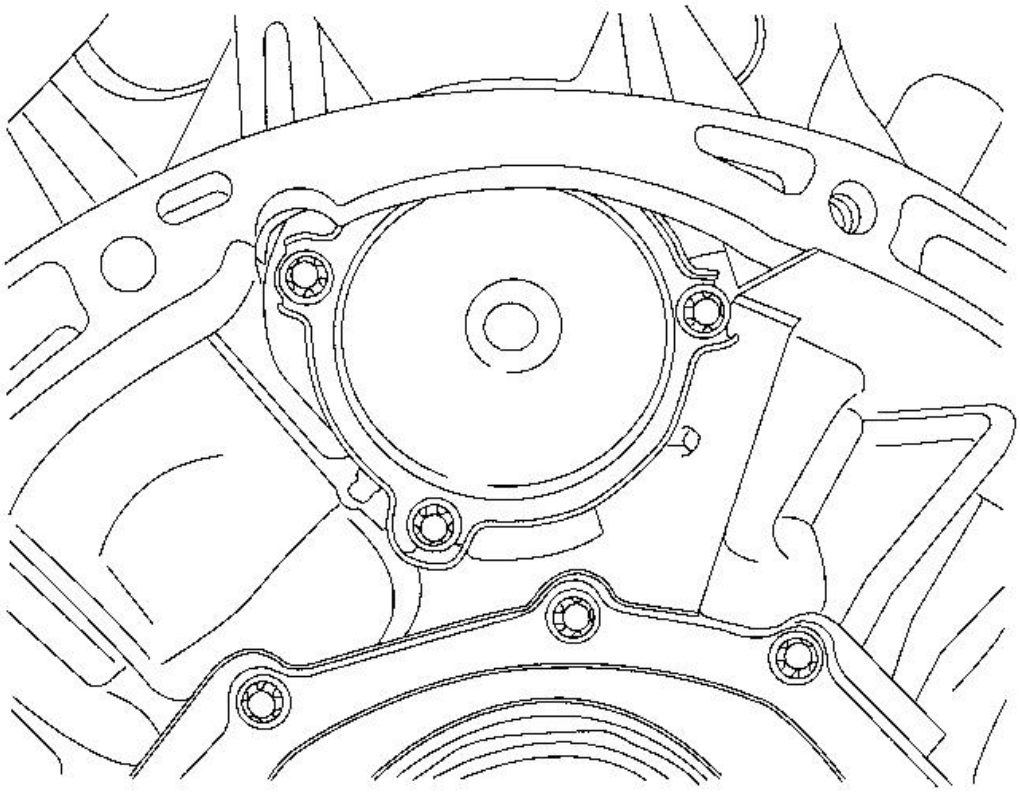

Fig. 435: Rear Balance Shaft Cover
Courtesy of CHRYSLER LLC

5. Remove the rear balance shaft cover.

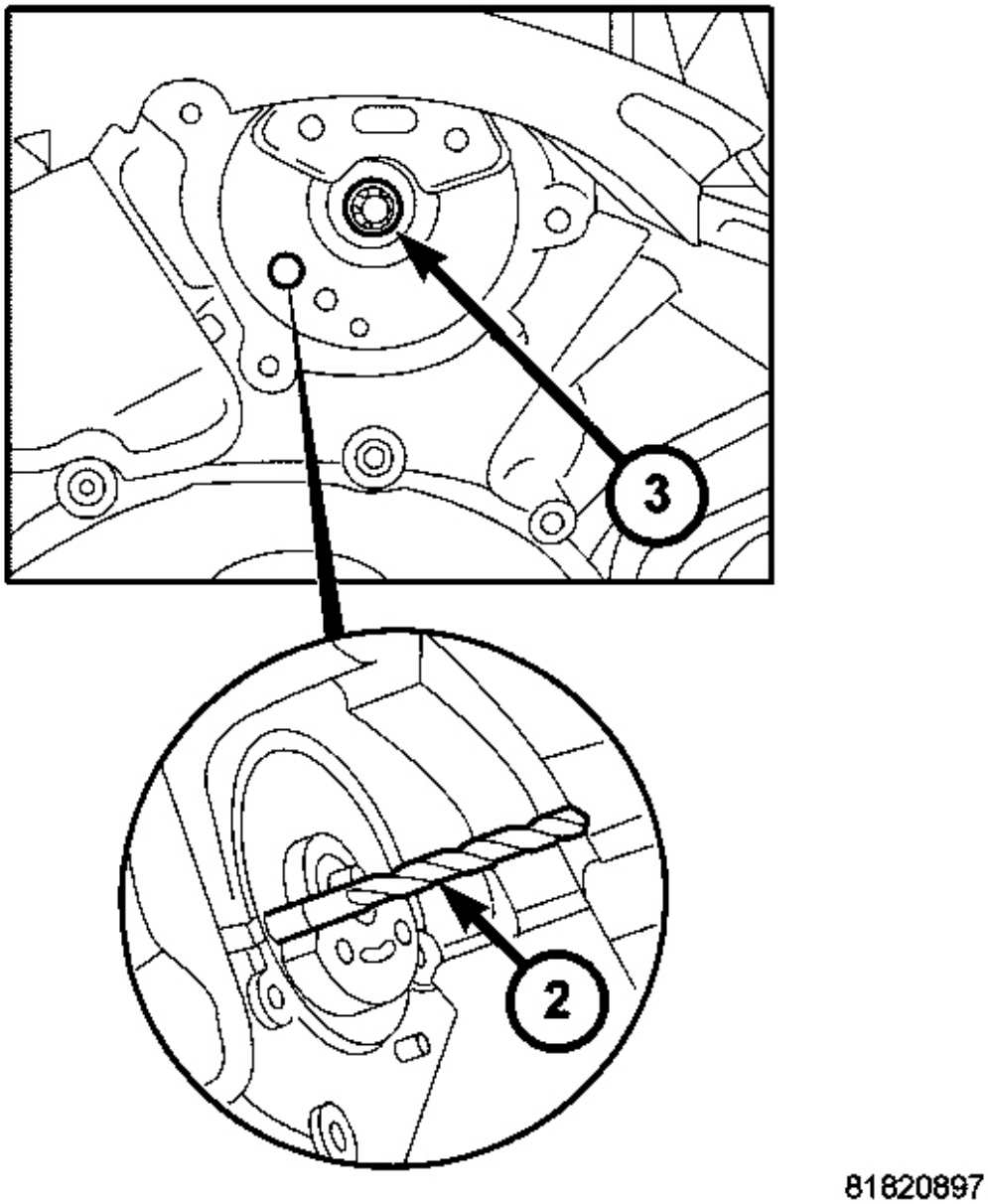

Fig. 436: Balance Shaft Alignment Rear
Courtesy of CHRYSLER LLC

6. Install a 8.5 mm diameter drill bit (2) into the balance shaft stop.

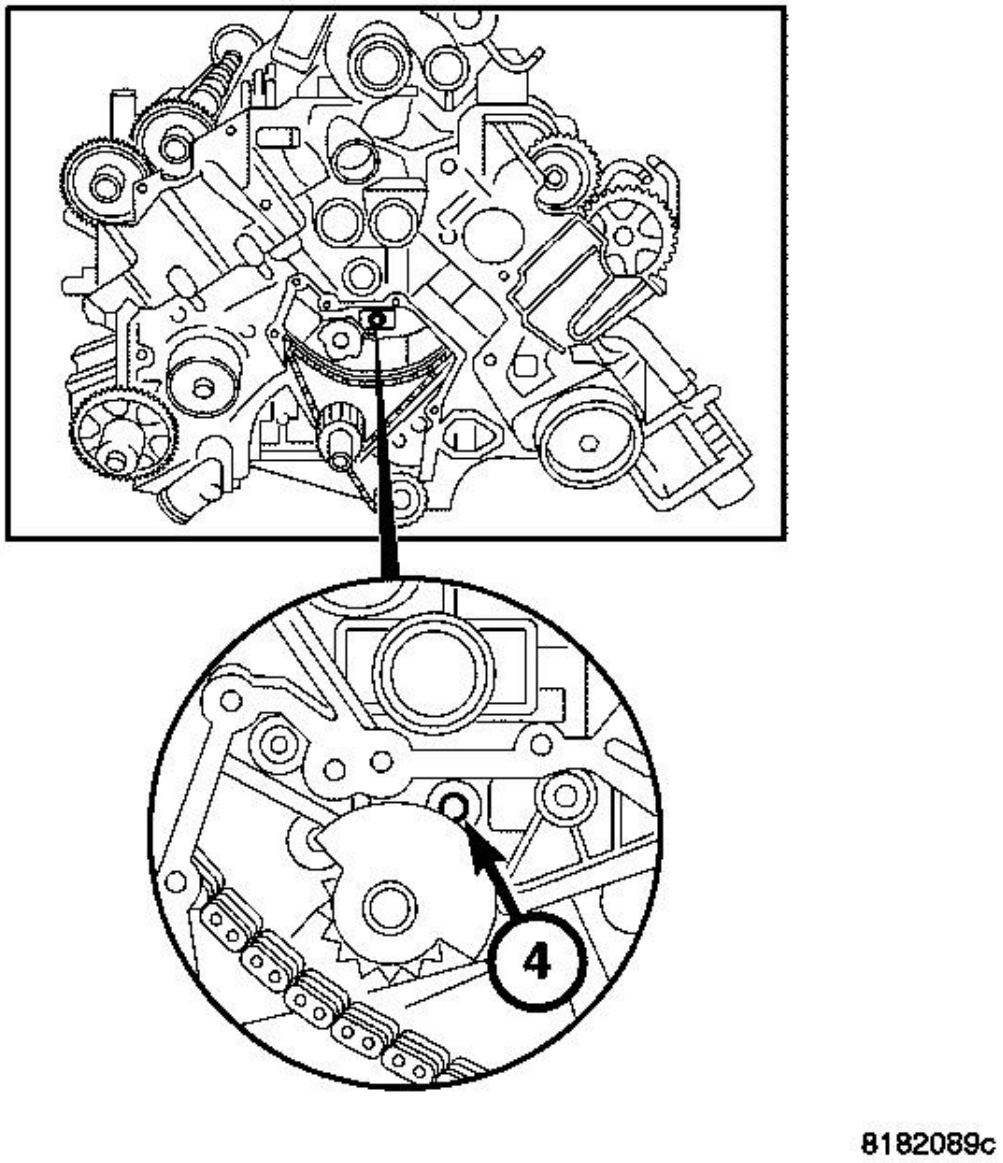

Fig. 437: Balance Shaft Hold Down Bolt
Courtesy of CHRYSLER LLC

7. Make sure that the notch in the balance shaft front counterweight is at the highest point of the weight. If the balance shaft is aligned correctly, remove the drill bit.
8. Remove the balance shaft hold down bolt (4).

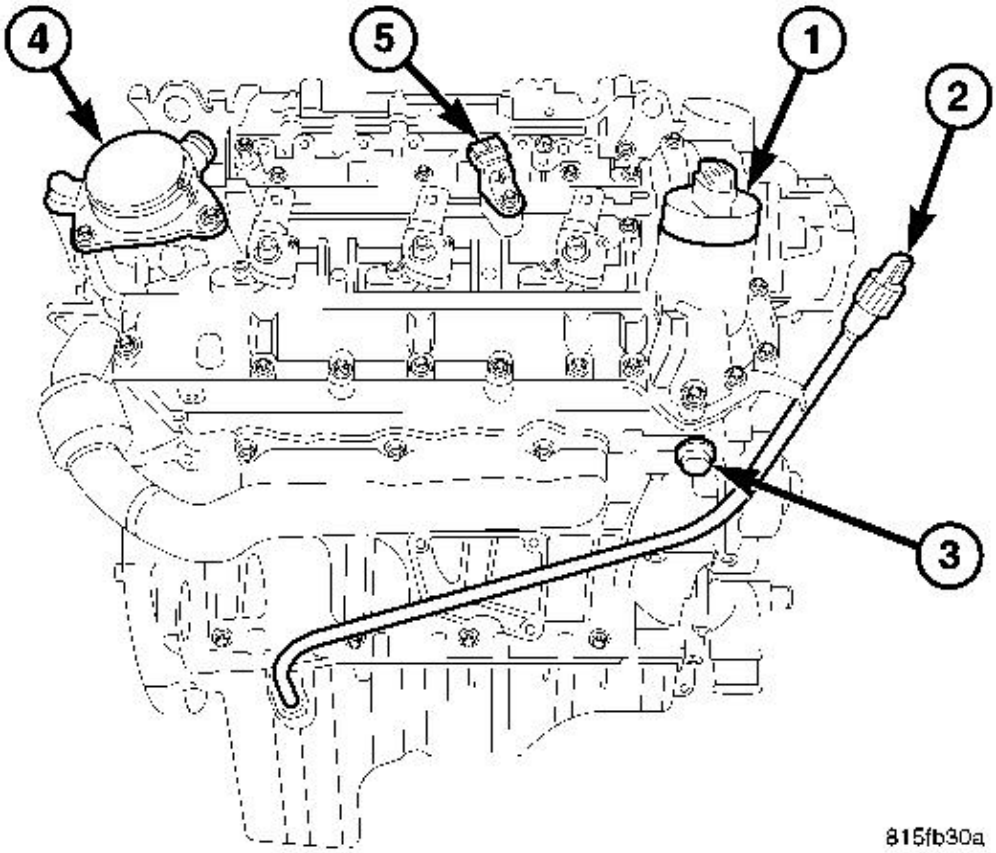

Fig. 438: Engine Oil Cap, Oil Level Indicator, Timing Chain Tensioner, Oil Separator Assembly & Camshaft Position Sensor
Courtesy of CHRYSLER LLC

1 - ENGINE OIL CAP
2 - OIL LEVEL INDICATOR
3 - TIMING CHAIN TENSIONER
4 - OIL SEPARATOR ASSEMBLY
5 - CAMSHAFT POSITION SENSOR

9. Remove the timing chain tensioner.
10. Remove the bolt from the front of the balance shaft.
11. Remove the balance shaft.

INSTALLATION

INSTALLATION

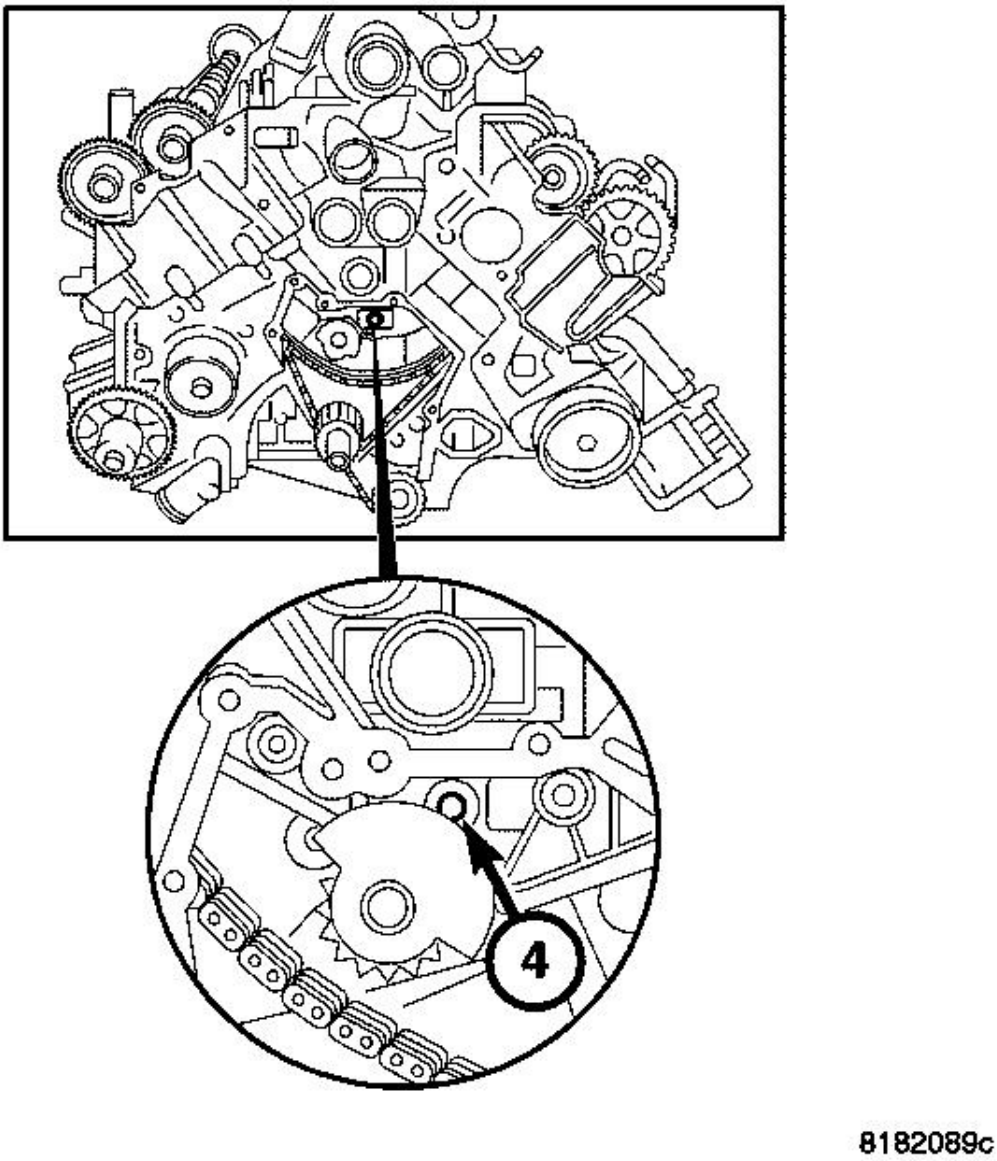

Fig. 439: Balance Shaft Hold Down Bolt
Courtesy of CHRYSLER LLC

1. Install the balance shaft.
2. Align the balance shaft so that the notch in the counterweight is facing directly up.

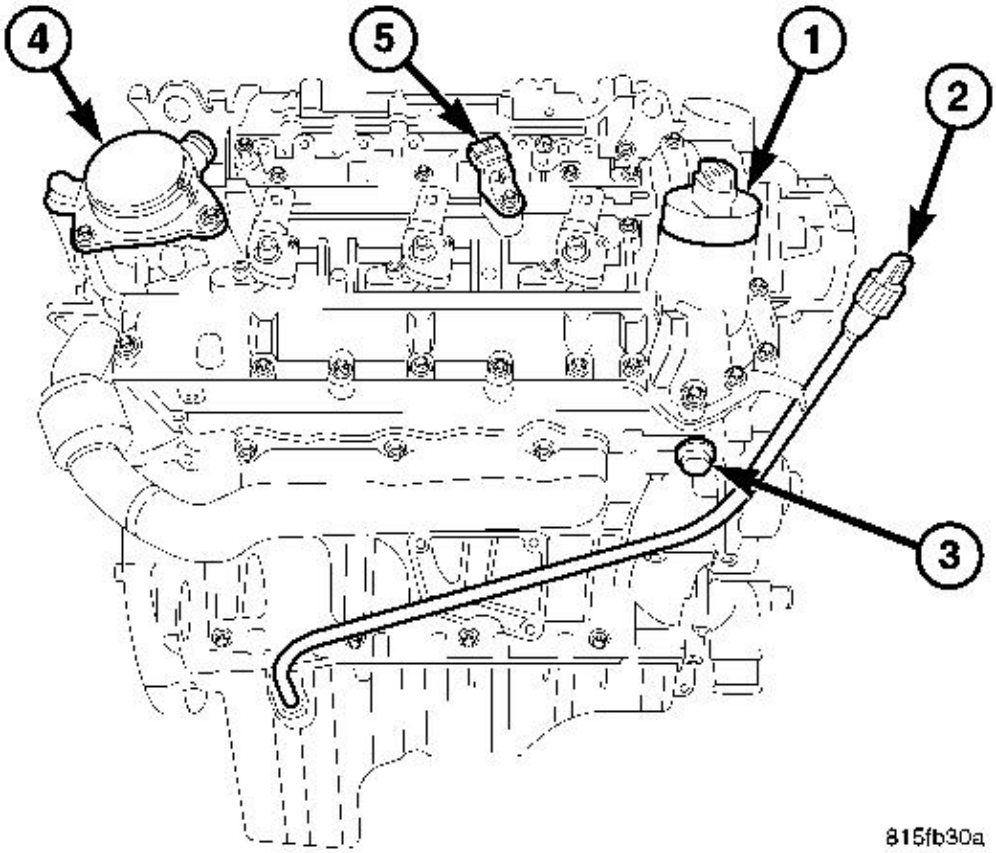

Fig. 440: Engine Oil Cap, Oil Level Indicator, Timing Chain Tensioner, Oil Separator Assembly & Camshaft Position Sensor
Courtesy of CHRYSLER LLC

1 - ENGINE OIL CAP
2 - OIL LEVEL INDICATOR
3 - TIMING CHAIN TENSIONER
4 - OIL SEPARATOR ASSEMBLY
5 - CAMSHAFT POSITION SENSOR

3. Install the timing chain tensioner. Torque to 80 N.m (59 ft. lbs).
4. Be sure that the camshafts and crankshaft are all set to their correct timing positions.

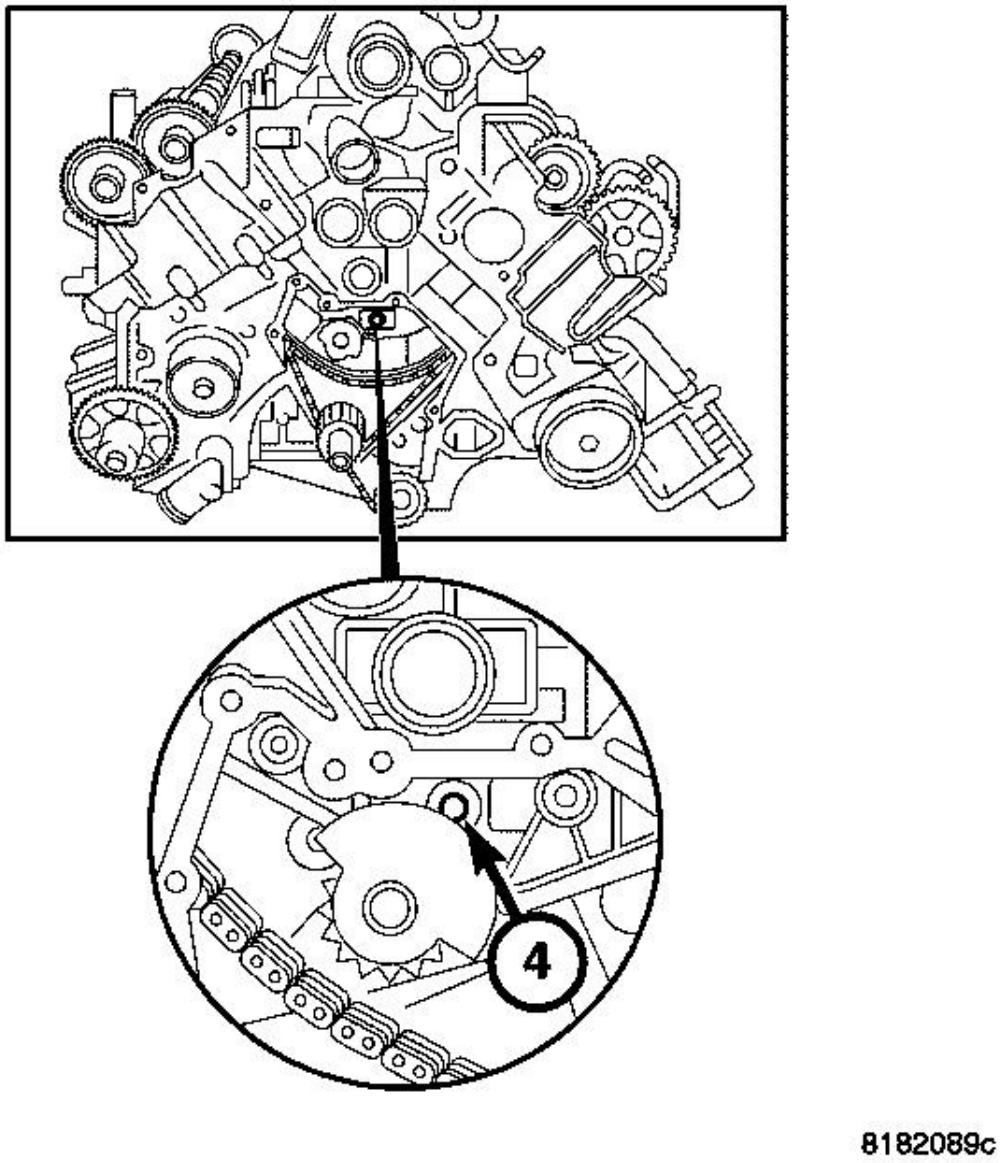

Fig. 441: Balance Shaft Hold Down Bolt
Courtesy of CHRYSLER LLC

5. Install the balance shaft bolt (4). Torque bolt to 35 N.m (309 in. lbs).

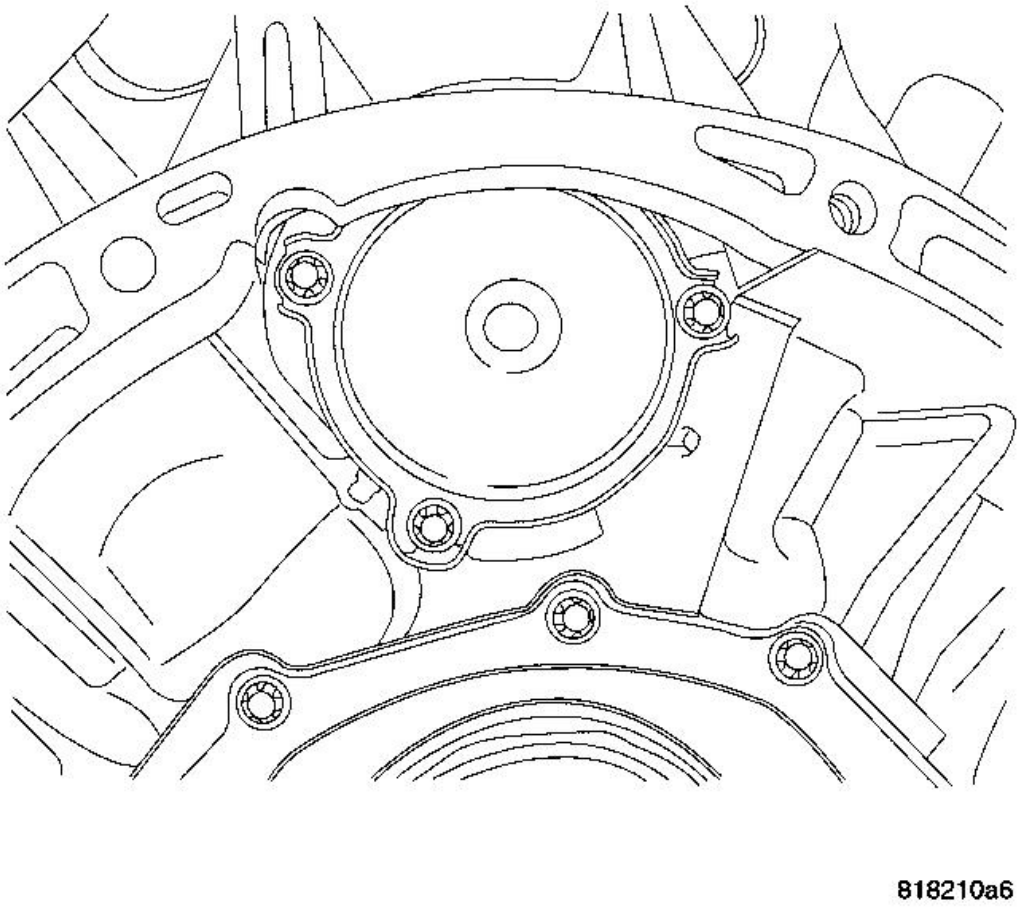

Fig. 442: Rear Balance Shaft Cover
Courtesy of CHRYSLER LLC

6. Install the bolt in the rear of the balance shaft 20 N.m (177 in. lbs) and then rotate an additional 90°.
7. Install the rear balance shaft cover. Torque bolts to 8 N.m (71.8 in. lbs).
8. Install the timing chain cover. See **INSTALLATION**.
9. Install the torque converter and transmission. Refer to **INSTALLATION** .
10. Connect the battery. Refer to **INSTALLATION** .

