ENGINE

4.2 Liter V8 5V Engine Mechanical, Engine Code(s): BHF

00 - GENERAL, TECHNICAL DATA

ENGINE NUMBER

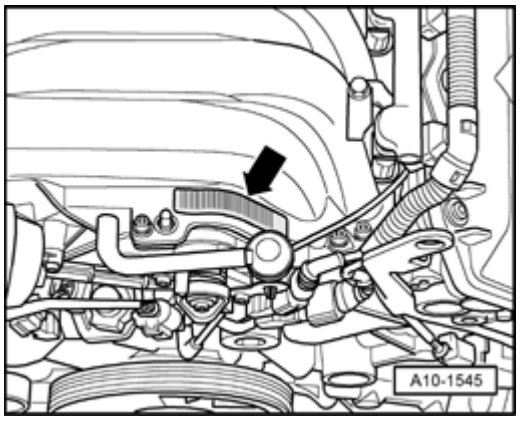

Fig. 1: Locating "Engine Code" And "Serial Number"
Courtesy of VOLKSWAGEN UNITED STATES, INC.

NOTE:

- **A sticker - arrow - with "engine code" and "serial number" is affixed at right on intake manifold.**
- **The engine code is also located on the vehicle data plate.**
- **The engine number is only visible after a work step.**

- Bring lock carrier into service position --> **Lock carrier, moving into service position**.

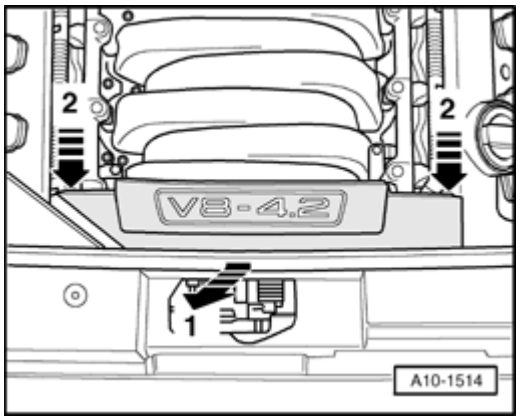

Fig. 2: Removing Front Engine Cover
Courtesy of VOLKSWAGEN UNITED STATES, INC.

- Remove front engine cover - **arrows 1 and 2** -.

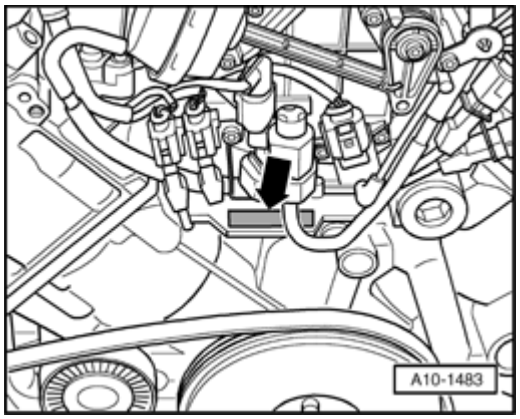

Fig. 3: Locating "Engine Code" And "Serial Number" At Front On Cylinder Block At Top
Courtesy of VOLKSWAGEN UNITED STATES, INC.

Engine number ("engine code" and "serial number") is located at front on cylinder block at top - **arrow** -.

ENGINE DATA

Engine data

Code letters		**BHF**
Displacement	ltr.	4,163
Output	kW at RPM	221/6200
Torque	Nm at RPM	380/2600 to 4700
Bore	dia. mm	84.5
Stroke	mm	92.8
Compression ratio		11.0
RON		98 * See note
Fuel injection and ignition system		Bosch Motronic
Ignition sequence		1-5-4-8-6-3-7-2
Exhaust gas recirculation (EGR)		No
Charging		No
Knock control		Yes
Variable valve timing		Yes
Variable intake manifold		Yes
Secondary air injection (AIR) system		Yes

*Super unleaded RON 95 is permissible, but with reduced power.

SAFETY PRECAUTIONS

Safety precautions

Note the following when working on the fuel system:

CAUTION: There is a risk of injury because the fuel is under high pressure.

- **To reduce pressure in fuel system, lay a clean cloth around the connector and carefully loosen connector.**

To prevent personal injury and damage to the injection and ignition system, observe the following:

- The ignition must be switched off before connecting or disconnecting injection and ignition system wiring or tester cables.
- Only clean engine with ignition switched off.
- If electrical connectors were disconnected, faults are saved in ECM:

- Connect Vehicle Diagnosis, Testing and Information System VAS 5051B.
- Start "Guided Functions" operating mode.
- Generate readiness code in ECM.

CAUTION: Risk of destroying electrical components when battery is disconnected.

- **Observe measures when disconnecting battery.**
- **Only disconnect battery with ignition switched off.**

- Disconnect battery -->
  - **27 BATTERY, STARTER, GENERATOR, CRUISE CONTROL**
  - **27 BATTERY, STARTER, GENERATOR, CRUISE CONTROL** for ELECTRICAL EQUIPMENT, CABRIOLET

.

Note the following when working on the cooling system:

CAUTION: Risk of scalding due to hot steam and hot coolant.

- **When the engine is warm the cooling system is under pressure.**
- **To reduce pressure, cover coolant reservoir cap with cloth and carefully open.**

If it is necessary to use testing and measuring devices on road tests, observe the following:

CAUTION: Risk of accident due to distraction and testing and measuring instruments not be sufficiently secured.

Risk of passenger airbag deploying in an accident.

- **Operating testing and measuring equipment while driving creates a distraction.**

- **There is an increased risk of injury due to unsecured testing and measuring equipment.**
- **Always secure testers on the rear seat with a strap and have a second person on the rear seat to operate them.**

GENERAL REPAIR NOTES

Rules for cleanliness

Even a little contamination can lead to faults. Therefore when working on the fuel supply and injection system, pay careful attention to the following rules of cleanliness:

- Before loosening, connections and surrounding areas must be cleaned thoroughly with engine or brake cleaner, and then cleaned area must be dried completely.
- Seal open lines and connections immediately using suitable protective caps.
- Place parts that have been removed on a clean surface and cover them. Use lint-free cloths.
- Only install clean components: Only unpack replacement parts immediately prior to installation. Do not use parts that have been stored unpackaged (e.g. in tool boxes etc.).
- Carefully cover over opened components or seal, if repairs are not performed immediately.
- When system is open: Do not work with compressed air. Do not move vehicle unless absolutely necessary.
- Protect disconnected electrical connectors from dirt and moisture and only connect if dry.

Fuel supply system, checking for leaks

- Let engine run a few minutes at average RPM.
- Switch off ignition.
- Check entire fuel supply system for leaks.
- If there are leaks in spite of correct tightening torque, the corresponding component must be replaced.

Contact corrosion!

Contact corrosion can occur if appropriate connecting elements (bolts, nuts, washers, etc.) are not used.

For this reason, only install connecting elements that are treated with a special coating.

Also, rubber or plastic parts and adhesive consist of non-conductive materials.

If there are doubts about the suitability of parts, generally use new parts .

NOTE:

- **Only original replacement parts are recommended, they are checked and compatible with aluminum.**
- **Audi accessories are recommended.**

- **Damage due to contact corrosion is not covered by warranty.**

10 - ENGINE - ASSEMBLY

ENGINE (VEHICLES WITH MANUAL TRANSMISSION)

Engine (vehicles with manual transmission)

NOTE:

- **With lock carrier removed, engine is removed downward with transmission and subframe.**

Engine (vehicles with manual transmission), removing

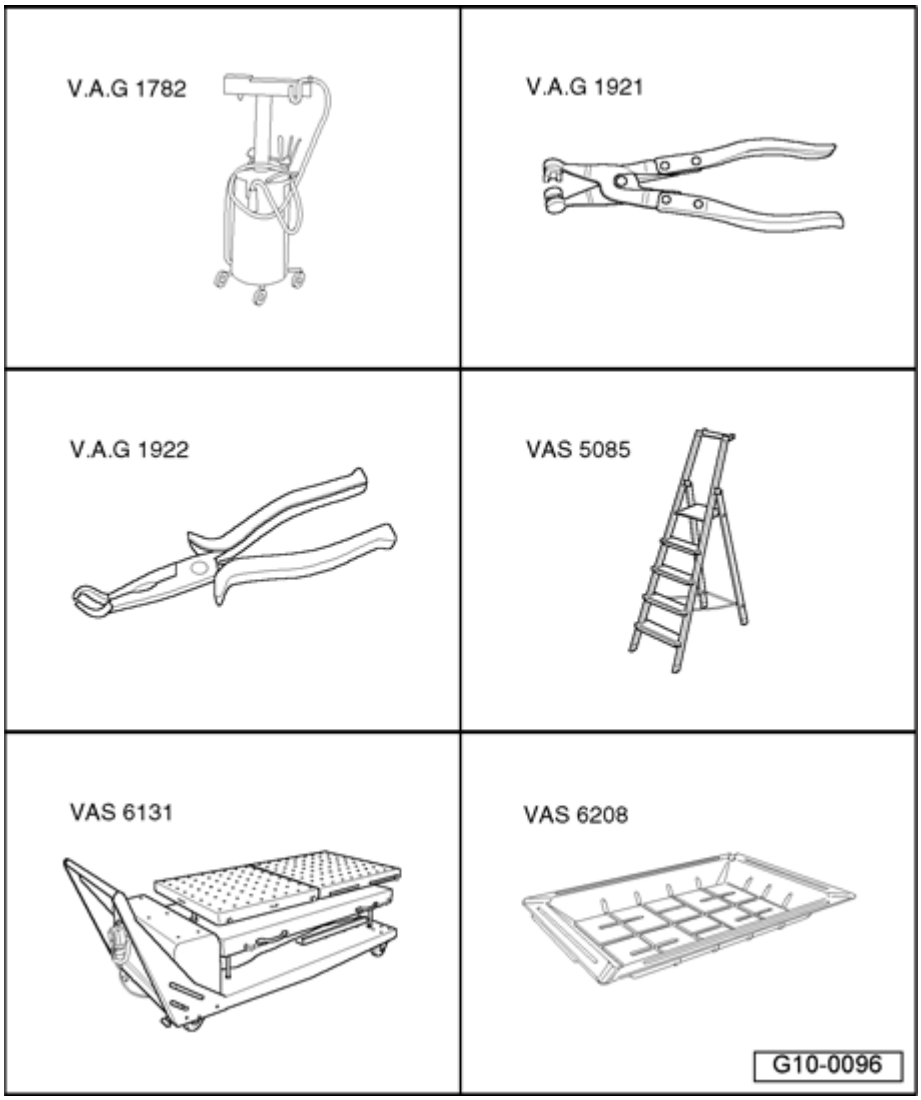

Fig. 4: Identifying Special Tools - Engine (Vehicles With Manual Transmission), Removing
Courtesy of VOLKSWAGEN UNITED STATES, INC.

Special tools, testers and auxiliary items required

- Old oil collecting and extracting device V.A.G 1782
- Hose clamp pliers V.A.G 1921
- Spark plug connector pliers V.A.G 1922
- Step ladder VAS 5085
- Scissor lift platform VAS 6131 A with support set for Audi VAS 6131/10
- Drip tray for workshop crane VAS 6208

NOTE:

- **If engine and transmission are to be separated after removal, the Supplementary Set, Audi A8 > 2002 VAS 6131/11 will also be required.**

Special tools, testers and auxiliary items required

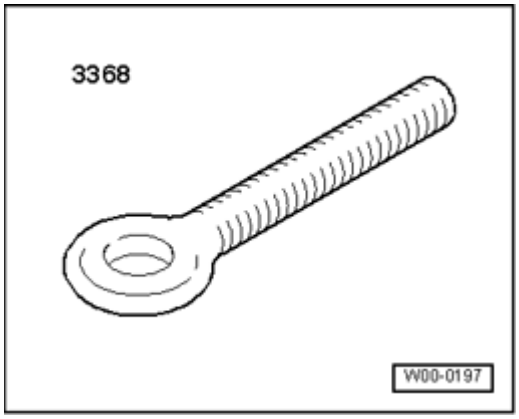

Fig. 5: Lifting Eyebolt 3368
Courtesy of VOLKSWAGEN UNITED STATES, INC.

- Lifting Eyebolt 3368

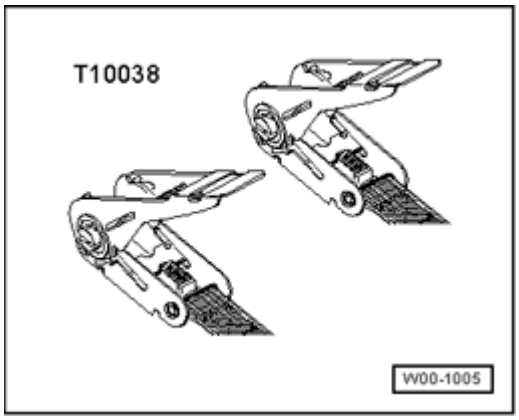

Fig. 6: Tension Strap T10038
Courtesy of VOLKSWAGEN UNITED STATES, INC.

- Tension strap T10038

Work procedure

NOTE:

- **Drained coolant must be stored in a clean container for disposal or reuse.**
- **All cable ties opened or cut during engine removal must be reinstalled at the same locations during installation.**

- Remove plenum chamber cover rubber seal.

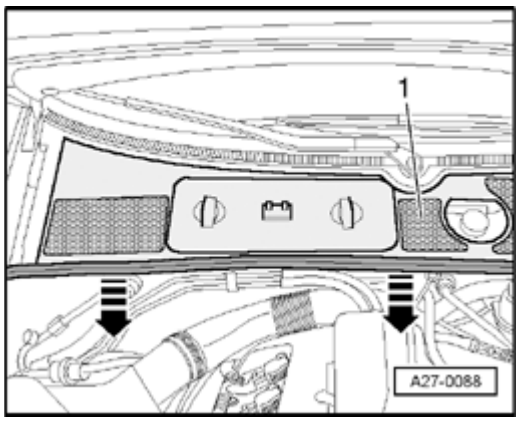

Fig. 7: Identifying Plenum Chamber Cover & Removing Rubber Seal
Courtesy of VOLKSWAGEN UNITED STATES, INC.

- Remove plenum chamber cover - **1** - toward front - **arrows** -.

CAUTION: Observe procedures when connecting battery -->

- **27 BATTERY, STARTER, GENERATOR, CRUISE CONTROL**
- **27 BATTERY, STARTER, GENERATOR, CRUISE CONTROL for ELECTRICAL EQUIPMENT, CABRIOLET**

.

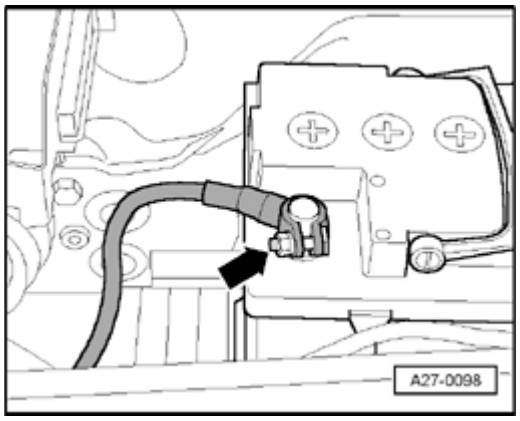

Fig. 8: Disconnecting Battery Ground (GND) Strap
Courtesy of VOLKSWAGEN UNITED STATES, INC.

- With ignition switched off, disconnect Battery Ground (GND) strap - **arrow** -.
- Discharge refrigerant circuit --> **87 - AIR CONDITIONING** .
- Extract hydraulic oil for power-steering from reservoir using old oil collecting and extracting device V.A.G 1782.

CAUTION: Cover cap of expansion tank with rag and open carefully, as hot steam i.e. hot coolant may escape when opening.

- Open cap of coolant expansion tank.
- Remove both front wheels.

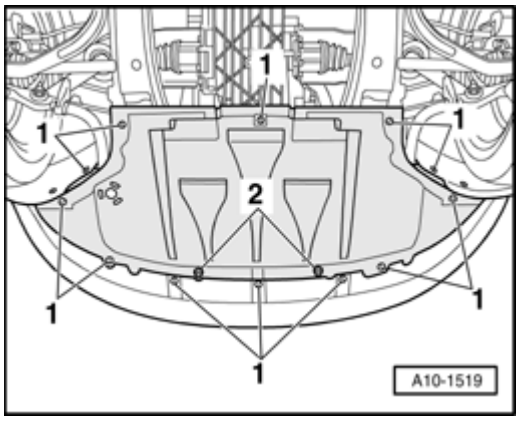

Fig. 9: Removing Quick-Release Fasteners, Screws And Noise Insulation
Courtesy of VOLKSWAGEN UNITED STATES, INC.

- Remove quick-release fasteners - **1** - , remove screws - **2** - and remove noise insulation.

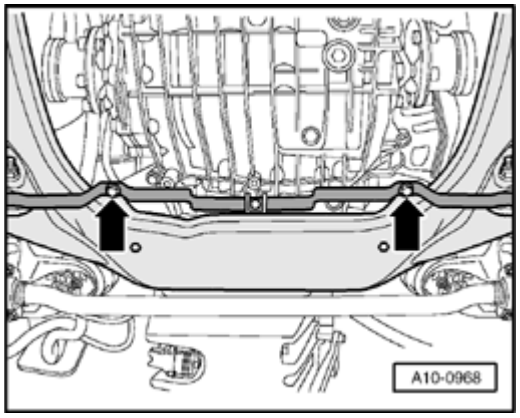

Fig. 10: Removing Bracket For Noise Insulation
Courtesy of VOLKSWAGEN UNITED STATES, INC.

- Remove bracket for noise insulation - **arrows** -.

- Remove left front and right front wheel housing liners -->
  - **66 EXTERIOR EQUIPMENT**
  - **66 - EXTERIOR EQUIPMENT** for BODY EXTERIOR - CABRIOLET

.

- Remove front bumper cover -->
  - **63 BUMPER**
  - **63 - BUMPERS** for BODY EXTERIOR - CABRIOLET

.

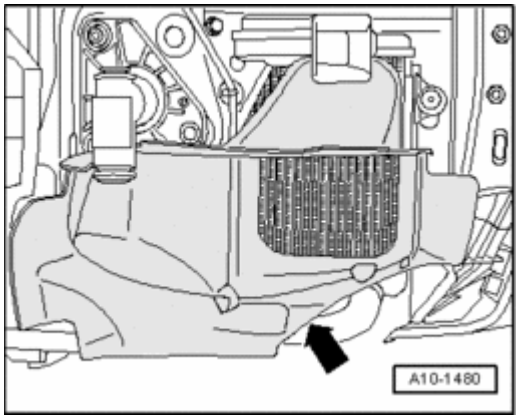

Fig. 11: Removing Left Air Guide In Front Of Auxiliary Cooler
Courtesy of VOLKSWAGEN UNITED STATES, INC.

- Remove left air guide - **arrow** - in front of auxiliary cooler.

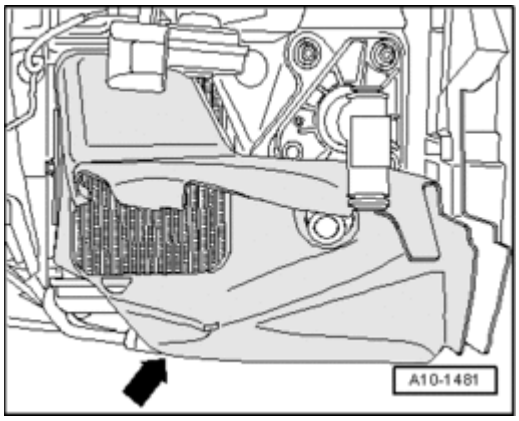

Fig. 12: Removing Right Air Guide In Front Of Auxiliary Cooler
Courtesy of VOLKSWAGEN UNITED STATES, INC.

- Remove right air guide - **arrow** - in front of auxiliary cooler.
- Place drip tray for workshop crane VAS 6208 under engine.

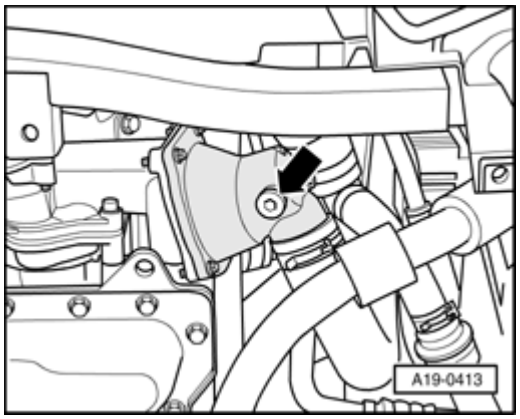

Fig. 13: Removing Drain Plug On Coolant Thermostat Housing
Courtesy of VOLKSWAGEN UNITED STATES, INC.

- Remove drain plug - **arrow** - on coolant thermostat housing and drain coolant from engine.

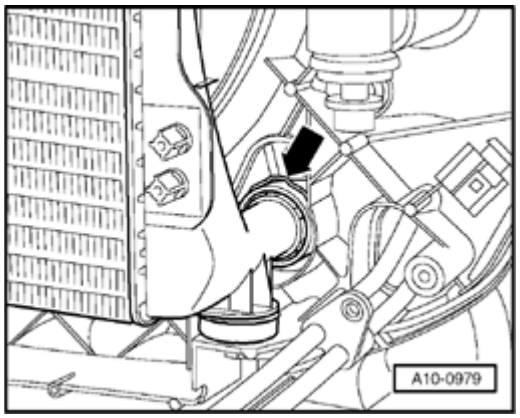

Fig. 14: Disconnecting Lower Coolant Hose From Radiator
Courtesy of VOLKSWAGEN UNITED STATES, INC.

- Disconnect lower coolant hose from radiator - **arrow** - and drain residual coolant.

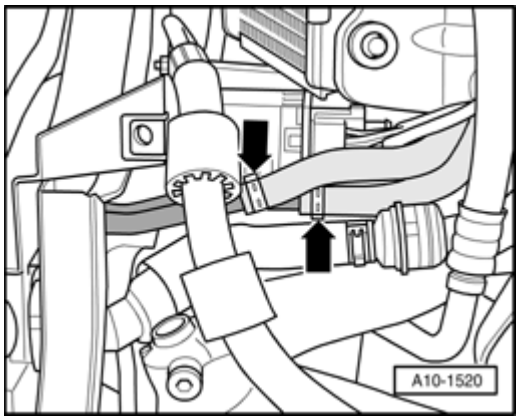

Fig. 15: Disconnecting Hydraulic Lines To Cooling Coil At Left Rear Of Bumper
Courtesy of VOLKSWAGEN UNITED STATES, INC.

- Place old oil collecting and extracting device V.A.G 1782 under engine.
- Disconnect hydraulic lines to cooling coil at left rear of bumper - **arrows** -.

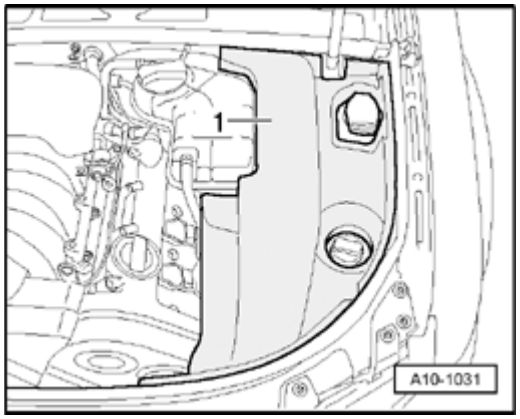

Fig. 16: Removing Cover In Engine Compartment (Left Side)
Courtesy of VOLKSWAGEN UNITED STATES, INC.

- Remove cover - **1** - in engine compartment (left side).

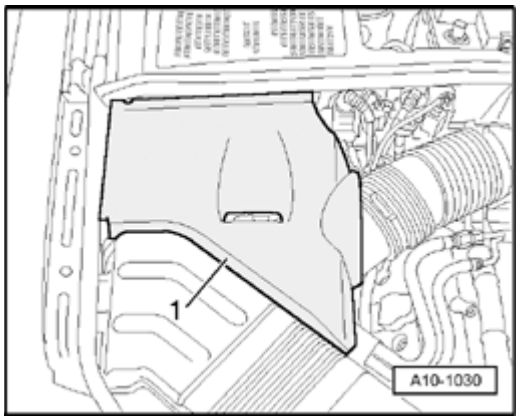

Fig. 17: Removing Cover In Engine Compartment (Right Side)
Courtesy of VOLKSWAGEN UNITED STATES, INC.

- Remove cover - **1** - in engine compartment (right side).

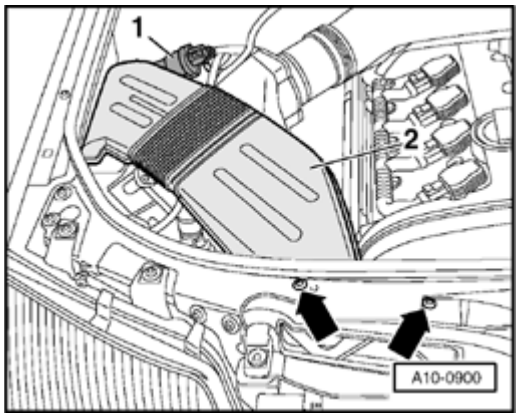

Fig. 18: Identifying Evaporative Emission Canister Purge Regulator Valve N80 And Air Duct
Courtesy of VOLKSWAGEN UNITED STATES, INC.

- Disengage Evaporative Emission (EVAP) Canister Purge Regulator Valve N80 - **1** - from air guide.
- Remove bolts - **arrows** -.
- Remove air duct - **2** -.

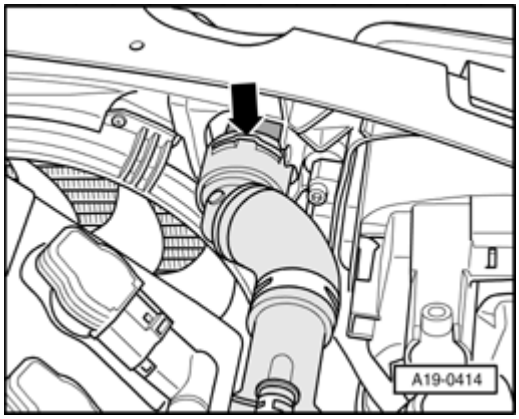

Fig. 19: Disconnecting Top Coolant Hose From Radiator
Courtesy of VOLKSWAGEN UNITED STATES, INC.

- Disconnect top coolant hose - **arrow** - from radiator.

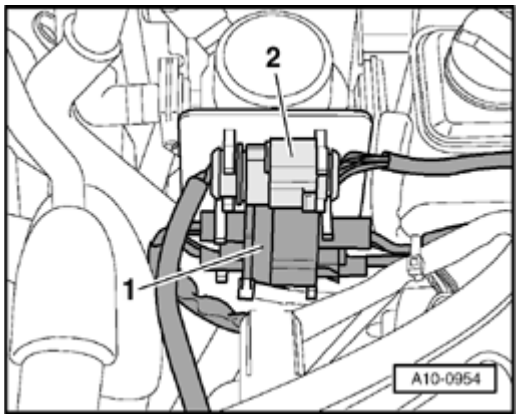

Fig. 20: Removing Electrical Harness Connectors And From Bracket
Courtesy of VOLKSWAGEN UNITED STATES, INC.

- Remove electrical harness connectors - **1** - and - **2** - from bracket and disconnect them.
- Free up wires to lock carrier.

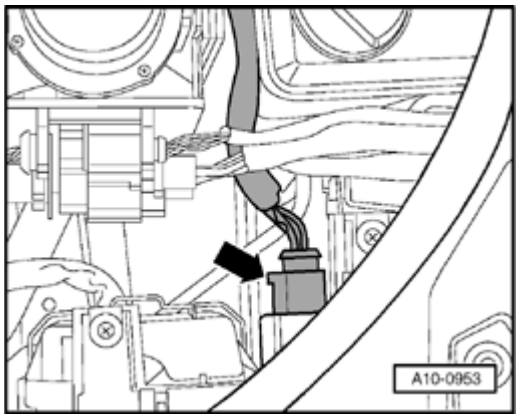

Fig. 21: Disconnecting Electrical Harness Connector For Headlights At Both Sides Of Vehicle
Courtesy of VOLKSWAGEN UNITED STATES, INC.

- Disconnect electrical harness connector - **arrow** - for headlights at both sides of the vehicle.
- Free up electrical wiring.

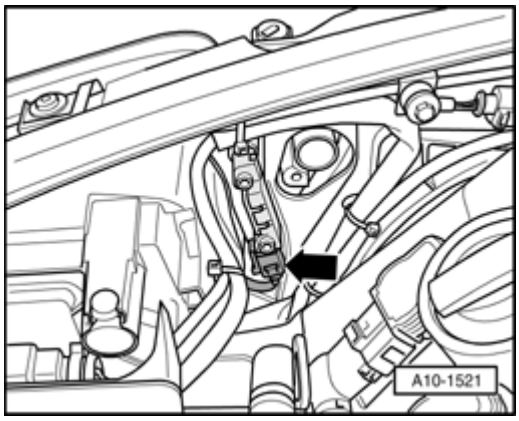

Fig. 22: Disconnecting Electrical Harness Connector For Left/Right Airbag Sensors On Lock Carrier
Courtesy of VOLKSWAGEN UNITED STATES, INC.

- Disconnect electrical harness connector - **arrow** - for left and right airbag sensors on lock carrier.
- Free up cables.
- Remove hood cable at lock carrier -->
  - **55 HOOD, LIDS**
  - **55 - HOOD, LIDS** for BODY EXTERIOR - CABRIOLET

.

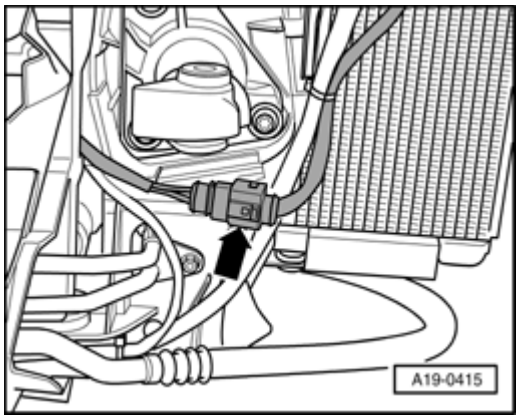

Fig. 23: Disconnecting Electrical Harness Connector For Right Fan
Courtesy of VOLKSWAGEN UNITED STATES, INC.

- Disconnect electrical harness connector - **arrow** - for right fan.

NOTE:

- **To prevent damage to condenser and also to the refrigerant lines/hoses, ensure that the lines and hoses are not stretched, kinked or bent.**

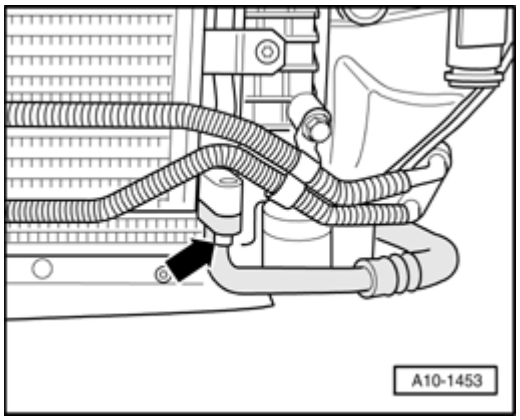

Fig. 24: Removing Refrigerant Line Leading To A/C Compressor
Courtesy of VOLKSWAGEN UNITED STATES, INC.

- Remove refrigerant line - **arrow** - leading to A/C compressor.

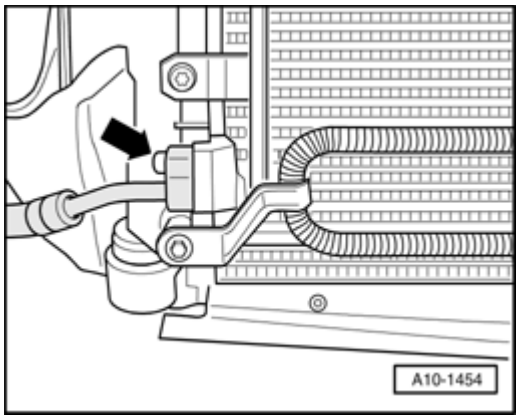

Fig. 25: Removing Refrigerant Line Leading To A/C Evaporator
Courtesy of VOLKSWAGEN UNITED STATES, INC.

- Remove refrigerant line - **arrow** - leading to A/C evaporator.

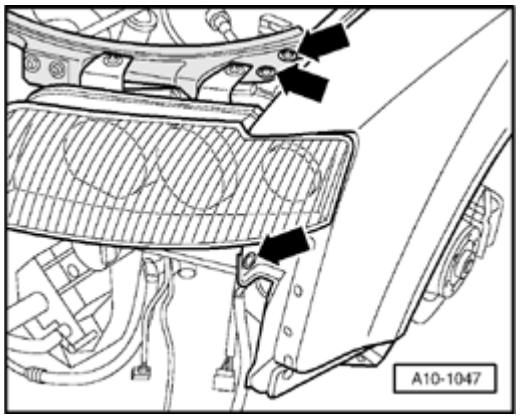

Fig. 26: Removing Bolts At Left/Right Side Of Bumper
Courtesy of VOLKSWAGEN UNITED STATES, INC.

- Remove bolts - **arrows** - at left and right side of bumper.
- Remove hood seal from lock carrier and fender edges.

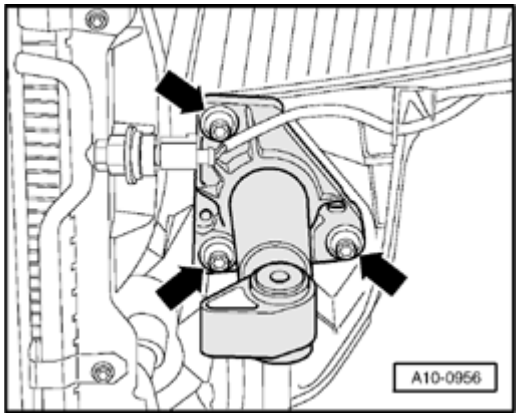

Fig. 27: Removing Bolts At Impact Absorbers At Left/Right

Courtesy of VOLKSWAGEN UNITED STATES, INC.

- Remove bolts at impact absorbers - **arrows** - at left and right.

NOTE:

- **A second technician is required to remove lock carrier.**

- Remove lock carrier and set aside so it cannot topple.

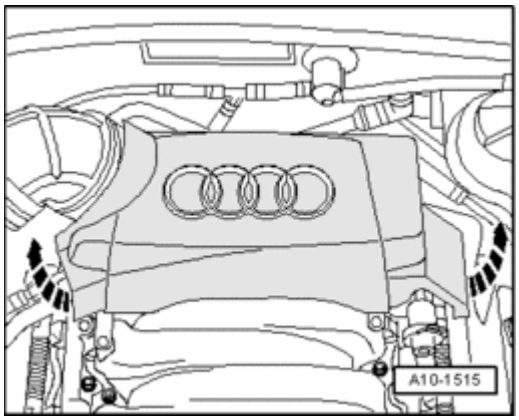

Fig. 28: Removing Rear Engine Cover
Courtesy of VOLKSWAGEN UNITED STATES, INC.

- Remove rear engine cover - **arrows** -.

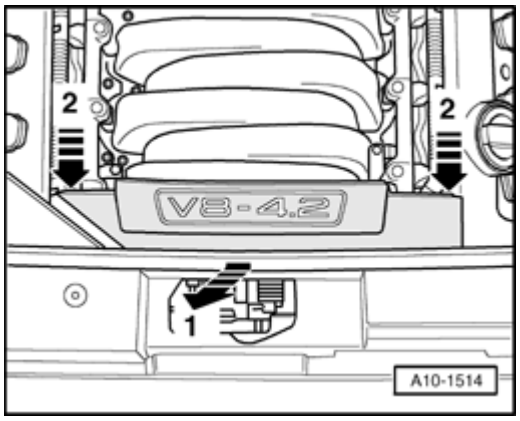

Fig. 29: Removing Front Engine Cover
Courtesy of VOLKSWAGEN UNITED STATES, INC.

- Remove front engine cover - **arrows 1 and 2** -.

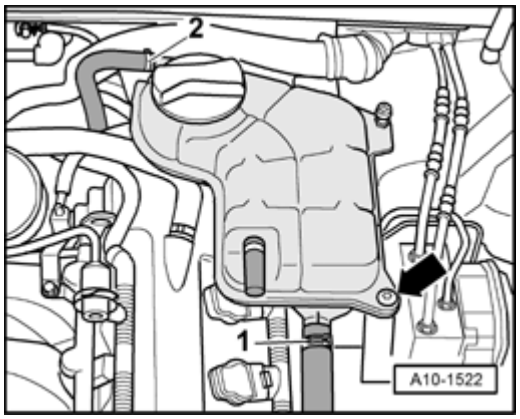

Fig. 30: Removing Coolant Hoses & Coolant Expansion Tank
Courtesy of VOLKSWAGEN UNITED STATES, INC.

- Remove coolant hoses - **1** - and - **2** -.
- Remove coolant expansion tank - **arrow** -.
- Disconnect electrical wiring to Engine Coolant Level (ECL) Warning Switch F66 at bottom of expansion tank.

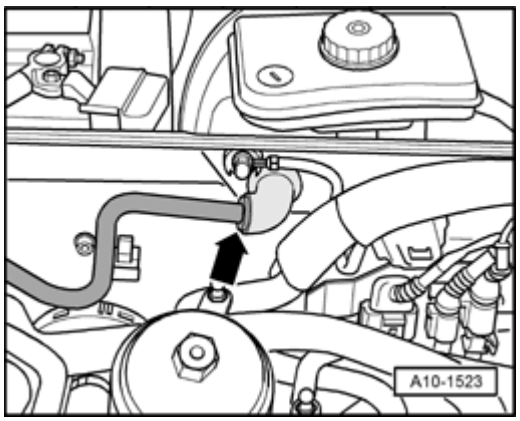

Fig. 31: Disconnecting Brake Booster Vacuum Hose From Grommet On Bulkhead
Courtesy of VOLKSWAGEN UNITED STATES, INC.

- Disconnect vacuum line - **arrow** - to brake booster at bulkhead.

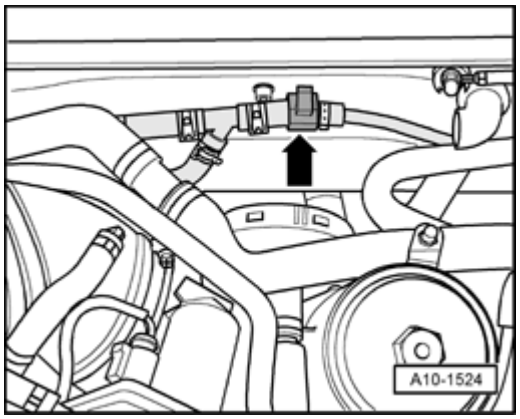

Fig. 32: Uncliping Coolant Hose From Bracket On Bulkhead
Courtesy of VOLKSWAGEN UNITED STATES, INC.

- Unclip coolant hose - **arrow** - from bracket on bulkhead.

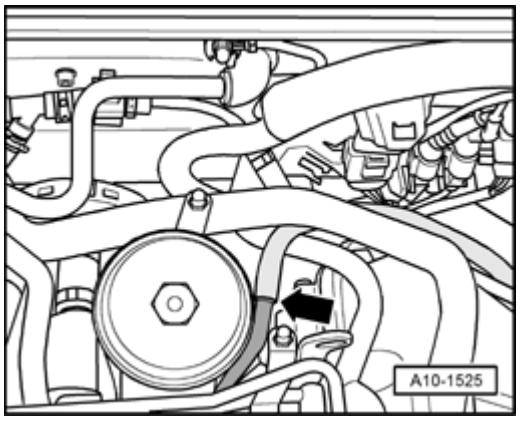

Fig. 33: Disconnecting Vacuum Line To Vacuum Reservoir
Courtesy of VOLKSWAGEN UNITED STATES, INC.

- If installed, disconnect vacuum line - **arrow** - to vacuum reservoir.

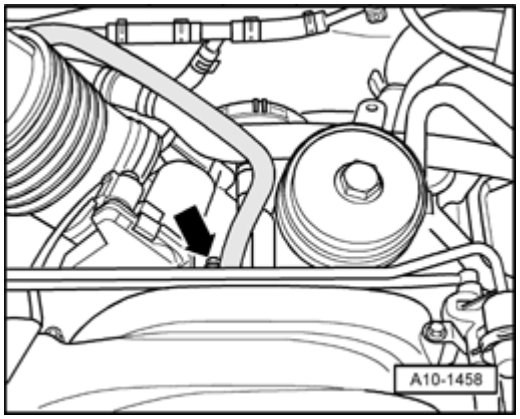

Fig. 34: Disconnecting Vacuum Hose From Intake Manifold
Courtesy of VOLKSWAGEN UNITED STATES, INC.

- Disconnect vacuum hose - **arrow** - from intake manifold.

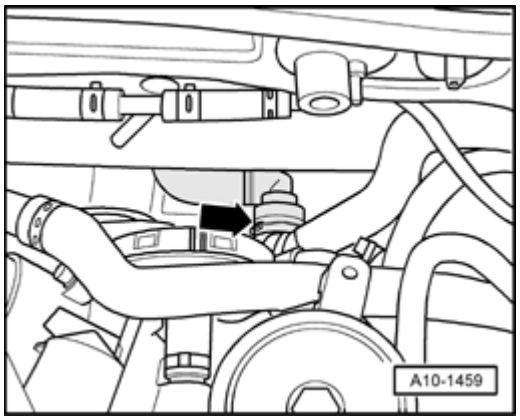

Fig. 35: Disconnecting Coolant Hose To Heater Core At Rear Coolant Pipe On Engine
Courtesy of VOLKSWAGEN UNITED STATES, INC.

- Disconnect coolant hose - **arrow** - to heater core at rear coolant pipe on engine.

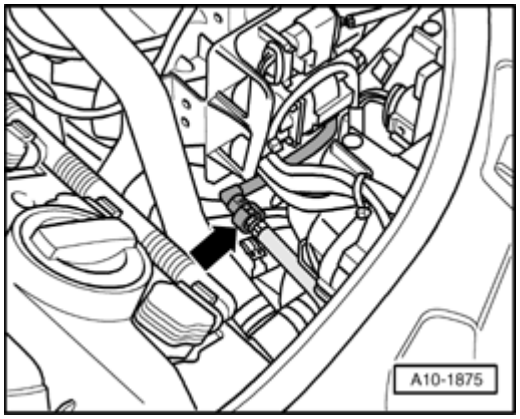

Fig. 36: Disconnecting Vacuum Line
Courtesy of VOLKSWAGEN UNITED STATES, INC.

- If installed, disconnect vacuum line at area designated with - **arrow** -.

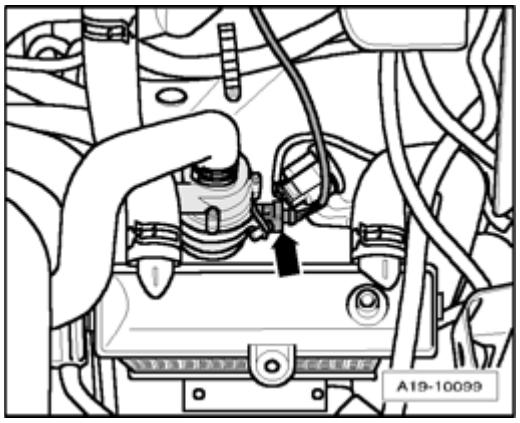

Fig. 37: Disconnecting Electrical Harness Connector For After-Run Coolant Pump V51
Courtesy of VOLKSWAGEN UNITED STATES, INC.

- If installed, disconnect electrical harness connector - **arrow** - for After-Run Coolant Pump V51 (behind auxiliary cooler at left) and free up electrical wire.

NOTE:

- **Place a rag under separating point to catch escaping hydraulic fluid.**

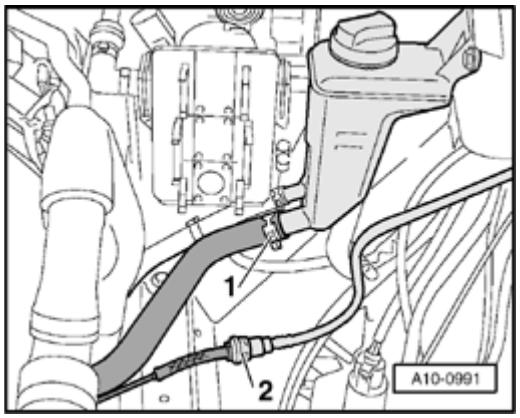

Fig. 38: Disconnecting Hose From Power Steering Fluid Reservoir & Vacuum Hose To Vacuum Reservoir
Courtesy of VOLKSWAGEN UNITED STATES, INC.

- Disconnect hose - **1** - from power steering fluid reservoir.

NOTE:

- **Ignore - 2 -.**

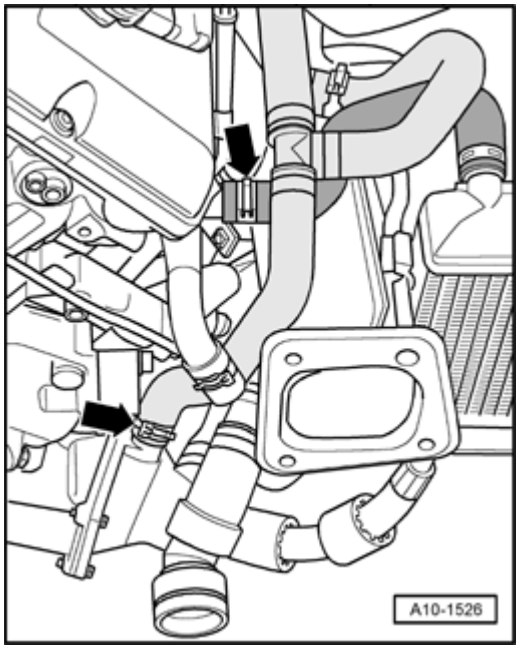

Fig. 39: Disconnecting Coolant Hoses

Courtesy of VOLKSWAGEN UNITED STATES, INC.

- Disconnect coolant hoses at positions indicated by - **arrows** -.

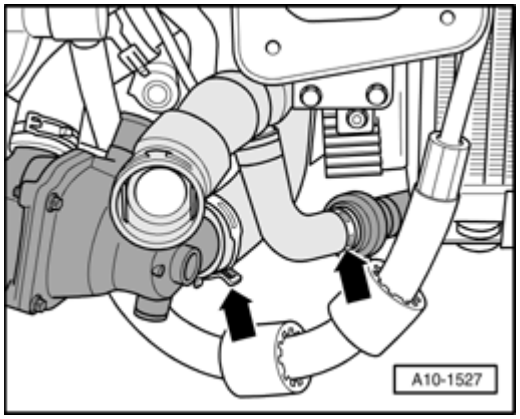

Fig. 40: Disconnecting Coolant Hoses
Courtesy of VOLKSWAGEN UNITED STATES, INC.

- Disconnect coolant hoses at positions indicated by - **arrows** -.

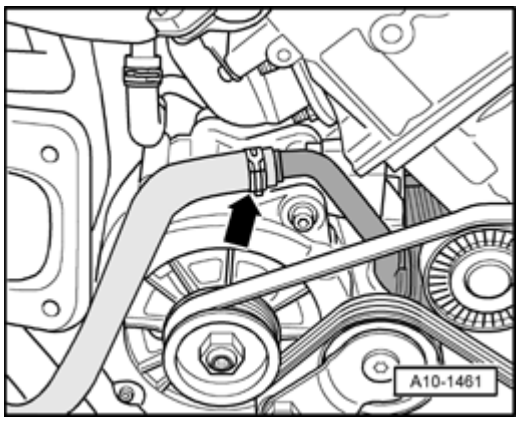

Fig. 41: Disconnecting Coolant Hose To Oil Cooler
Courtesy of VOLKSWAGEN UNITED STATES, INC.

- Disconnect coolant hose to oil cooler - **arrow** -.

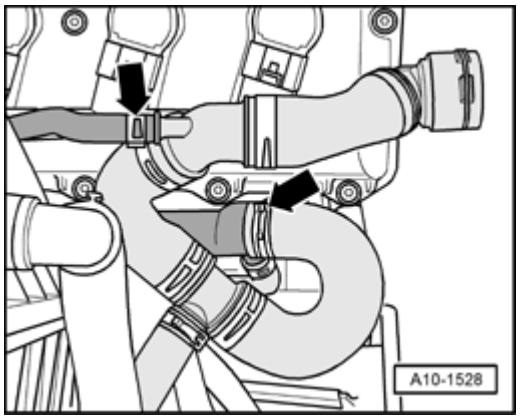

Fig. 42: Disconnecting Coolant Hoses
Courtesy of VOLKSWAGEN UNITED STATES, INC.

- Disconnect coolant hoses at positions indicated by - **arrows** -.

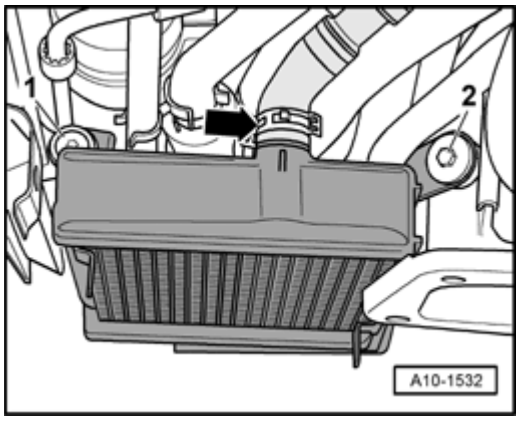

Fig. 43: Removing Bolts & Right Auxiliary Cooler Together With Coolant Hoses
Courtesy of VOLKSWAGEN UNITED STATES, INC.

- Remove bolts - **1** - and - **2** -.
- Remove right auxiliary cooler together with coolant hoses.

NOTE:

- **The hose - arrow - can remain connected at auxiliary cooler.**

CAUTION: Note rules of cleanliness for working on the fuel injection system --> Rules for cleanliness.

CAUTION: Fuel system is under pressure! Before opening system, place clean rags around connection. Then release pressure by carefully loosening connection.

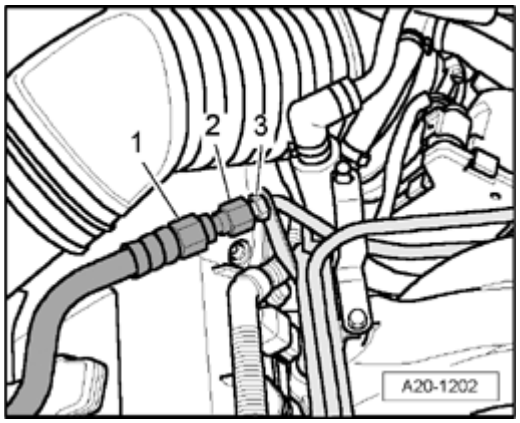

Fig. 44: Installing/Removing Fuel Hose To/From Connection On Fuel Rail Line
Courtesy of VOLKSWAGEN UNITED STATES, INC.

- Remove fuel hose from connection on fuel rail line. To do so, counter hold using an open-end wrench at hex head - **1** - and - **3** - and remove union nut - **2** -.

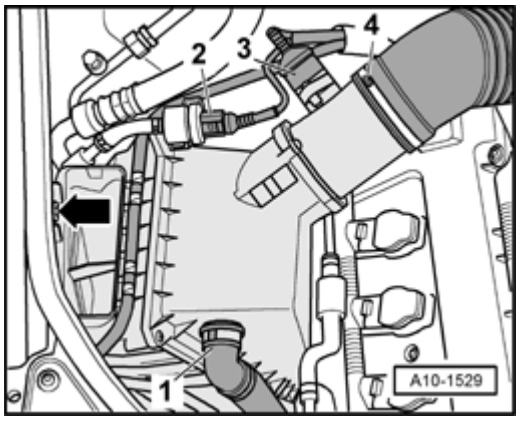

Fig. 45: Identifying Electrical Harness Connectors, Secondary Air Injection (AIR) Pump Hose, Air Guide Hose & Mass Air Flow (MAF) Sensor
Courtesy of VOLKSWAGEN UNITED STATES, INC.

- Disconnect electrical harness connector - **2** - from Evaporative Emission (EVAP) Canister Purge Regulator Valve N80.
- Disconnect electrical harness connector - **3** - at Mass Air Flow (MAF) Sensor G70.
- Disconnect hose - **1** - to Secondary Air Injection (AIR) pump.
- Disconnect air guide hose - **4** - at Mass Air Flow (MAF) sensor.

- Move wiring harness clear at air filter housing.
- Remove clip - **arrow** - and remove air filter housing with Mass Air Flow (MAF) sensor.

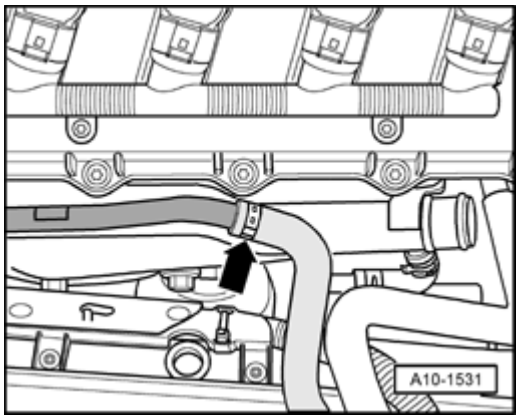

Fig. 46: Disconnecting Air Hose At Right On Engine
Courtesy of VOLKSWAGEN UNITED STATES, INC.

- Disconnect air hose - **arrow** - at right on engine.

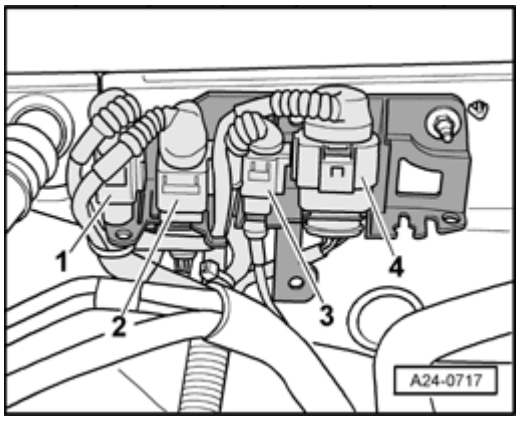

Fig. 47: Removing Bracket For Electrical Harness Connectors At Right From Bulkhead
Courtesy of VOLKSWAGEN UNITED STATES, INC.

- Remove bracket for electrical harness connectors - **1 to 4** - at right from bulkhead.

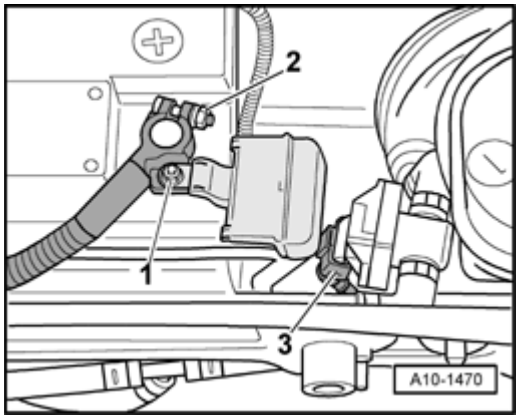

Fig. 48: Removing Nut And Fuse Strip On Plus Wire Terminal Clamp
Courtesy of VOLKSWAGEN UNITED STATES, INC.

- Remove nut - **1** - and remove fuse strip on battery positive (+) cable terminal clamp.
- Disconnect battery positive (+) cable - **2** - on battery positive terminal.
- Pull battery positive (+) cable through bulkhead toward front.
- Free up wiring harness.

NOTE:

- **Disregard item - 3 -.**

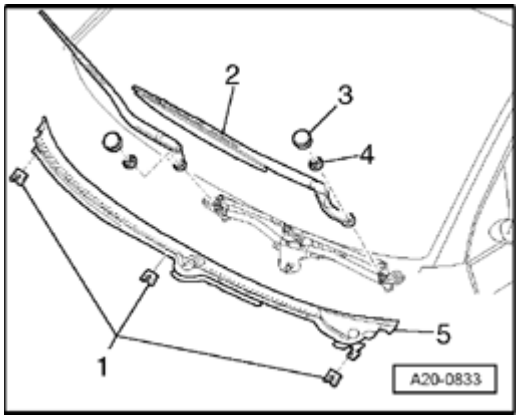

Fig. 49: Removing Securing Clips And Cowl
Courtesy of VOLKSWAGEN UNITED STATES, INC.

- Pry off both covers - **3** - using a screwdriver.
- Loosen hex-nuts - **4** - by several turns.
- Loosen wiper arms - **2** - from the respective wiper axle by tilting slightly.
- Remove nuts completely and remove wiper arms.

CAUTION: To prevent the cowl grille - 5 - from tearing when removing, coat transition between windshield and cowl grille with a soapy solution and pull grille up vertically out of fastening strip beginning at edge of window.

- Disconnect securing clips - **1** - and remove cowl grille - **5** -.

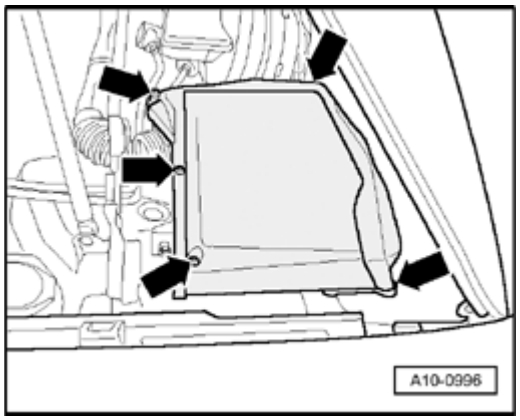

Fig. 50: Removing Screws And Cover From E-Box In Plenum Chamber
Courtesy of VOLKSWAGEN UNITED STATES, INC.

- Remove cover for E-Box in plenum chamber - **arrows** -.

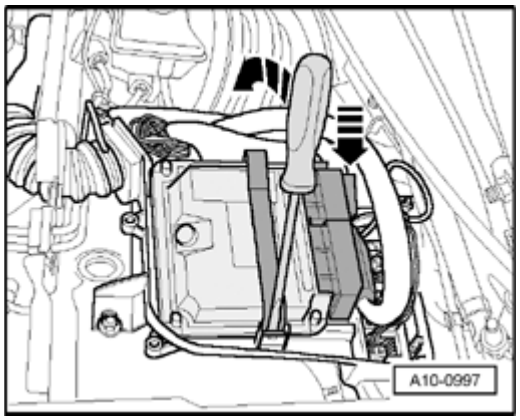

Fig. 51: Using Screwdriver To Remove Retainer Bar And Engine Control Module (ECM) J623
Courtesy of VOLKSWAGEN UNITED STATES, INC.

- Using a screwdriver, carefully pry off mounting bracket - **arrow** - and remove Engine Control Module (ECM) from E-Box.

NOTE:

- **Engine Control Module (ECM) remains connected at wiring harness.**

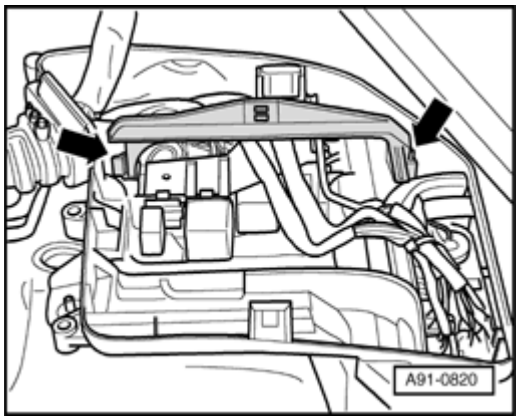

Fig. 52: Releasing Retaining Hooks Toward Outside And Removing Retaining Bracket
Courtesy of VOLKSWAGEN UNITED STATES, INC.

- Release retaining hooks - **arrows** - toward outside and remove retaining bracket.

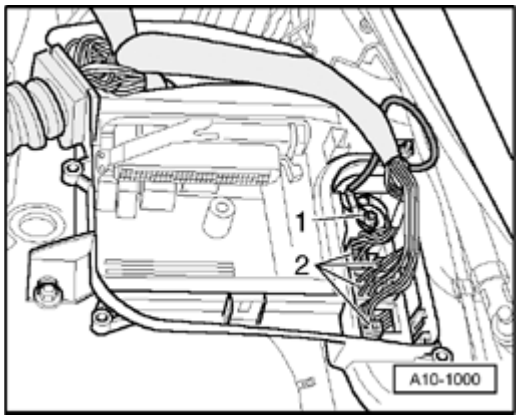

Fig. 53: Disconnecting All Electrical Harness Connectors On Connector Station Using Spark Plug Connector Pliers V.A.G 1922
Courtesy of VOLKSWAGEN UNITED STATES, INC.

- Disconnect all electrical harness connectors on connector station - **2** - using spark plug connector pliers V.A.G 1922.
- Remove electrical wire connection - **1** -.

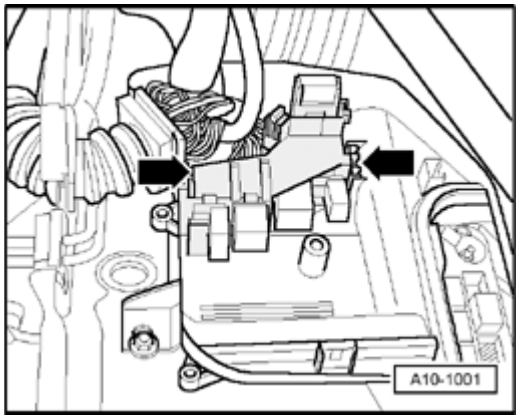

Fig. 54: Disengaging Locking Mechanisms And Removing Secondary Relay Carrier In E-Box Toward Top
Courtesy of VOLKSWAGEN UNITED STATES, INC.

- Disengage locking mechanisms - **arrows** - and remove secondary relay carrier in E-Box toward top.
- Disengage engine wiring harness at E-Box and bulkhead.

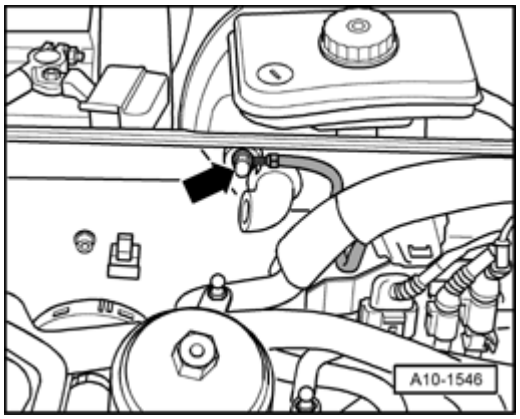

Fig. 55: Removing Ground (GND) Connection
Courtesy of VOLKSWAGEN UNITED STATES, INC.

- Remove Ground (GND) connection - **arrow** -.

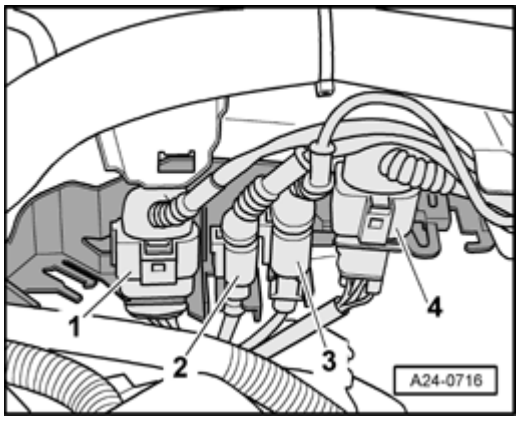

Fig. 56: Removing Bracket For Electrical Harness Connectors At Left From Bulkhead
Courtesy of VOLKSWAGEN UNITED STATES, INC.

- Remove bracket for electrical harness connectors - **1 to 4** - at left from bulkhead.
- Free up wiring harness.
- Set electrical wiring harness on engine and secure Engine Control Module (ECM) against falling down.

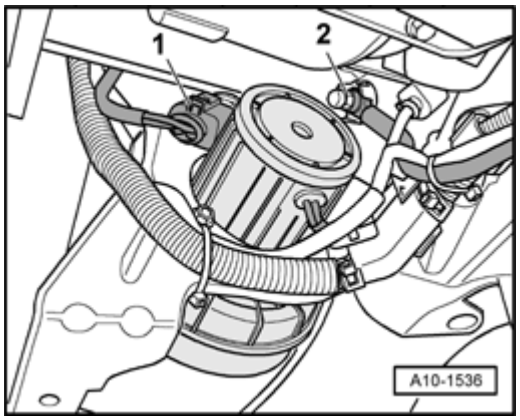

Fig. 57: Disconnecting Electrical Harness Connector At Secondary Air Injection (AIR) Pump Motor V101 & Removing Ground (GND) Wire On Long Member
Courtesy of VOLKSWAGEN UNITED STATES, INC.

- Disconnect electrical harness connector - **1** - at Secondary Air Injection (AIR) Pump Motor V101.
- Remove Ground (GND) wire - **2** - on long member.

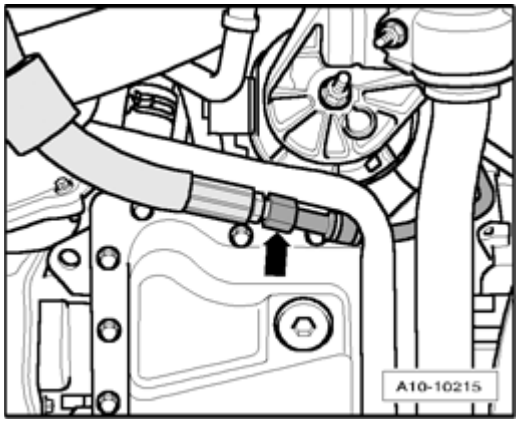

Fig. 58: Disconnecting Hydraulic Pressure Line For Power-Steering At Left Next To Oil Pan
Courtesy of VOLKSWAGEN UNITED STATES, INC.

- Place old oil collecting and extracting device V.A.G 1782 under engine.
- Disconnect hydraulic pressure line for power-steering - **arrow** - at left next to oil pan.

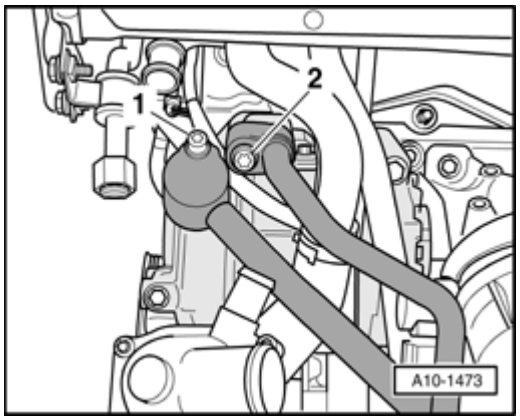

Fig. 59: Removing Bolts & Right Refrigerant Line From A/C Compressor
Courtesy of VOLKSWAGEN UNITED STATES, INC.

NOTE:

- **To prevent damage to condenser and also to the refrigerant lines/hoses, ensure that the lines and hoses are not stretched, kinked or bent.**

- Remove bolts - **1** - and - **2** -.
- Remove right refrigerant line from A/C compressor.

NOTE:

- **The left refrigerant line will be removed at a later point in time.**

- Seal open connections on A/C compressor using clean plugs.

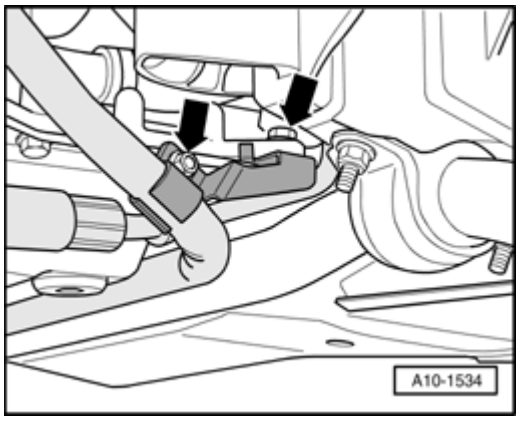

Fig. 60: Removing Left Bracket For Refrigerant Line
Courtesy of VOLKSWAGEN UNITED STATES, INC.

- Remove left bracket for refrigerant line - **arrows** -.

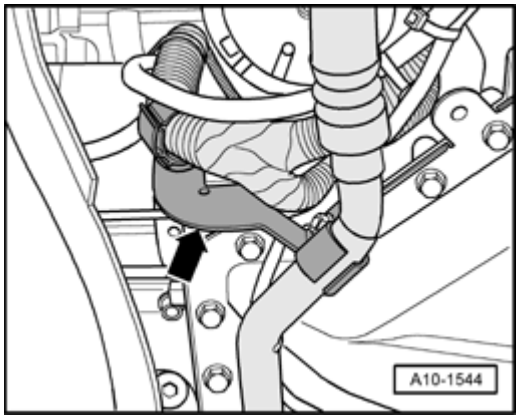

Fig. 61: Removing Refrigerant Line On Bracket
Courtesy of VOLKSWAGEN UNITED STATES, INC.

- Remove refrigerant line on bracket - **arrow** -.

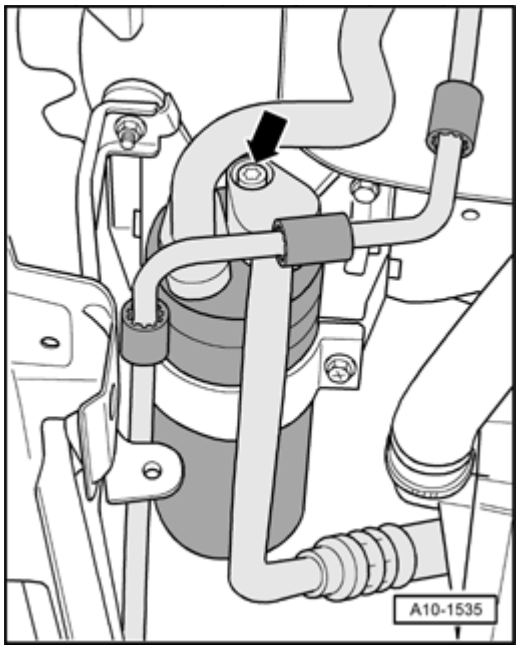

Fig. 62: Removing Bolt And Disconnecting Refrigerant Line To A/C Compressor
Courtesy of VOLKSWAGEN UNITED STATES, INC.

- Remove bolt - **arrow** - and disconnect refrigerant line to A/C compressor.

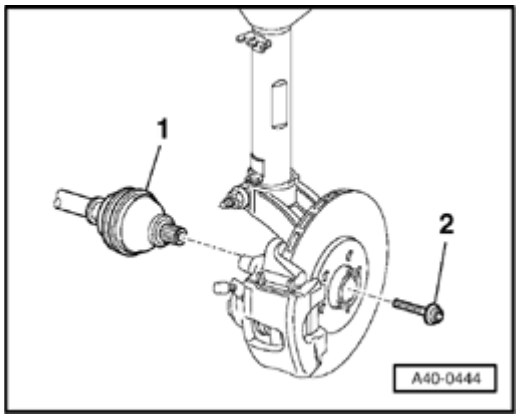

Fig. 63: Identifying Collar Bolt For Right Drive Axle
Courtesy of VOLKSWAGEN UNITED STATES, INC.

- Have a second technician press brake pedal.

CAUTION: To loosen collar bolt for drive axle, the wheel bearing must not be under load (vehicle must not be standing on its wheels).

- Remove collar bolt - **2** - at left and right drive axles - **1** -.

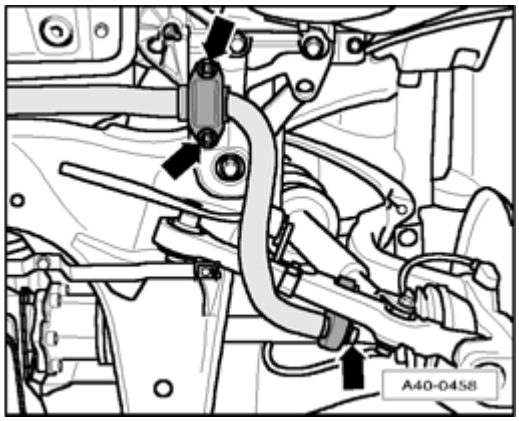

Fig. 64: Removing Bolts And Nuts Uniformly At Left/Right
Courtesy of VOLKSWAGEN UNITED STATES, INC.

- Remove bolts and nuts - **arrows** - uniformly at left and right.
- Remove stabilizer.

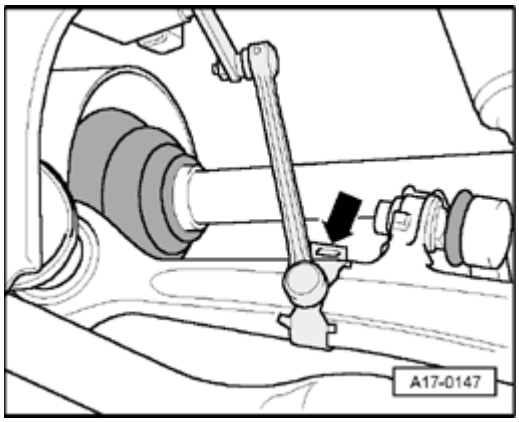

Fig. 65: Disconnecting Electrical Harness Connector At Left Front Level Control System Sensor G78
Courtesy of VOLKSWAGEN UNITED STATES, INC.

- Disconnect electrical harness connector at Left Front Level Control System Sensor G78.
- Unclip operating rod for Left Front Level Control System Sensor G78 at bottom on control arm.
- Remove outer suspension strut bolt from left and right of engine compartment.

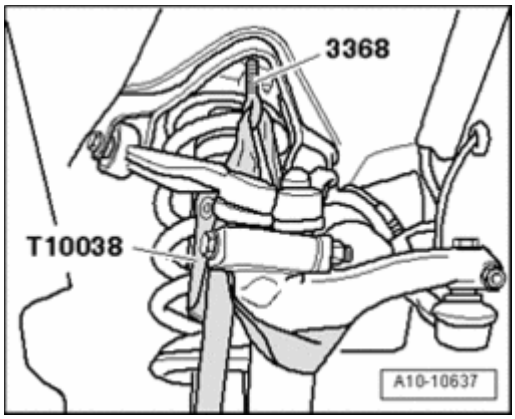

Fig. 66: Rotating Lifting Eyebolt 3368 At Left/Right In Suspension Strut Mount Hole From Below
Courtesy of VOLKSWAGEN UNITED STATES, INC.

- Rotate Lifting Eyebolt 3368 at left and right in suspension strut mount hole from below.

CAUTION: Only install Lifting Eyebolt 3368 until it is flush with upper edge of suspension strut mount so that hood is not damaged when closed.

- Tie up wheel bearing housing at left and right with Tensioning Strap T10038 as shown in illustration.

CAUTION: To prevent upper control arm joints from being damaged, wheel bearing housing must be supported before loosening lower suspension strut bolts.

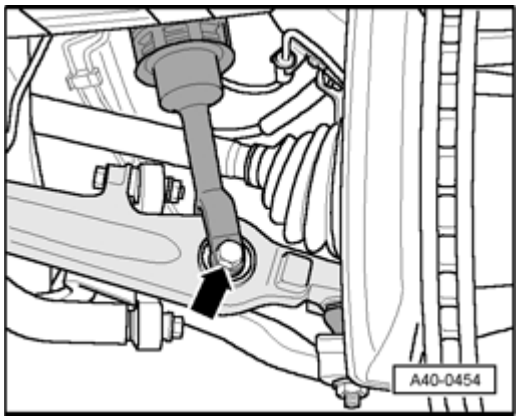

Fig. 67: Removing Bolt And Suspension Strut From Control Arm
Courtesy of VOLKSWAGEN UNITED STATES, INC.

- Remove bolt and remove suspension strut from control arm - **arrow** -.

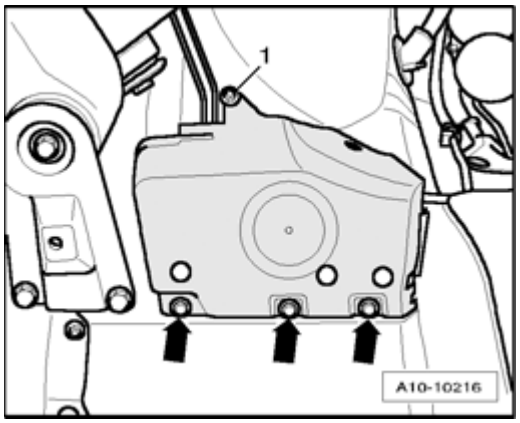

Fig. 68: Removing Expanding Clips, Nut And Cover Behind Wheel Housing
Courtesy of VOLKSWAGEN UNITED STATES, INC.

- Remove expanding clips - **arrows** -.
- Remove nut - **1** - and remove cover behind wheel housing.

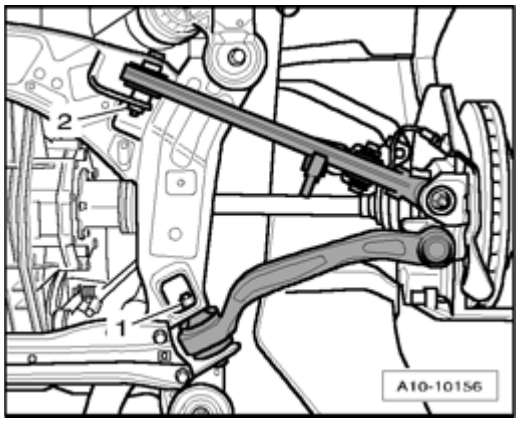

Fig. 69: Removing Guide Control Arm And Control Arm On Subframe
Courtesy of VOLKSWAGEN UNITED STATES, INC.

- Remove guide control arm - **1** - and control arm - **2** - on subframe.

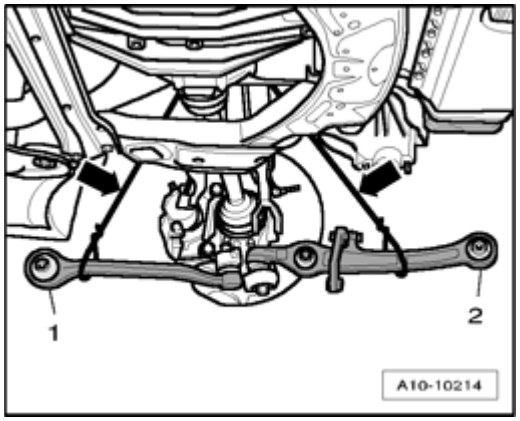

Fig. 70: Pivoting Guide Control Arm And Control Arm Outward

Courtesy of VOLKSWAGEN UNITED STATES, INC.

- Pivot guide control arm - **1** - and control arm - **2** - outward.

CAUTION: Guide control arm and control arm must not hang free. Tie up both control arms on wheel bearing housing - arrows - as shown in illustration.

- Repeat work procedure on opposite side of the vehicle.

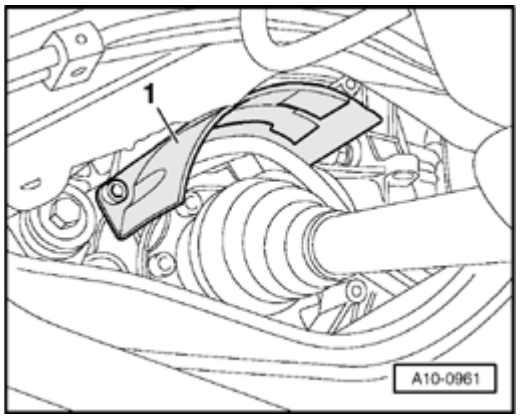

Fig. 71: Removing Heat Shield For Left Drive Axle
Courtesy of VOLKSWAGEN UNITED STATES, INC.

- Remove heat shield - **1** - for left drive axle.
- Remove drive axle from transmission flanged shaft.
- Swing left wheel bearing housing outward and remove drive axle.
- Repeat work procedure on opposite side of the vehicle.

NOTE:

- **Flex joint in front exhaust pipe must not be bent more than 10 ° , otherwise it may be damaged.**

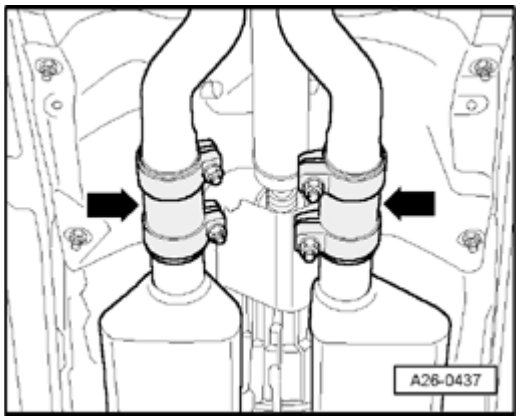

Fig. 72: Disconnecting Exhaust System At Double Clamps
Courtesy of VOLKSWAGEN UNITED STATES, INC.

- Disconnect exhaust system at double clamps - **arrows** -.

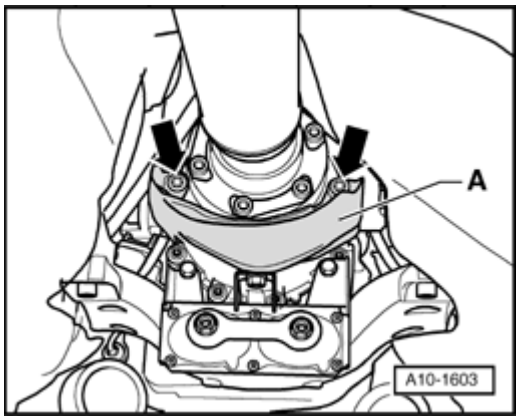

Fig. 73: Removing Heat Shield For Driveshaft
Courtesy of VOLKSWAGEN UNITED STATES, INC.

- Remove heat shield - **A** - for driveshaft - **arrows** -.
- Remove bolts at transmission/driveshaft flange.
- Push driveshaft together with rear final drive. The constant velocity (CV) joints can move axially.
- Tie up driveshaft to body.

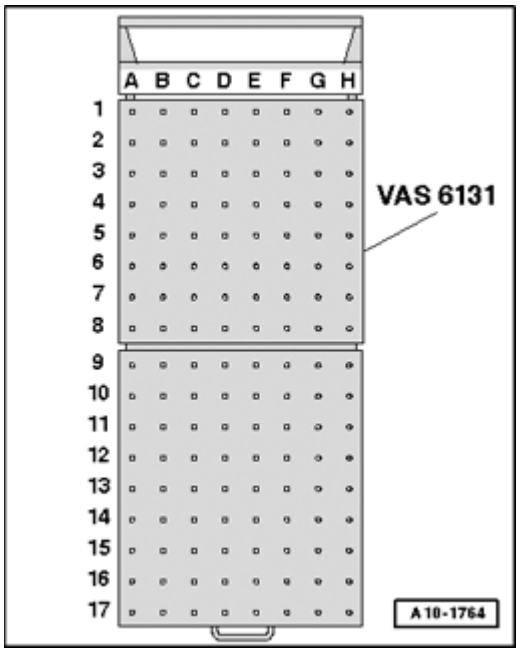

Fig. 74: Identifying Scissor Lift Platform VAS 6131
Courtesy of VOLKSWAGEN UNITED STATES, INC.

Prepare scissor lift platform:

- Equip scissor lift platform VAS 6131 A with support set for Audi VAS 6131/10 as follows:

Platform coordinates	Parts of support set for Audi VAS 6131/10			
B4	/10-1	/10-4	/10-5	/10-11
G3	/10-1	/10-4	/10-5	/10-11
B10	/10-1	/10-2	/10-5	/10-8
G10	/10-1	/10-2	/10-5	/10-8
C14	/10-1	/10-3	/10-5	/10-7
E14	/10-1	/10-3	/10-5	/10-7

- Install attachments on scissor lift table by hand first.
- Place scissor lift platform VAS 6131 A in horizontal position.
- Note bubble level (sight glass) on support platform.
- Drive scissor lift platform VAS 6131 A under engine/transmission subassembly.

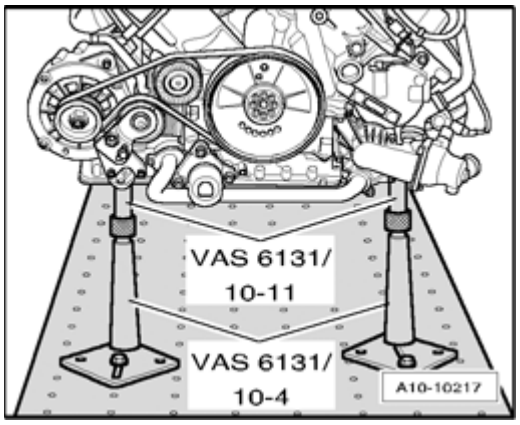

Fig. 75: Positioning Support Elements From VAS 6131/10 At Front On Engine
Courtesy of VOLKSWAGEN UNITED STATES, INC.

- Position support elements from VAS 6131/10 at front on engine as shown in illustration.

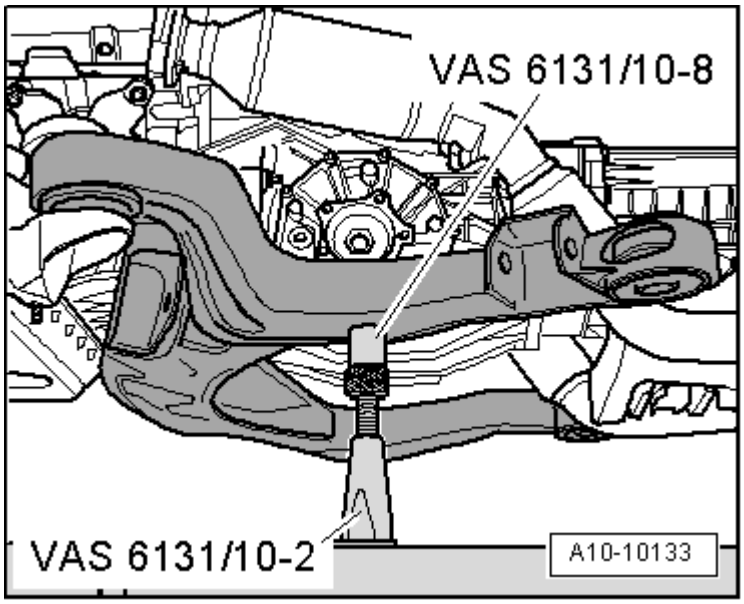

Fig. 76: Positioning Support Elements From VAS 6131/10 At Left/Right On Subframe
Courtesy of VOLKSWAGEN UNITED STATES, INC.

- Position support elements from VAS 6131/10 at left and right on subframe as shown in illustration.

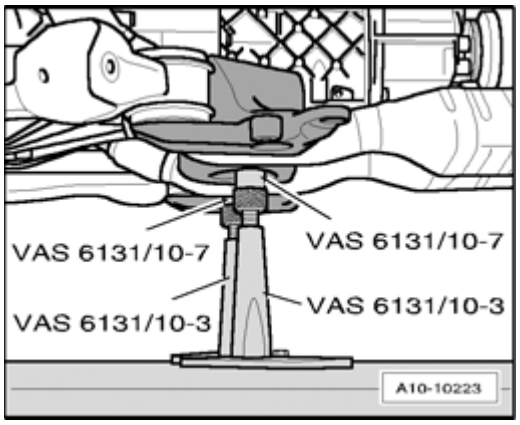

Fig. 77: Positioning Support Elements From VAS 6131/10 At Left/Right On Tunnel Cross Member
Courtesy of VOLKSWAGEN UNITED STATES, INC.

- Position support elements from VAS 6131/10 at left and right on tunnel cross member as shown in illustration.
- Turn all spindles of support elements upward far enough until all support pins make contact at support points.
- Tighten base plates for support elements to 20 Nm on scissor lift platform VAS 6131 A.

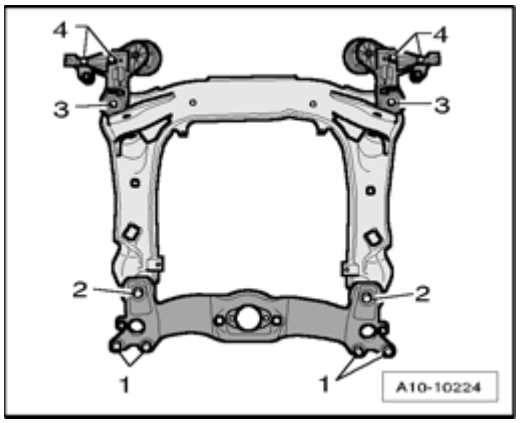

Fig. 78: Removing/Installing Bolts In Diagonal Sequence And In Stages
Courtesy of VOLKSWAGEN UNITED STATES, INC.

- Mark installation position of subframe and of both engine mount plates to long members using a felt-tip marker.
- Remove bolts - **1 to 4** - in diagonal sequence and in stages.

NOTE:

- **Verify that all hoses and lines between engine/transmission subassembly and body have been disconnected.**
- **While lowering, carefully guide engine/transmission subassembly with subframe out of engine compartment in order to prevent damage.**

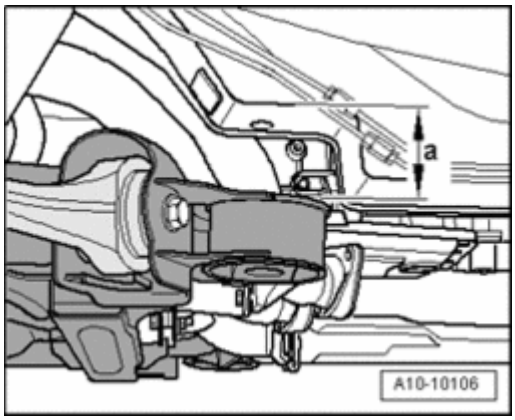

Fig. 79: Lowering Engine/Transmission Assembly Using Scissor Lift Platform VAS 6131 Only Approx. By Dimension
Courtesy of VOLKSWAGEN UNITED STATES, INC.

- Lower engine/transmission subassembly using scissor lift platform VAS 6131 A first only approx. dimension - **a** -.

- Dimension - **a** - = 100 mm.

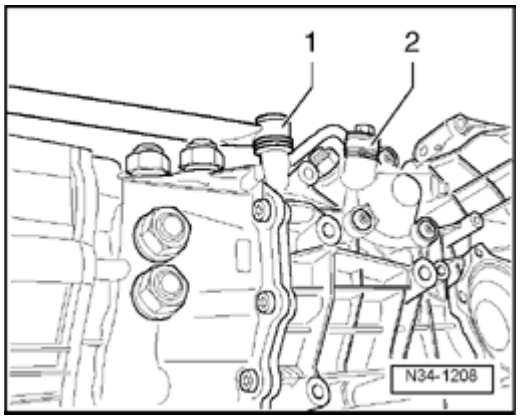

Fig. 80: Identifying Push Rod And Connecting Rod For Selector Rod
Courtesy of VOLKSWAGEN UNITED STATES, INC.

- Disconnect connecting rod - **2** - of shift rod.
- Remove socket head bolt of pivot rod - **1** -.

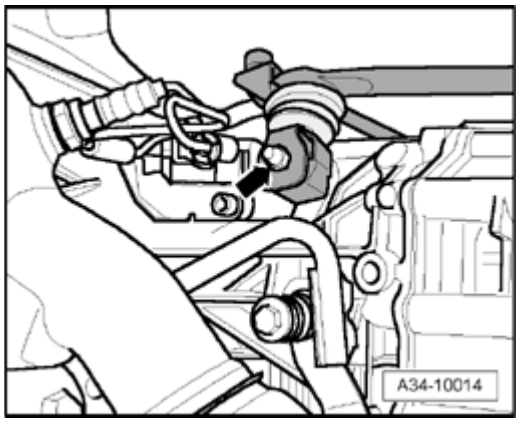

Fig. 81: Installing Lever For Selector Shaft
Courtesy of VOLKSWAGEN UNITED STATES, INC.

- Remove nut - **arrow** - and remove lever from selector shaft.

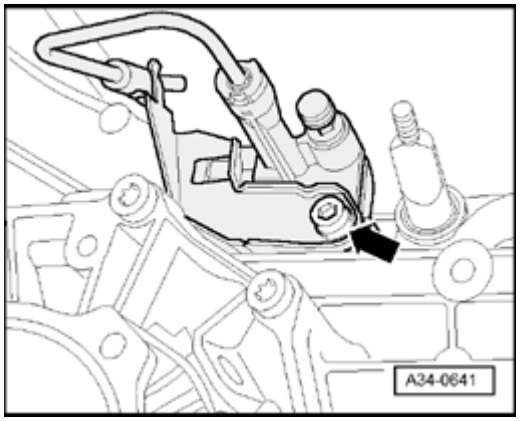

Fig. 82: Removing Clutch Slave Cylinder

Courtesy of VOLKSWAGEN UNITED STATES, INC.

- Remove clutch slave cylinder - **arrow** - , do not disconnect lines.
- Tie up clutch slave cylinder together with shift rods.
- Lower engine/transmission subassembly downward.
- Push scissor lift platform VAS 6131 A with engine/transmission subassembly under vehicle.

Engine (vehicles with manual transmission), separating

Special tools, testers and auxiliary items required

- Support set for Audi VAS 6131/10 and VAS 6131/11

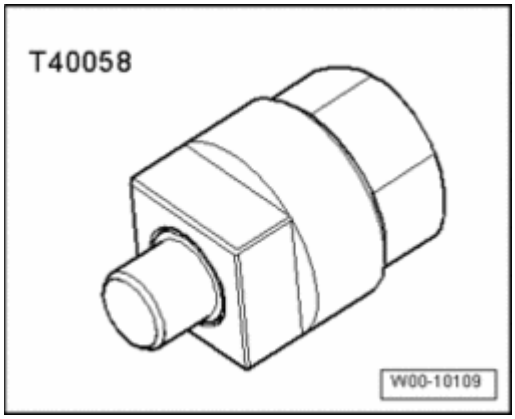

Fig. 83: Adapter T40058
Courtesy of VOLKSWAGEN UNITED STATES, INC.

- Adapter T40058

Work procedure

- Engine/transmission unit removed and attached to scissor lift platform VAS 6131 A.

NOTE:

- **All cable ties opened or cut during engine removal must be reinstalled at the same locations during installation.**
- **All heat insulation sleeves removed during engine removal must be reinstalled at the same locations during installation.**

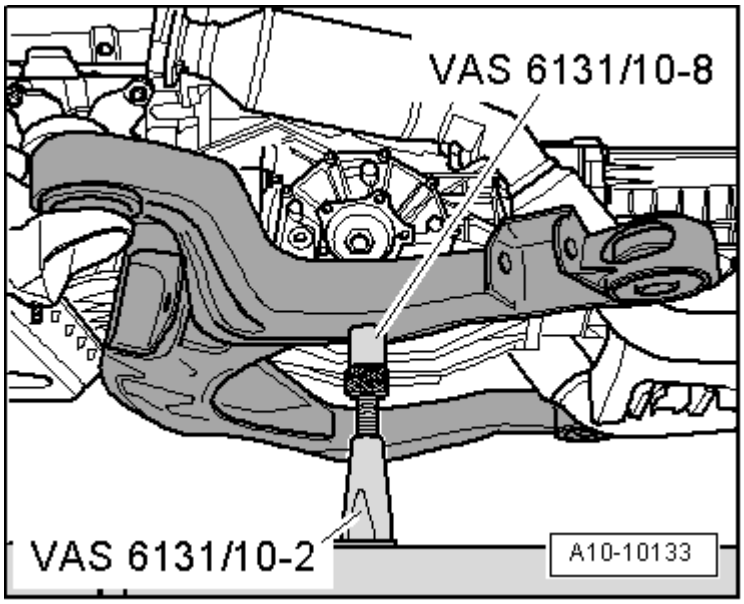

Fig. 84: Positioning Support Elements From VAS 6131/10 At Left/Right On Subframe
Courtesy of VOLKSWAGEN UNITED STATES, INC.

- Turn spindles of support elements from VAS 6131/10 at left and right at subframe completely downward.
- Remove support pins from spindles.
- Remove subframe to side.

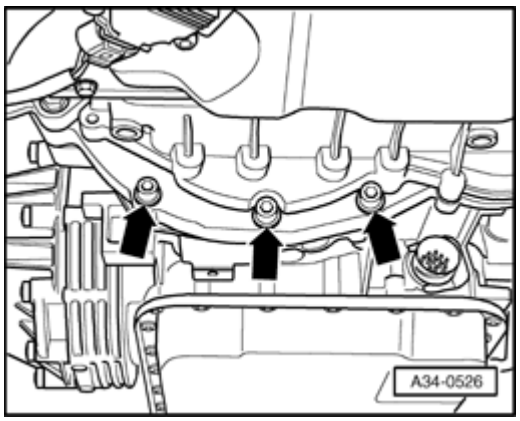

Fig. 85: Removing Bottom Engine/Transmission Connecting Bolts
Courtesy of VOLKSWAGEN UNITED STATES, INC.

- Remove bottom engine/transmission connecting bolts - **arrows** -.

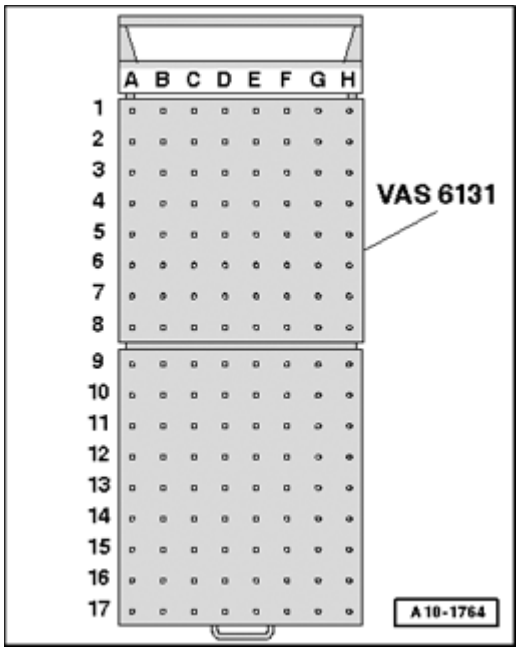

Fig. 86: Identifying Scissor Lift Platform VAS 6131
Courtesy of VOLKSWAGEN UNITED STATES, INC.

- Equip scissor lift platform VAS 6131 A with support set for Audi VAS 6131/10 and VAS 6131/11 as follows:

Platform coordinates	**Parts of support set for Audi VAS 6131/10 and VAS 6131/11**			
B4 * See note	/10-1	/10-4	/10-5	/10-11
G3 * See note	/10-1	/10-4	/10-5	/10-11
C7	/10-1	/10-4	/10-5	/10-12
G7	/10-1	/10-4	/10-5	/10-12
F10	/10-1	/10-4	/10-5	/11-3
D12	/10-1	/10-2	/10-5	/11-2
C14 * See note	/10-1	/10-3	/10-5	/10-7
E14 * See note	/10-1	/10-3	/10-5	/10-7

*Support elements remain unchanged.

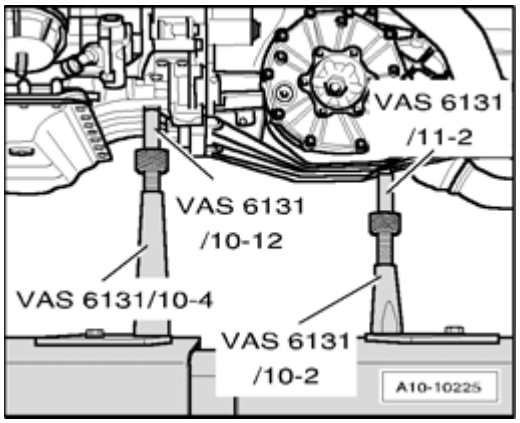

Fig. 87: Positioning Support Elements From VAS 6131/10 And VAS 6131/11 At Left On Engine/Transmission
Courtesy of VOLKSWAGEN UNITED STATES, INC.

- Position support elements from VAS 6131/10 and VAS 6131/11 at left on engine/transmission as shown in illustration.

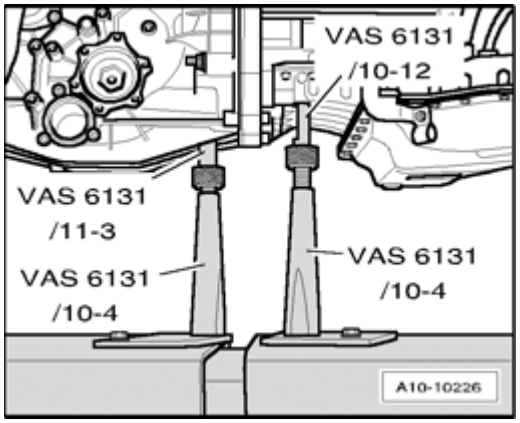

Fig. 88: Positioning Support Elements From VAS 6131/10 And VAS 6131/11 At Right On Engine/Transmission
Courtesy of VOLKSWAGEN UNITED STATES, INC.

- Position support elements from VAS 6131/10 and VAS 6131/11 at right on engine/transmission as shown in illustration.
- Turn spindles of attachments upward far enough until all support pins make contact at support points.
- Tighten base plates for support elements to 20 Nm on scissor lift platform VAS 6131 A.

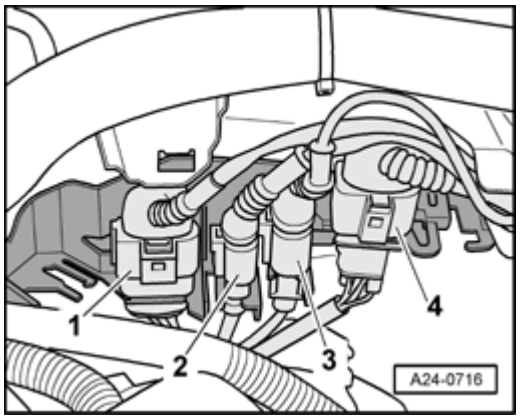

Fig. 89: Removing Bracket For Electrical Harness Connectors At Left From Bulkhead
Courtesy of VOLKSWAGEN UNITED STATES, INC.

- Remove electrical harness connectors - **1** - and - **4** - from bracket and disconnect.
- Remove heat insulation sleeve on wiring harness and free up individual wires.

NOTE:

- **In the illustration, the electrical harness connectors are depicted as installed.**

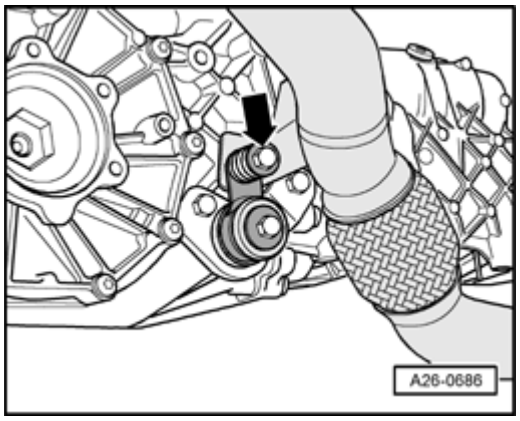

Fig. 90: Removing Bolt At Strap For Left Front Exhaust Pipe
Courtesy of VOLKSWAGEN UNITED STATES, INC.

- Remove bolt - **arrow** - at strap for left front exhaust pipe.

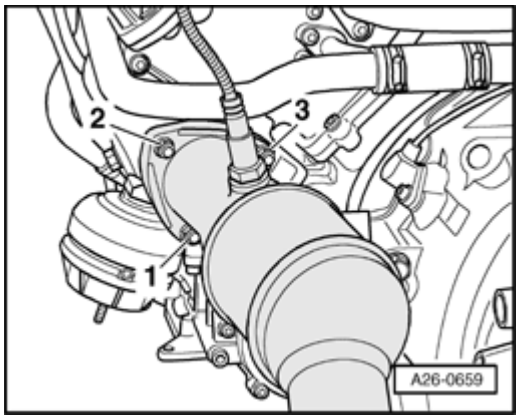

Fig. 91: Removing Nuts For Left Front Exhaust Pipe/Exhaust Manifold
Courtesy of VOLKSWAGEN UNITED STATES, INC.

- Remove nuts - **1 to 3** - for left front exhaust pipe/exhaust manifold.
- Remove front exhaust pipe with pre- and main catalytic converters.

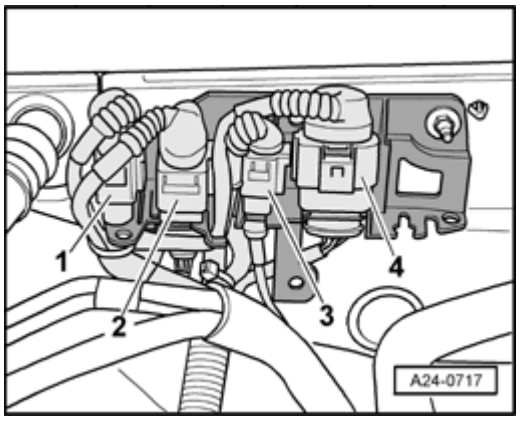

Fig. 92: Removing Electrical Harness Connectors From Bracket
Courtesy of VOLKSWAGEN UNITED STATES, INC.

- Remove electrical harness connectors - **2** - and - **4** - from bracket and disconnect.
- Free up wiring harnesses.

NOTE:

- **In the illustration, the electrical harness connectors are depicted as installed.**

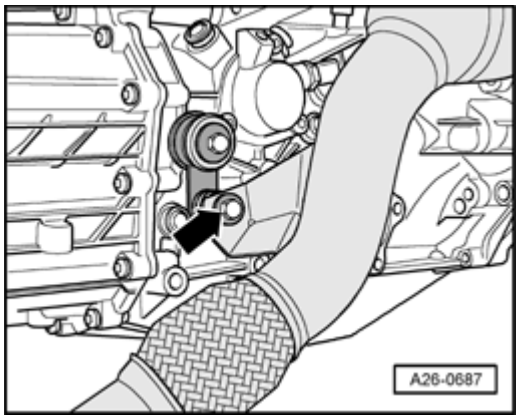

Fig. 93: Removing Bolt At Strap For Right Front Exhaust Pipe
Courtesy of VOLKSWAGEN UNITED STATES, INC.

- Remove bolt - **arrow** - at strap for right front exhaust pipe.

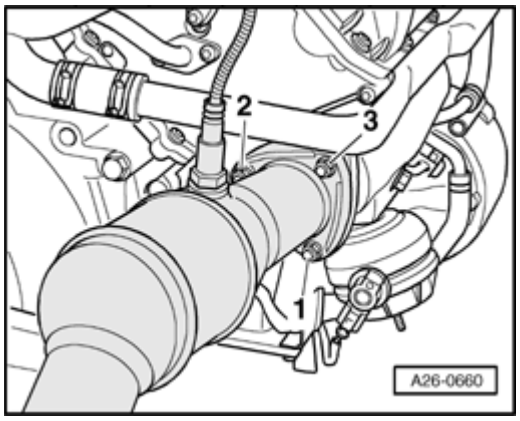

Fig. 94: Removing Nuts For Right Front Exhaust Pipe/Exhaust Manifold
Courtesy of VOLKSWAGEN UNITED STATES, INC.

- Remove nuts - **1 to 3** - for right front exhaust pipe/exhaust manifold.
- Remove front exhaust pipe with pre- and main catalytic converters.

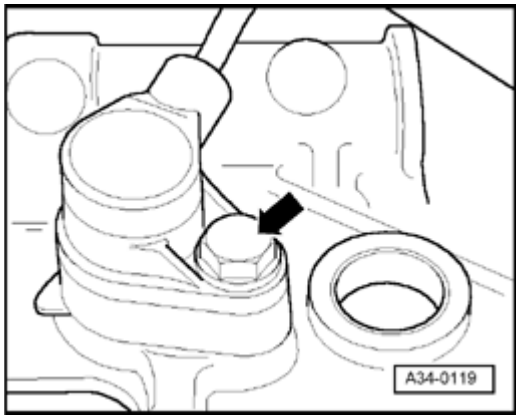

Fig. 95: Location Of Engine Speed (RPM) Sensor G28 On Coupling Housing

Courtesy of VOLKSWAGEN UNITED STATES, INC.

- Remove bolt and Engine Speed (RPM) Sensor G28 on transmission - **arrow** -.

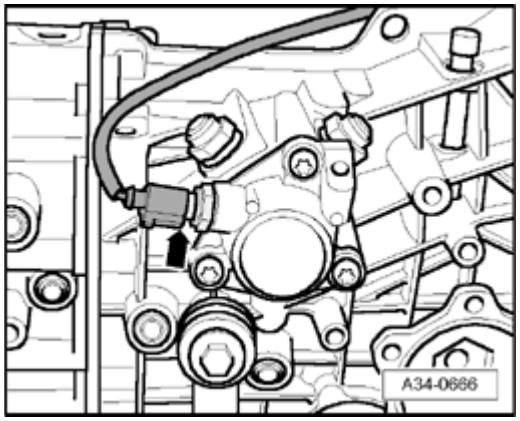

Fig. 96: Disconnecting Electrical Harness Connector At Back-Up Light Switch F4
Courtesy of VOLKSWAGEN UNITED STATES, INC.

- Disconnect electrical harness connector - **arrow** - at Back-Up Light Switch F4 and free up electrical wire.

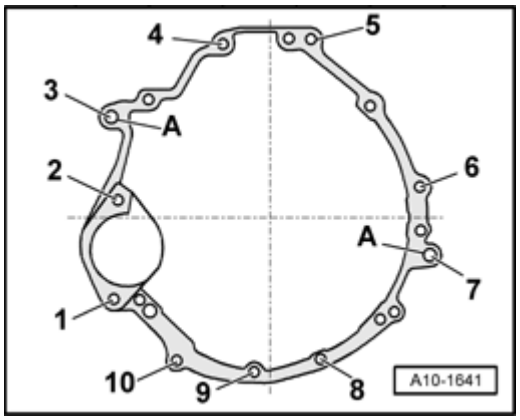

Fig. 97: Identifying Engine/Transmission Threaded Connections
Courtesy of VOLKSWAGEN UNITED STATES, INC.

- Remove engine/transmission threaded connections - **1 to 7** -.

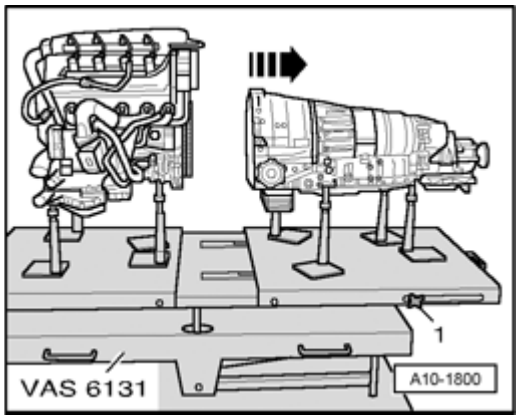

Fig. 98: Loosening Clamping Bolts On Side Of Scissor Lift Table VAS 6131 And Pull Rear Table Section With Transmission Rearward
Courtesy of VOLKSWAGEN UNITED STATES, INC.

- Loosen side clamping bolts - **1** - on scissor lift platform VAS 6131 A and pull rear platform top with transmission toward rear - **arrow** - , simultaneously push torque converter through opening of drive plate while doing this.

Engine (vehicles with manual transmission), securing to engine and transmission holder

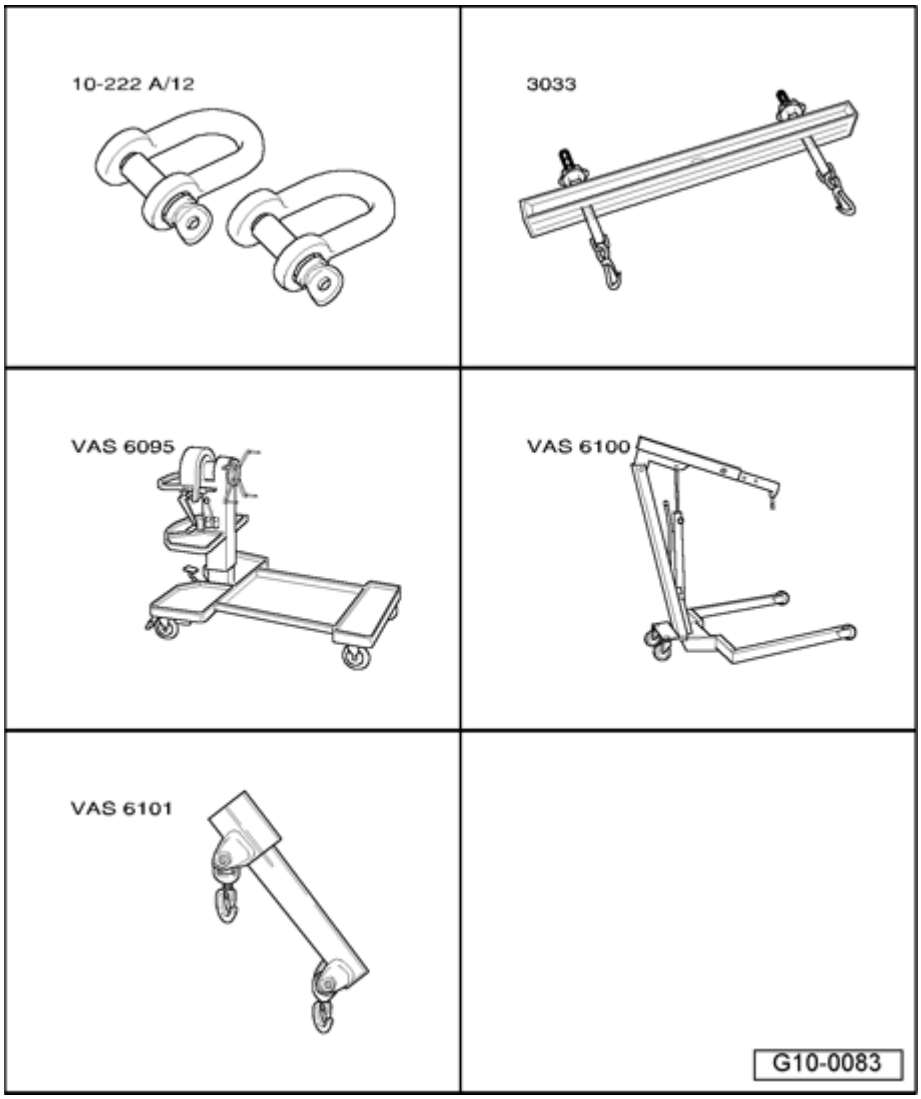

Fig. 99: Identifying Special Tools - Engine (Vehicles With Manual Transmission), Securing To Engine And Transmission Holder
Courtesy of VOLKSWAGEN UNITED STATES, INC.

Special tools, testers and auxiliary items required

- Shackle 10-222 A/12
- Lifting tackle 3033
- Engine and Transmission Holder VAS 6095 with Holder for V8 Engine Audi S4, allroad quattro VAS 6095/1-6 or Holder for V8 Engine Audi S4, allroad quattro VAS 6095/1-6A
- Shop crane VAS 6100
- Lift arm extension for workshop crane VAS 6101

Special tools, testers and auxiliary items required

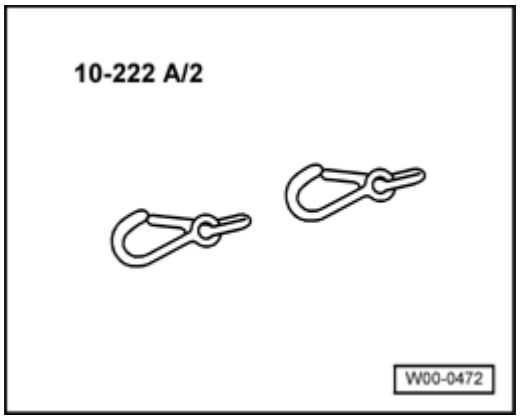

Fig. 100: Identifying Additional Hooks (2) 10-222 A/2
Courtesy of VOLKSWAGEN UNITED STATES, INC.

- Additional hooks 10-222 A/2

Work procedure

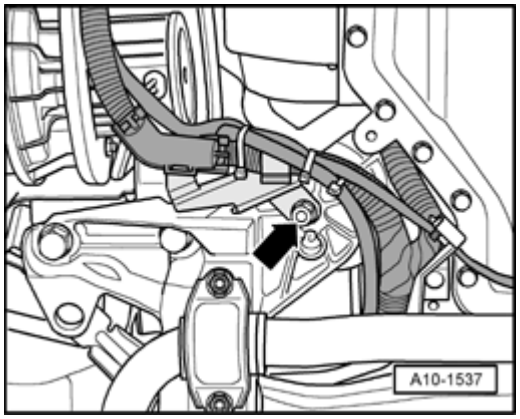

Fig. 101: Removing Wiring Harness Bracket At Right Engine Plate
Courtesy of VOLKSWAGEN UNITED STATES, INC.

- Remove wiring harness bracket at right engine plate - **arrows** -.

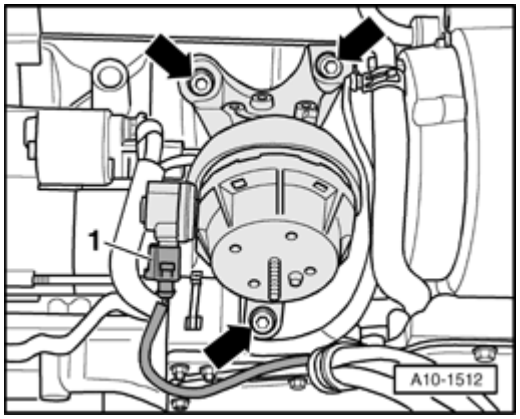

Fig. 102: Disconnecting Electrical Harness Connector At Right Engine Mount

Courtesy of VOLKSWAGEN UNITED STATES, INC.

- Disconnect electrical harness connector - **1** - at right engine mount.
- Remove bolts - **arrows** - and remove right engine mount.

NOTE:

- **Shown without engine mount plate to provide a better illustration.**

- Repeat work procedure on opposite side of vehicle.

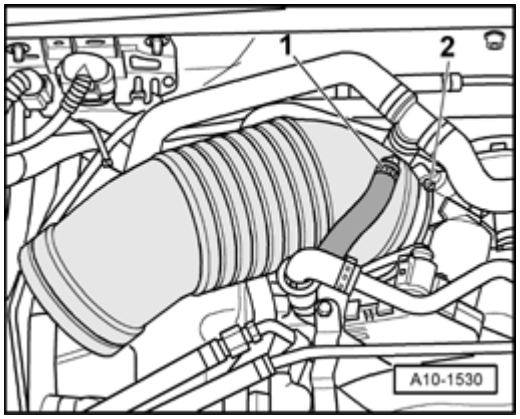

Fig. 103: Disconnecting Vacuum Hose & Air Guide Hose From Throttle Valve Control Module
Courtesy of VOLKSWAGEN UNITED STATES, INC.

- Disconnect vacuum hose - **1** -.
- Disconnect air guide hose - **2** - from throttle valve control module.

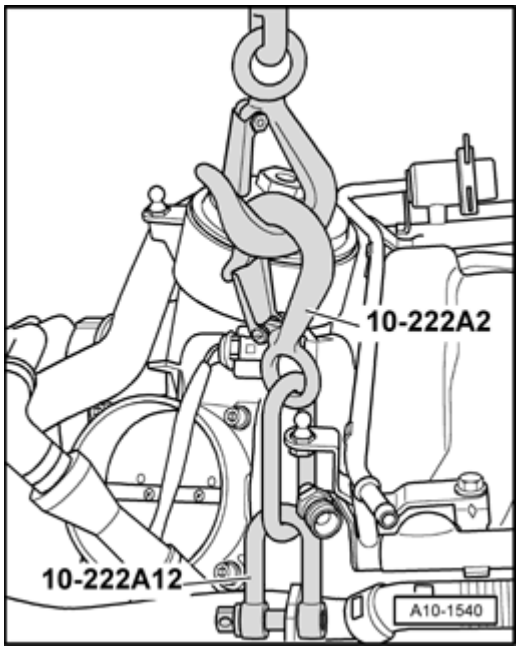

Fig. 104: Securing Shackle 10-222 A/12 To Right Rear Engine Lifting Eyelet & Hooking Additional Hook 10-222 A/2 On Shackle 10-222 A/12

Courtesy of VOLKSWAGEN UNITED STATES, INC.

- Secure shackle 10-222 A/12 to right rear engine lifting eyelet.
- Hook additional hook 10-222 A/2 on shackle 10-222 A/12.

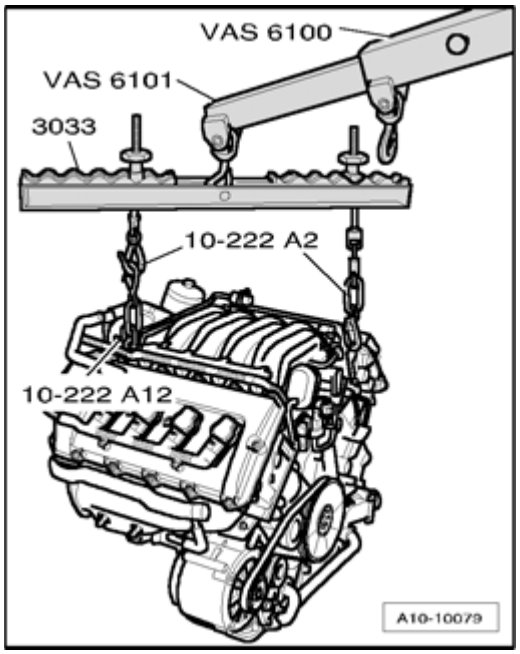

Fig. 105: Engaging Engine Sling 3033 On Additional Hook 10-222 A/2 And On Workshop Crane VAS 6100 With Lift Arm Extension For Workshop Crane VAS 6101
Courtesy of VOLKSWAGEN UNITED STATES, INC.

- Engage engine sling 3033 on additional hook 10-222 A/2 and on workshop crane VAS 6100 with lift arm extension for workshop crane VAS 6101 as shown in the illustration.
- Lift engine from support elements of scissor lift platform VAS 6131 A.

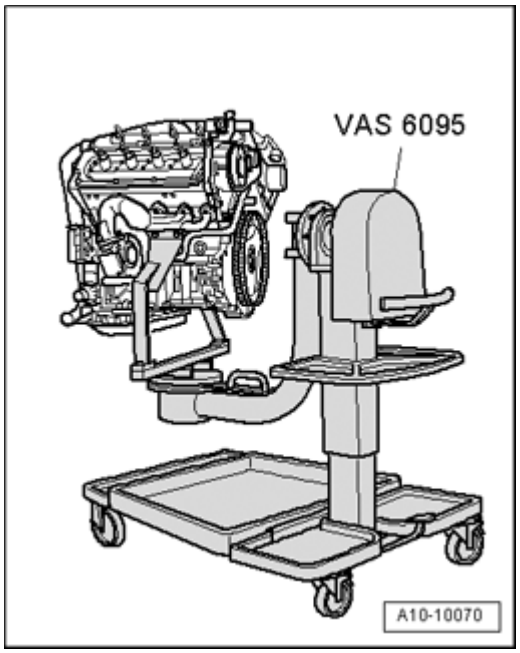

Fig. 106: Securing Engine With Transmission Holder VAS 6095
Courtesy of VOLKSWAGEN UNITED STATES, INC.

- Secure engine with Holder for V8 Engine Audi S4, allroad quattro VAS 6095/1-6 or Holder for V8 Engine Audi S4, allroad quattro VAS 6095/1-6A tightened to 42 Nm to Engine and Transmission Holder VAS 6095 as shown in the illustration.

Engine (vehicles with manual transmission), installing

NOTE:

- **During assembly, replace self-locking nuts and bolts.**
- **Always replace bolts that are tightened to torque as well as sealing rings, gaskets and O-rings.**
- **Secure all hose connections using hose clamps appropriate for the model type .**
- **During installation, re-install all heat insulation sleeves at the same locations.**
- **During installation, all cable ties must be re-installed at the same location.**

- When installing a new clutch disc in combination with a used SAC clutch pressure plate (self-adjusting pressure plate), the adjustment ring of the pressure plate must be turned back to impact. Otherwise the pressure plate works with decreased contact pressure (clutch slips) --> **30 CLUTCH** .

NOTE:

- **If clutch disc is not being replaced, the adjustment ring must not be turned back.**
- **New SAC-pressure plates are already pre-adjusted and must not be reset.**

- Clean input shaft splines and (in case of used clutch plates) clean hub splines, remove corrosion and apply

only a very thin coating of lubricant on splines. Do not grease the guide sleeve.
- If necessary, check centering of clutch drive plate.
- Check clutch release bearing for wear and replace if necessary.

If plastic ring of clutch release bearing is loose:

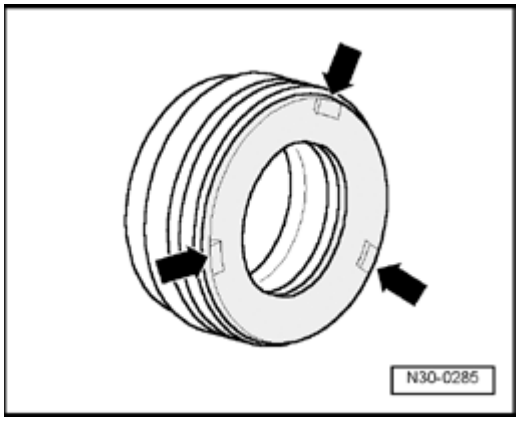

Fig. 107: Servicing Release Bearing With Plastic Ring
Courtesy of VOLKSWAGEN UNITED STATES, INC.

- Adhere clutch release bearing plastic ring to bearing ring, adhesive

- 3 rectangular tabs - **arrows** - of plastic ring reach into cutouts of bearing ring.
- If grooves with depth of more than 0.5 mm are present, the release bearing must be replaced.

- Make sure alignment sleeves for engine to transmission are installed in cylinder block. Install if necessary.
- Install intermediate plate between engine and transmission onto alignment bushings.
- Bolt transmission to engine.

NOTE:

- **Torque specifications only apply to lightly greased, oiled, phosphated or blackened nuts and bolts.**
- **Additional lubricants, such as engine or transmission oil are permissible, although lubricants containing graphite are not.**
- **Do not use any degreased parts.**
- **Tolerance for torque specifications ± 15%.**

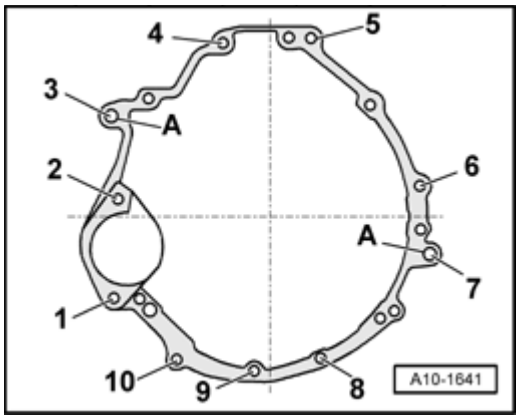

Fig. 108: Identifying Engine/Transmission Threaded Connections
Courtesy of VOLKSWAGEN UNITED STATES, INC.

Engine/transmission, fastening

Item	Bolt	Nm
1, 2	M12x120	65
3	M12x110	65
4, 5	M12x105	65
6	M12x130	65
7	M12x170	65
8, 9, 10	M10x60	45
A	Alignment sleeves for centering	

The rest of installation is in reverse order of removal, note the following:

- Install front exhaust pipes with catalytic converters: Left --> **Left front exhaust pipe with primary and main catalytic converter (vehicles with manual transmission), removing and installing** , right --> **Right front exhaust pipe with primary and main catalytic converter (vehicles with automatic transmission), removing and installing**.
- Always clean threaded driveshaft bores in transmission flanged shaft of locking fluid residue using a tap before installation.

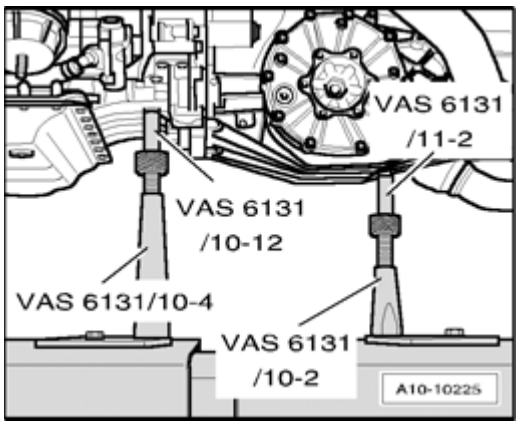

Fig. 109: Positioning Support Elements From VAS 6131/10 And VAS 6131/11 At Left On Engine/Transmission
Courtesy of VOLKSWAGEN UNITED STATES, INC.

- Rotate spindles of support elements downward at left of engine/transmission assembly.
- Remove both base plates for left support element on scissor lift platform VAS 6131 A.

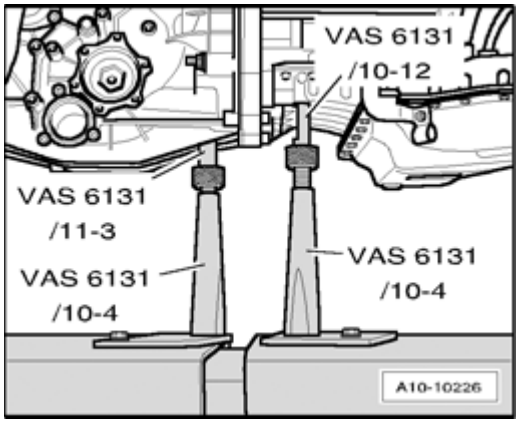

Fig. 110: Positioning Support Elements From VAS 6131/10 And VAS 6131/11 At Right On Engine/Transmission
Courtesy of VOLKSWAGEN UNITED STATES, INC.

- Rotate spindles of support elements downward at right of engine/transmission assembly.
- Remove both base plates for right support element on Scissor Lift Table VAS 6131 A.

NOTE:

- **The support points for front of engine and tunnel cross member remain unchanged.**

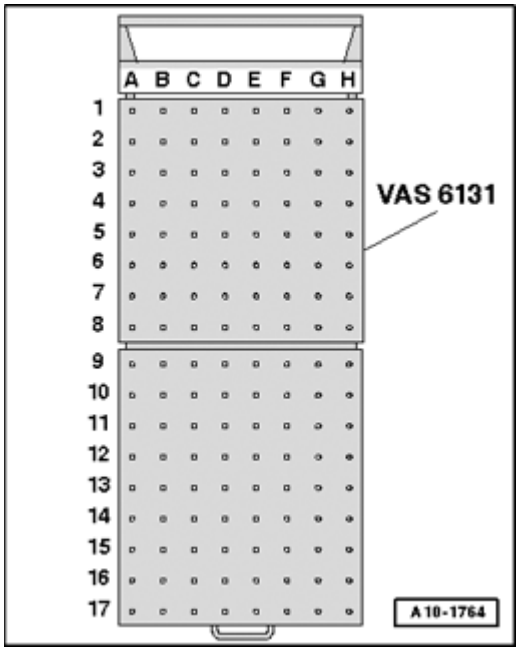

Fig. 111: Identifying Scissor Lift Platform VAS 6131
Courtesy of VOLKSWAGEN UNITED STATES, INC.

- Equip scissor lift platform VAS 6131 A with support set for Audi VAS 6131/10 as follows:

Platform coordinates	Parts of support set for Audi VAS 6131/10			
B4 * See note	/10-1	/10-4	/10-5	/10-11
G3 * See note	/10-1	/10-4	/10-5	/10-11
B10	/10-1	/10-2	/10-5	/10-8 * See note
G10	/10-1	/10-2	/10-5	/10-8 * See note
C14 * See note	/10-1	/10-3	/10-5	/10-7
E14 * See note	/10-1	/10-3	/10-5	/10-7

*Support elements remain unchanged.

*Only install support elements after installing subframe.

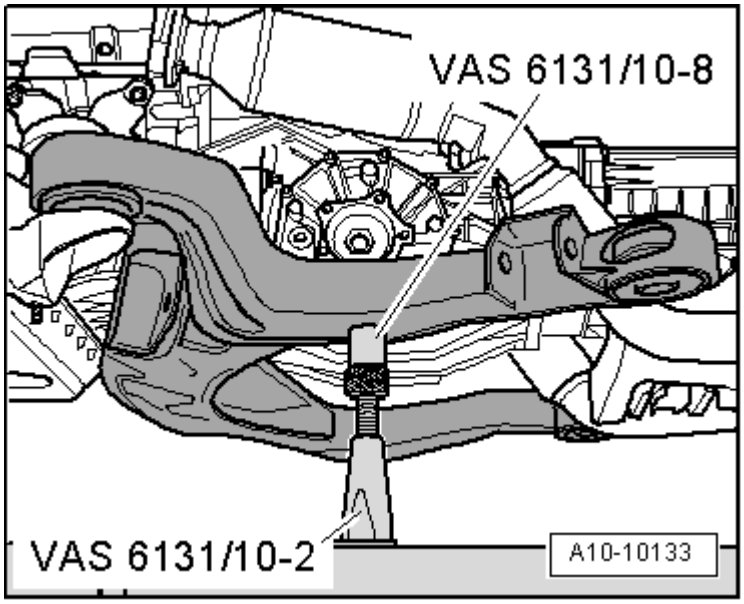

Fig. 112: Positioning Support Elements From VAS 6131/10 At Left/Right On Subframe
Courtesy of VOLKSWAGEN UNITED STATES, INC.

- Position subframe on both attachments VAS 6131/10-8.
- Turn spindles of support elements upward on both sides.
- Tighten base plates for support elements to 20 Nm on scissor lift platform VAS 6131 A.
- Using scissor lift platform VAS 6131 A , slowly guide engine/transmission unit with subframe into body from below.

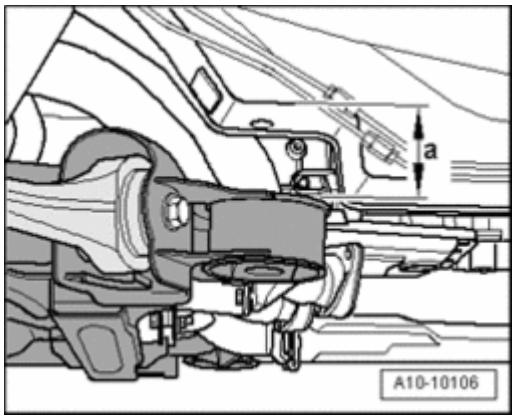

Fig. 113: Lowering Engine/Transmission Assembly Using Scissor Lift Platform VAS 6131 Only Approx. By Dimension
Courtesy of VOLKSWAGEN UNITED STATES, INC.

- Lift engine/transmission subassembly using scissor lift platform VAS 6131 A until dimension - **a** - is reached.

- Dimension - **a** - = 100 mm.

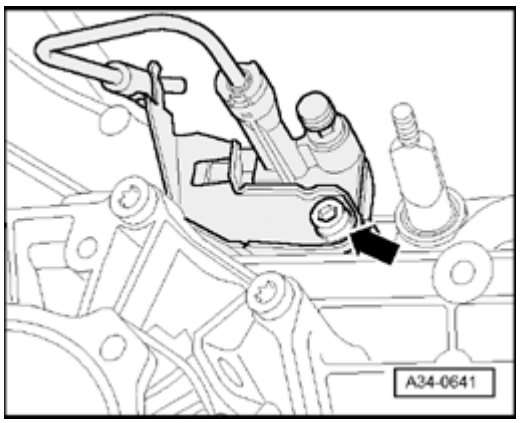

Fig. 114: Slave Cylinder Bracket And Fastener
Courtesy of VOLKSWAGEN UNITED STATES, INC.

- Secure clutch slave cylinder with a new bolt - **arrow** -.

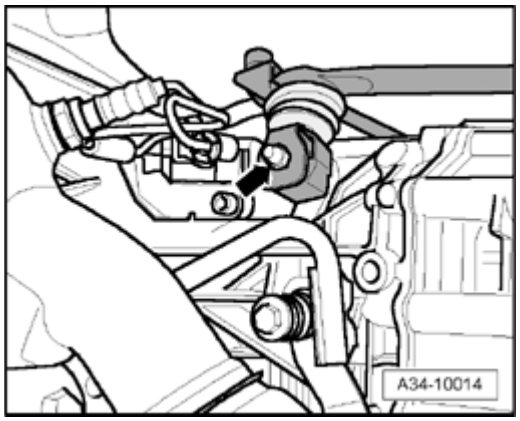

Fig. 115: Installing Lever For Selector Shaft
Courtesy of VOLKSWAGEN UNITED STATES, INC.

- Install lever for selector shaft - **arrow** -.

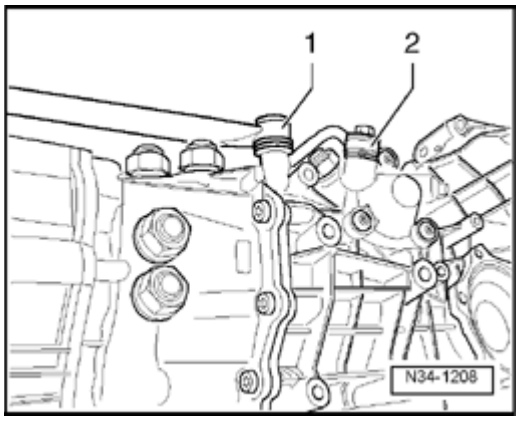

Fig. 116: Identifying Push Rod And Connecting Rod For Selector Rod
Courtesy of VOLKSWAGEN UNITED STATES, INC.

- Install connecting rod - **2** - of shift rod.
- Install socket head bolt of pivot rod - **1** -.

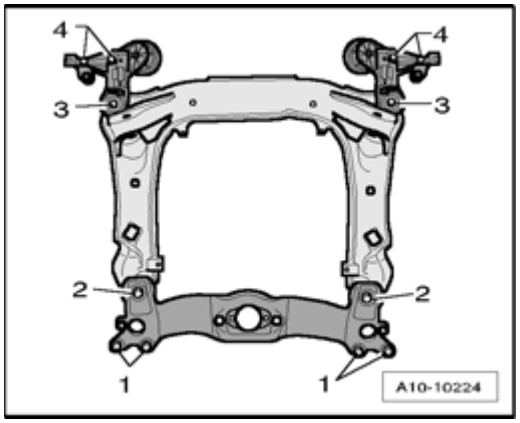

Fig. 117: Removing/Installing Bolts In Diagonal Sequence And In Stages

Courtesy of VOLKSWAGEN UNITED STATES, INC.

- Align subframe, engine bearing plated and tunnel cross member according to markings applied on long members during removal.
- Tighten bolts for subframe, engine mount plates as well as tunnel cross member only to specified torque. Do not tighten further (tighten bolts only after axle alignment).

1. 65 Nm
2. 110 Nm
3. 110 Nm
4. 75 Nm

CAUTION: Vehicle must not be driven in this condition.

- Install driveshafts --> **40 - FRONT SUSPENSION** .
- Install guide control arm, control arm, stabilizer bar and suspension strut --> **40 - FRONT SUSPENSION** .
- Install driveshaft -->
  - **39 - FINAL DRIVE, DIFFERENTIAL** for 5 SPD. AUTOMATIC TRANSMISSION 01V
  - **39 - FINAL DRIVE, DIFFERENTIAL** for 5 SPD. AUTOMATIC TRANSMISSION 01V FRONT AND ALL WHEEL DRIVE - INTERNAL COMPONENTS, SERVICING
  - **39 FINAL DRIVE, DIFFERENTIAL** for 5 SPD. MANUAL TRANSMISSION 012/01W FRONT WHEEL DRIVE
  - **39 FINAL DRIVE, DIFFERENTIAL** for 5 SPD. MANUAL TRANSMISSION 01A ALL WHEEL DRIVE
  - **39 FINAL DRIVE, DIFFERENTIAL** for 6 SPD. MANUAL TRANSMISSION 01E ALL WHEEL DRIVE
  - **39 FINAL DRIVE, DIFFERENTIAL** for 6-SPEED MANUAL TRANSMISSION 0A3, ALL WHEEL DRIVE

  .
- Align exhaust system free of tension --> **Exhaust system, installing free of tension**.
- Install refrigerant lines --> **87 AIR CONDITIONING** .

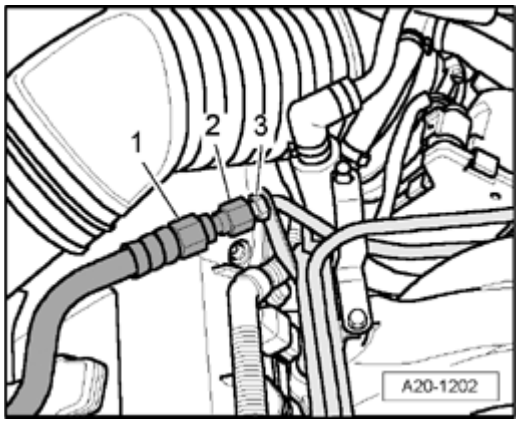

Fig. 118: Installing/Removing Fuel Hose To/From Connection On Fuel Rail Line
Courtesy of VOLKSWAGEN UNITED STATES, INC.

- Secure fuel hose to connection on fuel rail line. To do so, counter hold using an open-end wrench at each hex head - **1** - and - **3** - and tighten union nut - **2** - to 22 Nm.
- Install lock carrier with attachments -->
  - **50 BODY, FRONT**
  - **50 - BODY - FRONT** for BODY EXTERIOR - CABRIOLET

.

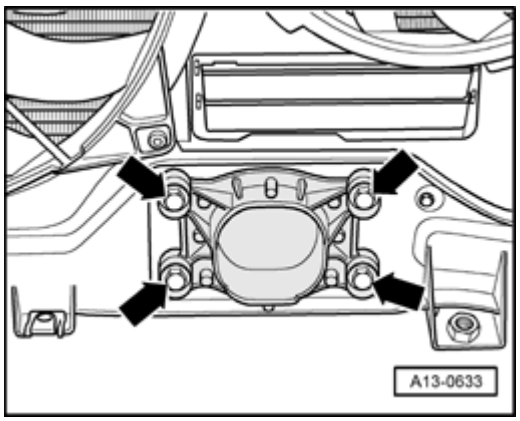

Fig. 119: Placing Torque Support On Rubber Buffer For Torque Support And Tightening Bolts
Courtesy of VOLKSWAGEN UNITED STATES, INC.

- Place torque support on rubber buffer for torque support and tighten bolts - **arrows** -.
- Install front bumper cover -->
  - **63 BUMPER**
  - **63 - BUMPERS** for BODY EXTERIOR - CABRIOLET

.

- Electrical connections and routing --> Electrical Wiring Diagrams, Troubleshooting and Component Locations.
- Observe safety precautions after connecting battery -->

- **27 BATTERY, STARTER, GENERATOR, CRUISE CONTROL**
- **27 BATTERY, STARTER, GENERATOR, CRUISE CONTROL** for ELECTRICAL EQUIPMENT, CABRIOLET

.

CAUTION: Do not use a battery charger for starting assistance! There is the risk that the vehicle control modules could be damaged.

- Mount wiper arms and adjust -->
  - **92 WINDSHIELD WIPER WASHER SYSTEM**
  - **92 WINDSHIELD WIPER & WASHER SYSTEM** for ELECTRICAL EQUIPMENT, CABRIOLET

  .
- Check oil level --> **Oil level, checking**.
- Before starting engine for the first time, fill power steering reservoir with hydraulic oil --> **48 - STEERING** .

NOTE:
- **Power-steering pump must not run dry.**

- Fill with coolant **Filling**.

NOTE:
- **Only reuse drained coolant if cylinder head or engine block was not replaced.**
- **Dirty coolant must not be re-used.**

- Fill refrigerant circuit --> **87 - AIR CONDITIONING** .
- Align subframe and both engine bearing plates --> **40 - FRONT SUSPENSION**
- Perform axle alignment --> **44 - WHEELS, TIRES, VEHICLE ALIGNMENT** .

CAUTION: After axle alignment, tighten subframe bolts to final torque.

- Check headlight adjustment -->
  - **01 - MAINTENANCE**
  - **01 - MAINTENANCE** for MAINTENANCE PROCEDURES - CABRIOLET

  .

Torque specifications

NOTE:
- **Torque specifications only apply to lightly greased, oiled, phosphated or**

blackened nuts and bolts.

- **Additional lubricants, such as engine or transmission oil are permissible, although lubricants containing graphite are not.**
- **Do not use any degreased parts.**
- **Tolerance for torque specifications ± 15%.**

Component		Nm
Bolts/nuts	M6	9
	M8	20
	M10	40
	M12	65
Exceptions:		
Engine support to engine		42 * See note
Clutch slave cylinder to transmission		23 * See note
Selector shaft lever to transmission		23
Pivot rod on transmission		40
Shift rod connecting rod on transmission		23
Heat shield for drive shaft to transmission		23
Hydraulic pressure line		40
Torque support stop to lock carrier		28
Fuel hose to fuel line		22

* Insert using locking compound; locking compound .

*Replace screw.

ENGINE (VEHICLES WITH AUTOMATIC TRANSMISSION)

Engine (vehicles with automatic transmission), removing

NOTE:

- **With lock carrier removed, engine is removed downward with transmission and subframe.**

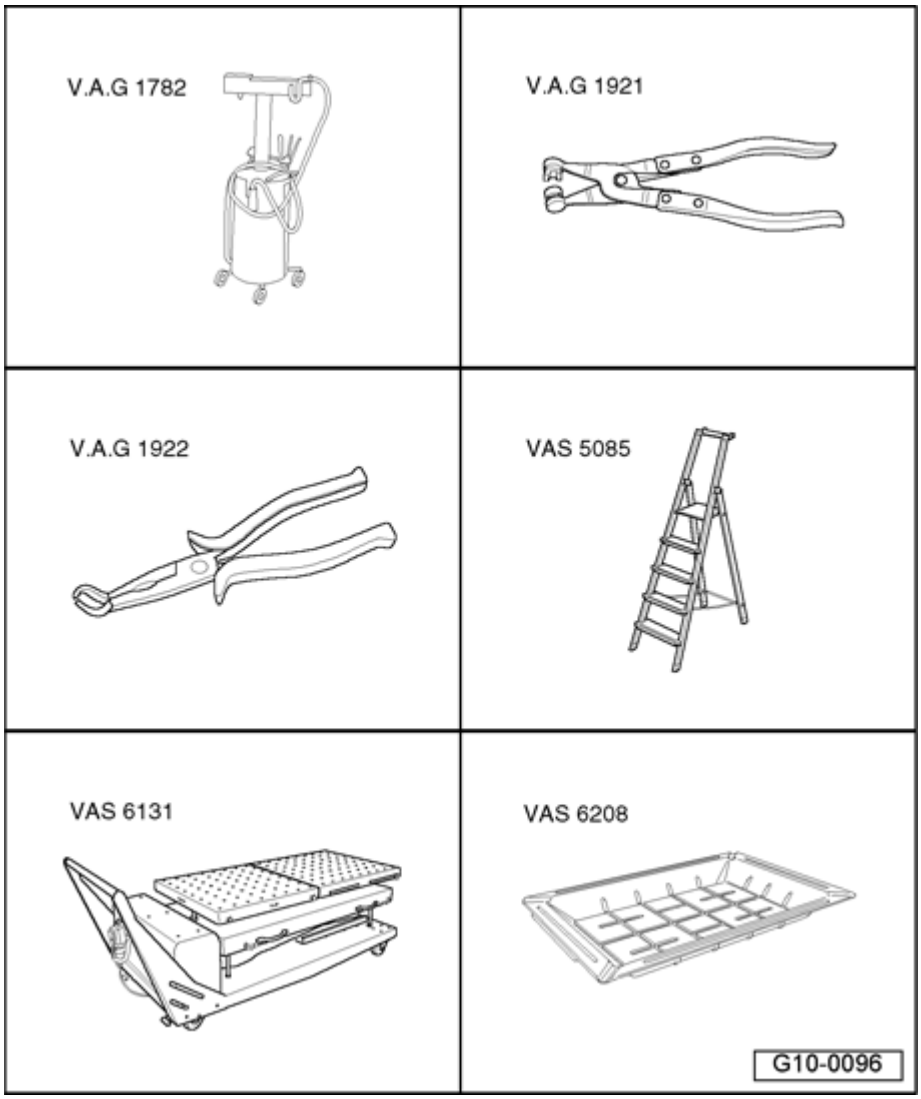

Fig. 120: Identifying Special Tools - Engine (Vehicles With Automatic Transmission), Removing
Courtesy of VOLKSWAGEN UNITED STATES, INC.

Special tools, testers and auxiliary items required

- Old oil collecting and extracting device V.A.G 1782
- Hose clamp pliers V.A.G 1921
- Spark plug connector pliers V.A.G 1922
- Step ladder VAS 5085
- Scissor lift platform VAS 6131 A with support set for Audi VAS 6131/10
- Drip tray for workshop crane VAS 6208

NOTE:

- **If engine and transmission are to be separated after removal, Supplementary Set, Audi A8 > 2002 VAS 6131/11 and Supplementary Set,**

Audi A6 > 2005 VAS 6131/12 will also be required.

Special tools, testers and auxiliary items required

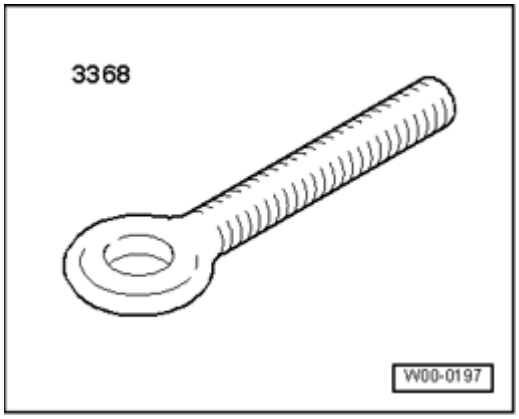

Fig. 121: Lifting Eyebolt 3368
Courtesy of VOLKSWAGEN UNITED STATES, INC.

- Lifting Eyebolt 3368

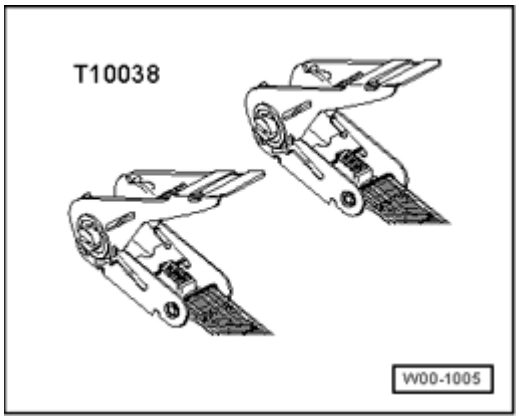

Fig. 122: Tension Strap T10038
Courtesy of VOLKSWAGEN UNITED STATES, INC.

- Tension strap T10038

Work procedure

NOTE:

- **All cable ties opened or cut during engine removal must be reinstalled at the same locations during installation.**
- **Drained coolant must be stored in a clean container for disposal or reuse.**

- Remove plenum chamber cover rubber seal.

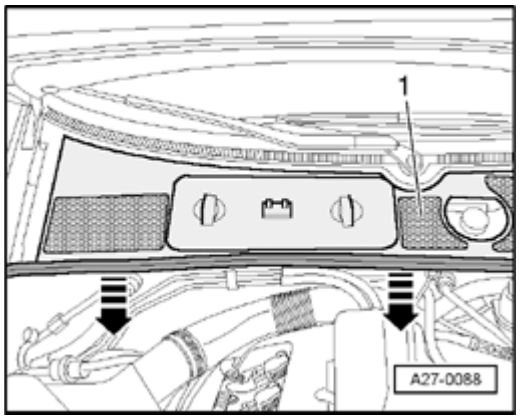

Fig. 123: Identifying Plenum Chamber Cover & Removing Rubber Seal
Courtesy of VOLKSWAGEN UNITED STATES, INC.

- Remove plenum chamber cover - **1** - toward front - **arrows** -.

CAUTION: Observe safety precautions when disconnecting battery -->

- **27 BATTERY, STARTER, GENERATOR, CRUISE CONTROL**
- **27 BATTERY, STARTER, GENERATOR, CRUISE CONTROL for ELECTRICAL EQUIPMENT, CABRIOLET**

.

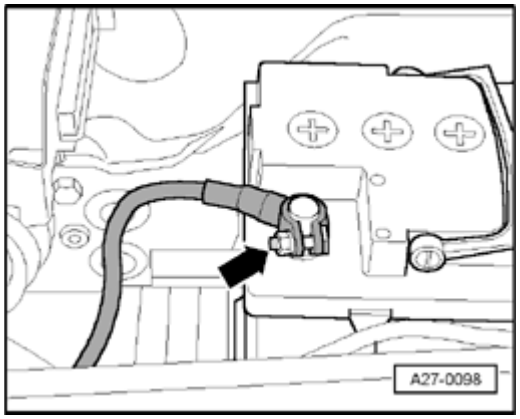

Fig. 124: Disconnecting Battery Ground (GND) Strap
Courtesy of VOLKSWAGEN UNITED STATES, INC.

- With ignition switched off, disconnect Battery Ground (GND) strap - **arrow** -.
- Discharge refrigerant circuit --> **87 - AIR CONDITIONING** .
- Extract hydraulic oil for power-steering from reservoir using old oil collecting and extracting device V.A.G 1782.

CAUTION: Cover cap of expansion tank with rag and open carefully, as hot steam i.e. hot coolant may escape when opening.

- Open cap of coolant expansion tank.
- Remove both front wheels.

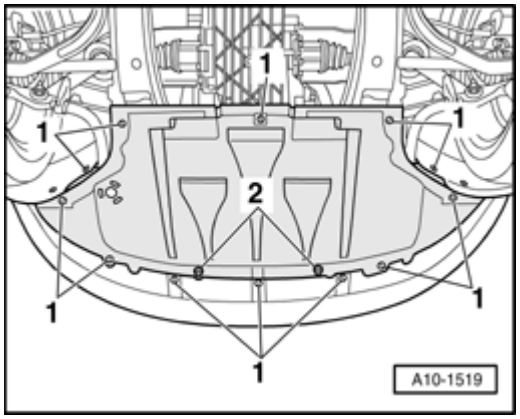

Fig. 125: Removing Quick-Release Fasteners, Screws And Noise Insulation
Courtesy of VOLKSWAGEN UNITED STATES, INC.

- Remove quick-release fasteners - **1** - , remove screws - **2** - and remove noise insulation.

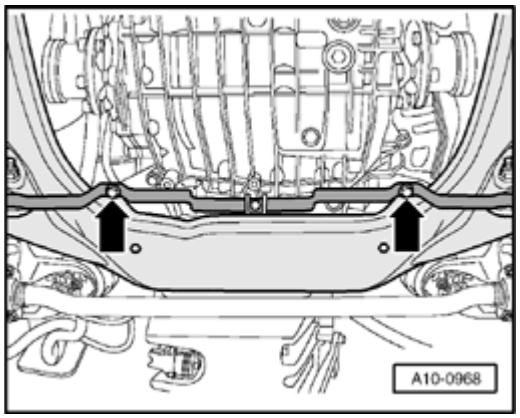

Fig. 126: Removing Bracket For Noise Insulation
Courtesy of VOLKSWAGEN UNITED STATES, INC.

- Remove bracket for noise insulation - **arrows** -.
- Remove left and right front wheel housing liners -->
  - **66 EXTERIOR EQUIPMENT**
  - **66 - EXTERIOR EQUIPMENT** for BODY EXTERIOR - CABRIOLET

  .
- Remove front bumper cover -->
  - **63 BUMPER**
  - **63 - BUMPERS** for BODY EXTERIOR - CABRIOLET

  .

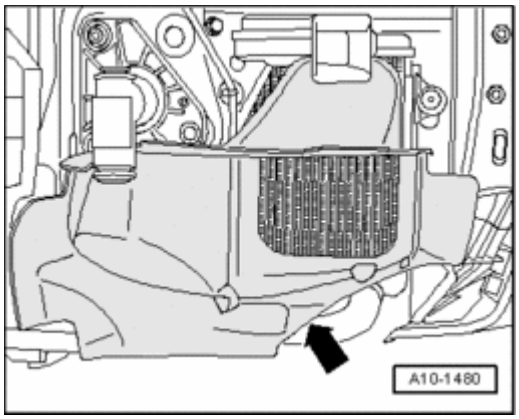

Fig. 127: Removing Left Air Guide In Front Of Auxiliary Cooler
Courtesy of VOLKSWAGEN UNITED STATES, INC.

- Remove left air guide - **arrow** - in front of auxiliary cooler.

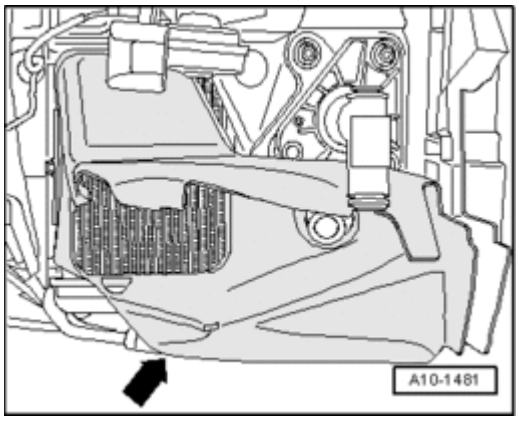

Fig. 128: Removing Right Air Guide In Front Of Auxiliary Cooler
Courtesy of VOLKSWAGEN UNITED STATES, INC.

- Remove right air guide - **arrow** - in front of auxiliary cooler.

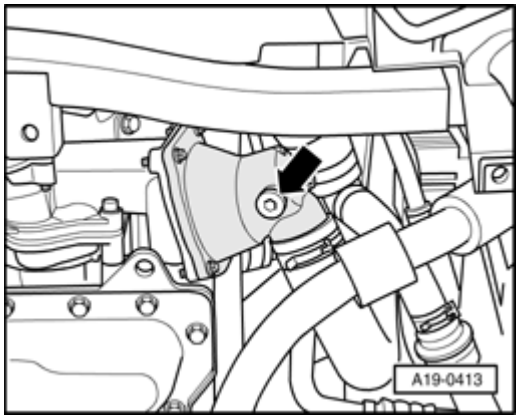

Fig. 129: Removing Drain Plug On Coolant Thermostat Housing
Courtesy of VOLKSWAGEN UNITED STATES, INC.

- Place drip tray for workshop crane VAS 6208 under engine.
- Remove drain plug - **arrow** - on coolant thermostat housing and drain coolant from engine.

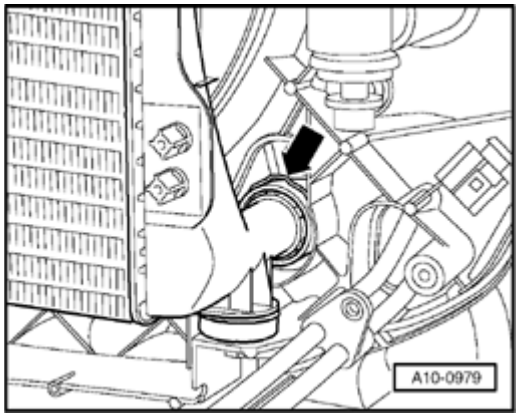

Fig. 130: Disconnecting Lower Coolant Hose From Radiator
Courtesy of VOLKSWAGEN UNITED STATES, INC.

- Disconnect lower coolant hose from radiator - **arrow** - and drain residual coolant.
- Place old oil collecting and extracting device V.A.G 1782 under engine.

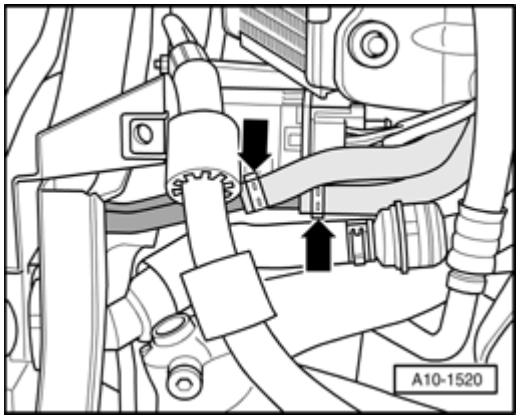

Fig. 131: Disconnecting Hydraulic Lines To Cooling Coil At Left Rear Of Bumper
Courtesy of VOLKSWAGEN UNITED STATES, INC.

- Disconnect hydraulic lines to cooling coil at left rear of bumper - **arrows** -.

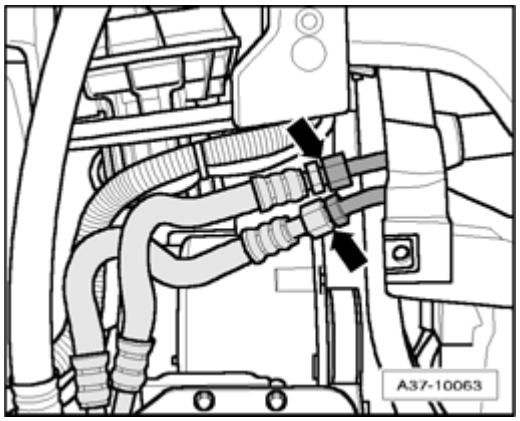

Fig. 132: Loosening Union Nuts And Disconnecting ATF Lines
Courtesy of VOLKSWAGEN UNITED STATES, INC.

NOTE:

- **Observe the rules of cleanliness for working on automatic transmissions --> 00 TECHNICAL DATA .**

- Place old oil collecting and extracting device V.A.G 1782 under engine.
- Loosen union nuts - **arrows** - and disconnect ATF lines.

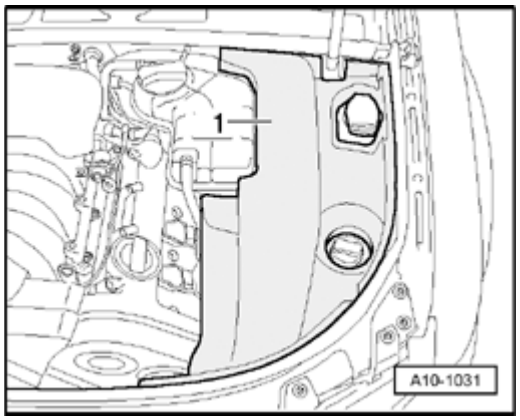

Fig. 133: Removing Cover In Engine Compartment (Left Side)
Courtesy of VOLKSWAGEN UNITED STATES, INC.

- Remove cover - **1** - in engine compartment (left side).

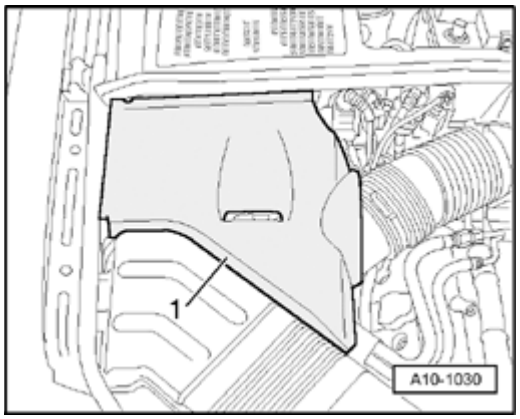

Fig. 134: Removing Cover In Engine Compartment (Right Side)
Courtesy of VOLKSWAGEN UNITED STATES, INC.

- Remove cover - **1** - in engine compartment (right side).

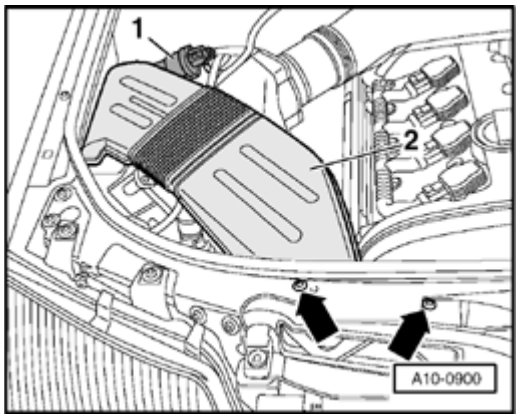

Fig. 135: Identifying Evaporative Emission Canister Purge Regulator Valve N80 And Air Duct
Courtesy of VOLKSWAGEN UNITED STATES, INC.

- Disengage Evaporative Emission (EVAP) Canister Purge Regulator Valve N80 - **1** - from air guide.
- Remove bolts - **arrows** -.
- Remove air duct - **2** -.

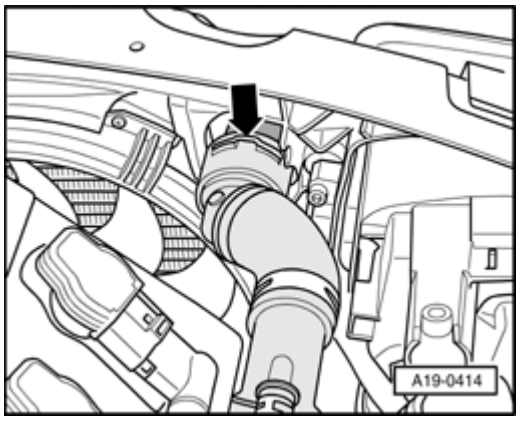

Fig. 136: Disconnecting Top Coolant Hose From Radiator
Courtesy of VOLKSWAGEN UNITED STATES, INC.

- Disconnect top coolant hose - **arrow** - from radiator.

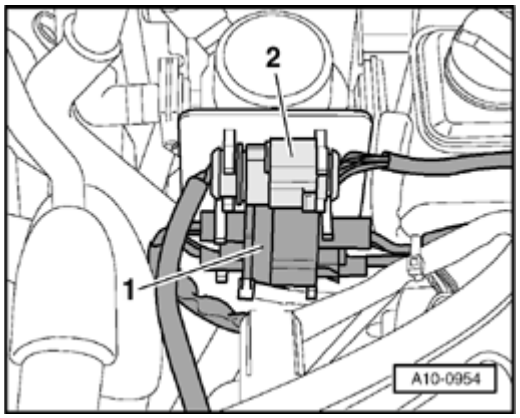

Fig. 137: Removing Electrical Harness Connectors And From Bracket
Courtesy of VOLKSWAGEN UNITED STATES, INC.

- Remove electrical harness connectors - **1** - and - **2** - from bracket and disconnect them.
- Free up wires to lock carrier.

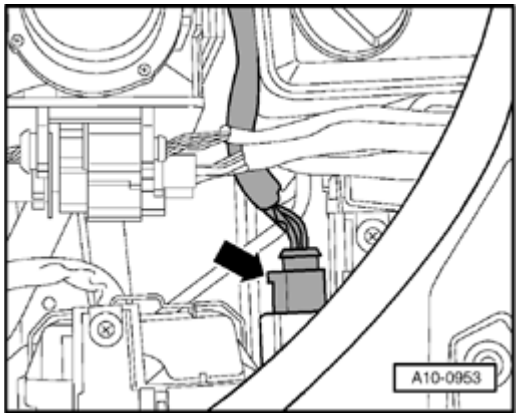

Fig. 138: Disconnecting Electrical Harness Connector For Headlights At Both Sides Of Vehicle
Courtesy of VOLKSWAGEN UNITED STATES, INC.

- Disconnect electrical harness connector - **arrow** - for headlights at both sides of vehicle.
- Free up electrical wiring.

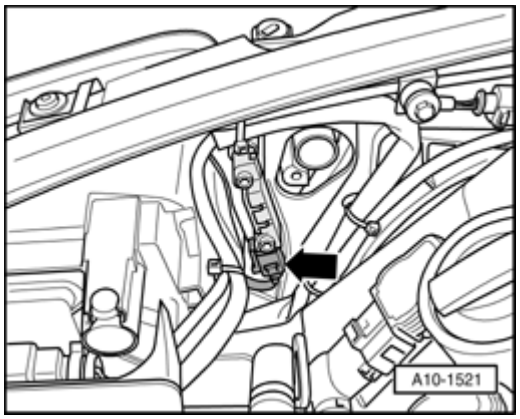

Fig. 139: Disconnecting Electrical Harness Connector For Left/Right Airbag Sensors On Lock Carrier
Courtesy of VOLKSWAGEN UNITED STATES, INC.

- Disconnect electrical harness connector - **arrow** - for left and right airbag sensors on lock carrier.
- Free up cables.
- Remove hood cable at lock carrier -->
  - **55 HOOD, LIDS**
  - **55 - HOOD, LIDS** for BODY EXTERIOR - CABRIOLET

.

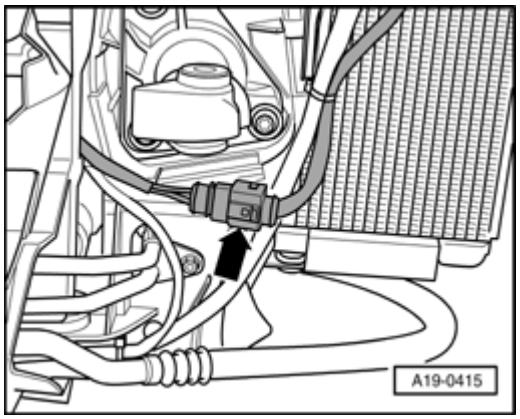

Fig. 140: Disconnecting Electrical Harness Connector For Right Fan
Courtesy of VOLKSWAGEN UNITED STATES, INC.

- Disconnect electrical harness connector - **arrow** - for right fan.

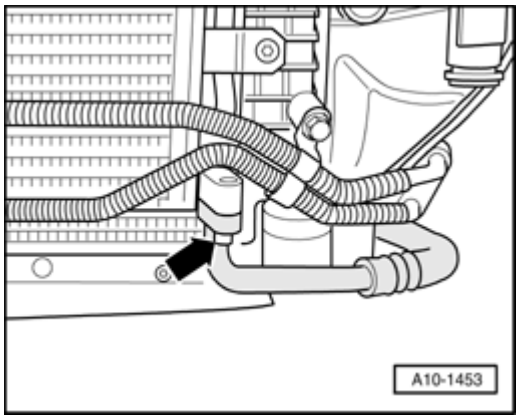

Fig. 141: Removing Refrigerant Line Leading To A/C Compressor
Courtesy of VOLKSWAGEN UNITED STATES, INC.

NOTE:

- **To prevent damage to condenser and also to the refrigerant lines/hoses, ensure that the lines and hoses are not stretched, kinked or bent.**

- Remove refrigerant line - **arrow** - leading to A/C compressor.

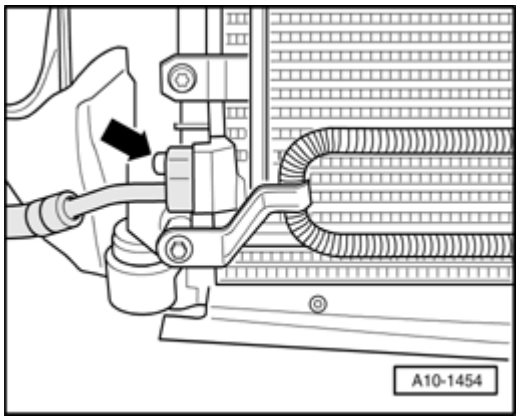

Fig. 142: Removing Refrigerant Line Leading To A/C Evaporator
Courtesy of VOLKSWAGEN UNITED STATES, INC.

- Remove refrigerant line - **arrow** - leading to A/C evaporator.

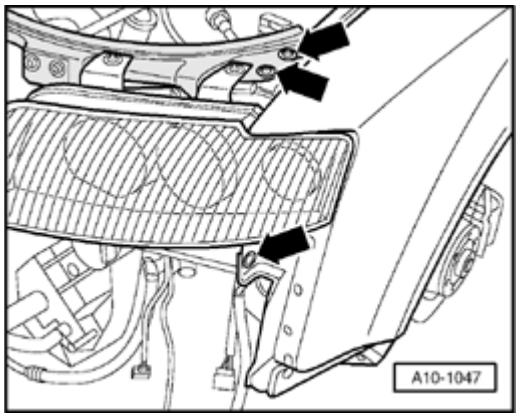

Fig. 143: Removing Bolts At Left/Right Side Of Bumper
Courtesy of VOLKSWAGEN UNITED STATES, INC.

- Remove bolts - **arrows** - at left and right side of bumper.
- Pull off hood seal from lock carrier and fender edges.

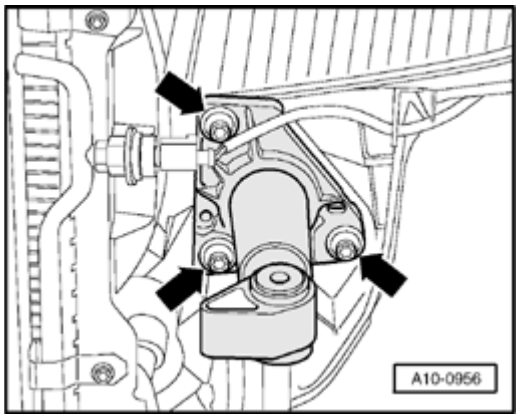

Fig. 144: Removing Bolts At Impact Absorbers At Left/Right
Courtesy of VOLKSWAGEN UNITED STATES, INC.

- Remove bolts at impact absorbers - **arrows** - at left and right.

NOTE:

- **A second technician is required to remove the lock carrier.**

- Remove lock carrier and set aside so it cannot topple.

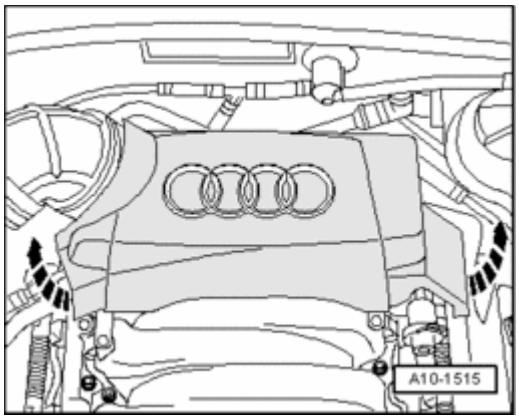

Fig. 145: Removing Rear Engine Cover
Courtesy of VOLKSWAGEN UNITED STATES, INC.

- Remove rear engine cover - **arrows** -.

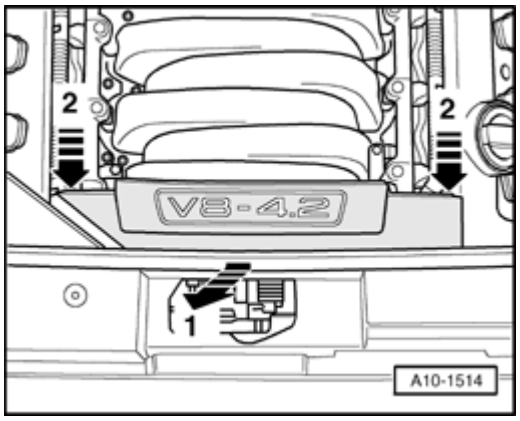

Fig. 146: Removing Front Engine Cover
Courtesy of VOLKSWAGEN UNITED STATES, INC.

- Remove front engine cover - **arrows 1 and 2** -.

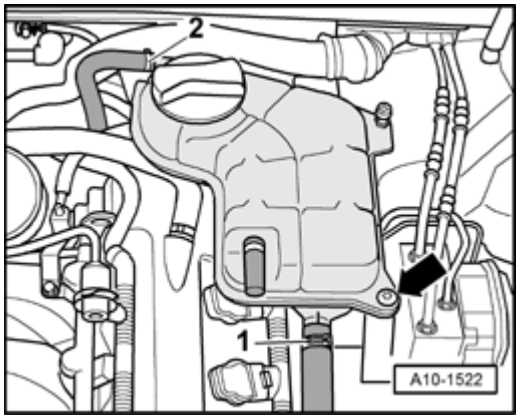

Fig. 147: Removing Coolant Hoses & Coolant Expansion Tank
Courtesy of VOLKSWAGEN UNITED STATES, INC.

- Remove coolant hoses - **1** - and - **2** -.
- Remove coolant expansion tank - **arrow** -.
- Disconnect electrical wiring to Engine Coolant Level (ECL) Warning Switch F66 at bottom of expansion tank.

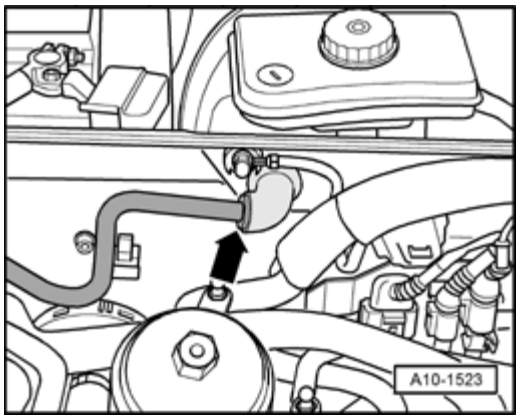

Fig. 148: Disconnecting Brake Booster Vacuum Hose From Grommet On Bulkhead
Courtesy of VOLKSWAGEN UNITED STATES, INC.

- Disconnect vacuum line - **arrow** - to brake booster at bulkhead.

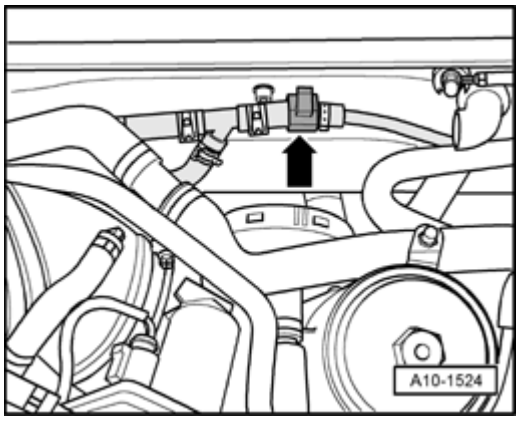

Fig. 149: Unclipping Coolant Hose From Bracket On Bulkhead
Courtesy of VOLKSWAGEN UNITED STATES, INC.

- Unclip coolant hose - **arrow** - from bracket on bulkhead.

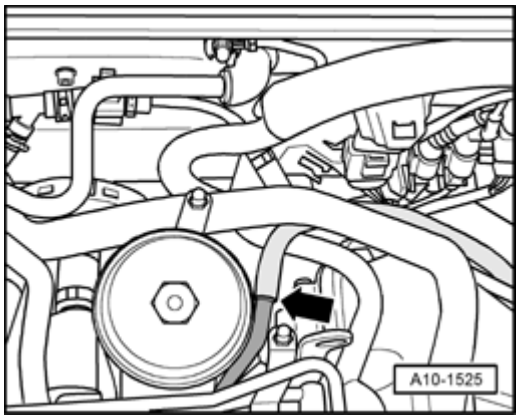

Fig. 150: Disconnecting Vacuum Line To Vacuum Reservoir
Courtesy of VOLKSWAGEN UNITED STATES, INC.

- If installed, disconnect vacuum line - **arrow** - to vacuum reservoir.

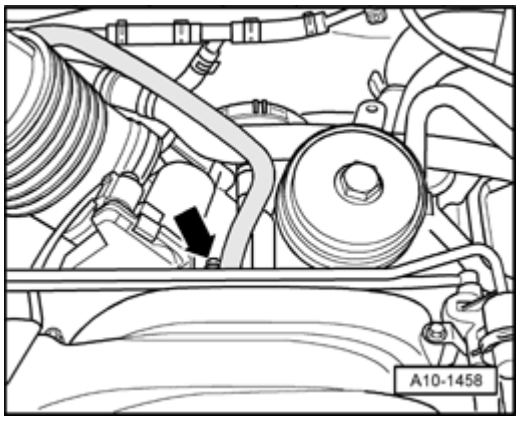

Fig. 151: Disconnecting Vacuum Hose From Intake Manifold
Courtesy of VOLKSWAGEN UNITED STATES, INC.

- Disconnect vacuum hose - **arrow** - from intake manifold.

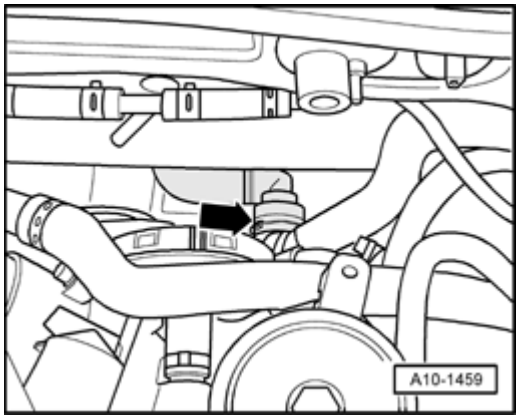

Fig. 152: Disconnecting Coolant Hose To Heater Core At Rear Coolant Pipe On Engine
Courtesy of VOLKSWAGEN UNITED STATES, INC.

- Disconnect coolant hose - **arrow** - to heater core at rear coolant pipe on engine.

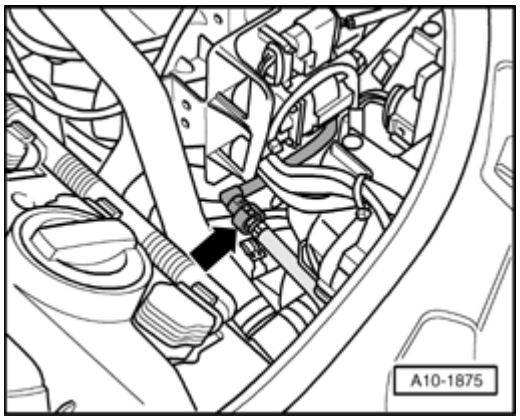

Fig. 153: Disconnecting Vacuum Line
Courtesy of VOLKSWAGEN UNITED STATES, INC.

- If installed, disconnect vacuum line at area designated with - **arrow** -.

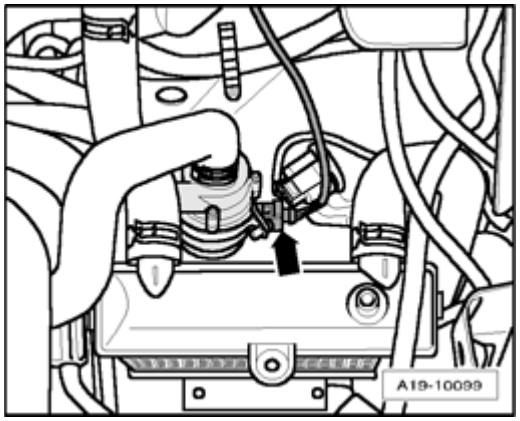

Fig. 154: Disconnecting Electrical Harness Connector For After-Run Coolant Pump V51
Courtesy of VOLKSWAGEN UNITED STATES, INC.

- If installed, disconnect electrical harness connector - **arrow** - for After-Run Coolant Pump V51 (behind auxiliary cooler at left) and free up electrical wire.

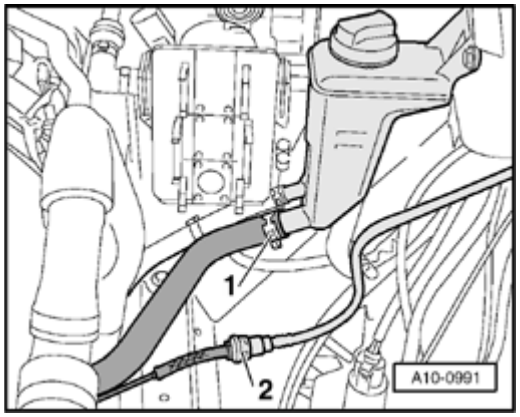

Fig. 155: Disconnecting Hose From Power Steering Fluid Reservoir & Vacuum Hose To Vacuum Reservoir
Courtesy of VOLKSWAGEN UNITED STATES, INC.

NOTE:

- **Place a rag under separating point to catch escaping hydraulic fluid.**

- Disconnect hose - **1** - from power steering fluid reservoir.

NOTE:

- **Ignore - 2 -.**

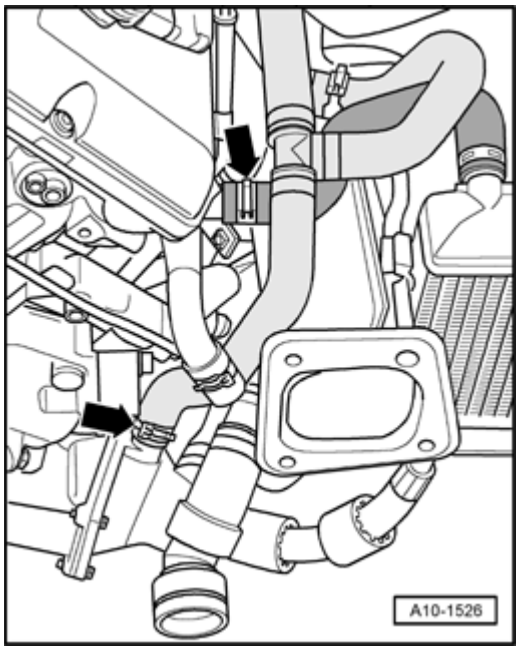

Fig. 156: Disconnecting Coolant Hoses
Courtesy of VOLKSWAGEN UNITED STATES, INC.

- Disconnect coolant hoses at positions indicated by - **arrows** -.

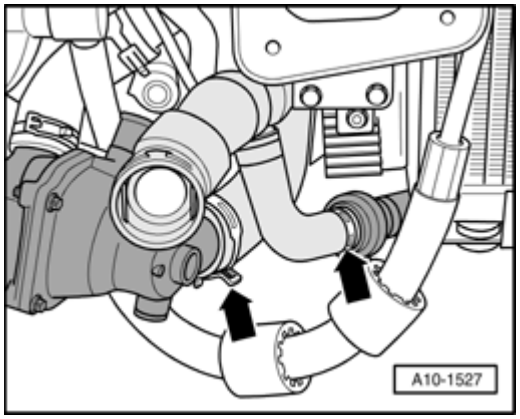

Fig. 157: Disconnecting Coolant Hoses
Courtesy of VOLKSWAGEN UNITED STATES, INC.

- Disconnect coolant hoses at positions indicated by - **arrows** -.

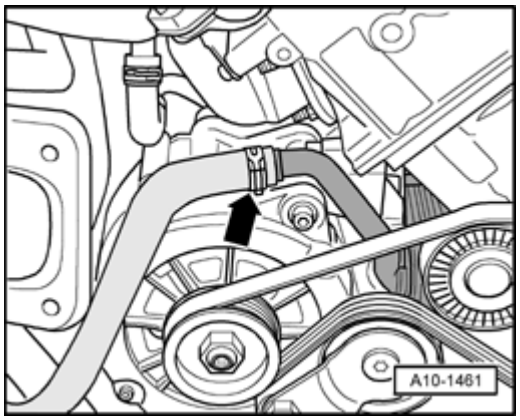

Fig. 158: Disconnecting Coolant Hose To Oil Cooler
Courtesy of VOLKSWAGEN UNITED STATES, INC.

- Disconnect coolant hose to oil cooler - **arrow** -.

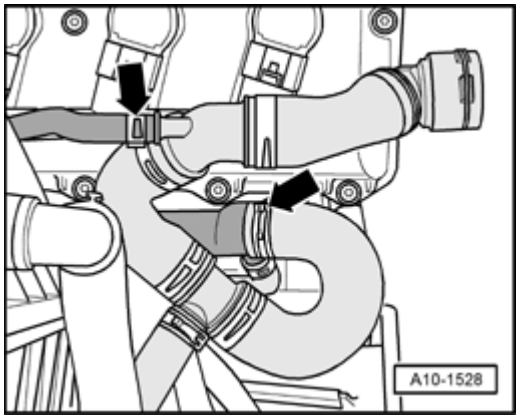

Fig. 159: Disconnecting Coolant Hoses
Courtesy of VOLKSWAGEN UNITED STATES, INC.

- Disconnect coolant hoses at positions indicated by - **arrows** -.

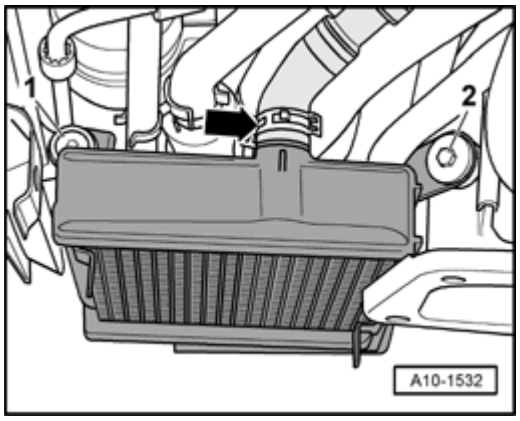

Fig. 160: Removing Bolts & Right Auxiliary Cooler Together With Coolant Hoses
Courtesy of VOLKSWAGEN UNITED STATES, INC.

- Remove bolts - **1** - and - **2** -.
- Remove right auxiliary cooler together with coolant hoses.

NOTE:

- **The hose - arrow - can remain connected at auxiliary cooler.**

CAUTION: Note rules of cleanliness for working on the fuel injection system --> Rules for cleanliness.

CAUTION: Fuel system is under pressure! Before opening system, place clean rags around the connection. Then release pressure by carefully loosening connection.

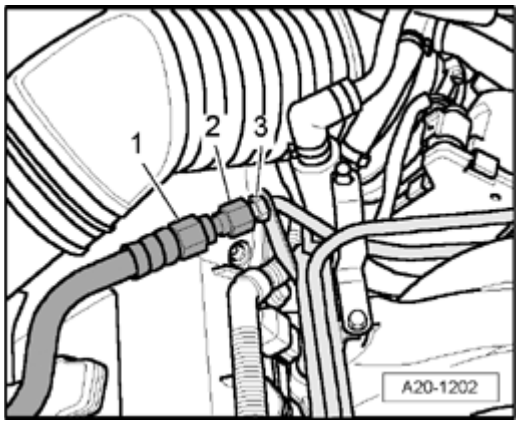

Fig. 161: Installing/Removing Fuel Hose To/From Connection On Fuel Rail Line
Courtesy of VOLKSWAGEN UNITED STATES, INC.

- Remove fuel hose from connection on fuel rail line. To do so, counter hold using an open-end wrench at hex head - **1** - and - **3** - and remove union nut - **2** -.

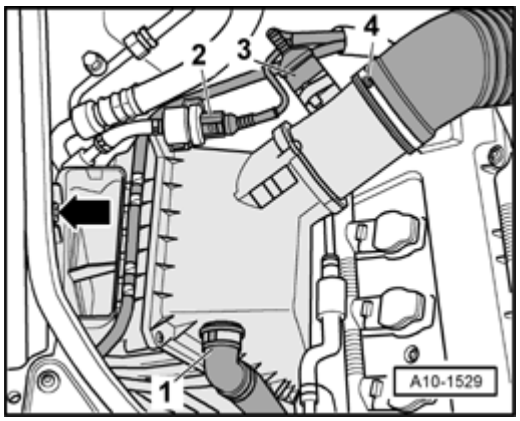

Fig. 162: Identifying Electrical Harness Connectors, Secondary Air Injection (AIR) Pump Hose, Air

Guide Hose & Mass Air Flow (MAF) Sensor
Courtesy of VOLKSWAGEN UNITED STATES, INC.

- Disconnect electrical harness connector - **2** - from Evaporative Emission (EVAP) Canister Purge Regulator Valve N80.
- Disconnect electrical harness connector - **3** - at Mass Air Flow (MAF) Sensor G70.
- Disconnect hose - **1** - to Secondary Air Injection (AIR) pump.
- Disconnect air guide hose - **4** - at Mass Air Flow (MAF) sensor.

- Move wiring harness clear at air filter housing.
- Remove clip - **arrow** - and remove air filter housing with Mass Air Flow (MAF) sensor.

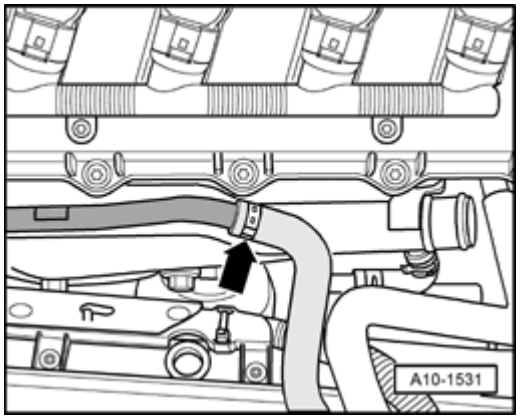

Fig. 163: Disconnecting Air Hose At Right On Engine
Courtesy of VOLKSWAGEN UNITED STATES, INC.

- Disconnect air hose - **arrow** - at right on engine.

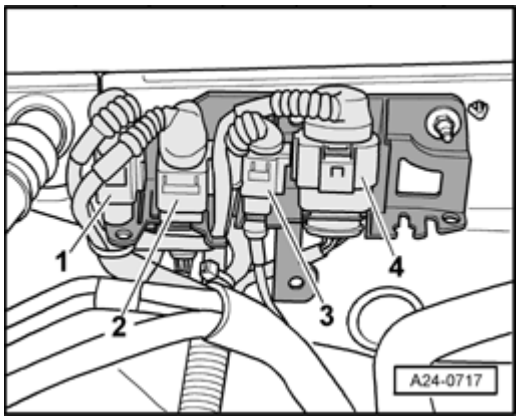

Fig. 164: Removing Bracket For Electrical Harness Connectors At Right From Bulkhead
Courtesy of VOLKSWAGEN UNITED STATES, INC.

- Remove bracket for electrical harness connectors - **1 to 4** - at right from bulkhead.

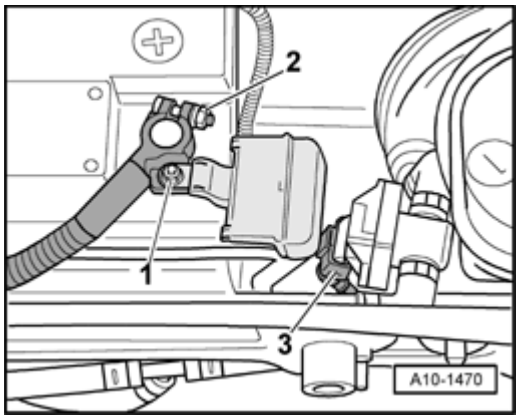

Fig. 165: Removing Nut And Fuse Strip On Plus Wire Terminal Clamp
Courtesy of VOLKSWAGEN UNITED STATES, INC.

- Remove nut - **1** - and remove fuse strip on plus wire terminal clamp.
- Disconnect battery positive (+) cable - **2** - on battery positive terminal.
- Pull battery positive (+) cable through bulkhead toward front.
- Free up the wiring harness.

NOTE:

- **Disregard item - 3 -.**

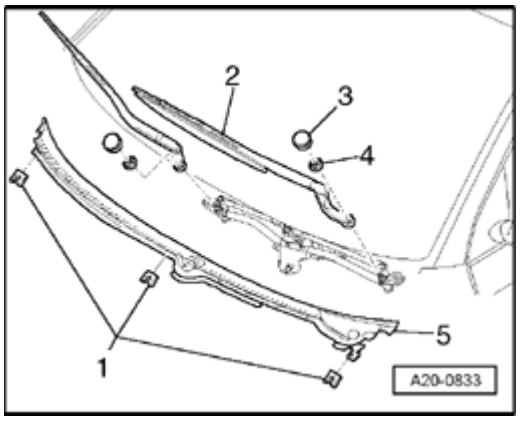

Fig. 166: Removing Securing Clips And Cowl
Courtesy of VOLKSWAGEN UNITED STATES, INC.

- Pry off both covers - **3** - using a screwdriver.
- Loosen hex-nuts - **4** - by several turns.
- Loosen wiper arms - **2** - from respective wiper axle by tilting slightly.
- Remove nuts completely and remove wiper arms.

CAUTION: To prevent the cowl grille - 5 - from tearing when removing, coat transition between windshield and cowl grille with a soapy solution and pull grille up vertically out of fastening strip beginning at edge of window.

- Disconnect securing clips - **1** - and remove cowl grille - **5** -.

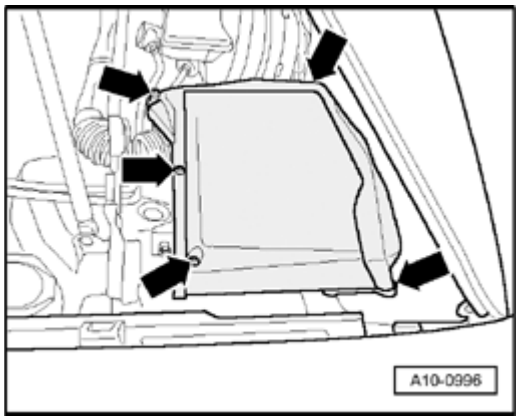

Fig. 167: Removing Screws And Cover From E-Box In Plenum Chamber
Courtesy of VOLKSWAGEN UNITED STATES, INC.

- Remove cover for E-Box in plenum chamber - **arrows** -.

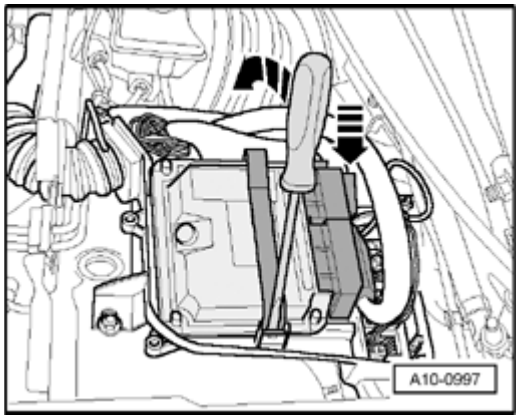

Fig. 168: Using Screwdriver To Remove Retainer Bar And Engine Control Module (ECM) J623
Courtesy of VOLKSWAGEN UNITED STATES, INC.

- Using a screwdriver, carefully pry off mounting bracket - **arrow** - and remove Engine Control Module (ECM) from E-Box.

NOTE:

- **Engine Control Module (ECM) remains connected at wiring harness.**

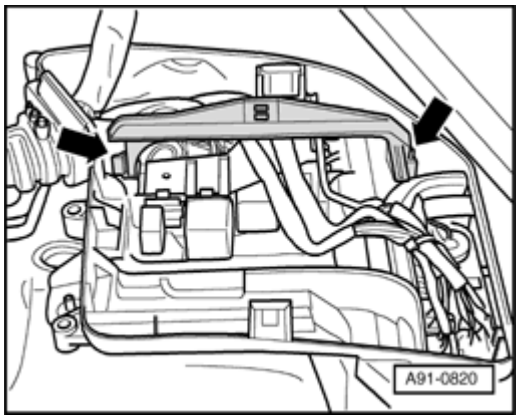

Fig. 169: Releasing Retaining Hooks Toward Outside And Removing Retaining Bracket
Courtesy of VOLKSWAGEN UNITED STATES, INC.

- Release retaining hooks - **arrows** - toward outside and remove retaining bracket.

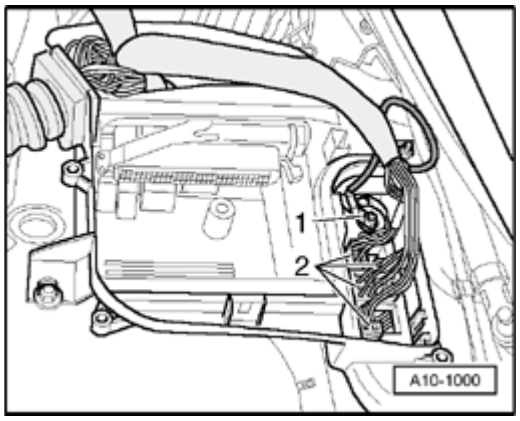

Fig. 170: Disconnecting All Electrical Harness Connectors On Connector Station Using Spark Plug Connector Pliers V.A.G 1922
Courtesy of VOLKSWAGEN UNITED STATES, INC.

- Disconnect all electrical harness connectors on connector station - **2** - using spark plug connector pliers V.A.G 1922.
- Remove electrical wire connection - **1** -.

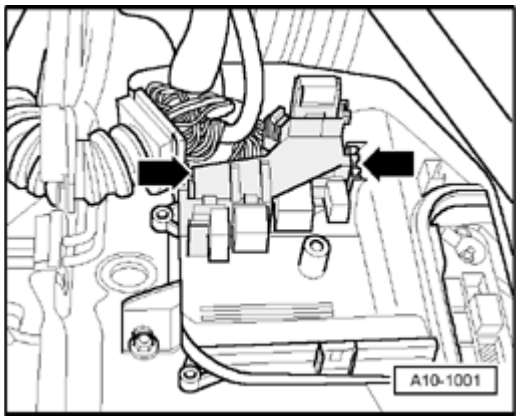

Fig. 171: Disengaging Locking Mechanisms And Removing Secondary Relay Carrier In E-Box Toward Top
Courtesy of VOLKSWAGEN UNITED STATES, INC.

- Disengage locking mechanisms - **arrows** - and remove secondary relay carrier in E-Box toward top.
- Disengage engine wiring harness at E-Box and bulkhead.

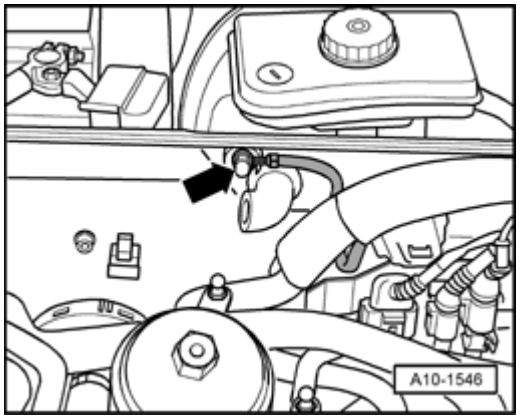

Fig. 172: Removing Ground (GND) Connection
Courtesy of VOLKSWAGEN UNITED STATES, INC.

- Remove Ground (GND) connection - **arrow** -.

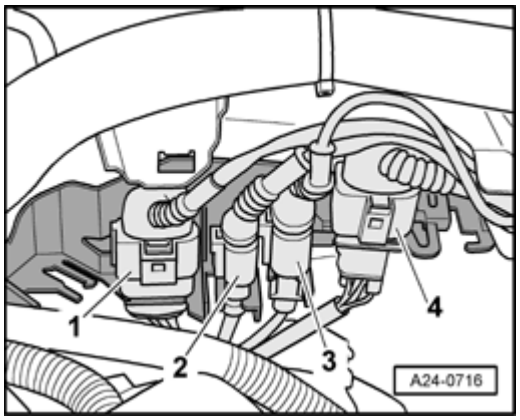

Fig. 173: Removing Bracket For Electrical Harness Connectors At Left From Bulkhead
Courtesy of VOLKSWAGEN UNITED STATES, INC.

- Remove bracket for electrical harness connectors - **1 to 4** - at left from bulkhead.
- Free up wiring harness.
- Set electrical wiring harness on engine and secure Engine Control Module (ECM) against falling down.

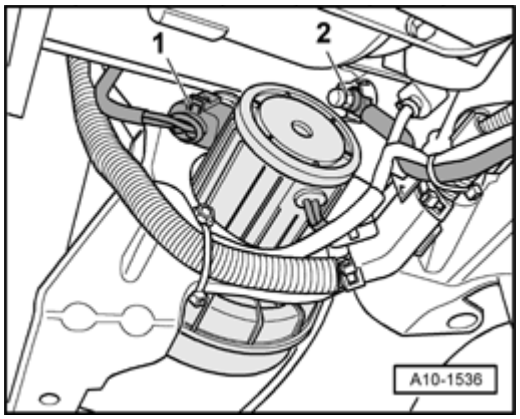

Fig. 174: Disconnecting Electrical Harness Connector At Secondary Air Injection (AIR) Pump Motor V101 & Removing Ground (GND) Wire On Long Member
Courtesy of VOLKSWAGEN UNITED STATES, INC.

- Disconnect electrical harness connector - **1** - at Secondary Air Injection (AIR) Pump Motor V101.
- Remove Ground (GND) wire - **2** - on long member.

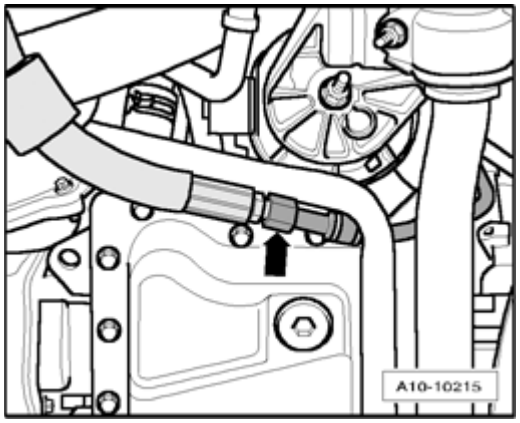

Fig. 175: Disconnecting Hydraulic Pressure Line For Power-Steering At Left Next To Oil Pan
Courtesy of VOLKSWAGEN UNITED STATES, INC.

- Place old oil collecting and extracting device V.A.G 1782 under engine.
- Disconnect hydraulic pressure line for power-steering - **arrow** - at left next to oil pan.

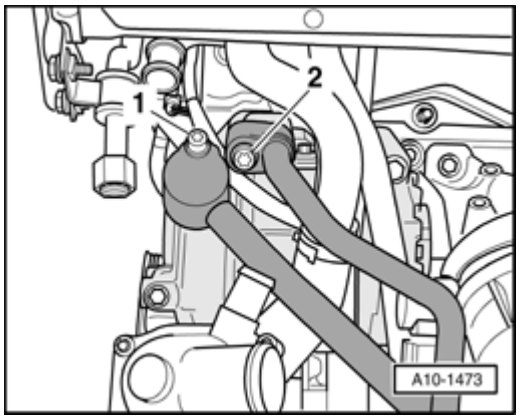

Fig. 176: Removing Bolts & Right Refrigerant Line From A/C Compressor
Courtesy of VOLKSWAGEN UNITED STATES, INC.

NOTE:

- **To prevent damage to condenser and also to the refrigerant lines/hoses, ensure that the lines and hoses are not stretched, kinked or bent.**

- Remove bolts - **1** - and - **2** -.
- Remove right refrigerant line from A/C compressor.

NOTE:

- **The left refrigerant line will be removed at a later point in time.**

- Seal open connections on A/C compressor using clean plugs.

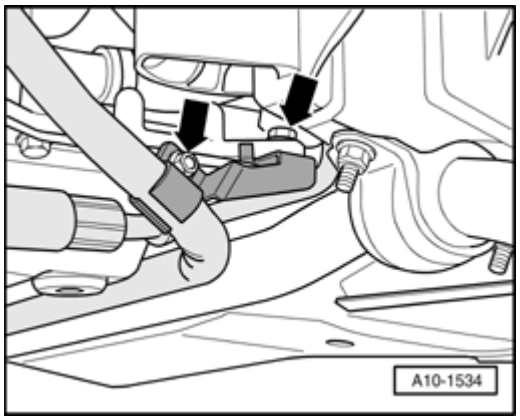

Fig. 177: Removing Left Bracket For Refrigerant Line
Courtesy of VOLKSWAGEN UNITED STATES, INC.

- Remove left bracket for refrigerant line - **arrows** -.

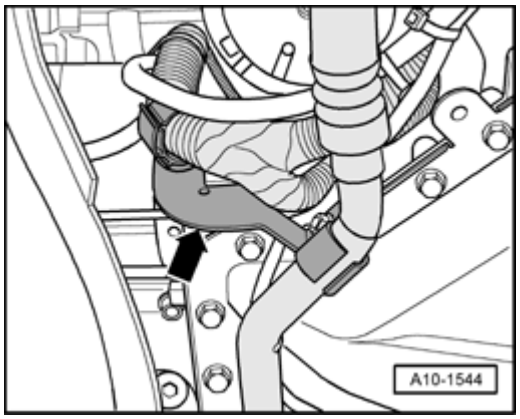

Fig. 178: Removing Refrigerant Line On Bracket
Courtesy of VOLKSWAGEN UNITED STATES, INC.

- Remove refrigerant line on bracket - **arrow** -.

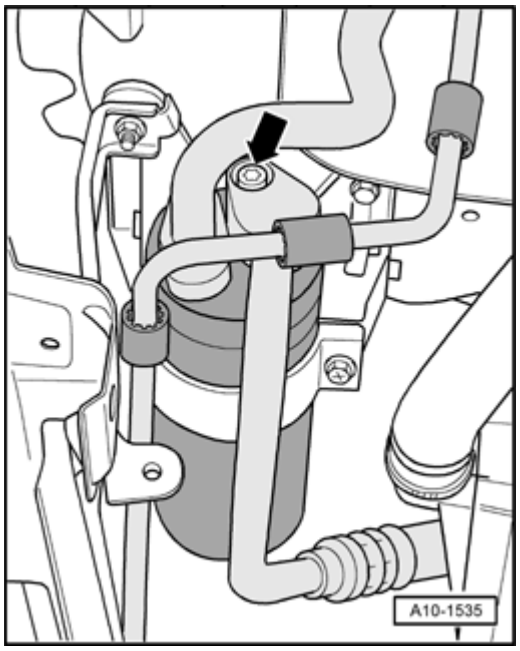

Fig. 179: Removing Bolt And Disconnecting Refrigerant Line To A/C Compressor
Courtesy of VOLKSWAGEN UNITED STATES, INC.

- Remove bolt - **arrow** - and disconnect refrigerant line to A/C compressor.

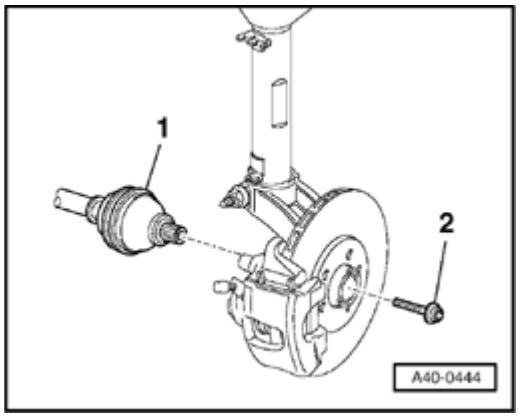

Fig. 180: Identifying Collar Bolt For Right Drive Axle
Courtesy of VOLKSWAGEN UNITED STATES, INC.

- Have a second technician press brake pedal.

CAUTION: To loosen collar bolt for drive axle, the wheel bearing must not be under load (vehicle must not be standing on its wheels).

- Remove collar bolt - **2** - at left and right drive axles - **1** -.

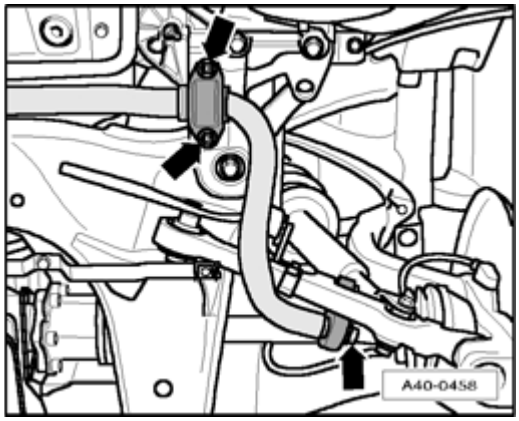

Fig. 181: Removing Bolts And Nuts Uniformly At Left/Right
Courtesy of VOLKSWAGEN UNITED STATES, INC.

- Remove bolts and nuts - **arrows** - uniformly at left and right.
- Remove stabilizer.

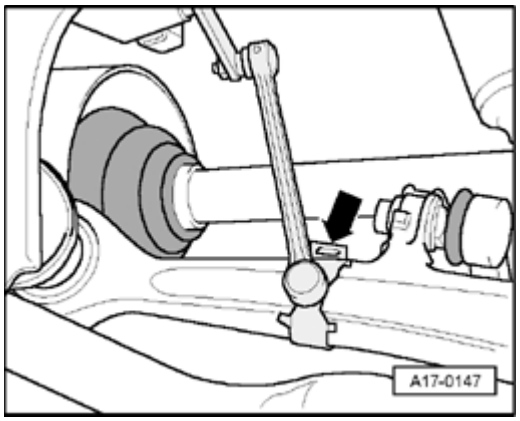

Fig. 182: Disconnecting Electrical Harness Connector At Left Front Level Control System Sensor G78
Courtesy of VOLKSWAGEN UNITED STATES, INC.

- Disconnect electrical harness connector at Level Control System Sensor.
- Unclip operating rod for Left Front Level Control System Sensor G78 at bottom on control arm.
- Remove outer suspension strut bolt from left and right of engine compartment.

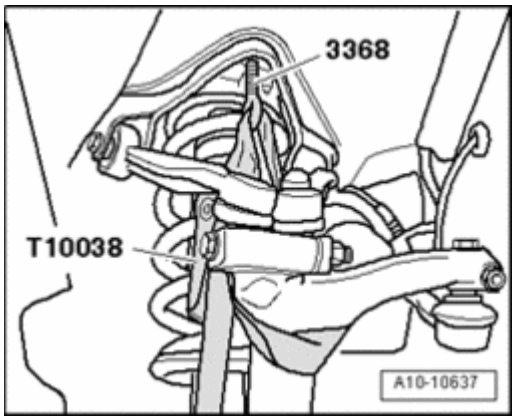

Fig. 183: Rotating Lifting Eyebolt 3368 At Left/Right In Suspension Strut Mount Hole From Below
Courtesy of VOLKSWAGEN UNITED STATES, INC.

- Rotate Lifting Eyebolt 3368 at left and right in suspension strut mount hole from below.

CAUTION: Only install Lifting Eyebolt 3368 until it is flush with upper edge of suspension strut mount so that hood is not damaged when closed.

- Tie up wheel bearing housing at left and right with Tensioning Strap T10038 as shown in illustration.

CAUTION: To prevent upper control arm joints from being damaged, wheel bearing housing must be supported before loosening lower suspension strut bolts.

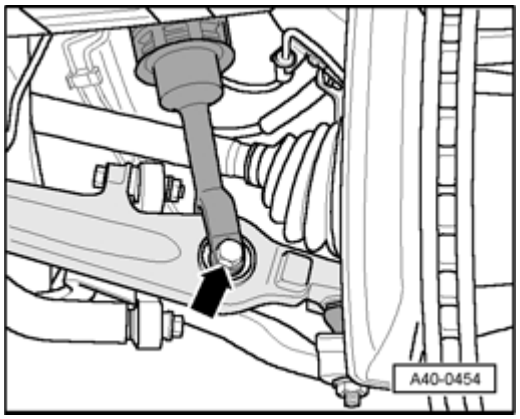

Fig. 184: Removing Bolt And Suspension Strut From Control Arm
Courtesy of VOLKSWAGEN UNITED STATES, INC.

- Remove bolt and remove suspension strut from control arm - **arrow** -.

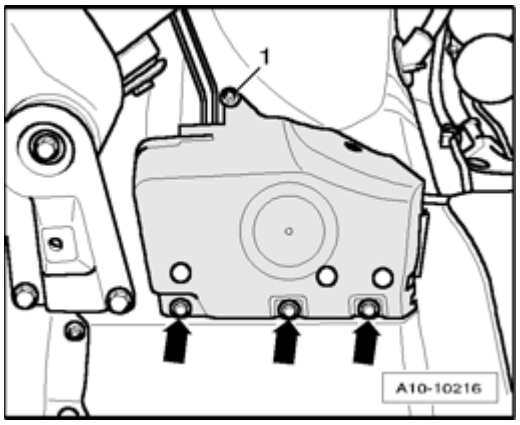

Fig. 185: Removing Expanding Clips, Nut And Cover Behind Wheel Housing
Courtesy of VOLKSWAGEN UNITED STATES, INC.

- Remove expanding clips - **arrows** -.
- Remove nut - **1** - and remove cover behind wheel housing.

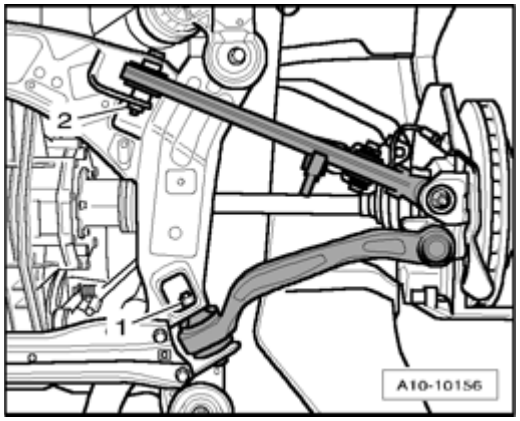

Fig. 186: Removing Guide Control Arm And Control Arm On Subframe

Courtesy of VOLKSWAGEN UNITED STATES, INC.

- Remove guide control arm - **1** - and control arm - **2** - on subframe.

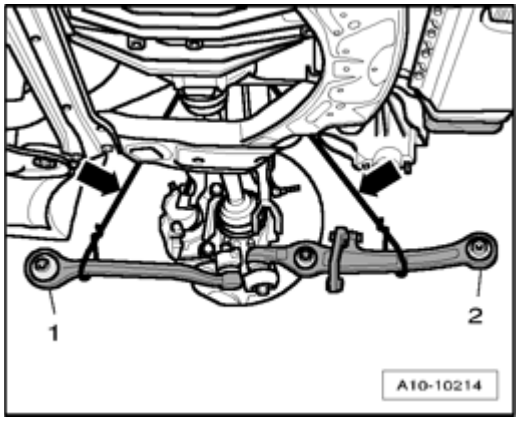

Fig. 187: Pivoting Guide Control Arm And Control Arm Outward
Courtesy of VOLKSWAGEN UNITED STATES, INC.

- Pivot guide control arm - **1** - and control arm - **2** - outward.

CAUTION: Guide control arm and control arm must not hang free. Tie up both control arms on wheel bearing housing - arrows - as shown in illustration.

- Repeat work procedure on opposite side of vehicle.

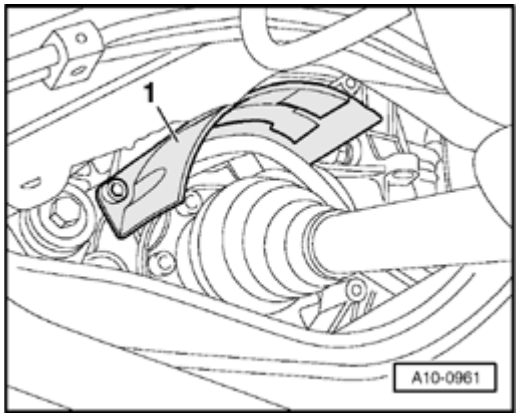

Fig. 188: Removing Heat Shield For Left Drive Axle
Courtesy of VOLKSWAGEN UNITED STATES, INC.

- Remove heat shield - **1** - for left drive axle.
- Remove drive axle from transmission flanged shaft.
- Swing left wheel bearing housing outward and remove drive axle.
- Repeat work procedure on opposite side of vehicle.

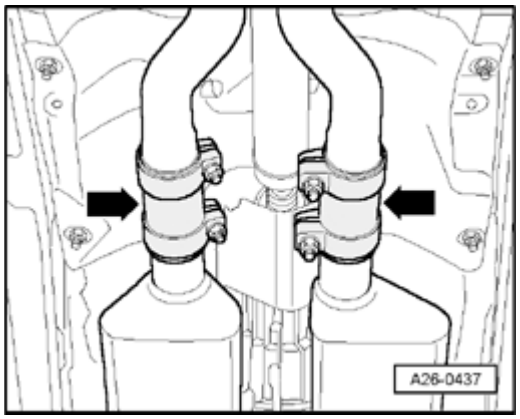

Fig. 189: Disconnecting Exhaust System At Double Clamps
Courtesy of VOLKSWAGEN UNITED STATES, INC.

NOTE:

- **Flex joint in front exhaust pipe must not be bent more than 10 ° , otherwise it may be damaged.**

- Disconnect exhaust system at double clamps - **arrows** -.

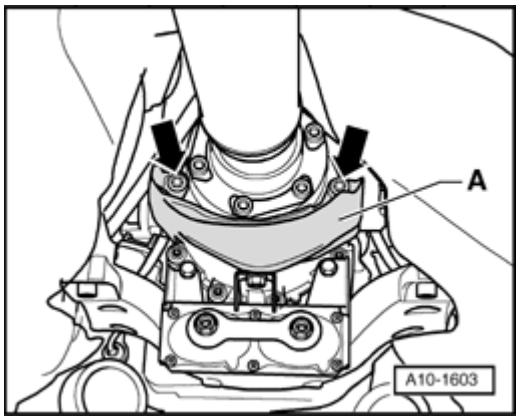

Fig. 190: Removing Heat Shield For Driveshaft
Courtesy of VOLKSWAGEN UNITED STATES, INC.

- Remove heat shield - **A** - for drive shaft - **arrows** -.
- Remove bolts at transmission/driveshaft flange.
- Push driveshaft together with rear final drive. The constant velocity (CV) joints can move axially.
- Tie up driveshaft to body.

NOTE:

- **Mark the installation position of bracket for selector lever cable using a felt-tip marker.**

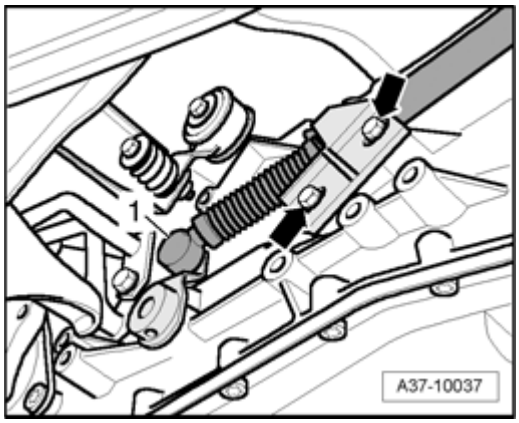

Fig. 191: Pressing Ball Socket Of Selector Lever Cable From Selector Shaft Lever & Removing Bracket On Transmission
Courtesy of VOLKSWAGEN UNITED STATES, INC.

- Press ball socket - **1** - of selector lever cable from selector shaft lever.
- Remove bracket on transmission - **arrows** -.
- Move selector lever cable clear.

NOTE:

- **To improve clarity, the transmission supports are shown removed in the illustration.**

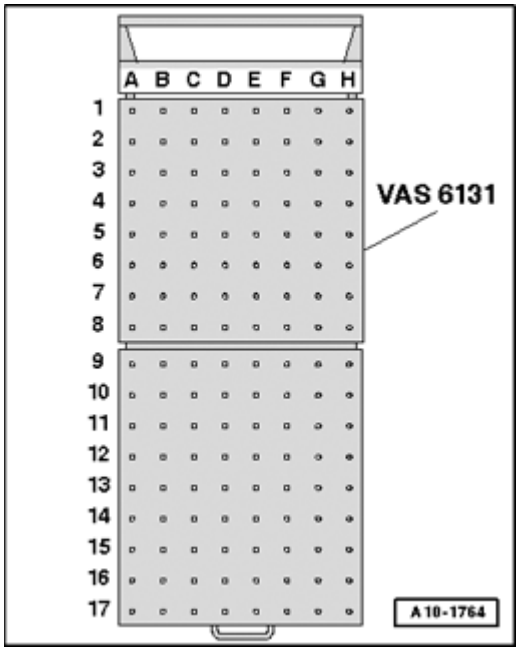

Fig. 192: Identifying Scissor Lift Platform VAS 6131
Courtesy of VOLKSWAGEN UNITED STATES, INC.

Prepare scissor lift platform:

- Equip scissor lift platform VAS 6131 A with support set for Audi VAS 6131/10 as follows:

Platform coordinates	Parts of support set for Audi VAS 6131/10			
B4	/10-1	/10-4	/10-5	/10-11
G3	/10-1	/10-4	/10-5	/10-11
B10	/10-1	/10-2	/10-5	/10-8
G10	/10-1	/10-2	/10-5	/10-8
C15	/10-1	/10-3	/10-5	/10-12
F15	/10-1	/10-3	/10-5	/10-12

- Install attachments on scissor lift table by hand first.
- Place scissor lift platform VAS 6131 A in horizontal position.
- Note bubble level (sight glass) on support platform.
- Drive scissor lift platform VAS 6131 A under engine/transmission subassembly.

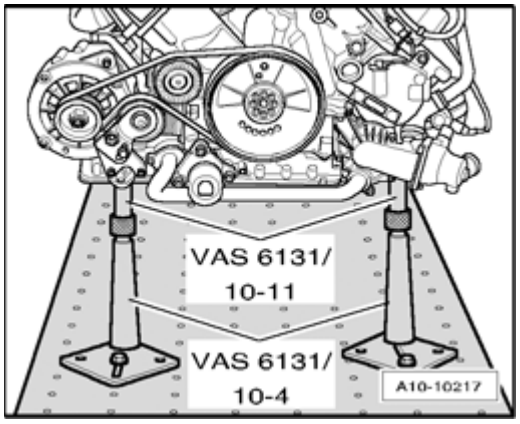

Fig. 193: Positioning Support Elements From VAS 6131/10 At Front On Engine
Courtesy of VOLKSWAGEN UNITED STATES, INC.

- Position support elements from VAS 6131/10 at front on engine as shown in illustration.

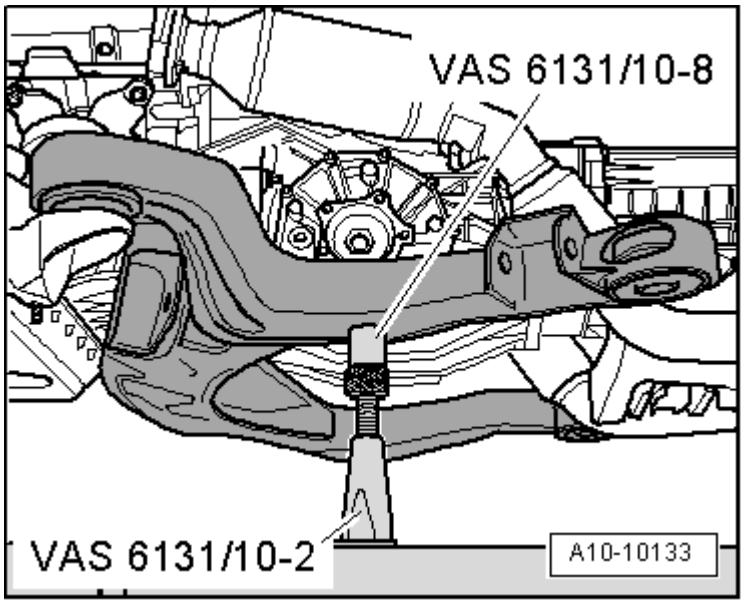

Fig. 194: Positioning Support Elements From VAS 6131/10 At Left/Right On Subframe
Courtesy of VOLKSWAGEN UNITED STATES, INC.

- Position support elements from VAS 6131/10 at left and right on subframe as shown in illustration.

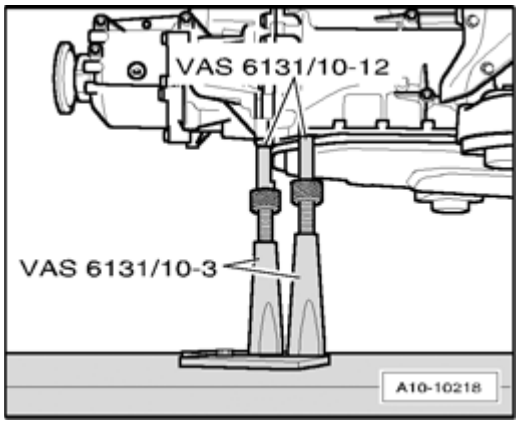

Fig. 195: Positioning Support Elements From VAS 6131/10 At Rear On Transmission
Courtesy of VOLKSWAGEN UNITED STATES, INC.

- Position support elements from VAS 6131/10 at rear on transmission as shown in illustration.
- Turn all spindles of support elements upward far enough until all support pins make contact at support points.
- Tighten base plates for support elements to 20 Nm on scissor lift platform VAS 6131 A.

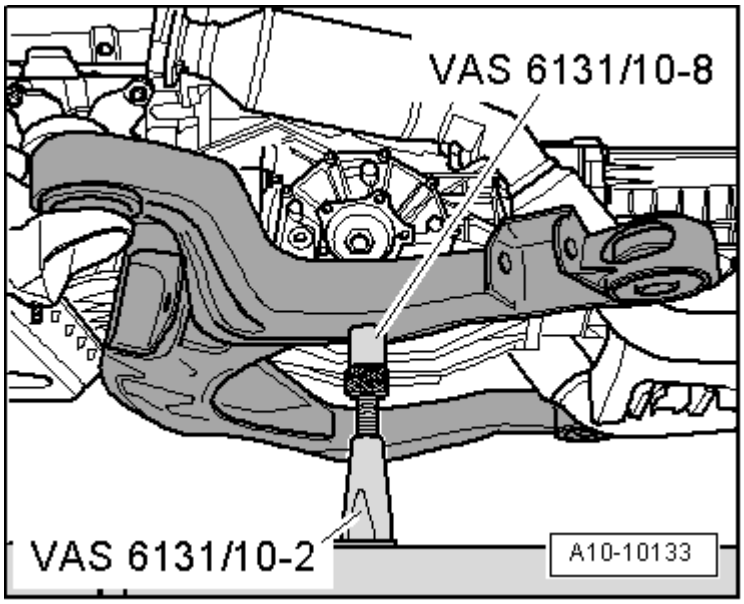

Fig. 196: Positioning Support Elements From VAS 6131/10 At Left/Right On Subframe
Courtesy of VOLKSWAGEN UNITED STATES, INC.

- Turn both spindles at subframe 2 rotations upward.

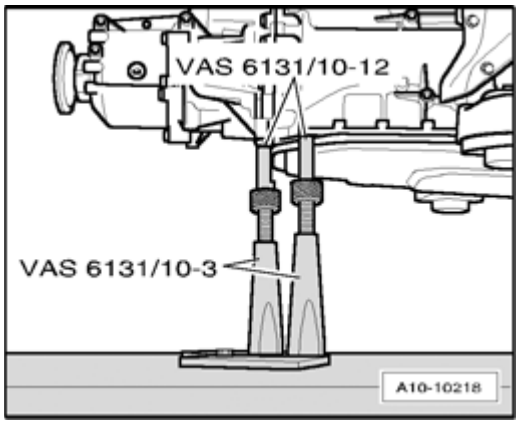

Fig. 197: Positioning Support Elements From VAS 6131/10 At Rear On Transmission
Courtesy of VOLKSWAGEN UNITED STATES, INC.

- Turn both spindles at transmission 4 rotations upward.

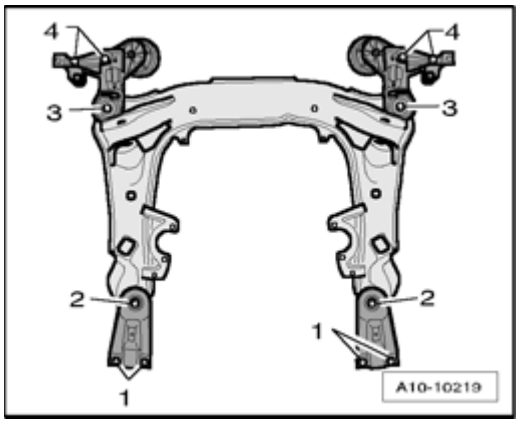

Fig. 198: Removing/Installing Bolts In Diagonal Sequence And In Stages
Courtesy of VOLKSWAGEN UNITED STATES, INC.

- Remove bolts - **1** -.
- Mark installation position of subframe and of both engine mount plates to long members using a felt-tip marker.
- Remove bolts - **2** - , - **3** - and - **4** - in diagonal sequence and in stages.

NOTE:

- **Verify that all hoses and lines between engine, transmission, subframe and body have been disconnected.**
- **While lowering, carefully guide engine/transmission subassembly with subframe out of engine compartment in order to prevent damage.**

- Slowly lower engine/transmission subassembly downward.
- Push scissor lift platform VAS 6131 A with engine/transmission subassembly under vehicle.

Engine and transmission (vehicles with automatic transmission), separating

Special tools, testers and auxiliary items required

- Support set for Audi VAS 6131/10 , VAS 6131/11 and VAS 6131/12

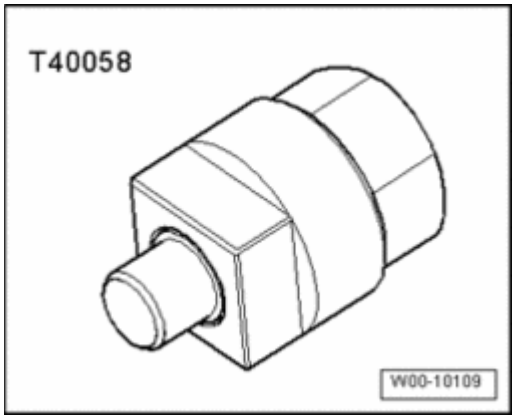

Fig. 199: Adapter T40058

Courtesy of VOLKSWAGEN UNITED STATES, INC.

- Adapter T40058

Work procedure

- Engine/transmission unit removed and attached to scissor lift platform VAS 6131 A.

NOTE:

- **All cable ties opened or cut during engine removal must be reinstalled at the same locations during installation.**
- **All heat insulation sleeves removed during engine removal must be reinstalled at the same locations during installation.**

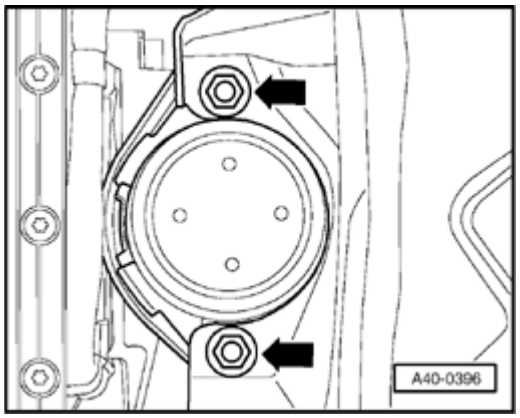

Fig. 200: Removing Bolts For Left/Right Transmission Mount
Courtesy of VOLKSWAGEN UNITED STATES, INC.

- Remove bolts - **arrows** - for left and right transmission mount.

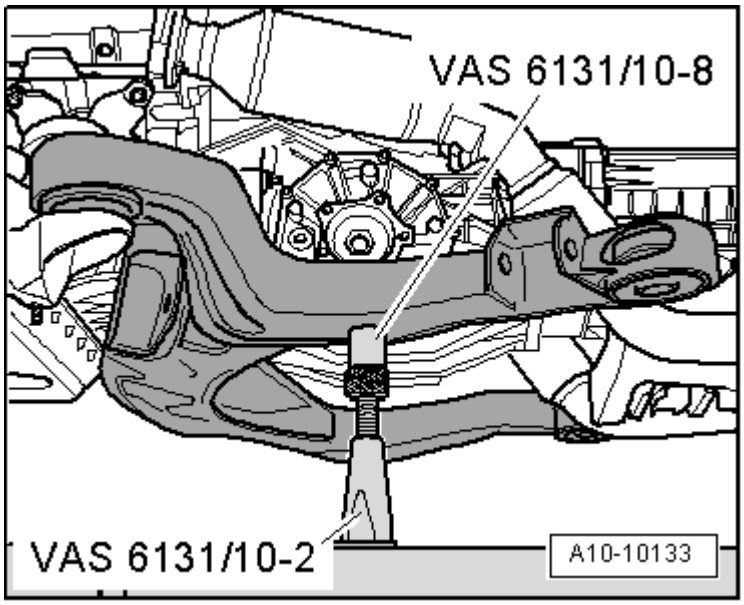

Fig. 201: Positioning Support Elements From VAS 6131/10 At Left/Right On Subframe
Courtesy of VOLKSWAGEN UNITED STATES, INC.

- Turn spindles of support elements from VAS 6131/10 at left and right at subframe completely downward.
- Remove support pins from spindles.
- Remove subframe to side.

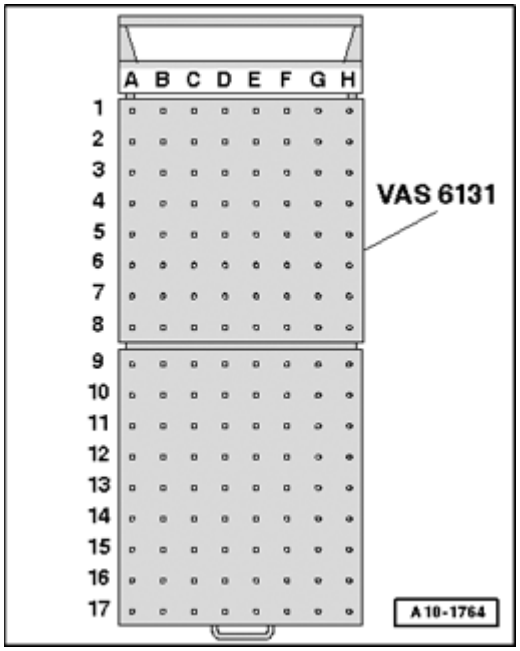

Fig. 202: Identifying Scissor Lift Platform VAS 6131
Courtesy of VOLKSWAGEN UNITED STATES, INC.

- Equip scissor lift platform VAS 6131 A with support set for Audi VAS 6131/10 , VAS 6131/11 and VAS 6131/12 as follows:

Platform coordinates	Parts of support set for Audi VAS 6131/10 , VAS 6131/11 and VAS 6131/12			
B4 * See note	/10-1	/10-4	/10-5	/10-11
G3 * See note	/10-1	/10-4	/10-5	/10-11
B7	/10-1	/10-4	/10-5	/11-2
G7	/10-1	/10-4	/10-5	/10-9
B10	/10-1	/10-2	/10-5	/12-1
G10	/10-1	/10-2	/10-5	/11-3
C15 * See note	/10-1	/10-3	/10-5	/10-12
F15 * See note	/10-1	/10-3	/10-5	/10-12

*Support elements remain unchanged.

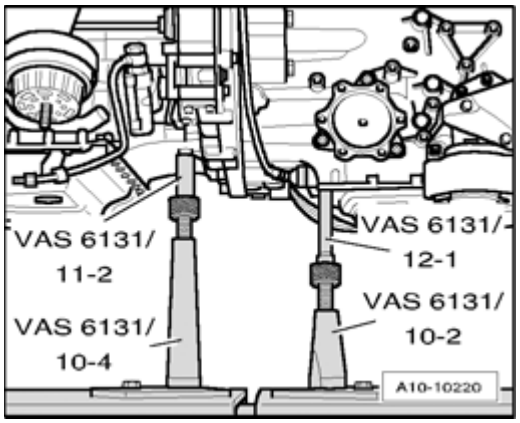

Fig. 203: Positioning Support Elements From VAS 6131/11 And VAS 6131/12 At Left On Engine/Transmission
Courtesy of VOLKSWAGEN UNITED STATES, INC.

- Position support elements from VAS 6131/11 and VAS 6131/12 at left on engine/transmission as shown in illustration.

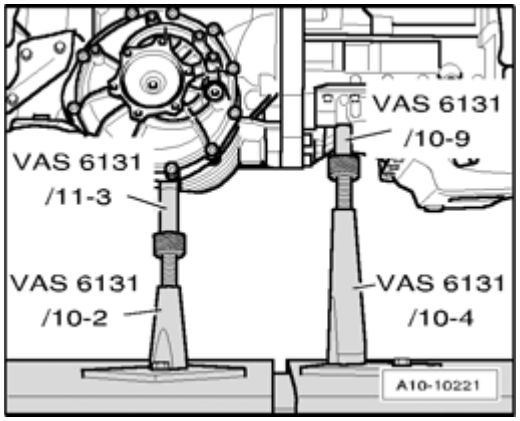

Fig. 204: Positioning Support Elements From VAS 6131/10 And VAS 6131/11 At Right On Engine/Transmission
Courtesy of VOLKSWAGEN UNITED STATES, INC.

- Position support elements from VAS 6131/10 and VAS 6131/11 at right on engine/transmission as shown in illustration.
- Twist spindles of attachments upward far enough until all support pins make contact at support points.
- Tighten base plates for support elements to 20 Nm on scissor lift platform VAS 6131 A.

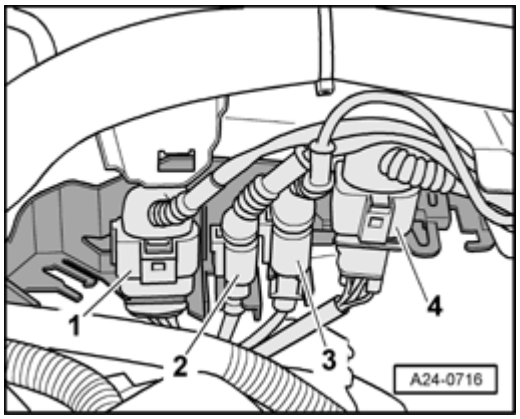

Fig. 205: Removing Bracket For Electrical Harness Connectors At Left From Bulkhead
Courtesy of VOLKSWAGEN UNITED STATES, INC.

- Remove electrical harness connectors - **1** - and - **4** - from bracket and disconnect.
- Remove heat insulation sleeve on wiring harness and free up individual wires.

NOTE:

- **In the illustration, the electrical harness connectors are depicted as installed.**

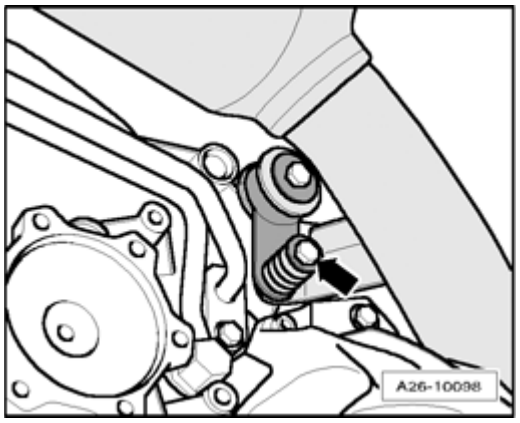

Fig. 206: Removing Bolt At Strap For Left Front Exhaust Pipe
Courtesy of VOLKSWAGEN UNITED STATES, INC.

- Remove bolt - **arrow** - at strap for left front exhaust pipe.

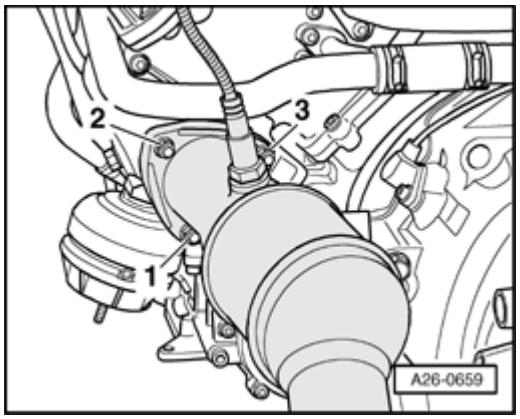

Fig. 207: Removing Nuts For Left Front Exhaust Pipe/Exhaust Manifold
Courtesy of VOLKSWAGEN UNITED STATES, INC.

- Remove nuts - **1 to 3** - for left front exhaust pipe/exhaust manifold.
- Remove front exhaust pipe with pre- and main catalytic converters.

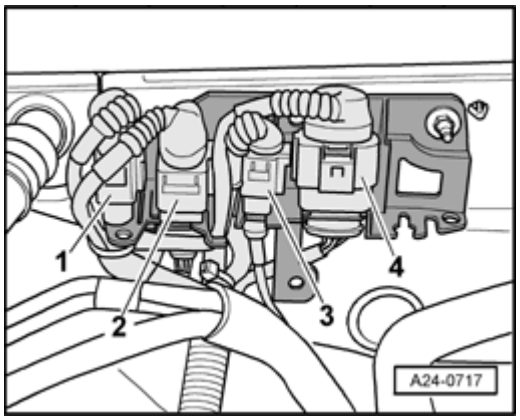

Fig. 208: Removing Bracket For Electrical Harness Connectors At Right From Bulkhead
Courtesy of VOLKSWAGEN UNITED STATES, INC.

- Remove electrical harness connectors - **2** - and - **4** - from bracket and disconnect.
- Free up the wiring harnesses.

NOTE:

- **In the illustration, the electrical harness connectors are depicted as installed.**

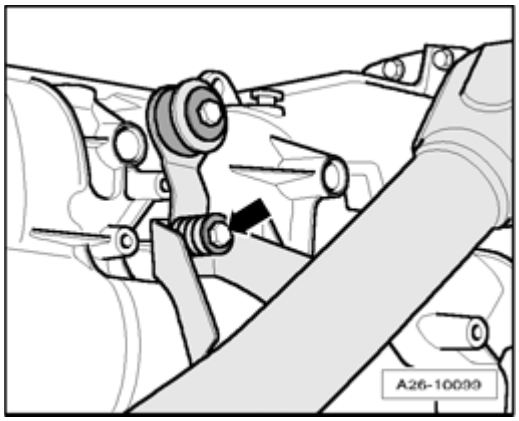

Fig. 209: Removing Bolt At Strap For Right Front Exhaust Pipe
Courtesy of VOLKSWAGEN UNITED STATES, INC.

- Remove bolt - **arrow** - at strap for right front exhaust pipe.

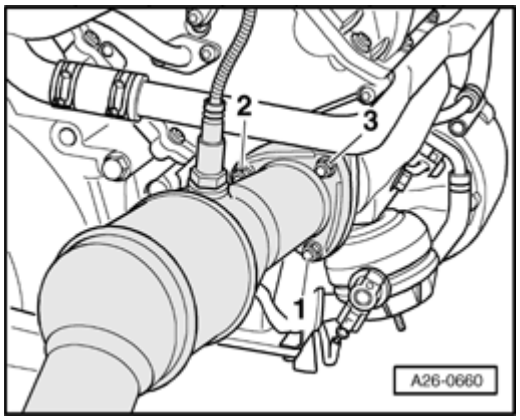

Fig. 210: Removing Nuts For Right Front Exhaust Pipe/Exhaust Manifold
Courtesy of VOLKSWAGEN UNITED STATES, INC.

- Remove nuts - **1 to 3** - for right front exhaust pipe/exhaust manifold.
- Remove front exhaust pipe with pre- and main catalytic converters.

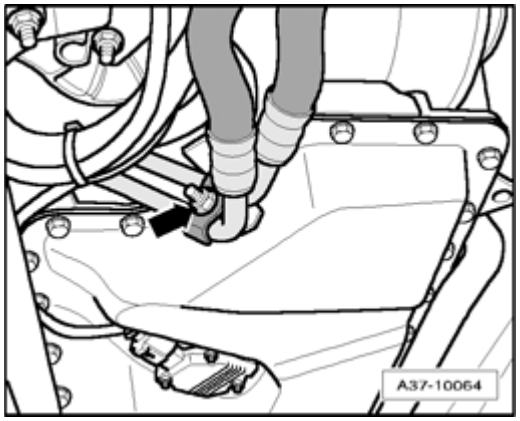

Fig. 211: Removing Bracket For ATF Lines At Right On Oil Pan

Courtesy of VOLKSWAGEN UNITED STATES, INC.

NOTE:

- **Observe rules of cleanliness for working on automatic transmissions --> 00 TECHNICAL DATA .**

- Remove bracket - **arrow** - for ATF lines at right on oil pan.

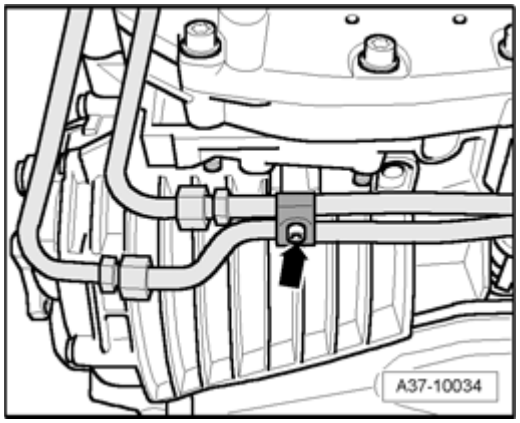

Fig. 212: Removing Bracket For ATF Lines At Bottom On Transmission
Courtesy of VOLKSWAGEN UNITED STATES, INC.

- Remove bracket - **arrow** - for ATF lines at bottom on transmission.

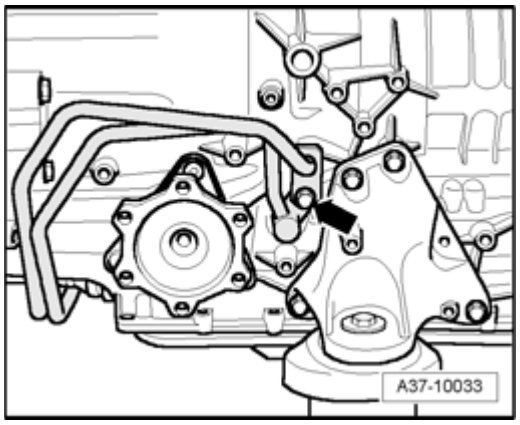

Fig. 213: Removing Bolt & Disconnecting ATF Lines From Transmission
Courtesy of VOLKSWAGEN UNITED STATES, INC.

- Remove bolt - **arrow** -.
- Disconnect ATF lines from transmission.

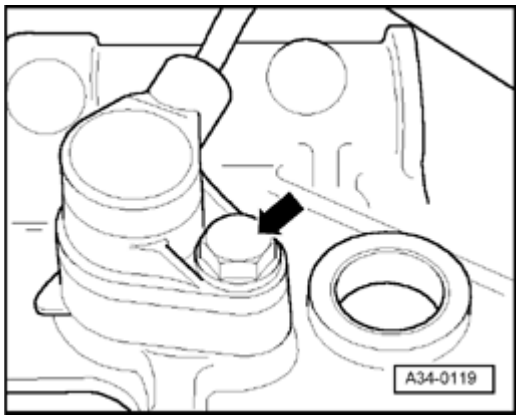

Fig. 214: Location Of Engine Speed (RPM) Sensor G28 On Coupling Housing
Courtesy of VOLKSWAGEN UNITED STATES, INC.

- Remove bolt and Engine Speed (RPM) Sensor G28 on transmission - **arrow** -.

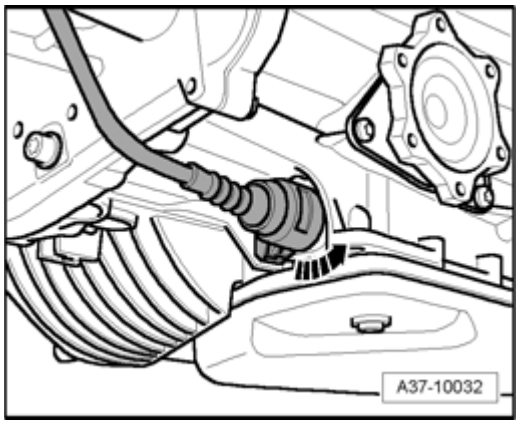

Fig. 215: Disconnecting Electrical Harness Connector On Transmission
Courtesy of VOLKSWAGEN UNITED STATES, INC.

- Disconnect electrical harness connector on transmission, to do this swing twist lock counterclockwise - **arrow** -.

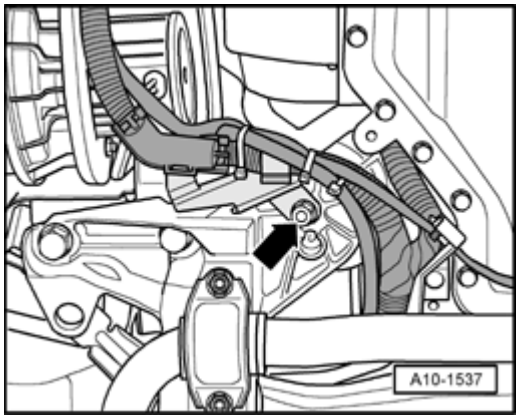

Fig. 216: Removing Wiring Harness Bracket At Right Engine Plate
Courtesy of VOLKSWAGEN UNITED STATES, INC.

- Remove wiring harness bracket at right engine plate - **arrows** -.

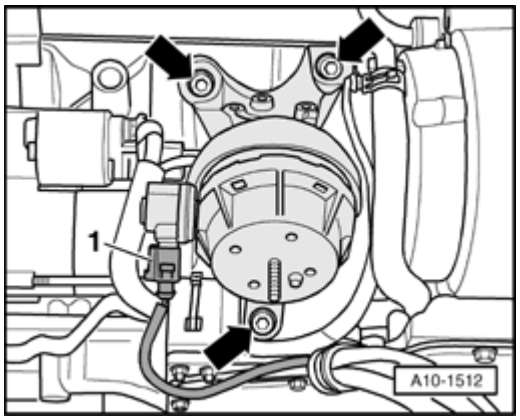

Fig. 217: Disconnecting Electrical Harness Connector At Right Engine Mount
Courtesy of VOLKSWAGEN UNITED STATES, INC.

- Disconnect electrical harness connector - **1** - at right engine mount.
- Remove bolts - **arrows** - and remove right engine mount.

NOTE:

- **Shown without engine mount plate to provide a better illustration.**

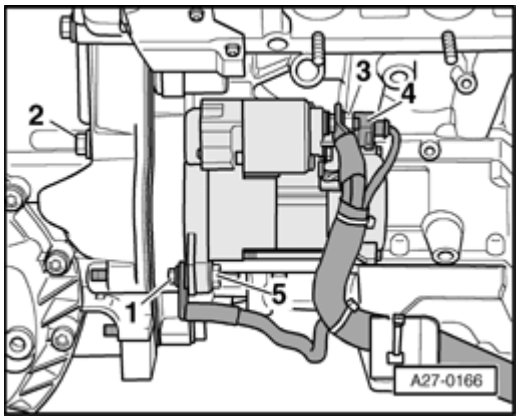

Fig. 218: Identifying Ground (GND) Wire, Starter Electrical Wires, Bolts & Starter
Courtesy of VOLKSWAGEN UNITED STATES, INC.

- Remove Ground (GND) wire - **1** -.
- Disconnect electrical wires - **3** - and - **4** - on starter.
- Remove bolts - **2** - and - **5** - and remove starter.

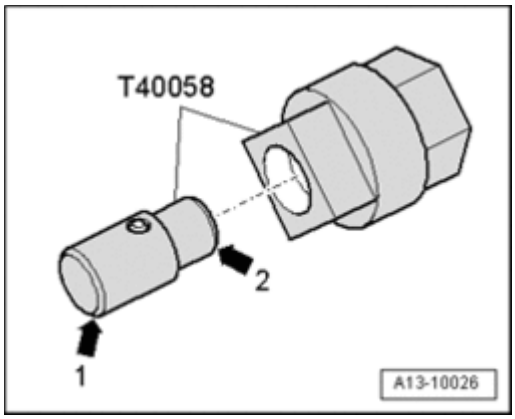

Fig. 219: Inserting Guide Pin Of Adapter T40058 So Small Diameter Points To Engine
Courtesy of VOLKSWAGEN UNITED STATES, INC.

- Insert guide pin of adapter T40058 so that small diameter - **arrow 2** - points to engine. Large diameter - **arrow 1** - points to adapter.

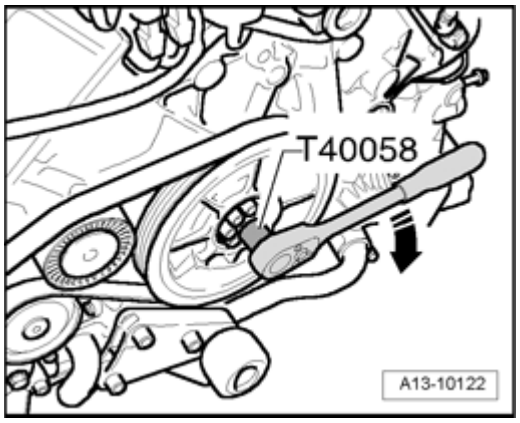

Fig. 220: Counter Holding Crankshaft Using Adapter T40058 To Loosen Torque Converter Bolts
Courtesy of VOLKSWAGEN UNITED STATES, INC.

- To loosen torque converter bolts, counter hold crankshaft using adapter T40058.

NOTE:

- **Disregard - arrow -.**

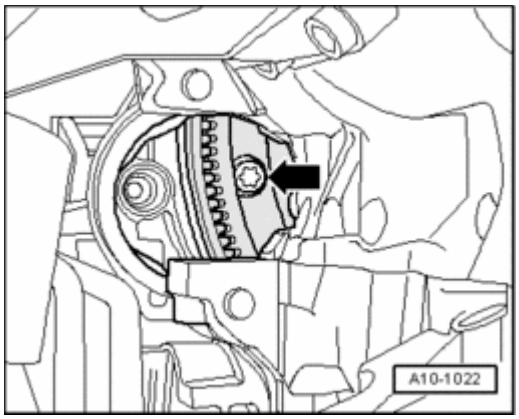

Fig. 221: Torque Converter Bolts
Courtesy of VOLKSWAGEN UNITED STATES, INC.

- Remove 3 torque converter bolts - **arrows** - in opening on removed starter (turn crankshaft $^{1}/_{3}$ rotation in each case).

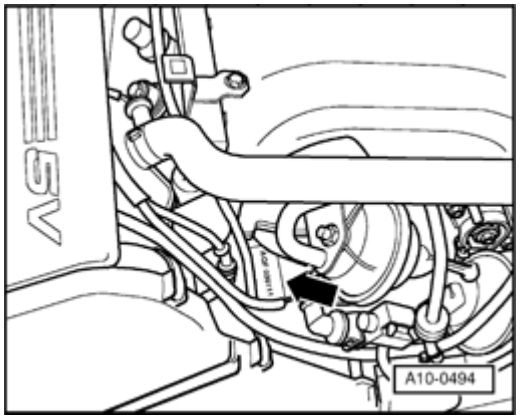

Fig. 222: Identifying Engine/Transmission Threaded Connections
Courtesy of VOLKSWAGEN UNITED STATES, INC.

- Remove engine/transmission threaded connections - **3 to 10** -.

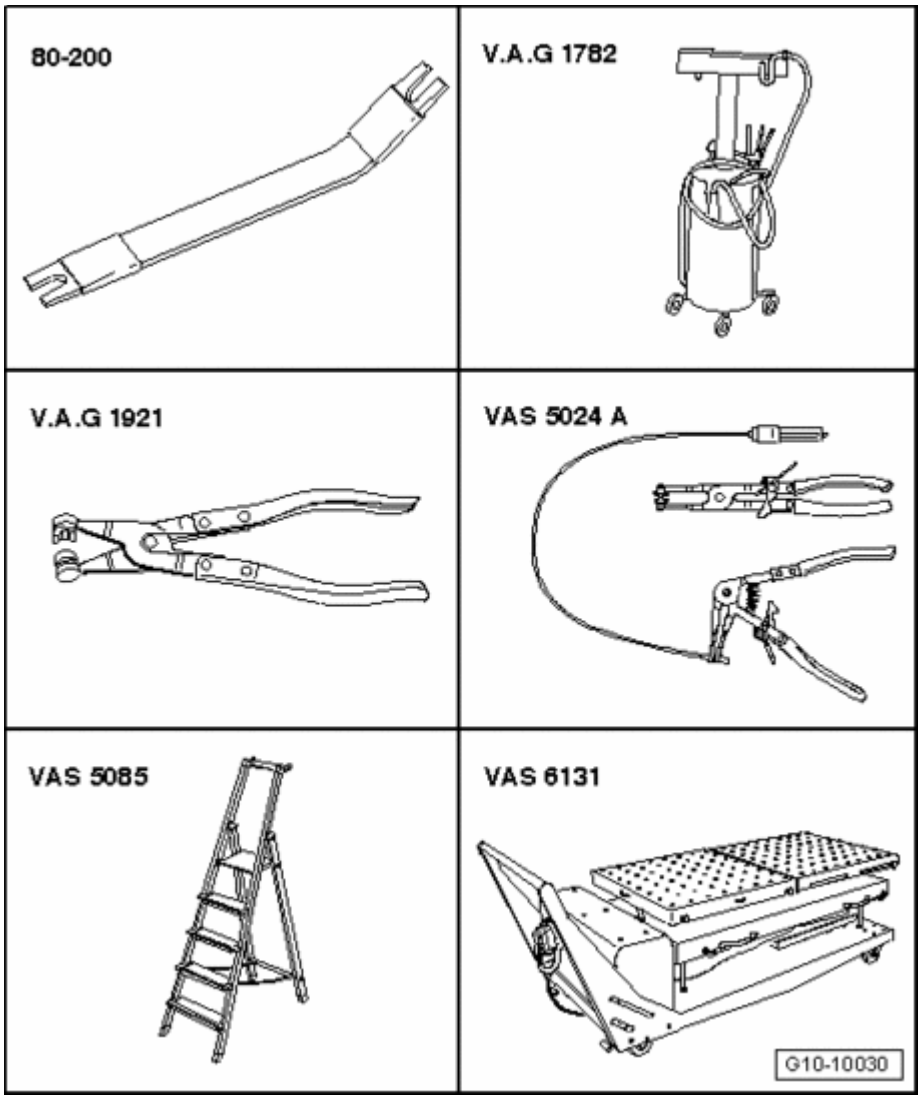

Fig. 223: Loosening Clamping Bolts On Side Of Scissor Lift Table VAS 6131 And Pull Rear Table Section With Transmission Rearward
Courtesy of VOLKSWAGEN UNITED STATES, INC.

- Loosen side clamping bolts - **1** - on scissor lift platform VAS 6131 A and pull rear platform top with transmission toward rear - **arrow** - , simultaneously push torque converter through opening of drive plate while doing this.

Engine (vehicles with automatic transmission), securing to assembly stand

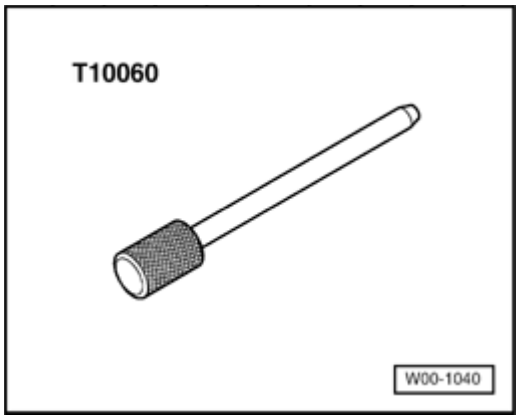

Fig. 224: Identifying Special Tools - Engine (Vehicles With Automatic Transmission), Securing To Assembly Stand
Courtesy of VOLKSWAGEN UNITED STATES, INC.

Special tools, testers and auxiliary items required

- Shackle 10-222 A/12
- Lifting tackle 3033
- Engine and Transmission Holder VAS 6095 with Holder for V8 Engine Audi S4, allroad quattro VAS 6095/1-6 or Holder for V8 Engine Audi S4, allroad quattro VAS 6095/1-6A
- Shop crane VAS 6100
- Lift arm extension for workshop crane VAS 6101

Special tools, testers and auxiliary items required

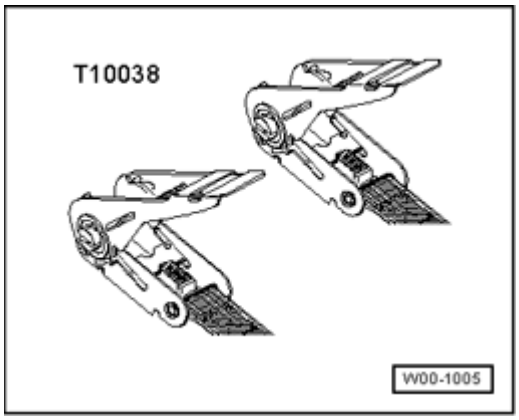

Fig. 225: Identifying Additional Hooks (2) 10-222 A/2
Courtesy of VOLKSWAGEN UNITED STATES, INC.

- Additional hooks (2) 10-222 A/2

Work procedure

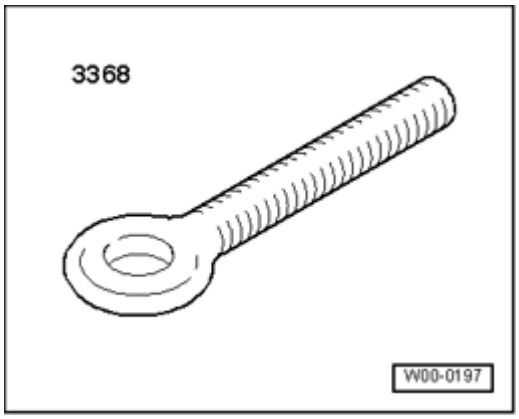

Fig. 226: Disconnecting Vacuum Hose & Air Guide Hose From Throttle Valve Control Module
Courtesy of VOLKSWAGEN UNITED STATES, INC.

- Disconnect vacuum hose - **1** -.
- Disconnect air guide hose - **2** - from throttle valve control module.

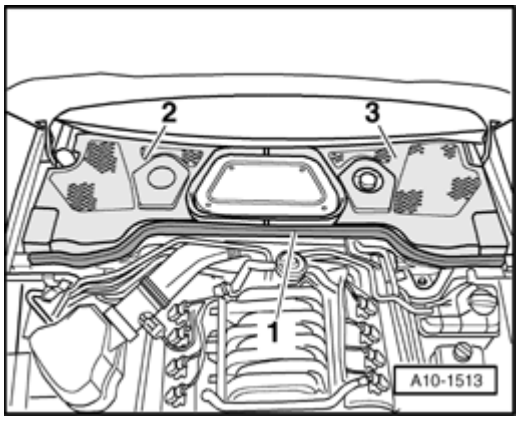

Fig. 227: Securing Shackle 10-222 A/12 To Right Rear Engine Lifting Eyelet & Hooking Additional Hook 10-222 A/2 On Shackle 10-222 A/12
Courtesy of VOLKSWAGEN UNITED STATES, INC.

- Secure shackle 10-222 A/12 to right rear engine lifting eyelet.
- Hook additional hook 10-222 A/2 on shackle 10-222 A/12.

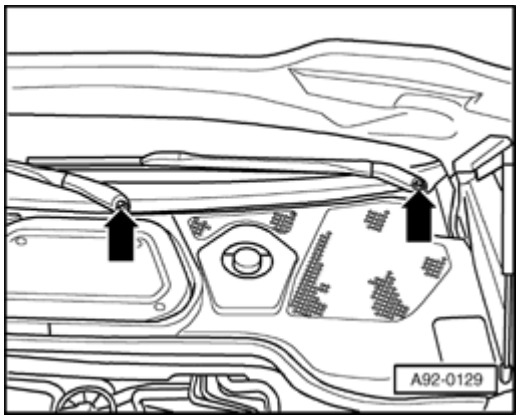

Fig. 228: Engaging Engine Sling 3033 On Additional Hook 10-222 A/2 And On Workshop Crane VAS 6100 With Lift Arm Extension For Workshop Crane VAS 6101
Courtesy of VOLKSWAGEN UNITED STATES, INC.

- Engage engine sling 3033 on additional hook 10-222 A/2 and on workshop crane VAS 6100 with lift arm extension for workshop crane VAS 6101 as shown in the illustration.
- Lift engine from support elements of scissor lift platform VAS 6131 A.
- Remove engine mount with left engine support.

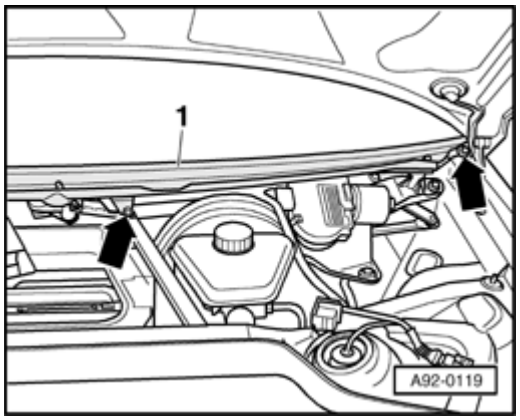

Fig. 229: Securing Engine With Transmission Holder VAS 6095
Courtesy of VOLKSWAGEN UNITED STATES, INC.

- Secure engine with Holder for V8 Engine Audi S4, allroad quattro VAS 6095/1-6 or Holder for V8 Engine Audi S4, allroad quattro VAS 6095/1-6A tightened to 42 Nm to Engine and Transmission Holder VAS 6095 as shown in the illustration.

Engine (vehicles with automatic transmission), installing

NOTE:

- **During assembly, replace self-locking nuts and bolts.**
- **Always replace bolts that are tightened to torque as well as sealing rings, gaskets and O-rings.**
- **Secure all hose connections using hose clamps appropriate for the model type .**

- **During installation, re-install all heat insulation sleeves at the same locations.**
- **During installation, all cable ties must be re-installed at the same location.**

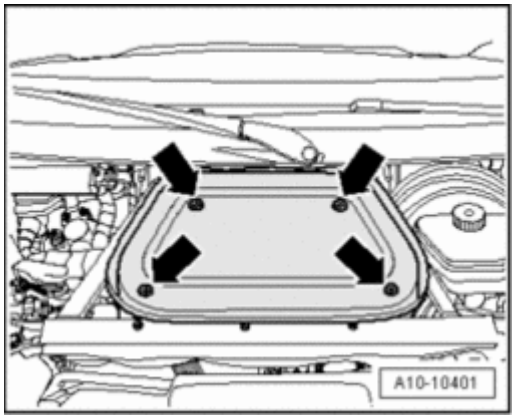

Fig. 230: Checking Installation Dimension For Torque Converter
Courtesy of VOLKSWAGEN UNITED STATES, INC.

Installation dimension for torque converter, checking

When torque converter is installed correctly, distance between contact surface of threaded holes at torque converter and contact surface of converter housing on Automatic Transmission 09L is approx. 19 mm.

CAUTION: If torque converter is incorrectly installed, torque converter coupling and ATF pump could be damaged when transmission and engine are flanged together.

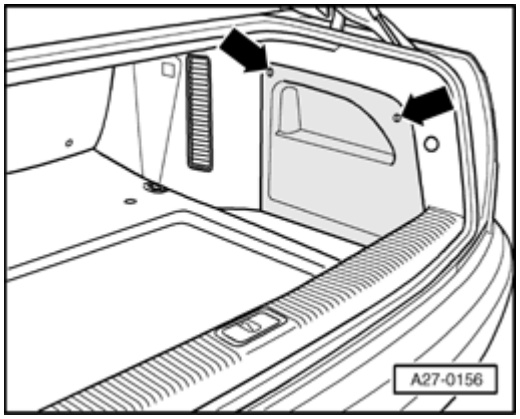

Fig. 231: Torque Converter Bolts
Courtesy of VOLKSWAGEN UNITED STATES, INC.

- Before connecting engine and transmission, rotate torque converter and engine drive plate so that one hole or one threaded hole stands at height of opening of removed starter - **arrow** -.
- To secure torque converter to drive plate, use new original ribbed bolts .
- Bolt transmission to engine.

CAUTION: Keep checking whether the torque converter behind the drive plate can be turned before and during tightening of the bolts at engine/transmission flange. If the torque converter cannot be turned, it must be assumed that it has not been inserted properly and that the coupling plate of the ATF pump and therefore the transmission will be destroyed during final tightening of the bolts.

NOTE:

- **Torque specifications only apply to lightly greased, oiled, phosphated or blackened nuts and bolts.**
- **Additional lubricants, such as engine or transmission oil are permissible, although lubricants containing graphite are not.**
- **Do not use any degreased parts.**
- **Tolerance for torque specifications ± 15%.**

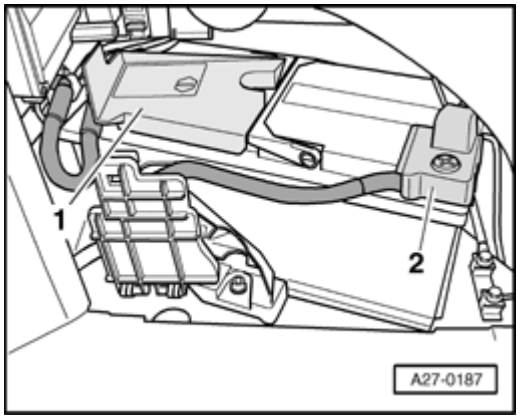

Fig. 232: Identifying Engine/Transmission Threaded Connections
Courtesy of VOLKSWAGEN UNITED STATES, INC.

Engine/transmission, fastening

Item	Bolt	Nm
1	M12x80	65
2, 4, 5	M12x105	65
3	M12x110	65
6	M12x130	65
7	M12x170	65
8, 9, 10	M10x60	45
A	Alignment sleeves for centering	

The rest of installation is in reverse order of removal, note the following:

- Install front exhaust pipes with catalytic converters: Left --> **Left front exhaust pipe with primary and main catalytic converter (vehicles with manual transmission), removing and installing** , right --> **Right front exhaust pipe with primary and main catalytic converter (vehicles with automatic**

transmission), removing and installing.

- Install ATF lines --> **37 CONTROLS, HOUSING** .
- Always clean threaded driveshaft bores in transmission flanged shaft of locking fluid residue using a tap before installation.

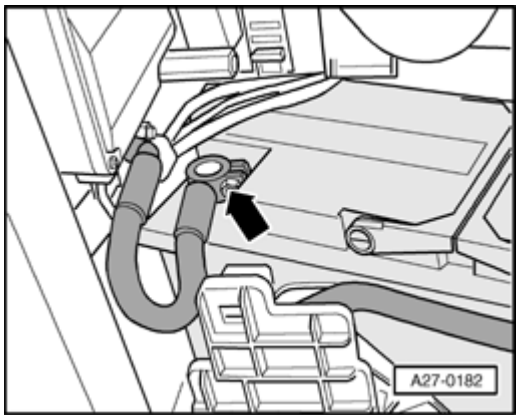

Fig. 233: Positioning Support Elements From VAS 6131/11 And VAS 6131/12 At Left On Engine/Transmission
Courtesy of VOLKSWAGEN UNITED STATES, INC.

- Rotate spindles of support elements downward at left of engine/transmission assembly.
- Remove both base plates for left support element on scissor lift platform VAS 6131 A.

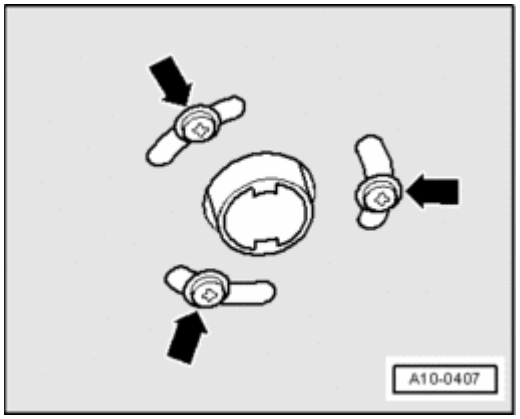

Fig. 234: Positioning Support Elements From VAS 6131/10 And VAS 6131/11 At Right On Engine/Transmission
Courtesy of VOLKSWAGEN UNITED STATES, INC.

- Rotate spindles of support elements downward at right of engine/transmission assembly.
- Remove both base plates for right support element on Scissor Lift Table VAS 6131 A.

NOTE:

- **The support points for front of engine and rear of transmission remain unchanged.**

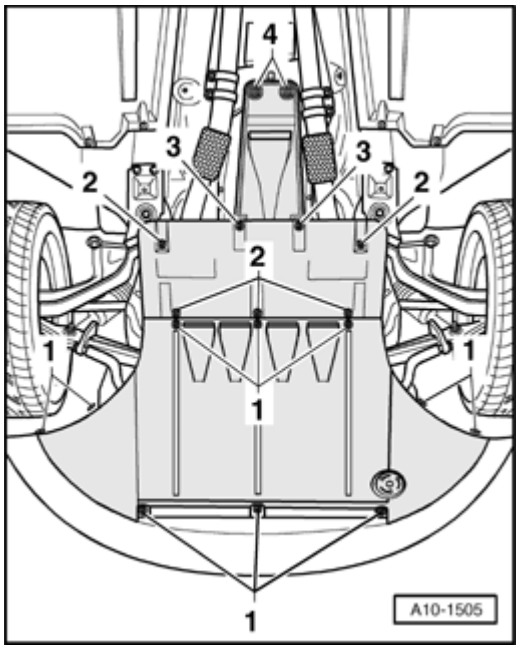

Fig. 235: Identifying Scissor Lift Platform VAS 6131
Courtesy of VOLKSWAGEN UNITED STATES, INC.

- Equip scissor lift platform VAS 6131 A with support set for Audi VAS 6131/10 as follows:

Platform coordinates	Parts of support set for Audi VAS 6131/10			
B4 * See note	/10-1	/10-4	/10-5	/10-11
G3 * See note	/10-1	/10-4	/10-5	/10-11
B10	/10-1	/10-2	/10-5	/10-8 * See note
G10	/10-1	/10-2	/10-5	/10-8 * See note
C15 * See note	/10-1	/10-3	/10-5	/10-12
F15 * See note	/10-1	/10-3	/10-5	/10-12

*Support elements remain unchanged.

*Only install support elements after installing subframe.

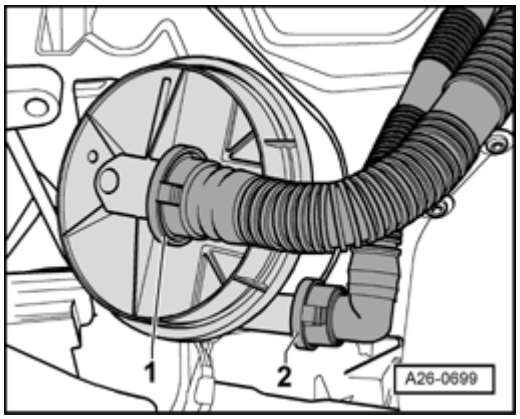

Fig. 236: Positioning Support Elements From VAS 6131/10 At Left/Right On Subframe
Courtesy of VOLKSWAGEN UNITED STATES, INC.

- Position subframe on both attachments VAS 6131/10-8.
- Turn spindles of support elements upward on both sides.
- Tighten base plates for support elements to 20 Nm on scissor lift platform VAS 6131 A.
- Install left and right transmission mounts --> **37 CONTROLS, HOUSING** .

- Using scissor lift platform VAS 6131 A , slowly guide engine/transmission unit with subframe into body from below.

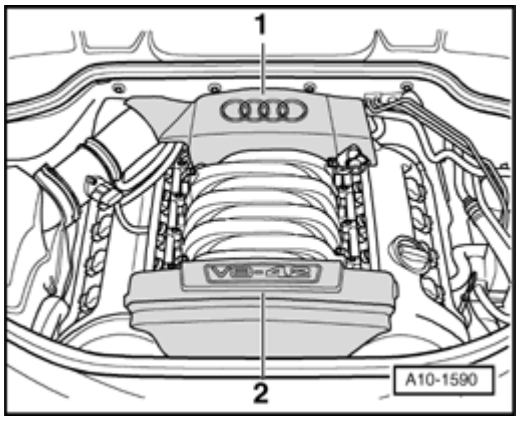

Fig. 237: Removing/Installing Bolts In Diagonal Sequence And In Stages
Courtesy of VOLKSWAGEN UNITED STATES, INC.

- Align subframe and engine bearing plates according to markings applied on long members during removal.
- Tighten bolts for subframe and engine mount plates only to specified torque. Do not tighten further (tighten bolts only after axle alignment).

1. 65 Nm
2. 110 Nm
3. 110 Nm

4. 75 Nm

CAUTION: Vehicle must not be driven in this condition.

The rest of installation is in reverse order of removal, note the following:

- Install selector lever cable, adjust if necessary -->**37 CONTROLS, HOUSING** .
- Install drive axles --> **40 - FRONT SUSPENSION** .
- Install guide control arm, control arm, stabilizer bar and suspension strut --> **40 - FRONT SUSPENSION** .
- Align exhaust system free of tension --> **Exhaust system, installing free of tension**.
- Install refrigerant lines --> **87 AIR CONDITIONING** .

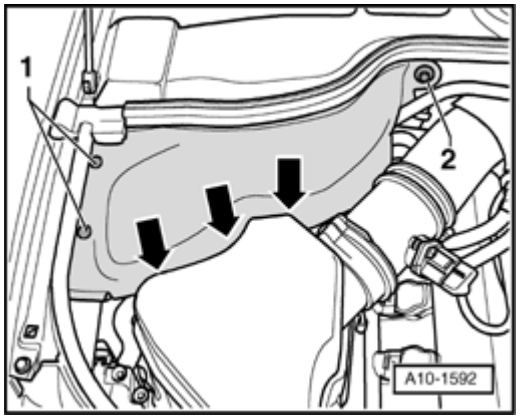

Fig. 238: Installing/Removing Fuel Hose To/From Connection On Fuel Rail Line
Courtesy of VOLKSWAGEN UNITED STATES, INC.

- Secure fuel hose to connection on fuel rail line. To do so, counter hold using an open-end wrench at each hex head - **1** - and - **3** - and tighten union nut - **2** - to 22 Nm.
- Install lock carrier with attachments -->
  - **50 BODY, FRONT**
  - **50 - BODY - FRONT** for BODY EXTERIOR - CABRIOLET

  .
- Install ATF lines -->
  - **37 - AUTOMATIC TRANSMISSION - CONTROLS, HOUSING** for 5 SPD. AUTOMATIC TRANSMISSION 01V
  - **37 - AUTOMATIC TRANSMISSION - CONTROLS, HOUSING** for 5 SPD. AUTOMATIC TRANSMISSION 01V FRONT AND ALL WHEEL DRIVE - INTERNAL COMPONENTS, SERVICING
  - **37 CONTROLS, HOUSING** for 6 SPD. AUTOMATIC TRANSMISSION 09L ALL WHEEL DRIVE

.

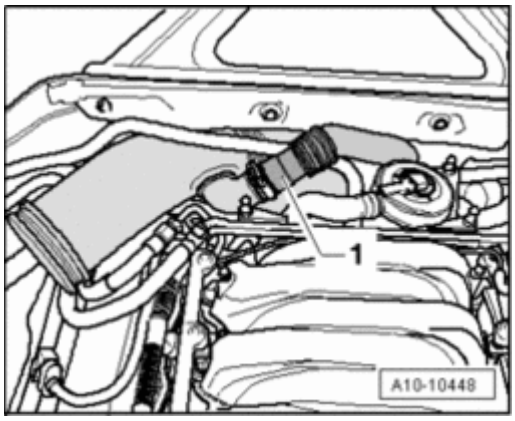

Fig. 239: Placing Torque Support On Rubber Buffer For Torque Support And Tightening Bolts
Courtesy of VOLKSWAGEN UNITED STATES, INC.

- Place torque support on rubber buffer for torque support and tighten bolts - **arrows** -.
- Install front bumper cover -->
  - **63 BUMPER**
  - **63 - BUMPERS** for BODY EXTERIOR - CABRIOLET

  .
- Electrical connections and routing --> Electrical Wiring Diagrams, Troubleshooting and Component Locations.
- Observe safety precautions after connecting battery -->
  - **97 WIRING**
  - **97 WIRING** for ELECTRICAL EQUIPMENT, CABRIOLET

  .

CAUTION: Do not use a battery charger for starting assistance! There is the risk that the vehicle control modules could be damaged.

- Mount wiper arms and adjust -->
  - **92 WINDSHIELD WIPER WASHER SYSTEM**
  - **92 WINDSHIELD WIPER & WASHER SYSTEM** for ELECTRICAL EQUIPMENT, CABRIOLET

  .
- Check oil level --> **Oil level, checking**.
- Before starting engine for the first time, fill power steering reservoir with hydraulic oil --> **48 - STEERING** .

CAUTION: Power-steering pump must not run dry.

- Fill with coolant **Filling**.

NOTE:

- **Only reuse drained coolant if cylinder head or engine block was not replaced.**
- **Dirty coolant must not be re-used.**

- Fill refrigerant circuit --> **87 - AIR CONDITIONING** .
- Align subframe and both engine mount plate --> **40 - FRONT SUSPENSION** .
- Perform axle alignment --> **44 - WHEELS, TIRES, VEHICLE ALIGNMENT** .

CAUTION: After axle alignment, tighten subframe bolts to final torque.

- Check headlight adjustment -->
  - **01 - MAINTENANCE**
  - **01 - MAINTENANCE** for MAINTENANCE PROCEDURES - CABRIOLET

.

Torque specifications

NOTE:

- **Torque specifications only apply to lightly greased, oiled, phosphated or blackened nuts and bolts.**
- **Additional lubricants, such as engine or transmission oil are permissible, although lubricants containing graphite are not.**
- **Do not use any degreased parts.**
- **Tolerance for torque specifications ± 15%.**

Component		Nm
Bolts/nuts	M6	9
	M8	20
	M10	40
	M12	65
Exceptions:		
Drive plate to torque converter		85 * See note
Clamp B+ to starter		16
Engine support to engine		42 * See note
Heat shield for drive shaft to transmission		23
Hydraulic pressure line		40
Torque support stop to lock carrier		28
Fuel hose to fuel line		22

*Replace bolts.

*Insert bolts with locking fluid.

13 - ENGINE - CRANKSHAFT, CYLINDER BLOCK

ENGINE, DISASSEMBLING AND ASSEMBLING

Lock carrier in service position, overview

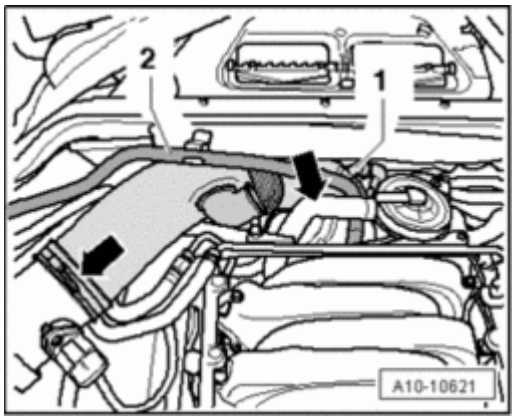

Fig. 240: Lock Carrier In Service Position, Overview
Courtesy of VOLKSWAGEN UNITED STATES, INC.

1 - 40 Nm

2 - Support tool 3369

- Tighten to 10 Nm

3 - 10 Nm

4 - 10 Nm

5 - 10 Nm

6 - 10 Nm

7 - Support tool 3369

- Tighten to 10 Nm

8 - 40 Nm

Lock carrier, moving into service position

Special tools, testers and auxiliary items required

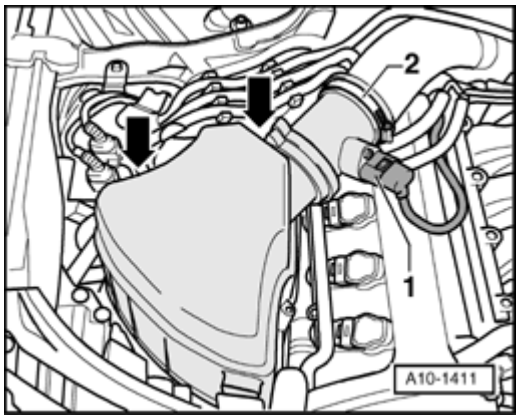

Fig. 241: Support Tool 3369
Courtesy of VOLKSWAGEN UNITED STATES, INC.

- Support tool 3369

Work procedure

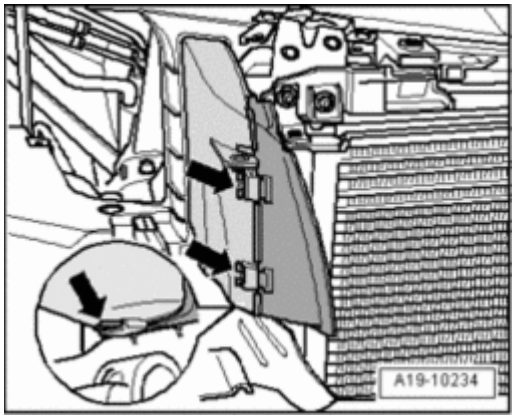

Fig. 242: Removing Quick-Release Fasteners, Screws And Noise Insulation
Courtesy of VOLKSWAGEN UNITED STATES, INC.

- Remove quick-release fasteners - **1** - , remove screws - **2** - and remove noise insulation.
- Remove both front wheels.
- Loosen left and right wheel housing liners in front area.
- Remove front bumper cover -->
  - **63 BUMPER**
  - **63 - BUMPERS** for BODY EXTERIOR - CABRIOLET

.

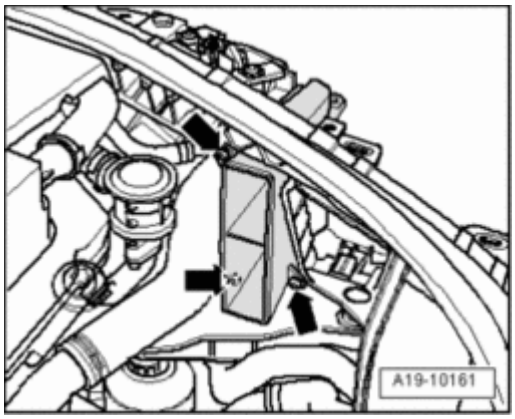

Fig. 243: Removing Cover In Engine Compartment (Left Side)
Courtesy of VOLKSWAGEN UNITED STATES, INC.

- Remove cover - **1** - in engine compartment (left side).

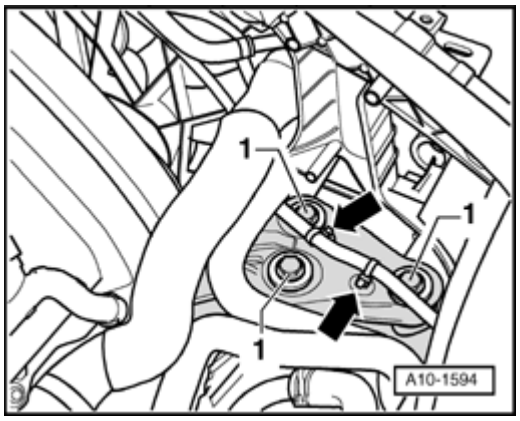

Fig. 244: Removing Electrical Harness Connectors And From Bracket
Courtesy of VOLKSWAGEN UNITED STATES, INC.

- Remove electrical harness connectors - **1** - and - **2** - from bracket.
- Free up wires to lock carrier.

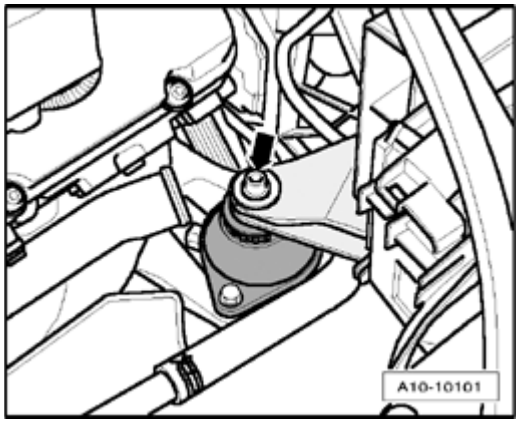

Fig. 245: Removing Cover In Engine Compartment (Right Side)

Courtesy of VOLKSWAGEN UNITED STATES, INC.

- Remove cover - **1** - in engine compartment (right side).

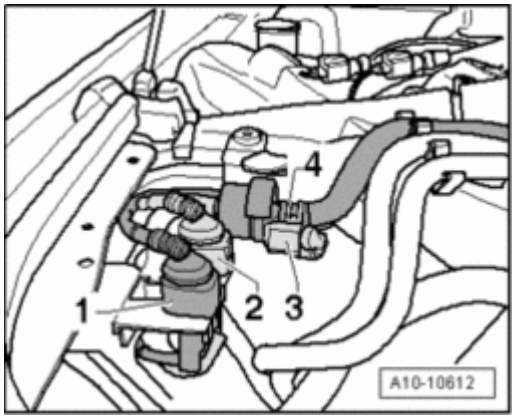

Fig. 246: Identifying Evaporative Emission Canister Purge Regulator Valve N80 And Air Duct
Courtesy of VOLKSWAGEN UNITED STATES, INC.

- Disengage Evaporative Emission (EVAP) Canister Purge Regulator Valve N80 - **1** - from air guide.
- Remove bolts - **arrows** -.
- Remove air duct - **2** -.

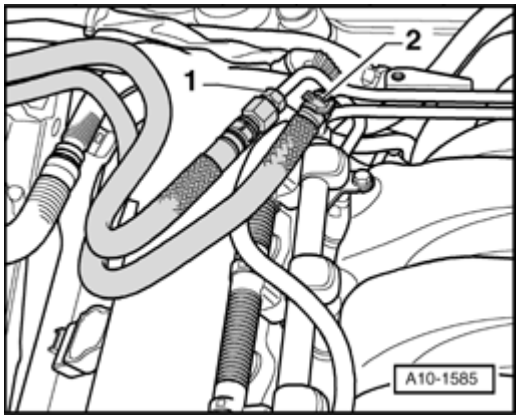

Fig. 247: Removing Left Air Guide In Front Of Auxiliary Cooler
Courtesy of VOLKSWAGEN UNITED STATES, INC.

- Remove left air guide - **arrow** - in front of auxiliary cooler.

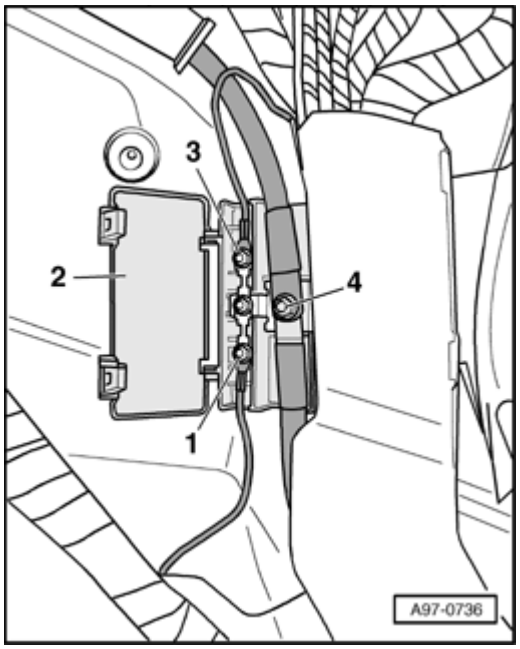

Fig. 248: Removing Right Air Guide In Front Of Auxiliary Cooler
Courtesy of VOLKSWAGEN UNITED STATES, INC.

- Remove right air guide - **arrow** - in front of auxiliary cooler.

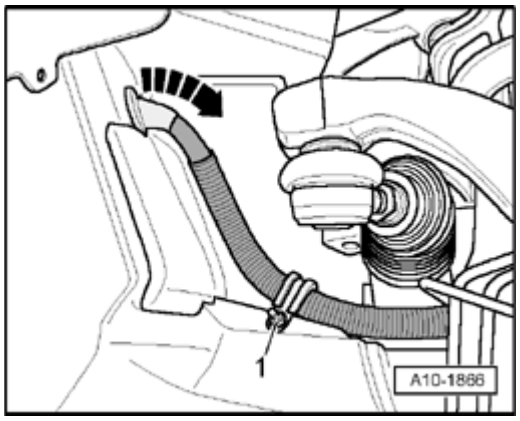

Fig. 249: Removing Bolts At Left/Right Side Of Bumper
Courtesy of VOLKSWAGEN UNITED STATES, INC.

- Remove bolts - **arrows** - at left and right side of bumper.
- Pull off hood seal from lock carrier and fender edges.

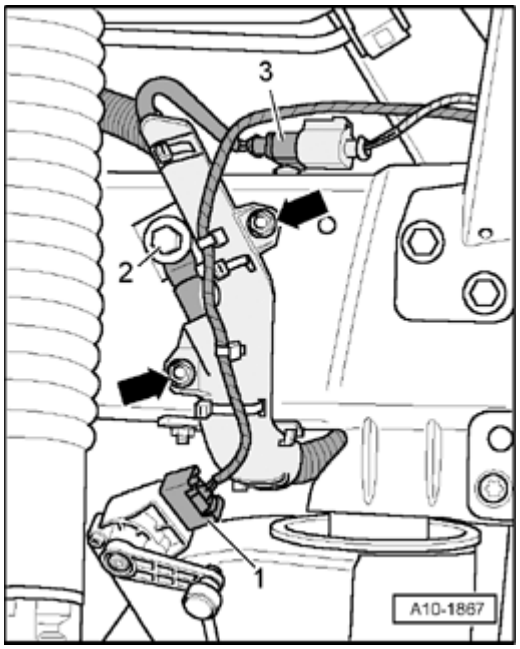

Fig. 250: Threading 3369 Support Tool Into Empty Holes At Left/Right
Courtesy of VOLKSWAGEN UNITED STATES, INC.

- Thread support tool 3369 into empty bores at left and right.
- Remove bolts at impact absorbers - **arrows** - at left and right.
- Carefully pull lock carrier toward front.

Installing

Installation is in reverse order of removal, note the following:

- Install lock carrier with attachments -->
  - **50 BODY, FRONT**
  - **50 - BODY - FRONT** for BODY EXTERIOR - CABRIOLET

.

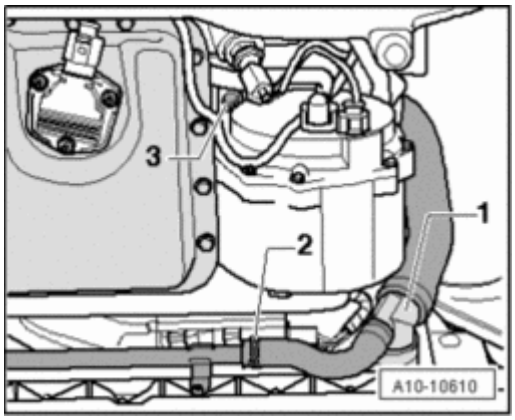

Fig. 251: Placing Torque Support On Rubber Buffer For Torque Support And Tightening Bolts

Courtesy of VOLKSWAGEN UNITED STATES, INC.

- Place torque support on rubber buffer for torque support and tighten bolts - **arrows** -.
- Install the front bumper cover -->
  - **63 BUMPER**
  - **63 - BUMPERS** for BODY EXTERIOR - CABRIOLET

  .
- Check headlight adjustment -->
  - **01 - MAINTENANCE**
  - **01 - MAINTENANCE** for MAINTENANCE PROCEDURES - CABRIOLET

  .

Torque specifications

Component	Nm
Torque support stop to lock carrier	28

BELT PULLEY SIDE, SERVICING

Ribbed belt drive for generator, component overview

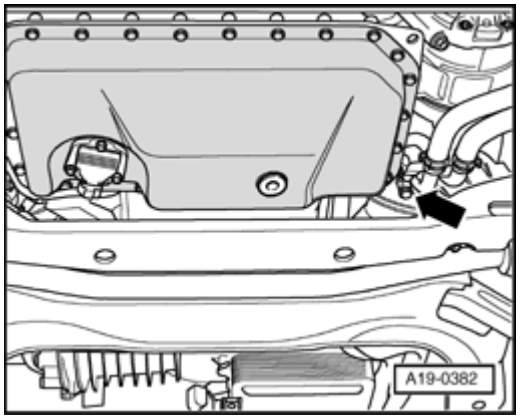

Fig. 252: Ribbed Belt Drive For Generator, Component Overview
Courtesy of VOLKSWAGEN UNITED STATES, INC.

1 - 22 Nm

2 - 22 Nm

3 - Ribbed belt tensioner

4 - 22 Nm

5 - Generator

- Removing and installing -->
  - **27 BATTERY, STARTER, GENERATOR, CRUISE CONTROL**
  - **27 BATTERY, STARTER, GENERATOR, CRUISE CONTROL** for ELECTRICAL EQUIPMENT, CABRIOLET

6 - M8 - 22 Nm; M10 - 46 Nm

7 - Alignment bushing

- For generator bracket
- 2 pieces

8 - Generator bracket

9 - 10 Nm

10 - Idler roller holder

11 - Vibration damper

- Removing and installing --> **Vibration damper, removing and installing**

12 - 22 Nm plus an additional 45 ° ($^{1}/_{8}$ turn)

- Replace

13 - Idler roller for ribbed belt

14 - 22 Nm

15 - Cover cap

16 - Ribbed belt

- Check for wear
- Do not kink
- Before removing, mark direction of rotation using chalk or felt-tip marker. Reversing direction of rotation of a run-in belt can destroy the belt
- Removing and installing --> **Ribbed belt, removing and installing**
- When installing ribbed belt, make sure it is seated correctly on pulleys

17 - Threaded bushing

Ribbed belt, removing and installing

Special tools, testers and auxiliary items required

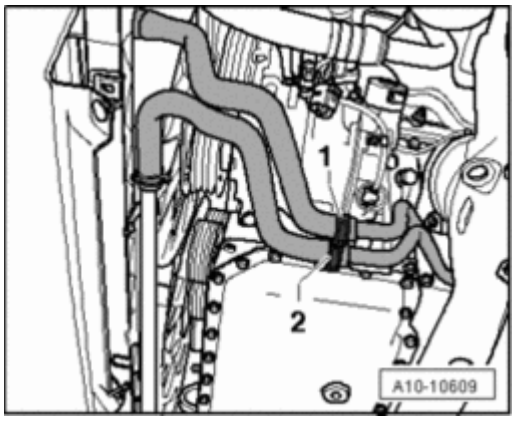

Fig. 253: Identifying Torque Wrench V.A.G. 1332
Courtesy of VOLKSWAGEN UNITED STATES, INC.

- Torque wrench V.A.G 1332

Removing

- Bring lock carrier into service position --> **Lock carrier, moving into service position**.

NOTE:

- **Before removing ribbed belt, mark the turning direction on it with chalk or a felt tip pen. A reversed direction of rotation can cause damage to the belt under operating conditions.**

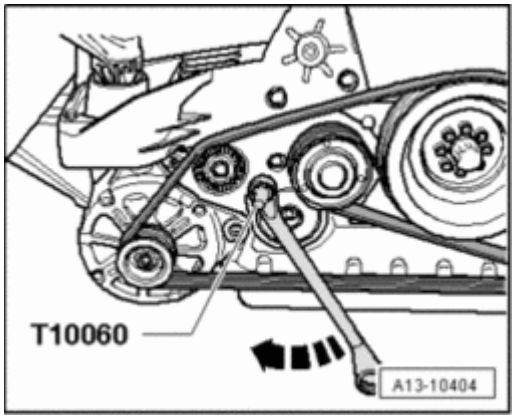

Fig. 254: Loosening Tensioning Bolt And Ribbed Belt
Courtesy of VOLKSWAGEN UNITED STATES, INC.

- Loosen tensioning bolt - **arrow** - and remove ribbed belt.

Installing

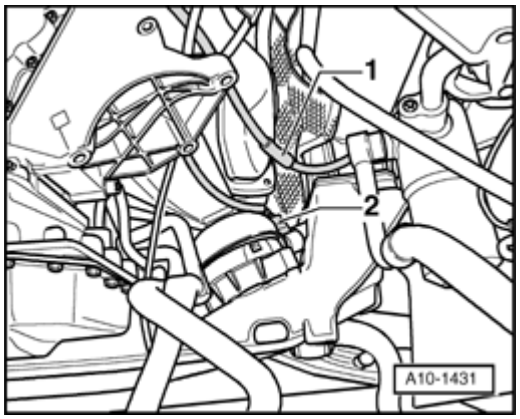

Fig. 255: Placing Ribbed Belt Over Belt Pulley In Sequence
Courtesy of VOLKSWAGEN UNITED STATES, INC.

- Place ribbed belt over belt pulley in specified sequence.

1. Generator
2. Ribbed belt
3. Idler roller
4. Vibration damper
5. Tensioning roller

NOTE:

- **When installing the ribbed belt, make sure it is seated correctly on the pulleys.**

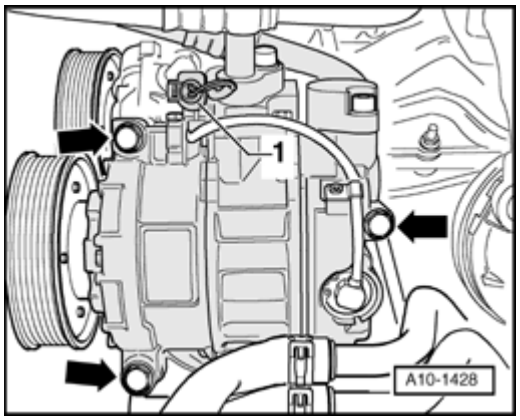

Fig. 256: Positioning Torque Wrench On Belt Tensioner Hex Bolt
Courtesy of VOLKSWAGEN UNITED STATES, INC.

- Position torque wrench on belt tensioner hex bolt and pre-tighten ribbed belt to 70 Nm.
- At the same time, tighten tensioning bolt - **arrow** - to 22 Nm.

The rest of installation is in reverse order of removal, note the following:

- Install lock carrier with attachments -->
  - **50 BODY, FRONT**
  - **50 - BODY - FRONT** for BODY EXTERIOR - CABRIOLET

  .
- Start engine and check belt running.

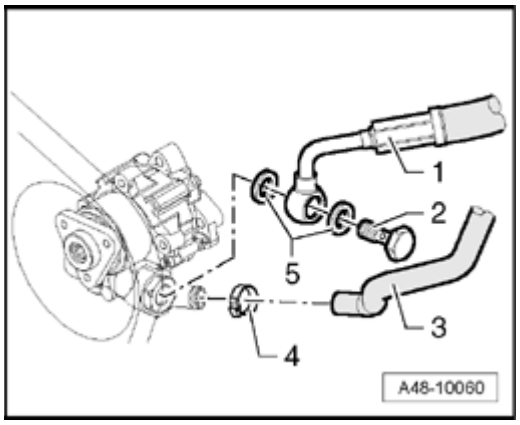

Fig. 257: Placing Torque Support On Rubber Buffer For Torque Support And Tightening Bolts
Courtesy of VOLKSWAGEN UNITED STATES, INC.

- Place torque support on rubber buffer for torque support and tighten bolts - **arrows** -.
- Install the front bumper cover -->
  - **63 BUMPER**
  - **63 - BUMPERS** for BODY EXTERIOR - CABRIOLET

  .
- Check headlight adjustment -->
  - **01 - MAINTENANCE**
  - **01 - MAINTENANCE** for MAINTENANCE PROCEDURES - CABRIOLET

  .

Torque specifications

Component	Nm
Torque support stop to lock carrier	28

Vibration damper, removing and installing

Removing

- Bring lock carrier into service position --> **Lock carrier, moving into service position**.

NOTE:

- **To loosen and tighten vibration damper, counter hold on center nut of**

generator belt pulley using open end wrench.

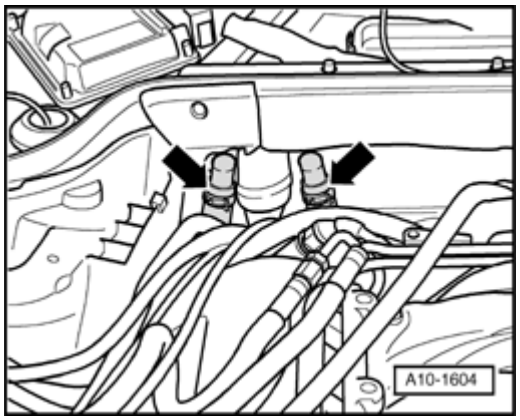

Fig. 258: Loosening Mounting Bolts On Vibration Damper Few Turns
Courtesy of VOLKSWAGEN UNITED STATES, INC.

- Loosen 8 mounting bolts - **arrow** - on vibration damper a few turns.

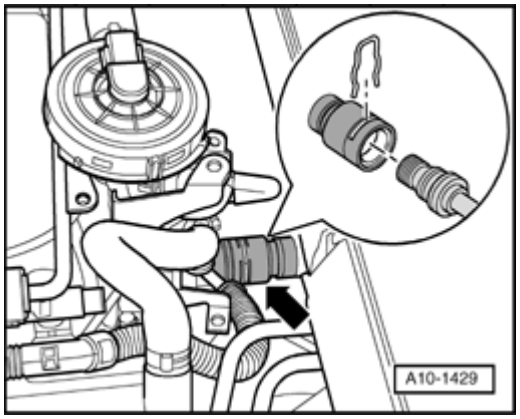

Fig. 259: Loosening Tensioning Bolt And Ribbed Belt
Courtesy of VOLKSWAGEN UNITED STATES, INC.

NOTE:

- **Before removing ribbed belt, mark the turning direction on it with chalk or a felt tip pen. A reversed direction of rotation can cause damage to the belt under operating conditions.**

- Loosen tensioning bolt - **arrow** - and remove ribbed belt.
- Remove vibration damper.

Installing

Installation is in reverse order of removal, note the following:

NOTE:

- **Replace bolts which have been tightened to torque.**

- **Installation of vibration damper is only possible in one position - note alignment bushing.**

- Install ribbed belt **Installing**.
- Install lock carrier with attachments -->
  - **50 BODY, FRONT**
  - **50 - BODY - FRONT** for BODY EXTERIOR - CABRIOLET

.

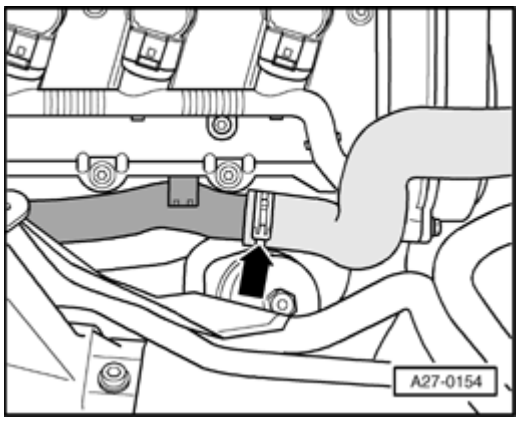

Fig. 260: Placing Torque Support On Rubber Buffer For Torque Support And Tightening Bolts
Courtesy of VOLKSWAGEN UNITED STATES, INC.

- Place torque support on rubber buffer for torque support and tighten bolts - **arrows** -.
- Install front bumper cover -->
  - **63 BUMPER**
  - **63 - BUMPERS** for BODY EXTERIOR - CABRIOLET

.

- Check headlight adjustment -->
  - **01 - MAINTENANCE**
  - **01 - MAINTENANCE** for MAINTENANCE PROCEDURES - CABRIOLET

.

Torque specifications

Component	Nm
Vibration damper to crankshaft	22 plus an additional 45 ° * See note
Torque support stop to lock carrier	28

* 45 ° corresponds to a 1/8 turn

*Replace bolts.

Crankshaft seal (ribbed belt side), replacing

Special tools, testers and auxiliary items required

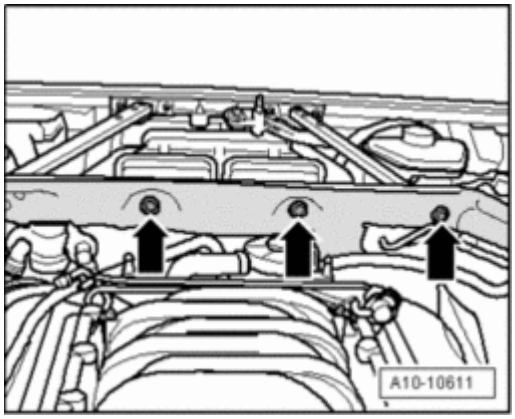

Fig. 261: Oil Seal Extractor T40019
Courtesy of VOLKSWAGEN UNITED STATES, INC.

- Oil Seal Extractor T40019

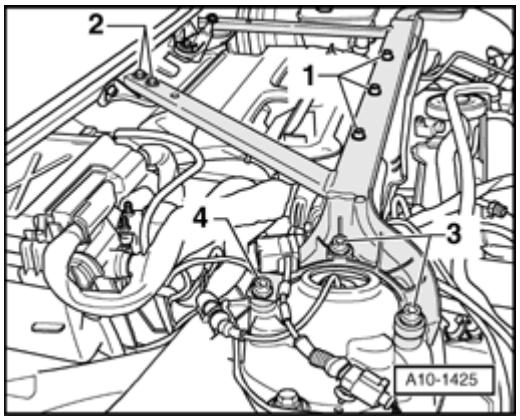

Fig. 262: Assembly Tool T40048
Courtesy of VOLKSWAGEN UNITED STATES, INC.

- Assembly tool T40048

Removing

- Bring lock carrier into service position --> **Lock carrier, moving into service position**.
- Remove vibration damper --> **Vibration damper, removing and installing**.
- Place inner part of Oil Seal Extractor T40019 flush with outer part and secure using knurled-head screw.

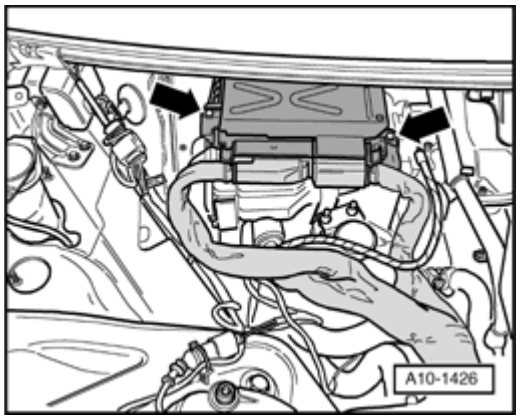

Fig. 263: Installing Oil Seal Extractor T40019
Courtesy of VOLKSWAGEN UNITED STATES, INC.

- Lubricate threaded head of Oil Seal Extractor T40019 , position and with forced pressure screw into oil seal as far as possible.
- Loosen knurled thumb screw and turn inner portion against crankshaft until seal is pulled out.
- Clamp seal extractor at mounting points in a vise.
- Remove seal using pliers.

Installing

- Clean operating and sealing surfaces.

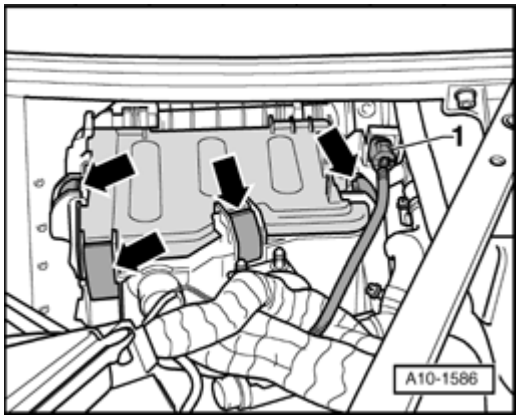

Fig. 264: Inserting Assembly Device T40048/1 Onto Pull Sleeve T40048/2 And Sliding Seal Onto Pull Sleeve
Courtesy of VOLKSWAGEN UNITED STATES, INC.

- Insert assembly device T40048/1 onto pull sleeve T40048/2 and slide seal - **1** - onto pull sleeve.
- Remove assembly device.

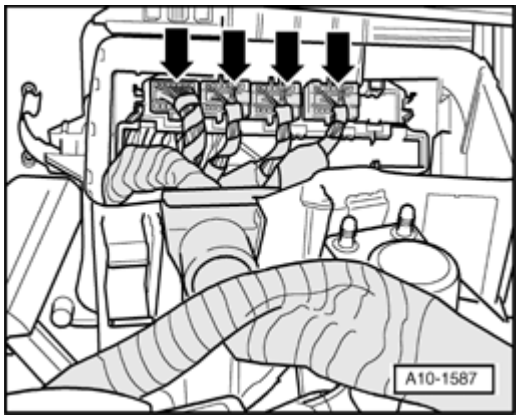

Fig. 265: Placing Pull Sleeve T40048/2 On Crankshaft And Sliding Seal Into Sealing Surface On Engine
Courtesy of VOLKSWAGEN UNITED STATES, INC.

- Place pull sleeve T40048/2 on crankshaft and slide seal - **1** - into sealing surface on engine.

NOTE:

- **Pull sleeve remains on crankshaft for pressing in.**

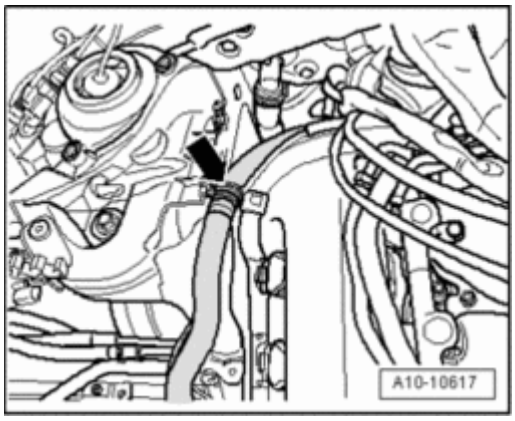

Fig. 266: Positioning Pressure Sleeve T40048/3 With Bolts On Crankshaft
Courtesy of VOLKSWAGEN UNITED STATES, INC.

- Position pressure sleeve T40048/3 with bolts M8x55 mm - **arrows** - on crankshaft.
- Then tighten bolts by hand.
- Tighten bolts each $^{1}/_{2}$ rotation by alternating sides to press in seal until it reaches stop.

The rest of installation is in reverse order of removal, note the following:

- Install vibration damper --> **Vibration damper, removing and installing**.
- Install lock carrier with attachments -->
  - **50 BODY, FRONT**
  - **50 - BODY - FRONT** for BODY EXTERIOR - CABRIOLET

.

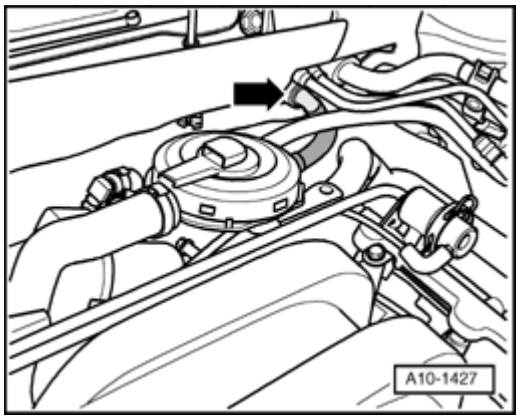

Fig. 267: Placing Torque Support On Rubber Buffer For Torque Support And Tightening Bolts
Courtesy of VOLKSWAGEN UNITED STATES, INC.

- Place torque support on rubber buffer for torque support and tighten bolts - **arrows** -.
- Install front bumper cover -->
  - **63 BUMPER**
  - **63 - BUMPERS** for BODY EXTERIOR - CABRIOLET

  .
- Check headlight adjustment -->
  - **01 - MAINTENANCE**
  - **01 - MAINTENANCE** for MAINTENANCE PROCEDURES - CABRIOLET

  .

Torque specifications

Component	Nm
Torque support stop to lock carrier	28

TIMING CHAIN SIDE, SERVICING

Dual-mass flywheel, component overview

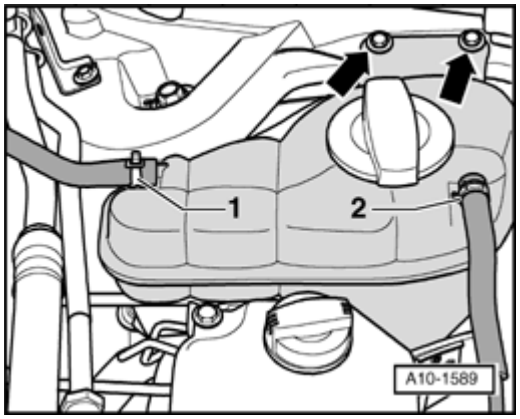

Fig. 268: Dual-Mass Flywheel, Component Overview
Courtesy of VOLKSWAGEN UNITED STATES, INC.

1 - Dual mass flywheel

- Removing and installing --> **Dual-mass flywheel, removing and installing**

2 - Needle bearing

- Pulling out and driving in --> **Dual-mass flywheel needle bearings, pulling out and driving in**

3 - Special bolt

- Replace
- Tightening torque **Torque specification**

4 - Crankshaft

5 - Sealing ring for crankshaft -timing chain side-

- Replacing --> **Crankshaft seal (timing chain side), replacing**.

Dual-mass flywheel, removing and installing

Special tools, testers and auxiliary items required

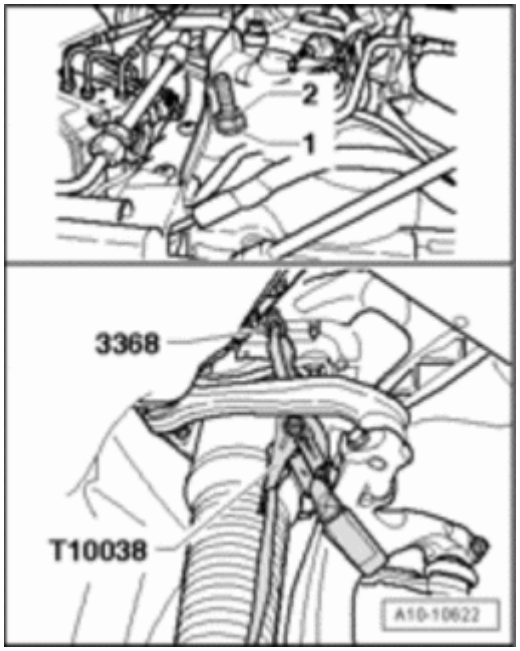

Fig. 269: Counter-Holder Tool 10-201
Courtesy of VOLKSWAGEN UNITED STATES, INC.

- Counter-holder tool 10-201

Removing

- Transmission removed.

- Remove clutch pressure plate --> **30 CLUTCH** .
- Mark dual mass flywheel to crankcase.

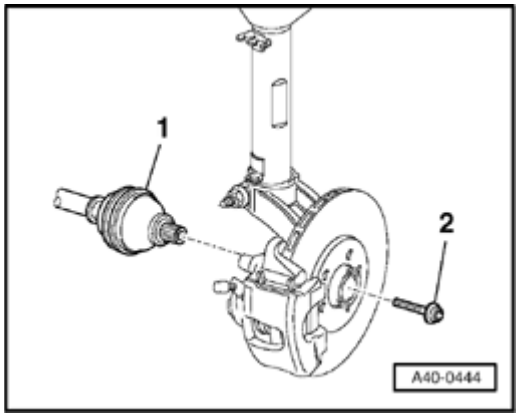

Fig. 270: Inserting Counter Hold Tool 10-201 To Loosen Bolts
Courtesy of VOLKSWAGEN UNITED STATES, INC.

- Insert counterhold tool 10-201 to loosen bolts.

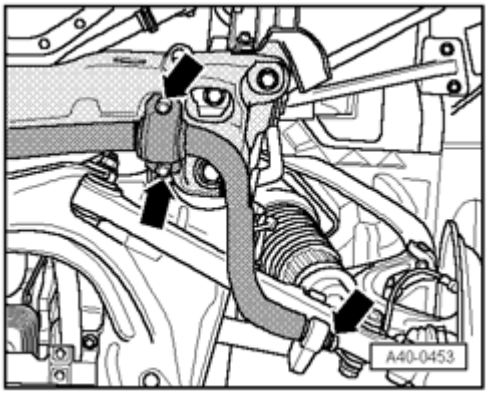

Fig. 271: Identifying Dual-Mass Flywheel & Bolts
Courtesy of VOLKSWAGEN UNITED STATES, INC.

NOTE:

- **To prevent damage to dual-mass flywheel when removing, bolts - B - must not be removed using an air-powered or impact wrench. Only removing bolts by hand is permitted.**

- Rotate dual-mass flywheel - **A** - so that bolts stand centered to holes - **arrows** -.
- When removing bolts, make sure that no bolt head makes contact on dual-mass flywheel because it will

otherwise be damaged when further installing the bolt.

Installing

Installation is in reverse order of removal, note the following:

NOTE:

- **Needle bearing is located in the flywheel and must be driven in when flywheel is replaced --> Dual-mass flywheel needle bearings, pulling out and driving in.**

- Use new bolts when securing.
- Turn over counterhold tool 10-201 to tighten bolts.
- Install clutch pressure plate --> **30 CLUTCH** .

Torque specification

Component	Nm
Dual-mass flywheel to crankshaft	
Bolt length 22.5 mm	60 plus an additional 90 ° * See note

* 90 ° corresponds to one quarter rotation.

*Replace bolts.

Dual-mass flywheel needle bearings, pulling out and driving in

Special tools, testers and auxiliary items required

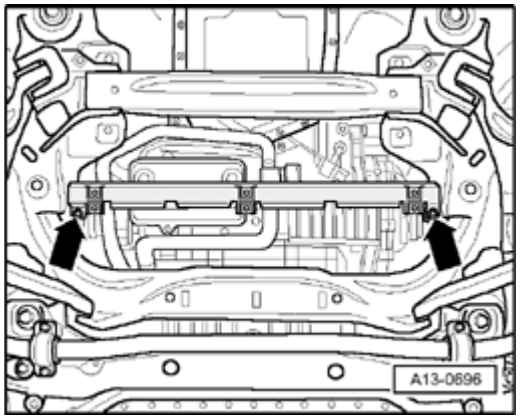

Fig. 272: Bearing Driver 3264
Courtesy of VOLKSWAGEN UNITED STATES, INC.

- Bearing driver 3264

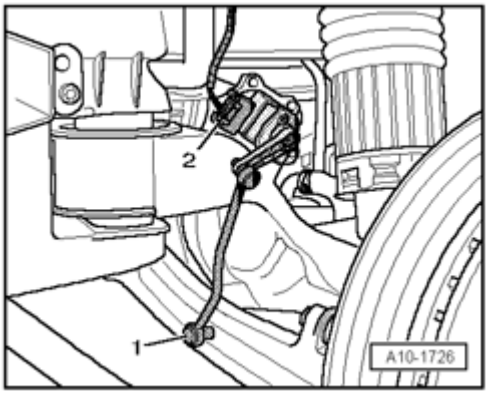

Fig. 273: Kukko 21/2 Internal puller, Kukko 21/4 Internal puller, Kukko 22/2 Counter support
Courtesy of VOLKSWAGEN UNITED STATES, INC.

- 1 - Internal puller Kukko 21/1
- 4 - Counter-support Kukko 22/1

Work procedure

- Transmission removed.

  - Remove clutch pressure plate --> **30 CLUTCH** .

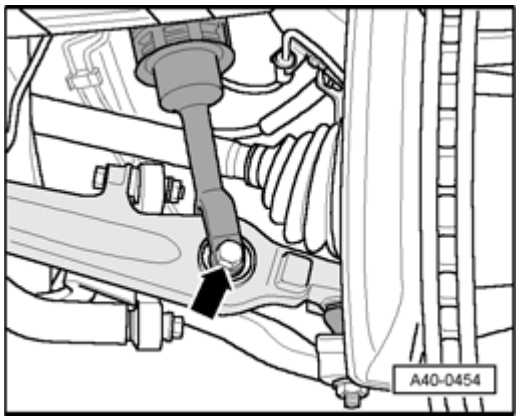

Fig. 274: Pulling Out Needle Bearing Using Internal Puller Kukko 21/1 And Support Kukko 22/1
Courtesy of VOLKSWAGEN UNITED STATES, INC.

  - Pull out needle bearing using internal puller Kukko 21/1 and support Kukko 22/1.

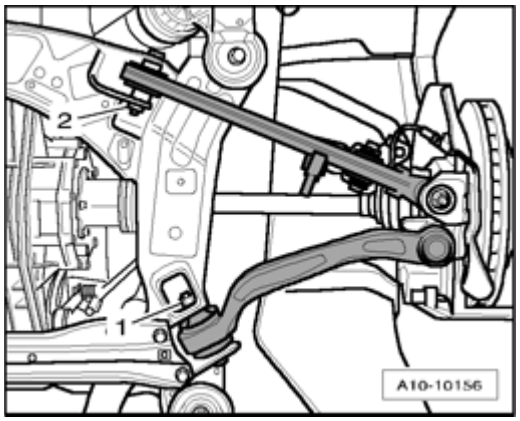

Fig. 275: Driving In Needle Bearing Using Bearing Driver 3264 Into Dual-Mass Flywheel Until It Reaches Stop
Courtesy of VOLKSWAGEN UNITED STATES, INC.

- Drive in needle bearing using bearing driver 3264 into dual-mass flywheel until it reaches stop.
- Install clutch pressure plate --> **30 CLUTCH** .

Drive plate, component overview

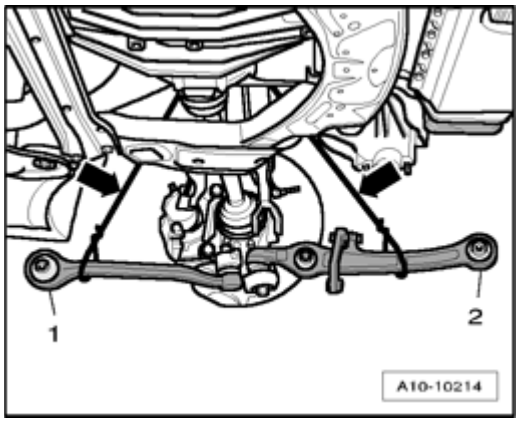

Fig. 276: Drive Plate, Component Overview
Courtesy of VOLKSWAGEN UNITED STATES, INC.

1 - Drive plate

- Removing and installing --> **Drive plate, removing and installing**

2 - Washer

- Mark for re-installation

3 - Special bolt

- Replace
- Tightening torque **Torque specification**

4 - Shim

- Mark for re-installation

5 - Sealing ring for crankshaft - timing chain side

- Removing and installing --> **Crankshaft seal (timing chain side), replacing**

6 - Crankshaft

Drive plate, removing and installing

Special tools, testers and auxiliary items required

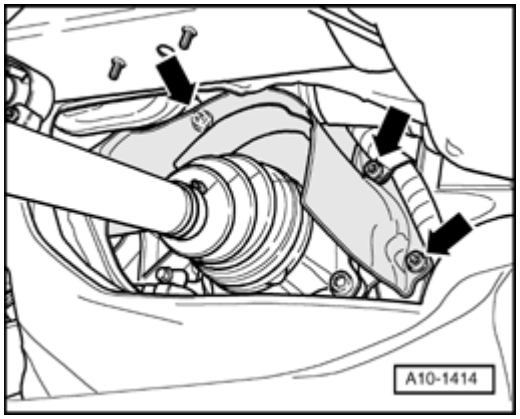

Fig. 277: Counter-Holder Tool 10-201
Courtesy of VOLKSWAGEN UNITED STATES, INC.

- Counter-holder tool 10-201

Removing

- Transmission removed.
  - Mark drive plate and washer to crankshaft.

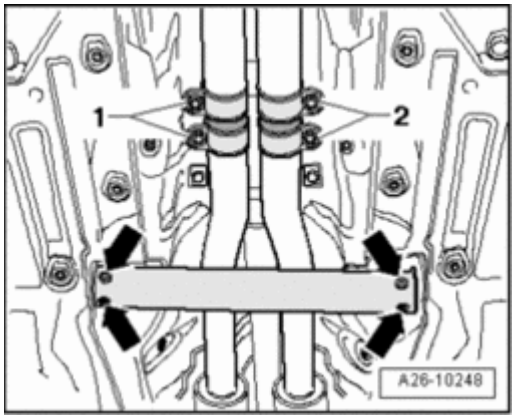

Fig. 278: Inserting Counter Hold Tool 10-201 To Loosen Bolts
Courtesy of VOLKSWAGEN UNITED STATES, INC.

- Insert counterhold tool 10-201 to loosen bolts.
- Remove drive plate.

Installing

Installation is in reverse order of removal, note the following:

- Install drive plate with washer.
- Use new bolts when securing.
- Turn over counterhold tool 10-201 to tighten bolts.

Torque specification

Component	Nm
Drive plate to crankshaft	30 plus an additional 90 ° * See note

* 90 ° corresponds to one quarter rotation.

*Replace bolts.

Crankshaft seal (timing chain side), replacing

Special tools, testers and auxiliary items required

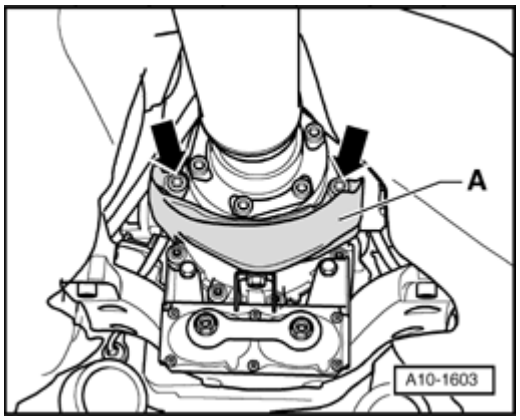

Fig. 279: Identifying Pulling Fixture T10122
Courtesy of VOLKSWAGEN UNITED STATES, INC.

- Assembly Tool T10122

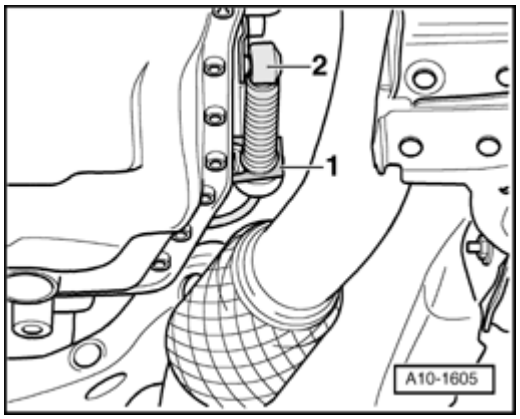

Fig. 280: Identifying Extractor Hook T20143
Courtesy of VOLKSWAGEN UNITED STATES, INC.

- Pulling Hook T20143

Work procedure

- Transmission removed.

  - Remove dual-mass flywheel --> **Dual-mass flywheel, removing and installing** , drive plate --> **Drive plate, removing and installing**.

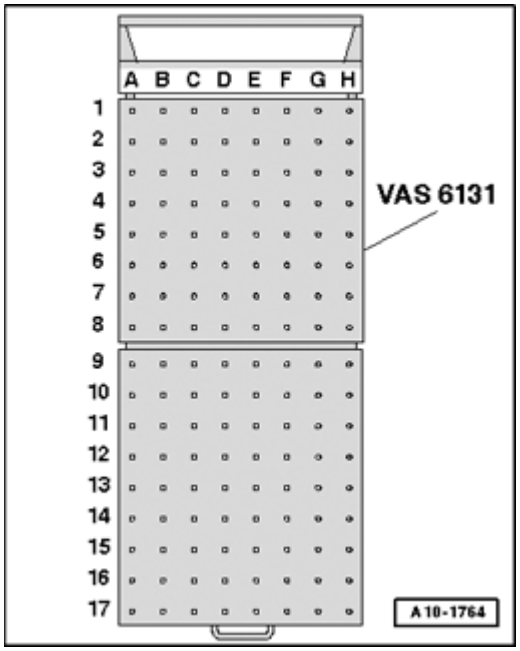

Fig. 281: Prying Out Sealing Ring Using Pulling Hook T20143/2
Courtesy of VOLKSWAGEN UNITED STATES, INC.

  - Pry out sealing ring using Pulling Hook T20143/2.
  - Clean operating and sealing surfaces.

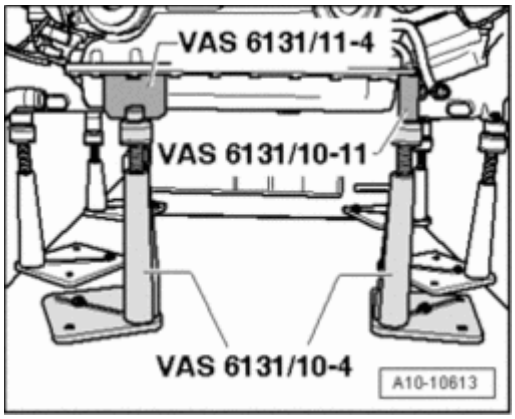

Fig. 282: Identifying Seal, Sleeve T10122/1 And Assembly Tool T10122/2
Courtesy of VOLKSWAGEN UNITED STATES, INC.

- Insert assembly device T10122/1 onto pull sleeve T10122/2 and slide seal - **A** - onto pull sleeve.
- Remove assembly device.

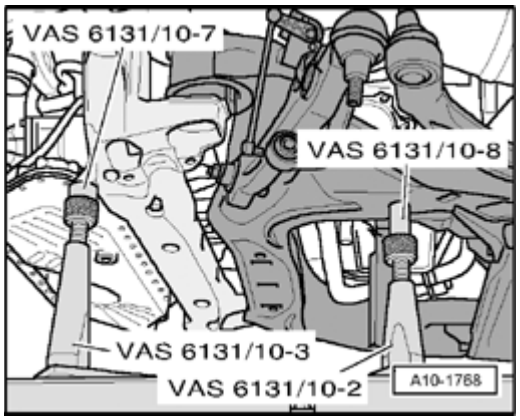

Fig. 283: Installing Pull Sleeve T10122/2 With Sealing Ring Onto Crankshaft
Courtesy of VOLKSWAGEN UNITED STATES, INC.

- Install pull sleeve T10122/2 with sealing ring - **1** - onto crankshaft.

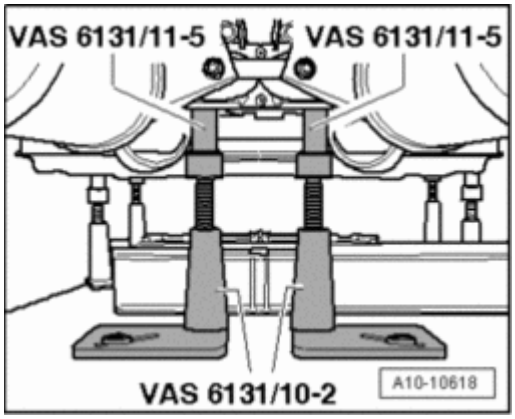

Fig. 284: Pressing In Seal Evenly All Around Until It Reaches Stop Using T10122/3

Courtesy of VOLKSWAGEN UNITED STATES, INC.

- Press in seal evenly all around until it reaches stop using T10122/3.

The rest of installation is in reverse order of removal, note the following:

- Install dual-mass flywheel --> **Dual-mass flywheel, removing and installing** , drive plate --> **Drive plate, removing and installing**.

Timing chains covers, component overview

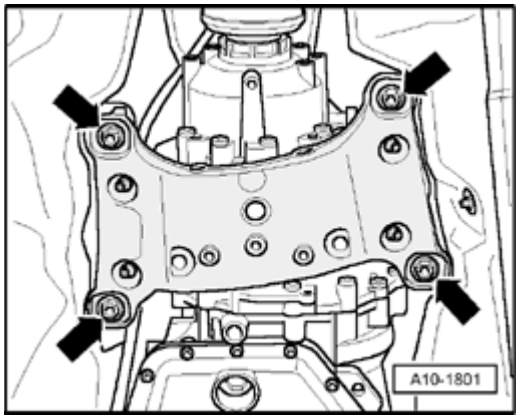

Fig. 285: Timing Chains Covers, Component Overview
Courtesy of VOLKSWAGEN UNITED STATES, INC.

1 - M6 - 10 Nm; M8 - 22 Nm

- Note tightening sequence *Position lower cover for timing chain and tighten bolts as follows.* under **Installing**

2 - Seal

- for crankshaft - timing chain side
- Removing and installing --> **Crankshaft seal (timing chain side), replacing**

3 - Shim

- For vehicles with automatic transmission
- Mark for re-installation

4 - Alignment bushing

- 2 pieces

5 - Heat shield

6 - 10 Nm

7 - Seal

- Replace

8 - 10 Nm

9 - Sealing flange

10 - 10 Nm

11 - Camshaft position (CMP) sensor 2 G163

12 - O-ring

- Replace

13 - 10 Nm

- Note tightening sequence *Position left cover for timing chain and tighten bolts as follows.* under **Installing**

14 - 10 Nm

- Note tightening sequence *Position left cover for timing chain and tighten bolts as follows.* under **Installing**

15 - Left timing chain cover

16 - Gasket

- Replace

17 - 4 Nm

- Insert using locking compound; locking compound .

18 - 10 Nm

19 - Camshaft Position (CMP) sensor G40

20 - O-ring

- Replace

21 - 10 Nm

- Note tightening sequence *Position right cover for timing chain and tighten bolts as follows.* under **Installing**

22 - Right timing chain cover

23 - Gasket

- Replace

24 - 4 Nm

- Insert using locking compound; locking compound .

25 - 10 Nm

- Note tightening sequence *Position right cover for timing chain and tighten bolts as follows.* under **Installing**

26 - Heat shield

27 - 10 Nm

28 - Seal

- Replace

29 - Sealing flange

30 - 10 Nm

31 - Alignment bushing

- 2 pieces

32 - Lower timing chain cover

Timing chain covers (All), removing and installing

Special tools, testers and auxiliary items required

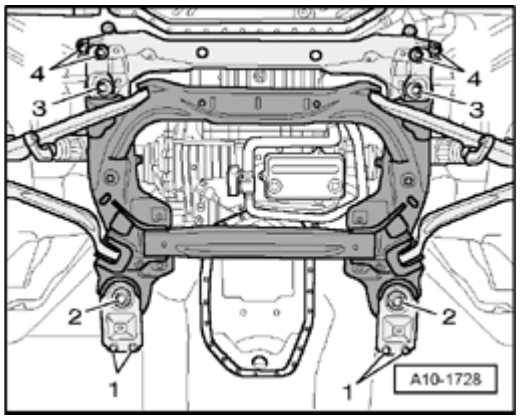

Fig. 286: Identifying Old Oil Collecting And Extracting Device V.A.G 1782
Courtesy of VOLKSWAGEN UNITED STATES, INC.

- Old oil collecting and extracting device V.A.G 1782
- Hand drill with plastic brush attachment
- Protective glasses
- Sealant

Removing

NOTE:

- **All cable ties opened or cut during engine removal must be reinstalled at the same locations during installation.**

- Place old oil collecting and extracting device V.A.G 1782 under engine and drain engine oil.
- Remove engine: --> **Engine (vehicles with manual transmission)** , --> **Engine (vehicles with automatic transmission), removing**.
- Disconnect engine and transmission: --> **Engine (vehicles with manual transmission), separating** , --> **Engine and transmission (vehicles with automatic transmission), separating**.
- Leave engine on Scissor Lift Table VAS 6131 A or secure engine to engine and transmission holder: --> **Engine (vehicles with manual transmission), securing to engine and transmission holder** , --> **Engine (vehicles with automatic transmission), securing to assembly stand**.

- Remove dual-mass flywheel --> **Dual-mass flywheel, removing and installing** , drive plate --> **Drive plate, removing and installing**.

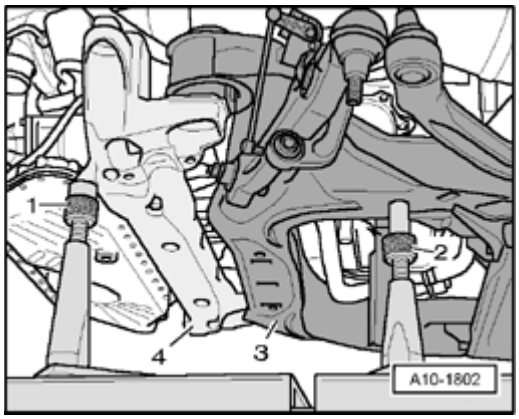

Fig. 287: Disconnecting Electrical Connection At Throttle Valve Control Module J338 & Crankcase Ventilation Hose At Intake Pipe
Courtesy of VOLKSWAGEN UNITED STATES, INC.

- Disconnect electrical connection - **1** - at throttle valve control module J338.
- Disconnect crankcase ventilation hose - **3** - at intake pipe.

NOTE:

- **Ignore - 2 -.**

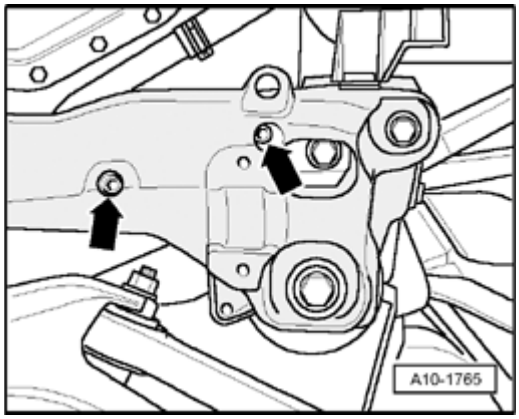

Fig. 288: Remove Electrical Harness Connectors Toward Front From Brackets On Intake Line
Courtesy of VOLKSWAGEN UNITED STATES, INC.

- Remove electrical harness connectors - **1** - , - **2** - , - **5** - and - **6** - toward front from brackets on intake line.
- Separate the electrical connectors - **3** - and - **4** -.

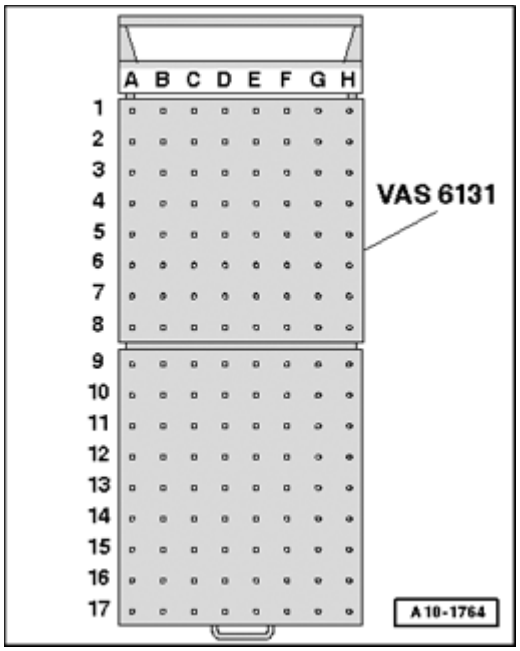

Fig. 289: Disconnecting Vacuum Hose At T-Piece
Courtesy of VOLKSWAGEN UNITED STATES, INC.

- Disconnect vacuum hose - **arrow** - at T-piece.

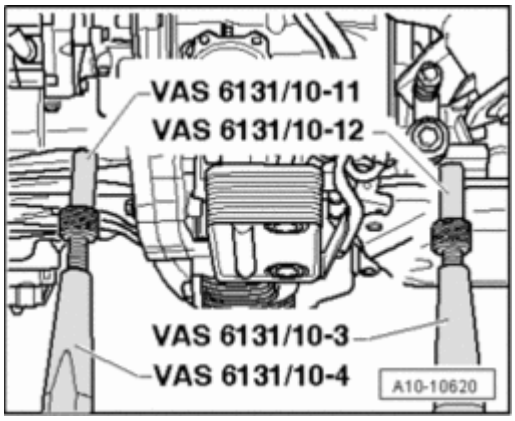

Fig. 290: Identifying Connector Strips At Fuel Injectors, Vacuum Line On Fuel Pressure Regulator & Retaining Bolts For Fuel Rail Line
Courtesy of VOLKSWAGEN UNITED STATES, INC.

- Disconnect connector strips - **1** - and - **5** - at fuel injectors.
- For vehicles with fuel return line, disconnect vacuum line - **4** - on fuel pressure regulator.
- Remove retaining bolts - **2** - and - **3** - for fuel rail line.
- Remove fuel rail line together with fuel injectors from intake manifold uniformly upward.

NOTE:

- **Carefully protect the removed fuel injectors from contamination.**

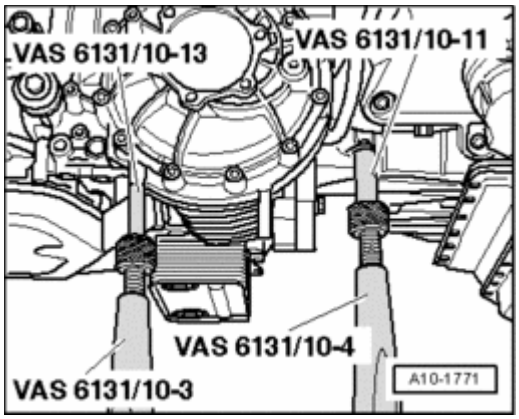

Fig. 291: Removing Left/Rear Engine Lifting Eye
Courtesy of VOLKSWAGEN UNITED STATES, INC.

- Remove left rear engine lifting eye - **arrows** -.

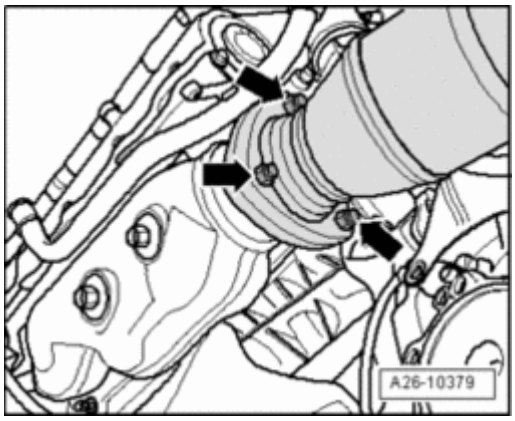

Fig. 292: Removing Intake Manifold Bolts
Courtesy of VOLKSWAGEN UNITED STATES, INC.

- Remove intake manifold bolts - **arrows** - and remove it.

NOTE:

- **Plug the intake ports of the cylinder head with clean rags.**

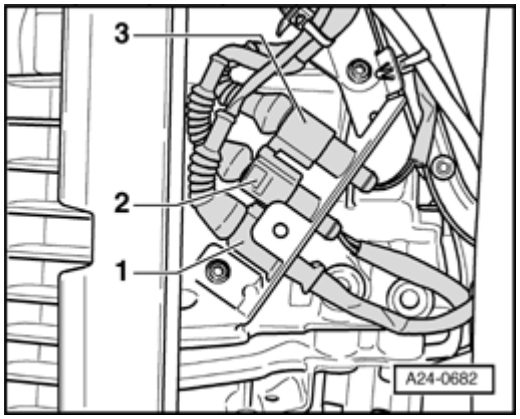

Fig. 293: Removing Cap For Oil Filter Housing
Courtesy of VOLKSWAGEN UNITED STATES, INC.

- Remove cap - **arrow** - for oil filter housing.
- Remove oil filter element.
- Extract engine oil using old oil collecting and extracting device V.A.G 1782 from oil filter housing.

NOTE:

- **Place a rag around oil filter housing to catch escaping engine oil.**

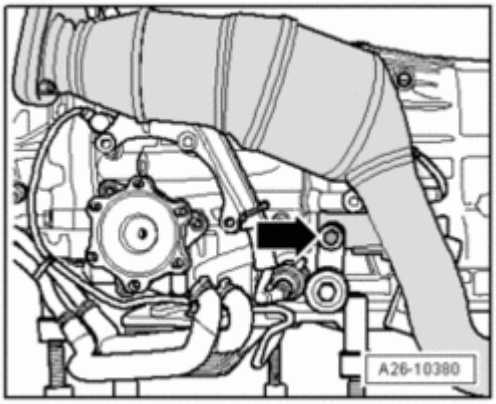

Fig. 294: Removing Bolts & Oil Filter Housing
Courtesy of VOLKSWAGEN UNITED STATES, INC.

- Remove bolts - **arrows** -.
- Remove oil filter housing.

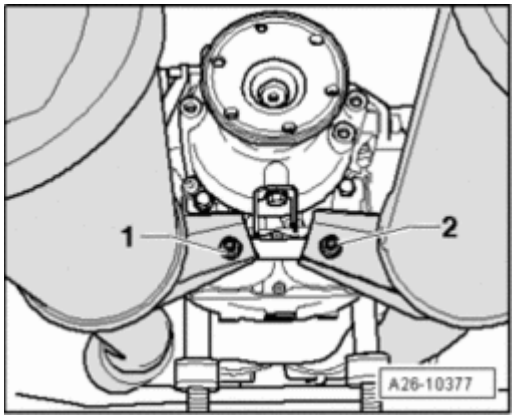

Fig. 295: Removing Bolts & Return Line From Power-Steering Pump
Courtesy of VOLKSWAGEN UNITED STATES, INC.

- Remove bolts - **1** - and - **2** -.
- Place old oil collecting and extracting device V.A.G 1782 underneath.
- Remove return line from power-steering pump - **arrow** -.

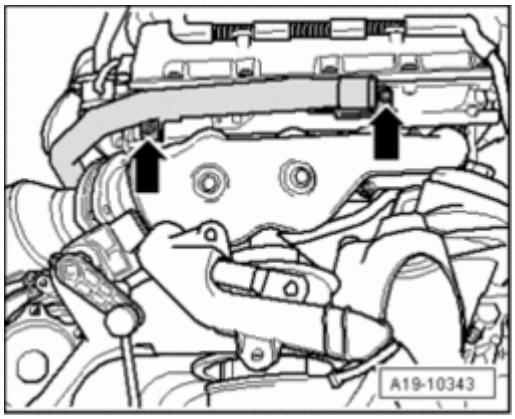

Fig. 296: Removing Bolt From Oil Dipstick Guide Tube At Cylinder Head
Courtesy of VOLKSWAGEN UNITED STATES, INC.

- Remove bolt - **arrow** - from oil dipstick guide tube at cylinder head, pull up and remove guide tube.

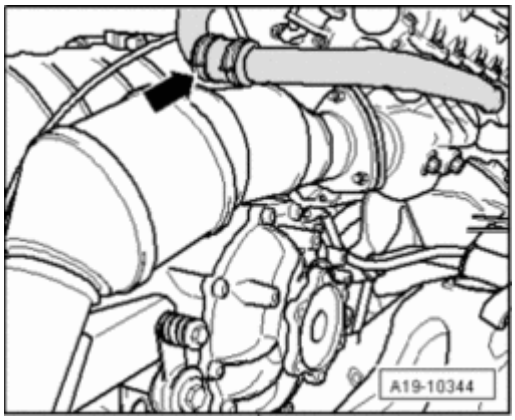

Fig. 297: Removing Bolts, Loosening Hose Clamps And Removing Left Coolant Pipe From Coolant Hoses
Courtesy of VOLKSWAGEN UNITED STATES, INC.

- Remove bolts - **1** - and - **2** -.
- Loosen hose clamps - **arrows** - and remove left coolant pipe from coolant hoses.

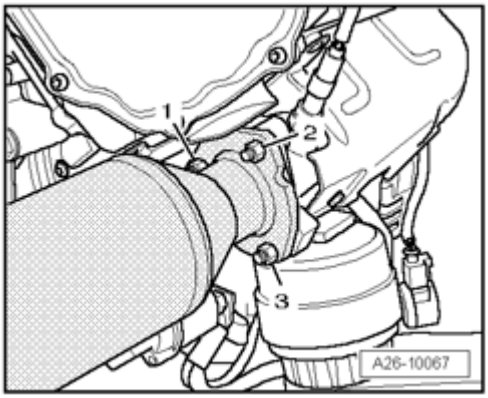

Fig. 298: Removing Bolts, Loosening Hose Clamps And Removing Right Coolant Pipe From Coolant

Hoses
Courtesy of VOLKSWAGEN UNITED STATES, INC.

- Remove bolts - **1** - and - **2** -.
- Loosen hose clamps - **arrows** - and remove right coolant pipe from coolant hoses.

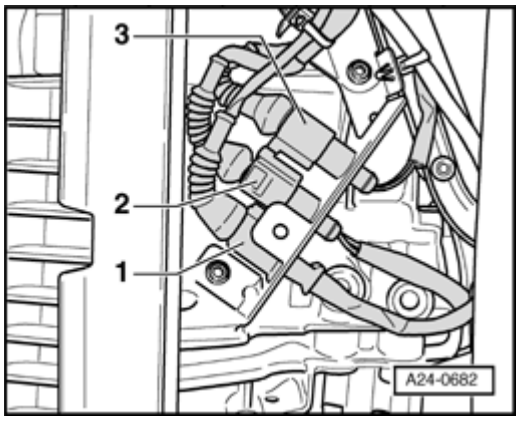

Fig. 299: Disconnecting Electrical Harness Connector On Engine Coolant Temperature (ECT) Gauge Sensor G2/G62
Courtesy of VOLKSWAGEN UNITED STATES, INC.

- Disconnect electrical harness connector - **2** - on Engine Coolant Temperature (ECT) Gauge Sensor G2/G62.
- Remove nut - **1** - and remove electrical wiring harness at rear of coolant pipe.

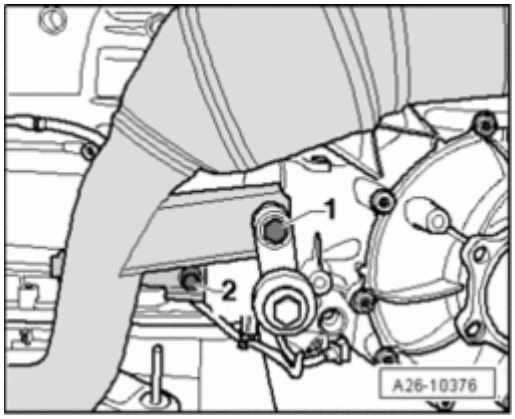

Fig. 300: Removing Bolts & Rear Coolant Pipe
Courtesy of VOLKSWAGEN UNITED STATES, INC.

- Remove bolts - **2 to 5** -.
- Remove rear coolant pipe.

NOTE:

- **Ignore - 1 - and - 6 -.**

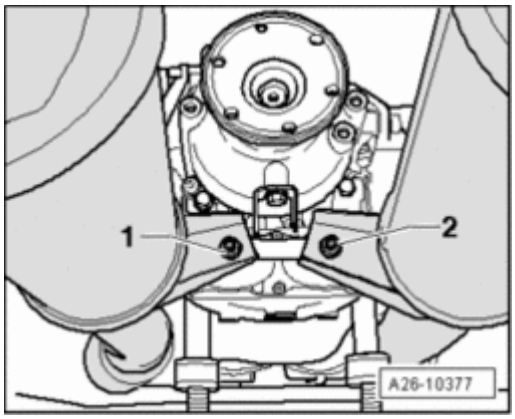

Fig. 301: Removing Mounting Bolts Of Combination Valves For Secondary Air Injection (AIR) System
Courtesy of VOLKSWAGEN UNITED STATES, INC.

- Remove mounting bolts - **1 to 4** - of combination valves for Secondary Air Injection (AIR) system.

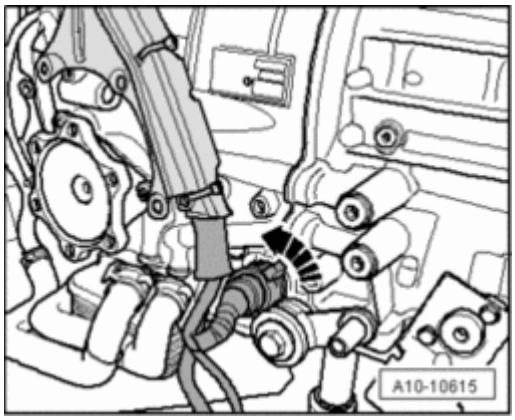

Fig. 302: Removing Nuts And Left Exhaust Manifold
Courtesy of VOLKSWAGEN UNITED STATES, INC.

- Remove nuts - **1 to 12** - and remove left exhaust manifold.

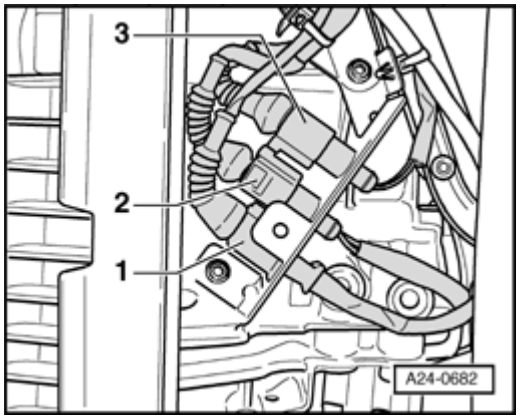

Fig. 303: Removing Left Heat Shield
Courtesy of VOLKSWAGEN UNITED STATES, INC.

- Remove left heat shield - **arrows** -.

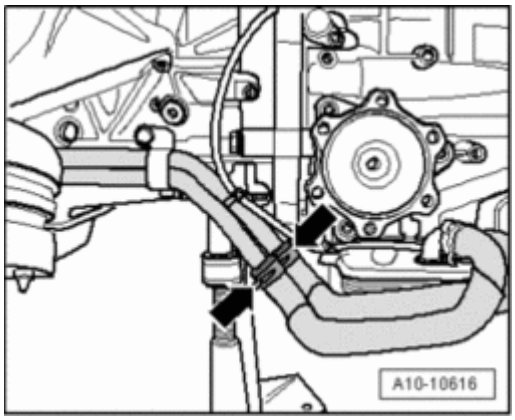

Fig. 304: Removing Nuts And Right Exhaust Manifold
Courtesy of VOLKSWAGEN UNITED STATES, INC.

- Remove nuts - **1 to 12** - and remove right exhaust manifold.

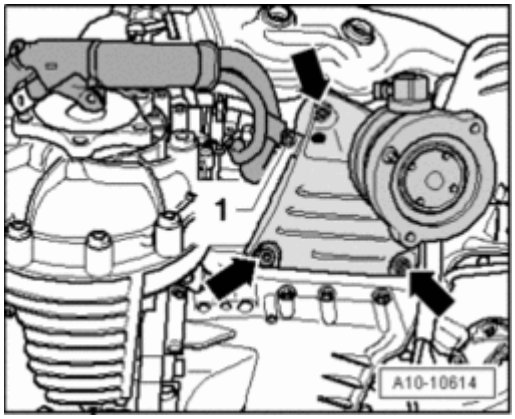

Fig. 305: Removing Right Heat Shield
Courtesy of VOLKSWAGEN UNITED STATES, INC.

- Remove right heat shield - **arrows** -.

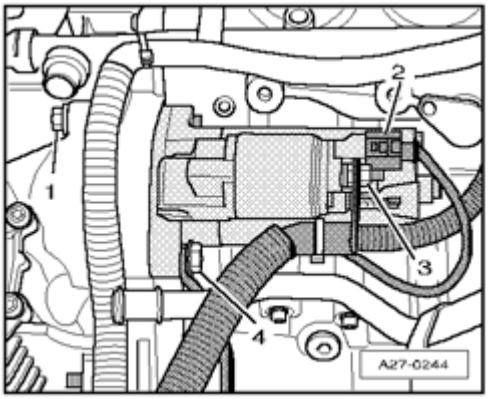

Fig. 306: Removing Bolts On Left Cylinder Head, Disconnecting Electrical Harness Connectors & Removing Ignition Coils
Courtesy of VOLKSWAGEN UNITED STATES, INC.

- Remove bolts - **5** - and - **6** - on left cylinder head.
- Disconnect electrical harness connectors - **1 to 4** -.
- Remove ignition coils - **arrows** -.

NOTE:

- **Extractor T40039 can be used for removal.**

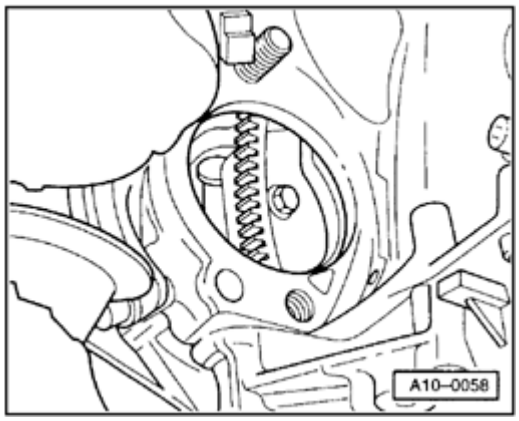

Fig. 307: Disconnecting Hose Of Crankshaft Housing Ventilation & Removing Left Cylinder Head Cover Bolts In Sequence
Courtesy of VOLKSWAGEN UNITED STATES, INC.

- Disconnect hose of crankshaft housing ventilation - **arrow** -.
- Remove left cylinder head cover bolts in sequence - **15 to 1** -.
- Remove cylinder head cover.

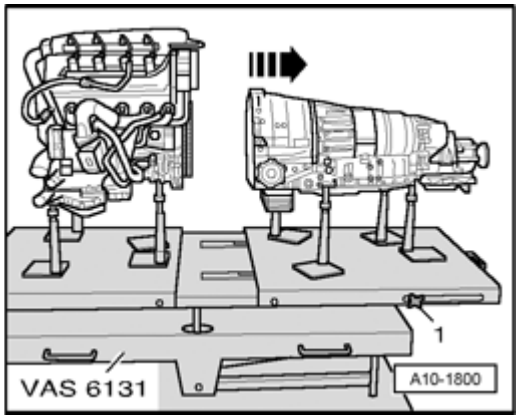

Fig. 308: Removing Bolts On Right Cylinder Head, Disconnecting Electrical Harness Connectors & Removing Ignition Coils
Courtesy of VOLKSWAGEN UNITED STATES, INC.

- Remove bolts - **5** - and - **6** - on right cylinder head.

- Disconnect electrical harness connectors - **1 to 4** -.
- Remove ignition coils - **arrows** -.

NOTE:

- **Extractor T40039 can be used for removal.**

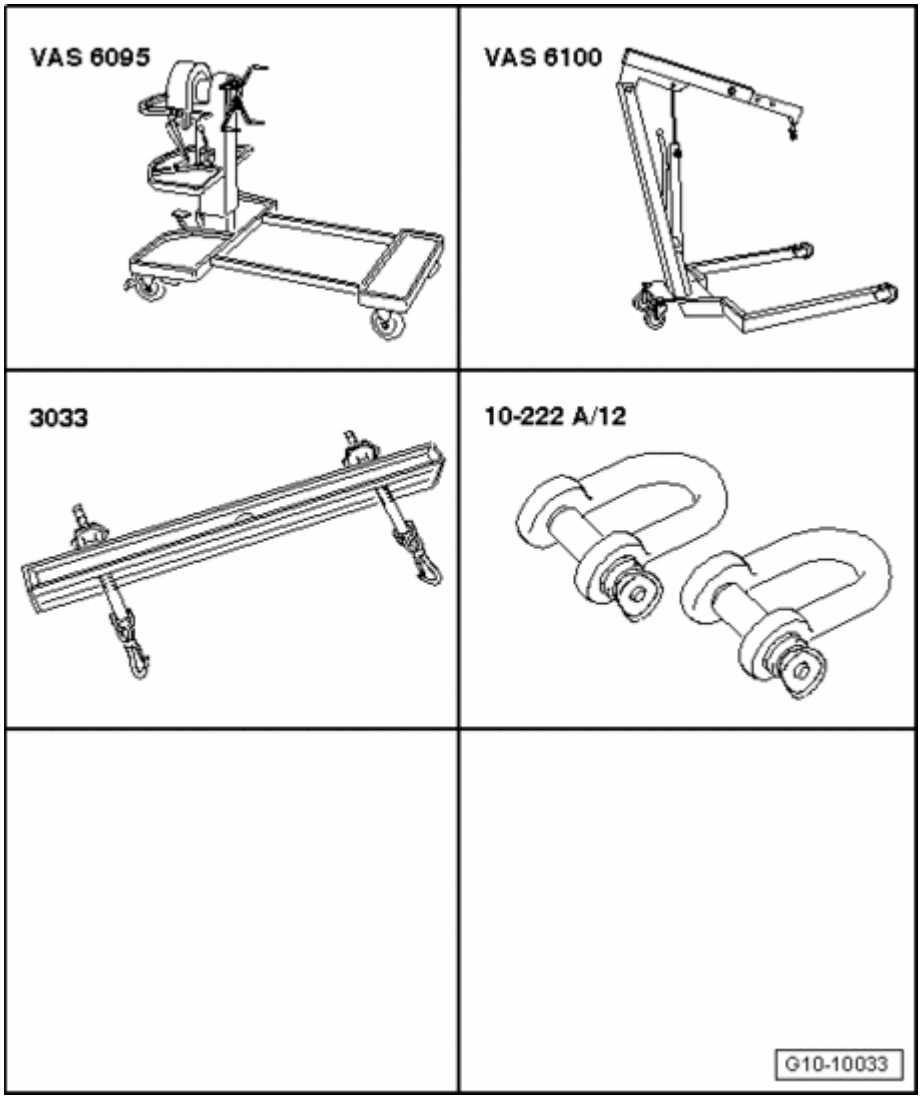

Fig. 309: Disconnecting Hose Of Crankshaft Housing Ventilation & Removing Right Cylinder Head Cover Screws In Sequence
Courtesy of VOLKSWAGEN UNITED STATES, INC.

- Disconnect hose of crankshaft housing ventilation - **arrow** -.
- Remove right cylinder head cover screws in sequence - **15 to 1** -.
- Remove cylinder head cover.

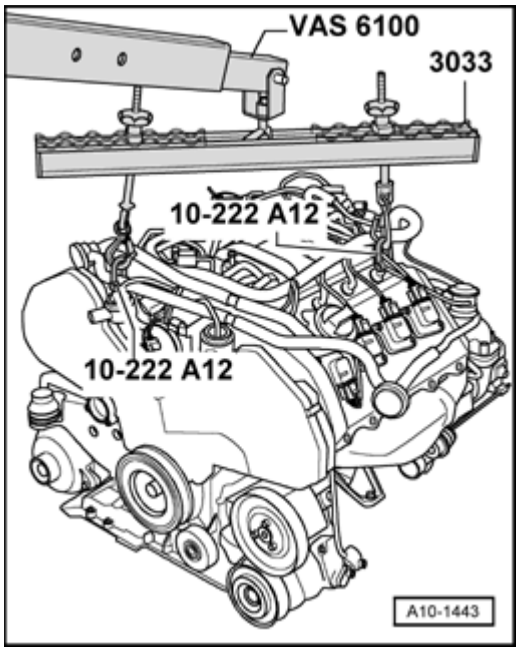

Fig. 310: Disconnecting Electrical Harness Connector For Camshaft Position (CMP) Sensor 2 G163 On Left Cylinder Head
Courtesy of VOLKSWAGEN UNITED STATES, INC.

- Disconnect electrical harness connector - **arrow** - for Camshaft Position (CMP) Sensor 2 G163 on left cylinder head.
- Disconnect electrical harness connector - **arrow** - for Camshaft Position (CMP) Sensor G40 on right cylinder head.

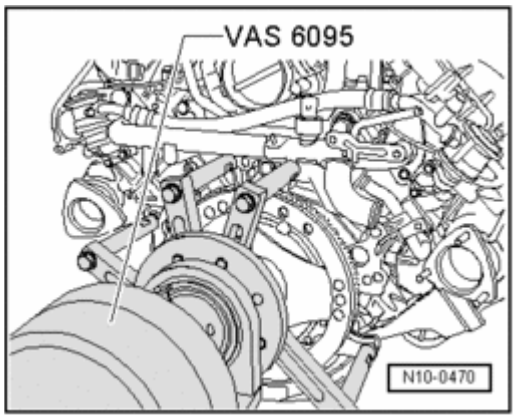

Fig. 311: Removing Ground (GND) Cable On Right Cylinder Head
Courtesy of VOLKSWAGEN UNITED STATES, INC.

- Remove Ground (GND) cable on right cylinder head - **arrow** -.
- Set wiring harness aside.

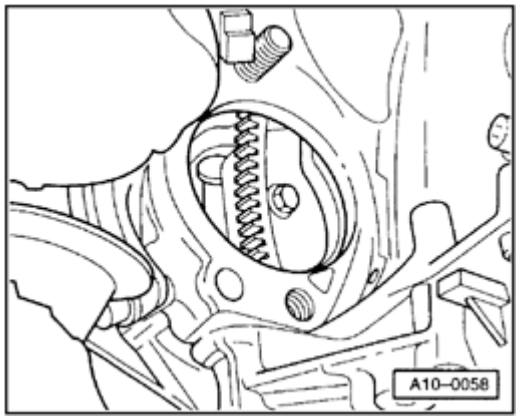

Fig. 312: Removing/Installing Bolts And Left Timing Chain Cover
Courtesy of VOLKSWAGEN UNITED STATES, INC.

- Remove bolts - **1 to 6** - and remove left timing chain cover.

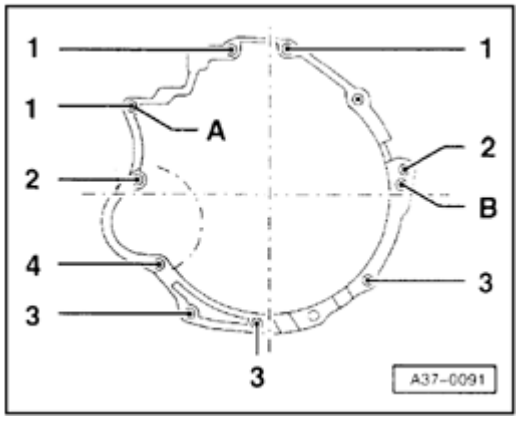

Fig. 313: Removing Bolts And Right Timing Chain Cover
Courtesy of VOLKSWAGEN UNITED STATES, INC.

- Remove bolts - **1 to 6** - and remove right timing chain cover.

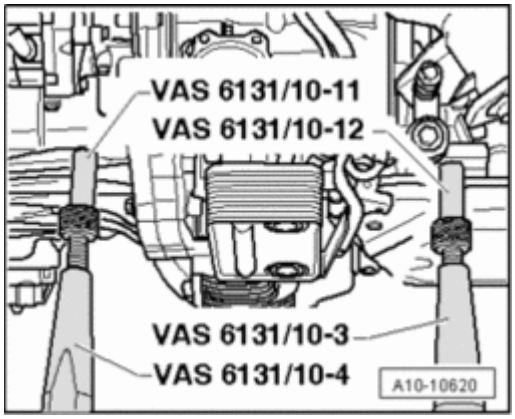

Fig. 314: Removing Bolts And Lower Timing Chain Cover
Courtesy of VOLKSWAGEN UNITED STATES, INC.

- Remove bolts - **1 to 13** - and remove lower timing chain cover.

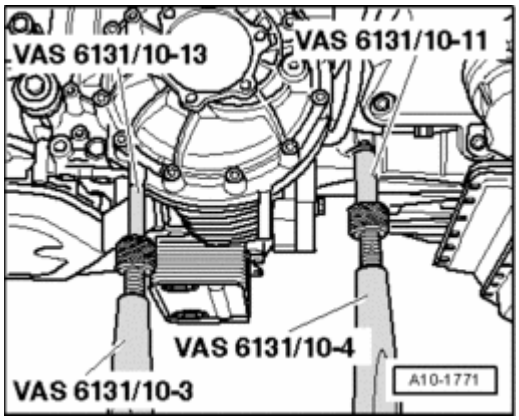

Fig. 315: Pressing Sealing Ring For Crankshaft At Rear Out Of Cover
Courtesy of VOLKSWAGEN UNITED STATES, INC.

- Press sealing ring for crankshaft at rear out of cover.

Installing

NOTE:

- **Replace gaskets, seals and O-rings.**
- **During installation, all cable ties must be re-installed at the same location.**

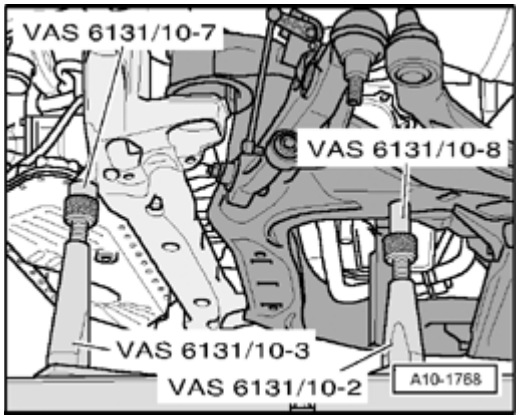

Fig. 316: Using Rotating Plastic Brush To Remove Any Sealant Residue From Sealing Flange, Cylinder Block And Upper Part Of Oil Pan
Courtesy of VOLKSWAGEN UNITED STATES, INC.

- Using e.g. a rotating plastic brush, remove sealant residue on covers for timing chain and on cylinder block and head.

CAUTION: Wear safety glasses.

- Clean sealing surfaces, they must be free of oil and grease.

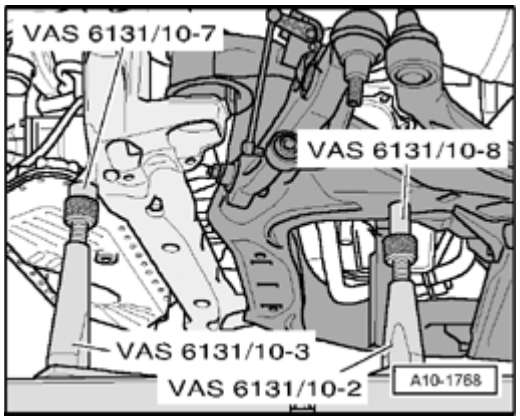

Fig. 317: Cutting Tube Nozzle At Front Marking
Courtesy of VOLKSWAGEN UNITED STATES, INC.

- Cut off nozzle on the tube of sealant at front mark (dia. of nozzle approx. 1 mm).

NOTE:

- **Covers for timing chain must be installed within 5 minutes after applying sealant.**

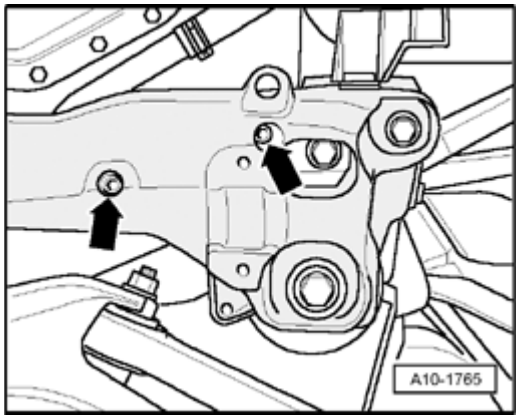

Fig. 318: Applying Sealant Beads On Clean Sealing Surfaces Of Lower Cover For Timing Chain
Courtesy of VOLKSWAGEN UNITED STATES, INC.

- Apply sealant beads - **1 to 6** - , as shown in illustration, on clean sealing surfaces of lower cover for timing chain.

- Thickness of sealant bead: 1.5 to 2.0 mm.

- Check whether 2 alignment bushings are present in cylinder block, install if necessary.

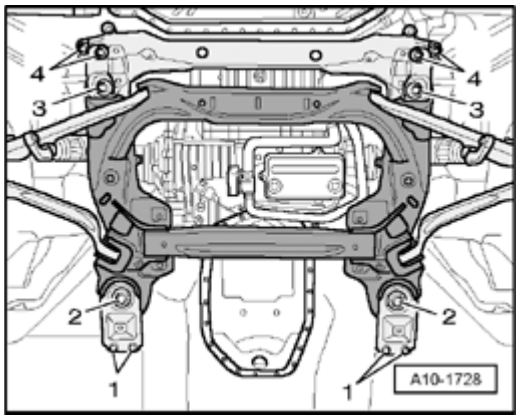

Fig. 319: Removing Bolts And Lower Timing Chain Cover
Courtesy of VOLKSWAGEN UNITED STATES, INC.

- Position lower cover for timing chain and tighten bolts as follows.

1. Tighten bolts 11 , 12 , 13 to 10 Nm
2. Tighten bolts 1 , 3 , 4 , 5 , 6 , 7 , 8 , 9 , 10 to 10 Nm
3. Tighten bolts 4 , 8 , 9 , 10 to 22 Nm
4. Tighten bolts 2 for power-steering pump to 22 Nm

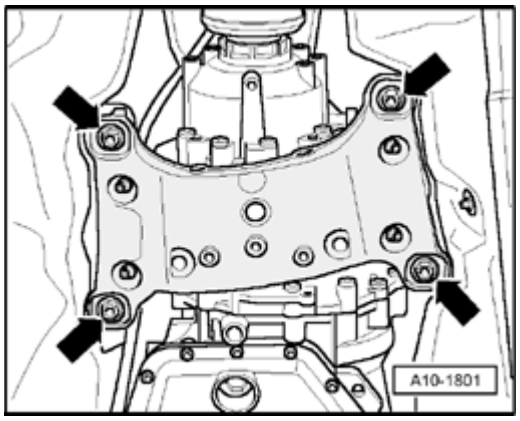

Fig. 320: Removing/Installing Sealing Flanges For Camshaft Adjuster On Left/Right Covers For Timing Chain
Courtesy of VOLKSWAGEN UNITED STATES, INC.

- Remove sealing flanges for camshaft adjuster on left and right covers for timing chain - **arrows** -.

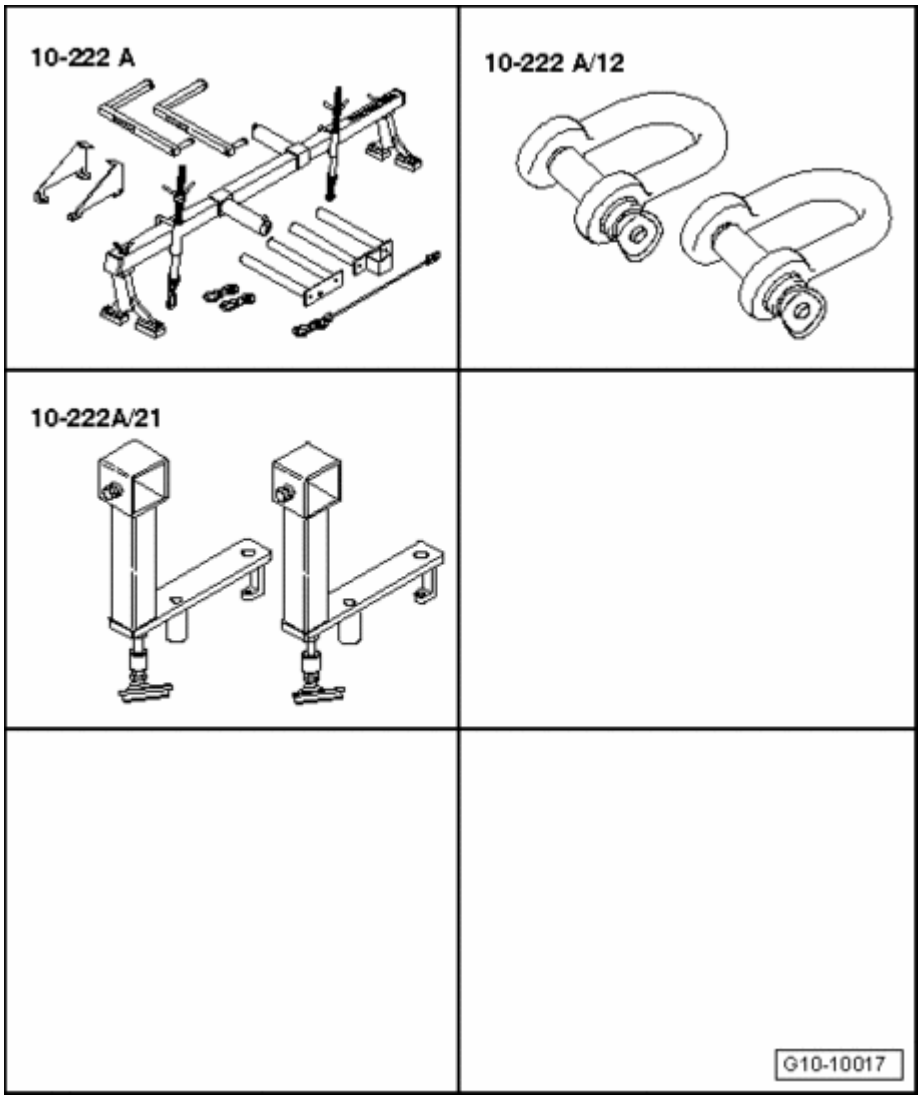

Fig. 321: Applying Sealant Bead On Clean Sealing Surfaces Of Left Cover For Timing Chain
Courtesy of VOLKSWAGEN UNITED STATES, INC.

- Apply sealant bead - **arrow** - , as shown in illustration, on clean sealing surfaces of left cover for timing chain.

- Groove on lower sealing surface - **arrow 1** - must be completely filled with sealant. Sealant bead must stand 1.5 to 2.0 mm above sealing surface.
- Sealant bead on front sealing surface - **arrows 2** - must be 1.5 to 2.0 mm thick.

- Install new seal - **3** - on left cover for timing chain.

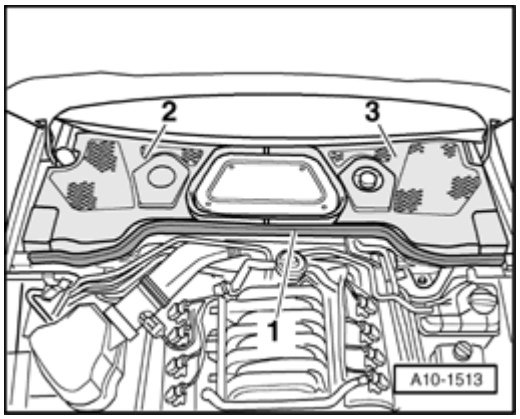

Fig. 322: Removing/Installing Bolts And Left Timing Chain Cover
Courtesy of VOLKSWAGEN UNITED STATES, INC.

- Position left cover for timing chain and tighten bolts as follows.

1. Tighten bolts to 1 to 4 to 5 Nm
2. Tighten bolts to 6 to 10 Nm
3. Tighten bolts to 5 to 10 Nm
4. Tighten bolts to 1 to 4 to 10 Nm

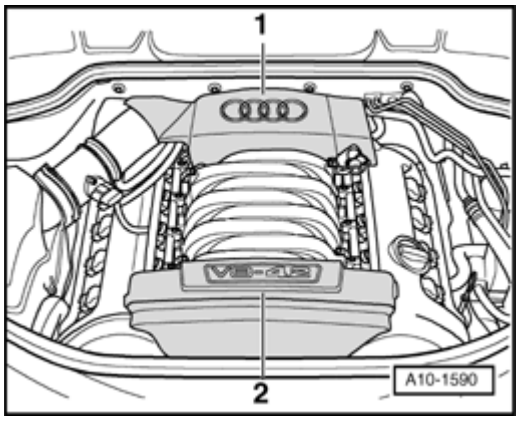

Fig. 323: Applying Sealant Beads On Clean Sealing Surfaces Of Right Cover For Timing Chain
Courtesy of VOLKSWAGEN UNITED STATES, INC.

- Apply sealant beads - **arrow** - , as shown in illustration, on clean sealing surfaces of right cover for timing chain.

- Groove on lower sealing surface - **arrow 1** - must be completely filled with sealant. Sealant bead must stand 1.5 to 2.0 mm above sealing surface.
- Sealant bead on front sealing surface - **arrows 2** - must be 1.5 to 2.0 mm thick.

- Install new seal - **3** - on right cover for timing chain.

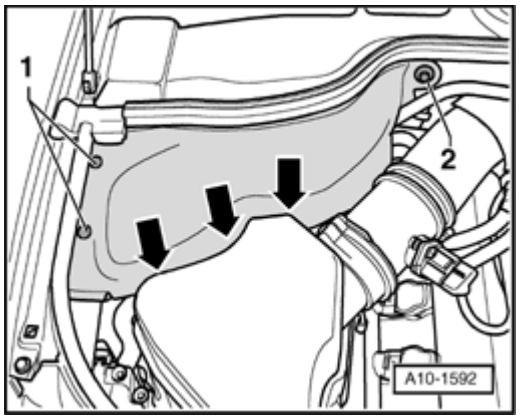

Fig. 324: Removing/Installing Bolts And Right Timing Chain Cover
Courtesy of VOLKSWAGEN UNITED STATES, INC.

- Position right cover for timing chain and tighten bolts as follows.

1. Tighten bolts 2 , 3 , 5 , 6 to 5 Nm
2. Tighten bolts to 1 to 10 Nm
3. Tighten bolts to 4 to 10 Nm
4. Tighten bolts 2 , 3 , 5 , 6 to 10 Nm

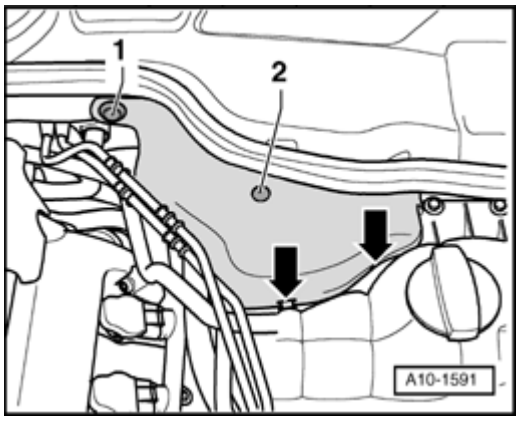

Fig. 325: Removing/Installing Sealing Flanges For Camshaft Adjuster On Left/Right Covers For Timing Chain
Courtesy of VOLKSWAGEN UNITED STATES, INC.

- Install sealing flanges for camshaft adjuster with new sealing rings on left and right covers for timing chain - **arrows** -.

The rest of installation is in reverse order of removal, note the following:

- Install crankshaft seal, timing chain side --> **Crankshaft seal (timing chain side), replacing**.
- Install cylinder head cover: --> **Left cylinder head cover, removing and installing** , --> **Right cylinder head cover, removing and installing**.
- Install exhaust manifold: --> **Left exhaust manifold, removing and installing** , --> **Right exhaust**

manifold, removing and installing.

- Install combination valve for Secondary Air Injection (AIR) system: --> **Left combination valve for Secondary Air Injection, removing and installing** , --> **Right combination valve for Secondary Air Injection, removing and installing**.
- Install rear coolant pipe --> **Rear coolant pipe, removing and installing**.
- Install left and right coolant pipe --> **Right coolant pipe, removing and installing** and --> **Left coolant pipe, removing and installing**.
- Install oil filter housing --> **Oil filter housing, removing and installing**.
- Install intake manifold --> **Intake manifold, removing and installing**.
- Install dual-mass flywheel --> **Dual-mass flywheel, removing and installing** , --> **Drive plate, removing and installing**.
- Install engine: --> **Engine (vehicles with manual transmission), installing** , --> **Engine (vehicles with automatic transmission), installing**.
- Add engine oil and check oil level --> **Oil level, checking**.

Torque specifications

Component			Nm
Lower cover	Power-steering pump		22
For timing chain	Engine	M6	10
to		M8	22
Seal on cover for timing chain			4 * See note
Left and right cover for timing chain on engine			10
Sealing flange on cover for timing chain			10
Hall sensor on cover for timing chain			10
Ground (GND) wire to cylinder head			10
Heat shield to engine			10
Oil drain plug			50

* Insert using locking compound; locking compound .

Camshaft timing chain, component overview

Left camshaft timing chain

NOTE:

- **Before removing timing chain, mark direction of travel with paint. Reversing the rotation direction of a used chain can destroy it.**

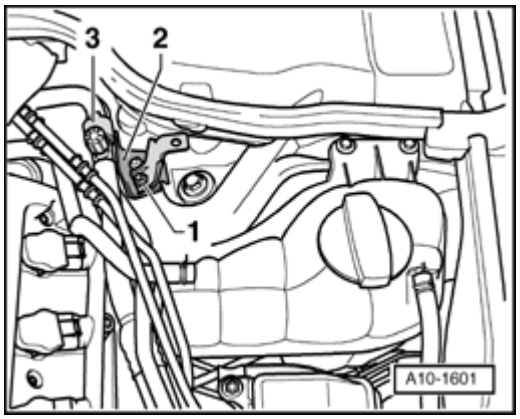

Fig. 326: Camshaft Timing Chain, Component Overview (Left Camshaft Timing Chain)
Courtesy of VOLKSWAGEN UNITED STATES, INC.

1 - Pivot pin -10 Nm

2 - 5 Nm plus an additional $^{1}/_{4}$ turn (90 °)

- Replace

3 - Washer

- Note installation position

4 - Camshaft bolt

- Replace
- Initial tightening torque: 40 Nm
- Final tightening torque: 100 Nm plus an additional $^{1}/_{4}$ turn (90 °)

5 - Chain sprocket

- For exhaust camshaft

6 - Camshaft bolt

- Replace
- Initial tightening torque: 40 Nm
- Final tightening torque: 100 Nm plus an additional $^{1}/_{4}$ turn (90 °)

7 - Hall sensor wheel

- When installing timing chain, adjust using setting gauge T40047

8 - Camshaft adjuster

- For intake camshaft

9 - Diamond disc

- Replace

10 - Chain tensioner

- For left timing chain

11 - Left camshaft timing chain

- Removing and installing --> **Camshaft timing chain, removing and installing**

12 - Guide rail

- Can be replaced separately

13 - Control housing

- For camshaft adjuster

14 - Gasket

- Replace

15 - Camshaft

16 - Alignment bushing

- 2 pieces

17 - 5 Nm plus an additional $^{1}/_{4}$ turn (90 °)

- Replace

18 - Bracket

- For drive sprocket

19 - 10 Nm

20 - Drive sprocket

- For left timing chain

21 - Thrust washer

- For drive sprocket

22 - 5 Nm plus an additional $^{1}/_{4}$ turn (90 °)

- Replace

23 - Guide rail

Right camshaft timing chain

NOTE:

- **Before removing timing chain, mark direction of travel with paint. Reversing the rotation direction of a used chain can destroy it.**

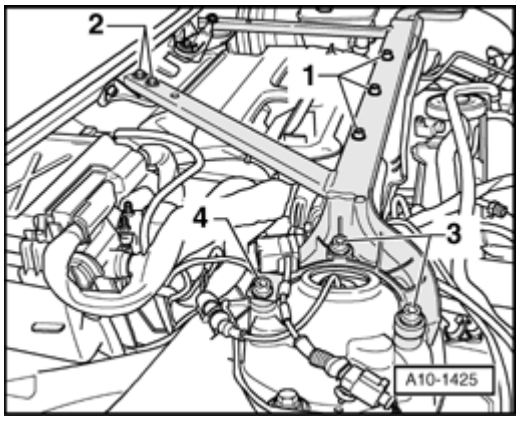

Fig. 327: Camshaft Timing Chain, Component Overview (Right Camshaft Timing Chain)
Courtesy of VOLKSWAGEN UNITED STATES, INC.

1 - Chain tensioner

- For right timing chain

2 - 5 Nm plus an additional $^{1}/_{4}$ turn (90 °)

- Replace

3 - Mounting pin

- For drive sprocket

4 - Washer

5 - 42 Nm

6 - Camshaft bolt

- Replace
- Initial tightening torque: 40 Nm
- Final tightening torque: 100 Nm plus an additional $^{1}/_{4}$ turn (90 °)

7 - Hall sensor wheel

- When installing timing chain, adjust using setting gauge T40047

8 - Camshaft adjuster

- For intake camshaft

9 - Diamond disc

- Replace

10 - Pivot pin -10 Nm

11 - Guide rail

12 - Thrust washer

- For drive sprocket

13 - Right camshaft timing chain

- Removing and installing --> **Camshaft timing chain, removing and installing**

14 - Control housing

- For camshaft adjuster

15 - Gasket

- Replace

16 - Camshaft

17 - Alignment bushing

- 2 pieces

18 - Guide rail

- Can be replaced separately

19 - 5 Nm plus an additional $^{1}/_{4}$ turn (90 °)

- Replace

20 - Chain sprocket

- For exhaust camshaft

21 - Washer

- Note installation position

22 - Camshaft bolt

- Replace
- Initial tightening torque: 40 Nm
- Final tightening torque: 100 Nm plus an additional $^{1}/_{4}$ turn (90 °)

23 - Drive sprocket

- For right timing chain

24 - Guide rail

- For timing chain

25 - Pivot pin -10 Nm

Camshaft timing chain, removing and installing

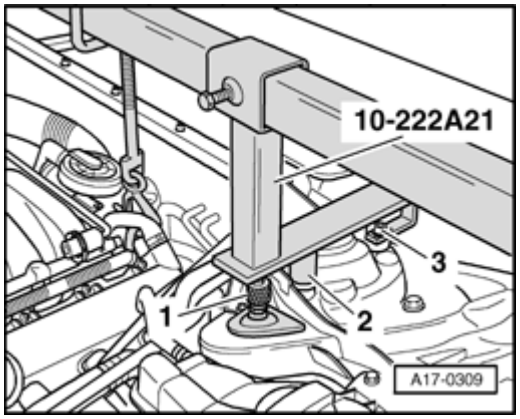

Fig. 328: Identifying Special Tools - Camshaft Timing Chain, Removing And Installing
Courtesy of VOLKSWAGEN UNITED STATES, INC.

Special tools, testers and auxiliary items required

- Crankshaft Holder 3242
- Trim removal wedge 3409 (2x)
- Old oil collecting and extracting device V.A.G 1782
- Multi-point socket T10035
- Camshaft locator T40046 (qty. 2)
- Setting gauge T40047

Special tools, testers and auxiliary items required

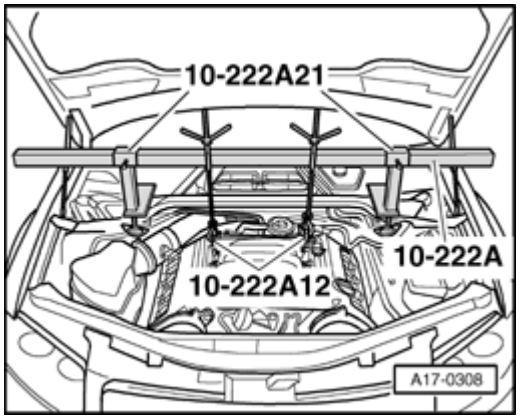

Fig. 329: Identifying Old Oil Collecting And Extracting Device V.A.G 1782
Courtesy of VOLKSWAGEN UNITED STATES, INC.

- Old oil collecting and extracting device V.A.G 1782

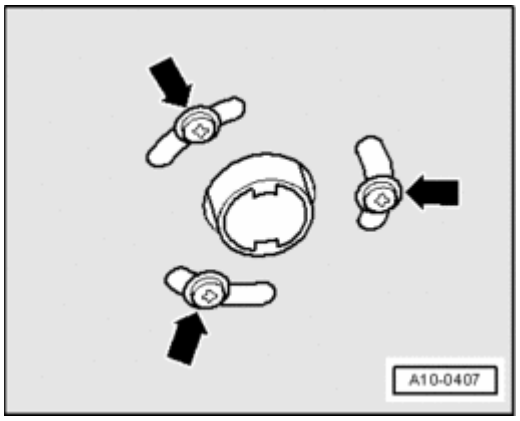

Fig. 330: Identifying Key T40049
Courtesy of VOLKSWAGEN UNITED STATES, INC.

- Key T40049
- Drill 3.3 mm diameter (2x)

Removing

- Place old oil collecting and extracting device V.A.G 1782 under engine and drain engine oil.
- Remove engine: Vehicles with manual transmission --> **Engine (vehicles with manual transmission)** , vehicles with automatic transmission --> **Engine (vehicles with automatic transmission), removing**.
- Disconnect engine and transmission: Vehicles with manual transmission --> **Engine (vehicles with manual transmission), separating** , vehicles with automatic transmission --> **Engine and transmission (vehicles with automatic transmission), separating**.
- Leave engine on Scissor Lift Table VAS 6131 A or secure engine to the engine and transmission holder: Vehicles with manual transmission --> **Engine (vehicles with manual transmission), securing to engine and transmission holder** , vehicles with automatic transmission --> **Engine (vehicles with automatic transmission), securing to assembly stand**.

- Remove covers for timing chains --> **Timing chain covers (All), removing and installing**.

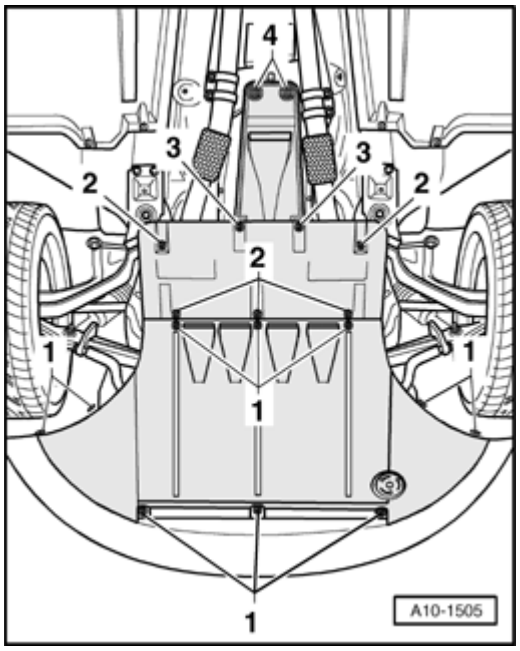

Fig. 331: Rotating Crankshaft To TDC Ignition Timing
Courtesy of VOLKSWAGEN UNITED STATES, INC.

- Install key T40049 at rear on crankshaft e.g. using 2 old bolts for dual-mass flywheel.
- Rotate crankshaft in direction of engine rotation - **arrow** - to TDC ignition timing.

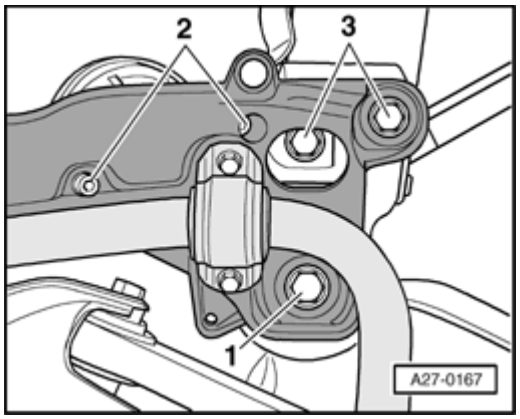

Fig. 332: Identifying Slits At Front In Camshafts Stand Parallel At Same Height With Upper Edge Of Cylinder Head
Courtesy of VOLKSWAGEN UNITED STATES, INC.

- Slits - **arrows** - at front in camshafts must stand parallel at same height with upper edge of cylinder head.

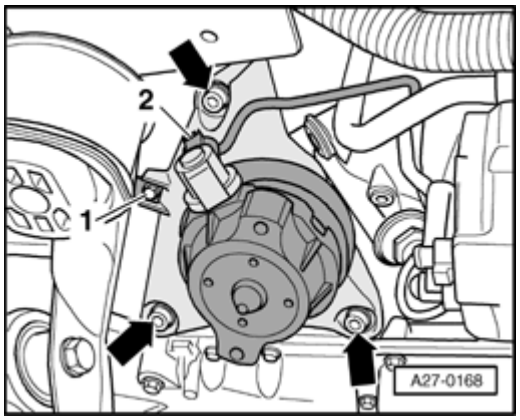

Fig. 333: Removing/Installing Camshaft Locator T40046
Courtesy of VOLKSWAGEN UNITED STATES, INC.

- Rotate camshafts at hex head slightly back or forth if necessary so that camshaft locator T40046 can be inserted.
- If camshaft locator T40046 cannot be inserted, rotate crankshaft 1 rotation (360 °) further.
- Remove camshaft locator T40046 again.

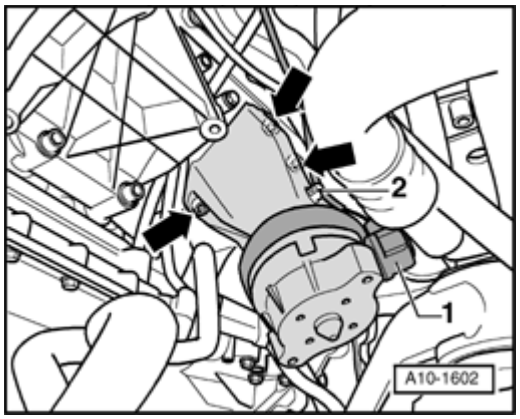

Fig. 334: Removing/Installing Crankshaft Holder 3242 Into Hole
Courtesy of VOLKSWAGEN UNITED STATES, INC.

- Remove drain plug from upper section of oil pan.
- Install Crankshaft Holder 3242 into hole (20 Nm), if necessary rotate crankshaft very slightly back and forth to completely center holder.

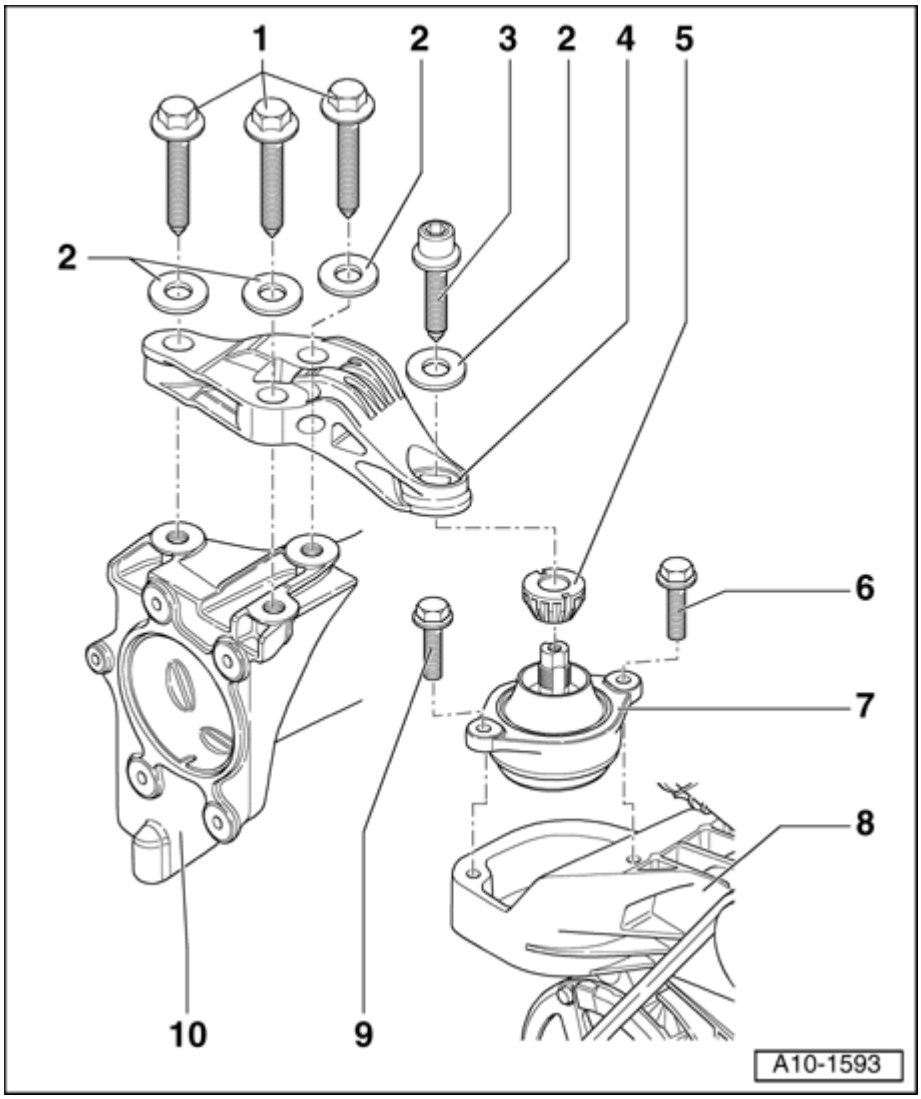

Fig. 335: Pushing Glide Track Of Chain Tensioner For Left Timing Chain
Courtesy of VOLKSWAGEN UNITED STATES, INC.

- Push glide track of chain tensioner for left timing chain in direction of - **arrow** - and pull off chain tensioner using a drill bit 3.3 mm dia. - **1** -.

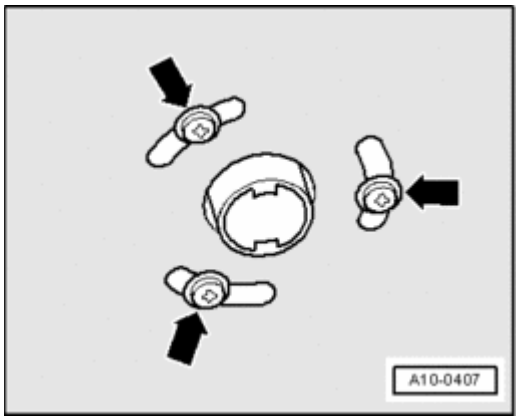

Fig. 336: Removing Bolts For Camshaft Chain Sprocket Or Camshaft Adjuster Using Multipoint Socket T10035
Courtesy of VOLKSWAGEN UNITED STATES, INC.

- Mark running direction of left timing chain with paint.
- Remove bolts - **1** - and - **2** - for camshaft chain sprocket or camshaft adjuster using multipoint socket T10035.
- Remove camshaft chain sprocket, camshaft adjuster and timing chain.

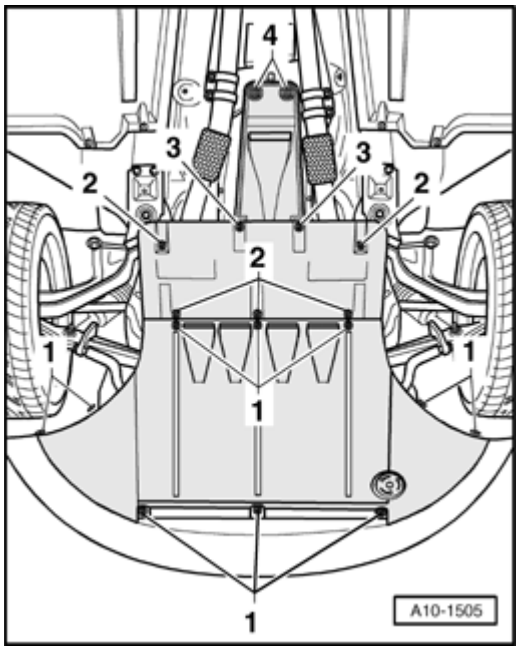

Fig. 337: Pushing Glide Track Of Chain Tensioner For Right Timing Chain
Courtesy of VOLKSWAGEN UNITED STATES, INC.

- Push glide track of chain tensioner for right timing chain in direction of - **arrow** - and pull off chain tensioner using a drill bit 3.3 mm dia. - **1** -.
- Mark running direction of right timing chain with paint.

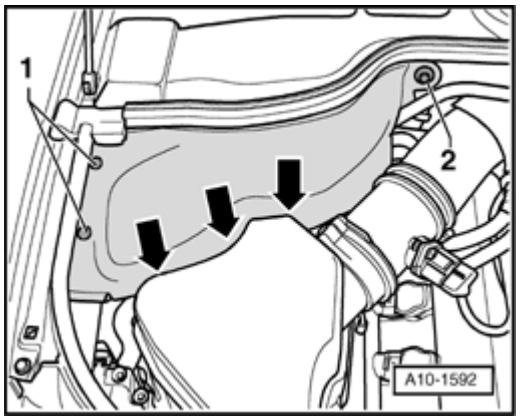

Fig. 338: Removing Bolts For Camshaft Chain Sprocket Or Camshaft Adjuster Using Multipoint Socket

T10035
Courtesy of VOLKSWAGEN UNITED STATES, INC.

- Remove bolts - **1** - and - **2** - for camshaft chain sprocket or camshaft adjuster using multipoint socket T10035.
- Remove camshaft chain sprocket, camshaft adjuster and timing chain.

Installing

- Secure crankshaft in TDC position using Crankshaft Holder 3242.
- Drive chain for timing mechanism installed --> **Drive chain for timing mechanism, removing and installing**.

NOTE:

- **Always replace bolts that are tightened to torque as well as O-rings and gaskets.**
- **When turning camshaft, crankshaft must not be at TDC for any cylinder. Valves and/or pistons may be damaged.**

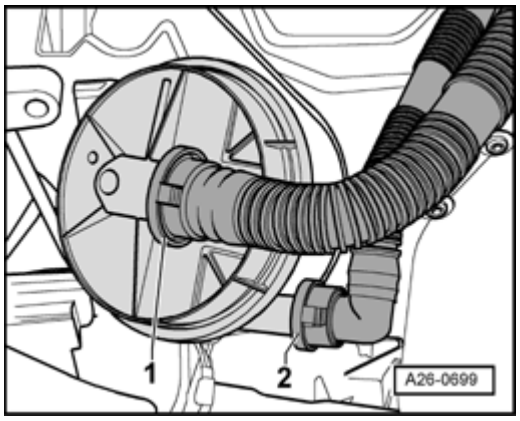

Fig. 339: Rotating Inner Part And Outer Part Of Both Camshaft Adjusters Against Each Other Up To Lock Position
Courtesy of VOLKSWAGEN UNITED STATES, INC.

- Rotate inner part and outer part of both camshaft adjusters against each other up to lock position - **arrows** -.

- Inner part and outer part must not be able to be against each other in lock position (slight play can still be felt).

- Check whether camshafts of both cylinder heads stand in TDC position.

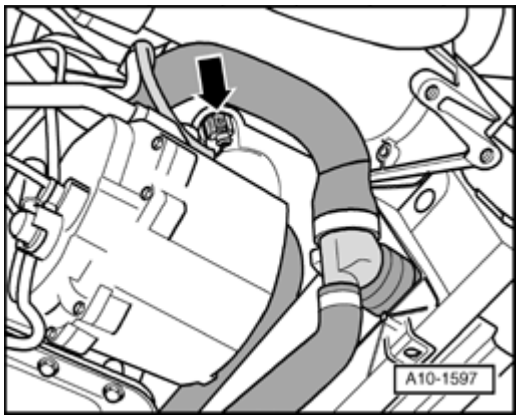

Fig. 340: Identifying Slits At Front In Camshafts Stand Parallel At Same Height With Upper Edge Of Cylinder Head
Courtesy of VOLKSWAGEN UNITED STATES, INC.

- Slits - **arrows** - at front in camshafts must stand parallel at same height with upper edge of cylinder head.

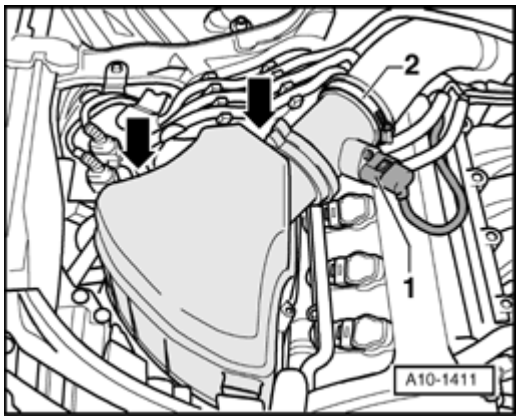

Fig. 341: Removing/Installing Camshaft Locator T40046
Courtesy of VOLKSWAGEN UNITED STATES, INC.

- Insert camshaft locator T40046 into camshafts of left cylinder head, to do so rotate camshafts back or forth at hex head if necessary.

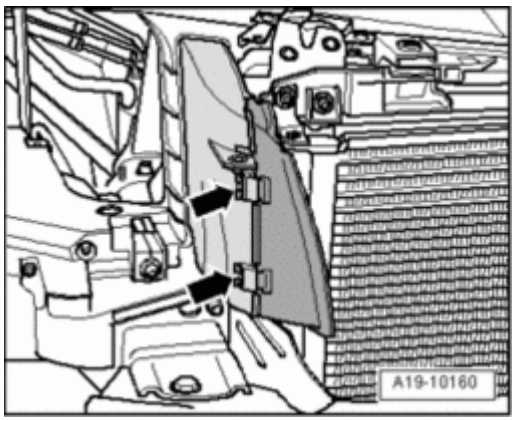

Fig. 342: Removing/Inserting Camshaft Locator T40046 From/Into Camshafts Of Right Cylinder Head

Courtesy of VOLKSWAGEN UNITED STATES, INC.

- Insert camshaft locator T40046 into camshafts of right cylinder head, to do so rotate camshafts back or forth at hex head if necessary.
- Replace all four camshaft bolts.
- Replace diamond disc between camshaft and left cylinder head camshaft adjuster.
- Assemble left timing chain with chain sprocket and camshaft adjuster.

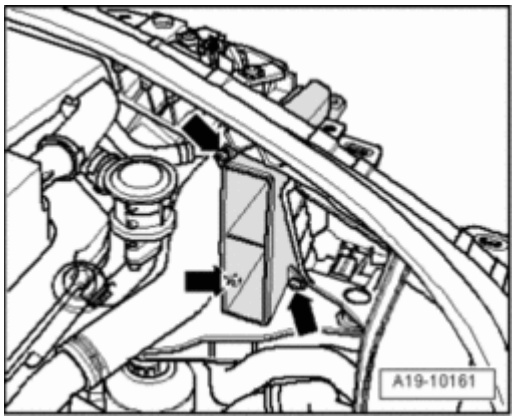

Fig. 343: Removing Bolts For Camshaft Chain Sprocket Or Camshaft Adjuster Using Multipoint Socket T10035
Courtesy of VOLKSWAGEN UNITED STATES, INC.

- Loosely install bolts - **1** - and - **2** -.

- Chain sprocket and camshaft adjuster must be able to still be rotated on camshaft and must not tip.

- Replace diamond disc between camshafts and right cylinder head camshaft adjuster.
- Assemble right timing chain with chain sprocket and camshaft adjuster.

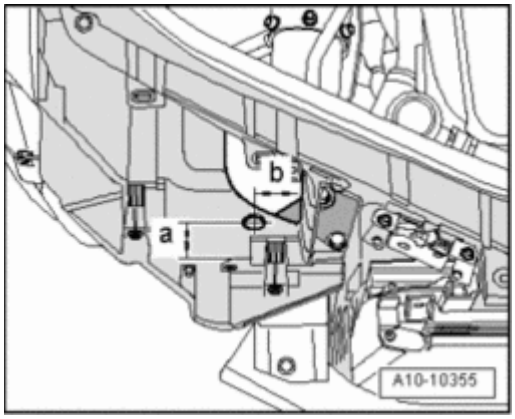

Fig. 344: Removing Bolts For Camshaft Chain Sprocket Or Camshaft Adjuster Using Multipoint Socket T10035
Courtesy of VOLKSWAGEN UNITED STATES, INC.

- Loosely install bolts - **1** - and - **2** -.

- Chain sprocket and camshaft adjuster must be able to still be rotated on camshaft and must not tip.

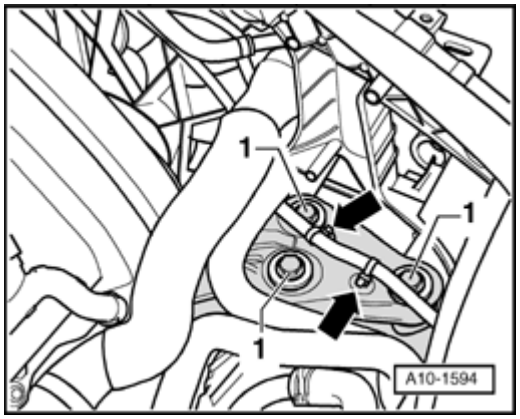

Fig. 345: Removing/Installing Crankshaft Holder 3242 Into Hole
Courtesy of VOLKSWAGEN UNITED STATES, INC.

- Remove Crankshaft Holder 3242.

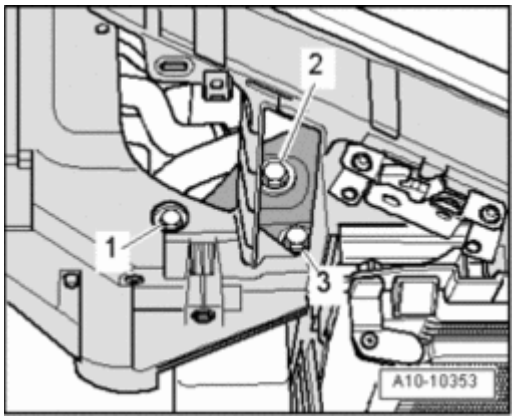

Fig. 346: Using Key T40049 To Rotate Crankshaft In Opposite Direction Of Engine Rotation
Courtesy of VOLKSWAGEN UNITED STATES, INC.

- Using key T40049 , rotate crankshaft approx. 30 ° in opposite direction of engine rotation - **arrow** -.
- Pull drill bit out of alignment hole, which loosens left chain tensioner.

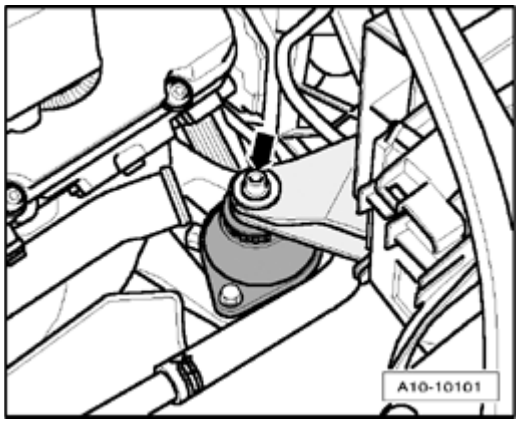

Fig. 347: Inserting Trim Removal Wedge 3409
Courtesy of VOLKSWAGEN UNITED STATES, INC.

- Insert trim removal wedge 3409 as shown in illustration and bring chain tensioner into contact with trim removal wedge 3409.
- Lightly pressing in an extra 0.5 mm is permitted.
- Pull drill bit out of alignment hole, which loosens right chain tensioner.

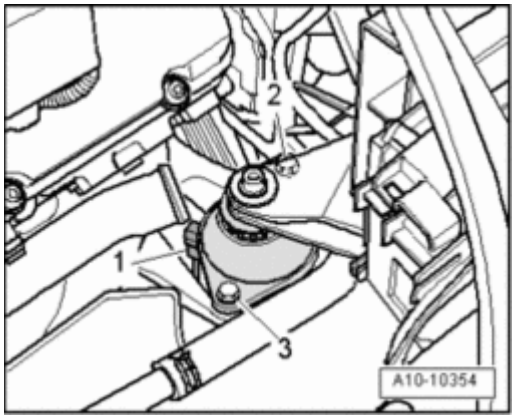

Fig. 348: Insert Trim Removal Wedge 3409
Courtesy of VOLKSWAGEN UNITED STATES, INC.

- Insert trim removal wedge 3409 as shown in illustration and bring chain tensioner into contact with trim removal wedge 3409.
- Lightly pressing in an extra 0.5 mm is permitted.

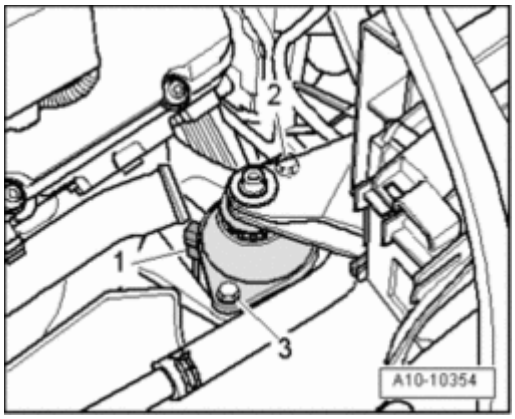

Fig. 349: Rotating Crankshaft To TDC Ignition Timing
Courtesy of VOLKSWAGEN UNITED STATES, INC.

- Using key T40049 , rotate crankshaft in direction of engine rotation - **arrow** - to TD ignition timing.

NOTE:

- **If rotated unintentionally beyond TDC, turn back crankshaft again approx. 30 ° and set to TDC again.**

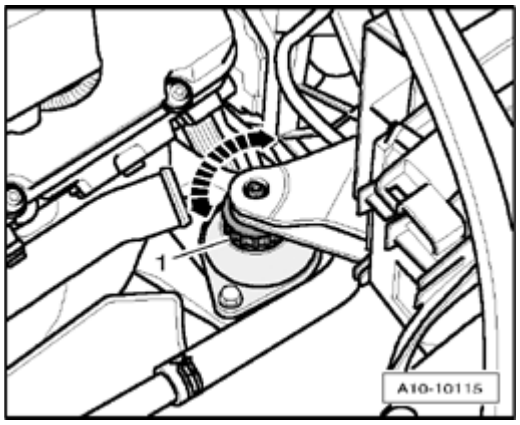

Fig. 350: Removing/Installing Crankshaft Holder 3242 Into Hole
Courtesy of VOLKSWAGEN UNITED STATES, INC.

- Install Crankshaft Holder 3242 into hole (20 Nm), if necessary rotate crankshaft very slightly back and forth to completely center holder.

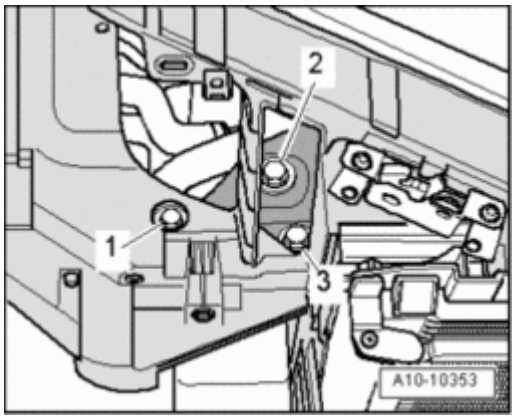

Fig. 351: Tightening Camshaft Bolt On Exhaust Camshaft Of Left Cylinder Head To Initial Tightening Torque
Courtesy of VOLKSWAGEN UNITED STATES, INC.

- Tighten camshaft bolt - **1** - on exhaust camshaft of left cylinder head to initial tightening torque.

- Torque specification: 40 Nm.

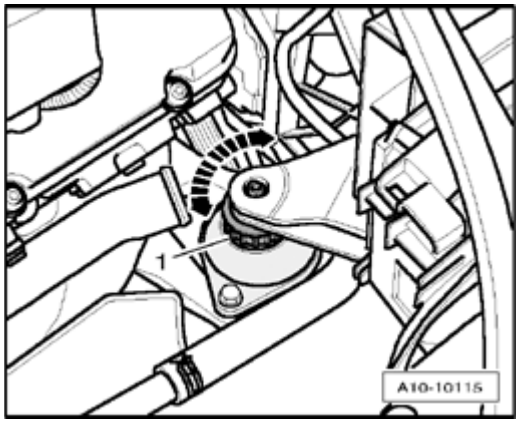

Fig. 352: Securing Hall Sensor Wheel On Camshaft Adjuster Of Intake Camshaft Of Left Cylinder Head Using Setting Gauge T40047
Courtesy of VOLKSWAGEN UNITED STATES, INC.

- Secure Hall sensor wheel on camshaft adjuster of intake camshaft of left cylinder head using setting gauge T40047.
- Place setting gauge T40047 on bolt - **1** -.
- Tighten camshaft bolt - **2** - on intake camshaft to initial tightening torque.

- Torque specification: 40 Nm.

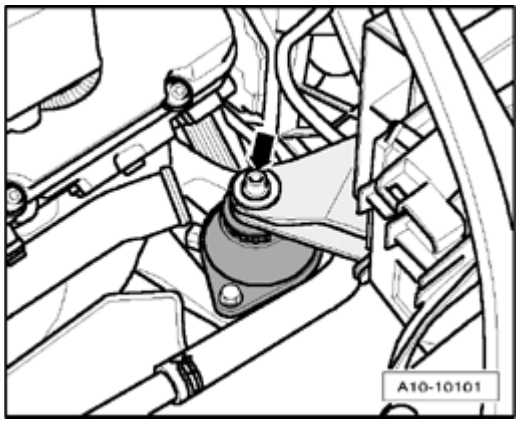

Fig. 353: Securing Hall Sensor Wheel On Camshaft Adjuster Of Intake Camshaft Of Right Cylinder Head Using Setting Gauge T40047
Courtesy of VOLKSWAGEN UNITED STATES, INC.

- Secure Hall sensor wheel on camshaft adjuster of intake camshaft of right cylinder head using setting gauge T40047.
- Place setting gauge T40047 on bolt - **2** -.
- Tighten camshaft bolt - **1** - on intake camshaft to initial tightening torque.

- Torque specification: 40 Nm.

- Remove setting gauge T40047.

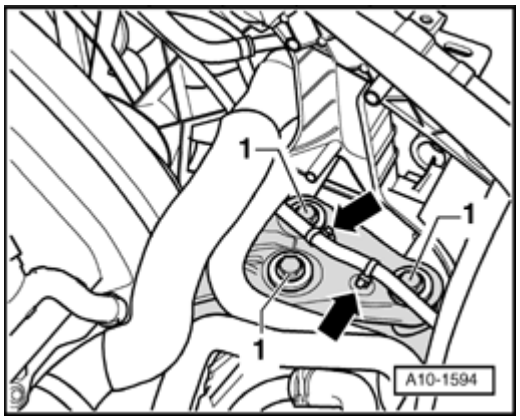

Fig. 354: Tightening Camshaft Bolt On Exhaust Camshaft Of Right Cylinder Head To Initial Tightening Torque
Courtesy of VOLKSWAGEN UNITED STATES, INC.

- Tighten camshaft bolt - **2** - on exhaust camshaft of right cylinder head to initial tightening torque.

- Torque specification: 40 Nm.

NOTE:

- **Camshaft locators T40046 must not be used as counter holder for final tightening of camshaft bolts.**

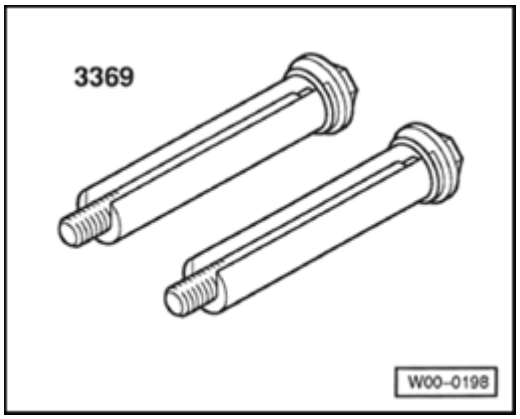

Fig. 355: Removing/Installing Camshaft Locator T40046
Courtesy of VOLKSWAGEN UNITED STATES, INC.

- Remove camshaft locators T40046 on both cylinder heads.

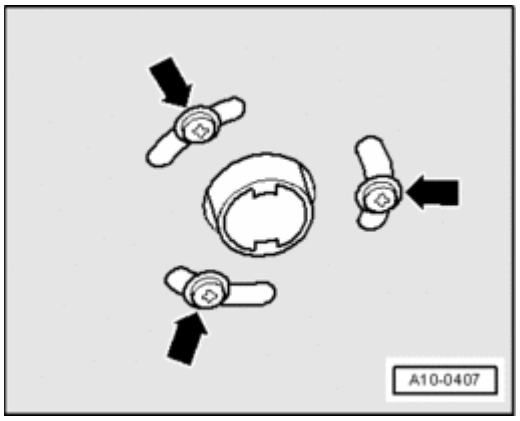

Fig. 356: Tightening Camshaft Bolt On Exhaust Camshaft Of Left Cylinder Head To Initial Tightening Torque
Courtesy of VOLKSWAGEN UNITED STATES, INC.

- Tighten camshaft bolt - **1** - on exhaust camshaft of left cylinder head to final tightening torque.

- Torque specification: 100 Nm plus an additional $^{1}/_{4}$ turn (90 °).

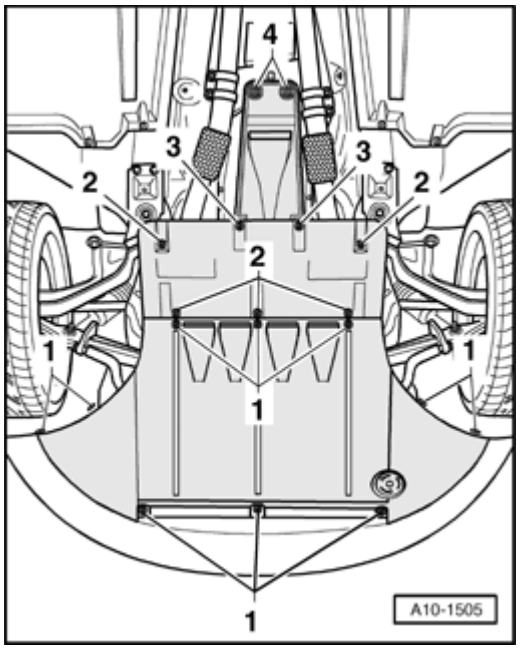

Fig. 357: Securing Hall Sensor Wheel On Camshaft Adjuster Of Intake Camshaft Of Left Cylinder Head Using Setting Gauge T40047
Courtesy of VOLKSWAGEN UNITED STATES, INC.

- Secure Hall sensor wheel on camshaft adjuster of intake camshaft of left cylinder head using setting gauge T40047.
- Place setting gauge T40047 on bolt - **1** -.
- Tighten camshaft bolt - **2** - on intake camshaft to final tightening torque.

- Torque specification: 100 Nm plus an additional $^{1}/_{4}$ turn (90 °).

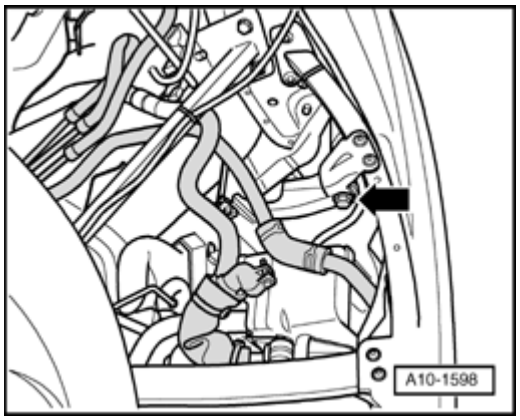

Fig. 358: Securing Hall Sensor Wheel On Camshaft Adjuster Of Intake Camshaft Of Right Cylinder Head Using Setting Gauge T40047
Courtesy of VOLKSWAGEN UNITED STATES, INC.

- Secure Hall sensor wheel on camshaft adjuster of intake camshaft of right cylinder head using setting gauge T40047.

- Place setting gauge T40047 on bolt - **2** -.
- Tighten camshaft bolt - **1** - on intake camshaft to final tightening torque.

- Torque specification: 100 Nm plus an additional $^{1}/_{4}$ turn (90 °).

- Remove setting gauge T40047.

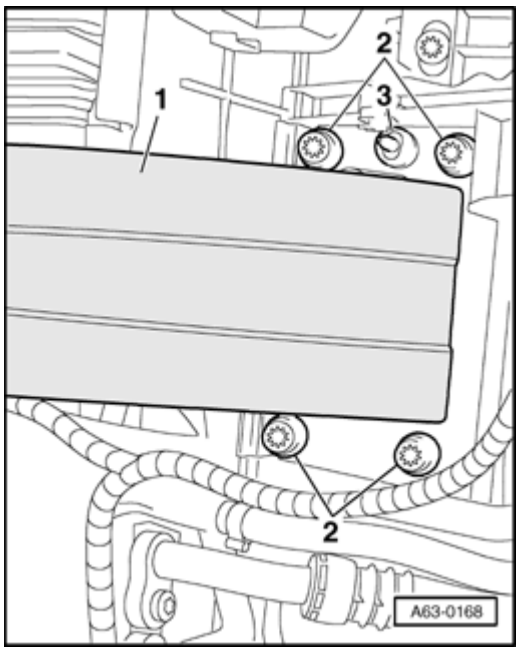

Fig. 359: Tightening Camshaft Bolt On Exhaust Camshaft Of Right Cylinder Head To Initial Tightening Torque
Courtesy of VOLKSWAGEN UNITED STATES, INC.

- Tighten camshaft bolt - **2** - on exhaust camshaft of right cylinder head to final tightening torque.

- Torque specification: 100 Nm plus an additional $^{1}/_{4}$ turn (90 °).

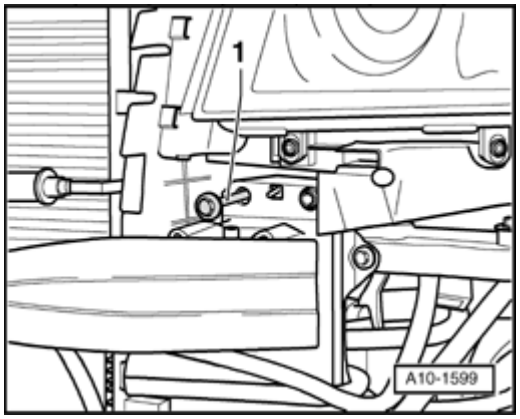

Fig. 360: Removing/Installing Crankshaft Holder 3242 Into Hole

Courtesy of VOLKSWAGEN UNITED STATES, INC.

- Remove Crankshaft Holder 3242.

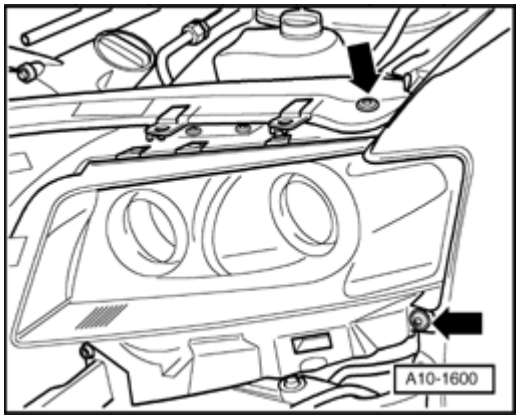

Fig. 361: Rotating Crankshaft To TDC Ignition Timing
Courtesy of VOLKSWAGEN UNITED STATES, INC.

- Using key T40049 turn crankshaft two complete rotations in direction of engine rotation - **arrow** - until crankshaft stands at TDC again.

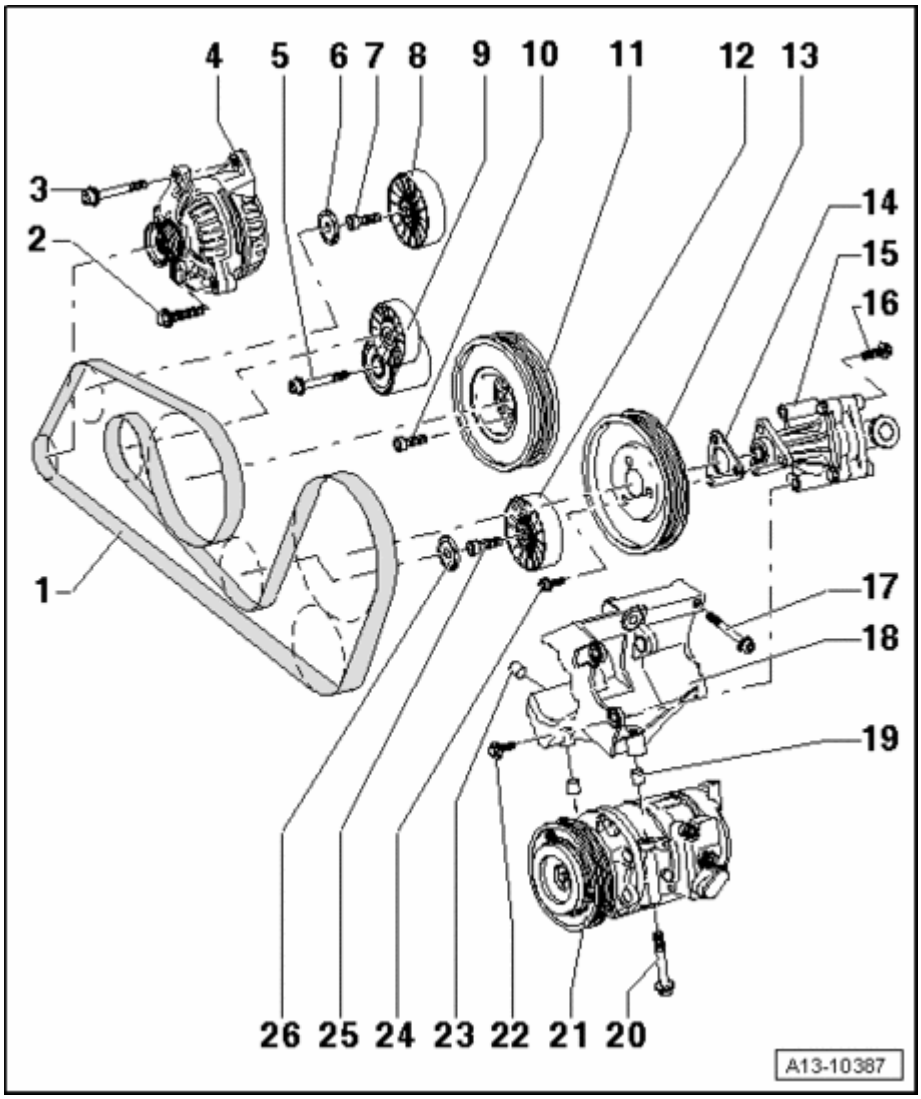

Fig. 362: Identifying Slits At Front In Camshafts Stand Parallel At Same Height With Upper Edge Of Cylinder Head
Courtesy of VOLKSWAGEN UNITED STATES, INC.

- Slits - **arrows** - at front in camshafts must stand parallel at same height with upper edge of cylinder head.

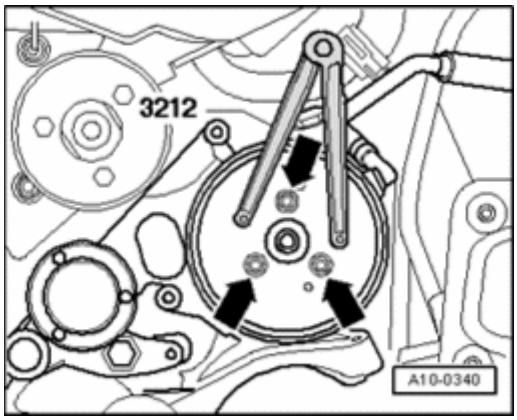

Fig. 363: Removing/Installing Crankshaft Holder 3242 Into Hole
Courtesy of VOLKSWAGEN UNITED STATES, INC.

- Install Crankshaft Holder 3242 into hole (20 Nm), if necessary rotate crankshaft very slightly back and forth to completely center holder.

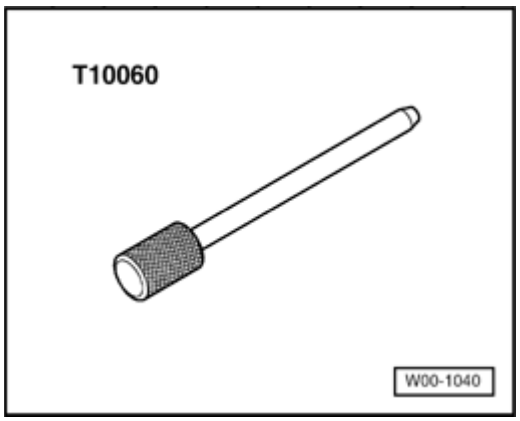

Fig. 364: Removing/Installing Camshaft Locator T40046
Courtesy of VOLKSWAGEN UNITED STATES, INC.

- Insert camshaft locator T40046 into camshafts of left cylinder head.

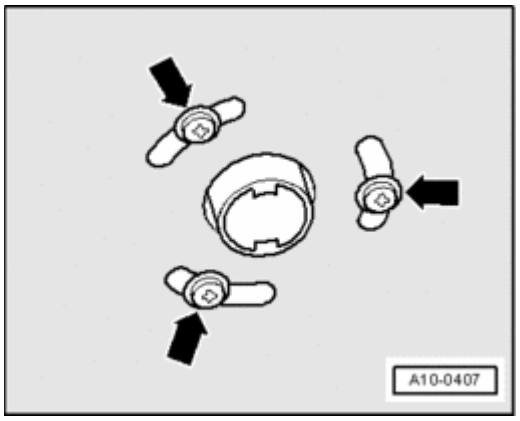

Fig. 365: Removing/Inserting Camshaft Locator T40046 From/Into Camshafts Of Right Cylinder Head
Courtesy of VOLKSWAGEN UNITED STATES, INC.

- Insert camshaft locator T40046 into camshafts of right cylinder head.

If camshaft locators cannot be inserted:

- Repeat adjustment.
- Pull out trim removal wedge 3409.
- Remove camshaft locator T40046 on both cylinder heads.
- Remove Crankshaft Holder 3242.

- Install sealing plug of TDC marking with new sealing ring into upper section of oil pan.

The rest of installation is in reverse order of removal, note the following:

- Install covers for timing chains **Installing**.
- Install engine: Vehicles with manual transmission --> **Engine (vehicles with manual transmission), installing** , vehicles with automatic transmission --> **Engine (vehicles with automatic transmission), installing**.
- Add engine oil and check oil level --> **Oil level, checking**.

Torque specifications

Component	Nm
Camshaft bolts	100 plus an additional 90 ° * See note
Sealing plug in upper section of oil pan	35
Oil drain plug	50

* 90 ° corresponds to one quarter rotation.

*Replace bolts.

Camshaft timing chains, removing from camshafts

NOTE:

- **For the removal of the cylinder head or camshafts, it is sufficient to remove camshaft timing chains only from the camshafts. Chains remain on the engine; only the top covers at left and right are removed.**
- **Even if work is performed only on one of the cylinder heads, the procedure described must be followed, since then the valve timing at both cylinder heads must be adjusted.**

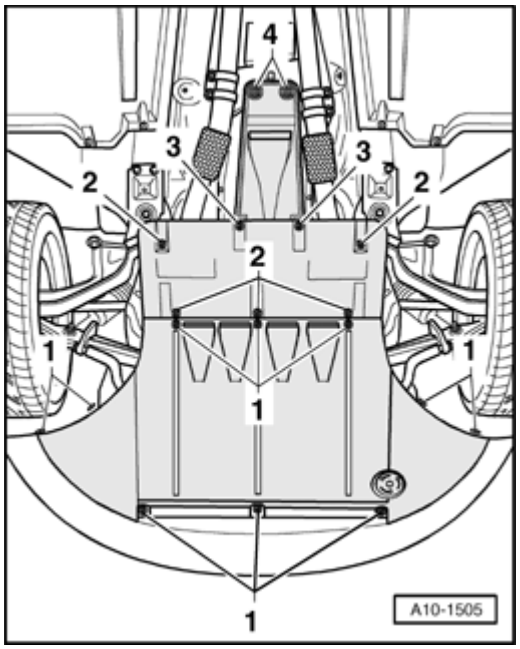

Fig. 366: Identifying Special Tools - Camshaft Timing Chains, Removing From Camshafts
Courtesy of VOLKSWAGEN UNITED STATES, INC.

Special tools, testers and auxiliary items required

- Crankshaft Holder 3242
- Trim removal wedge 3409 (2x)
- Old oil collecting and extracting device V.A.G 1782
- Multi-point socket T10035
- Camshaft locator T40046 (qty. 2)
- Setting gauge T40047

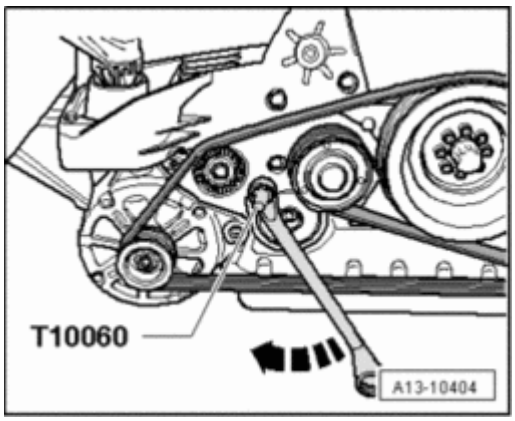

Fig. 367: Identifying Old Oil Collecting And Extracting Device V.A.G 1782
Courtesy of VOLKSWAGEN UNITED STATES, INC.

Old oil collecting and extracting device V.A.G 1782

Drill bit 3.3 mm dia. (2x)

Work procedure

NOTE:

- **All cable ties opened or cut during engine removal must be reinstalled at the same locations during installation.**

- Place old oil collecting and extracting device V.A.G 1782 under engine and drain engine oil.
- Remove engine: Vehicles with manual transmission --> **Engine (vehicles with manual transmission)** , vehicles with automatic transmission --> **Engine (vehicles with automatic transmission), removing**.
- Leave engine with transmission installed on scissor lift platform VAS 6131 A.

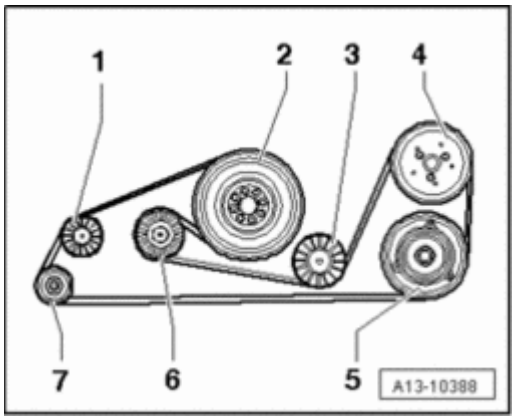

Fig. 368: Disconnecting Electrical Connection At Throttle Valve Control Module J338 & Crankcase Ventilation Hose At Intake Pipe
Courtesy of VOLKSWAGEN UNITED STATES, INC.

- Disconnect electrical connection - **1** - at throttle valve control module J338.
- Disconnect crankcase ventilation hose - **3** - at intake pipe.

NOTE:

- **Disregard item - 2 -.**

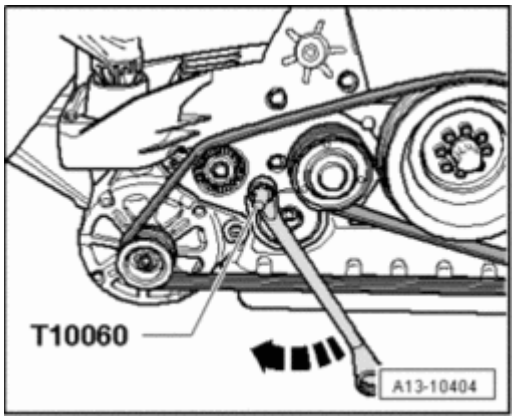

Fig. 369: Remove Electrical Harness Connectors Toward Front From Brackets On Intake Line

Courtesy of VOLKSWAGEN UNITED STATES, INC.

- Remove electrical harness connectors - **1** - , - **2** - , - **5** - and - **6** - toward front from brackets on intake line.
- Disconnect electrical connectors - **3** - and - **4** -.

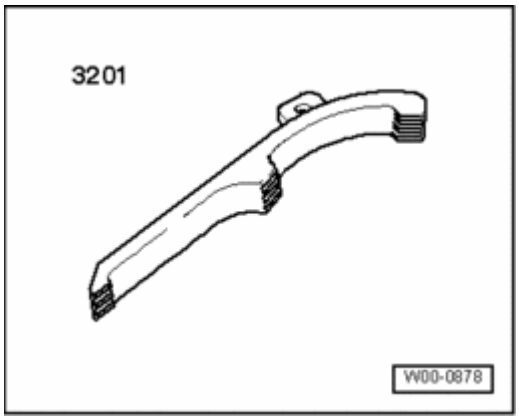

Fig. 370: Disconnecting Vacuum Hose At T-Piece
Courtesy of VOLKSWAGEN UNITED STATES, INC.

- Disconnect vacuum hose - **arrow** - at T-piece.

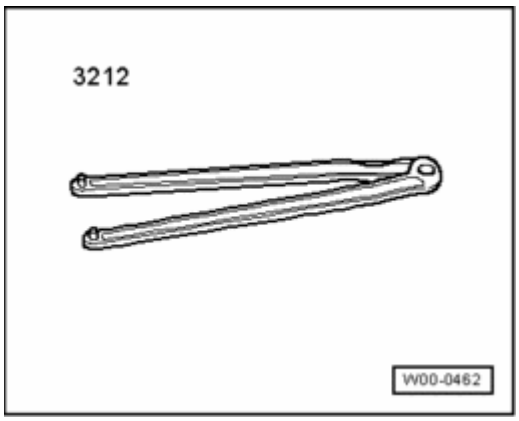

Fig. 371: Identifying Connector Strips At Fuel Injectors, Vacuum Line On Fuel Pressure Regulator & Retaining Bolts For Fuel Rail Line
Courtesy of VOLKSWAGEN UNITED STATES, INC.

- Disconnect connector strips - **1** - and - **5** - at fuel injectors.
- For vehicles with fuel return line, disconnect vacuum line - **4** - on fuel pressure regulator.
- Remove retaining bolts - **2** - and - **3** - for fuel rail line.
- Remove fuel rail line together with fuel injectors from intake manifold uniformly upward.

NOTE:

- **Carefully protect the removed fuel injectors from contamination.**

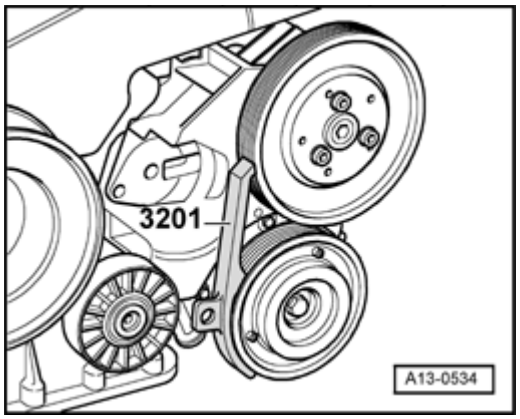

Fig. 372: Removing Left/Rear Engine Lifting Eye
Courtesy of VOLKSWAGEN UNITED STATES, INC.

- Remove left rear engine lifting eye - **arrows** -.

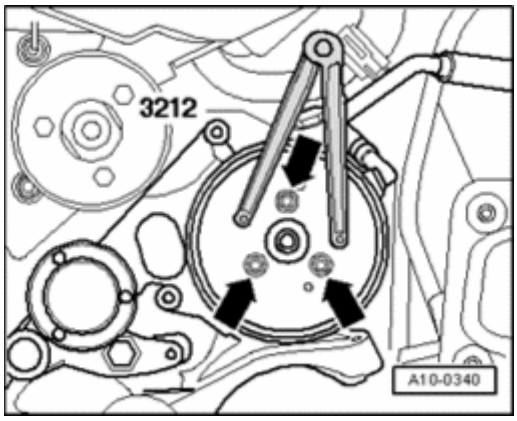

Fig. 373: Removing Intake Manifold Bolts
Courtesy of VOLKSWAGEN UNITED STATES, INC.

- Remove intake manifold bolts - **arrows** - and remove it.

NOTE:

- **Plug intake ports of the cylinder head with clean rags.**

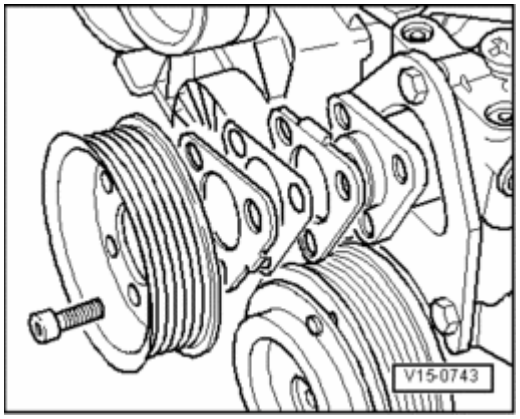

Fig. 374: Removing Cap For Oil Filter Housing
Courtesy of VOLKSWAGEN UNITED STATES, INC.

- Remove cap - **arrow** - for oil filter housing.
- Remove oil filter element.
- Extract engine oil using old oil collecting and extracting device V.A.G 1782 from oil filter housing.

NOTE:

- **Place a rag around oil filter housing to catch escaping engine oil.**

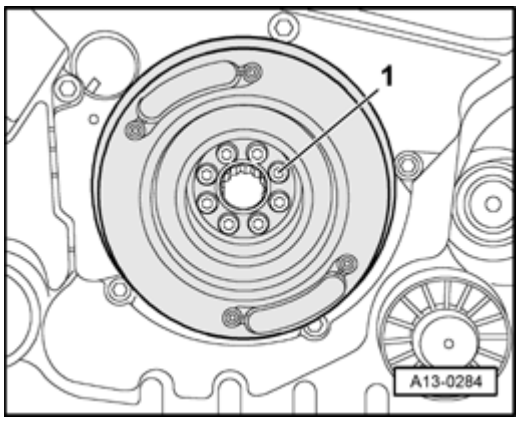

Fig. 375: Removing Bolts & Oil Filter Housing
Courtesy of VOLKSWAGEN UNITED STATES, INC.

- Remove bolts - **arrows** -.
- Remove oil filter housing.

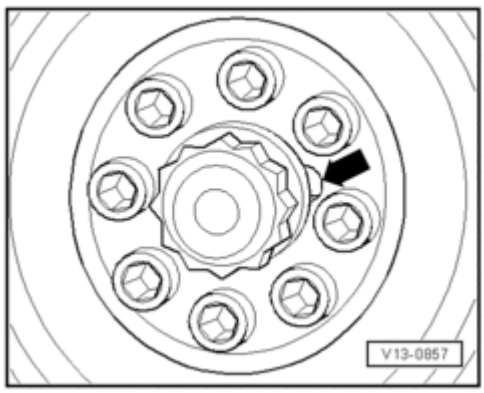

Fig. 376: Removing Bolts & Return Line From Power-Steering Pump
Courtesy of VOLKSWAGEN UNITED STATES, INC.

- Remove bolts - **1** - and - **2** -.
- Place old oil collecting and extracting device V.A.G 1782 underneath.
- Remove return line from power-steering pump - **arrow** -.

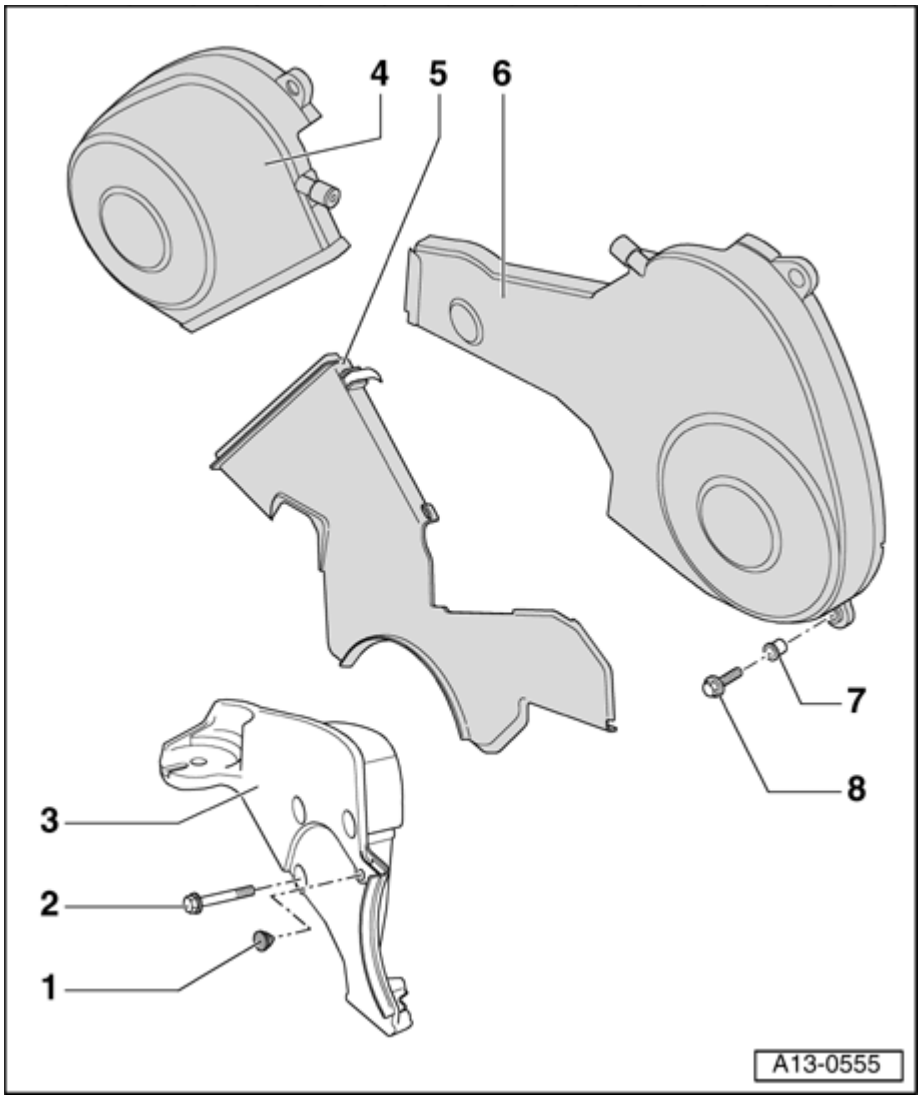

Fig. 377: Removing Bolt From Oil Dipstick Guide Tube At Cylinder Head
Courtesy of VOLKSWAGEN UNITED STATES, INC.

- Remove guide pipe bolt - **arrow** - for oil dipstick at cylinder head, pull up and remove.

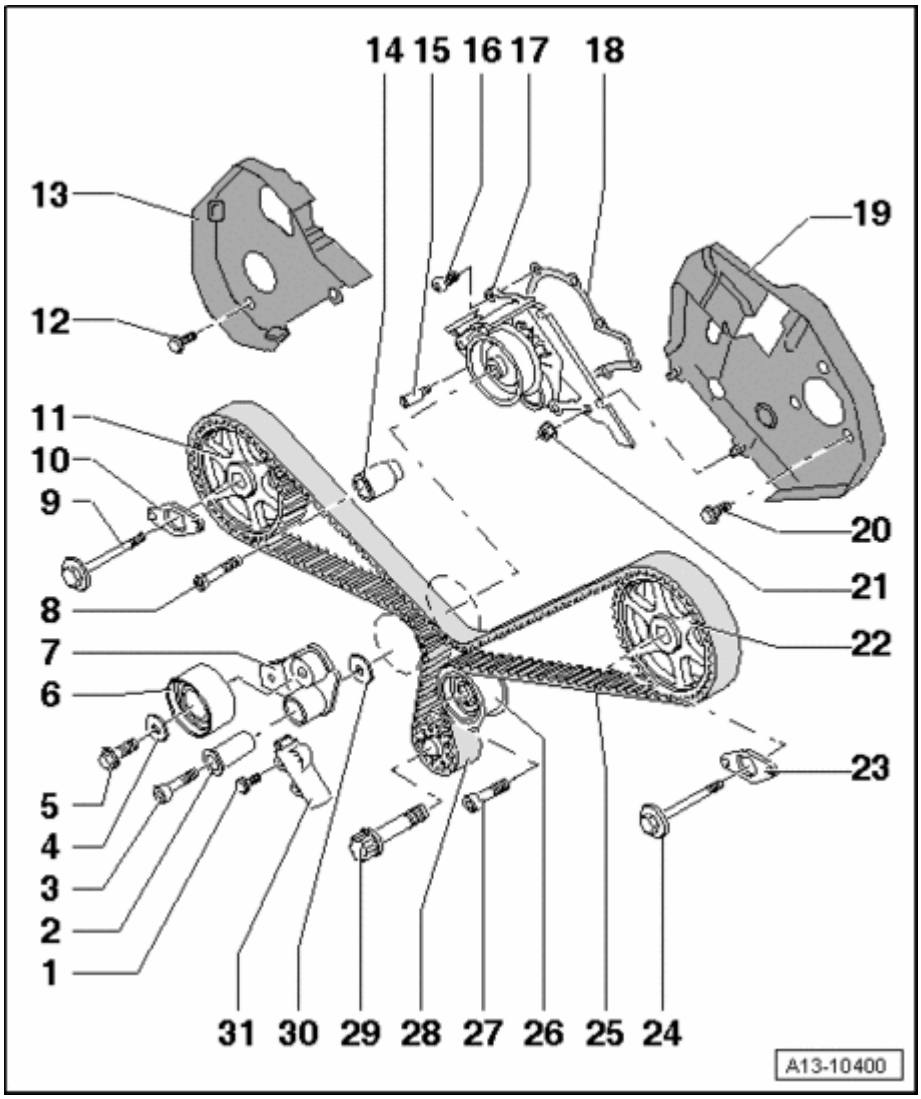

Fig. 378: Removing Bolts, Loosening Hose Clamps And Removing Left Coolant Pipe From Coolant Hoses
Courtesy of VOLKSWAGEN UNITED STATES, INC.

- Remove bolts - **1** - and - **2** -.
- Loosen hose clamps - **arrows** - and remove left coolant pipe from coolant hoses.

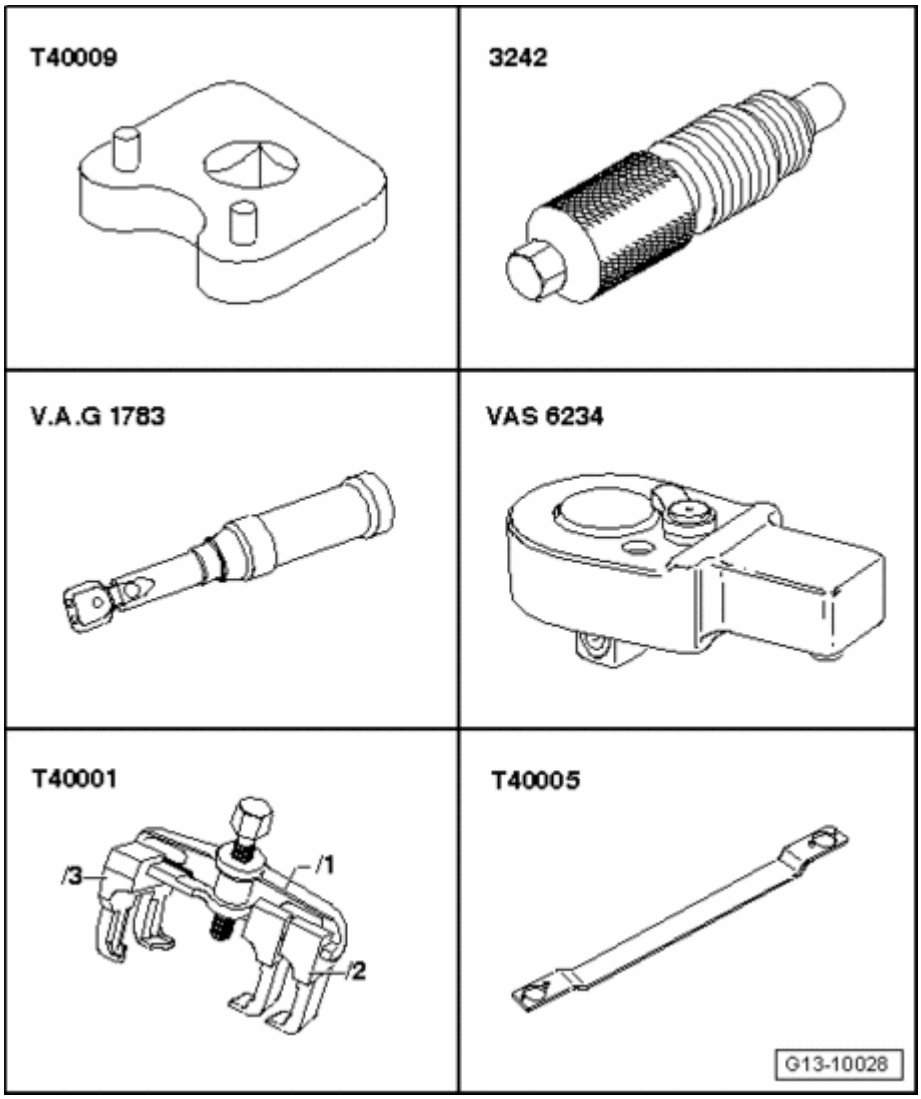

Fig. 379: Removing Bolts, Loosening Hose Clamps And Removing Right Coolant Pipe From Coolant Hoses
Courtesy of VOLKSWAGEN UNITED STATES, INC.

- Remove bolts - **1** - and - **2** -.
- Loosen hose clamps - **arrows** - and remove right coolant pipe from coolant hoses.

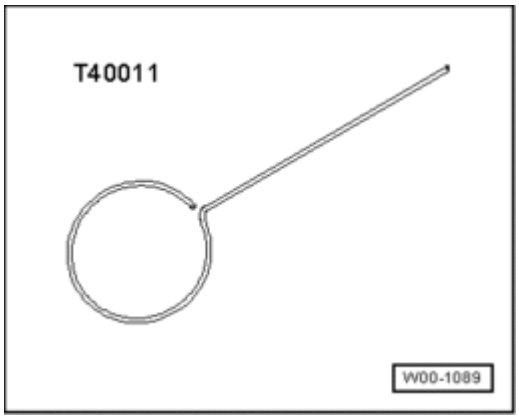

Fig. 380: Disconnecting Electrical Harness Connector On Engine Coolant Temperature (ECT) Gauge Sensor G2/G62
Courtesy of VOLKSWAGEN UNITED STATES, INC.

- Disconnect electrical harness connector - **2** - on Engine Coolant Temperature (ECT) Gauge Sensor G2/G62.
- Remove nut - **1** - and remove electrical wiring harness at rear coolant pipe.

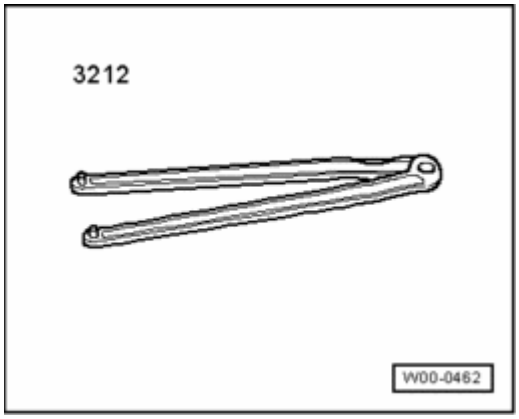

Fig. 381: Removing Bolts & Rear Coolant Pipe
Courtesy of VOLKSWAGEN UNITED STATES, INC.

- Remove bolts - **2 to 5** -.
- Remove rear coolant pipe.

NOTE:

- **Ignore - 1 - and - 6 -.**

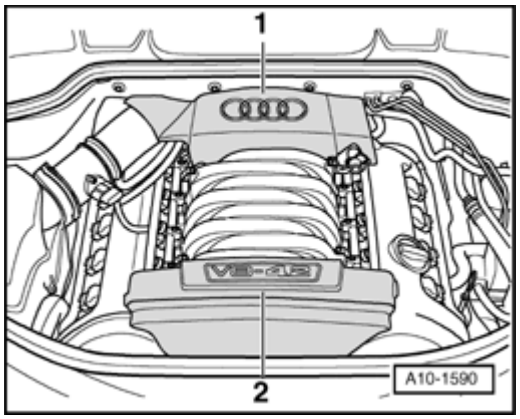

Fig. 382: Removing Mounting Bolts Of Combination Valves For Secondary Air Injection (AIR) System
Courtesy of VOLKSWAGEN UNITED STATES, INC.

- Remove mounting bolts - **1 to 4** - of combination valves for Secondary Air Injection (AIR) system.

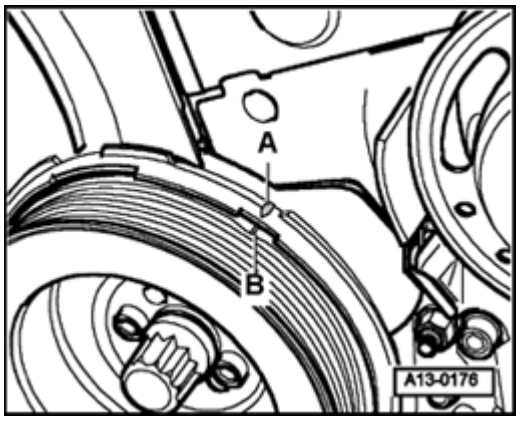

Fig. 383: Removing Nuts And Left Exhaust Manifold
Courtesy of VOLKSWAGEN UNITED STATES, INC.

- Remove nuts - **1 to 12** - and remove left exhaust manifold.

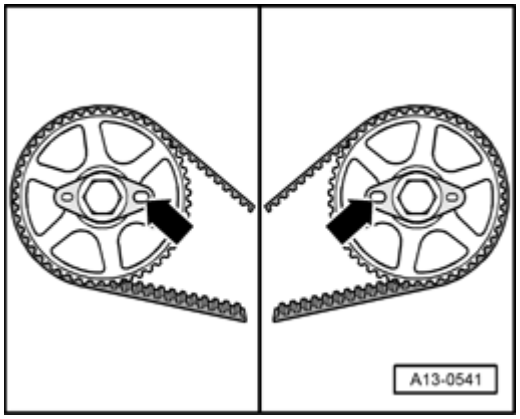

Fig. 384: Removing Left Heat Shield
Courtesy of VOLKSWAGEN UNITED STATES, INC.

- Remove left heat shield - **arrows** -.

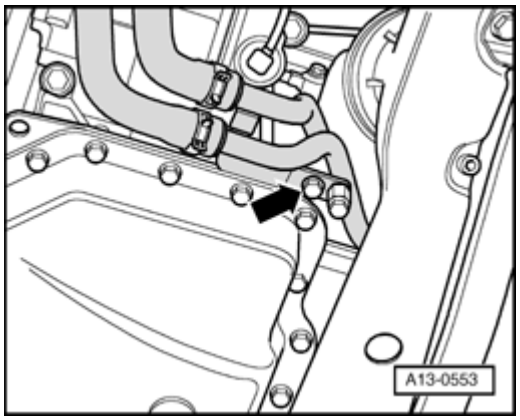

Fig. 385: Removing Nuts And Right Exhaust Manifold
Courtesy of VOLKSWAGEN UNITED STATES, INC.

- Remove nuts - **1 to 12** - and remove right exhaust manifold.

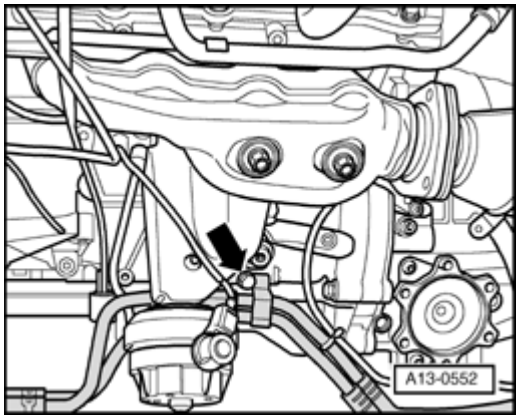

Fig. 386: Removing Right Heat Shield
Courtesy of VOLKSWAGEN UNITED STATES, INC.

- Remove right heat shield - **arrows** -.

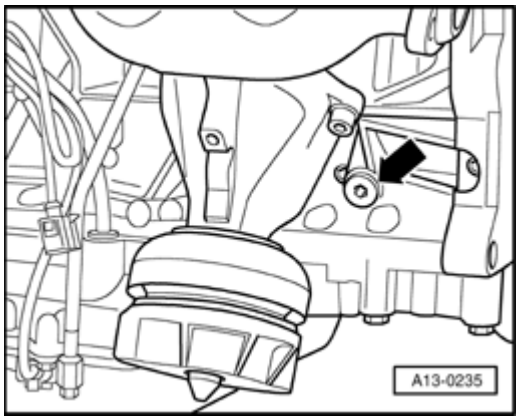

Fig. 387: Removing Bolts On Left Cylinder Head, Disconnecting Electrical Harness Connectors & Removing Ignition Coils
Courtesy of VOLKSWAGEN UNITED STATES, INC.

- Remove bolts - **5** - and - **6** - on left cylinder head.
- Disconnect electrical harness connectors - **1 to 4** -.
- Remove ignition coils - **arrows** -.

NOTE:

- **Extractor T40039 can be used for removal.**

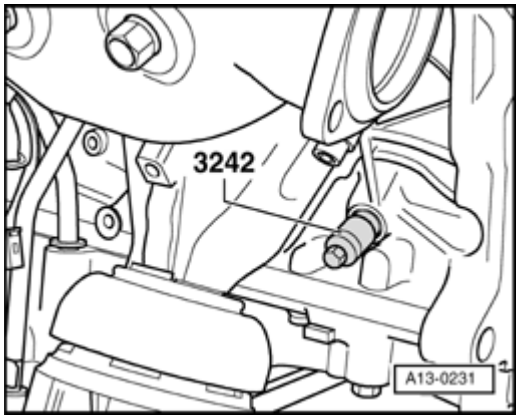

Fig. 388: Disconnecting Hose Of Crankshaft Housing Ventilation & Removing Left Cylinder Head Cover Bolts In Sequence
Courtesy of VOLKSWAGEN UNITED STATES, INC.

- Disconnect hose of crankshaft housing ventilation - **arrow** -.
- Remove left cylinder head cover bolts in sequence - **15 to 1** -.
- Remove cylinder head cover.

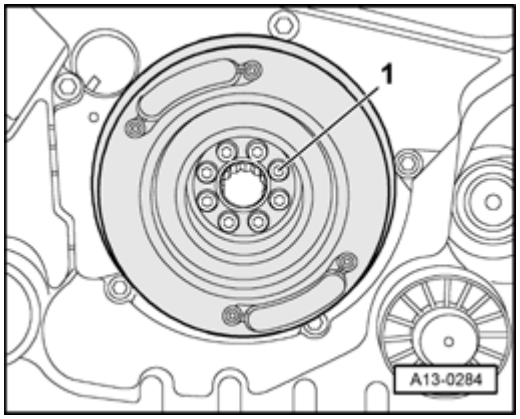

Fig. 389: Removing Bolts On Right Cylinder Head, Disconnecting Electrical Harness Connectors & Removing Ignition Coils
Courtesy of VOLKSWAGEN UNITED STATES, INC.

- Remove bolts - **5** - and - **6** - on right cylinder head.

- Disconnect electrical harness connectors - **1 to 4** -.
- Remove ignition coils - **arrows** -.

NOTE:

- **Extractor T40039 can be used for removal.**

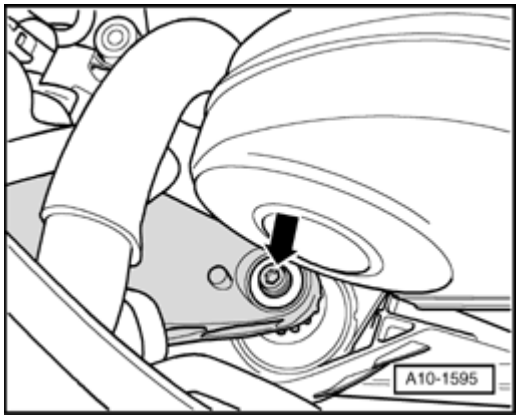

Fig. 390: Disconnecting Hose Of Crankshaft Housing Ventilation & Removing Right Cylinder Head Cover Screws In Sequence
Courtesy of VOLKSWAGEN UNITED STATES, INC.

- Disconnect hose of crankshaft housing ventilation - **arrow** -.
- Remove right cylinder head cover bolts in sequence - **15 to 1** -.
- Remove cylinder head cover.

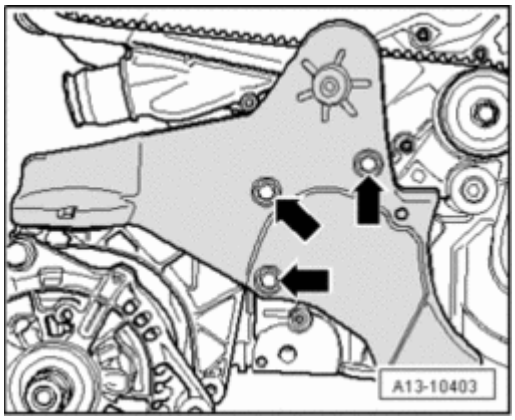

Fig. 391: Disconnecting Electrical Harness Connector For Camshaft Position (CMP) Sensor 2 G163 On Left Cylinder Head
Courtesy of VOLKSWAGEN UNITED STATES, INC.

- Disconnect electrical harness connector - **arrow** - for Camshaft Position (CMP) Sensor 2 G163 on left cylinder head.

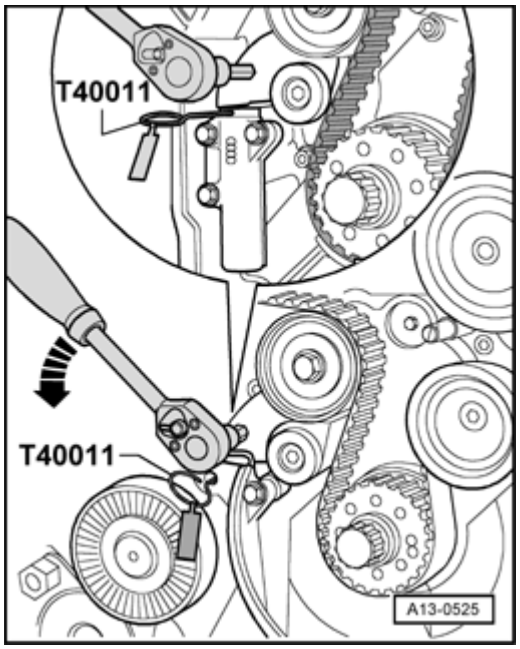

Fig. 392: Pressing Sealing Ring For Crankshaft At Rear Out Of Cover
Courtesy of VOLKSWAGEN UNITED STATES, INC.

- Disconnect electrical harness connector - **arrow** - for Camshaft Position (CMP) Sensor G40 on right cylinder head.

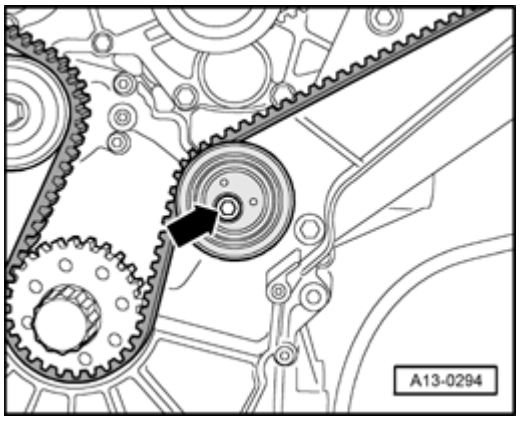

Fig. 393: Removing Ground (GND) Cable On Right Cylinder Head
Courtesy of VOLKSWAGEN UNITED STATES, INC.

- Remove Ground (GND) wire on right cylinder head - **arrow** -.
- Set wiring harness aside.

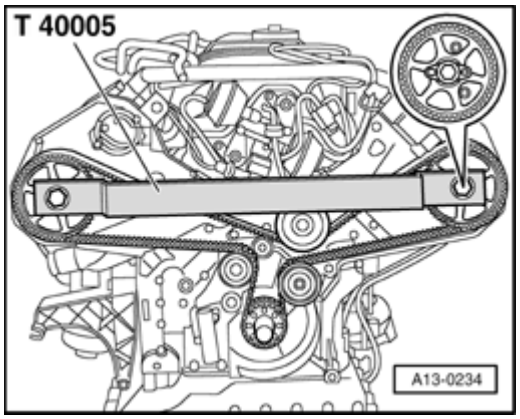

Fig. 394: Removing/Installing Bolts And Left Timing Chain Cover
Courtesy of VOLKSWAGEN UNITED STATES, INC.

- Remove bolts - **1 to 6** - and remove left timing chain cover.

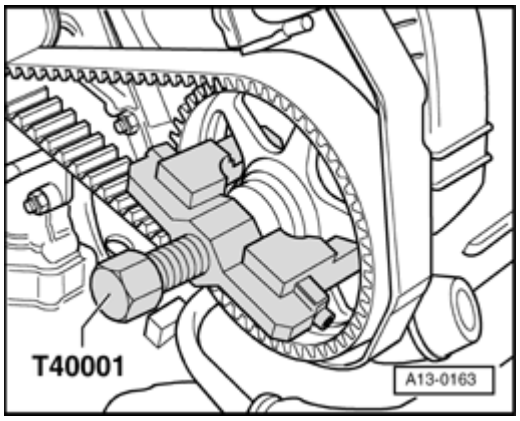

Fig. 395: Removing Bolts And Right Timing Chain Cover
Courtesy of VOLKSWAGEN UNITED STATES, INC.

- Remove bolts - **1 to 6** - and remove right timing chain cover.

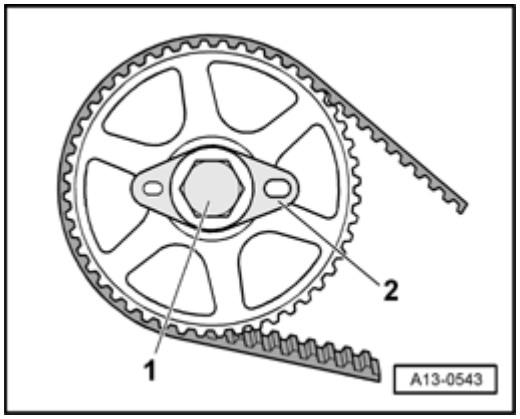

Fig. 396: Rotating Crankshaft To TDC Ignition Timing
Courtesy of VOLKSWAGEN UNITED STATES, INC.

- Rotate crankshaft in direction of engine rotation - **arrow** - to TDC ignition timing.

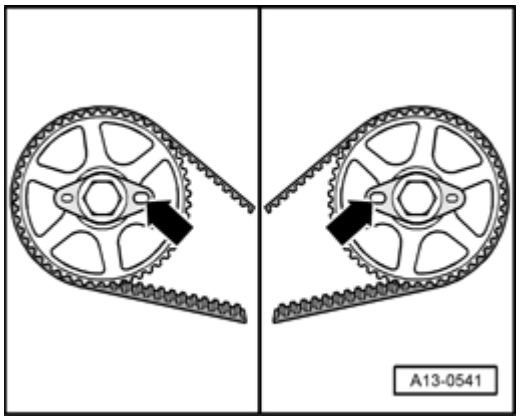

Fig. 397: Identifying Slits At Front In Camshafts Stand Parallel At Same Height With Upper Edge Of Cylinder Head
Courtesy of VOLKSWAGEN UNITED STATES, INC.

- Slits - **arrows** - at front in camshafts must stand parallel at same height with upper edge of cylinder head.

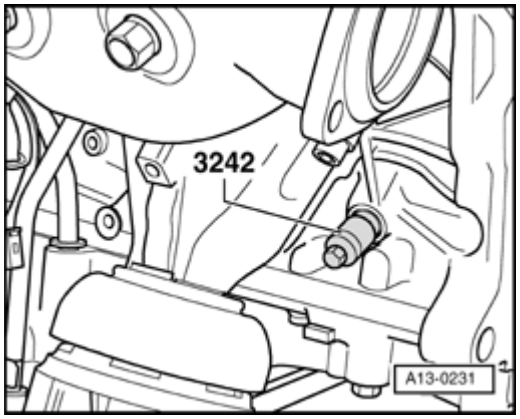

Fig. 398: Removing/Inserting Camshaft Locator T40046 From/Into Camshafts Of Right Cylinder Head
Courtesy of VOLKSWAGEN UNITED STATES, INC.

- Rotate camshafts at hex head slightly back and forth if necessary so that camshaft locator T40046 can be inserted.
- If camshaft locator T40046 cannot be inserted, rotate crankshaft 1 rotation (360 °) further.
- Remove camshaft locator T40046 again.
- Remove drain plug from upper section of oil pan.

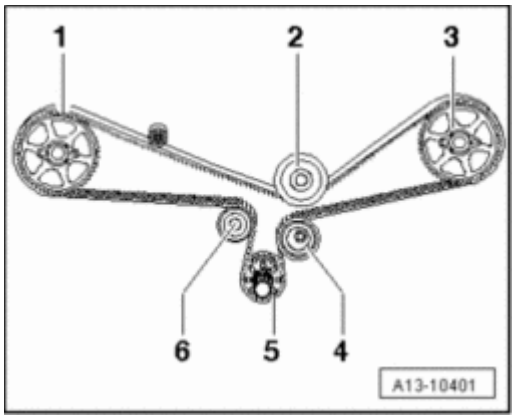

Fig. 399: Removing/Installing Crankshaft Holder 3242 Into Hole
Courtesy of VOLKSWAGEN UNITED STATES, INC.

- Install Crankshaft Holder 3242 into hole (20 Nm), if necessary rotate crankshaft very slightly back and forth to completely center holder.

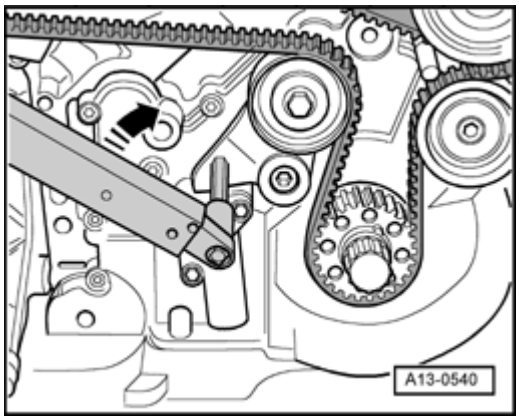

Fig. 400: Pushing Glide Track Of Chain Tensioner For Left Timing Chain
Courtesy of VOLKSWAGEN UNITED STATES, INC.

- Push glide track of chain tensioner for left timing chain in direction of - **arrow** - and pull off chain tensioner using a drill bit - **1** - 3.3 mm in dia.

NOTE:

- **In the following illustration, the timing mechanism is depicted with covers completely removed.**

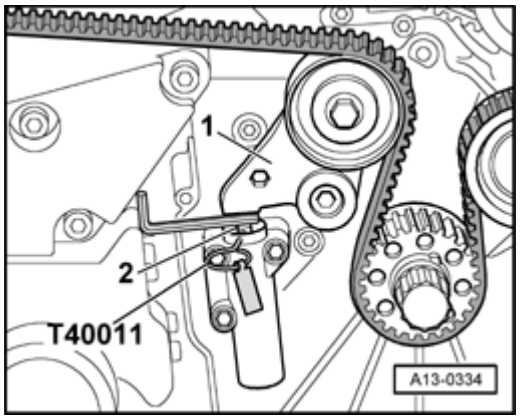

Fig. 401: Removing Bolts For Camshaft Chain Sprocket Or Camshaft Adjuster Using Multipoint Socket T10035
Courtesy of VOLKSWAGEN UNITED STATES, INC.

- Remove bolts - **1** - and - **2** - for camshaft chain sprocket or camshaft adjuster using multipoint socket T10035.
- Remove camshaft chain sprocket and camshaft adjuster.

NOTE:

- **Camshaft timing chain remains on engine.**
- **Also, if only one of the two cylinder heads is removed, bolts for camshaft gears must be loosened at both cylinder heads.**

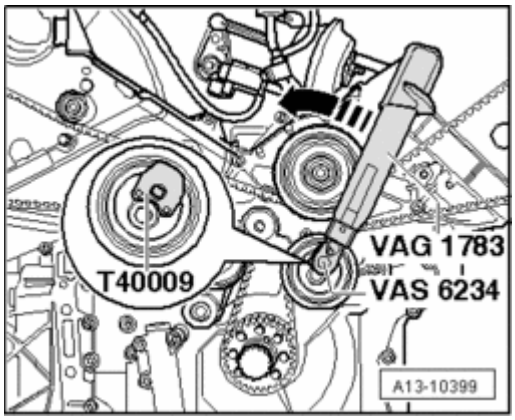

Fig. 402: Pushing Glide Track Of Chain Tensioner For Right Timing Chain
Courtesy of VOLKSWAGEN UNITED STATES, INC.

- Push glide track of chain tensioner for right timing chain in direction of - **arrow** - and pull off chain tensioner using a drill bit - **1** - 3.3 mm in dia.

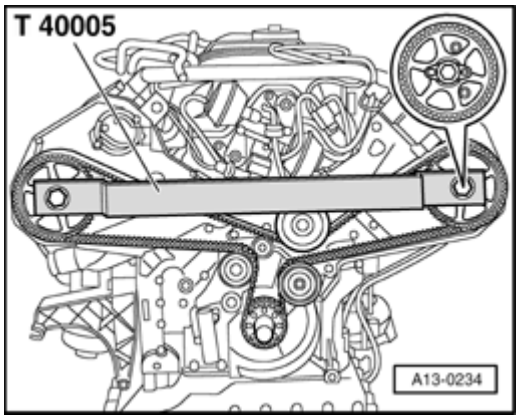

Fig. 403: Removing Bolts For Camshaft Chain Sprocket Or Camshaft Adjuster Using Multipoint Socket T10035
Courtesy of VOLKSWAGEN UNITED STATES, INC.

- Remove bolts - **1** - and - **2** - for camshaft chain sprocket or camshaft adjuster using multipoint socket T10035.
- Remove camshaft chain sprocket and camshaft adjuster.

NOTE:

- **Camshaft timing chain remains on engine.**
- **Also, if only one of the two cylinder heads is removed, bolts for camshaft gears must be loosened at both cylinder heads.**

Installing

- Secure crankshaft in TDC position using Crankshaft Holder 3242.

NOTE:

- **Always replace bolts that are tightened to torque as well as O-rings and gaskets.**
- **When turning camshaft, crankshaft must not be at TDC for any cylinder. Valves and/or pistons may be damaged.**
- **During installation, all cable ties must be re-installed at the same location.**

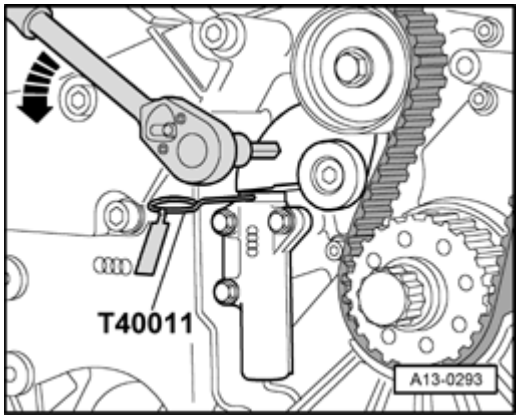

Fig. 404: Rotating Inner Part And Outer Part Of Both Camshaft Adjusters Against Each Other Up To Lock Position
Courtesy of VOLKSWAGEN UNITED STATES, INC.

- Rotate inner part and outer part of both camshaft adjusters against each other up to lock position - **arrows** -.
- Inner part and outer part must not be able to be against each other in lock position (slight play can still be felt).
- Check whether camshafts of both cylinder heads stand in TDC position.

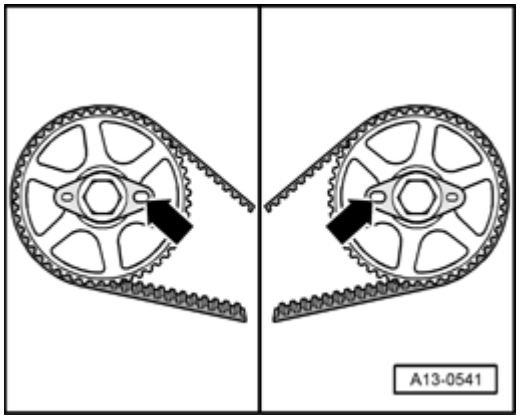

Fig. 405: Identifying Slits At Front In Camshafts Stand Parallel At Same Height With Upper Edge Of Cylinder Head
Courtesy of VOLKSWAGEN UNITED STATES, INC.

- Slits - **arrows** - at front in camshafts must stand parallel at same height with upper edge of cylinder head.

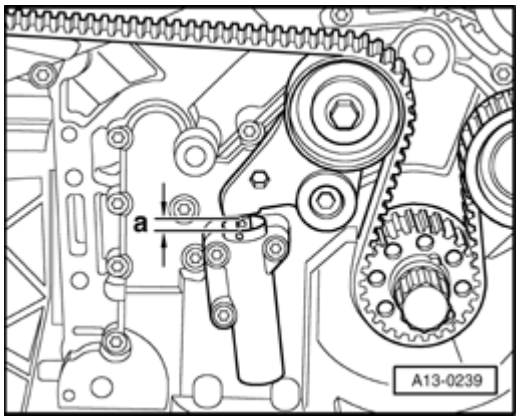

Fig. 406: Removing/Installing Camshaft Locator T40046
Courtesy of VOLKSWAGEN UNITED STATES, INC.

- Insert camshaft locator T40046 into camshafts of left cylinder head, to do so rotate camshafts back and forth at hex head if necessary.

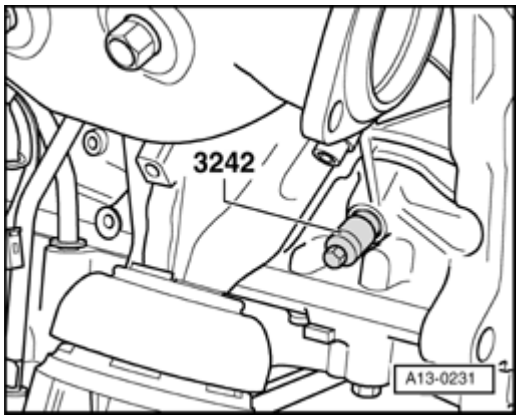

Fig. 407: Removing/Inserting Camshaft Locator T40046 From/Into Camshafts Of Right Cylinder Head
Courtesy of VOLKSWAGEN UNITED STATES, INC.

- Insert camshaft locator T40046 into camshafts of right cylinder head, to do so rotate camshafts back and forth at hex head if necessary.
- Replace all four camshaft bolts.
- Replace diamond disc between camshaft and left cylinder head camshaft adjuster.
- Assemble left timing chain with chain sprocket and camshaft adjuster.

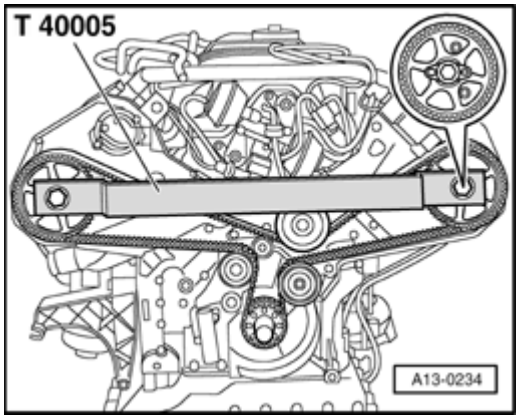

Fig. 408: Removing Bolts For Camshaft Chain Sprocket Or Camshaft Adjuster Using Multipoint Socket T10035
Courtesy of VOLKSWAGEN UNITED STATES, INC.

- Loosely install bolts - **1** - and - **2** -.

- Chain sprocket and camshaft adjuster must be able to still be rotated on camshaft and must not tip.

- Replace diamond disc between camshafts and right cylinder head camshaft adjuster.
- Assemble right timing chain with chain sprocket and camshaft adjuster.

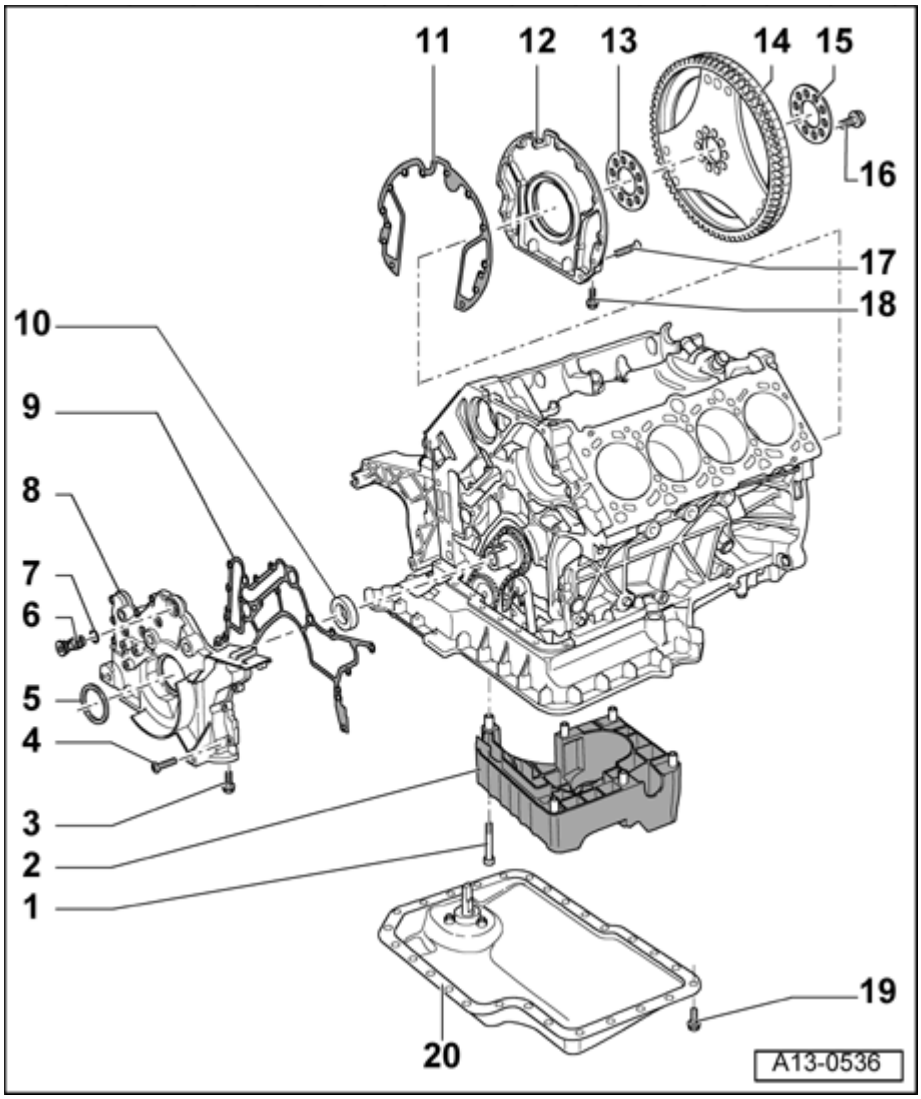

Fig. 409: Removing/Installing Bolts For Camshaft Chain Sprocket Or Camshaft Adjuster Using Multipoint Socket T10035
Courtesy of VOLKSWAGEN UNITED STATES, INC.

- Loosely install bolts - **1** - and - **2** -.

- Chain sprocket and camshaft adjuster must be able to still be rotated on camshaft and must not tip

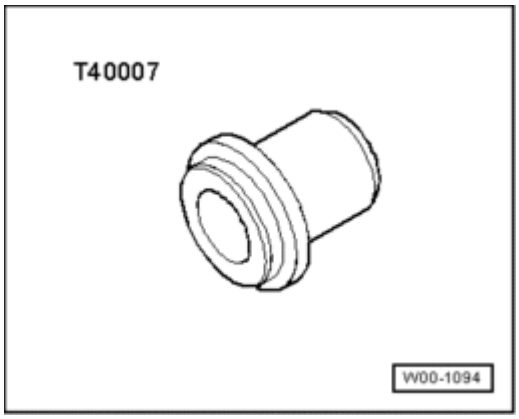

Fig. 410: Removing/Installing Crankshaft Holder 3242 Into Hole
Courtesy of VOLKSWAGEN UNITED STATES, INC.

- Remove Crankshaft Holder 3242.

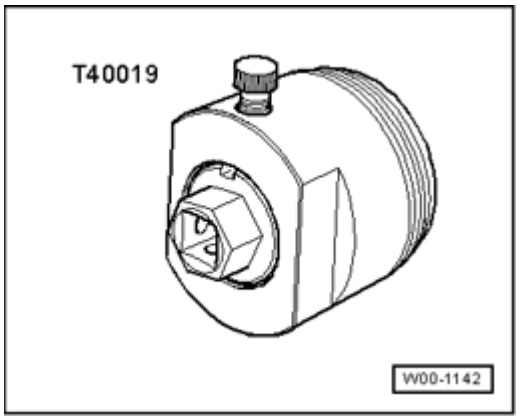

Fig. 411: Rotating Crankshaft 30 ° In Opposite Direction Of Engine Rotation
Courtesy of VOLKSWAGEN UNITED STATES, INC.

- Rotate crankshaft 30 ° in opposite direction of engine rotation - **arrow** -.
- Pull drill out of alignment hole, which loosens left chain tensioner.

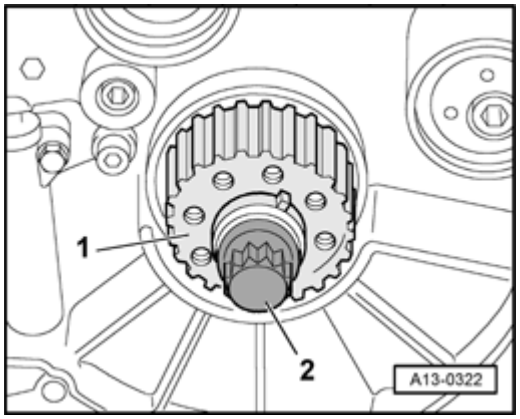

Fig. 412: Inserting Trim Removal Wedge 3409

Courtesy of VOLKSWAGEN UNITED STATES, INC.

- Insert trim removal wedge 3409 as shown in illustration and bring chain tensioner into contact with trim removal wedge 3409.
- Lightly pressing in an extra 0.5 mm is permitted.
- Pull drill out of alignment hole, which loosens right chain tensioner.

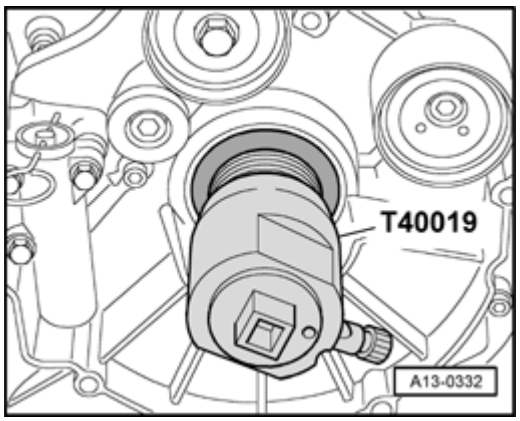

Fig. 413: Insert Trim Removal Wedge 3409
Courtesy of VOLKSWAGEN UNITED STATES, INC.

- Insert trim removal wedge 3409 as shown in illustration and bring chain tensioner into contact with trim removal wedge 3409.
- Lightly pressing in an extra 0.5 mm is permitted.

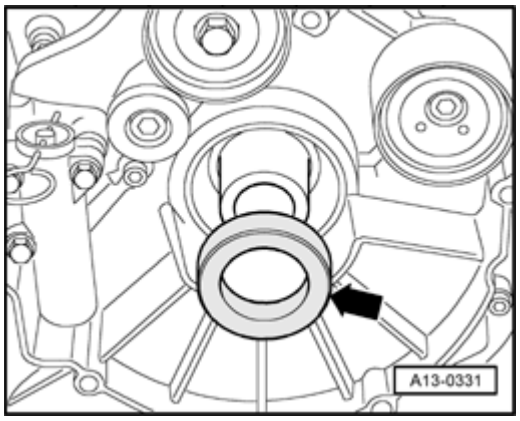

Fig. 414: Rotating Crankshaft To TDC Ignition Timing
Courtesy of VOLKSWAGEN UNITED STATES, INC.

- Rotate crankshaft in direction of engine rotation - **arrow** - to TDC ignition timing.

NOTE:

- **If rotated unintentionally beyond TDC, turn back crankshaft again approx. 30 ° and set to TDC again.**

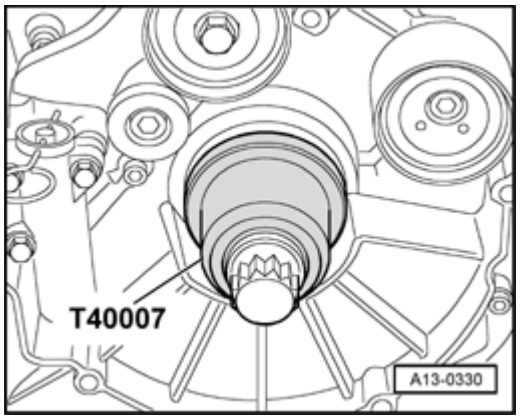

Fig. 415: Removing/Installing Crankshaft Holder 3242 Into Hole
Courtesy of VOLKSWAGEN UNITED STATES, INC.

- Install Crankshaft Holder 3242 into hole (20 Nm), if necessary rotate crankshaft very slightly back and forth to completely center holder.

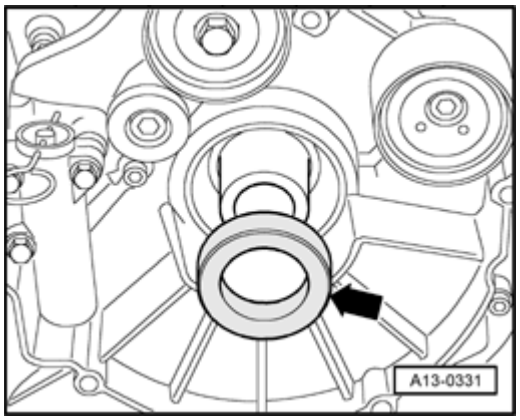

Fig. 416: Tightening Camshaft Bolt On Exhaust Camshaft Of Left Cylinder Head To Initial Tightening Torque
Courtesy of VOLKSWAGEN UNITED STATES, INC.

- Tighten camshaft bolt - **1** - on exhaust camshaft of left cylinder head to initial tightening torque.

- Torque specification: 40 Nm.

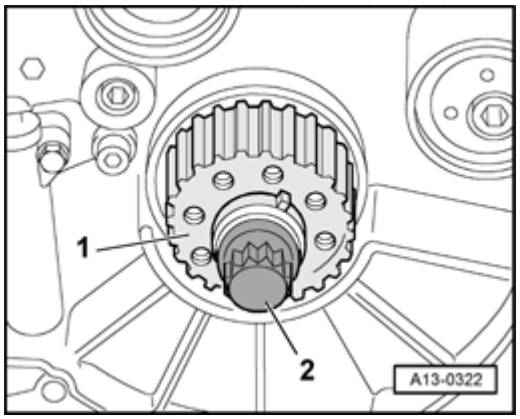

Fig. 417: Securing Hall Sensor Wheel On Camshaft Adjuster Of Intake Camshaft Of Left Cylinder Head Using Setting Gauge T40047
Courtesy of VOLKSWAGEN UNITED STATES, INC.

- Secure Hall sensor wheel on camshaft adjuster of intake camshaft of left cylinder head using setting gauge T40047.
- Place setting gauge on bolt - **1** -.
- Tighten camshaft bolt - **2** - on intake camshaft to initial tightening torque.

- Torque specification: 40 Nm.

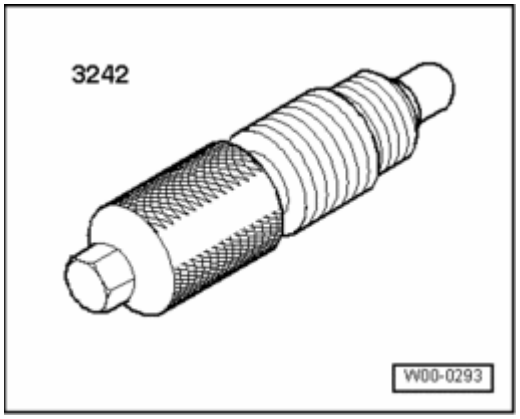

Fig. 418: Securing Hall Sensor Wheel On Camshaft Adjuster Of Intake Camshaft Of Right Cylinder Head Using Setting Gauge T40047
Courtesy of VOLKSWAGEN UNITED STATES, INC.

- Secure Hall sensor wheel on camshaft adjuster of intake camshaft of right cylinder head using setting gauge T40047.
- Place setting gauge on bolt - **2** -.
- Tighten camshaft bolt - **1** - on intake camshaft to initial tightening torque.

- Torque specification: 40 Nm.

- Remove setting gauge.

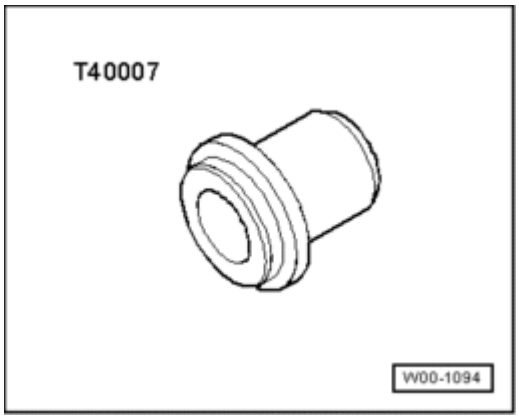

Fig. 419: Tightening Camshaft Bolt On Exhaust Camshaft Of Right Cylinder Head To Initial Tightening Torque
Courtesy of VOLKSWAGEN UNITED STATES, INC.

- Tighten camshaft bolt - **2** - on exhaust camshaft of right cylinder head to initial tightening torque.
- Torque specification: 40 Nm.

NOTE:

- **Camshaft locators must not be used as counter holder for final tightening of camshaft bolts.**

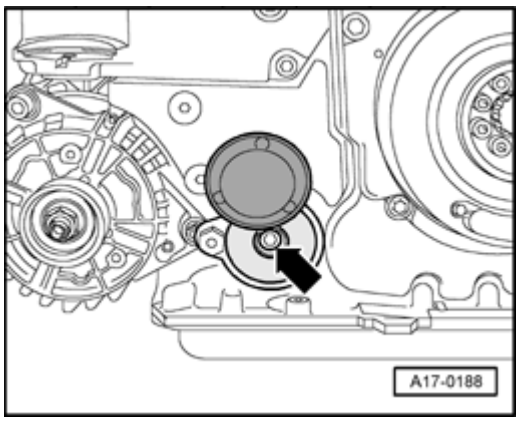

Fig. 420: Removing/Installing Camshaft Locator T40046
Courtesy of VOLKSWAGEN UNITED STATES, INC.

- Remove camshaft locators T40046 on both cylinder heads.

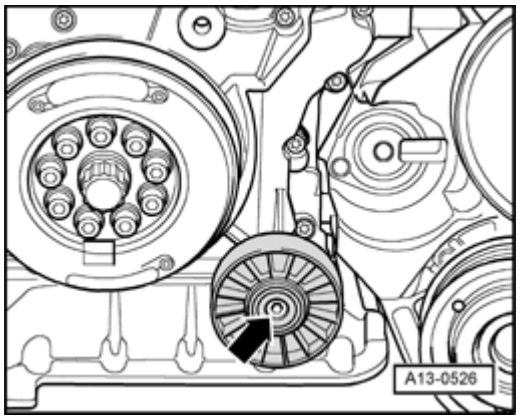

Fig. 421: Tightening Camshaft Bolt On Exhaust Camshaft Of Left Cylinder Head To Initial Tightening Torque
Courtesy of VOLKSWAGEN UNITED STATES, INC.

- Tighten camshaft bolt - **1** - on exhaust camshaft of left cylinder head to final tightening torque.

- Torque specification: 100 Nm plus an additional ($^1/_4$ turn (90 °).

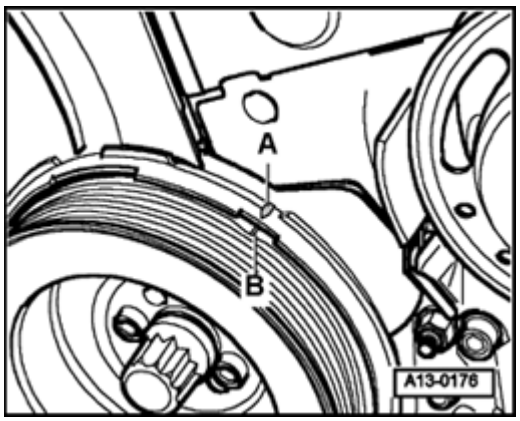

Fig. 422: Securing Hall Sensor Wheel On Camshaft Adjuster Of Intake Camshaft Of Left Cylinder Head Using Setting Gauge T40047
Courtesy of VOLKSWAGEN UNITED STATES, INC.

- Secure Hall sensor wheel on camshaft adjuster of intake camshaft of left cylinder head using setting gauge T40047.
- Place locator on bolt - **1** -.
- Tighten camshaft bolt - **2** - on intake camshaft to final tightening torque.

- Torque specification: 100 Nm plus an additional ($^1/_4$ turn (90 °).

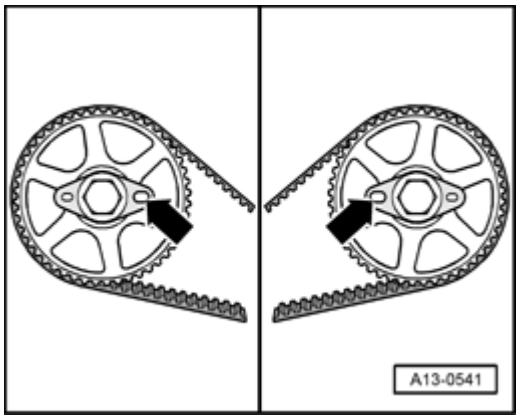

Fig. 423: Securing Hall Sensor Wheel On Camshaft Adjuster Of Intake Camshaft Of Right Cylinder Head Using Setting Gauge T40047
Courtesy of VOLKSWAGEN UNITED STATES, INC.

- Secure Hall sensor wheel on camshaft adjuster of intake camshaft of right cylinder head using setting gauge T40047.
- Place setting gauge T40047 on bolt - **2** -.
- Tighten camshaft bolt - **1** - on intake camshaft to final tightening torque.

- Torque specification: 100 Nm plus an additional ($^1/_4$ turn (90 °).

- Remove setting gauge T40047.

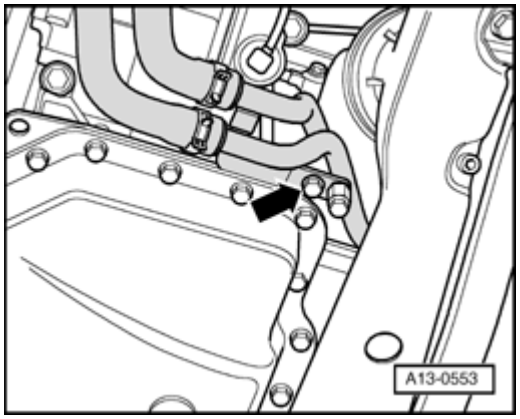

Fig. 424: Tightening Camshaft Bolt On Exhaust Camshaft Of Right Cylinder Head To Initial Tightening Torque
Courtesy of VOLKSWAGEN UNITED STATES, INC.

- Tighten camshaft bolt - **2** - on exhaust camshaft of right cylinder head to final tightening torque.

- Torque specification: 100 Nm plus an additional ($^1/_4$ turn (90 °).

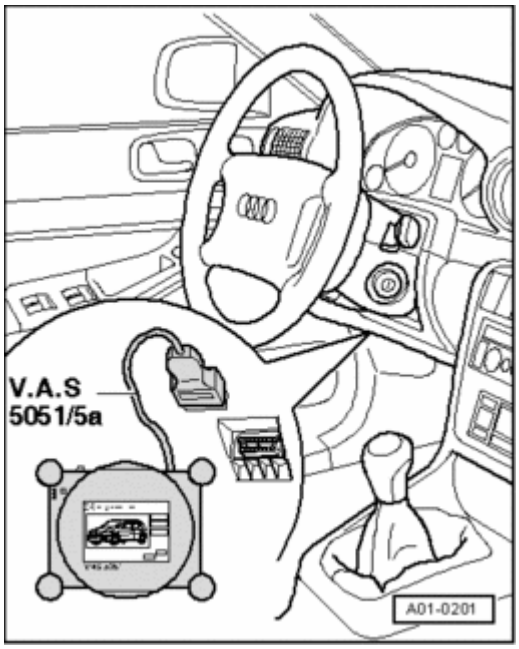

Fig. 425: Removing/Installing Crankshaft Holder 3242 Into Hole
Courtesy of VOLKSWAGEN UNITED STATES, INC.

- Remove Crankshaft Holder 3242.

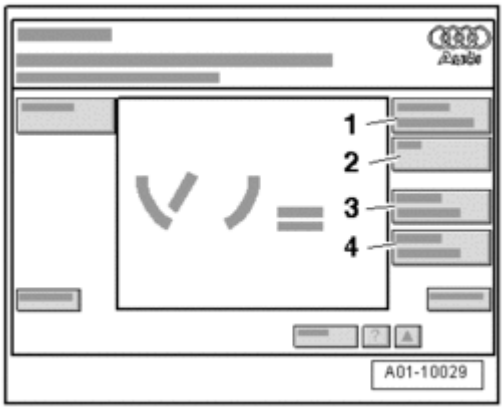

Fig. 426: Rotating Crankshaft To TDC Ignition Timing
Courtesy of VOLKSWAGEN UNITED STATES, INC.

- Turn crankshaft two complete rotations in direction of engine rotation - **arrow** - until crankshaft stands at TDC again.

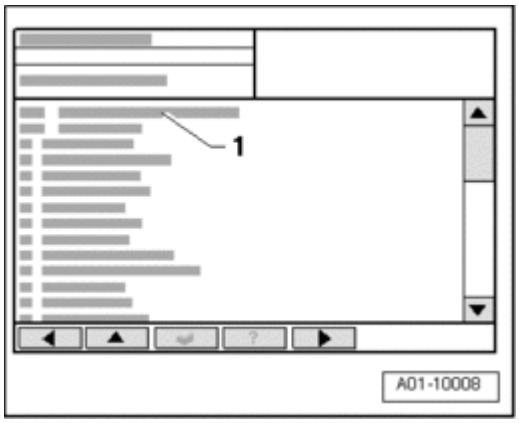

Fig. 427: Identifying Slits At Front In Camshafts Stand Parallel At Same Height With Upper Edge Of Cylinder Head
Courtesy of VOLKSWAGEN UNITED STATES, INC.

- Slits - **arrows** - at front in camshafts must stand parallel at same height with upper edge of cylinder head.

Fig. 428: Removing/Installing Crankshaft Holder 3242 Into Hole
Courtesy of VOLKSWAGEN UNITED STATES, INC.

- Install Crankshaft Holder 3242 into hole (20 Nm), if necessary rotate crankshaft very slightly back and forth to completely center holder.

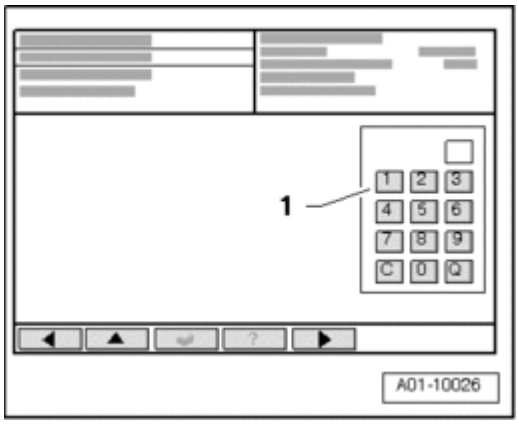

Fig. 429: Removing/Installing Camshaft Locator T40046
Courtesy of VOLKSWAGEN UNITED STATES, INC.

- Insert camshaft locator T40046 into camshafts of left cylinder head.

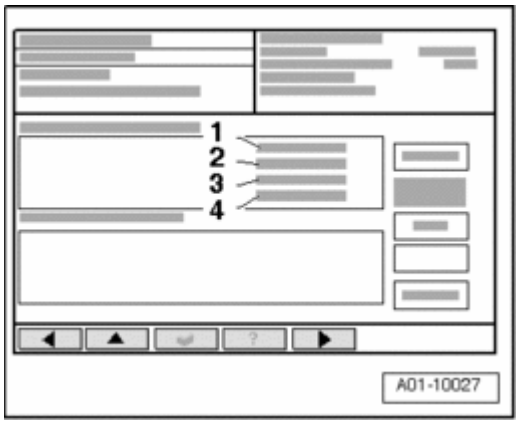

Fig. 430: Removing/Inserting Camshaft Locator T40046 From/Into Camshafts Of Right Cylinder Head
Courtesy of VOLKSWAGEN UNITED STATES, INC.

- Insert camshaft locator T40046 into camshafts of right cylinder head.

If camshaft locators cannot be inserted:

- Repeat adjustment.
- Pull out trim removal wedge 3409.
- Remove camshaft locator T40046 on both cylinder heads.
- Remove Crankshaft Holder 3242.

- Install sealing plug of TDC marking with new sealing ring into upper section of oil pan.

The rest of installation is in reverse order of removal, note the following:

- Install covers for timing chains **Installing**.
- Install engine: Vehicles with manual transmission --> **Engine (vehicles with manual transmission), installing** , vehicles with automatic transmission --> **Engine (vehicles with automatic transmission), installing**.
- Add engine oil and check oil level --> **Oil level, checking**.

Torque specifications

Component	Nm
Camshaft bolts	100 plus an additional 90 ° * See note
Sealing plug in upper section of oil pan	35
Oil drain plug	50

* 90 ° corresponds to one quarter rotation.

*Replace bolts.

Drive chain for timing mechanism - component overview

NOTE:

- **Before removing timing chain, mark direction of travel with paint. Reversing the rotation direction of a used chain can destroy it.**

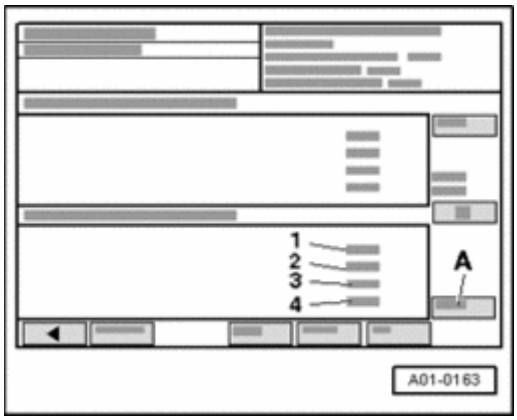

Fig. 431: Drive Chain For Timing Mechanism - Component Overview
Courtesy of VOLKSWAGEN UNITED STATES, INC.

1 - Pivot pin for drive sprocket

2 - Washer

3 - 42 Nm

4 - Pivot pin -10 Nm

5 - 5 Nm plus an additional ($^1/_4$ turn (90 °).

- Replace

6 - Thrust washer for drive sprocket

7 - Drive sprocket for left timing chain

8 - Pivot pin -10 Nm

9 - Drive chain for timing mechanism

10 - Guide rail

11 - Pivot pin -10 Nm

12 - 10 Nm

13 - Mounting bracket for drive sprocket

14 - O-ring

- Replace

15 - Thrust washer

16 - Drive sprocket for right timing chain

17 - Pivot pin -10 Nm

18 - O-ring

- Replace

19 - Chain tensioner

20 - 10 Nm

21 - Glide track for chain tensioner

22 - Crankshaft

23 - Guide rail

24 - Pivot pin -10 Nm

Drive chain for timing mechanism, removing and installing

Removing

- Remove camshaft timing chains --> **Camshaft timing chain, removing and installing**.
- Remove chain for power take-off --> **Chain for power take-off, removing and installing**.

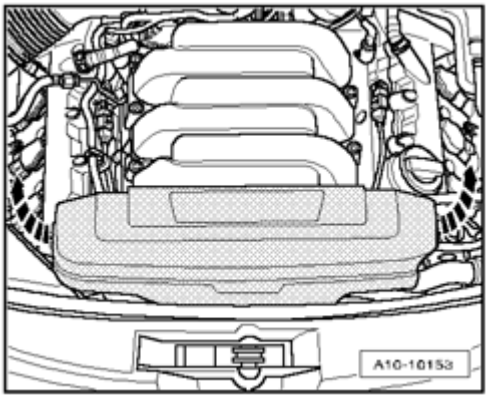

Fig. 432: Removing Glide Track At Left Cylinder Head & Chain Tensioner
Courtesy of VOLKSWAGEN UNITED STATES, INC.

- Remove glide track - **1** - at left cylinder head.
- Remove chain tensioner - **2** -.

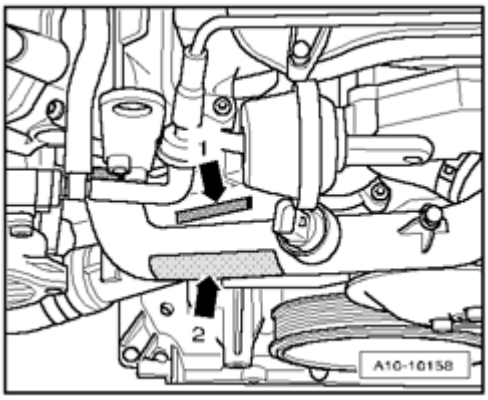

Fig. 433: Removing Glide Track At Right Cylinder Head
Courtesy of VOLKSWAGEN UNITED STATES, INC.

- Remove glide track - **1** - at right cylinder head.
- Remove chain tensioner - **2** -.

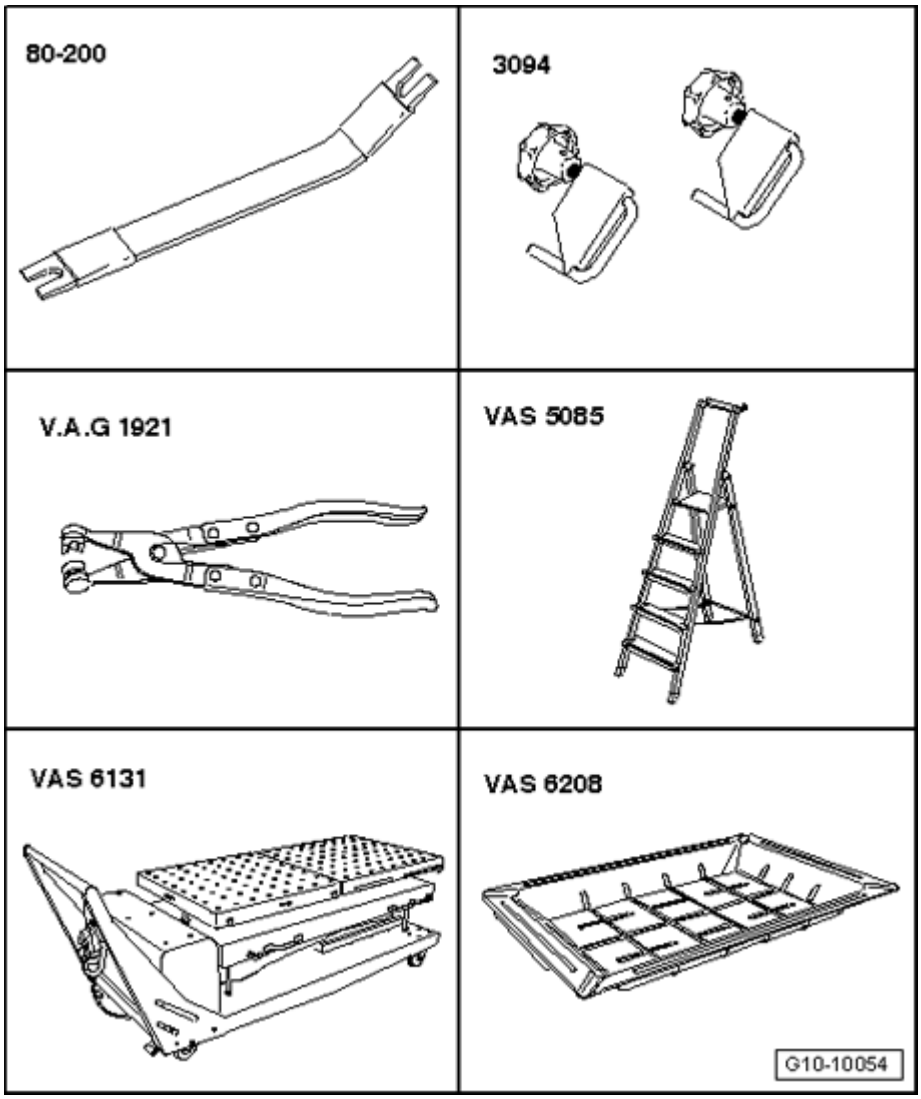

Fig. 434: Pushing Glide Track Of Chain Tensioner For Chain Drive And Pull
Courtesy of VOLKSWAGEN UNITED STATES, INC.

- Push glide track of chain tensioner for chain drive in direction of - **arrow** - and pull off chain tensioner using a drill bit - **4** - 3.3 mm dia.
- Mark running direction of timing chain with paint.
- Remove bolts - **2** - and - **3** - and remove chain sprockets with drive chain and glide track - **1** -.

Installing

Installation is in reverse order of removal, note the following:

NOTE:

- **Replace bolts which have been tightened to torque.**

- Install chain for power take-off --> **Chain for power take-off, removing and installing**.
- Install camshaft timing chains **Installing**.

Torque specifications

Component	Nm
Left drive sprocket to mounting bracket	5 plus an additional 90 ° * See note
Right drive sprocket to cylinder block	42
Chain tensioner for left camshaft timing chain to cylinder head	5 plus an additional 90 ° * See note
Chain tensioner for right camshaft timing chain to cylinder head	5 plus an additional 90 ° * See note

*Replace bolts.

* 90 ° corresponds to one quarter turn.

Chain for power take-off, component overview

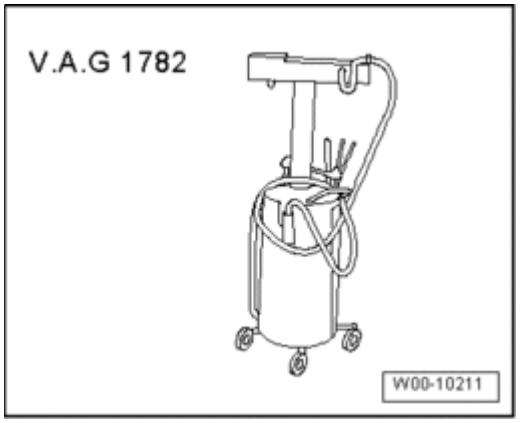

Fig. 435: Identifying Special Tools - Chain For Power Take-Off, Component Overview
Courtesy of VOLKSWAGEN UNITED STATES, INC.

1 - 10 Nm

2 - Chain tensioner

- With glide track

3 - 42 Nm

4 - Washer

5 - Pivot pin for idler sprocket

6 - Idler sprocket for chain for power take-off

7 - 10 Nm

8 - Mounting bracket for idler chain sprocket

9 - Chain for power take-off

- Removing and installing --> **Chain for power take-off, removing and installing**

10 - Crankshaft

11 - Drive sprocket for power take-off

12 - 62 Nm

Chain for power take-off, removing and installing

Special tools, testers and auxiliary items required

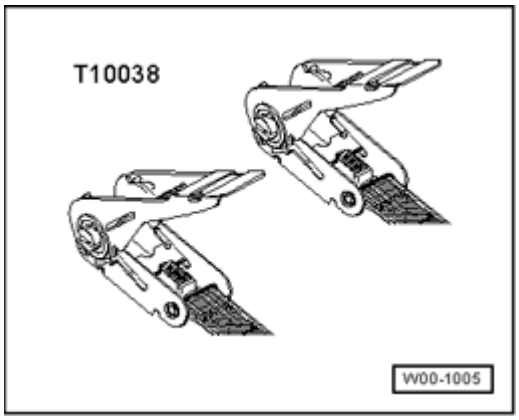

Fig. 436: Identifying Old Oil Collecting And Extracting Device V.A.G 1782
Courtesy of VOLKSWAGEN UNITED STATES, INC.

- Old oil collecting and extracting device V.A.G 1782

Removing

- Place old oil collecting and extracting device V.A.G 1782 under engine and drain engine oil.
- Remove engine: Vehicles with manual transmission --> **Engine (vehicles with manual transmission)** , vehicles with automatic transmission --> **Engine (vehicles with automatic transmission), removing**.
- Disconnect engine and transmission: Vehicles with manual transmission --> **Engine (vehicles with manual transmission), separating** , vehicles with automatic transmission --> **Engine and transmission (vehicles with automatic transmission), separating**.
- Leave engine on Scissor Lift Table VAS 6131 A or secure engine to engine and transmission holder: Vehicles with manual transmission --> **Engine (vehicles with manual transmission), securing to engine and transmission holder** , vehicles with automatic transmission --> **Engine (vehicles with automatic transmission), securing to assembly stand**.

- Remove covers for timing chains --> **Timing chain covers (All), removing and installing**.

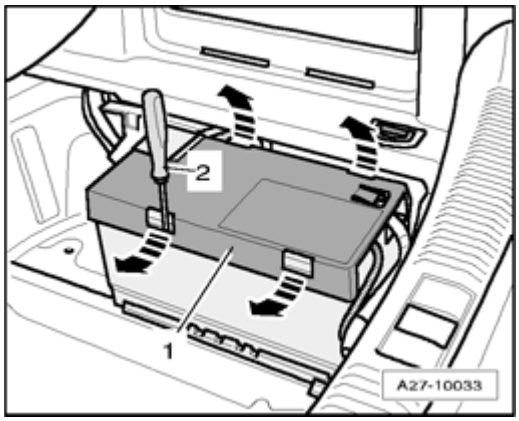

Fig. 437: Pushing Glide Track Of Chain Tensioner and Pull Off Chain Tensioner Using Drill Bit
Courtesy of VOLKSWAGEN UNITED STATES, INC.

- Push glide track of chain tensioner in direction of - **arrow** - and pull off chain tensioner using a drill bit - **1** - 3.3 mm dia.

NOTE:

- **If chain sprocket for power take-off is to be removed, mounting bolt must be loosened before removing chain.**

- Mark running direction of chain for power take-off with paint.
- Remove bolts - **2 to 5** - and remove chain tensioner.
- Remove chain for power take-off.

Installing

Installation is in reverse order of removal, note the following:

- First install chain for power take-off.
- Install chain tensioner starting at top on engine.
- Install covers for timing chains **Installing**.
- Install engine: Vehicles with manual transmission --> **Engine (vehicles with manual transmission), installing** , vehicles with automatic transmission --> **Engine (vehicles with automatic transmission), installing**.

- Add engine oil and check oil level --> **Oil level, checking**.

Torque specifications

Component	Nm
Chain tensioner on cylinder block	10
Oil drain plug	50

Power take-off, component overview

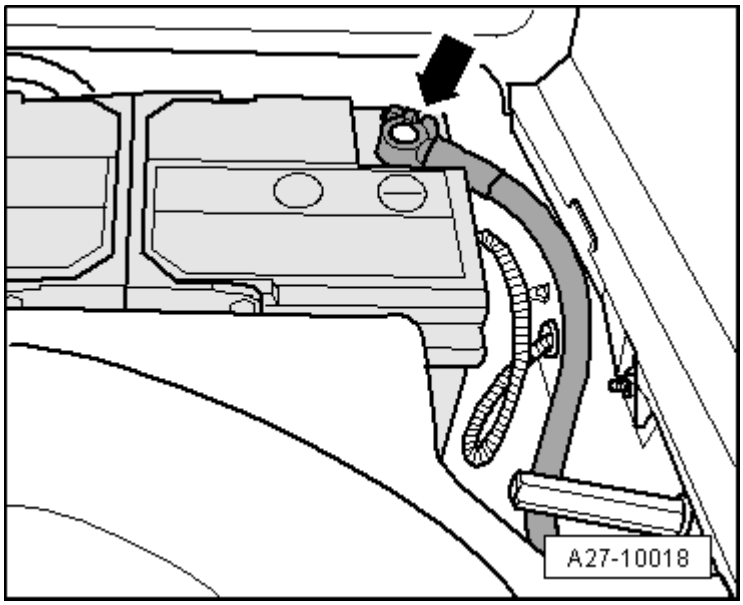

Fig. 438: Power Take-Off, Component Overview
Courtesy of VOLKSWAGEN UNITED STATES, INC.

1 - 62 Nm

2 - Spring

3 - Drive sprocket

- For power take-off

4 - Drive spur gear

- For power take-off

5 - 22 Nm

6 - Spur gear unit

7 - O-ring

- Replace

8 - Seal

- For A/C compressor drive
- Replacing --> **Power take-off seals, replacing**.

9 - Protective dust cap

- For A/C compressor drive

10 - Input shaft

- For air conditioning compressor
- Tighten to 60 Nm

11 - Seal

- For power steering pump drive
- Replacing --> **Power take-off seals, replacing**.

12 - Power-steering pump

13 - Input shaft

- For oil pump

14 - Circlip

15 - Thrust washer

16 - O-ring

- Replace

17 - Shaft for drive spur gear

18 - Bolt -22 Nm

Power take-off seals, replacing

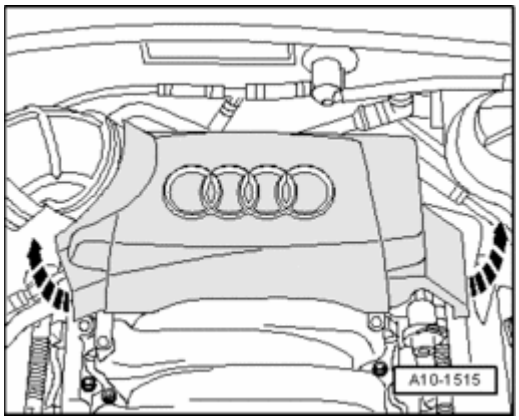

Fig. 439: Identifying Special Tools - Power Take-Off Seals, Replacing
Courtesy of VOLKSWAGEN UNITED STATES, INC.

Special tools, testers and auxiliary items required

- Pulling Hook T20143
- Pressure piece T40051
- Pressure piece T40052

Work procedure

- Remove air conditioning compressor --> **87 AIR CONDITIONING** .
- Remove power steering pump --> **48 - STEERING** .

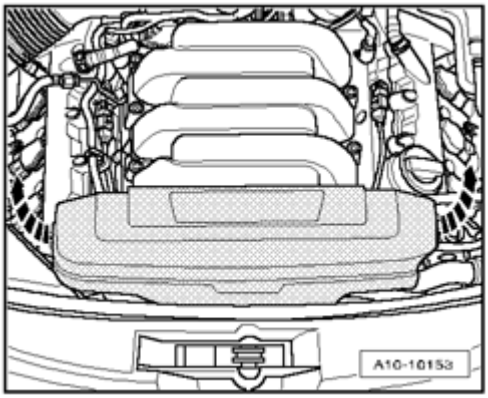

Fig. 440: Prying Out Sealing Ring For A/C Compressor Drive Using Pulling Hook T20143/1
Courtesy of VOLKSWAGEN UNITED STATES, INC.

- Pry out sealing ring for A/C compressor drive using pulling hook T20143/1.

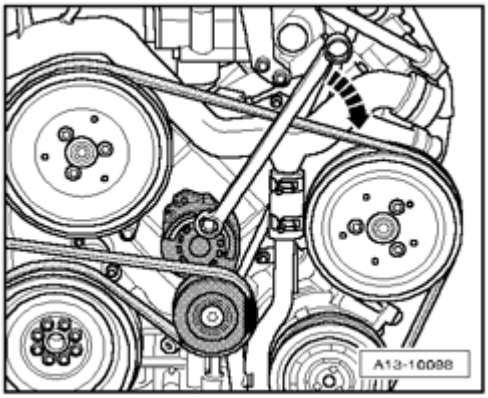

Fig. 441: Prying Out Power-Steering Pump Drive Seal Using Pulling Hook T20143/1
Courtesy of VOLKSWAGEN UNITED STATES, INC.

- Pry out power-steering pump drive seal using pulling hook T20143/1.

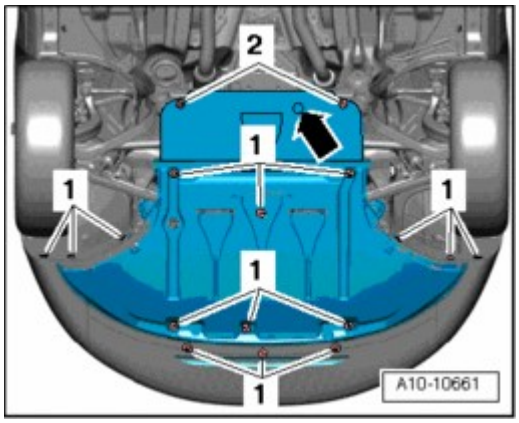

Fig. 442: Driving In Sealing Ring For A/C Compressor Drive Using Thrust Piece T40051
Courtesy of VOLKSWAGEN UNITED STATES, INC.

- Drive in sealing ring for A/C compressor drive using thrust piece T40051.

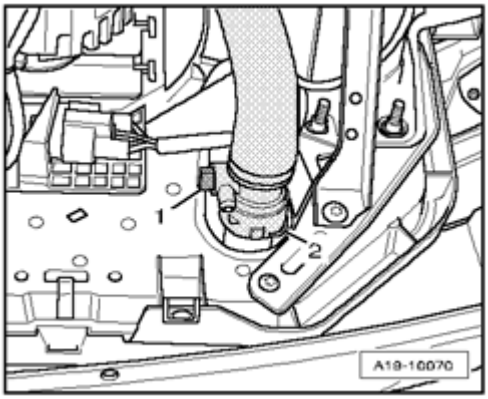

Fig. 443: Driving In Sealing Ring For Power-Steering Pump Drive Using Thrust Piece T40052
Courtesy of VOLKSWAGEN UNITED STATES, INC.

- Drive in sealing ring for power-steering pump drive using thrust piece T40052.

The rest of installation is in reverse order of removal, note the following:

- Install the power steering pump --> **48 - STEERING** .
- Install A/C compressor --> **87 AIR CONDITIONING** .

Spur gear unit, removing and installing

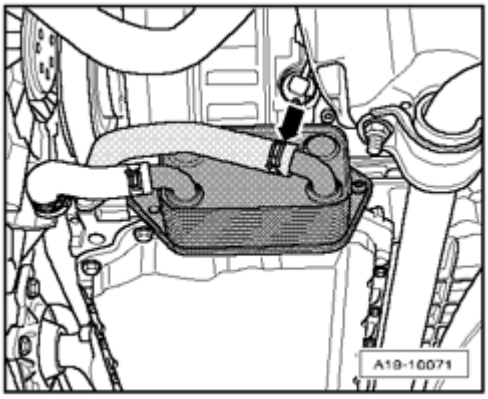

Fig. 444: Identifying Special Tools - Spur Gear Unit, Removing And Installing
Courtesy of VOLKSWAGEN UNITED STATES, INC.

Special tools, testers and auxiliary items required

- Pulling Hook T20143
- Pressure piece T40051
- Pressure piece T40052
- Sealant

Special tools, testers and auxiliary items required

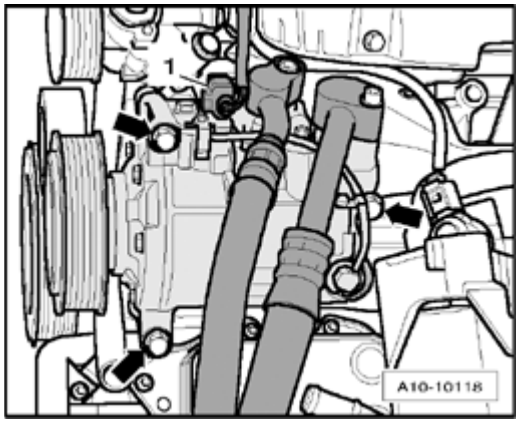

Fig. 445: Identifying Old Oil Collecting And Extracting Device V.A.G 1782
Courtesy of VOLKSWAGEN UNITED STATES, INC.

- Old oil collecting and extracting device V.A.G 1782
- Hand drill with plastic brush attachment
- Protective glasses
- Sealant

Removing

- Place old oil collecting and extracting device V.A.G 1782 under engine and drain engine oil.
- Remove engine: Vehicles with manual transmission --> **Engine (vehicles with manual transmission)** , vehicles with automatic transmission --> **Engine (vehicles with automatic transmission), removing**.
- Disconnect engine and transmission: Vehicles with manual transmission --> **Engine (vehicles with manual transmission), separating** , vehicles with automatic transmission --> **Engine and transmission (vehicles with automatic transmission), separating**.
- Leave engine on Scissor Lift Table VAS 6131 A or secure engine to engine and transmission holder: Vehicles with manual transmission --> **Engine (vehicles with manual transmission), securing to engine and transmission holder** , vehicles with automatic transmission --> **Engine (vehicles with automatic transmission), securing to assembly stand**.

- Remove covers for timing chains --> **Timing chain covers (All), removing and installing**.
- Remove power-steering pump from cylinder block.

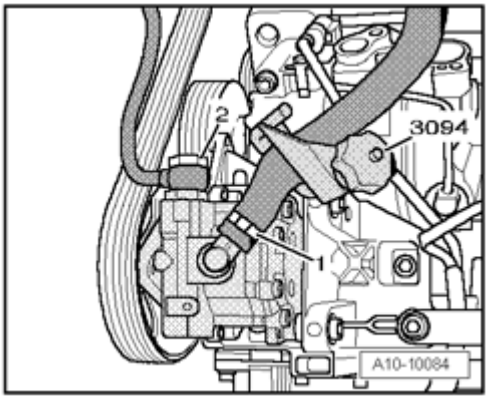

Fig. 446: Loosen Bolt On Drive Sprocket
Courtesy of VOLKSWAGEN UNITED STATES, INC.

- Loosen bolt - **1** - on drive sprocket - **2** - a few turns.
- Remove chain for power take-off --> **Chain for power take-off, removing and installing**.
- Remove drive sprocket for power take-off.

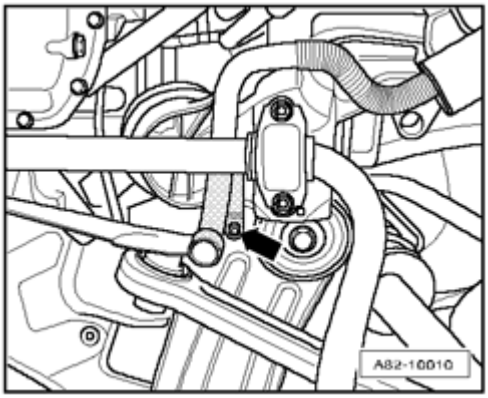

Fig. 447: Removing Bolts & Spur Gear Unit

Courtesy of VOLKSWAGEN UNITED STATES, INC.

- Remove bolts - **1 to 6** -.
- Remove spur gear unit.

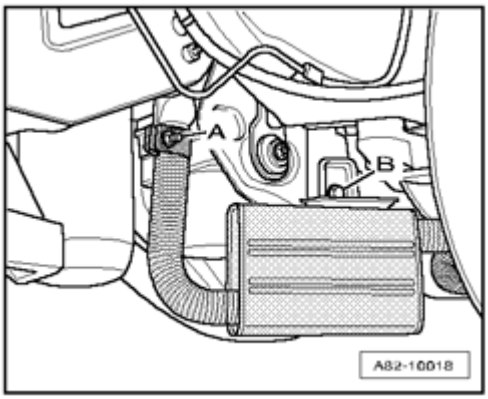

Fig. 448: Removing Compression Spring Between Spur Gear Unit And Oil Pump Input Shaft
Courtesy of VOLKSWAGEN UNITED STATES, INC.

- Remove compression spring - **2** - between spur gear unit - **1** - and oil pump input shaft - **3** -.

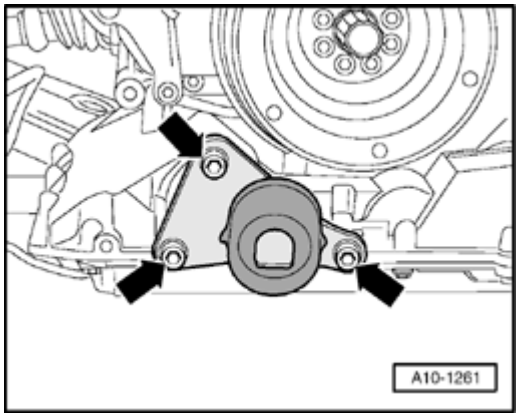

Fig. 449: Removing Drive Shaft For Oil Pump
Courtesy of VOLKSWAGEN UNITED STATES, INC.

- Remove drive shaft - **arrow** - for oil pump.

Installing

NOTE:

- **Replace seals and O-rings.**

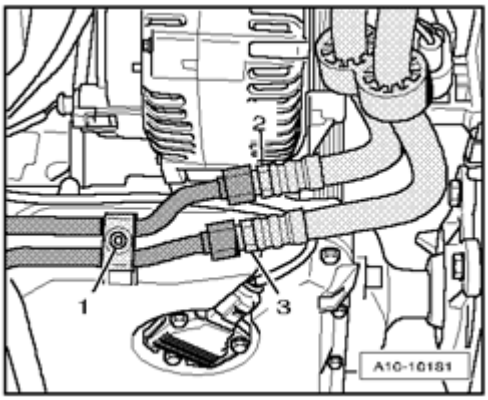

Fig. 450: Removing A/C Compressor Drive Seal And Power Steering Pump Drive Seal Using Pulling Hook T20143/1
Courtesy of VOLKSWAGEN UNITED STATES, INC.

- Remove A/C compressor drive seal - **2** - and power steering pump drive seal - **3** - using pulling hook T20143/1.
- Remove O-ring - **1** -.
- Remove sealant residue on spur gear unit and cylinder block.
- Clean sealing surfaces so they are completely free of any oil or grease.

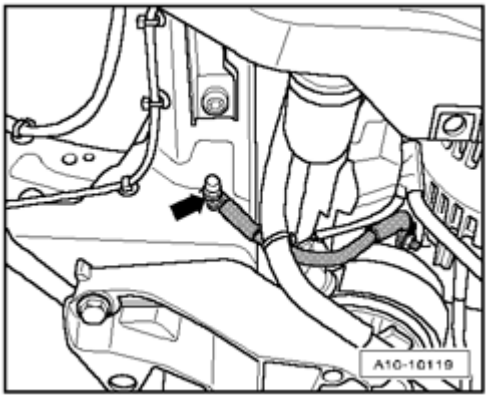

Fig. 451: Driving In Sealing Ring For A/C Compressor Drive Using Thrust Piece T40051 & Sealing Ring For Power-Steering Pump Drive Using Thrust Piece T40052
Courtesy of VOLKSWAGEN UNITED STATES, INC.

- Drive in sealing ring for A/C compressor drive using thrust piece T40051.
- Drive in sealing ring for power-steering pump drive using thrust piece T40052.

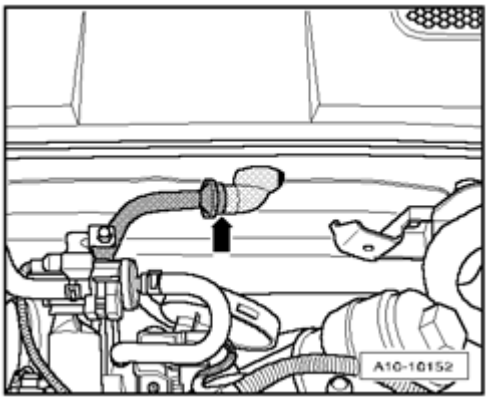

Fig. 452: Removing Drive Shaft For Oil Pump
Courtesy of VOLKSWAGEN UNITED STATES, INC.

- Insert drive shaft - **arrow** - for oil pump into guide on oil pump.

NOTE:

- **To guarantee that the drive shaft engages correctly in the oil pump, insert the drive shaft into the oil pump separately, do not install together with the front bearing cap.**

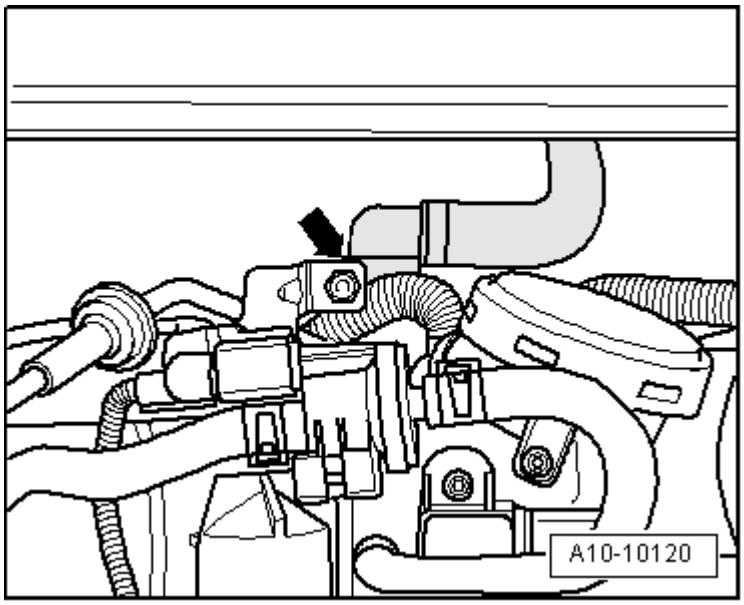

Fig. 453: Cutting Tube Nozzle At Front Marking
Courtesy of VOLKSWAGEN UNITED STATES, INC.

- Cut off nozzle on tube of sealant at front mark (dia. of nozzle approx. 1.5 mm).

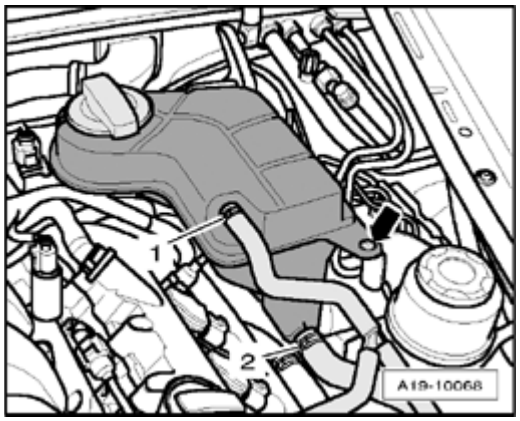

Fig. 454: Applying Sealant Beads To Clean Sealing Surfaces Of Spur Gear Unit
Courtesy of VOLKSWAGEN UNITED STATES, INC.

- Apply sealant beads - **arrows** - to clean sealing surfaces of spur gear unit as shown in illustration.
- Thickness of sealant beads: 2.0 mm.
- Position O-ring - **1** - and secure it with some grease.

NOTE:

- **The spur gear unit must be installed within 5 minutes after application of sealant.**

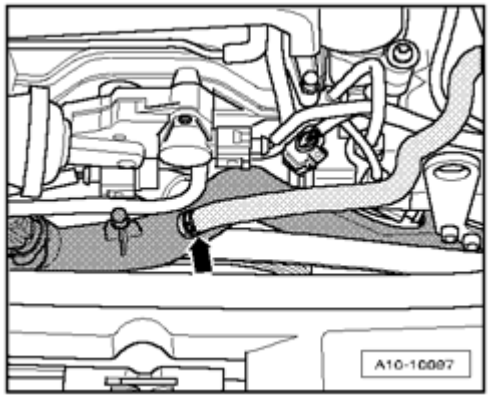

Fig. 455: Removing Compression Spring Between Spur Gear Unit And Oil Pump Input Shaft
Courtesy of VOLKSWAGEN UNITED STATES, INC.

- Position compress spring - **2** - for input shaft - **3** - in spur gear unit - **1** -.

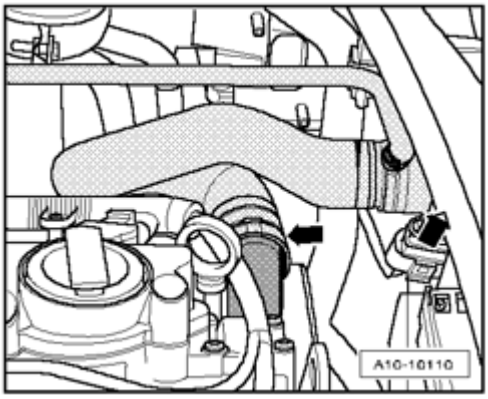

Fig. 456: Removing Bolts & Spur Gear Unit
Courtesy of VOLKSWAGEN UNITED STATES, INC.

- Position spur gear unit and tighten bolts - **1 to 6** - in a diagonal sequence in stages.

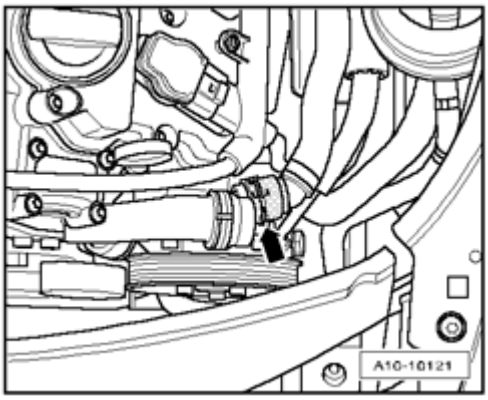

Fig. 457: Loosen Bolt On Drive Sprocket
Courtesy of VOLKSWAGEN UNITED STATES, INC.

- Hand tighten power take-off drive sprocket - **2** -.
- Install chain for power take-off --> **Chain for power take-off, removing and installing**.
- Tighten power take-off drive sprocket bolt - **1** -.
- Slide power steering pump with new O-ring onto spur gear for power-steering pump drive.

The rest of installation is in reverse order of removal, note the following:

- Install covers for timing chains **Installing**.
- Install engine: Vehicles with manual transmission --> **Engine (vehicles with manual transmission), installing** , vehicles with automatic transmission --> **Engine (vehicles with automatic transmission), installing**.
- Add engine oil and check oil level --> **Oil level, checking**.

Torque specifications

Component	Nm
Spur gear unit to cylinder block	22
Drive sprocket for power take-off to shaft	62
Oil drain plug	50

CRANKSHAFT, REMOVING AND INSTALLING

Crankshaft, component overview

NOTE:

- **To perform assembly work, secure engine with Holder for V8 Engine Audi S4, allroad quattro VAS 6095/1-6 or Holder for V8 Engine Audi S4, allroad quattro VAS 6095/1-6A to Engine and Transmission Holder VAS 6095 --> Engine (vehicles with automatic transmission), securing to assembly stand.**

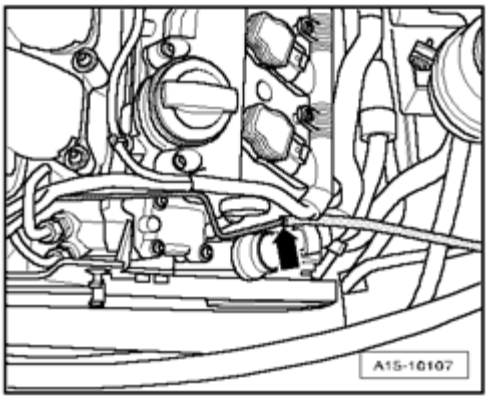

Fig. 458: Crankshaft, Component Overview
Courtesy of VOLKSWAGEN UNITED STATES, INC.

1 - Seals

- Replace

2 - Seal for crankshaft - ribbed belt side

- Replacing --> **Crankshaft seal (ribbed belt side), replacing**.

3 - Alignment bushing

- 3 pieces
- Insert into guide frame
- Installed location **Sealant applied on cylinder block (for guide frame)**

4 - Screws

- For guide frame
- Replace
- Different bolt sizes
- Tightening order **Installing guide frame**

5 - Bolt

- For sealing surfaces of cylinder block/guide frame
- Different bolt lengths
- Tightening order **Installing guide frame**

6 - Bearing bracket

- Sealant applied on cylinder block (for guide frame) **Sealant applied on cylinder block (for guide frame)**
- Tightening sequence for manifold mounting bolts **Installing guide frame**

7 - Thrust washer

- Only at 4th crankshaft bearing
- Lubricating grooves face outward
- Note locating point in guide frame
- Measuring crankshaft axial clearance --> **Axial clearance, measuring**

8 - Bearing shell

- For guide frame without lubricating groove
- Do not interchange used bearing shells (mark)
- Insert new bearing shells for guide frame with proper color marking --> **Allocation of main bearing shells for new crankshafts** or --> **Allocation of main bearing shells for used and reworked crankshafts**

9 - Crankshaft

- Measuring axial play --> **Axial clearance, measuring**
- Radial clearance, measuring --> **Radial clearance, measuring**
- Do not turn crankshaft when measuring radial play
- Crankshaft dimensions --> **Crankshaft dimensions**

10 - Thrust washer

- Only at 4th crankshaft bearing
- Lubricating grooves face outward

- Measuring crankshaft axial clearance --> **Axial clearance, measuring**

11 - Bearing shell

- For cylinder block with oil groove
- Do not interchange used bearing shells (mark)
- Insert new bearing shells for cylinder block with proper color marking --> **Allocation of main bearing shells for new crankshafts** or --> **Allocation of main bearing shells for used and reworked crankshafts**

12 - Gasket

- Replace

13 - Cylinder block

- Sealant applied on cylinder block (for guide frame) **Sealant applied on cylinder block (for guide frame)**

Sealant applied on cylinder block (for guide frame)

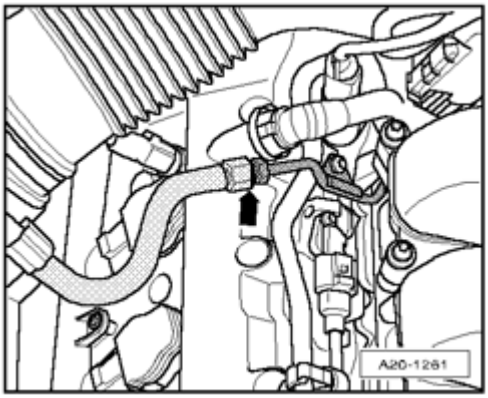

Fig. 459: Sealant Applied On Cylinder Block (For Guide Frame)
Courtesy of VOLKSWAGEN UNITED STATES, INC.

- Clean sealing surfaces, they must be free of oil and grease.
- Apply sealant beads - **arrows** - on clean sealing surfaces of guide frame as shown in illustration.

- Thickness of sealant beads: 1.5 to 2.0 mm.

- Install seals - **1 to 3** -.

Installation position of alignment bushings

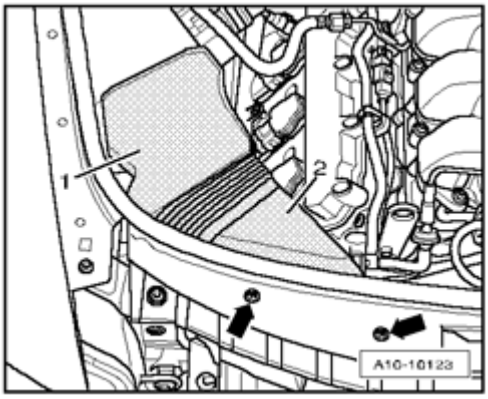

Fig. 460: Installation Position Of Alignment Bushings
Courtesy of VOLKSWAGEN UNITED STATES, INC.

- Check whether alignment bushings - **arrows** - are inserted at locations in guide frame as shown in the illustration.

Installing guide frame

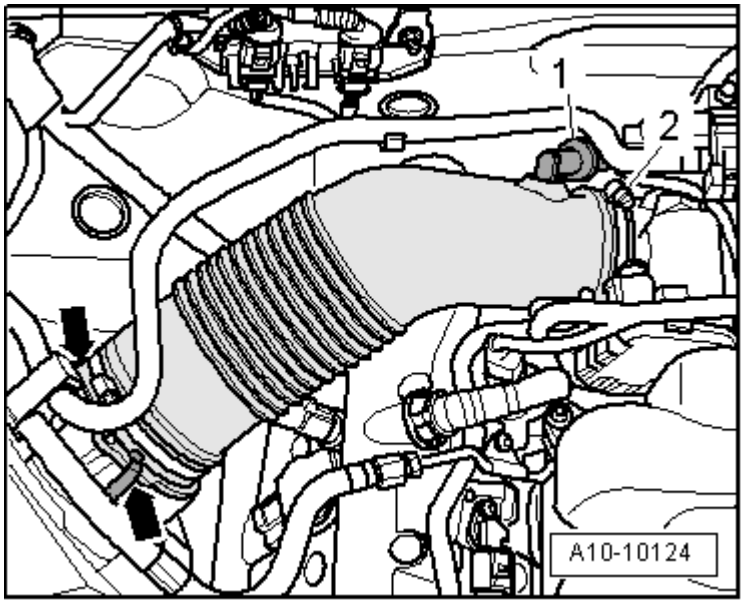

Fig. 461: Installing Guide Frame Bolts
Courtesy of VOLKSWAGEN UNITED STATES, INC.

- Replace bolts - **1 to 20** -.
- Tighten bolts for guide frame as follows:
- Tighten bolts - **1 to 10** - to 30 Nm with torque wrench.
- Tighten bolts - **11 to 20** - to 20 Nm with torque wrench.

- Tighten bolts - **1 to 10** - to 50 Nm with torque wrench.
- Tighten bolts - **11 to 20** - to 30 Nm with torque wrench.

- Tighten bolts - **1 to 10** - 90 ° ($^1/_4$ additional turn) using a rigid wrench.
- Tighten bolts - **11 to 20** - 90 ° ($^1/_4$ additional turn) using a rigid wrench.
- Tighten bolts for sealing surfaces of cylinder block/guide frame - **dark hatching in the illustration** - to 9 Nm in diagonal sequence.

Allocation of main bearing shells for new crankshafts

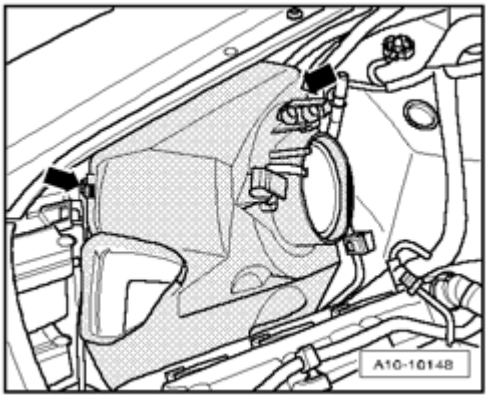

Fig. 462: Allocation Of Crankshaft Bearing Shells For Cylinder Block
Courtesy of VOLKSWAGEN UNITED STATES, INC.

Allocation of crankshaft bearing shells for cylinder block

- Bearing shells with correct thickness are allocated to cylinder block in factory. Colored dots on sides of bearing shells serve for identifying bearing shell thickness.
- Allocation of bearing shells to cylinder block is marked by one letter each at left front on cylinder block (can be read from outside) as shown in the illustration.

Letter on cylinder block		Color of bearing
R	=	Red
G	=	Yellow
B	=	Blue

NOTE:

- **In addition, the letters are also stamped on the guide frame.**

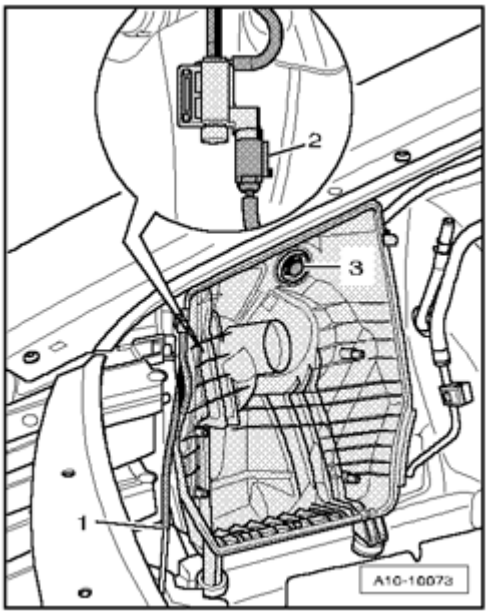

Fig. 463: Allocation Of Crankshaft Bearing Shells For Guide Frame - Crankshaft Manufactured By Alfing
Courtesy of VOLKSWAGEN UNITED STATES, INC.

Allocation of crankshaft bearing shells for guide frame - crankshaft manufactured by Alfing

- Bearing shells with correct thickness are allocated to guide frame in the factory. Colored dots on sides of bearing shells serve for identifying bearing shell thickness.
- Allocation of bearing shells to guide frame is marked by one colored dot each on crankshaft counterweight as shown in the illustration.
- Crankshafts manufactured by Alfing have no manufacturers identification.

Colored dot on crankshaft	Color of bearing
Red	Red
Yellow	Yellow
Blue	Blue

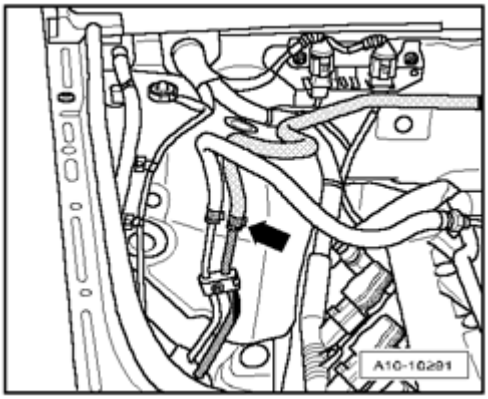

Fig. 464: Allocation Of Crankshaft Bearing Shells For Guide Frame - Crankshaft Manufactured By Weber
Courtesy of VOLKSWAGEN UNITED STATES, INC.

Allocation of crankshaft bearing shells for guide frame - crankshaft manufactured by Weber

- Bearing shells with correct thickness are allocated to guide frame in the factory. Colored dots on sides of bearing shells serve for identifying bearing shell thickness.
- Allocation of bearing shells to guide frame is marked by one colored dot each on front crankshaft counterweight as shown in the illustration. The "X" marks the end of the letter series and stand next to color identification for bearing 1 (belt pulley side).
- Crankshafts manufactured by Weber have a manufacturers identification - **A** - on front crankshaft counterweight.

NOTE:

- **The letter series begins at left with bearing 5 (flywheel side).**

Letter on crankshaft		Color of bearing
R	=	Red
G	=	Yellow
B	=	Blue

Allocation of main bearing shells for used and reworked crankshafts

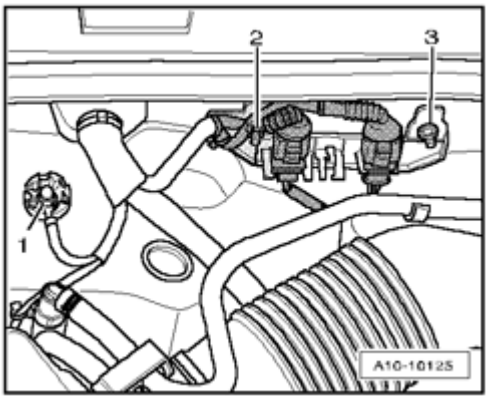

Fig. 465: Allocation Of Crankshaft Bearing Shells For Cylinder Block
Courtesy of VOLKSWAGEN UNITED STATES, INC.

Allocation of crankshaft bearing shells for cylinder block

- Bearing shells are allocated to cylinder block corresponding to color markings stamped into cylinder block.
- For used and reworked crankshafts, the main crankshaft journals must be measured in order to allocate matching bearing shells.
- Basic dimension of main crankshaft journals = 65 mm dia.

- Repair stage of main crankshaft journals = 64.75 mm dia.
- Thicker over-sized bearing shells are available for reworked crankshafts. These have the same color markings as the original-size bearing shells.

Letter on cylinder block		Color of bearing
R	=	Red
G	=	Yellow
B	=	Blue

Allocation of crankshaft bearing shells for guide frame

- For used and reworked crankshafts, the main crankshaft journals must be measured in order to allocate the matching bearing shells.
- Any other markings on the crankshaft are invalid when reworking crankshafts.
- Allocate bearing shells to determined diameter of main crankshaft journals according to the following table.

Main crankshaft journals diameter	Color identification of bearing shells for guide frame		
Dimension in mm	**Red**	**Yellow**	**Blue**
Basic dimension 65 * See note	64.978 to 64.972	64.972 to 64.965	64.965 to 64.958
Repair stage 64.75 * See note	64.728 to 64.722	64.722 to 64.715	64.715 to 64.708

*Colored markings on bearing shells do not indicate if they are for new or used crankshafts.

Crankshaft dimensions

Reconditioning dimension in mm	Crankshaft journal diameter		Connecting rod journal diameter	
Basic dimension	65.00	0.022 0.042	54.00	0.022 0.042
Repair stage	64.75	0.022 0.042	53.75	0.022 0.042

Axial clearance, measuring

Special tools, testers and auxiliary items required

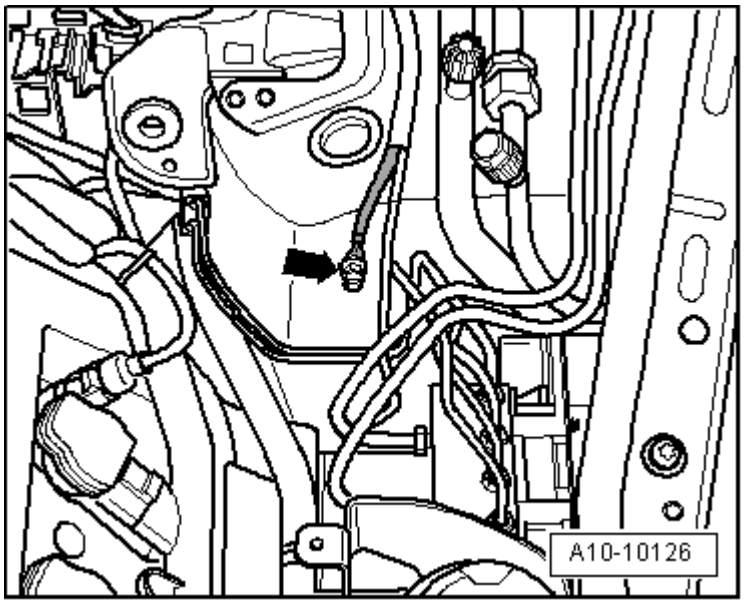

Fig. 466: Identifying Dial Gauge Holder VW 387
Courtesy of VOLKSWAGEN UNITED STATES, INC.

- Dial gauge holder VW 387

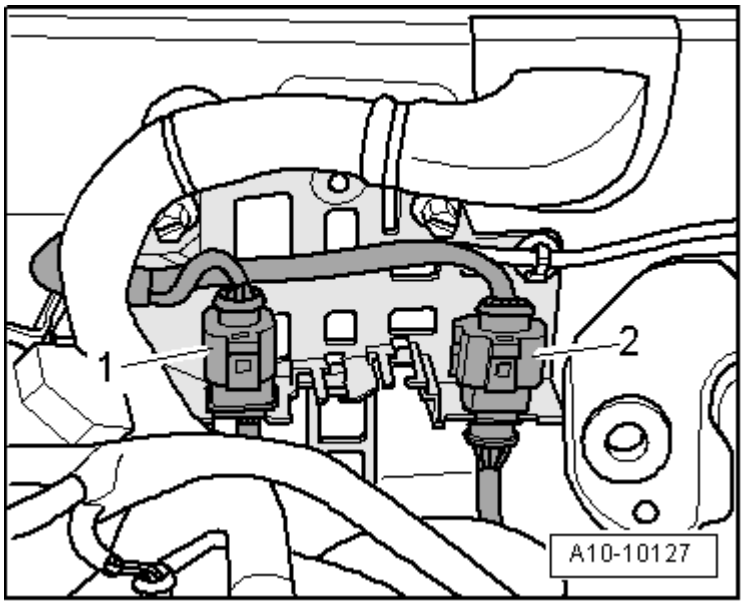

Fig. 467: Dial Gauge VAS 6079
Courtesy of VOLKSWAGEN UNITED STATES, INC.

- Dial gauge VAS 6079

Work procedure

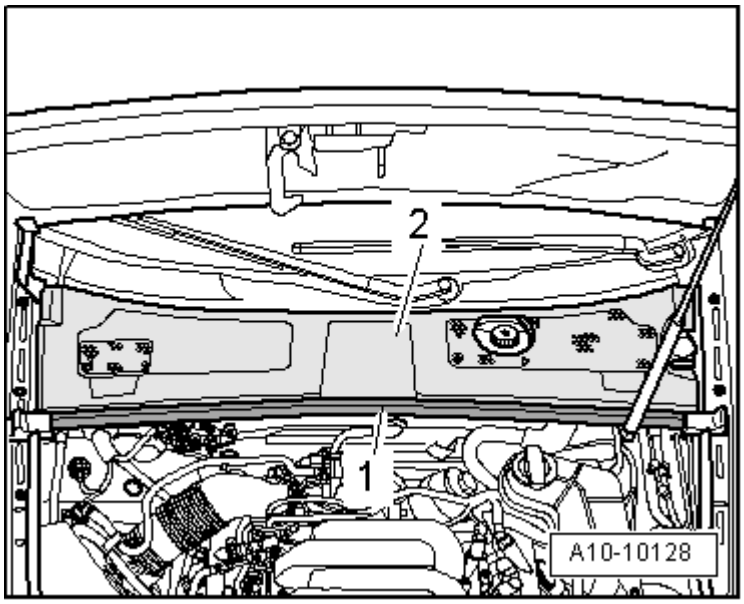

Fig. 468: Attaching Dial Indicator VAS 6079 Together With Dial Gauge Holder VW 387 To Cylinder Block And Setting Indicator Against Crankshaft Counterweight
Courtesy of VOLKSWAGEN UNITED STATES, INC.

- Attach dial indicator VAS 6079 together with dial gauge holder VW 387 to cylinder block and set indicator against crankshaft counterweight.
- Press crankshaft against dial indicator by hand, set indicator to "0".
- Press crankshaft off dial indicator and read off value:

- Axial clearance: 0.090 to 0.251 mm.

Radial clearance, measuring

Special tools, testers and auxiliary items required

- Plastigage

Work procedure

NOTE:
- **Do not interchange used bearings**
- **Bearing shells that are worn down to the nickel layer must be replaced.**

- Remove guide frame and clean journals.
- Place Plastigage over entire width of bearing journal or into bearing shells.

- Plastigage must rest in center of bearing shell.

- Install guide frame and tighten to 30 Nm. Do not turn crankshaft.
- Remove guide frame again.

- Compare width of Plastigage with measuring scale:

- Radial clearance, new: 0.010 to 0.039 mm.
- Radial clearance wear limit: 0.08 mm.

PISTON AND CONNECTING ROD, DISASSEMBLING AND ASSEMBLING

Piston and connecting rod, component overview

NOTE:

- **Oil injector jet for piston cooling Oil spray jet for piston cooling**

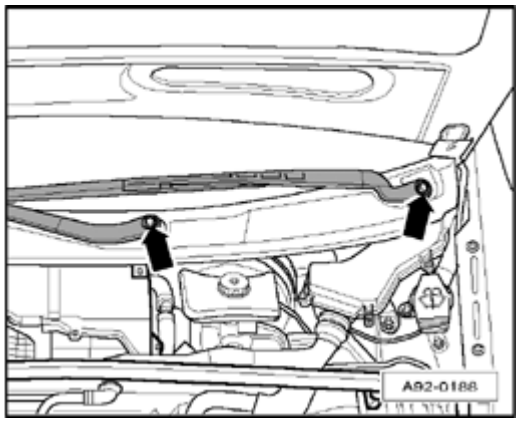

Fig. 469: Piston And Connecting Rod, Component Overview
Courtesy of VOLKSWAGEN UNITED STATES, INC.

1 - Connecting rod bolt - 30 Nm plus an additional $^{1}/_{4}$ turn (90 °)

- Replace
- Lubricate threads and contact surface
- Tighten to 30 Nm to measure radial play, do not turn further

2 - Connecting rod bearing cap

- Do not interchange
- Mark allocation to cylinder using a color marker - **B** - **Mark connecting rod**
- When installing bearing cap, observe: The wide thrust flange - **A** - must point to same side on connecting rod and connecting rod bearing cap
- Installation position of connecting rod pairs **Connecting rod, installed location**

3 - Bearing shells

- Check that retaining tabs are secured
- Do not interchange used bearing shells (mark, but not on running surface)

- Radial clearance, measuring --> **Connecting rod radial clearance, measuring**
- Over-sized bearings are available for reworked crankshaft connecting rod journals

4 - Connecting rod

- Only replace as set
- Mark allocation to cylinder with paint - **B** - **Mark connecting rod**
- When installing bearing cap, observe: The wide thrust flange - **A** - must point to the same side on connecting rod and connecting rod bearing cap
- Installation position of connecting rod pairs **Connecting rod, installed location**

- Axial play for each new connecting rod pair: 0.20 to 0.38 mm
- Axial play wear limit: 0.60 mm
- Radial clearance, measuring --> **Connecting rod radial clearance, measuring**

5 - Piston pin

- If tight, heat piston to 60 ° C
- Removing and installing using a drift VW 222 A

6 - Circlip

7 - Piston

- Installation position of pistons **Piston installation position**
- Piston and cylinder dimensions --> **Piston and cylinder dimensions**
- Checking **Checking piston**
- Install with piston ring compressor

- Measuring cylinder bore **Measuring cylinder bore**

8 - Piston rings

- Offset gaps by 120 °
- Use piston ring pliers for removal and installation
- "TOP" marking or inscribed side must point to piston head
- Measuring end cap **Measuring piston ring gap**

- Measuring side clearance **Measuring piston ring side clearance**

Measuring piston ring gap

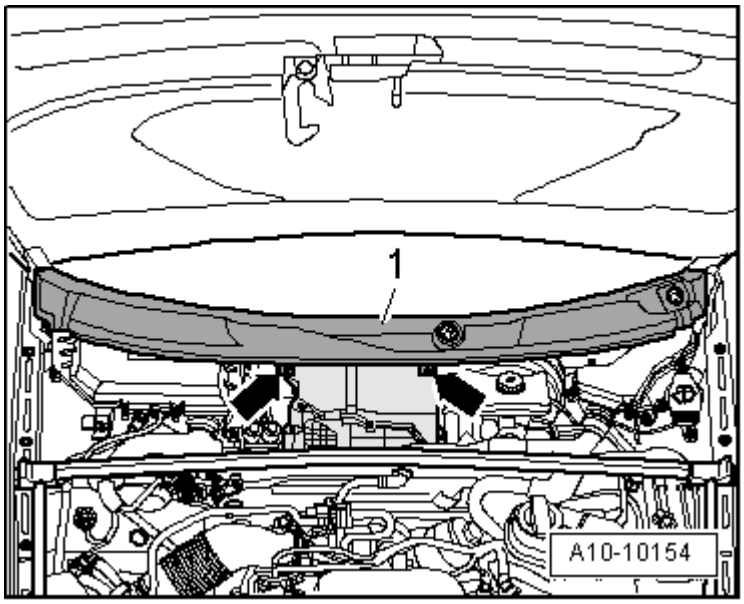

Fig. 470: Checking Piston Ring Gap
Courtesy of VOLKSWAGEN UNITED STATES, INC.

- Push ring squarely from above down to approx. 15 mm from bottom end of cylinder. To do this use a piston without rings.

Piston ring dimensions in mm	New	Wear limit
1. Compression ring	0.25 to 0.40	0.8
2. Compression ring	0.20 to 0.40	0.8
Oil scraping ring		0.4

Measuring piston ring side clearance

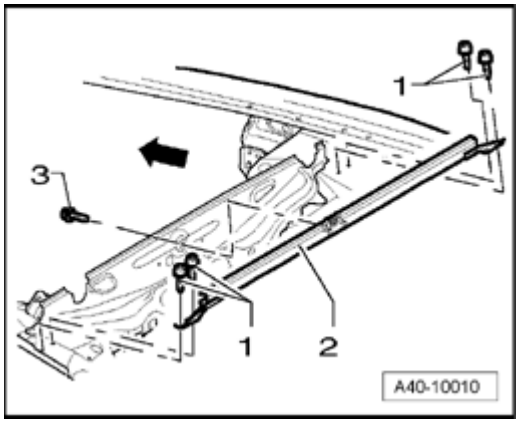

Fig. 471: Measuring Piston Ring Side Clearance
Courtesy of VOLKSWAGEN UNITED STATES, INC.

- Clean ring groove of piston before checking.

Piston ring dimensions in mm	New	Wear limit
1. Compression ring	0.04 to 0.08	0.20
2. Compression ring	0.005 to 0.045	0.20
Oil scraping ring	0.01 to 0.05	0.15

Checking piston

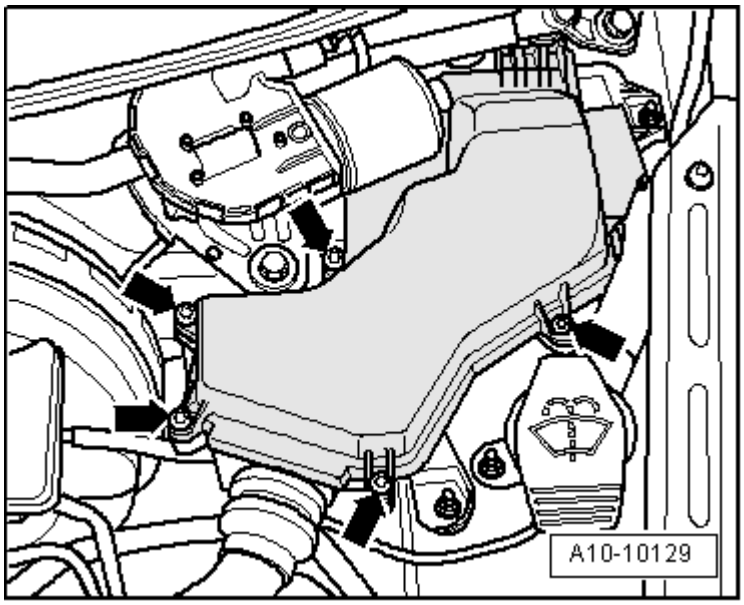

Fig. 472: Checking Piston
Courtesy of VOLKSWAGEN UNITED STATES, INC.

- Measure approx. 10 mm from the lower edge, at a 90 ° angle to piston pin axis using an external micrometer 75 to 100 mm.

- Maximum deviation from nominal dimension: 0.04 mm.

Nominal dimension --> **Piston and cylinder dimensions**.

Measuring cylinder bore

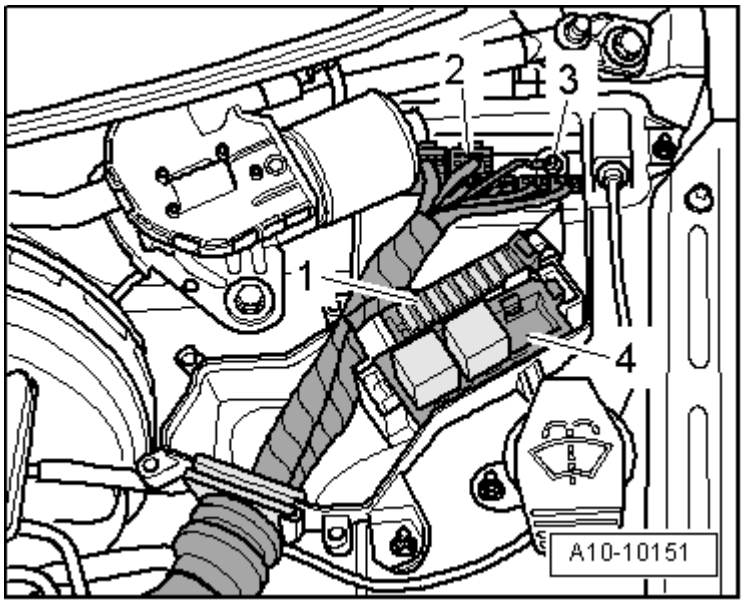

Fig. 473: Checking Cylinder Bores
Courtesy of VOLKSWAGEN UNITED STATES, INC.

- Using an internal dial gauge 50 to 100 mm, measure at 3 points in diagonal sequence horizontally - **A** - and vertically - **B** -.

- Maximum deviation from nominal dimension: 0.08 mm.

Nominal dimension --> **Piston and cylinder dimensions**.

Piston installation position

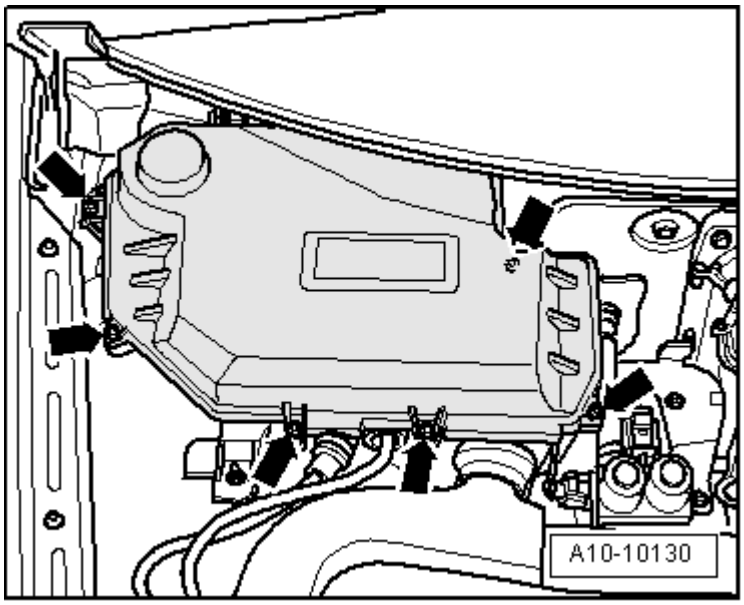

Fig. 474: Piston Installation Position
Courtesy of VOLKSWAGEN UNITED STATES, INC.

- Mark allocation to cylinder on piston head using chalk or water-proof felt pen.

NOTE:

- **Do not use a center punch or scribe, since the piston head coating will be damaged.**

Installed location:

- Arrows on piston heads point to belt pulley side.
- Valve recesses - **1** - point toward center of engine.

Mark connecting rod

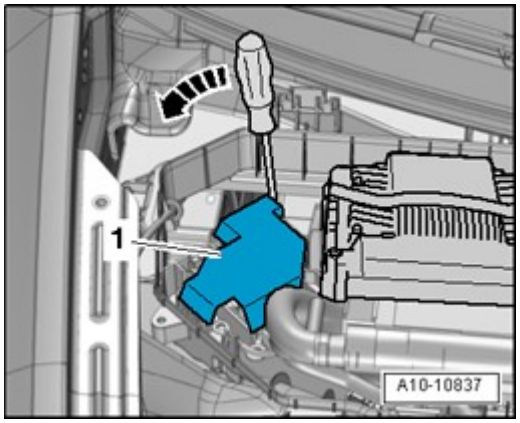

Fig. 475: Mark Connecting Rod
Courtesy of VOLKSWAGEN UNITED STATES, INC.

NOTE:

- **Only replace connecting rod as a set.**
- **Do not interchange connecting rod bearings.**

- Before removing, mark allocation of connecting rod and connecting rod bearing caps to each other and to cylinder with paint - **arrow** -.

Connecting rod, installed location

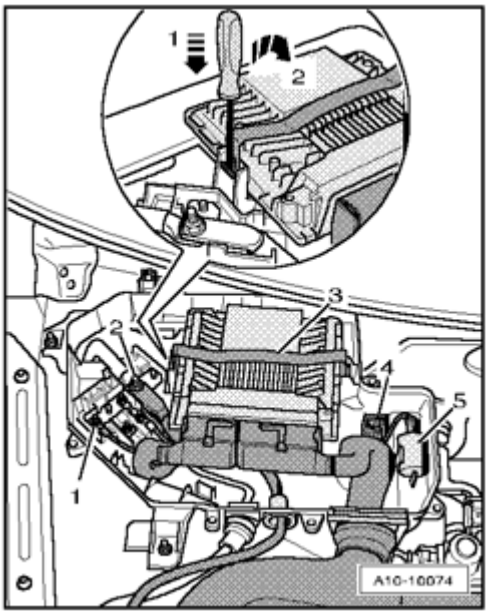

Fig. 476: Connecting Rod, Installed Location
Courtesy of VOLKSWAGEN UNITED STATES, INC.

- Molded tabs - **arrows** - at beveled surfaces of connecting rod pairs 1 and 2, 3 and 4, 5 and 6 as well as 7 and 8 must point toward each other.

Oil spray jet for piston cooling

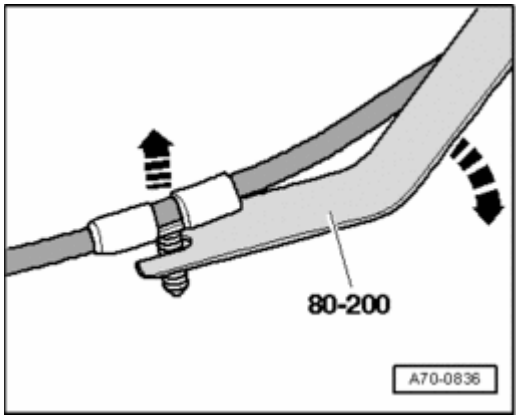

Fig. 477: Oil Spray Jet For Piston Cooling
Courtesy of VOLKSWAGEN UNITED STATES, INC.

1. Oil injector jet (opening pressure 2 to 2.4 bar positive pressure)
2. Bolts - 9 Nm. Insert using locking compound; locking compound

Piston and cylinder dimensions

Matching pistons are allocated to the different manufacturing stages of the cylinder block.

Cylinder bore diameter mm	Piston diameter mm
84.510 ± 0.005	84.490 ± 0.010 * See note
84.610 ± 0.005	84.590 ± 0.010 * See note
84.710 ± 0.005	84.690 ± 0.010 * See note

*Dimension with graphite coating (thickness = 0.01 mm). The graphite coating wears off.

Connecting rod radial clearance, measuring

Special tools, testers and auxiliary items required

- Plastigage

Test sequence

- Remove connecting rod bearing caps.
- Clean bearing caps and journals
- Place Plastigage over entire width of bearing journal or into bearing shells.
- Install connecting rod bearing cap and tighten to 30 Nm. Do not turn crankshaft.

- Remove connecting rod bearing caps again.
- Compare width of Plastigage with measuring scale:

- Radial clearance, new: 0.028 to 0.077 mm.
- Radial clearance wear limit: 0.12 mm.

- Replace bolts for connecting rod bearings.

15 - ENGINE - CYLINDER HEAD, VALVETRAIN

CYLINDER HEAD, REMOVING AND INSTALLING

Cylinder head, component overview

NOTE:

- **Right cylinder head is shown in illustration.**

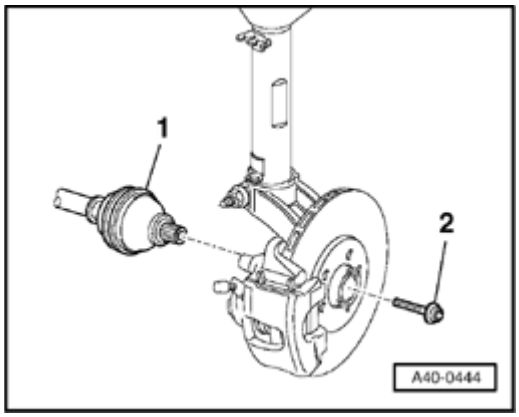

Fig. 478: Cylinder Head, Component Overview
Courtesy of VOLKSWAGEN UNITED STATES, INC.

1 - Cylinder head gasket

- Replacing --> **Cylinder head, removing and installing**.
- Installed location: Part Number, points to cylinder head
- After replacing, change coolant and engine oil

2 - Lifting eye

3 - 22 Nm

4 - Gasket

- Replace if damaged or leaking

5 - Cylinder head cover gasket

- Replace if damaged or leaking

6 - Cylinder head cover

- Removing and installing left cylinder head cover --> **Left cylinder head cover, removing and installing**
- Removing and installing right cylinder head cover --> **Right cylinder head cover, removing and installing**

7 - Ignition coil

- Extractor T40039 can be used for removal.

8 - Special bolt - 10 Nm

- Replace if damaged or leaking
- Observe sequence for tightening *Tighten cylinder head cover in sequence* under **Installing**

9 - Cylinder head cover gaskets

- Replace if damaged or leaking

10 - Cylinder head cover gasket

- Replace if damaged or leaking

11 - Semicircular seal

- Replace if damaged or leaking

12 - Cylinder head bolt

- Replace
- Observe sequence for loosening *Loosen cylinder head bolts in the sequence* under **Cylinder head, removing and installing**
- Observe sequence for tightening --> **Fig. 490**

13 - Cylinder head

- Removing --> **Cylinder head, removing and installing**
- Check for distortion *Checking cylinder head for distortion* under **Cylinder head, component overview**
- Reworking dimension **Reworking dimension of cylinder head**
- Installing **Installing**

- After replacing, change coolant and engine oil

Checking cylinder head for distortion

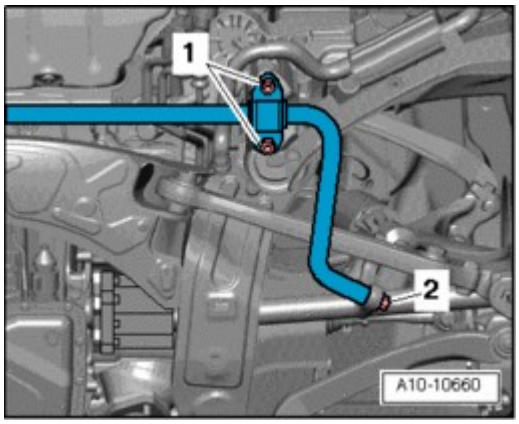

Fig. 479: Checking Cylinder Head For Distortion
Courtesy of VOLKSWAGEN UNITED STATES, INC.

- Check cylinder head at multiple points for distortion, using straight edge and feeler gauges.

- Max. permissible distortion: 0.1 mm

Reworking dimension of cylinder head

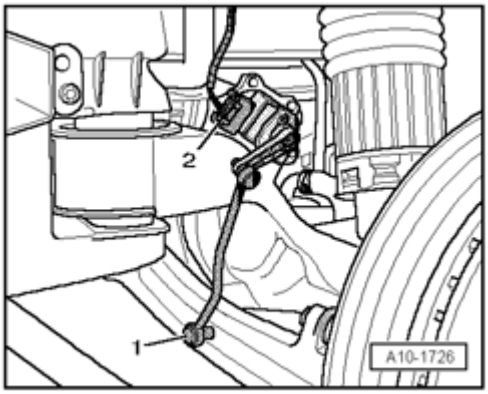

Fig. 480: Reworking Dimension Of Cylinder Head
Courtesy of VOLKSWAGEN UNITED STATES, INC.

- It is only permitted to reface cylinder head to minimum dimension - **a** -.
- Minimum dimension: - **a** - = 139.25 mm.

Left cylinder head cover, removing and installing

Special tools, testers and auxiliary items required

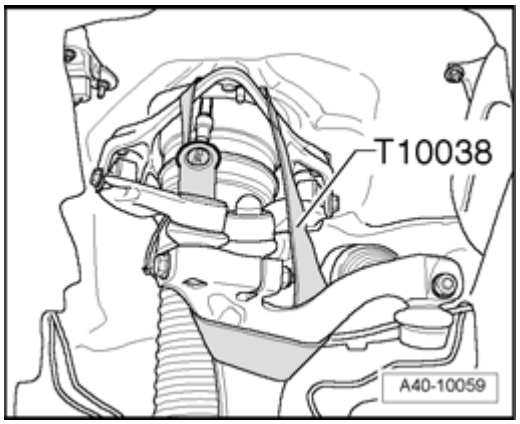

Fig. 481: Identifying Hose Clamps 3094
Courtesy of VOLKSWAGEN UNITED STATES, INC.

- Hose clamps up to 25 mm diameter 3094

Removing

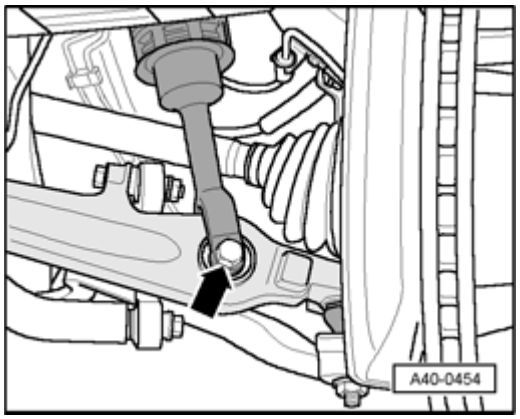

Fig. 482: Removing Front Engine Cover
Courtesy of VOLKSWAGEN UNITED STATES, INC.

- Remove front engine cover - **arrows 1 and 2** -.

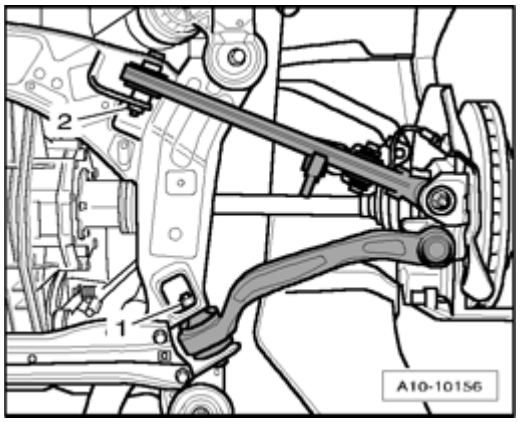

Fig. 483: Removing Rear Engine Cover
Courtesy of VOLKSWAGEN UNITED STATES, INC.

- Remove rear engine cover - **arrows** -.

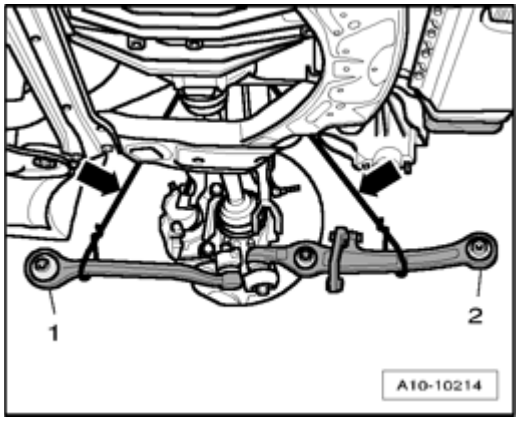

Fig. 484: Removing Cover In Engine Compartment (Left Side)
Courtesy of VOLKSWAGEN UNITED STATES, INC.

- Remove cover - **1** - in engine compartment (left side).

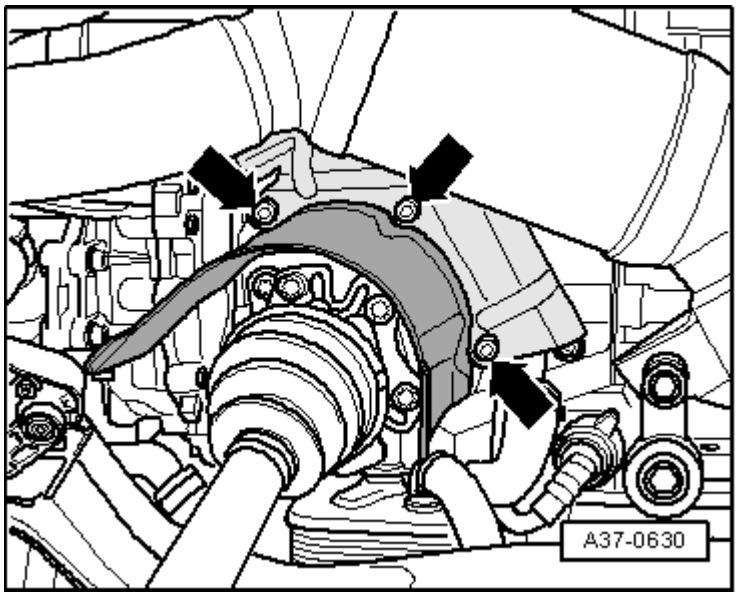

Fig. 485: Removing Coolant Hoses & Coolant Expansion Tank
Courtesy of VOLKSWAGEN UNITED STATES, INC.

- Clamp off coolant hose - **2** - using Hose clamps up to 25 mm diameter 3094 and disconnect from coolant expansion tank.
- Seal connection using a plug that fits.
- Remove coolant expansion tank - **arrow** -.
- Disconnect electrical wire to Engine Coolant Level (ECL) Warning Switch F66 at bottom on expansion tank and set aside coolant expansion tank with coolant hose - **1** - connected.

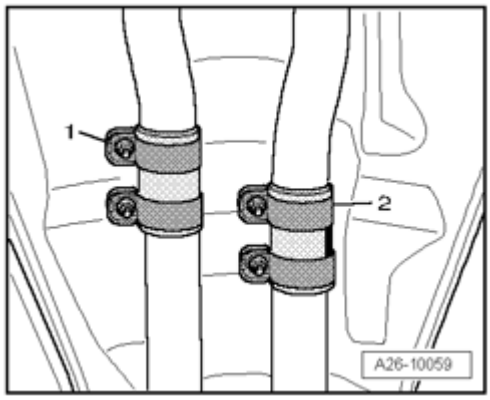

Fig. 486: Removing Bolt From Oil Dipstick Guide Tube At Cylinder Head
Courtesy of VOLKSWAGEN UNITED STATES, INC.

- Remove bolt - **arrow** - at oil dipstick guide tube.

NOTE:

- **Guide tube remains inserted in upper part of oil pan.**

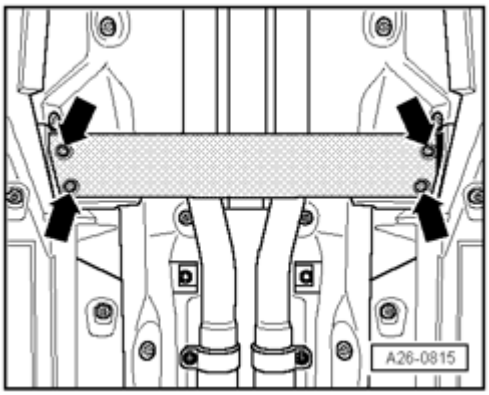

Fig. 487: Removing Bolts On Left Cylinder Head, Disconnecting Electrical Harness Connectors & Removing Ignition Coils
Courtesy of VOLKSWAGEN UNITED STATES, INC.

- Remove bolts - **5** - and - **6** -.
- Disconnect electrical harness connectors - **1 to 4** -.
- Remove ignition coils - **arrows** -.

NOTE:

- **Extractor T40039 can be used for removal.**

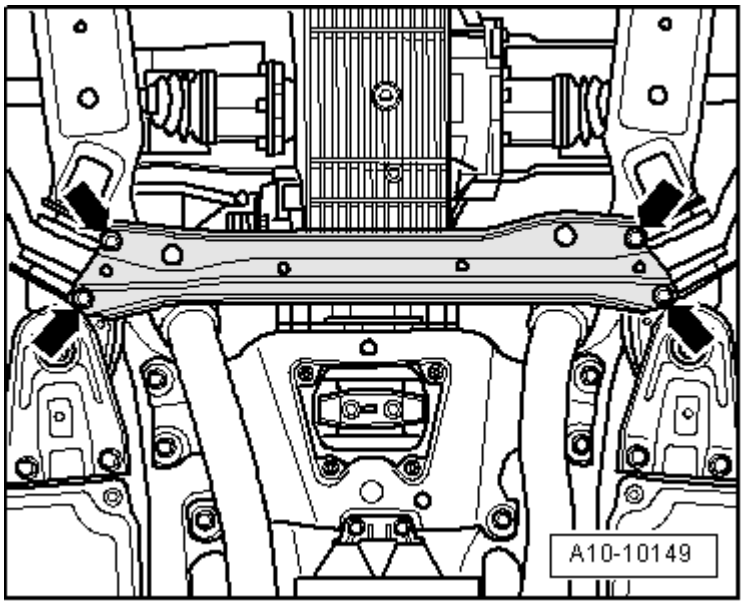

Fig. 488: Disconnecting Hose Of Crankshaft Housing Ventilation & Removing Left Cylinder Head Cover Bolts In Sequence
Courtesy of VOLKSWAGEN UNITED STATES, INC.

- Disconnect hose of crankshaft housing ventilation - **arrow** -.

- Remove left cylinder head cover screws in sequence - **15 to 1** -.
- Remove cylinder head cover.

Installing

Installation is in reverse order of removal, note the following:

NOTE:

- **Replace cylinder head cover gaskets if damaged.**
- **Replace bolts for cylinder head cover if gasket is damaged.**

- Clean sealing surfaces, they must be free of oil and grease.

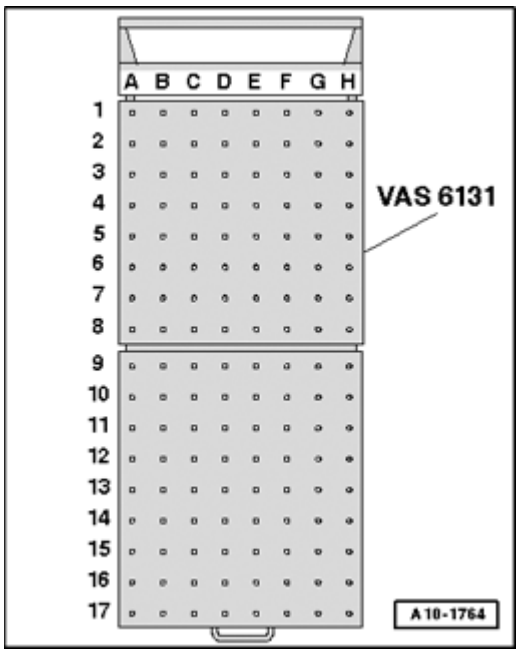

Fig. 489: Coating Semicircular Seals Lightly With Oil And Insert
Courtesy of VOLKSWAGEN UNITED STATES, INC.

- Coat semicircular seals - **arrows** - lightly with oil and insert.

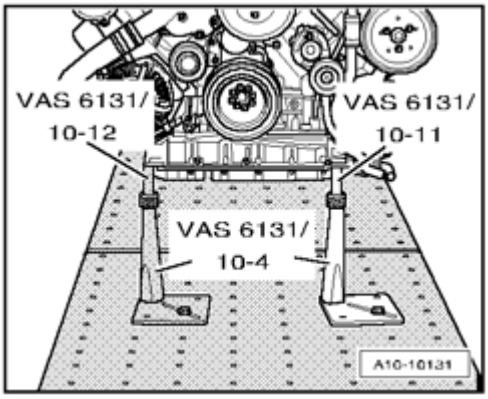

Fig. 490: Tightening Cylinder Head Cover In Sequence
Courtesy of VOLKSWAGEN UNITED STATES, INC.

- Tighten cylinder head cover in sequence - **1 to 15** -.

Torque specifications

Component	Nm
Cylinder head cover to cylinder head	10
Wiring for ignition coils at cylinder head cover	5 * See note
Oil dip stick guide tube to cylinder head	10

* Insert using locking compound; locking compound .

Right cylinder head cover, removing and installing

Removing

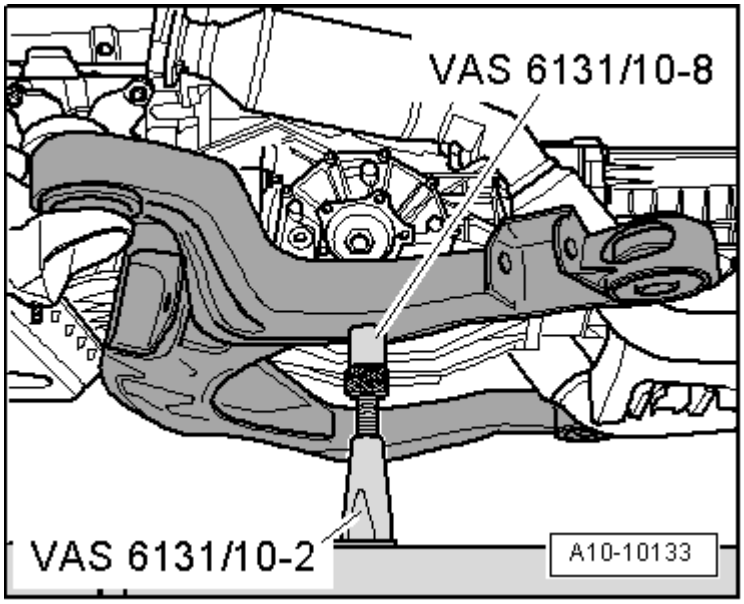

Fig. 491: Removing Rear Engine Cover
Courtesy of VOLKSWAGEN UNITED STATES, INC.

- Remove rear engine cover - **arrows** -.

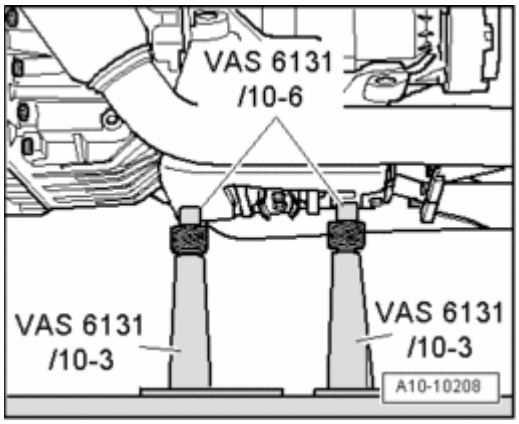

Fig. 492: Identifying Evaporative Emission Canister Purge Regulator Valve N80 And Air Duct
Courtesy of VOLKSWAGEN UNITED STATES, INC.

- Disengage Evaporative Emission (EVAP) Canister Purge Regulator Valve N80 - **1** - from air guide.
- Remove bolts - **arrows** -.
- Remove air duct - **2** -.

CAUTION: Note rules of cleanliness for working on the fuel injection system --> Rules for cleanliness.

CAUTION: Fuel system is under pressure! Before opening system, place clean rags around connection. Then release pressure by carefully loosening connection.

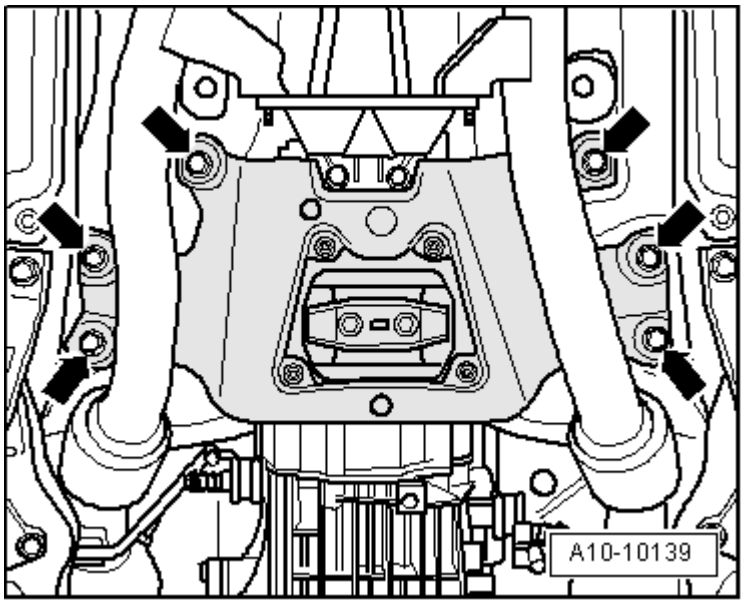

Fig. 493: Installing/Removing Fuel Hose To/From Connection On Fuel Rail Line
Courtesy of VOLKSWAGEN UNITED STATES, INC.

- Remove fuel hose from connection on fuel rail line. To do so, counter hold using an open-end wrench at hex head - **1** - and - **3** - and remove union nut - **2** -.

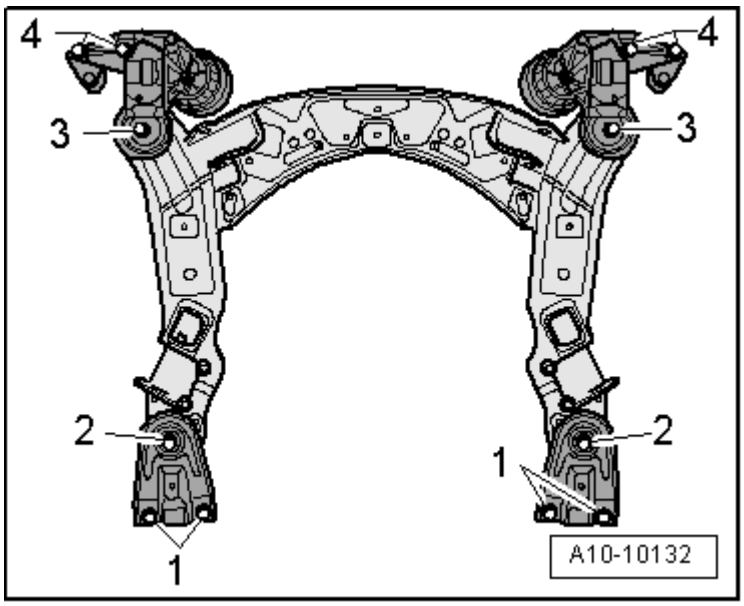

Fig. 494: Identifying Electrical Harness Connectors, Secondary Air Injection (AIR) Pump Hose, Air Guide Hose & Mass Air Flow (MAF) Sensor
Courtesy of VOLKSWAGEN UNITED STATES, INC.

- Disconnect electrical harness connector - **2** - from Evaporative Emission (EVAP) Canister Purge Regulator Valve N80.
- Disconnect electrical harness connector - **3** - at Mass Air Flow (MAF) Sensor G70.

- Disconnect hose - **1** - to Secondary Air Injection (AIR) pump.
- Disconnect air guide hose - **4** - at Mass Air Flow (MAF) Sensor G70.

- Move wiring harness clear at air filter housing.
- Remove clip and remove air filter housing with Mass Air Flow (MAF) Sensor G70.

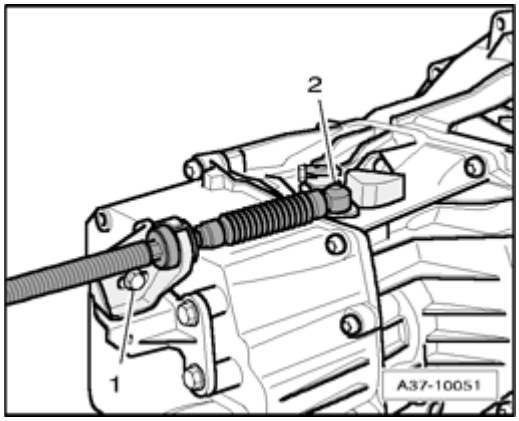

Fig. 495: Disconnecting Vacuum Hose & Air Guide Hose From Throttle Valve Control Module
Courtesy of VOLKSWAGEN UNITED STATES, INC.

- Disconnect vacuum hose - **1** -.
- Disconnect air guide hose - **2** - from Throttle Valve Control Module J338.

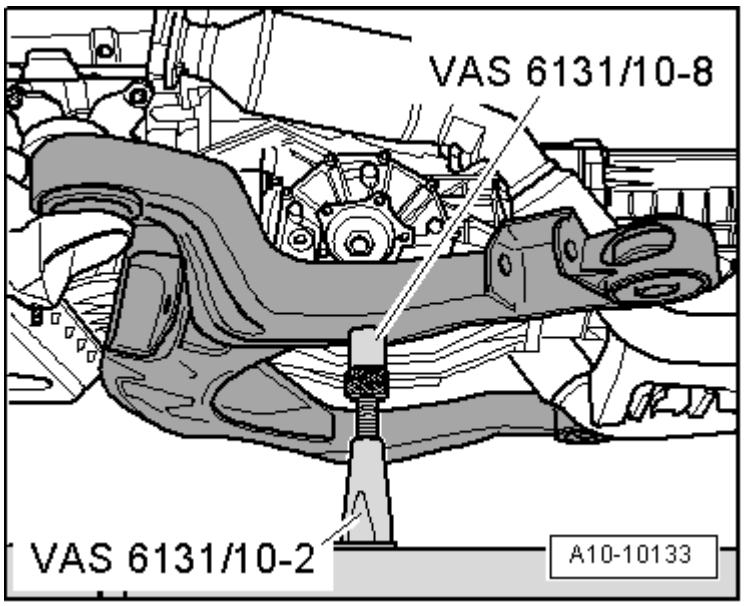

Fig. 496: Removing Bolts On Right Cylinder Head, Disconnecting Electrical Harness Connectors & Removing Ignition Coils
Courtesy of VOLKSWAGEN UNITED STATES, INC.

- Remove bolts - **5** - and - **6** - on right cylinder head.
- Disconnect electrical harness connectors - **1 to 4** -.

- Remove ignition coils - **arrows** -.

NOTE:

- **Extractor T40039 can be used for removal.**

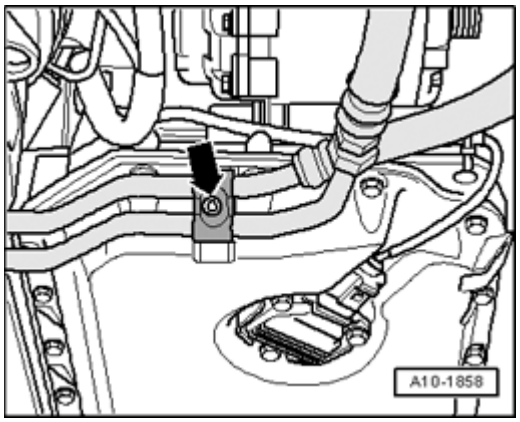

Fig. 497: Disconnecting Hose Of Crankshaft Housing Ventilation & Removing Right Cylinder Head Cover Screws In Sequence
Courtesy of VOLKSWAGEN UNITED STATES, INC.

- Disconnect hose of crankshaft housing ventilation - **arrow** -.
- Remove right cylinder head cover bolts in sequence - **15 to 1** -.
- Remove cylinder head cover.

Installing

Installation is in reverse order of removal, note the following:

NOTE:

- **Replace cylinder head cover gaskets if damaged.**
- **Replace bolts for cylinder head cover if gasket is damaged.**

- Clean sealing surfaces, they must be free of oil and grease.

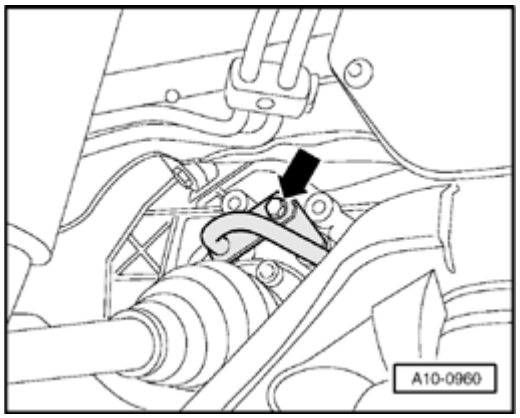

Fig. 498: Coating Semicircular Seals Lightly With Oil And Insert

Courtesy of VOLKSWAGEN UNITED STATES, INC.

- Coat semicircular seals - **arrows** - lightly with oil and insert.

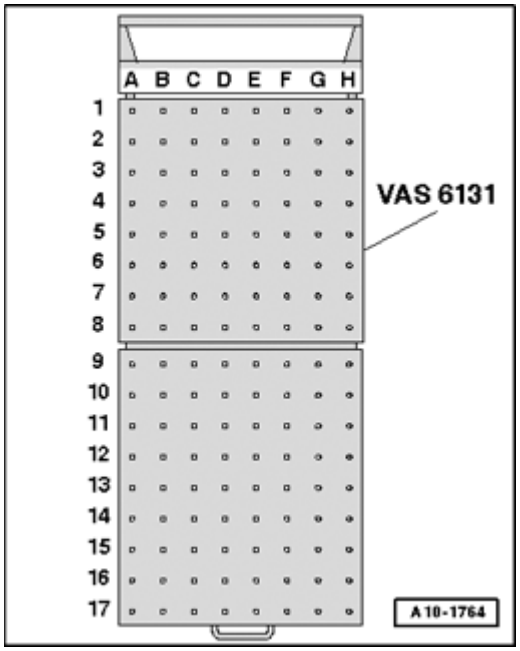

Fig. 499: Disconnecting Hose Of Crankshaft Housing Ventilation & Removing Right Cylinder Head Cover Screws In Sequence
Courtesy of VOLKSWAGEN UNITED STATES, INC.

- Tighten cylinder head cover in sequence - **1 to 15** -.

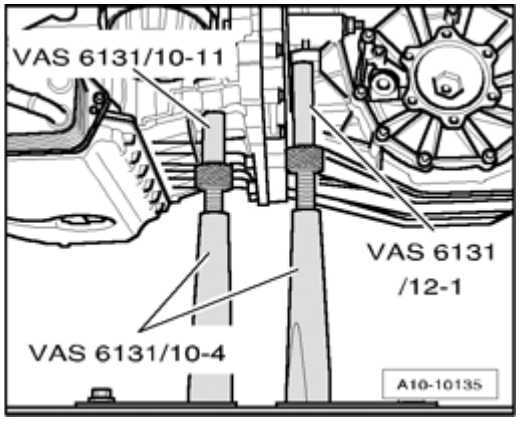

Fig. 500: Installing/Removing Fuel Hose To/From Connection On Fuel Rail Line
Courtesy of VOLKSWAGEN UNITED STATES, INC.

- Secure fuel hose to connection on fuel rail line. To do so, counter hold using an open-end wrench at each hex head - **1** - and - **3** - and tighten union nut - **2** - to 22 Nm.

Torque specifications

Component	Nm
Cylinder head cover to cylinder head	10
Wiring for ignition coils at cylinder head cover	5 * See note
Fuel supply line to fuel rail	22

* Insert using locking compound; locking compound .

Cylinder head, removing and installing

Removing

NOTE:

- **All cable ties opened or cut during engine removal must be reinstalled at the same locations during installation.**

- Remove engine: Vehicles with manual transmission --> **Engine (vehicles with manual transmission)** , vehicles with automatic transmission --> **Engine (vehicles with automatic transmission), removing**.
- Leave engine with transmission installed on scissor lift platform VAS 6131 A.
- Remove camshaft timing chains from camshafts --> **Camshaft timing chains, removing from camshafts**.

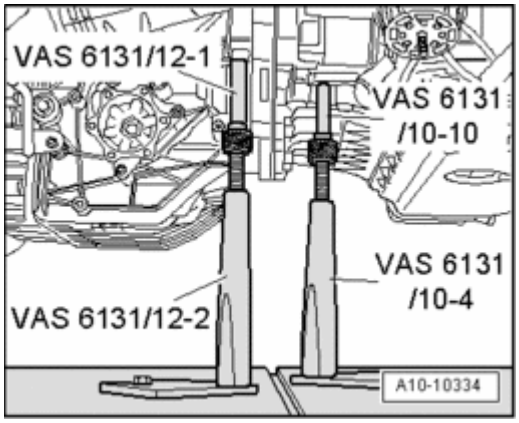

Fig. 501: Removing Glide Track At Left Cylinder Head & Chain Tensioner
Courtesy of VOLKSWAGEN UNITED STATES, INC.

- Remove glide track - **1** - at left cylinder head.
- Remove chain tensioner - **2** -.

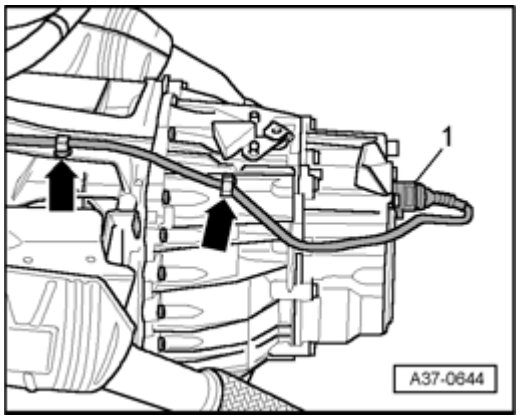

Fig. 502: Removing Glide Track At Right Cylinder Head
Courtesy of VOLKSWAGEN UNITED STATES, INC.

- Remove glide track - **1** - at right cylinder head.
- Remove chain tensioner - **2** -.

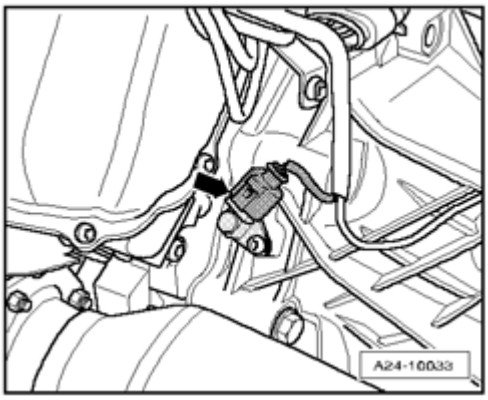

Fig. 503: Loosening Cylinder Head Bolts In Sequence
Courtesy of VOLKSWAGEN UNITED STATES, INC.

- Loosen cylinder head bolts in the sequence - **1 to 10** -.
- Remove cylinder head and place it on a soft surface (foam).

Installing

NOTE:

- **Replace cylinder head bolts.**
- **During assembly, replace self-locking nuts and bolts.**
- **Always replace bolts that are tightened to torque as well as O-rings and gaskets.**
- **Carefully remove residual sealant from cylinder head and cylinder block. Make sure that no long scrapes or scratches result.**
- **Carefully remove all grinding and sanding residue.**
- **There must be no oil or coolant in the blind holes for the cylinder head**

bolts in the cylinder block.

- **After installing a replacement cylinder head with camshafts installed, oil contact surfaces between roller rocker levers and cam lubricating surfaces after installing cylinder head.**
- **Do not remove plastic bases protecting exposed valves until immediately before installing cylinder head.**
- **Cylinder heads with cracks between the valve seats, or between the valve seat and the spark plug threads, can continue to be used without reducing the service life, as long as the cracks have a width of max. 0.3 mm, or only the first 4 threads of the spark plug threads are cracked.**
- **Only unpack new cylinder head gasket immediately prior to installation.**
- **Handle gasket with extra care. Damages to the silicone layer and in areas of recesses may result in leaks.**
- **Install cylinder head gasket onto guide sleeves. Marking "oben" (top) or part number must face toward cylinder head.**
- **Secure all hose connections using hose clamps appropriate for the model type .**
- **When replacing the cylinder head or cylinder head seal, all of the coolant and engine oil must be replaced.**
- **After working on the valvetrain and lifters, carefully rotate the crankshaft by hand at least 2 full revolutions before starting to be sure that valves do not strike the pistons.**
- **During installation, all cable ties must be re-installed at the same location.**

- Check whether camshafts of both cylinder heads stand in TDC position.

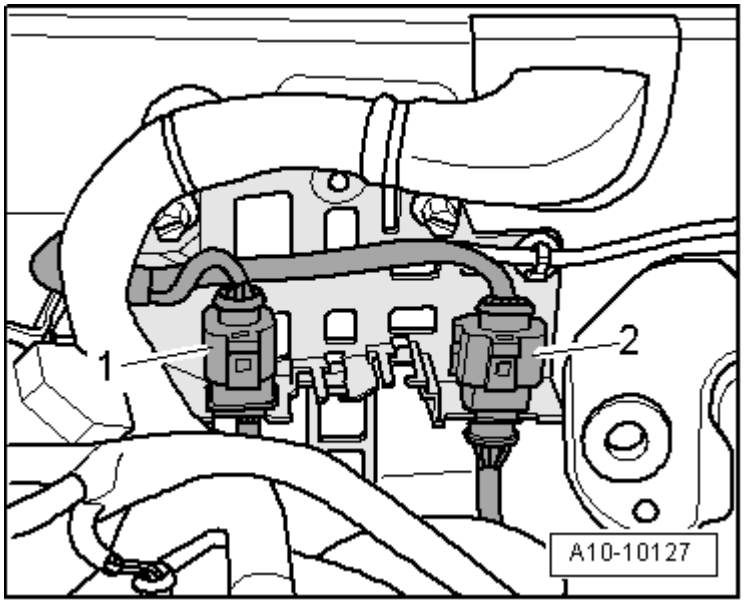

Fig. 504: Identifying Slits At Front In Camshafts Stand Parallel At Same Height With Upper Edge Of Cylinder Head

Courtesy of VOLKSWAGEN UNITED STATES, INC.

- Slits - **arrows** - at front in camshafts must stand parallel at same height with upper edge of cylinder head.

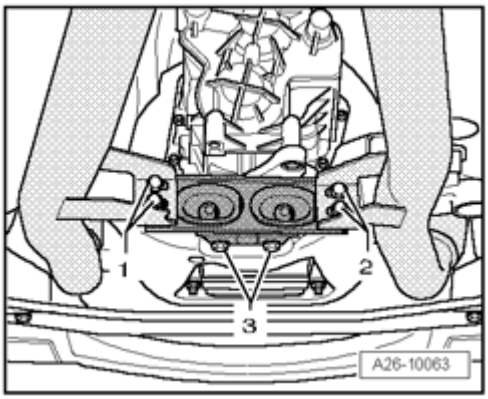

Fig. 505: Removing/Installing Crankshaft Holder 3242 Into Hole
Courtesy of VOLKSWAGEN UNITED STATES, INC.

- Crankshaft holder 3242 must be installed.

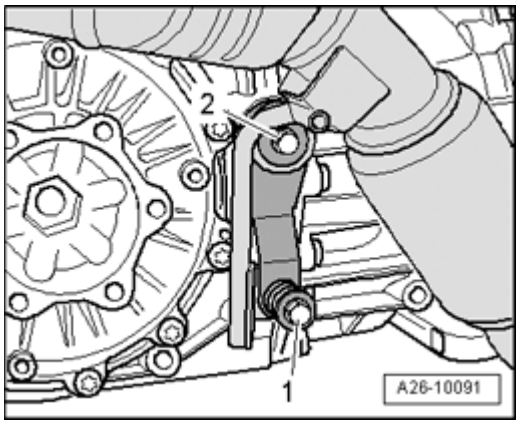

Fig. 506: Positioning Cylinder Head Gasket
Courtesy of VOLKSWAGEN UNITED STATES, INC.

- Position cylinder head gasket.

- Pay close attention to alignment bushings in cylinder block - **arrows** -.
- Pay attention to installation position of cylinder head gasket, marking "oben" (top) or part number must face toward cylinder head.

- Install cylinder head.
- Insert new cylinder head bolts and tighten by hand.

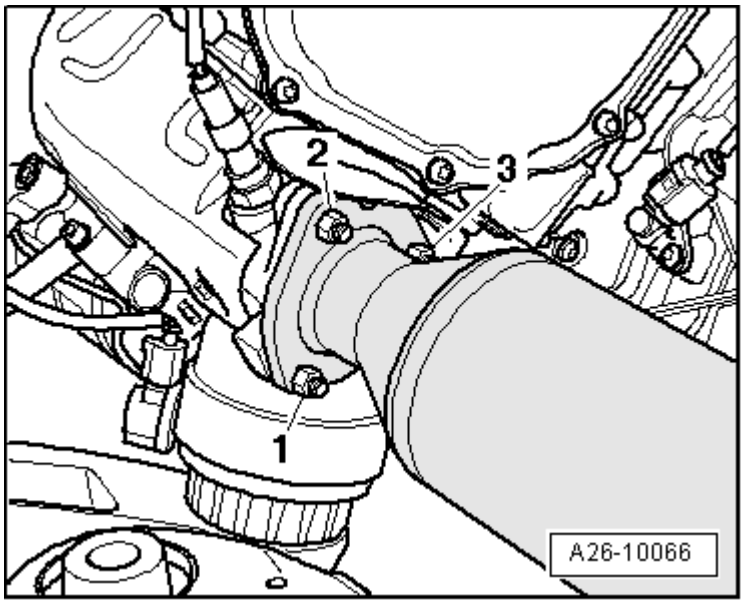

Fig. 507: Tightening Cylinder Head Bolts In 4 Stages In Tightening Sequence
Courtesy of VOLKSWAGEN UNITED STATES, INC.

- Tighten cylinder head bolts in 4 stages in tightening sequence shown as follows:
- Using torque wrench, tighten to 30 Nm.
- Using torque wrench, tighten to 60 Nm.
- With Torx key, 90 ° ($^1/_4$ turn) additional turn.
- With Torx key, 90 ° ($^1/_4$ turn) additional turn.

NOTE:

- **There is no requirement to retighten the cylinder head bolts after repairs.**

The rest of installation is in reverse order of removal, note the following:

- Install camshaft timing chains **Installing**.
- Install engine: Vehicles with manual transmission --> **Engine (vehicles with manual transmission), installing** , vehicles with automatic transmission --> **Engine (vehicles with automatic transmission), installing**.
- Change engine oil -->
  - **01 - MAINTENANCE**
  - **01 - MAINTENANCE** for MAINTENANCE PROCEDURES - CABRIOLET

  .
- Replace coolant **Filling**.

Torque specifications

Component	Nm
Chain tensioner to cylinder head	5 plus an additional 90 ° * See note

*Replace bolts.

* 90 ° corresponds to one quarter turn.

INTAKE MANIFOLD, REMOVING AND INSTALLING

Intake manifold (vehicles with fuel return line), component overview

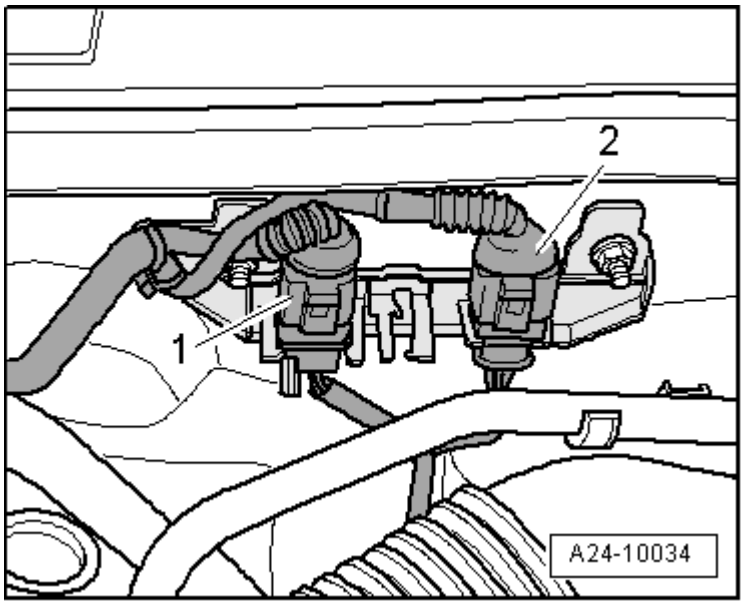

Fig. 508: Intake Manifold (Vehicles With Fuel Return Line), Component Overview
Courtesy of VOLKSWAGEN UNITED STATES, INC.

1 - Intake manifold

- Removing and installing --> **Intake manifold, removing and installing**

2 - O-rings for fuel injectors

- Replace

3 - 10 Nm

4 - Fuel return line

5 - Fuel supply line

- Tighten union nut to 22 Nm

6 - Fuel rail

7 - Vacuum line

8 - Crankcase housing ventilation pressure regulator valve

9 - 10 Nm

- Fasten in diagonal sequence in steps

10 - Lifting eye

11 - 23 Nm

12 - Gasket for intake manifold

- Replace

13 - Locking pin - 0.6 Nm

Intake manifold (vehicles without fuel return line), component overview

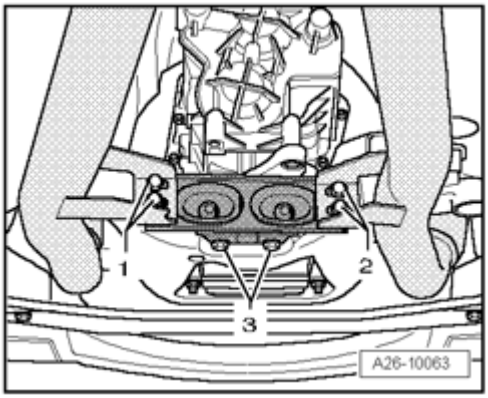

Fig. 509: Intake Manifold (Vehicles Without Fuel Return Line), Component Overview
Courtesy of VOLKSWAGEN UNITED STATES, INC.

1 - Intake manifold

- Removing and installing --> **Intake manifold, removing and installing**

2 - O-rings for fuel injectors

- Replace

3 - 10 Nm

4 - Secure the fuel line from the connector flange of the fuel tank using hose clamps appropriate for the model type

- Loosening and tightening union nut --> **Loosening and tightening union nut for fuel hose**

5 - Fuel rail

6 - Pressure regulator valve

- For crankcase ventilation

7 - 10 Nm

- Fasten diagonally in steps

8 - Lifting eye

9 - 23 Nm

10 - Gasket

- For intake manifold
- Replace

11 - Locking pin - 0.6 Nm

Loosening and tightening union nut for fuel hose

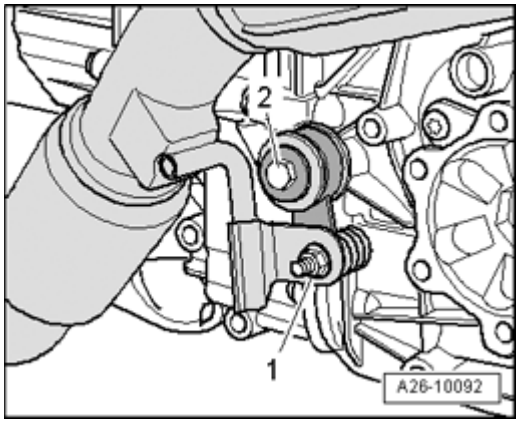

Fig. 510: Installing/Removing Fuel Hose To/From Connection On Fuel Rail Line
Courtesy of VOLKSWAGEN UNITED STATES, INC.

CAUTION: Note rules of cleanliness for working on the fuel injection system --> Rules for cleanliness.

CAUTION: Fuel system is under pressure! Before opening system, place clean rags around connection. Then release pressure by carefully loosening connection.

Loosening:

- Remove fuel hose from connection on fuel rail line. To do so, counter hold using an open-end wrench at each hex head - **1** - and - **3** - and remove union nut - **2** -.

Tightening:

- Secure fuel hose to connection on fuel rail line. To do so, counter hold using an open-end wrench at each hex head - **1** - and - **3** - and tighten union nut - **2** - to 22 Nm.

Intake manifold, removing and installing

Removing

NOTE:

- **All cable ties opened or cut during engine removal must be reinstalled at the same locations during installation.**

- Bring lock carrier into service position --> **Lock carrier, moving into service position**.

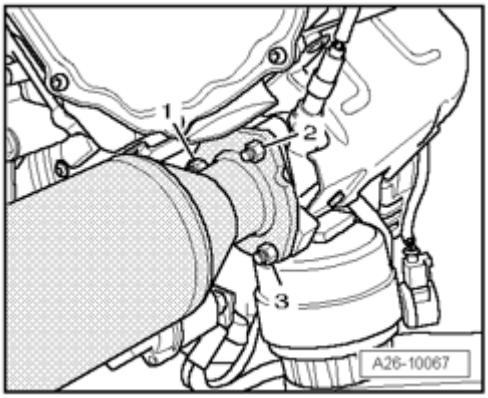

Fig. 511: Removing Rear Engine Cover
Courtesy of VOLKSWAGEN UNITED STATES, INC.

- Remove rear engine cover - **arrows** -.

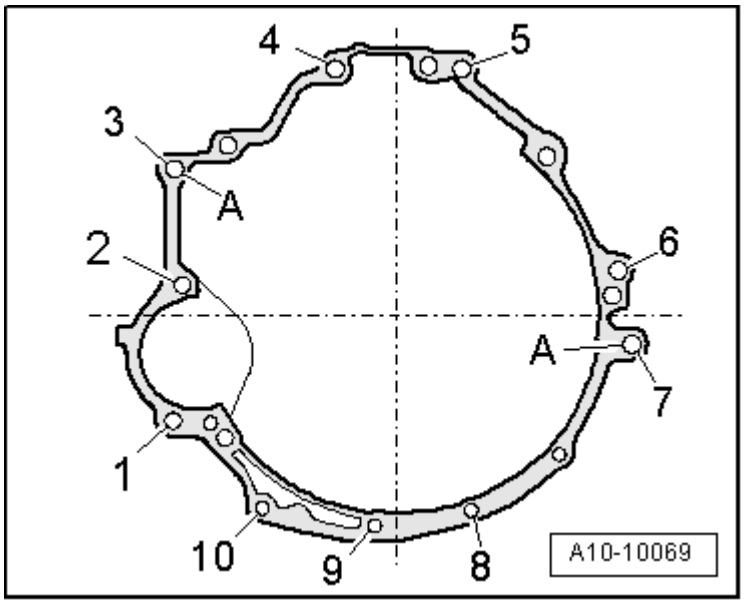

Fig. 512: Removing Front Engine Cover
Courtesy of VOLKSWAGEN UNITED STATES, INC.

- Remove front engine cover - **arrows 1 and 2** -.

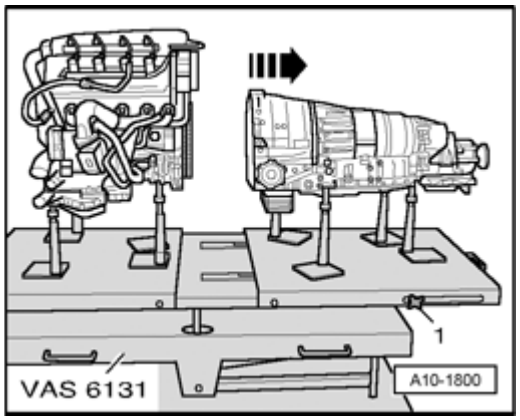

Fig. 513: Disconnecting Brake Booster Vacuum Hose From Grommet On Bulkhead
Courtesy of VOLKSWAGEN UNITED STATES, INC.

- Disconnect vacuum line - **arrow** - to brake booster at bulkhead.

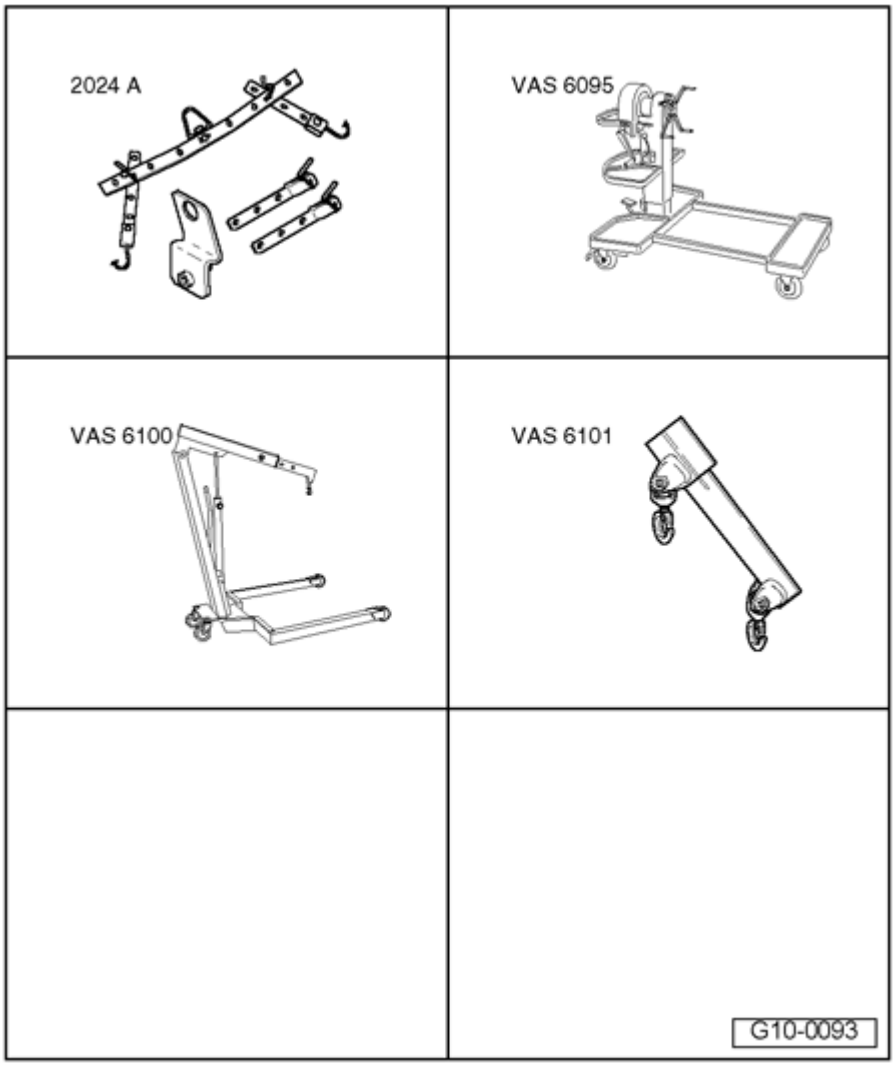

Fig. 514: Disconnecting Vacuum Line To Vacuum Reservoir
Courtesy of VOLKSWAGEN UNITED STATES, INC.

- If installed, disconnect vacuum line - **arrow** - to vacuum reservoir.

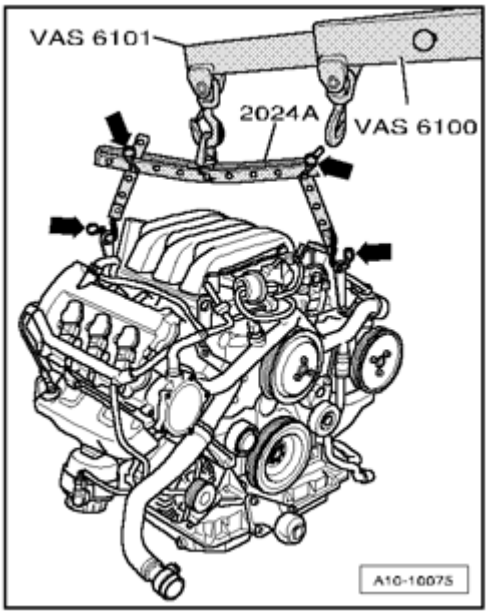

Fig. 515: Disconnecting Vacuum Hose From Intake Manifold
Courtesy of VOLKSWAGEN UNITED STATES, INC.

- Disconnect vacuum hose - **arrow** - from intake manifold.

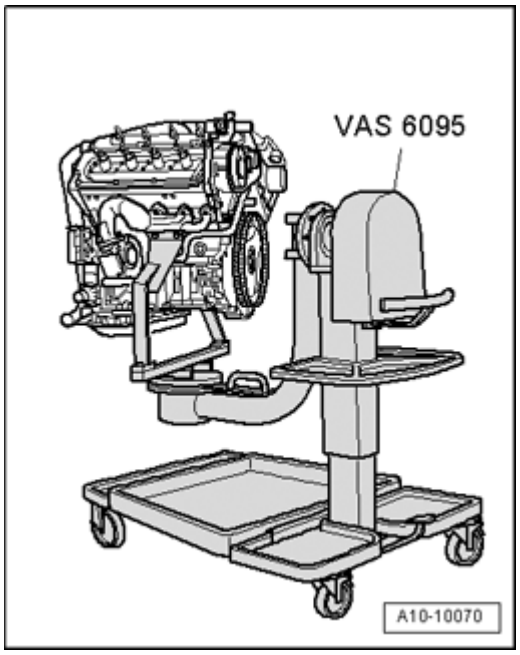

Fig. 516: Disconnecting Electrical Connection At Throttle Valve Control Module J338
Courtesy of VOLKSWAGEN UNITED STATES, INC.

- Disconnect electrical connection - **1** - at throttle valve control module J338.
- Disconnect vacuum hose - **2** -.
- Remove air guide hose - **3** -.

- Disconnect crankcase ventilation hose - **4** - at intake pipe.

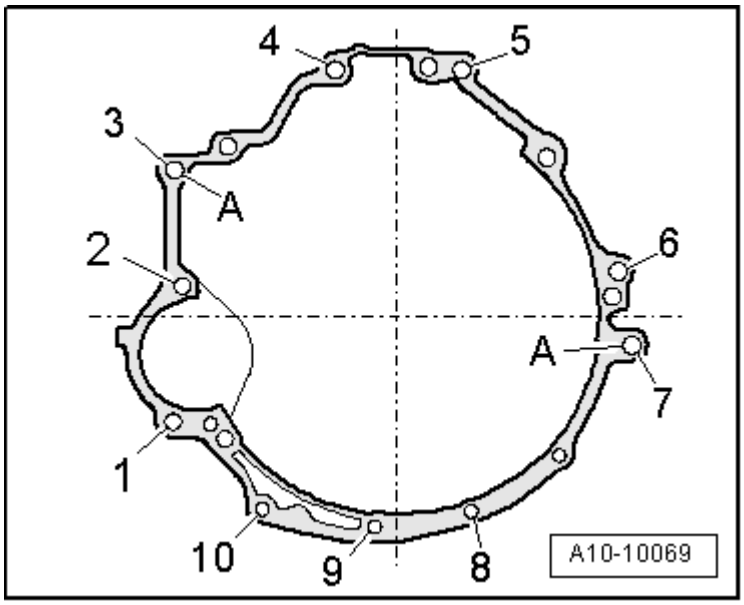

Fig. 517: Disconnecting Vacuum Line
Courtesy of VOLKSWAGEN UNITED STATES, INC.

- If installed, disconnect vacuum line at area designated with - **arrow** -.

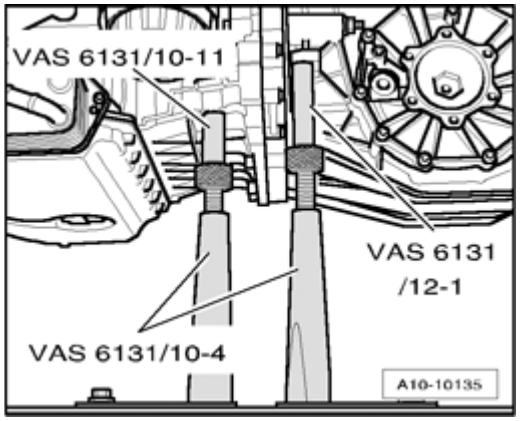

Fig. 518: Remove Electrical Harness Connectors Toward Front From Brackets On Intake Line
Courtesy of VOLKSWAGEN UNITED STATES, INC.

- Remove electrical harness connectors - **1 to 4** - toward front from brackets on intake pipe.

NOTE:

- **The electrical connections must not be separated.**

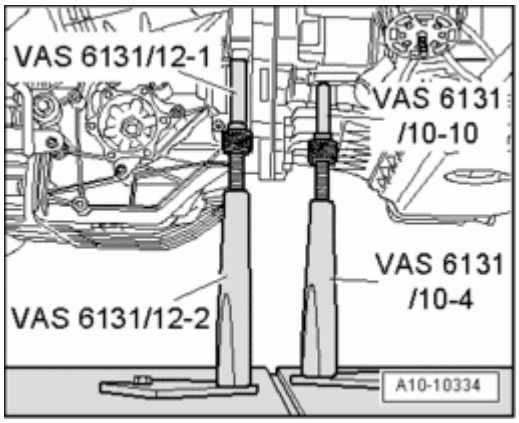

Fig. 519: Disconnecting Vacuum Hose At T-Piece
Courtesy of VOLKSWAGEN UNITED STATES, INC.

- Disconnect vacuum hose - **arrow** - at T-piece.

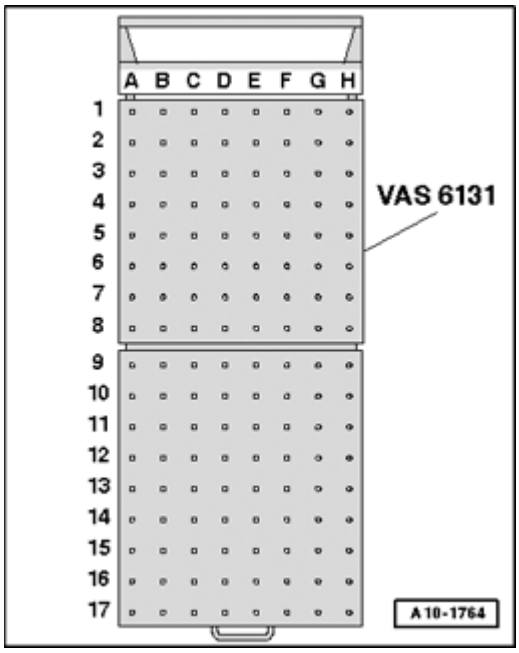

Fig. 520: Identifying Connector Strips At Fuel Injectors, Vacuum Line On Fuel Pressure Regulator & Retaining Bolts For Fuel Rail Line
Courtesy of VOLKSWAGEN UNITED STATES, INC.

- Disconnect connector strips - **1** - and - **5** - at fuel injectors.
- For vehicles with fuel return line, disconnect vacuum line - **4** - on fuel pressure regulator.
- Remove retaining bolts - **2** - and - **3** - for fuel rail line.
- Remove fuel distributor together with fuel injectors from intake manifold simultaneously upward and place it on a clean rag in engine compartment.

NOTE:

- **Carefully protect the removed fuel injectors from contamination.**

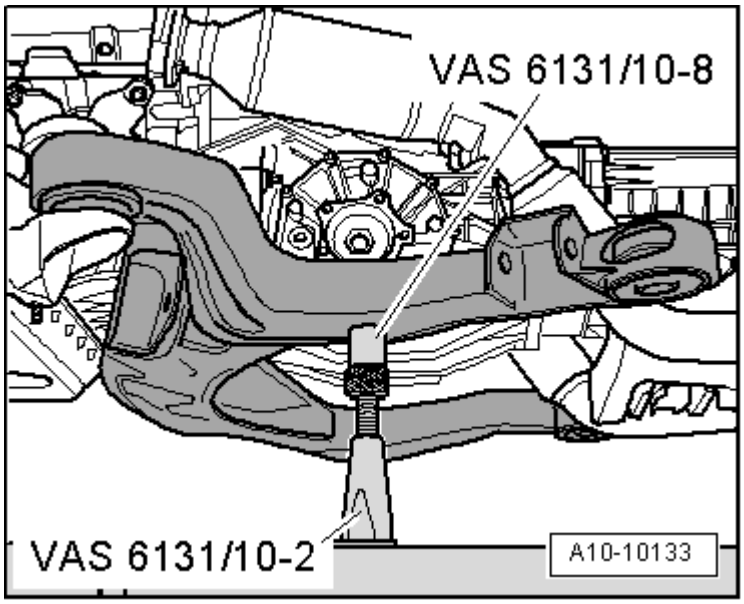

Fig. 521: Removing Left/Rear Engine Lifting Eye
Courtesy of VOLKSWAGEN UNITED STATES, INC.

- Remove bolts - **arrows** - for left rear engine lifting eye.

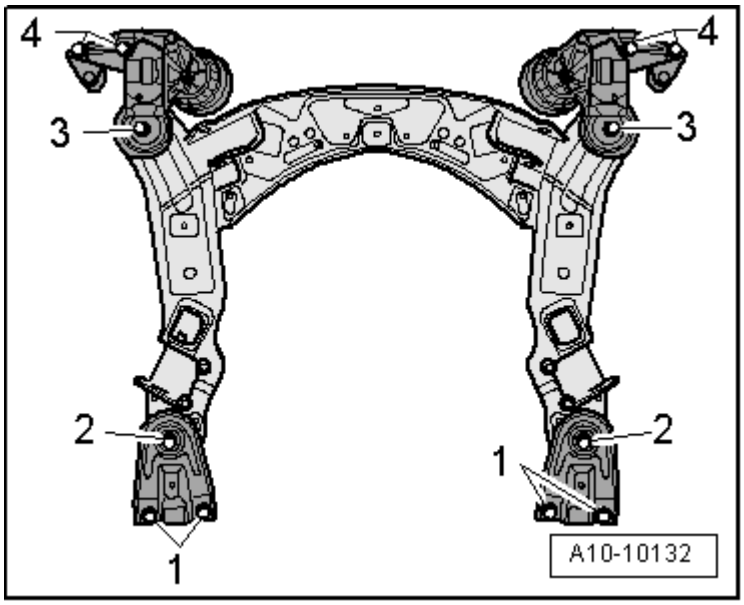

Fig. 522: Removing Intake Manifold Bolts
Courtesy of VOLKSWAGEN UNITED STATES, INC.

- Remove intake manifold bolts - **arrows** - and remove manifold.

NOTE:

- **Plug intake ports of cylinder head with clean rags.**

Installing

Installation is in reverse order of removal, note the following:

NOTE:

- **Replace gaskets and O-rings.**
- **Secure all hose connections using hose clamps appropriate for the model type .**
- **During installation, all cable ties must be re-installed at the same location.**

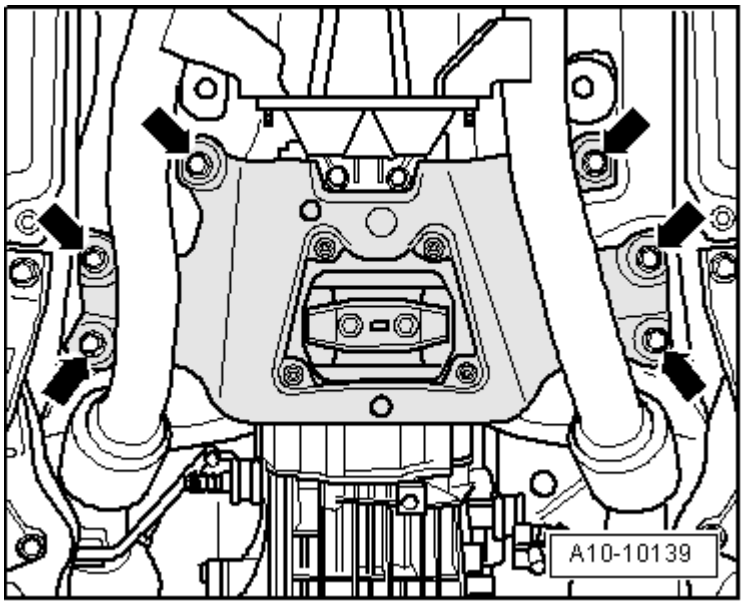

Fig. 523: Replacing Intake Manifold Gaskets, Thereby Removing Locking Bolt
Courtesy of VOLKSWAGEN UNITED STATES, INC.

- Replace intake manifold gaskets, thereby removing locking bolt - **1** -.
- Be aware of alignment pins - **2** - when setting intake manifold in place.

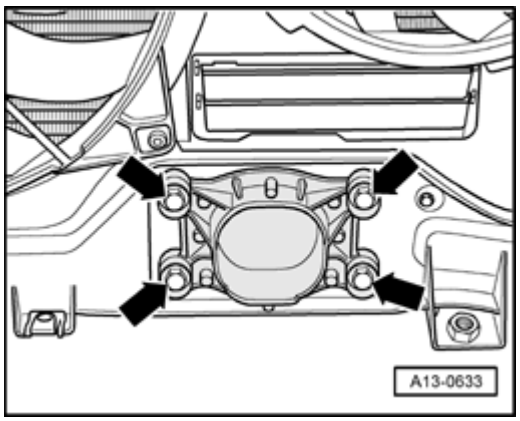

Fig. 524: Tightening Intake Manifold Bolts In Diagonal Sequence And In Steps
Courtesy of VOLKSWAGEN UNITED STATES, INC.

- Tighten intake manifold bolts - **arrows** - in a diagonal sequence and in steps.

Tightening torque: 11 Nm

- Install lock carrier with attachments -->
  - **50 BODY, FRONT**
  - **50 - BODY - FRONT** for BODY EXTERIOR - CABRIOLET

.

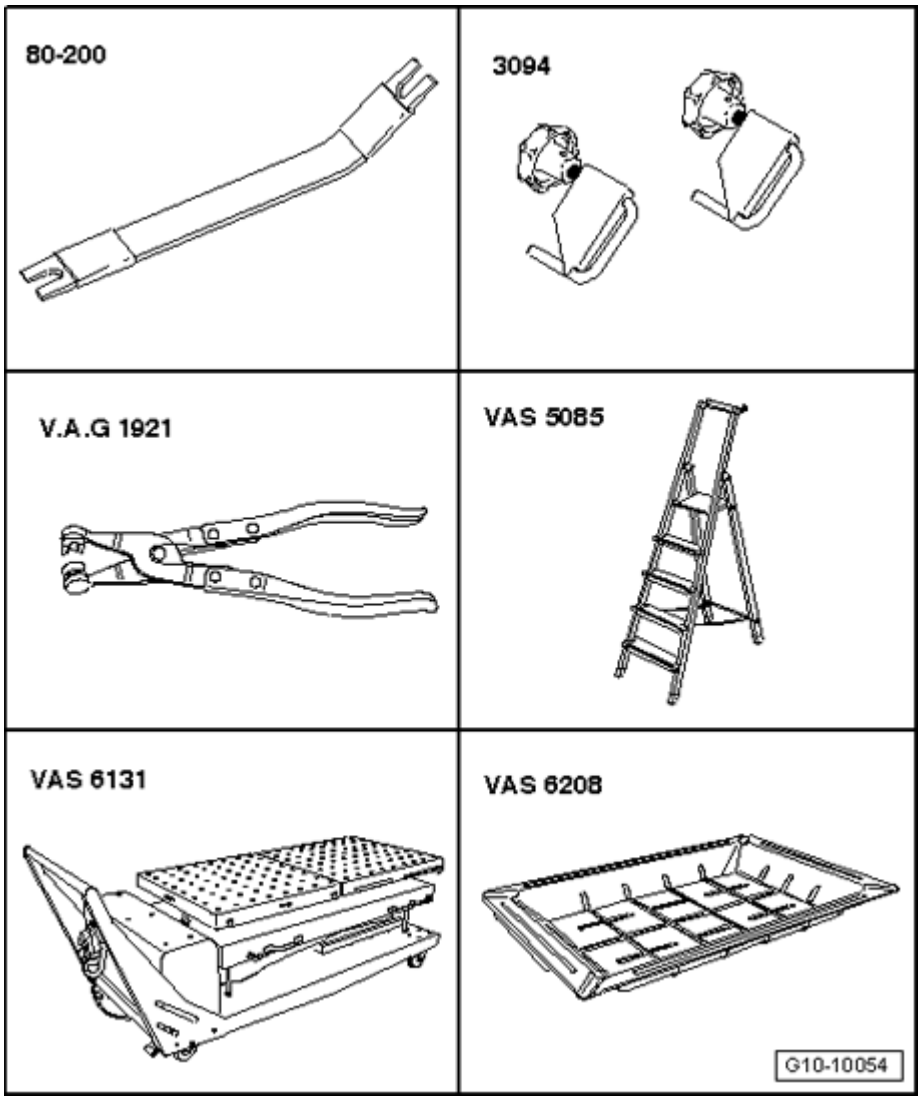

Fig. 525: Placing Torque Support On Rubber Buffer For Torque Support And Tightening Bolts
Courtesy of VOLKSWAGEN UNITED STATES, INC.

- Place torque support on rubber buffer for torque support and tighten bolts - **arrows** -.
- Install front bumper cover -->
  - **63 BUMPER**
  - **63 - BUMPERS** for BODY EXTERIOR - CABRIOLET

.

- Run engine for 5 minutes.
- Retighten intake manifold bolts in sequence shown.

Tightening torque: 11 Nm

- Check headlight adjustment -->
  - **01 - MAINTENANCE**
  - **01 - MAINTENANCE** for MAINTENANCE PROCEDURES - CABRIOLET

.

Torque specifications

Component	Nm
Locking bolt to cylinder head	0.6
Intake manifold to cylinder head	11
Engine lifting eyelet to cylinder head	22
Fuel rail pipe to intake manifold	10
Torque support stop to lock carrier	28

Compression pressures, checking

Special tools, testers and auxiliary items required

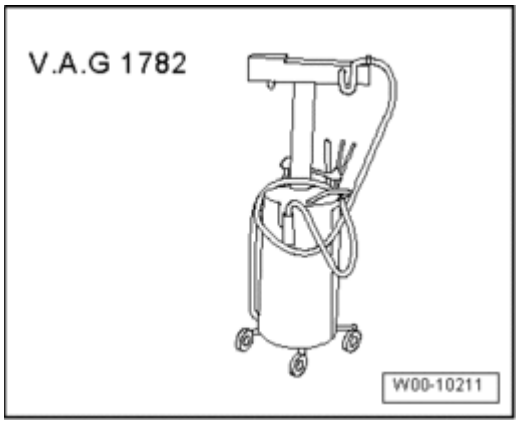

Fig. 526: Identifying Spark Plug Wrench 3122 B
Courtesy of VOLKSWAGEN UNITED STATES, INC.

- Spark plug removal tool 3122 B

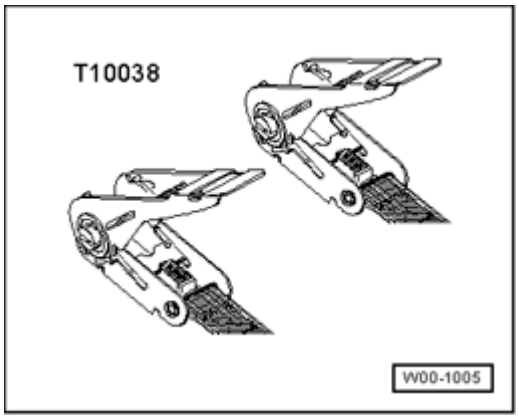

Fig. 527: Compression Tester V.A.G 1763
Courtesy of VOLKSWAGEN UNITED STATES, INC.

- Compression tester V.A.G 1763

Test conditions

- Engine oil temperature min. 30 ° C
- Battery voltage at least 12.5 V

Test sequence

- Switch off ignition.

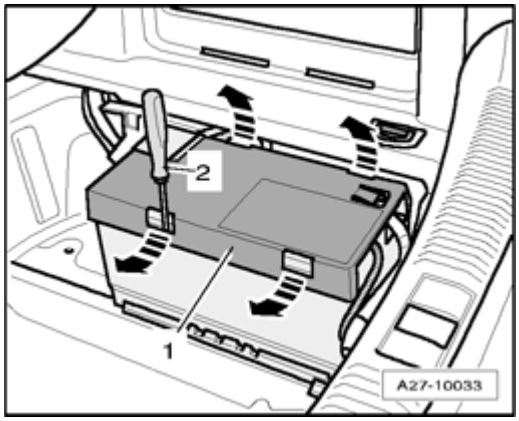

Fig. 528: Removing Fuse For Fuel Pump (FP) From Socket
Courtesy of VOLKSWAGEN UNITED STATES, INC.

- Remove fuse for Fuel Pump (FP) from socket - **28** -.

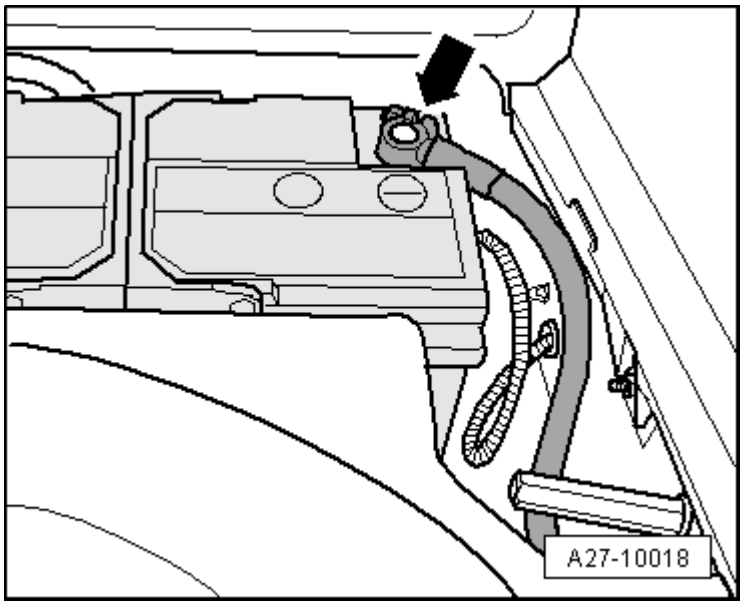

Fig. 529: Removing Rear Engine Cover
Courtesy of VOLKSWAGEN UNITED STATES, INC.

- Remove rear engine cover - **arrows** -.

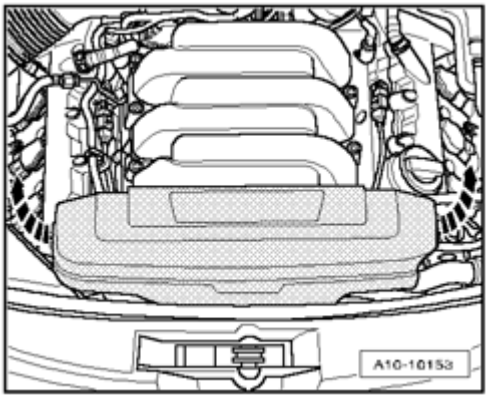

Fig. 530: Removing Front Engine Cover
Courtesy of VOLKSWAGEN UNITED STATES, INC.

- Remove front engine cover - **arrows 1 and 2** -.

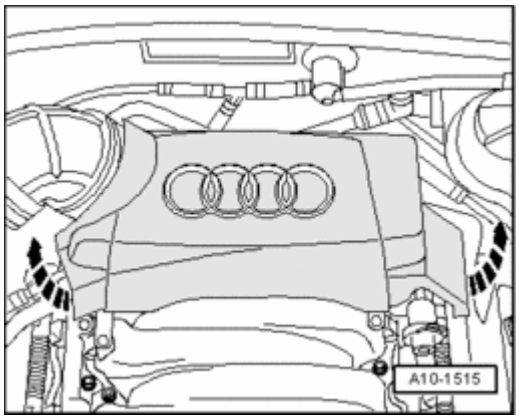

Fig. 531: Removing Cover In Engine Compartment (Left Side)
Courtesy of VOLKSWAGEN UNITED STATES, INC.

- Remove cover - **1** - in engine compartment (left side).

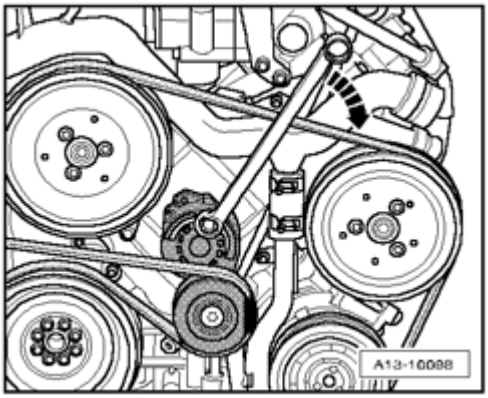

Fig. 532: Removing Coolant Hoses & Coolant Expansion Tank
Courtesy of VOLKSWAGEN UNITED STATES, INC.

- Remove coolant expansion tank - **arrow** -.
- Disconnect electrical wire from Engine Coolant Level (ECL) Warning Switch F66 and set aside coolant reservoir with coolant hoses - **1** - and - **2** - connected.

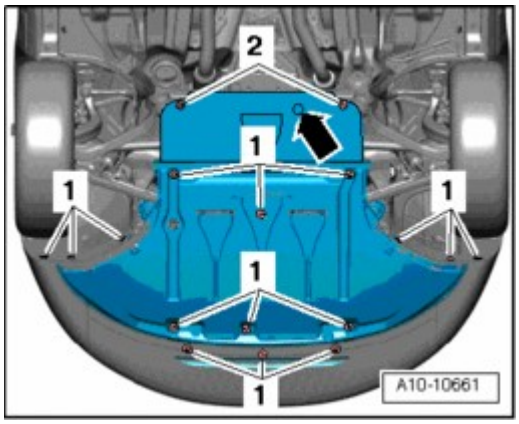

Fig. 533: Removing Bolt From Oil Dipstick Guide Tube At Cylinder Head
Courtesy of VOLKSWAGEN UNITED STATES, INC.

- Remove bolt - **arrow** - at oil dipstick guide tube.

NOTE:

- **Guide tube remains inserted in upper part of oil pan.**

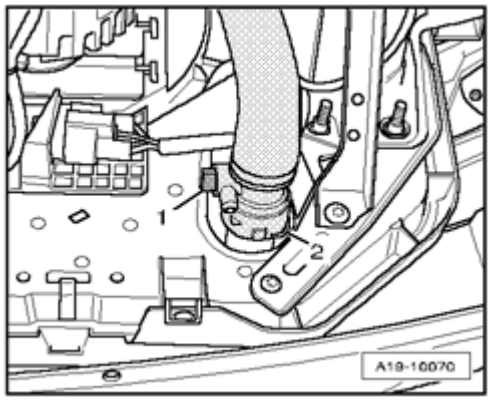

Fig. 534: Removing Cover In Engine Compartment (Right Side)
Courtesy of VOLKSWAGEN UNITED STATES, INC.

- Remove cover - **1** - in engine compartment (right side).

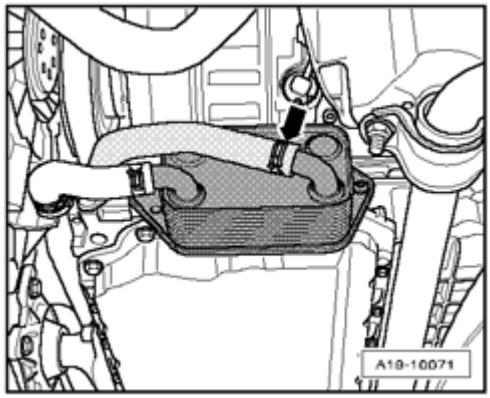

Fig. 535: Identifying Evaporative Emission Canister Purge Regulator Valve N80 And Air Duct
Courtesy of VOLKSWAGEN UNITED STATES, INC.

- Disengage Evaporative Emission (EVAP) Canister Purge Regulator Valve N80 - **1** - from air guide.
- Remove bolts - **arrows** -.
- Remove air duct - **2** -.

CAUTION: Note rules of cleanliness for working on the fuel injection system --> Rules for cleanliness.

CAUTION: Fuel system is under pressure! Before opening system, place clean rags around connection. Then release pressure by carefully loosening connection.

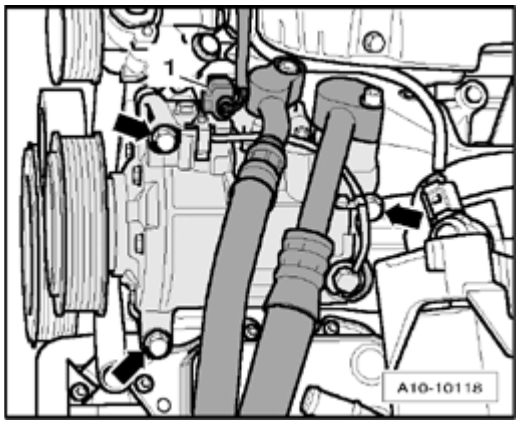

Fig. 536: Installing/Removing Fuel Hose To/From Connection On Fuel Rail Line
Courtesy of VOLKSWAGEN UNITED STATES, INC.

- Remove fuel hose from connection on fuel rail line. To do so, counter hold using an open-end wrench at hex head - **1** - and - **3** - and remove union nut - **2** -.

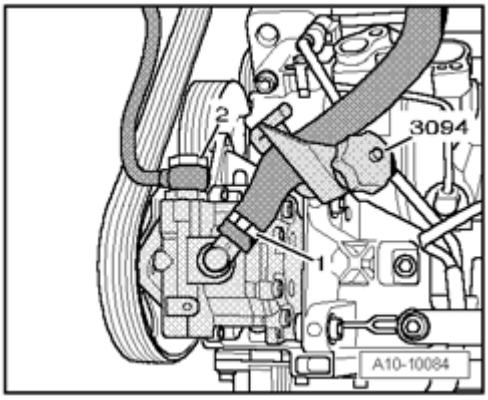

Fig. 537: Identifying Electrical Harness Connectors, Secondary Air Injection (AIR) Pump Hose, Air Guide Hose & Mass Air Flow (MAF) Sensor
Courtesy of VOLKSWAGEN UNITED STATES, INC.

- Disconnect electrical harness connector - **2** - from Evaporative Emission (EVAP) Canister Purge Regulator Valve N80.
- Disconnect electrical harness connector - **3** - at Mass Air Flow (MAF) Sensor G70.
- Disconnect hose - **1** - to Secondary Air Injection (AIR) pump.
- Disconnect air guide hose - **4** - at Mass Air Flow (MAF) sensor.

- Move wiring harness clear at air filter housing.
- Remove clip and remove air filter housing with Mass Air Flow (MAF) sensor.

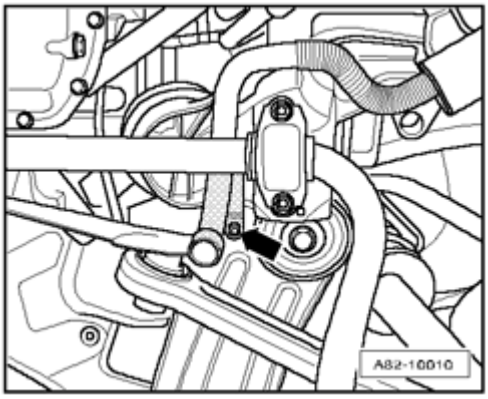

Fig. 538: Removing Bolts On Left Cylinder Head, Disconnecting Electrical Harness Connectors & Removing Ignition Coils
Courtesy of VOLKSWAGEN UNITED STATES, INC.

- Remove bolts - **5** - and - **6** - on left cylinder head.
- Disconnect electrical harness connectors - **1 to 4** -.
- Remove ignition coils - **arrows** -.

NOTE:

- **Extractor T40039 can be used for removal.**

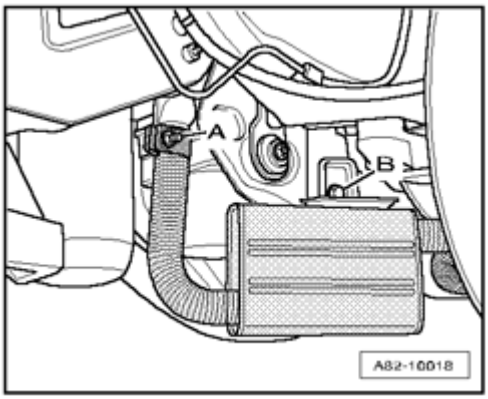

Fig. 539: Removing Bolts On Right Cylinder Head, Disconnecting Electrical Harness Connectors & Removing Ignition Coils
Courtesy of VOLKSWAGEN UNITED STATES, INC.

- Remove bolts - **5** - and - **6** - on right cylinder head.
- Disconnect electrical harness connectors - **1 to 4** -.
- Remove ignition coils - **arrows** -.

NOTE:

- **Extractor T40039 can be used for removal.**

- Using spark plug removal tool 3122 B , remove spark plugs.

- Open throttle valve completely.
- Check compression using compression tester V.A.G 1763.

NOTE:

- **Using the compression tester Operating instructions.**

- Have a second technician press accelerator pedal completely and at the same time operate starter long enough until pressure increase no longer appears on tester.

Compression pressure:

New bar positive pressure	Wear limit bar positive pressure	Difference between cylinders bar positive pressure
10.0 to 14.0	9.0	max. 3.0

Assembly is in reverse order of removal, note the following:

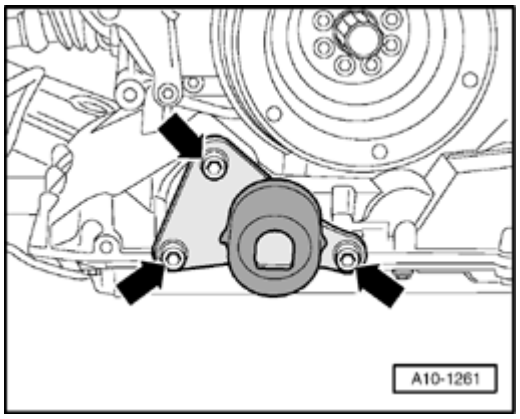

Fig. 540: Installing/Removing Fuel Hose To/From Connection On Fuel Rail Line
Courtesy of VOLKSWAGEN UNITED STATES, INC.

- Secure fuel hose to connection on fuel rail line. To do so, counter hold using an open-end wrench at each hex head - **1** - and - **3** - and tighten union nut - **2** - to 22 Nm.
- Install sparks plugs -->
  - **01 - MAINTENANCE**
  - **01 - MAINTENANCE** for MAINTENANCE PROCEDURES - CABRIOLET

  .

Faults are saved in the ECM when the electrical connectors are disconnected:

- Connect Vehicle Diagnosis, testing info. system VAS 5051B.
- Start "Guided Functions" operating mode.
- Generate readiness code in ECM.

Torque specifications

Component	Nm
Wiring for ignition coils at cylinder head cover	5 * See note
Oil dip stick guide tube to cylinder head	10
Fuel supply line to fuel rail	22

* Insert using locking compound; locking compound .

VALVETRAIN, SERVICING

Valvetrain, servicing

NOTE:

- **Cylinder heads with cracks between the valve seats, or between the valve seat and the spark plug threads, can continue to be used without reducing the service life, as long as the cracks have a width of max. 0.3 mm, or only the first 4 threads of the spark plug threads are cracked.**
- **After installing the camshafts, the engine may not be started for approx. 30 minutes. The hydraulic equalization elements must seat themselves (otherwise the valves will crash into the pistons).**
- **After working on the valvetrain, carefully rotate engine by hand at least 2 full revolutions to ensure that valves do not strike the pistons when starting.**
- **Always replace seals, sealing rings and O-rings.**

Valvetrain, component overview

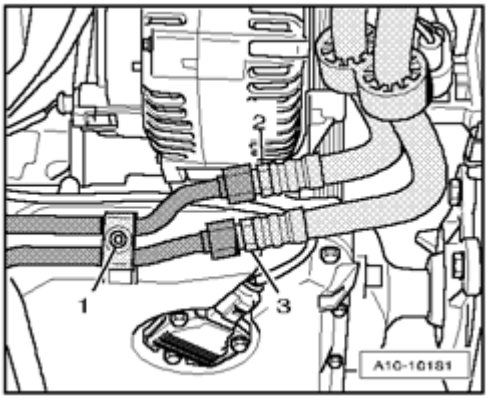

Fig. 541: Valvetrain, Component Overview
Courtesy of VOLKSWAGEN UNITED STATES, INC.

1 - 5 Nm plus an additional $^{1}/_{4}$ turn (90 °)

- Replace

2 - Housing for camshaft adjustment solenoid valve

3 - Gasket

- Replace

4 - Valve stem seal

- Replacing --> **Valve stem seals, replacing**.

5 - Valve spring

6 - Valve spring plate

7 - Valve keepers

8 - Hydraulic valve lifter

- Pressed into roller rocker lever
- Not removable without being damaged

9 - Roller rocker lever

- Removing and installing --> **Roller rocker lever, removing and installing**

10 - Alignment bushing

- 2 pieces

11 - Double bearing cap

12 - 5 Nm plus an additional $^{1}/_{4}$ turn (90 °)

- Replace

13 - Oil deflector

- On cylinder head at right between bearing cap E4 and A4
- On cylinder head at left between bearing cap E2 and A2

14 - 5 Nm plus an additional $^{1}/_{4}$ turn (90 °)

- Replace

15 - Bearing cap

- Note installation position and allocation **Installing**

16 - Intake camshaft

- Removing and installing --> **Camshafts, removing and installing**
- Checking axial play --> **Camshaft (axial clearance), checking**
- Check radial clearance using Plastigage (roller rocker lever removed) wear limit 0.1 mm run-out max. 0.01 mm

17 - Exhaust camshaft

- Removing and installing --> **Camshafts, removing and installing**
- Checking axial play --> **Camshaft (axial clearance), checking**
- Check radial clearance using Plastigage (roller rocker lever removed) wear limit 0.1 mm run-out max. 0.01 mm

18 - Shaft for roller rocker lever, intake side

- Removing and installing --> **Roller rocker lever, removing and installing**

19 - 10 Nm

20 - Shaft for roller rocker lever, exhaust side

- Removing and installing --> **Roller rocker lever, removing and installing**

21 - O-ring for shaft of roller rocker lever

- Replace

22 - Cylinder head

- See note --> **Valvetrain, servicing**
- Check valve guides, grind valve seats --> **Valve guides, checking**
- Rework valve seats --> **Valve seats, refacing**

23 - Intake valve

- Do not rework, only lapping is permitted
- Valve dimensions --> **Valve dimensions**
- Check valve guides, grind valve seats --> **Valve guides, checking**

24 - Exhaust valve

- Do not rework, only lapping is permitted
- Valve dimensions --> **Valve dimensions**
- Check valve guides, grind valve seats --> **Valve guides, checking**

25 - Alignment bushing

- 2 pieces

Camshafts, removing and installing

NOTE:

- **Removal and installation at right cylinder head is depicted in the following description.**

Removing

- Remove engine: Vehicles with manual transmission --> **Engine (vehicles with manual transmission)** , vehicles with automatic transmission --> **Engine (vehicles with automatic transmission), removing**.
- Disconnect engine and transmission: Vehicles with manual transmission --> **Engine (vehicles with manual transmission), separating** , vehicles with automatic transmission --> **Engine and transmission (vehicles with automatic transmission), separating**.
- Remove camshaft timing chains from camshafts --> **Camshaft timing chains, removing from camshafts**.

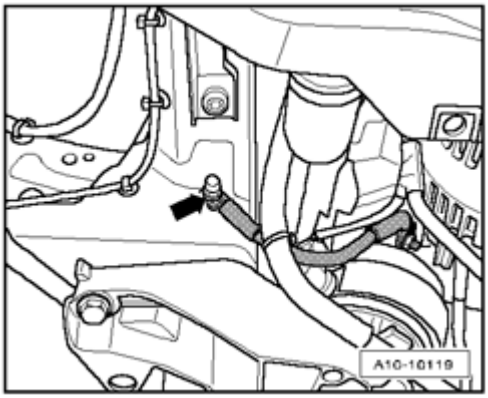

Fig. 542: Removing Housing For Camshaft Adjustment Solenoid Valves
Courtesy of VOLKSWAGEN UNITED STATES, INC.

- Remove housing for camshaft adjustment solenoid valves - **arrows** -.

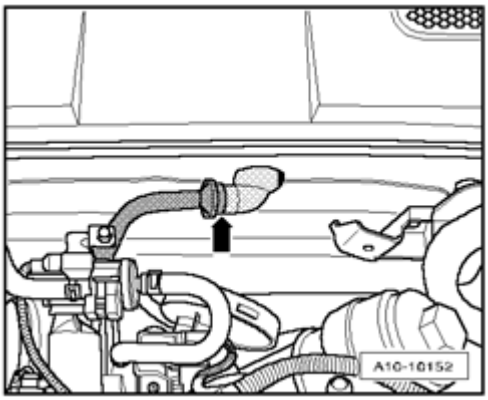

Fig. 543: Removing/Installing Bearing Caps
Courtesy of VOLKSWAGEN UNITED STATES, INC.

- Remove bearing caps - **1** - , - **E3** - , - **E5** - , - **A3** - and - **A5** -.
- Remove oil deflector - **arrow** -.
- Loosen and remove bearing caps - **E2** - , - **E4** - , - **A2** - and - **A4** - for intake and exhaust camshafts, alternating and in diagonal sequence.
- Remove intake and exhaust camshaft.

Installing

- Secure crankshaft in TDC position using Crankshaft Holder 3242.

NOTE:

- **Always replace bolts that are tightened to torque as well as O-rings and gaskets.**

- Install camshafts at TDC position into cylinder head.

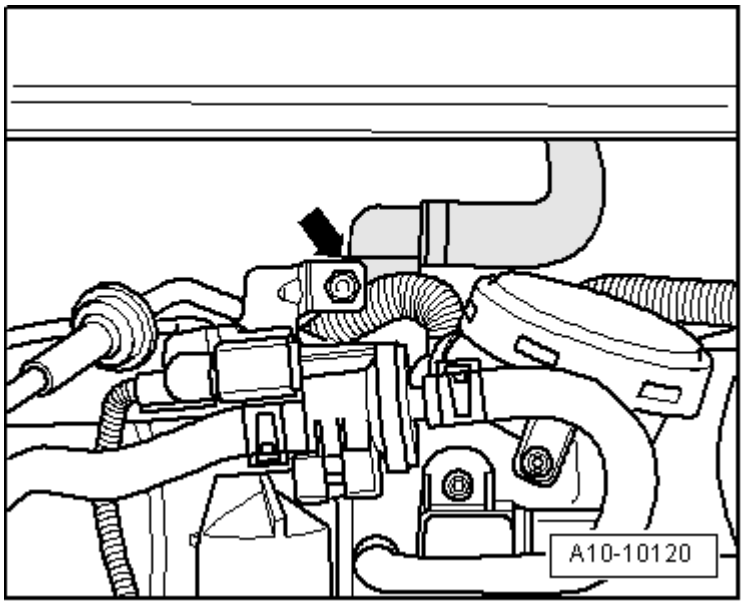

Fig. 544: Identifying Slits At Front In Camshafts Stand Parallel At Same Height With Upper Edge Of Cylinder Head
Courtesy of VOLKSWAGEN UNITED STATES, INC.

- Slits - **arrows** - at front in camshafts must stand parallel at same height with upper edge of cylinder head.

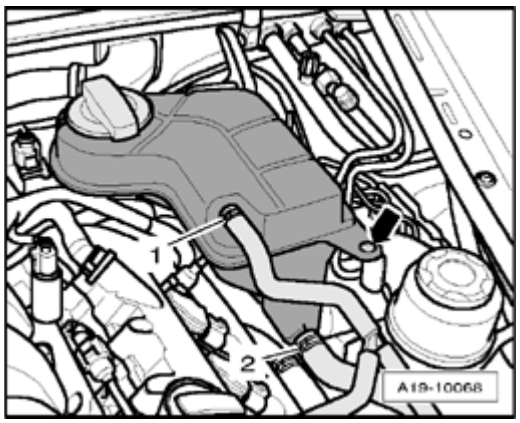

Fig. 545: Removing/Installing Bearing Caps
Courtesy of VOLKSWAGEN UNITED STATES, INC.

- Install bearing caps - **E2** - , - **E4** - , - **A2** - and - **A4** -.
- Install oil deflector - **arrow** - :

- On cylinder head at right between bearing cap - **E4** - and - **A2** -
- On cylinder head at left between bearing cap - **E2** - and - **A2** -

- Tighten bearing caps - **E2** - , - **E4** - , - **A2** - and - **A4** - for intake and exhaust camshafts, alternating and in diagonal sequence.
- Tighten remaining bearing caps in diagonal sequence.

NOTE:

- **Note alignment bushing on bearing cap - 1 -.**

The rest of installation is in reverse order of removal, note the following:

- Install camshaft timing chains **Installing**.
- Install engine: Vehicles with manual transmission --> **Engine (vehicles with manual transmission), installing** , vehicles with automatic transmission --> **Engine (vehicles with automatic transmission), installing**.

Torque specifications

Component	Nm
Bearing cap to cylinder head	5 plus an additional 90 ° * See note
Housing for camshaft adjustment solenoid valve	5 plus an additional 90 ° * See note

* 90 ° corresponds to one quarter turn.

*Replace bolts.

Camshaft (axial clearance), checking

Special tools, testers and auxiliary items required

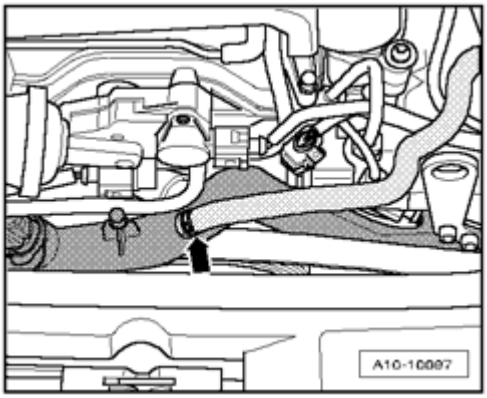

Fig. 546: Identifying Dial Gauge Holder VW 387
Courtesy of VOLKSWAGEN UNITED STATES, INC.

- Dial gauge holder VW 387
- Dial gauge

Test sequence

- Camshafts removed.
- Roller rocker lever removed.

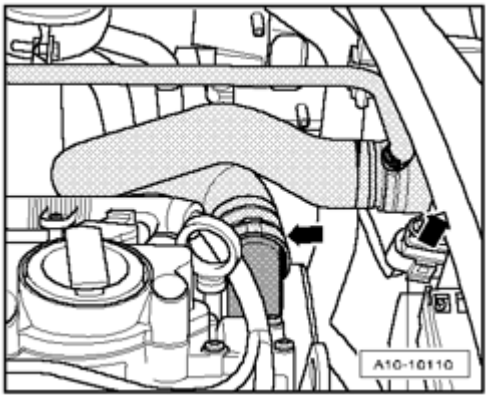

Fig. 547: Inserting Camshafts In Cylinder Head And Tighten With Outer Bearing Caps
Courtesy of VOLKSWAGEN UNITED STATES, INC.

- Insert camshafts in cylinder head and tighten with outer bearing caps - **arrows** -.

- Secure dial gauge holder VW 387 to dial gauge on cylinder head:

Wear limit for intake and exhaust camshaft.

- Axial clearance: max. 0.20 mm.

Roller rocker lever, removing and installing

Removing

- Remove engine: Vehicles with manual transmission --> **Engine (vehicles with manual transmission)** , vehicles with automatic transmission --> **Engine (vehicles with automatic transmission), removing**.
- Remove camshaft timing chains from camshafts --> **Camshaft timing chains, removing from camshafts**.
- Remove camshafts --> **Camshafts, removing and installing**.
- Mark allocation of roller rocker lever and shafts for roller cam follower for re-installation.

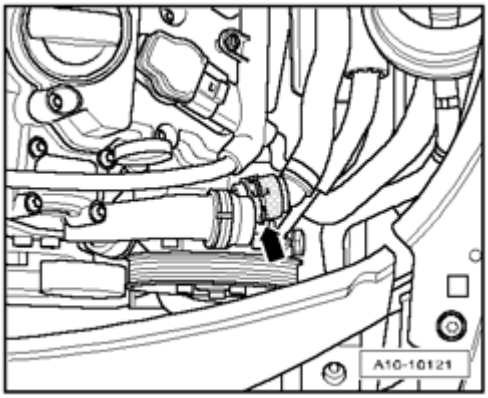

Fig. 548: Removing bolts
Courtesy of VOLKSWAGEN UNITED STATES, INC.

- Remove bolts - **arrows** -.
- Thread a M6-bolt into hole in shaft for roller rocker lever.
- Remove shaft from cylinder head and remove roller rocker lever.

Installing

Installation is in reverse order of removal, note the following:

NOTE:

- **Replace O-rings.**

- Lubricate bearing areas of roller rocker lever with oil before installation.
- Install camshafts --> **Camshafts, removing and installing**.
- Install camshaft timing chains **Installing**.

- Install engine: Vehicles with manual transmission --> **Engine (vehicles with manual transmission), installing** , vehicles with automatic transmission --> **Engine (vehicles with automatic transmission), installing**.

Torque specifications

Component	Nm
Shaft for roller rocker lever to cylinder head	10

Valve stem seals, replacing

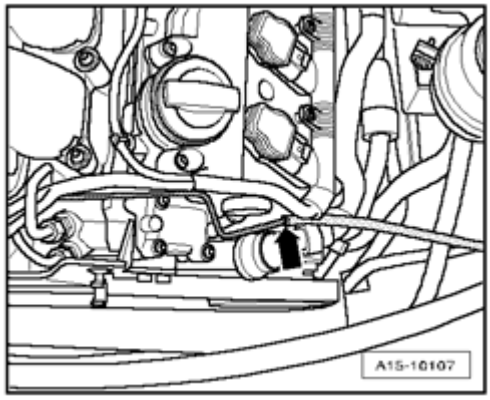

Fig. 549: Identifying Special Tools - Valve Stem Seals, Replacing
Courtesy of VOLKSWAGEN UNITED STATES, INC.

Special tools, testers and auxiliary items required

- Spark plug removal tool 3122 B
- Valve seal removal tool 3364
- Valve stem seal driver 3365
- Valve cotter disassembly and assembly device VAS 5161
- Adapter T40012

Work procedure

- Remove engine: Vehicles with manual transmission --> **Engine (vehicles with manual transmission)** , vehicles with automatic transmission --> **Engine (vehicles with automatic transmission), removing**.
- Remove camshaft timing chains from camshafts --> **Camshaft timing chains, removing from camshafts**.
- Remove camshafts --> **Camshafts, removing and installing**.
- Using spark plug removal tool 3122 B , remove spark plugs.

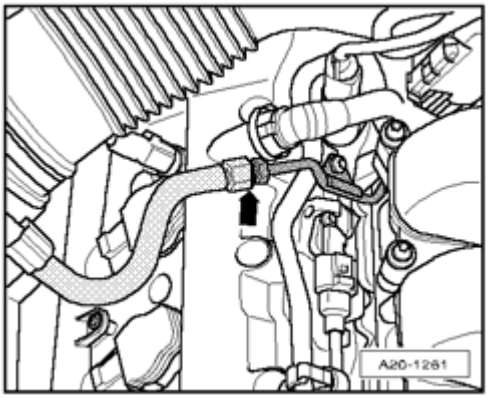

Fig. 550: Turning Roller Rocker Lever Upward And Securing With A Rubber Band
Courtesy of VOLKSWAGEN UNITED STATES, INC.

- Turn roller rocker lever upward and secure it with a rubber band.

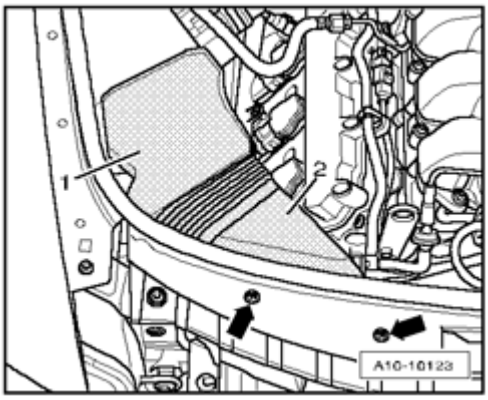

Fig. 551: Placing Guide Plate VAS 5161/7 From Valve Cotter Disassembly, Assembly Device VAS 5161 On Cylinder Head & Securing Guide Plate VAS 5161/7 With Knurled Screws VAS 5161/12
Courtesy of VOLKSWAGEN UNITED STATES, INC.

- Place guide plate VAS 5161/7 from valve cotter disassembly and assembly device VAS 5161 on cylinder head.
- Secure guide plate VAS 5161/7 with knurled screws VAS 5161/12.

NOTE:

- **If guide plate cannot be installed, drill mounting bores to approx. 0.5 mm.**

- Insert drift VAS 5161/3 into guide plate and loosen stuck valve keepers using a plastic hammer.

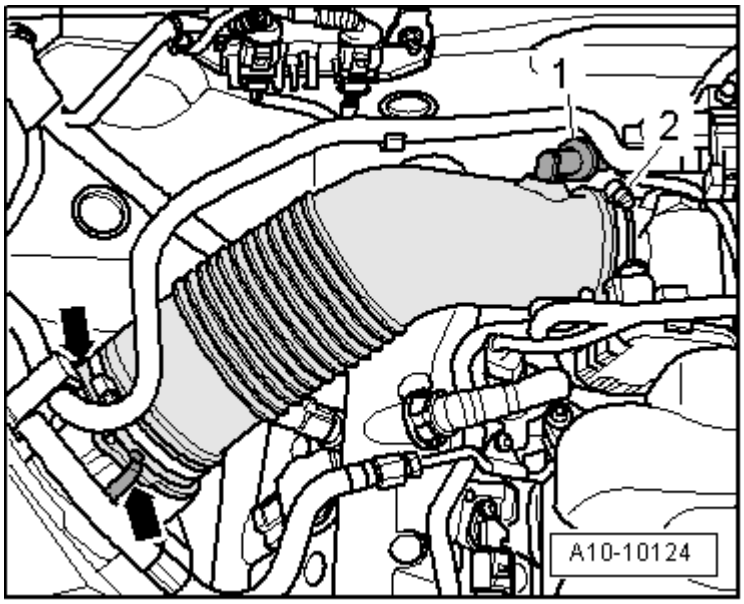

Fig. 552: Installing Engaging Device VAS 5161/6 With Installation Forks VAS 5161/5 Into Guide Plate VAS 5161/7
Courtesy of VOLKSWAGEN UNITED STATES, INC.

- Install engaging device VAS 5161/6 with installation forks VAS 5161/5 into guide plate VAS 5161/7.
- Guide installation cartridge VAS 5161/8 into guide plate VAS 5161/7.
- Install adapter T40012 with gasket by hand into respective spark plug thread and apply constant pressure.

- Minimum pressure: 6 bar positive pressure.

- Engage pressure fork VAS 5161/2 at engaging device VAS 5161/6 and press down installation cartridge VAS 5161/8.
- At the same time, turn knurled bolt of installation cartridge VAS 5161/8 toward right, until points engage in valve keepers.
- Lightly move knurled bolt back and forth, this causes valve keys to be pressed apart and captured in installation cartridge VAS 5161/8.
- Release pressure fork VAS 5161/2.

- Take out installation cartridge VAS 5161/8.
- Remove guide plate VAS 5161/7.

- Pressurized air hose remains connected

- Remove valve spring with valve spring plate.

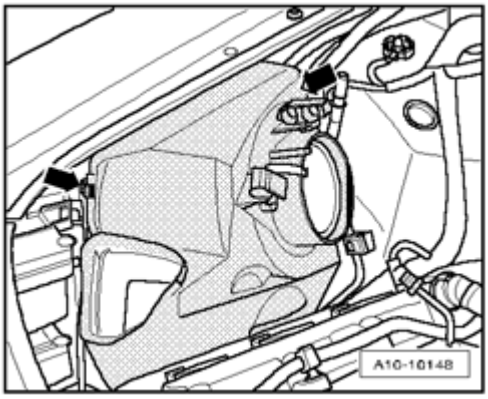

Fig. 553: Identifying Valve Seal Removal Tool 3364
Courtesy of VOLKSWAGEN UNITED STATES, INC.

- Pull off valve stem oil seals using Valve Seal Removal Tool 3364.

Installing

NOTE:

- **For pressing on valve stem seals from delivery program, the Valve Stem Seal Driver 3365 must be drilled to dia. of 10.5 mm.**

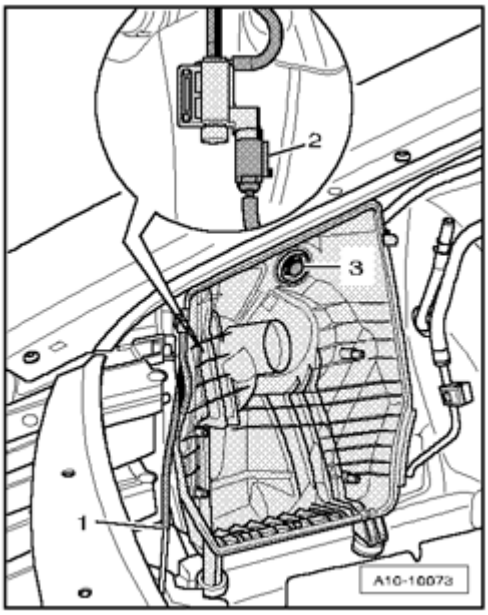

Fig. 554: Identifying Plastic Sleeve, Valve Stem Oil Seal & Valve Stem Seal Driver 3365
Courtesy of VOLKSWAGEN UNITED STATES, INC.

- A plastic sleeve - **A** - is supplied with new valve shaft seals.

- Place plastic sleeve - **A** - on valve stem to prevent damage to new valve stem seals - **B** -.
- Lightly coat sealing lips of valve stem seal with oil.

- Push valve stem seal onto plastic sleeve.
- Carefully press valve stem oil seal onto valve guide using valve stem seal driver 3365.
- Remove plastic sleeve again.

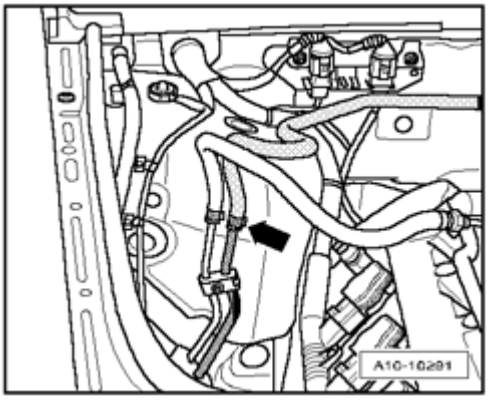

Fig. 555: Identifying Installation Cartridge VAS 5161/8
Courtesy of VOLKSWAGEN UNITED STATES, INC.

- If valve keepers were removed from Installation Cartridge VAS 5161/8 , they must then be inserted into Insertion Device VAS 5161/18.

NOTE:

- **The large diameter of the valve keepers points upward.**

- Insert valve spring and valve spring plate.
- Install Guide Plate VAS 5161/7 onto cylinder head again.

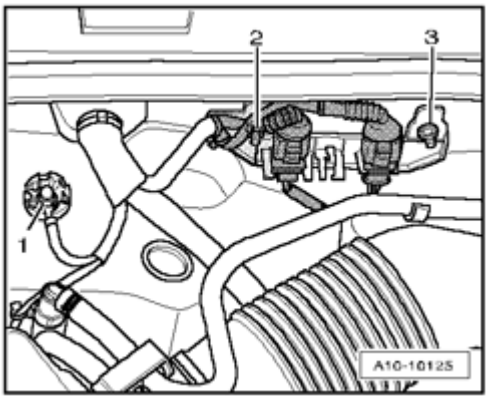

Fig. 556: Installing Engaging Device VAS 5161/6 With Installation Forks VAS 5161/5 Into Guide Plate VAS 5161/7
Courtesy of VOLKSWAGEN UNITED STATES, INC.

- Insert installation cartridge VAS 5161/8 into guide plate VAS 5161/7.
- Press down Pressure Fork VAS 5161/2 and pull knurled bolt upward - the valve keepers are inserted in

this manner.

- Release pressure fork VAS 5161/2 with knurled bolt still pulled.
- Install sparks plugs -->
  - **01 - MAINTENANCE**
  - **01 - MAINTENANCE** for MAINTENANCE PROCEDURES - CABRIOLET

  .

- Install camshafts --> **Camshafts, removing and installing**.
- Install camshaft timing chains **Installing**.
- Install engine: Vehicles with manual transmission --> **Engine (vehicles with manual transmission), installing** , vehicles with automatic transmission --> **Engine (vehicles with automatic transmission), installing**.

NOTE:

- **After installing camshafts, do not crank engine for at least 30 minutes. The hydraulic equalization elements must seat themselves (otherwise valves will strike the pistons).**
- **After working on the valvetrain and lifters, carefully rotate the crankshaft by hand at least 2 full revolutions before starting to be sure that valves do not strike the pistons.**

Valve guides, checking

Special tools, testers and auxiliary items required

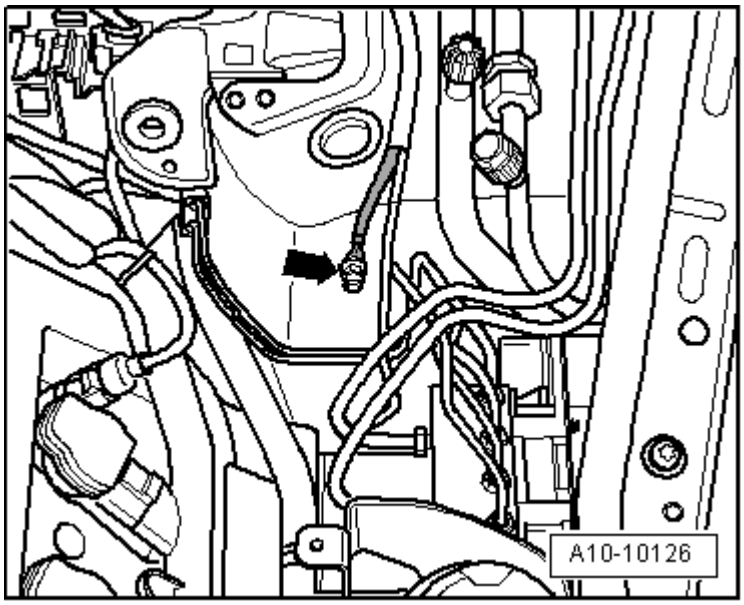

Fig. 557: Identifying Dial Gauge Holder VW 387
Courtesy of VOLKSWAGEN UNITED STATES, INC.

- Dial gauge holder VW 387

- Dial gauge

Work sequence

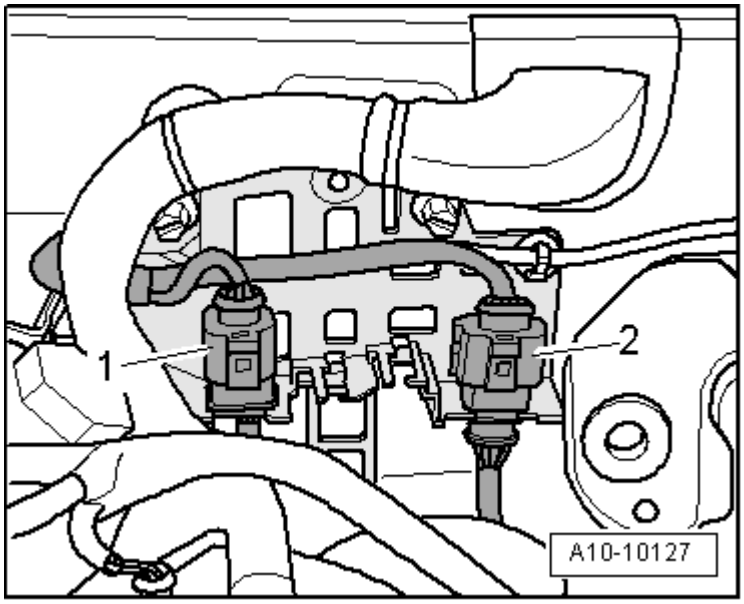

Fig. 558: Identifying Special Tool - VW 387 Installed
Courtesy of VOLKSWAGEN UNITED STATES, INC.

- Insert valve into valve guide.
- Valve stem tip must seal with valve guide.

NOTE:

- **Due to differences in valve stem diameter, make sure that only intake valves are used to check intake valve guides, and only exhaust valves are used to check exhaust valve guides.**

- Determine tilt clearance.
- Wear limit of intake and exhaust valve guide: 0.80 mm.

NOTE:

- **If wear limit is exceeded, re-measure using new valves.**
- **If wear limit is still exceeded, replace cylinder head. The valve guides cannot be replaced.**
- **If valve is replaced during repair, use new valve for measurement.**

Valves, checking

- Perform a visual check for signs of wear at stem and at seating surface.
- Replace valves with significant traces of wear.

Valve dimensions

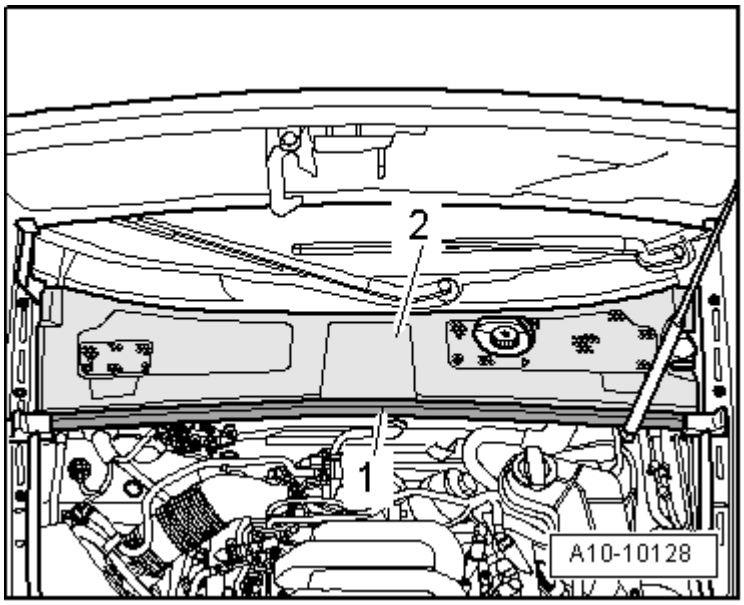

Fig. 559: Valve Dimensions
Courtesy of VOLKSWAGEN UNITED STATES, INC.

NOTE:

- **Intake and exhaust valves must not be refaced by grinding. Only lapping is permitted.**

Dimension	Intake valve	Exhaust valve
a = diameter mm	26.8 to 27.0	29.8 to 30.0
b = diameter mm	5.956 to 5.970	5.936 to 5.950
c = mm	96.39 to 96.59	94.79 to 94.99
a = Angle °	45	45

CAUTION:

- **Worn sodium-filled exhaust valves must not be scrapped without first being properly treated.**
- **Using a metal saw, the valves must be cut in half between the shaft center and valve plate. While doing this, do not come into contact with water. After cutting open valves, throw not more than 10 at a time into a bucket of water. Then, move quickly away, because a sudden chemical reaction will occur during which the sodium is burnt away.**
- **The treated parts may then be discarded through conventional disposal channels.**

Valve seats, refacing

NOTE:

- **If a perfect contact pattern is not achieved by grinding the valve seats,**

reface the valve seats.

Special tools, testers and auxiliary items required

- Depth gauge
- Valve seat refacing tool

NOTE:

- **When repairing engines with leaking valves, it is not sufficient to rework or replace valve seats and valves. It is particularly important to check valve guides for wear on engines with higher mileage --> Valve guides, checking**
- **Only reface valve seats enough until a perfect contact pattern is obtained.**
- **Before refacing, determine maximum refacing dimension.**
- **If refaced dimension is exceeded, hydraulic valve lifter function is no longer guaranteed and cylinder head must be replaced.**

Determining maximum allowable refacing dimension

- Insert valve and press it firmly against valve seat.

NOTE:

- **If the valve is to be replaced as part of a repair, use a new valve for the calculation.**

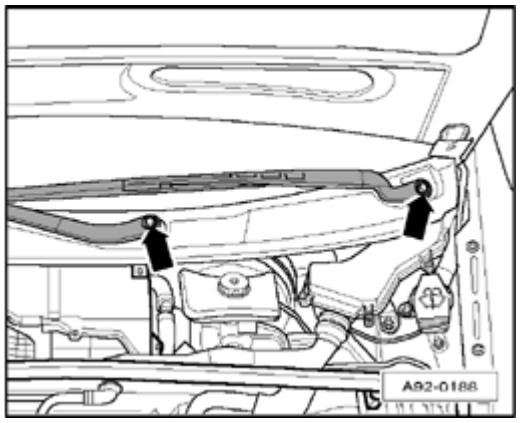

Fig. 560: Measuring Distance Between Valve Stem End (Upper Edge) And Top Surface Of Cylinder Head Using Depth Gauge
Courtesy of VOLKSWAGEN UNITED STATES, INC.

- Measure distance - **a** - between end of valve stem and camshaft center axle (camshaft center axle is located at the level of cylinder head upper edge).
- Calculate maximum permissible refacing dimension from measured distance and the minimum dimension.

Minimum dimension		
Outer intake valves	Center intake valves	Exhaust valves

39.3 mm	41.0 mm	39.9 mm

Measured distance minus minimum dimension = max. permissible refaced dimension.

Example for outer intake valve:		
	Measured distance	39.7 mm
	Minimum dimension	-39.3 mm
=	Maximum permissible refacing dimension	= 0.4 mm

NOTE:

- **If the maximum allowed refaced dimension is 0 mm or less than 0 mm, repeat measurement using new valve. If measurement result is still 0 mm or less than 0 mm, replace cylinder head.**

Refacing valve seats

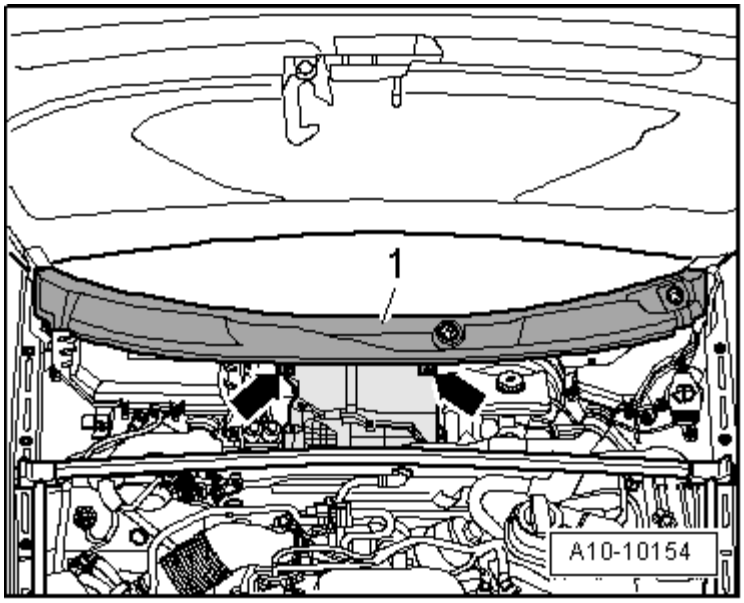

Fig. 561: Refacing Valve Seats
Courtesy of VOLKSWAGEN UNITED STATES, INC.

Intake valve seat

a - Dia. 26.6 mm

b - Approx. 1.0 mm

Z - Lower edge of cylinder head

a - 45 ° valve seat angle

ß - 30 ° upper correction angle

gamma - 60 ° lower correction angle

Exhaust valve seat

a - Dia. 26.0 mm

b - Approx. 1.0 mm

Z - Lower edge of cylinder head

a - 45 ° valve seat angle

ß - 30 ° upper correction angle

gamma - 60 ° lower correction angle

NOTE:

- **Determining maximum allowable refacing dimension Determining maximum allowable refacing dimension.**

Camshaft adjustment, checking

The adjustment of intake camshafts is load- and RPM dependent. Oil pressure is switched to respective camshaft adjuster (mechanical adjustment devices) via solenoid valve for camshaft adjustment.

NOTE:

- **Camshaft adjustment is active only 25 seconds after engine start.**

Solenoid valves for camshaft adjustment, checking

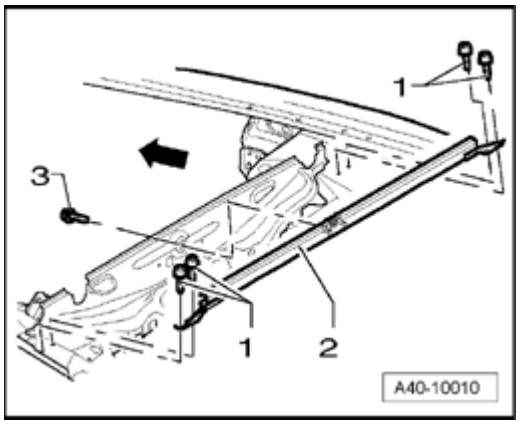

Fig. 562: Identifying Special Tools - Solenoid Valves For Camshaft Adjustment, Checking
Courtesy of VOLKSWAGEN UNITED STATES, INC.

Special tools, testers and auxiliary items required

- Hand multimeter V.A.G 1526 B or V.A.G 1526 A

- Voltage tester V.A.G 1527 B
- Connector test kit V.A.G 1594 C or V.A.G 1594 A
- Test box 1598/31
- Vehicle Diagnostic, Testing and Information System VAS 5051 A with diagnostic cable VAS 5051/1

Preparation

Cylinder bank 1 (right):

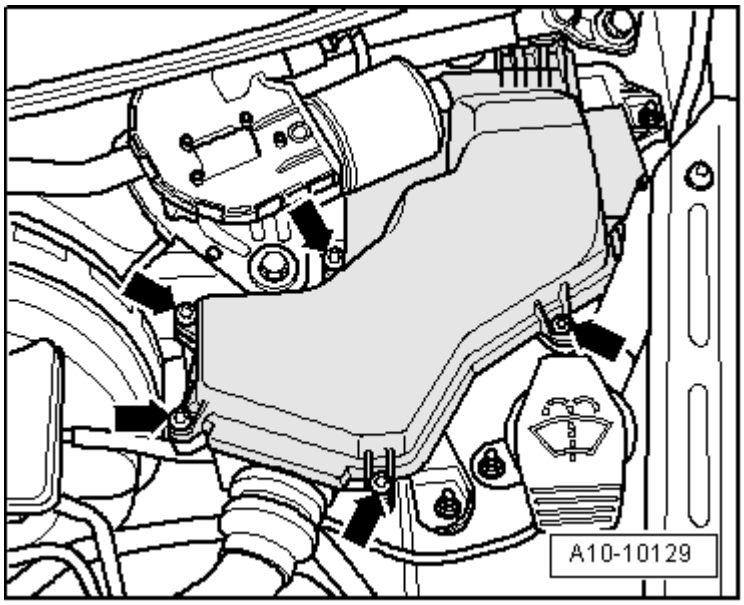

Fig. 563: Removing Bracket For Electrical Harness Connectors At Right From Bulkhead
Courtesy of VOLKSWAGEN UNITED STATES, INC.

- Disconnect electrical harness connector - **3** - to Camshaft Adjustment Valve 1 N205.

Cylinder bank 2 (left):

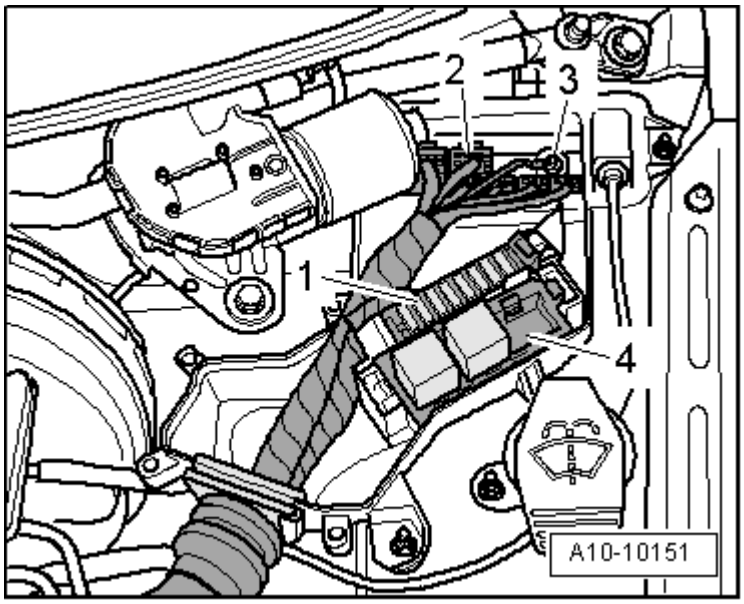

Fig. 564: Removing Coolant Hoses & Coolant Expansion Tank
Courtesy of VOLKSWAGEN UNITED STATES, INC.

- Remove coolant expansion tank bolt - **arrow** -.
- Disconnect electrical wire from Engine Coolant Level (ECL) Warning Switch F66 and set aside coolant reservoir with coolant hoses - **1** - and - **2** - connected.

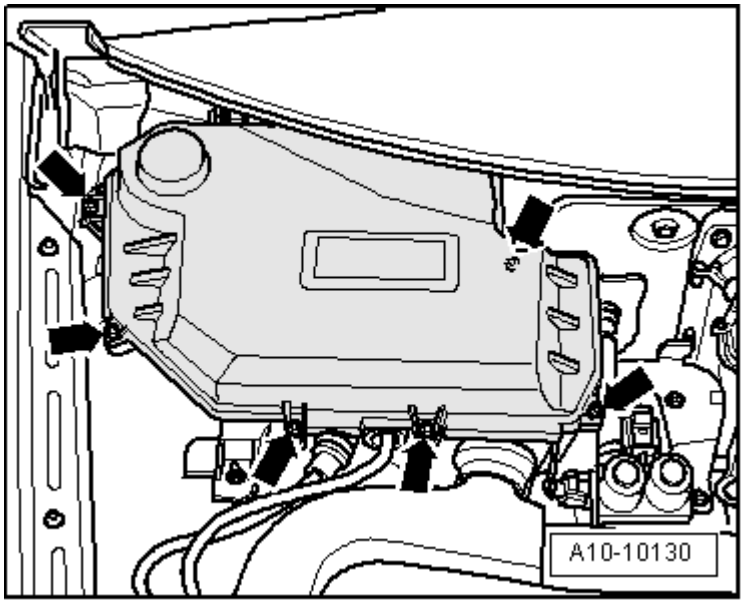

Fig. 565: Disconnecting Electrical Harness Connector To Camshaft Adjustment Valve 2 N208
Courtesy of VOLKSWAGEN UNITED STATES, INC.

- Disconnect electrical harness connector - **2** - to Camshaft Adjustment Valve 2 N208.

Checking internal resistance

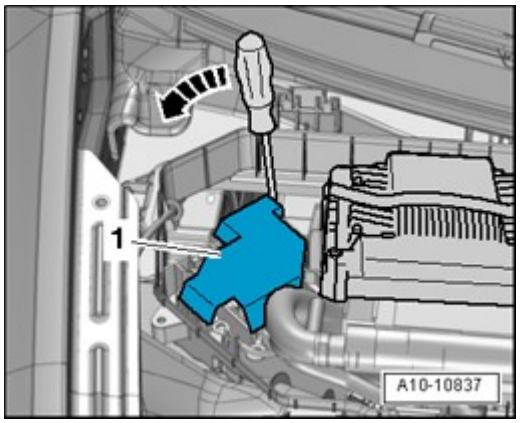

Fig. 566: Identifying Exhaust Flap Valve 1 N321 Terminals
Courtesy of VOLKSWAGEN UNITED STATES, INC.

- Connect multimeter to valve for resistance measurement.
- Specification: 8 to 13 ohms.

If specification is not obtained:

- Replace valve.

If specified value is not achieved:

Checking voltage supply

- Fuse for valve for camshaft adjustment is OK --> Electrical Wiring Diagrams, Troubleshooting and Component Locations.
- Motronic Engine Control Module (ECM) Power Supply Relay J271 OK.

NOTE:

- **Voltage for camshaft adjustment valves is supplied via Motronic Engine Control Module (ECM) Power Supply Relay J271.**

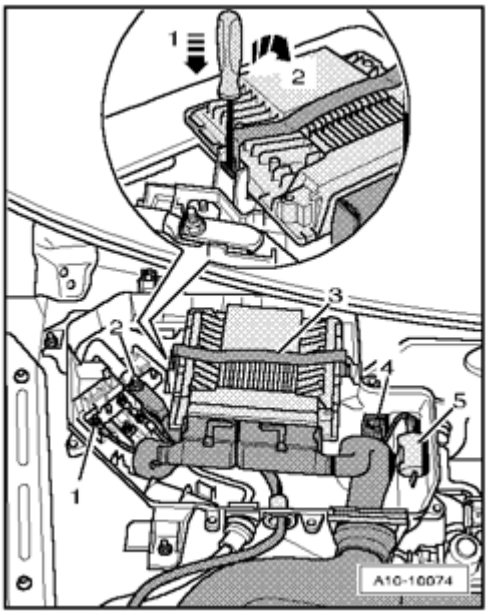

Fig. 567: Identifying 2-Pin Electrical Harness Connector & Terminals
Courtesy of VOLKSWAGEN UNITED STATES, INC.

- Connect voltage tester V.A.G 1527 B as follows:

Harness connector Terminal	Measure to
- 1 -	Engine Ground (GND)

- Operate starter briefly.

- LED must light up.

If LED does not light up:

- Check wire connection from terminal 1 of electrical harness connector via fuse to Motronic Engine Control Module (ECM) Power Supply Relay J271 for open circuit according to wiring diagram.
- Repair wire connection if necessary.

If LED lights up:

Check activation

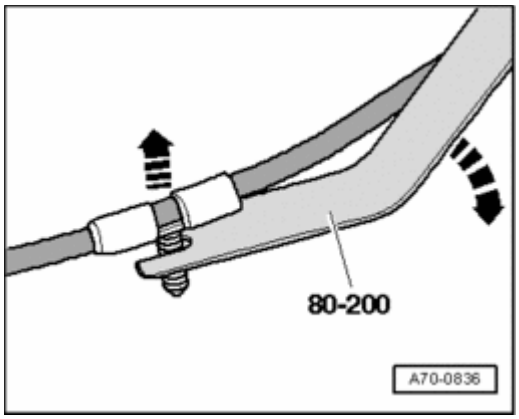

Fig. 568: Identifying 2-Pin Electrical Harness Connector & Terminals
Courtesy of VOLKSWAGEN UNITED STATES, INC.

- Connect voltage tester V.A.G 1527 B to terminals - **1** - (B+) and - **2** - of electrical harness connector.
- Connect Vehicle Diagnostic, Testing and Information System VAS 5051 and select vehicle system "01 - engine electronics". Ignition must be switched on Guided Fault Finding in VAS 5051.

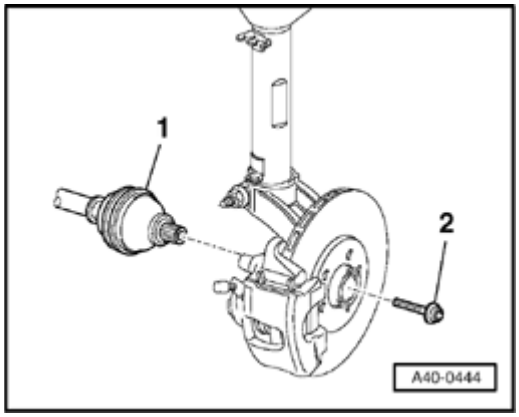

Fig. 569: Diagnostic System VAS 5051: Display
Courtesy of VOLKSWAGEN UNITED STATES, INC.

Display on VAS 5051 :

- In selection - **1** - , click on the function "03 - output Diagnostic Test Mode (DTM)".
- Press --> button repeatedly until Camshaft Adjustment Valve 1 N205 is activated.

- LED must blink.

- Press --> button repeatedly until Camshaft Adjustment Valve 2 N208 is activated.

- LED must blink.

- End function "03 - output Diagnostic Test Mode (DTM)" by pressing <-- button.
- Select "06 - End Output".

- Switch off ignition.

If LED does not blink or it remains lit:

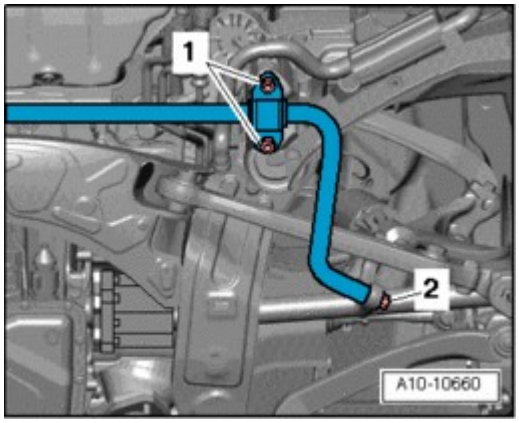

Fig. 570: Connecting Test Box VAG1598/31 To Engine Control Module Wiring Harness
Courtesy of VOLKSWAGEN UNITED STATES, INC.

- Connect test box V.A.G 1598/31 to wiring harness connectors, Engine Control Module (ECM) is not connected. Connect Ground (GND) clip at test box (not visible in illustration) to Ground (GND) --> **24 MULTIPORT FUEL INJECTION (MFI)** .

CAUTION: To avoid damaging electronic components, set measuring range before connecting test leads and observe all test requirements.

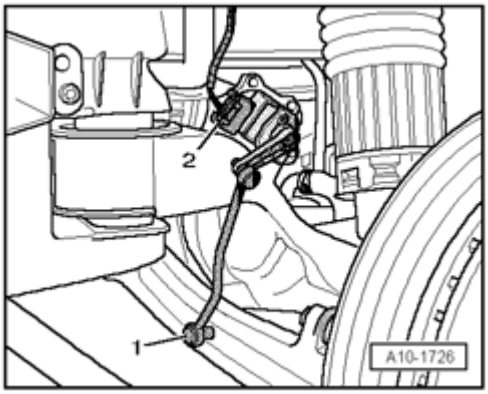

Fig. 571: Identifying 2-Pin Electrical Harness Connector & Terminals
Courtesy of VOLKSWAGEN UNITED STATES, INC.

- Check following wire connections for open circuit and short circuit to Ground (GND) and B+:

- Camshaft Adjustment Valve 1 N205

Harness connector Terminal	Test box V.A.G 1598/31 Socket

- 2 -	115

- Camshaft Adjustment Valve 2 N208

Harness connector Terminal	Test box V.A.G 1598/31 Socket
- 2 -	120

  - Repair wire connection if necessary.

If wiring connection is OK:

  - Replace Engine Control Module (ECM) --> **24 MULTIPORT FUEL INJECTION (MFI)** .

If no malfunctions are detected:

  - Replace mechanical camshaft adjuster --> **Camshafts, removing and installing**.

17 - ENGINE - LUBRICATION

LUBRICATION SYSTEM COMPONENTS, REMOVING AND INSTALLING

Lubrication system components, removing and installing

NOTE:

- **If large quantities of metal shavings or abraded material are found in the engine oil while servicing the engine, oil passages must be carefully cleaned to prevent resulting damage and the oil cooler must be replaced.**
- **Oil level must not exceed max. marking danger of catalytic converter damage!**
- **Oil quantities, oil specifications and viscosity classes Fluid Capacity Chart.**

Oil pump, lower section of oil pan, component overview

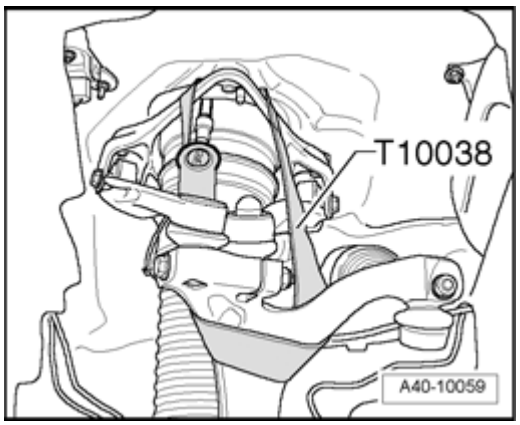

Fig. 572: Oil Pump, Lower Section Of Oil Pan, Component Overview

Courtesy of VOLKSWAGEN UNITED STATES, INC.

1 - 10 Nm

2 - Oil pan (lower section)

- Removing and installing --> **Oil pan (lower part), removing and installing**
- With Oil Level Thermal Sensor G266
- Oil Level Thermal Sensor G266 , removing and installing --> **Oil Level Thermal Sensor G266 , removing and installing**

3 - 10 Nm

4 - Intake tube

- With oil strainer

5 - Seal

- Replace

6 - O-ring

- Replace

7 - 10 Nm

8 - Oil pipe

9 - Seal

- Replace

10 - 10 Nm

11 - Oil pipe

12 - O-rings

- Replace

13 - Drive shaft for coolant pump

14 - Fitting sleeves

- 2 pieces

15 - Seal

- Replace

16 - Oil pump

- Do not disassemble
- With relief valve approx. 4 bar
- Removing and installing --> **Oil pump, removing and installing**

17 - Drive shaft for oil pump

18 - 10 Nm

19 - Housing for intake tube

20 - O-ring

- Replace

21 - Seal

- Replace

22 - 10 Nm

23 - Seal

- Replace

24 - Oil drain plug - 50 Nm

Oil Level Thermal Sensor G266 , removing and installing

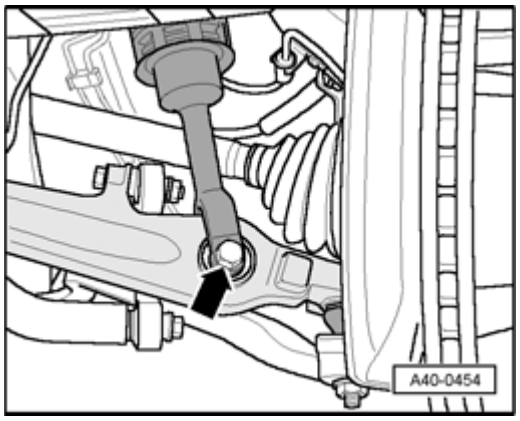

Fig. 573: Oil Level Thermal Sensor G266 , Removing And Installing

Courtesy of VOLKSWAGEN UNITED STATES, INC.

1. Bolt - 10 Nm. Insert using locking compound; locking compound
2. Sealing ring; replace
3. Electrical harness connector
4. Oil Level Thermal Sensor G266

Oil pan (lower part), removing and installing

Special tools, testers and auxiliary items required

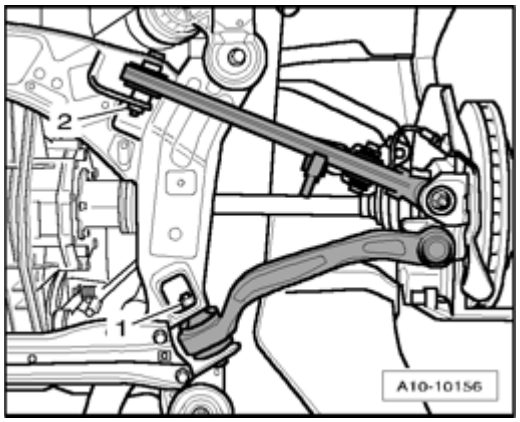

Fig. 574: Drip Tray For VAS 6100, VAS 6208
Courtesy of VOLKSWAGEN UNITED STATES, INC.

- Drip tray for workshop crane VAS 6208

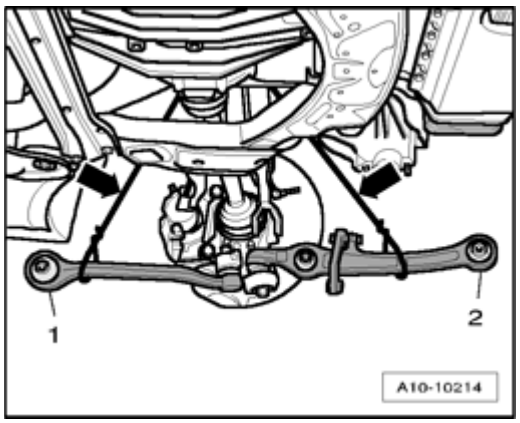

Fig. 575: Identifying Old Oil Collecting And Extracting Device V.A.G 1782
Courtesy of VOLKSWAGEN UNITED STATES, INC.

- Old oil collecting and extracting device V.A.G 1782
- Hand drill with plastic brush attachment
- Protective glasses
- Sealant

Removing

- Drain coolant --> **Cooling system, draining and filling**.
- Bring lock carrier into service position --> **Lock carrier, moving into service position**.

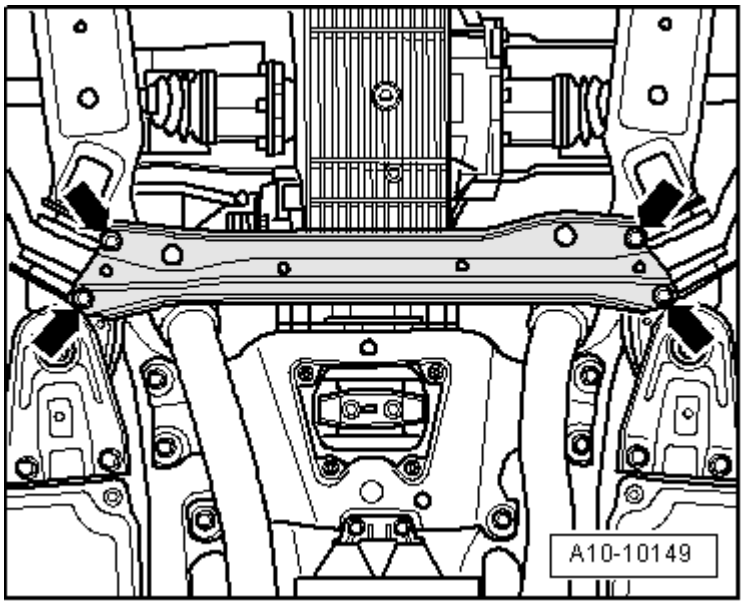

Fig. 576: Removing Bolts And Torque Support From Engine
Courtesy of VOLKSWAGEN UNITED STATES, INC.

- Remove bolts - **arrows** - and remove torque support from engine.

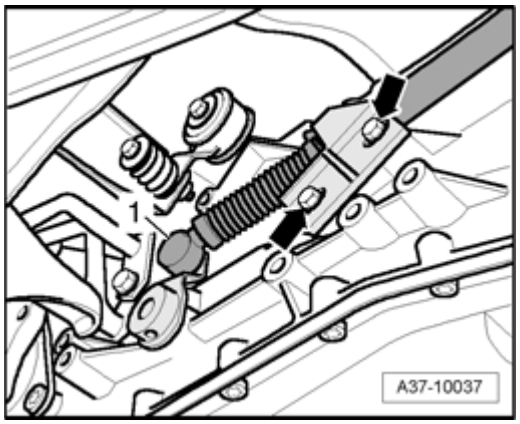

Fig. 577: Removing Front Coolant Pipe On Engine
Courtesy of VOLKSWAGEN UNITED STATES, INC.

- Place drip tray for workshop crane VAS 6208 under engine.
- Remove front coolant pipe on engine - **arrows** -.

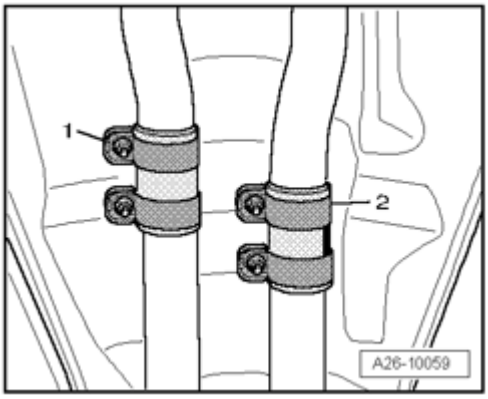

Fig. 578: Removing Nuts For Left/Right Stabilizer Mounts
Courtesy of VOLKSWAGEN UNITED STATES, INC.

- Remove nuts - **1 to 4** - for left and right stabilizer mounts.

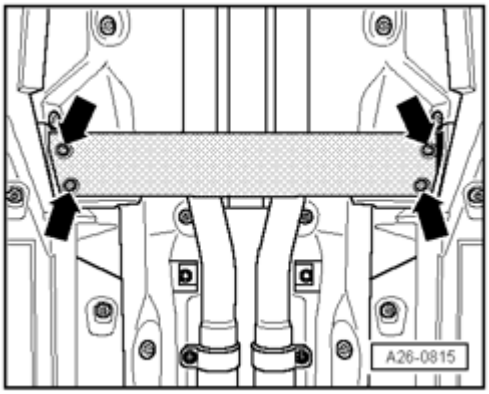

Fig. 579: Removing Left Bracket For Refrigerant Line
Courtesy of VOLKSWAGEN UNITED STATES, INC.

- Remove left bracket for refrigerant line - **arrows** -.

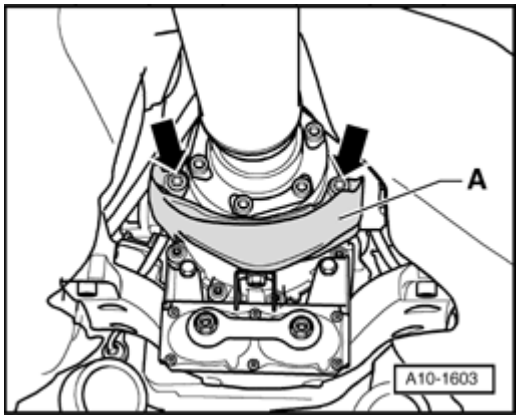

Fig. 580: Removing Refrigerant Line On Bracket
Courtesy of VOLKSWAGEN UNITED STATES, INC.

- Remove refrigerant line on bracket - **arrow** -.

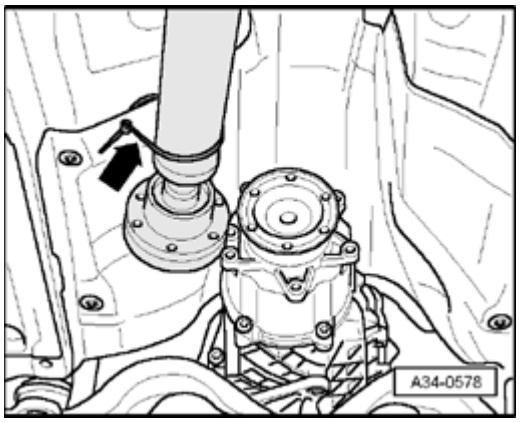

Fig. 581: Disconnecting Electrical Harness Connector On Oil Level Thermal Sensor G266 And Free Up Electrical Wire
Courtesy of VOLKSWAGEN UNITED STATES, INC.

- Disconnect electrical harness connector on Oil Level Thermal Sensor G266 - **arrow** - and free up electrical wire.

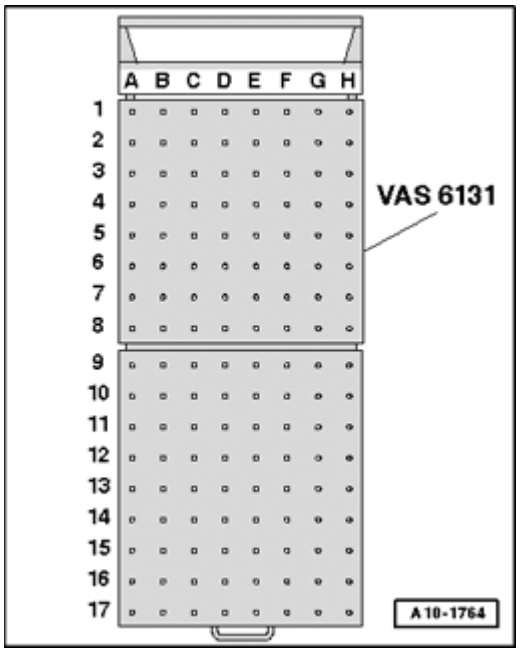

Fig. 582: Removing Oil Pan (Lower Part)
Courtesy of VOLKSWAGEN UNITED STATES, INC.

- Place old oil collecting and extracting device V.A.G 1782 under engine and drain engine oil.
- Remove oil pan (lower part) - **1** - and pry out carefully.

NOTE:

- **There is still a residual amount of oil in lower section of oil pan.**

Installing

NOTE:

- **Replace seals.**

CAUTION: Wear safety glasses.

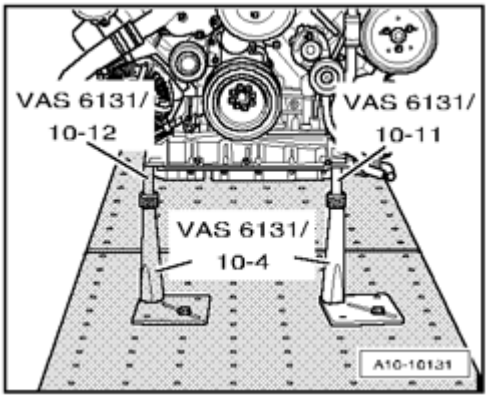

Fig. 583: Using Rotating Plastic Brush To Remove Any Remaining Sealant From Oil Pan (Lower Part) And At Upper Part
Courtesy of VOLKSWAGEN UNITED STATES, INC.

- Using rotating plastic brush, remove any remaining sealant from oil pan (lower part) and at upper part.
- Clean sealing surfaces, they must be free of oil and grease.

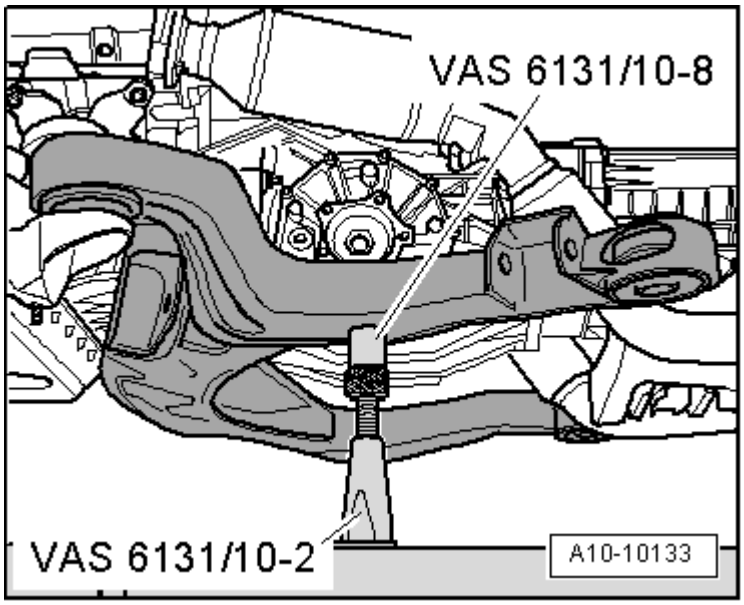

Fig. 584: Cutting Tube Nozzle At Front Marking
Courtesy of VOLKSWAGEN UNITED STATES, INC.

- Cut off nozzle on tube of sealant at front mark (dia. of nozzle approx. 1 mm).

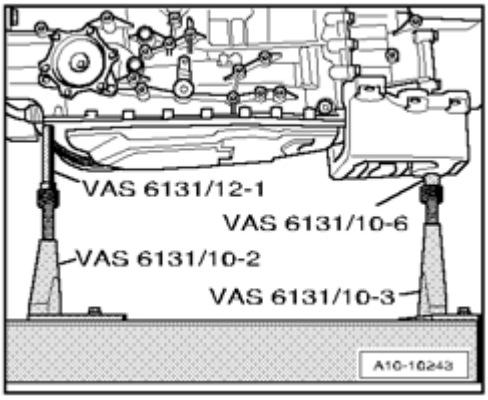

Fig. 585: Applying Sealant Bead On Clean Sealing Surface Of Lower Section Of Oil Pan
Courtesy of VOLKSWAGEN UNITED STATES, INC.

- Apply sealant bead - **arrows** - on clean sealing surface of lower section of oil pan as shown in illustration.

- Thickness of sealant bead: 1.5 to 2.0 mm.

NOTE:

- **Observe the position of the sealant bead at areas indicated with - arrows -.**
- **The oil pan (lower part) must be installed within 5 minutes after application of sealant.**
- **Sealant bead must not be thicker than specified, otherwise excess sealant may get into lower section of oil pan and clog strainer in intake tube.**

- Set lower part of oil pan in place and fasten all bolts in diagonal sequence to 5 Nm.
- Tighten bolts of lower section of oil pan in diagonal sequence to 10 Nm.

The rest of installation is in reverse order of removal, note the following:

- Install stabilizer bar --> **40 - FRONT SUSPENSION** .
- Install front coolant pipe --> **Front coolant pipe, removing and installing**.
- Install lock carrier with attachments -->
  - **50 BODY, FRONT**
  - **50 - BODY - FRONT** for BODY EXTERIOR - CABRIOLET

.

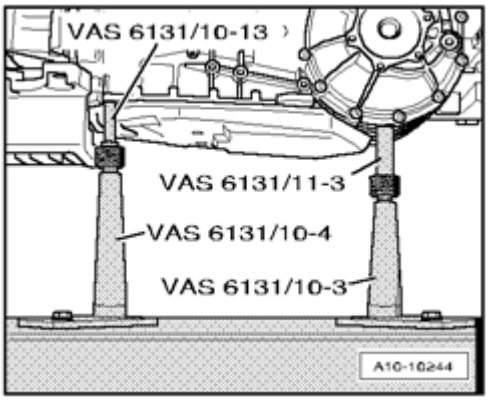

Fig. 586: Placing Torque Support On Rubber Buffer For Torque Support And Tightening Bolts
Courtesy of VOLKSWAGEN UNITED STATES, INC.

- Place torque support on rubber buffer for torque support and tighten bolts - **arrows** -.
- Install the front bumper cover -->
  - **63 BUMPER**
  - **63 - BUMPERS** for BODY EXTERIOR - CABRIOLET

  .
- Add engine oil and check oil level --> **Oil level, checking**.
- Fill with coolant **Filling**.
- Check headlight adjustment -->
  - **01 - MAINTENANCE**
  - **01 - MAINTENANCE** for MAINTENANCE PROCEDURES - CABRIOLET

  .

Torque specifications

Component	Nm
Lower part of oil pan to upper part of oil pan	10
Oil drain plug	50
Bracket for refrigerant line to upper section of oil pan	10
Clamp to bracket for refrigerant line	10
Torque support stop to lock carrier	28

Oil pump, removing and installing

Special tools, testers and auxiliary items required

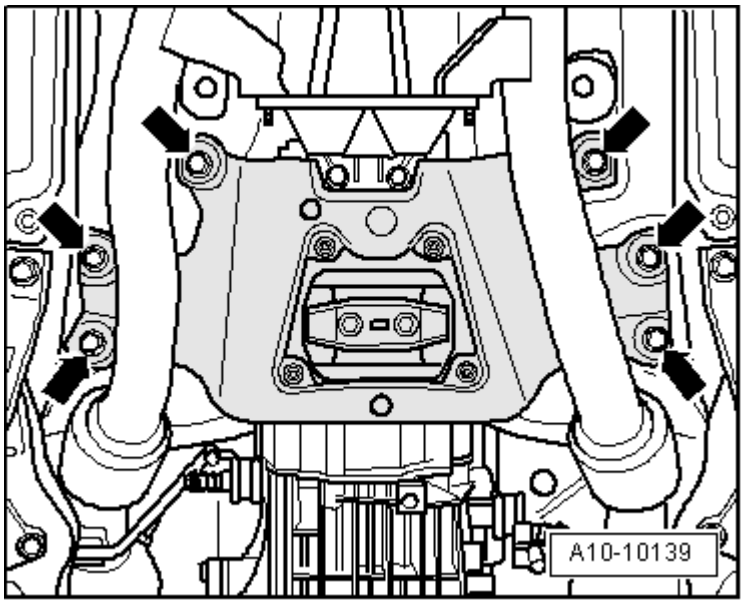

Fig. 587: Identifying Old Oil Collecting And Extracting Device V.A.G 1782
Courtesy of VOLKSWAGEN UNITED STATES, INC.

- Old oil collecting and extracting device V.A.G 1782

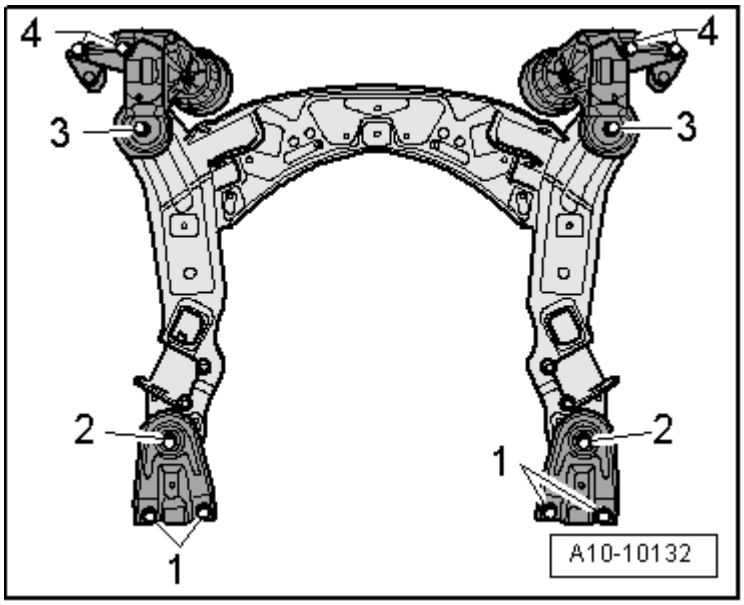

Fig. 588: Long-Nose Gripping Pliers VAS 6226
Courtesy of VOLKSWAGEN UNITED STATES, INC.

- Long-nose gripping pliers VAS 6226

Removing

- Remove lower section of oil pan --> **Oil pan (lower part), removing and installing**.

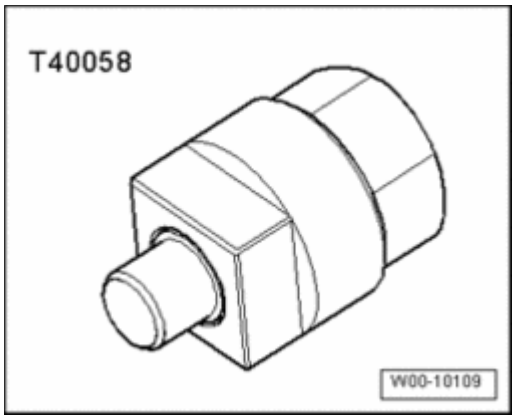

Fig. 589: Disconnecting Coolant Hose & Removing Coolant Pump
Courtesy of VOLKSWAGEN UNITED STATES, INC.

- Disconnect coolant hose - **1** -.
- Remove coolant pump - **arrows** -.

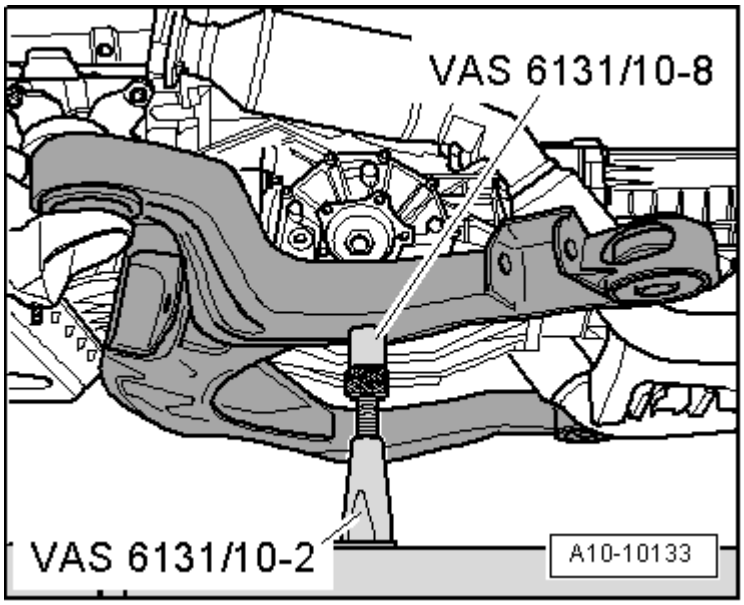

Fig. 590: Removing/Installing Drive Shaft For Coolant Pump From Oil Pump
Courtesy of VOLKSWAGEN UNITED STATES, INC.

- Remove drive shaft - **arrow** - for coolant pump from oil pump.

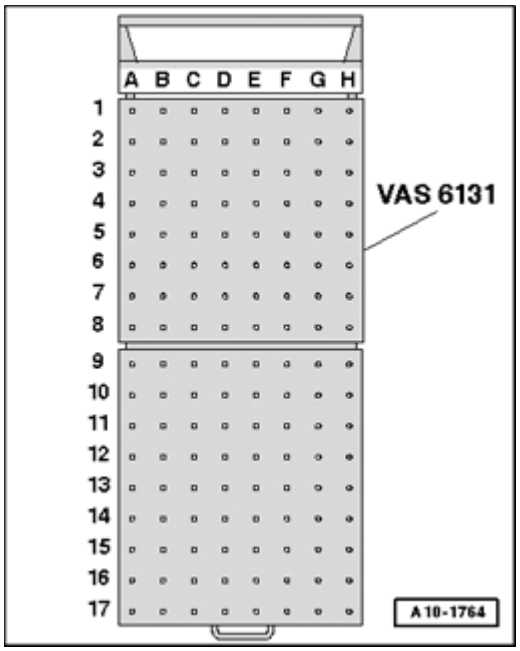

Fig. 591: Removing Bolts And Oil Pipes
Courtesy of VOLKSWAGEN UNITED STATES, INC.

- Place old oil collecting and extracting device V.A.G 1782 under engine.
- Remove bolts and remove oil pipes - **1** - and - **2** -.

NOTE:

- **Oil escapes when removing oil pipes.**

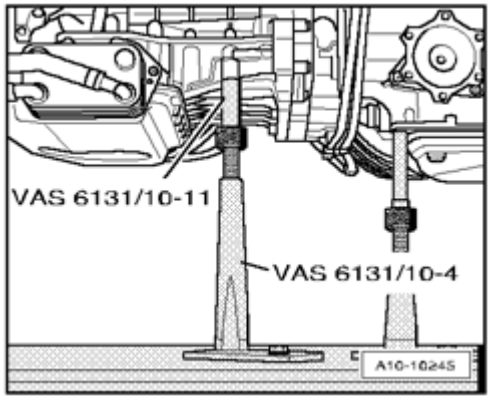

Fig. 592: Removing Bolts And Intake Tube With Housing
Courtesy of VOLKSWAGEN UNITED STATES, INC.

- Remove bolts - **1 to 3** - and remove intake tube with housing.

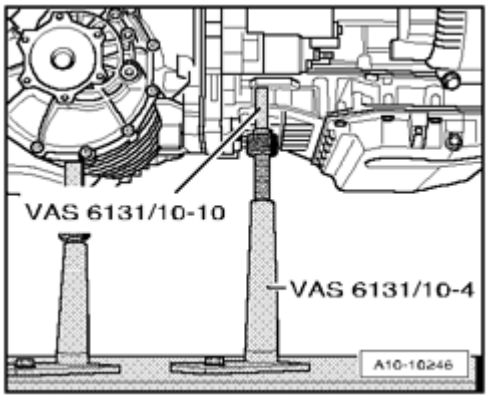

Fig. 593: Pressing Back Drive Shaft For Oil Pump Against Spring Force And Clamping Tightly Using Long-Nose Gripping Pliers VAS 6226
Courtesy of VOLKSWAGEN UNITED STATES, INC.

- Press back drive shaft - **1** - for oil pump against spring force and clamp tightly using Long-nose gripping pliers VAS 6226.

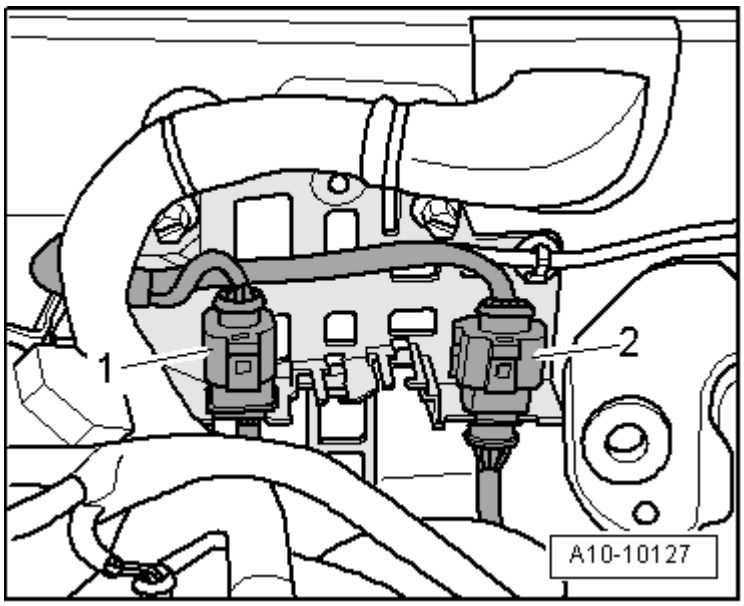

Fig. 594: Removing Bolts And Oil Pump
Courtesy of VOLKSWAGEN UNITED STATES, INC.

- Remove bolts - **arrows** - and remove oil pump.

Installing

NOTE:

- **Replace seals and O-rings.**

- Check whether 2 alignment bushings are present in cylinder block, install if necessary.
- Tighten oil pump - **arrows** -.

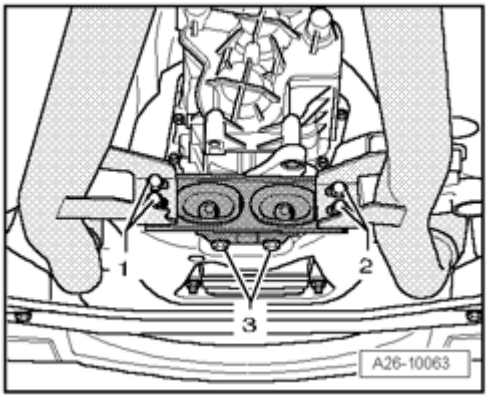

Fig. 595: Pressing Back Drive Shaft For Oil Pump Against Spring Force And Clamping Tightly Using Long-Nose Gripping Pliers VAS 6226
Courtesy of VOLKSWAGEN UNITED STATES, INC.

- Unlock Long-nose gripping pliers VAS 6226 and let drive shaft - **1** - glide into oil pump.

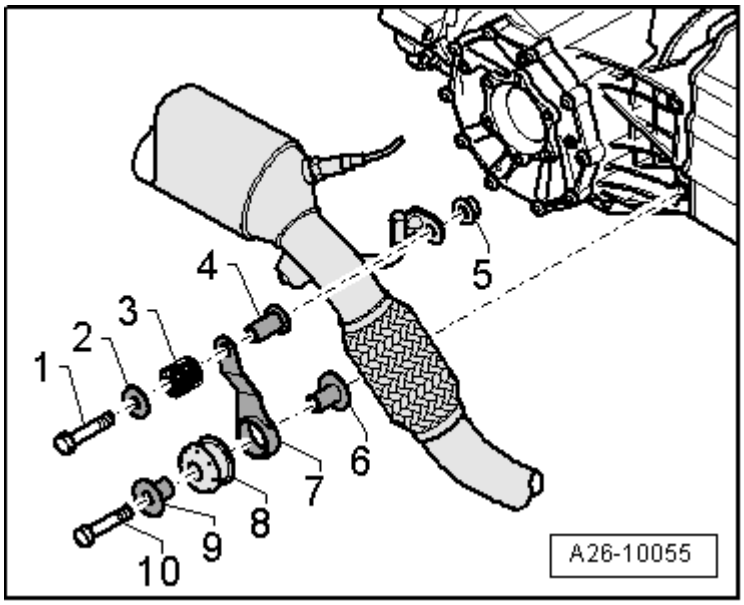

Fig. 596: Checking Whether Drive Shaft Is Friction Locked To Oil Pump
Courtesy of VOLKSWAGEN UNITED STATES, INC.

- Check whether drive shaft is friction locked to oil pump. To do so, reach into intake opening - **arrow** - of oil pump and try to rotate oil pump gears.

- Toothed gears must not be able to be rotated

The rest of installation is in reverse order of removal, note the following:

- Install coolant pump --> **Coolant pump, removing and installing**.
- Install lower section of oil pan **Installing**.

- Check oil level --> **Oil level, checking**.
- Fill with coolant **Filling**.

Torque specifications

Component	Nm
Oil pump to cylinder block	10
Housing for intake tube to oil pump	10
Oil pipes to upper section of oil pan and oil pump	10

Upper section of oil pan, component overview

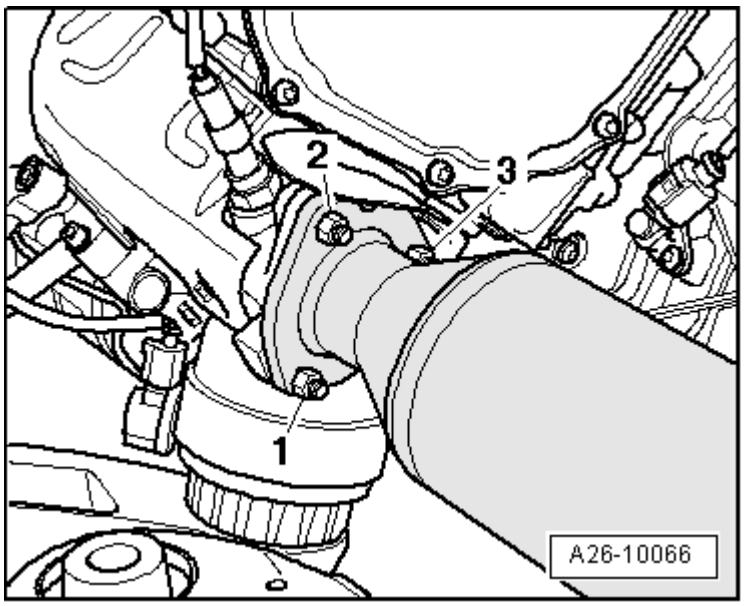

Fig. 597: Upper Section Of Oil Pan, Component Overview
Courtesy of VOLKSWAGEN UNITED STATES, INC.

1 - Oil pan (lower section)

- Removing and installing --> **Oil pan (lower part), removing and installing**
- With Oil Level Thermal Sensor G266
- Oil Level Thermal Sensor G266 , removing and installing *, removing and installing* under **Oil Level Thermal Sensor G266 , removing and installing**

2 - 10 Nm

3 - 10 Nm

4 - Oil pipe

5 - Gasket

- Replace

6 - 10 Nm

7 - Oil pipe

8 - O-rings

- Replace

9 - Oil pan (upper section)

- Removing and installing --> **Oil pan (upper part), removing and installing**

10 - Seal

- Replace

11 - Gasket

- Replace

12 - O-ring

- Replace

13 - 15 Nm

14 - 10 Nm

15 - Guide tube for oil dipstick

16 - O-ring

- Replace

17 - Seal

- Replace

18 - Locking bolt - 35 Nm

19 - O-ring

- Replace

20 - Seal

- Replace

21 - Oil drain plug - 50 Nm

Oil pan (upper part), removing and installing

Special tools, testers and auxiliary items required

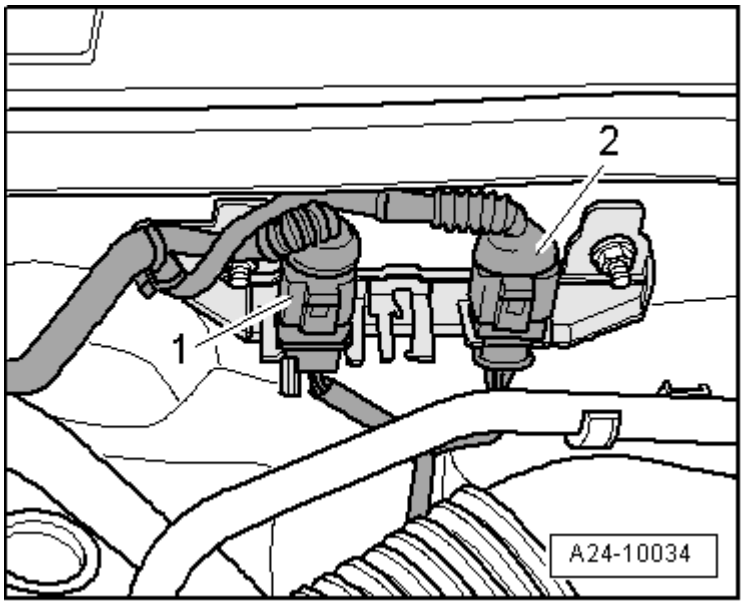

Fig. 598: Identifying Old Oil Collecting And Extracting Device V.A.G 1782
Courtesy of VOLKSWAGEN UNITED STATES, INC.

- Old oil collecting and extracting device V.A.G 1782
- Protective glasses
- Hand drill with plastic brush attachment
- Sealant

Removing

- Place old oil collecting and extracting device V.A.G 1782 under engine and drain engine oil.
- Remove engine: Vehicles with manual transmission --> **Engine (vehicles with manual transmission)** , vehicles with automatic transmission --> **Engine (vehicles with automatic transmission), removing**.
- Disconnect engine and transmission: Vehicles with manual transmission --> **Engine (vehicles with manual transmission), separating** , vehicles with automatic transmission --> **Engine and transmission (vehicles with automatic transmission), separating**.
- Secure engine on engine and transmission holder: Vehicles with manual transmission --> **Engine (vehicles with manual transmission), securing to engine and transmission holder** , vehicles with automatic transmission --> **Engine (vehicles with automatic transmission), securing to assembly stand**.

- Remove covers for timing chains --> **Timing chain covers (All), removing and installing**.

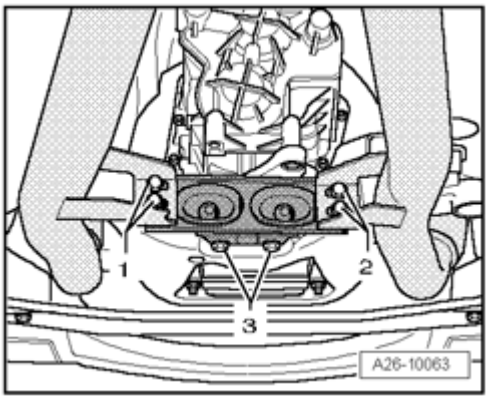

Fig. 599: Loosening Tensioning Bolt And Ribbed Belt
Courtesy of VOLKSWAGEN UNITED STATES, INC.

NOTE:

- **Before removing ribbed belt, mark the turning direction on it with chalk or a felt tip pen. A reversed direction of rotation can cause damage to the belt under operating conditions.**

- Loosen tensioning bolt - **arrow** - and remove ribbed belt.

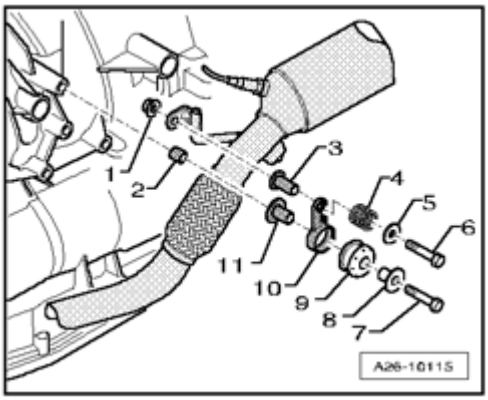

Fig. 600: Removing Tensioning Roller
Courtesy of VOLKSWAGEN UNITED STATES, INC.

- Remove tensioning roller - **arrows** -.

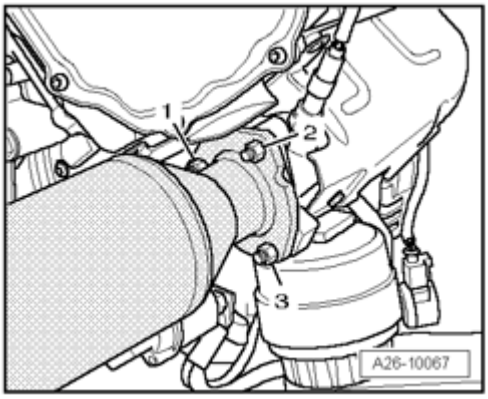

Fig. 601: Removing Hose Clamps And Disconnecting Coolant Hose
Courtesy of VOLKSWAGEN UNITED STATES, INC.

- Remove hose clamps - **1** - and disconnect coolant hose.

NOTE:

- **Ignore - 2 -.**

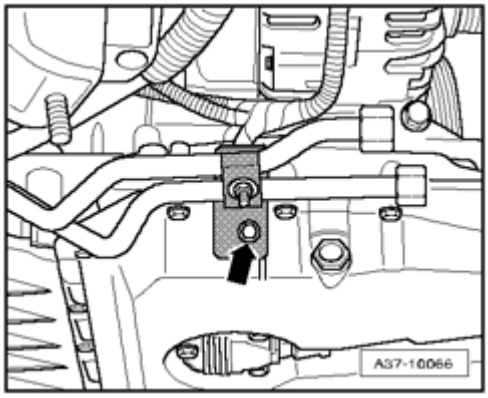

Fig. 602: Disconnecting Coolant Hose On Generator, Electrical Connector & Removing Electrical Wire On Generator
Courtesy of VOLKSWAGEN UNITED STATES, INC.

- Disconnect coolant hose - **3** - on generator.
- Disconnect electrical connector - **1** -.
- Remove electrical wire - **2** - on generator.

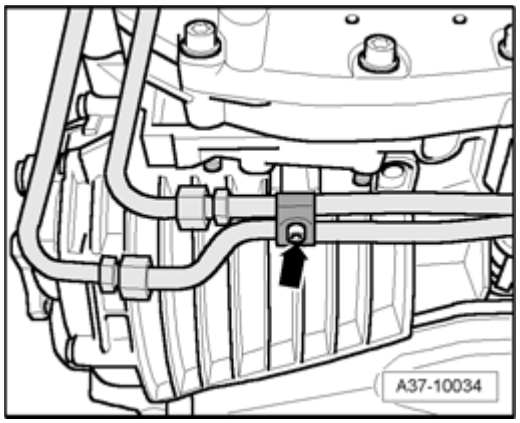

Fig. 603: Removing Generator Bolts
Courtesy of VOLKSWAGEN UNITED STATES, INC.

- Remove bolts - **arrows** -.

NOTE:

- **If generator is stuck in its bracket, install mounting bolt again up to 2 rotations.**
- **Carefully strike on bolt heads using flat side of hammer - doing this loosens threaded sleeves of generator mount.**

- Remove generator.

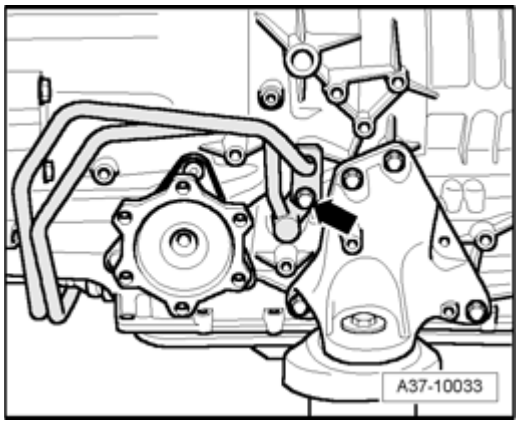

Fig. 604: Removing Bolts & Bracket For Generator
Courtesy of VOLKSWAGEN UNITED STATES, INC.

- Remove bolts - **arrows** -.
- Remove bracket for generator.

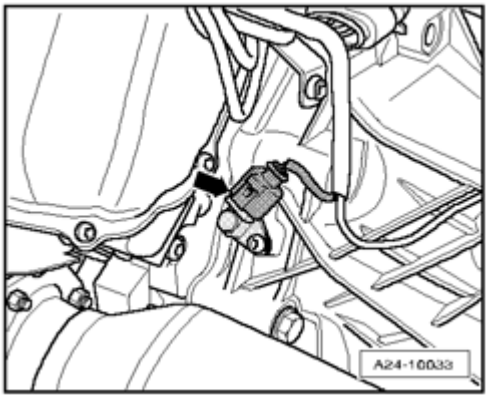

Fig. 605: Removing Bolts And Torque Support From Engine
Courtesy of VOLKSWAGEN UNITED STATES, INC.

- Remove bolts - **arrows** - and remove torque support from engine.

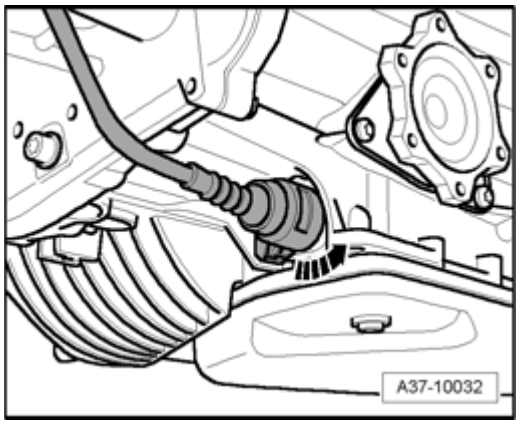

Fig. 606: Removing Front Coolant Pipe On Engine
Courtesy of VOLKSWAGEN UNITED STATES, INC.

- Remove front coolant pipe on engine - **arrows** -.

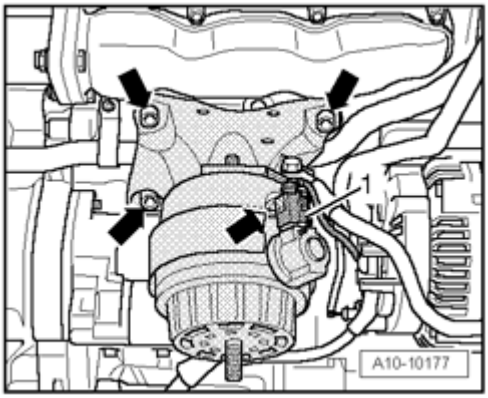

Fig. 607: Disconnecting Coolant Hose & Removing Coolant Pump
Courtesy of VOLKSWAGEN UNITED STATES, INC.

- Disconnect coolant hose - **1** -.
- Remove coolant pump - **arrows** -.

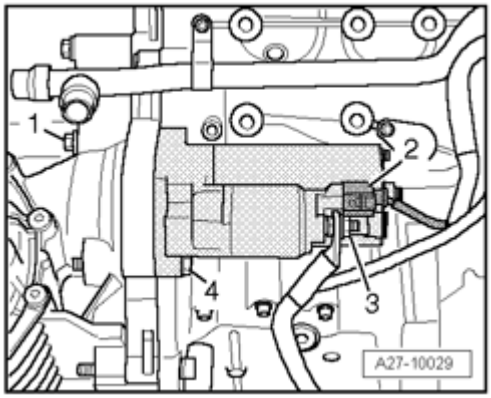

Fig. 608: Removing/Installing Drive Shaft For Coolant Pump From Oil Pump
Courtesy of VOLKSWAGEN UNITED STATES, INC.

- Remove drive shaft - **arrow** - for coolant pump from oil pump.

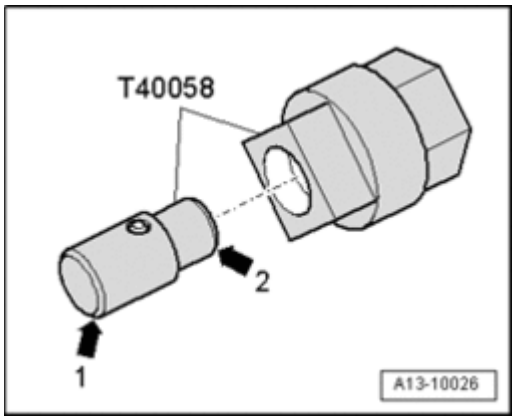

Fig. 609: Removing Bolt From Oil Dipstick Guide Tube At Cylinder Head
Courtesy of VOLKSWAGEN UNITED STATES, INC.

- Remove guide pipe for oil dipstick at cylinder head - **arrow** - , pull up and remove.

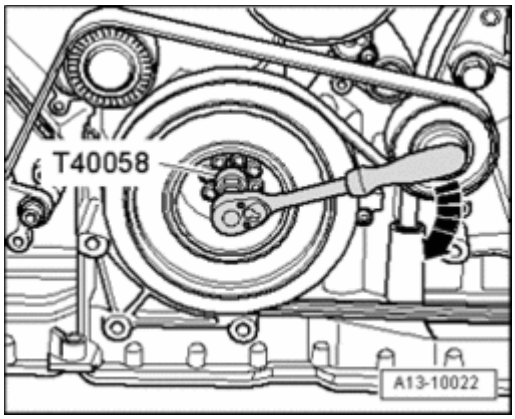

Fig. 610: Disconnecting Electrical Harness Connector On Oil Level Thermal Sensor G266 And Free Up Electrical Wire
Courtesy of VOLKSWAGEN UNITED STATES, INC.

- Disconnect electrical connector on Oil Level Thermal Sensor G266 - **arrow** - and free up electrical wire.

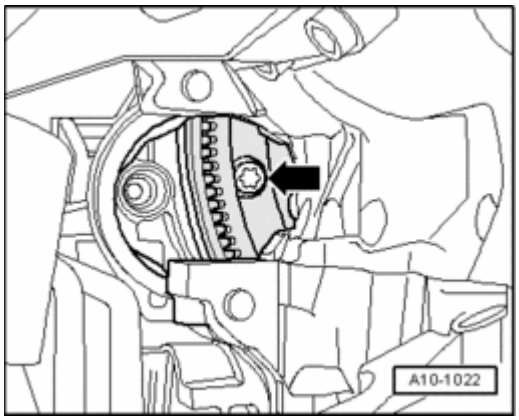

Fig. 611: Removing Oil Pan (Lower Part)
Courtesy of VOLKSWAGEN UNITED STATES, INC.

- Remove oil pan (lower part) - **1** - and pry out carefully.

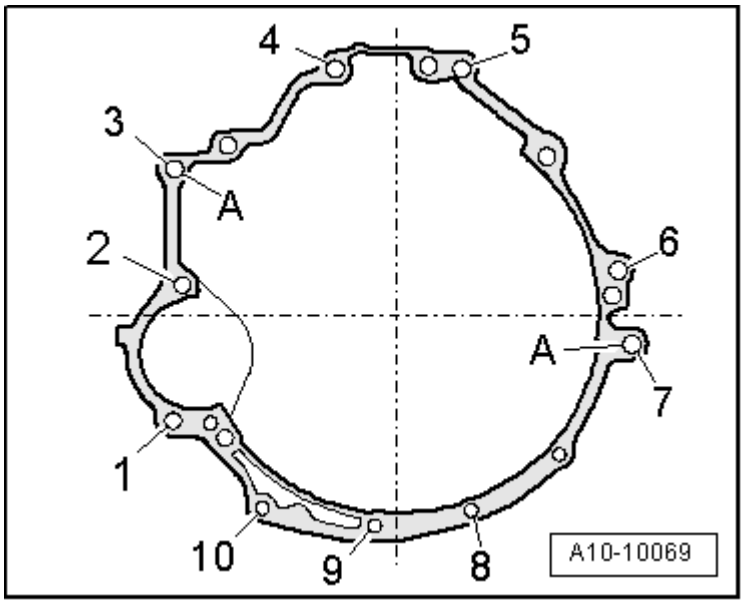

Fig. 612: Removing Bolts And Oil Pipes
Courtesy of VOLKSWAGEN UNITED STATES, INC.

- Remove bolts and remove oil pipes - **1** - and - **2** -.

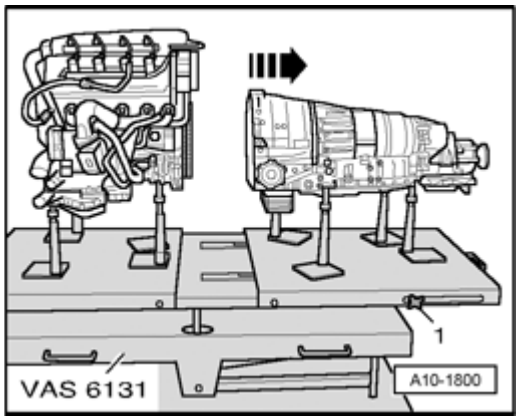

Fig. 613: Removing Bolts For Upper Section Of Oil Pan
Courtesy of VOLKSWAGEN UNITED STATES, INC.

- Remove bolts - **1 to 7** - for upper section of oil pan.
- Press upper part of oil pan from alignment pins of cylinder block.

Installing

NOTE:

- **Replace seals and O-rings.**

CAUTION: Wear safety glasses.

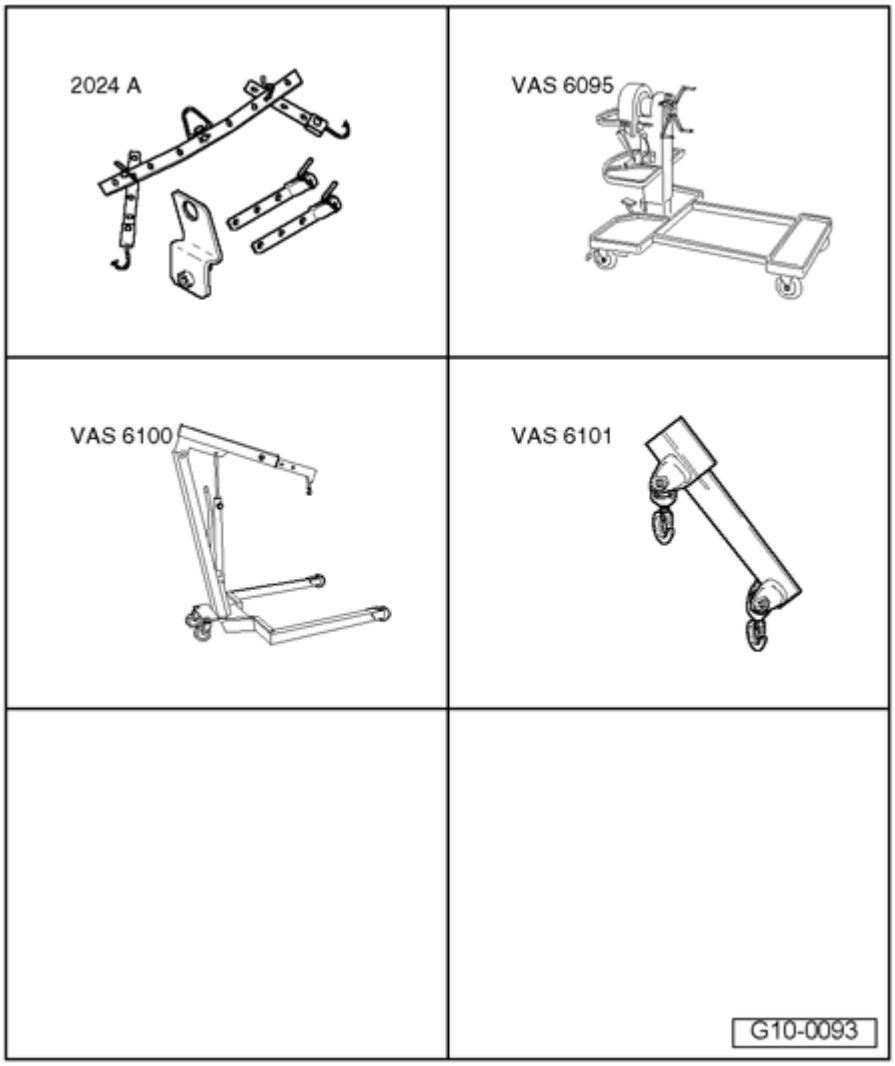

Fig. 614: Using Rotating Plastic Brush To Remove Remaining Sealant From Oil Pan (Upper Part) And At Cylinder Block
Courtesy of VOLKSWAGEN UNITED STATES, INC.

- Using rotating plastic brush, remove any remaining sealant from oil pan (upper part) and at cylinder block.
- Clean sealing surfaces, they must be free of oil and grease.

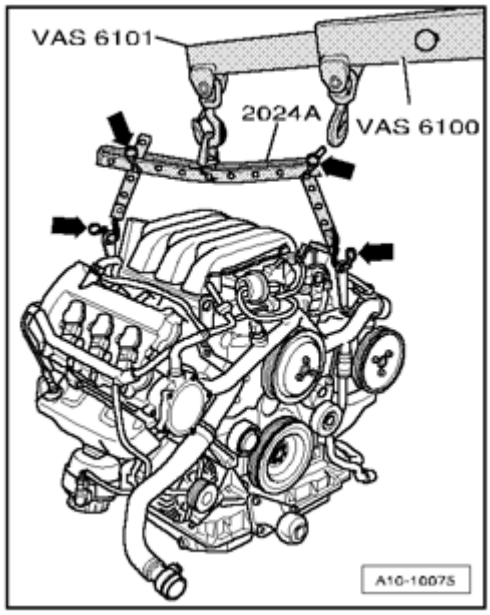

Fig. 615: Cutting Tube Nozzle At Front Marking
Courtesy of VOLKSWAGEN UNITED STATES, INC.

- Cut off nozzle on tube of sealant at front mark (dia. of nozzle approx. 1 mm).

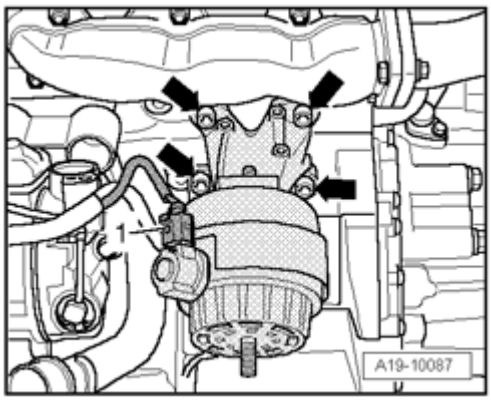

Fig. 616: Inserting New Seals Into Grooves On Cylinder Block
Courtesy of VOLKSWAGEN UNITED STATES, INC.

- Insert new seals - **1 to 4** - into grooves on cylinder block.
- Apply sealant beads - **arrows** - to clean sealing surface of cylinder block as depicted in illustration.

- Thickness of sealant bead: 1.5 to 2.0 mm.

NOTE:

- **The oil pan (upper part) must be installed within 5 minutes after application of sealant.**
- **Sealant bead must not be thicker than specified, otherwise sealant could get into oil pan and clog the strainer on intake tube.**

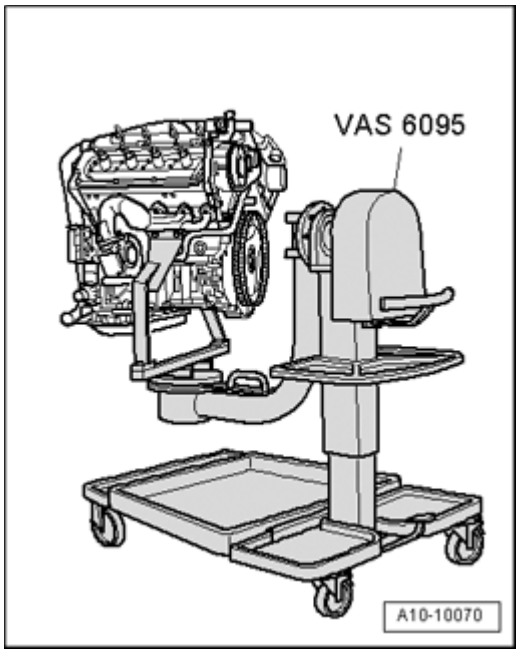

Fig. 617: Removing Bolts For Upper Section Of Oil Pan
Courtesy of VOLKSWAGEN UNITED STATES, INC.

- With a second technician, position upper section of oil pan and pre-tighten screws - **1 to 7** - to 5 Nm in diagonal sequence.
- Tighten bolts - **1 to 7** - diagonally to 15 Nm.

The rest of installation is in reverse order of removal, note the following:

- Install coolant pump --> **Coolant pump, removing and installing**.
- Install lower section of oil pan **Installing**.
- Replace O-ring at guide tube for oil dipstick and insert guide tube into hole in oil pan (upper part).
- When installing generator bracket, note two alignment bushings.

- Install covers for timing chains **Installing**.
- Install ribbed belt **Installing**.
- Install engine: Vehicles with manual transmission --> **Engine (vehicles with manual transmission), installing** , vehicles with automatic transmission --> **Engine (vehicles with automatic transmission), installing**.
- Add engine oil and check oil level --> **Oil level, checking**.

Torque specifications

Component	Nm
Oil pipes to upper section of oil pan	10
Coolant pump housing to upper section of oil pan	10
Bracket for refrigerant line to upper section of oil pan	10

Oil dip stick guide tube to cylinder head			10
Coolant line	Coolant pump		10
front to	Oil pan (upper section)		10
Torque bracket to upper part of oil pan			42
Generator bracket		M8	22
to engine		M10	45
Generator to generator bracket			23
Terminal 30/B+ to generator			16

Oil check valves and spray nozzle valve - component overview

NOTE:

- **If irregular valve noise occurs repeatedly during short journeys and disappears after extended driving, the oil check valves must be replaced.**

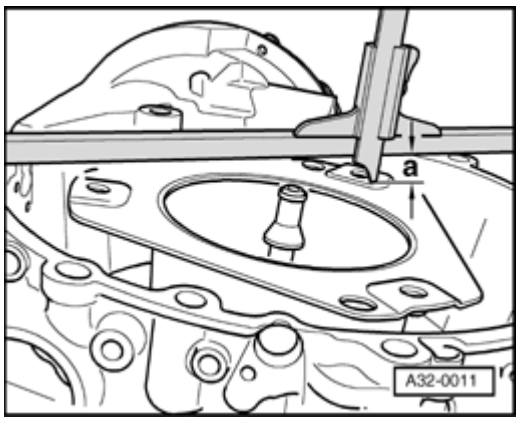

Fig. 618: Oil Check Valves And Spray Nozzle Valve - Component Overview
Courtesy of VOLKSWAGEN UNITED STATES, INC.

1 - O-ring

- Replace

2 - Oil check valve

- Removing and installing --> **Oil check valves and spray nozzle valve, removing and installing**

3 - Ventilation pipe

4 - 10 Nm

- Insert using locking compound; locking compound .

5 - 10 Nm

6 - Hose

- To pressure regulating valve for crankshaft housing ventilation

7 - Cover

8 - Gasket

- Replace

9 - Spray nozzle valve

- Removing and installing --> **Oil check valves and spray nozzle valve, removing and installing**

10 - Oil check valve

- Removing and installing --> **Oil check valves and spray nozzle valve, removing and installing**

11 - O-rings

- Replace

Oil check valves and spray nozzle valve, removing and installing

NOTE:

- **If irregular valve noise occurs repeatedly during short journeys and disappears after extended driving, the oil check valves must be replaced.**

Removing

- Remove intake manifold --> **Intake manifold, removing and installing**.
- Remove oil filter housing --> **Oil filter housing, removing and installing**.

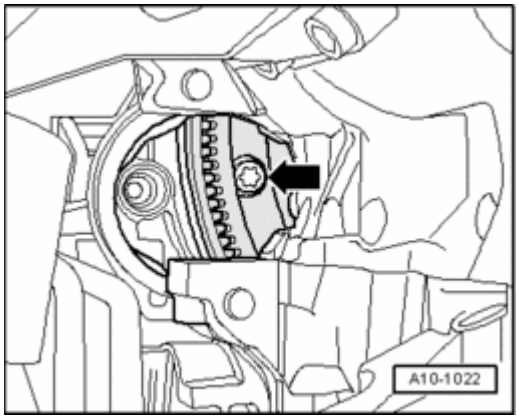

Fig. 619: Identifying Right Rear Knock Sensor Bolt, Crankshaft Housing Ventilation & Oil Check Valves Cover
Courtesy of VOLKSWAGEN UNITED STATES, INC.

- Remove bolt - **1** - and remove right rear knock sensor.

- Remove hose of crankshaft housing ventilation - **arrow** -.
- Unscrew cover - **2** - for oil check valves.
- Remove seal.

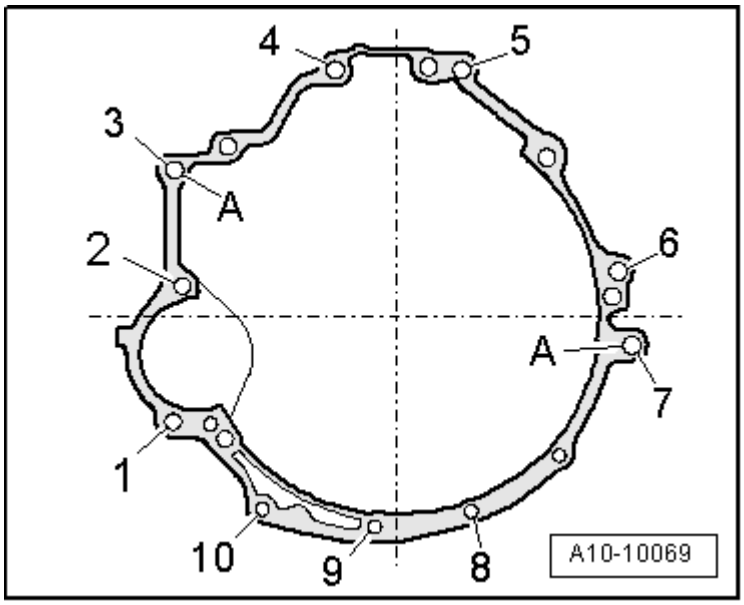

Fig. 620: Removing Oil Check Valves & Spray Nozzle Valve
Courtesy of VOLKSWAGEN UNITED STATES, INC.

- Remove oil check valves - **1** - and - **3** -.
- Remove spray nozzle valve - **2** -.

Installing

Installation is in reverse order of removal, note the following:

NOTE:

- **Replace gaskets and O-rings.**
- **Secure all hose connections using hose clamps appropriate for the model type .**

- Install oil filter housing --> **Oil filter housing, removing and installing**.
- Install intake manifold --> **Intake manifold, removing and installing**.

Torque specifications

Component	Nm
Cover for oil check valves to cylinder block	10
Knock sensor to cylinder block	25 * See note

*Do not oil bolt.

Oil filter housing, component overview

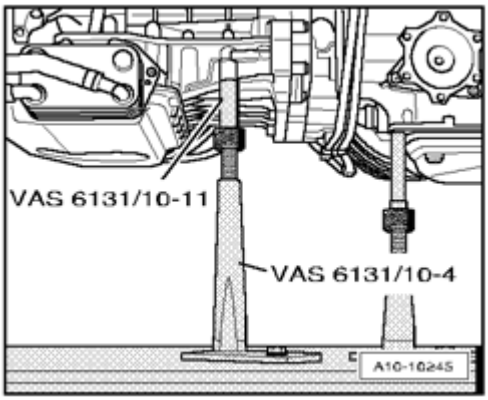

Fig. 621: Oil Filter Housing, Component Overview
Courtesy of VOLKSWAGEN UNITED STATES, INC.

1 - Gasket

- Replace

2 - 10 Nm

3 - 22 Nm

4 - Oil filter housing

5 - Oil filter element

- Removing and installing -->
  - **01 - MAINTENANCE**
  - **01 - MAINTENANCE** for MAINTENANCE PROCEDURES - CABRIOLET

6 - O-ring

- Replace

7 - Cap - 25 Nm

8 - Seal

- Replace

9 - Locking bolt - 50 Nm

10 - Seal

- Replace

11 - Oil Pressure Switch F1 , 1.4 bar

- Black insulation
- Checking --> **Oil pressure and oil pressure switch, checking**
- Removing and installing --> **Oil Pressure Switch F1 , removing and installing**
- Tighten to 25 Nm

12 - O-ring

- Replace

Oil filter housing, removing and installing

Special tools, testers and auxiliary items required

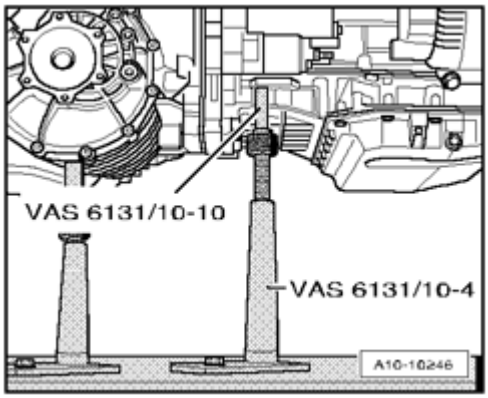

Fig. 622: Identifying Old Oil Collecting And Extracting Device V.A.G 1782
Courtesy of VOLKSWAGEN UNITED STATES, INC.

- Old oil collecting and extracting device V.A.G 1782

Removing

- Remove intake manifold --> **Intake manifold, removing and installing**.

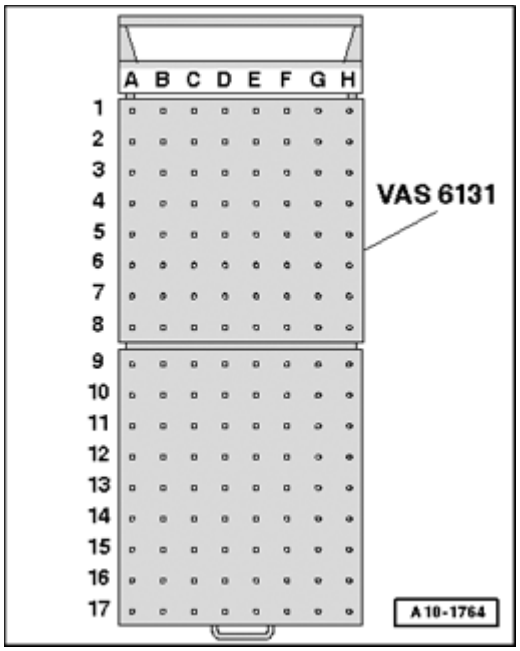

Fig. 623: Removing Cap For Oil Filter Housing
Courtesy of VOLKSWAGEN UNITED STATES, INC.

- Remove cap - **arrow** - for oil filter housing.
- Remove oil filter element.
- Extract engine oil using old oil collecting and extracting device V.A.G 1782 from oil filter housing.

NOTE:

- **Place a rag around oil filter housing to catch escaping engine oil.**

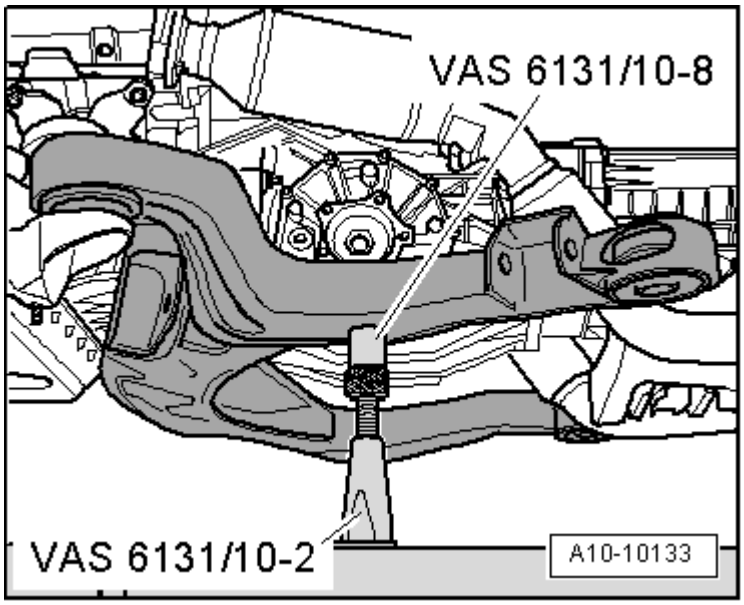

Fig. 624: Removing Bolts & Oil Filter Housing
Courtesy of VOLKSWAGEN UNITED STATES, INC.

- Remove bolts - **arrows** -.
- Remove oil filter housing.

Installing

Installation is in reverse order of removal, note the following:

NOTE:

- **Replace seals and O-rings.**

- Install intake manifold --> **Intake manifold, removing and installing**.
- Add engine oil and check oil level --> **Oil level, checking**.

Torque specifications

Component		Nm
Oil filter housing	Cylinder block	10
to	Cover for timing chain	22
Cap to oil filter housing		25

Oil cooler, removing and installing

Special tools, testers and auxiliary items required

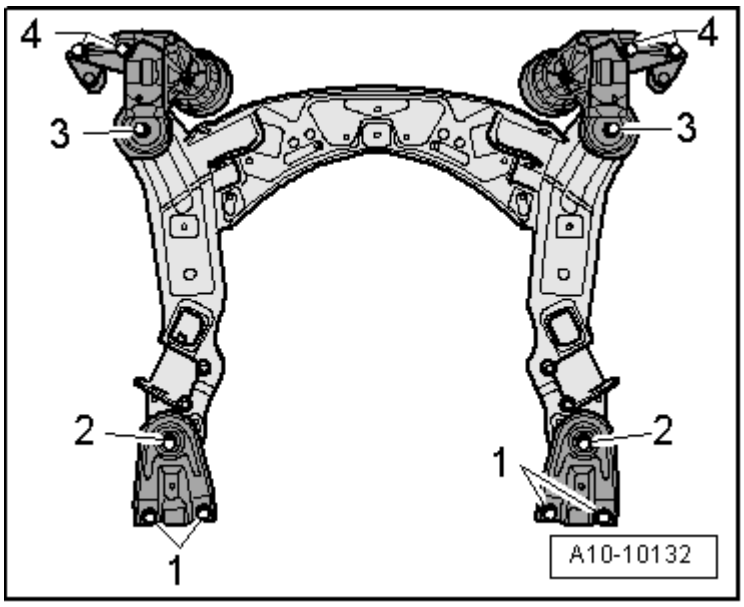

Fig. 625: Identifying Old Oil Collecting And Extracting Device V.A.G 1782
Courtesy of VOLKSWAGEN UNITED STATES, INC.

- Old oil collecting and extracting device V.A.G 1782

Removing

- Remove generator -->
  - **27 BATTERY, STARTER, GENERATOR, CRUISE CONTROL**
  - **27 BATTERY, STARTER, GENERATOR, CRUISE CONTROL** for ELECTRICAL EQUIPMENT, CABRIOLET

.

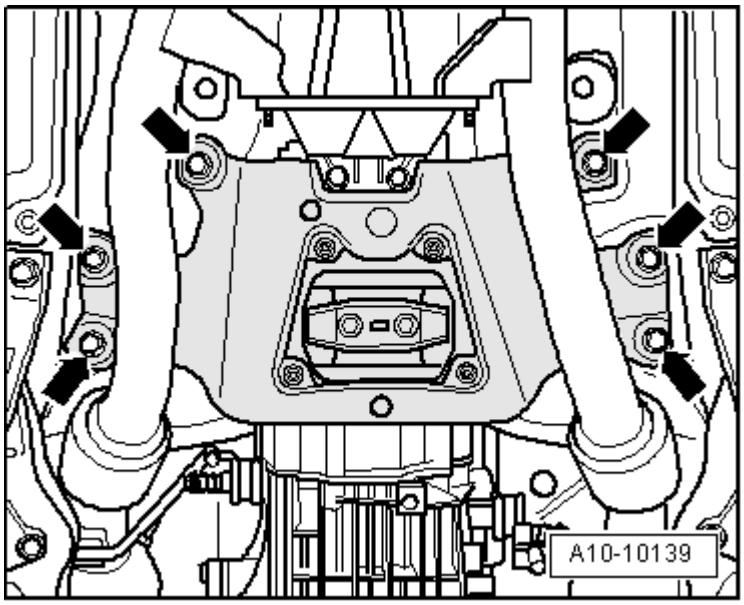

Fig. 626: Removing Bolts & Bracket For Generator
Courtesy of VOLKSWAGEN UNITED STATES, INC.

- Remove bolts - **arrows** -.
- Remove bracket for generator.

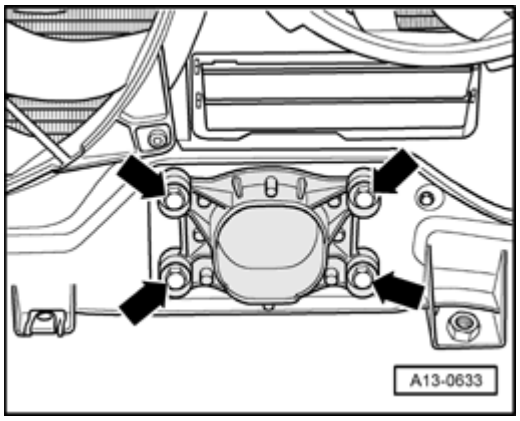

Fig. 627: Disconnecting Coolant Hose From Oil Cooler & Removing Bolts And Oil Cooler
Courtesy of VOLKSWAGEN UNITED STATES, INC.

- Disconnect coolant hose - **1** - from oil cooler.

- Place old oil collecting and extracting device V.A.G 1782 under engine.
- Remove bolts - **arrows** - and remove oil cooler.

Installing

Installation is in reverse order of removal, note the following:

NOTE:

- **Replace O-rings.**
- **Secure all hose connections using hose clamps appropriate for the model type .**

- When installing generator bracket, note the two alignment bushings.
- Install generator -->
  - **27 BATTERY, STARTER, GENERATOR, CRUISE CONTROL**
  - **27 BATTERY, STARTER, GENERATOR, CRUISE CONTROL** for ELECTRICAL EQUIPMENT, CABRIOLET

.

Torque specifications

Component		Nm
Oil cooler to cylinder block		10
Generator bracket	M8	22
to engine	M10	45

Oil Pressure Switch F1 , removing and installing

Removing

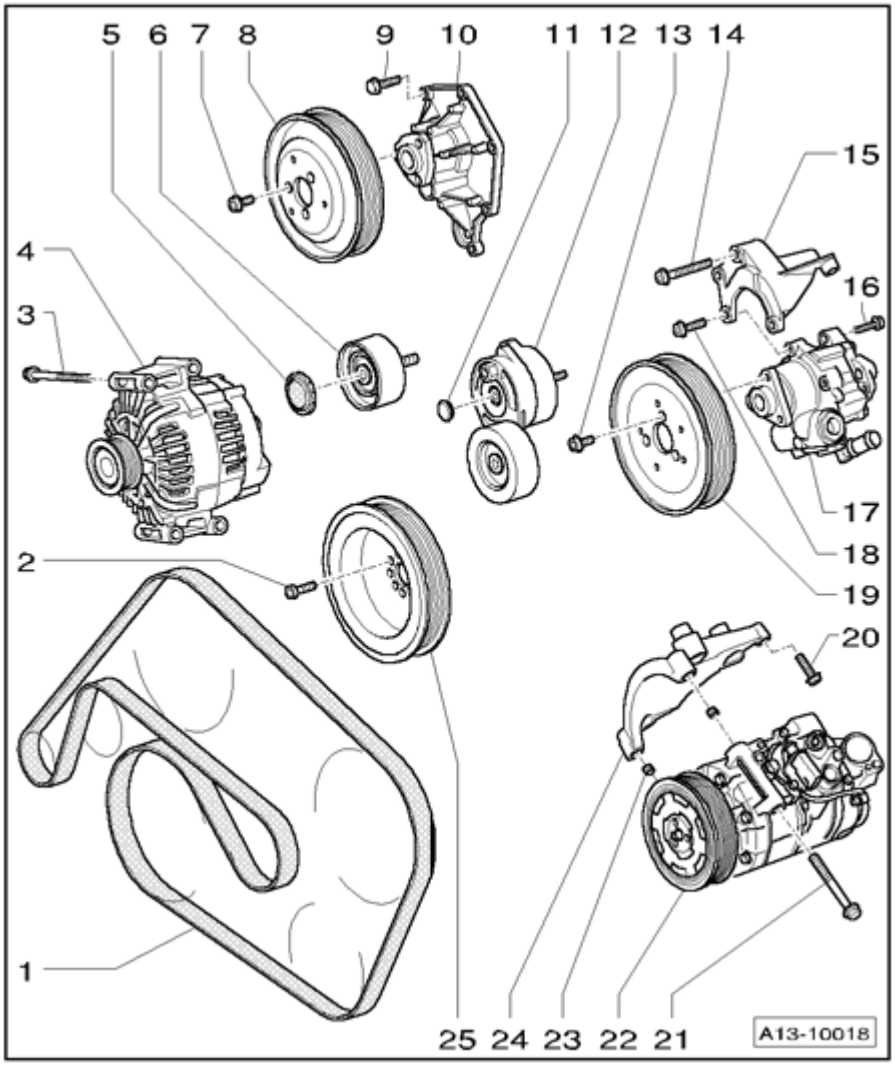

Fig. 628: Removing Rear Engine Cover
Courtesy of VOLKSWAGEN UNITED STATES, INC.

- Remove rear engine cover - **arrows** -.

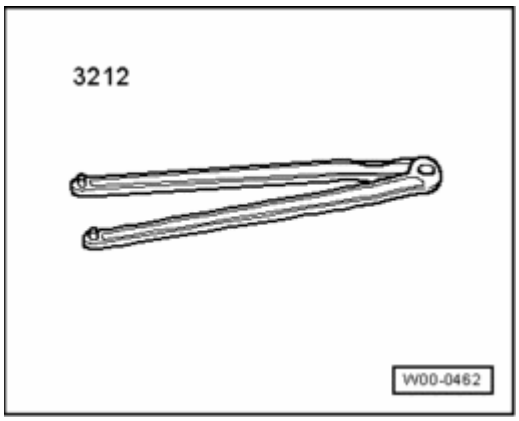

Fig. 629: Disconnecting Electrical Harness Connector From Oil Pressure Switch

Courtesy of VOLKSWAGEN UNITED STATES, INC.

- Disconnect electrical harness connector from oil pressure switch - **arrow** -.
- Remove oil pressure switch.

Installing

Installation is in reverse order of removal, note the following:

NOTE:

- **Replace seal.**

Torque specifications

Component	Nm
Oil pressure switch to oil filter housing	25

Oil pressure and oil pressure switch, checking

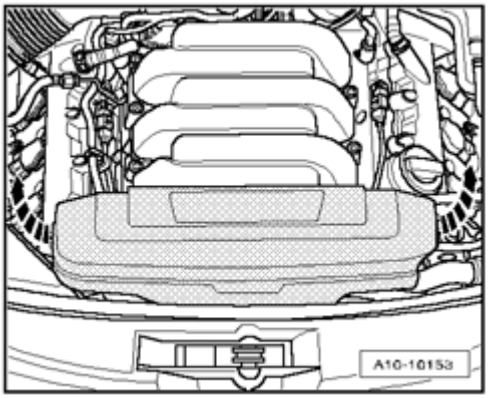

Fig. 630: Identifying Special Tools - Oil Pressure And Oil Pressure Switch, Checking
Courtesy of VOLKSWAGEN UNITED STATES, INC.

Special tools, testers and auxiliary items required

- Oil pressure gauge V.A.G 1342 with adapter V.A.G 1342/14
- Voltage tester V.A.G 1527 B
- Connector test set V.A.G 1594 C

Test conditions

- Oil level OK
- Engine oil temperature approximately 90 ° C.

Test sequence

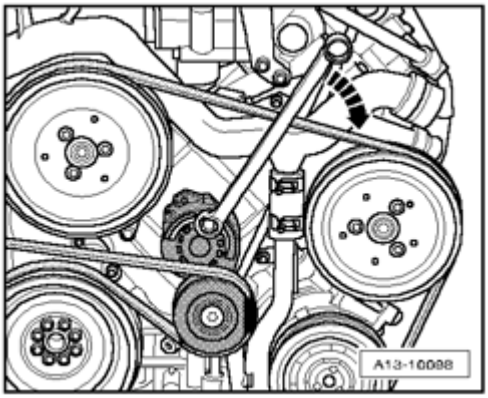

Fig. 631: Removing Rear Engine Cover
Courtesy of VOLKSWAGEN UNITED STATES, INC.

- Remove rear engine cover - **arrows** -.

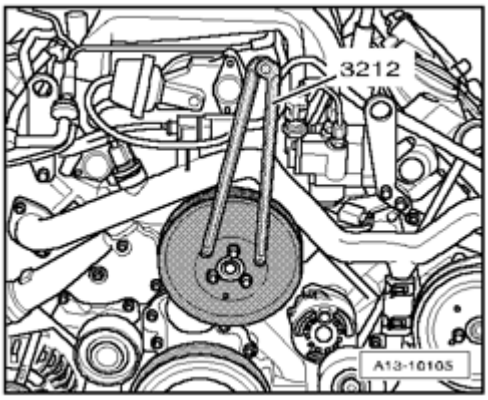

Fig. 632: Disconnecting Electrical Harness Connector From Oil Pressure Switch
Courtesy of VOLKSWAGEN UNITED STATES, INC.

- Disconnect electrical harness connector from Oil Pressure Switch F1 - **arrow** -.
- Remove oil pressure switch --> **Oil Pressure Switch F1 , removing and installing**.

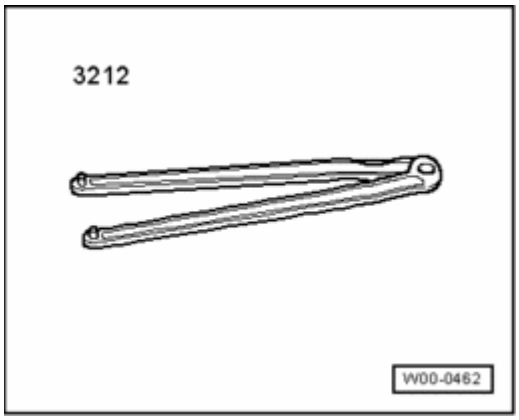

Fig. 633: Connecting Oil Pressure Tester V.A.G 1342 With Adapter V.A.G 1342/14 To Hole For Oil

Pressure Switch
Courtesy of VOLKSWAGEN UNITED STATES, INC.

- Connect oil pressure tester V.A.G 1342 with adapter V.A.G 1342/14 to hole for oil pressure switch.
- Install oil pressure switch - **2** - into oil pressure gauge V.A.G 1342.
- Place the brown wire of oil pressure gauge on Ground (GND).

Oil pressure switch, checking

- Connect voltage tester V.A.G 1527 B - **1** - with adapter cables from connector test kit V.A.G 1594 C to oil pressure switch and battery positive ("+").

- LED must not light up.

If LED lights up:

- Replace Oil Pressure Switch.
- Start engine.

NOTE:

- **While starting engine, watch Pressure Tester and LED as oil pressure switch may open during start.**
- **At 1.2 to 1.6 bar pressure, LED must light up.**

If LED does not light up:

- Replace Oil Pressure Switch.

Oil pressure, checking

- Start engine.

- Oil pressure at 2000 RPM: min. 2.0 bar
- Oil pressure at 3500 RPM: min. 3.5 bar

Assembling

Assembly is in reverse order of removal, note the following:

- Install oil pressure switch --> **Oil Pressure Switch F1 , removing and installing**.

Engine oil

Oil quantities, oil specifications and viscosity classes Fluid Capacity Chart.

Oil level, checking

NOTE:

- **Oil level must not exceed max. marking danger of catalytic converter damage!**

Test conditions

- Engine oil temperature min. 60 ° C.
- Vehicle in level position.
- After stopping engine, wait a few minutes to allow oil to flow back into oil pan.

Test sequence

- Pull out oil dipstick, wipe off with a clean cloth and re-insert dipstick again up to stop.
- Withdraw dipstick again and read oil level.

Range of markings on dipstick:

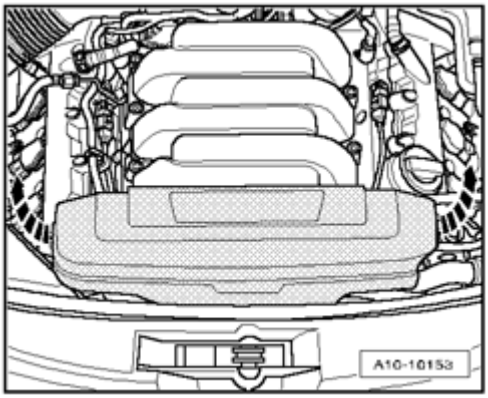

Fig. 634: Range Of Markings On Dipstick
Courtesy of VOLKSWAGEN UNITED STATES, INC.

a - Oil must not be added.

b - Oil may be topped off.

c - Oil must be added. After topping off, it is sufficient if oil level is somewhere in range - **b** - (shaded area).

NOTE:

- **Oil level must not exceed max. marking - a - and must not fall short of min. marking - c -.**

19 - ENGINE - COOLING SYSTEM

COOLING SYSTEM COMPONENTS, REMOVING AND INSTALLING

Cooling system components, removing and installing

CAUTION: Cover cap of expansion tank with rag and open carefully, as hot steam i.e. hot coolant may escape when opening.

NOTE:

- **When the engine is warm the cooling system is under pressure. If necessary release pressure before commencing repair work.**
- **Arrows on coolant pipes and coolant hoses must line up across from each other.**

Coolant hose connection diagram

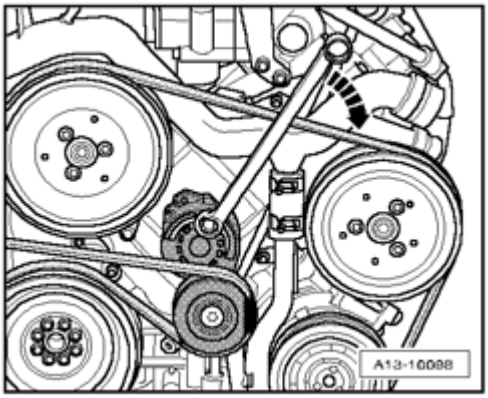

Fig. 635: Coolant Hose Connection Diagram
Courtesy of VOLKSWAGEN UNITED STATES, INC.

1 - Right auxiliary cooler

- Removing and installing --> **Right auxiliary cooler, removing and installing**
- Replace coolant after replacing

2 - Not installed

3 - Coolant regulator for auxiliary cooler

4 - Oil cooler

- Removing and installing --> **Oil cooler, removing and installing**

5 - Cylinder head/cylinder block

- Renew coolant after replacing

6 - Heater core

- Replace coolant after replacing

7 - Bleeder hole

- At coolant hose to heater core

8 - Cap

- Pressure relief valve in cap, checking **Pressure relief valve in cap, checking**

9 - Coolant expansion tank

10 - Not installed

11 - Left auxiliary cooler

- Removing and installing --> **Left auxiliary cooler, removing and installing**
- Renew coolant after replacing

12 - Non-return valve

- Opens in direction of arrow, locks against direction of arrow

13 - Radiator

- Removing and installing --> **Radiator, removing and installing**
- Replace coolant after replacing

14 - Coolant thermostat

- Removing and installing --> **Coolant thermostat, removing and installing**
- Checking --> **Thermostat, checking**

15 - Coolant pump

- Removing and installing --> **Coolant pump, removing and installing**

16 - Generator

Cooling system, draining and filling

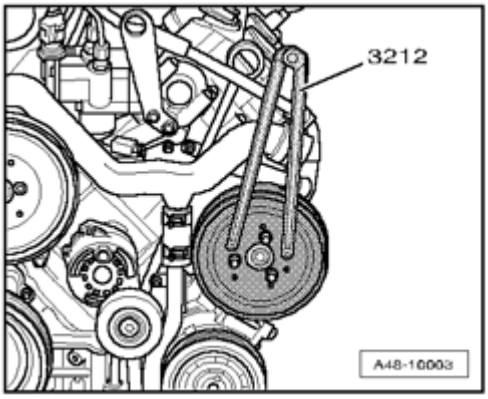

Fig. 636: Identifying Special Tools - Cooling System, Draining And Filling
Courtesy of VOLKSWAGEN UNITED STATES, INC.

Special tools, testers and auxiliary items required

- Adapter V.A.G 1274/8
- Adapter V.A.G 1274 tester V.A.G 1274/10
- Hose clamp pliers V.A.G 1921
- Cooling system charge unit VAS 6096
- Drip tray for workshop crane VAS 6208
- Refractometer T10007

Draining

NOTE:

- **Drained coolant must be stored in a clean container for disposal or reuse.**

CAUTION: Cover cap of expansion tank with rag and open carefully, as hot steam i.e. hot coolant may escape when opening.

- Open cap of coolant expansion tank.

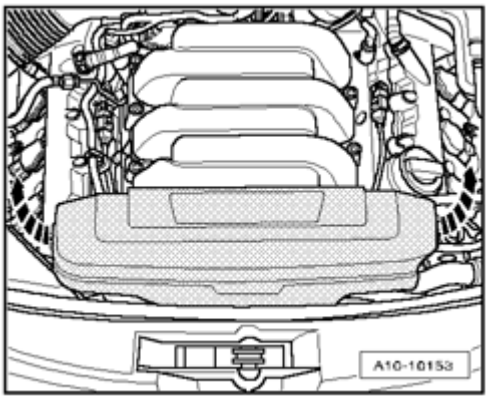

Fig. 637: Removing Quick-Release Fasteners, Screws And Noise Insulation
Courtesy of VOLKSWAGEN UNITED STATES, INC.

- Remove quick-release fasteners - **1** - , remove screws - **2** - and remove noise insulation.
- Place drip tray for workshop crane VAS 6208 under engine.

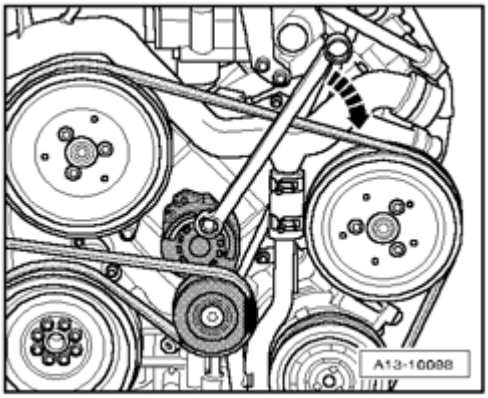

Fig. 638: Removing Drain Plug On Coolant Thermostat Housing
Courtesy of VOLKSWAGEN UNITED STATES, INC.

- Remove drain plug - **arrow** - on coolant thermostat housing and drain coolant from engine.

Filling

NOTE:

- **The cooling system is filled all year round with a mixture of frost and corrosion protection additives and water.**
- **Use only *coolant additive Plus G 012 A8F A1* (short: G12+) "according to TL VW 774 F". Other coolant additives may above all reduce the corrosion protection effect significantly. The damage resulting from this may lead to loss of coolant and consequently to severe engine damage.**
- **G12+ and coolant additives with the designation "according to TL VW 774 F" reduce frost and corrosion damage as well as lime deposits. They also raise the boiling point. For this reason the system must be filled all year round with frost and corrosion protection additives.**
- **Because of its high boiling point, the coolant improves engine reliability under heavy loads, particularly in countries with tropical climates.**
- **Protection against frost must be assured to about -25 ° C (in arctic climatic countries to about -35 ° C).**
- **The coolant concentration must not be reduced by adding water even in warmer seasons and in warmer countries. The coolant additive portion must be at least 40%.**
- **If for climatic reasons greater frost protection is required, the amount of G12+ can be increased, but only up to 60% (frost protection to about -40 ° C), otherwise frost protection and cooling effectiveness will be reduced.**

- **Only clean drinking water may be used for mixing coolant.**
- **If the radiator, heater core, cylinder head and cylinder head gasket or cylinder block is replaced, completely replace the engine coolant.**
- **Dirty coolant must not be re-used.**
- **For coolant G12+ , use refractometer T10007 to test frost protection in cooling system.**

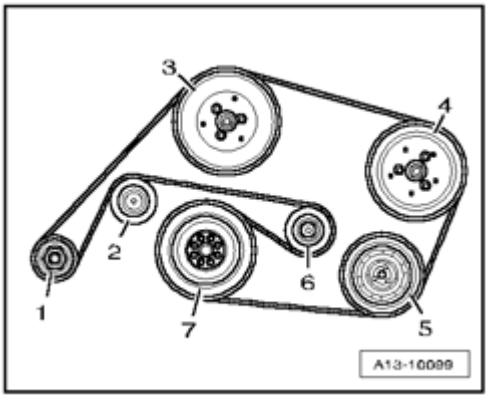

Fig. 639: Removing Drain Plug On Coolant Thermostat Housing
Courtesy of VOLKSWAGEN UNITED STATES, INC.

- Re-install drain plug - **arrow** - with new sealing ring.

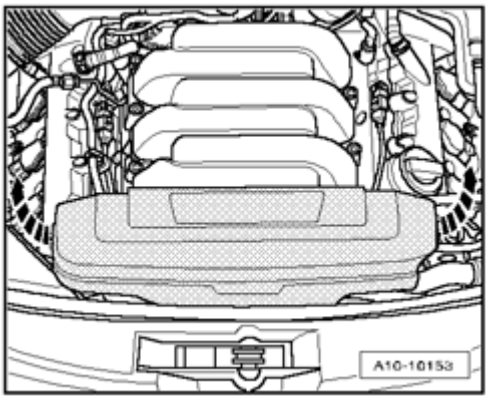

Fig. 640: Filling Reservoir VAS 6096/1 With At Least 12 Liters Of Premixed Coolant
Courtesy of VOLKSWAGEN UNITED STATES, INC.

- Fill coolant reservoir of Cooling System Charge Unit VAS 6096 with at least 12 liters of pre-mixed coolant with correct mixture ratio:

- G12+ (40%) and water (60%) for frost protection up to -25 ° C
- G12+ (50%) and water (50%) for frost protection up to -35 ° C
- G12+ (60%) and water (40%) for frost protection up to -40 ° C

- Install adapter V.A.G 1274/8 onto expansion tank.
- Assemble Cooling System Charge Unit VAS 6096 on adapter V.A.G 1274/8.
- Place air outlet hose - **1** - into a small container - **2** -. (A small amount of coolant is drawn off which should be reserved with the discharged air.)
- Close both valves - **A** - and - **B** - , turn lever perpendicular to direction of flow to do this.
- Connect hose - **3** - to pressurized air.

- Pressure: 6 to 10 bar positive pressure.

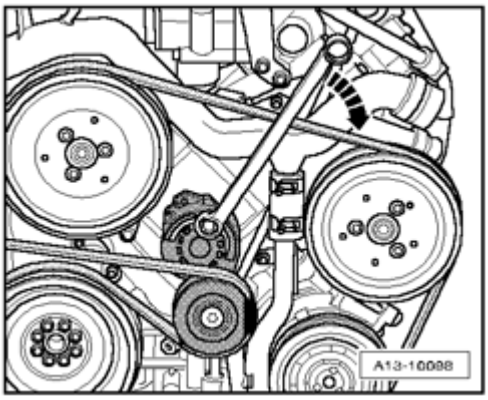

Fig. 641: Opening Valve
Courtesy of VOLKSWAGEN UNITED STATES, INC.

- Open valve - **B** - , to do this, turn lever in direction of flow.

A vacuum is created in cooling system by suction jet pump.

- Needle on instrument display must travel into green region.

- Also briefly open valve - **A** - , turn lever in direction of flow to do this, so that coolant reservoir hose of cooling system filler unit VAS 6096 is filled with coolant.
- Close valve - **A** - again.
- Let valve - **B** - remain open another 2 minutes.

- A further vacuum is created in cooling system by suction jet pump.
- Needle on instrument display must still remain in green region.

- Close valve - **B** -.

- Needle in the display instrument must remain in green region, then sufficient vacuum in cooling system is obtained for the upcoming filling.

If needle stands below the green region, repeat procedure.

If vacuum decreases, cooling system is leaking.

- Disconnect pressurized air hose.
- Open valve - **A** -.

The vacuum in cooling system has effect of extracting coolant from coolant reservoir of VAS 6096 ; cooling system is filled.

- Detach cooling system filler unit VAS 6096 from adapter V.A.G 1274/8 on coolant expansion tank.

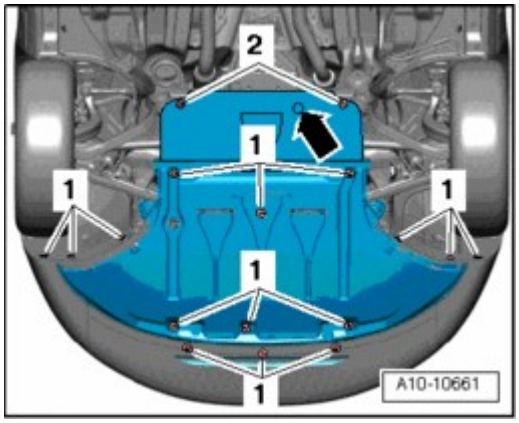

Fig. 642: Connecting Pipe For Cooling System Tester V.A.G 1274/10 To Adapter
Courtesy of VOLKSWAGEN UNITED STATES, INC.

- Connect pipe for cooling system tester V.A.G 1274/10 to adapter.

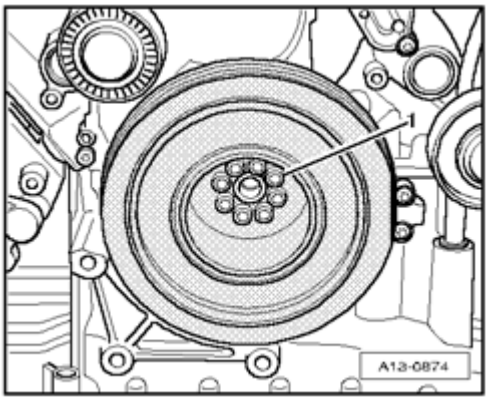

Fig. 643: Identifying Plenum Chamber Cover & Removing Rubber Seal
Courtesy of VOLKSWAGEN UNITED STATES, INC.

- Remove plenum chamber cover rubber seal.
- Remove plenum chamber cover - **1** - toward front - **arrows** -.

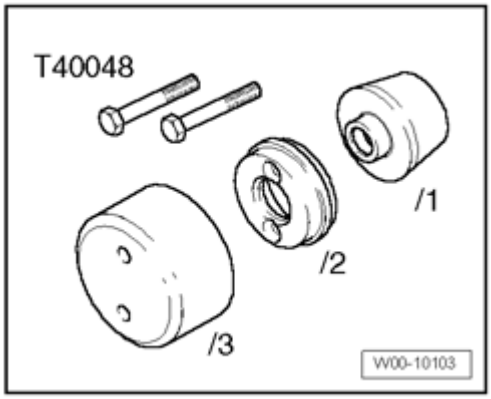

Fig. 644: Sliding Back Boot For Coolant Hoses At Connection Of Heater Core
Courtesy of VOLKSWAGEN UNITED STATES, INC.

- Slide back boot for coolant hoses at connection of heater core.
- Loosen coolant hose to heater core and pull back hose sufficiently so that the bleeder hole - **arrow** - is no longer sealed by connection.
- Fill up coolant until it escapes from the coolant hose bleeder hole without bubbles.
- Push coolant hose on connection and tighten.

- Twist cap for expansion tank closed.
- Start engine.
- Set heating air conditioning system to "HI".
- Let engine run at 2000 RPM for 3 minutes.

- Let engine run at idle long enough until both large coolant hoses on main cooler are warm.
- Let engine run at 2000 RPM for 1 minute.
- Turn off engine and allow it to cool off.

Check coolant level

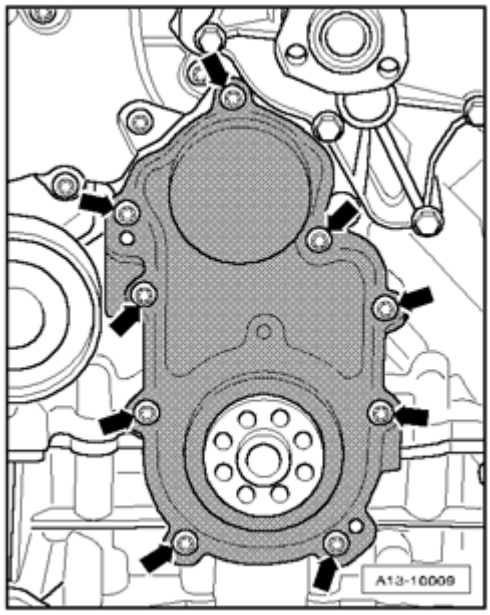

Fig. 645: Check Coolant Level
Courtesy of VOLKSWAGEN UNITED STATES, INC.

- Coolant level may be above MAX marking with engine at operating temperature.

Torque specifications

Component	Nm
Drain plug in coolant regulator housing	25

Coolant pump and coolant thermostat, component overview

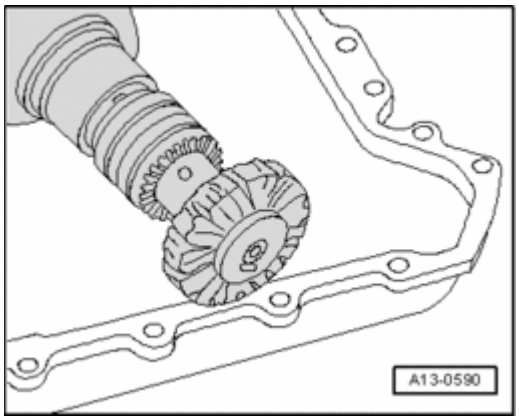

Fig. 646: Coolant Pump And Coolant Thermostat, Component Overview
Courtesy of VOLKSWAGEN UNITED STATES, INC.

1 - Coolant pump housing

- Removing and installing --> **Coolant pump, removing and installing**

2 - 10 Nm

3 - Front coolant line

- Removing and installing --> **Front coolant pipe, removing and installing**

4 - O-ring

- Replace

5 - 10 Nm

6 - Seal

- Replace

7 - Coolant pump

- Removing and installing --> **Coolant pump, removing and installing**

8 - O-ring

- Replace

9 - 10 Nm

10 - Drive shaft for oil pump

11 - O-ring

- Replace

12 - Seal

- Replace

13 - Coolant thermostat

- Removing and installing --> **Coolant thermostat, removing and installing**
- Installed location **Coolant thermostat installation location**
- Checking --> **Thermostat, checking**

14 - Thermostat housing

- Removing and installing --> **Coolant thermostat, removing and installing**

15 - Drain plug, 25 Nm

16 - Seal

- Replace

17 - 10 Nm

Coolant thermostat installation location

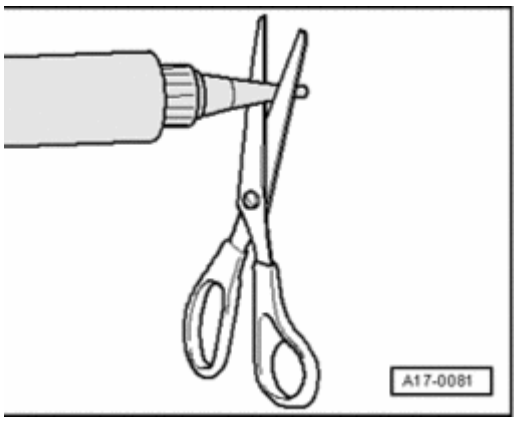

Fig. 647: Installed Location Of Bleeder Valve
Courtesy of VOLKSWAGEN UNITED STATES, INC.

- Bleeder valve - **arrow** - toward top.

Coolant pump, removing and installing

Removing

- Bring lock carrier into service position --> **Lock carrier, moving into service position**.
- Remove front coolant pipe --> **Front coolant pipe, removing and installing**.

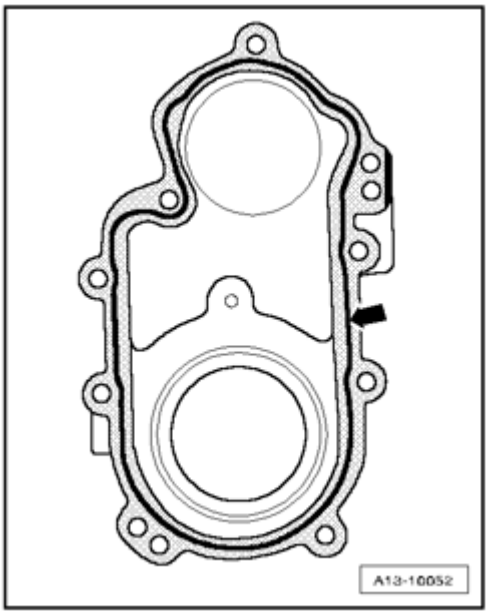

Fig. 648: Disconnecting Lower Coolant Hose From Radiator
Courtesy of VOLKSWAGEN UNITED STATES, INC.

- Disconnect lower coolant hose from radiator - **arrow** - and drain residual coolant.

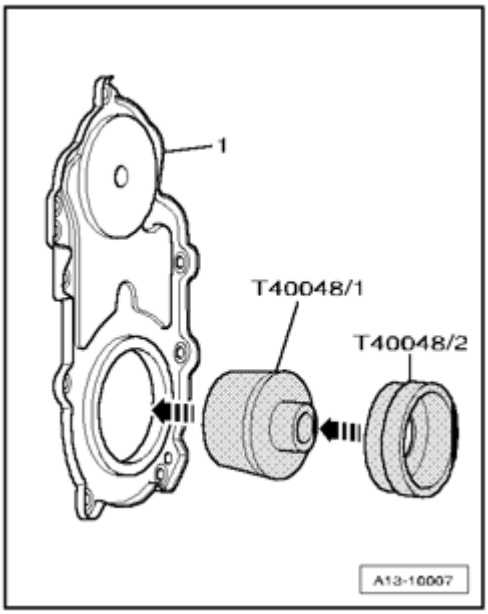

Fig. 649: Removing Bolts & Coolant Regulator Housing
Courtesy of VOLKSWAGEN UNITED STATES, INC.

- Disconnect coolant hoses at coolant regulator housing.
- Remove bolts - **arrows** -.
- Remove coolant regulator housing.

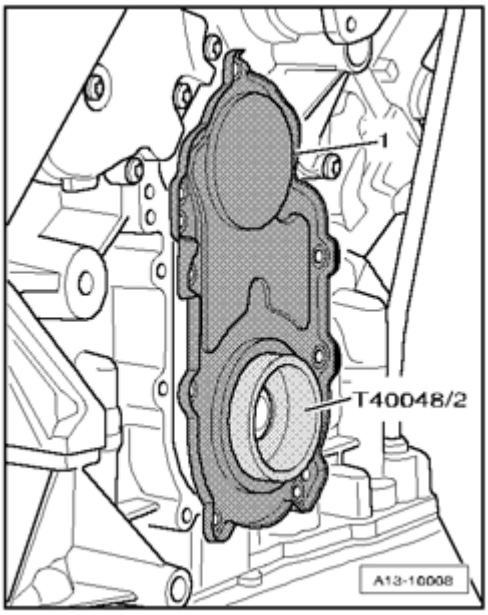

Fig. 650: Identifying Coolant Hose & Coolant Pump Housing Bolts
Courtesy of VOLKSWAGEN UNITED STATES, INC.

- Disconnect - **1** -.
- Remove bolts - **arrows** -.
- Remove coolant pump housing toward front, pay attention to drive shaft for coolant pump while doing this.

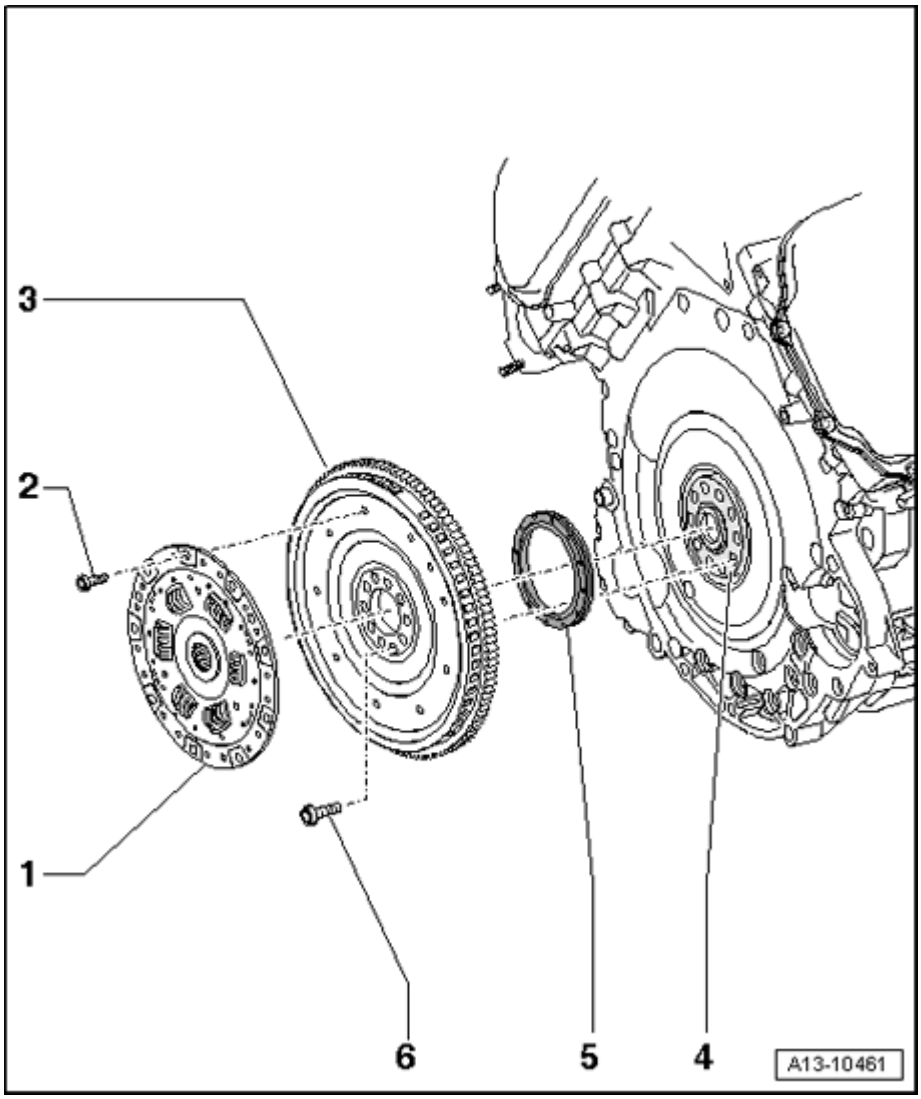

Fig. 651: Removing/Installing Drive Shaft For Coolant Pump From Oil Pump
Courtesy of VOLKSWAGEN UNITED STATES, INC.

- Remove drive shaft - **arrow** - for coolant pump from guide on oil pump.

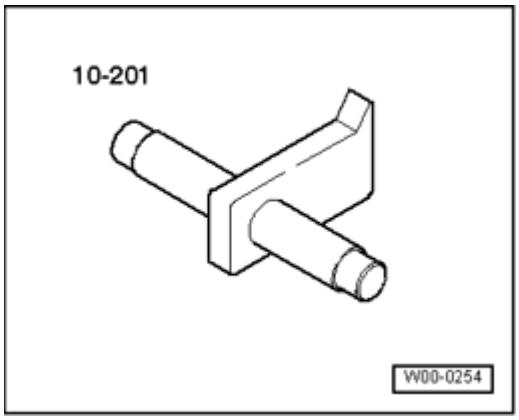

Fig. 652: Removing Bolts & Coolant Pump From Housing
Courtesy of VOLKSWAGEN UNITED STATES, INC.

- Remove bolts - **arrows** -.
- Remove coolant pump - **2** - from housing - **1** -.

Installing

NOTE:

- **Replace seals and O-rings.**
- **Secure all hose connections using hose clamps appropriate for the model type .**

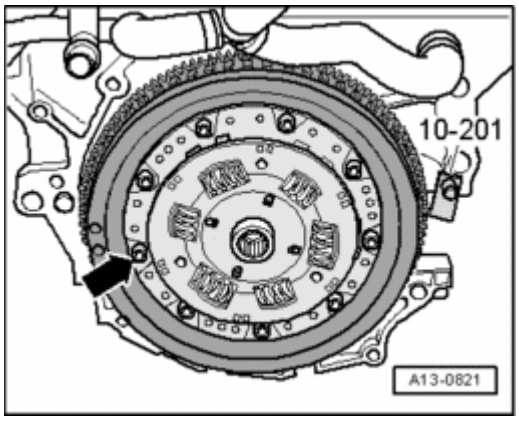

Fig. 653: Removing/Installing Drive Shaft For Coolant Pump From Oil Pump
Courtesy of VOLKSWAGEN UNITED STATES, INC.

- Insert drive shaft - **arrow** - for coolant pump into oil pump mount on engine.
- Slide coolant pump into mounts on upper section of oil pan.

NOTE:

- **To connect drive flange onto hex head of drive shaft, reach with the finger into the lower pipe connection of coolant pump and twist at impeller until coolant pump can be inserted completely.**

The rest of installation is in reverse order of removal, note the following:

- Install coolant regulator --> **Coolant thermostat, removing and installing**.
- Install front coolant pipe --> **Front coolant pipe, removing and installing**.
- Install lock carrier with attachments -->
  - **50 BODY, FRONT**
  - **50 - BODY - FRONT** for BODY EXTERIOR - CABRIOLET

.

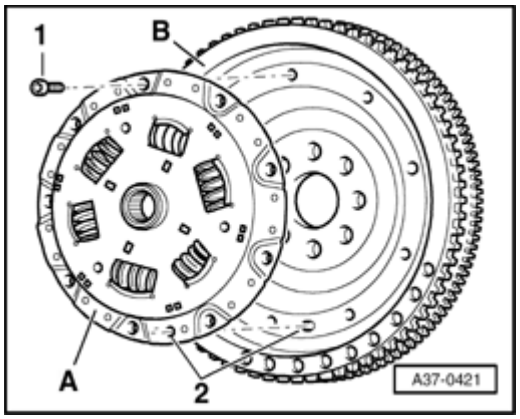

Fig. 654: Placing Torque Support On Rubber Buffer For Torque Support And Tightening Bolts
Courtesy of VOLKSWAGEN UNITED STATES, INC.

- Place torque support on rubber buffer for torque support and tighten bolts - **arrows** -.
- Install front bumper cover -->
  - **63 BUMPER**
  - **63 - BUMPERS** for BODY EXTERIOR - CABRIOLET

  .
- Fill with coolant **Filling**.
- Check headlight adjustment -->
  - **01 - MAINTENANCE**
  - **01 - MAINTENANCE** for MAINTENANCE PROCEDURES - CABRIOLET

  .

Torque specifications

Component	Nm
Coolant pump to housing	10
Coolant pump housing to upper section of oil pan	10
Torque support stop to lock carrier	28

After-Run Coolant Pump V51 , removing and installing

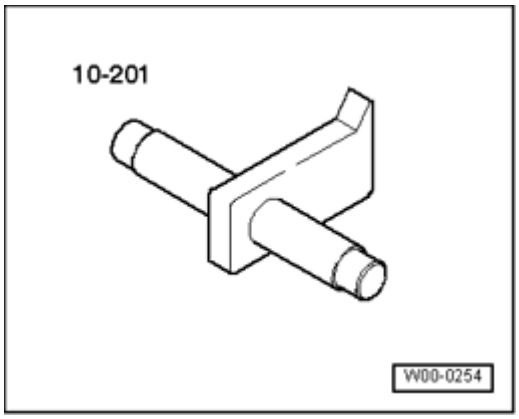

Fig. 655: Disconnecting Electrical Harness Connector For After-Run Coolant Pump V51
Courtesy of VOLKSWAGEN UNITED STATES, INC.

Location: In coolant hose behind left headlight.

- Disconnect electrical harness connector - **arrow** - for After-Run Coolant Pump V51 (behind auxiliary radiator at left) and move electrical wiring clear.
- Activating After-Run Coolant Pump V51 or after connecting new ECM.
- Follow instructions in Guided Fault-finding.
- Enter correct vehicle into Guided Fault-finding.

- Press "Go to" button
- Select "Function/component selection"
- Select "Powertrain"
- Select "Engine code"

- 01 - On Board Diagnostic (OBD) capable system
- Select "Functions"
- Select "Engine Control Module (ECM)"

Coolant thermostat, removing and installing

Special tools, testers and auxiliary items required

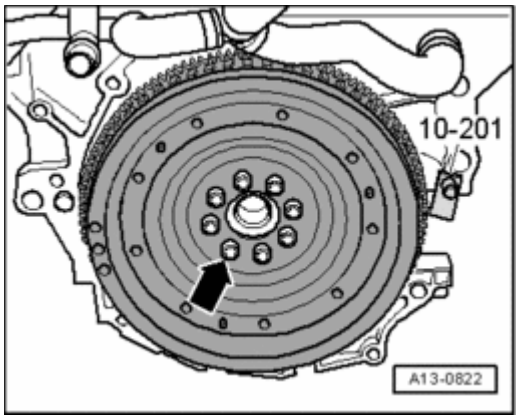

Fig. 656: Seal Installer 3265
Courtesy of VOLKSWAGEN UNITED STATES, INC.

- Seal installer 3265

Removing

- Drain coolant --> **Cooling system, draining and filling**.
- Disconnect coolant hoses at coolant regulator housing.

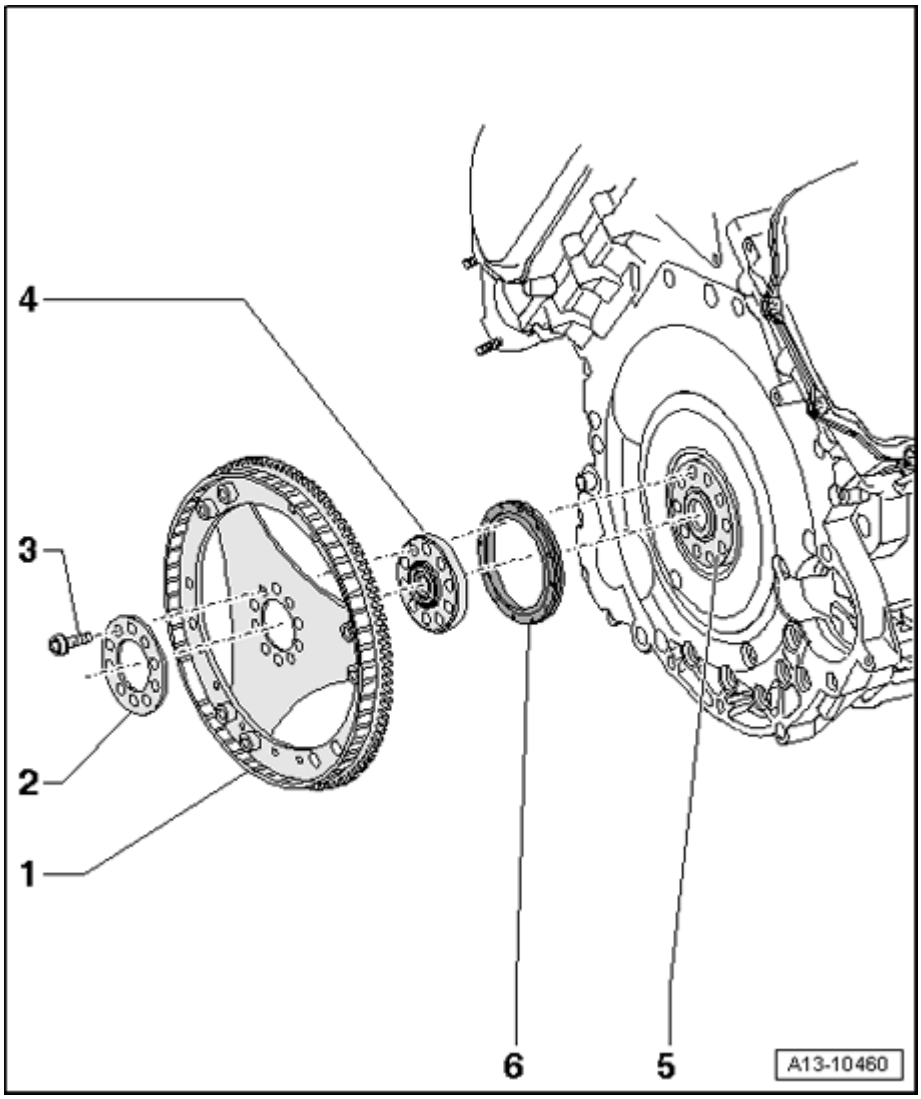

Fig. 657: Removing Bolts & Coolant Regulator Housing
Courtesy of VOLKSWAGEN UNITED STATES, INC.

- Remove bolts - **arrows** -.
- Remove coolant regulator housing.

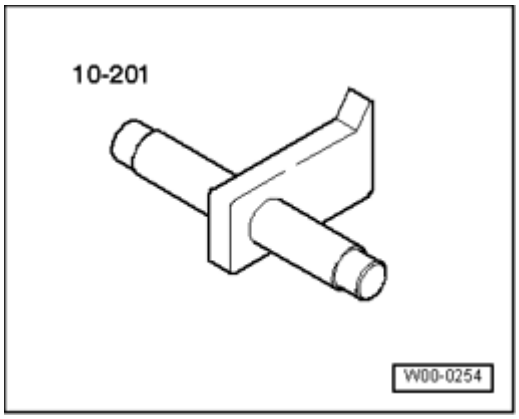

Fig. 658: Pressing Down Retaining Bracket Using Seal Installer 3265
Courtesy of VOLKSWAGEN UNITED STATES, INC.

- Press down retaining bracket using Seal installer 3265 and rotate approx. 180 ° (one half turn) - **arrow** -.

Installing

Installation is in reverse order of removal, note the following:

NOTE:

- **Replace seals.**
- **Secure all hose connections using hose clamps appropriate for the model type.**

- Clean and smooth sealing surface.
- Insert coolant regulator.

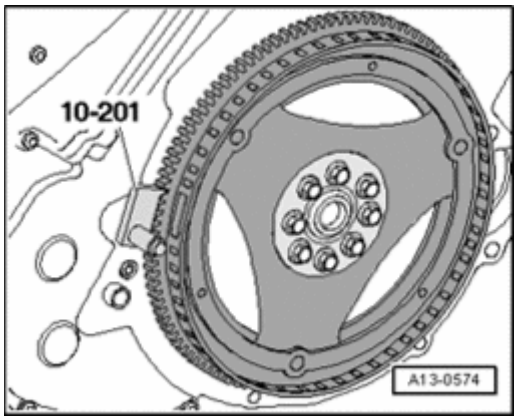

Fig. 659: Installed Location Of Bleeder Valve
Courtesy of VOLKSWAGEN UNITED STATES, INC.

- Installed location: Bleeder valve - **arrow** - toward top.

- Press down retaining bracket using Seal installer 3265 and rotate approx. 180 ° (one half rotation).

- Retaining bracket must be engaged beneath pin of connection.
- Fill with coolant **Filling**.

Torque specifications

Component	Nm
Coolant regulator housing to coolant pump housing	10

Thermostat, checking

- Heat up removed thermostat in water.

Opening begins	Opening ends	Opening lift
approx. 87 ° C	approx. 102 ° C [1)]	min. 8 mm
• [1)] Cannot be tested.		

Coolant pipes/hoses, component overview

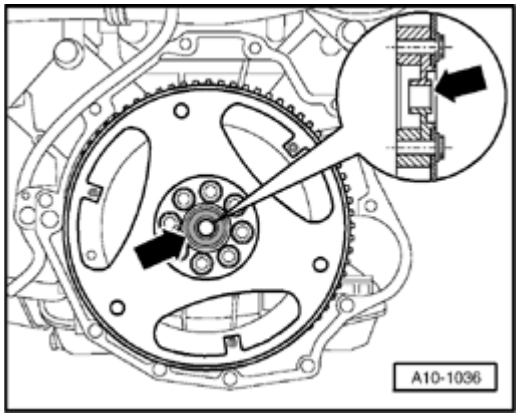

Fig. 660: Coolant Pipes/Hoses, Component Overview
Courtesy of VOLKSWAGEN UNITED STATES, INC.

1 - Front coolant line

- Removing and installing --> **Front coolant pipe, removing and installing**

2 - 10 Nm

3 - Seal

- Replace

4 - Coolant hose

- To generator

5 - 10 Nm

6 - Coolant hose

- To upper radiator

7 - Right coolant line

- Removing and installing --> **Right coolant pipe, removing and installing**

8 - O-ring

- Replace

9 - 10 Nm

10 - Coolant hose

- To coolant expansion tank

11 - Rear coolant pipe

- Removing and installing --> **Rear coolant pipe, removing and installing**

12 - O-ring

- Replace

13 - Engine Coolant Temperature (ECT) Gauge Sensor G2/G62

14 - Retaining clip

15 - Coolant hose

- To heater core

16 - 10 Nm

17 - Coolant hose

- To left auxiliary cooler

18 - Left coolant line

- Removing and installing --> **Left coolant pipe, removing and installing**

19 - Plug

20 - Coolant hose

- To coolant regulator housing

21 - O-ring

- Replace

Front coolant pipe, removing and installing

Special tools, testers and auxiliary items required

- Drip tray for workshop crane VAS 6208

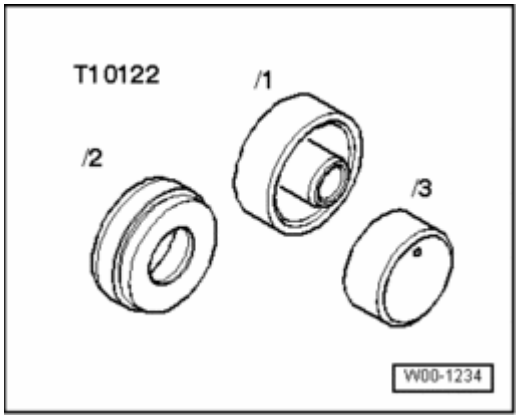

Fig. 661: Drip Tray For VAS 6100, VAS 6208
Courtesy of VOLKSWAGEN UNITED STATES, INC.

Removing

- Drain coolant --> **Cooling system, draining and filling**.
- Bring lock carrier into service position --> **Lock carrier, moving into service position**.

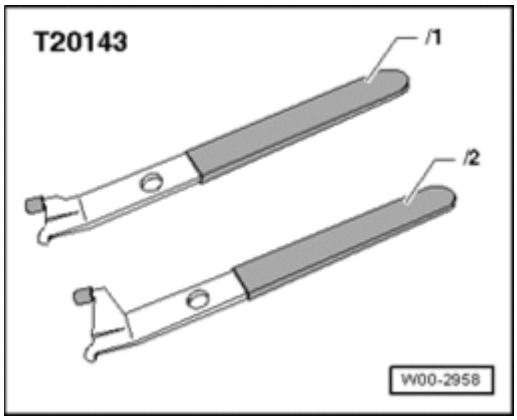

Fig. 662: Removing Bolts And Torque Support From Engine
Courtesy of VOLKSWAGEN UNITED STATES, INC.

- Remove bolts - **arrows** - and remove torque support from engine.
- Place drip tray for workshop crane VAS 6208 under engine.

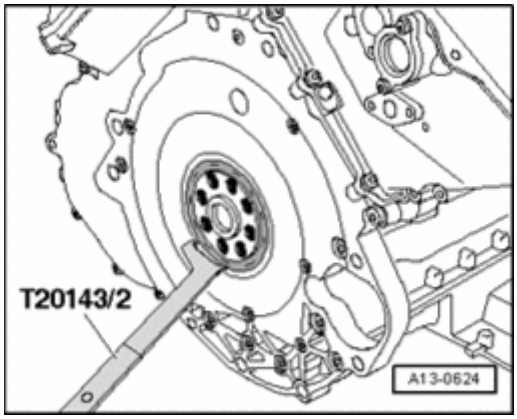

Fig. 663: Removing Front Coolant Pipe On Engine
Courtesy of VOLKSWAGEN UNITED STATES, INC.

- Remove front coolant pipe on engine - **arrows** -.

Installing

Installation is in reverse order of removal, note the following:

NOTE:

- **Replace seals and O-rings.**
- **Secure all hose connections using hose clamps appropriate for the model type .**

- Install the lock carrier with attachments -->
  - **50 BODY, FRONT**
  - **50 - BODY - FRONT** for BODY EXTERIOR - CABRIOLET

.

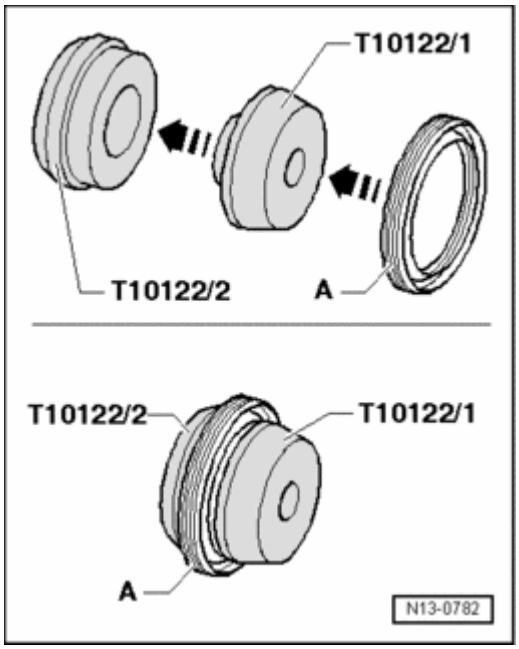

Fig. 664: Placing Torque Support On Rubber Buffer For Torque Support And Tightening Bolts
Courtesy of VOLKSWAGEN UNITED STATES, INC.

- Place torque support on rubber buffer for torque support and tighten bolts - **arrows** -.
- Install front bumper cover -->
  - **63 BUMPER**
  - **63 - BUMPERS** for BODY EXTERIOR - CABRIOLET

  .
- Fill with coolant **Filling**.
- Check headlight adjustment -->
  - **01 - MAINTENANCE**
  - **01 - MAINTENANCE** for MAINTENANCE PROCEDURES - CABRIOLET

  .

Torque specifications

Component		Nm
Coolant line	Coolant pump	10
front to	Oil pan (upper section)	10
Torque bracket to upper part of oil pan		42
Torque support stop to lock carrier		28

Rear coolant pipe, removing and installing

Special tools, testers and auxiliary items required

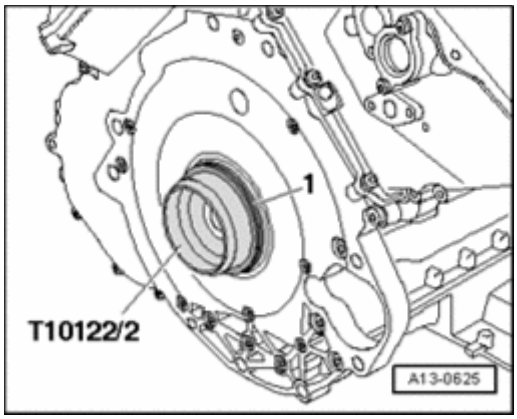

Fig. 665: Identifying Spring-Type Clip Pliers VAS 6340
Courtesy of VOLKSWAGEN UNITED STATES, INC.

- Hose clamp pliers VAS 6340

Removing

NOTE:

- **All cable ties opened or cut during engine removal must be reinstalled at the same locations during installation.**

- Drain coolant --> **Cooling system, draining and filling**.
- Bring lock carrier into service position --> **Lock carrier, moving into service position**.
- Remove right coolant pipe --> **Right coolant pipe, removing and installing**.
- Remove engine support bridge 10-222 A from engine compartment.

NOTE:

- **Engine support bridge was necessary to remove right coolant pipe, but it hinders the following work sequence.**

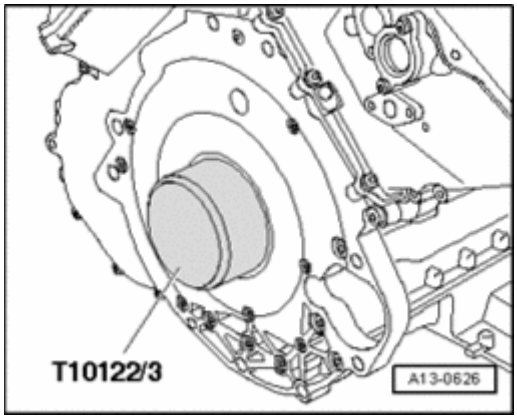

Fig. 666: Removing Coolant Hoses & Coolant Expansion Tank
Courtesy of VOLKSWAGEN UNITED STATES, INC.

- Remove coolant hoses - **1** - and - **2** -.

- Remove coolant expansion tank - **arrow** -.
- Disconnect electrical wiring to Engine Coolant Level (ECL) Warning Switch F66 at bottom of expansion tank.

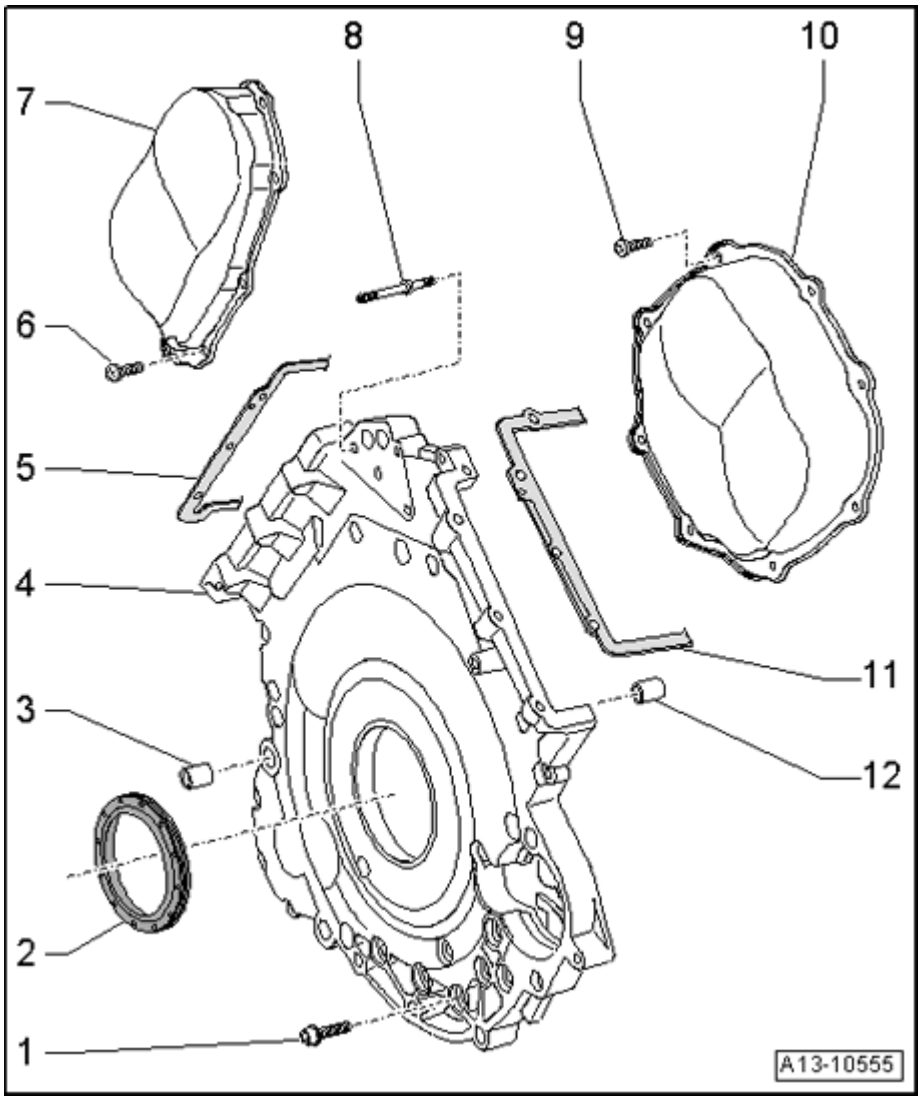

Fig. 667: Removing Bracket For Electrical Harness Connectors At Left From Bulkhead
Courtesy of VOLKSWAGEN UNITED STATES, INC.

- Remove electrical harness connectors - **1 to 4** - from bracket at left of bulkhead.
- Remove bracket from bulkhead.

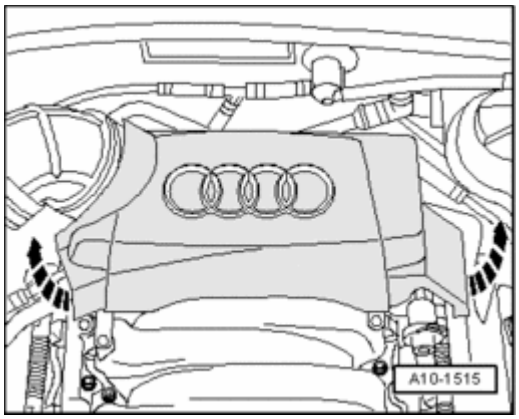

Fig. 668: Disconnecting Brake Booster Vacuum Hose From Grommet On Bulkhead
Courtesy of VOLKSWAGEN UNITED STATES, INC.

- Disconnect vacuum line - **arrow** - to brake booster at bulkhead.

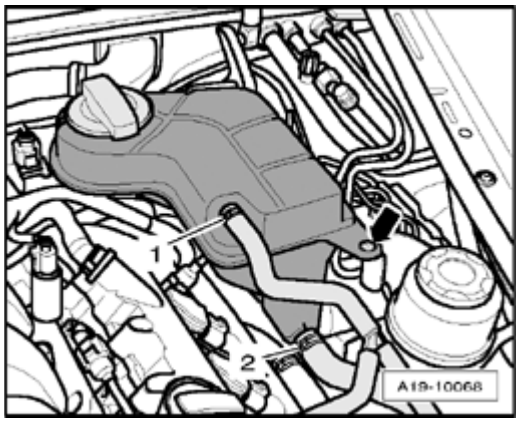

Fig. 669: Disconnecting Coolant Hose To Heater Core At Rear Coolant Pipe On Engine
Courtesy of VOLKSWAGEN UNITED STATES, INC.

- Disconnect coolant hose to heater core at rear coolant pipe on engine.

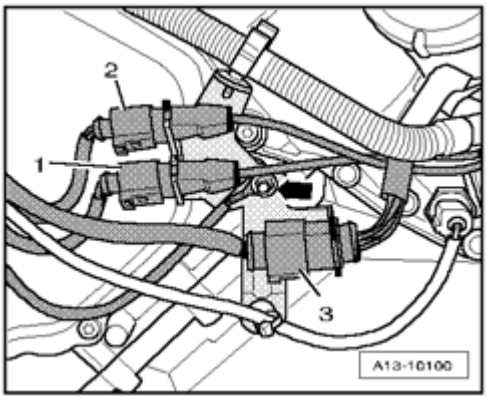

Fig. 670: Disconnecting Coolant Hose From Y-Connector
Courtesy of VOLKSWAGEN UNITED STATES, INC.

- Disconnect coolant hose from Y-connector - **arrow** -.

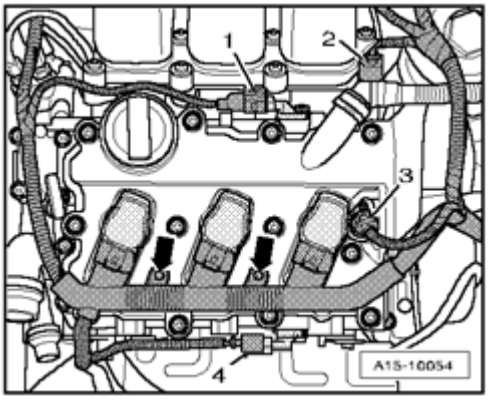

Fig. 671: Disconnecting Electrical Harness Connector For Camshaft Position (CMP) Sensor 2 G163 On Left Cylinder Head
Courtesy of VOLKSWAGEN UNITED STATES, INC.

- Disconnect electrical harness connector - **arrow** - for Camshaft Position (CMP) Sensor 2 G163 on left cylinder head.

NOTE:

- **The following illustration shows the engine as removed, from behind.**

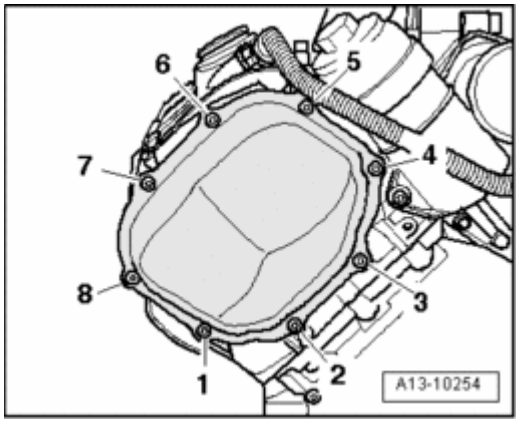

Fig. 672: Pressing Sealing Ring For Crankshaft At Rear Out Of Cover
Courtesy of VOLKSWAGEN UNITED STATES, INC.

- Disconnect electrical harness connector - **arrow** - for Camshaft Position (CMP) Sensor G40 on right cylinder head.

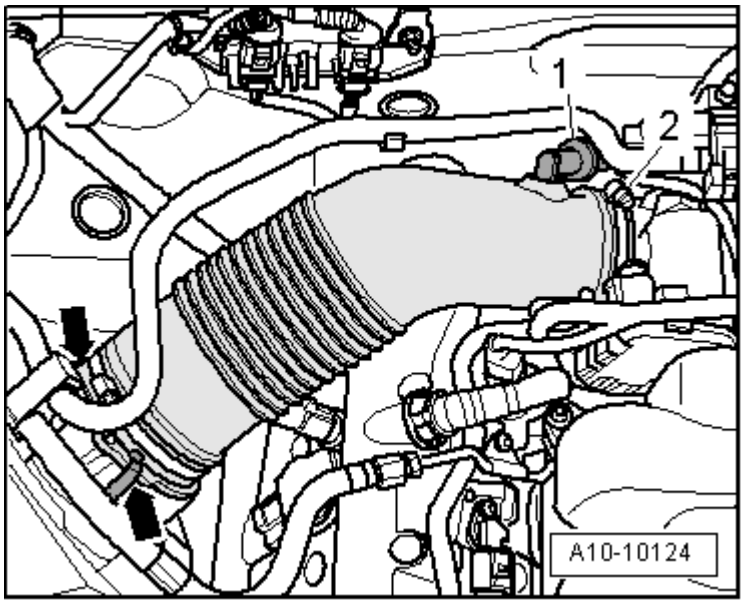

Fig. 673: Disconnecting Electrical Harness Connector On Engine Coolant Temperature (ECT) Gauge Sensor G2/G62
Courtesy of VOLKSWAGEN UNITED STATES, INC.

- Disconnect the electrical connector - **2** - on Engine Coolant Temperature (ECT) Gauge Sensor G2/G62.
- Remove nut - **1** - and remove electrical wiring harness at rear coolant pipe.

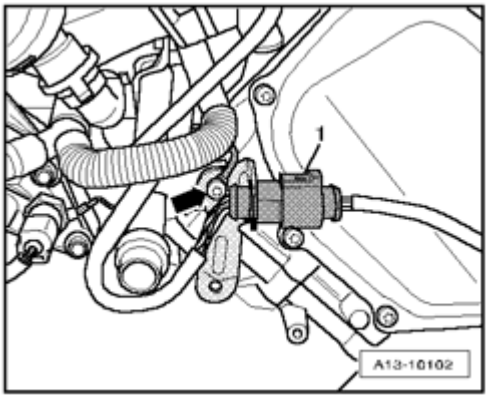

Fig. 674: Removing Bolts & Rear Coolant Pipe
Courtesy of VOLKSWAGEN UNITED STATES, INC.

- Loosen hose clips - **1** - using Hose Clip Pliers VAS 6340.
- Loosen hose clip - **6** - using Hose Clips Pliers VAS 6340 and remove coolant hose.
- Remove bolts - **2 to 5** -.
- Remove rear coolant pipe.

Installing

Installation is in reverse order of removal, note the following:

NOTE:

- **Replace O-rings.**
- **Secure all hose connections using hose clamps appropriate for the model type .**
- **During installation, all cable ties must be re-installed at the same location.**

- Clean and/or smooth O-rings sealing surface before installing.
- Coat new O-rings with non-corrosive lubricant (Vaseline), install rear coolant pipe and tighten.
- Install right coolant pipe --> **Right coolant pipe, removing and installing**.
- Install lock carrier with attachments -->
  - **50 BODY, FRONT**
  - **50 - BODY - FRONT** for BODY EXTERIOR - CABRIOLET

.

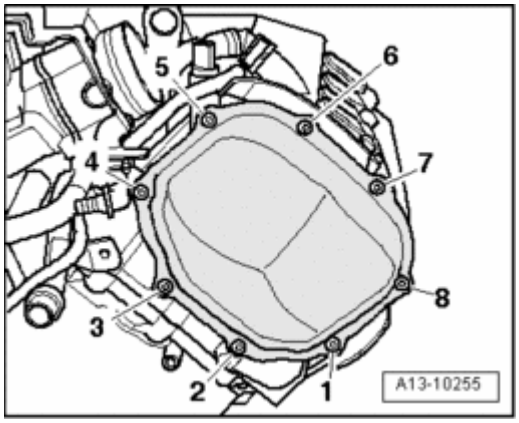

Fig. 675: Placing Torque Support On Rubber Buffer For Torque Support And Tightening Bolts
Courtesy of VOLKSWAGEN UNITED STATES, INC.

- Place torque support on rubber buffer for torque support and tighten bolts - **arrows** -.
- Install front bumper cover -->
  - **63 BUMPER**
  - **63 - BUMPERS** for BODY EXTERIOR - CABRIOLET

.

- Fill with coolant **Filling**.
- Check headlight adjustment -->
  - **01 - MAINTENANCE**
  - **01 - MAINTENANCE** for MAINTENANCE PROCEDURES - CABRIOLET

.

Torque specifications

Component	Nm

Rear coolant pipe to cylinder head	10
Retaining clamps to rear coolant pipe	10

Left coolant pipe, removing and installing

Special tools, testers and auxiliary items required

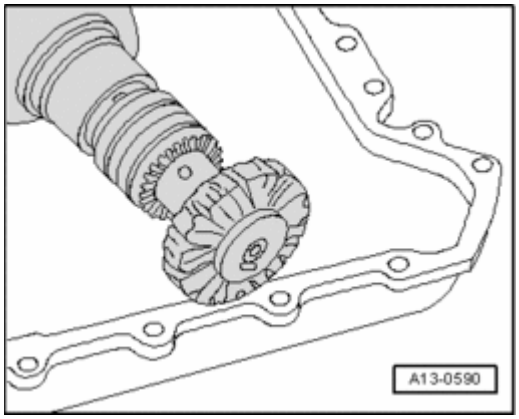

Fig. 676: Identifying Hose Clip Pliers Vag 1921
Courtesy of VOLKSWAGEN UNITED STATES, INC.

- Hose clamp pliers V.A.G 1921

Removing

- Remove engine: Vehicles with manual transmission --> **Engine (vehicles with manual transmission)** , vehicles with automatic transmission --> **Engine (vehicles with automatic transmission), removing**.

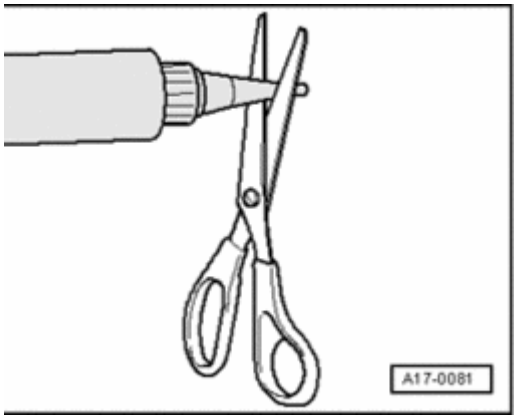

Fig. 677: Removing Bolts & Return Line From Power-Steering Pump
Courtesy of VOLKSWAGEN UNITED STATES, INC.

- Remove bolts - **1** - and - **2** -.

NOTE:

- **To prevent oil from escaping, the hose - arrow - remains connected to**

power steering.

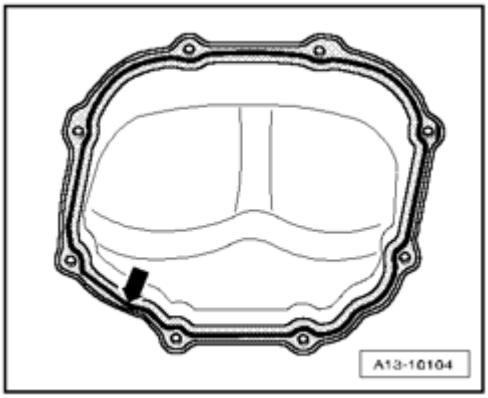

Fig. 678: Removing Bolt From Oil Dipstick Guide Tube At Cylinder Head
Courtesy of VOLKSWAGEN UNITED STATES, INC.

- Remove guide pipe for oil dipstick at cylinder head - **arrow** - , pull up and remove.

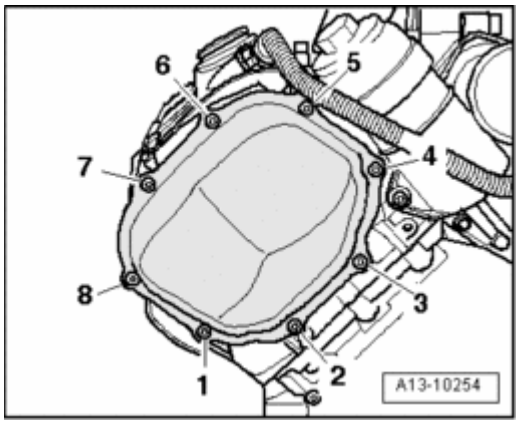

Fig. 679: Removing Bolts, Loosening Hose Clamps And Removing Left Coolant Pipe From Coolant Hoses
Courtesy of VOLKSWAGEN UNITED STATES, INC.

- Remove bolts - **1** - and - **2** -.
- Loosen hose clamps - **arrows** - and remove left coolant pipe from coolant hoses.

Installing

Installation is in reverse order of removal, note the following:

NOTE:

- **Replace O-ring.**
- **Secure all hose connections using hose clamps appropriate for the model type .**

- Replace O-ring at guide tube for oil dipstick and insert guide tube into hole in oil pan (upper part).

- Install engine: Vehicles with manual transmission --> **Engine (vehicles with manual transmission), installing** , vehicles with automatic transmission --> **Engine (vehicles with automatic transmission), installing**.

Torque specifications

Component		Nm
Left coolant pipe to cylinder head		10
Oil dip stick guide tube to cylinder head		10
Return line of	Bracket	10
power-steering to	Engine support	10

Right coolant pipe, removing and installing

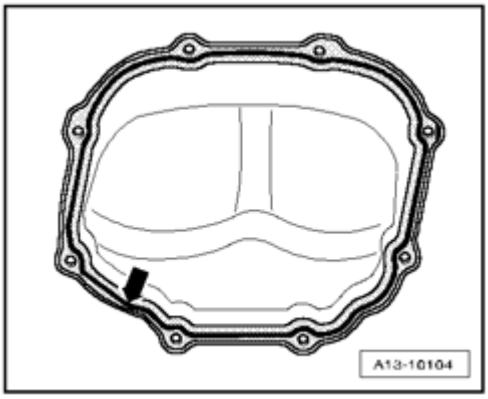

Fig. 680: Identifying Special Tools - Right Coolant Pipe, Removing And Installing
Courtesy of VOLKSWAGEN UNITED STATES, INC.

Special tools, testers and auxiliary items required

- Engine support bridge 10-222 A
- Shackle 10-222 A/12
- Hose clamp pliers VAS 6340
- Insert pad for front fender T40045

Removing

NOTE:

- **All cable ties opened or cut during engine removal must be reinstalled at the same locations during installation.**

- Drain coolant --> **Cooling system, draining and filling**.
- Bring lock carrier into service position --> **Lock carrier, moving into service position**.

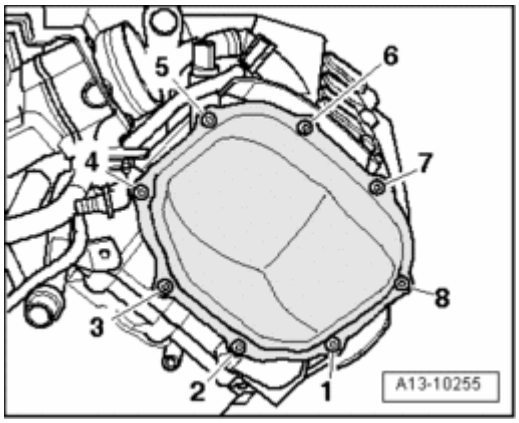

Fig. 681: Removing Wiring Harness Bracket At Right Engine Plate
Courtesy of VOLKSWAGEN UNITED STATES, INC.

- Remove wiring harness bracket at right engine console - **arrows** -.

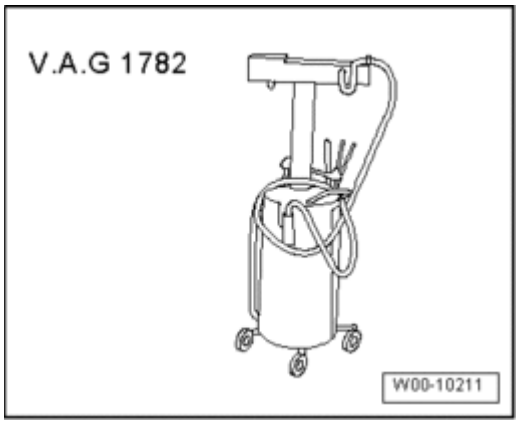

Fig. 682: Removing Lower Nut On Right Engine Mount
Courtesy of VOLKSWAGEN UNITED STATES, INC.

- Remove lower nut - **1** - on right engine mount.

NOTE:

- **Ignore - 2 -.**

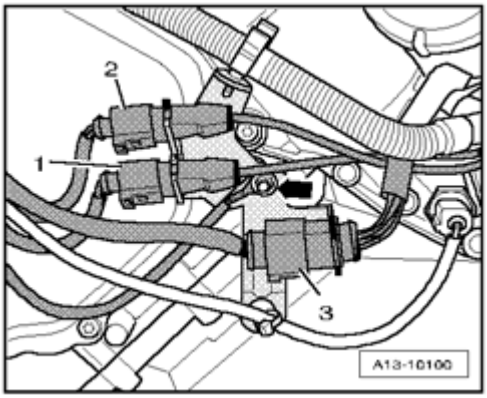

Fig. 683: Removing Rear Engine Cover
Courtesy of VOLKSWAGEN UNITED STATES, INC.

- Remove rear engine cover - **arrows** -.

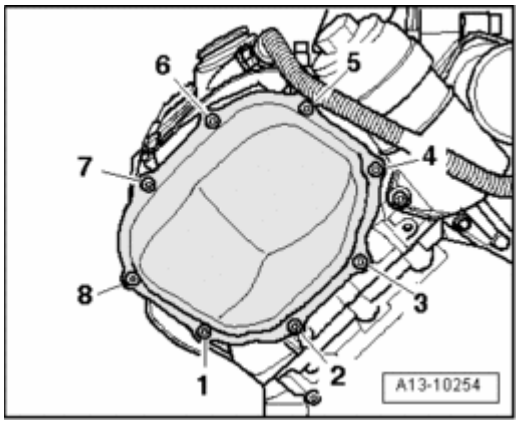

Fig. 684: Removing Front Engine Cover
Courtesy of VOLKSWAGEN UNITED STATES, INC.

- Remove front engine cover - **arrows 1 and 2** -.

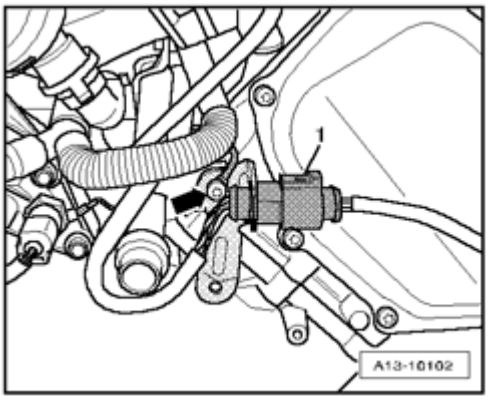

Fig. 685: Removing Cover In Engine Compartment (Right Side)
Courtesy of VOLKSWAGEN UNITED STATES, INC.

- Remove cover - **1** - in engine compartment (right side).

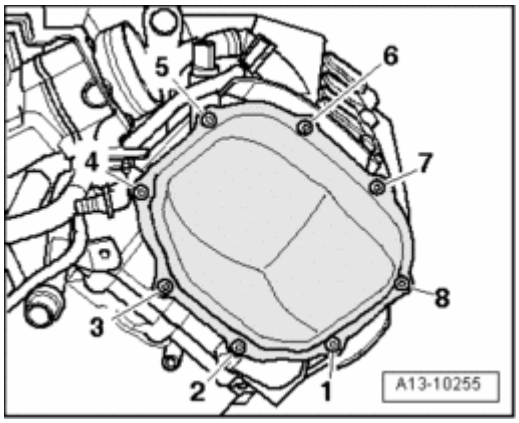

Fig. 686: Identifying Evaporative Emission Canister Purge Regulator Valve N80 And Air Duct
Courtesy of VOLKSWAGEN UNITED STATES, INC.

- Disengage Evaporative Emission (EVAP) Canister Purge Regulator Valve N80 - **item 1** - from air guide.
- Remove bolts - **arrows** -.
- Remove air duct - **2** -.

CAUTION: Note rules of cleanliness for working on the fuel injection system --> Rules for cleanliness.

CAUTION: Fuel system is under pressure! Before opening system, place rags around connection area. Then release pressure by carefully loosening connection.

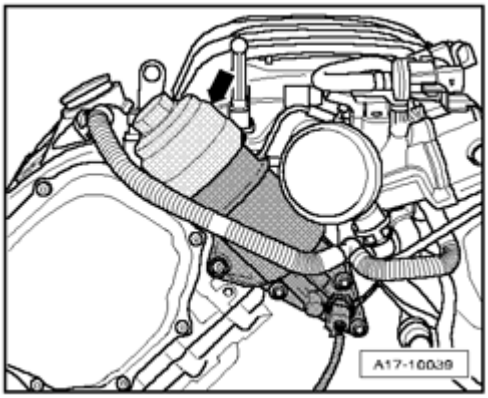

Fig. 687: Installing/Removing Fuel Hose To/From Connection On Fuel Rail Line
Courtesy of VOLKSWAGEN UNITED STATES, INC.

- Remove fuel hose from connection on fuel rail line. To do so, counter hold using an open-end wrench at hex head - **1** - and - **3** - and remove union nut - **2** -.

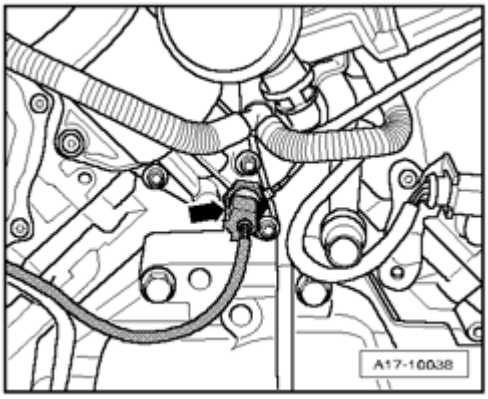

Fig. 688: Identifying Electrical Harness Connectors, Secondary Air Injection (AIR) Pump Hose, Air Guide Hose & Mass Air Flow (MAF) Sensor
Courtesy of VOLKSWAGEN UNITED STATES, INC.

- Disconnect electrical harness connector - **2** - from Evaporative Emission (EVAP) Canister Purge Regulator Valve N80.
- Disconnect electrical harness connector - **3** - at Mass Air Flow (MAF) Sensor G70.
- Disconnect hose - **1** - to Secondary Air Injection (AIR) pump.
- Disconnect air guide hose - **4** - at Mass Air Flow (MAF) sensor.

- Move wiring harness clear at air filter housing.
- Remove clip and remove air filter housing with Mass Air Flow (MAF) sensor.

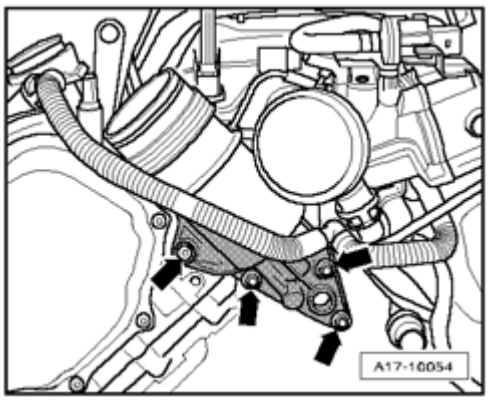

Fig. 689: Disconnecting Vacuum Hose & Air Guide Hose From Throttle Valve Control Module
Courtesy of VOLKSWAGEN UNITED STATES, INC.

- Disconnect vacuum hose - **1** -.
- Disconnect air guide hose - **2** - from throttle valve control module.

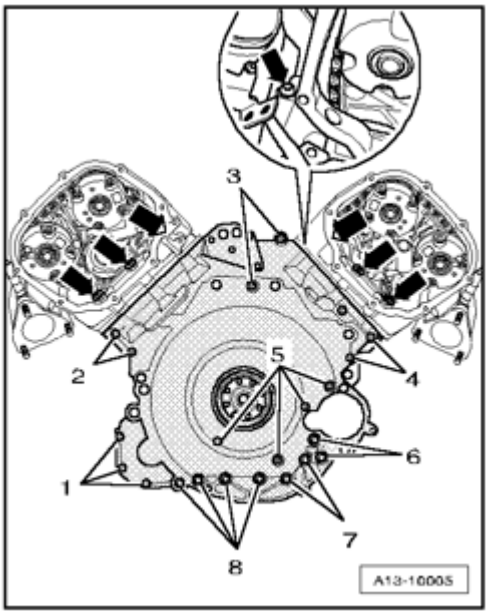

Fig. 690: Disconnecting Vacuum Hose From Intake Manifold
Courtesy of VOLKSWAGEN UNITED STATES, INC.

- Disconnect vacuum hose - **arrow** - from intake manifold.

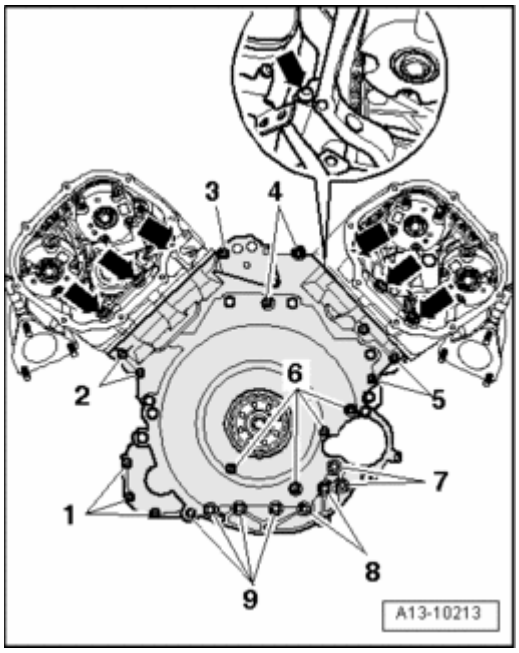

Fig. 691: Disconnecting Hose For Crankcase Ventilation From Right Cylinder Head Cover
Courtesy of VOLKSWAGEN UNITED STATES, INC.

- Disconnect hose for crankcase ventilation from right cylinder head cover - **arrow** -.

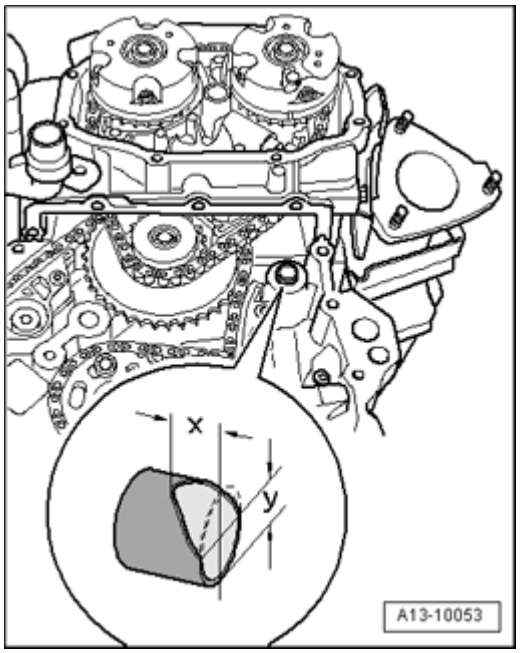

Fig. 692: Removing Bracket For Electrical Harness Connectors At Right From Bulkhead
Courtesy of VOLKSWAGEN UNITED STATES, INC.

- Remove electrical harness connectors - **1 to 4** - from bracket at right of bulkhead.
- Free up cables.

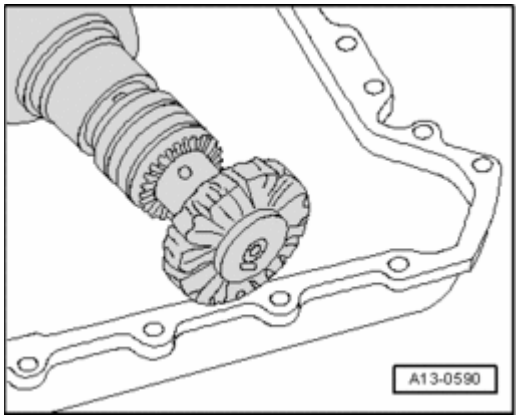

Fig. 693: Securing Shackle 10-222 A/12 To Right Rear Engine Lifting Eyelet
Courtesy of VOLKSWAGEN UNITED STATES, INC.

- Secure shackle 10-222 A/12 to right rear engine lifting eyelet.

NOTE:

- **Ignore - 1 -.**

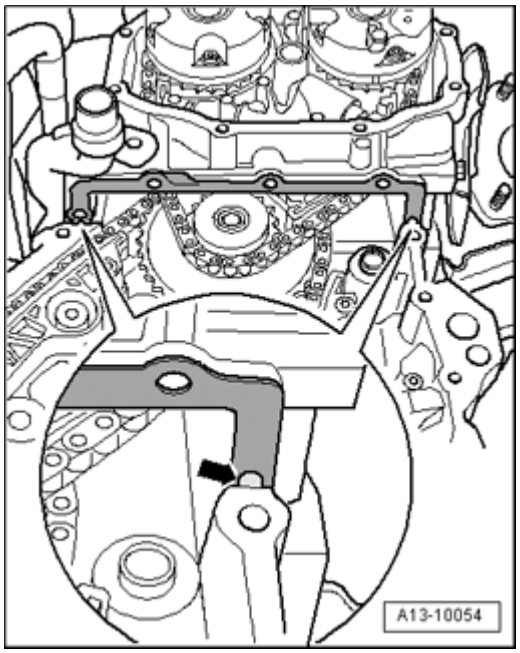

Fig. 694: Engaging Shackle 10-222 A/12 On Spindle Of Engine Support Bridge 10-222 A
Courtesy of VOLKSWAGEN UNITED STATES, INC.

- Position engine support bridge 10-222 A onto bolted flange of fenders.
- Engage shackle 10-222 A/12 on spindle of engine support bridge 10-222 A.
- Raise engine slightly using spindle on engine support bridge.

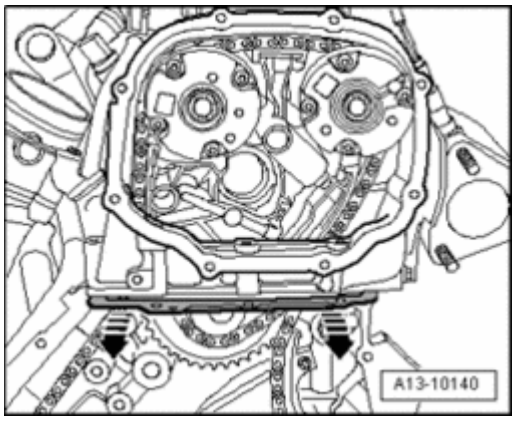

Fig. 695: Disconnecting Top Coolant Hose From Radiator
Courtesy of VOLKSWAGEN UNITED STATES, INC.

- Disconnect top coolant hose - **arrow** - from radiator.

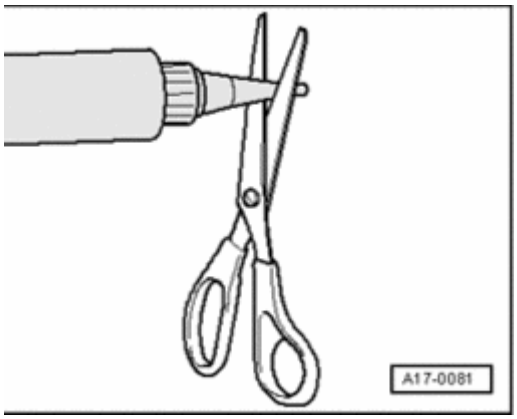

Fig. 696: Disconnecting Air Hose At Right On Engine
Courtesy of VOLKSWAGEN UNITED STATES, INC.

- Disconnect air hose - **arrow** - to combination valves for Secondary Air Injection (AIR).

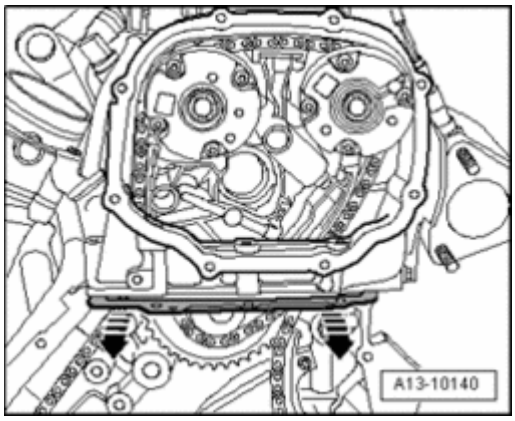

Fig. 697: Removing Bolts, Loosening Hose Clamps And Removing Right Coolant Pipe From Coolant Hoses
Courtesy of VOLKSWAGEN UNITED STATES, INC.

- Remove bolts - **1** - and - **2** -.
- Loosen hose clamps - **arrows** - and remove right coolant pipe from coolant hoses.
- If necessary, remove engine support bridge to remove coolant pipe.

Installing

Installation is in reverse order of removal, note the following:

NOTE:

- **Secure all hose connections using hose clamps appropriate for the model type .**
- **During installation, all cable ties must be re-installed at the same location.**

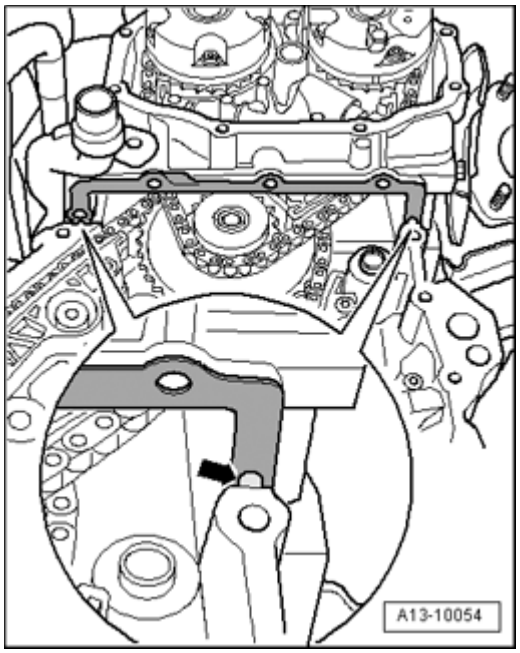

Fig. 698: Installing/Removing Fuel Hose To/From Connection On Fuel Rail Line
Courtesy of VOLKSWAGEN UNITED STATES, INC.

- Secure fuel hose to connection on fuel rail line. To do so, counter hold using an open-end wrench at each hex head - **1** - and - **3** - and tighten union nut - **2** - to 22 Nm.
- Install lock carrier with attachments -->
  - **50 BODY, FRONT**
  - **50 - BODY - FRONT** for BODY EXTERIOR - CABRIOLET

.

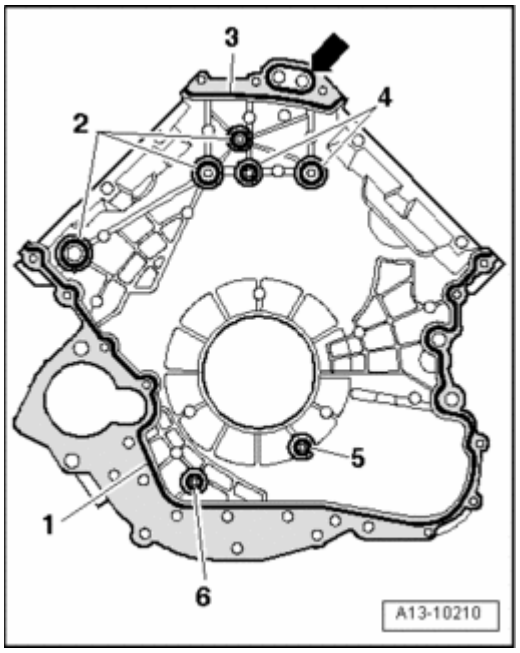

Fig. 699: Placing Torque Support On Rubber Buffer For Torque Support And Tightening Bolts
Courtesy of VOLKSWAGEN UNITED STATES, INC.

- Place torque support on rubber buffer for torque support and tighten bolts - **arrows** -.
- Install front bumper cover -->
  - **63 BUMPER**
  - **63 - BUMPERS** for BODY EXTERIOR - CABRIOLET

  .
- Fill with coolant **Filling**.
- Check headlight adjustment -->
  - **01 - MAINTENANCE**
  - **01 - MAINTENANCE** for MAINTENANCE PROCEDURES - CABRIOLET

  .

Torque specifications

Component	Nm
Right coolant pipe to cylinder head	10
Left engine mount to engine console	23
Oil pipes to rear air guide pipe	10
Fuel supply line to fuel rail	22
Torque support stop to lock carrier	28

Radiator, removing and installing

Special tools, testers and auxiliary items required

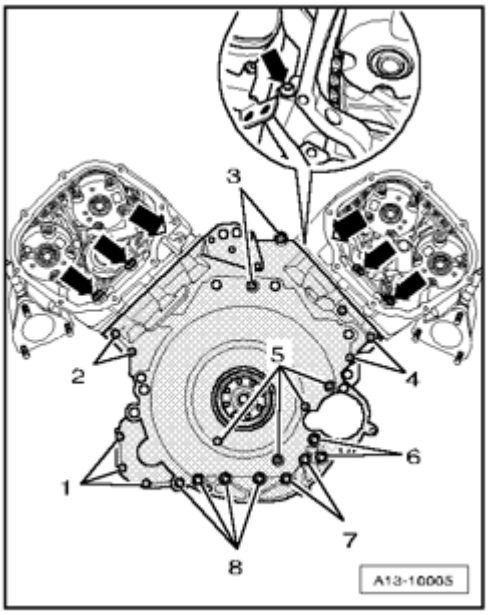

Fig. 700: Drip Tray For VAS 6100, VAS 6208
Courtesy of VOLKSWAGEN UNITED STATES, INC.

- Drip tray for workshop crane VAS 6208

Removing

NOTE:

- **Drained coolant must be stored in a clean container for disposal or reuse.**
- **When assembled correctly, radiator and condenser can show slight impressions on fins. This is not damage. Radiators or condensers should not be replaced because of slight impressions like these.**

CAUTION: Cover cap of expansion tank with rag and open carefully, as hot steam i.e. hot coolant may escape when opening.

- Open cap of coolant expansion tank.

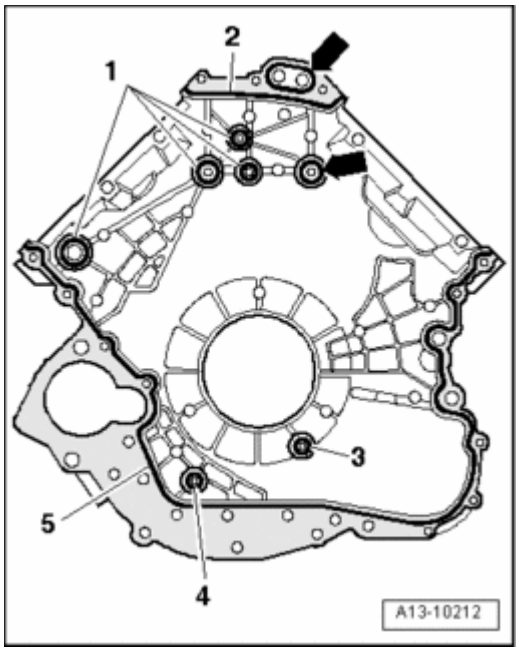

Fig. 701: Removing Quick-Release Fasteners, Screws And Noise Insulation
Courtesy of VOLKSWAGEN UNITED STATES, INC.

- Remove quick-release fasteners - **1** - , remove screws - **2** - and remove noise insulation.
- Remove front bumper cover -->
  - **63 BUMPER**
  - **63 - BUMPERS** for BODY EXTERIOR - CABRIOLET

.

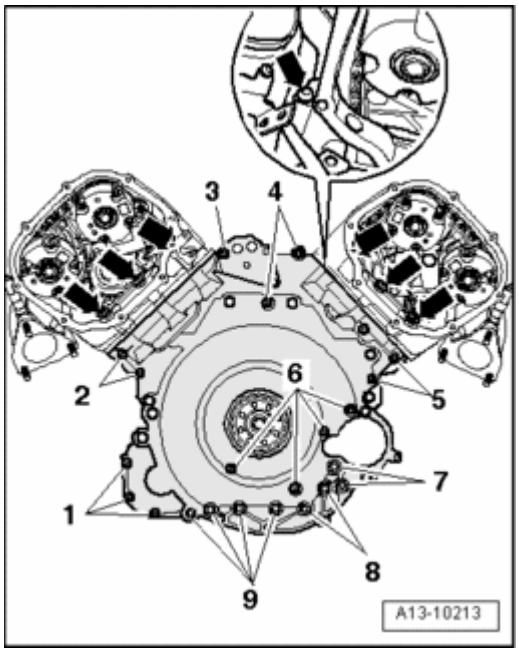

Fig. 702: Removing Right Air Guide In Front Of Auxiliary Cooler

Courtesy of VOLKSWAGEN UNITED STATES, INC.

- Remove right air guide - **arrow** - in front of auxiliary cooler.

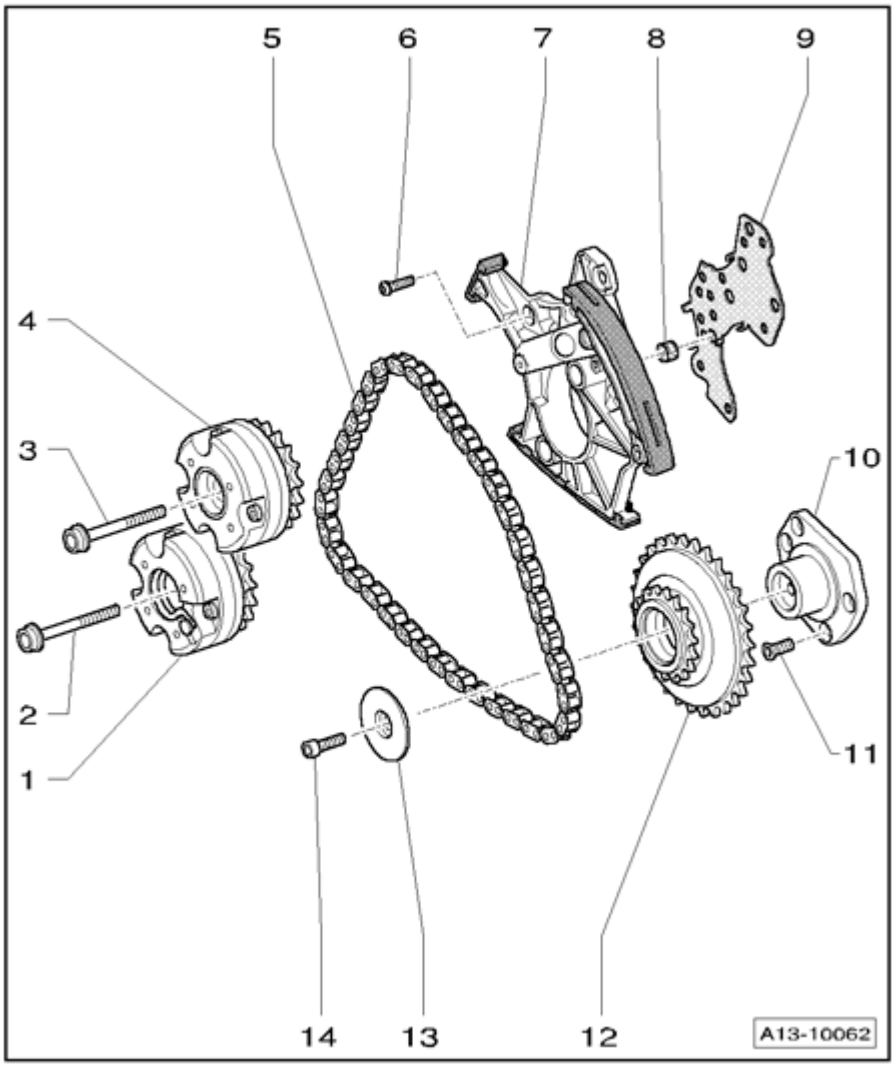

Fig. 703: Removing Left Air Guide In Front Of Auxiliary Cooler
Courtesy of VOLKSWAGEN UNITED STATES, INC.

- Remove left air guide - **arrow** - in front of auxiliary cooler.

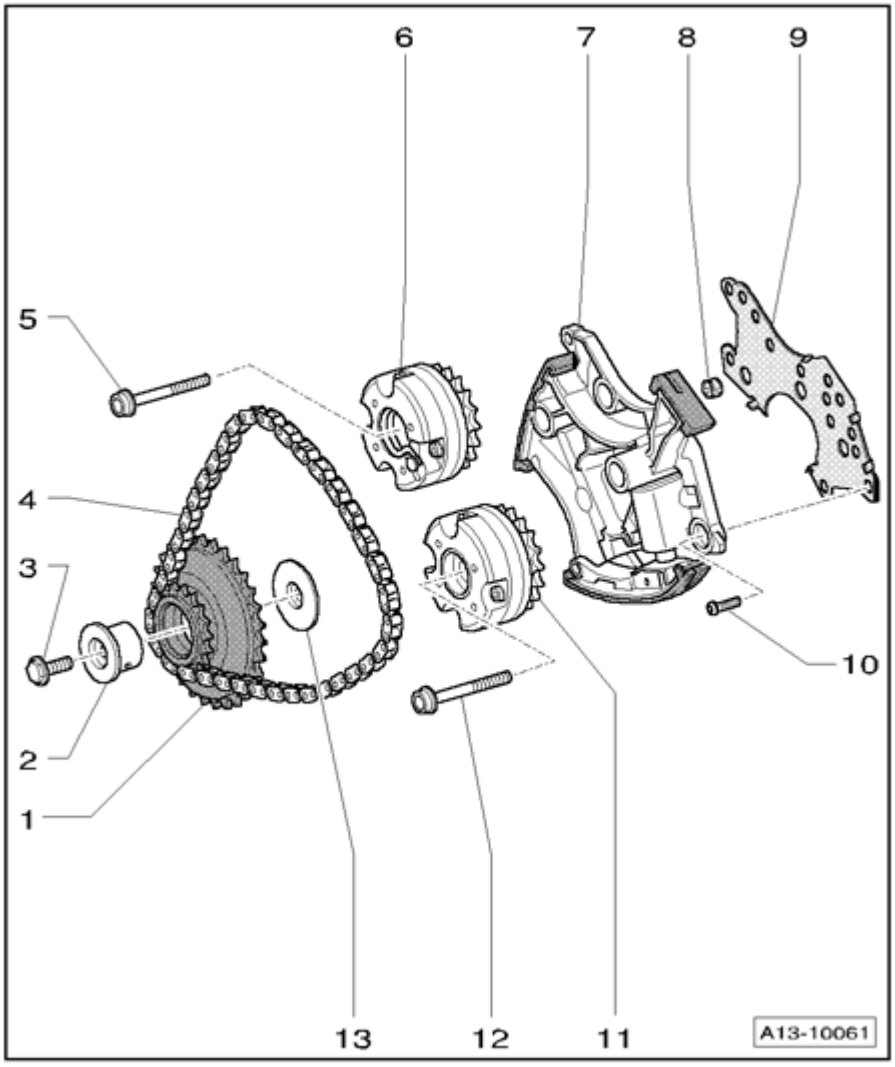

Fig. 704: Removing Drain Plug On Coolant Thermostat Housing
Courtesy of VOLKSWAGEN UNITED STATES, INC.

- Place drip tray for workshop crane VAS 6208 under engine.
- Remove drain plug - **arrow** - on coolant thermostat housing and drain coolant from engine.

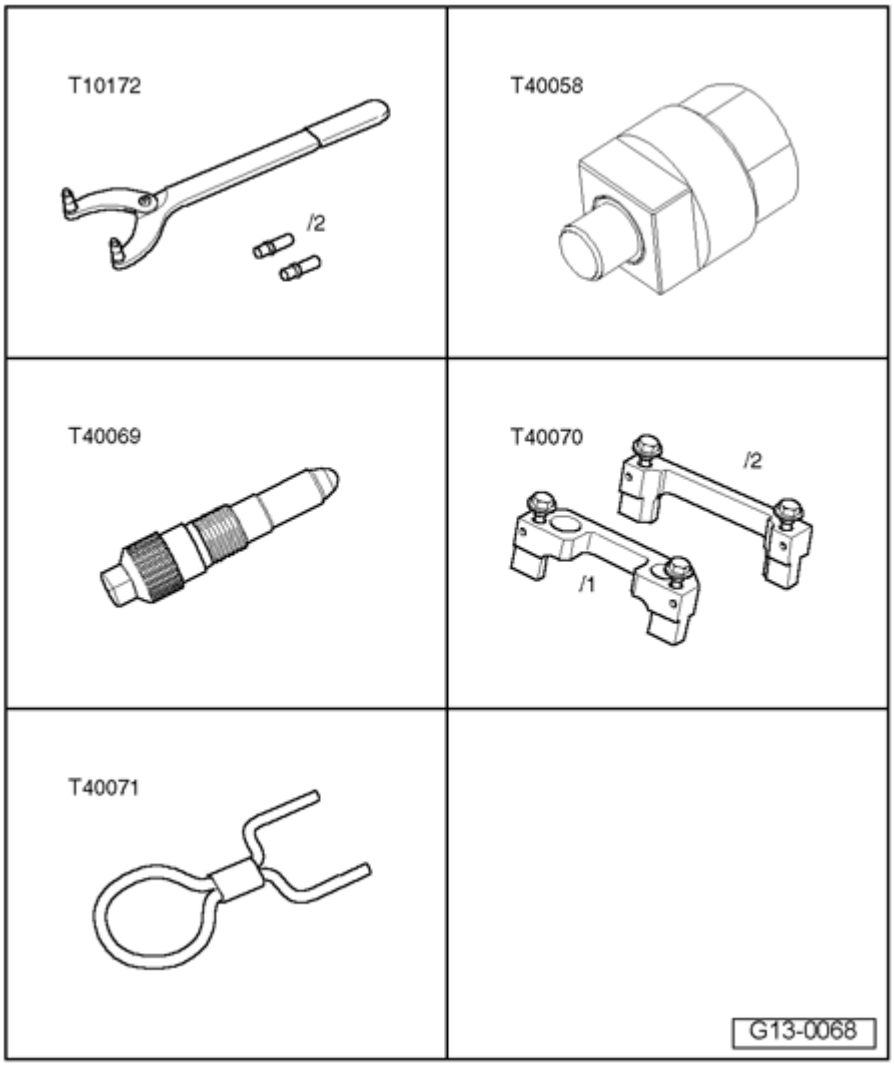

Fig. 705: Disconnecting Lower Coolant Hose From Radiator
Courtesy of VOLKSWAGEN UNITED STATES, INC.

- Disconnect lower coolant hose from radiator - **arrow** - and drain residual coolant.

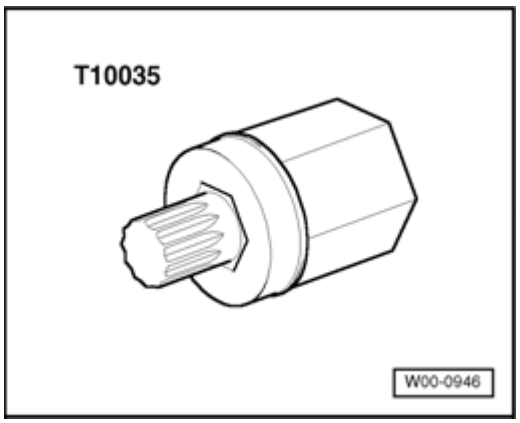

Fig. 706: Removing Cover In Engine Compartment (Right Side)
Courtesy of VOLKSWAGEN UNITED STATES, INC.

- Remove cover - **1** - in engine compartment (right side).

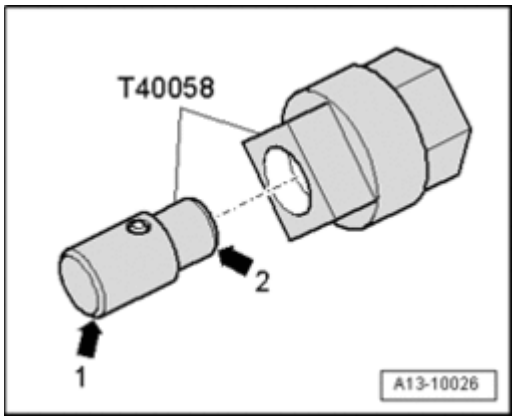

Fig. 707: Identifying Evaporative Emission Canister Purge Regulator Valve N80 And Air Duct
Courtesy of VOLKSWAGEN UNITED STATES, INC.

- Disengage Evaporative Emission (EVAP) Canister Purge Regulator Valve N80 - **item 1** - from air guide.
- Remove bolts - **arrows** -.
- Remove air duct - **2** -.

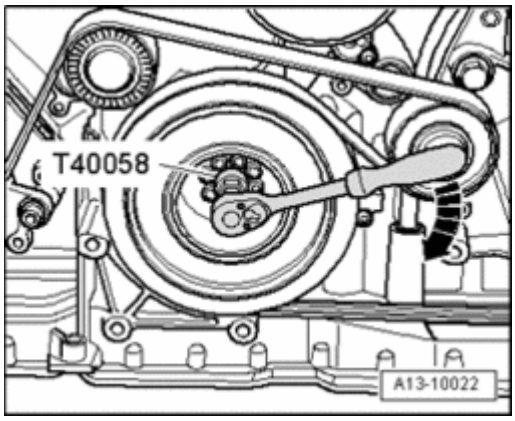

Fig. 708: Disconnecting Top Coolant Hose From Radiator
Courtesy of VOLKSWAGEN UNITED STATES, INC.

- Disconnect top coolant hose - **arrow** - from radiator.

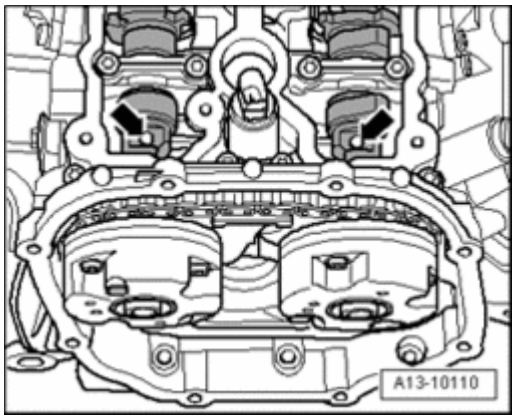

Fig. 709: Removing Bolts On Left/Right Air Guides At Cooler
Courtesy of VOLKSWAGEN UNITED STATES, INC.

- Remove bolts - **arrows** - on left and right air guides at cooler.

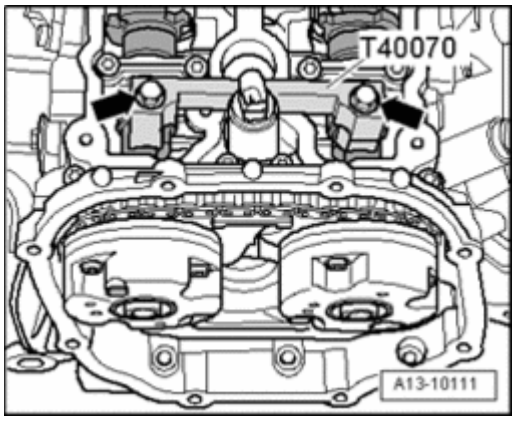

Fig. 710: Removing Power Steering Hydraulic Oil Cooling Pipe
Courtesy of VOLKSWAGEN UNITED STATES, INC.

- Unclip Outside Air Temperature Sensor G17 - **1** - from bracket and free up wire.
- Remove power steering hydraulic oil cooling pipe - **arrows** - ; do not open hydraulic oil circuit.
- Tie up power steering hydraulic oil cooling pipe to side.

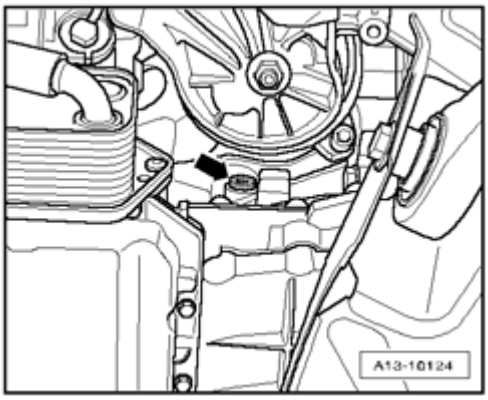

Fig. 711: Removing Coolant Fan Control (FC) Control Module J293 From Radiator
Courtesy of VOLKSWAGEN UNITED STATES, INC.

- Remove Coolant Fan Control (FC) Control Module J293 from radiator - **arrow** -.

CAUTION: The air conditioning refrigerant circuit must not be opened.

NOTE:

- **To prevent damage to condenser and also to the refrigerant lines/hoses, ensure that the pipes and hoses are not stretched, kinked or bent.**

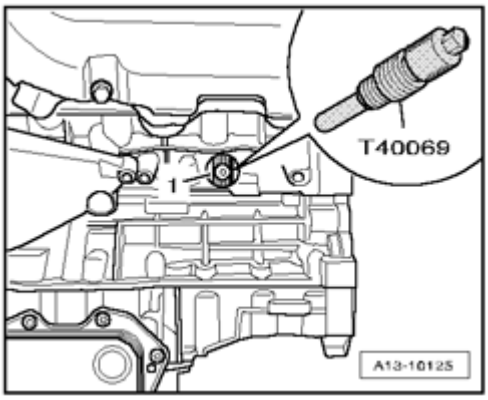

Fig. 712: Disconnecting Electrical Harness Connector At High Pressure Sensor G65
Courtesy of VOLKSWAGEN UNITED STATES, INC.

- Disconnect electrical harness connector - **1** - at High Pressure Sensor G65.
- Remove bolts - **arrows** -.
- Remove condenser and swing downward with lines connected.

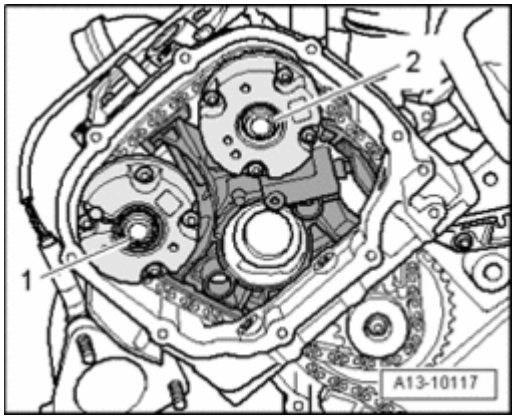

Fig. 713: Releasing Both Radiator Retaining Pins And Removing By Pulling Upward
Courtesy of VOLKSWAGEN UNITED STATES, INC.

- Release both radiator retaining pins and remove by pulling upward - **arrows** -.

- Tilt radiator at upper edge forward, pull up and remove.

Installing

Installation is in reverse order of removal, note the following:

- Install the front bumper cover -->
  - **63 BUMPER**
  - **63 - BUMPERS** for BODY EXTERIOR - CABRIOLET

  .
- Fill with coolant **Filling**.

NOTE:

- **Complete coolant must be replaced if the radiator was replaced.**

Torque specifications

Component	Nm
Condenser to radiator	10
Cooling coil to radiator	10
Coolant Fan Control (FC)Control Module J293 to radiator	10
Drain plug to coolant regulator housing	25

Left auxiliary cooler, removing and installing

Special tools, testers and auxiliary items required

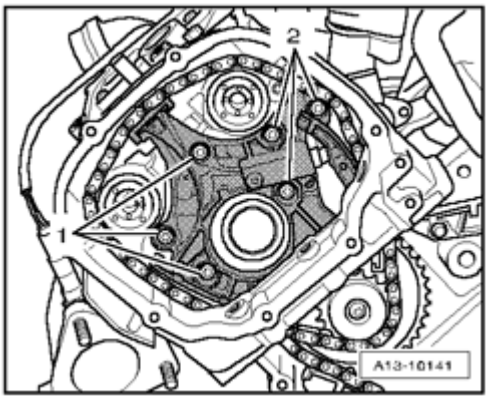

Fig. 714: Drip Tray For VAS 6100, VAS 6208
Courtesy of VOLKSWAGEN UNITED STATES, INC.

- Drip tray for workshop crane VAS 6208

Removing

- Drain coolant --> **Cooling system, draining and filling**.
- Bring lock carrier into service position --> **Lock carrier, moving into service position**.

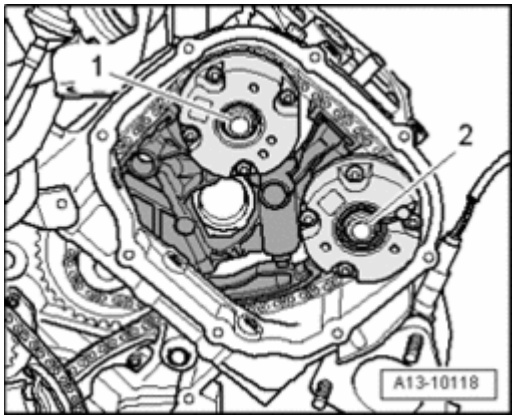

Fig. 715: Disconnecting Coolant Hoses & Removing Bolt
Courtesy of VOLKSWAGEN UNITED STATES, INC.

- Disconnect coolant hoses - **1** - and - **2** -.
- Remove bolt - **arrow** -.
- Remove left auxiliary cooler.

Installing

Installation is in reverse order of removal, note the following:

NOTE:

- **Secure all hose connections using hose clamps appropriate for the model type .**

- Install lock carrier with attachments -->
  - **50 BODY, FRONT**
  - **50 - BODY - FRONT** for BODY EXTERIOR - CABRIOLET

.

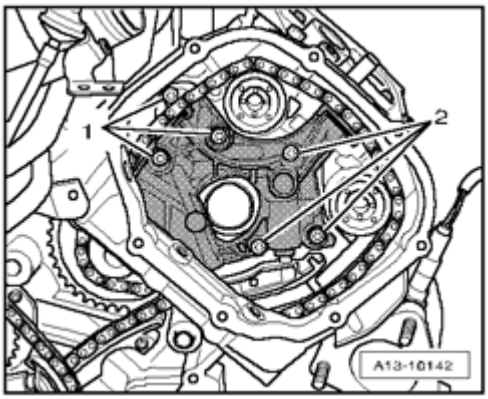

Fig. 716: Placing Torque Support On Rubber Buffer For Torque Support And Tightening Bolts
Courtesy of VOLKSWAGEN UNITED STATES, INC.

- Place torque support on rubber buffer for torque support and tighten bolts - **arrows** -.
- Install front bumper cover -->
  - **63 BUMPER**
  - **63 - BUMPERS** for BODY EXTERIOR - CABRIOLET

  .
- Fill with coolant **Filling**.

NOTE:

- **Complete coolant must be replaced if the radiator was replaced.**

- Check headlight adjustment -->
  - **01 - MAINTENANCE**
  - **01 - MAINTENANCE** for MAINTENANCE PROCEDURES - CABRIOLET

  .

Torque specifications

Component	Nm
Left auxiliary cooler to bracket	10

Right auxiliary cooler, removing and installing

Special tools, testers and auxiliary items required

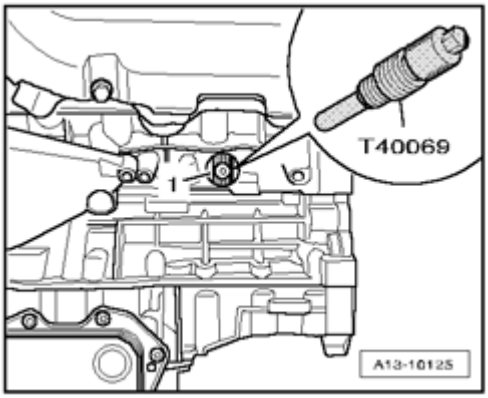

Fig. 717: Drip Tray For VAS 6100, VAS 6208
Courtesy of VOLKSWAGEN UNITED STATES, INC.

- Drip tray for workshop crane VAS 6208

Removing

- Drain the coolant --> **Cooling system, draining and filling**.
- Bring the lock carrier into service position --> **Lock carrier, moving into service position**.

CAUTION: Note rules of cleanliness for working on the fuel injection system --> Rules for cleanliness.

CAUTION: Fuel system is under pressure! Before opening system, place rags around connection area. Then release pressure by carefully loosening connection.

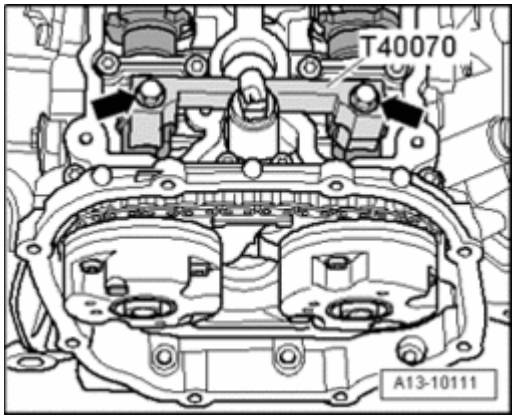

Fig. 718: Installing/Removing Fuel Hose To/From Connection On Fuel Rail Line
Courtesy of VOLKSWAGEN UNITED STATES, INC.

- Remove fuel hose from connection on fuel rail line. To do so, counter hold using an open-end wrench at hex head - **1** - and - **3** - and remove union nut - **2** -.

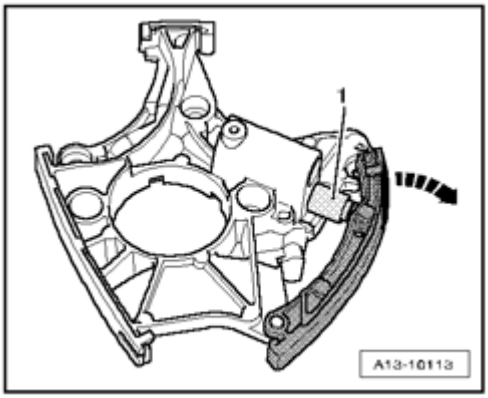

Fig. 719: Identifying Electrical Harness Connectors, Secondary Air Injection (AIR) Pump Hose, Air Guide Hose & Mass Air Flow (MAF) Sensor
Courtesy of VOLKSWAGEN UNITED STATES, INC.

- Disconnect electrical harness connector - **2** - from Evaporative Emission (EVAP) Canister Purge Regulator Valve N80.
- Disconnect electrical harness connector - **3** - at Mass Air Flow (MAF) Sensor G70.

- Disconnect hose - **1** - to Secondary Air Injection (AIR) pump.
- Disconnect air guide hose - **4** - at Mass Air Flow (MAF) sensor.

- Move wiring harness clear at air filter housing.
- Remove clip and remove air filter housing with Mass Air Flow (MAF) sensor.

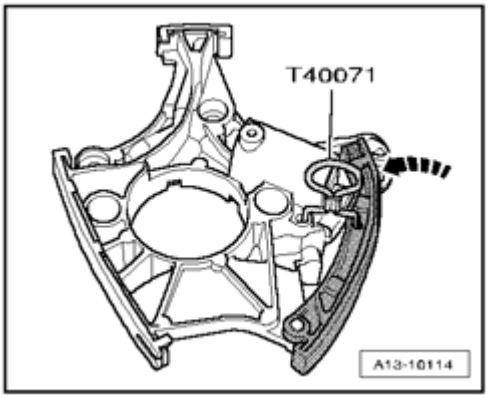

Fig. 720: Removing Bolts & Right Auxiliary Cooler Together With Coolant Hoses
Courtesy of VOLKSWAGEN UNITED STATES, INC.

- Disconnect upper hose on auxiliary cooler - **arrow** -.
- Remove bolts - **1** - and - **2** -.

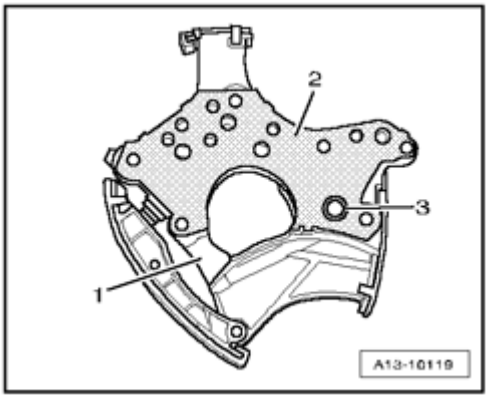

Fig. 721: Removing Wiring Harness Bracket At Right Engine Plate
Courtesy of VOLKSWAGEN UNITED STATES, INC.

- Remove wiring harness bracket at right engine plate - **arrows** -.

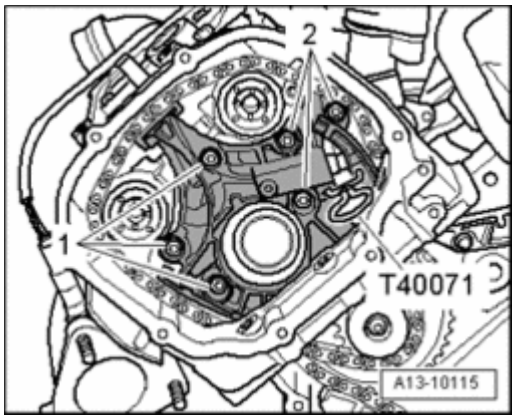

Fig. 722: Disconnecting Lower Coolant Hose On Auxiliary Cooler & Removing Nuts And Bracket
Courtesy of VOLKSWAGEN UNITED STATES, INC.

- Disconnect lower coolant hose on auxiliary cooler - **arrow** -.
- Remove nuts - **2** - and remove bracket - **1** -.
- Remove right auxiliary cooler.

Installing

Installation is in reverse order of removal, note the following:

NOTE:

- **Secure all hose connections using hose clamps appropriate for the model type .**

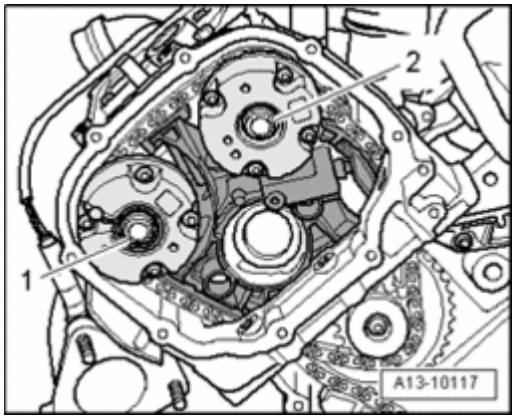

Fig. 723: Installing/Removing Fuel Hose To/From Connection On Fuel Rail Line
Courtesy of VOLKSWAGEN UNITED STATES, INC.

- Secure fuel hose to connection on fuel rail line. To do so, counter hold using an open-end wrench at each hex head - **1** - and - **3** - and tighten union nut - **2** - to 22 Nm.
- Install lock carrier with attachments -->
  - **50 BODY, FRONT**
  - **50 - BODY - FRONT** for BODY EXTERIOR - CABRIOLET

.

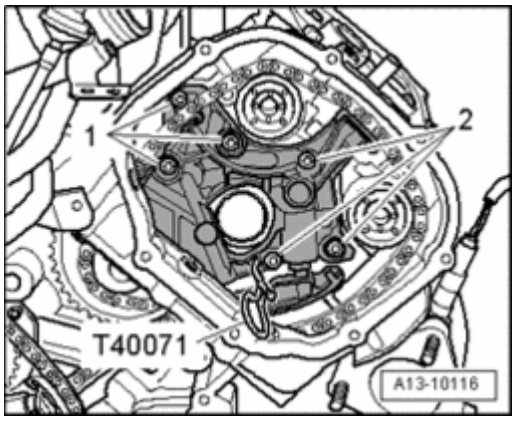

Fig. 724: Placing Torque Support On Rubber Buffer For Torque Support And Tightening Bolts
Courtesy of VOLKSWAGEN UNITED STATES, INC.

- Place torque support on rubber buffer for torque support and tighten bolts - **arrows** -.
- Install front bumper cover -->
  - **63 BUMPER**
  - **63 - BUMPERS** for BODY EXTERIOR - CABRIOLET

  .
- Fill with coolant **Filling**.

NOTE:

- **Complete coolant must be replaced if the radiator was replaced.**

- Check headlight adjustment -->
  - **01 - MAINTENANCE**
  - **01 - MAINTENANCE** for MAINTENANCE PROCEDURES - CABRIOLET

  .

Torque specifications

Component		Nm
Bracket for auxiliary cooler to bracket for Secondary Air Injection (AIR) pump		10
Auxiliary cooler	Bracket	10
to	Long member	10 * See note
Fuel supply line to fuel rail		22

* Insert using locking compound; locking compound .

Cooling system, checking for leaks

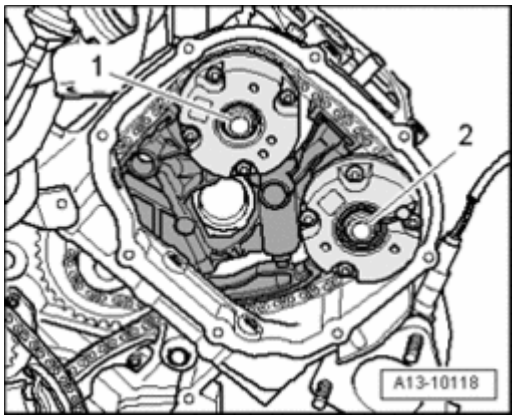

Fig. 725: Identifying Special Tools - Cooling System, Checking For Leaks
Courtesy of VOLKSWAGEN UNITED STATES, INC.

Special tools, testers and auxiliary items required

- Cooling system tester V.A.G 1274
- Adapter V.A.G 1274/8
- Adapter V.A.G 1274/9

Test conditions

- Engine at operating temperature.

Test sequence

CAUTION: Cover cap of expansion tank with rag and open carefully, as hot steam i.e. hot coolant may escape when opening.

- Open cap of coolant expansion tank.

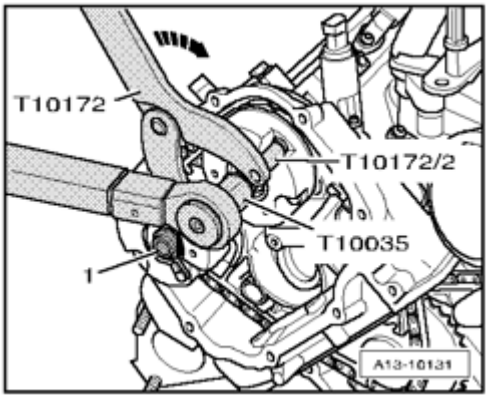

Fig. 726: Positioning Cooling System Tester V.A.G 1274 With Adapter V.A.G 1274/8 On Expansion Tank
Courtesy of VOLKSWAGEN UNITED STATES, INC.

- Position cooling system tester V.A.G 1274 with adapter V.A.G 1274/8 on expansion tank.
- Generate a positive pressure of approx. 1.0 bar using hand pump of cooling system tester.

If pressure drops:

- Search for leaking areas and repair malfunction.

Pressure relief valve in cap, checking

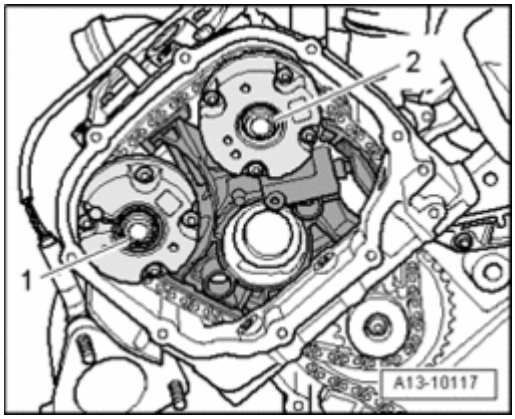

Fig. 727: Checking Pressure Relief Valve In Filler Cap
Courtesy of VOLKSWAGEN UNITED STATES, INC.

- Position cooling system tester V.A.G 1274 with adapter V.A.G 1274/9 on cap.
- Generate a positive pressure using hand pump of cooling system tester.

- Pressure release valve must open at a positive pressure of 1.4 to 1.6 bar.

If check-valve does not open as indicated:

- Replace cap.

Electric coolant fan, function

Cooling system is equipped with 2 electric coolant fans:

- Coolant Fan V7 at left in direction of travel with Coolant Fan Control (FC) Control Module J293
- Coolant Fan 2 V177 at right in direction of travel with Coolant Fan Control (FC) Control Module 2 J671

Both fans are activated continuously via respective Coolant Fan Control (FC) Control Module.

- Terminal 66 of Engine Control Module (ECM) is the control output to Coolant Fan Control (FC) Control Module J293.
- Terminal 104 of Engine Control Module (ECM) is the control output to Coolant Fan Control (FC) Control Module 2 J671.

Coolant fans are activated by reason of the following criteria:

- Fan request from A/C system: A fan request is transmitted by A/C control head via CAN-Bus to Engine Control Module (ECM), it is sent directly to the fans.
- Normal engine operation: During normal driving operation and engine running at idle, fans are regulated by coolant temperature and ambient temperature.

Electric coolant fan, checking

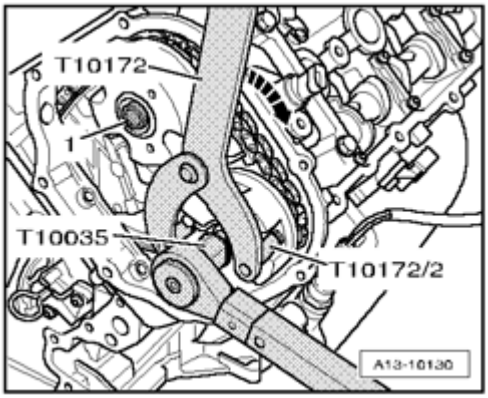

Fig. 728: Identifying Special Tools - Electric Coolant Fan, Checking
Courtesy of VOLKSWAGEN UNITED STATES, INC.

Special tools, testers and auxiliary items required

- Hand multimeter V.A.G 1526 B or V.A.G 1526 A
- Voltage tester V.A.G 1527 B
- Connector test kit V.A.G 1594 C or V.A.G 1594 A
- Test box V.A.G 1598/31
- Vehicle Diagnostic, Testing and Information System VAS 5051 with diagnostic cable VAS 5051/1

Work sequence

- Connect Vehicle Diagnostic, Testing and Information System VAS 5051 A and select vehicle system "01 - engine electronics". For this, ignition must be switched on Guided Fault Finding in VAS 5051.

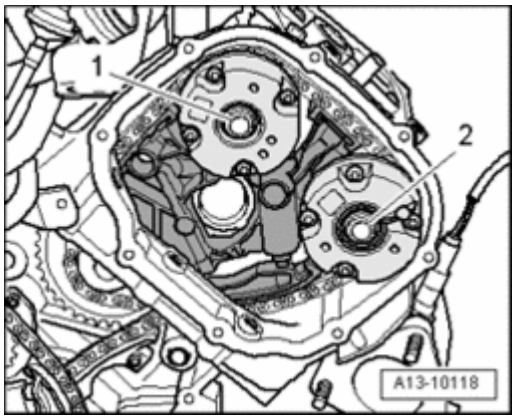

Fig. 729: Diagnostic System VAS 5051: Display
Courtesy of VOLKSWAGEN UNITED STATES, INC.

Display on VAS 5051 :

- In selection - **1** - , click on the function "03 - output Diagnostic Test Mode (DTM)".
- Press --> button repeatedly, until "coolant fan activation 2" is activated.

- Coolant Fan Control (FC) Control Module 2 J671 switches on Coolant Fan 2 V177 (right) 1 time slowly to full speed.

- Press --> button repeatedly, until "coolant fan activation 1" is activated.

- Coolant Fan Control (FC) Control Module J293 switches on Coolant Fan V7 (left) 1 time slowly to full speed.

- End function "03 - output Diagnostic Test Mode (DTM)" by pressing <-- button.

If fan activation does not react as described:

- Produce conditions for starting up coolant fan according to required input criteria (e.g. switch on A/C system, increase engine temperature correspondingly).

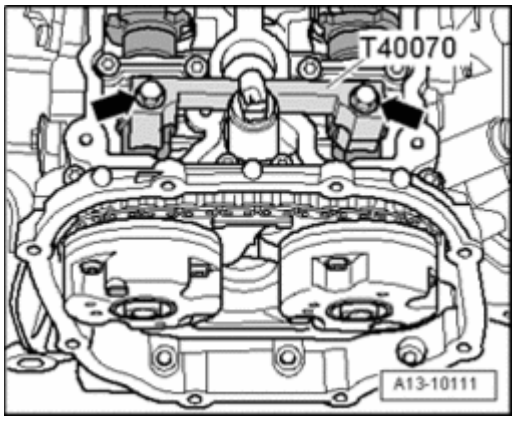

Fig. 730: Diagnostic System VAS 5051: Display

Courtesy of VOLKSWAGEN UNITED STATES, INC.

Display on VAS 5051 :

- In selection - **1** - , click on function "08 - Read measuring value block".

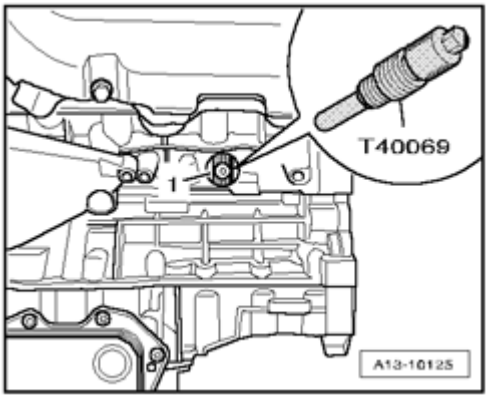

Fig. 731: Diagnostic System VAS 5051: Display
Courtesy of VOLKSWAGEN UNITED STATES, INC.

Display on VAS 5051 :

1 - Enter display group

- Select function "135" in button field - **2** - for "display group 135" and press Q to confirm input.

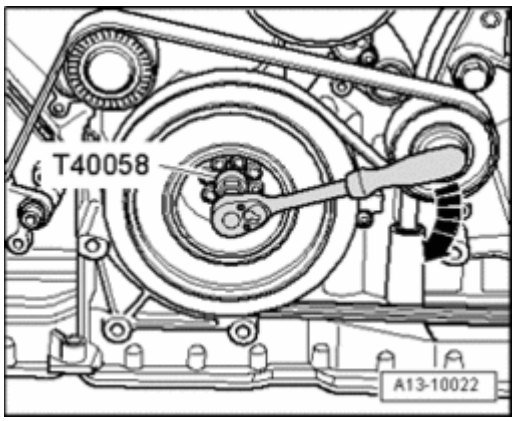

Fig. 732: Diagnostic System VAS 5051: Display
Courtesy of VOLKSWAGEN UNITED STATES, INC.

Display on VAS 5051 :

- Check indication in display fields - **2** - and - **3** -.

Display field	Indicated	Specified value

- **2** -	Duty cycle for fan 1 (left) in %	min. 10%
- **3** -	Duty cycle for fan 2 (right) in %	min. 10%

NOTE:

- **At fan request by A/C system and/or coolant temperature greater than 98 ° C, duty cycle must rise above 10% and fans must start up.**

- Press <-- button to end function "08 - Read measuring value block".

If duty cycle does not rise above 10%:

- Read out DTC memory of engine control module (ECM).
- Select "06 - End Output".
- Switch off ignition.
- Repair displayed malfunctions if necessary.

If respective fan does not start up even though duty cycle is above 10%:

- Check Coolant Fan V7 or Coolant Fan 2 V177.

Checking Coolant Fan V7 (left)

- Fuses for Coolant Fan V7 and Coolant Fan Control (FC) Control Module J293 OK --> Electrical Wiring Diagrams, Troubleshooting and Component Locations.

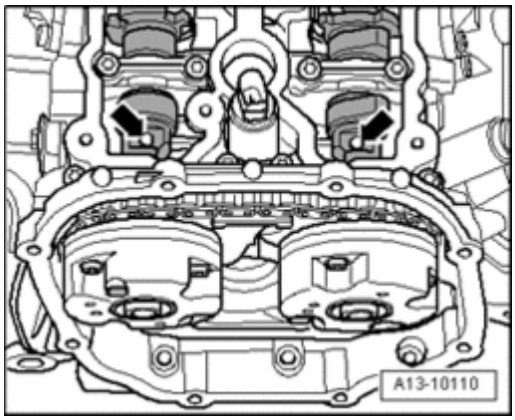

Fig. 733: Removing Cover In Engine Compartment (Left Side)
Courtesy of VOLKSWAGEN UNITED STATES, INC.

- Remove cover - **1** - in engine compartment (left side).

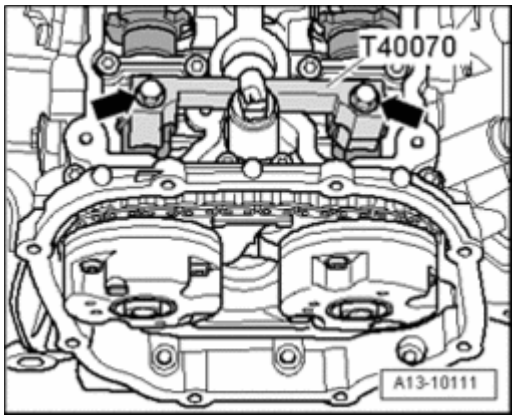

Fig. 734: Removing Electrical Harness Connectors And From Bracket
Courtesy of VOLKSWAGEN UNITED STATES, INC.

- Remove electrical harness connector - **1** - from bracket and disconnect it.

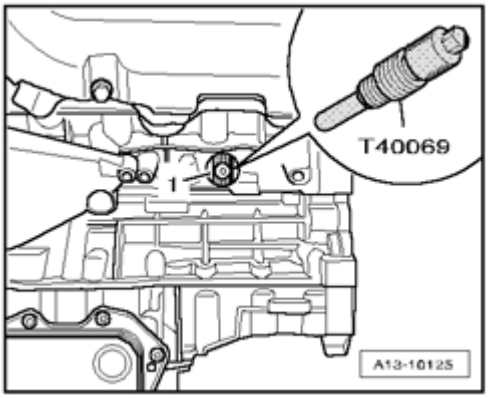

Fig. 735: Identifying 4-Pin Connector & Terminals
Courtesy of VOLKSWAGEN UNITED STATES, INC.

- Connect multimeter for voltage measurement as follows.

Harness connector Terminal	Measure to
- 1 -	Engine Ground (GND)
- 4 -	Battery positive (B+)

- Specification: approx. battery voltage respectively

If specifications are not obtained:

- Repair wire connection if necessary.

If specified values are achieved:

- Connect multimeter for voltage measurement as follows:

Harness connector Terminal	Measure to
- 2 -	Engine Ground (GND)

- Specification: approx. battery voltage

If specification is not obtained:

- Repair wire connection if necessary.

If specified value is not achieved:

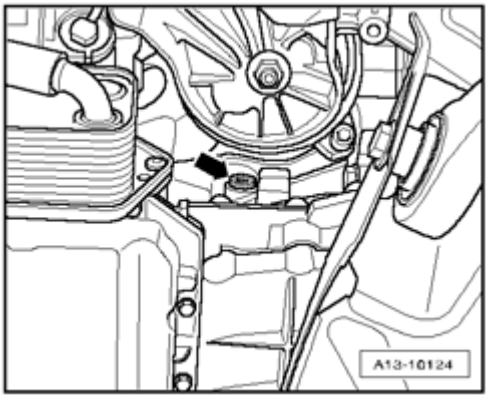

Fig. 736: Identifying 4-Pin Connector & Terminals
Courtesy of VOLKSWAGEN UNITED STATES, INC.

- Connect multimeter between terminal - **2** - and - **3** - of harness connector for voltage measurement.

- Vehicle Diagnostic, Testing and Information System VAS 5051 connected, "Vehicle Self-Diagnosis" and vehicle system "01 Engine electronics" selected. The ignition must be switched on.

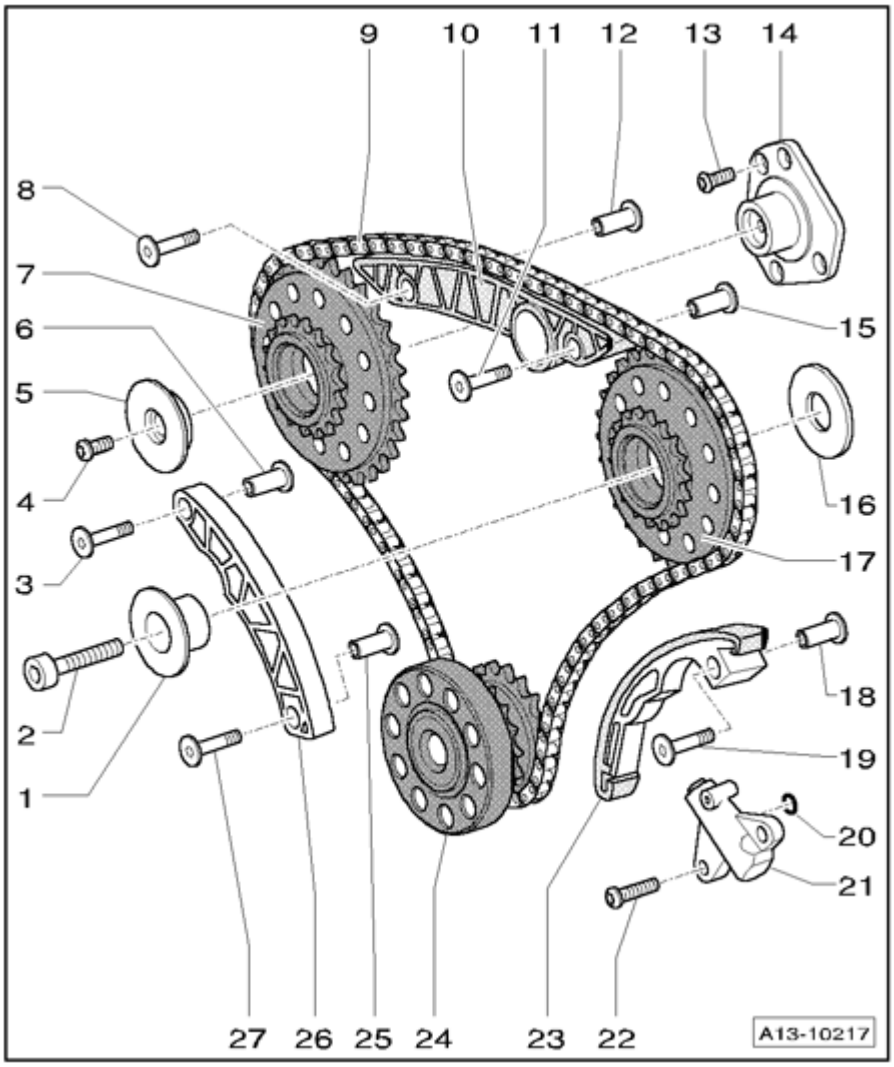

Fig. 737: Diagnostic System VAS 5051: Display
Courtesy of VOLKSWAGEN UNITED STATES, INC.

Display on VAS 5051 :

- In selection - **1** - , click on function "03 - output Diagnostic Test Mode (DTM)".
- Press --> key repeatedly, until "coolant fan activation 1" is activated.

- Voltage value must decrease slowly from approx. battery voltage to approx. 8 volts (and then increase again).

- End function "03 - output Diagnostic Test Mode (DTM)" by pressing <-- button.
- Select "06 - End Output".
- Switch off ignition.

If specification is not obtained:

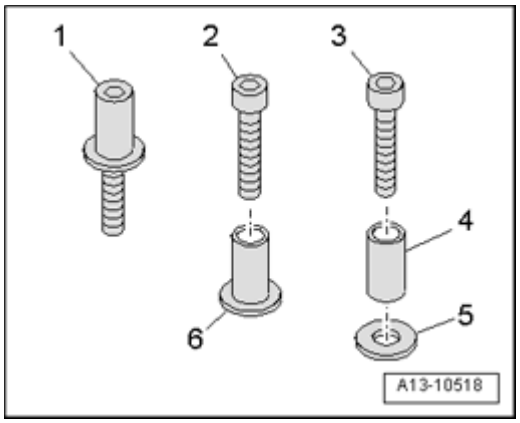

Fig. 738: Connecting Test Box VAG1598/31 To Engine Control Module Wiring Harness
Courtesy of VOLKSWAGEN UNITED STATES, INC.

- Connect test box V.A.G 1598/31 to wiring harness connectors, Engine Control Module (ECM) is not connected. Connect Ground (GND) clip at test box (not visible in illustration) to Ground (GND) --> **24 MULTIPORT FUEL INJECTION (MFI)** .

CAUTION: To avoid damaging electronic components, set measuring range before connecting test leads and observe all test requirements.

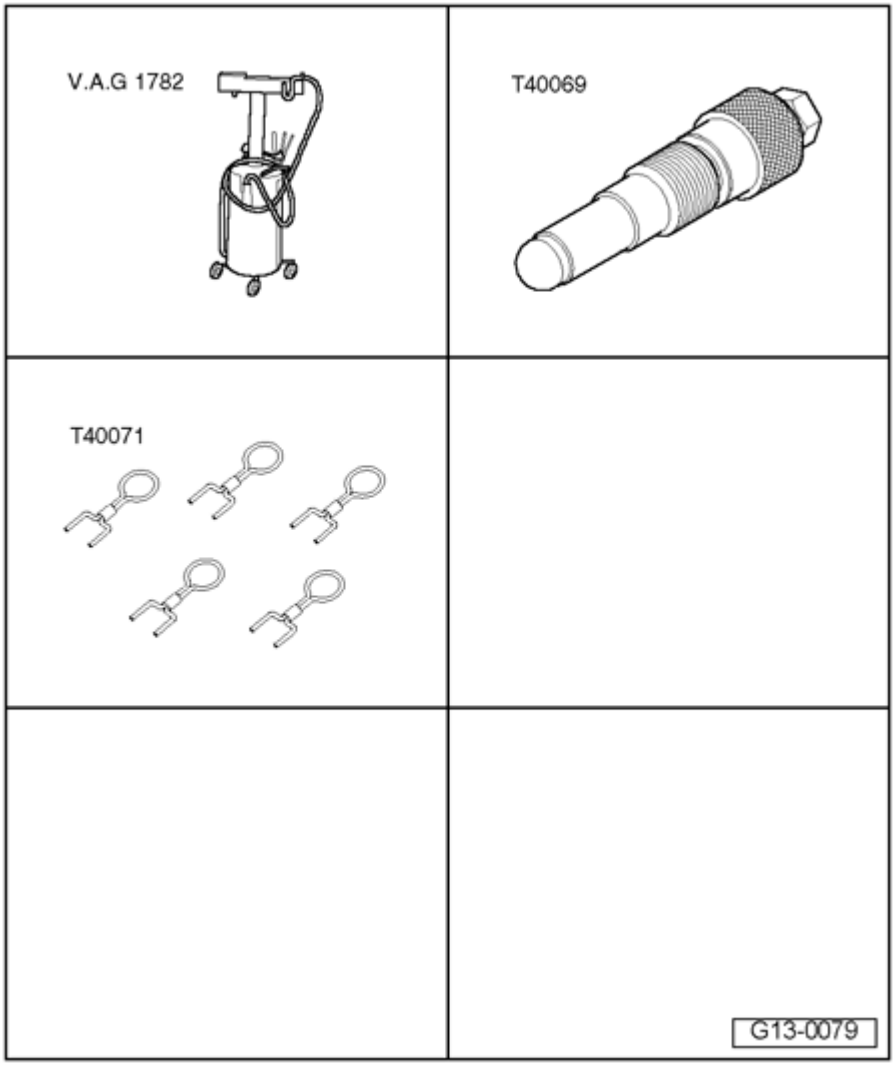

Fig. 739: Identifying 4-Pin Connector & Terminals
Courtesy of VOLKSWAGEN UNITED STATES, INC.

- Check following wire connection for open circuit and short circuit to Ground (GND) and B+:

Harness connector Terminal	Test box V.A.G 1598/31 Socket
- 4 -	66

- Repair wire connection if necessary.

If no malfunctions are detected:

- Remove front bumper cover -->
  - **63 BUMPER**
  - **63 - BUMPERS** for BODY EXTERIOR - CABRIOLET

.

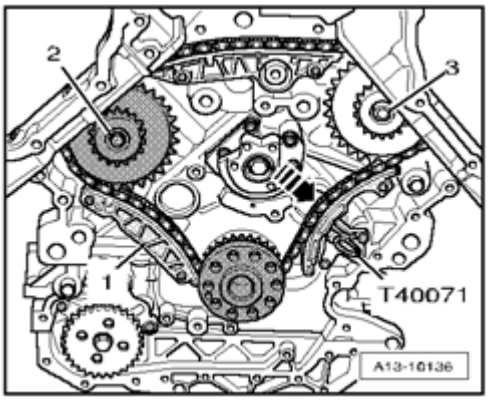

Fig. 740: Connecting Multimeter With Measuring Probes And Connector Adapters From Connector Test Kit V.A.G 1594 C (Harness Connector Remains Connected)
Courtesy of VOLKSWAGEN UNITED STATES, INC.

- Connect multimeter with measuring probes and connector adapters from connector test kit V.A.G 1594 C between terminal - **1** - and terminal - **2** - of brown harness connector on Coolant Fan Control (FC) Control Module J293 ; harness connector remains connected.

- Vehicle Diagnostic, Testing and Information System VAS 5051 A connected, "Vehicle Self-Diagnosis" and vehicle system "01 Engine electronics" selected. The ignition must be switched on.

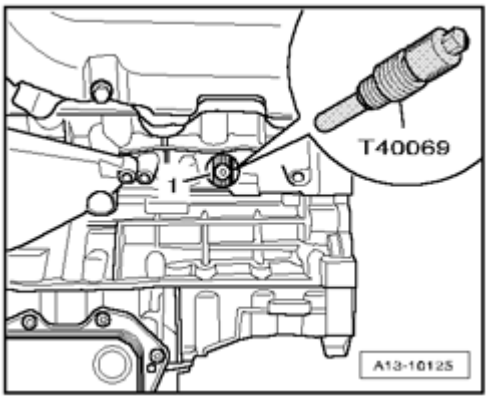

Fig. 741: Diagnostic System VAS 5051: Display
Courtesy of VOLKSWAGEN UNITED STATES, INC.

Display on VAS 5051 :

- In selection - **1** - , click on function "03 - output Diagnostic Test Mode (DTM)".
- Press --> key repeatedly, until "coolant fan activation 1" is activated.

- Voltage value must increase up to approx. 10.5 volts (and then decrease again).

- End function "03 - output Diagnostic Test Mode (DTM)" by pressing <-- button.
- Select "06 - End Output".

- Switch off ignition.

If specified value is reached but fan does not run:

- Replace Coolant Fan V7 --> **Coolant Fan V7 (left), removing and installing**.

If specification is not obtained:

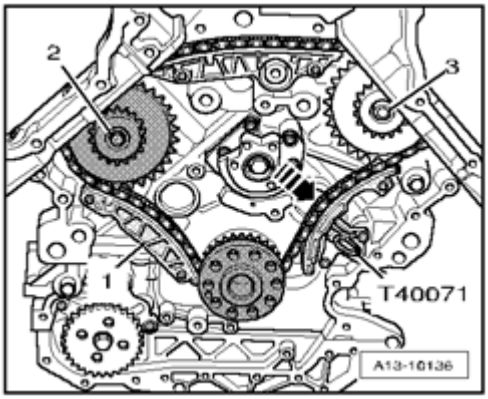

Fig. 742: Removing Electrical Harness Connectors And From Bracket
Courtesy of VOLKSWAGEN UNITED STATES, INC.

- Check wire connections from harness connector at left front in engine compartment to Coolant Fan Control (FC) Control Module J293 according to wiring diagram.

If no malfunctions are detected:

- Replace Coolant Fan Control (FC) Control Module J293.

Checking Coolant Fan 2 V177 (right)

- Fuses for Coolant Fan 2 V177 and Coolant Fan Control (FC) Control Module 2 J671 OK --> Electrical Wiring Diagrams, Troubleshooting and Component Locations.

- Remove front bumper cover -->
  - **63 BUMPER**
  - **63 - BUMPERS** for BODY EXTERIOR - CABRIOLET

  .

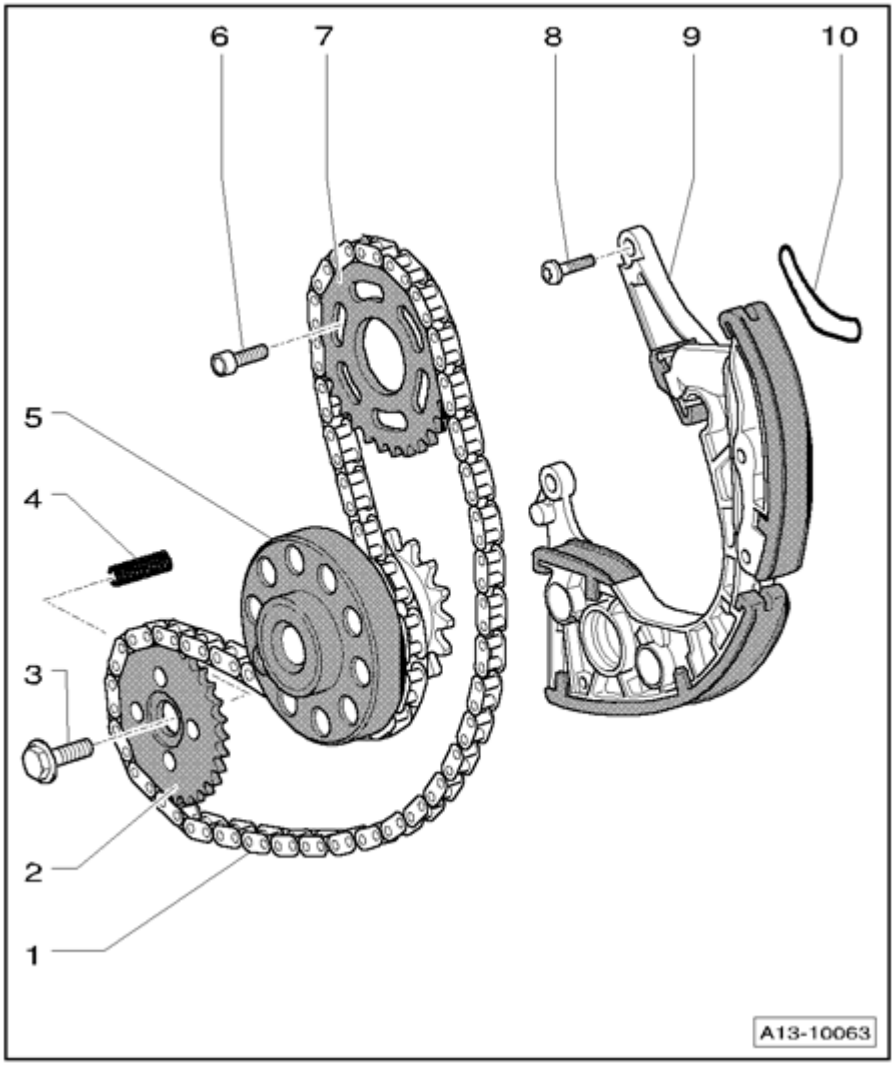

Fig. 743: Connecting Multimeter With Measuring Probes And Connector Adapters From Connector Test Kit V.A.G 1594 C (Harness Connector For Coolant Fan 2 V177 Remains Connected)
Courtesy of VOLKSWAGEN UNITED STATES, INC.

- Connect multimeter with measuring probes and connector adapters from connector test kit V.A.G 1594 C between terminal - **1** - and terminal - **2** - ; harness connector for Coolant Fan 2 V177 remains connected.

- Vehicle Diagnostic, Testing and Information System VAS 5051 connected, "Vehicle Self-Diagnosis" and vehicle system "01 Engine electronics" selected. The ignition must be switched on.

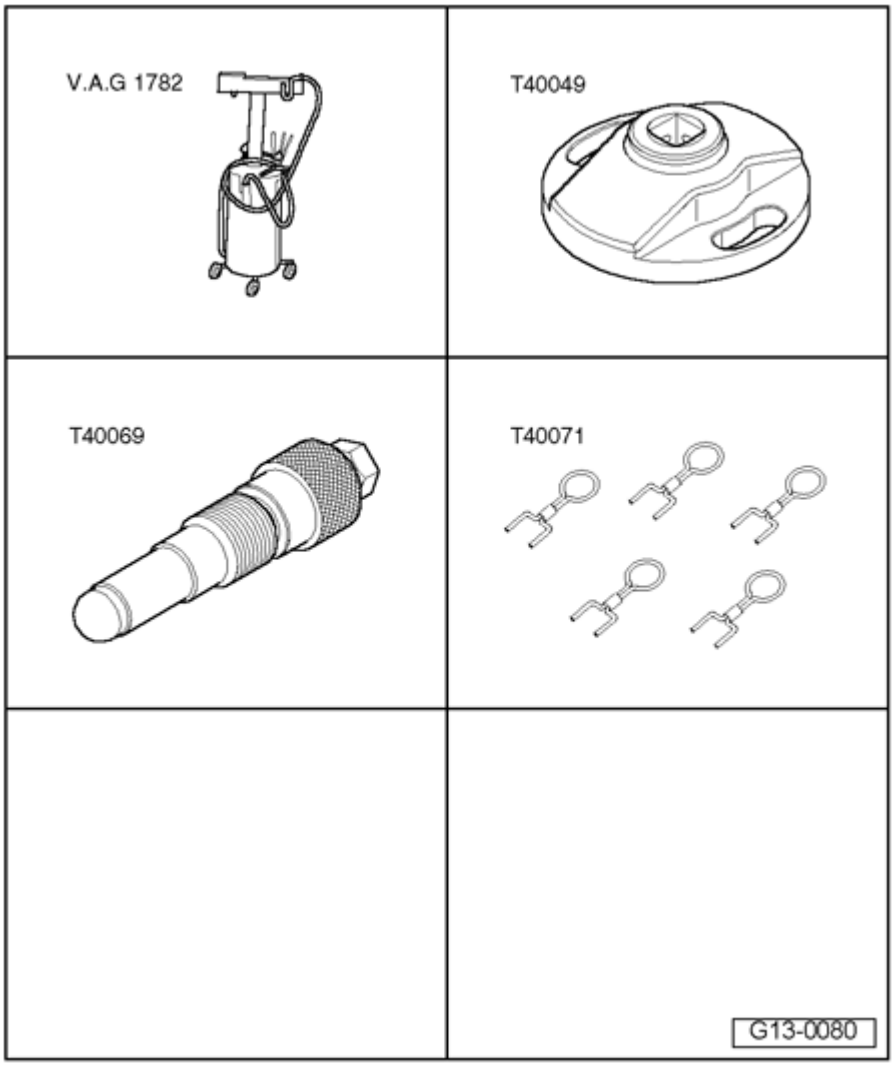

Fig. 744: Diagnostic System VAS 5051: Display
Courtesy of VOLKSWAGEN UNITED STATES, INC.

Display on VAS 5051 :

- In selection - **1** - , click on function "03 - output Diagnostic Test Mode (DTM)".
- Press --> key repeatedly, until "coolant fan activation 2" is activated.

- Voltage value must increase up to approx. 9 volts

- End function "03 - output Diagnostic Test Mode (DTM)" by pressing <-- button.
- Select "06 - End Output".
- Switch off ignition.

If specified value is reached but fan does not run:

- Replace Coolant Fan 2 V177 --> **Coolant Fan 2 V177 (right), removing and installing**.

If specification is not obtained:

- Bring lock carrier into service position --> **Lock carrier, moving into service position**.

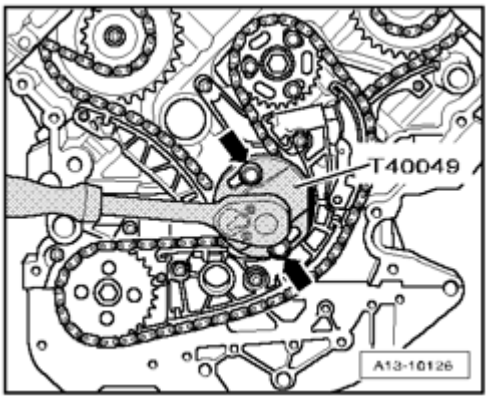

Fig. 745: Removing Coolant Fan Control (FC) Control Module 2 J671 On Left Front Longmember
Courtesy of VOLKSWAGEN UNITED STATES, INC.

- Remove Coolant Fan Control (FC) Control Module 2 J671 on left front longmember - **arrows** -.
- Disconnect electrical harness connector - **2** - on Coolant Fan Control (FC) Control Module 2 J671.

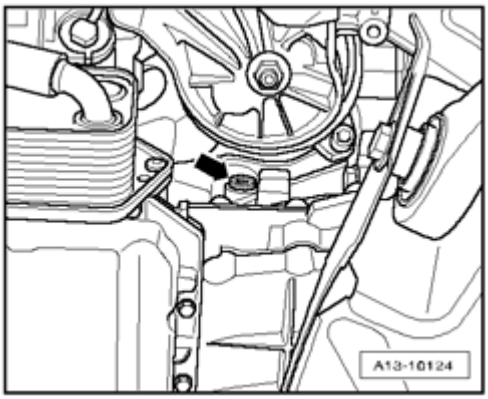

Fig. 746: Identifying Harness Connector Terminal
Courtesy of VOLKSWAGEN UNITED STATES, INC.

- Connect multimeter for voltage measurement as follows.

Harness connector Terminal	Measure to
- 1 -	Battery positive (B+)
- 2 -	Engine Ground (GND)

- Specification: approx. battery voltage respectively

If specifications are not obtained:

- Repair wire connection if necessary.

If specified values are achieved:

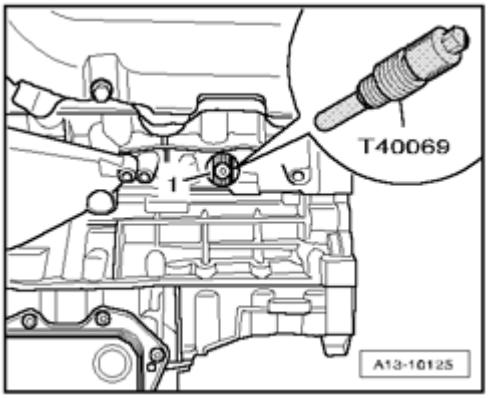

Fig. 747: Disconnecting Electrical Harness Connector On Coolant Fan Control (FC) Control Module 2 J671
Courtesy of VOLKSWAGEN UNITED STATES, INC.

- Disconnect electrical harness connector - **1** - on Coolant Fan Control (FC) Control Module 2 J671.

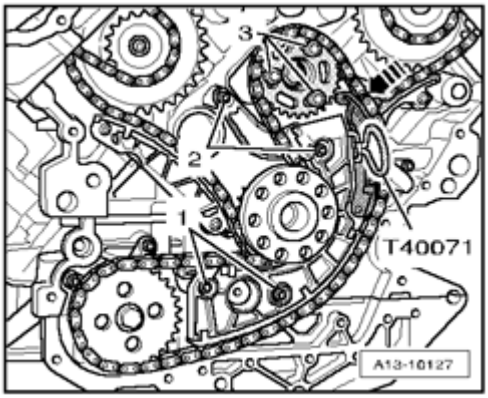

Fig. 748: Identifying 6-Pin Electrical Harness Connector & Terminals
Courtesy of VOLKSWAGEN UNITED STATES, INC.

- Connect multimeter between terminal - **1** - and - **2** - of harness connector for voltage measurement.

- Vehicle Diagnostic, Testing and Information System VAS 5051 A connected, "Vehicle Self-Diagnosis" and vehicle system "01 Engine electronics" selected. The ignition must be switched on.

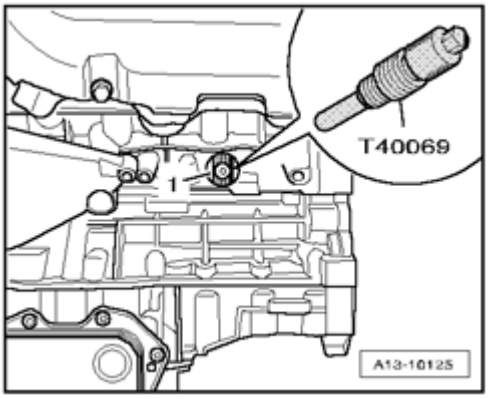

Fig. 749: Diagnostic System VAS 5051: Display
Courtesy of VOLKSWAGEN UNITED STATES, INC.

Display on VAS 5051 :

- In selection - **1** - , click on function "03 - output Diagnostic Test Mode (DTM)".
- Press --> button repeatedly, until "coolant fan activation 2" is activated.

- Voltage value must decrease slowly from approx. battery voltage to approx. 8 volts (and then increase again)

- End function "03 - output Diagnostic Test Mode (DTM)" by pressing <-- button.
- Select "06 - End Output".
- Switch off ignition.

If specification is not obtained:

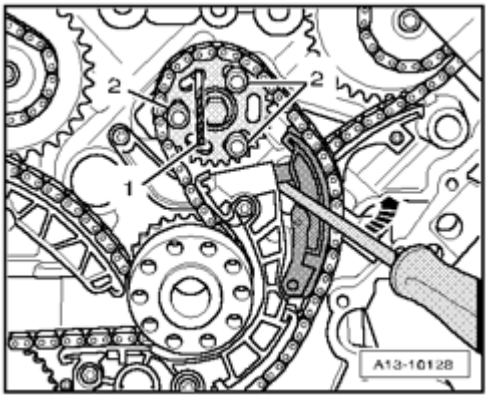

Fig. 750: Connecting Test Box VAG1598/31 To Engine Control Module Wiring Harness
Courtesy of VOLKSWAGEN UNITED STATES, INC.

- Connect test box V.A.G 1598/31 to wiring harness connectors, Engine Control Module (ECM) is not connected. Connect Ground (GND) clip at test box to Ground (GND) (not visible in illustration) --> **24 MULTIPORT FUEL INJECTION (MFI)** .

CAUTION: To avoid damaging electronic components, set measuring range before connecting test leads and observe all test requirements.

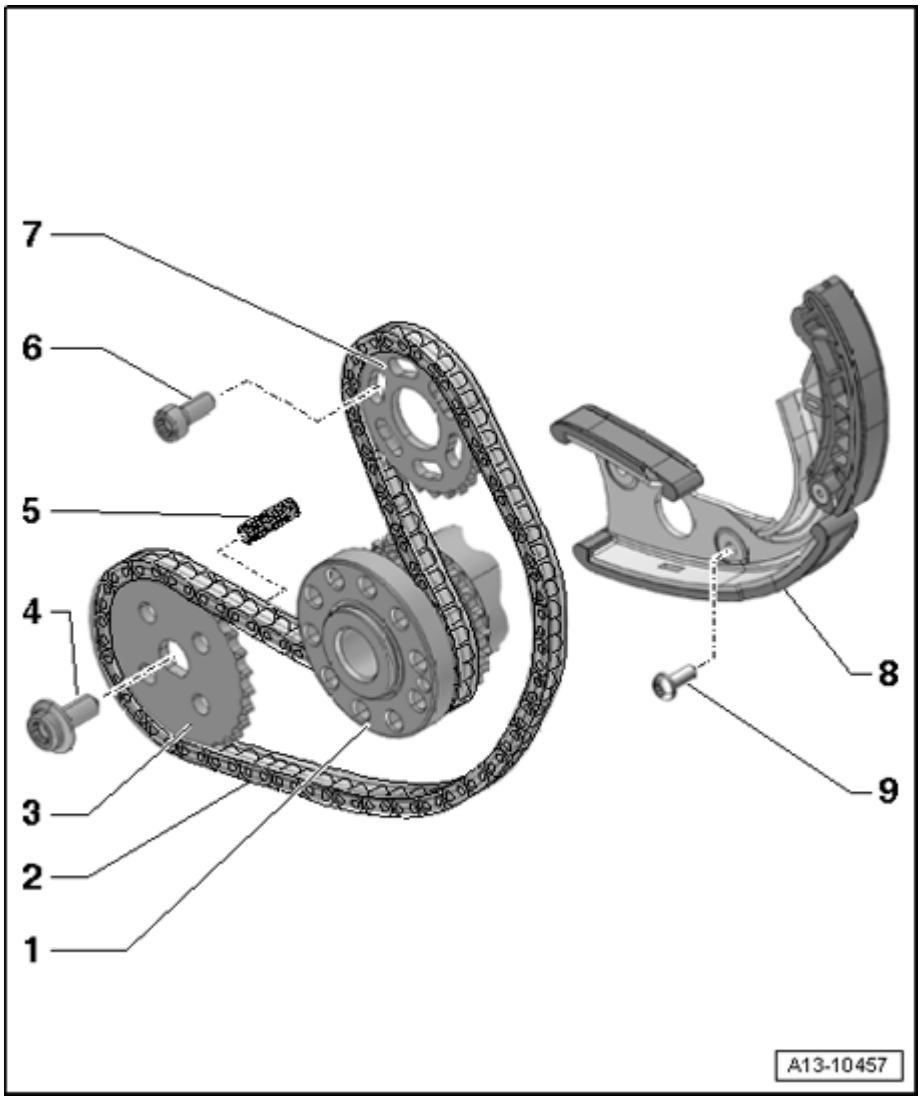

Fig. 751: Identifying 6-Pin Electrical Harness Connector & Terminals
Courtesy of VOLKSWAGEN UNITED STATES, INC.

- Check the following wire connection for open circuit and short circuit to Ground (GND) and B+:

Harness connector Terminal	Test box V.A.G 1598/31 Socket
- 2 -	104

- Repair wire connection if necessary.

If no malfunctions are detected:

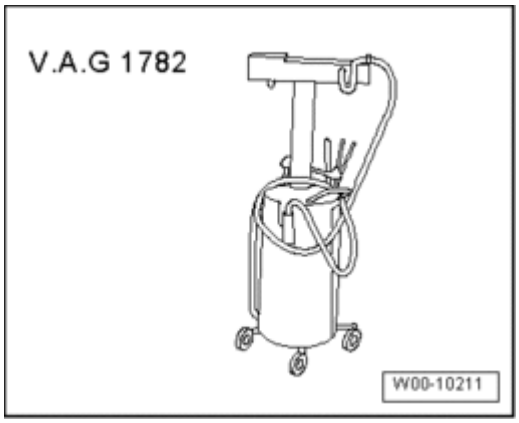

Fig. 752: Disconnecting Electrical Harness Connector For Right Fan
Courtesy of VOLKSWAGEN UNITED STATES, INC.

- Check wire connection from Coolant Fan Control (FC) Control Module 2 J671 to harness connector on longmember - **arrow** -.

If no malfunctions are detected in wiring:

- Replace Coolant Fan Control (FC) Control Module 2 J671.

Coolant Fan V7 (left), removing and installing

Removing

NOTE:

- **All cable ties opened or cut during engine removal must be reinstalled at the same locations during installation.**

- Bring lock carrier into service position --> **Lock carrier, moving into service position**.

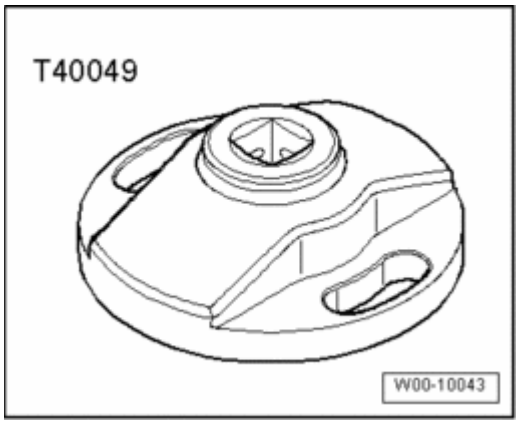

Fig. 753: Disconnecting Electrical Connector On Fuel Pump (FP) Control Module J293
Courtesy of VOLKSWAGEN UNITED STATES, INC.

- Disconnect electrical connector - **arrow** - on Fuel Pump (FP) Control Module J293.

- Move wiring harness to coolant fan clear.

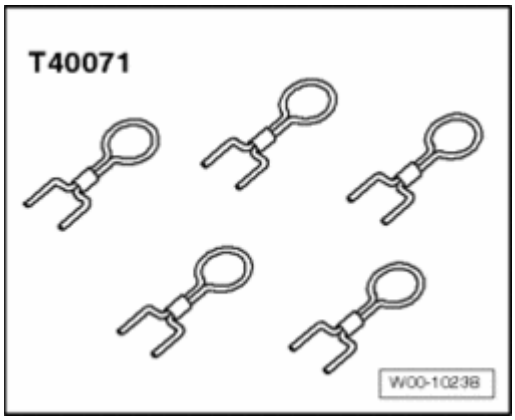

Fig. 754: Removing Bolts And Fan
Courtesy of VOLKSWAGEN UNITED STATES, INC.

- Remove bolts - **arrows** - and remove fan.

Installing

Installation is in reverse order of removal, note the following:

NOTE:

- **During installation, all cable ties must be re-installed at the same location.**

- Install lock carrier with attachments -->
  - **50 BODY, FRONT**
  - **50 - BODY - FRONT** for BODY EXTERIOR - CABRIOLET

.

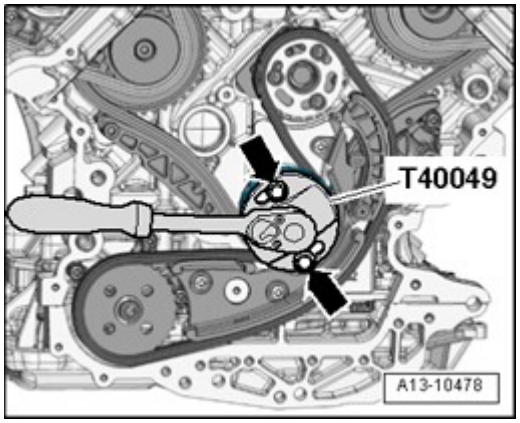

Fig. 755: Placing Torque Support On Rubber Buffer For Torque Support And Tightening Bolts
Courtesy of VOLKSWAGEN UNITED STATES, INC.

- Place torque support on rubber buffer for torque support and tighten bolts - **arrows** -.

- Install front bumper cover -->
  - **63 BUMPER**
  - **63 - BUMPERS** for BODY EXTERIOR - CABRIOLET

  .
- Check headlight adjustment -->
  - **01 - MAINTENANCE**
  - **01 - MAINTENANCE** for MAINTENANCE PROCEDURES - CABRIOLET

  .

Torque specifications

Component	Nm
Coolant fan to lock carrier	10
Torque support stop to lock carrier	28

Coolant Fan 2 V177 (right), removing and installing

Removing

NOTE:

- **All cable ties opened or cut during engine removal must be reinstalled at the same locations during installation.**

- Bring lock carrier into service position --> **Lock carrier, moving into service position**.

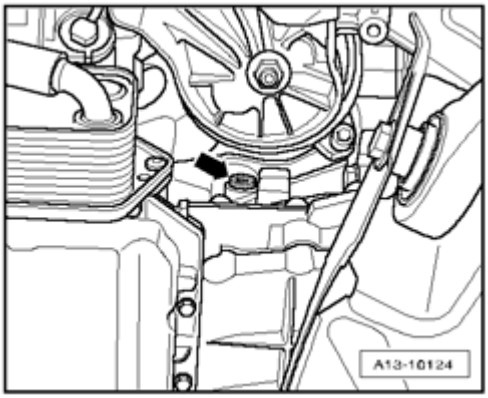

Fig. 756: Disconnecting Electrical Harness Connector For Right Fan
Courtesy of VOLKSWAGEN UNITED STATES, INC.

- Disconnect electrical harness connector - **arrow** -.
- Move wiring harness to coolant fan clear.

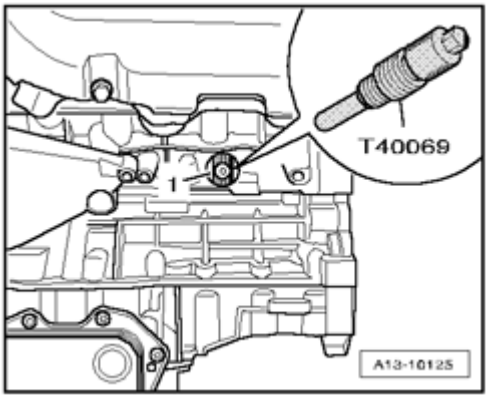

Fig. 757: Removing Coolant Fan
Courtesy of VOLKSWAGEN UNITED STATES, INC.

- Remove bolts - **1** -.
- Turn coolant fan in direction of - **arrow** - and remove it.

Installing

Installation is in reverse order of removal, note the following:

NOTE:

- **During installation, all cable ties must be re-installed at the same location.**

- Install lock carrier with attachments -->
  - **50 BODY, FRONT**
  - **50 - BODY - FRONT** for BODY EXTERIOR - CABRIOLET

.

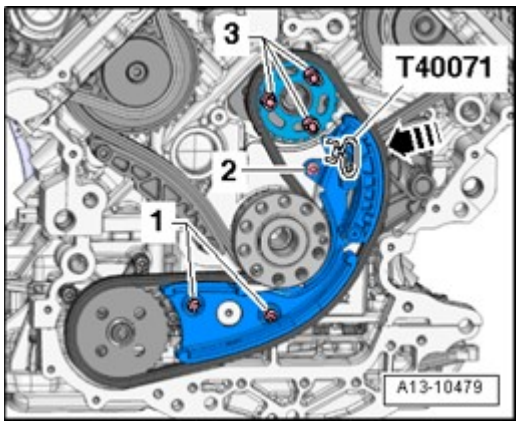

Fig. 758: Placing Torque Support On Rubber Buffer For Torque Support And Tightening Bolts
Courtesy of VOLKSWAGEN UNITED STATES, INC.

- Place torque support on rubber buffer for torque support and tighten bolts - **arrows** -.
- Install front bumper cover -->

- **63 BUMPER**
- **63 - BUMPERS** for BODY EXTERIOR - CABRIOLET

.

- Check headlight adjustment -->
  - **01 - MAINTENANCE**
  - **01 - MAINTENANCE** for MAINTENANCE PROCEDURES - CABRIOLET

.

Torque specifications

Component	Nm
Coolant fan to lock carrier	10
Torque support stop to lock carrier	28

26 - EXHAUST SYSTEM, EMISSION CONTROLS

EXHAUST SYSTEM COMPONENTS, REMOVING AND INSTALLING

Exhaust system components, removing and installing

NOTE:

- **Replace gaskets and self-locking nuts.**
- **During installation, protective heat boots must be re-installed at the same location.**
- **All cable ties opened or cut during engine removal must be reinstalled at the same locations during installation.**
- **After exhaust system repairs, make sure exhaust system is not under stress and is far enough from the body. If necessary, loosen double clamps and align mufflers and exhaust pipes so that there is adequate distance to vehicle body, and weight is evenly distributed among the exhaust hangers.**
- **Flex joint in front exhaust pipe must not be bent more than 10 ° , otherwise it may be damaged.**

Exhaust system, component overview

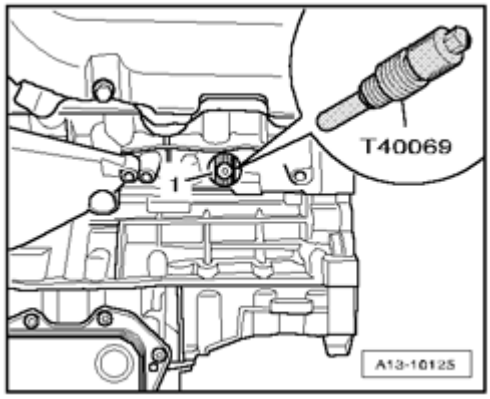

Fig. 759: Exhaust System, Component Overview
Courtesy of VOLKSWAGEN UNITED STATES, INC.

1 - 23 Nm

2 - Suspended mount

- Replace if damaged

3 - 27 Nm

- Replace
- Tighten uniformly in several stages

4 - Exhaust manifold

- For cylinder bank 1 (right)
- Removing and installing --> **Right exhaust manifold, removing and installing**

5 - Heated Oxygen Sensor (HO2S) G39 (before catalytic converter)

- For cylinder bank 1 (right)
- The threads of new oxygen sensors are coated with assembly paste; the paste must not get into slots of oxygen sensor body
- When re-using the previous oxygen sensor, grease threads with hot bolt paste; the paste must not get into slots of oxygen sensor body. Hot bolt paste
- Removing and installing --> **24 MULTIPORT FUEL INJECTION (MFI)**

6 - 27 Nm

- Replace
- Tighten uniformly in several stages

7 - Exhaust manifold

- Cylinder bank 2 (left)
- Removing and installing --> **Left exhaust manifold, removing and installing**

8 - Heated Oxygen Sensor (HO2S) 2 G108 (in front of catalytic converter)

- For cylinder bank 2 (left)
- The threads of new oxygen sensors are coated with assembly paste; the paste must not get into slots of oxygen sensor body
- When re-using the previous oxygen sensor, grease threads with hot bolt paste; the paste must not get into slots of oxygen sensor body. Hot bolt paste
- Removing and installing --> **24 MULTIPORT FUEL INJECTION (MFI)**

9 - Front exhaust pipe with pre- and main catalytic converters

- For left side of vehicle
- With flex joint
- Decoupling element must not be bent more than 10 ° otherwise it may be damaged
- Protect from hit- and impact stress

- Removing and installing: Vehicles with manual transmission --> **Left front exhaust pipe with primary and main catalytic converter (vehicles with manual transmission), removing and installing** , vehicles with automatic transmission --> **Left front exhaust pipe with primary and main catalytic converter (vehicles with automatic transmission), removing and installing**
- Individual mounting components for vehicles with manual transmission **Individual left mounting components - vehicles with manual transmission**
- Individual mounting components for vehicles with automatic transmission **Individual left mounting components - vehicles with automatic transmission**
- Install exhaust system free of stress --> **Exhaust system, installing free of tension**

10 - Front clamping sleeve

- Installed location **Installed position of front double clamps**
- Before tightening, ensure exhaust system is tension-free --> **Exhaust system, installing free of tension**
- Tighten bolts evenly

11 - 40 Nm

12 - Oxygen Sensor (O2S) Behind Three Way Catalytic Converter (TWC) G131

- For cylinder bank 2 (left)
- The threads of new oxygen sensors are coated with assembly paste; the paste must not get into slots of oxygen sensor body
- When re-using previous oxygen sensor, grease threads with hot bolt paste; the paste must not get into slots of oxygen sensor body. Hot bolt paste

- Removing and installing --> **24 MULTIPORT FUEL INJECTION (MFI)**

13 - Oxygen Sensor (O2S) Behind Three Way Catalytic Converter (TWC) G130

- For cylinder bank 1 (right)
- The threads of new oxygen sensors are coated with assembly paste; paste must not get into slots of oxygen sensor body
- When re-using previous oxygen sensor, grease threads with hot bolt paste; the paste must not get into slots of oxygen sensor body. Hot bolt paste
- Removing and installing --> **24 MULTIPORT FUEL INJECTION (MFI)**

14 - Front exhaust pipe with pre- and main catalytic converters

- For right side of vehicle
- With flex joint
- Decoupling element must not be bent more than 10 ° otherwise it may be damaged
- Protect from hit and impact stress

- Removing and installing: Vehicles with manual transmission --> **Right front exhaust pipe with primary and main catalytic converter (vehicles with manual transmission), removing and installing** , vehicles with automatic transmission --> **Right front exhaust pipe with primary and main catalytic converter (vehicles with automatic transmission), removing and installing**
- Individual components of suspension **Individual components of suspension, right side**
- Install exhaust system free of stress --> **Exhaust system, installing free of tension**

15 - Rear muffler

- For left side of vehicle
- Original equipment as one unit with center muffler. For repairs, replace each separately.
- Separating point *Separate exhaust pipes at separating point* under **Center muffler and rear muffler, separating**
- With exhaust flap - checking exhaust flap --> **Exhaust flap, checking**

- Install exhaust system free of stress --> **Exhaust system, installing free of tension**

16 - Suspended mount

- Replace if damaged

17 - 23 Nm

18 - Rear muffler

- For right side of vehicle

- Original equipment as one unit with center muffler. For repairs, replace each separately.
- Separating point *Separate exhaust pipes at separating point* under **Center muffler and rear muffler, separating**
- With exhaust flap - checking exhaust flap --> **Exhaust flap, checking**
- Install exhaust system free of stress --> **Exhaust system, installing free of tension**

19 - 25 Nm

20 - 40 Nm

21 - Rear clamping sleeve

- For individual replacement of center and rear mufflers
- Installed location **Installed position of rear double clamps**
- Before tightening, ensure exhaust system is tension-free --> **Exhaust system, installing free of tension**
- Tighten bolts evenly

22 - Center muffler

- Original equipment as one unit with rear muffler. For repairs, replace each separately.

Installed position of front double clamps

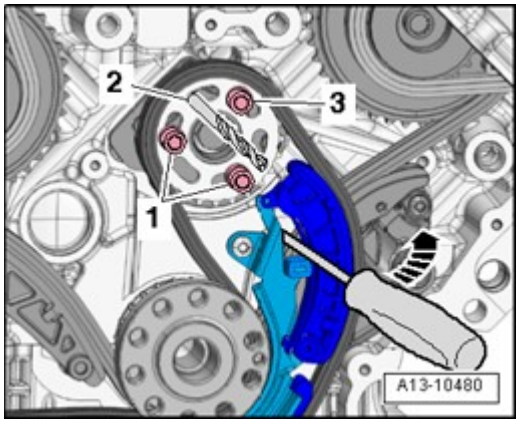

Fig. 760: Installed Position Of Front Double Clamps
Courtesy of VOLKSWAGEN UNITED STATES, INC.

- Install double clamps so that the bolt ends do not project over lower edge of double clamp.
- Threaded connections face each other.

Installed position of rear double clamps

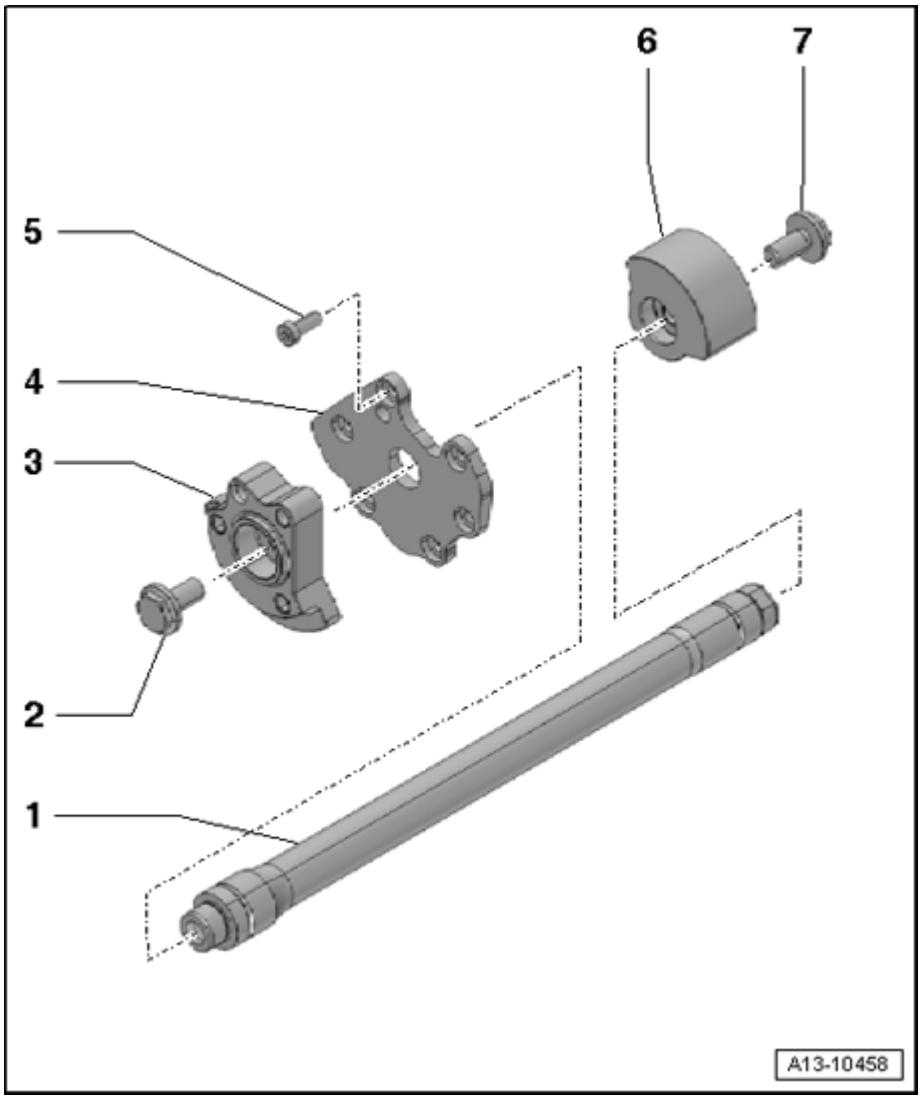

Fig. 761: Installing Double Clamps So That Bolt Ends Do Not Project Over Lower Edge Of Double Clamp
Courtesy of VOLKSWAGEN UNITED STATES, INC.

- Install double clamps so that the bolt ends do not project over lower edge of double clamp.
- Threaded connections point toward outside.

Individual left mounting components - vehicles with manual transmission

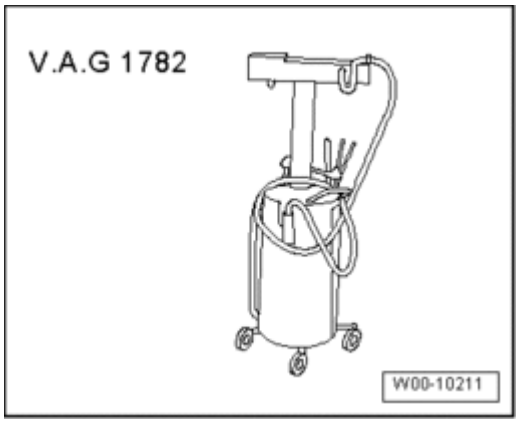

Fig. 762: Individual Left Mounting Components - Vehicles With Manual Transmission
Courtesy of VOLKSWAGEN UNITED STATES, INC.

1. Bolt -25 Nm
2. Spacing sleeve
3. Tab
4. Spring
5. Washer
6. Bolt -25 Nm
7. Bolt -25 Nm
8. Spacing sleeve
9. Buffer
10. Spacing sleeve
11. Bracket
12. Washer

Individual left mounting components - vehicles with automatic transmission

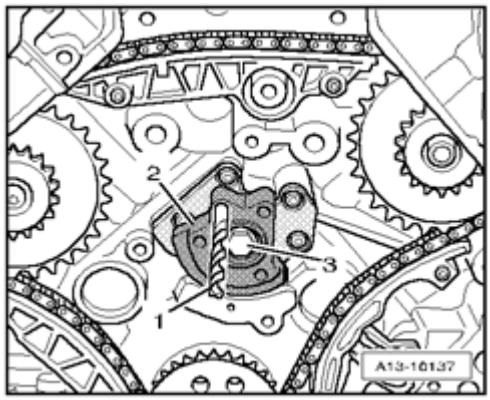

Fig. 763: Individual Left Mounting Components - Vehicles With Automatic Transmission
Courtesy of VOLKSWAGEN UNITED STATES, INC.

1. Spacing sleeve
2. Buffer
3. Tab
4. Spacing sleeve
5. Bolt -25 Nm
6. Bolt -25 Nm
7. Washer
8. Spring
9. Spacing sleeve

Individual components of suspension, right side

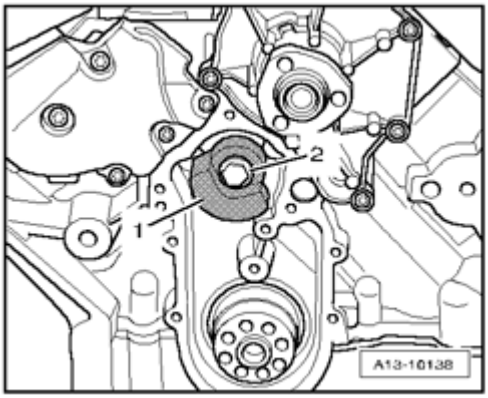

Fig. 764: Individual Components Of Suspension, Right Side
Courtesy of VOLKSWAGEN UNITED STATES, INC.

1. Bolt -25 Nm
2. Spacing sleeve
3. Buffer
4. Spacing sleeve
5. Nut, self-locking - 25 Nm
6. Spacing sleeve
7. Tab
8. Spring
9. Washer
10. Bolt -25 Nm

Center muffler and rear muffler, separating

- A separating point has been provided in the connecting pipe for individual replacement of the center or rear muffler
- The separating point is marked by depressions around circumference of exhaust pipe.

Special tools, testers and auxiliary items required

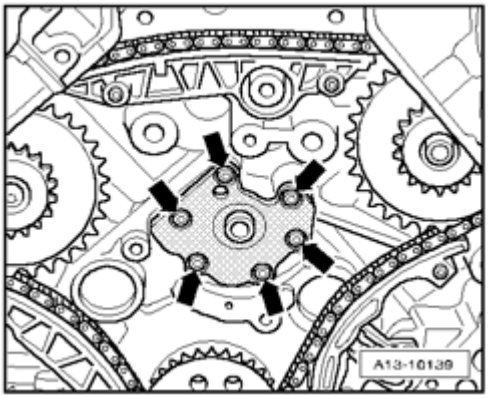

Fig. 765: Chain Pipe Cutter VAS 6254
Courtesy of VOLKSWAGEN UNITED STATES, INC.

- Chain pipe cutter VAS 6254

Work procedure

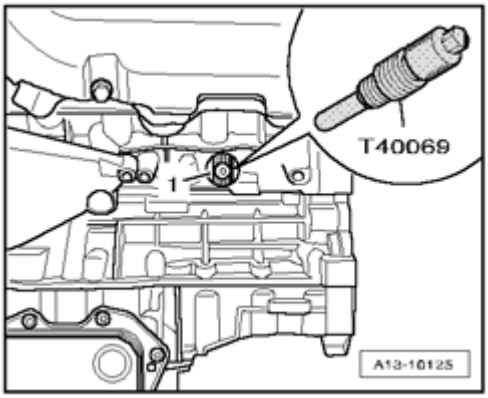

Fig. 766: Separating Exhaust Pipes At Separating Point Using Chain Pipe Cutter VAS 6254 At Right Angle
Courtesy of VOLKSWAGEN UNITED STATES, INC.

- Separate exhaust pipes at separating point - **arrows** - using chain pipe cutter VAS 6254 at a right angle.

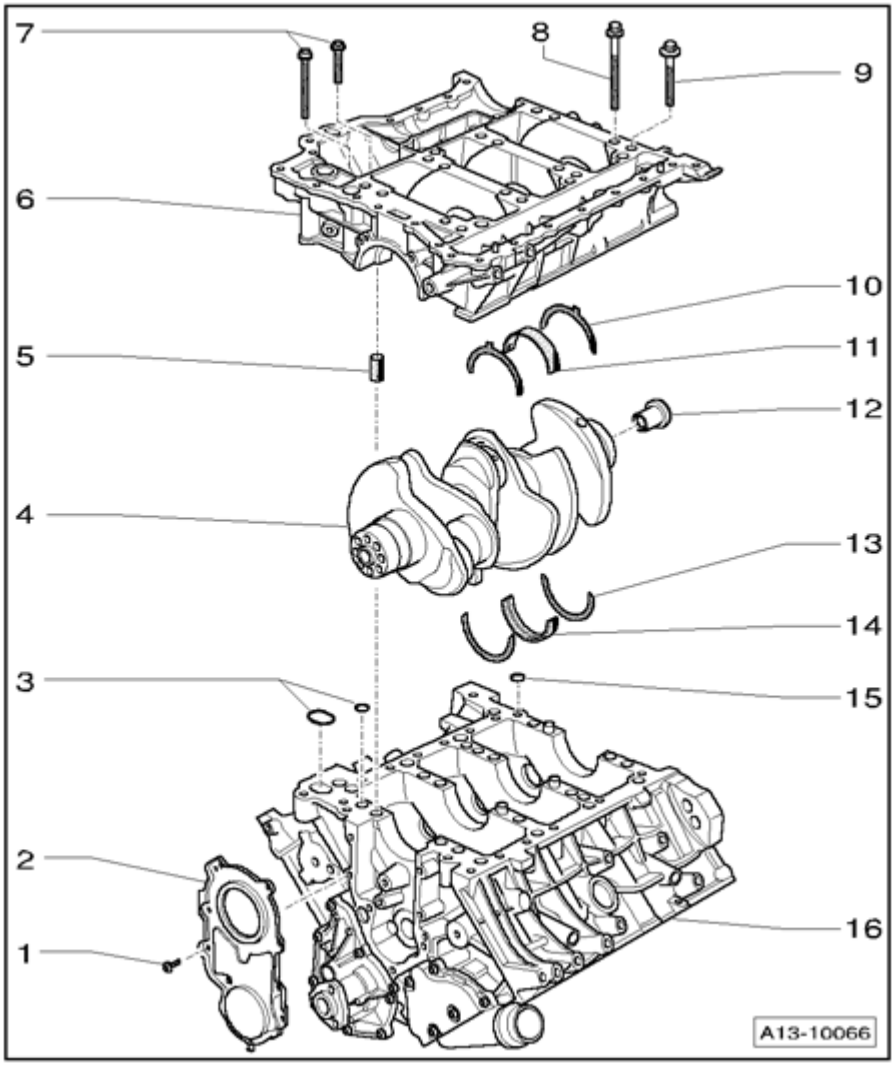

Fig. 767: Positioning Clamping Sleeves At Center Of Separating Cut
Courtesy of VOLKSWAGEN UNITED STATES, INC.

- Position clamping sleeves - **arrows** - at center of separating cut.

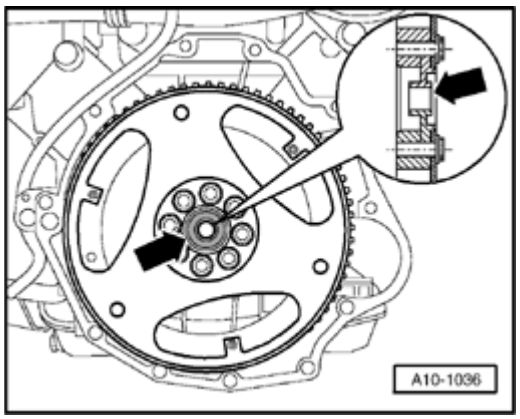

Fig. 768: Installing Double Clamps So That Bolt Ends Do Not Project Over Lower Edge Of Double

Clamp
Courtesy of VOLKSWAGEN UNITED STATES, INC.

- When installing the double clamps, ensure that the bolt ends do not project beyond lower edge of the double clamp.
- Threaded connections point toward outside.
- Align exhaust system free of tension --> **Exhaust system, installing free of tension**.

Left front exhaust pipe with primary and main catalytic converter (vehicles with manual transmission), removing and installing

Special tools, testers and auxiliary items required

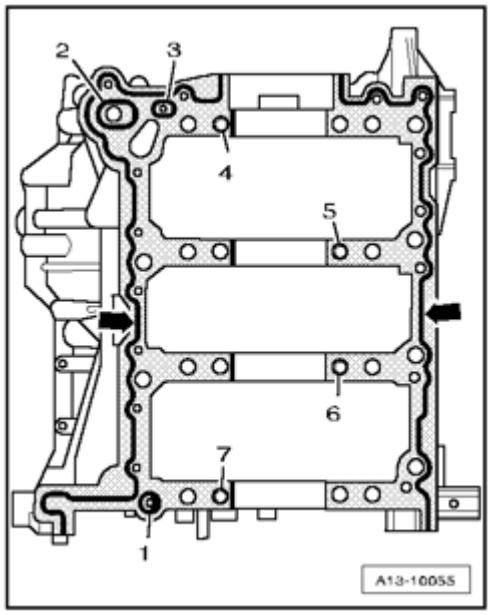

Fig. 769: Identifying Hose Clamps 3094
Courtesy of VOLKSWAGEN UNITED STATES, INC.

- Hose clamps up to 25 mm diameter 3094

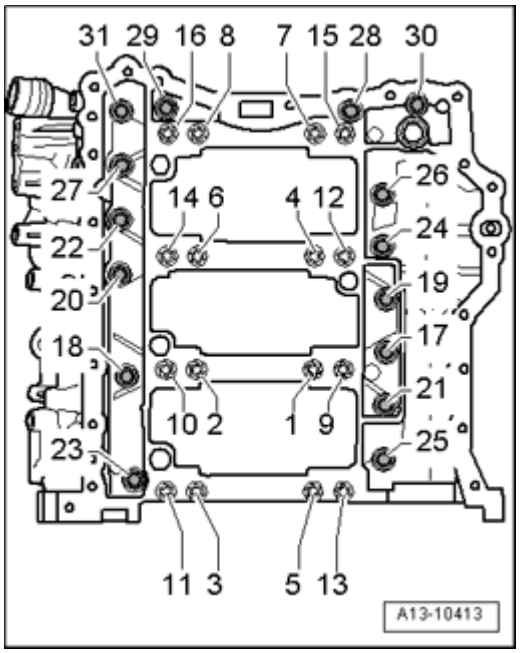

Fig. 770: Identifying Engine/Transmission Jack V.A.G. 1383 A
Courtesy of VOLKSWAGEN UNITED STATES, INC.

- Engine/transmission jack V.A.G 1383 A

Removing

NOTE:

- **All cable ties opened or cut during engine removal must be reinstalled at the same locations during installation.**

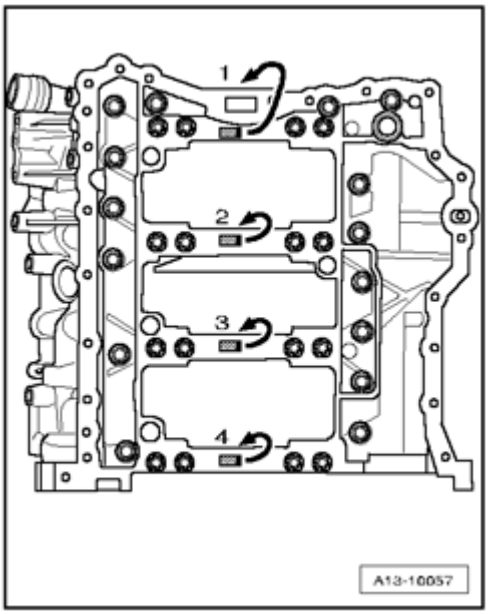

Fig. 771: Removing Rear Engine Cover

Courtesy of VOLKSWAGEN UNITED STATES, INC.

- Remove rear engine cover - **arrows** -.

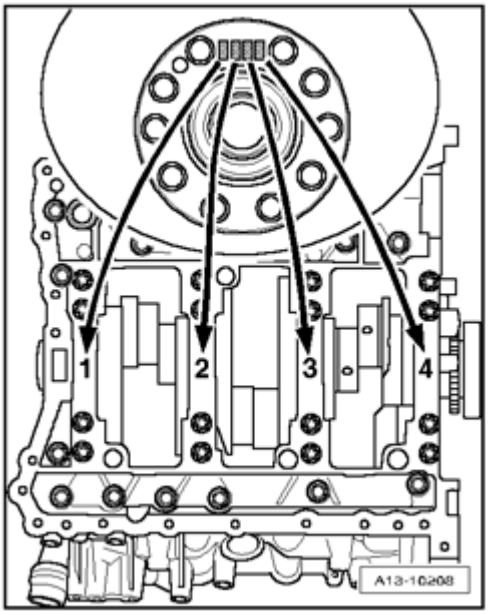

Fig. 772: Removing Cover In Engine Compartment (Left Side)
Courtesy of VOLKSWAGEN UNITED STATES, INC.

- Remove cover - **1** - in engine compartment (left side).

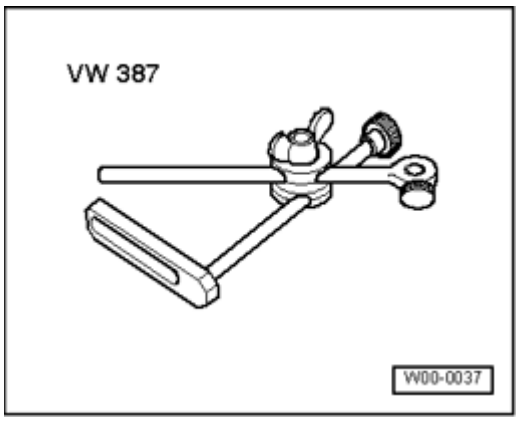

Fig. 773: Removing Coolant Hoses & Coolant Expansion Tank
Courtesy of VOLKSWAGEN UNITED STATES, INC.

- Clamp off coolant hose - **2** - using Hose clamps up to 25 mm diameter 3094 and disconnect from coolant expansion tank.
- Seal connection using a plug that fits.
- Remove coolant expansion tank - **arrow** -.
- Disconnect electrical wire to Engine Coolant Level (ECL) Warning Switch F66 at bottom on expansion

tank and set aside coolant expansion tank with coolant hose - **1** - connected.

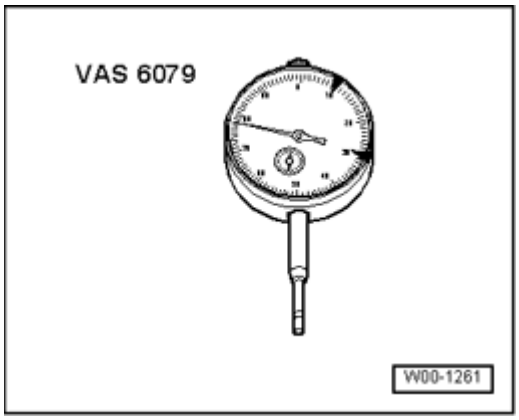

Fig. 774: Removing Bracket For Electrical Harness Connectors At Left From Bulkhead
Courtesy of VOLKSWAGEN UNITED STATES, INC.

- Remove electrical harness connectors - **1 to 4** - from bracket at left of bulkhead.
- Disconnect electrical harness connectors - **1** - and - **4** -.
- Remove bracket from bulkhead.
- Remove heat insulation sleeve on wiring harness and lay open wiring harness.

- Free up oxygen sensor wires downward.
- Remove left front wheel.

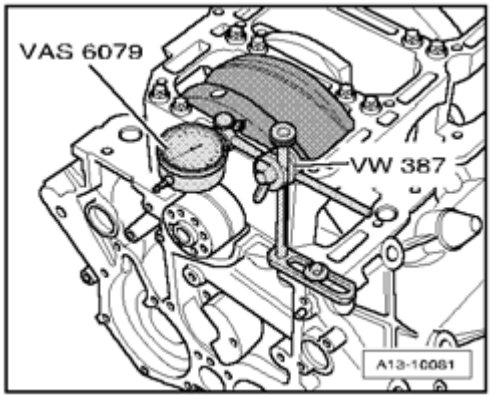

Fig. 775: Removing Quick-Release Fasteners, Screws And Noise Insulation
Courtesy of VOLKSWAGEN UNITED STATES, INC.

- Remove quick-release fasteners - **1** - , remove screws - **2** - and remove noise insulation.

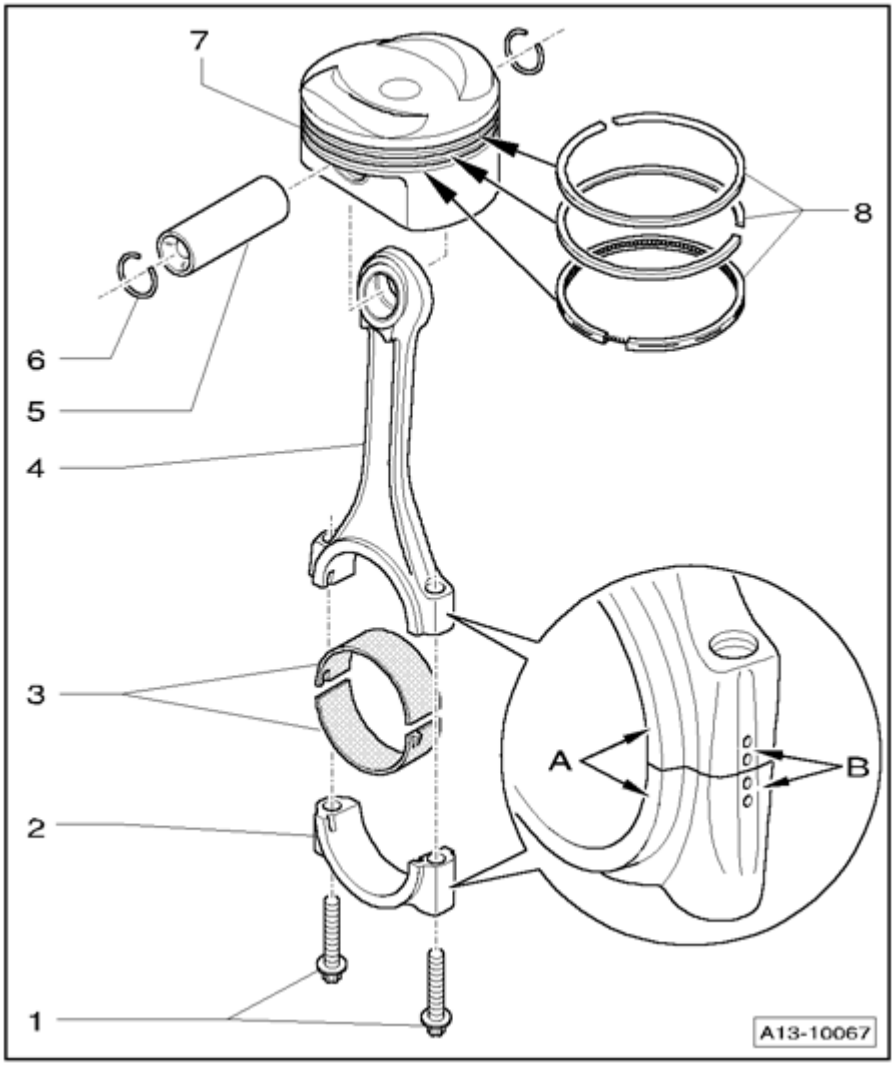

Fig. 776: Removing Bracket For Noise Insulation
Courtesy of VOLKSWAGEN UNITED STATES, INC.

- Remove bracket for noise insulation - **arrows** -.

NOTE:

- **Flex joint in front exhaust pipe must not be bent more than 10 ° , otherwise it may be damaged.**

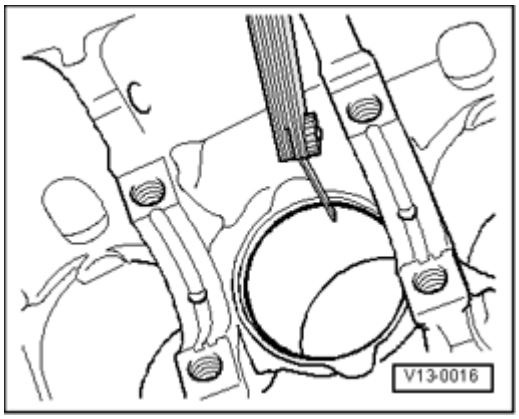

Fig. 777: Disconnecting Exhaust System At Double Clamps
Courtesy of VOLKSWAGEN UNITED STATES, INC.

- Disconnect exhaust system at left double clamp - **left arrow** -.

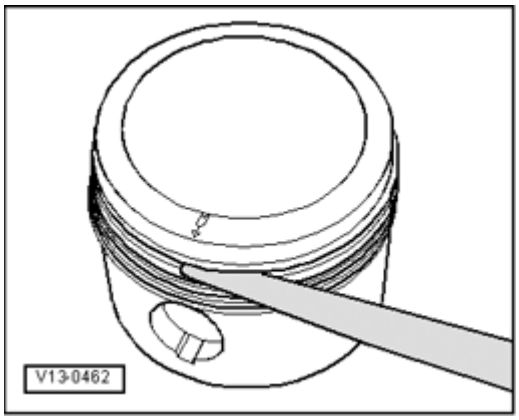

Fig. 778: Supporting Tunnel Cross Member Using VAG1383A Engine/Transmission Lift And A Piece Of Wood
Courtesy of VOLKSWAGEN UNITED STATES, INC.

- Place Engine/transmission jack V.A.G 1383 A plunger with a block of wood inserted in between - **arrow** - beneath rear cross member.
- First remove bolts - **1** - and - **2** - , then bolts - **3** - and - **4** -.

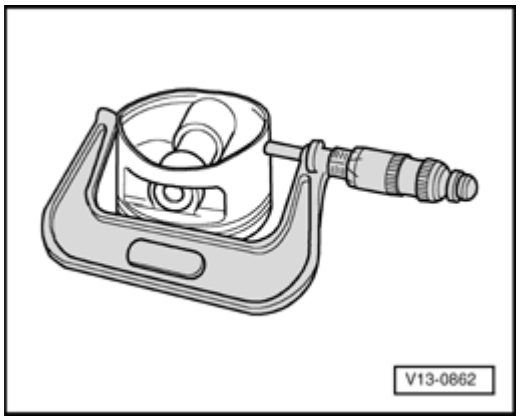

Fig. 779: Identifying Distance Between Cross Member And Body Reaches Dimension
Courtesy of VOLKSWAGEN UNITED STATES, INC.

- Slowly lower rear cross member using engine/transmission jack V.A.G 1383 A until distance between rear cross member/chassis acquires dimension - **x** -.

- Dimension - **x** - = 60 mm.

NOTE:

- **Transmission must not be lowered further because otherwise driveshaft joint and decoupling element in front exhaust pipe may be damaged.**

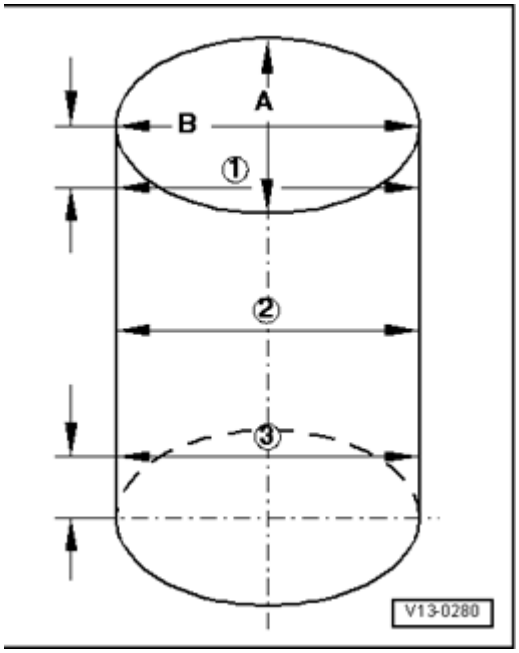

Fig. 780: Drive Axle Heat Shield
Courtesy of VOLKSWAGEN UNITED STATES, INC.

- Remove heat shield for left and right drive axles - **arrow** -.

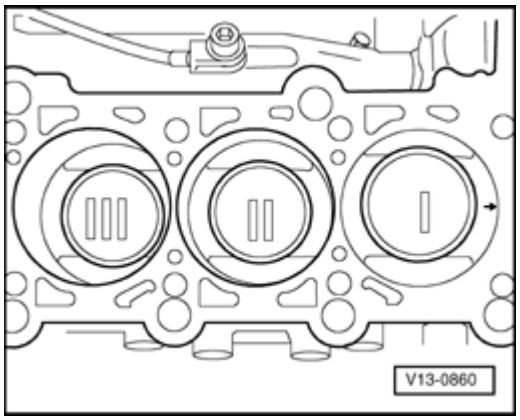

Fig. 781: Identifying Push Rod And Connecting Rod For Selector Rod

Courtesy of VOLKSWAGEN UNITED STATES, INC.

- Disconnect connecting rod - **2** - of shift rod.
- Remove socket head bolt of pivot rod - **1** -.

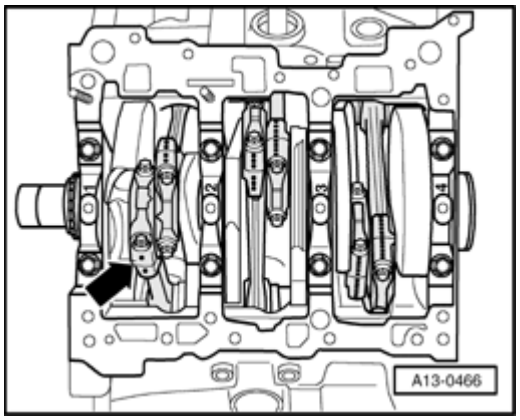

Fig. 782: Freeing Up Oxygen Sensor Wires At Areas Indicated By On Transmission
Courtesy of VOLKSWAGEN UNITED STATES, INC.

- Free up oxygen sensor wires at areas indicated by - **arrows** - on transmission.

NOTE:

- **Illustration shows engine/transmission assembly removed.**

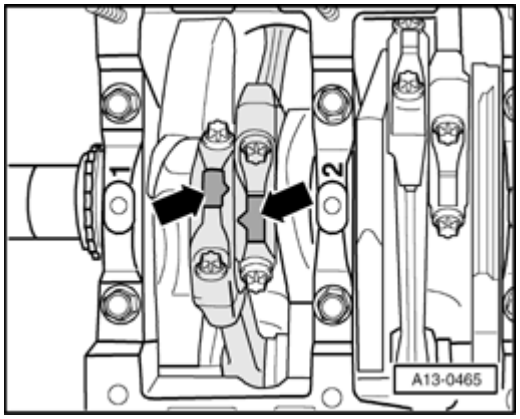

Fig. 783: Removing Bolt At Strap For Left Front Exhaust Pipe
Courtesy of VOLKSWAGEN UNITED STATES, INC.

- Remove bolt - **arrow** - at strap for left front exhaust pipe.

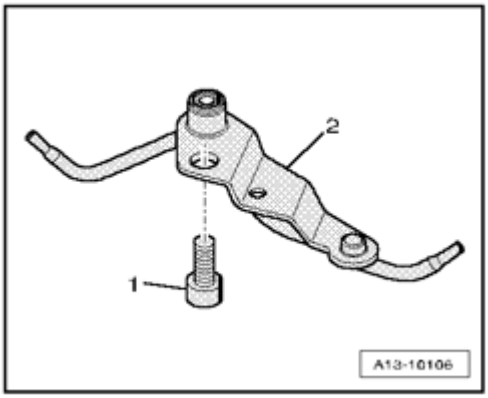

Fig. 784: Removing Nuts For Left Front Exhaust Pipe/Exhaust Manifold
Courtesy of VOLKSWAGEN UNITED STATES, INC.

- Remove nuts - **1 to 3** - for left front exhaust pipe/exhaust manifold.

NOTE:

- **Illustration shows engine removed.**

- Disconnect front exhaust pipe from left exhaust manifold.
- Remove front exhaust pipe with pre- and main catalytic converters.

Installing

Installation is in reverse order of removal, note the following:

NOTE:

- **Replace self-locking nuts.**
- **Secure all hose connections using hose clamps appropriate for the model type .**
- **During installation, all cable ties must be re-installed at the same location.**

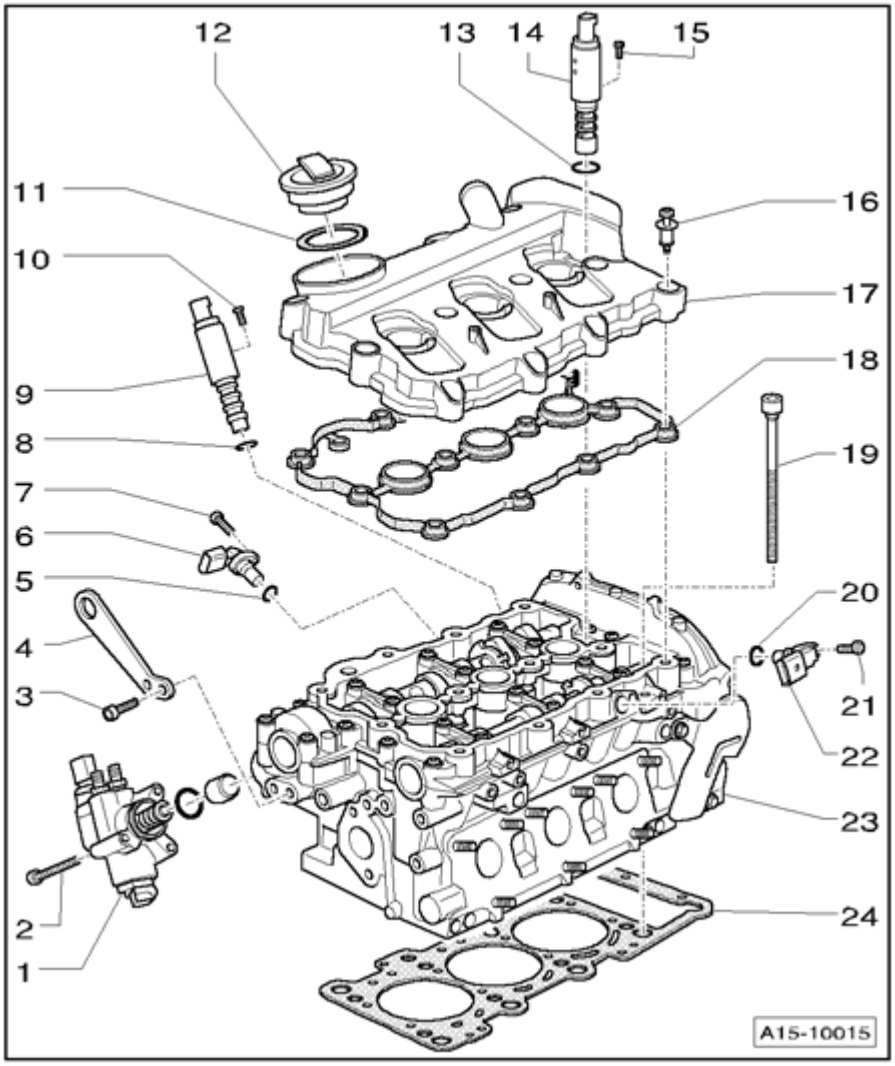

Fig. 785: Removing Nuts For Left Front Exhaust Pipe/Exhaust Manifold
Courtesy of VOLKSWAGEN UNITED STATES, INC.

- Tighten nuts - **1 to 3** - of front exhaust pipe/exhaust manifold bolts uniformly in stages, while doing so, align catalytic converter horizontally.
- Install subframe --> **40 - FRONT SUSPENSION** .

NOTE:

- **Individual mounting components of exhaust system on transmission** ***Individual components of suspension, right side*** **under**

- Align exhaust system free of tension --> **Exhaust system, installing free of tension**.

Torque specifications

Component	Nm
Front exhaust pipe with pre- and main catalytic	27

converters to exhaust manifold	
Front exhaust pipe with pre- and main catalytic converters to mounting strap	25
Pivot rod on transmission	40
Shift rod connecting rod on transmission	23
Driveshaft guard on transmission	23

Right front exhaust pipe with primary and main catalytic converter (vehicles with manual transmission), removing and installing

Special tools, testers and auxiliary items required

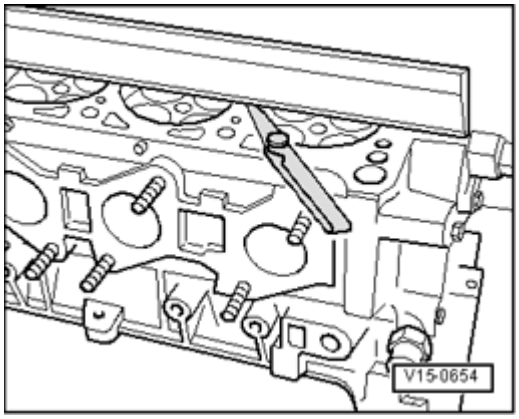

Fig. 786: Identifying Engine/Transmission Jack V.A.G. 1383 A
Courtesy of VOLKSWAGEN UNITED STATES, INC.

- Engine/transmission jack V.A.G 1383 A

Removing

NOTE:

- **All cable ties opened or cut during engine removal must be reinstalled at the same locations during installation.**

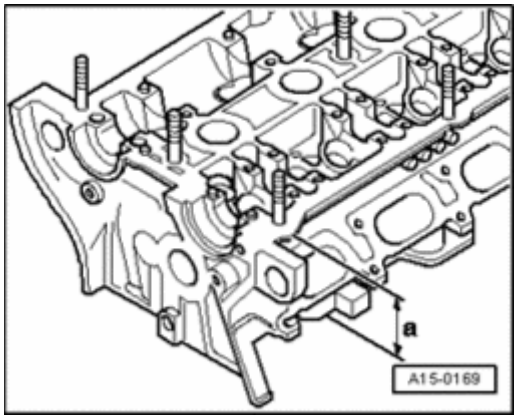

Fig. 787: Removing Rear Engine Cover

Courtesy of VOLKSWAGEN UNITED STATES, INC.

- Remove rear engine cover - **arrows** -.

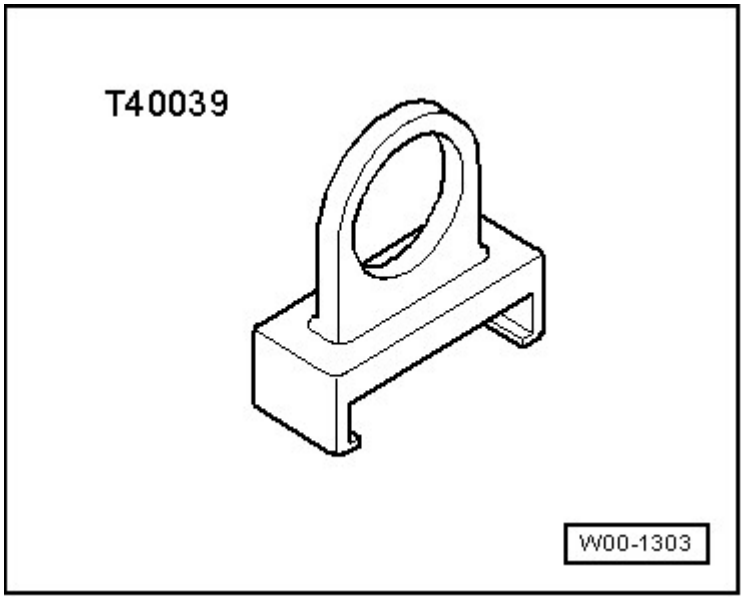

Fig. 788: Removing Cover In Engine Compartment (Right Side)
Courtesy of VOLKSWAGEN UNITED STATES, INC.

- Remove cover - **1** - in engine compartment (right side).

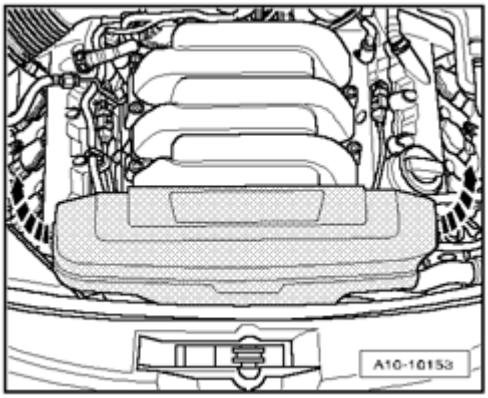

Fig. 789: Removing Air Guide Hose
Courtesy of VOLKSWAGEN UNITED STATES, INC.

- Remove air guide hose - **arrows** -.

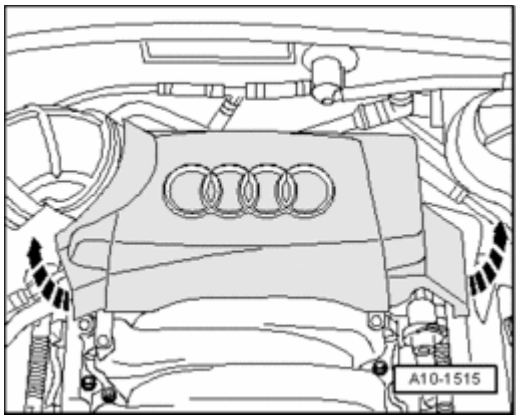

Fig. 790: Removing Bracket For Electrical Harness Connectors At Right From Bulkhead
Courtesy of VOLKSWAGEN UNITED STATES, INC.

- Remove harness connectors - **1 to 4** - from bracket at right of bulkhead.
- Disconnect electrical harness connectors - **2** - and - **4** -.
- Free up oxygen sensor wires downward.
- Remove right front wheel.

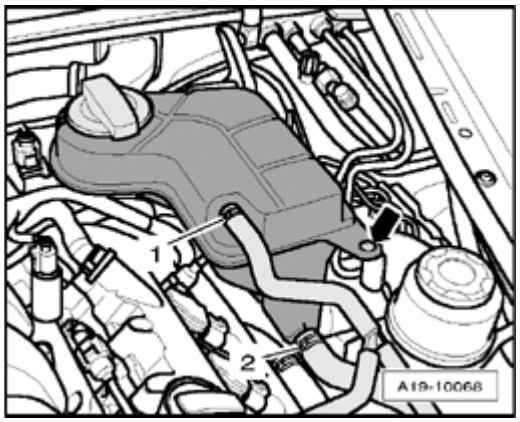

Fig. 791: Removing Quick-Release Fasteners, Screws And Noise Insulation
Courtesy of VOLKSWAGEN UNITED STATES, INC.

- Remove quick-release fasteners - **1** - , remove screws - **2** - and remove noise insulation.

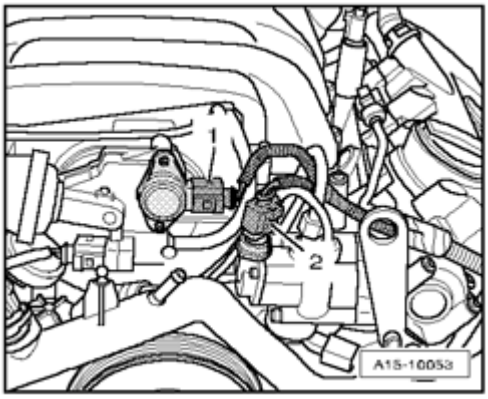

Fig. 792: Removing Bracket For Noise Insulation
Courtesy of VOLKSWAGEN UNITED STATES, INC.

- Remove bracket for noise insulation - **arrows** -.

NOTE:

- **Flex joint in front exhaust pipe must not be bent more than 10 ° , otherwise it may be damaged.**

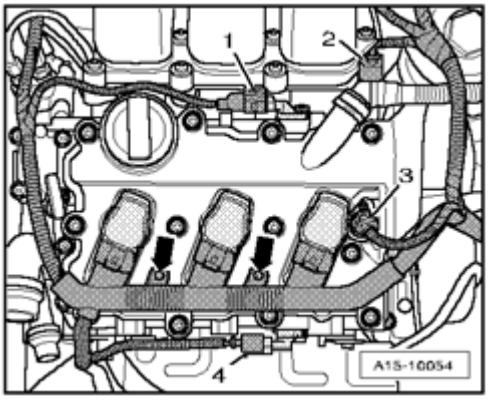

Fig. 793: Disconnecting Exhaust System At Double Clamps
Courtesy of VOLKSWAGEN UNITED STATES, INC.

- Disconnect exhaust system at right double clamp - **right arrow** -.

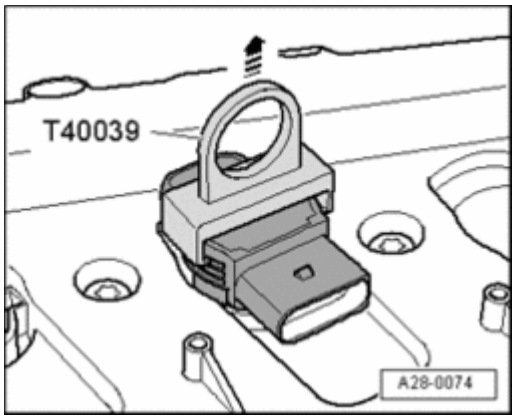

Fig. 794: Supporting Tunnel Cross Member Using VAG1383A Engine/Transmission Lift And A Piece Of Wood
Courtesy of VOLKSWAGEN UNITED STATES, INC.

- Place Engine/Transmission Jack V.A.G 1383 A plunger with a block of wood inserted in between - **arrow** - beneath rear cross member.
- First remove bolts - **1** - and - **2** - , then bolts - **3** - and - **4** -.

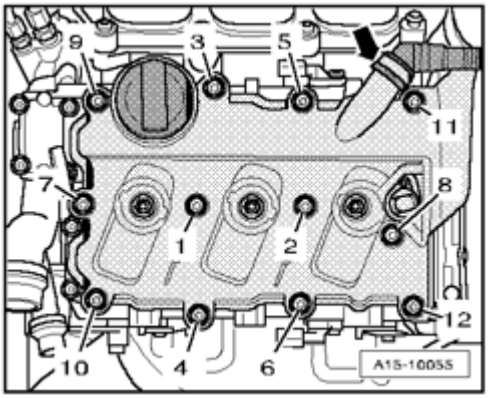

Fig. 795: Identifying Distance Between Cross Member And Body Reaches Dimension
Courtesy of VOLKSWAGEN UNITED STATES, INC.

- Slowly lower rear cross member using Engine/transmission jack V.A.G 1383 A until distance between rear cross member/chassis acquires dimension - **x** -.

- Dimension - **x** - = 60 mm

NOTE:

- **Transmission must not be lowered further because otherwise driveshaft joint and decoupling element in front exhaust pipe may be damaged.**

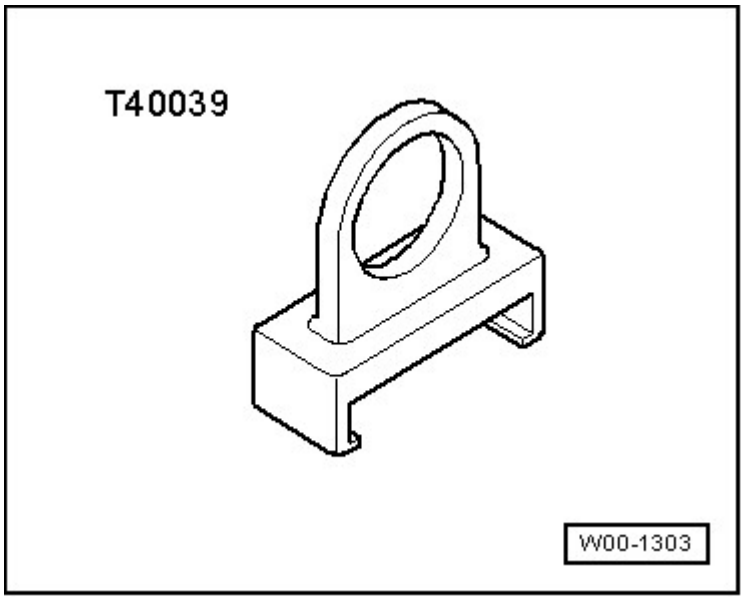

Fig. 796: Drive Axle Heat Shield
Courtesy of VOLKSWAGEN UNITED STATES, INC.

- Remove heat shield - **arrow** - for right drive axle.

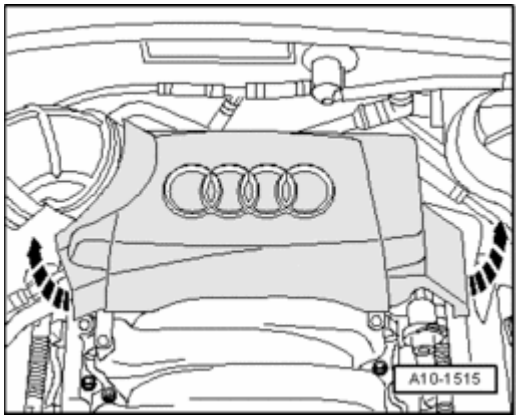

Fig. 797: Identifying Push Rod And Connecting Rod For Selector Rod
Courtesy of VOLKSWAGEN UNITED STATES, INC.

- Disconnect connecting rod - **2** - of shift rod.
- Remove socket head bolt of pivot rod - **1** -.

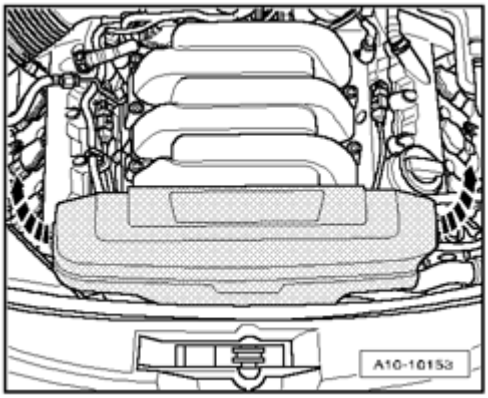

Fig. 798: Freeing Up Oxygen Sensor Wires At Areas Indicated By On Transmission
Courtesy of VOLKSWAGEN UNITED STATES, INC.

- Free up oxygen sensor wires at areas indicated by - **arrows** - on transmission.

NOTE:

- **Illustration shows engine/transmission assembly removed.**

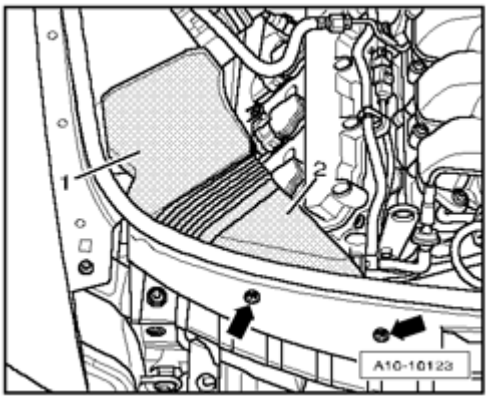

Fig. 799: Removing Bolt At Strap For Right Front Exhaust Pipe
Courtesy of VOLKSWAGEN UNITED STATES, INC.

- Remove bolt - **arrow** - at strap for right front exhaust pipe.

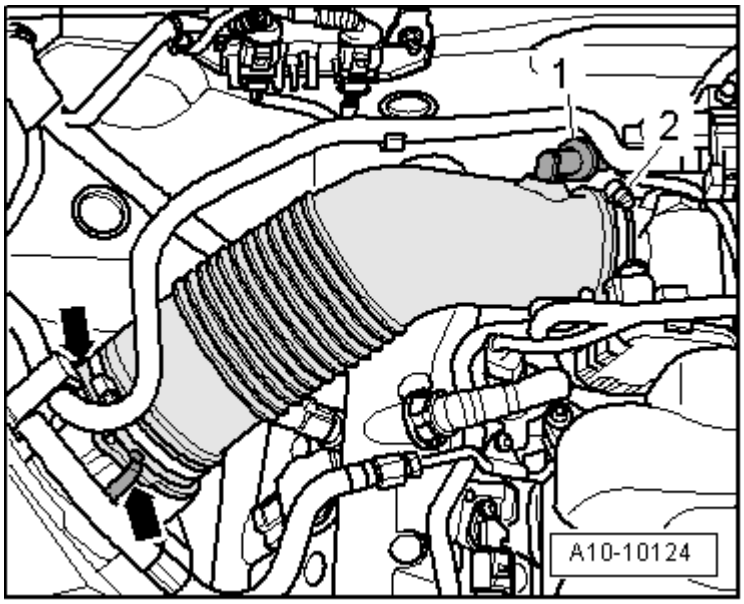

Fig. 800: Removing Nuts For Right Front Exhaust Pipe/Exhaust Manifold
Courtesy of VOLKSWAGEN UNITED STATES, INC.

- Remove nuts - **1 to 3** - for right front exhaust pipe/exhaust manifold.

NOTE:

- **Illustration shows engine removed.**

- Remove front exhaust pipe with pre- and main catalytic converters.

Installing

Installation is in reverse order of removal, note the following:

NOTE:

- **Replace self-locking nuts.**
- **Secure all hose connections using hose clamps appropriate for the model type .**
- **During installation, all cable ties must be re-installed at the same location.**

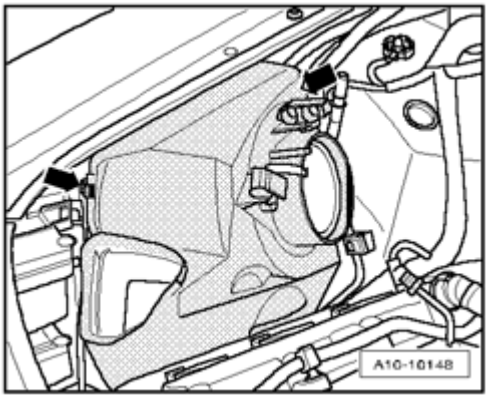

Fig. 801: Removing Nuts For Right Front Exhaust Pipe/Exhaust Manifold
Courtesy of VOLKSWAGEN UNITED STATES, INC.

- Tighten nuts - **1 to 3** - of front exhaust pipe/exhaust manifold bolts uniformly in stages, align catalytic converter horizontally while doing so.
- Install subframe --> **40 - FRONT SUSPENSION** .

NOTE:

- **Individual mounting components of exhaust system on transmission**
  Individual components of suspension, right side

- Align exhaust system free of tension --> **Exhaust system, installing free of tension**.

Torque specifications

Component	Nm
Front exhaust pipe with pre- and main catalytic converters to exhaust manifold	27
Front exhaust pipe with pre- and main catalytic converters to mounting strap	25
Pivot rod on transmission	40
Shift rod connecting rod on transmission	23
Driveshaft guard on transmission	23

Left front exhaust pipe with primary and main catalytic converter (vehicles with automatic transmission), removing and installing

Special tools, testers and auxiliary items required

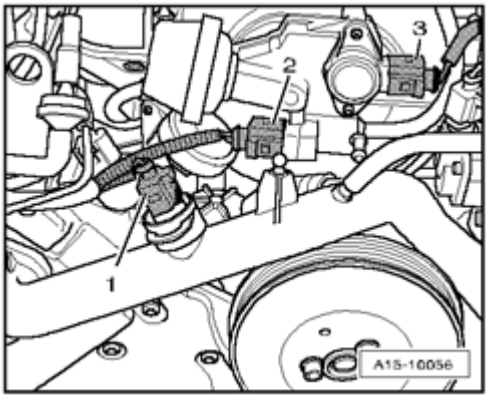

Fig. 802: Identifying Hose Clamps 3094
Courtesy of VOLKSWAGEN UNITED STATES, INC.

- Hose clamps up to 25 mm diameter 3094

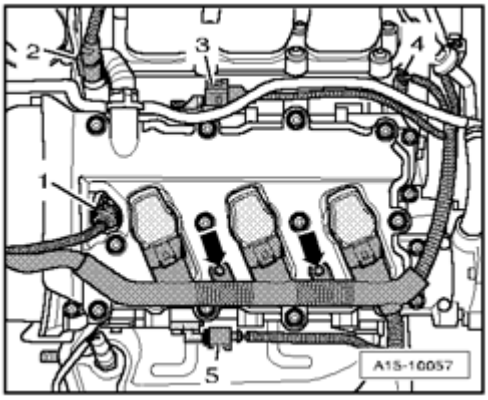

Fig. 803: Identifying Engine/Transmission Jack V.A.G. 1383 A
Courtesy of VOLKSWAGEN UNITED STATES, INC.

- Engine/transmission jack V.A.G 1383 A

Removing

NOTE:

- **All heat insulation sleeves removed during engine removal must be reinstalled at the same locations during installation.**
- **All cable ties opened or cut during engine removal must be reinstalled at the same locations during installation.**

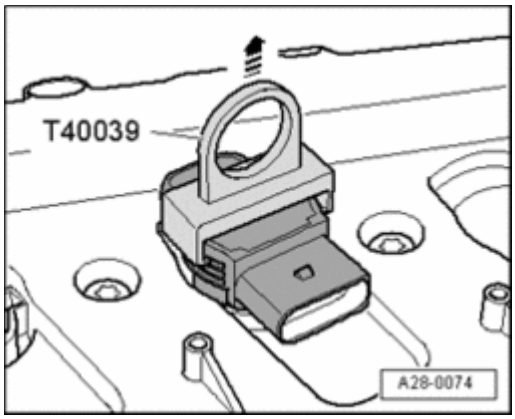

Fig. 804: Removing Rear Engine Cover
Courtesy of VOLKSWAGEN UNITED STATES, INC.

- Remove rear engine cover - **arrows** -.

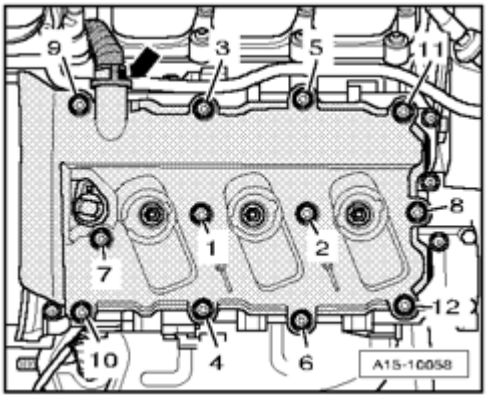

Fig. 805: Removing Cover In Engine Compartment (Right Side)
Courtesy of VOLKSWAGEN UNITED STATES, INC.

- Remove cover - **1** - in engine compartment (right side).

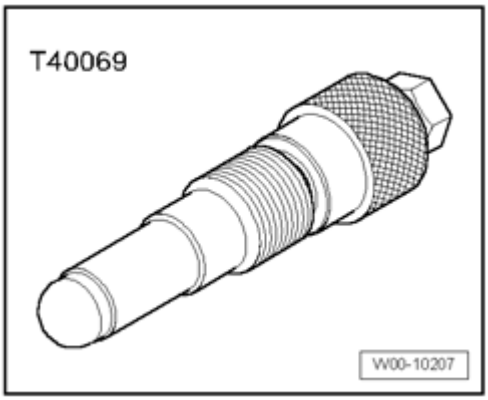

Fig. 806: Removing Air Guide Hose
Courtesy of VOLKSWAGEN UNITED STATES, INC.

- Remove air guide hose - **arrows** -.

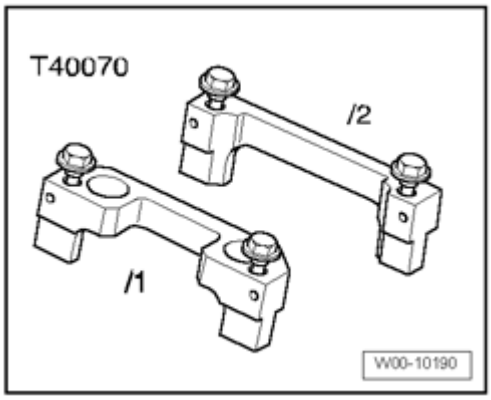

Fig. 807: Removing Cover In Engine Compartment (Left Side)
Courtesy of VOLKSWAGEN UNITED STATES, INC.

- Remove cover - **1** - in engine compartment (left side).

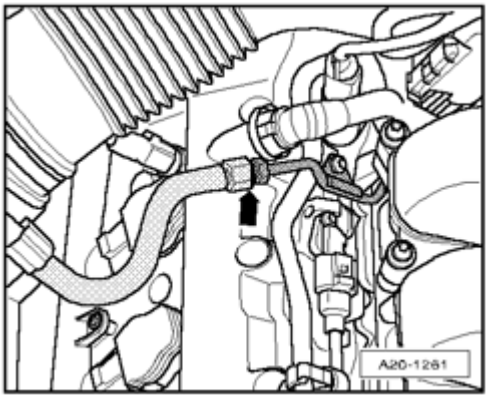

Fig. 808: Removing Coolant Hoses & Coolant Expansion Tank
Courtesy of VOLKSWAGEN UNITED STATES, INC.

- Clamp off coolant hose - **2** - using Hose clamps up to 25 mm diameter 3094 and disconnect from coolant expansion tank.
- Seal connection using a plug that fits.
- Remove coolant expansion tank - **arrow** -.
- Disconnect electrical wire to Engine Coolant Level (ECL) Warning Switch F66 at bottom on expansion tank and set aside coolant expansion tank with coolant hose - **1** - connected.

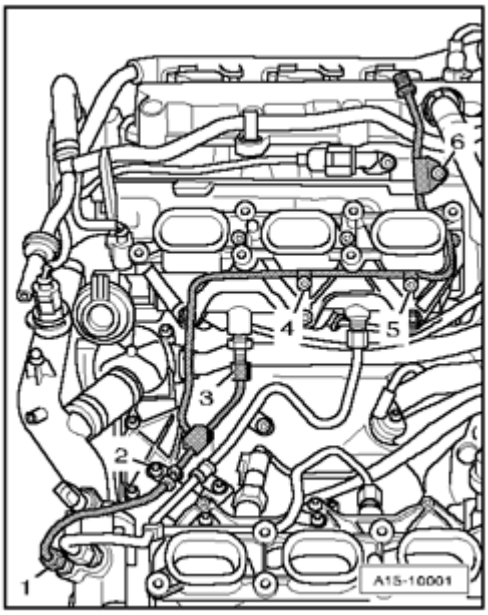

Fig. 809: Removing Bracket For Electrical Harness Connectors At Left From Bulkhead
Courtesy of VOLKSWAGEN UNITED STATES, INC.

- Remove electrical harness connectors - **1 to 4** - from bracket at left of bulkhead.
- Disconnect electrical harness connectors - **1** - and - **4** -.
- Remove bracket from bulkhead.
- Remove heat insulation sleeve on wiring harness and lay open wiring harness.

- Free up oxygen sensor wires downward.
- Remove left front wheel.

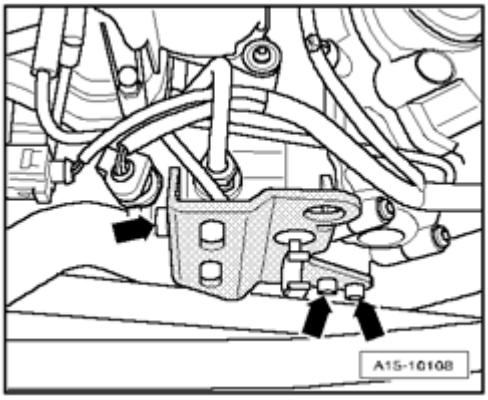

Fig. 810: Removing Quick-Release Fasteners, Screws And Noise Insulation
Courtesy of VOLKSWAGEN UNITED STATES, INC.

- Remove quick-release fasteners - **1** - , remove screws - **2** - and remove noise insulation.

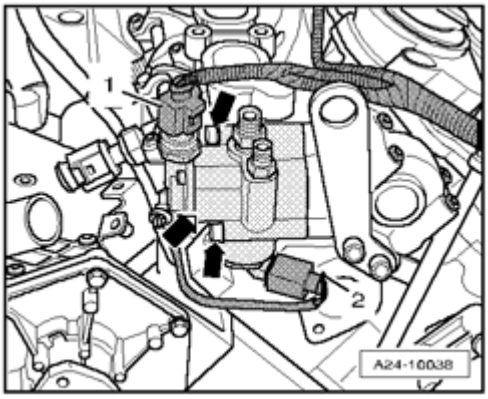

Fig. 811: Disconnecting Exhaust System At Double Clamps
Courtesy of VOLKSWAGEN UNITED STATES, INC.

NOTE:

- **Decoupling elements in front exhaust pipes must not be bent more than 10 ° danger of damage.**

- Disconnect exhaust system at double clamps - **arrows** -.

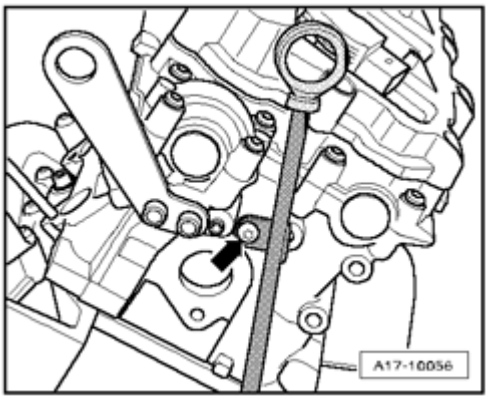

Fig. 812: Removing Heat Shield For Driveshaft
Courtesy of VOLKSWAGEN UNITED STATES, INC.

- Remove heat shield - **A** - for driveshaft - **arrows** -.
- Remove bolts at transmission/driveshaft flange.
- Push driveshaft together with rear final drive. The constant velocity (CV) joints can move axially.
- Tie up drive shaft to body.

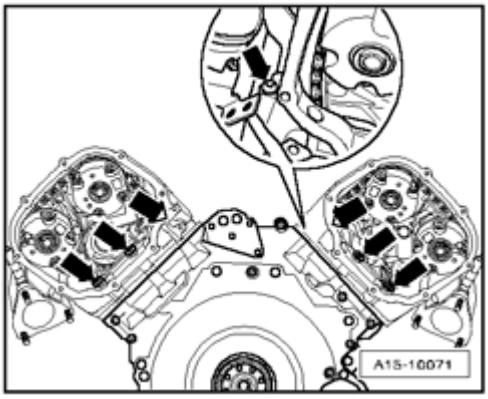

Fig. 813: Placing Lifting Surface Of Engine/Transmission Jack V.A.G 1383 A Centered On Housing Casing And Support Transmission From Below
Courtesy of VOLKSWAGEN UNITED STATES, INC.

- Place lifting surface of Engine/transmission jack V.A.G 1383 A centered on housing casing - **arrow** - and support transmission from below.

CAUTION: The lock carrier must be installed.

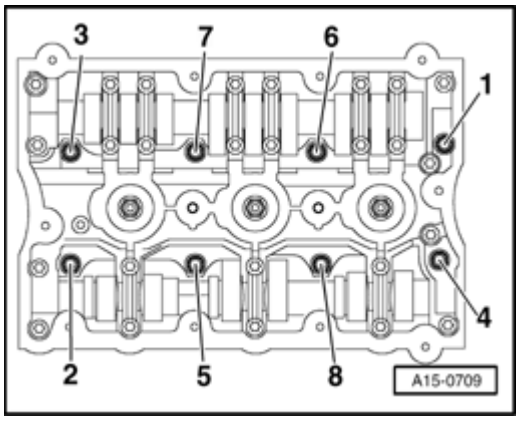

Fig. 814: Removing Bolts And Mounting Bolts Of Subframe
Courtesy of VOLKSWAGEN UNITED STATES, INC.

- First remove bolts - **2** - and - **3** - and then mounting bolts - **1** - and - **4** - of subframe.

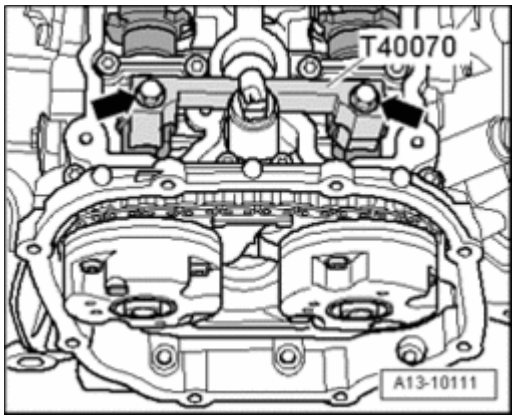

Fig. 815: Lowering Engine/Transmission Assembly Using Scissor Lift Platform VAS 6131 Only Approx. By Dimension
Courtesy of VOLKSWAGEN UNITED STATES, INC.

- Lower transmission and subframe using Engine/transmission jack V.A.G 1383 A to dimension - **a** -.

- Dimension - **a** - = 50 mm.

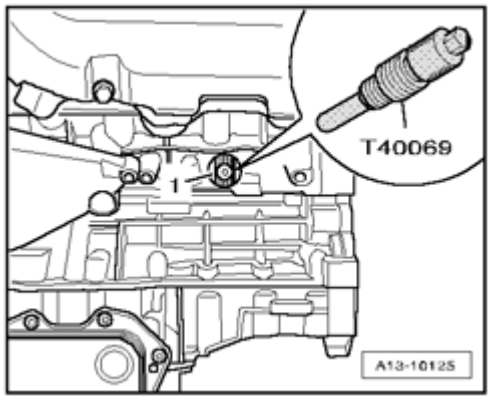

Fig. 816: Removing Heat Shield For Left Drive Axle
Courtesy of VOLKSWAGEN UNITED STATES, INC.

- Remove heat shield - **1** - for left drive axle.

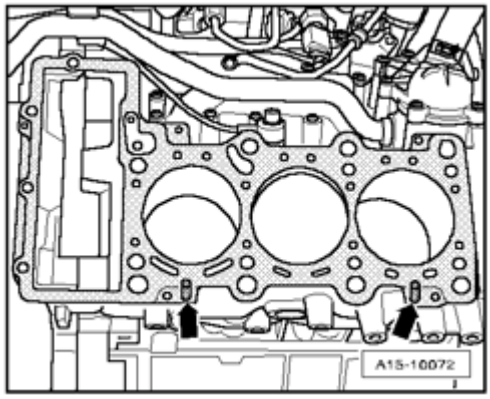

Fig. 817: Freeing Up Oxygen Sensor Wires At Areas Indicated By On Transmission
Courtesy of VOLKSWAGEN UNITED STATES, INC.

- Free up oxygen sensor wires at areas indicated by - **arrows** - on transmission.

NOTE:

- **Illustration shows engine/transmission assembly removed.**

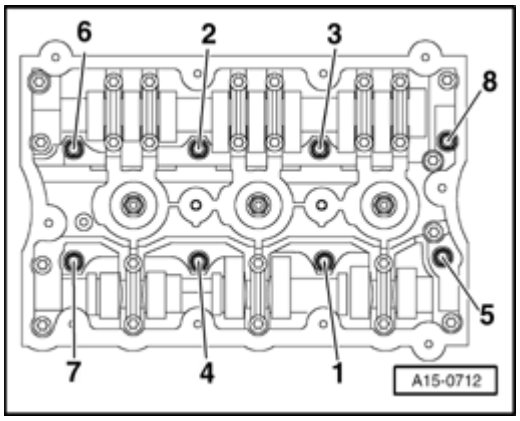

Fig. 818: Removing Bolt At Strap For Left Front Exhaust Pipe
Courtesy of VOLKSWAGEN UNITED STATES, INC.

- Remove bolt - **arrow** - at strap for left front exhaust pipe.

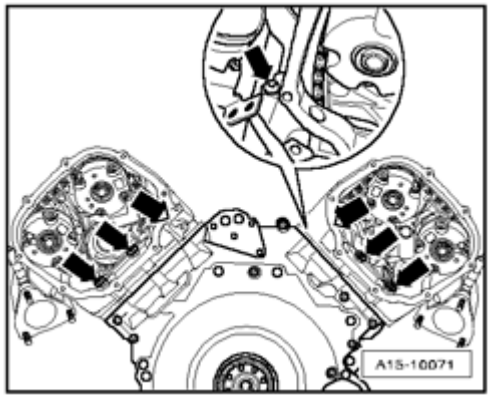

Fig. 819: Removing Nuts For Left Front Exhaust Pipe/Exhaust Manifold
Courtesy of VOLKSWAGEN UNITED STATES, INC.

- Remove nuts - **1 to 3** - for left front exhaust pipe/exhaust manifold.

NOTE:

- **Illustration shows engine/transmission assembly removed.**

- Remove front exhaust pipe with pre- and main catalytic converters.

Installing

Installation is in reverse order of removal, note the following:

NOTE:

- **Replace self-locking nuts.**
- **During installation, re-install all heat insulation sleeves at the same locations.**
- **Secure all hose connections using hose clamps appropriate for the model type .**
- **During installation, all cable ties must be re-installed at the same location.**

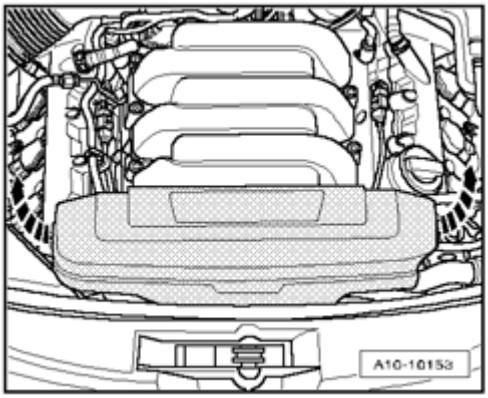

Fig. 820: Removing/Installing Nuts For Left Front Exhaust Pipe/Exhaust Manifold
Courtesy of VOLKSWAGEN UNITED STATES, INC.

- Tighten nuts - **1 to 3** - of front exhaust pipe/exhaust manifold bolts uniformly in stages, align catalytic converter horizontally while doing so.
- Install subframe --> **40 - FRONT SUSPENSION** .

NOTE:

- **Individual mounting components of exhaust system on transmission Individual left mounting components - vehicles with automatic transmission**

- Align exhaust system free of tension --> **Exhaust system, installing free of tension**.

Torque specifications

Component	Nm
Front exhaust pipe with pre- and main catalytic converters to exhaust manifold	27
Front exhaust pipe with pre- and main catalytic converters to mounting strap	25
Heat shield for drive shaft to transmission	23

Right front exhaust pipe with primary and main catalytic converter (vehicles with automatic transmission), removing and installing

Special tools, testers and auxiliary items required

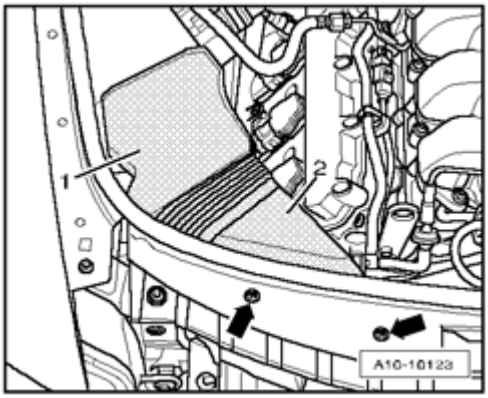

Fig. 821: Identifying Engine/Transmission Jack V.A.G. 1383 A
Courtesy of VOLKSWAGEN UNITED STATES, INC.

- Engine/transmission jack V.A.G 1383 A

Removing

NOTE:

- **All cable ties opened or cut during engine removal must be reinstalled at the same locations during installation.**

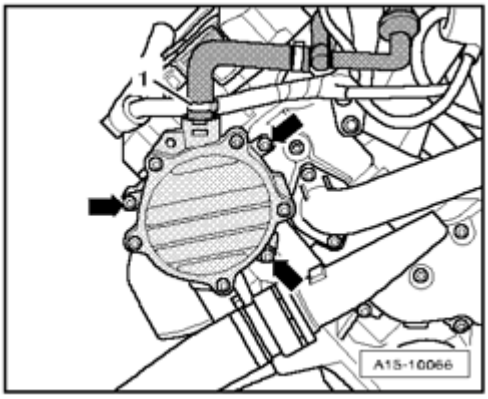

Fig. 822: Removing Rear Engine Cover
Courtesy of VOLKSWAGEN UNITED STATES, INC.

- Remove rear engine cover - **arrows** -.

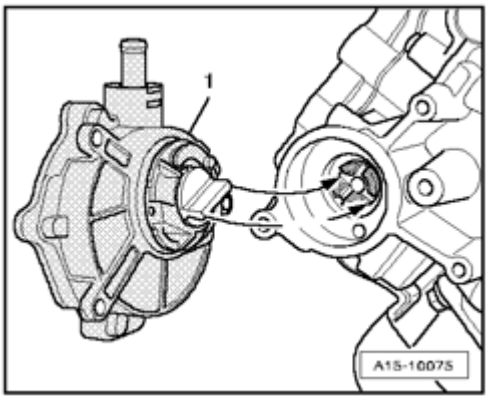

Fig. 823: Removing Cover In Engine Compartment (Right Side)
Courtesy of VOLKSWAGEN UNITED STATES, INC.

- Remove cover - **1** - in engine compartment (right side).

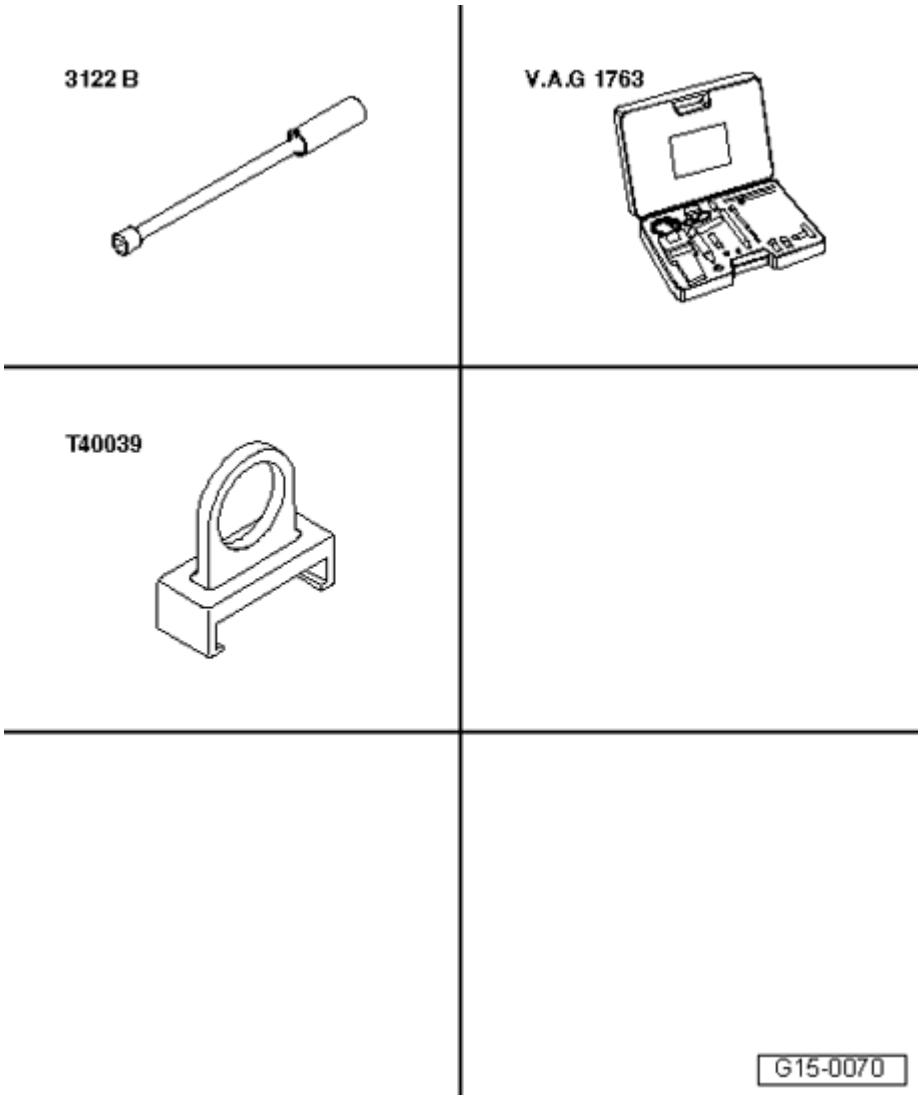

Fig. 824: Removing Air Guide Hose
Courtesy of VOLKSWAGEN UNITED STATES, INC.

- Remove air guide hose - **arrows** -.

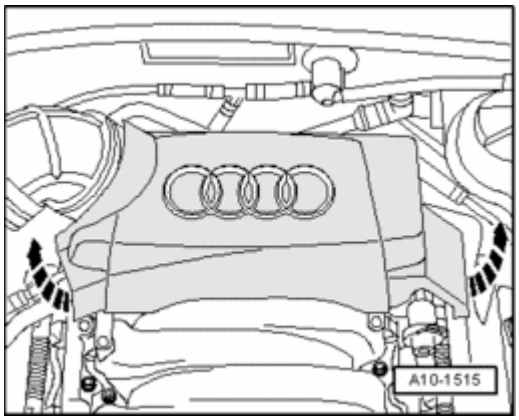

Fig. 825: Removing Bracket For Electrical Harness Connectors At Right From Bulkhead
Courtesy of VOLKSWAGEN UNITED STATES, INC.

- Remove harness connectors - **1 to 4** - from bracket at right of bulkhead.
- Disconnect electrical harness connectors - **2** - and - **4** -.
- Free up oxygen sensor wires downward.
- Remove right front wheel.

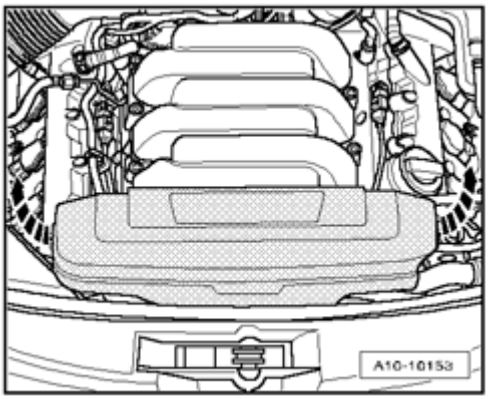

Fig. 826: Removing Quick-Release Fasteners, Screws And Noise Insulation
Courtesy of VOLKSWAGEN UNITED STATES, INC.

- Remove quick-release fasteners - **1** - , remove screws - **2** - and remove noise insulation.

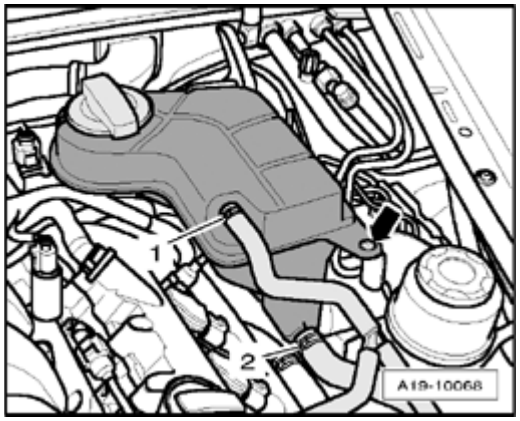

Fig. 827: Disconnecting Exhaust System At Double Clamps
Courtesy of VOLKSWAGEN UNITED STATES, INC.

NOTE:

- **Decoupling elements in front exhaust pipes must not be bent more than 10 ° danger of damage.**

- Disconnect exhaust system at double clamps - **arrows** -.

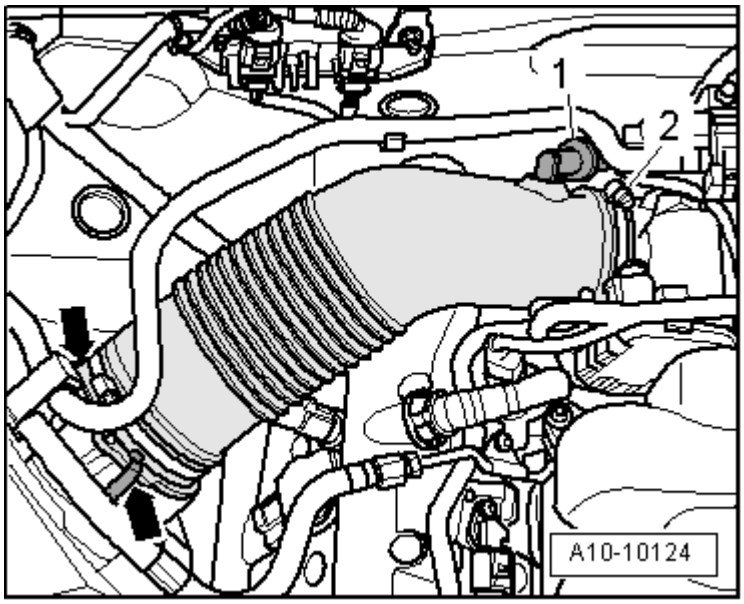

Fig. 828: Removing Heat Shield For Driveshaft
Courtesy of VOLKSWAGEN UNITED STATES, INC.

- Remove heat shield - **A** - for driveshaft - **arrows** -.
- Remove bolts at transmission/driveshaft flange.
- Push driveshaft together with rear final drive. The constant velocity (CV) joints can move axially.
- Tie up driveshaft to body.

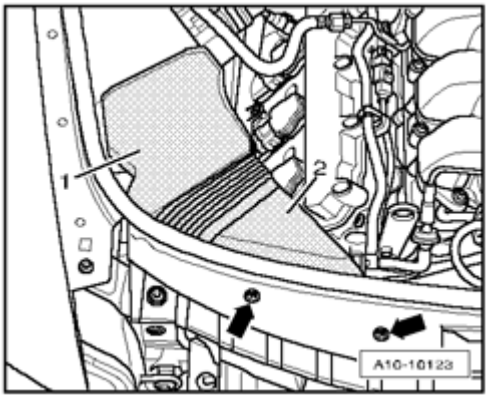

Fig. 829: Placing Lifting Surface Of Engine/Transmission Jack V.A.G 1383 A Centered On Housing Casing And Support Transmission From Below
Courtesy of VOLKSWAGEN UNITED STATES, INC.

- Place lifting surface of Engine/transmission jack V.A.G 1383 A centered on housing casing - **arrow** - and support transmission from below.

CAUTION: The lock carrier must be installed.

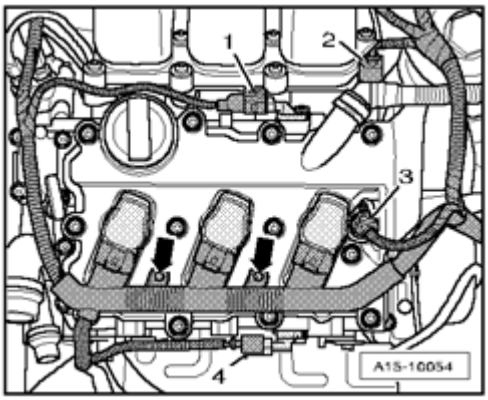

Fig. 830: Removing Bolts And Mounting Bolts Of Subframe
Courtesy of VOLKSWAGEN UNITED STATES, INC.

- First remove bolts - **2** - and - **3** - and then mounting bolts - **1** - and - **4** - of subframe.

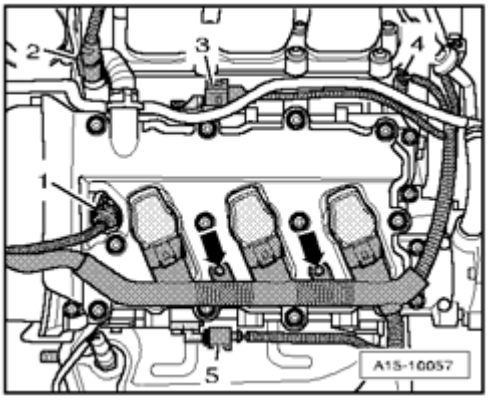

Fig. 831: Lowering Transmission And Subframe Using Engine/Transmission Jack V.A.G 1383 A To Dimension
Courtesy of VOLKSWAGEN UNITED STATES, INC.

- Lower transmission and subframe using Engine/transmission jack V.A.G 1383 A to dimension - **a** -.

- Dimension - **a** - = 50 mm.

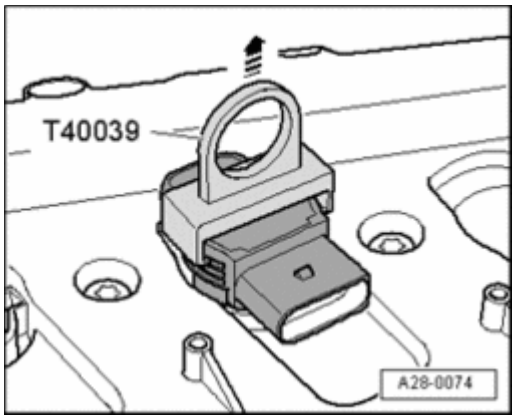

Fig. 832: Removing Heat Shield For Left Drive Axle
Courtesy of VOLKSWAGEN UNITED STATES, INC.

- Remove heat shield - **1** - for left drive axle.

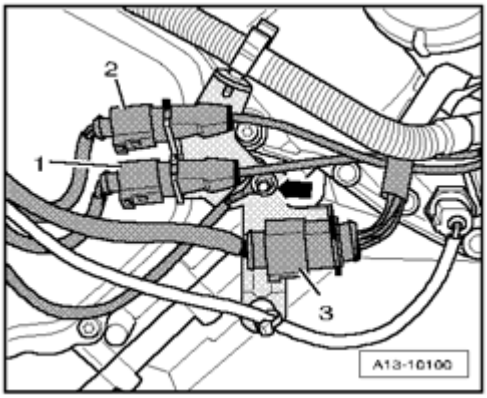

Fig. 833: Freeing Up Oxygen Sensor Wires At Areas Indicated By On Transmission
Courtesy of VOLKSWAGEN UNITED STATES, INC.

- Free up oxygen sensor wires at areas indicated by - **arrows** - on transmission.

NOTE:

- **Illustration shows engine/transmission assembly removed.**

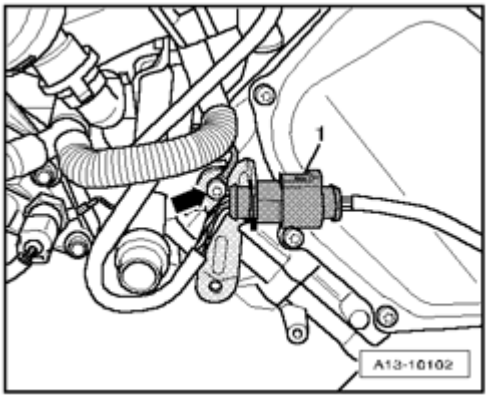

Fig. 834: Removing Bolt At Strap For Right Front Exhaust Pipe
Courtesy of VOLKSWAGEN UNITED STATES, INC.

- Remove bolt - **arrow** - at strap for right front exhaust pipe.

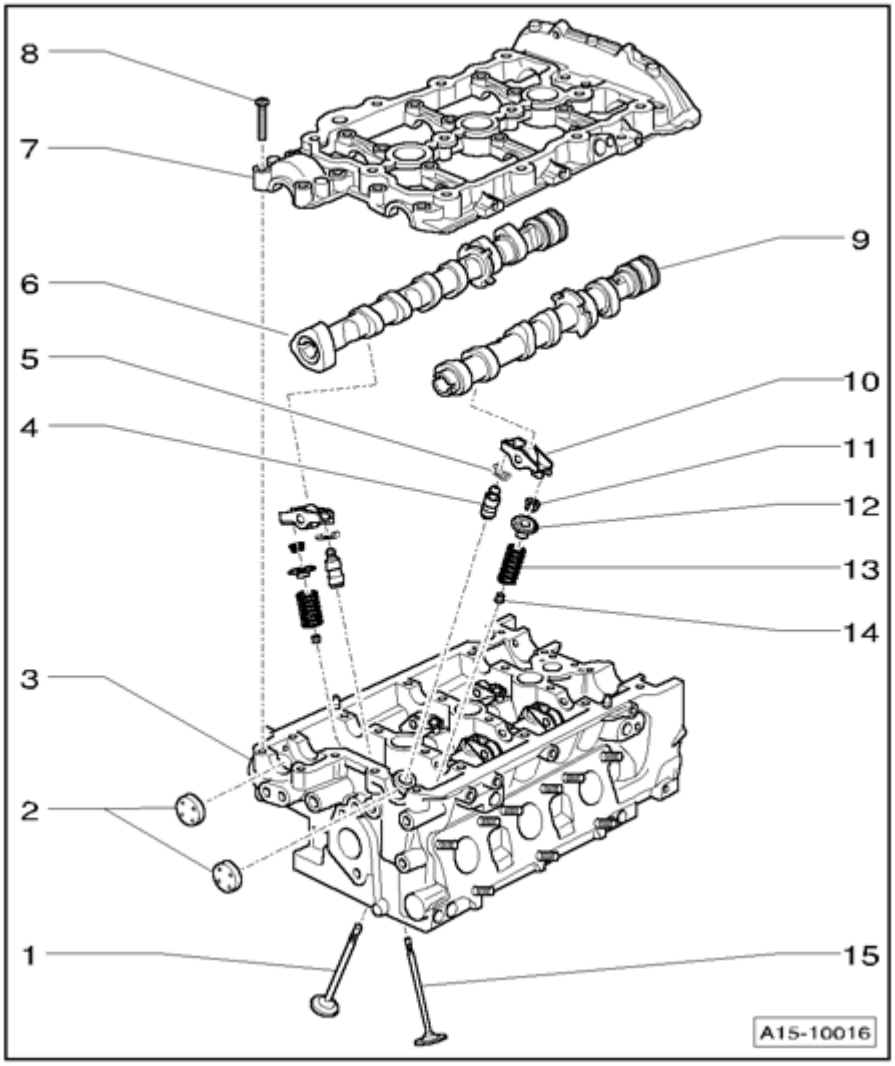

Fig. 835: Removing Nuts For Right Front Exhaust Pipe/Exhaust Manifold
Courtesy of VOLKSWAGEN UNITED STATES, INC.

- Remove nuts - **1 to 3** - for right front exhaust pipe/exhaust manifold.

NOTE:

- **Illustration shows engine/transmission assembly removed.**

- Next, disconnect front exhaust pipe from exhaust manifold.

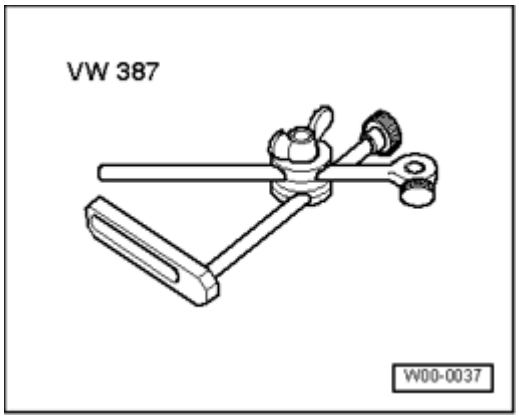

Fig. 836: Removing Bolts For Left/Right Transmission Mount
Courtesy of VOLKSWAGEN UNITED STATES, INC.

- Remove bolts - **arrows** - for right transmission mount at bottom.

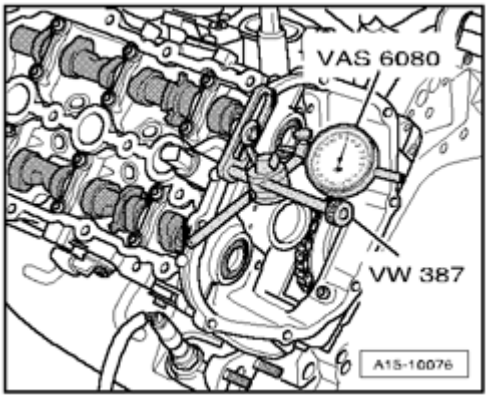

Fig. 837: Removing Bolts, Heat Shield, Transmission Support
Courtesy of VOLKSWAGEN UNITED STATES, INC.

- Remove bolts - **2** - and remove heat shield - **B** -.
- Remove bolts - **1** - and remove transmission support.
- Remove front exhaust pipe with pre- and main catalytic converters.

Installing

Installation is in reverse order of removal, note the following:

NOTE:

- **Replace self-locking nuts.**
- **During installation, all cable ties must be re-installed at the same location.**
- **Secure all hose connections using hose clamps appropriate for the model type .**

- Install transmission supports -->**37 CONTROLS, HOUSING** .

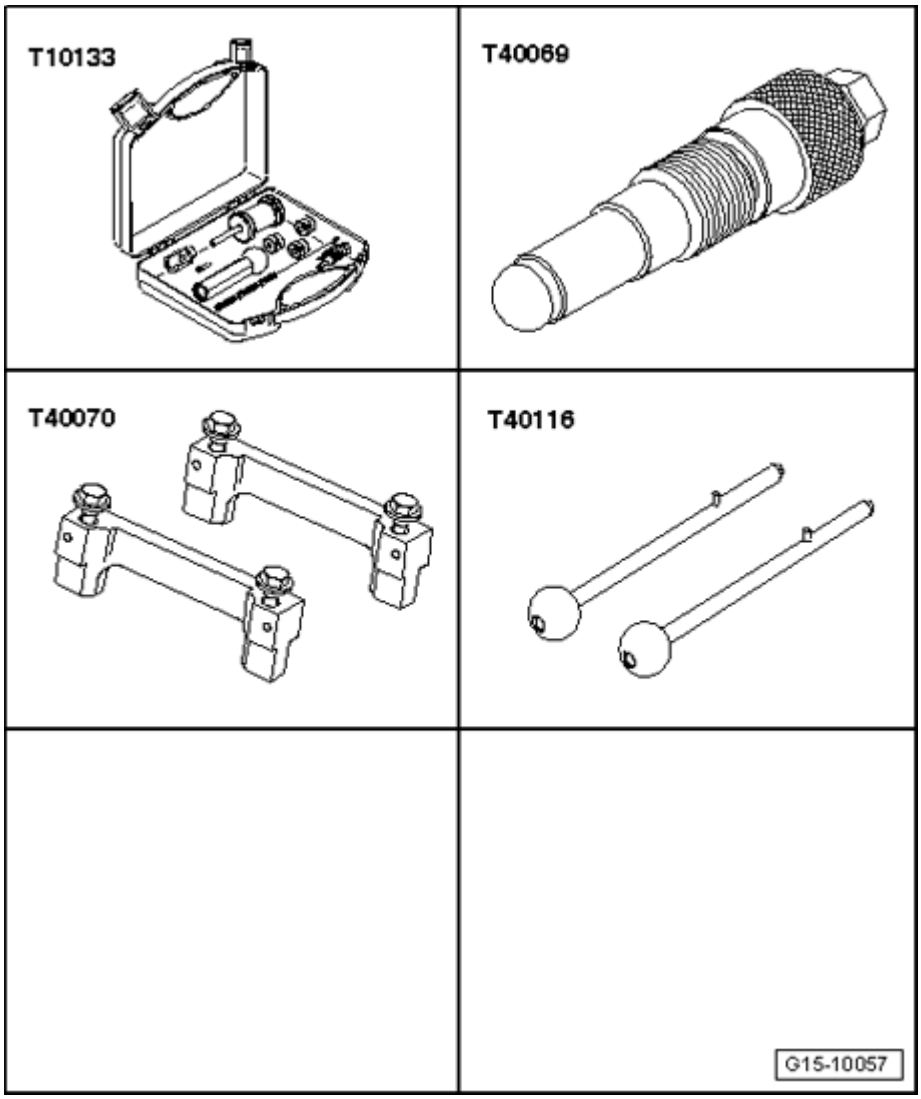

Fig. 838: Removing/Installing Nuts For Right Front Exhaust Pipe/Exhaust Manifold
Courtesy of VOLKSWAGEN UNITED STATES, INC.

- Tighten nuts - **1 to 3** - of front exhaust pipe/exhaust manifold bolts uniformly in stages, align catalytic converter horizontally while doing so.
- Install subframe --> **40 - FRONT SUSPENSION** .

NOTE:

- **Individual mounting components of exhaust system on transmission**
  Individual components of suspension, right side

- Align exhaust system free of tension --> **Exhaust system, installing free of tension**.

Torque specifications

Component	Nm
Front exhaust pipe with pre- and main catalytic	27

converters to exhaust manifold	
Front exhaust pipe with pre- and main catalytic converters to mounting strap	25
Driveshaft guard on transmission	23

Left exhaust manifold, removing and installing

Special tools, testers and auxiliary items required

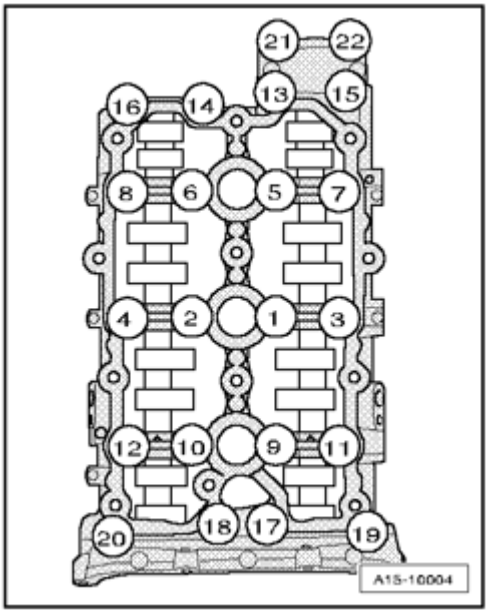

Fig. 839: Identifying Hose Clip Pliers Vag 1921
Courtesy of VOLKSWAGEN UNITED STATES, INC.

- Hose clamp pliers V.A.G 1921

Removing

- Remove engine: Vehicles with manual transmission --> **Engine (vehicles with manual transmission)** , vehicles with automatic transmission --> **Engine (vehicles with automatic transmission), removing**.

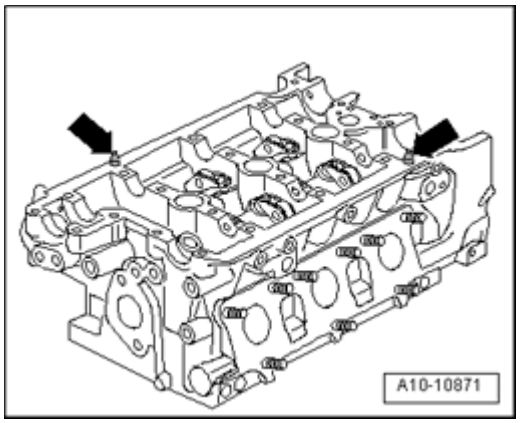

Fig. 840: Removing Bracket For Electrical Harness Connectors At Left From Bulkhead
Courtesy of VOLKSWAGEN UNITED STATES, INC.

- Remove electrical harness connectors - **1** - and - **4** - for oxygen sensors in left front exhaust pipe out of bracket and disconnect.
- Remove heat insulation sleeve on wiring harness and free up individual wires.

NOTE:

- **In the illustration, the electrical harness connectors are depicted as installed.**

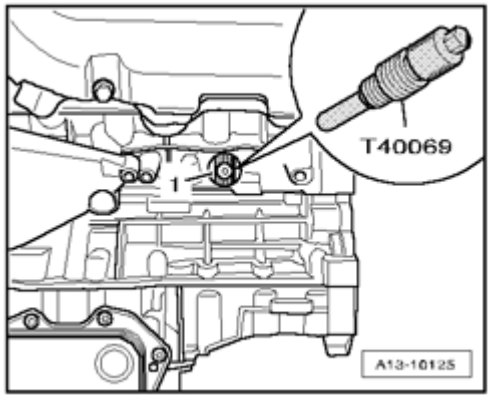

Fig. 841: Removing Bolt At Strap For Left Front Exhaust Pipe
Courtesy of VOLKSWAGEN UNITED STATES, INC.

- Remove bolt - **arrow** - at strap for left front exhaust pipe.

NOTE:

- **Illustration shows the strap for a vehicle with manual transmission.**

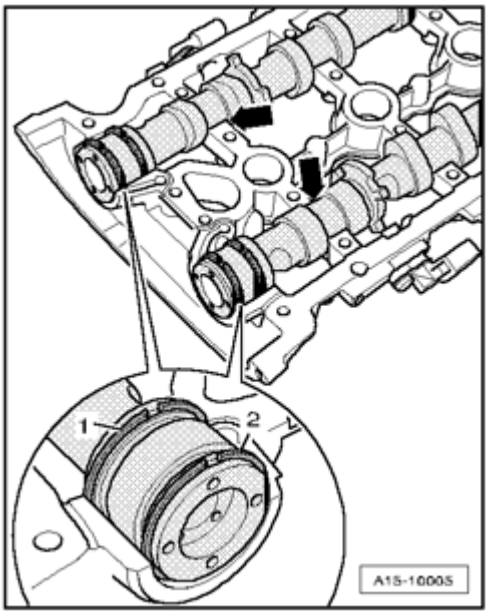

Fig. 842: Removing Nuts For Left Front Exhaust Pipe/Exhaust Manifold
Courtesy of VOLKSWAGEN UNITED STATES, INC.

- Remove nuts - **1 to 3** - for left front exhaust pipe/exhaust manifold.

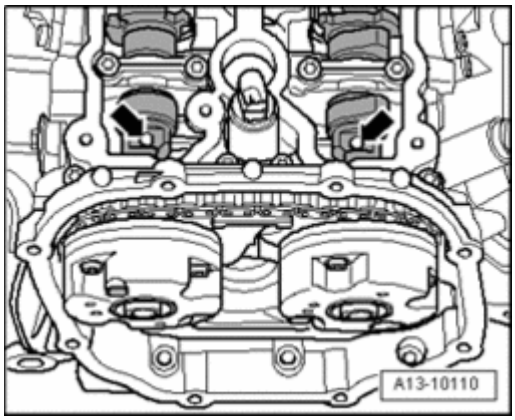

Fig. 843: Removing Bolts & Return Line From Power-Steering Pump
Courtesy of VOLKSWAGEN UNITED STATES, INC.

- Remove bolts - **1** - and - **2** -.

NOTE:

- **To prevent oil from escaping, the hose - arrow - remains connected to power steering.**

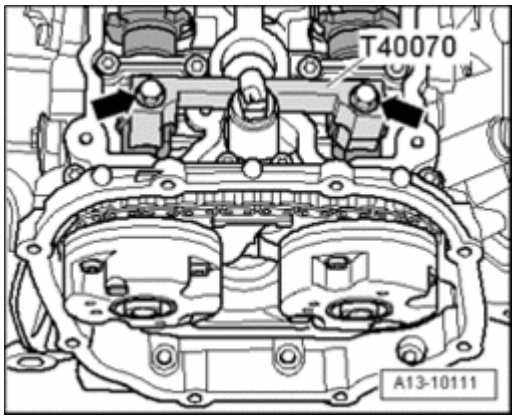

Fig. 844: Removing Bolt From Oil Dipstick Guide Tube At Cylinder Head
Courtesy of VOLKSWAGEN UNITED STATES, INC.

- Unscrew guide pipe for oil dipstick at cylinder head - **arrow** - , pull up and remove.

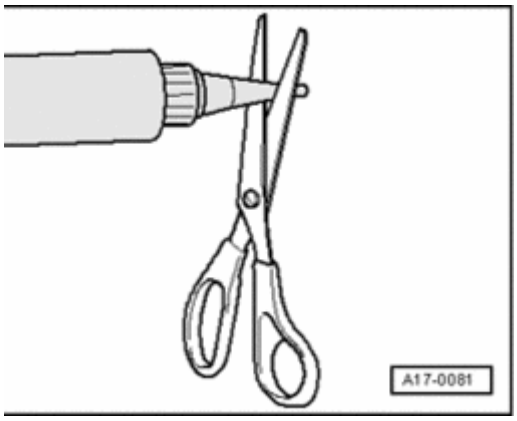

Fig. 845: Removing Bolts, Loosening Hose Clamps And Removing Left Coolant Pipe From Coolant Hoses
Courtesy of VOLKSWAGEN UNITED STATES, INC.

- Remove bolts - **1** - and - **2** -.
- Loosen hose clamps - **arrows** - and remove left coolant pipe from coolant hoses.

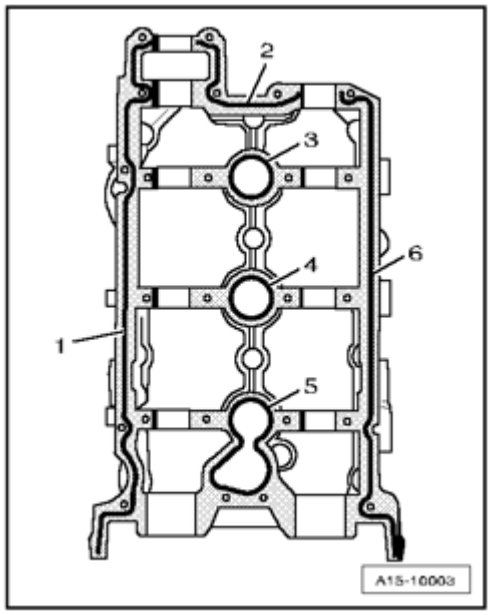

Fig. 846: Removing Nuts And Left Exhaust Manifold
Courtesy of VOLKSWAGEN UNITED STATES, INC.

- Remove nuts - **1 to 12** - and remove left exhaust manifold.

Installing

Installation is in reverse order of removal, note the following:

NOTE:

- **Always replace self-locking nuts and O-ring.**

- Install left coolant pipe --> **Left coolant pipe, removing and installing**.
- Install left front exhaust pipe: Vehicles with manual transmission --> **Left front exhaust pipe with primary and main catalytic converter (vehicles with manual transmission), removing and installing** , vehicles with automatic transmission --> **Left front exhaust pipe with primary and main catalytic converter (vehicles with automatic transmission), removing and installing**.
- Install engine: Vehicles with manual transmission --> **Engine (vehicles with manual transmission), installing** , vehicles with automatic transmission --> **Engine (vehicles with automatic transmission), installing**.

Torque specifications

Component	Nm
Exhaust manifold to cylinder head	25 * See note

*Replace nuts.

Right exhaust manifold, removing and installing

Special tools, testers and auxiliary items required

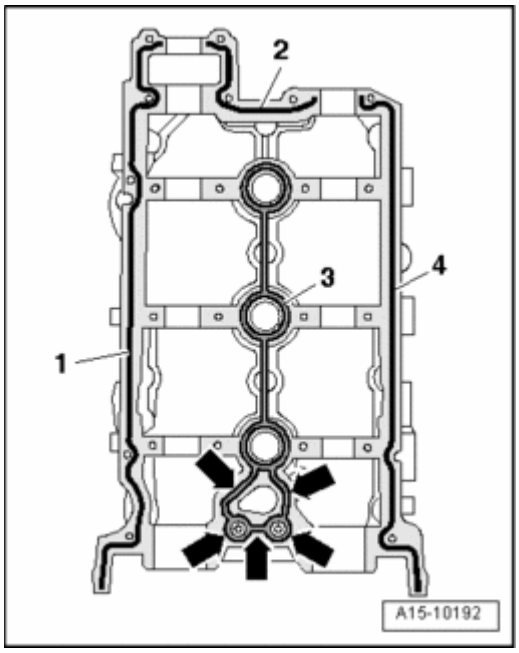

Fig. 847: Identifying Hose Clip Pliers Vag 1921
Courtesy of VOLKSWAGEN UNITED STATES, INC.

- Hose clamp pliers V.A.G 1921

Removing

- Remove engine: Vehicles with manual transmission --> **Engine (vehicles with manual transmission)** , vehicles with automatic transmission --> **Engine (vehicles with automatic transmission), removing**.

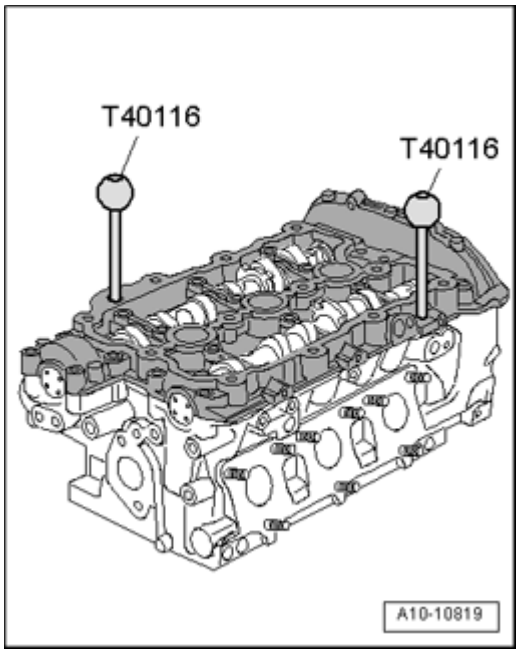

Fig. 848: Removing Bracket For Electrical Harness Connectors At Right From Bulkhead
Courtesy of VOLKSWAGEN UNITED STATES, INC.

- Remove electrical harness connectors - **2** - and - **4** - for oxygen sensors in right front exhaust pipe out of bracket and disconnect.

NOTE:

- **In the illustration, the electrical harness connectors are depicted as installed.**

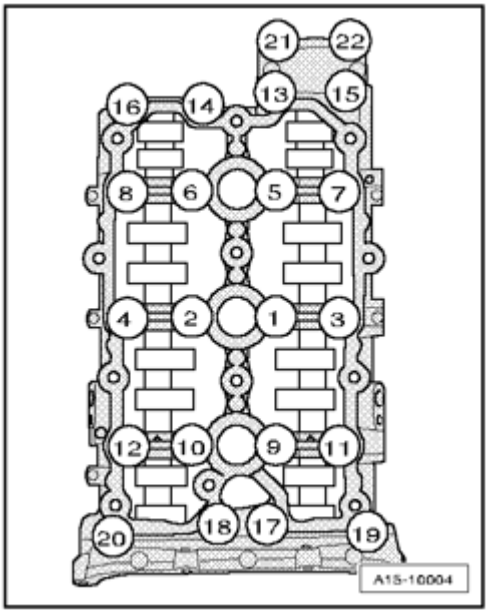

Fig. 849: Removing Bolt At Strap For Right Front Exhaust Pipe
Courtesy of VOLKSWAGEN UNITED STATES, INC.

- Remove bolt - **arrow** - at strap for right front exhaust pipe.

NOTE:

- **Illustration shows the strap for a vehicle with manual transmission.**

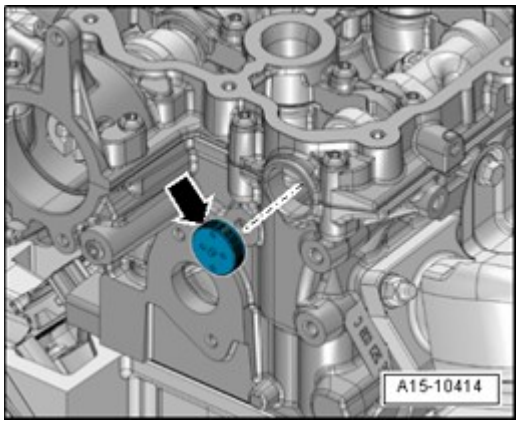

Fig. 850: Removing Nuts For Right Front Exhaust Pipe/Exhaust Manifold
Courtesy of VOLKSWAGEN UNITED STATES, INC.

- Remove nuts - **1 to 3** - for right front exhaust pipe/exhaust manifold.
- Remove front exhaust pipe with pre- and main catalytic converters.

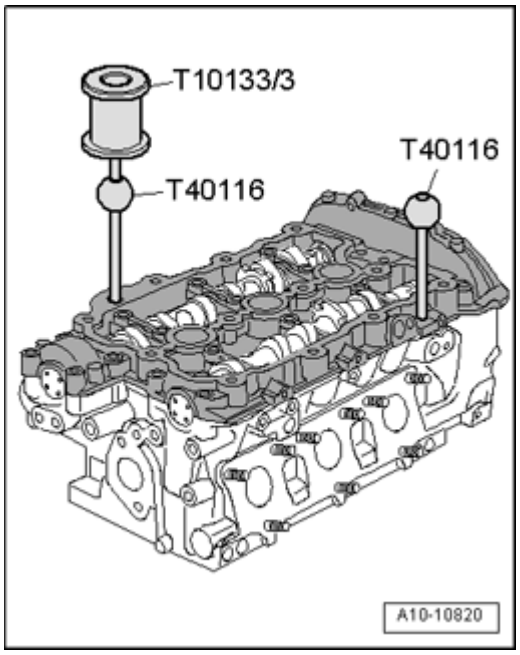

Fig. 851: Removing Bolts, Loosening Hose Clamps And Removing Right Coolant Pipe From Coolant Hoses
Courtesy of VOLKSWAGEN UNITED STATES, INC.

- Remove bolts - **1** - and - **2** -.
- Loosen hose clamps - **arrows** - and remove right coolant pipe from coolant hoses.

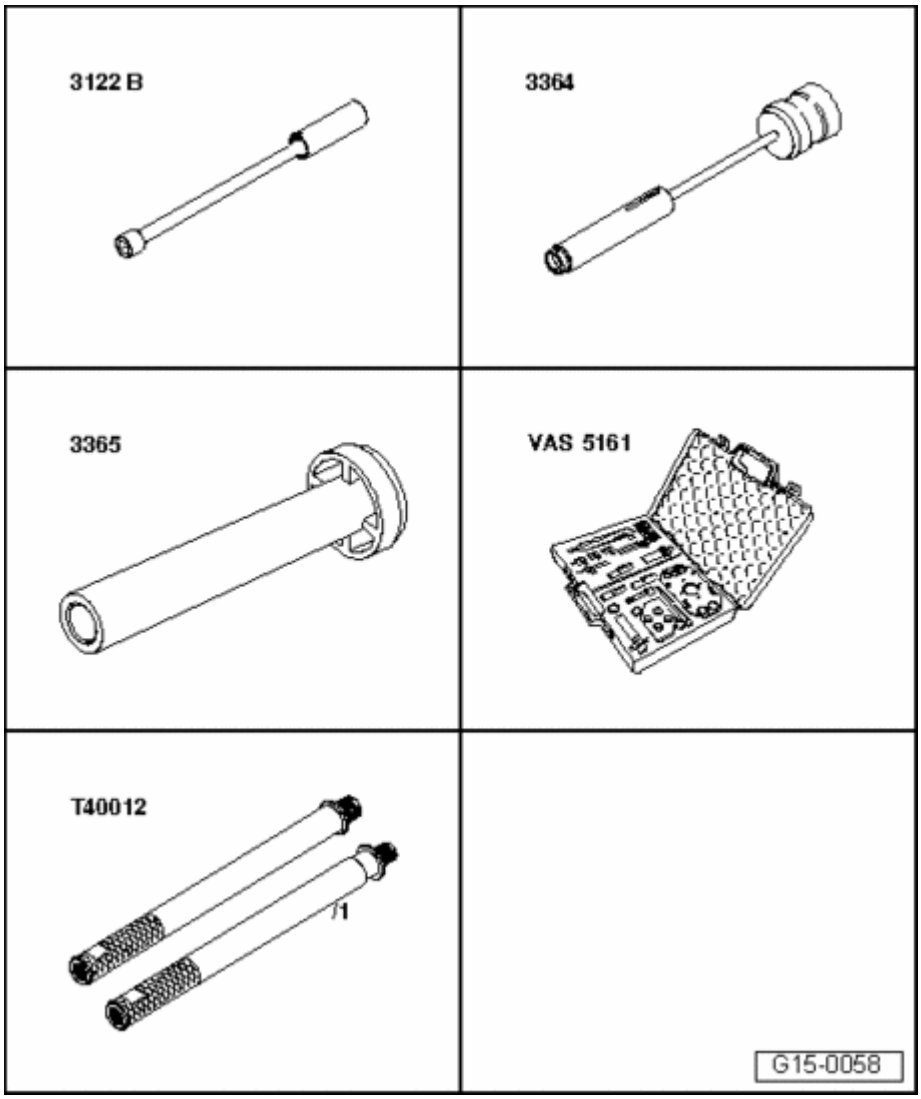

Fig. 852: Removing Nuts And Right Exhaust Manifold
Courtesy of VOLKSWAGEN UNITED STATES, INC.

- Remove nuts - **1 to 12** - and remove right exhaust manifold.

Installing

Installation is in reverse order of removal, note the following:

NOTE:

- **Replace self-locking nuts.**

- Install right front exhaust pipe: --> **Right front exhaust pipe with primary and main catalytic converter (vehicles with manual transmission), removing and installing** , --> **Right front exhaust pipe with primary and main catalytic converter (vehicles with automatic transmission), removing and installing**.
- Install right coolant pipe --> **Right coolant pipe, removing and installing**.

- Install engine: --> **Engine (vehicles with manual transmission), installing** , --> **Engine (vehicles with automatic transmission), installing**.

Torque specifications

Component	Nm
Exhaust manifold to cylinder head	25 * See note

*Replace nuts.

Exhaust system, installing free of tension

NOTE:

- **Align exhaust system when cold.**

Vehicles without double clamps between center and rear muffler

- Loosen clamping sleeves bolts.

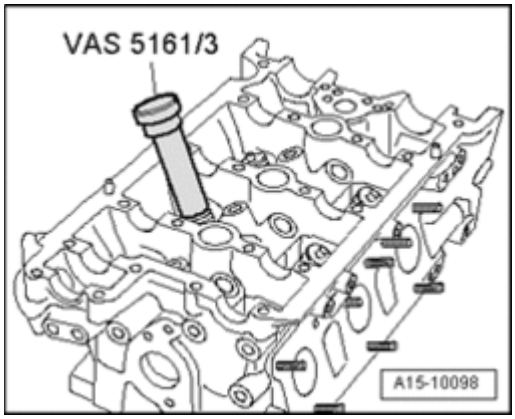

Fig. 853: Pushing Exhaust System Toward Front Of Vehicle
Courtesy of VOLKSWAGEN UNITED STATES, INC.

- Push exhaust system far enough forward - **arrow** - until pre-load on retaining loops at right of center muffler - **a** - = 5 to 9 mm.
- Tighten of clamping sleeve threaded connections evenly to 40 Nm.
- Align end pipes **Tailpipes, aligning**.

Vehicles with double clamps between center and rear muffler

NOTE:

- **Only for vehicles with double clamps between center and rear mufflers, the center muffler must also be aligned.**

- Loosen bolts of double clamps and.

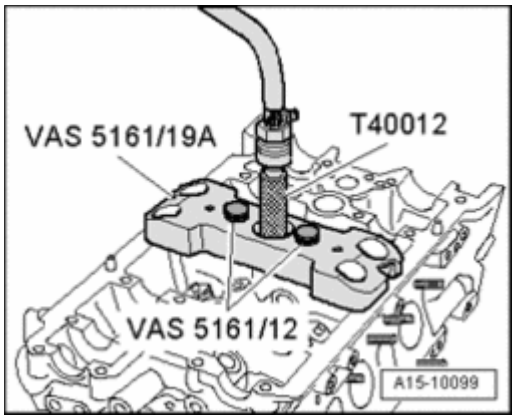

Fig. 854: Pushing Exhaust System Toward Front Of Vehicle
Courtesy of VOLKSWAGEN UNITED STATES, INC.

- Push forward part of exhaust system far enough forward - **arrow** - until pre-load on retaining loops on center muffler - **a** - = 5 to 9 mm.
- Tighten threaded connections of front double clamps evenly to 40 Nm.

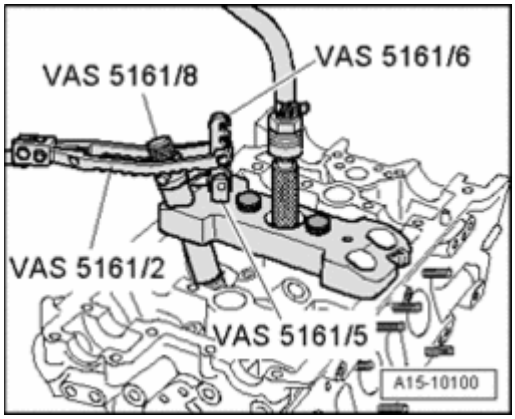

Fig. 855: Pushing Rear Part Of Exhaust System Far Enough Forward Until Pre-Load On Retaining Loops At Rear On Rear Muffler
Courtesy of VOLKSWAGEN UNITED STATES, INC.

- Push rear part of exhaust system far enough forward - **arrow** - until pre-load on retaining loops at rear on rear muffler - **a** - = 7 to 11 mm.
- Align rear muffler horizontally.
- Tighten threaded connections of rear double clamps evenly to 40 Nm.
- Align end pipes.

Tailpipes, aligning

- Check distance of end pipes at left and right to bumper:

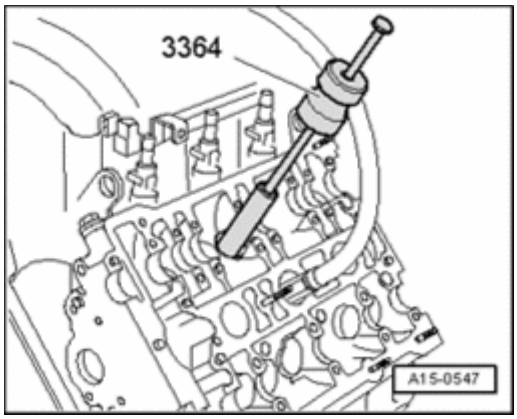

Fig. 856: Checking Distance Of End Pipes At Left/Right To Bumper
Courtesy of VOLKSWAGEN UNITED STATES, INC.

- Dimension - **x** - left = dimension - **x** - right.

If necessary, correct dimension x as follows:

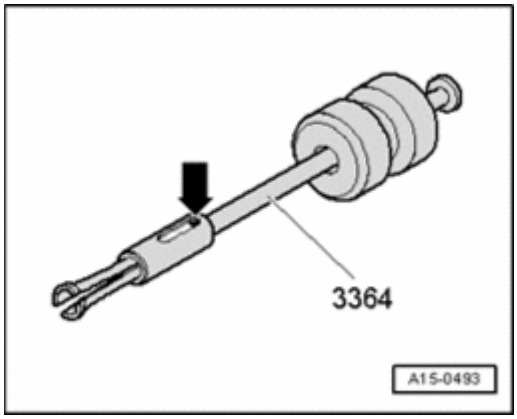

Fig. 857: Loosening Nut Of Brace Between Exhaust Pipes
Courtesy of VOLKSWAGEN UNITED STATES, INC.

- Loosen nuts - **arrows** - of brace between exhaust pipes.
- Adjust distance between rear mufflers.
- Tighten nut to 25 Nm.

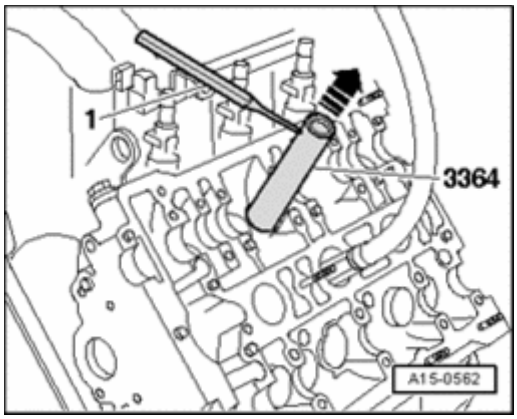

Fig. 858: Checking Distances Of End Pipes To Bumper
Courtesy of VOLKSWAGEN UNITED STATES, INC.

- Check distances - **y** - and - **z** - of end pipes to bumper:

- Dimension - **y** - = greater than 20 mm.
- Dimension - **z** - = 10 to 16 mm.

- If necessary, check whether exhaust system is aligned tension-free --> **Exhaust system, installing free of tension**.

Exhaust system, checking for leaks

- Start engine and let run at idle.
- Seal tailpipes with cloths or plug for duration of the leak test.
- Check for leaks by listening at connection areas of cylinder head/exhaust manifold, exhaust manifold/front exhaust pipe etc.
- Repair leaks detected.

SECONDARY AIR INJECTION (AIR), SERVICING

Secondary Air Injection (AIR), servicing

The Secondary Air Injection (AIR) system heats up the engine faster, and thereby the catalytic converter achieves operation readiness earlier after a cold start.

Principle and function

Principle

Due to the rich mixture during the cold start phase, the exhaust emissions contain an increased level of unburned hydrocarbons. The Secondary Air Injection (AIR) system improves the secondary oxidation within the catalytic converter, thereby reducing harmful emissions. The heat released by secondary oxidation shortens the start-up time of the catalytic converter considerably, as well as significantly improves emissions quality during the cold-running phase.

Function

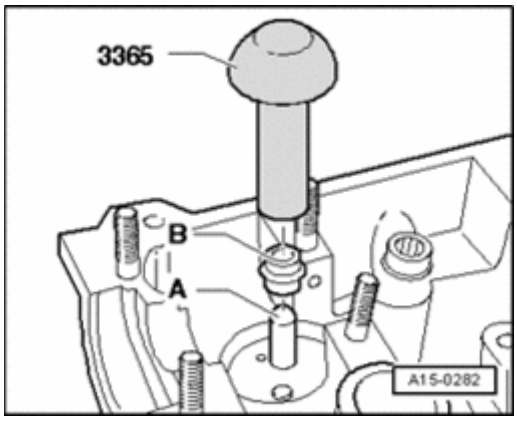

Fig. 859: Secondary Air Injection (Air), Component Overview
Courtesy of VOLKSWAGEN UNITED STATES, INC.

- In the cold start phase, the ECM - **3** - activates secondary air pump - **1** - via relay for secondary air pump - **2** -. Air reaches combination valves for Secondary Air Injection (AIR) - **4** - and - **8** -.
- The Secondary Air Injection (AIR) valve - **5** - is activated in parallel, which allows the vacuum to reach the combination valves for Secondary Air Injection (AIR) - **4** - and - **8** -. The appropriate combination valve for Secondary Air Injection (AIR) thereby opens the path for secondary air to the exhaust channels of the cylinder head.

Secondary Air Injection (AIR), component overview

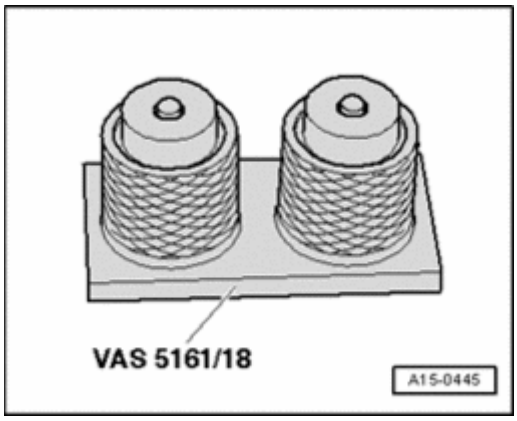

Fig. 860: Secondary Air Injection (Air), Component Overview
Courtesy of VOLKSWAGEN UNITED STATES, INC.

1 - Secondary Air Injection (AIR) Pump Motor V101

- Component location *Component location of* under **Component location of Secondary Air Injection (AIR) Pump Motor V101**
- Removing and installing --> **Secondary Air Injection (AIR) pump, removing and installing**

2 - Secondary Air Injection (AIR) Pump Relay J299

- Component location --> **Component location for Secondary Air Injection (AIR) Pump Relay J299**

3 - Motronic engine control module J220

4 - Right combination valve for Secondary Air Injection (AIR)

- Component location **Secondary Air Injection (AIR) combi-valve**
- Checking --> **Combination valve for Secondary Air Injection (AIR), checking function and for proper seal**
- Removing and installing --> **Right combination valve for Secondary Air Injection, removing and installing**

5 - Secondary air injection (AIR) solenoid valve N112

- Component location --> **Installation location of Secondary Air Injection (AIR) Solenoid Valve N112**

6 - Non-return valve

- Installed location: - **Arrow** - points in direction of flow, as shown in **Fig. 860**.

7 - To Intake manifold

8 - Left combination valve for Secondary Air Injection (AIR)

- Component location **Secondary Air Injection (AIR) combi-valve**
- Checking --> **Combination valve for Secondary Air Injection (AIR), checking function and for proper seal**
- Removing and installing --> **Left combination valve for Secondary Air Injection, removing and installing**

9 - Vacuum reservoir

- Component location: In left front wheel housing behind wheel housing liner

Installation location of Secondary Air Injection (AIR) Solenoid Valve N112

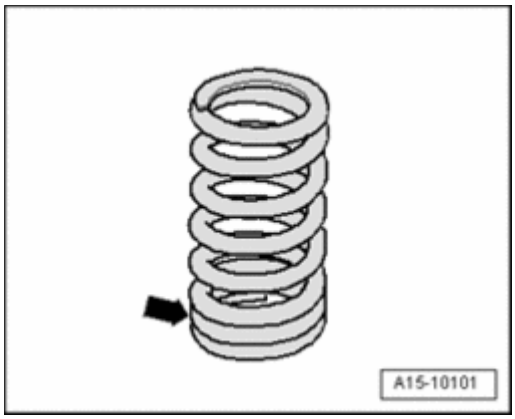

Fig. 861: Installation Location Of Secondary Air Injection (AIR) Solenoid Valve N112
Courtesy of VOLKSWAGEN UNITED STATES, INC.

- Front at intake manifold - **arrow** -.

Component location of Secondary Air Injection (AIR) Pump Motor V101

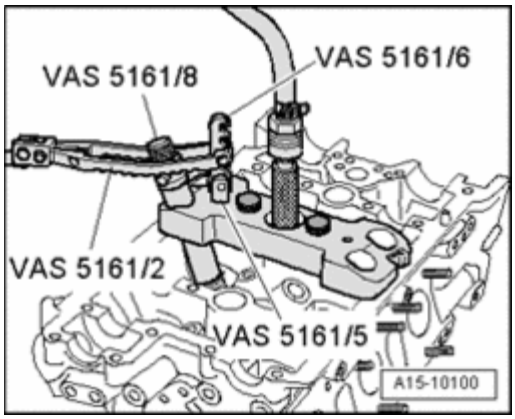

Fig. 862: Component Location Of Secondary Air Injection (AIR) Pump Motor V101
Courtesy of VOLKSWAGEN UNITED STATES, INC.

- At right front in engine compartment below long member.

1 - Secondary Air Injection (AIR) Pump Motor V101

Component location for Secondary Air Injection (AIR) Pump Relay J299

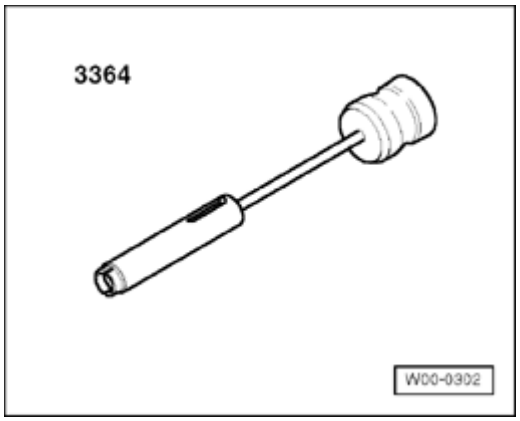

Fig. 863: Component Location For Secondary Air Injection (AIR) Pump Relay J299
Courtesy of VOLKSWAGEN UNITED STATES, INC.

- In E-box, plenum chamber.

2 - Secondary Air Injection (AIR) Pump Relay J299

B - Secondary Air Injection (AIR) Pump Fuse S130

Secondary Air Injection (AIR) combi-valve

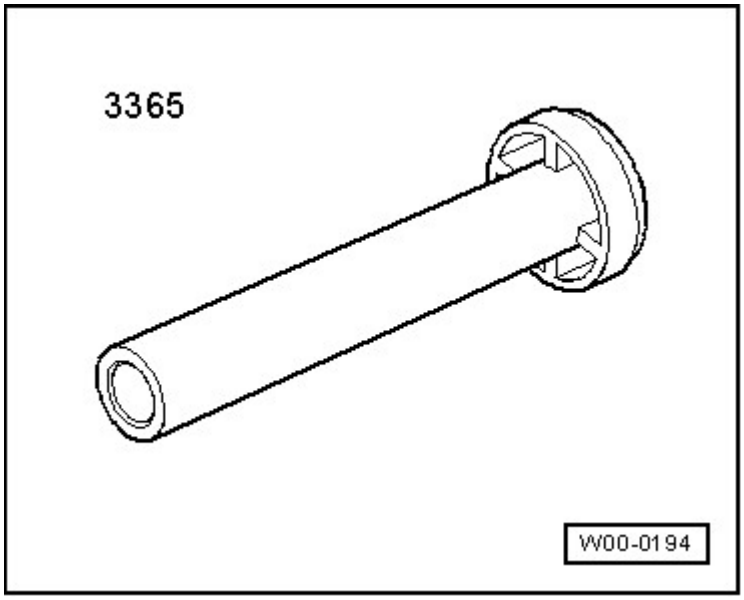

Fig. 864: Secondary Air Injection (AIR) Combi-Valve
Courtesy of VOLKSWAGEN UNITED STATES, INC.

- At rear of cylinder heads.

NOTE:

- **The left combination valve for Secondary Air Injection (AIR) is depicted in the illustration.**

Secondary Air Injection (AIR) pump, removing and installing

Removing

- Bring lock carrier into service position --> **Lock carrier, moving into service position**.
- Remove right auxiliary cooler --> **Right auxiliary cooler, removing and installing**.

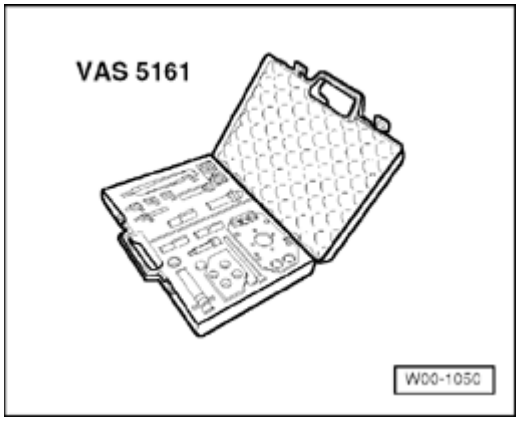

Fig. 865: Disconnecting Hoses At Secondary Air Injection (AIR) Pump
Courtesy of VOLKSWAGEN UNITED STATES, INC.

- Disconnect hoses - **2** - and - **3** - at Secondary Air Injection (AIR) pump - **1** -.
- Disconnect electrical connector - **4** -.
- Remove nut and remove Secondary Air Injection (AIR) pump from bracket.

Installing

Installation is in reverse order of removal, note the following:

- Install right auxiliary cooler --> **Right auxiliary cooler, removing and installing**.
- Install lock carrier with attachments -->
  - **50 BODY, FRONT**
  - **50 - BODY - FRONT** for BODY EXTERIOR - CABRIOLET

.

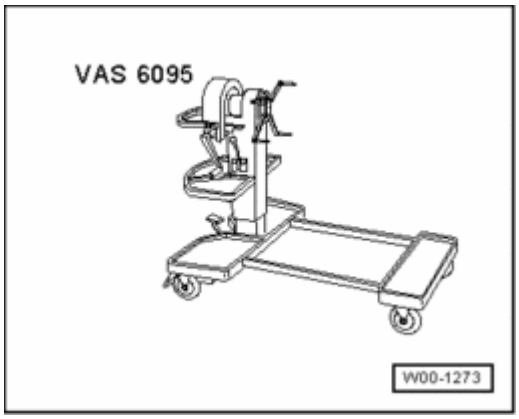

Fig. 866: Placing Torque Support On Rubber Buffer For Torque Support And Tightening Bolts
Courtesy of VOLKSWAGEN UNITED STATES, INC.

- Place torque support on rubber buffer for torque support and tighten bolts - **arrows** -.
- Install front bumper cover -->
  - **63 BUMPER**
  - **63 - BUMPERS** for BODY EXTERIOR - CABRIOLET

  .
- Check headlight adjustment -->
  - **01 - MAINTENANCE**
  - **01 - MAINTENANCE** for MAINTENANCE PROCEDURES - CABRIOLET

  .

Torque specifications

Component	Nm
Secondary Air Injection (AIR) pump to bracket	10
Torque support stop to lock carrier	28

Combination valve for Secondary Air Injection (AIR), checking function and for proper seal

Special tools, testers and auxiliary items required

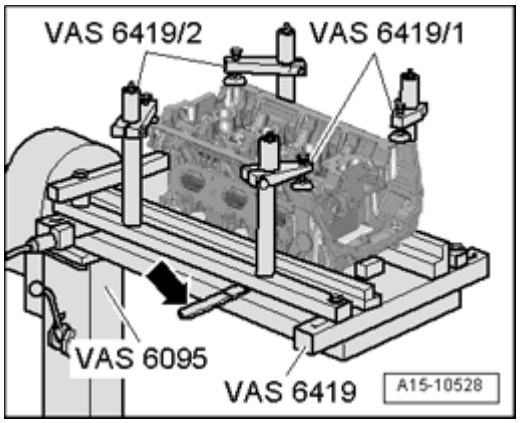

Fig. 867: Identifying Hand Vacuum Pump VAS 6213
Courtesy of VOLKSWAGEN UNITED STATES, INC.

- Hand vacuum pump VAS 6213

Test conditions

- Vacuum lines and hose connections free of leaks.
- Vacuum lines not plugged.

Test sequence

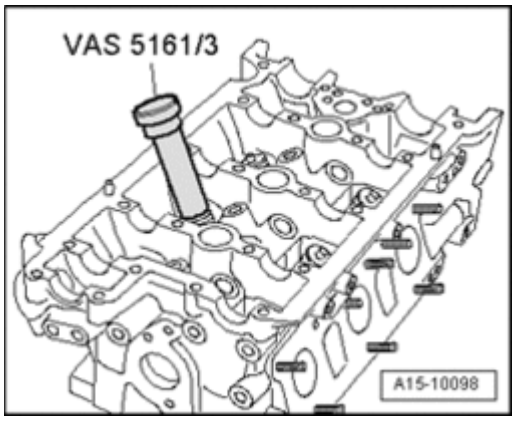

Fig. 868: Removing Rear Engine Cover
Courtesy of VOLKSWAGEN UNITED STATES, INC.

- Remove rear engine cover - **arrows** -.

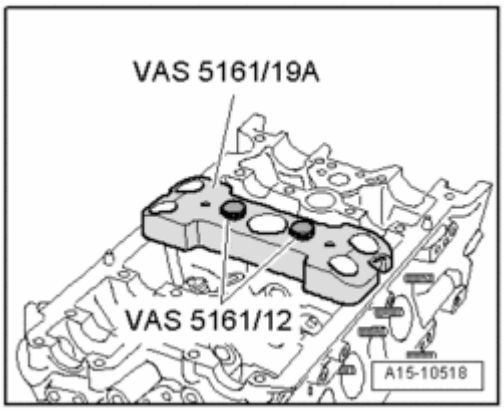

Fig. 869: Removing Cover In Engine Compartment (Right Side)
Courtesy of VOLKSWAGEN UNITED STATES, INC.

- Remove cover - **1** - in engine compartment (right side).

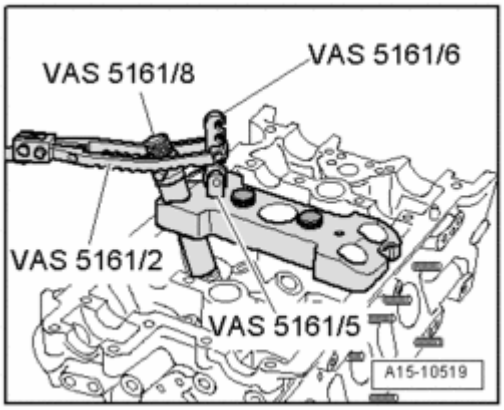

Fig. 870: Identifying Evaporative Emission Canister Purge Regulator Valve N80 And Air Duct
Courtesy of VOLKSWAGEN UNITED STATES, INC.

- Disengage Evaporative Emission (EVAP) Canister Purge Regulator Valve N80 - **1** - from air guide.
- Remove bolts - **arrows** -.
- Remove air duct - **2** -.

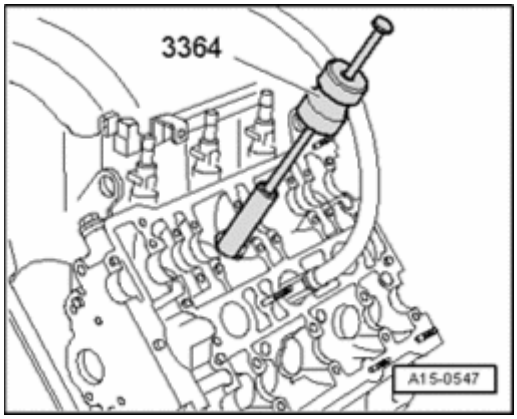

Fig. 871: Removing Air Guide Hose
Courtesy of VOLKSWAGEN UNITED STATES, INC.

- Remove air guide hose - **arrows** -.

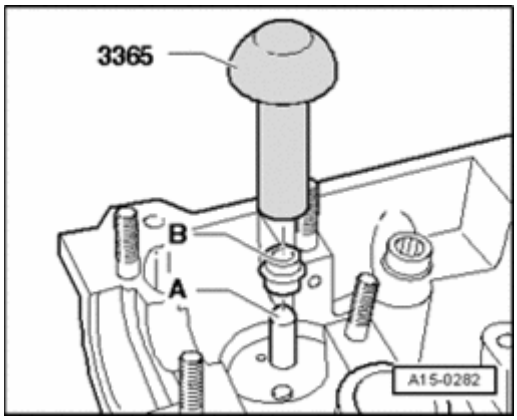

Fig. 872: Disconnecting Vacuum Hose At Combination Valve To Be Tested
Courtesy of VOLKSWAGEN UNITED STATES, INC.

- Disconnect vacuum hose - **arrow** - at combination valve to be tested.

NOTE:

- **Left combination valve is shown in illustration.**

- Connect hand vacuum pump VAS 6213 to vacuum hose of combination valve to be checked.

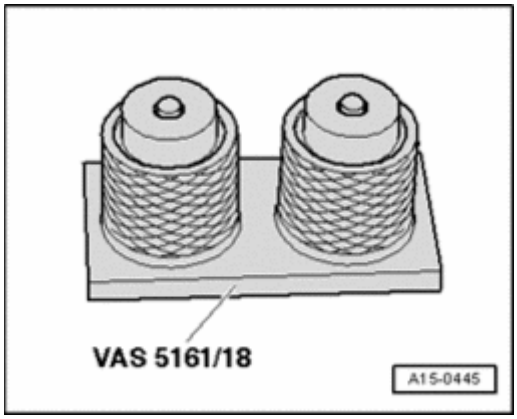

Fig. 873: Disconnecting Hose For Secondary Air Injection (AIR) Pump At Air Filter Housing
Courtesy of VOLKSWAGEN UNITED STATES, INC.

- Disconnect hose - **arrow** - for Secondary Air Injection (AIR) pump at air filter housing, press release buttons to do so.
- Blow with light pressure into pipe (do not use pressurized air).

- Both combination valves must be closed, it must not be possible to blow through hose.

- Operate hand vacuum pump.
- The relevant combination valve must open, it must not be possible to blow through

If relevant combination valve does not open:

- Replace combination valve: Left --> **Left combination valve for Secondary Air Injection, removing and installing** , right --> **Right combination valve for Secondary Air Injection, removing and installing**.

Left combination valve for Secondary Air Injection, removing and installing

Special tools, testers and auxiliary items required

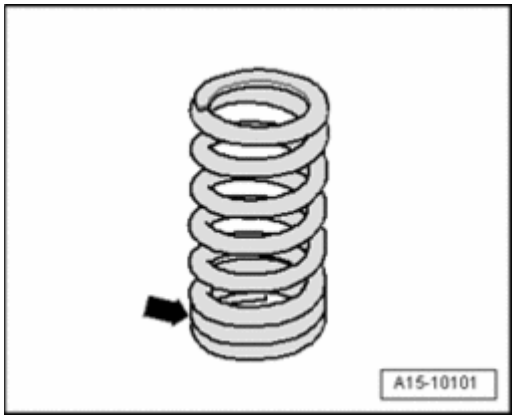

Fig. 874: Identifying Hose Clamps 3094
Courtesy of VOLKSWAGEN UNITED STATES, INC.

- Hose clamps up to 25 mm diameter 3094

Removing

NOTE:

- **All cable ties opened or cut during engine removal must be reinstalled at the same locations during installation.**

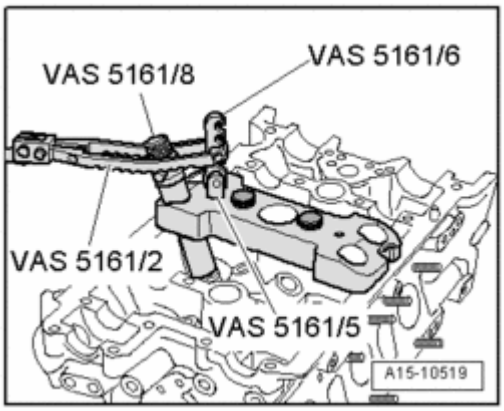

Fig. 875: Removing Rear Engine Cover
Courtesy of VOLKSWAGEN UNITED STATES, INC.

- Remove rear engine cover - **arrows** -.

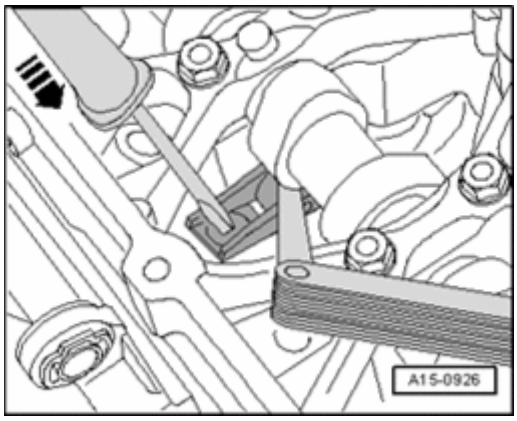

Fig. 876: Removing Cover In Engine Compartment (Left Side)
Courtesy of VOLKSWAGEN UNITED STATES, INC.

- Remove cover - **1** - in engine compartment (left side).

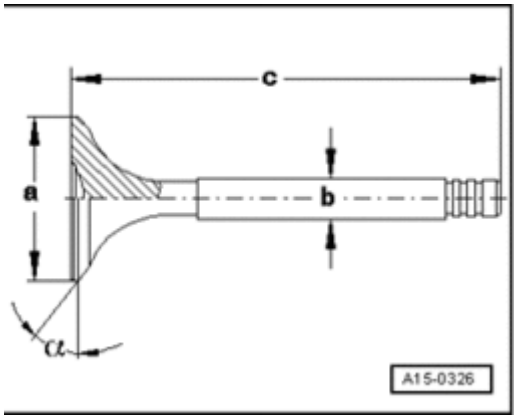

Fig. 877: Removing Coolant Hoses & Coolant Expansion Tank
Courtesy of VOLKSWAGEN UNITED STATES, INC.

- Clamp off coolant hose - **2** - using Hose clamps up to 25 mm diameter 3094 and disconnect from coolant expansion tank.
- Seal connection using a plug that fits.
- Remove coolant expansion tank - **arrow** -.
- Disconnect electrical wire to Engine Coolant Level (ECL) Warning Switch F66 at bottom on expansion tank and set aside coolant expansion tank with coolant hose - **1** - connected.

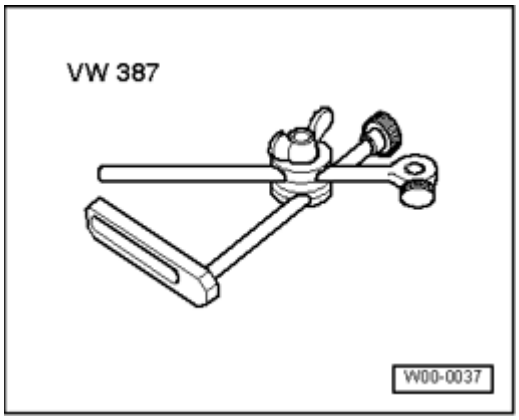

Fig. 878: Removing Bracket For Electrical Harness Connectors At Left From Bulkhead
Courtesy of VOLKSWAGEN UNITED STATES, INC.

- Remove electrical harness connectors - **1 to 4** - from bracket at left of bulkhead.
- Remove bracket from bulkhead.

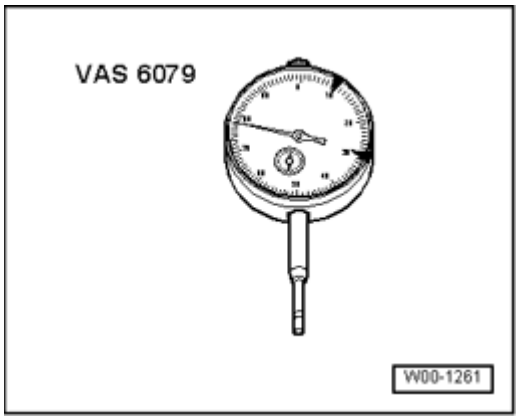

Fig. 879: Disconnecting Brake Booster Vacuum Hose From Grommet On Bulkhead
Courtesy of VOLKSWAGEN UNITED STATES, INC.

- Disconnect vacuum line - **arrow** - to brake booster at bulkhead.

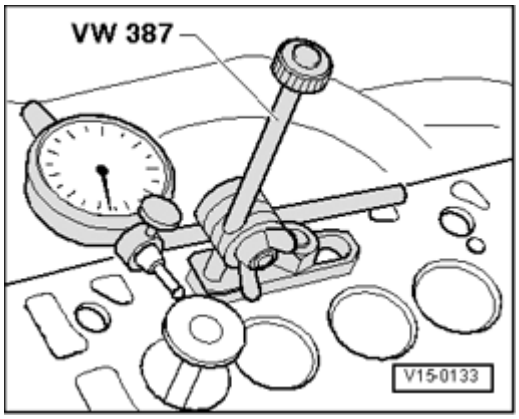

Fig. 880: Disconnecting Electrical Harness Connector For Camshaft Position (CMP) Sensor 2 G163 On Left Cylinder Head
Courtesy of VOLKSWAGEN UNITED STATES, INC.

- Disconnect electrical harness connector - **arrow** - for Camshaft Position (CMP) Sensor 2 G163 on left cylinder head.

NOTE:

- **Illustration depicts engine from rear.**

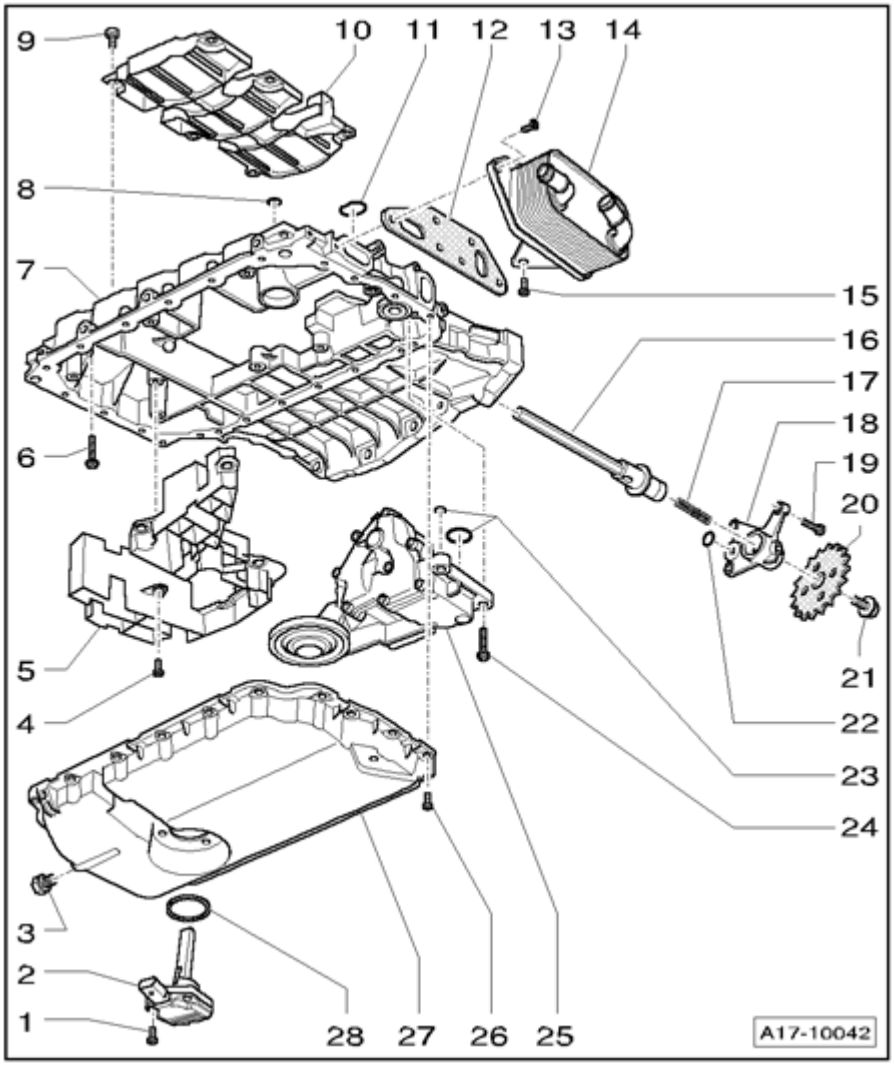

Fig. 881: Disconnect Vacuum Hose, Electrical Harness Connector From Oil Pressure Switch F1, Removing Bolts & Oil Pressure Switch
Courtesy of VOLKSWAGEN UNITED STATES, INC.

- Disconnect vacuum hose - **3** -.
- Remove bolts - **4** -.
- Disconnect electrical harness connector from Oil Pressure Switch F1 - **5** -.
- Remove oil pressure switch.

- Remove bolts - **1** - and - **2** -.
- Swing combination valve and remove bolts - **6** -.
- Remove combination valve and connecting tube.

NOTE:

- **Illustration depicts engine from rear.**

Installing

Installation is in reverse order of removal, note the following:

NOTE:

- **Always replace gaskets and seals.**
- **Note installation position of seal between cylinder head and connecting tube.**
- **Secure all hose connections using hose clamps appropriate for the model type .**
- **During installation, all cable ties must be re-installed at the same location.**

- Check coolant level --> **Check coolant level**.

Torque specifications

Component	Nm
Connecting tube to cylinder head	10
Connecting tubes to combination valve	10
Oil pressure switch to oil filter housing	25

Right combination valve for Secondary Air Injection, removing and installing

Removing

- Remove right coolant pipe --> **Right coolant pipe, removing and installing**.
- Remove engine support bridge 10-222 A from engine compartment.

NOTE:

- **Engine support bridge 10-222 A was necessary to remove right coolant pipe, but it hinders the following work sequence.**

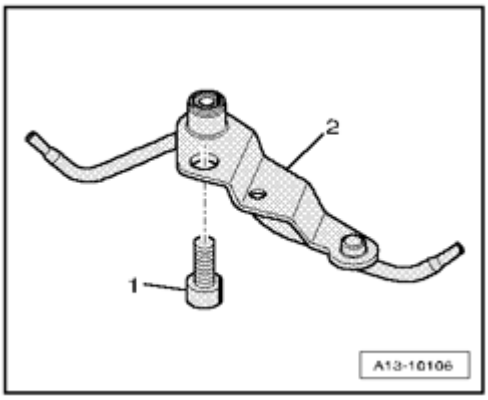

Fig. 882: Disconnecting Vacuum Hose And Remove Bolts & Combination Valve
Courtesy of VOLKSWAGEN UNITED STATES, INC.

- Disconnect vacuum hose - **3** -.
- Remove bolts - **1** - , - **2** - and - **4** - and remove combination valve.

NOTE:

- **Illustration depicts engine from rear.**

Installing

Installation is in reverse order of removal, note the following:

NOTE:

- **Replace seals.**

- Install right coolant pipe --> **Right coolant pipe, removing and installing**.

Torque specifications

Component	Nm
Connecting tube to cylinder head	10
Connecting tubes to combination valve	10

EXHAUST FLAP

Exhaust flap, checking

Special tools, testers and auxiliary items required

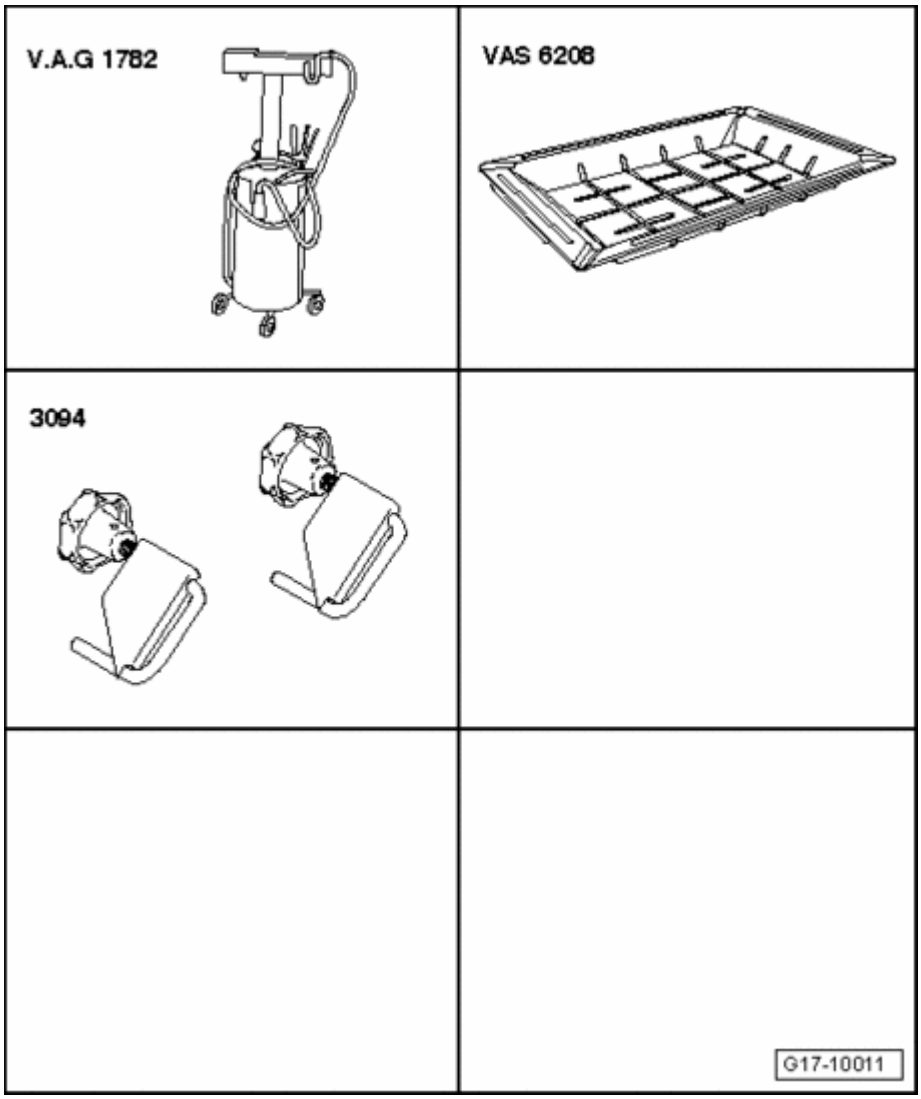

Fig. 883: Identifying Vehicle Diagnosis, Testing And Information System VAS 5051B
Courtesy of VOLKSWAGEN UNITED STATES, INC.

- Vehicle diagnostic, testing, and information system VAS 5051B

Test sequence

- Let engine run briefly so that the required vacuum for the test is present in vacuum reservoir.
- Switch engine off and connect Vehicle Diagnosis, Testing and Information System VAS 5051B.
- Switch ignition on.
- Press Vehicle Self-Diagnosis button, select vehicle system "01 - Engine electronics" and activate with --> button.

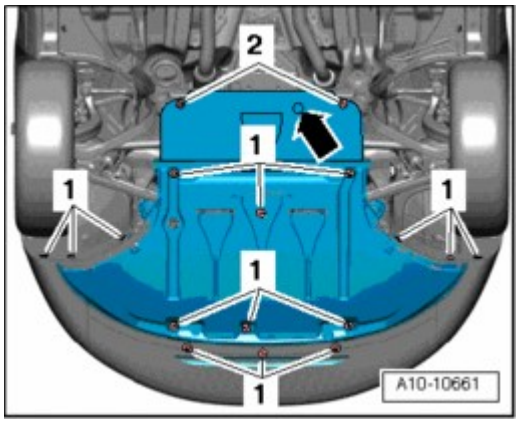

Fig. 884: Diagnostic System VAS 5051: Display
Courtesy of VOLKSWAGEN UNITED STATES, INC.

Display on VAS 5051B :

- In selection - **1** - , press "011 - Measured values" and activate by pressing --> button.
- Press --> button repeatedly until Exhaust Flap Valve 1 N321 is activated.

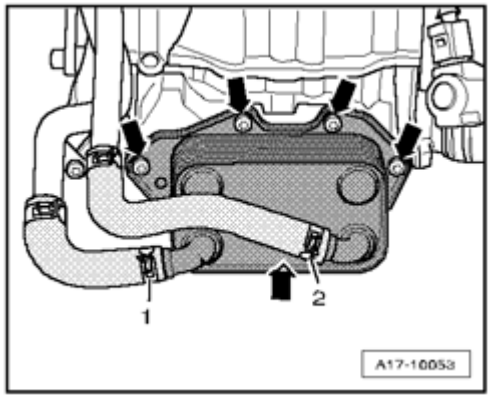

Fig. 885: Generating Vacuum Using Hand Vacuum Pump
Courtesy of VOLKSWAGEN UNITED STATES, INC.

- Operating rod - **arrow** - for exhaust flap must move back and forth at both rear mufflers.

If actuator rod does not move:

- Check exhaust flap vacuum reservoir --> **Exhaust flap vacuum reservoir, checking**.
- Check vacuum line to vacuum reservoir and to Exhaust Flap Valve 1 N321 under left side trim in luggage compartment.
- Check Exhaust Flap Valve 1 N321 in "Guided Fault Finding" operating mode.
- End function "03 - Output Diagnostic Test Mode (DTM)" by pressing <-- button.

- Press "06 - End Output".
- Switch off ignition.

Exhaust flap vacuum reservoir, checking

Special tools, testers and auxiliary items required

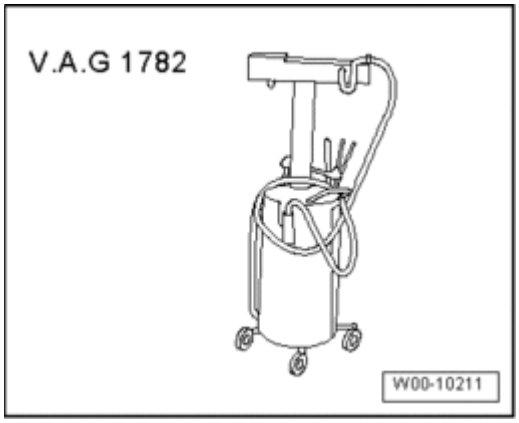

Fig. 886: Identifying Hand Vacuum Pump VAS 6213
Courtesy of VOLKSWAGEN UNITED STATES, INC.

- Hand vacuum pump VAS 6213

Test sequence

- Disconnect hose on vacuum diaphragm for exhaust flap at rear muffler.

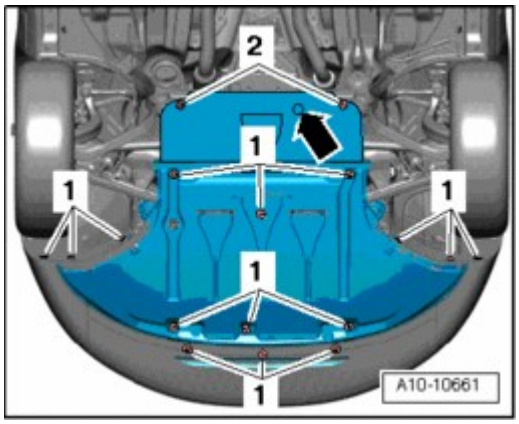

Fig. 887: Connecting Hand Vacuum Pump V.A.G 1390 To Vacuum Diaphragm
Courtesy of VOLKSWAGEN UNITED STATES, INC.

- Connect Hand Vacuum Pump V.A.G 1390 to vacuum diaphragm.

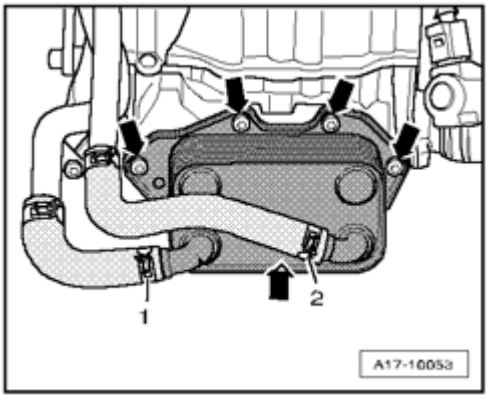

Fig. 888: Generating Vacuum Using Hand Vacuum Pump
Courtesy of VOLKSWAGEN UNITED STATES, INC.

- Generate vacuum using hand vacuum pump.
- Linkage must move toward front.
- Vent the hand vacuum pump.
- Linkage must move toward rear.

If linkage does not move:

- Check the linkage for ease of movement and check the vacuum diaphragm for leaks.

