ENGINE

4.2 Liter V8 4V Engine Mechanical, Engine Code(s): BVJ

00 - GENERAL, TECHNICAL DATA

ENGINE NUMBER

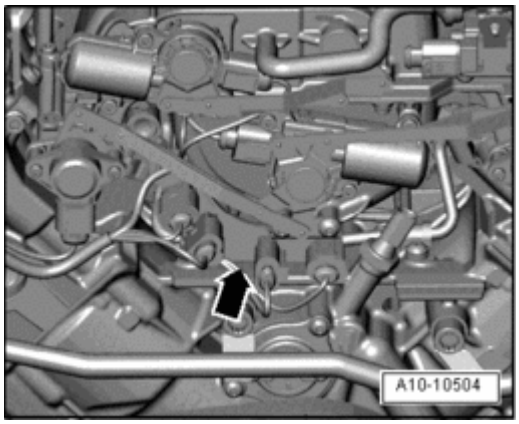

Fig. 1: Identifying Engine Number Stamped On Engine Block
Courtesy of VOLKSWAGEN UNITED STATES, INC.

- Engine number ("engine code" and "serial number") is located at front on cylinder block at top - **arrow** -.
- The engine code is also located on vehicle data plate.

NOTE:

- **The engine number is only visible if the front engine cover is removed.**

ENGINE DATA

Engine data

Code letters		**BVJ**
Displacement	ltr.	4.163
Output	kW at 1/rpm	257/6800
Torque	Nm at rpm	440/3500
Bore	dia. mm	84.5
Stroke	mm	92.8
Compression ratio		12.5
RON		98 1)
Fuel injection and ignition system		Bosch Motronic
Ignition sequence		1-5-4-8-6-3-7-2
Charging		no
Oxygen sensor regulation		4 sensors

 © 2011 Mitchell Repair Information Company, LLC.

Variable valve timing	yes
Variable intake manifold	yes
Secondary air injection (AIR) system	yes
Valves per cylinder	4

- [1] Super unleaded RON 95 is permissible, although with reduced power.

SAFETY PRECAUTIONS

Safety precautions

Note the following when working on the fuel system:

CAUTION: There is a risk of injury because the fuel is under very high pressure.

- **Before opening high pressure area of the fuel injection system, fuel pressure must be relieved to residual pressure.**
- **To reduce remaining residual pressure, lay a clean cloth around the connector and carefully loosen connector.**

To prevent personal injury and damage to the injection and ignition system, observe the following:

- The ignition must be switched off before connecting or disconnecting injection and ignition system wiring or tester cables.
- Only clean engine with ignition switched off.
- If electrical connectors were disconnected, faults are saved in ECM:

  - Connect Vehicle Diagnosis, testing info. system VAS 5051.
  - Start "Guided Functions" operating mode.
  - Generate readiness code in ECM.

CAUTION: Risk of destroying electrical components when battery is disconnected.

- **Observe measures when disconnecting battery.**
- **Only disconnect battery with ignition switched off.**

Note the following when working on the cooling system:

CAUTION: Risk of scalding due to hot steam and hot coolant.

- **When the engine is warm the cooling system is under pressure.**
- **To reduce pressure, cover coolant reservoir cap with cloth and carefully open.**

 © 2011 Mitchell Repair Information Company, LLC.

If it is necessary to use testing and measuring devices on road tests, observe the following:

CAUTION: Risk of injury due to deployment of passenger airbag in a collision.

- **Always secure testing and measuring equipment on the rear seat and have a second person operate it from there.**

Procedure before opening fuel injection system high pressure area

- The fuel injection system is separated into a high-pressure section (max. approx. 120 bar) and a low-pressure section (approx. 6 bar).
- Before a component in the fuel injection system high pressure area is remove, the fuel pressure must be definitely reduced to a residual pressure of approx. 6 bar, as described in the following.

Special tools, testers and auxiliary items required

- Vehicle diagnostic, testing, and information system VAS 5051

Work procedure

- Start engine and run at idle speed.

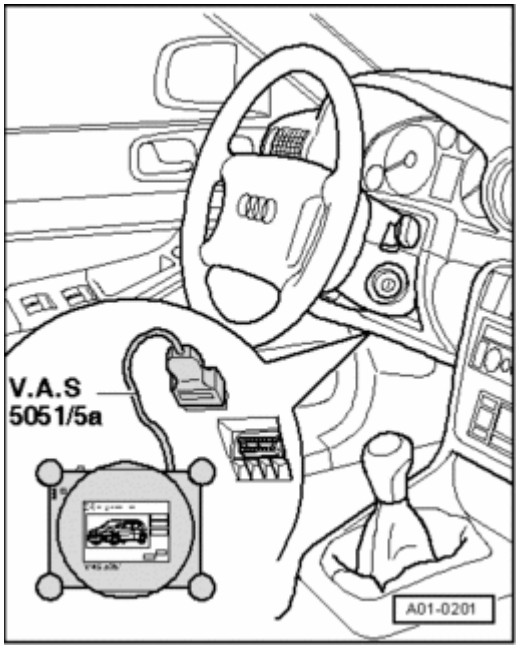

Fig. 2: Connecting Data Link Connector (DLC)
Courtesy of VOLKSWAGEN UNITED STATES, INC.

- Connect Vehicle Diagnosis, testing info. system VAS 5051.

 © 2011 Mitchell Repair Information Company, LLC.

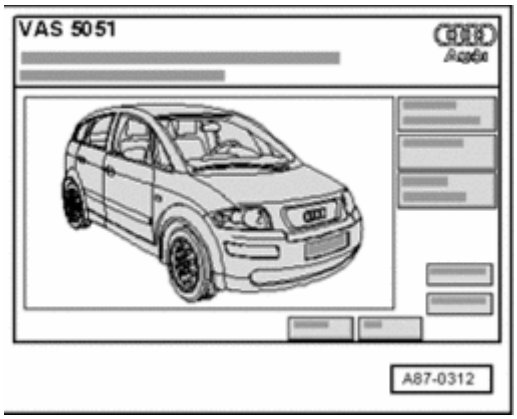

Fig. 3: Diagnostic System VAS 5051: Display
Courtesy of VOLKSWAGEN UNITED STATES, INC.

Display on VAS 5051 :

- Click on Vehicle Self-Diagnosis button.

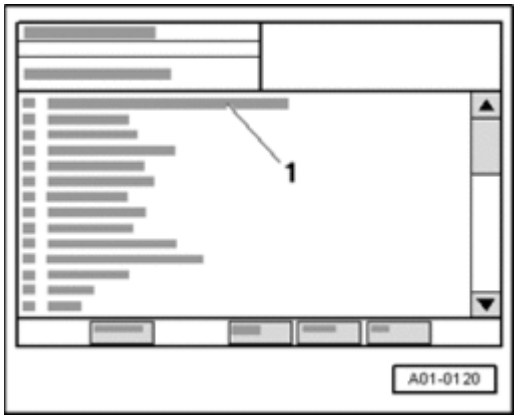

Fig. 4: Diagnostic System VAS 5051: Display - "01 - Engine Electronics"
Courtesy of VOLKSWAGEN UNITED STATES, INC.

Display on VAS 5051 :

- In selection - **1** - , press vehicle system "01 - Engine electronics".
- Wait until next display appears.

 © 2011 Mitchell Repair Information Company, LLC.

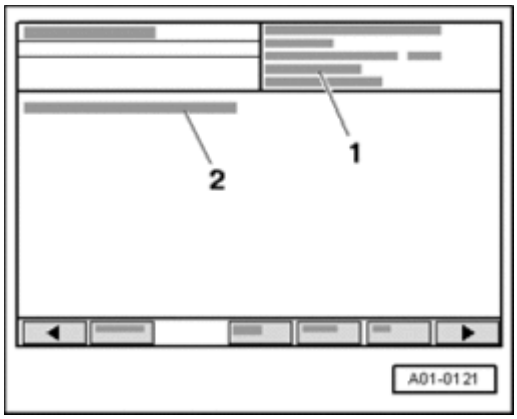

Fig. 5: VAS 5051 Tester Displaying Control Module Identification And Coding
Courtesy of VOLKSWAGEN UNITED STATES, INC.

Display on VAS 5051 :

1 - Control module identification of engine control module (ECM)

- Click on --> button.

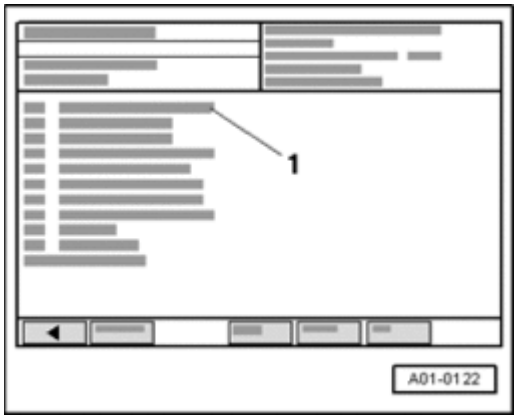

Fig. 6: Diagnostic System VAS 5051: Display - Basic Setting
Courtesy of VOLKSWAGEN UNITED STATES, INC.

Display on VAS 5051 :

1 - Selection of diagnostic functions

- In selection - **1** - , click on diagnostic function "08 - Read measuring value block".

 © 2011 Mitchell Repair Information Company, LLC.

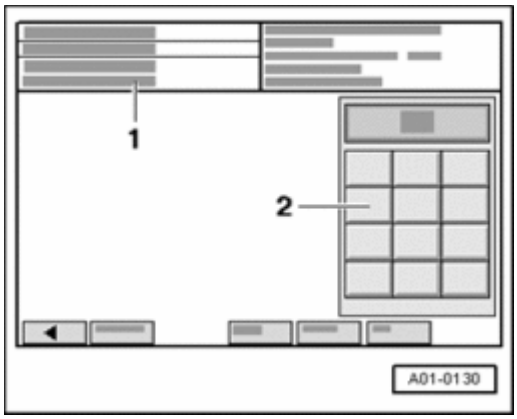

Fig. 7: Diagnostic System VAS 5051: Display - Display Group And Key Pad
Courtesy of VOLKSWAGEN UNITED STATES, INC.

Display on VAS 5051 :

- In button field - **2** - , press buttons 1 4 0 for "display group 140" and confirm entry by pressing Q button.

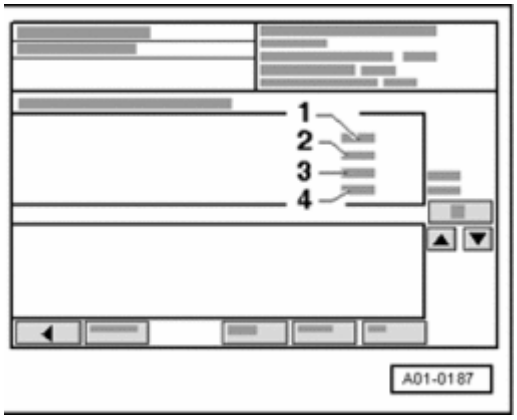

Fig. 8: Diagnostic System VAS 5051: Display
Courtesy of VOLKSWAGEN UNITED STATES, INC.

Display on VAS 5051 :

- Check display for fuel pressure in fuel rail in display field - **3** -.

Example:

3 - 40.63 bar

 © 2011 Mitchell Repair Information Company, LLC.

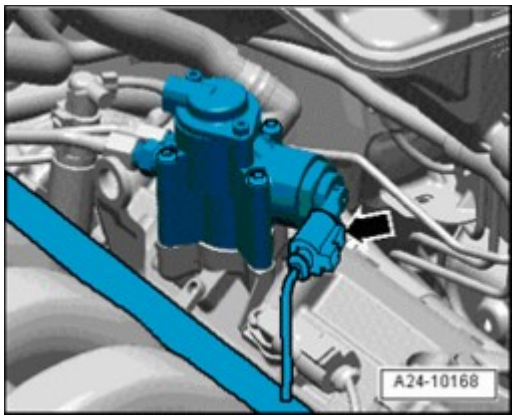

Fig. 9: Disconnecting Electrical Connector At Fuel Metering Valve 2 N402 On Left High Pressure Pump
Courtesy of VOLKSWAGEN UNITED STATES, INC.

- Disconnect electrical connector - **arrow** - at Fuel Metering Valve 2 N402 on left high pressure pump.

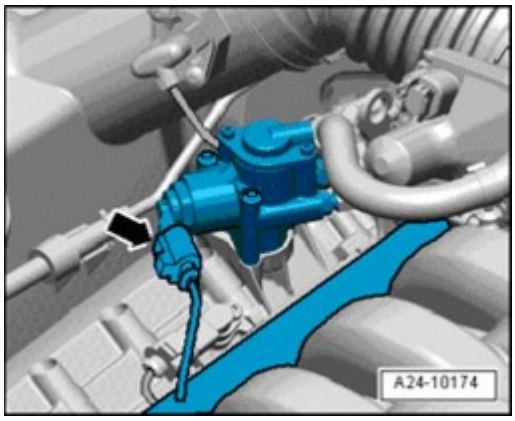

Fig. 10: Disconnecting Electrical Connector At Fuel Metering Valve 2 N290 On Right High Pressure Pump
Courtesy of VOLKSWAGEN UNITED STATES, INC.

- Disconnect electrical connector - **arrow** - at Fuel Metering Valve N290 on right high pressure pump.

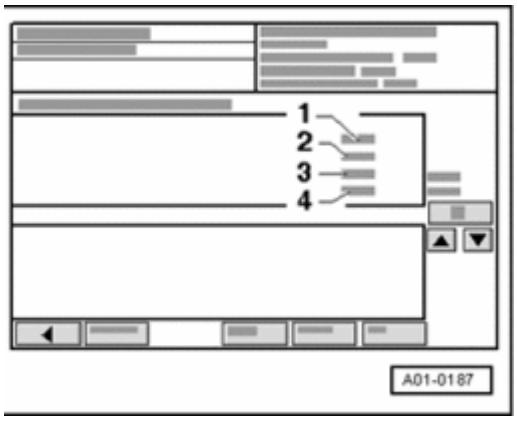

Fig. 11: Diagnostic System VAS 5051: Display
Courtesy of VOLKSWAGEN UNITED STATES, INC.

 © 2011 Mitchell Repair Information Company, LLC.

Display on VAS 5051 :

- Check indication in display field - **3** - :
- Fuel pressure in fuel rail must sink to approx. 6 bar.
- Switch off ignition.

The fuel rail will continue to be filled with fuel, but it will no longer be under high pressure.

Now components or lines can be opened. Lay a clean cloth around connection points and collect escaping fuel.

Final procedures

- Reconnect electrical harness connectors.

Faults are saved in ECM when electrical connectors are disconnected:

- Connect Vehicle Diagnosis, testing info. system VAS 5051.
- Start "Guided Functions" operating mode.
- Generate readiness code in ECM.

RULES FOR CLEANLINESS

Rules for cleanliness

Even minor contaminations can lead to malfunctions in the fuel injection system. When working on coolant supply and fuel injection system, observe the following rules of cleanliness:

- Before loosening, connections and surrounding areas must be cleaned thoroughly with engine or brake cleaner, and then cleaned area must be dried completely.
- Immediately seal off lines and connections with clean plugs or protective caps.
- Place removed parts on a clean surface and cover them with lint-free cloths.
- Only install clean components: Only unpack replacement parts immediately prior to installation. Do not use parts that have been stored unpackaged (e.g. in tool boxes etc.).
- If system is open, do not work with compressed air and do not move the vehicle.
- Protect disconnected electrical connectors from dirt and moisture and only connect if dry.

10 - ENGINE - ASSEMBLY

ENGINE, REMOVING

NOTE:

- **With lock carrier installed, engine is removed downward with transmission and subframe.**

 © 2011 Mitchell Repair Information Company, LLC.

- **Drained coolant must be stored in a clean container for disposal or reuse.**
- **During installation, all cable ties must be re-installed at the same location.**

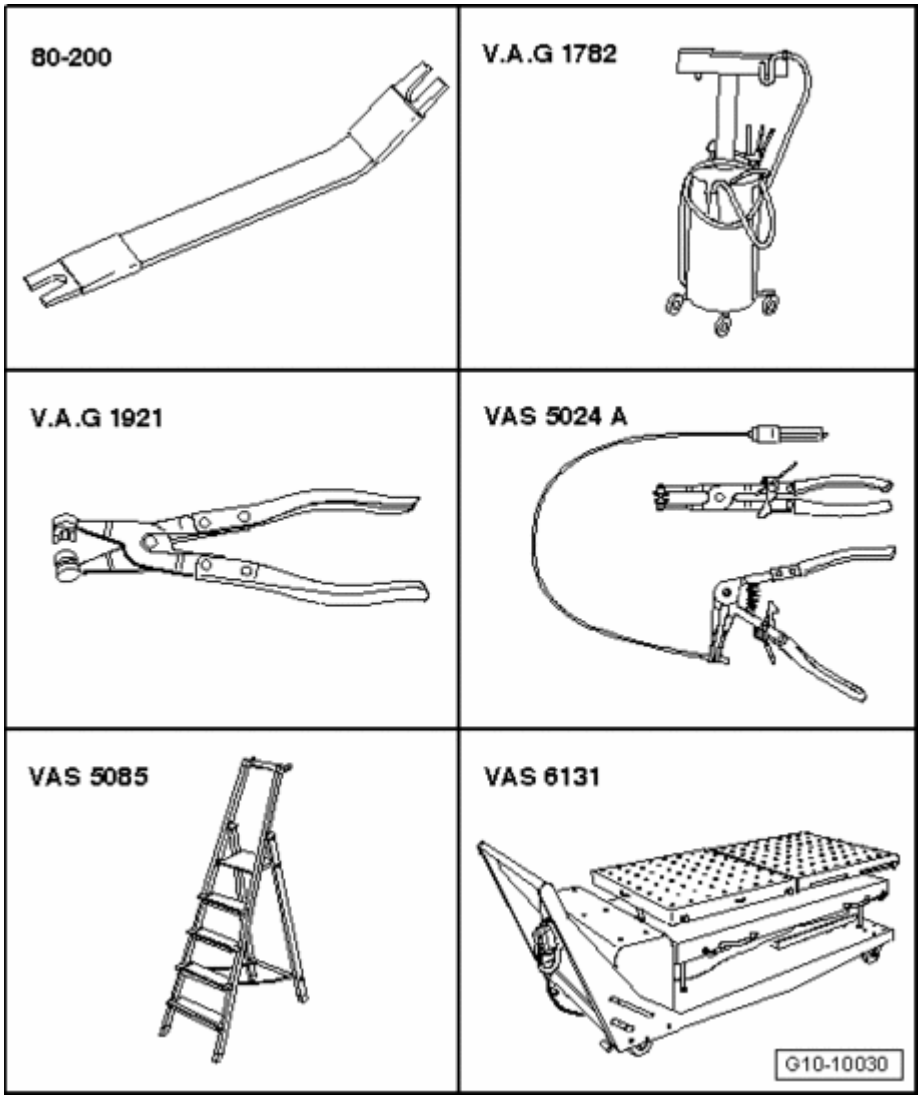

Fig. 12: Identifying Special Tools - Engine, Removing
Courtesy of VOLKSWAGEN UNITED STATES, INC.

Special tools, testers and auxiliary items required

- Pry lever 80 - 200
- Old oil collecting and extracting device V.A.G 1782
- Hose clamp pliers V.A.G 1921
- Spring-type clip pliers VAS 5024 A
- Step ladder VAS 5085
- Scissor Lift Table VAS 6131 with Support Set VAS 6131/10 and Supplementary Set VAS 6131/11 and

 © 2011 Mitchell Repair Information Company, LLC.

VAS 6131/12

Special tools, testers and auxiliary items required

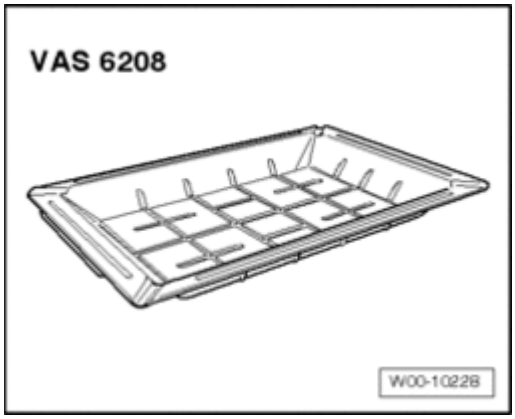

Fig. 13: Drip Tray For VAS 6100, VAS 6208
Courtesy of VOLKSWAGEN UNITED STATES, INC.

- Drip tray for workshop crane VAS 6208

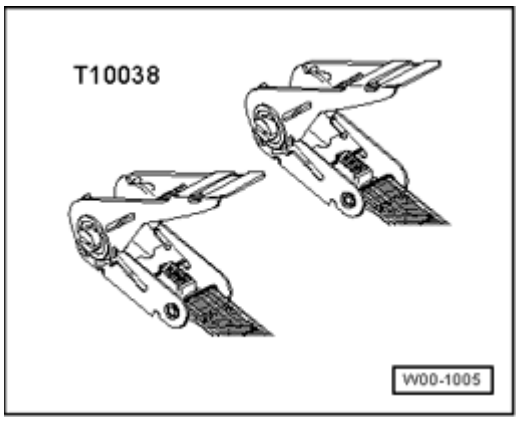

Fig. 14: Identifying Tensioning Strap T10038
Courtesy of VOLKSWAGEN UNITED STATES, INC.

- Tension strap T10038

Work procedure

CAUTION: Risk of vehicle tipping over with engine removed.

- **Secure vehicle. Luggage compartment must be empty for this.**

There is a risk of injury because the fuel is under very high pressure.

- **Before opening high pressure area of the fuel injection system, fuel pressure must be relieved to residual pressure.**

 © 2011 Mitchell Repair Information Company, LLC.

- Reduce fuel pressure in high pressure area --> **Procedure before opening fuel injection system high pressure area**.

CAUTION: Risk of destroying electrical components when battery is disconnected.

- **Observe measures when disconnecting battery.**

NOTE:

- **So that the front wheels can still be turned with the battery disconnected, the battery must only be disconnected with ignition key inserted.**
- **In order for the driveshaft to be able to rotate for removal, the electronic parking brake must be released before disconnecting battery.**

- Remove luggage compartment floor trim.
- If battery is secured with a retaining strap, open strap.

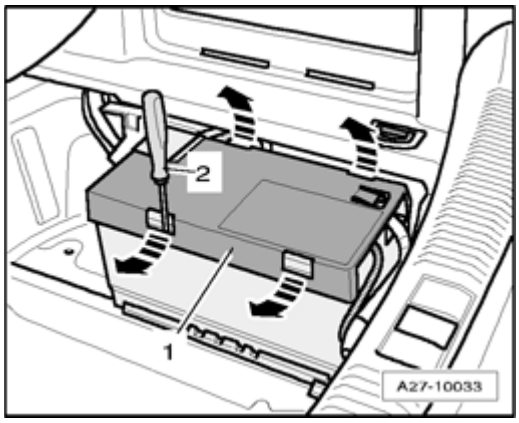

Fig. 15: Releasing Retaining Clips With A Screwdriver And Removing Battery Ground Cover
Courtesy of VOLKSWAGEN UNITED STATES, INC.

- Release retaining clips - **arrows** - with a screwdriver - **2** - and remove cover - **1** -.

 © 2011 Mitchell Repair Information Company, LLC.

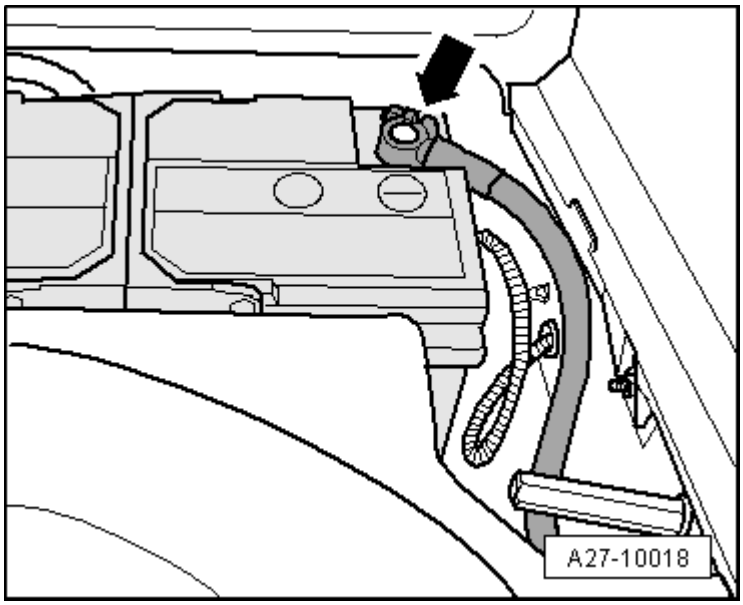

Fig. 16: Disconnecting Ground (GND) Strap At Battery Ground (GND) Terminal
Courtesy of VOLKSWAGEN UNITED STATES, INC.

- With ignition switched off, disconnect Battery Ground (GND) wire - **arrow** -.
- Discharge refrigerant circuit Refrigerant R134a - Servicing.
- Extract hydraulic oil from power steering reservoir using Used Oil Collecting and Extracting Device V.A.G 1782.

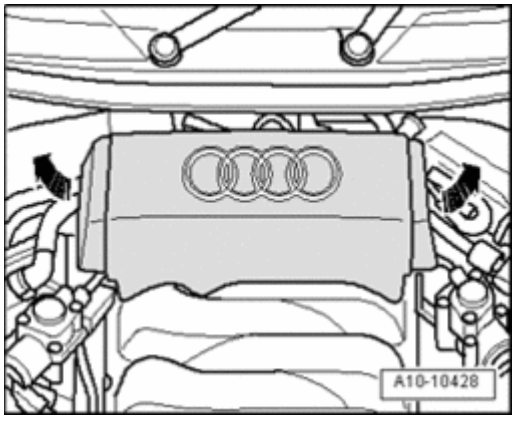

Fig. 17: Removing Rear Engine Cover
Courtesy of VOLKSWAGEN UNITED STATES, INC.

- Pull rear engine cover - **arrows** - off.

 © 2011 Mitchell Repair Information Company, LLC.

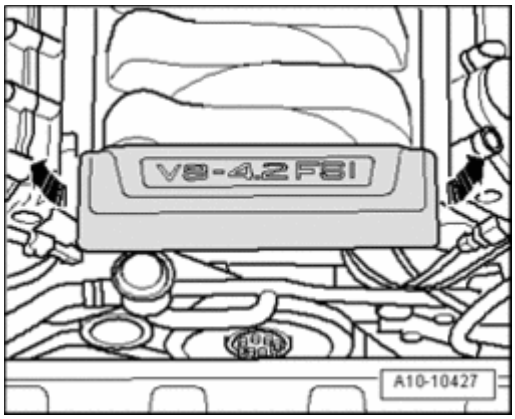

Fig. 18: Removing Front Engine Cover
Courtesy of VOLKSWAGEN UNITED STATES, INC.

- Pull front engine cover - **arrows** - off.

CAUTION: Risk of scalding due to hot steam and hot coolant.

- **When the engine is warm the cooling system is under pressure.**
- **To reduce pressure, cover coolant reservoir cap with cloth and carefully open.**

- Open cap on coolant expansion tank.

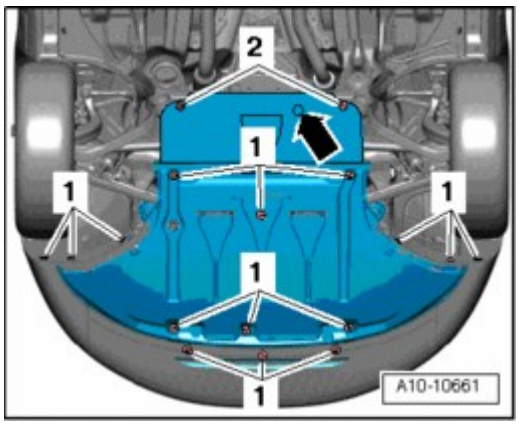

Fig. 19: Identifying Noise Insulation And Mountings
Courtesy of VOLKSWAGEN UNITED STATES, INC.

- Remove both front wheels.
- Remove sound insulation by loosening securing pieces - **1, 2 and arrow** -.
- Place drip tray for workshop crane VAS 6208 under engine.

 © 2011 Mitchell Repair Information Company, LLC.

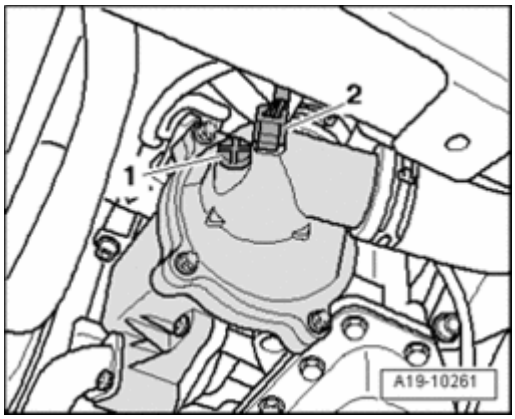

Fig. 20: Removing/Installing Drain Plug On Map Controlled Engine Cooling Thermostat F265
Courtesy of VOLKSWAGEN UNITED STATES, INC.

- Remove drain plug - **1** - on Map Controlled Engine Cooling Thermostat F265 and allow coolant to drain.

NOTE:

- **Ignore - 2 -.**

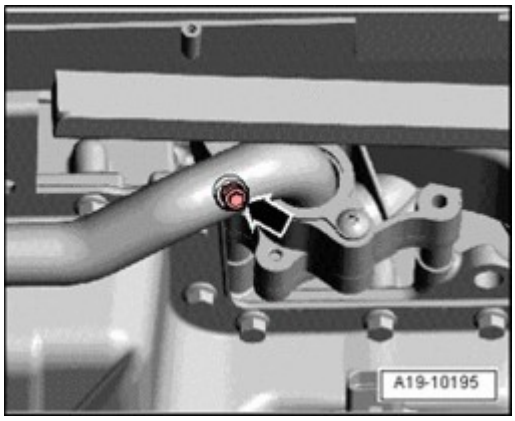

Fig. 21: Removing/Installing Drain Plug On Front Coolant Pipe
Courtesy of VOLKSWAGEN UNITED STATES, INC.

- Remove drain plug - **arrow** - at front coolant pipe and drain coolant.
- Place old oil collecting and extracting device V.A.G 1782 under engine.

NOTE:

- **Observe the rules of cleanliness for working on automatic transmissions --> 00 - GENERAL, TECHNICAL DATA .**

 © 2011 Mitchell Repair Information Company, LLC.

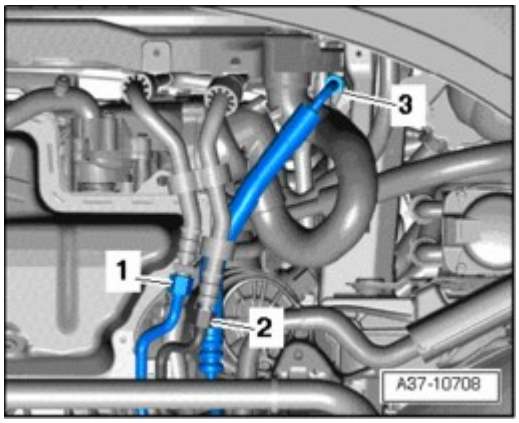

Fig. 22: Disconnecting ATF Lines And Power Steering Hydraulic Line
Courtesy of VOLKSWAGEN UNITED STATES, INC.

- Disconnect ATF lines - **1 and 2** - and power steering hydraulic line - **3** -.

NOTE:

- **To prevent dirt and moisture from entering, seal off open lines and connections with clean plugs or protective caps.**

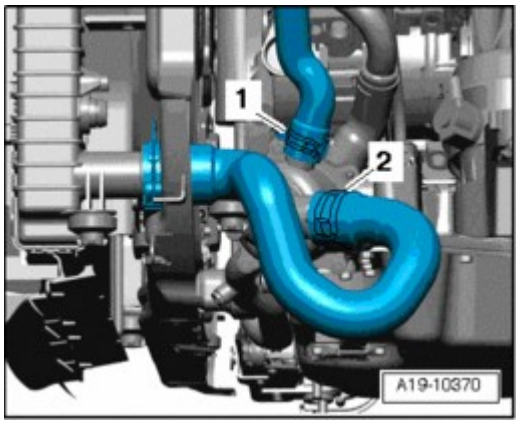

Fig. 23: Removing Coolant Hoses From Map Controlled Engine Cooling Thermostat F265
Courtesy of VOLKSWAGEN UNITED STATES, INC.

- Remove coolant hoses - **1 and 2** - from Map Controlled Engine Cooling Thermostat F265.

CAUTION: Risk of damaging coolant lines and hoses.

- **Do not stretch, kink or bend coolant lines and hoses.**

 © 2011 Mitchell Repair Information Company, LLC.

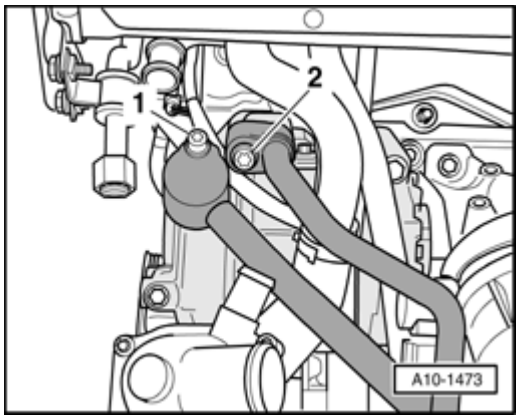

Fig. 24: Removing Bolts & Right Refrigerant Line From A/C Compressor
Courtesy of VOLKSWAGEN UNITED STATES, INC.

- Remove bolts - **1 and 2** -.
- Disconnect refrigerant lines from A/C compressor.

NOTE:

- **To prevent dirt and moisture from entering, seal off open lines and connections with clean plugs or protective caps.**

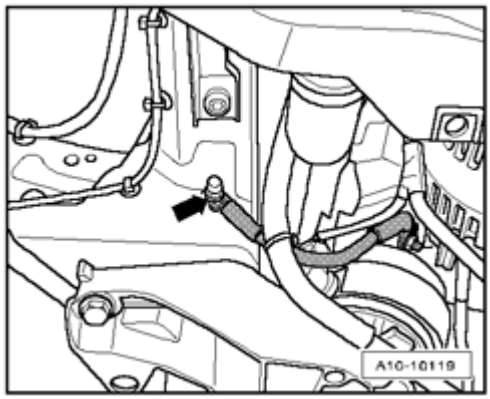

Fig. 25: Removing Ground (GND) Strap From Right Longitudinal Member
Courtesy of VOLKSWAGEN UNITED STATES, INC.

- Remove Ground (GND) strap - **arrow** - from right longitudinal member.

 © 2011 Mitchell Repair Information Company, LLC.

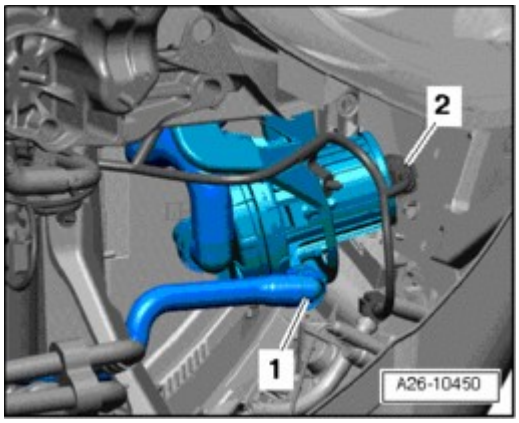

Fig. 26: Disconnecting Electrical Connector On Secondary Air Injection (AIR) Pump Motor V101 & Removing Air Guide Hose
Courtesy of VOLKSWAGEN UNITED STATES, INC.

- Disconnect electrical connector - **2** - on Secondary Air Injection (AIR) Pump Motor V101 and free up wire.
- Remove air guide hose - **1** - and free it up.

CAUTION: Risk of injury from fuel.

- **To reduce fuel pressure, lay cloths around connecting point before opening fuel system and carefully loosen.**

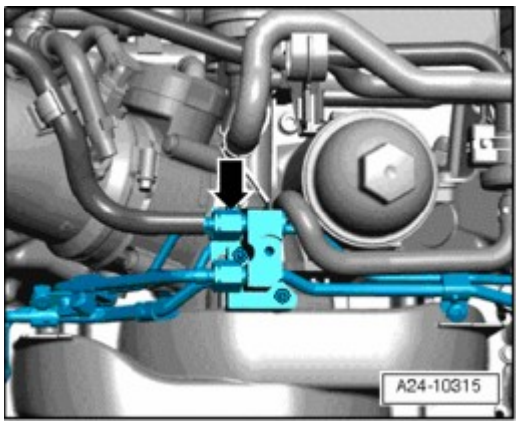

Fig. 27: Disconnecting Fuel Line
Courtesy of VOLKSWAGEN UNITED STATES, INC.

- Disconnect fuel line - **arrow** -.

 © 2011 Mitchell Repair Information Company, LLC.

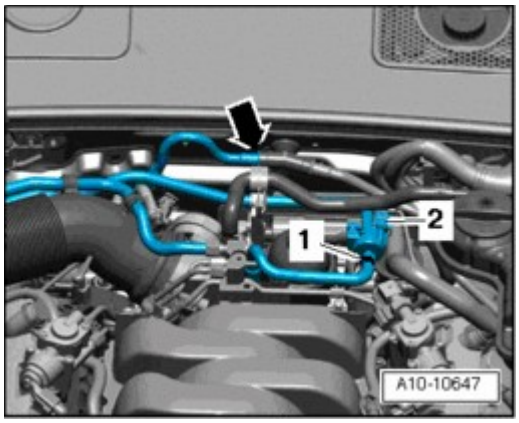

Fig. 28: Disconnecting Electrical Connector On Evaporative Emission (EVAP) Canister Purge Regulator Valve N80 And Removing Vacuum Hose
Courtesy of VOLKSWAGEN UNITED STATES, INC.

- Free up fuel line and line to EVAP canister on air filter housing and air guide pipe.
- Disconnect electrical connector - **2** - on Evaporative Emission (EVAP) Canister Purge Regulator Valve N80 and remove vacuum hose - **1** -.
- Remove Evaporative Emission (EVAP) Canister Purge Regulator Valve N80 from bracket and lay aside with hose and fuel line connected.

NOTE:

- **Disregard - arrow -.**

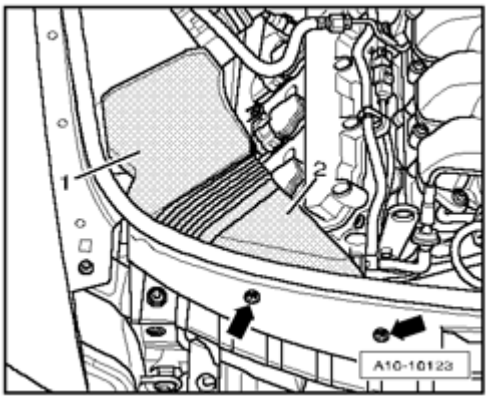

Fig. 29: Removing Bolts & Air Duct
Courtesy of VOLKSWAGEN UNITED STATES, INC.

- Remove bolts - **arrows** -.
- Remove air duct - **1 and 2** -.

 © 2011 Mitchell Repair Information Company, LLC.

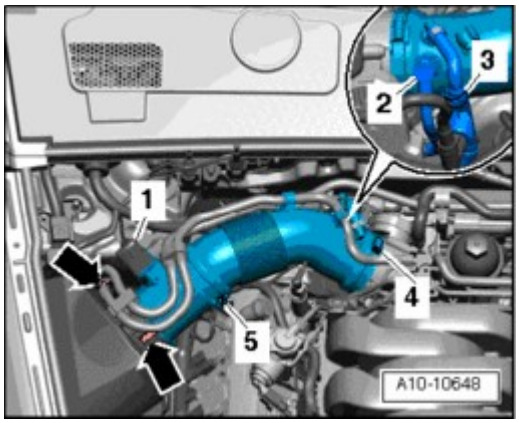

Fig. 30: Identifying Mass Air Flow (MAF) Sensor G70 Electrical Harness Connector, Vacuum Line, Hose Connection, Crankcase Ventilation Hose & Hose Clamps
Courtesy of VOLKSWAGEN UNITED STATES, INC.

- Disconnect electrical harness connector - **1** - at Mass Air Flow (MAF) Sensor G70.
- Remove vacuum line - **3** - to air guide pipe.

CAUTION: Risk of violating emissions legislation.

- **Do not open hose connection - 2 - !**

- Lay aside air guide hose with connected crankcase ventilation hose - **2** - by loosening hose clamps - **4** - and opening clips - **arrows** -.

NOTE:

- **Ignore - 5 -.**

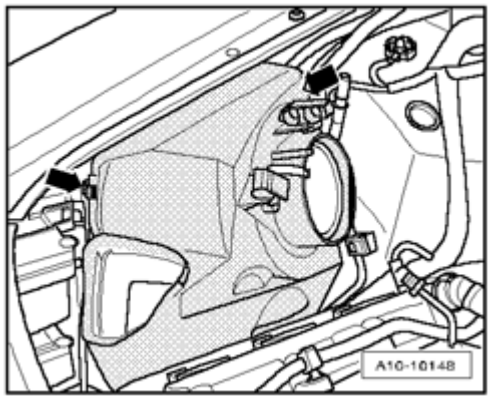

Fig. 31: Opening Clips And Removing Upper Part Of Air Filter Housing
Courtesy of VOLKSWAGEN UNITED STATES, INC.

- Open clips - **arrows** - and remove upper part of air filter housing.

 © 2011 Mitchell Repair Information Company, LLC.

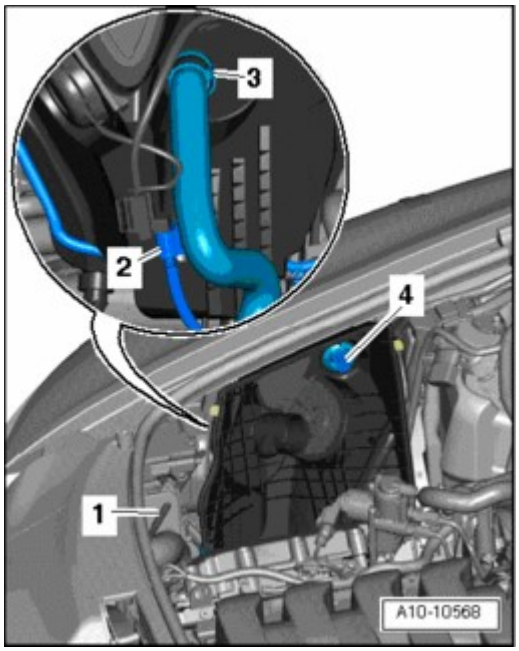

Fig. 32: Identifying Vacuum Line, Spreader Clips, Intake Air Switch-Over Valve N335 Electrical Connection & Air Guide Hose
Courtesy of VOLKSWAGEN UNITED STATES, INC.

- Disconnect vacuum line - **1** -.
- Remove pin from spreader clips - **4** -.
- Remove lower part of air filter housing and on backside, disconnect electrical connection - **2** - at intake air switch-over valve N335.
- Disconnect air guide hose - **3** - to Secondary Air Injection (AIR) pump.

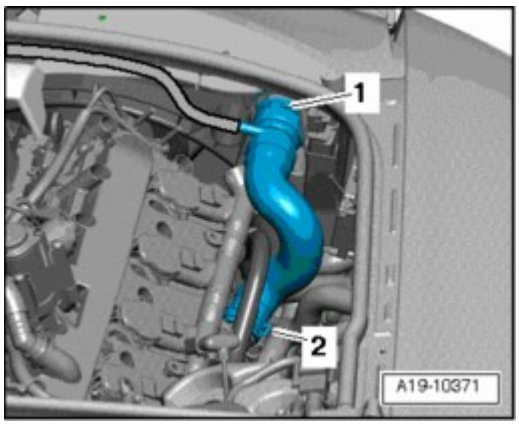

Fig. 33: Removing Coolant Hose From Radiator And Right Coolant Pipe
Courtesy of VOLKSWAGEN UNITED STATES, INC.

- Remove coolant hose - **1** - from radiator and right coolant pipe - **2** -.
- Lay coolant hose on lock carrier.

 © 2011 Mitchell Repair Information Company, LLC.

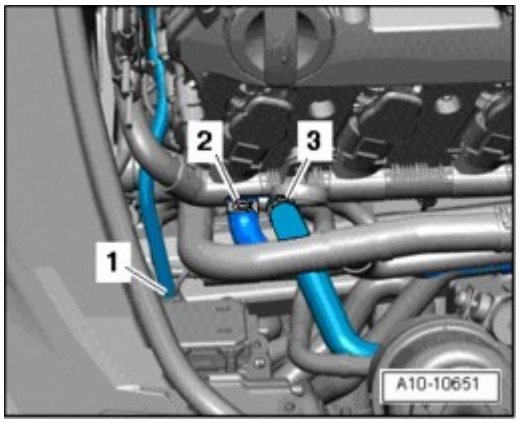

Fig. 34: Identifying Vacuum Hose, Coolant Hose & Power Steering Hydraulic Hose
Courtesy of VOLKSWAGEN UNITED STATES, INC.

- Disconnect vacuum hose - **1** -.
- Disconnect coolant hose - **2** -.
- Remove power steering hydraulic hose - **3** -.

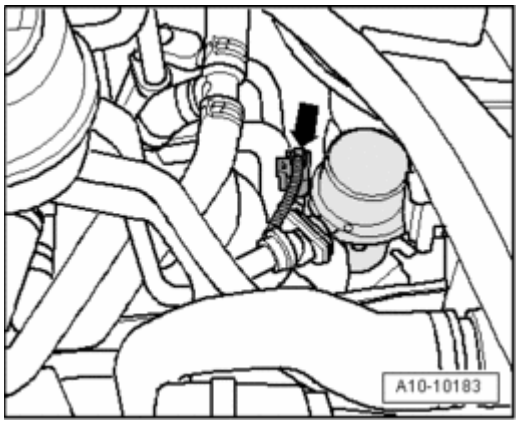

Fig. 35: Disconnecting Electrical Harness Connector To Brake System Vacuum Pump V192
Courtesy of VOLKSWAGEN UNITED STATES, INC.

- Disconnect electrical harness connector - **arrow** - to Brake System Vacuum Pump V192.
- Free up electrical wiring.

NOTE:

- **To improve clarity, the illustration is shown with headlamp removed.**

 © 2011 Mitchell Repair Information Company, LLC.

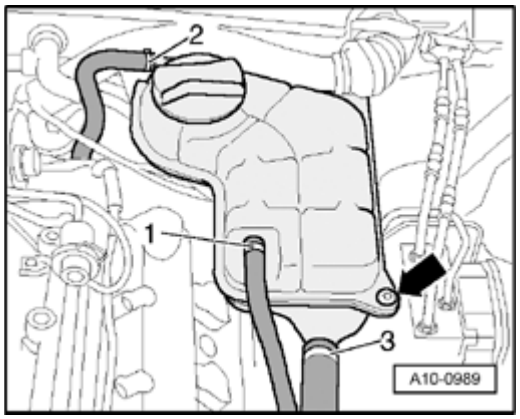

Fig. 36: Removing Coolant Hoses
Courtesy of VOLKSWAGEN UNITED STATES, INC.

- Remove coolant hose - **2** - from coolant reservoir.
- Remove coolant reservoir - **arrow** - and disconnect electrical connector on Engine Coolant Level (ECL) Warning Switch F66 at bottom of coolant reservoir.
- Lay aside coolant reservoir with connected coolant hoses - **1 and 3** -.

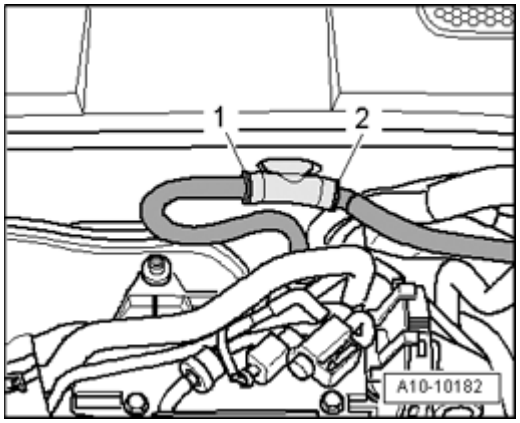

Fig. 37: Removing Vacuum Hoses From T-Piece On Bulkhead
Courtesy of VOLKSWAGEN UNITED STATES, INC.

- Remove vacuum hoses - **1 and 2** - from T-piece on bulkhead.

 © 2011 Mitchell Repair Information Company, LLC.

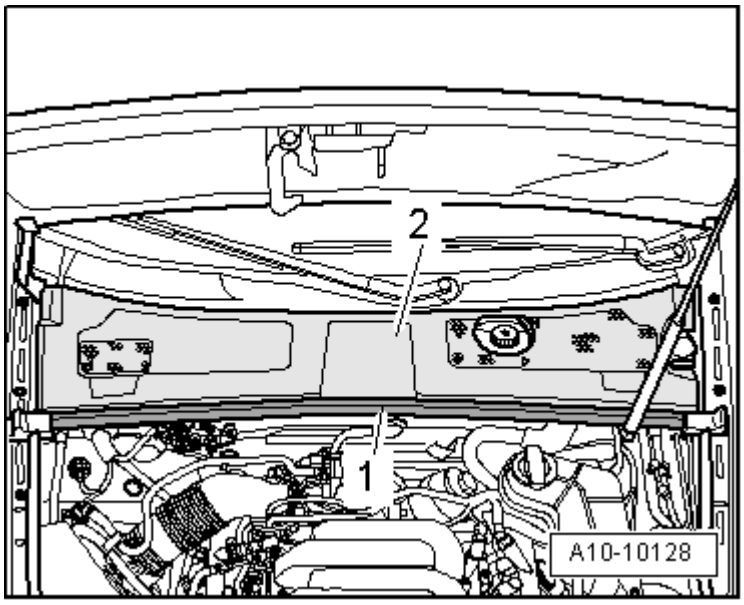

Fig. 38: Removing Rubber Seal And Plenum Chamber Cover
Courtesy of VOLKSWAGEN UNITED STATES, INC.

- Remove rubber seal - **1** - and remove plenum chamber cover - **2** -.

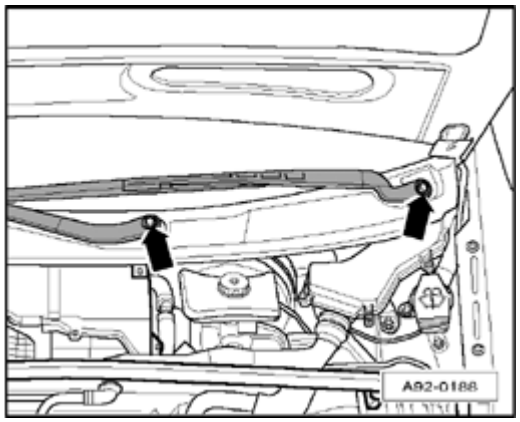

Fig. 39: Identifying Wiper Arm Nuts
Courtesy of VOLKSWAGEN UNITED STATES, INC.

- Pry out cover caps on windshield wiper arms with a screwdriver and loosen nuts - **arrows** - a few turns.
- Loosen wiper arms by tilting slightly from windshield wiper axle.
- Remove nuts completely and remove wiper arms.

NOTE:

- **If wiper arms cannot be removed in this way, use a standard puller.**

 © 2011 Mitchell Repair Information Company, LLC.

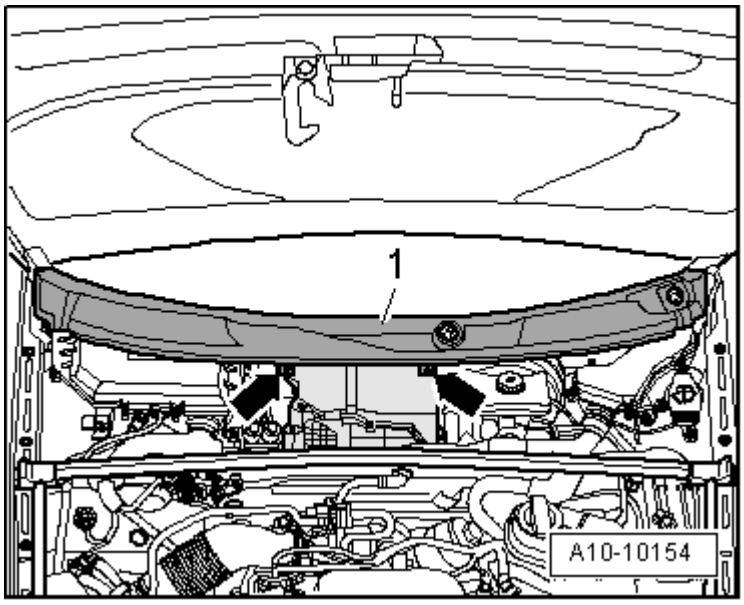

Fig. 40: Removing Bolts For Cowl Grill
Courtesy of VOLKSWAGEN UNITED STATES, INC.

- Remove bolts - **arrows** - and remove cowl grille - **1** - from windshield.

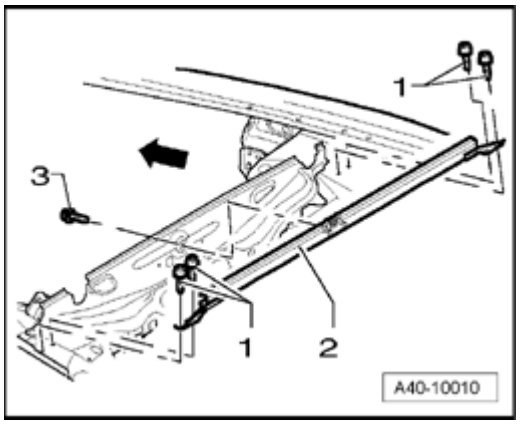

Fig. 41: Removing Bolts And Strut Tower Brace
Courtesy of VOLKSWAGEN UNITED STATES, INC.

- If vehicle is equipped with dome braces, remove bolts - **1 and 3** - and remove dome braces - **2** -.

 © 2011 Mitchell Repair Information Company, LLC.

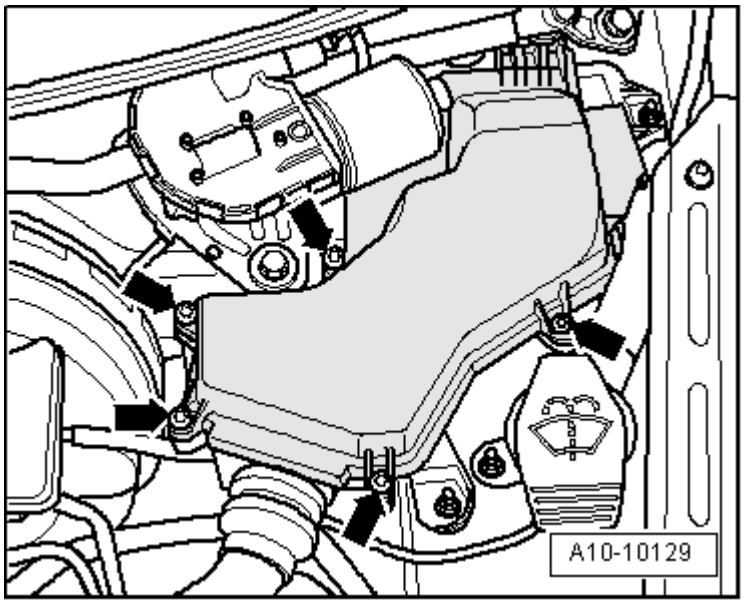

Fig. 42: Removing Bolts And Cover Form E-Box At Left In Engine Compartment
Courtesy of VOLKSWAGEN UNITED STATES, INC.

- Remove bolts - **arrows** - and remove cover form E-box at left in engine compartment.

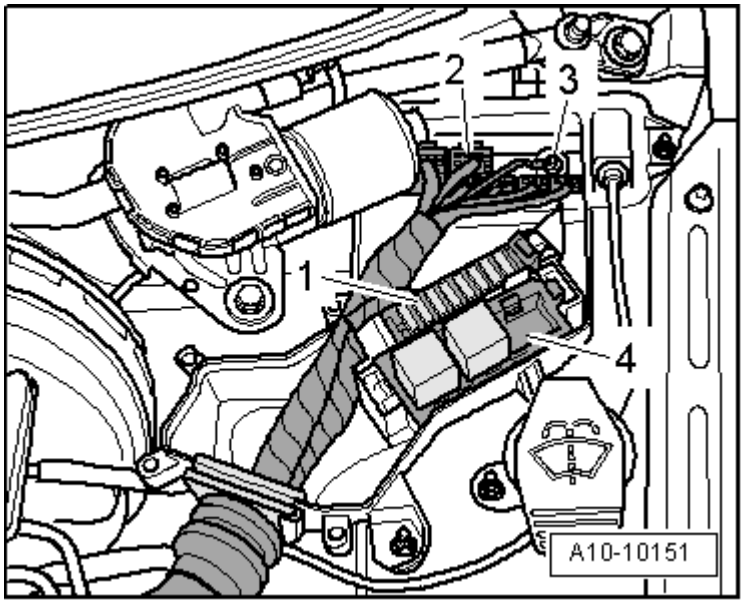

Fig. 43: Identifying Fuse Holder, 3-Socket Relay Carrier, Electrical Wire Connection & Electrical Connections
Courtesy of VOLKSWAGEN UNITED STATES, INC.

- Release retaining tabs and pull fuse holder - **1** - and 3-socket relay carrier - **4** - upward and off.
- Remove electrical wire connection - **3** -.
- Disconnect all electrical connections - **2** - at rear on connector strip.
- Disengage and free up engine wiring harness at E-Box.

 © 2011 Mitchell Repair Information Company, LLC.

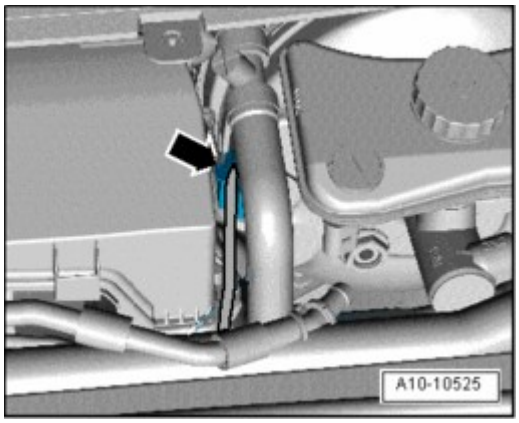

Fig. 44: Disconnecting Electrical Harness Connector At Brake Booster Pressure Sensor G294
Courtesy of VOLKSWAGEN UNITED STATES, INC.

- Disconnect electrical harness connector - **arrow** - at Brake Booster Pressure Sensor G294.

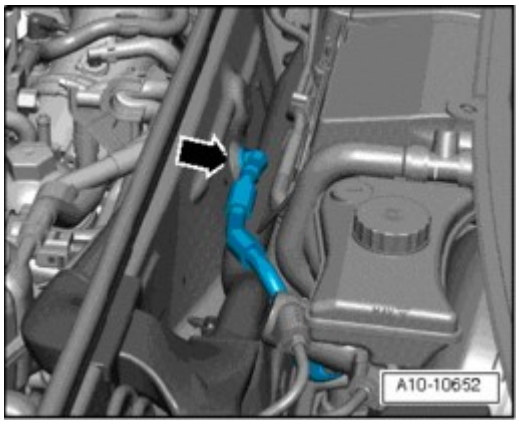

Fig. 45: Disconnecting Vacuum Line To Brake Booster At Bulkhead
Courtesy of VOLKSWAGEN UNITED STATES, INC.

- Disconnect vacuum line - **arrow** - to brake booster at bulkhead.

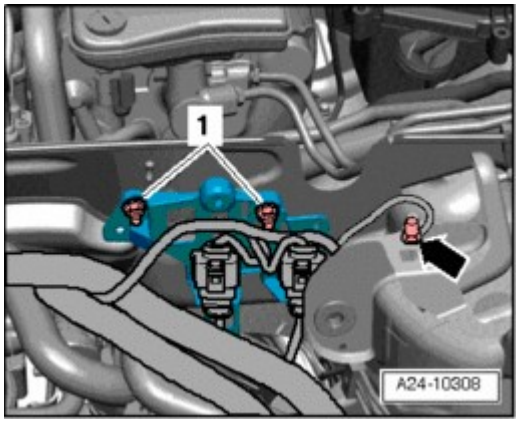

Fig. 46: Removing Nut And Left Electrical Connectors Bracket From Bulkhead & Ground (GND) Wire From Left Strut Tower

 © 2011 Mitchell Repair Information Company, LLC.

Courtesy of VOLKSWAGEN UNITED STATES, INC.

- Remove nut - **1** - and remove left electrical connectors bracket from bulkhead.
- Remove Ground (GND) wire - **arrow** - from left strut tower.

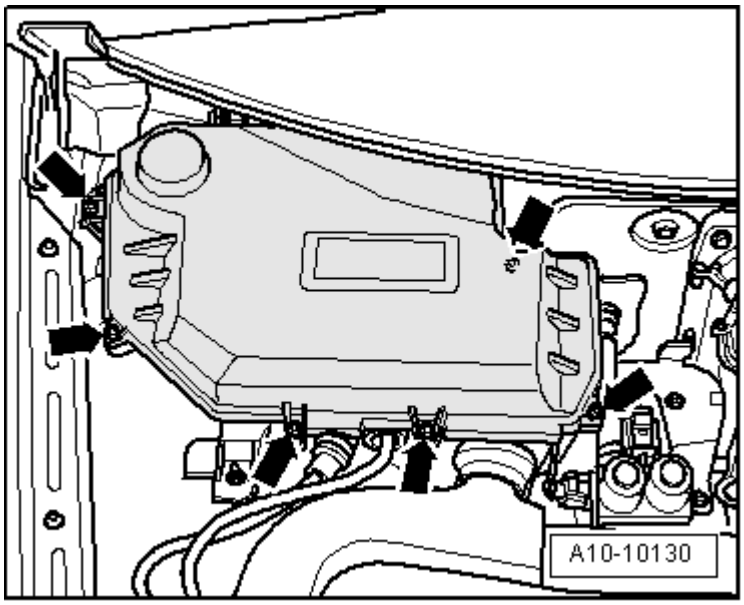

Fig. 47: Removing Bolts And Cover For E-Box At Right In Engine Compartment
Courtesy of VOLKSWAGEN UNITED STATES, INC.

- Remove bolts - **arrows** - and remove cover for E-box at right in engine compartment.

CAUTION: Risk of burning on heater pump valve unit (at left in front of E box).

- **Wear protective gloves when working near heater pump valve unit.**

 © 2011 Mitchell Repair Information Company, LLC.

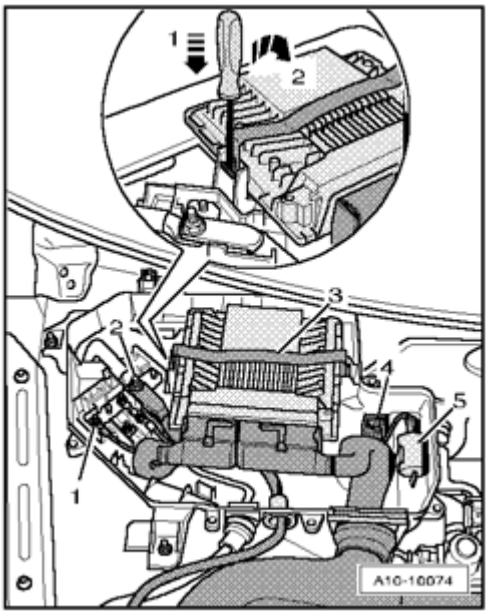

Fig. 48: Prying Off Retaining Clip With Screwdriver And Removing ECM From E-Box
Courtesy of VOLKSWAGEN UNITED STATES, INC.

- Carefully pry off retaining clip - **3** - with a screwdriver - **arrows 1 and 2** - and remove ECM from E-box.

NOTE:

- **Engine Control Module (ECM) remains connected at wiring harness.**

- Unclip suppression capacitors - **5** - from bracket in E-box.
- Disconnect electrical connection - **4** - at rear on connector strip.
- Disconnect electrical wiring connections - **1 and 2** -.

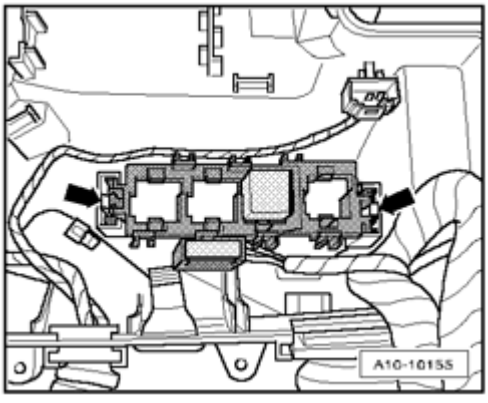

Fig. 49: Releasing locking mechanisms and remove relay carrier upward
Courtesy of VOLKSWAGEN UNITED STATES, INC.

- Release locking mechanisms - **arrows** - and remove relay carrier upward.

 © 2011 Mitchell Repair Information Company, LLC.

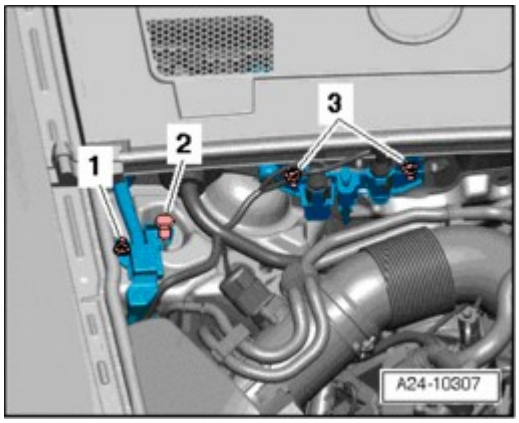

Fig. 50: Identifying Ground Pins & Nuts
Courtesy of VOLKSWAGEN UNITED STATES, INC.

- Remove nuts - **3** - and remove right electrical connectors bracket from bulkhead.
- Remove nut - **1** - on positive terminal pick-off.
- Remove Ground pins - **2** -.

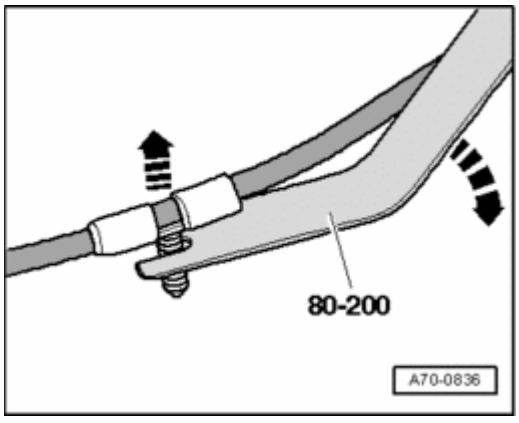

Fig. 51: Using Pry Lever 80 - 200 To Remove Instrument Panel Central Tube
Courtesy of VOLKSWAGEN UNITED STATES, INC.

- Free electrical wiring up to generator using pry lever 80-200.

NOTE:

- **If necessary, use silicon-free spray lubricant to facilitate removal of wiring clips.**

- Set both wiring harnesses on engine and secure Engine Control Module (ECM) against falling down.
- Have a second technician press brake pedal.

CAUTION: Risk of damaging wheel bearing.

- **To loosen drive axle collar bolt, vehicle must not be resting on wheels.**

 © 2011 Mitchell Repair Information Company, LLC.

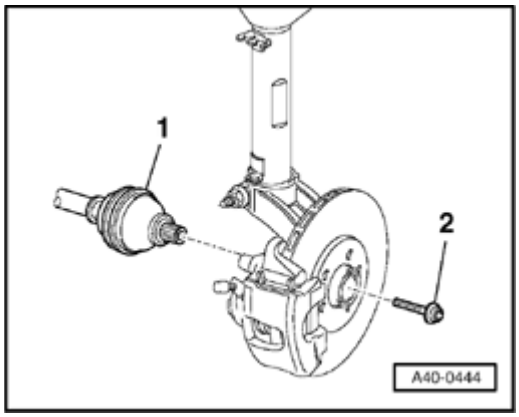

Fig. 52: Removing Collar Bolt At Left/Right Drive Axles
Courtesy of VOLKSWAGEN UNITED STATES, INC.

- Remove collar bolt - **2** - at left and right drive axles - **1** -.

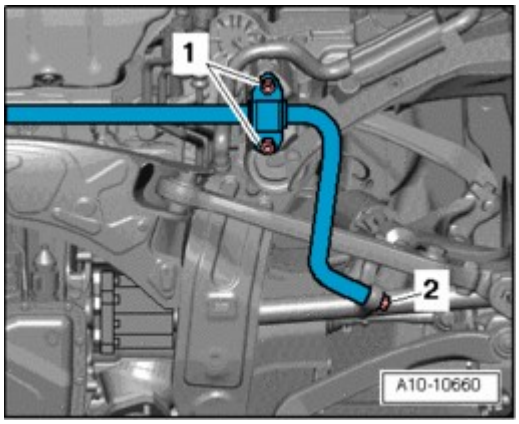

Fig. 53: Removing Left/Right Nuts, Bolts & Stabilizer Bar
Courtesy of VOLKSWAGEN UNITED STATES, INC.

- Evenly remove left and right nuts - **1** -.
- Remove left and right bolts - **2** - and remove stabilizer bar.

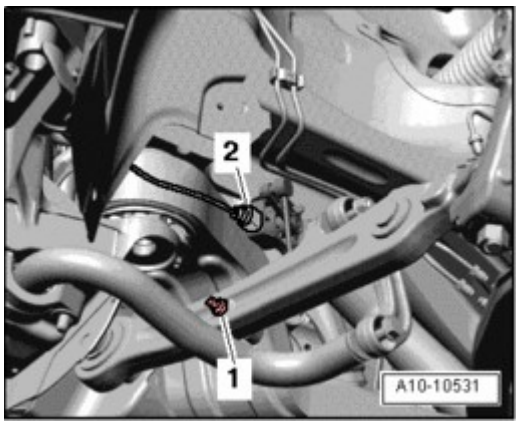

Fig. 54: Disconnecting Electrical Harness Connector At Level Control System Sensor & Connecting Link

 © 2011 Mitchell Repair Information Company, LLC.

From Control Arm
Courtesy of VOLKSWAGEN UNITED STATES, INC.

- Disconnect electrical harness connector - **2** - at Level Control System Sensor.
- Disconnect connecting link - **1** - from control arm.

CAUTION: Risk of damaging axle joints on upper control arms.

- **Support wheel bearing housing.**

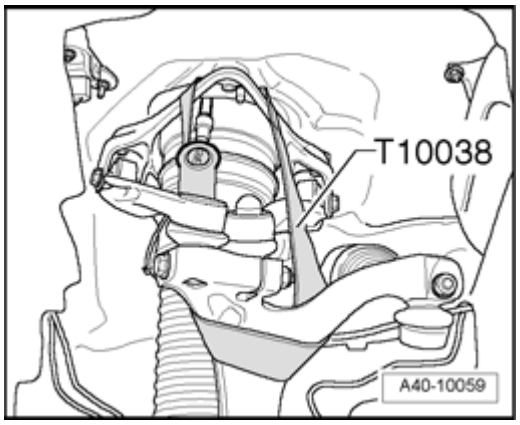

Fig. 55: Tying Up Wheel Bearing Housing With Tension Strap T10038
Courtesy of VOLKSWAGEN UNITED STATES, INC.

- Tie up wheel bearing housing with Tension Strap T10038 as shown in illustration.

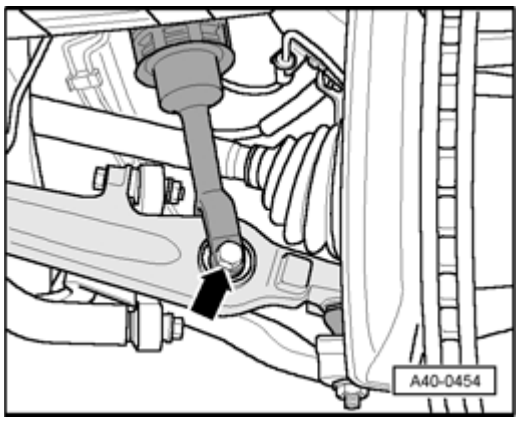

Fig. 56: Removing Bolt And Suspension Strut From Control Arm
Courtesy of VOLKSWAGEN UNITED STATES, INC.

- Remove suspension strut from control arm - **arrow** -.

 © 2011 Mitchell Repair Information Company, LLC.

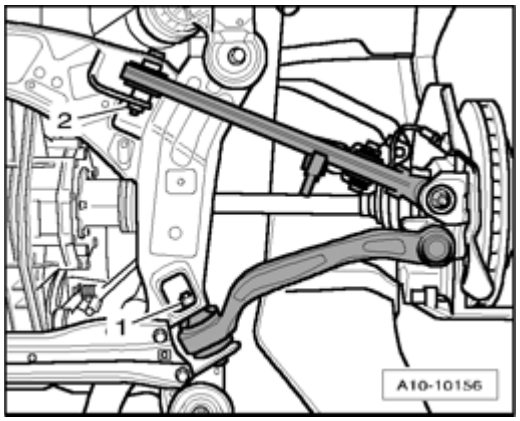

Fig. 57: Removing Guide Control Arm And Control Arm On Subframe
Courtesy of VOLKSWAGEN UNITED STATES, INC.

- Remove guide control arm - **1** - and control arm - **2** - from subframe.

CAUTION: Risk of damaging axle joints on guide control arm and control arm.

- **Tie guide control arm and control arm up to wheel bearing housing - arrows -.**

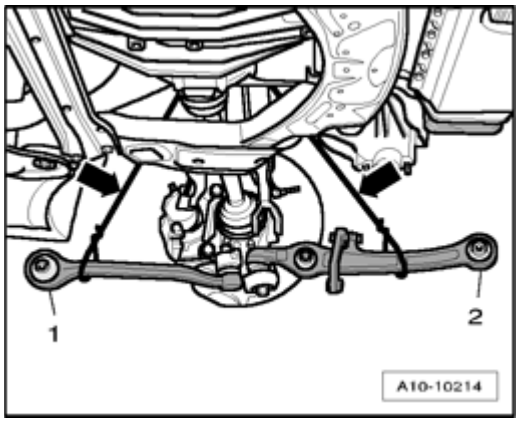

Fig. 58: Pivoting Guide Control Arm And Control Arm Outward
Courtesy of VOLKSWAGEN UNITED STATES, INC.

- Pivot guide control arm - **1** - and control arm - **2** - outward.
- Repeat work procedure on opposite side of vehicle.
- Remove drive axle from transmission flanged shaft.

CAUTION: Risk of damaging brake line.

- **Carefully tilt wheel bearing housing toward outside.**

- Remove drive shaft.
- Repeat work procedure on opposite side of vehicle.

 © 2011 Mitchell Repair Information Company, LLC.

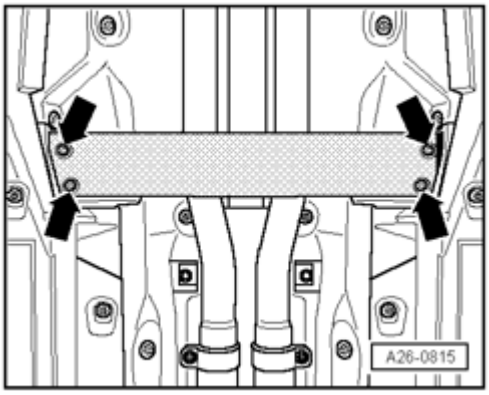

Fig. 59: Removing Front Transverse Beam
Courtesy of VOLKSWAGEN UNITED STATES, INC.

- Remove front transverse beam - **arrows** -.

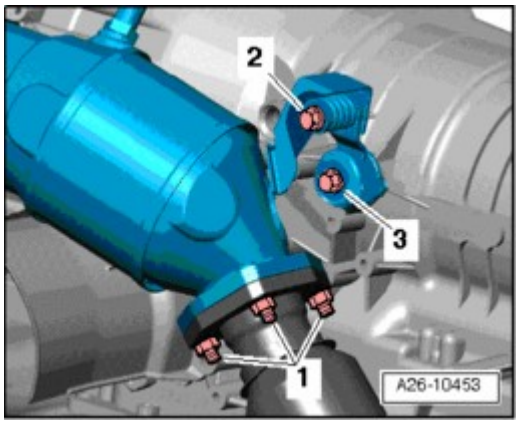

Fig. 60: Removing Left Front Muffler Nuts
Courtesy of VOLKSWAGEN UNITED STATES, INC.

- Remove left front muffler nuts - **1** -.

NOTE:

- **Ignore - 2 and 3 -.**

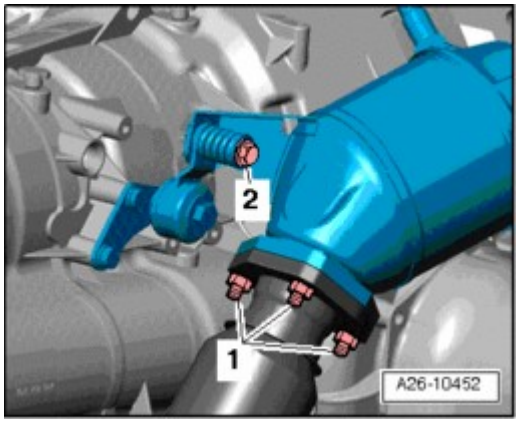

 © 2011 Mitchell Repair Information Company, LLC.

Fig. 61: Removing Right Front Muffler Nuts
Courtesy of VOLKSWAGEN UNITED STATES, INC.

- Remove right front muffler nuts - **1** -.

NOTE:

- **Ignore - 2 -.**

CAUTION: Risk of damaging decoupling elements in front muffler.

- **Do not bend decoupling elements in front muffler more than 10°.**

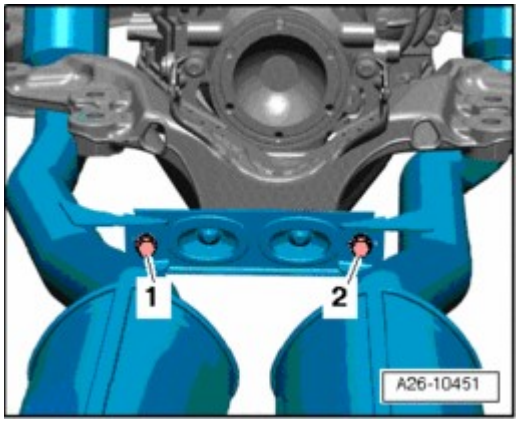

Fig. 62: Removing Bolts
Courtesy of VOLKSWAGEN UNITED STATES, INC.

- Remove bolts - **1 and 2** -.

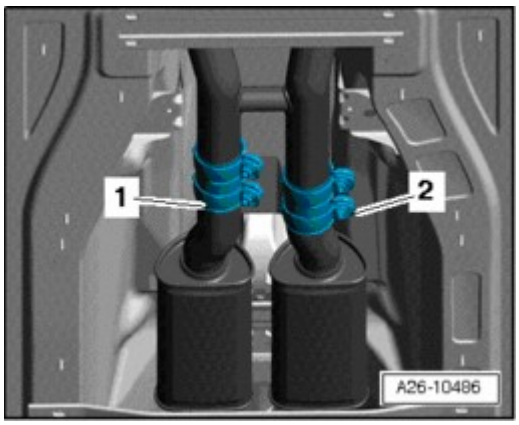

Fig. 63: Loosening Left/Right Clamping Sleeve
Courtesy of VOLKSWAGEN UNITED STATES, INC.

- Loosen left clamping sleeve - **1** - , slide back and remove left front muffler.
- Loosen right clamping sleeve - **2** - , slide back and remove right front muffler.

 © 2011 Mitchell Repair Information Company, LLC.

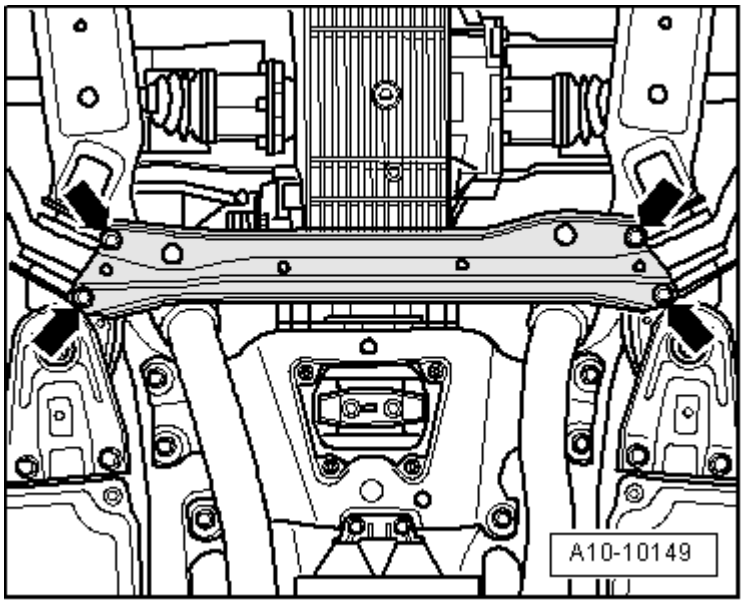

Fig. 64: Removing Subframe Transverse Beam
Courtesy of VOLKSWAGEN UNITED STATES, INC.

- Remove subframe transverse beam - **arrows** -.

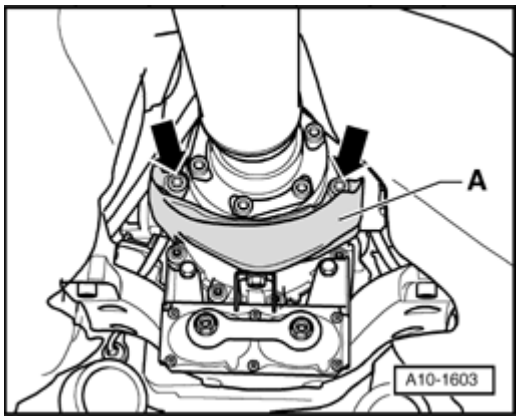

Fig. 65: Removing Heat Shield For Drive Axle
Courtesy of VOLKSWAGEN UNITED STATES, INC.

- Remove heat shield - **A** - for drive axle - **arrows** -.
- Remove bolts that connect driveshaft to transmission.
- Slide driveshaft back to rear final drive; constant velocity joints can move axially.

 © 2011 Mitchell Repair Information Company, LLC.

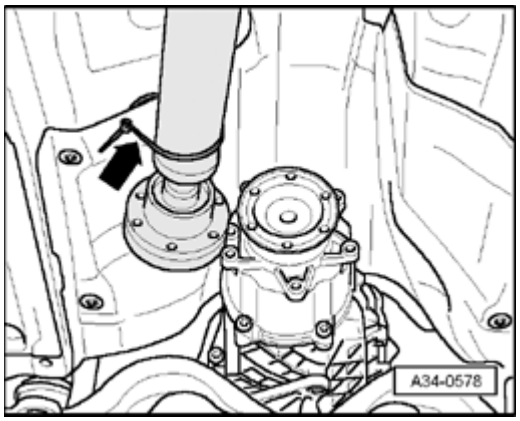

Fig. 66: Drive Shaft Tied To Side, Onto Heat Shield
Courtesy of VOLKSWAGEN UNITED STATES, INC.

- Tie driveshaft up and to the side against heat shield - **arrow** -.

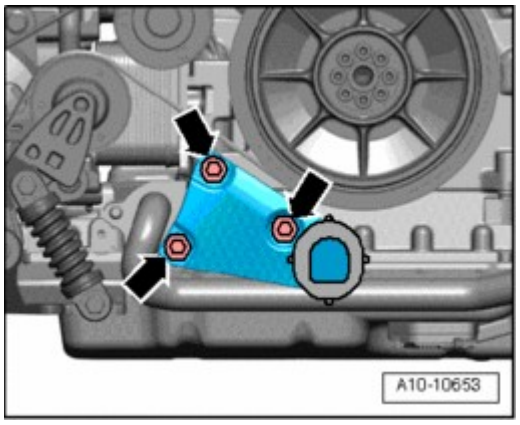

Fig. 67: Removing Bolts For Torque Support
Courtesy of VOLKSWAGEN UNITED STATES, INC.

- Remove bolts - **arrows** - for torque support.

NOTE:

- **The torque support can be removed at a later time.**

Vehicles with auxiliary heater:

- Remove left front wheelhousing liner --> **66 - EXTERIOR EQUIPMENT** .

 © 2011 Mitchell Repair Information Company, LLC.

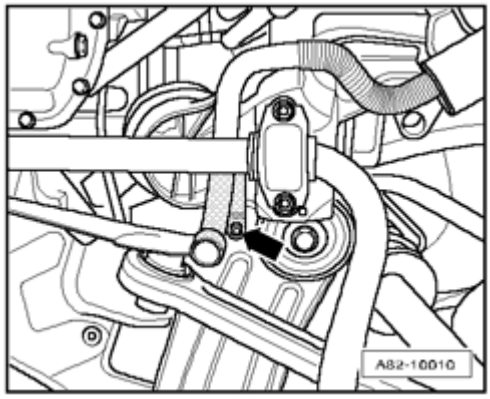

Fig. 68: Removing Bolt For Corrugated Exhaust Pipe
Courtesy of VOLKSWAGEN UNITED STATES, INC.

- Remove bolt - **arrow** - for corrugated exhaust pipe.

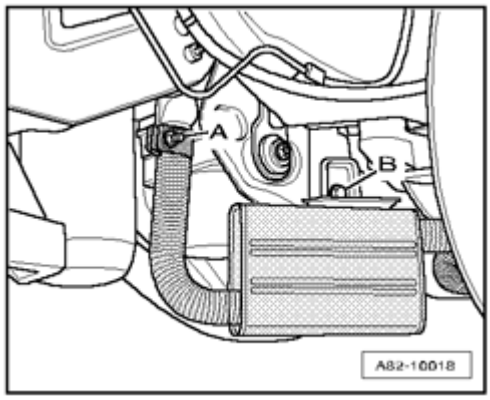

Fig. 69: Loosening Nut On Clamp For Corrugated Exhaust Pipe & Removing Bolt & Muffler With Corrugated Exhaust Pipe
Courtesy of VOLKSWAGEN UNITED STATES, INC.

- Loosen nut - **A** - on clamp for corrugated exhaust pipe.
- Remove bolt - **B** - and remove muffler with corrugated exhaust pipe.

Prepare scissor lift platform:

 © 2011 Mitchell Repair Information Company, LLC.

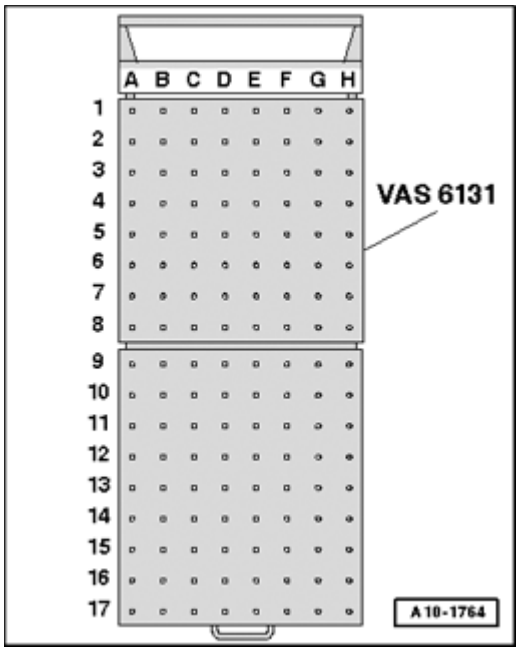

Fig. 70: Identifying Scissor Lift Platform VAS 6131
Courtesy of VOLKSWAGEN UNITED STATES, INC.

- Equip Scissor Lift Table VAS 6131 with Support Set VAS 6131/10 as well as Supplementary Set VAS 6131/11 and VAS 6131/12 as follows:

Platform coordinates	Parts from Support Set VAS 6131/10 , Supplementary Set VAS 6131/11 and VAS 6131/12			
C4	/10-1	/10-4	/10-5	/10-12
F4	/10-1	/10-4	/10-5	/10-11
D10	/10-1	/10-2	/10-5	/12-1
B11	/10-1	/10-2	/10-5	/10-8
E11	/10-1	/10-3	/10-5	/11-3
G11	/10-1	/10-2	/10-5	/10-8
F14	/10-1	/10-4	/10-5	/10-13
D16	/10-1	/10-3	/10-5	/10-6

- Install attachments on scissor lift table by hand first.
- Place scissor lift platform VAS 6131 in horizontal position.

- Note bubble level (sight glass) on support platform.

- Drive scissor lift platform VAS 6131 under engine/transmission subassembly.

 © 2011 Mitchell Repair Information Company, LLC.

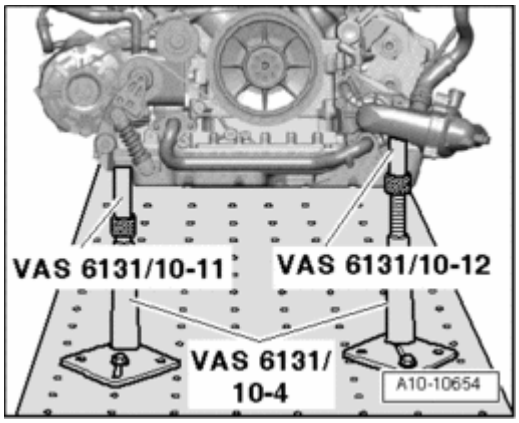

Fig. 71: Positioning Support Elements From VAS 6131/10 At Front On Engine
Courtesy of VOLKSWAGEN UNITED STATES, INC.

- Position support elements from VAS 6131/10 at front on engine as shown in illustration.
- Ensure right threaded spindle at front of engine is completely installed.

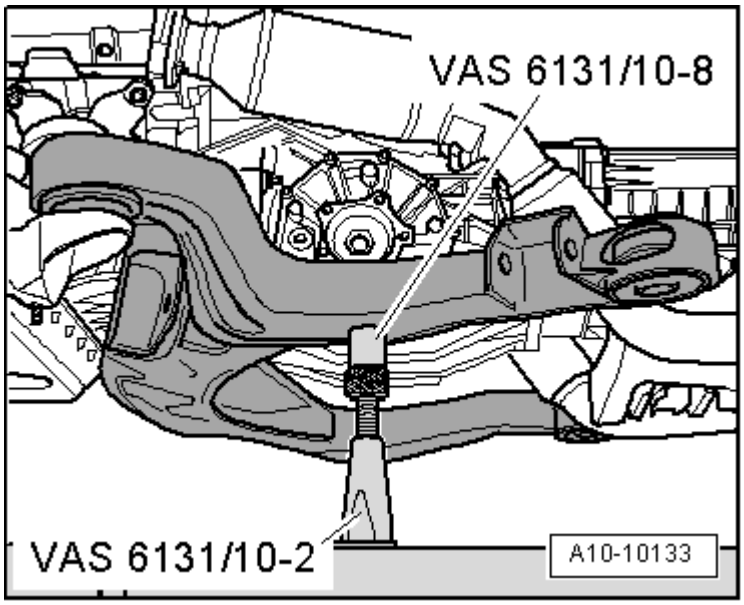

Fig. 72: Positioning Support Elements From VAS 6131/10 At Left/Right On Subframe
Courtesy of VOLKSWAGEN UNITED STATES, INC.

- Position support elements from VAS 6131/10 at left and right on subframe as shown in illustration.

 © 2011 Mitchell Repair Information Company, LLC.

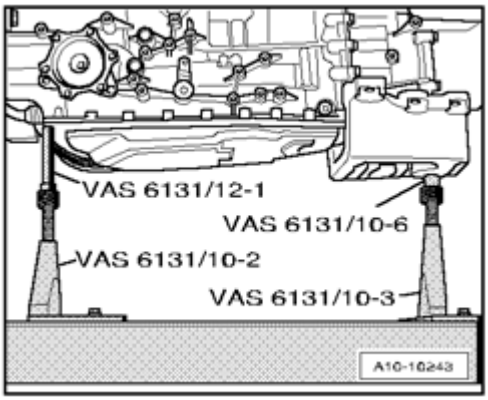

Fig. 73: Positioning Support Elements From VAS 6131/10 And VAS 6131/12 At Left On Transmission And Tunnel Cross Member
Courtesy of VOLKSWAGEN UNITED STATES, INC.

- Position support elements from VAS 6131/10 and VAS 6131/12 at left on transmission and tunnel cross member as shown in illustration.

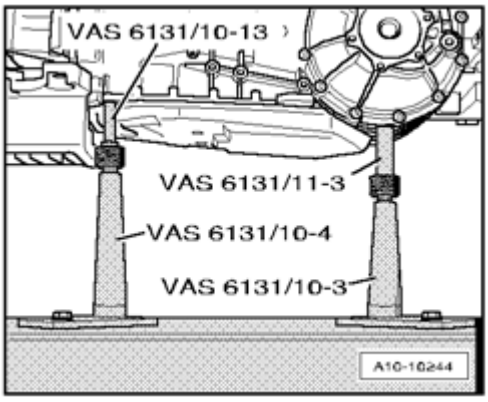

Fig. 74: Positioning Support Elements From VAS 6131/10 And VAS 6131/11 At Right On Transmission
Courtesy of VOLKSWAGEN UNITED STATES, INC.

- Position support elements from VAS 6131/10 and VAS 6131/11 at right on transmission as shown in illustration.
- Twist all spindles of support elements upward far enough until all support pins make contact at support points.
- Tighten base plates for support elements to 20 Nm on scissor lift platform VAS 6131.

 © 2011 Mitchell Repair Information Company, LLC.

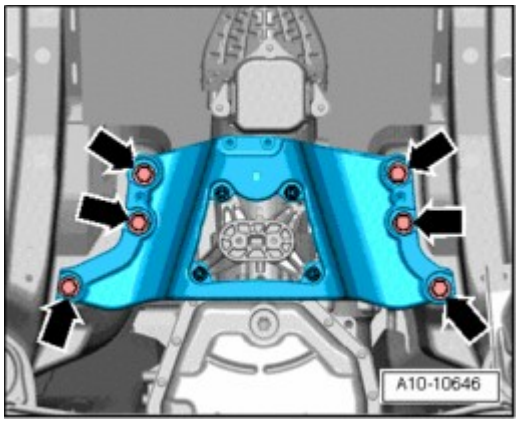

Fig. 75: Removing Bolts At Tunnel Cross Member
Courtesy of VOLKSWAGEN UNITED STATES, INC.

- Remove bolts - **arrows** - at tunnel cross member.

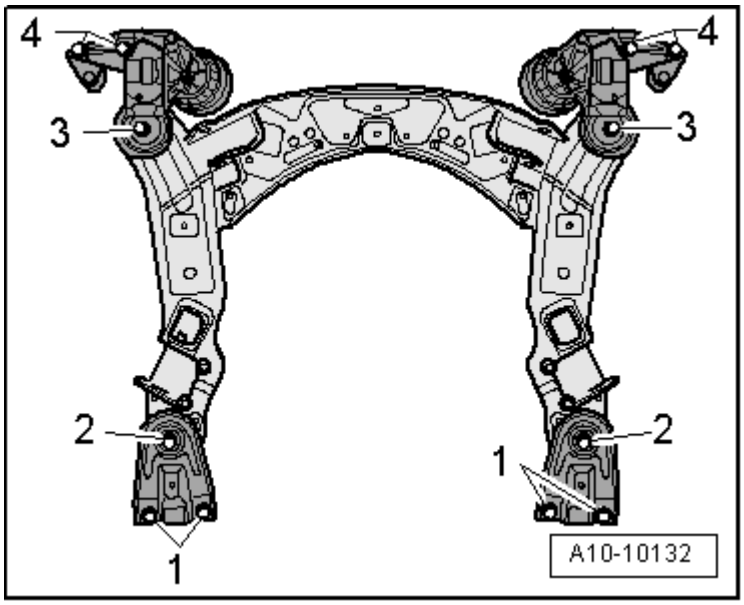

Fig. 76: Engine Mount Plate Bolts Removal/Installing Sequence
Courtesy of VOLKSWAGEN UNITED STATES, INC.

- Remove bolts - **1** -.
- Mark installation position of subframe and of both engine mount plates to long members using a felt-tip marker.
- Remove bolts - **2, 3, 4** - in diagonal sequence and in stages.

CAUTION: Risk of damaging hose and wiring connections as well as engine compartment.

- **Check whether all are loosened between engine, transmission, subframe and body.**

 © 2011 Mitchell Repair Information Company, LLC.

- **Carefully guide engine-transmission assembly with subframe out of engine compartment while lowering.**

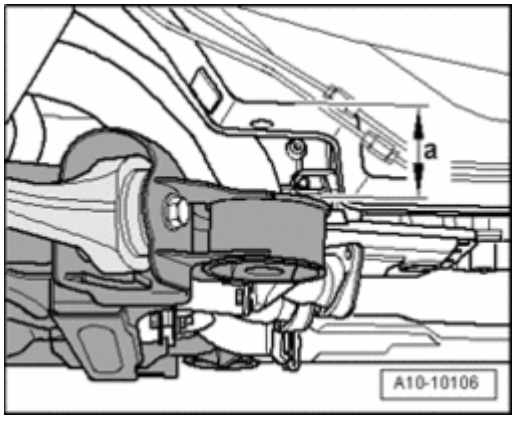

Fig. 77: Lowering Engine/Transmission Assembly Using Scissor Lift Platform VAS 6131 Only Approx. By Dimension
Courtesy of VOLKSWAGEN UNITED STATES, INC.

- First lower engine/transmission assembly using scissor lift platform VAS 6131 only approx. by dimension - **a** -.

- Dimension - **a** - = 100 mm maximum.

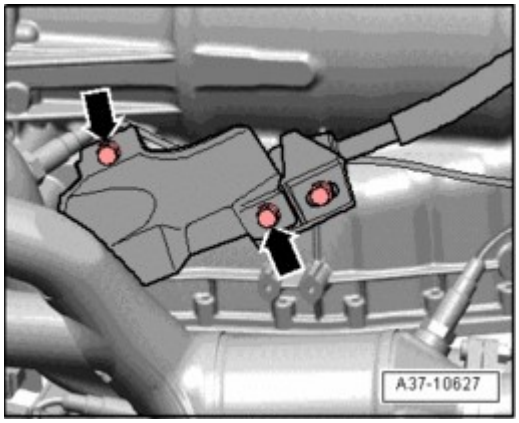

Fig. 78: Removing Bolts & Selector Lever Cable Heat Shield
Courtesy of VOLKSWAGEN UNITED STATES, INC.

- On a vehicle with heat shield, remove bolts - **arrows** - and remove selector lever cable heat shield.

 © 2011 Mitchell Repair Information Company, LLC.

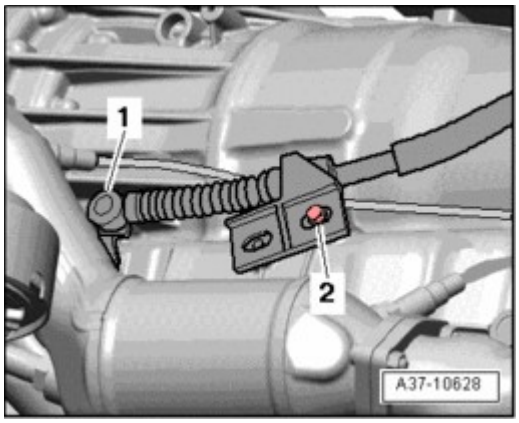

Fig. 79: Identifying Ball Socket & Mounting Bracket
Courtesy of VOLKSWAGEN UNITED STATES, INC.

- Identify installation position of selector lever cable bracket with a felt-tip pen for re-installation.
- Press ball socket - **1** - of selector lever cable from selector shaft lever using pry lever 80 - 200.
- Remove mounting bracket - **2** - from transmission.
- Move selector lever cable clear.

- Remove torque support.
- Lower engine/transmission subassembly downward.
- Push scissor lift platform VAS 6131 with engine/transmission subassembly under vehicle.

ENGINE AND TRANSMISSION, SEPARATING

Engine and transmission, separating

Special tools, testers and auxiliary items required

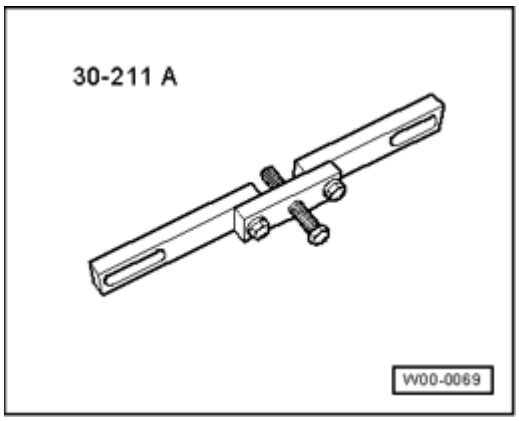

Fig. 80: Bracket 30 - 211 A
Courtesy of VOLKSWAGEN UNITED STATES, INC.

- Bracket 30 - 211 A
- Adapter VAS 6131/10-12 qty. 2

 © 2011 Mitchell Repair Information Company, LLC.

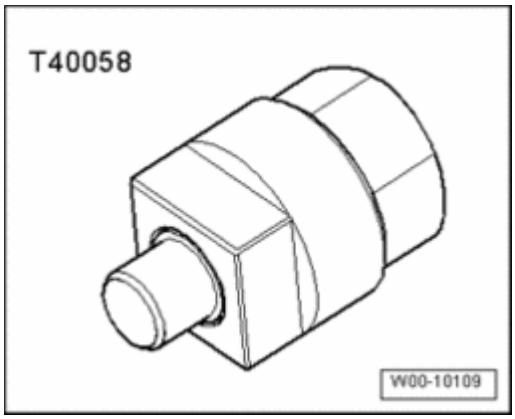

Fig. 81: Adapter T40058
Courtesy of VOLKSWAGEN UNITED STATES, INC.

- Adapter T40058

Work procedure

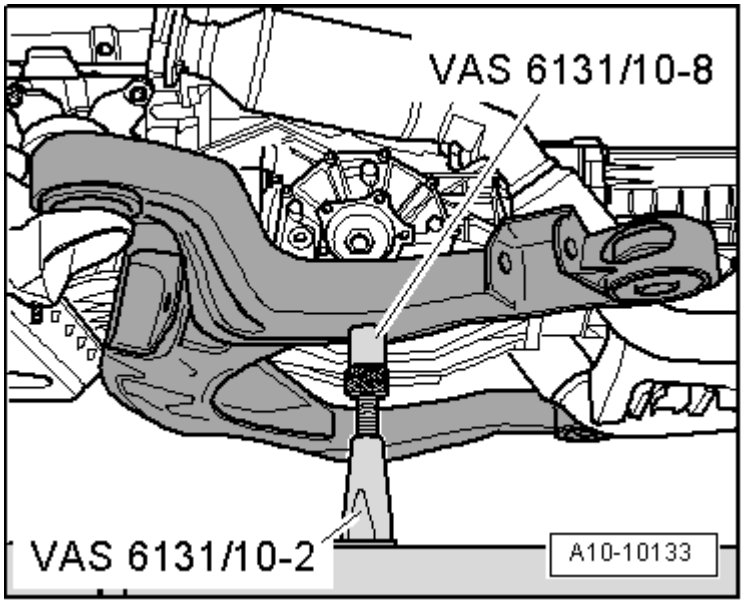

Fig. 82: Positioning Support Elements From VAS 6131/10 At Left/Right On Subframe
Courtesy of VOLKSWAGEN UNITED STATES, INC.

- Engine/transmission assembly removed and placed on Scissor Lift Table VAS 6131.

- Twist spindles of support elements at left and right at subframe completely downward.
- Remove both base plates of subframe support elements from Scissor Lift Table VAS 6131.
- Remove subframe to side.

NOTE:

- **The support points for front of engine and transmission remain unchanged.**

 © 2011 Mitchell Repair Information Company, LLC.

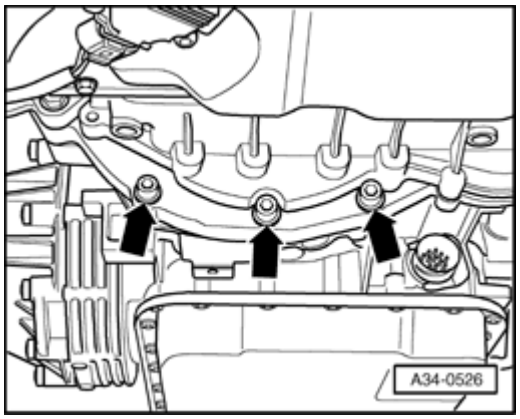

Fig. 83: Removing Lower Engine-Transmission Connecting Bolts
Courtesy of VOLKSWAGEN UNITED STATES, INC.

- Remove lower engine-transmission connecting bolts - **arrows** -.

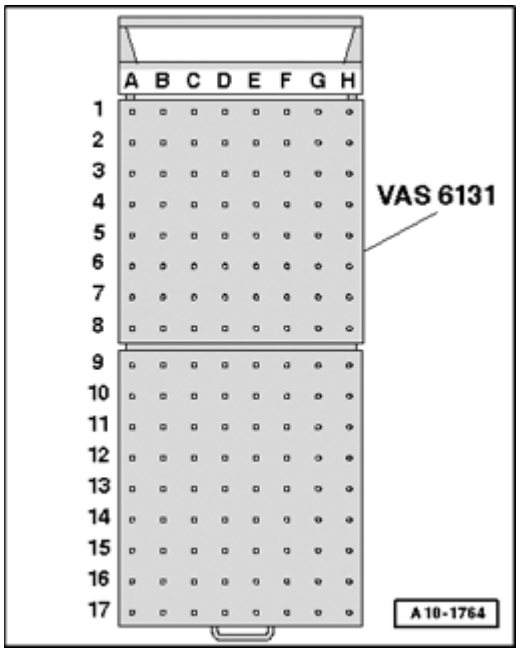

Fig. 84: Identifying Scissor Lift Platform VAS 6131
Courtesy of VOLKSWAGEN UNITED STATES, INC.

- Equip Scissor Lift Table VAS 6131 with Support Set VAS 6131/10 as well as Supplementary Set VAS 6131/11 and VAS 6131/12 as follows:

Platform coordinates	**Parts from Support Set VAS 6131/10 , Supplementary Set VAS 6131/11 and VAS 6131/12**			
C4 1)	/10-1	/10-4	/10-5	/10-12
F4 1)	/10-1	/10-4	/10-5	/10-11
C7	/10-1	/10-4	/10-5	/12-1

 © 2011 Mitchell Repair Information Company, LLC.

E7	/10-1	/10-4	/10-5	/12-1
D10 1)	/10-1	/10-2	/10-5	/12-1
E11 1)	/10-1	/10-3	/10-5	/11-3
F14 1)	/10-1	/10-4	/10-5	/10-13
D16 1)	/10-1	/10-3	/10-5	/10-6

- 1) The support elements remain unchanged.

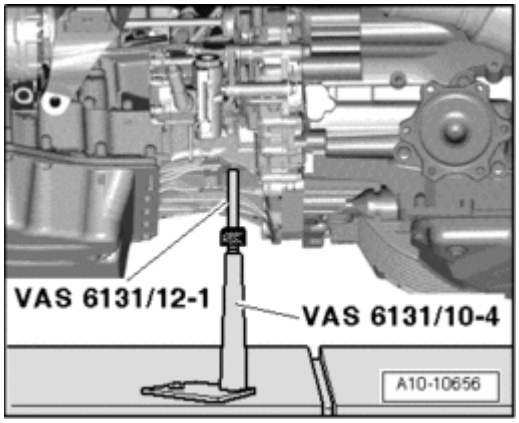

Fig. 85: Removing Left Rear Support Element Base Plate From Scissor Lift Table VAS 6131
Courtesy of VOLKSWAGEN UNITED STATES, INC.

- Position support elements from VAS 6131/10 and VAS 6131/12 at left on engine as shown in illustration.

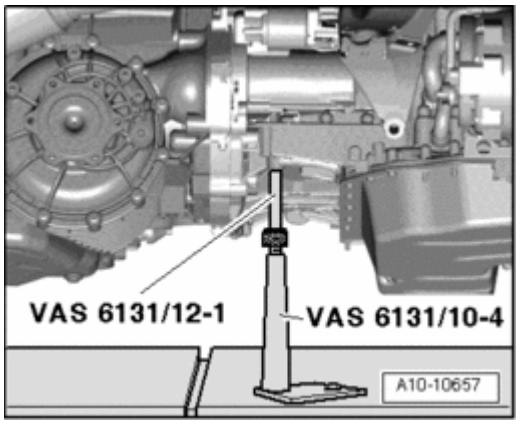

Fig. 86: Removing Right Rear Support Element Base Plate From Scissor Lift Table VAS 6131
Courtesy of VOLKSWAGEN UNITED STATES, INC.

- Position support elements from VAS 6131/10 and VAS 6131/12 at right on engine as shown in illustration.
- Twist spindles of attachments upward far enough until all support pins make contact at support points.
- Tighten base plates for support elements to 20 Nm on scissor lift platform VAS 6131.

 © 2011 Mitchell Repair Information Company, LLC.

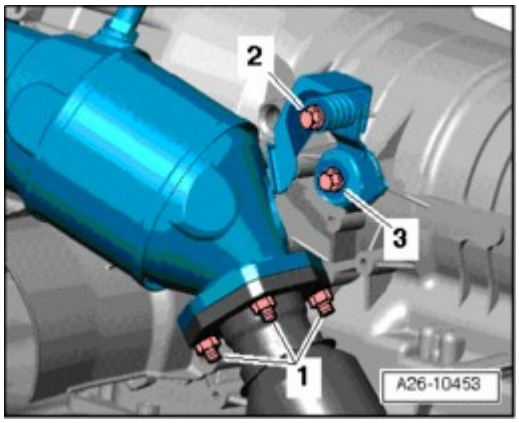

Fig. 87: Removing Left Front Muffler Nuts
Courtesy of VOLKSWAGEN UNITED STATES, INC.

- Remove bolt - **2** - at left catalytic converter bracket.

NOTE:

- **Ignore - 1 and 3 -.**

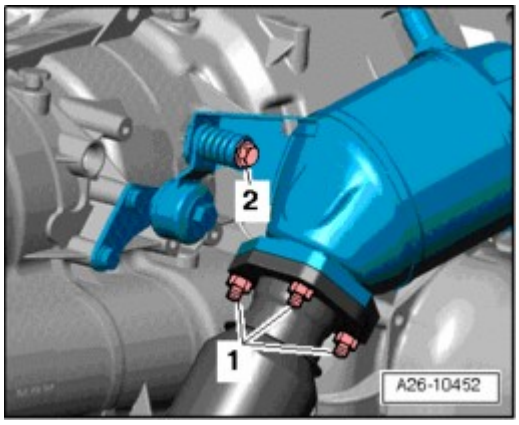

Fig. 88: Removing Right Front Muffler Nuts
Courtesy of VOLKSWAGEN UNITED STATES, INC.

- Remove bolt - **2** - at right catalytic converter bracket.

NOTE:

- **Ignore - 1 -.**

 © 2011 Mitchell Repair Information Company, LLC.

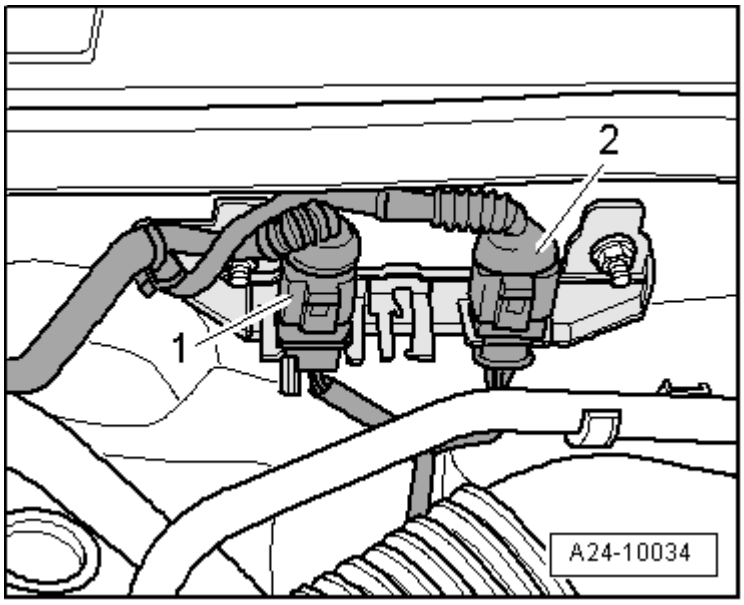

Fig. 89: Disconnecting Electrical Harness Connector For Oxygen Sensor (O2S) Behind Three Way Catalytic Converter (TWC) G130
Courtesy of VOLKSWAGEN UNITED STATES, INC.

- Remove electrical harness connectors from bracket and disconnect it:

1. For Heated Oxygen Sensor (HO2S) G39
2. For Oxygen Sensor (O2S) Behind Three Way Catalytic Converter (TWC) G130

- Free up electrical wires to oxygen sensors.

NOTE:

- **The illustration shows electrical connectors in installation positions.**

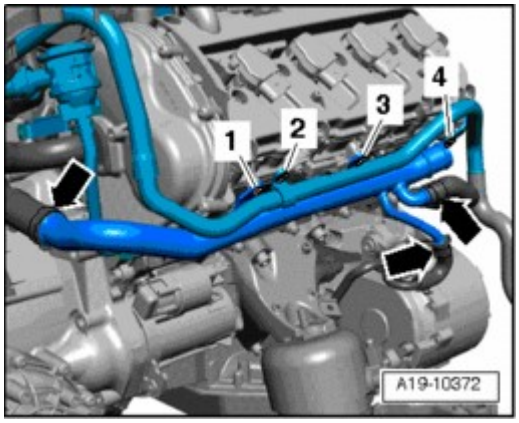

Fig. 90: Removing Secondary Air Injection Air Guide Pipe & Right Coolant Pipe Bolts
Courtesy of VOLKSWAGEN UNITED STATES, INC.

- Remove bolts - **2 and 4** - and place secondary air injection air guide pipe upward.
- Remove bolts - **1 and 3** - and remove right coolant pipe from coolant hoses - **arrows** -.

 © 2011 Mitchell Repair Information Company, LLC.

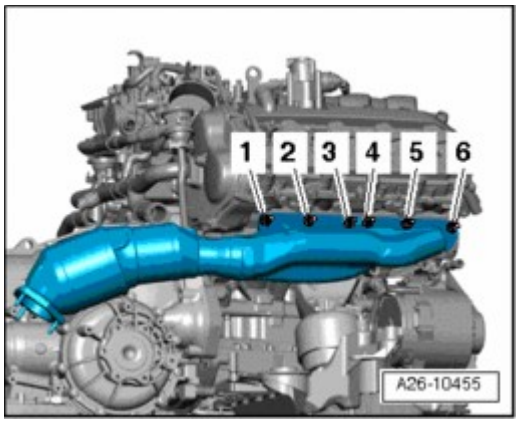

Fig. 91: Removing Nuts And Right Exhaust Manifold With Catalytic Converter
Courtesy of VOLKSWAGEN UNITED STATES, INC.

- Remove nuts - **6 through 1** - and remove right exhaust manifold with catalytic converter.

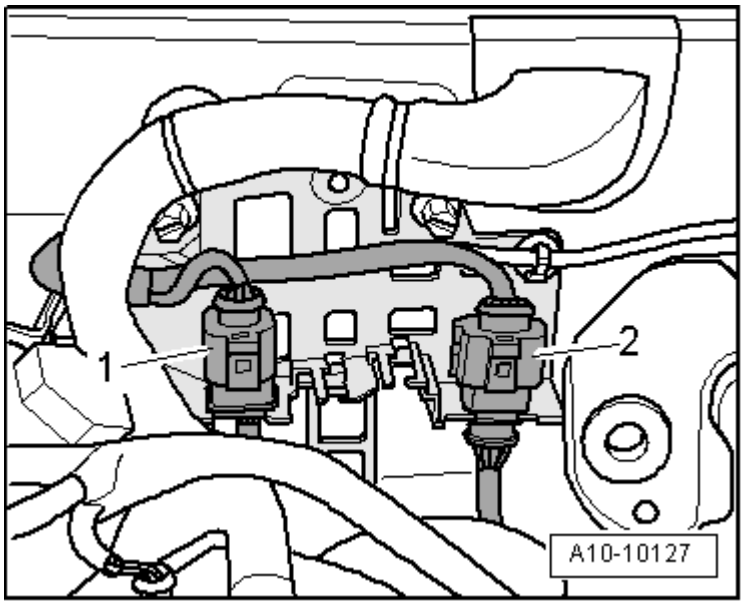

Fig. 92: Disconnecting Electrical Harness Connector For Oxygen Sensor (O2S) 2 Behind Three Way Catalytic Converter (TWC) G131
Courtesy of VOLKSWAGEN UNITED STATES, INC.

- Remove electrical harness connectors from bracket and disconnect it:

1. For Heated Oxygen Sensor (HO2S) 2 G108
2. For Oxygen Sensor (O2S) 2 Behind Three Way Catalytic Converter (TWC) G131

- Free up electrical wires to oxygen sensors.

NOTE:

- **The illustration shows electrical connectors in installation positions.**

 © 2011 Mitchell Repair Information Company, LLC.

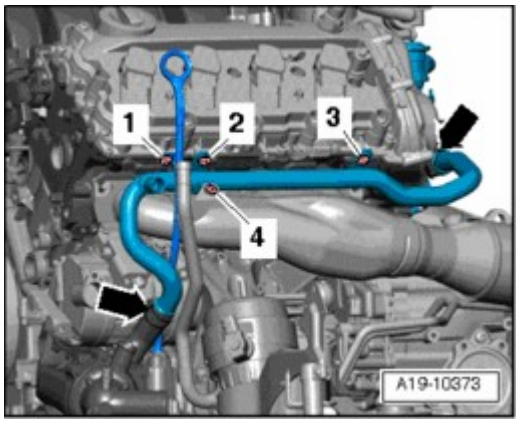

Fig. 93: Removing Oil Dipstick Guide Tube Bolt, Guide Tube, Bolts & Coolant Pipe From Coolant Hoses
Courtesy of VOLKSWAGEN UNITED STATES, INC.

- Remove oil dipstick guide tube bolt - **1** - and remove guide tube upward.
- Remove bolts - **2, 3, 4** - and remove left coolant pipe from coolant hoses - **arrows** -.

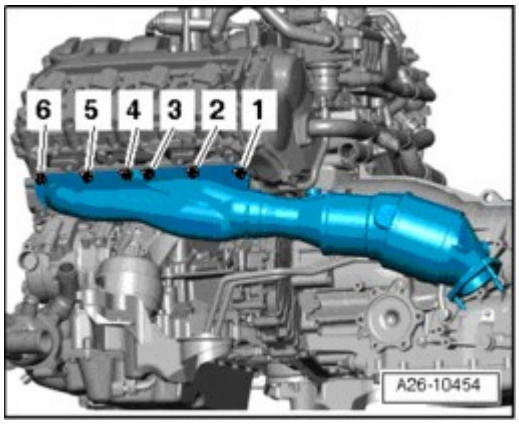

Fig. 94: Removing Nuts And Left Exhaust Manifold With Catalytic Converter
Courtesy of VOLKSWAGEN UNITED STATES, INC.

- Remove nuts - **6 through 1** - and remove left exhaust manifold with catalytic converter.

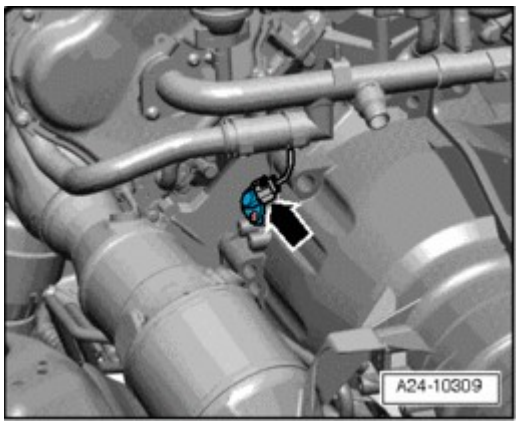

Fig. 95: Disconnecting Electrical Connector On Engine Speed (RPM) Sensor G28

 © 2011 Mitchell Repair Information Company, LLC.

Courtesy of VOLKSWAGEN UNITED STATES, INC.

- Disconnect electrical connector - **arrow** - on Engine Speed (RPM) Sensor G28.

CAUTION: Risk of destroying transmission control module (Mechatronic) with static discharge.

- **Do not touch contacts in transmission connector with hands.**

- To discharge static electricity, touch transmission housing with hand (without wearing gloves).

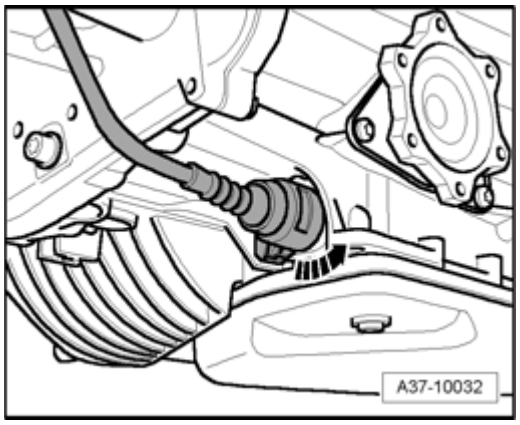

Fig. 96: Disconnecting Electrical Connector On Transmission By Turning Twist Lock Counter-Clockwise
Courtesy of VOLKSWAGEN UNITED STATES, INC.

- Disconnect electrical connector on transmission by turning twist lock counter-clockwise - **arrow** -.
- Free up wiring harness.

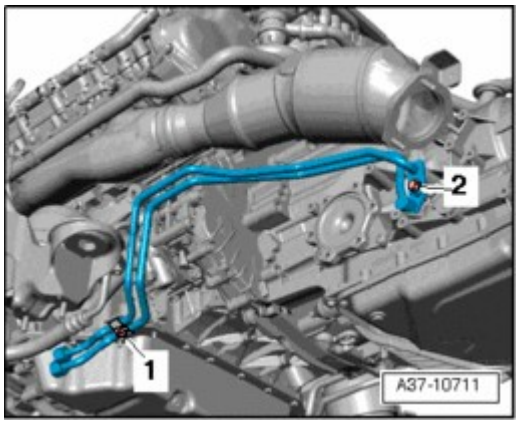

Fig. 97: Removing Nut And Bolt For ATF Lines
Courtesy of VOLKSWAGEN UNITED STATES, INC.

- Remove nut - **1** - and bolt - **2** - for ATF lines.

NOTE:

- **To prevent dirt and moisture from entering, seal off open lines and**

 © 2011 Mitchell Repair Information Company, LLC.

connections with clean plugs or protective caps.

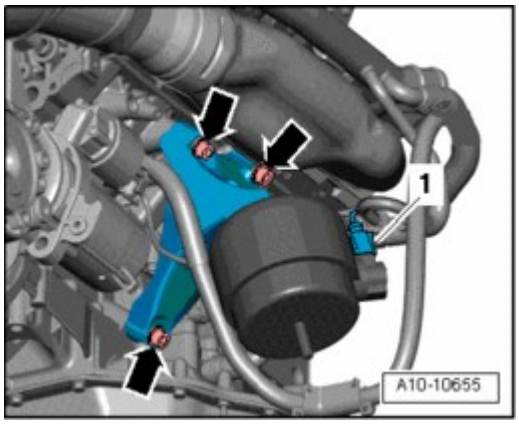

Fig. 98: Identifying Electrical Harness Connector And Bolts
Courtesy of VOLKSWAGEN UNITED STATES, INC.

- Disconnect electrical connector - **1** - and free up electrical wiring on engine mount plate.
- Remove bolts - **arrows** - and remove engine support with engine mount.

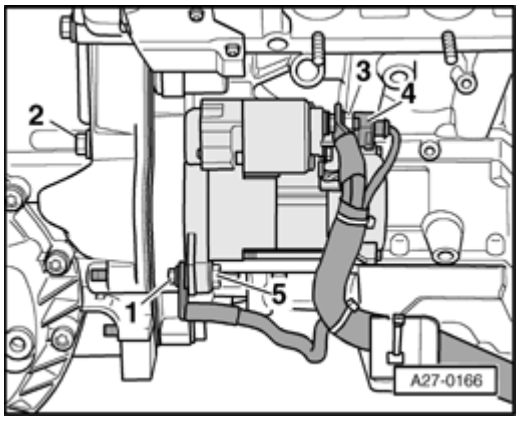

Fig. 99: Identifying Ground (GND) Wire, Starter Electrical Wires, Bolts & Starter
Courtesy of VOLKSWAGEN UNITED STATES, INC.

- Remove Ground (GND) wire - **1** -.
- Disconnect electrical wires - **3 and 4** - from starter.
- Remove bolts - **2 and 5** - and remove starter.

 © 2011 Mitchell Repair Information Company, LLC.

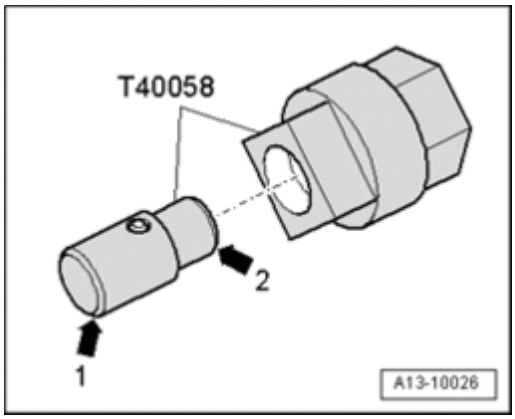

Fig. 100: Inserting Guide Pin Of Adapter T40058 So That Large Diameter Points To Engine
Courtesy of VOLKSWAGEN UNITED STATES, INC.

- Insert guide pin of adapter T40058 so that small diameter - **arrow 2** - points to engine. Large diameter - **arrow 1** - points to socket.

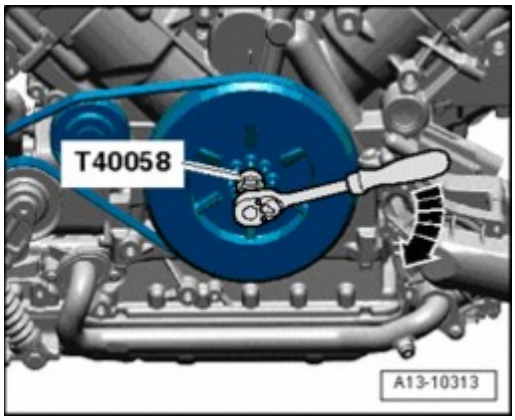

Fig. 101: Using Socket T40058 To Rotate Crankshaft To TDC
Courtesy of VOLKSWAGEN UNITED STATES, INC.

- To loosen torque converter bolts, counter-hold crankshaft using adapter T40058.

NOTE:

- **Disregard - arrow -.**

 © 2011 Mitchell Repair Information Company, LLC.

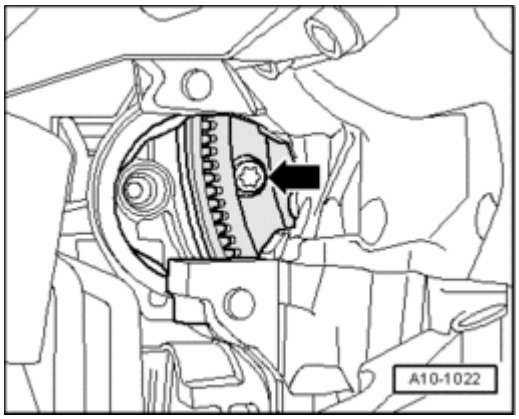

Fig. 102: Torque Converter Bolts
Courtesy of VOLKSWAGEN UNITED STATES, INC.

- Remove 3 torque converter bolts - **arrow** - in opening on removed starter (turn crankshaft $^{1}/_{3}$ rotation in each case).

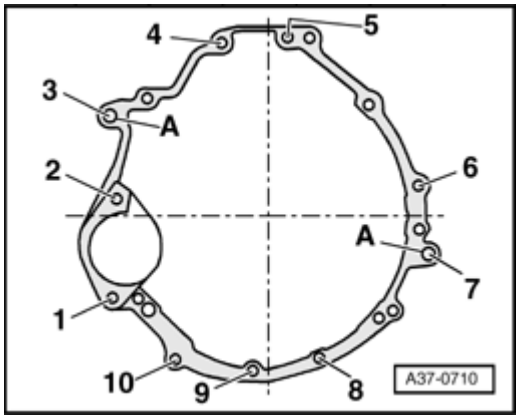

Fig. 103: Identifying Engine/Transmission Threaded Connections
Courtesy of VOLKSWAGEN UNITED STATES, INC.

- Remove engine-transmission connecting bolts - **3 through 7** -.

NOTE:

- **Ignore - A -.**

 © 2011 Mitchell Repair Information Company, LLC.

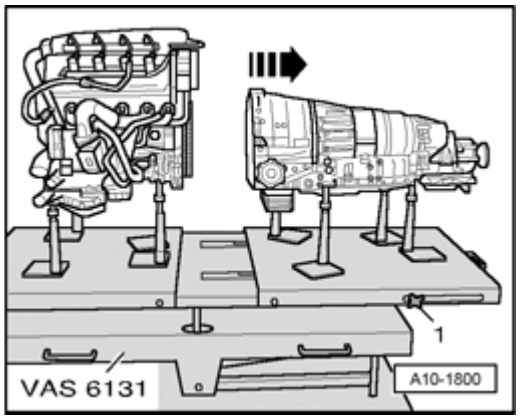

Fig. 104: Loosening Clamping Bolts On Side Of Scissor Lift Table VAS 6131 And Pulling Rear Table Section With Transmission Rearward
Courtesy of VOLKSWAGEN UNITED STATES, INC.

- Loosen side clamping screws - **1** - on scissor lift platform VAS 6131 and pull rear platform top with transmission toward rear - **arrow** - , simultaneously push torque converter off drive plate through opening for removed starter.

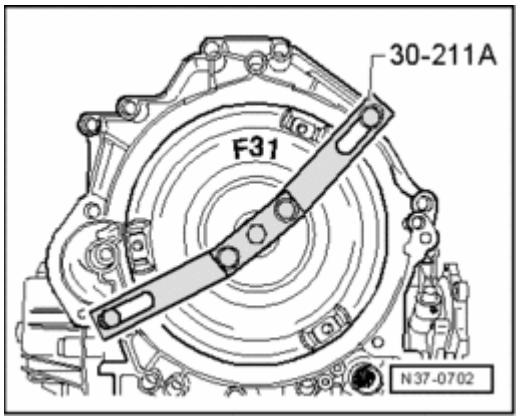

Fig. 105: Securing Torque Converter
Courtesy of VOLKSWAGEN UNITED STATES, INC.

- Secure torque converter in transmission with Bracket 30 - 211 A to prevent it from falling down.

ENGINE, SECURING TO ASSEMBLY STAND

Engine, securing to assembly stand

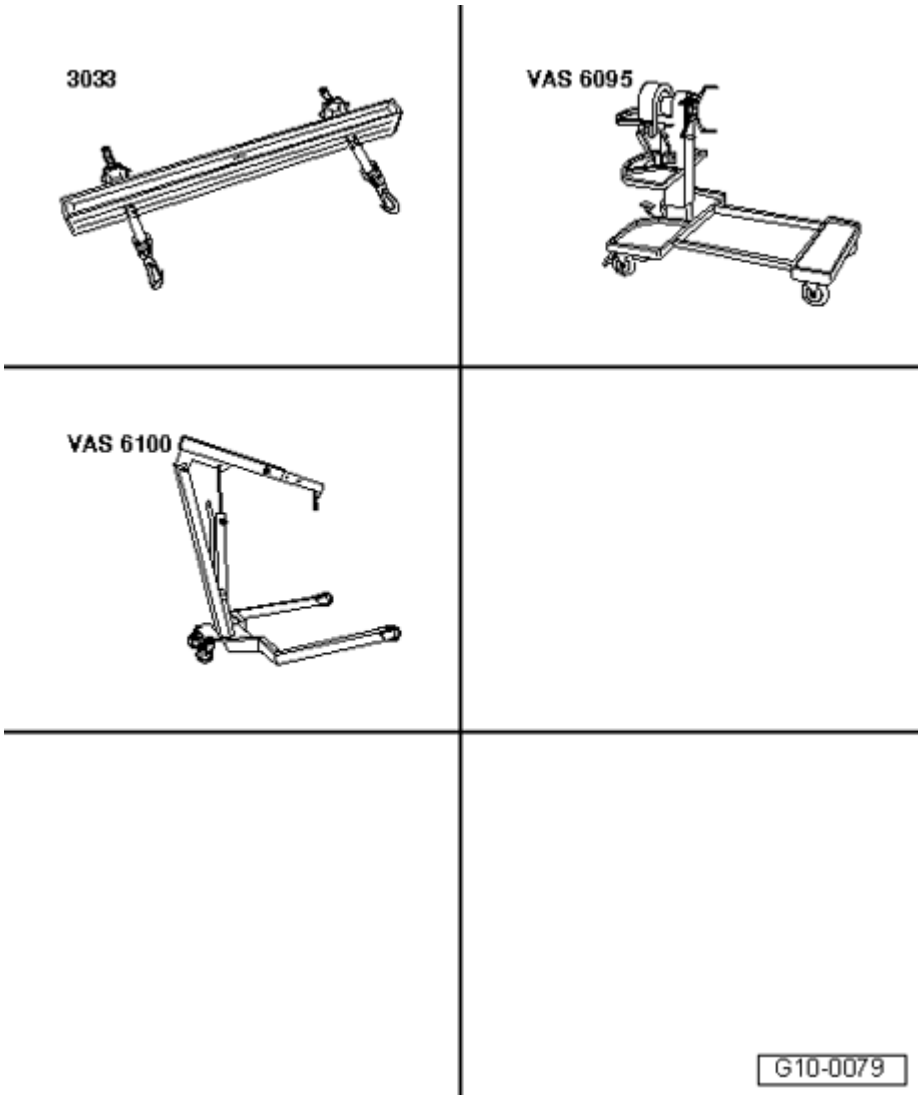

Fig. 106: Identifying Special Tools - Engine, Securing To Assembly Stand
Courtesy of VOLKSWAGEN UNITED STATES, INC.

Special tools, testers and auxiliary items required

- Lifting tackle 3033
- Engine and transmission holder VAS 6095 with bracket VAS 6095/1-6A
- Shop crane VAS 6100

Special tools, testers and auxiliary items required

 © 2011 Mitchell Repair Information Company, LLC.

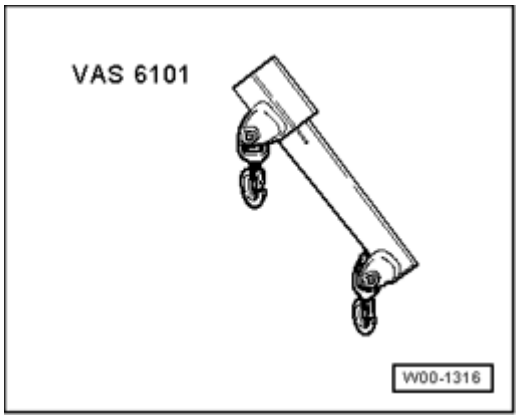

Fig. 107: Lift Arm Extension For Workshop Crane VAS 6101
Courtesy of VOLKSWAGEN UNITED STATES, INC.

- Lift arm extension for workshop crane VAS 6101

Work procedure

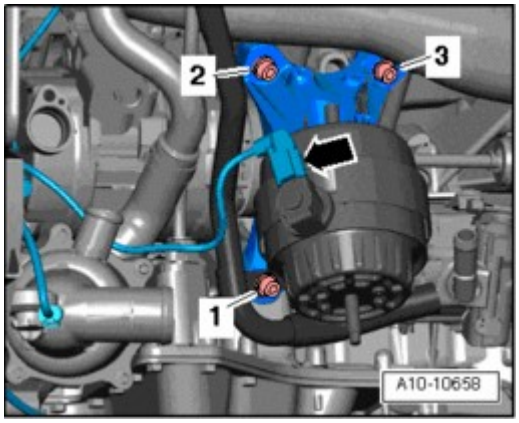

Fig. 108: Disconnecting Electrical Harness Connector At Left Engine Mount & Removing Bolts And Engine Support From Engine Mount
Courtesy of VOLKSWAGEN UNITED STATES, INC.

- Disconnect electrical harness connector - **arrow** - at left engine mount.
- Remove bolts - **1, 2, 3** - and remove engine support from engine mount.

 © 2011 Mitchell Repair Information Company, LLC.

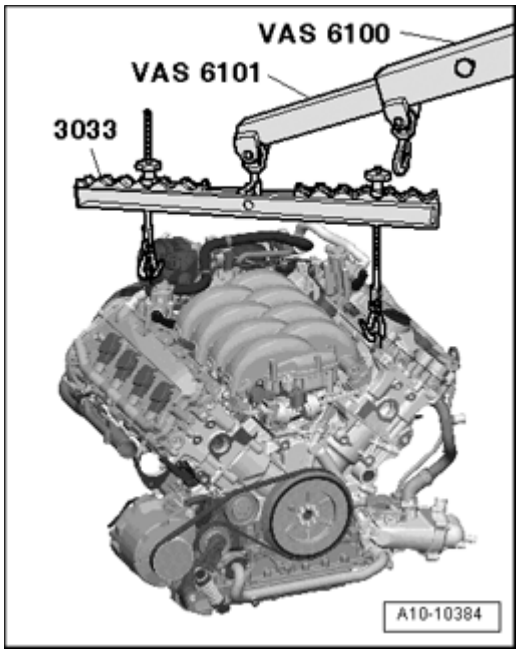

Fig. 109: Engaging Lifting Tackle 3033 On Engine Lifting Eyes And On Shop Crane VAS 6100 With Lift Arm Ext./Workshop Hoist VAS 6101
Courtesy of VOLKSWAGEN UNITED STATES, INC.

- Engage Lifting Tackle 3033 on engine lifting eyes and on Shop Crane VAS 6100 with Lift Arm Ext./Workshop Hoist VAS 6101 as shown in the illustration.
- Lift engine from support elements of Scissor Lift Table VAS 6131.

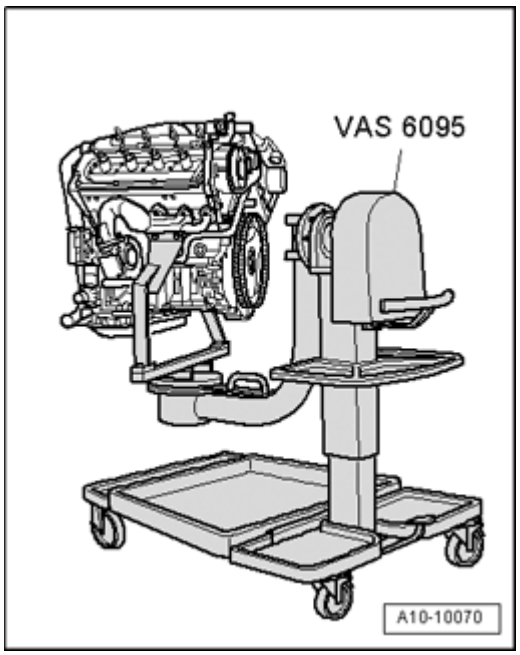

Fig. 110: Securing Engine Using Bracket VAS 6095/1-5 To 40 Nm Engine And Transmission Holder VAS 6095
Courtesy of VOLKSWAGEN UNITED STATES, INC.

 © 2011 Mitchell Repair Information Company, LLC.

- Secure engine using bracket VAS 6095/1-6A on Engine and Transmission Holder VAS 6095 as shown in illustration.

ENGINE, INSTALLING

Engine, installing

Torque specifications

NOTE:

- **Torque specifications only apply to lightly greased, oiled, phosphated or blackened nuts and bolts.**
- **Additional lubricants, such as engine or transmission oil are permissible, although lubricants containing graphite are not.**
- **Do not use any degreased parts.**
- **Tolerance for torque specifications ± 15%.**

Tightening torques --> **Assembly mount, overview** , --> **Crankshaft, assembly overview**.

Component			Nm
Bolts and nuts		M6	9
	M8 20		
	M10 40		
		M12	65
Exceptions:			
Drive plate to torque converter			85 1)
Heat shield for drive axle to transmission			23
High-pressure line			25

- 1) Replace bolts .

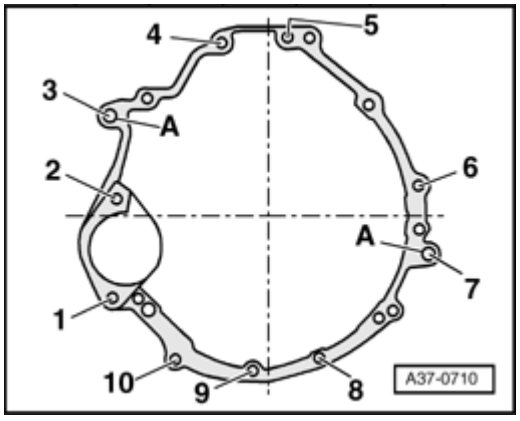

Fig. 111: Identifying Engine/Transmission Threaded Connections
Courtesy of VOLKSWAGEN UNITED STATES, INC.

 © 2011 Mitchell Repair Information Company, LLC.

Securing engine to transmission

Pos.	Bolt	Nm
1	M10x80 1)	65
2	M12x90	65
3	M12x105	65
4, 5	M12x100	65
6	M12x125	65
7	M12x170	65
8, 9, 10	M10x80	45
A	Alignment sleeves for centering	

- 1) bolt class 10.9.

Work procedure

Installation is in reverse order of removal, note the following:

NOTE:

- **Replace bolts which have been tightened to torque.**
- **Replace self-locking nuts and bolts as well as sealing rings, seals and O-rings.**
- **Only replace torque converter bolts with original bolts .**
- **Secure all hose connections using hose clamps appropriate for the model type .**
- **During installation, all cable ties must be re-installed at the same location.**

- Check whether alignment sleeves for centering engine and transmission in cylinder block are present, insert missing alignment sleeves.

CAUTION: Risk of destroying ATF pump coupling plate by inserting torque converter incorrectly.

- **Check torque converter installation dimension.**

 © 2011 Mitchell Repair Information Company, LLC.

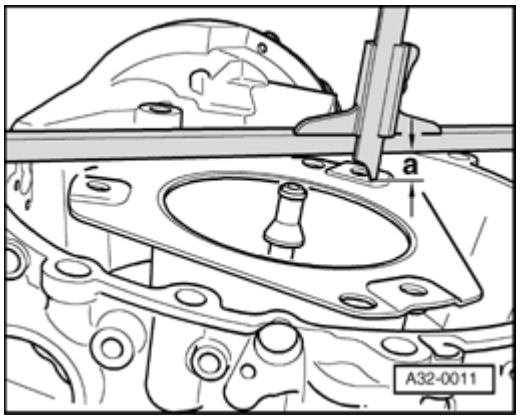

Fig. 112: Checking Installation Dimension For Torque Converter
Courtesy of VOLKSWAGEN UNITED STATES, INC.

When torque converter is installed correctly, distance - **a** - between contact surface of threaded holes at torque converter and contact surface of bell housing on Automatic Transmission 09E is at least 19 mm.

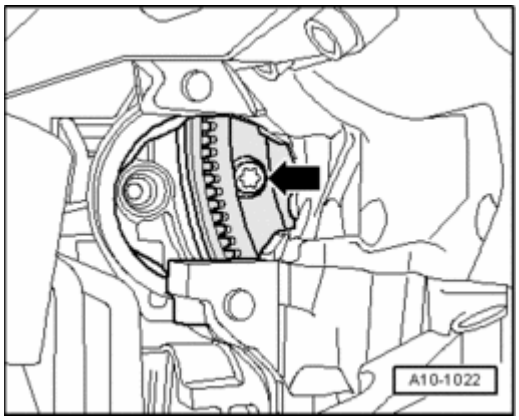

Fig. 113: Torque Converter Bolts
Courtesy of VOLKSWAGEN UNITED STATES, INC.

- Before guiding engine and transmission together, rotate torque converter and drive plate so that holes and threaded holes are same height as opening on removed starter - **arrow** -.

CAUTION: Risk of destroying automatic transmission.

- **Keep checking whether the torque converter behind the drive plate can be turned before and during tightening of the bolts at engine/transmission connection. If the torque converter cannot be turned, it must be assumed that it is inserted incorrectly.**
- **Only secure torque converter to drive plate with new original bolts.**

- Install ATF lines --> **37 - AUTOMATIC TRANSMISSION - CONTROLS, HOUSING** .

 © 2011 Mitchell Repair Information Company, LLC.

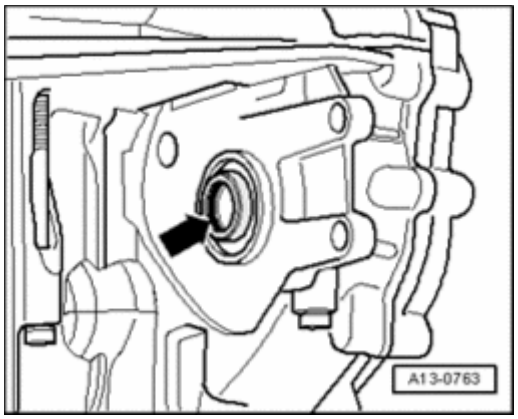

Fig. 114: Checking Whether O-Ring Is Inserted In Power Steering Pump Input Shaft
Courtesy of VOLKSWAGEN UNITED STATES, INC.

- Before installing an exchanged engine, check whether O-ring - **arrow** - is inserted in power steering pump input shaft.
- Install starter --> **27 - STARTER, GENERATOR, CRUISE CONTROL** .
- Install right engine support --> **Right engine mount, removing and installing**.
- Install exhaust manifold: Left --> **Left exhaust manifold with catalytic converter, removing and installing** , right --> **Right exhaust manifold with catalytic converter, removing and installing**.
- Install left coolant pipe --> **Left coolant pipe, removing and installing**.
- Place oil dipstick guide tube in hole on upper part of oil pan.
- Install right coolant pipe --> **Right coolant pipe, removing and installing**.
- Install secondary air injection air guide pipe --> **Secondary air injection (AIR) system, assembly overview**.
- Always clean threaded driveshaft bores in transmission flanged shaft of locking fluid residue using a tap before installation.

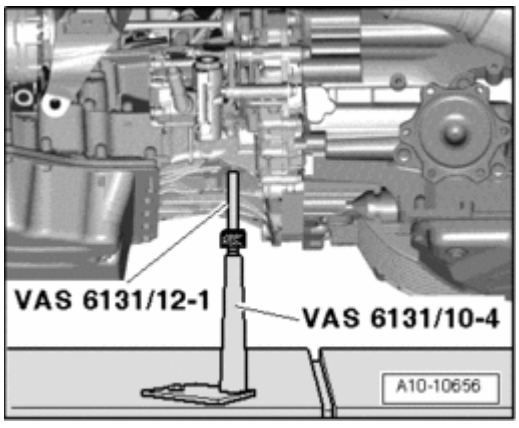

Fig. 115: Removing Left Rear Support Element Base Plate From Scissor Lift Table VAS 6131
Courtesy of VOLKSWAGEN UNITED STATES, INC.

- Turn spindle of left rear support element on engine downward.

 © 2011 Mitchell Repair Information Company, LLC.

- Remove left rear support element base plate from Scissor Lift Table VAS 6131.

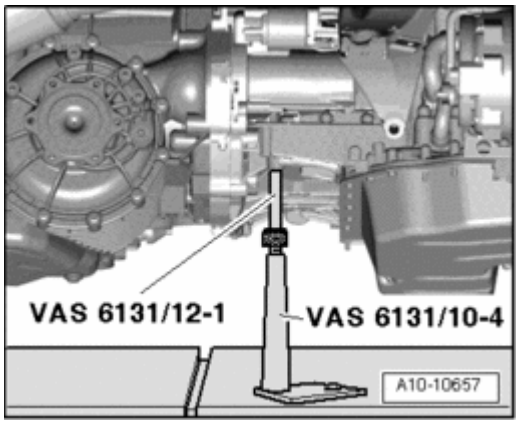

Fig. 116: Removing Right Rear Support Element Base Plate From Scissor Lift Table VAS 6131
Courtesy of VOLKSWAGEN UNITED STATES, INC.

- Turn spindle of right rear support element on engine downward.
- Remove right rear support element base plate from Scissor Lift Table VAS 6131.

NOTE:

- **The support points for front of engine and transmission remain unchanged.**

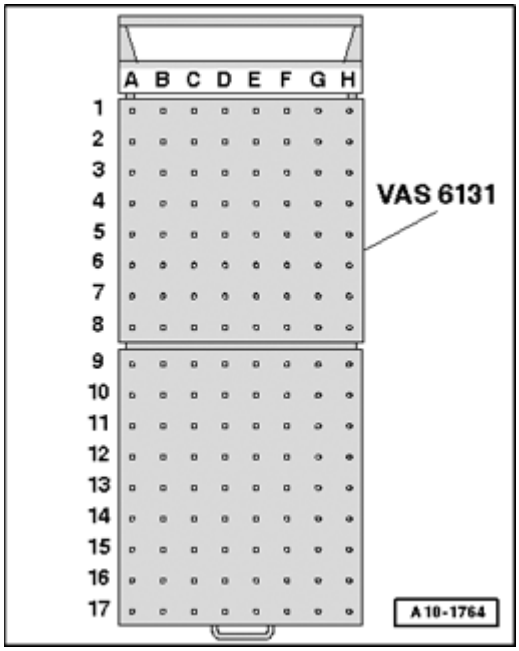

Fig. 117: Identifying Scissor Lift Platform VAS 6131
Courtesy of VOLKSWAGEN UNITED STATES, INC.

- Equip scissor lift platform VAS 6131 with support set for Audi VAS 6131/10 as follows:

 © 2011 Mitchell Repair Information Company, LLC.

Platform coordinates	Parts from Support Set VAS 6131/10 , Supplementary Set VAS 6131/11 and VAS 6131/12			
C4 1)	/10-1	/10-4	/10-5	/10-12
F4 1)	/10-1	/10-4	/10-5	/10-11
D10 1)	/10-1	/10-2	/10-5	/12-1
B11	/10-1	/10-2	/10-5	/10-8 2)
E11 1)	/10-1	/10-3	/10-5	/11-3
G11	/10-1	/10-2	/10-5	/10-8 2)
F14 1)	/10-1	/10-4	/10-5	/10-13
D16 1)	/10-1	/10-3	/10-5	/10-6

- 1) The support elements remain unchanged.
- 2) Only install support elements after installing subframe.

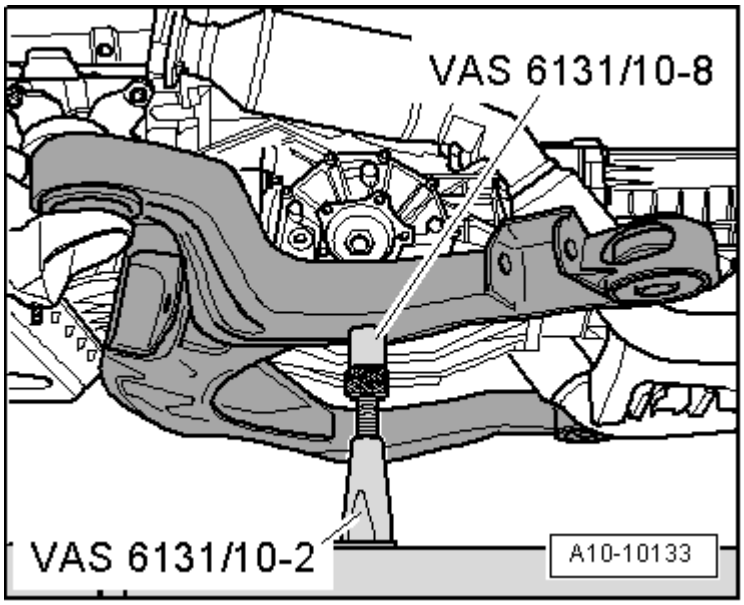

Fig. 118: Positioning Support Elements From VAS 6131/10 At Left/Right On Subframe
Courtesy of VOLKSWAGEN UNITED STATES, INC.

- Position subframe on both attachments VAS 6131/10-8.
- Twist spindles of support elements upward on both sides.
- Tighten base plates for support elements to 20 Nm on scissor lift platform VAS 6131.
- Using Scissor Lift Platform VAS 6131 , slowly guide engine/transmission unit with subframe into body from below.

 © 2011 Mitchell Repair Information Company, LLC.

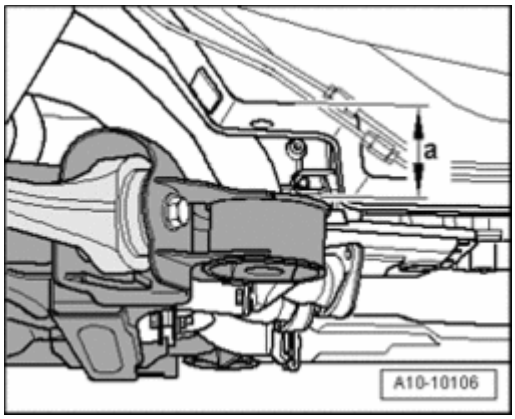

Fig. 119: Lifting Engine/Transmission Subassembly Using Scissor Lift Platform VAS 6131 Until Dimension Is Reached
Courtesy of VOLKSWAGEN UNITED STATES, INC.

- Lift engine/transmission subassembly using scissor lift platform VAS 6131 until dimension - **a** - is reached.

- Dimension - **a** - = at least 100 mm.

- Install selector lever cable and check adjustment --> **37 - AUTOMATIC TRANSMISSION - CONTROLS, HOUSING** .
- Bring torque support into installation position.
- Raise engine/transmission assembly with subframe further using Scissor Lift Table VAS 6131.

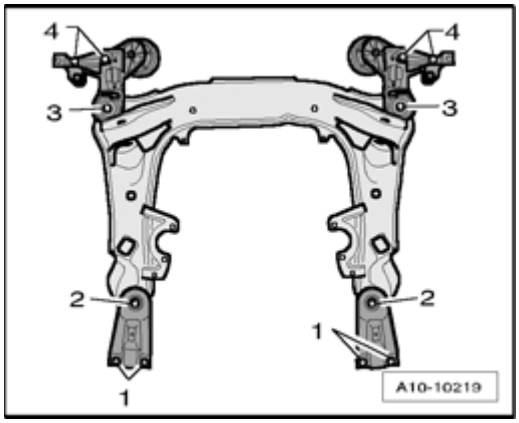

Fig. 120: Removing/Installing Engine Mount Plate Bolts In Diagonal Sequence And In Stages
Courtesy of VOLKSWAGEN UNITED STATES, INC.

- Align subframe and engine mount plates according to markings applied on longmembers during removal.
- Tighten subframe and engine mount plate bolts only to specified torque, do not tighten further (only tighten bolts after axle alignment) --> **40 - FRONT SUSPENSION** .

CAUTION: Risk of accident due to loose connections.

 © 2011 Mitchell Repair Information Company, LLC.

- **If the bolts in the subframe are not tightened to final torque, vehicle must not be driven.**

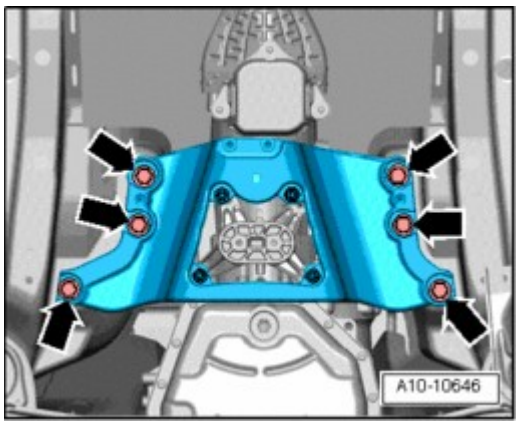

Fig. 121: Removing/Tighting Bolts At Tunnel Cross Member
Courtesy of VOLKSWAGEN UNITED STATES, INC.

- Tighten bolts - **arrows** - on tunnel cross member --> **40 - FRONT SUSPENSION** .

The rest of installation is in reverse order of removal, note the following:

- Install drive axles --> **40 - FRONT SUSPENSION** .
- Install guide control arm, control arm, stabilizer bar, connecting link, suspension strut and subframe crossmember --> **40 - FRONT SUSPENSION**
- On a vehicle with auxiliary heater, install muffler with corrugated exhaust pipe --> **87 - AIR CONDITIONING** .
- Install drive shaft --> **39 FINAL DRIVE, REAR DIFFERENTIAL** .

- Install front muffler: left --> **Left front muffler, removing and installing** , right --> **Right front muffler, removing and installing**.
- Align exhaust system free of tension --> **Exhaust system, installing free of tension**.
- Install refrigerant lines --> **87 - AIR CONDITIONING** .
- Install ATF lines --> **37 - AUTOMATIC TRANSMISSION - CONTROLS, HOUSING** .

- Install power steering pump hydraulic hose --> **48 - STEERING** .
- Install torque support --> **Assembly mount, overview**.
- Install air filter housing --> **24 - MULTIPORT FUEL INJECTION (MFI)** .
- Electrical connections and routing --> Electrical Wiring Diagrams, Troubleshooting and Component Locations , tightening torques --> **97 - WIRES** .

- Observe safety precautions after connecting battery --> **27 - STARTER, GENERATOR, CRUISE CONTROL** .

 © 2011 Mitchell Repair Information Company, LLC.

CAUTION: Risk of destroying control modules with excess voltage.

- **Do not use a battery charger for starting assistance!**

- Install dome brace --> **40 - FRONT SUSPENSION** .
- Install wiper arms and adjust --> **92 - WINDSHIELD WIPER AND WASHER SYSTEM** .
- Add engine oil and check oil level --> **Oil level, checking**.
- Before starting engine for the first time, fill power steering vacuum reservoir with hydraulic oil --> **48 - STEERING** .

NOTE:

- **Power-steering pump must not run dry.**

- Fill with coolant **Filling**.

NOTE:

- **Only reuse drained coolant if cylinder head or engine block was not replaced.**
- **Dirty coolant must not be re-used.**

- Fill refrigerant circuit Refrigerant R134a - Servicing.
- Align subframe and both engine mount plates --> **40 - FRONT SUSPENSION** .
- Perform axle alignment --> **44 - WHEELS, TIRES, WHEEL ALIGNMENT** .

CAUTION: Risk of accident due to loose connections.

- **Tighten subframe bolts to final torque after axle alignment.**

- Check ATF level --> **37 - AUTOMATIC TRANSMISSION - CONTROLS, HOUSING** .

ASSEMBLY MOUNT

Assembly mount, overview

 © 2011 Mitchell Repair Information Company, LLC.

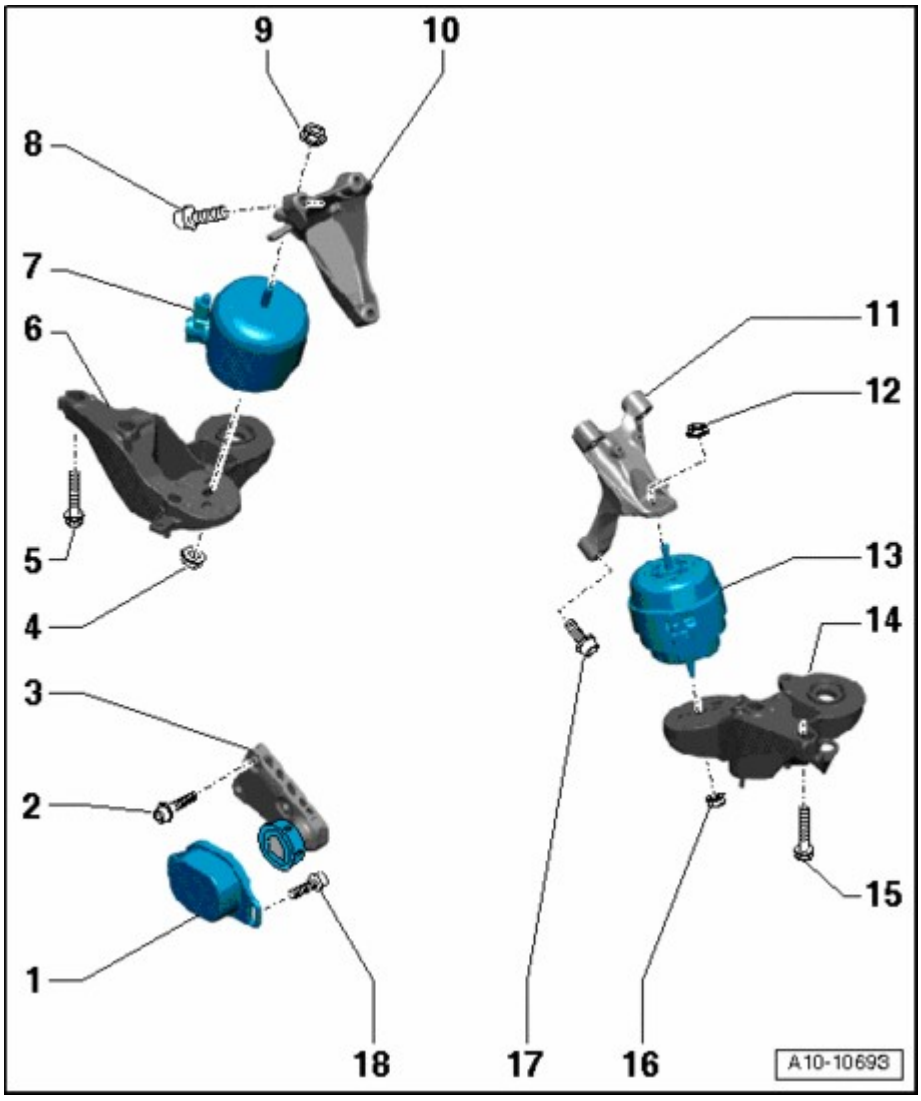

Fig. 122: Assembly Mount, Overview
Courtesy of VOLKSWAGEN UNITED STATES, INC.

1 - Torque support stop

- Must contact torque support buffer at top and bottom without play

2 - Bolt

- 40 Nm

3 - Torque bracket

- Removing and installing --> **Torque support, removing and installing**

4 - Nut

 © 2011 Mitchell Repair Information Company, LLC.

- 40 Nm

5 - Bolt

- 75 Nm

6 - Right engine mount plate

- Removing and installing --> **Right engine mount, removing and installing**

7 - Engine mount, right

- Removing and installing --> **Right engine mount, removing and installing**

8 - Bolt

- 40 Nm

9 - Nut

- 40 Nm

10 - Right engine support

- Removing and installing --> **Right engine mount, removing and installing**

11 - Left engine support

- Removing and installing --> **Left engine mount, removing and installing**

12 - Nut

- 40 Nm

13 - Engine mount, left

- Removing and installing --> **Left engine mount, removing and installing**

14 - Left engine mount console

- Removing and installing --> **Left engine mount, removing and installing**

15 - Bolt

- 75 Nm

16 - Nut

 © 2011 Mitchell Repair Information Company, LLC.

- 40 Nm

17 - Bolt

- 40 Nm

18 - Bolt

- 40 Nm

Left engine mount, removing and installing

Special tools, testers and auxiliary items required

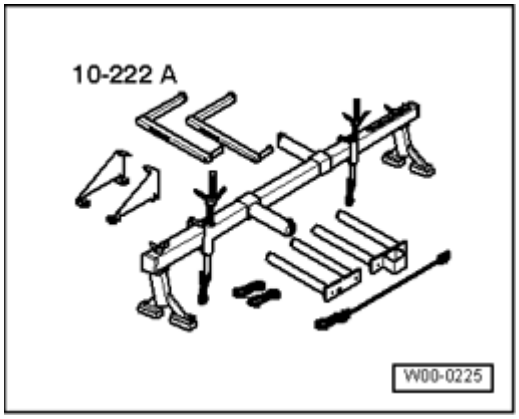

Fig. 123: Identifying Engine Support Bridge 10 - 222 A
Courtesy of VOLKSWAGEN UNITED STATES, INC.

- Engine support bridge 10 - 222 A

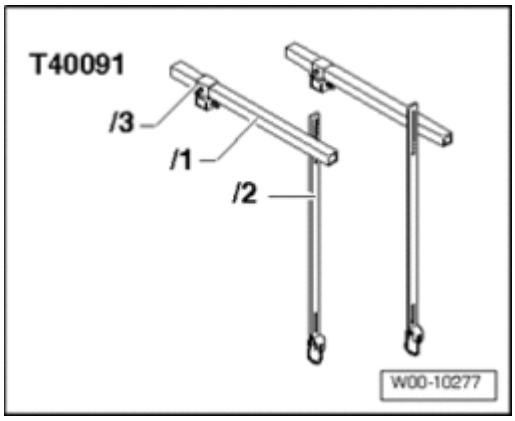

Fig. 124: Engine Support Basic Set T40091
Courtesy of VOLKSWAGEN UNITED STATES, INC.

- Engine Support Basic Set T40091

 © 2011 Mitchell Repair Information Company, LLC.

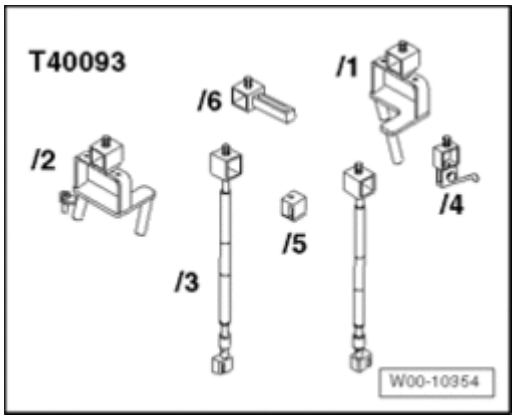

Fig. 125: Engine Support Supplement Set T40093
Courtesy of VOLKSWAGEN UNITED STATES, INC.

- Engine Support Supplement Set T40093

Removing

NOTE:

- **During installation, all cable ties must be re-installed at the same location.**

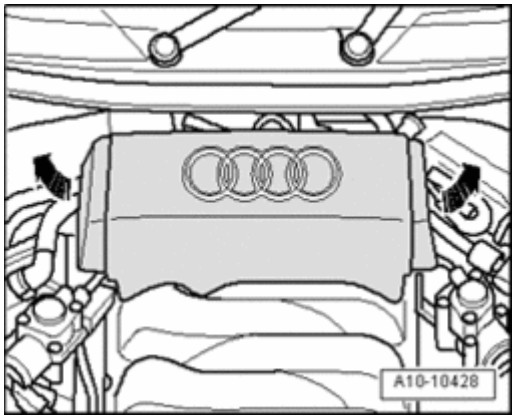

Fig. 126: Removing Rear Engine Cover
Courtesy of VOLKSWAGEN UNITED STATES, INC.

- Pull rear engine cover - **arrows** - off.

 © 2011 Mitchell Repair Information Company, LLC.

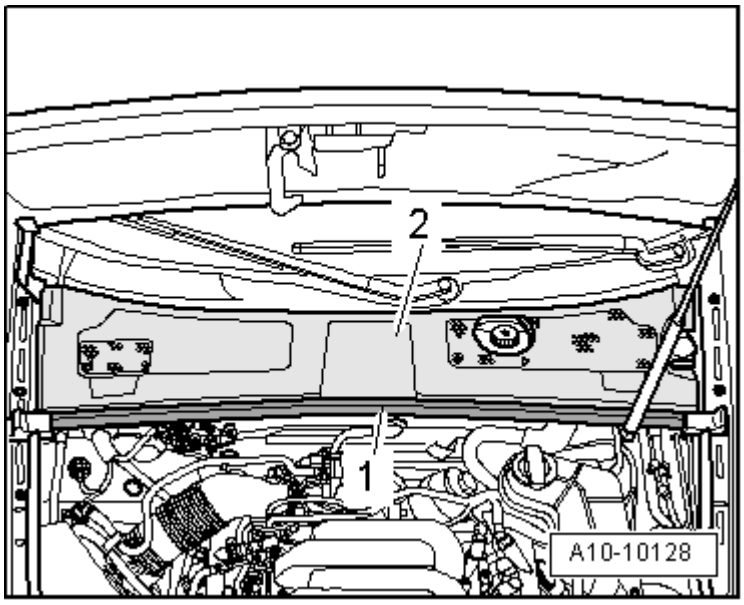

Fig. 127: Removing Rubber Seal And Plenum Chamber Cover
Courtesy of VOLKSWAGEN UNITED STATES, INC.

- Remove rubber seal - **1** - and remove plenum chamber cover - **2** -.

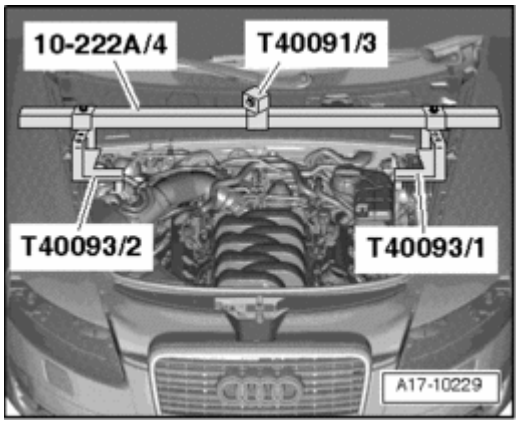

Fig. 128: Securing Adapter 10 - 222 A/4 Using Binder T40091/3 As Well As Supports T40093/1 And T40093/2 At Suspension Strut Domes
Courtesy of VOLKSWAGEN UNITED STATES, INC.

- Secure Adapter 10 - 222 A/4 with connector T40091/3 and supports T40093/1 and T40093/2 to suspension strut towers.

- Support for left and right side of vehicle is marked.

 © 2011 Mitchell Repair Information Company, LLC.

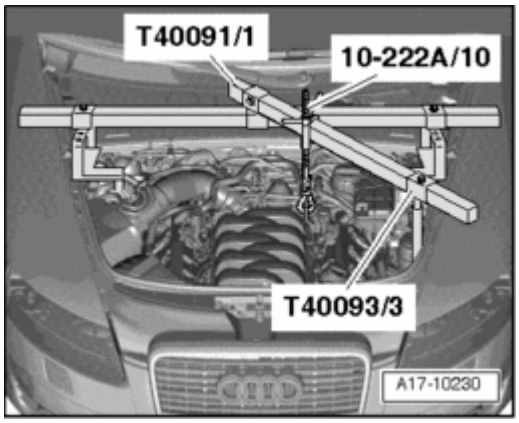

Fig. 129: Installing Additional Engine Support Bridge 10 - 222 A Parts
Courtesy of VOLKSWAGEN UNITED STATES, INC.

- Install additional Engine Support Bridge 10 - 222 A parts as shown in illustration. Position supports T40093/3 on long member notches.
- Engage Hook 10 - 222 A/10 in left engine lifting eye.
- Tension engine with spindle.

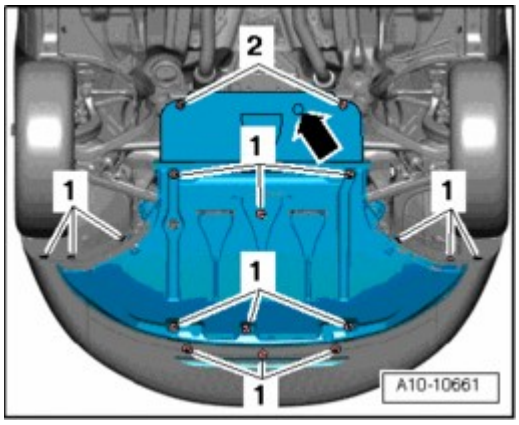

Fig. 130: Identifying Noise Insulation And Mountings
Courtesy of VOLKSWAGEN UNITED STATES, INC.

- Remove sound insulation by loosening securing pieces - **1, 2, arrow** -.

Vehicles with auxiliary heater:

- Remove left front wheel.
- Remove left front wheelhousing liner --> **66 - EXTERIOR EQUIPMENT** .

 © 2011 Mitchell Repair Information Company, LLC.

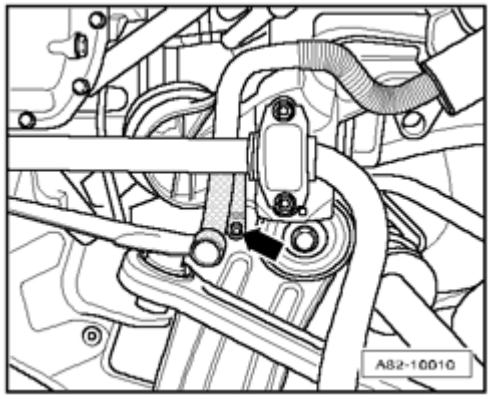

Fig. 131: Removing Bolt For Corrugated Exhaust Pipe
Courtesy of VOLKSWAGEN UNITED STATES, INC.

- Remove bolt - **arrow** - for corrugated exhaust pipe.

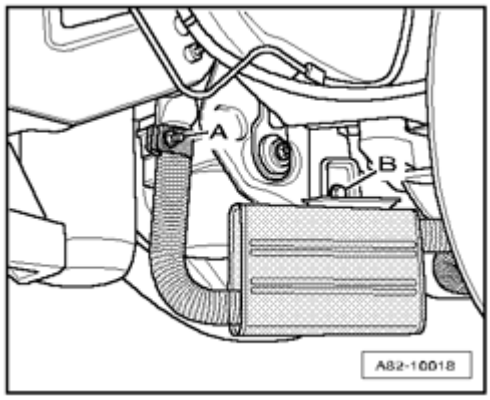

Fig. 132: Loosening Nut On Clamp For Corrugated Exhaust Pipe & Removing Bolt & Muffler With Corrugated Exhaust Pipe
Courtesy of VOLKSWAGEN UNITED STATES, INC.

- Loosen nut - **A** - on clamp for corrugated exhaust pipe.
- Remove bolt - **B** - and remove muffler with corrugated exhaust pipe.

All:

 © 2011 Mitchell Repair Information Company, LLC.

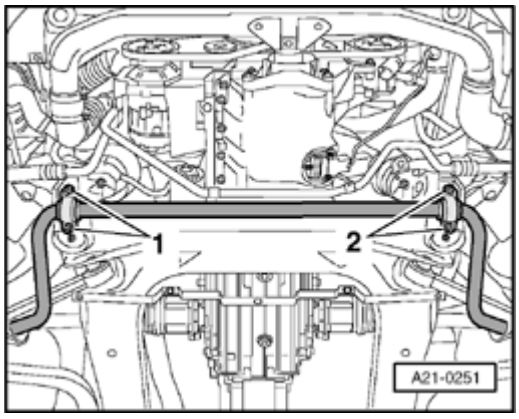

Fig. 133: Removing Bolts For Left And Right Stabilizer Bar Mount
Courtesy of VOLKSWAGEN UNITED STATES, INC.

- Remove bolts - **1 and 2** - for left and right stabilizer bar mount.
- Slightly lower stabilizer bar.

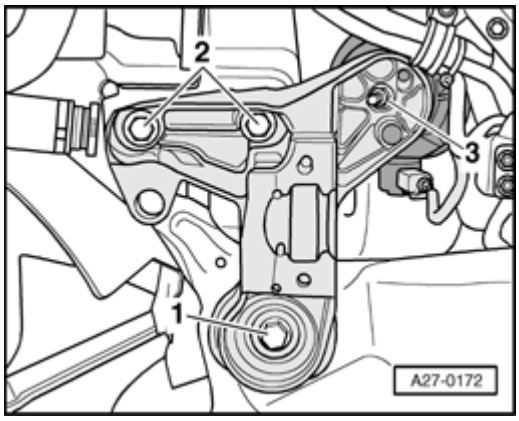

Fig. 134: Identifying Nuts, Bolts, And Right Side Engine Mount Carrier
Courtesy of VOLKSWAGEN UNITED STATES, INC.

- Remove nut - **3** -.
- Remove bolts - **1 and 2** - and remove left engine mount plate.

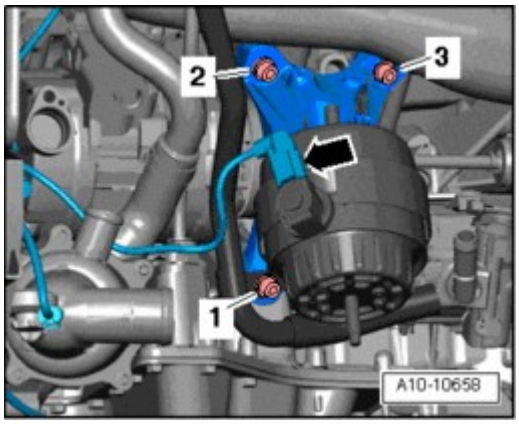

 © 2011 Mitchell Repair Information Company, LLC.

Fig. 135: Disconnecting Electrical Harness Connector At Left Engine Mount & Removing Bolts And Engine Support From Engine Mount
Courtesy of VOLKSWAGEN UNITED STATES, INC.

- Disconnect electrical harness connector - **arrow** - at left engine mount.
- Remove bolts - **1, 2, 3** - and remove engine support from engine mount.

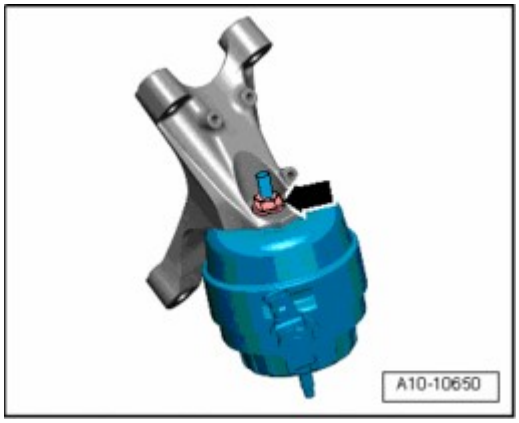

Fig. 136: Removing Nut And Engine Mount From Engine Support
Courtesy of VOLKSWAGEN UNITED STATES, INC.

- Remove nut - **arrow** - and remove engine mount from engine support.

Installing

- Tightening torques --> **Assembly mount, overview**.

Installation is in reverse order of removal, note the following:

NOTE:

- **Replace bolts which have been tightened to torque.**
- **During installation, all cable ties must be re-installed at the same location.**

- Install stabilizer bar --> **40 - FRONT SUSPENSION** .
- On a vehicle with auxiliary heater, install muffler with corrugated exhaust pipe --> **87 - AIR CONDITIONING** .

Right engine mount, removing and installing

Special tools, testers and auxiliary items required

 © 2011 Mitchell Repair Information Company, LLC.

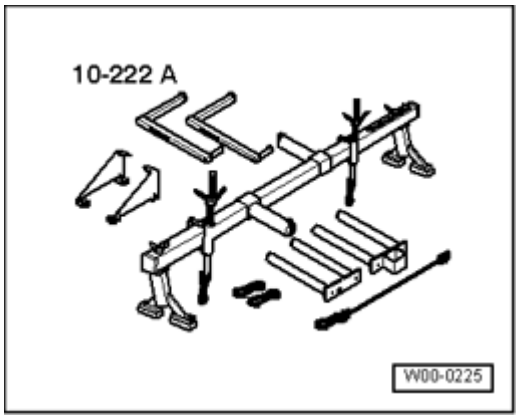

Fig. 137: Identifying Engine Support Bridge 10 - 222 A
Courtesy of VOLKSWAGEN UNITED STATES, INC.

- Engine support bridge 10 - 222 A

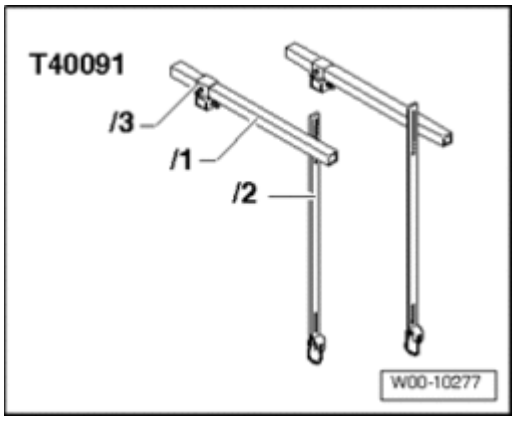

Fig. 138: Engine Support Basic Set T40091
Courtesy of VOLKSWAGEN UNITED STATES, INC.

- Engine Support Basic Set T40091

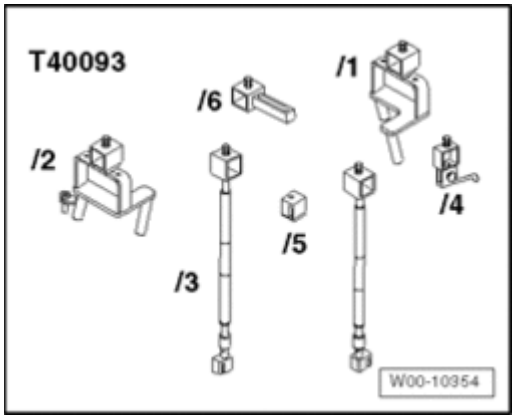

Fig. 139: Engine Support Supplement Set T40093
Courtesy of VOLKSWAGEN UNITED STATES, INC.

 © 2011 Mitchell Repair Information Company, LLC.

- Engine Support Supplement Set T40093

Removing

NOTE:

- **During installation, all cable ties must be re-installed at the same location.**

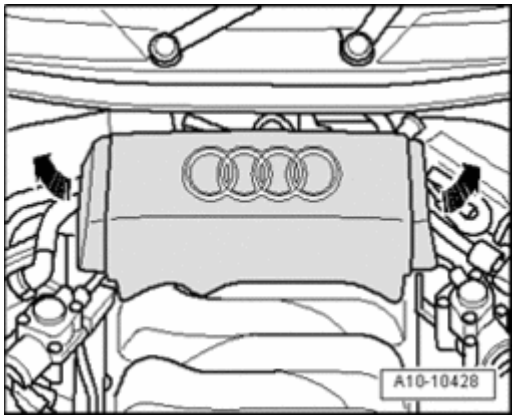

Fig. 140: Removing Rear Engine Cover
Courtesy of VOLKSWAGEN UNITED STATES, INC.

- Pull rear engine cover - **arrows** - off.

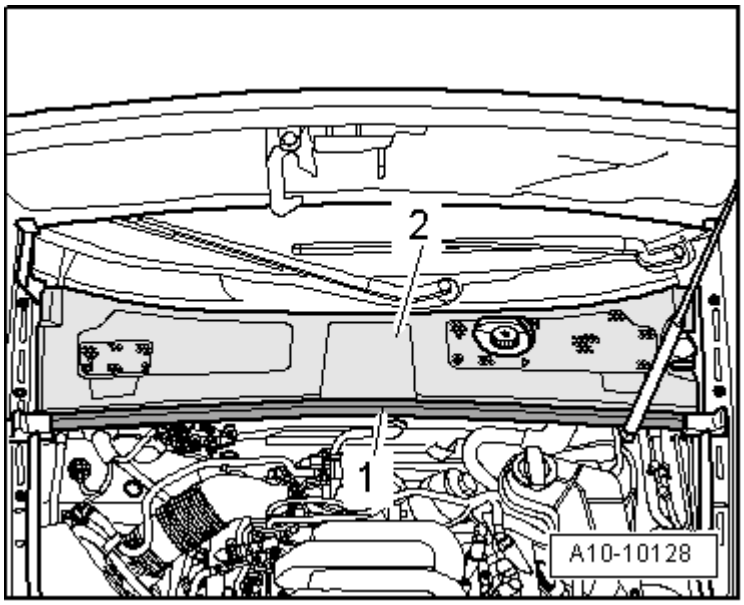

Fig. 141: Removing Rubber Seal And Plenum Chamber Cover
Courtesy of VOLKSWAGEN UNITED STATES, INC.

- Remove rubber seal - **1** - and remove plenum chamber cover - **2** -.

 © 2011 Mitchell Repair Information Company, LLC.

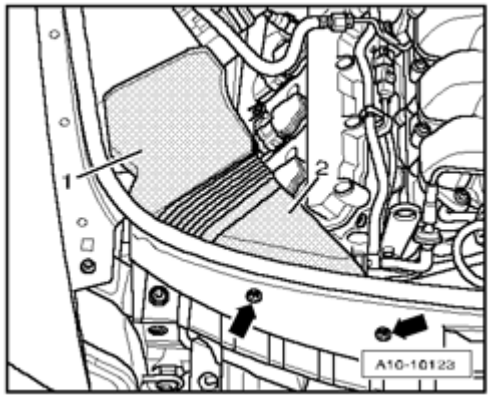

Fig. 142: Removing Bolts & Air Duct
Courtesy of VOLKSWAGEN UNITED STATES, INC.

- Remove bolts - **arrows** -.
- Remove air duct - **1 and 2** -.

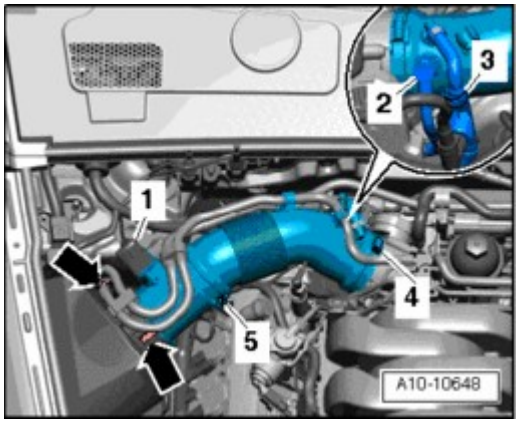

Fig. 143: Identifying Mass Air Flow (MAF) Sensor G70 Electrical Harness Connector, Vacuum Line, Hose Connection, Crankcase Ventilation Hose & Hose Clamps
Courtesy of VOLKSWAGEN UNITED STATES, INC.

- Free up fuel line and line to EVAP canister on air filter housing.
- Disconnect electrical harness connector - **1** - at Mass Air Flow (MAF) Sensor G70.
- Remove air guide pipe from air filter housing by loosening hose clamps - **5** - and opening clips - **arrows** - .

NOTE:

- **Ignore items - 2, 3, 4 -.**

 © 2011 Mitchell Repair Information Company, LLC.

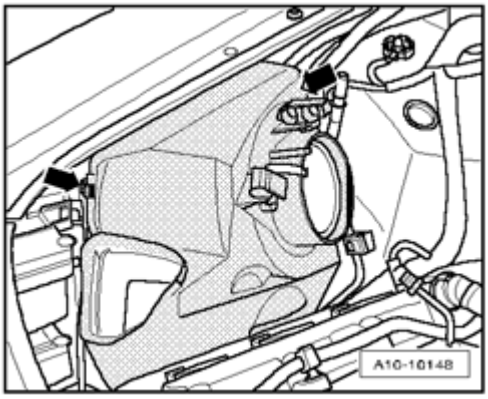

Fig. 144: Opening Clips And Removing Upper Part Of Air Filter Housing
Courtesy of VOLKSWAGEN UNITED STATES, INC.

- Open clips - **arrows** - and remove upper part of air filter housing.

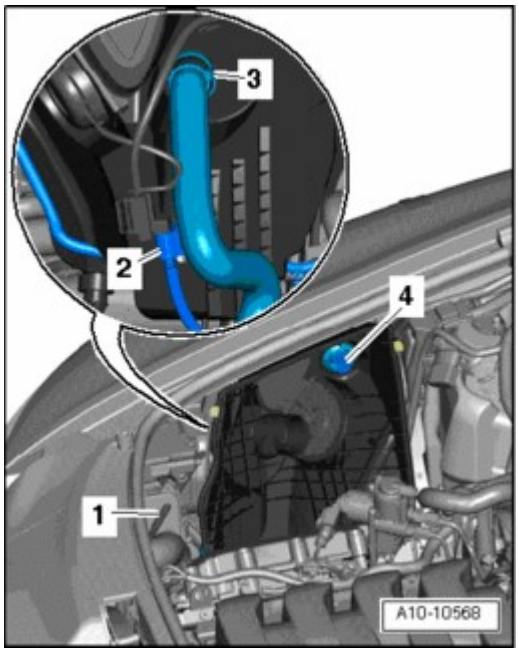

Fig. 145: Identifying Vacuum Line, Spreader Clips, Intake Air Switch-Over Valve N335 Electrical Connection & Air Guide Hose
Courtesy of VOLKSWAGEN UNITED STATES, INC.

- Disconnect vacuum line - **1** -.
- Remove pin from spreader clips - **4** -.
- Remove lower part of air filter housing and, on the backside, separate electrical connection - **2** - at intake air switch-over valve N335.
- Remove secondary air injection air guide hose - **3** - by pressing release buttons.

 © 2011 Mitchell Repair Information Company, LLC.

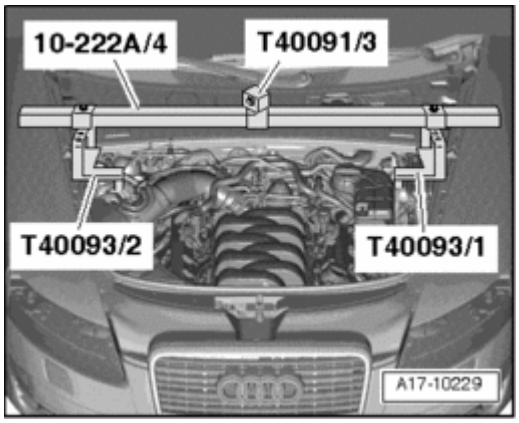

Fig. 146: Securing Adapter 10 - 222 A/4 Using Binder T40091/3 As Well As Supports T40093/1 And T40093/2 At Suspension Strut Domes
Courtesy of VOLKSWAGEN UNITED STATES, INC.

- Secure Adapter 10 - 222 A/4 with connector T40091/3 and supports T40093/1 and T40093/2 to suspension strut towers.

- Support for left and right side of vehicle is marked.

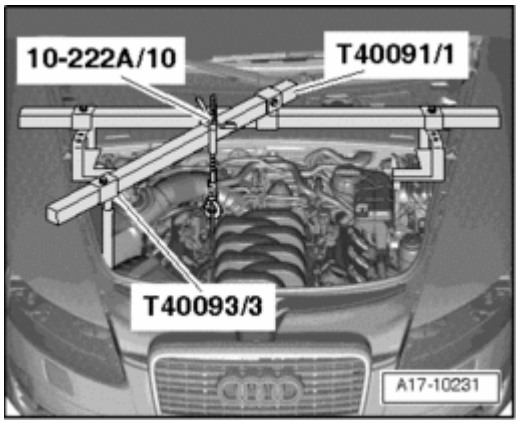

Fig. 147: Installing Additional Engine Support Bridge 10 - 222 A Parts
Courtesy of VOLKSWAGEN UNITED STATES, INC.

- Install additional Engine Support Bridge 10 - 222 A parts as shown in illustration. Position supports T40093/3 on long member notches.
- Engage Hook 10 - 222 A/10 in left engine lifting eye.
- Tension engine with spindle.
- Remove right front wheel.

 © 2011 Mitchell Repair Information Company, LLC.

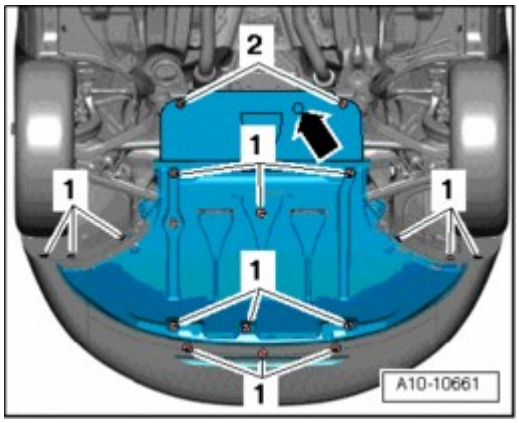

Fig. 148: Identifying Noise Insulation And Mountings
Courtesy of VOLKSWAGEN UNITED STATES, INC.

- Remove sound insulation by loosening securing pieces - **1, 2, arrow** -.

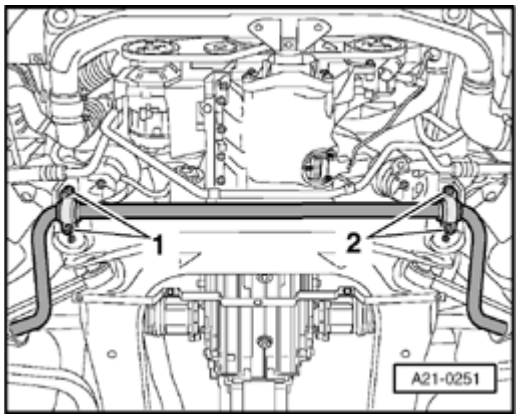

Fig. 149: Removing Bolts For Left And Right Stabilizer Bar Mount
Courtesy of VOLKSWAGEN UNITED STATES, INC.

- Remove bolts - **1 and 2** - for left and right stabilizer bar mount.
- Slightly lower stabilizer bar.

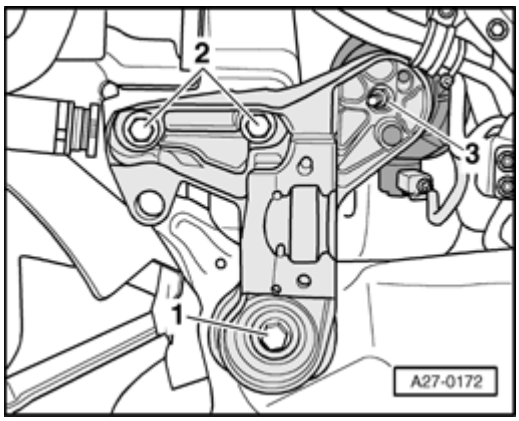

Fig. 150: Identifying Nuts, Bolts, And Right Side Engine Mount Carrier

 © 2011 Mitchell Repair Information Company, LLC.

Courtesy of VOLKSWAGEN UNITED STATES, INC.

- Free up electrical wires on right engine mount plate.
- Remove nut - **3** -.
- Remove bolts - **1 and 2** - and remove right engine mount plate.

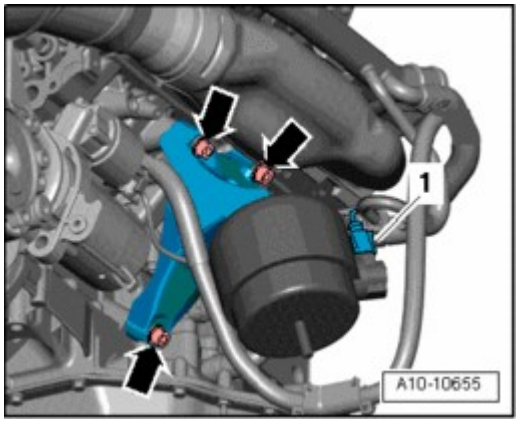

Fig. 151: Identifying Electrical Harness Connector And Bolts
Courtesy of VOLKSWAGEN UNITED STATES, INC.

- Disconnect electrical harness connector - **1** - at right engine mount.
- Remove bolts - **arrows** - and remove engine support with engine mount.

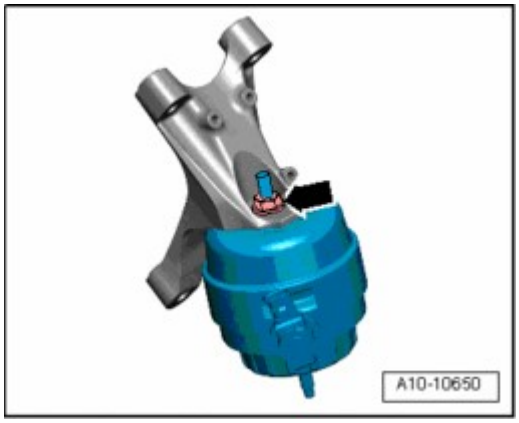

Fig. 152: Removing Nut And Engine Mount From Engine Support
Courtesy of VOLKSWAGEN UNITED STATES, INC.

- Remove nut - **arrow** - and remove engine mount from engine support.

Installing

- Tightening torques --> **Assembly mount, overview**.

Installation is in reverse order of removal, note the following:

 © 2011 Mitchell Repair Information Company, LLC.

NOTE:

- **Replace bolts which have been tightened to torque.**
- **During installation, all cable ties must be re-installed at the same location.**

- Install stabilizer bar --> **40 - FRONT SUSPENSION** .

Torque support, removing and installing

Special tools, testers and auxiliary items required

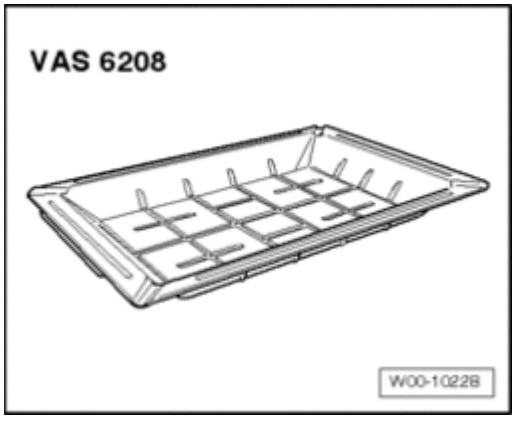

Fig. 153: Drip Tray For VAS 6100, VAS 6208
Courtesy of VOLKSWAGEN UNITED STATES, INC.

- Drip tray for workshop crane VAS 6208

Removing

- Drain coolant --> **Cooling system, draining and filling**.

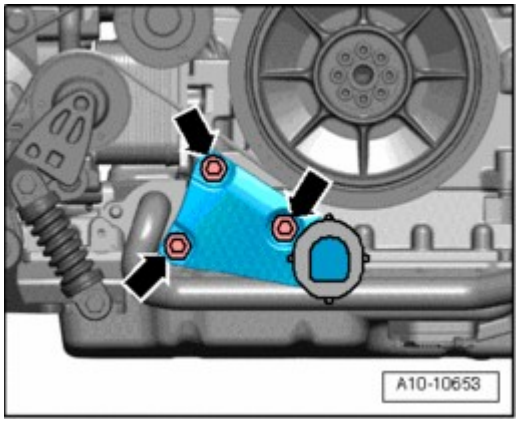

Fig. 154: Removing Bolts For Torque Support
Courtesy of VOLKSWAGEN UNITED STATES, INC.

- Remove bolts - **arrows** - for torque support.

 © 2011 Mitchell Repair Information Company, LLC.

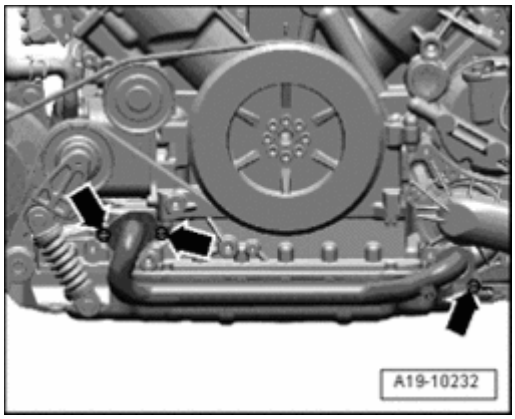

Fig. 155: Removing Bolts, Front Coolant Pipe At Engine And At Coolant Pump
Courtesy of VOLKSWAGEN UNITED STATES, INC.

- Place drip tray for workshop crane VAS 6208 under engine.
- Remove bolts - **arrows** -.
- Remove front coolant pipe from engine and from coolant pump.
- Remove torque support.

Installing

- Tightening torques --> **Coolant pipes, assembly overview**.

Installation is in reverse order of removal, note the following:

NOTE:

- **Replace bolts which have been tightened to torque.**
- **Replace O-rings.**

- Bring torque support into installation position.
- Install front coolant pipe --> **Front coolant line, removing and installing**.

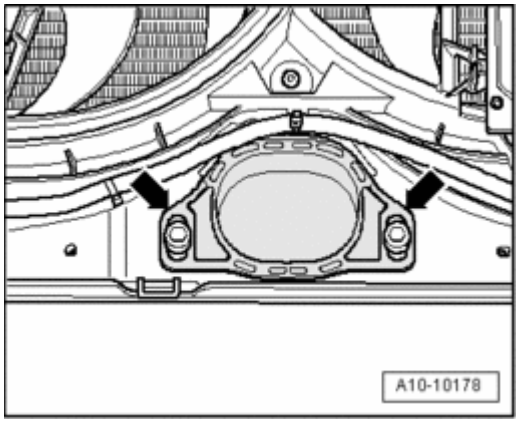

Fig. 156: Placing Torque Support On Rubber Buffer For Torque Support And Tightening Bolts
Courtesy of VOLKSWAGEN UNITED STATES, INC.

 © 2011 Mitchell Repair Information Company, LLC.

- Position torque support stop so that rubber buffer contacts top and bottom without play and tightening bolts - **arrows** -.
- Fill with coolant **Filling**.

13 - ENGINE - CRANKSHAFT, CYLINDER BLOCK

CYLINDER BLOCK, BELT PULLEY SIDE

Ribbed belt drive, assembly overview

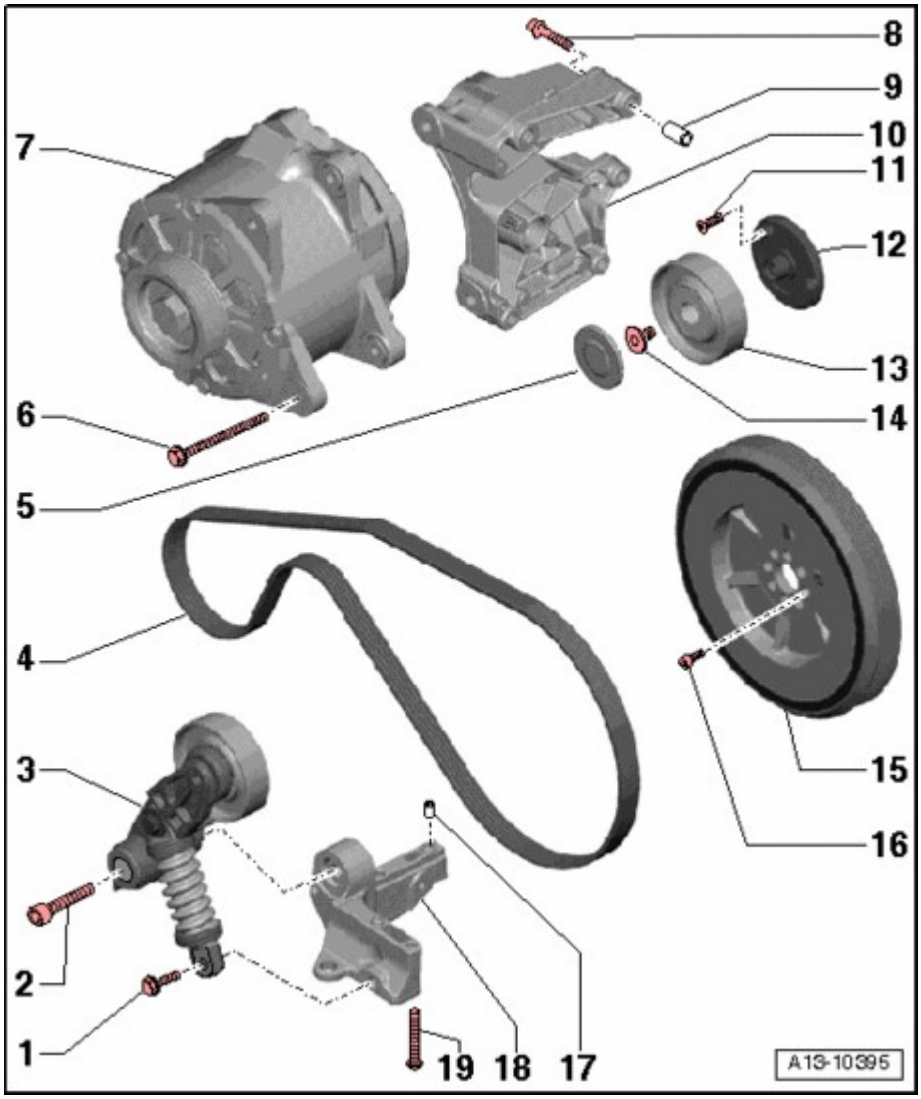

Fig. 157: Ribbed Belt Drive, Assembly Overview
Courtesy of VOLKSWAGEN UNITED STATES, INC.

1 - Bolt

- 22 Nm

 © 2011 Mitchell Repair Information Company, LLC.

2 - Bolt

- 55 Nm

3 - Tensioning device for ribbed belt

- Removing and installing --> **Ribbed belt tensioner, removing and installing**

4 - Ribbed belt

- Check for wear
- Do not kink

CAUTION: Risk of destroying due to reversed running direction on a used ribbed belt.

- **Before removing ribbed belt, marking running direction with chalk or felt-tip pen for reinstallation later.**

- Removing and installing --> **Ribbed belt, removing and installing**
- When installing, make sure it is seated correctly on pulleys

5 - Cover cap

6 - Bolt

- 22 Nm

7 - Generator

- Removing and installing --> **27 - STARTER, GENERATOR, CRUISE CONTROL**

8 - Bolt

- M8: 22 Nm
- M10: 46 Nm

9 - Alignment bushing

- For generator bracket
- 2 pieces

10 - Generator bracket

11 - Bolt

- 9 Nm

 © 2011 Mitchell Repair Information Company, LLC.

12 - Bracket

- For idler pulley

13 - Idler roller for ribbed belt

14 - Bolt

- 22 Nm

15 - Vibration damper

- Removing and installing --> **Vibration damper, removing and installing**

16 - Bolt

- Replace
- Tightening order **Vibration damper tightening sequence**

17 - Alignment bushing

- 2 pieces

18 - Bracket

- For ribbed belt tensioner

19 - Bolt

- Different lengths
- 9 Nm

Vibration damper tightening sequence

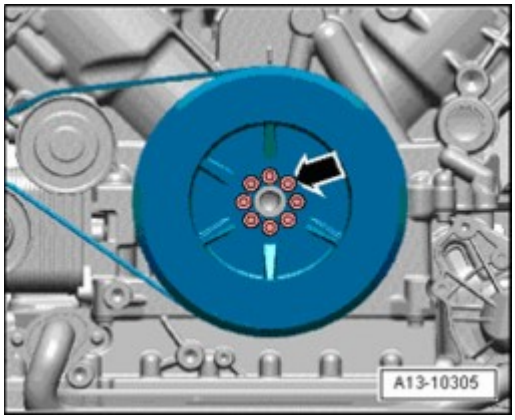

Fig. 158: Loosening Mounting Bolts On Vibration Damper

 © 2011 Mitchell Repair Information Company, LLC.

Courtesy of VOLKSWAGEN UNITED STATES, INC.

- Tighten bolts - **arrow** - in diagonal sequence in 3 stages as follows:
- Tighten bolts to 15 Nm.
- Tighten bolts to 22 Nm.
- Tighten an additional 90° ($^{1}/_{4}$ turn).

Ribbed belt, removing and installing

Removing

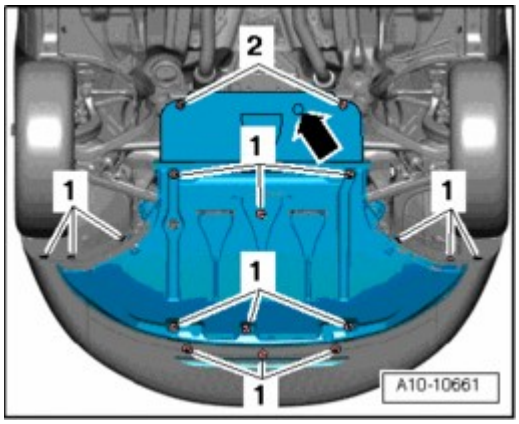

Fig. 159: Identifying Noise Insulation And Mountings
Courtesy of VOLKSWAGEN UNITED STATES, INC.

- Remove sound insulation by loosening securing pieces - **1, 2 and arrow** -.

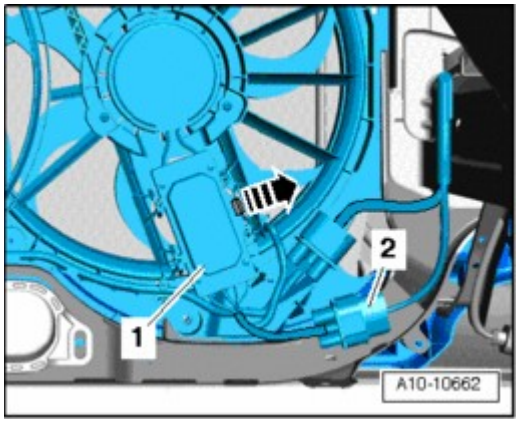

Fig. 160: Identifying Clip, Coolant Fan Control (FC) Control Module J293, And Electrical Harness Connector
Courtesy of VOLKSWAGEN UNITED STATES, INC.

- Remove electrical harness connector - **2** - from bracket and disconnect it.
- Release retaining clip - **arrow** - and lay aside Coolant Fan Control (FC) Control Module J293 - **1** -.

 © 2011 Mitchell Repair Information Company, LLC.

CAUTION: Risk of destroying due to reversed running direction on a used ribbed belt.

- **Before removing ribbed belt, marking running direction with chalk or felt-tip pen for reinstallation later.**

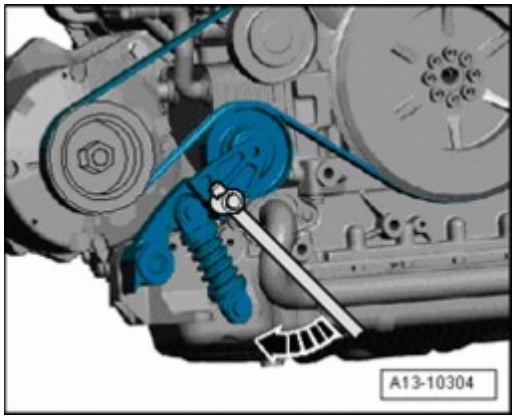

Fig. 161: Releasing Ribbed Belt Tension
Courtesy of VOLKSWAGEN UNITED STATES, INC.

- Pivot tensioning device in direction of - **arrow** - to relieve tension on ribbed belt.
- Remove ribbed belt and release tensioning device.

Installing

Installation is in reverse order of removal, note the following:

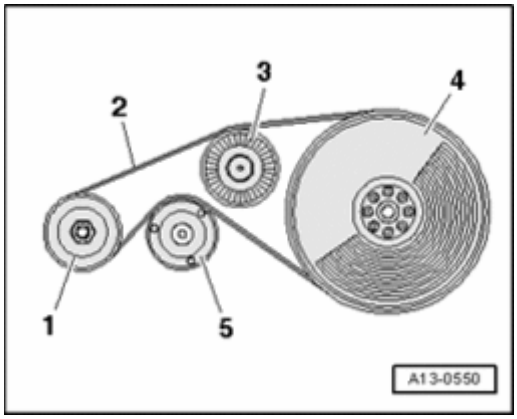

Fig. 162: Placing Ribbed Belt Over Belt Pulley In Specified Sequence
Courtesy of VOLKSWAGEN UNITED STATES, INC.

- Route ribbed belt - **2** - over belt pulley in specified sequence.

1 - Generator

3 - Idler roller

 © 2011 Mitchell Repair Information Company, LLC.

4 - Vibration damper

5 - Tensioning roller

NOTE:

- **When installing the ribbed belt, ensure it is seated correctly on the pulleys.**

  - Start engine and check running belt.

Ribbed belt tensioner, removing and installing

Removing

- Remove ribbed belt --> **Ribbed belt, removing and installing**

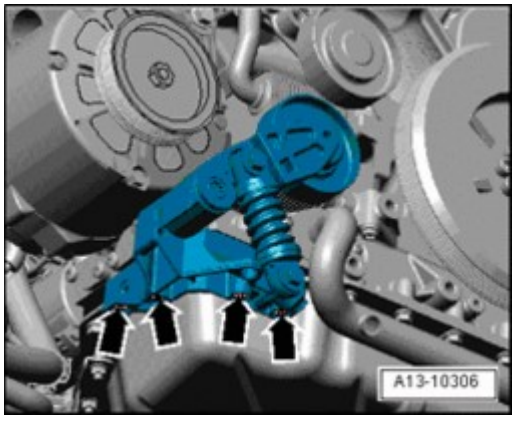

Fig. 163: Removing Bolts & Ribbed Belt Tensioner At Upper Part Of Oil Pan
Courtesy of VOLKSWAGEN UNITED STATES, INC.

- Remove bolts - **arrows** -.
- Remove ribbed belt tensioner from upper part of oil pan.

Installing

- Tightening torque --> **Ribbed belt drive, assembly overview**.

Installation is in reverse order of removal.

Vibration damper, removing and installing

Removing

- Bring lock carrier into service position --> **50 - BODY - FRONT** .

 © 2011 Mitchell Repair Information Company, LLC.

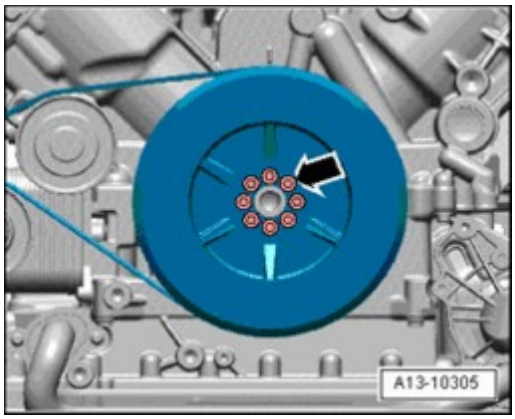

Fig. 164: Loosening Mounting Bolts On Vibration Damper
Courtesy of VOLKSWAGEN UNITED STATES, INC.

- Loosen 8 vibration damper bolts - **arrow** - several turns while counter holding at generator ribbed belt pulley center nut with an open-end wrench.
- Remove ribbed belt --> **Ribbed belt, removing and installing**
- Remove bolts - **arrows** - and remove vibration damper.

Installing

- Tightening torque **Vibration damper tightening sequence**

Installation is in reverse order of removal, note the following:

NOTE:

- **Replace bolts which have been tightened to torque.**
- **Secure all hose connections using hose clamps appropriate for the model type .**
- **Installation of vibration damper is only possible in one position - note alignment bushing.**

- Install ribbed belt --> **Ribbed belt, removing and installing**.
- Install lock carrier with attachments --> **50 - BODY - FRONT** .

Crankshaft seal, ribbed belt side, replacing

Special tools, testers and auxiliary items required

 © 2011 Mitchell Repair Information Company, LLC.

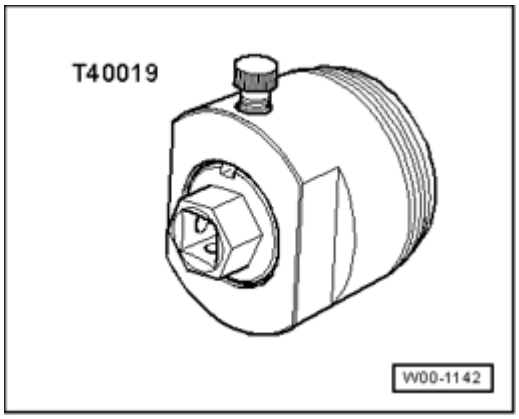

Fig. 165: Seal Remover T40019
Courtesy of VOLKSWAGEN UNITED STATES, INC.

- Seal remover T40019

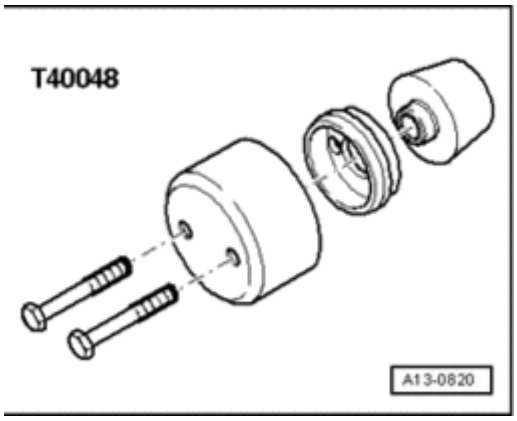

Fig. 166: Assembly Tool T40048
Courtesy of VOLKSWAGEN UNITED STATES, INC.

- Assembly tool T40048

Work procedure

- Bring lock carrier into service position --> **50 - BODY - FRONT** .
- Remove vibration damper --> **Vibration damper, removing and installing**.

 © 2011 Mitchell Repair Information Company, LLC.

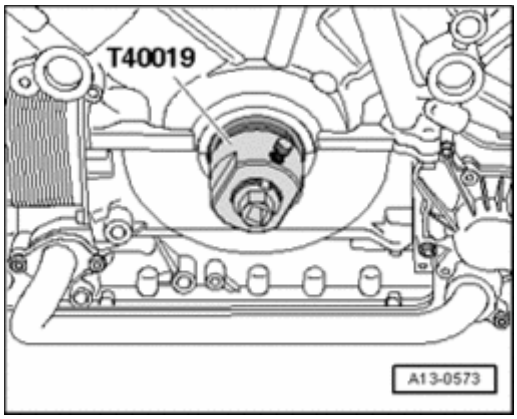

Fig. 167: Installing Oil Seal Extractor T40019
Courtesy of VOLKSWAGEN UNITED STATES, INC.

- Position inner part of Oil Seal Extractor T40019 flush with outer part and secure inner part with knurled thumb screw.
- Lubricate threaded head of seal remover, place against seal, and with strong force install into seal as far as possible.
- Loosen knurled screw and turn inner portion against crankshaft until oil seal is pulled out.
- Clamp seal extractor at mounting points in a vise.
- Remove seal using pliers.
- Clean operating and sealing surfaces.

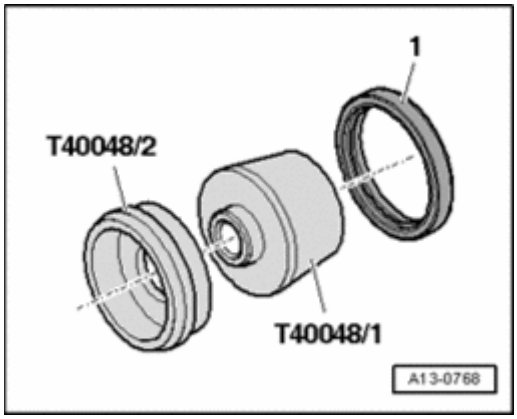

Fig. 168: Inserting Assembly Device T40048/1 Onto Pull Sleeve T40048/2 And Slide Seal Onto Pull Sleeve
Courtesy of VOLKSWAGEN UNITED STATES, INC.

- Position assembly device T40048/1 on pull sleeve T40048/2 and slide seal - **1** - onto pull sleeve.
- Remove assembly device.

 © 2011 Mitchell Repair Information Company, LLC.

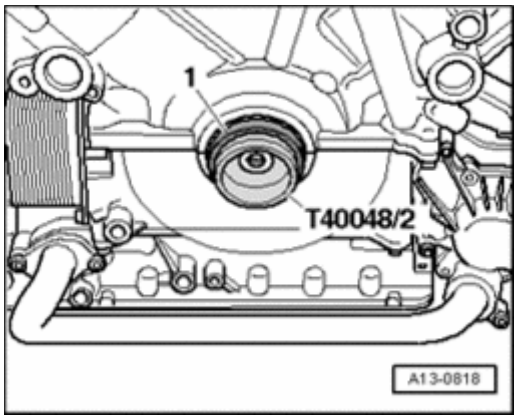

Fig. 169: Placing Pull Sleeve T40048/2 On Crankshaft And Sliding Seal Into Sealing Surface On Engine
Courtesy of VOLKSWAGEN UNITED STATES, INC.

- Place pull sleeve T40048/2 on crankshaft and slide seal - **1** - into sealing surface on cylinder block.

NOTE:

- **Pull sleeve remains on crankshaft for pressing in.**

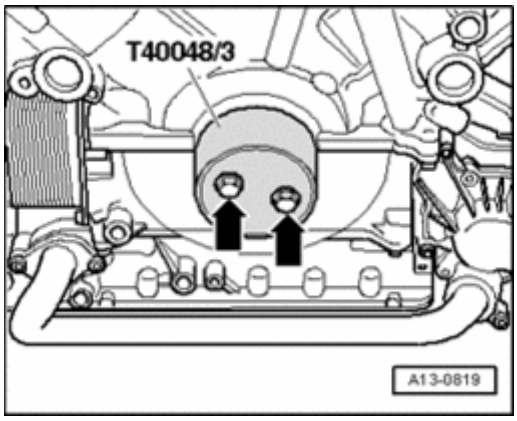

Fig. 170: Positioning Pressure Sleeve T40048/3 With Bolts On Crankshaft
Courtesy of VOLKSWAGEN UNITED STATES, INC.

- Position pressure sleeve T40048/3 with 2 M8x55 mm bolts - **arrows** - on crankshaft.
- Then install bolts by hand.
- Tighten bolts each $^{1}/_{2}$ rotation by alternating sides to press in seal until it reaches stop.

The rest of installation is in reverse order of removal, note the following:

NOTE:

- **Secure all hose connections using hose clamps appropriate for the model type .**

- Install vibration damper --> **Vibration damper, removing and installing**.
- Install ribbed belt --> **Ribbed belt, removing and installing**.

 © 2011 Mitchell Repair Information Company, LLC.

- Install lock carrier with attachments --> **50 - BODY - FRONT** .

CYLINDER BLOCK, TRANSMISSION SIDE

Cylinder block, transmission side

NOTE:

- **To perform assembly work, secure engine with V8 FSI engine holder 6095/1-6A to Engine and Transmission Holder VAS 6095 --> Engine, securing to assembly stand.**

Drive plate, assembly overview

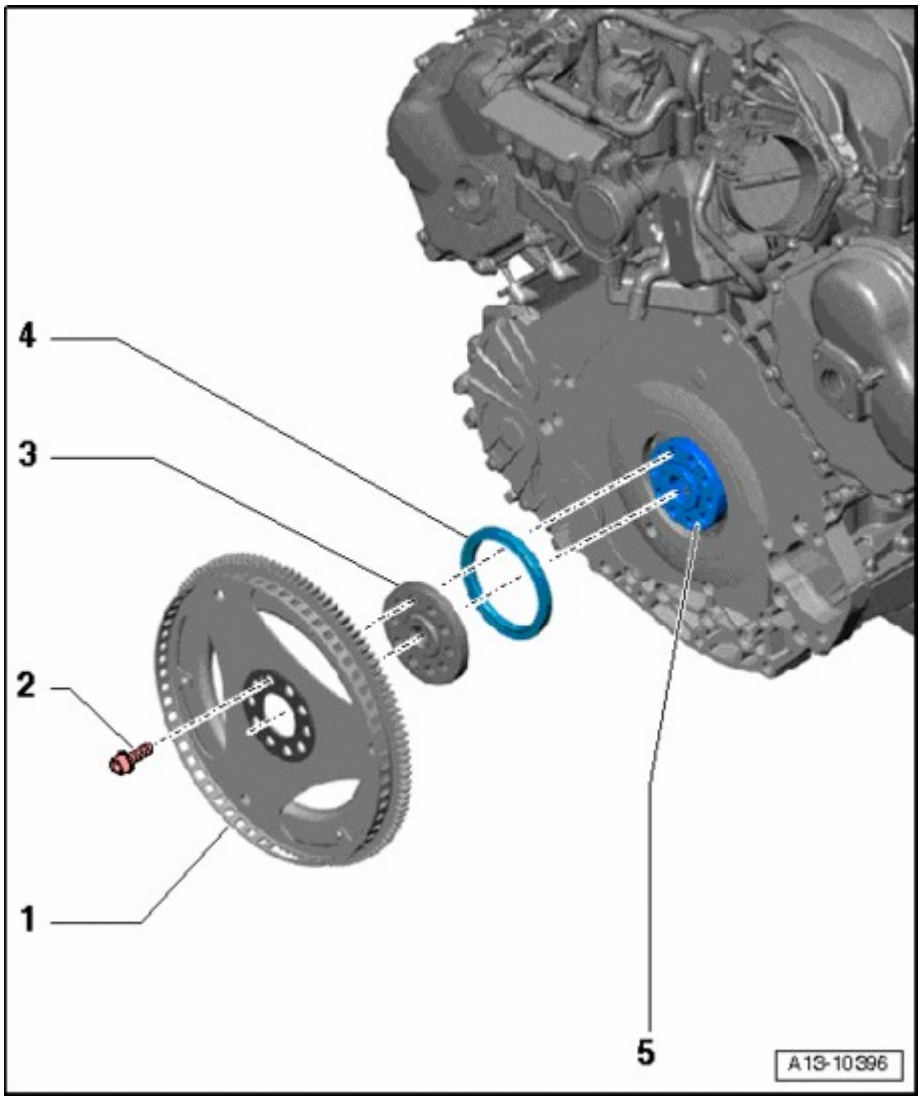

Fig. 171: Drive Plate, Assembly Overview
Courtesy of VOLKSWAGEN UNITED STATES, INC.

1 - Drive plate

 © 2011 Mitchell Repair Information Company, LLC.

- Removing and installing --> **Drive plate, removing and installing**
- Mark for re-installation

2 - Bolt

- Replace
- 60 Nm plus an additional 90° ($^{1}/_{4}$ turn).

3 - Shim

- Mark for re-installation

4 - Transmission-side crankshaft sealing ring

- Replacing --> **Transmission-side crankshaft sealing ring, replacing**.

5 - Crankshaft

Drive plate, removing and installing

Special tools, testers and auxiliary items required

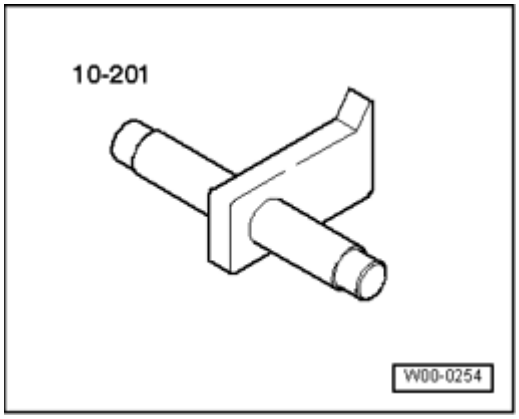

Fig. 172: Counter-Holder Tool 10-201
Courtesy of VOLKSWAGEN UNITED STATES, INC.

- Counter-holder tool 10 - 201

Removing

- Engine or transmission removed.

 © 2011 Mitchell Repair Information Company, LLC.

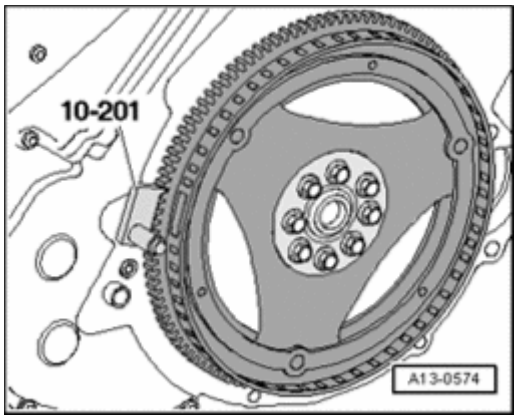

Fig. 173: Inserting Counter Hold Tool 10-201 To Loosen Bolts
Courtesy of VOLKSWAGEN UNITED STATES, INC.

- Insert counter-hold tool 10 - 201 to loosen bolts.
- Identify position of drive plate to crankshaft with a felt-tip pen for reinstallation.
- Remove drive plate.
- Remove shim from behind it.

Installing

- Tightening torque --> **Drive plate, assembly overview**.

Installation is in reverse order of removal, note the following:

NOTE:

- **Replace bolts which have been tightened to torque.**

- Install drive plate with shim.
- Turn over counter-hold tool 10 - 201 to tighten bolts.

Transmission-side crankshaft sealing ring, replacing

Special tools, testers and auxiliary items required

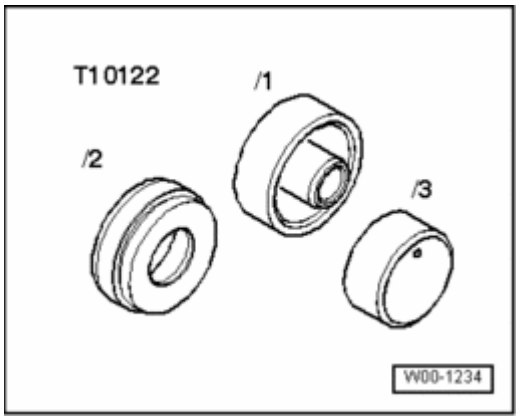

 © 2011 Mitchell Repair Information Company, LLC.

Fig. 174: Pulling Fixture T10122
Courtesy of VOLKSWAGEN UNITED STATES, INC.

- Pulling fixture T10122

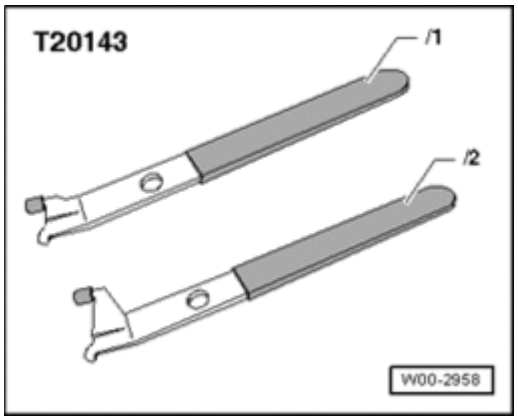

Fig. 175: Extractor Hook T20143
Courtesy of VOLKSWAGEN UNITED STATES, INC.

- Extractor hook T20143

Work procedure

- Engine or transmission removed.
  - Remove drive plate --> **Drive plate, removing and installing**.

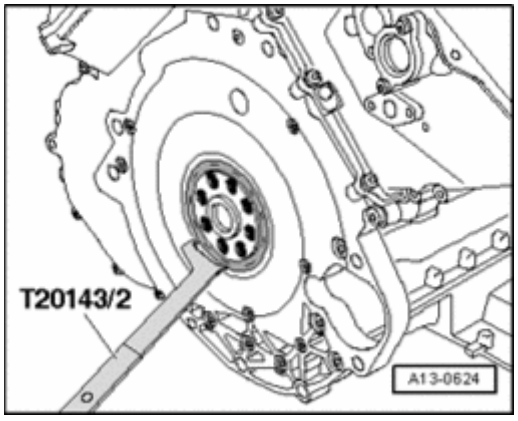

Fig. 176: Prying Out Sealing Ring Using Extractor Lever T20143/2
Courtesy of VOLKSWAGEN UNITED STATES, INC.

  - Pry out sealing ring using pulling hook T20143/2.
  - Clean operating and sealing surfaces.

 © 2011 Mitchell Repair Information Company, LLC.

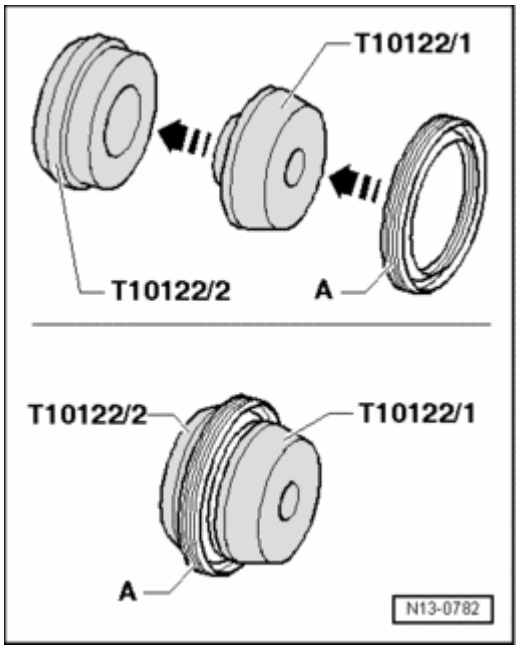

Fig. 177: Inserting Assembly Device T10122/1 Onto Pull Sleeve T10122/2 And Shaft Seal Onto Pull Sleeve
Courtesy of VOLKSWAGEN UNITED STATES, INC.

- Insert assembly device T10122/1 onto pull sleeve T10122/2 and slide sealing ring - **A** - onto pull sleeve.
- Remove assembly device.

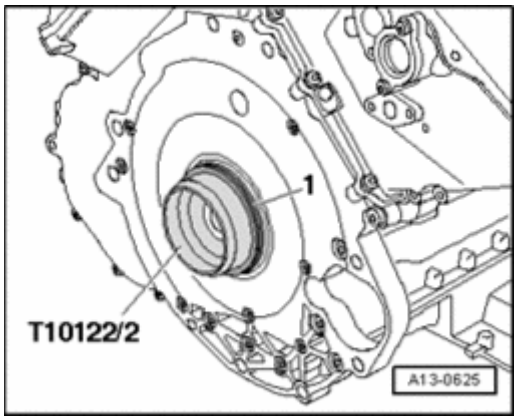

Fig. 178: Installing Pull Sleeve T10122/2 With Sealing Ring Onto Crankshaft
Courtesy of VOLKSWAGEN UNITED STATES, INC.

- Install pull sleeve T10122/2 with seal - **1** - on crankshaft.

 © 2011 Mitchell Repair Information Company, LLC.

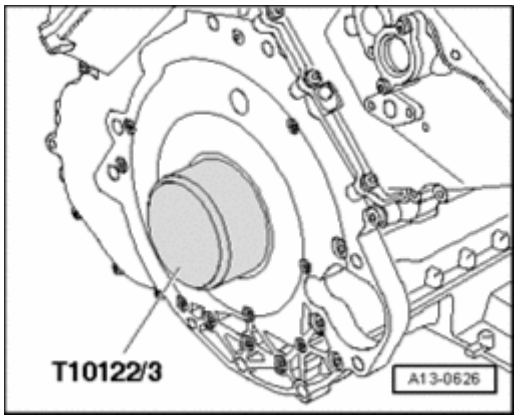

Fig. 179: Pressing In Sealing Ring All Around Evenly And Flush Using Pressure Sleeve T10122/3
Courtesy of VOLKSWAGEN UNITED STATES, INC.

- Press seal evenly and flush all around with thrust piece T10122/3.

The rest of installation is in reverse order of removal, note the following:

- Install drive plate --> **Drive plate, removing and installing**.

CRANKSHAFT

Crankshaft

NOTE:

- **To perform assembly work, secure engine with V8 FSI engine holder 6095/1-6A to Engine and Transmission Holder VAS 6095 --> Engine, securing to assembly stand.**

Crankshaft, assembly overview

 © 2011 Mitchell Repair Information Company, LLC.

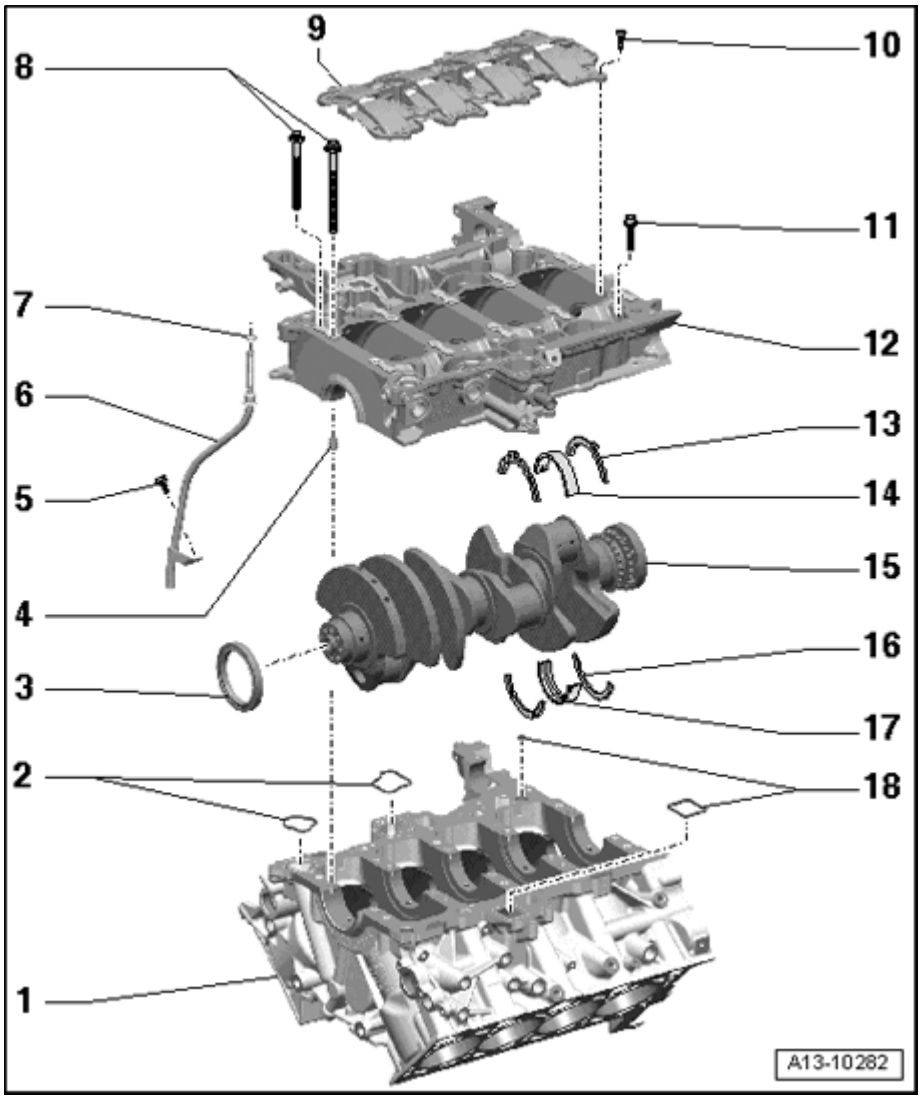

Fig. 180: Crankshaft, Assembly Overview
Courtesy of VOLKSWAGEN UNITED STATES, INC.

1 - Cylinder block

- Paired to - **12** -
- Sealant applied on cylinder block (for guide frame) **Sealant applied on cylinder block (for guide frame)**

2 - Seals

- Replace

3 - Crankshaft seal, ribbed belt side

- Replacing --> **Crankshaft seal, ribbed belt side, replacing**.

 © 2011 Mitchell Repair Information Company, LLC.

4 - Alignment bushing

- 2 pieces
- Insert into guide frame
- Installed location **Sealant applied on cylinder block (for guide frame)**

5 - Bolt

- 9 Nm

6 - Guide tube for oil dipstick

7 - O-ring

- Replace

8 - Bolts

- For guide frame
- Replace
- Various bolt sizes
- Tightening order **Guide frame tightening sequence**

9 - Baffle plate

10 - Bolt

- Tightening order **Baffle plate tightening sequence**

11 - Bolt

- For guide frame to cylinder block sealing surfaces
- Different bolt lengths
- Tightening order **Guide frame tightening sequence**

12 - Bearing bracket

- Paired to - **1** -
- Sealant applied on cylinder block (for guide frame) **Sealant applied on cylinder block (for guide frame)**
- Bolt tightening sequence **Guide frame tightening sequence**

13 - Thrust washer

- Only at 4th crankshaft bearing

 © 2011 Mitchell Repair Information Company, LLC.

- Lubricating grooves face outward
- Note locating point in guide frame
- Measuring crankshaft axial clearance --> **Axial clearance, measuring**

14 - Bearing shell

- For guide frame without lubricating groove
- Mark used bearing shells
- Insert new bearing shells for guide frame with proper color marking: New crankshafts --> **Allocation of main bearing shells for new crankshafts** , used and reworked crankshafts --> **Allocation of main bearing shells for used and reworked crankshafts**

15 - Crankshaft

- Measuring axial play --> **Axial clearance, measuring**
- Radial clearance, measuring --> **Radial clearance, measuring**
- Do not turn crankshaft when measuring radial play
- Crankshaft dimensions --> **Crankshaft dimensions**

16 - Thrust washer

- Only at 4th crankshaft bearing
- Lubricating grooves face outward
- Measuring crankshaft axial clearance --> **Axial clearance, measuring**

17 - Bearing shell

- For cylinder block with oil groove
- Mark used bearing shells
- Insert new bearing shells for cylinder block with proper color marking: New crankshafts --> **Allocation of main bearing shells for new crankshafts** , used and reworked crankshafts --> **Allocation of main bearing shells for used and reworked crankshafts**

18 - Seals

- Replace

Baffle plate tightening sequence

 © 2011 Mitchell Repair Information Company, LLC.

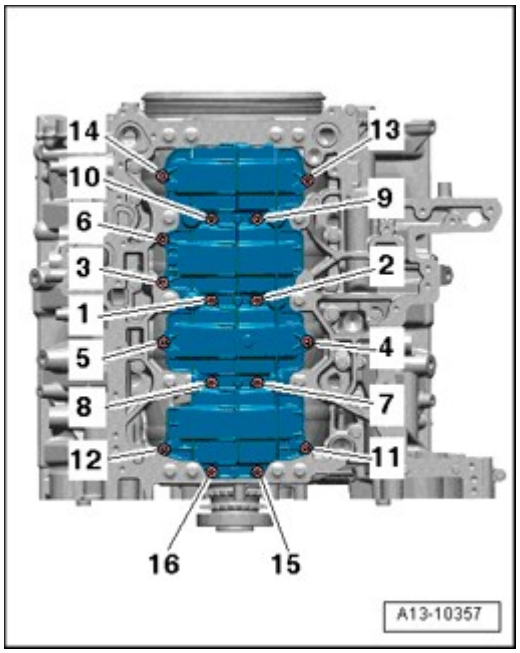

Fig. 181: Baffle Plate Tightening Sequence
Courtesy of VOLKSWAGEN UNITED STATES, INC.

- Tighten bolts - **1 to 16** - in sequence.
- 9 Nm

Sealant applied on cylinder block (for guide frame)

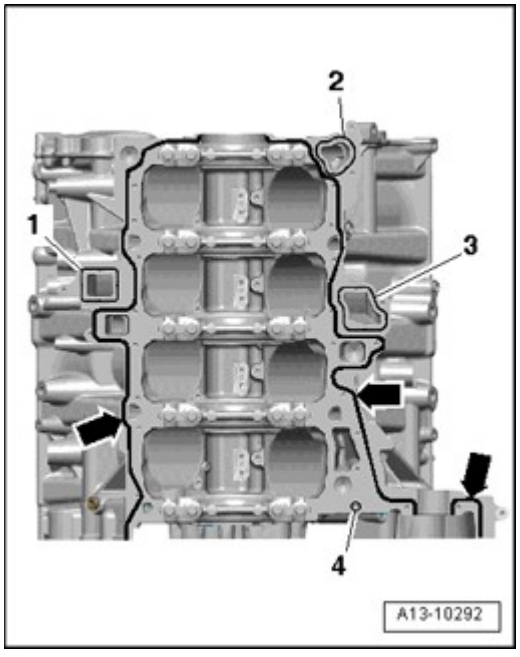

Fig. 182: Sealant Applied On Cylinder Block (For Guide Frame)
Courtesy of VOLKSWAGEN UNITED STATES, INC.

 © 2011 Mitchell Repair Information Company, LLC.

- Clean sealing surfaces so they are completely free of any oil or grease.
- Apply sealant beads - **arrows** - to clean sealing surfaces as shown in illustration.

- Thickness of sealant beads: 2.0 mm.

- Install seals - **1 to 4** -.

Installation position of alignment bushings

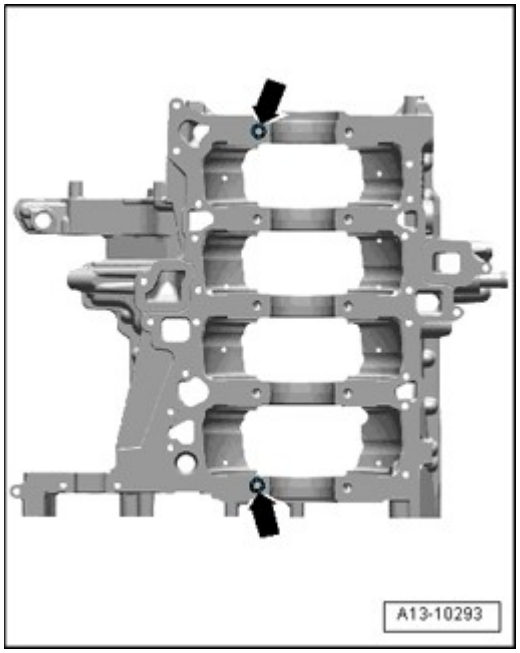

Fig. 183: Installation Position Of Alignment Bushings
Courtesy of VOLKSWAGEN UNITED STATES, INC.

- Check whether alignment bushings - **arrows** - are inserted at locations in guide frame as shown in the illustration.

Guide frame tightening sequence

 © 2011 Mitchell Repair Information Company, LLC.

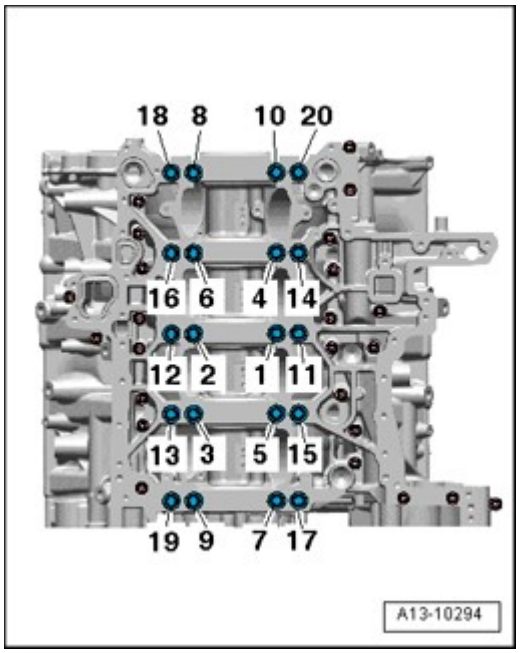

Fig. 184: Guide Frame Tightening Sequence
Courtesy of VOLKSWAGEN UNITED STATES, INC.

- Replace bolts - **1 to 20** -.
- Tighten bolts in 7 stages as follows:
- Tighten bolts - **1 to 10** - to 30 Nm.
- Tighten bolts - **11 to 20** - to 20 Nm.
- Tighten bolts - **1 to 10** - to 50 Nm.
- Tighten bolts - **11 to 20** - to 30 Nm.
- Tighten bolts - **1 to 10** - an additional 90° ($^{1}/_{4}$ turn).
- Tighten bolts - **11 to 20** - an additional 90° ($^{1}/_{4}$ turn).
- Tighten guide frame to cylinder block sealing surface bolts, - **highlighted in illustration but not numbered** - , in a diagonal sequence to 9 Nm.

Allocation of main bearing shells for new crankshafts

 © 2011 Mitchell Repair Information Company, LLC.

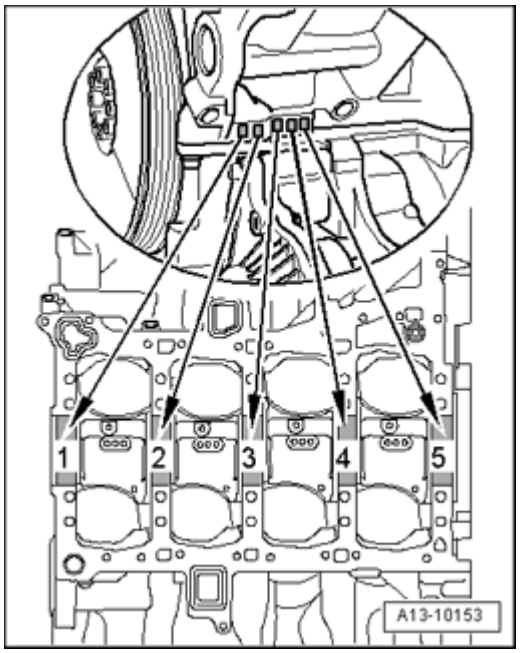

Fig. 185: Allocation Of Crankshaft Bearing Shells For Cylinder Block
Courtesy of VOLKSWAGEN UNITED STATES, INC.

Allocation of crankshaft bearing shells for cylinder block

- Bearing shells with correct thickness are allocated to cylinder block in the factory. Colored dots on sides of bearing shells serve for identifying bearing shell thickness.
- Allocation of bearing shells to cylinder block is marked by one letter each at left front on cylinder block (can be read from outside) as shown in the illustration.

Letter on cylinder block		Color of bearing
R	=	Red
G	=	Yellow
B	=	Blue

NOTE:

- **In addition, the letters are also stamped on the guide frame.**

 © 2011 Mitchell Repair Information Company, LLC.

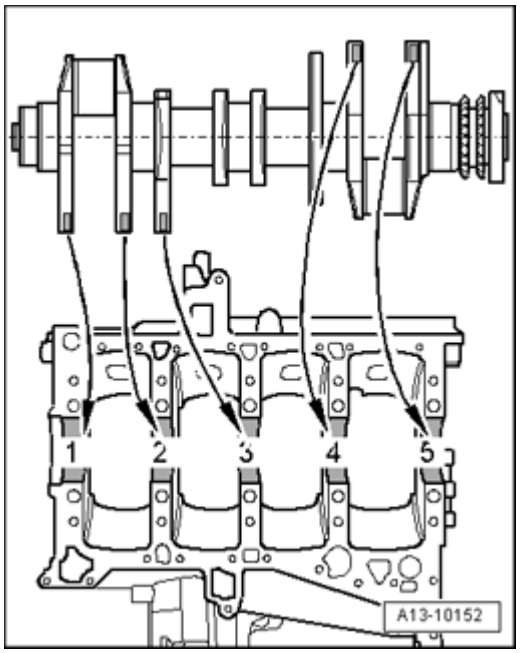

Fig. 186: Allocation Of Crankshaft Bearing Shells For Guide Frame - Version I
Courtesy of VOLKSWAGEN UNITED STATES, INC.

Allocation of crankshaft bearing shells for guide frame - Version I

- Bearing shells with correct thickness are allocated to guide frame in the factory. Colored dots on sides of bearing shells serve for identifying bearing shell thickness.
- Allocation of bearing shells to guide frame is marked by one colored dot each on crankshaft counterweight as shown in the illustration.

Colored dot on crankshaft	Color of bearing
Red	Red
Yellow	Yellow
Blue	Blue

 © 2011 Mitchell Repair Information Company, LLC.

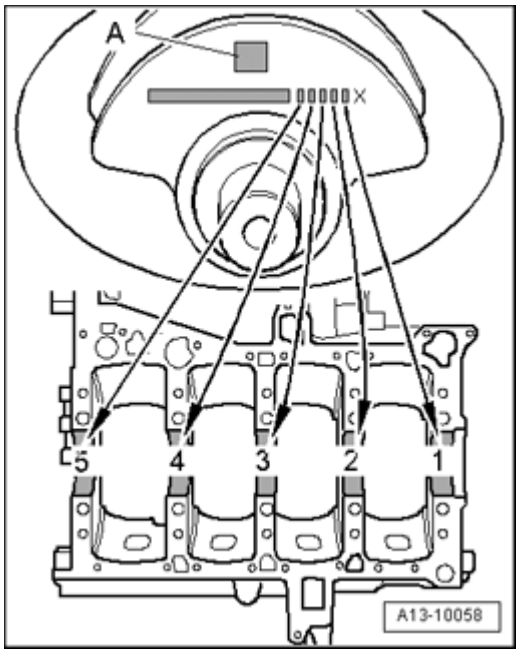

Fig. 187: Allocation Of Crankshaft Bearing Shells For Guide Frame - Version II
Courtesy of VOLKSWAGEN UNITED STATES, INC.

Allocation of crankshaft bearing shells for guide frame - Version II

- Bearing shells with correct thickness are allocated to guide frame in the factory. Colored dots on sides of bearing shells serve for identifying bearing shell thickness.
- The allocation of bearing shells to guide frame is identified by a letter on the front crankshaft counterweight, as shown in the illustration. The "X" marks the end of the letter sequence and is near bearing 1 color identification on belt pulley side.

NOTE:

- **Ignore - A -.**

Letter on crankshaft		Color of bearing
R	=	Red
G	=	Yellow
B	=	Blue

Allocation of main bearing shells for used and reworked crankshafts

 © 2011 Mitchell Repair Information Company, LLC.

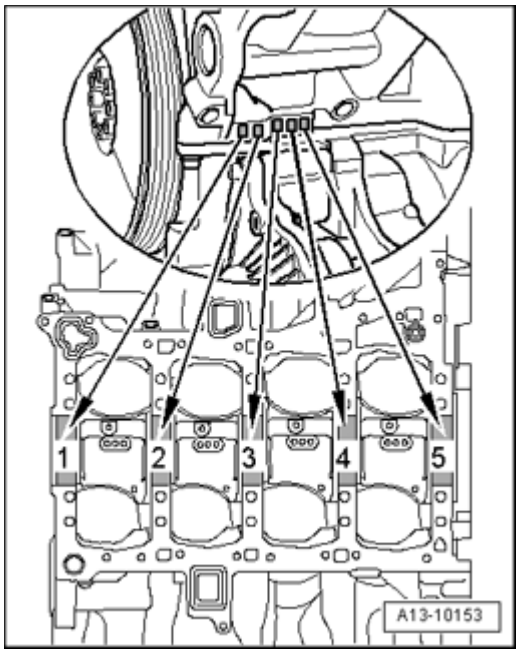

Fig. 188: Allocation Of Crankshaft Bearing Shells For Cylinder Block
Courtesy of VOLKSWAGEN UNITED STATES, INC.

Allocation of crankshaft bearing shells for cylinder block

- Bearing shells are allocated to cylinder block corresponding to color markings stamped into cylinder block.
- For used and reworked crankshafts, the main crankshaft journals must be measured in order to allocate the matching bearing shells.
- Crankshaft dimensions --> **Crankshaft dimensions**.
- Thicker over-sized bearing shells are available for reworked crankshafts. These have the same color markings as the original-size bearing shells.

Letter on cylinder block		Color of bearing
R	=	Red
G	=	Yellow
B	=	Blue

Allocation of crankshaft bearing shells for guide frame

- For used and reworked crankshafts, the main crankshaft journals must be measured in order to allocate the matching bearing shells.
- Any other markings on the crankshaft are invalid when reworking crankshafts.
- Allocate bearing shells to the determined diameter of main crankshaft journals according to the following table.

Main crankshaft	Color identification of bearing shells for guide frame

 © 2011 Mitchell Repair Information Company, LLC.

journals diameter			
Dimensions in mm	Red	Yellow	Blue
Basic dimension 65.000 1)	64.978 to 64.972	64.972 to 64.965	64.965 to 64.958
Repair stage 64.750 1)	64.728 to 64.722	64.722 to 64.715	64.715 to 64.708

- 1) The same color marking is valid for the thicker over-sized bearing for reworked crankshafts as for new crankshafts despite greater bearing thickness.

Crankshaft dimensions

Reconditioning dimension in mm	**Main crankshaft journals diameter**		**Connecting rod pins diameter**	
Basic dimension	65.000	0.022 0.042	54.000	0.022 0.042
Repair stage	64.750	0.022 0.042	53.750	0.022 0.042

Axial clearance, measuring

Special tools, testers and auxiliary items required

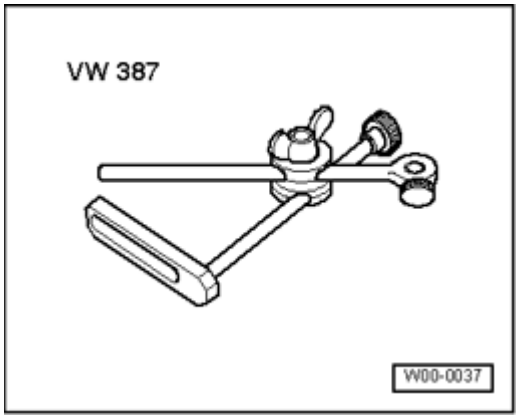

Fig. 189: Dial Gauge Holder VW 387
Courtesy of VOLKSWAGEN UNITED STATES, INC.

- Dial gauge holder VW 387

 © 2011 Mitchell Repair Information Company, LLC.

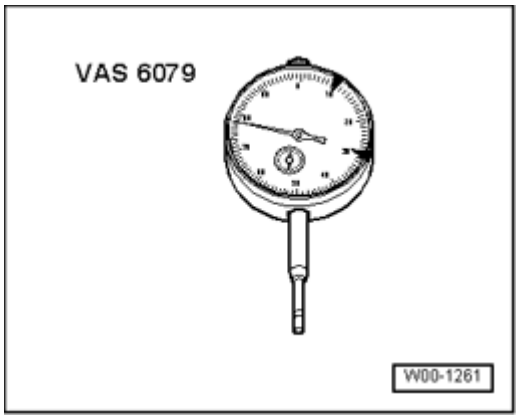

Fig. 190: Dial Gauge VAS 6079
Courtesy of VOLKSWAGEN UNITED STATES, INC.

- Dial gauge VAS 6079

Work procedure

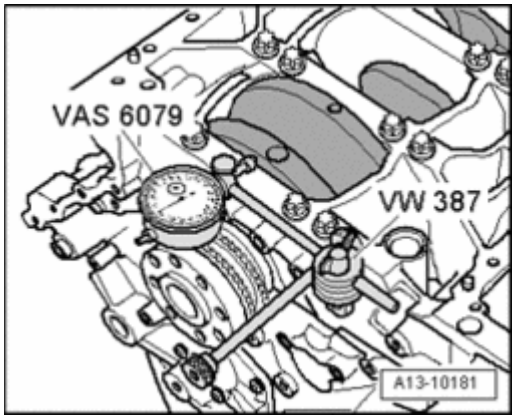

Fig. 191: Securing Dial Gauge VAS 6079 With Dial Gauge Holder VW 387 To Cylinder Block
Courtesy of VOLKSWAGEN UNITED STATES, INC.

- Secure Dial Gauge VAS 6079 with Dial Gauge Holder VW 387 to cylinder block as shown in illustration.
- Position dial gauge against crankshaft counterweight.
- Press crankshaft by hand against gauge and set gauge to "0".
- Press crankshaft off gauge and read value.

- Axial clearance: 0.090 to 0.251 mm.

Radial clearance, measuring

Special tools, testers and auxiliary items required

- Plastigage

 © 2011 Mitchell Repair Information Company, LLC.

Work procedure

NOTE:

- **Identify used bearing for reinstallation.**
- **If the bearing shells are worn down to the nickel layer, they must be replaced.**

- Remove guide frame and clean journals.
- Place Plastigage over entire width of bearing journal or into bearing shells.

- Plastigage must rest in center of bearing shell.

- Install guide frame and tighten to 30 Nm. Do not turn crankshaft.
- Remove guide frame again.
- Compare width of Plastigage with measuring scale.

Radial clearance:

- New: 0.017 to 0.044 mm.
- Wear limit: 0.08 mm.

PISTON AND CONNECTING ROD

Piston and connecting rod, assembly overview

NOTE:

- **Oil injector jet for piston cooling Oil spray jet for piston cooling**

 © 2011 Mitchell Repair Information Company, LLC.

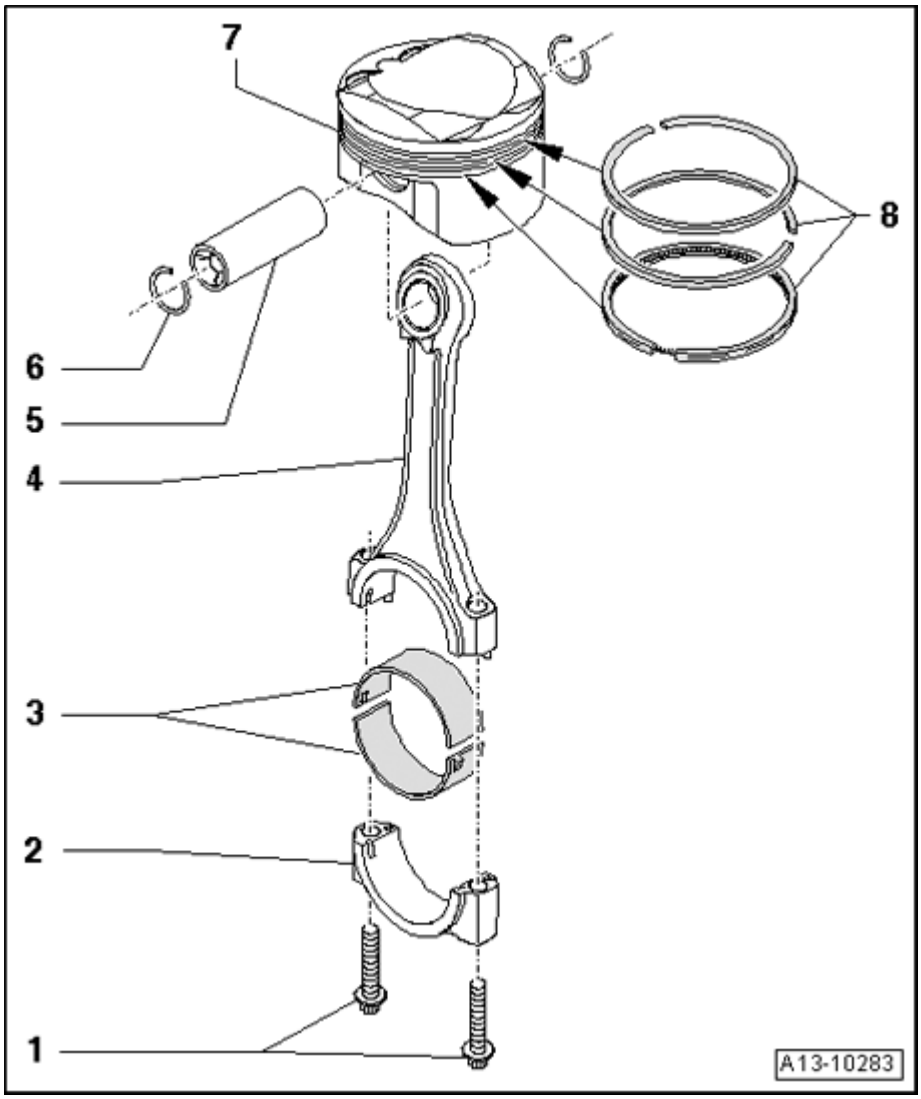

Fig. 192: Piston And Connecting Rod, Assembly Overview
Courtesy of VOLKSWAGEN UNITED STATES, INC.

1 - Bolt

- Replace
- Lubricate threads and contact surface
- 60 Nm plus an additional 90° ($^{1}/_{4}$ turn).
- Tighten to 60 Nm to measure radial play, do not turn further

2 - Connecting rod bearing cap

- Mark for re-installation
- Mark affiliation to cylinder with paint **Mark connecting rod**
- Installation position of connecting rod pairs **Connecting rod, installed location**

 © 2011 Mitchell Repair Information Company, LLC.

3 - Bearing shells

- Check that retaining tabs are secured
- Mark used bearing shells for reinstallation but not on running surface
- Radial clearance, measuring --> **Radial clearance of connecting rod, measuring**
- Over-sized bearings are available for reworked crankshaft connecting rod journals

4 - Connecting rod

- Only replace as set
- Mark affiliation to cylinder with paint **Mark connecting rod**
- Installation position of connecting rod pairs **Connecting rod, installed location**
- Axial play for each new connecting rod pair: 0.20 to 0.27 mm
- Axial play wear limit: 0.30 mm
- Radial clearance, measuring --> **Radial clearance of connecting rod, measuring**

5 - Piston pin

- If tight, heat piston to 60° C
- Removing and installing using a drift VW 222 A

6 - Circlip

7 - Piston

- Installation position of pistons **Piston installation position**
- Piston and cylinder dimensions --> **Piston and cylinder dimensions**
- Checking **Checking piston**
- Install with piston ring compressor
- Measuring cylinder bore **Measuring cylinder bore**

8 - Piston rings

- Offset gaps by 120°
- Use piston ring pliers for removal and installation
- "TOP" marking or inscribed side must point to piston head
- Gap, measuring **Piston ring end gap, measuring**
- Measuring side clearance **Measuring piston ring side clearance**

Piston ring end gap, measuring

 © 2011 Mitchell Repair Information Company, LLC.

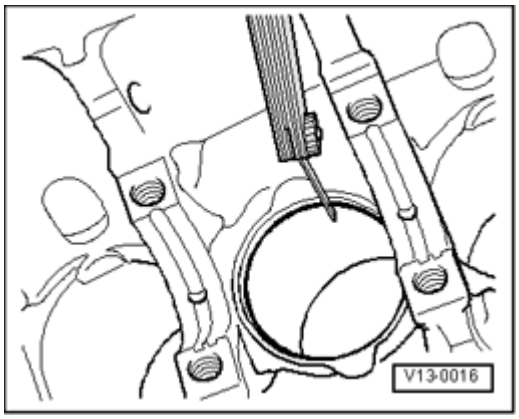

Fig. 193: Piston Ring End Gap, Measuring
Courtesy of VOLKSWAGEN UNITED STATES, INC.

- Slide piston ring down from above at a right angle to cylinder wall until it is approx. 15 mm from bottom edge of cylinder.
- When sliding in, use a piston without piston rings.

Piston ring dimensions in mm	New	Wear limit
1. Compression ring	0.20 to 0.35	0.80
2. Compression ring	0.20 to 0.40	0.80
Oil scraping ring	0.20 to 0.40	0.80

Measuring piston ring side clearance

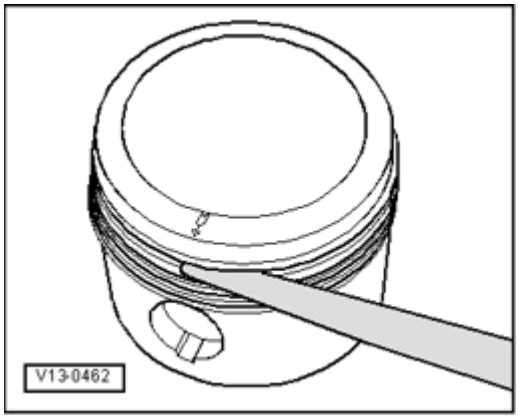

Fig. 194: Measuring Piston Ring Side Clearance
Courtesy of VOLKSWAGEN UNITED STATES, INC.

- Clean ring groove of piston before checking.

Piston ring dimensions in mm	New	Wear limit
1. Compression ring	0.035 to 0.085	0.200
2. Compression ring	0.005 to 0.045	0.150
Oil scraping ring	0.010 to 0.050	0.200

 © 2011 Mitchell Repair Information Company, LLC.

Checking piston

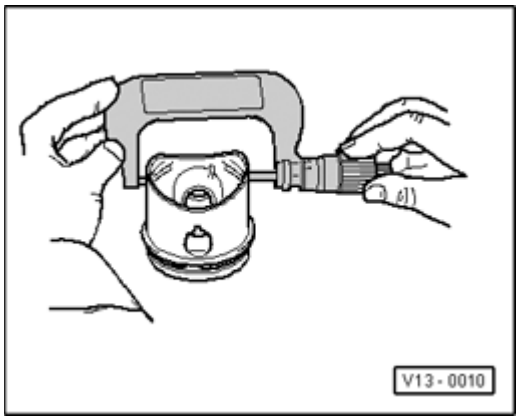

Fig. 195: Checking Piston
Courtesy of VOLKSWAGEN UNITED STATES, INC.

- Measure approx. 15 mm from the lower edge, at a 90° angle to piston pin axis using an external micrometer 75 to 100 mm.
- Maximum deviation from nominal dimension: 0.03 mm.

Nominal dimension --> **Piston and cylinder dimensions**.

Measuring cylinder bore

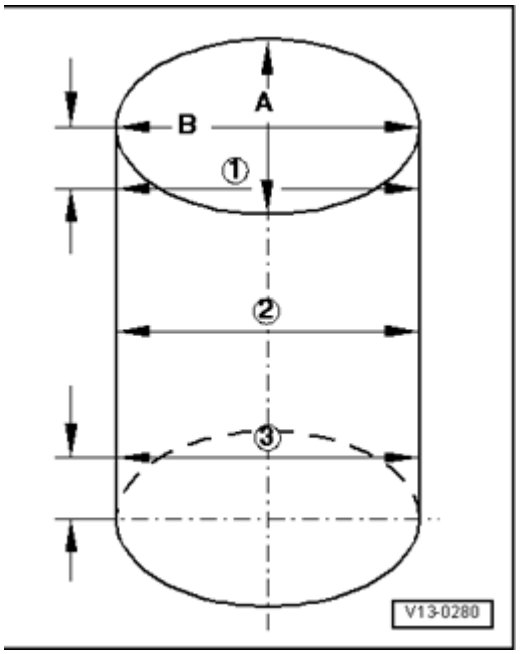

Fig. 196: Measuring Cylinder Bore
Courtesy of VOLKSWAGEN UNITED STATES, INC.

- Using an internal dial gauge 50 to 100 mm, measure at 3 points in diagonal sequence horizontally - **A** -

 © 2011 Mitchell Repair Information Company, LLC.

and vertically - **B** -.

- Maximum deviation from nominal dimension: 0.08 mm.

Nominal dimension --> **Piston and cylinder dimensions**.

Piston installation position

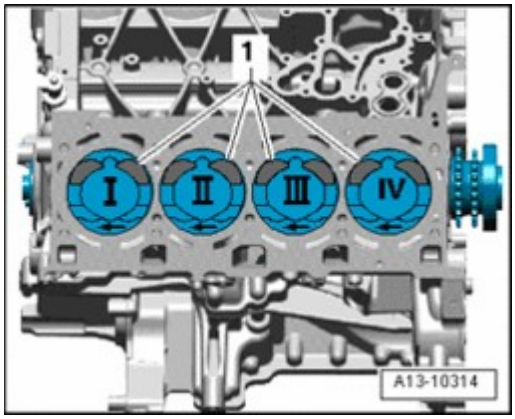

Fig. 197: Piston Installation Position
Courtesy of VOLKSWAGEN UNITED STATES, INC.

- Mark allocation to cylinder with pen on piston crown for reinstallation.

NOTE:

- **Do not use a center punch or scribe, since the piston head coating will be damaged.**

Installed location:

- Arrows on piston heads point to belt pulley side.
- Large valve recesses - **1** - point toward center of engine.

Mark connecting rod

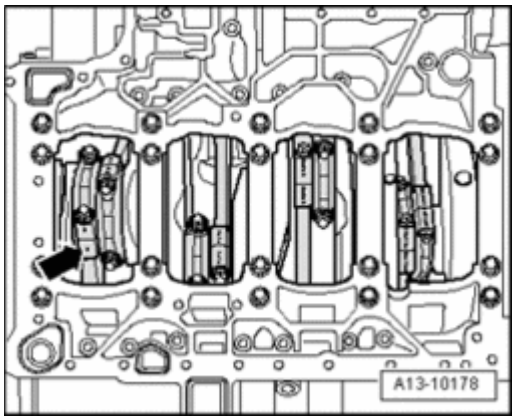

Fig. 198: Mark Connecting Rod

 © 2011 Mitchell Repair Information Company, LLC.

Courtesy of VOLKSWAGEN UNITED STATES, INC.

NOTE:

- **Only replace connecting rod as a set.**

  - Mark connecting rod and connecting rod bearing cap to each other and to cylinder - **arrow** - with pen for reinstallation.

Connecting rod, installed location

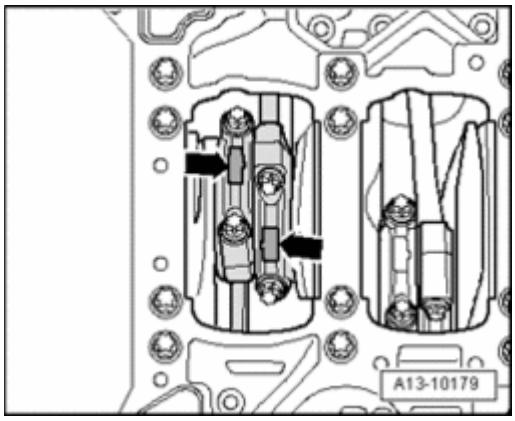

Fig. 199: Connecting Rod, Installed Location
Courtesy of VOLKSWAGEN UNITED STATES, INC.

- Molded tabs - **arrows** - at the beveled surfaces of connecting rod pairs 1 and 2, 3 and 4, 5 and 6 as well as 7 and 8 must point toward each other.

Oil spray jet for piston cooling

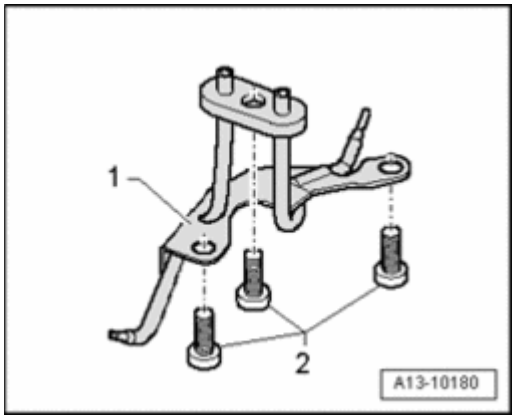

Fig. 200: Oil Spray Jet For Piston Cooling
Courtesy of VOLKSWAGEN UNITED STATES, INC.

1. Oil spray jet
2. Bolts, 9 Nm. Insert with locking compound

 © 2011 Mitchell Repair Information Company, LLC.

NOTE:

- **Do not bend piston spray nozzles.**
- **Bend piston spray nozzles must be replaced.**

Piston and cylinder dimensions

Matching pistons are allocated to different manufacturing stages of cylinder block.

Cylinder bore diameter mm	Piston diameter mm
84.510 ± 0.005	84.490 1)
84.610 ± 0.005	84.590 1)

- 1) Measurement with graphite coating (thickness = 0.01 mm). The graphite coating wears off.

Radial clearance of connecting rod, measuring

Special tools, testers and auxiliary items required

- Plastigage

Work procedure

- Remove connecting rod bearing caps.
- Clean bearing caps and journals.
- Place Plastigage over entire width of bearing journal or into bearing shells.
- Install connecting rod bearing cap and tighten to 60 Nm. Do not turn crankshaft.
- Remove connecting rod bearing caps again.
- Compare width of Plastigage with measuring scale.

Radial clearance:

- New: 0.020 to 0.069 mm.
- Wear limit: 0.120 mm.

- Replace connecting rod bolts.

15 - ENGINE - CYLINDER HEAD, VALVETRAIN

CYLINDER HEAD

Cylinder head, assembly overview

NOTE:

- **Cylinder head for cylinder bank 2 (left) is shown in illustration.**

 © 2011 Mitchell Repair Information Company, LLC.

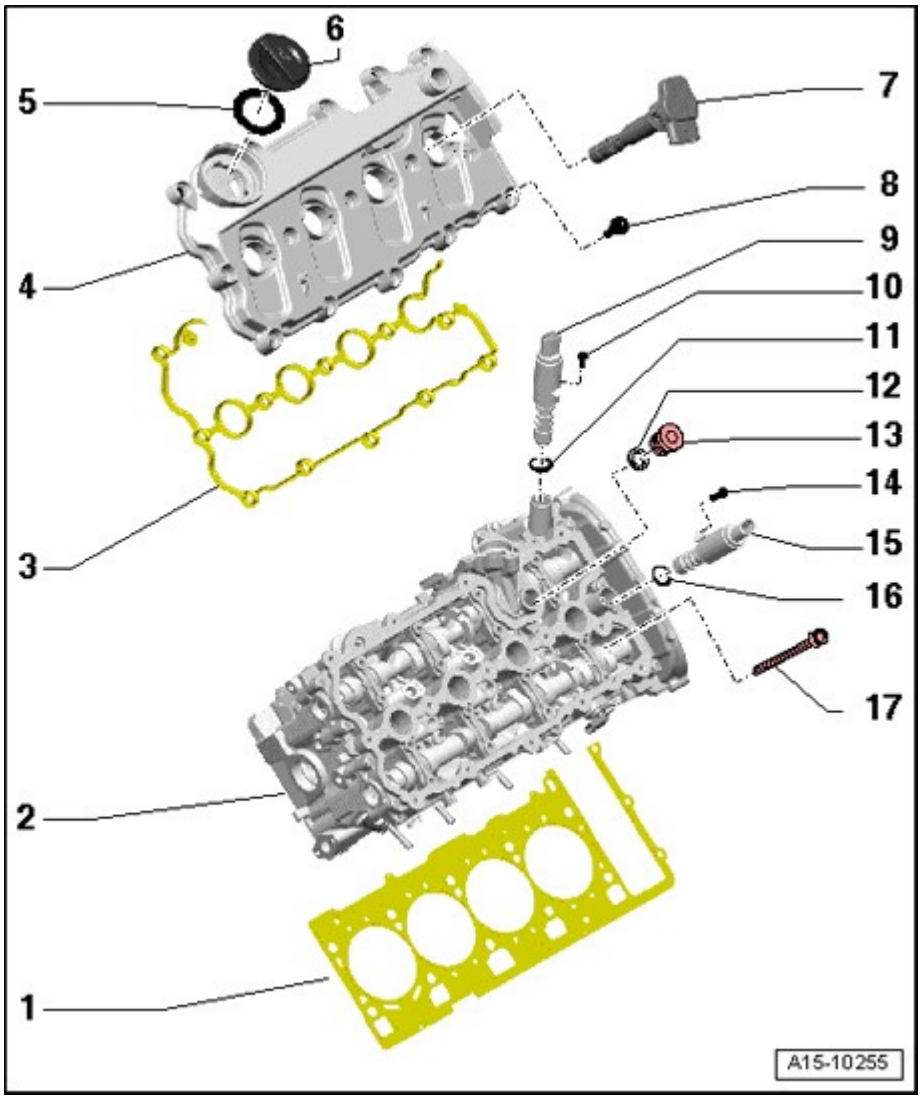

Fig. 201: Cylinder Head, Assembly Overview
Courtesy of VOLKSWAGEN UNITED STATES, INC.

1 - Cylinder head gasket

- Replacing --> **Cylinder head, removing and installing**.
- Installed location: Part Number, points to cylinder head
- After replacing, change engine oil and coolant

2 - Cylinder head

- Removing and installing --> **Cylinder head, removing and installing**
- Check for distortion **Checking cylinder head for distortion**
- Reworking dimension **Reworking dimension, cylinder head**
- After replacing, change engine oil and coolant

 © 2011 Mitchell Repair Information Company, LLC.

3 - Cylinder head cover gasket

- Replace if damaged or leaking

4 - Cylinder head cover

- Removing and installing: Left --> **Left cylinder head cover, removing and installing** , right --> **Right cylinder head cover, removing and installing**

5 - Gasket

- For cap
- Replace if damaged or leaking

6 - Cap

7 - Ignition coil

- Remove with Ignition Coil Puller T40039

8 - Bolt

- Replace if seal is damaged
- Left cylinder head cover tightening sequence **Left cylinder head cover tightening sequence**
- Right cylinder head cover tightening sequence **Right cylinder head cover tightening sequence**

9 - Valve 2 for camshaft adjustment N208

10 - Bolt

- 2.4 Nm

11 - O-ring

- Replace

12 - Seal

- Replace

13 - Locking bolt

- 35 Nm

14 - Bolt

 © 2011 Mitchell Repair Information Company, LLC.

- 2.4 Nm

15 - Camshaft Adjustment Valve 2 (exhaust) N319

16 - O-ring

- Replace

17 - Bolt

- Replace
- Observe sequence for loosening --> **Fig. 228**
- Tightening order **Cylinder head tightening sequence**

Left cylinder head cover tightening sequence

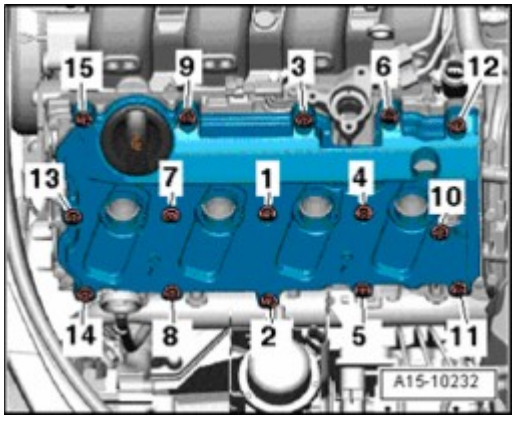

Fig. 202: Left Cylinder Head Cover Bolts Removal Sequence
Courtesy of VOLKSWAGEN UNITED STATES, INC.

- Tighten bolts - **1 to 15** - in sequence.

- 9 Nm

Right cylinder head cover tightening sequence

 © 2011 Mitchell Repair Information Company, LLC.

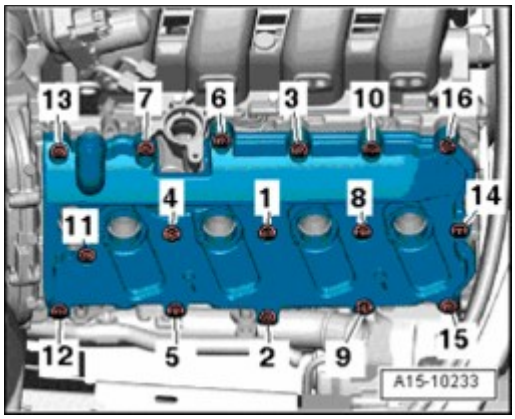

Fig. 203: Removing Right Cylinder Head Cover Bolts In Sequence & Cylinder Head Cover
Courtesy of VOLKSWAGEN UNITED STATES, INC.

- Tighten bolts - **1 to 16** - in sequence.

- 9 Nm

Cylinder head tightening sequence

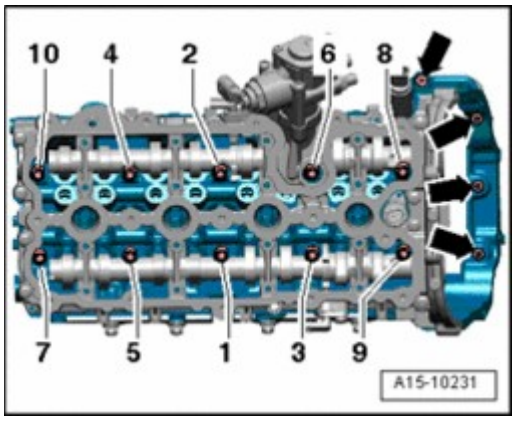

Fig. 204: Tightening Cylinder Head Bolts In Stages In Tightening Sequence
Courtesy of VOLKSWAGEN UNITED STATES, INC.

- Tighten bolts in 5 stages - **1 to 5** - in sequence as follows:
- Insert bolts by hand as far as stop.
- Tighten bolts to 30 Nm.
- Tighten bolts to 60 Nm.

- Tighten an additional 90° ($^{1}/_{4}$ turn).
- Tighten an additional 90° ($^{1}/_{4}$ turn).
- Insert bolts - **arrows** - with locking compound and tighten to 8 Nm; Locking compound .
- Tighten bolts - **arrows** - an additional 90° ($^{1}/_{4}$ turn).

 © 2011 Mitchell Repair Information Company, LLC.

Checking cylinder head for distortion

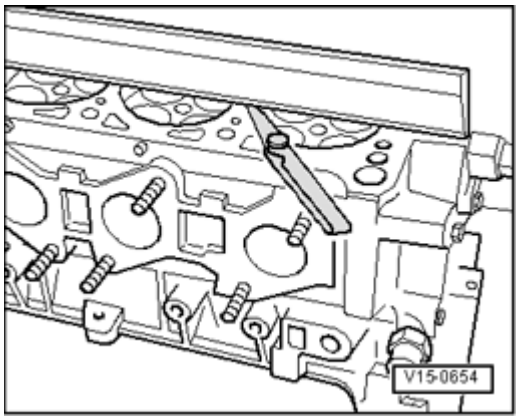

Fig. 205: Checking Cylinder Head For Distortion
Courtesy of VOLKSWAGEN UNITED STATES, INC.

- Check cylinder head at multiple points for distortion, using straight edge and feeler gauges.
- Maximum permissible warpage: 0.1 mm.

Reworking dimension, cylinder head

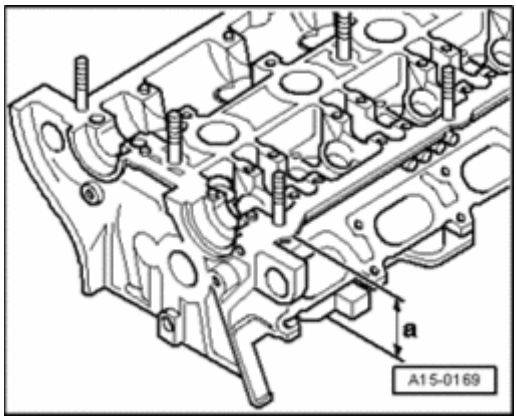

Fig. 206: Reworking Dimension, Cylinder Head
Courtesy of VOLKSWAGEN UNITED STATES, INC.

Resurfacing cylinder head (face grinding) is only permissible to minimum dimension - **a** -.

- Minimum dimension: - **a** - = 139.5 mm.

Left cylinder head cover, removing and installing

Special tools, testers and auxiliary items required

 © 2011 Mitchell Repair Information Company, LLC.

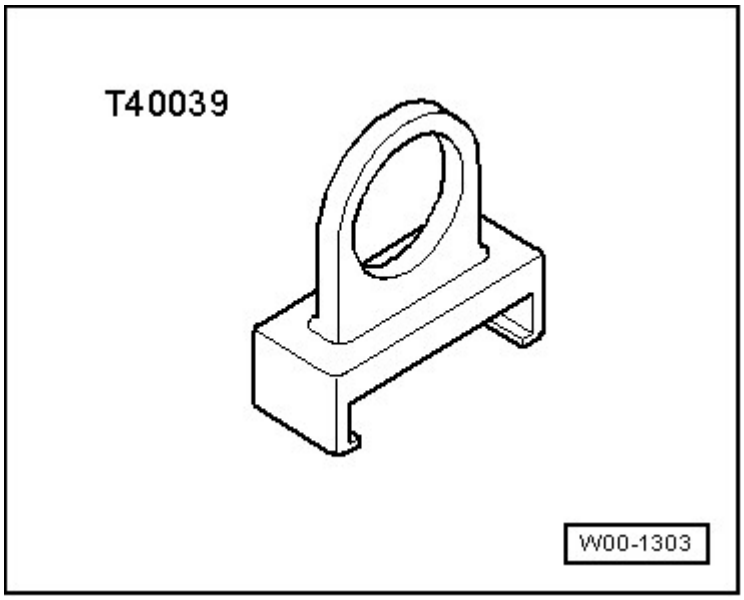

Fig. 207: Ignition Coil Puller T40039
Courtesy of VOLKSWAGEN UNITED STATES, INC.

- Ignition Coil Puller T40039

Removing

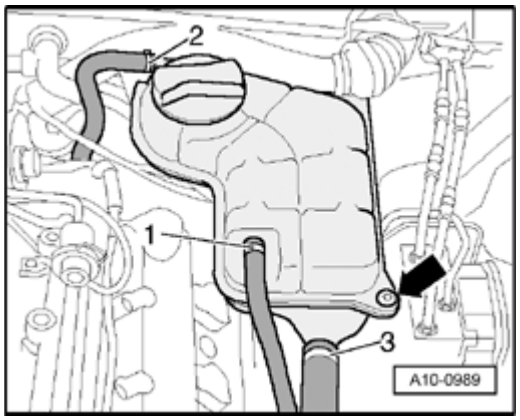

Fig. 208: Removing Coolant Hoses
Courtesy of VOLKSWAGEN UNITED STATES, INC.

- Remove coolant hose - **2** - from coolant reservoir.
- Remove coolant reservoir - **arrow** - and disconnect electrical connector on Engine Coolant Level (ECL) Warning Switch F66 at bottom of coolant reservoir.
- Lay aside coolant reservoir with connected coolant hoses - **1 and 3** -.

 © 2011 Mitchell Repair Information Company, LLC.

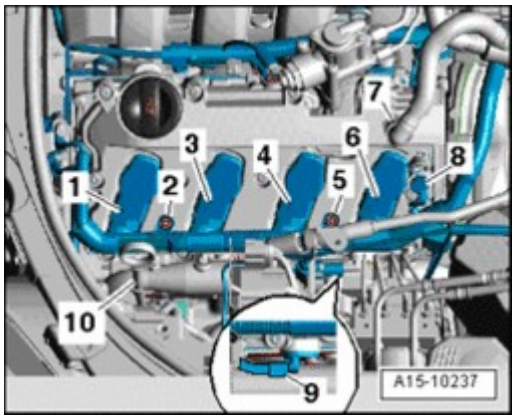

Fig. 209: Removing Oil Dipstick From Guide Tube, Bolts Electrical Connectors & Crankcase Ventilation Hose
Courtesy of VOLKSWAGEN UNITED STATES, INC.

- Remove oil dipstick - **10** - from guide tube.
- Remove bolts - **2 and 5** -.
- Disconnect electrical connectors - **1, 3, 4, 6, 8, 9** - and free up wiring harness.
- Remove crankcase ventilation hose - **7** - by pressing release buttons.

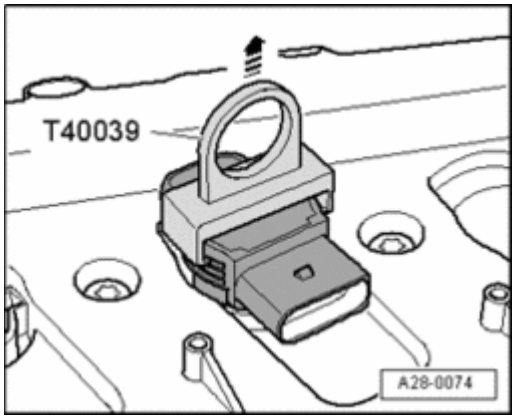

Fig. 210: Removing Ignition Coils Using Ignition Coil Puller T40039
Courtesy of VOLKSWAGEN UNITED STATES, INC.

- Remove ignition coils using ignition coil puller T40039.

 © 2011 Mitchell Repair Information Company, LLC.

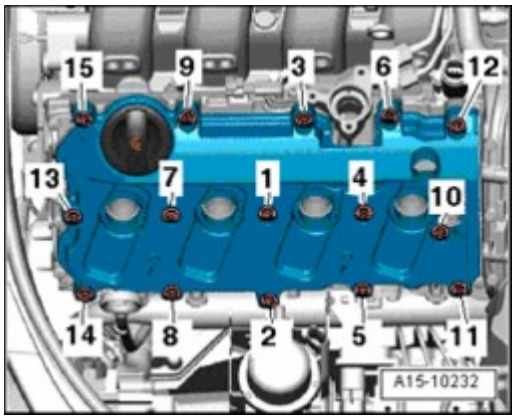

Fig. 211: Left Cylinder Head Cover Bolts Removal Sequence
Courtesy of VOLKSWAGEN UNITED STATES, INC.

- Remove left cylinder head cover bolts - **15 to 1** - in sequence.
- Remove cylinder head cover.

Installing

- Tightening torque **Left cylinder head cover tightening sequence**.

Installation is in reverse order of removal, note the following:

NOTE:

- **Replace cylinder head cover gaskets if damaged.**
- **Replace bolts for cylinder head cover if gasket is damaged.**
- **Secure all hose connections using hose clamps appropriate for the model type .**

- Clean sealing surfaces so they are completely free of any oil or grease.
- Tighten cylinder head cover bolts **Left cylinder head cover tightening sequence**

Right cylinder head cover, removing and installing

Special tools, testers and auxiliary items required

 © 2011 Mitchell Repair Information Company, LLC.

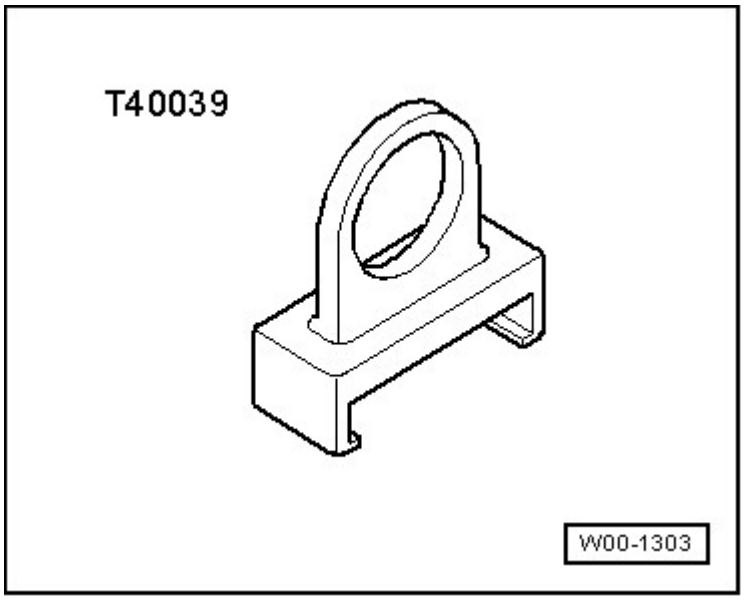

Fig. 212: Ignition Coil Puller T40039
Courtesy of VOLKSWAGEN UNITED STATES, INC.

- Ignition coil puller T40039

Removing

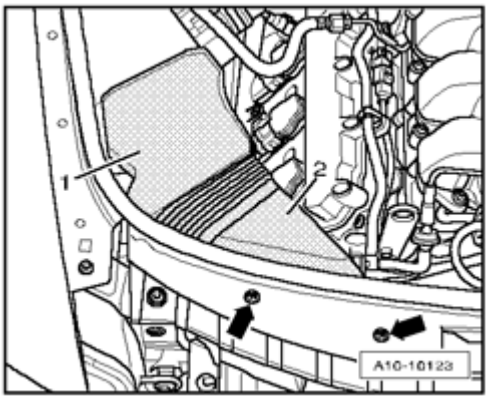

Fig. 213: Removing Bolts & Air Duct
Courtesy of VOLKSWAGEN UNITED STATES, INC.

- Remove bolts - **arrows** -.
- Remove air duct - **1 and 2** -.

 © 2011 Mitchell Repair Information Company, LLC.

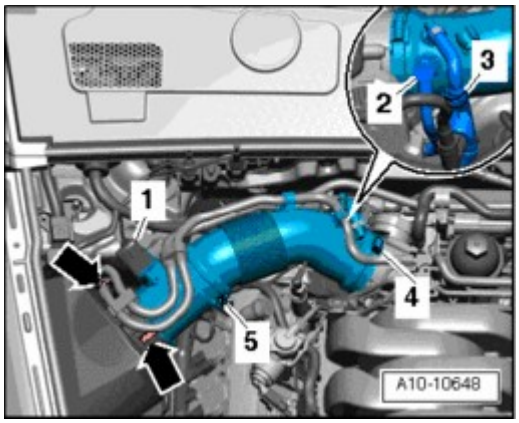

Fig. 214: Identifying Mass Air Flow (MAF) Sensor G70 Electrical Harness Connector, Vacuum Line, Hose Connection, Crankcase Ventilation Hose & Hose Clamps
Courtesy of VOLKSWAGEN UNITED STATES, INC.

- Free up fuel line and line to EVAP canister on air filter housing and air guide pipe.
- Disconnect electrical harness connector - **1** - at Mass Air Flow (MAF) Sensor G70.
- Remove vacuum line - **3** - to air guide hose.

CAUTION: Risk of violating emissions legislation.

- **Do not open hose connection - 2 - !**

- Lay aside air guide hose with connected crankcase ventilation hose - **2** - by loosening hose clamp - **4** - and opening clips - **arrows** -.

NOTE:

- **Ignore - 5 -.**

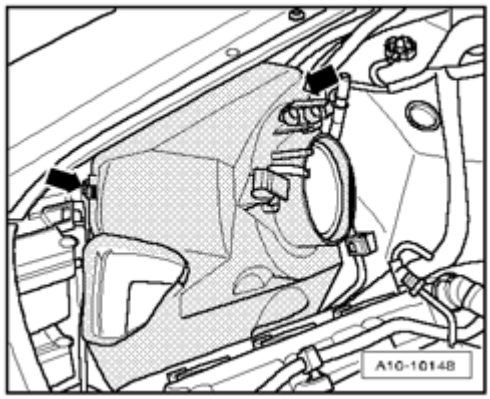

Fig. 215: Opening Clips And Removing Upper Part Of Air Filter Housing
Courtesy of VOLKSWAGEN UNITED STATES, INC.

- Open clips - **arrows** - and remove upper part of air filter housing.

 © 2011 Mitchell Repair Information Company, LLC.

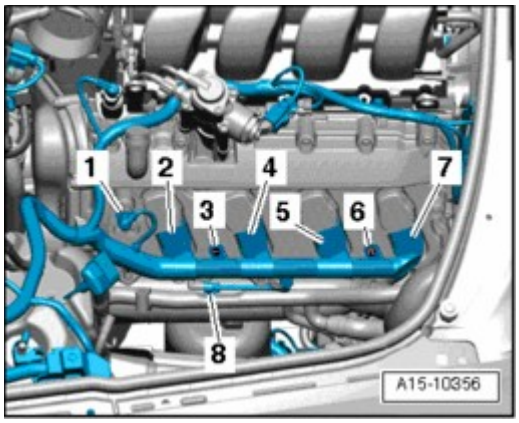

Fig. 216: Removing Bolts On Right Cylinder Head & Disconnecting Electrical Connectors
Courtesy of VOLKSWAGEN UNITED STATES, INC.

- Remove bolts - **3 and 6** - on right cylinder head.
- Disconnect electrical connectors - **1, 2, 4, 5, 7, 8** -.

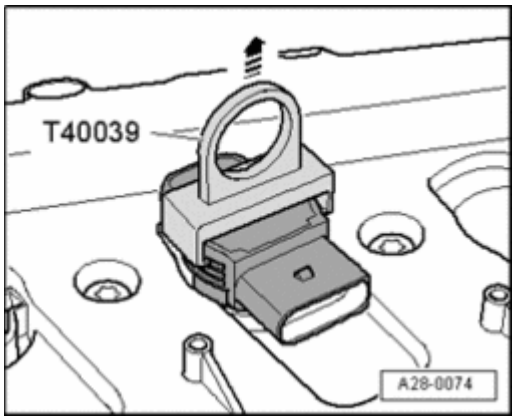

Fig. 217: Removing Ignition Coils Using Ignition Coil Puller T40039
Courtesy of VOLKSWAGEN UNITED STATES, INC.

- Remove ignition coils using ignition coil puller T40039.

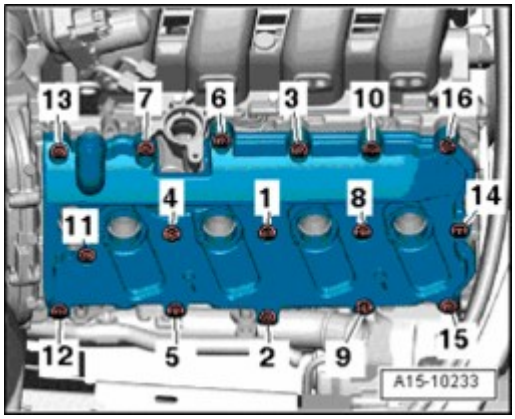

Fig. 218: Removing Right Cylinder Head Cover Bolts In Sequence & Cylinder Head Cover

 © 2011 Mitchell Repair Information Company, LLC.

Courtesy of VOLKSWAGEN UNITED STATES, INC.

- Remove right cylinder head cover bolts - **16 to 1** - in sequence.
- Remove cylinder head cover.

Installing

- Tightening torque **Right cylinder head cover tightening sequence**.

Installation is in reverse order of removal, note the following:

NOTE:

- **Replace cylinder head cover gaskets if damaged.**
- **Replace bolts for cylinder head cover if gasket is damaged.**
- **Secure all hose connections using hose clamps appropriate for the model type .**

- Clean sealing surfaces so they are completely free of any oil or grease.
- Tighten cylinder head cover bolts **Right cylinder head cover tightening sequence**

Cylinder head, removing and installing

 © 2011 Mitchell Repair Information Company, LLC.

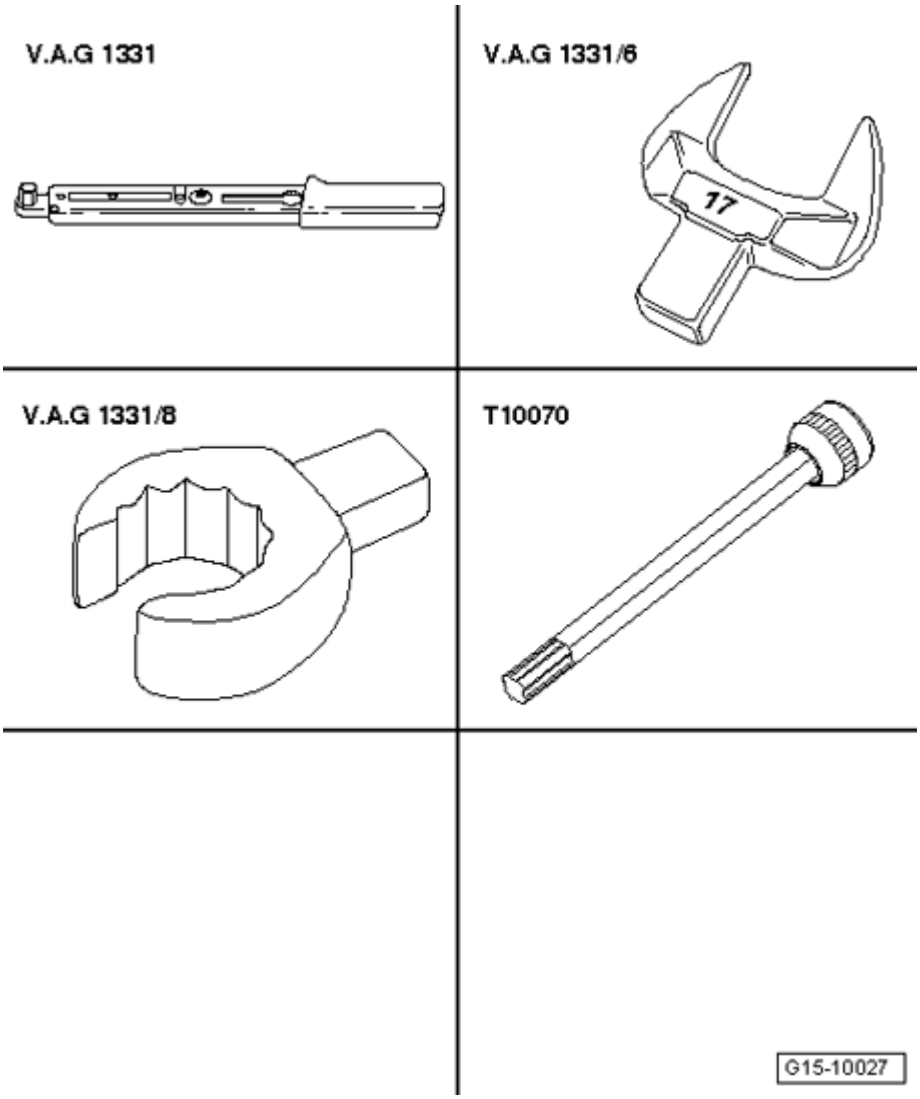

Fig. 219: Identifying Special Tools - Cylinder Head, Removing And Installing
Courtesy of VOLKSWAGEN UNITED STATES, INC.

Special tools, testers and auxiliary items required

- Torque wrench V.A.G 1331
- SW 17 socket V.A.G 1331/6
- SW 14 socket, open ring V.A.G 1331/8
- Multi-point socket T10070

Removing

NOTE:

- **The procedure is primarily shown for left cylinder head in the following illustration.**
- **During installation, all cable ties must be re-installed at the same location.**

 © 2011 Mitchell Repair Information Company, LLC.

- Drain coolant --> **Cooling system, draining and filling**.

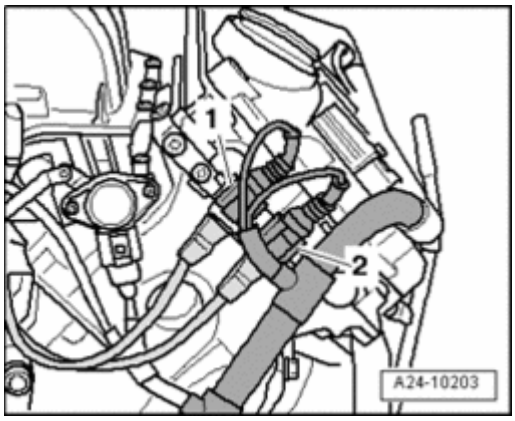

Fig. 220: Removing Knock Sensor Electrical Connectors From Bracket
Courtesy of VOLKSWAGEN UNITED STATES, INC.

- Remove knock sensor electrical connectors - **1 and 2** - from bracket.
- Remove intake manifold --> **24 - MULTIPORT FUEL INJECTION (MFI)** .
- Remove left coolant pipe --> **Left coolant pipe, removing and installing**.
- Remove right coolant pipe --> **Right coolant pipe, removing and installing** (for right cylinder head).
- Remove left secondary air injection combi-valve --> **Left combination valve for Secondary Air Injection, removing and installing** (for left cylinder head).
- Remove right secondary air injection combi-valve --> **Right combination valve for Secondary Air Injection, removing and installing**.
- Remove rear coolant pipe --> **Rear coolant line, removing and installing**.
- Remove cylinder head cover: Left --> **Left cylinder head cover, removing and installing** , right --> **Right cylinder head cover, removing and installing**.
- Remove left and right timing chain covers --> **Left and right timing chain covers, removing and installing**.
- Remove camshaft timing chains from camshafts --> **Camshaft timing chains, removing from camshafts**.
- Remove front muffler: left --> **Left front muffler, removing and installing** , right --> **Right front muffler, removing and installing**.

 © 2011 Mitchell Repair Information Company, LLC.

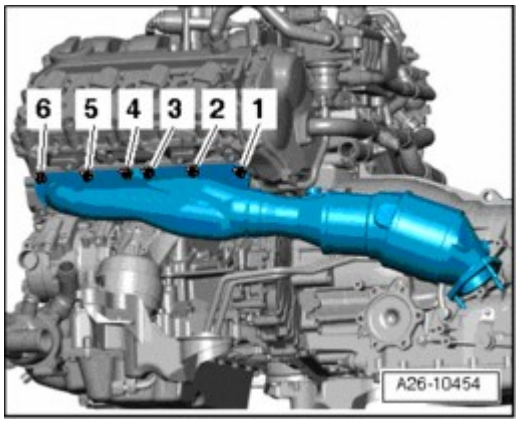

Fig. 221: Removing Nuts And Left Exhaust Manifold With Catalytic Converter
Courtesy of VOLKSWAGEN UNITED STATES, INC.

Left cylinder head:

- Remove left exhaust manifold nuts - **6 through 1** -.

NOTE:

- **To improve clarity, the engine is shown removed.**
- **Both lower securing strips remain installed.**

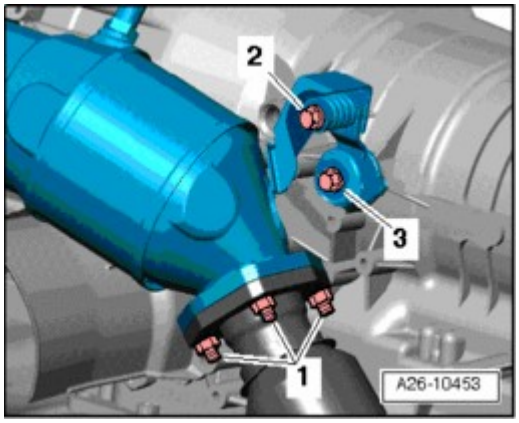

Fig. 222: Removing Left Front Muffler Nuts
Courtesy of VOLKSWAGEN UNITED STATES, INC.

- Remove bolts - **2 and 3** - and remove tab.

NOTE:

- **Ignore - 1 -.**

- Remove left exhaust manifold from cylinder head stud bolts and securing strips.
- Lay aside left exhaust manifold with catalytic converter in engine compartment.

 © 2011 Mitchell Repair Information Company, LLC.

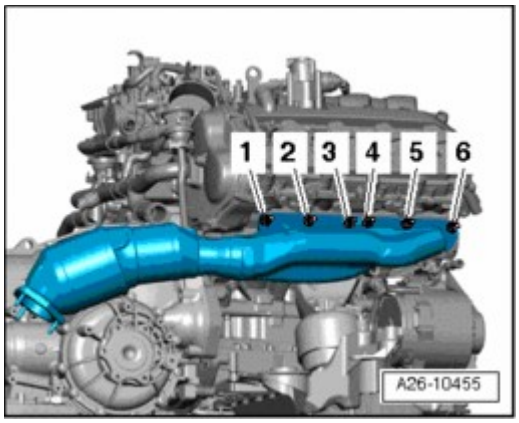

Fig. 223: Removing Nuts And Right Exhaust Manifold With Catalytic Converter
Courtesy of VOLKSWAGEN UNITED STATES, INC.

Right cylinder head:

- Remove right nuts - **6 through 1** -.

NOTE:

- **To improve clarity, the engine is shown removed.**
- **Both lower securing strips remain installed.**

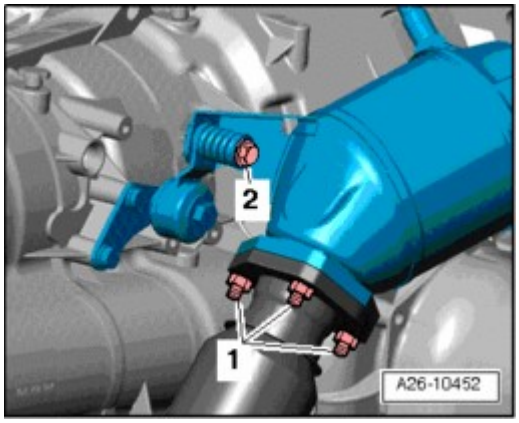

Fig. 224: Removing Right Front Muffler Nuts
Courtesy of VOLKSWAGEN UNITED STATES, INC.

- Remove bolt - **2** -.

NOTE:

- **Ignore - 1 -.**

- Remove right exhaust manifold from cylinder head stud bolts and securing strips.
- Lay aside right exhaust manifold with catalytic converter in engine compartment.

 © 2011 Mitchell Repair Information Company, LLC.

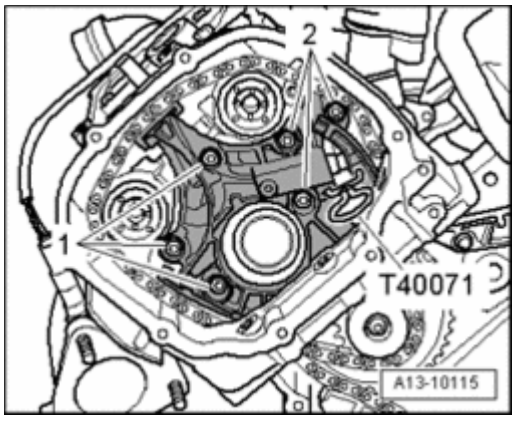

Fig. 225: Tightening Bolts & Replacing Camshaft Bolts
Courtesy of VOLKSWAGEN UNITED STATES, INC.

Continued for both sides:

- Remove bolts - **1 and 2** - and remove affected chain tensioner.

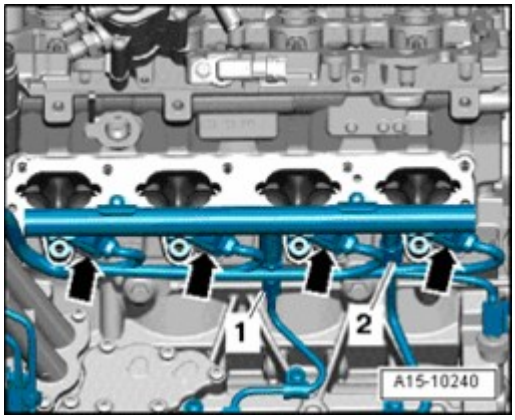

Fig. 226: Disconnecting Electrical Connectors At Fuel Injectors & Removing High Pressure Lines From Connector On Fuel Rail
Courtesy of VOLKSWAGEN UNITED STATES, INC.

- Disconnect electrical connectors - **arrows** - at fuel injectors.
- Remove high pressure line - **2** - from connector on fuel rail.
- Remove high pressure line - **1** - from connector on fuel rail. To do this, counter-hold at hex head with and open-end wrench and loosen union nut.

NOTE:

- **Do not change bent shape of high pressure lines.**

 © 2011 Mitchell Repair Information Company, LLC.

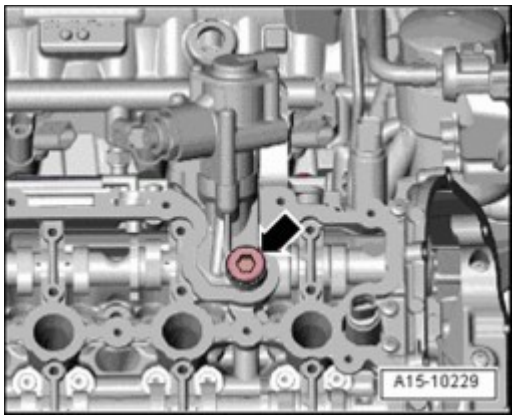

Fig. 227: Removing Locking Bolt
Courtesy of VOLKSWAGEN UNITED STATES, INC.

- Remove locking bolt - **arrow** -.

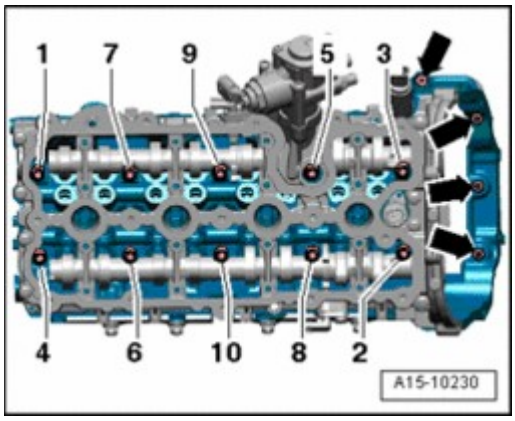

Fig. 228: Cylinder Head Bolts Loosening Sequence
Courtesy of VOLKSWAGEN UNITED STATES, INC.

- Remove bolts - **arrows** -.
- Using Socket T10070 , remove cylinder head bolts in - **1 to 10** - sequence.
- Remove bolts and carefully remove cylinder head.
- Lay cylinder head on a soft surface (foam).

Installing

- Tightening torques --> **Cylinder head, assembly overview** , **Cylinder head tightening sequence** , --> **Camshaft timing chain, assembly overview** , --> **Secondary air injection (AIR) system, assembly overview**.

CAUTION: Risk of damaging sealing surfaces.

- **Carefully remove sealant residue from cylinder head and cylinder block.**

 © 2011 Mitchell Repair Information Company, LLC.

- **Make sure that no long scrapes or scratches result.**

Risk of damaging cylinder block.

- **No oil or coolant must be in the cylinder head bolt blind holes in the cylinder block.**

Risk of leaks in cylinder head seal.

- **Carefully remove all grinding and sanding residue.**
- **Only unpack new cylinder head gasket immediately prior to installation.**
- **To prevent cylinder head seal silicone layer and recessed area from being damaged, always handle seal extremely carefully.**

Risk of damaging open valves.

- **If a replacement cylinder head is installed, only remove plastic base right before cylinder head is installed to protect open valves.**

Risk of damaging valves and piston heads after working on valvetrain.

- **To ensure valves do not strike pistons when starting, carefully rotate engine at least 2 full revolutions.**

NOTE:

- **Replace bolts which have been tightened to torque.**
- **Replace self-locking nuts, sealing rings, seals and O-rings.**
- **If a replacement cylinder head is installed, contact surfaces between bearing elements, roller rocker levers and cam running surfaces must be lubricated before installing cylinder head cover.**
- **Secure all hose connections using hose clamps of series-production status**
- **During installation, all cable ties must be re-installed at the same location.**

- Check whether camshafts of both cylinder heads stand in "TDC" position.

 © 2011 Mitchell Repair Information Company, LLC.

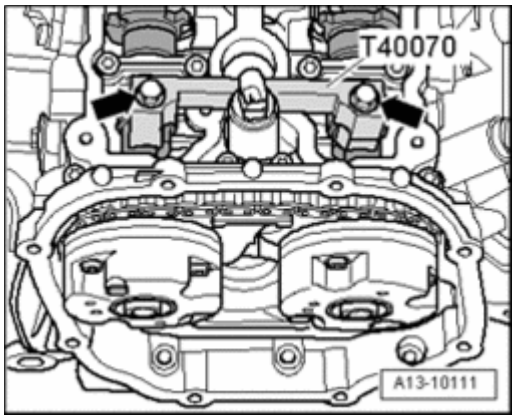

Fig. 229: Removing/Installing Camshaft Locators T40070 On Both Cylinder Heads
Courtesy of VOLKSWAGEN UNITED STATES, INC.

- Camshaft Clamp T40070 must be installed on both cylinder heads and tightened to 25 Nm.

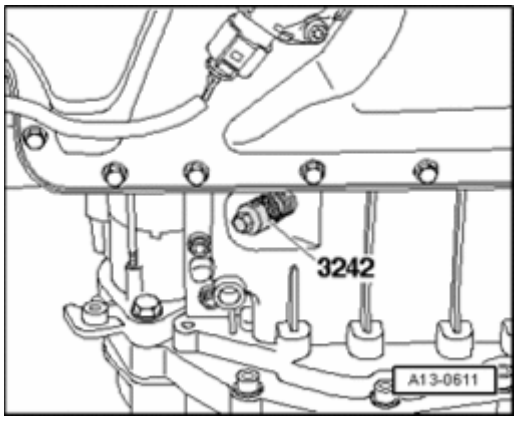

Fig. 230: Removing/Installing Crankshaft Holder 3242 Into Hole
Courtesy of VOLKSWAGEN UNITED STATES, INC.

- Crankshaft holder 3242 must be installed.

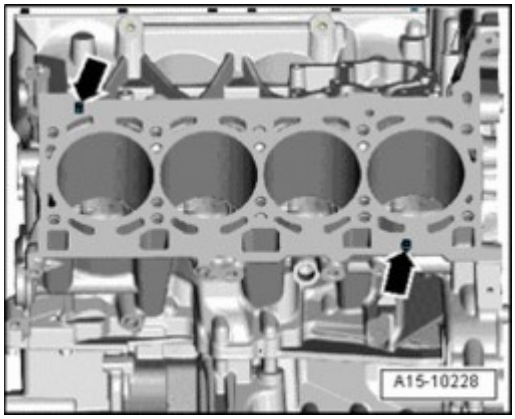

Fig. 231: Identifying Alignment Bushings In Cylinder Block
Courtesy of VOLKSWAGEN UNITED STATES, INC.

 © 2011 Mitchell Repair Information Company, LLC.

- Position cylinder head gasket.

- Pay close attention to alignment bushings in cylinder block - **arrows** -.
- Pay attention to installation position of cylinder head gasket, marking "oben" (top) or part number must face toward cylinder head.

- Install cylinder head.

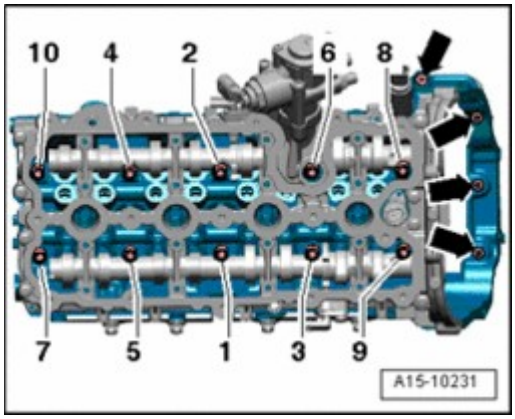

Fig. 232: Tightening Cylinder Head Bolts In Stages In Tightening Sequence
Courtesy of VOLKSWAGEN UNITED STATES, INC.

- Tighten cylinder head bolts **Cylinder head tightening sequence**

NOTE:

- **Bolts must not be tightened after repairs.**

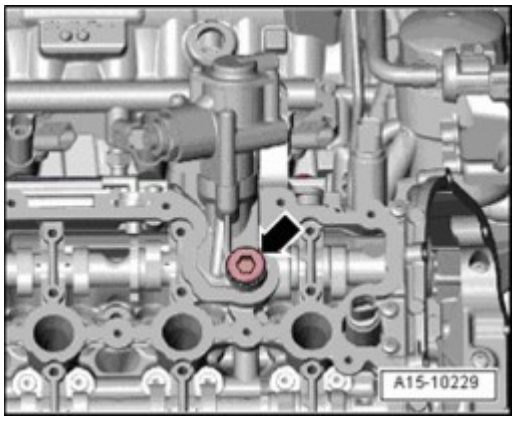

Fig. 233: Removing Locking Bolt
Courtesy of VOLKSWAGEN UNITED STATES, INC.

- Tighten locking bolt - **arrow** -.

 © 2011 Mitchell Repair Information Company, LLC.

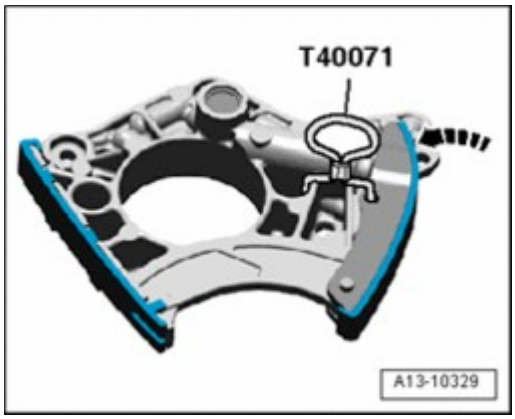

Fig. 234: Pressing Left/Right Camshaft Timing Chain Guide Rail Inward And Securing Chain Tensioner With Locking Pin T40071
Courtesy of VOLKSWAGEN UNITED STATES, INC.

- Check whether camshaft timing chain tensioner guide rail is secured with Locking Pin T40071.

NOTE:

- **If the tensioning element was removed from the chain tensioner, note installation position: Hole in housing floor faces toward chain tensioner, piston faces toward tensioning rail.**
- **Disregard - arrow -.**

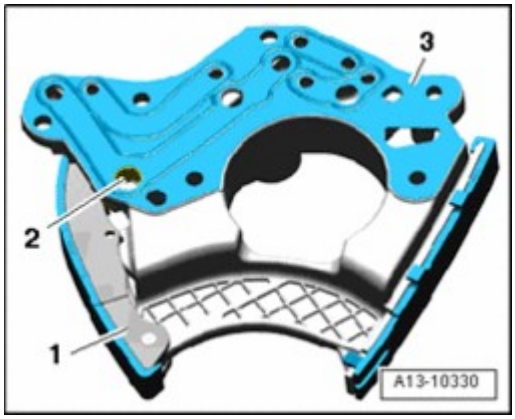

Fig. 235: Identifying Chain Tensioner Oil Screen, Gasket & Chain Tensioner
Courtesy of VOLKSWAGEN UNITED STATES, INC.

- Clean chain tensioner oil screen - **2** -.
- Place a new gasket - **3** - onto rear of chain tensioner - **1** -.

 © 2011 Mitchell Repair Information Company, LLC.

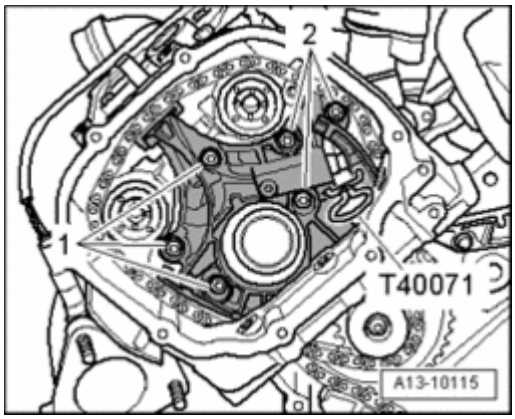

Fig. 236: Tightening Bolts & Replacing Camshaft Bolts
Courtesy of VOLKSWAGEN UNITED STATES, INC.

- Set chain tensioner in place and install camshaft timing chain, as shown in the illustration.
- Tighten bolts - **1 and 2** -.

The rest of installation is in reverse order of removal, note the following:

- Install exhaust manifold: Left --> **Left exhaust manifold with catalytic converter, removing and installing** , right --> **Right exhaust manifold with catalytic converter, removing and installing**.
- Install front muffler: left --> **Left front muffler, removing and installing** , right --> **Right front muffler, removing and installing**.
- Install camshaft timing chains **Installing**.
- Install left and right timing chain covers **Installing**.
- Install combination valve for Secondary Air Injection (AIR) system: Left --> **Left combination valve for Secondary Air Injection, removing and installing** , right --> **Right combination valve for Secondary Air Injection, removing and installing**.
- Install rear coolant pipe --> **Rear coolant line, removing and installing**.
- Install left coolant pipe --> **Left coolant pipe, removing and installing**.
- Place oil dipstick guide tube in hole on upper part of oil pan.
- Install right coolant pipe --> **Right coolant pipe, removing and installing**.
- Install cylinder head cover: Left --> **Left cylinder head cover, removing and installing** , right --> **Right cylinder head cover, removing and installing**.
- Install intake manifold --> **24 - MULTIPORT FUEL INJECTION (MFI)** .

 © 2011 Mitchell Repair Information Company, LLC.

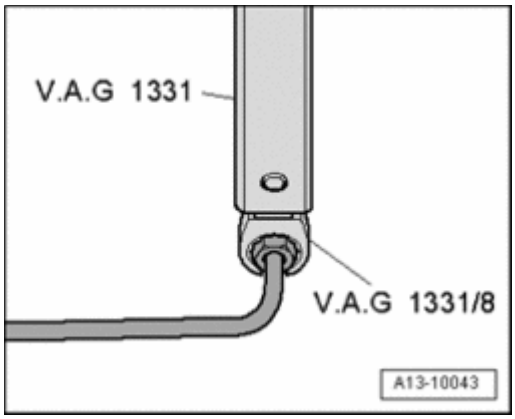

Fig. 237: Fastening High-Pressure Line At Fuel Rail Using Torque Wrench V.A.G 1331 With Open End Wrench Socket V.A.G 1331/8
Courtesy of VOLKSWAGEN UNITED STATES, INC.

- To tighten SW 14 union nut at fuel rail, use Torque Wrench V.A.G 1331 with Socket Insert AF 14, open ring V.A.G 1331/8 --> **24 - MULTIPORT FUEL INJECTION (MFI)** .

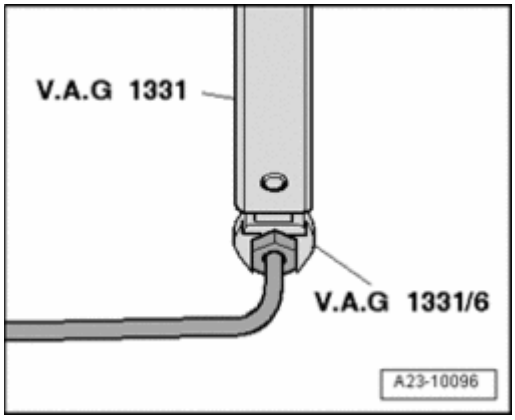

Fig. 238: Tightening SW 17 Union Nut At Fuel Rail Using Torque Wrench V.A.G 1331 With SW 17 Socket V.A.G 1331/6
Courtesy of VOLKSWAGEN UNITED STATES, INC.

- To tighten SW 17 union nut at fuel rail, use Torque Wrench V.A.G 1331 with SW 17 socket V.A.G 1331/6 --> **24 - MULTIPORT FUEL INJECTION (MFI)** .
- Align exhaust system free of tension --> **Exhaust system, installing free of tension**.
- Change engine oil 405.
- Change coolant --> **Cooling system, draining and filling**.

Compression pressure, measuring

 © 2011 Mitchell Repair Information Company, LLC.

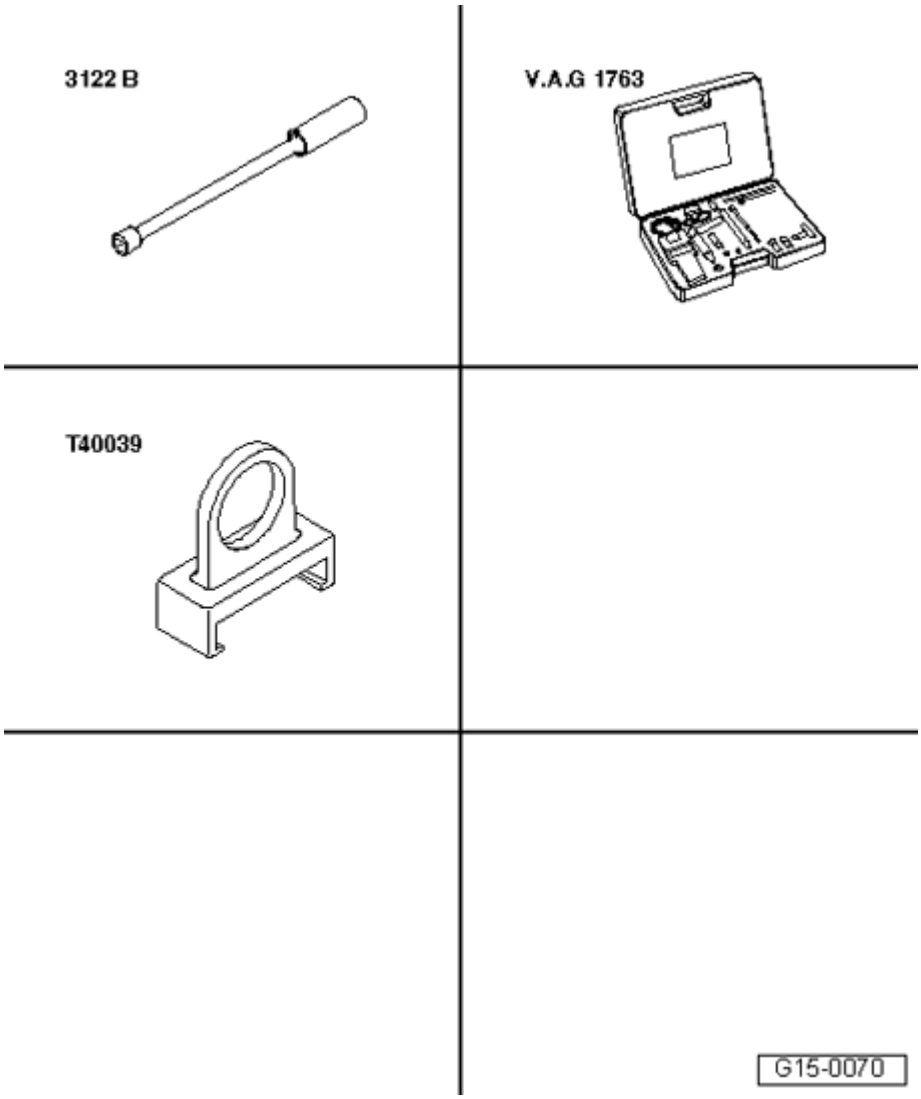

Fig. 239: Identifying Special Tools - Compression Pressure, Measuring
Courtesy of VOLKSWAGEN UNITED STATES, INC.

Special tools, testers and auxiliary items required

- Spark plug removal tool 3122 B
- Compression tester V.A.G 1763
- Ignition Coil Puller T40039

Work procedure

- Engine oil temperature at least 30° C.
- Battery voltage at least 12.5 V.

- Switch off ignition.
- Remove Engine Control Module (ECM) J623 --> **24 - MULTIPORT FUEL INJECTION (MFI)** .

 © 2011 Mitchell Repair Information Company, LLC.

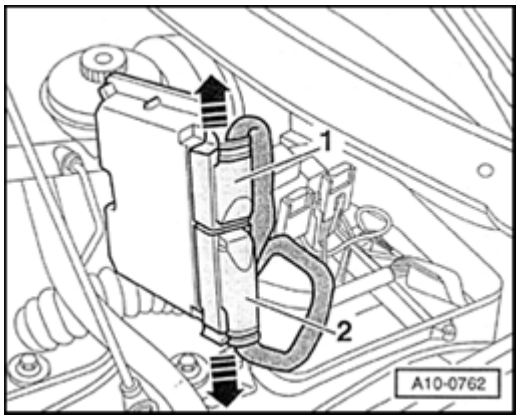

Fig. 240: Removing Smaller Connector From Engine Control Module (ECM) By Removing Connector Lock
Courtesy of VOLKSWAGEN UNITED STATES, INC.

- Only remove smaller connector - **1** - from engine control module (ECM) by removing connector lock - **arrow** -.

NOTE:

- **The larger connector - 2 - remains connected.**

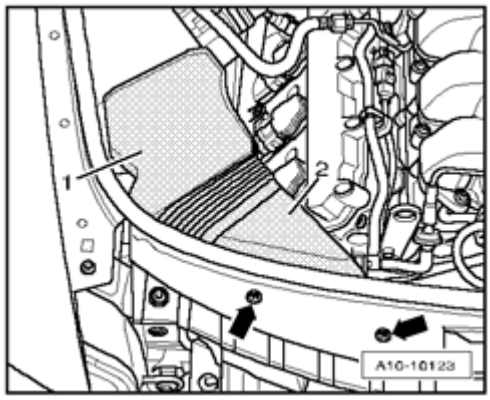

Fig. 241: Removing Bolts & Air Duct
Courtesy of VOLKSWAGEN UNITED STATES, INC.

- Remove bolts - **arrows** -.
- Remove air duct - **1 and 2** -.

 © 2011 Mitchell Repair Information Company, LLC.

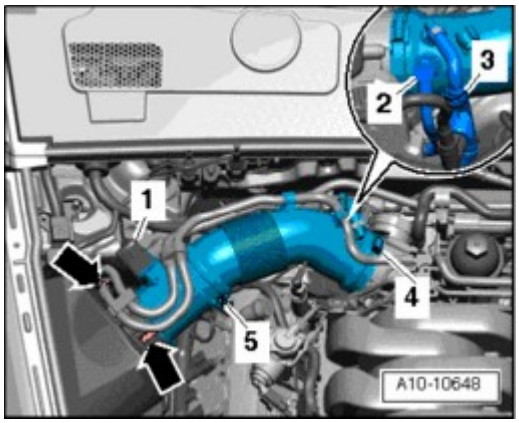

Fig. 242: Identifying Mass Air Flow (MAF) Sensor G70 Electrical Harness Connector, Vacuum Line, Hose Connection, Crankcase Ventilation Hose & Hose Clamps
Courtesy of VOLKSWAGEN UNITED STATES, INC.

- Free up fuel line and line to EVAP canister on air filter housing and air guide pipe.
- Disconnect electrical harness connector - **1** - at Mass Air Flow (MAF) Sensor G70.
- Remove vacuum line - **3** - to air guide hose.

CAUTION: Risk of violating emissions legislation.

- **Do not open hose connection - 2 - !**

- Lay aside air guide hose with connected crankcase ventilation hose - **2** - by loosening hose clamp - **4** - and opening clips - **arrows** -.

NOTE:

- **Ignore - 5 -.**

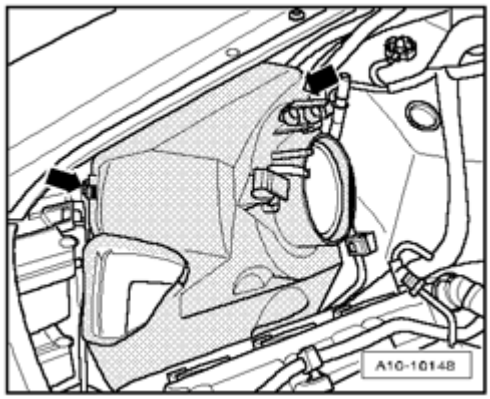

Fig. 243: Opening Clips And Removing Upper Part Of Air Filter Housing
Courtesy of VOLKSWAGEN UNITED STATES, INC.

- Open clips - **arrows** - and remove upper part of air filter housing.

 © 2011 Mitchell Repair Information Company, LLC.

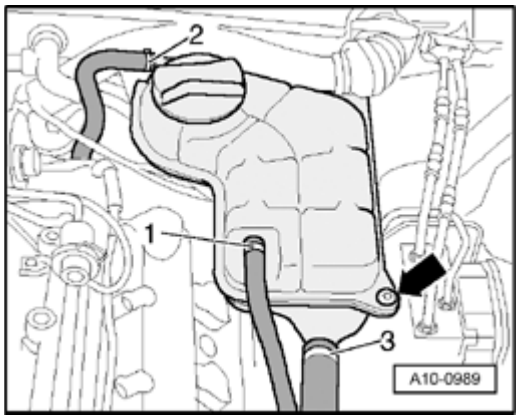

Fig. 244: Removing Coolant Hoses
Courtesy of VOLKSWAGEN UNITED STATES, INC.

- Remove coolant reservoir - **arrow** - and disconnect electrical connector on Engine Coolant Level (ECL) Warning Switch F66 at bottom of coolant reservoir.
- Lay aside coolant reservoir with connected coolant hoses - **1, 2, 3** -.

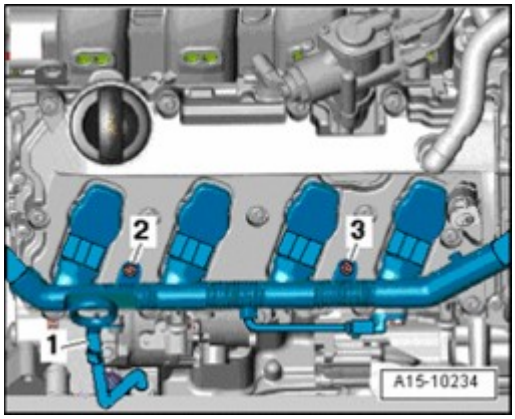

Fig. 245: Identifying Oil Dipstick, Bolts & Ignition Coils Electrical Harness Connectors
Courtesy of VOLKSWAGEN UNITED STATES, INC.

- Remove oil dipstick - **1** - from guide tube.
- Remove bolts - **2 and 3** -.
- Disconnect electrical harness connectors at ignition coils.
- Press electrical wiring harness to side.

 © 2011 Mitchell Repair Information Company, LLC.

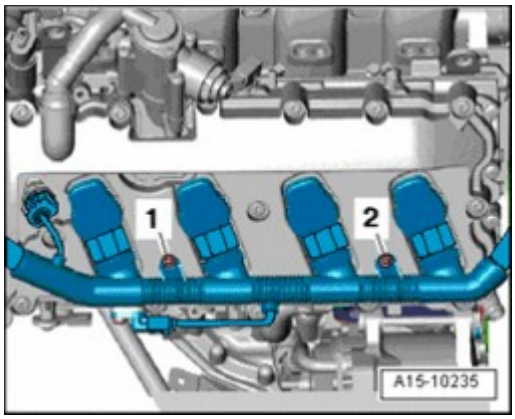

Fig. 246: Identifying Bolts & Ignition Coils Electrical Harness Connectors
Courtesy of VOLKSWAGEN UNITED STATES, INC.

- Remove bolts - **1 and 2** -.
- Disconnect electrical harness connectors at ignition coils.
- Press electrical wiring harness to side.

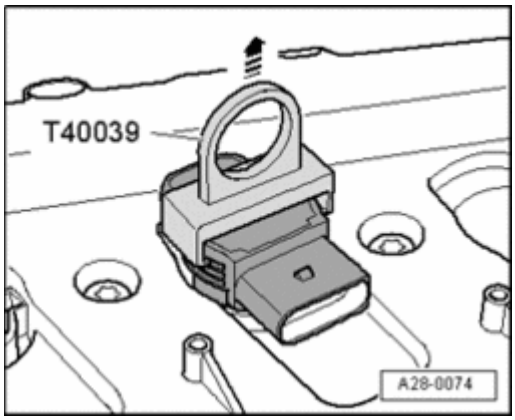

Fig. 247: Removing Ignition Coils Using Ignition Coil Puller T40039
Courtesy of VOLKSWAGEN UNITED STATES, INC.

- Remove all ignition coils using Ignition Coil Puller T40039.
- Remove spark plugs using Spark Plug Removal Tool 3122 B.
- Check compression using compression tester V.A.G 1763.

NOTE:

- **Using tester operating instructions.**

- Have a second technician press accelerator pedal completely and at the same time operate starter long enough until pressure increase no longer appears on tester.

Compression pressure	Bar pressure
New	10.0 to 14.0
Wear limit	9.0

 © 2011 Mitchell Repair Information Company, LLC.

Maximum difference between cylinders	3.0

Assembly is in reverse order of removal, note the following:

- Install sparks plugs 405.
- Install Engine Control Module (ECM) J623 --> **24 - MULTIPORT FUEL INJECTION (MFI)** .

Faults are saved in ECM when electrical connectors are disconnected:

- Connect Vehicle Diagnosis, testing info. system VAS 5051.
- Start "Guided Functions" operating mode.
- Generate readiness code in ECM.

CHAIN DRIVE

Timing chain covers, assembly overview

 © 2011 Mitchell Repair Information Company, LLC.

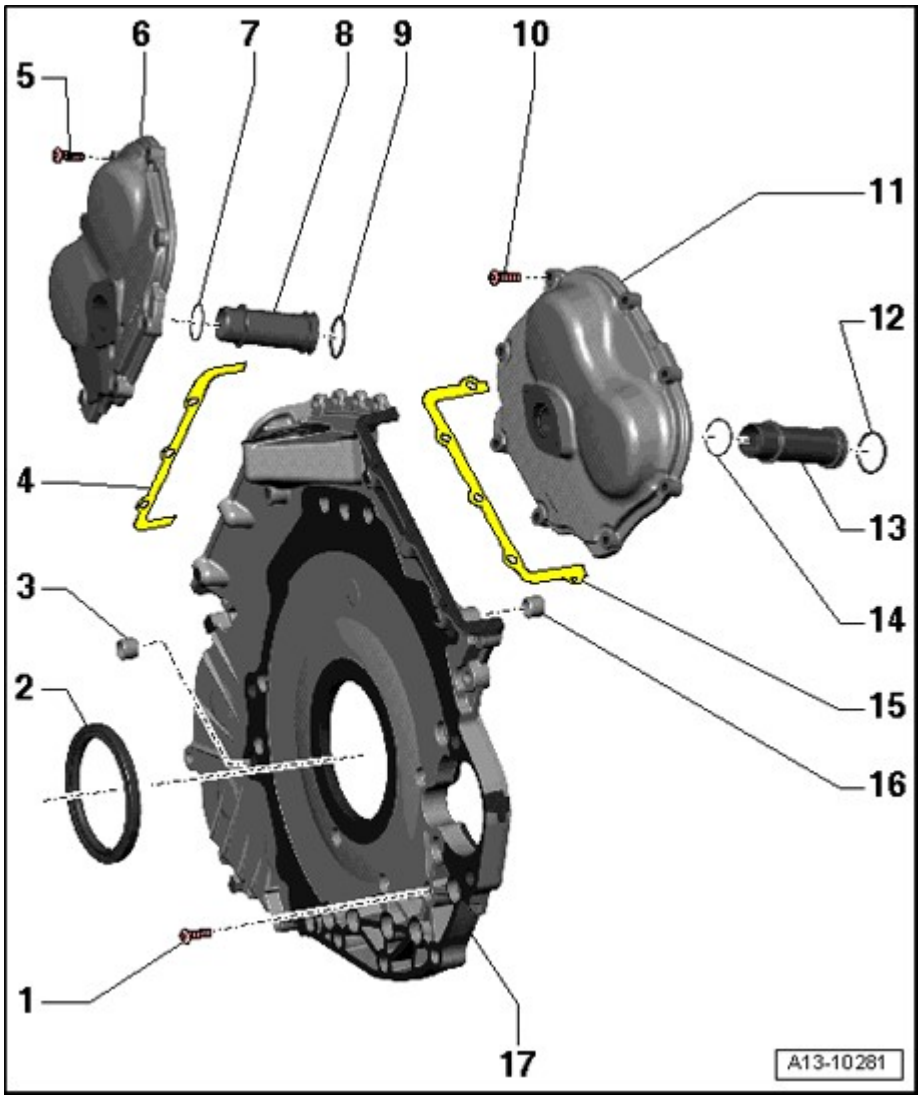

Fig. 248: Timing Chain Covers, Assembly Overview
Courtesy of VOLKSWAGEN UNITED STATES, INC.

1 - Bolt

- Tightening order **Timing chain lower cover tightening sequence**

2 - Transmission-side crankshaft sealing ring

- Replacing --> **Transmission-side crankshaft sealing ring, replacing**.

3 - Alignment bushing

- 2 pieces

4 - Left cylinder head gasket

 © 2011 Mitchell Repair Information Company, LLC.

5 - Bolt

- Tightening order **Left timing chain cover, tightening sequence**

6 - Left timing chain cover

- Removing and installing --> **Left and right timing chain covers, removing and installing**
- Tightening order **Left timing chain cover, tightening sequence**

7 - O-ring

- Replace

8 - Left coolant intermediate pipe

- Drive out with drift

9 - O-ring

- Replace

10 - Bolt

- Tightening order **Right timing chain cover, tightening sequence**

11 - Right timing chain cover

- Removing and installing --> **Left and right timing chain covers, removing and installing**
- Tightening order **Right timing chain cover, tightening sequence**

12 - O-ring

- Replace

13 - Right coolant intermediate pipe

- Drive out with drift

14 - O-ring

- Replace

15 - Right cylinder head gasket

16 - Alignment bushing

- 2 pieces

 © 2011 Mitchell Repair Information Company, LLC.

17 - Lower timing chain cover

- Removing and installing --> **Timing chain lower cover, removing and installing**
- Tightening order **Timing chain lower cover tightening sequence**

Left timing chain cover, tightening sequence

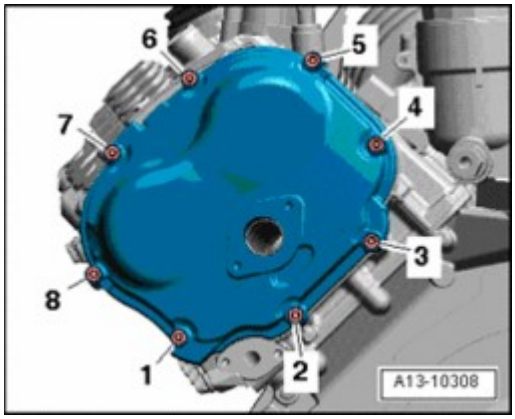

Fig. 249: Identifying Left Timing Chain Cover And Tighten/Removing Bolts Sequence
Courtesy of VOLKSWAGEN UNITED STATES, INC.

- Tighten bolts in - **1 to 8** - sequence.
- 9 Nm

Right timing chain cover, tightening sequence

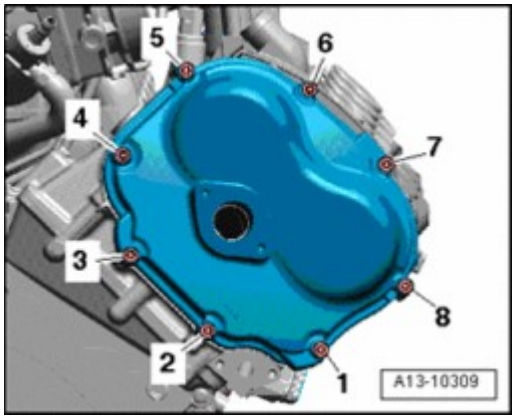

Fig. 250: Identifying Right Timing Chain Cover And Tighten/Removing Bolts Sequence
Courtesy of VOLKSWAGEN UNITED STATES, INC.

- Tighten bolts in - **1 to 8** - sequence.
- 9 Nm

Timing chain lower cover tightening sequence

 © 2011 Mitchell Repair Information Company, LLC.

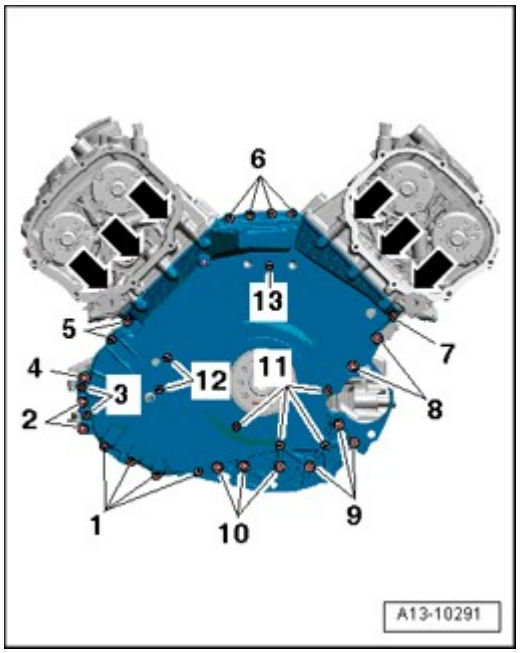

Fig. 251: Removing/Installing Bolts And Lower Timing Chain Cover
Courtesy of VOLKSWAGEN UNITED STATES, INC.

- Replace M6 bolts - **1, 3, 5, 6, 7, 11, 12, 13** - and - **arrows** -.
- Tighten bolts in 6 stages as follows:
- Insert bolts - **arrows** - with locking compound and pre-tighten to 5 Nm.
- Tighten bolts - **1 to 13** - in diagonal sequence to 8 Nm.
- Tighten bolts - **arrows** - to 8 Nm.
- Tighten M8 bolts - **2, 4, 8, 9, 10** - in a diagonal sequence to 22 Nm.
- Turn M6 bolts - **1, 3, 5, 6, 7, 11, 12, 13** - an additional 90° ($^{1}/_{4}$ turn) in a diagonal sequence.
- Tighten bolts - **arrows** - an additional 90° ($^{1}/_{4}$ turn).

Left and right timing chain covers, removing and installing

Special tools, testers and auxiliary items required

- Hand drill with plastic brush attachment
- Protective glasses
- Sealant

Removing

NOTE:

- **During installation, all cable ties must be re-installed at the same location.**

 © 2011 Mitchell Repair Information Company, LLC.

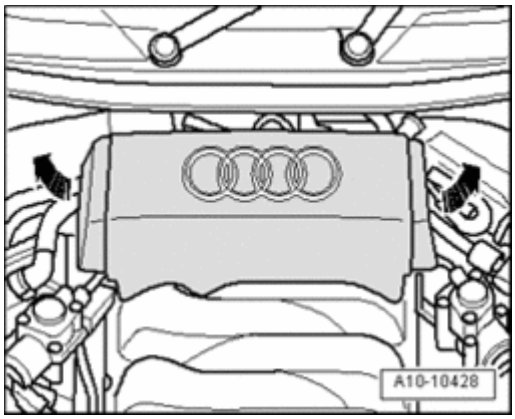

Fig. 252: Removing Rear Engine Cover
Courtesy of VOLKSWAGEN UNITED STATES, INC.

- Pull rear engine cover - **arrows** - off.
- Drain coolant --> **Cooling system, draining and filling**.
- Remove left coolant pipe --> **Left coolant pipe, removing and installing**.
- Remove right coolant pipe --> **Right coolant pipe, removing and installing**.

- Remove oxygen sensors G39 and G108 (in front of catalytic converter) --> **24 - MULTIPORT FUEL INJECTION (MFI)** .
- Remove secondary air injection combi-valve: left --> **Left combination valve for Secondary Air Injection, removing and installing** , right --> **Right combination valve for Secondary Air Injection, removing and installing**.
- Remove rear coolant pipe --> **Rear coolant line, removing and installing**.

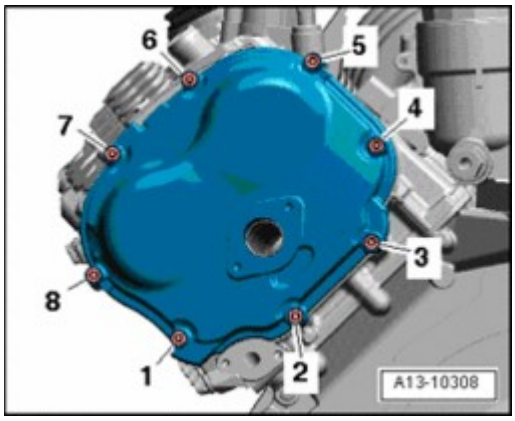

Fig. 253: Identifying Left Timing Chain Cover And Tighten/Removing Bolts Sequence
Courtesy of VOLKSWAGEN UNITED STATES, INC.

- Remove bolts - **1 to 8** - and remove left timing chain cover.

 © 2011 Mitchell Repair Information Company, LLC.

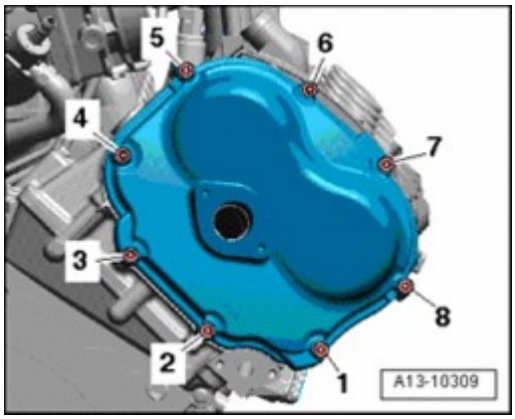

Fig. 254: Identifying Right Timing Chain Cover And Tighten/Removing Bolts Sequence
Courtesy of VOLKSWAGEN UNITED STATES, INC.

- Remove bolts - **1 to 8** - and remove right timing chain cover.

Installing

- Tightening torques **Left timing chain cover, tightening sequence** , **Right timing chain cover, tightening sequence**

NOTE:

- **Replace M6 bolts and O-rings.**
- **Secure all hose connections using hose clamps appropriate for the model type .**
- **During installation, all cable ties must be re-installed at the same location.**

CAUTION: Risk of eye injury.

- **Wear safety glasses.**

CAUTION: Risk of contaminating lubricating system.

- **Cover open parts of engine.**

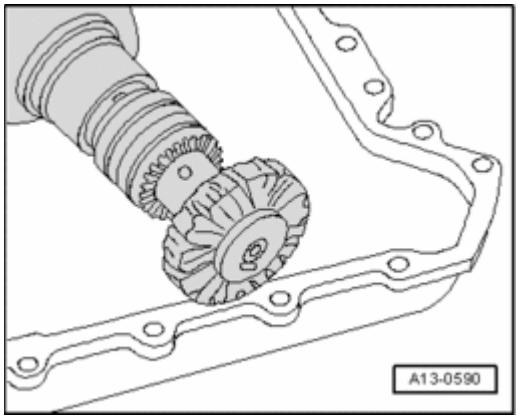

 © 2011 Mitchell Repair Information Company, LLC.

Fig. 255: Using Rotating Plastic Brush To Remove Any Sealant Residue From Sealing Flange, Cylinder Block And Upper Part Of Oil Pan
Courtesy of VOLKSWAGEN UNITED STATES, INC.

- Remove sealant residue on timing chain covers and cylinder head, e.g. with a rotating plastic brush.
- Clean sealing surfaces so they are completely free of any oil or grease.

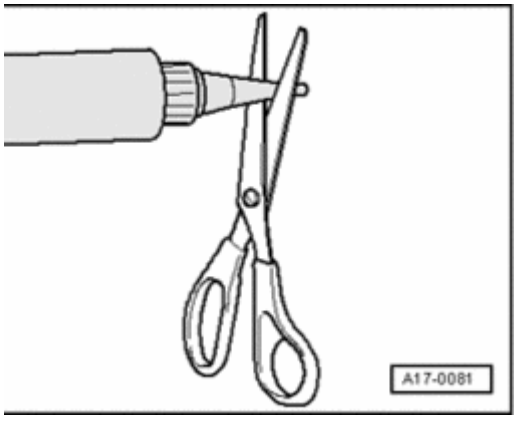

Fig. 256: Cutting Tube Nozzle At Front Marking
Courtesy of VOLKSWAGEN UNITED STATES, INC.

- Cut off nozzle on tube of sealant at front mark (dia. of nozzle approx. 2 mm).

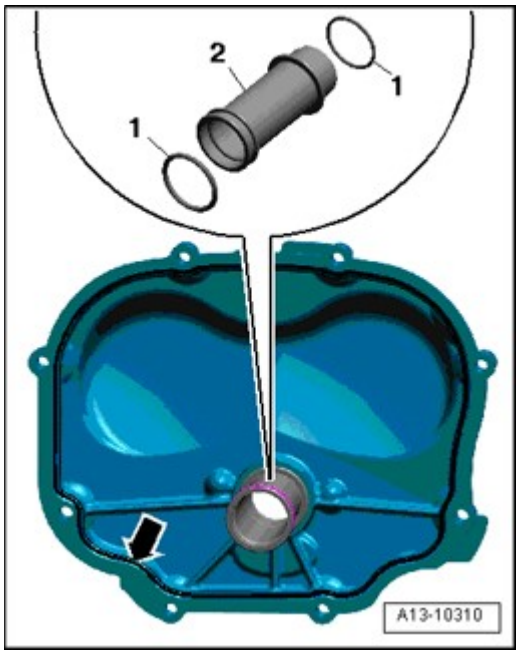

Fig. 257: Driving Left Coolant Intermediate Pipe Out Of Left Timing Chain Cover With Suitable Drift
Courtesy of VOLKSWAGEN UNITED STATES, INC.

- Drive left coolant intermediate pipe - **2** - out of timing chain cover with a drift.
- Replace O-rings - **1** - at coolant intermediate pipe - **2** -.

 © 2011 Mitchell Repair Information Company, LLC.

- Insert coolant intermediate pipe in left timing chain cover.
- Apply sealant bead - **arrows** - on clean sealing surfaces of left timing chain cover, as shown in illustration.

- Thickness of sealant bead: 2.5 mm.

NOTE:

- **Timing chain covers must be installed within 5 minutes after applying sealant.**

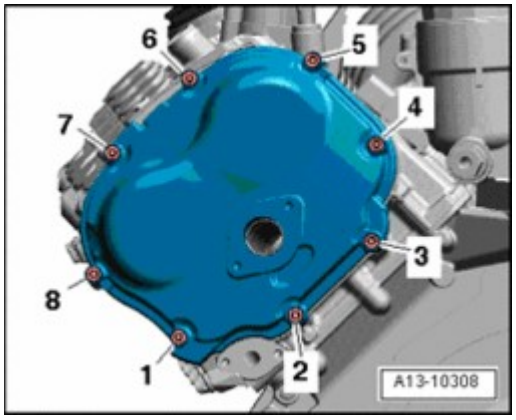

Fig. 258: Identifying Left Timing Chain Cover And Tighten/Removing Bolts Sequence
Courtesy of VOLKSWAGEN UNITED STATES, INC.

- Position left timing chain cover and tighten bolts **Left timing chain cover, tightening sequence**

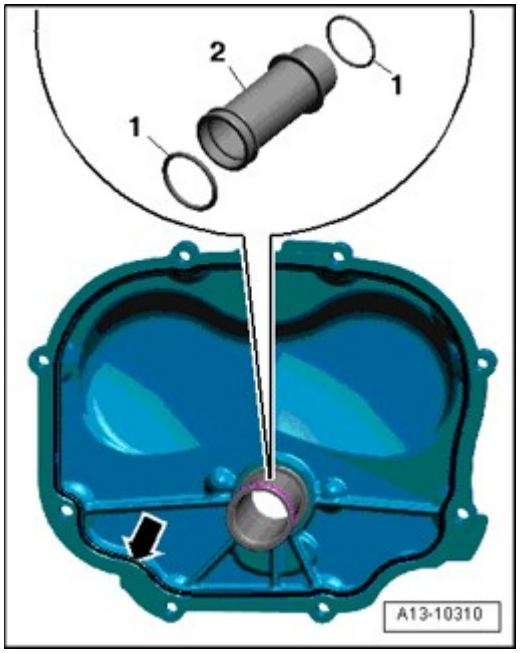

Fig. 259: Driving Left Coolant Intermediate Pipe Out Of Left Timing Chain Cover With Suitable Drift
Courtesy of VOLKSWAGEN UNITED STATES, INC.

 © 2011 Mitchell Repair Information Company, LLC.

- Drive right coolant intermediate pipe - **2** - out of right timing chain cover with a drift.
- Replace O-rings - **1** - at coolant intermediate pipe - **2** -.
- Insert coolant intermediate pipe in right timing chain cover.
- Apply sealant bead - **arrows** - on clean sealing surfaces of right timing chain cover, as shown in illustration.

- Thickness of sealant bead: 2.5 mm.

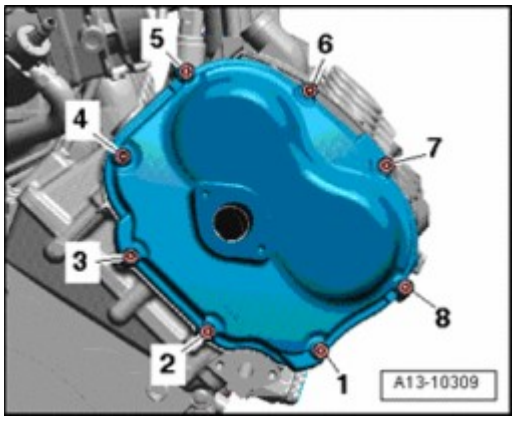

Fig. 260: Identifying Right Timing Chain Cover And Tighten/Removing Bolts Sequence
Courtesy of VOLKSWAGEN UNITED STATES, INC.

- Position right timing chain cover and tighten bolts **Right timing chain cover, tightening sequence**

The rest of installation is in reverse order of removal, note the following:

- Install rear coolant pipe --> **Rear coolant line, removing and installing**.
- Install secondary air injection combination valve: Left --> **Left combination valve for Secondary Air Injection, removing and installing** , right --> **Right combination valve for Secondary Air Injection, removing and installing**.
- Install Heated Oxygen Sensor (HO2S) G39 and Heated Oxygen Sensor (HO2S) 2 G108 --> **24 - MULTIPORT FUEL INJECTION (MFI)** .
- Install left coolant pipe --> **Left coolant pipe, removing and installing**.

- Place oil dipstick guide tube in hole on upper part of oil pan.
- Install right coolant pipe --> **Right coolant pipe, removing and installing**.
- Fill with coolant **Filling**.

Timing chain lower cover, removing and installing

Special tools, testers and auxiliary items required

 © 2011 Mitchell Repair Information Company, LLC.

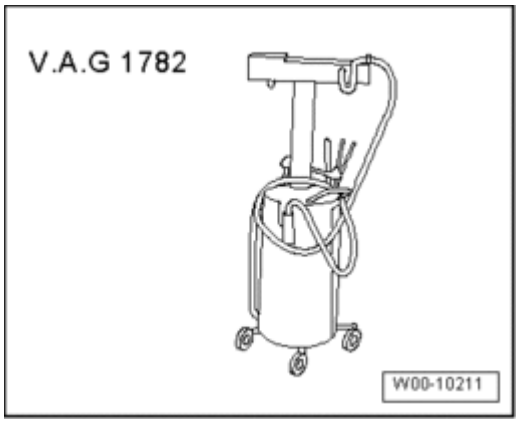

Fig. 261: Identifying Old Oil Collecting And Extracting Device V.A.G 1782
Courtesy of VOLKSWAGEN UNITED STATES, INC.

- Old oil collecting and extracting device V.A.G 1782
- Hand drill with plastic brush attachment
- Protective glasses
- Sealant

Removing

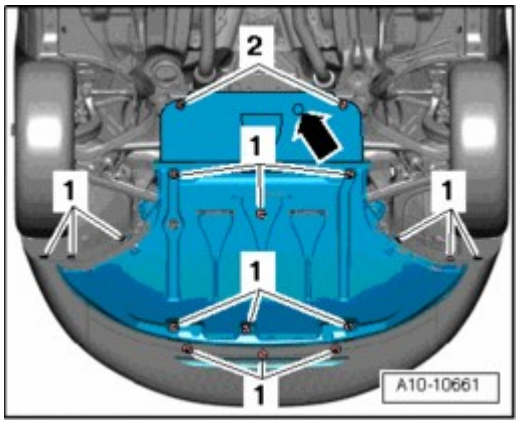

Fig. 262: Identifying Noise Insulation And Mountings
Courtesy of VOLKSWAGEN UNITED STATES, INC.

- Remove sound insulation by loosening securing pieces - **1, 2 and arrow** -.
- Place old oil collecting and extracting device V.A.G 1782 under engine and drain engine oil.
- Remove automatic transmission --> **37 - AUTOMATIC TRANSMISSION - CONTROLS, HOUSING** .
- Remove drive plate --> **Drive plate, removing and installing**.
- Remove left and right timing chain covers --> **Left and right timing chain covers, removing and installing**.
- Remove intake manifold --> **24 - MULTIPORT FUEL INJECTION (MFI)** .

 © 2011 Mitchell Repair Information Company, LLC.

- Remove oil filter housing --> **Oil filter housing, removing and installing**.

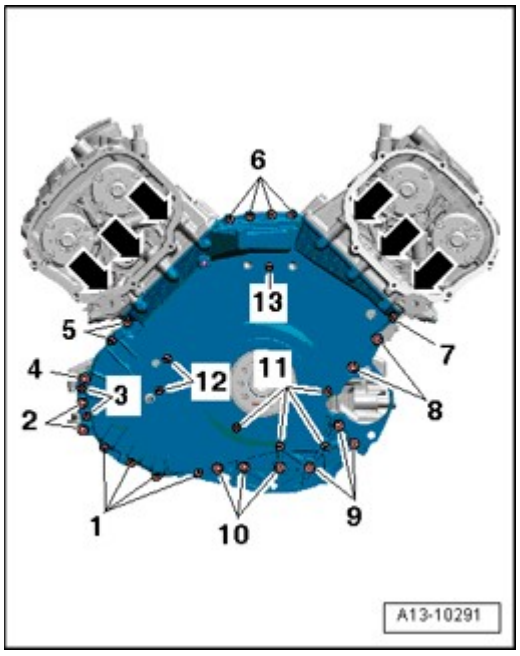

Fig. 263: Removing/Installing Bolts And Lower Timing Chain Cover
Courtesy of VOLKSWAGEN UNITED STATES, INC.

- Remove bolts - **arrows** -.
- Remove bolts - **1 through 13** - and remove lower timing chain cover.
- Press transmission-side crankshaft sealing ring out of lower timing chain cover.

Installing

- Tightening torques **Timing chain lower cover tightening sequence**

Installation is in reverse order of removal, note the following:

- Pull alignment bushing out of top right of cylinder block.

 © 2011 Mitchell Repair Information Company, LLC.

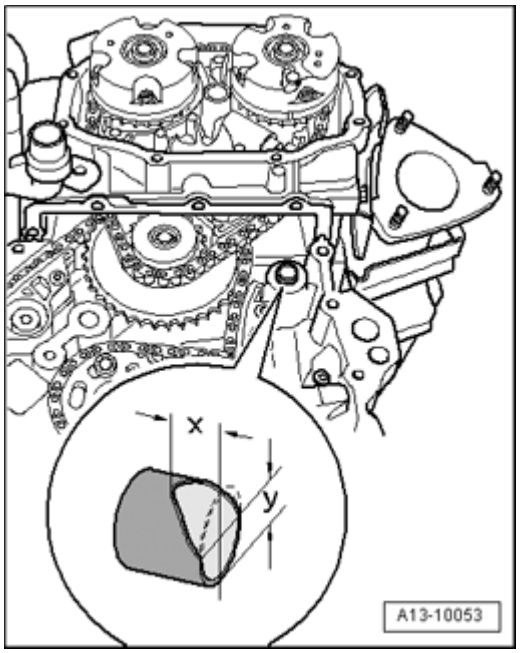

Fig. 264: Chamfer Alignment Bushing With File
Courtesy of VOLKSWAGEN UNITED STATES, INC.

- Chamfer alignment bushing with a file, as shown in the illustration.

- Dimension - **x** - = 6.5 mm.
- Dimension - **y** - = 8 mm.

- Install alignment bushing into cylinder block so that the chamfered side faces upward.

NOTE:

- **Because of the chamfer, the lower timing chain cover can be positioned more easily when the cylinder head is installed.**

CAUTION: Risk of eye injury.

- **Wear safety glasses.**

CAUTION: Risk of contaminating lubricating system.

- **Cover open parts of engine.**

 © 2011 Mitchell Repair Information Company, LLC.

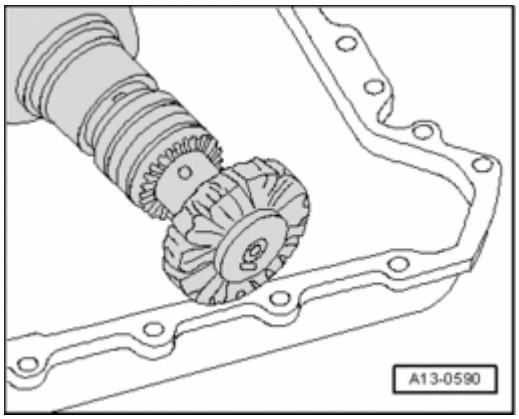

Fig. 265: Using Rotating Plastic Brush To Remove Any Sealant Residue From Sealing Flange, Cylinder Block And Upper Part Of Oil Pan
Courtesy of VOLKSWAGEN UNITED STATES, INC.

- Remove sealant residue on lower timing chain cover and on cylinder block and cylinder head, e.g. with a rotating plastic brush.
- Clean sealing surfaces so they are completely free of any oil or grease.

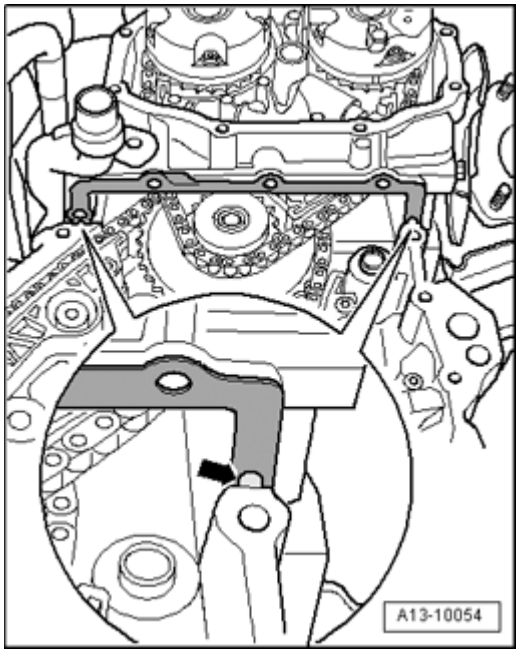

Fig. 266: Cleaning Old Sealant From Holes In Cylinder Head Gaskets
Courtesy of VOLKSWAGEN UNITED STATES, INC.

- Clean old sealant from holes - **arrow** - in cylinder head gaskets.

NOTE:

- **With the cylinder head installed only half of the holes in the cylinder head gasket are visible.**

CAUTION: Risk of damaging cylinder head seal.

 © 2011 Mitchell Repair Information Company, LLC.

- **Only bend ends of cylinder head seals slightly, do not kink.**

NOTE:

- **A kinked cylinder head gasket must be replaced.**

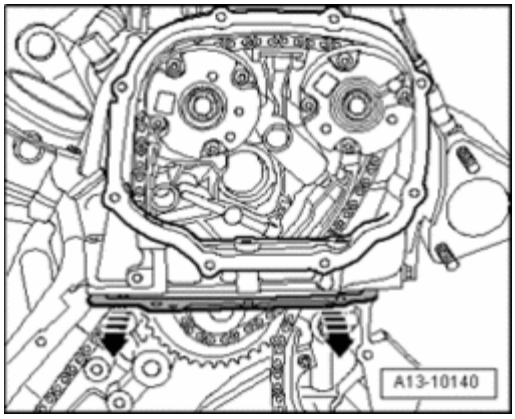

Fig. 267: Bending Ends Of Cylinder Head Gaskets Very Slightly Downward Until Upper Sealing Surface Of Gasket And Cylinder Head Can Be Cleaned
Courtesy of VOLKSWAGEN UNITED STATES, INC.

- Bend the ends of cylinder head gaskets very slightly downward - **arrows** - until upper sealing surface of gasket and cylinder head can be cleaned.
- Clean both cylinder head gaskets, top and bottom, so they are completely free of any oil or grease.

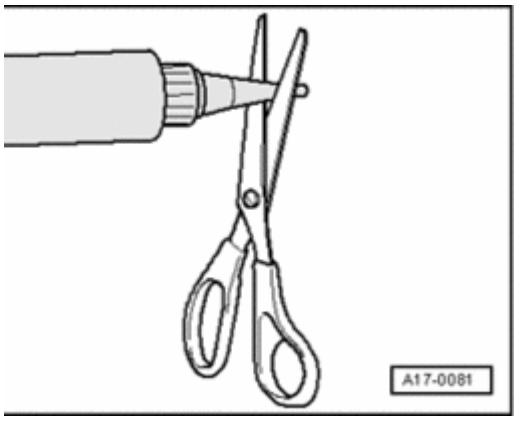

Fig. 268: Cutting Tube Nozzle At Front Marking
Courtesy of VOLKSWAGEN UNITED STATES, INC.

- Cut off nozzle on tube of sealant at front mark (dia. of nozzle approx. 2 mm).

CAUTION: Risk of damaging cylinder head seal.

- **Only bend ends of cylinder head seals slightly, do not kink.**

 © 2011 Mitchell Repair Information Company, LLC.

NOTE:

- **A kinked cylinder head gasket must be replaced.**

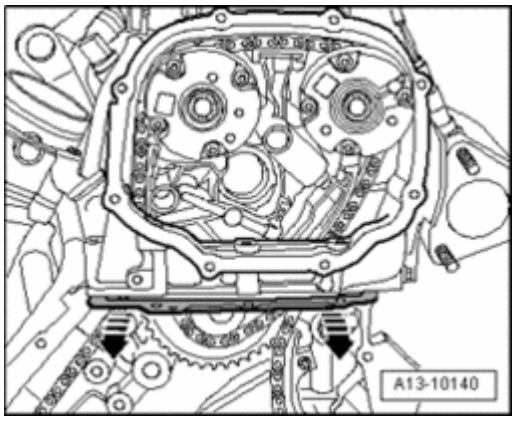

Fig. 269: Bending Ends Of Cylinder Head Gaskets Very Slightly Downward Until Upper Sealing Surface Of Gasket And Cylinder Head Can Be Cleaned
Courtesy of VOLKSWAGEN UNITED STATES, INC.

- Coat sealing surfaces of cylinder head gaskets, top and bottom, with a thin layer of sealant, to do this slightly bending cylinder head gaskets downward again - **arrows** -.
- To coat surface between cylinder head and gasket, use a flat object, e.g. a feeler gauge.

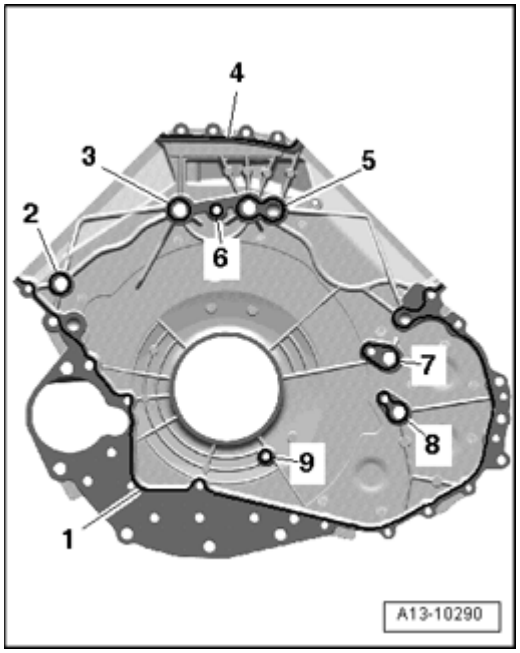

Fig. 270: Applying Sealant Beads On Clean Sealing Surfaces Of Lower Timing Chain Cover
Courtesy of VOLKSWAGEN UNITED STATES, INC.

- Apply sealant beads - **1 to 9** - on clean sealing surfaces of lower timing chain cover, as shown in illustration.

- Thickness of sealant beads: 2.5 mm.

 © 2011 Mitchell Repair Information Company, LLC.

NOTE:

- **Lower timing chain cover must be installed within 5 minutes of applying sealant.**

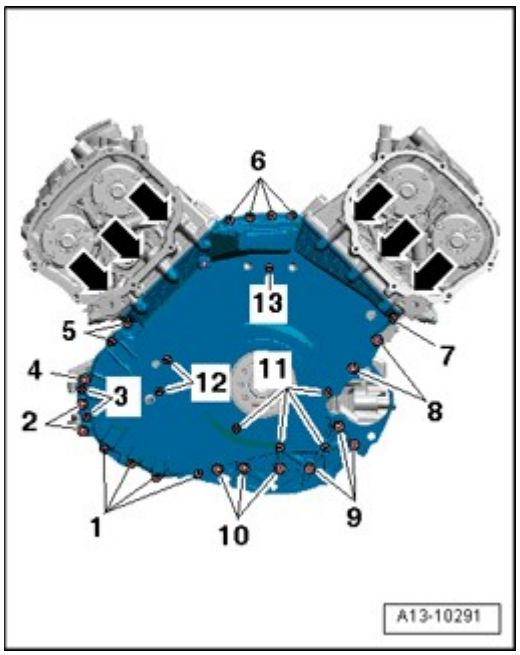

Fig. 271: Removing/Installing Bolts And Lower Timing Chain Cover
Courtesy of VOLKSWAGEN UNITED STATES, INC.

- Set lower timing chain cover in place, guiding cover at an angle from below onto the sealing surface of the cylinder block and cylinder head.
- When installing, make sure that the cylinder head gaskets do not become damaged.

NOTE:

- **A damaged cylinder head seal must be replaced.**

- Tighten bolts **Timing chain lower cover tightening sequence**.

The rest of installation is in reverse order of removal, note the following:

- Install crankshaft seal, transmission side --> **Transmission-side crankshaft sealing ring, replacing**.
- Install oil filter housing --> **Oil filter housing, removing and installing**.
- Install intake manifold --> **24 - MULTIPORT FUEL INJECTION (MFI)** .
- Install left and right timing chain covers **Installing**.

- Install drive plate --> **Drive plate, removing and installing**.
- Install automatic transmission --> **37 - AUTOMATIC TRANSMISSION - CONTROLS, HOUSING** .
- Add engine oil and check oil level --> **Oil level, checking**.

Camshaft timing chain, assembly overview

 © 2011 Mitchell Repair Information Company, LLC.

Left camshaft timing chain

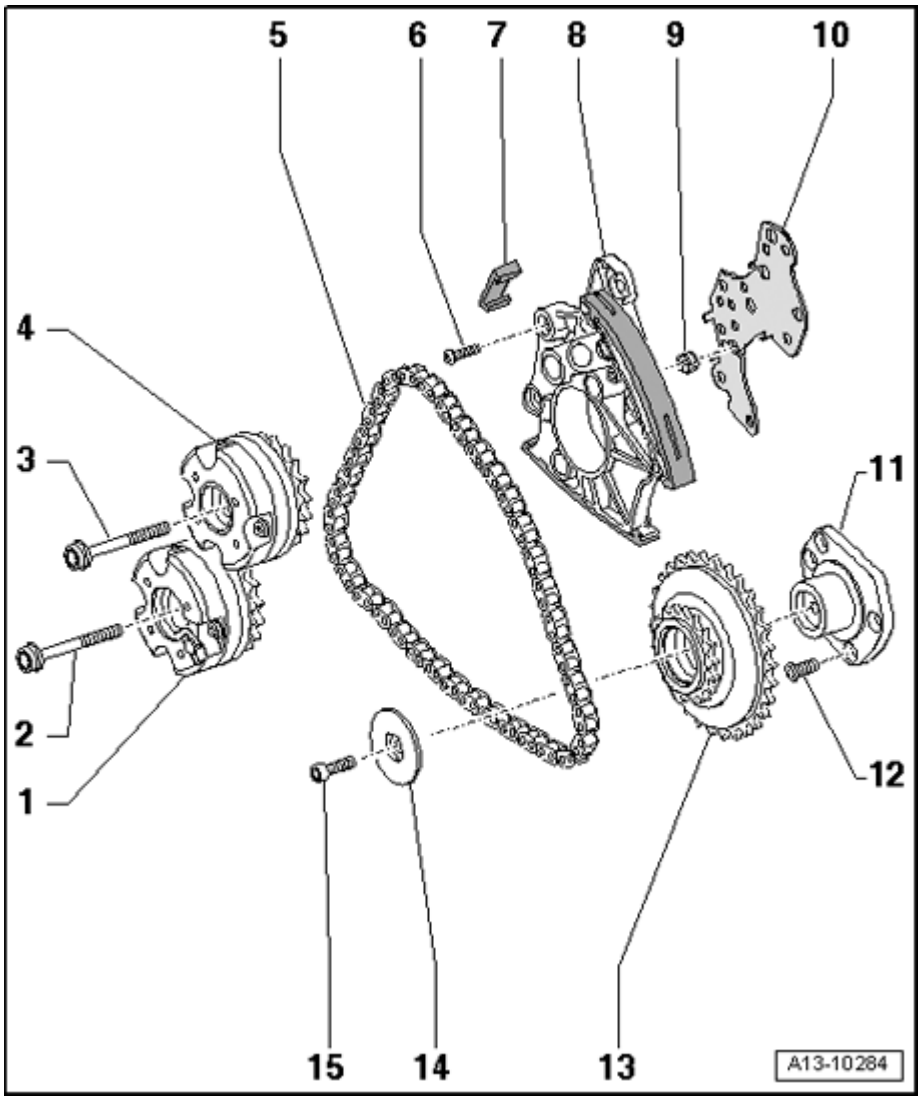

Fig. 272: Camshaft Timing Chain, Assembly Overview (Left Camshaft Timing Chain)
Courtesy of VOLKSWAGEN UNITED STATES, INC.

1 - Camshaft adjuster for exhaust camshaft

- Identification "Exhaust"
- Removing and installing --> **Camshaft timing chain, removing and installing**

2 - Bolt

- Replace
- 80 Nm plus an additional 90° ($^{1}/_{4}$ turn).

3 - Bolt

 © 2011 Mitchell Repair Information Company, LLC.

- Replace
- 80 Nm plus an additional 90° ($^{1}/_{4}$ turn).

4 - Camshaft adjuster for intake camshaft

- Identification "Intake"
- Removing and installing --> **Camshaft timing chain, removing and installing**

5 - Left camshaft timing chain

CAUTION: Risk of destroying due to reversed running direction on a used timing chain.

- **Mark timing chain running direction with arrows using paint for reinstallation.**

- Removing and installing --> **Camshaft timing chain, removing and installing**

6 - Bolt

- Replace
- 5 Nm plus an additional 90° ($^{1}/_{4}$ turn).

7 - Guide piece

8 - Chain tensioner for left camshaft timing chain

- Removing and installing --> **Camshaft timing chain, removing and installing**

9 - Oil strainer

- Set into chain tensioner
- Observe locating tabs on circumference

10 - Gasket

- Replace
- Clipped onto chain tensioner

11 - Mounting bracket for drive sprocket

12 - Bolt

- 9 Nm

 © 2011 Mitchell Repair Information Company, LLC.

13 - Drive sprocket for left camshaft timing chain

14 - Thrust washer for drive sprocket

15 - Bolt

- 22 Nm

Right camshaft timing chain

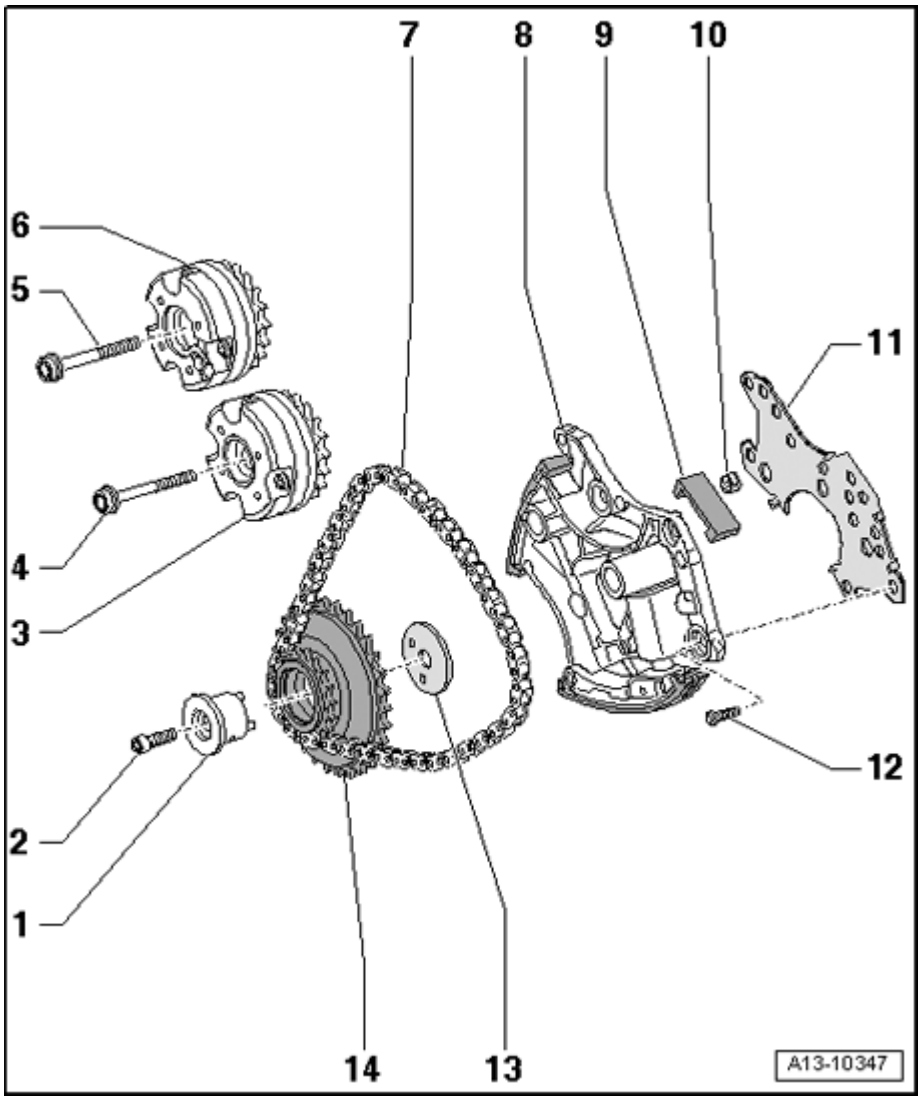

Fig. 273: Camshaft Timing Chain, Assembly Overview (Right Camshaft Timing Chain)
Courtesy of VOLKSWAGEN UNITED STATES, INC.

1 - Mounting bracket for drive sprocket

- For right camshaft timing chain
- Asymmetrical version

 © 2011 Mitchell Repair Information Company, LLC.

- Installed location **Right camshaft timing chain drive sprocket mounting bracket location**

2 - Bolt

- 42 Nm

3 - Camshaft adjuster for exhaust camshaft

- Identification "Exhaust"
- Removing and installing --> **Camshaft timing chain, removing and installing**

4 - Bolt

- Replace
- 80 Nm plus an additional 90° ($^{1}/_{4}$ turn).

5 - Bolt

- Replace
- 80 Nm plus an additional 90° ($^{1}/_{4}$ turn).

6 - Camshaft adjuster for intake camshaft

- Identification "Intake"
- Removing and installing --> **Camshaft timing chain, removing and installing**

7 - Right camshaft timing chain

CAUTION: Risk of destroying due to reversed running direction on a used timing chain.

- **Mark timing chain running direction with arrows using paint for reinstallation.**

- Removing and installing --> **Camshaft timing chain, removing and installing**

8 - Chain tensioner for right camshaft timing chain

- Removing and installing --> **Camshaft timing chain, removing and installing**

9 - Guide piece

10 - Oil strainer

 © 2011 Mitchell Repair Information Company, LLC.

- Set into chain tensioner
- Installed location: Observe locating tabs on circumference

11 - Gasket

- Replace
- Clipped onto chain tensioner

12 - Bolt

- Replace
- 5 Nm plus an additional 90° ($^{1}/_{4}$ turn).

13 - Thrust washer for drive sprocket

14 - Drive sprocket for right camshaft timing chain

Right camshaft timing chain drive sprocket mounting bracket location

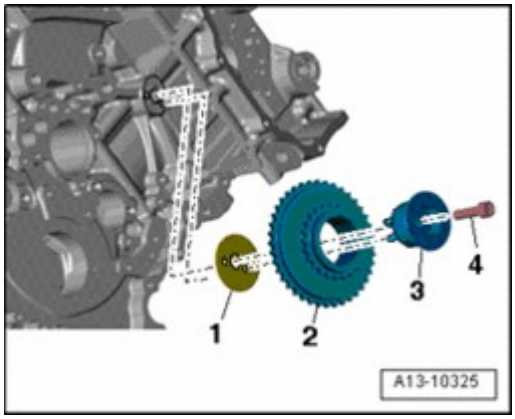

Fig. 274: Right Camshaft Timing Chain Drive Sprocket Mounting Bracket Location
Courtesy of VOLKSWAGEN UNITED STATES, INC.

- Alignment bushings in right camshaft timing chain drive sprocket mounting pins - **3** - must engage in holes in thrust washer - **1** - and cylinder block.

2 - Drive sprocket for right camshaft timing chain

4 - Bolt

Camshaft timing chains, removing from camshafts

 © 2011 Mitchell Repair Information Company, LLC.

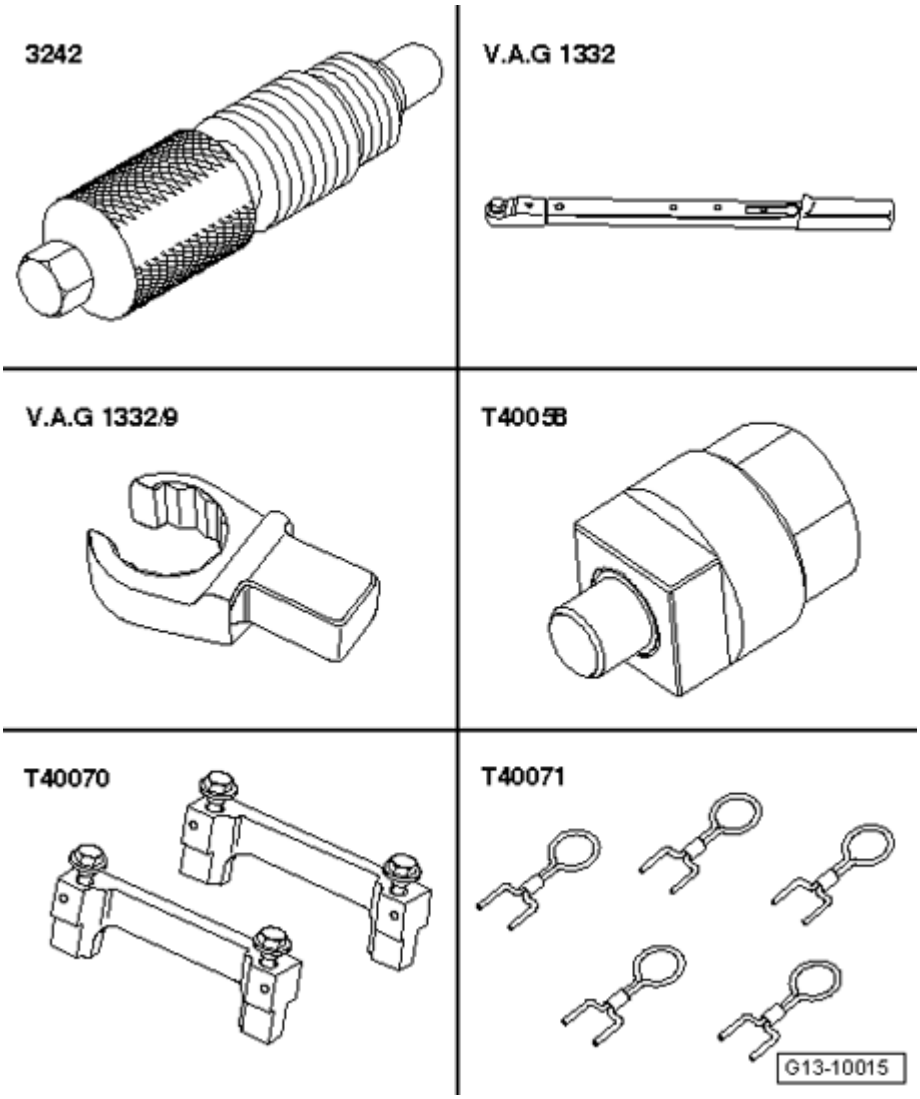

Fig. 275: Identifying Special Tools - Camshaft Timing Chains, Removing From Camshafts
Courtesy of VOLKSWAGEN UNITED STATES, INC.

Special tools, testers and auxiliary items required

- Locking pin 3242
- Torque wrench V.A.G 1332
- Assembly tool V.A.G 1332/9
- Adapter T40058
- Camshaft Clamp T40070 , qty. 2
- Locking Pin T40071 , qty. 2

Special tools, testers and auxiliary items required

 © 2011 Mitchell Repair Information Company, LLC.

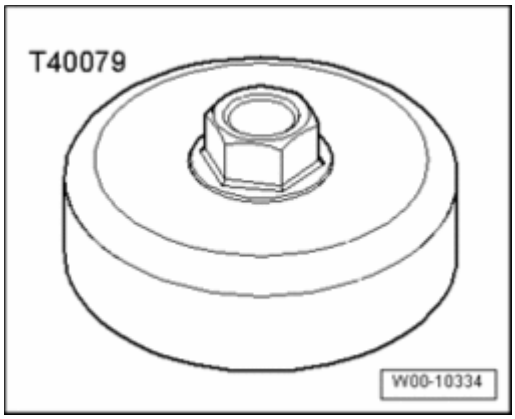

Fig. 276: Wrench T40079
Courtesy of VOLKSWAGEN UNITED STATES, INC.

- Wrench T40079

Removing

NOTE:

- **According to the following description, the timing chains for camshafts remain on engine.**
- **Even if work is performed only on one of the cylinder heads, the procedure described must be followed, since then the valve timing at both cylinder heads must be adjusted.**

- Remove cylinder head cover: left --> **Left cylinder head cover, removing and installing** , right --> **Right cylinder head cover, removing and installing**.
- Remove left and right timing chain covers --> **Left and right timing chain covers, removing and installing**.

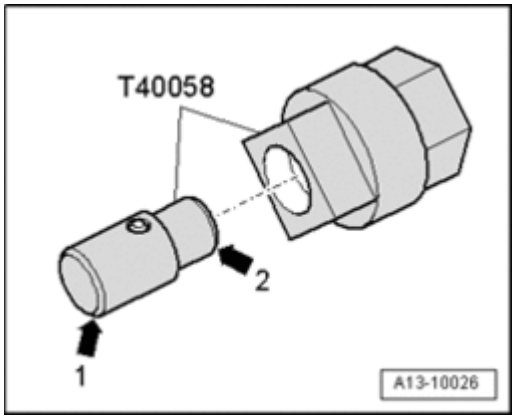

Fig. 277: Inserting Guide Pin Of Adapter T40058 So That Large Diameter Points To Engine
Courtesy of VOLKSWAGEN UNITED STATES, INC.

- Insert guide pin of adapter T40058 so that small diameter - **arrow 2** - points to engine. Large diameter - **arrow 1** - points to socket.

 © 2011 Mitchell Repair Information Company, LLC.

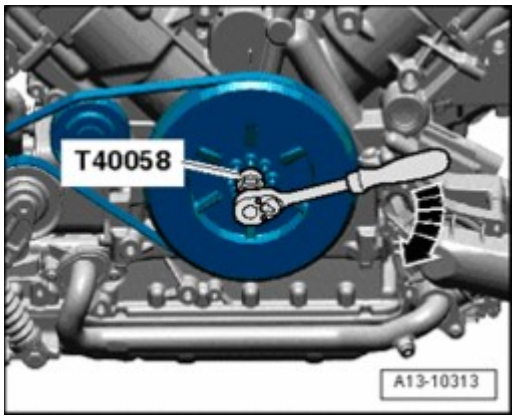

Fig. 278: Using Socket T40058 To Rotate Crankshaft To TDC
Courtesy of VOLKSWAGEN UNITED STATES, INC.

- Using Socket T40058 , rotate crankshaft in direction of engine rotation - **arrow** - to "TDC".

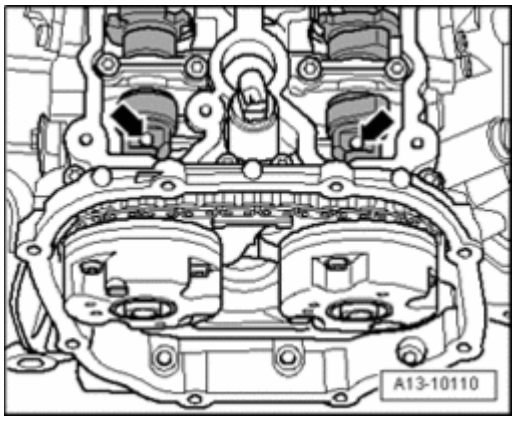

Fig. 279: Identifying Threaded Holes In Camshafts Must Face Upward
Courtesy of VOLKSWAGEN UNITED STATES, INC.

- The threaded holes - **arrows** - in camshafts must face upward.

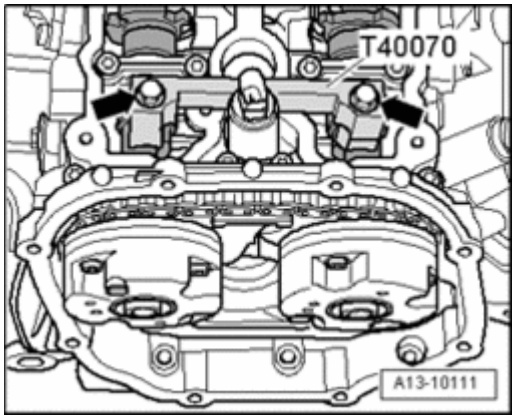

Fig. 280: Removing/Installing Camshaft Locators T40070 On Both Cylinder Heads
Courtesy of VOLKSWAGEN UNITED STATES, INC.

 © 2011 Mitchell Repair Information Company, LLC.

- Mount camshaft locating tool T40070 to both cylinder heads and tighten bolts - **arrows** - to 25 Nm.

- The Camshaft Locating Tool T40070 is correctly positioned when holes for cylinder head bolts remain free.

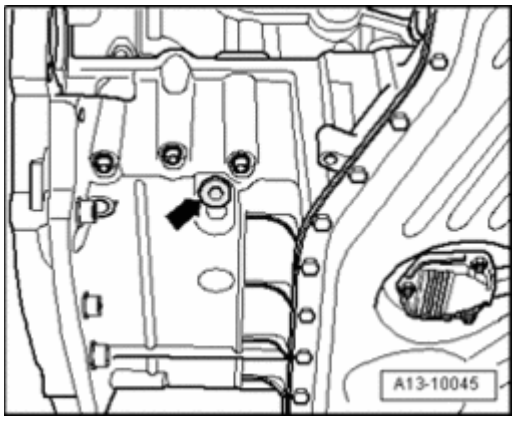

Fig. 281: Removing Locking Bolt From Upper Part Of Oil Pan
Courtesy of VOLKSWAGEN UNITED STATES, INC.

- Remove locking bolt - **arrow** - from upper part of oil pan.

CAUTION: Risk of injury when touching "TDC" hole with finger.

- **Do not rotate crankshaft - 1 -.**

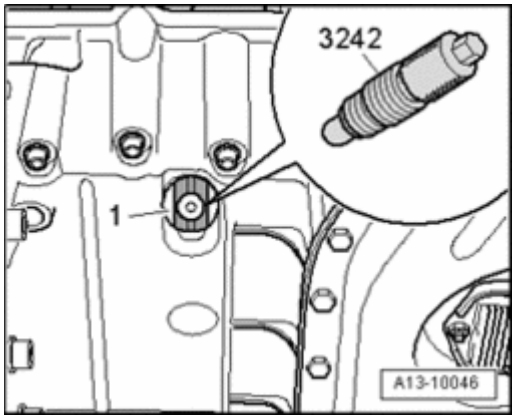

Fig. 282: Installing Crankshaft Holder 3242 In Bore
Courtesy of VOLKSWAGEN UNITED STATES, INC.

- Install crankshaft holder 3242 into hole to 20 Nm, if necessary rotate crankshaft very slightly back and forth to completely center holder.

 © 2011 Mitchell Repair Information Company, LLC.

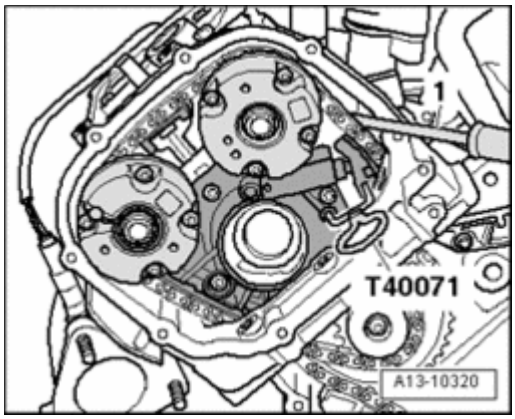

Fig. 283: Pressing Left Camshaft Timing Chain Tensioner Glide Track Inward With Screwdriver As Far As Stop And Securing Chain Tensioner With Locking Pin T40071
Courtesy of VOLKSWAGEN UNITED STATES, INC.

- Press left camshaft timing chain tensioner glide track inward with a screwdriver - **1** - as far as stop and secure chain tensioner with Locking Pin T40071.

NOTE:

- **The toothed belt tensioner is lubricated with oil and should only be compressed slowly by applying constant pressure.**

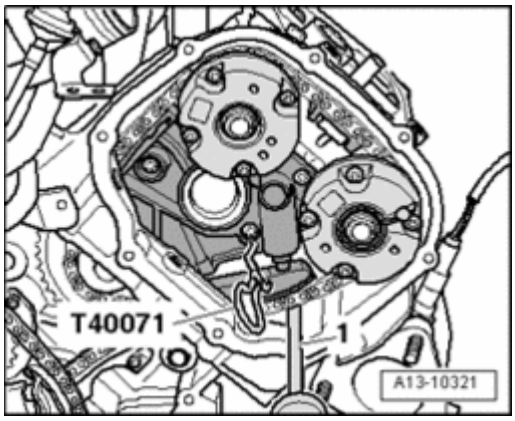

Fig. 284: Pressing Right Camshaft Timing Chain Tensioner Glide Track Inward With Screwdriver As Far As Stop And Securing Chain Tensioner With Locking Pin T40071
Courtesy of VOLKSWAGEN UNITED STATES, INC.

- Press right camshaft timing chain tensioner glide track inward with a screwdriver - **1** - as far as stop and secure chain tensioner with Locking Pin T40071.

NOTE:

- **The toothed belt tensioner is lubricated with oil and should only be compressed slowly by applying constant pressure.**

 © 2011 Mitchell Repair Information Company, LLC.

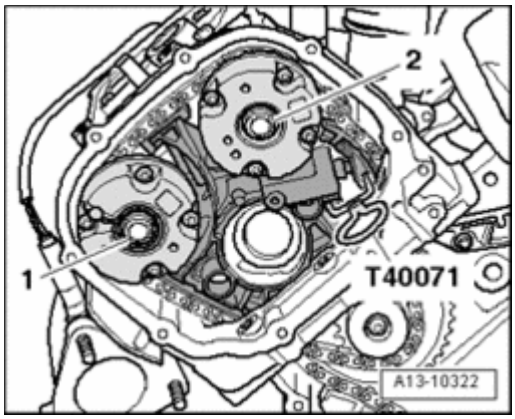

Fig. 285: Identifying Bolts On Left Cylinder Head And Removing Both Camshaft Adjusters
Courtesy of VOLKSWAGEN UNITED STATES, INC.

- For re-installation, identify installation location of camshaft adjuster with paint.
- Remove bolts - **1 and 2** - on left cylinder head and remove both camshaft adjusters.

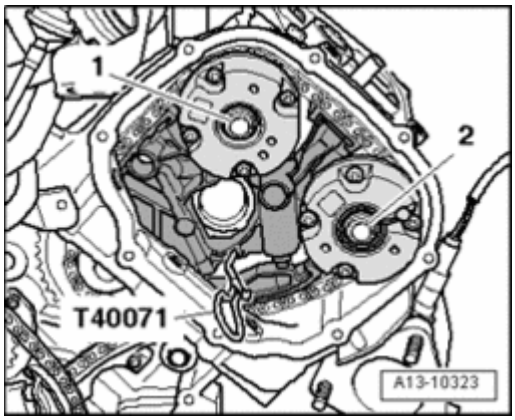

Fig. 286: Identifying Bolts On Right Cylinder Head And Removing Both Camshaft Adjusters
Courtesy of VOLKSWAGEN UNITED STATES, INC.

- For re-installation, identify installation location of camshaft adjuster with paint.
- Remove bolts - **1 and 2** - on right cylinder head and remove both camshaft adjusters.

Installing

- Tightening torques --> **Camshaft timing chain, assembly overview** , --> **Upper part of oil pan, assembly overview**.

NOTE:

- **Replace bolts which have been tightened to torque.**
- **Replace locking bolt O-ring.**

CAUTION: Risk of damaging valves and piston crowns.

- **If camshafts are rotated, crankshaft may not rest with any piston at**

 © 2011 Mitchell Repair Information Company, LLC.

"TDC".

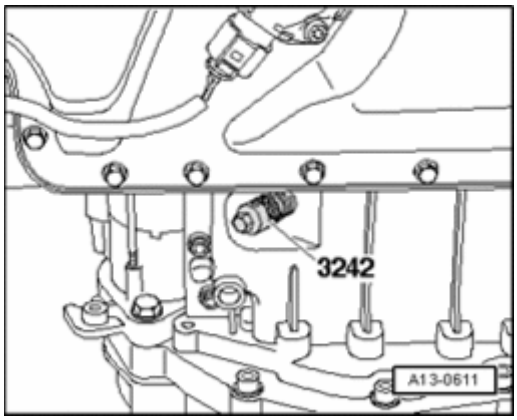

Fig. 287: Removing/Installing Crankshaft Holder 3242 Into Hole
Courtesy of VOLKSWAGEN UNITED STATES, INC.

- Drive chain for timing mechanism installed --> **Drive chain for timing mechanism, removing and installing**.
- Secure crankshaft in "TDC" position using Crankshaft Holder 3242.

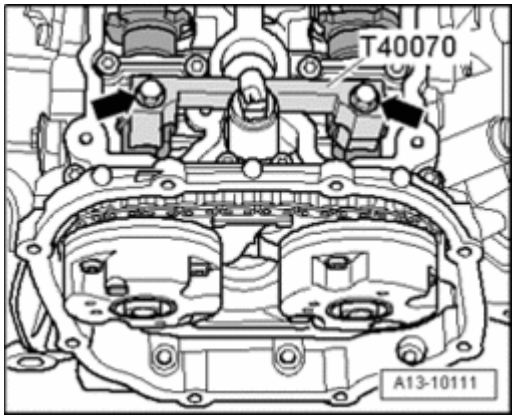

Fig. 288: Removing/Installing Camshaft Locators T40070 On Both Cylinder Heads
Courtesy of VOLKSWAGEN UNITED STATES, INC.

- Camshaft Clamp T40070 mounted on both cylinder heads and fastened to 25 Nm - **arrows** -.

 © 2011 Mitchell Repair Information Company, LLC.

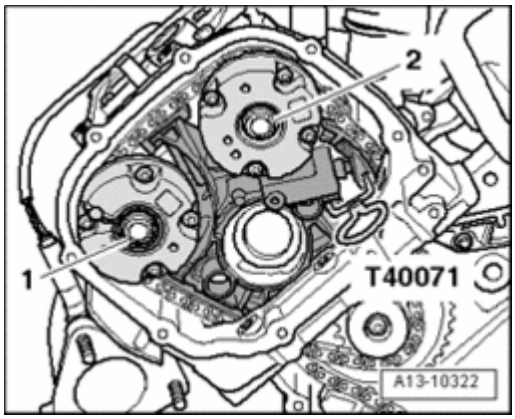

Fig. 289: Identifying Bolts On Left Cylinder Head And Removing Both Camshaft Adjusters
Courtesy of VOLKSWAGEN UNITED STATES, INC.

- Re-install camshaft adjuster on left cylinder head according to mark applied during removal.
- Place camshaft timing chain onto drive sprocket and onto camshaft adjusters and loosely thread in bolts - **1 and 2** -.

- Both camshaft adjusters must be able to still be rotated on camshaft and must not tip.

- Remove Locking Pin T40071.

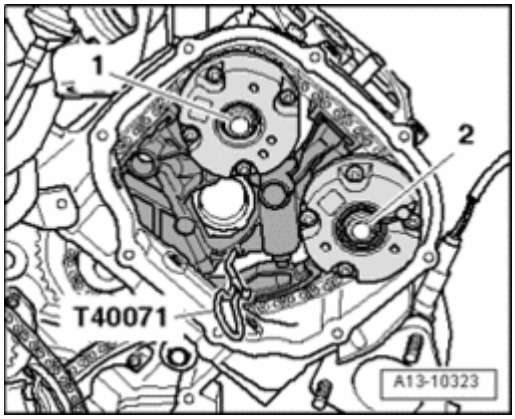

Fig. 290: Identifying Bolts On Right Cylinder Head And Removing Both Camshaft Adjusters
Courtesy of VOLKSWAGEN UNITED STATES, INC.

- Re-install camshaft adjuster on right cylinder head according to mark applied during removal.
- Place camshaft timing chain onto drive sprocket and onto camshaft adjusters and loosely thread in bolts - **1 and 2** -.

- Both camshaft adjusters must be able to still be rotated on camshaft and must not tip.

- Remove Locking Pin T40071.

 © 2011 Mitchell Repair Information Company, LLC.

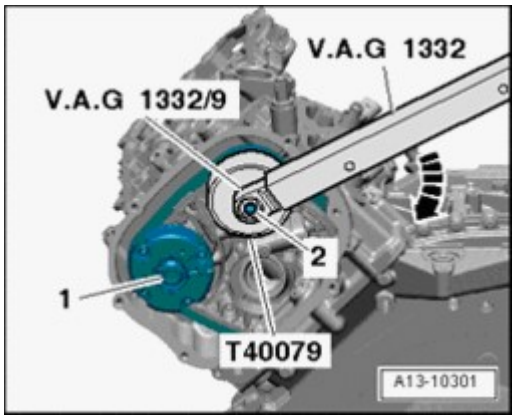

Fig. 291: Positioning Adapter T40079 On Intake Camshaft Adjuster At Left Cylinder Head
Courtesy of VOLKSWAGEN UNITED STATES, INC.

- Position Key T40079 on intake camshaft adjuster at left cylinder head.
- Position Torque Wrench V.A.G 1332 with Open Ring Spanner Insert V.A.G 1332/9 on Key T40079.
- Have a second technician pre-tension camshaft adjuster to 40 Nm in direction of - **arrow** -.
- Tighten bolts as follows while camshaft adjuster is held under pre-tension:

- Pre-tighten bolt - **1** - on intake camshaft to 60 Nm.
- Pre-tighten bolt - **2** - on exhaust camshaft to 60 Nm.

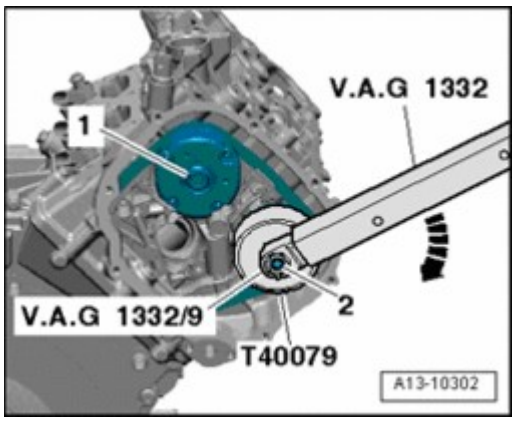

Fig. 292: Positioning Adapter T40079 On Exhaust Camshaft Adjuster At Right Cylinder Head
Courtesy of VOLKSWAGEN UNITED STATES, INC.

- Position Key T40079 on exhaust camshaft adjuster at right cylinder head.
- Position Torque Wrench V.A.G 1332 with Open Ring Spanner Insert V.A.G 1332/9 on Key T40079.
- Have a second technician pre-tension camshaft adjuster to 40 Nm in direction of - **arrow** -.
- Tighten bolts as follows while camshaft adjuster is held under pre-tension:

- Pre-tighten bolt - **1** - to intake camshaft to 60 Nm.
- Pre-tighten bolt - **2** - to exhaust camshaft to 60 Nm.

 © 2011 Mitchell Repair Information Company, LLC.

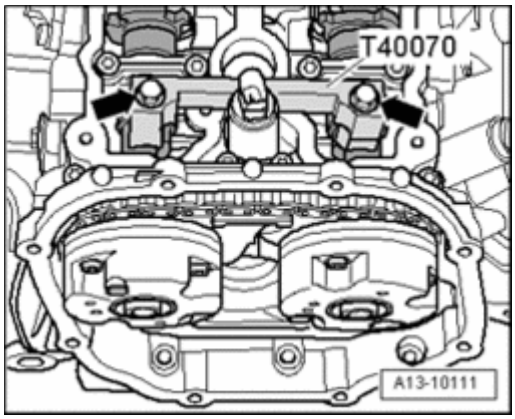

Fig. 293: Removing/Installing Camshaft Locators T40070 On Both Cylinder Heads
Courtesy of VOLKSWAGEN UNITED STATES, INC.

- Remove Key T40079.
- Remove Camshaft Clamps T40070 on both cylinder heads - **arrows** -.

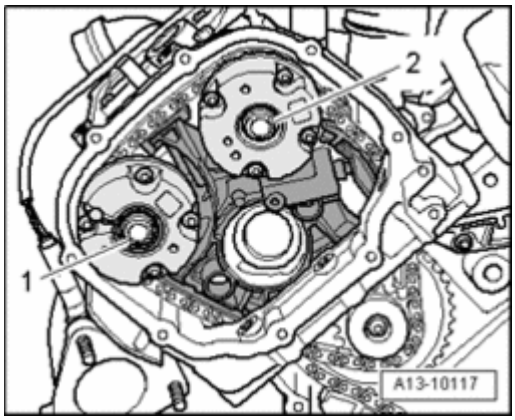

Fig. 294: Tightening Camshaft Bolts On Left Cylinder Head
Courtesy of VOLKSWAGEN UNITED STATES, INC.

- Tighten camshaft adjuster bolts on left cylinder head as follows:

- Tighten bolt - **1** - to intake camshaft to final torque.
- Tighten bolt - **2** - to exhaust camshaft to final torque.

 © 2011 Mitchell Repair Information Company, LLC.

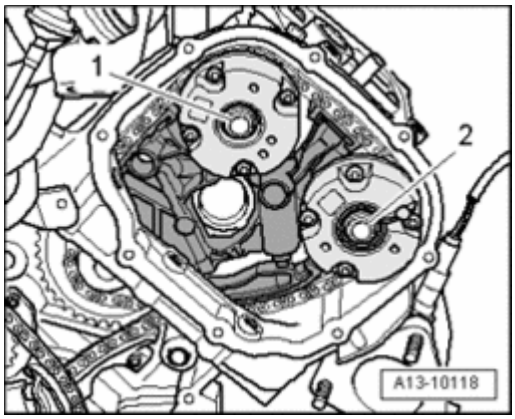

Fig. 295: Tightening Camshaft Bolts On Right Cylinder Head
Courtesy of VOLKSWAGEN UNITED STATES, INC.

- Tighten camshaft adjuster bolts on right cylinder head as follows:

- Tighten bolt - **1** - to intake camshaft to final torque.
- Tighten bolt - **2** - to exhaust camshaft to final torque.

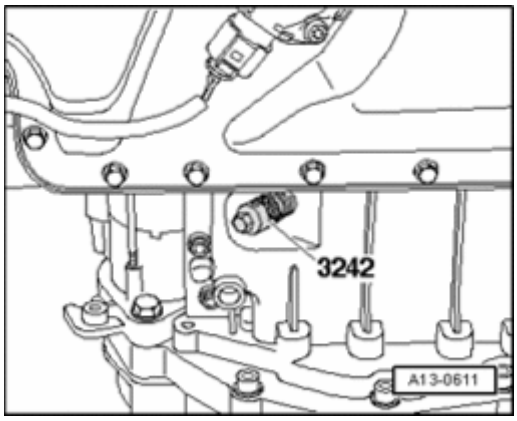

Fig. 296: Removing/Installing Crankshaft Holder 3242 Into Hole
Courtesy of VOLKSWAGEN UNITED STATES, INC.

- Remove crankshaft holder 3242.

 © 2011 Mitchell Repair Information Company, LLC.

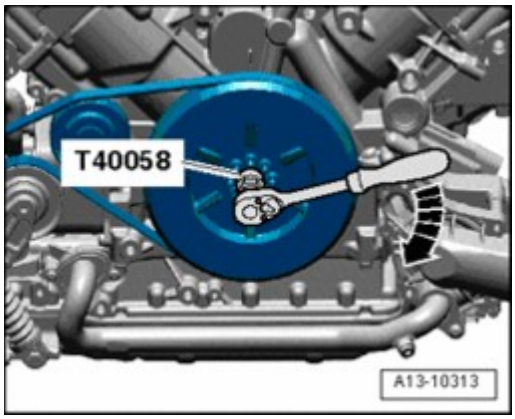

Fig. 297: Using Socket T40058 To Rotate Crankshaft To TDC
Courtesy of VOLKSWAGEN UNITED STATES, INC.

- Using Socket T40058 turn crankshaft two complete rotations in direction of engine rotation - **arrow** - until crankshaft stands at "TDC" again.

NOTE:

- **If rotated unitentionally beyond "TDC" , crankshaft must be rotated back approx. 30° and set to "TDC" again.**

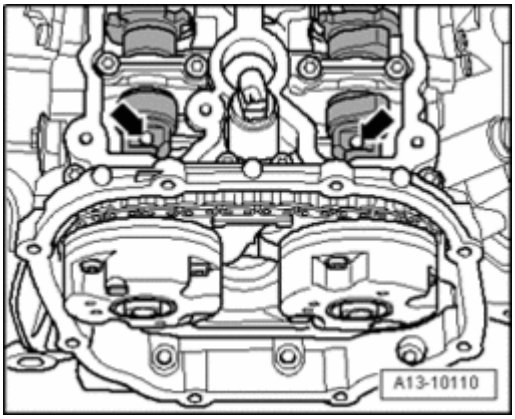

Fig. 298: Identifying Threaded Holes In Camshafts Must Face Upward
Courtesy of VOLKSWAGEN UNITED STATES, INC.

- **The threaded holes - arrows - in the camshafts must face upward.**

 © 2011 Mitchell Repair Information Company, LLC.

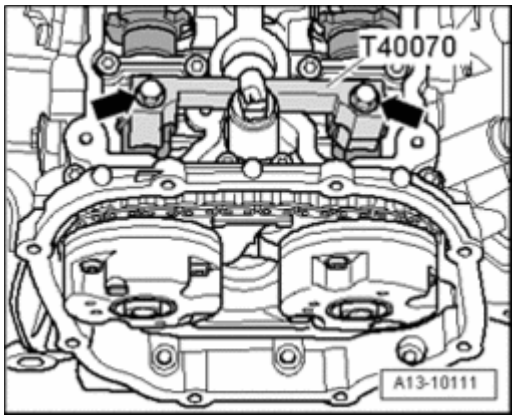

Fig. 299: Removing/Installing Camshaft Locators T40070 On Both Cylinder Heads
Courtesy of VOLKSWAGEN UNITED STATES, INC.

- Mount camshaft locating tool T40070 to both cylinder heads and tighten bolts - **arrows** - to 25 Nm.

- The Camshaft Locating Tool T40070 is correctly positioned when holes for cylinder head bolts remain free.

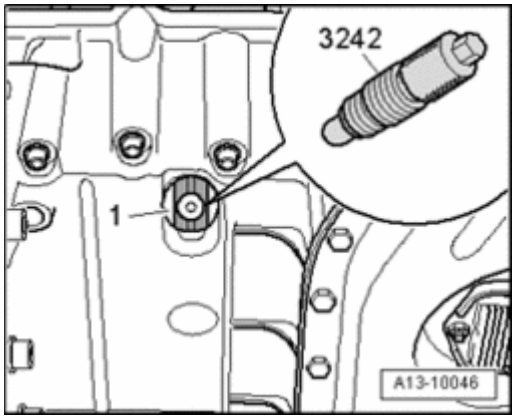

Fig. 300: Installing Crankshaft Holder 3242 In Bore
Courtesy of VOLKSWAGEN UNITED STATES, INC.

- Install Crankshaft Holder 3242 in bore and tighten to 20 Nm.

- The crankshaft holder 3242 must engage in the locating hole of crankshaft - **1** - , otherwise repeat adjustment.

- Remove camshaft locating tools on both cylinder heads.
- Remove crankshaft holder 3242.
- Tighten "TDC" marking locking bolt.

The rest of installation is in reverse order of removal, note the following:

- Install left and right timing chain covers **Installing**.

 © 2011 Mitchell Repair Information Company, LLC.

- Install cylinder head covers: Left --> **Left cylinder head cover, removing and installing** , right --> **Right cylinder head cover, removing and installing**.

Camshaft timing chain, removing and installing

Special tools, testers and auxiliary items required

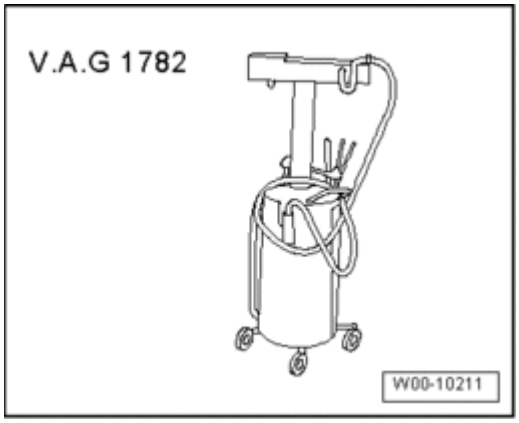

Fig. 301: Identifying Old Oil Collecting And Extracting Device V.A.G 1782
Courtesy of VOLKSWAGEN UNITED STATES, INC.

- Old oil collecting and extracting device V.A.G 1782

Removing

NOTE:

- **Even if work is performed only on one of the cylinder heads, the procedure described must be followed, since then the valve timing at both cylinder heads must be adjusted.**

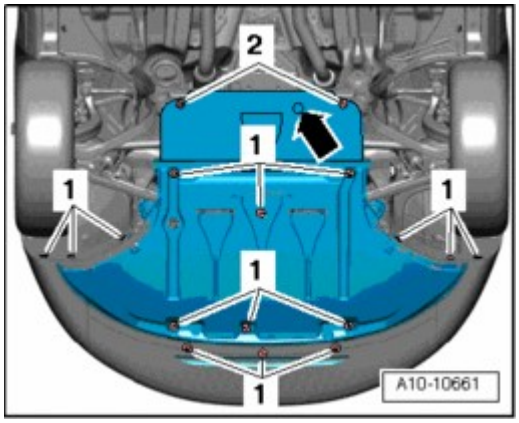

Fig. 302: Identifying Noise Insulation And Mountings
Courtesy of VOLKSWAGEN UNITED STATES, INC.

- Remove sound insulation by loosening securing pieces - **1, 2 and arrow** -.
- Place old oil collecting and extracting device V.A.G 1782 under engine and drain engine oil.

 © 2011 Mitchell Repair Information Company, LLC.

- Remove automatic transmission --> **37 - AUTOMATIC TRANSMISSION - CONTROLS, HOUSING** .
- Remove drive plate --> **Drive plate, removing and installing**.

- Remove cylinder head cover: Left --> **Left cylinder head cover, removing and installing** , right --> **Right cylinder head cover, removing and installing**.
- Remove left and right timing chain covers --> **Left and right timing chain covers, removing and installing**.
- Remove intake manifold --> **24 - MULTIPORT FUEL INJECTION (MFI)** .
- Remove oil filter housing --> **Oil filter housing, removing and installing**.

- Remove lower timing chain cover --> **Timing chain lower cover, removing and installing**.
- Remove camshaft timing chains from camshafts --> **Camshaft timing chains, removing from camshafts**.

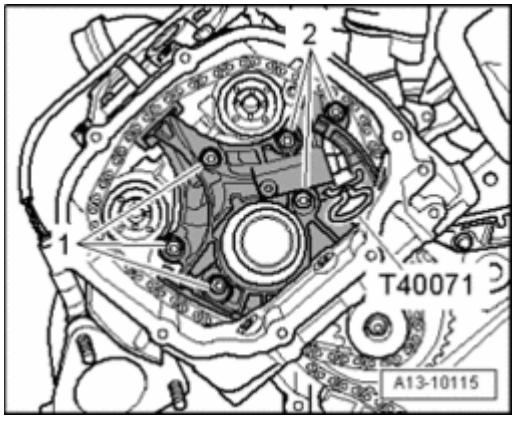

Fig. 303: Tightening Bolts & Replacing Camshaft Bolts
Courtesy of VOLKSWAGEN UNITED STATES, INC.

- Identify running direction of left camshaft timing chain with paint for reinstallation.
- Remove bolts - **1 and 2** - and remove left chain tensioner and left camshaft timing chain.

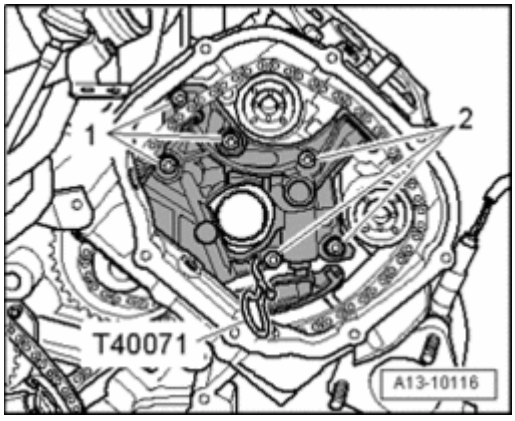

Fig. 304: Tightening Bolts & Replacing Camshaft Bolts

 © 2011 Mitchell Repair Information Company, LLC.

Courtesy of VOLKSWAGEN UNITED STATES, INC.

- Identify running direction of right camshaft timing chain with paint for re-installation.
- Remove bolts - **1 and 2** - and remove right chain tensioner and right camshaft timing chain.

Installing

- Tightening torque --> **Camshaft timing chain, assembly overview**.

NOTE:

- **If the tensioning element was removed from the chain tensioner, note installation position: Hole in housing floor faces toward chain tensioner, piston faces toward tensioning rail.**
- **Replace bolts which have been tightened to torque.**
- **Replace gasket.**

CAUTION: Risk of damaging valves and piston crowns.

- **If camshafts are rotated, crankshaft may not rest with any piston at "TDC".**

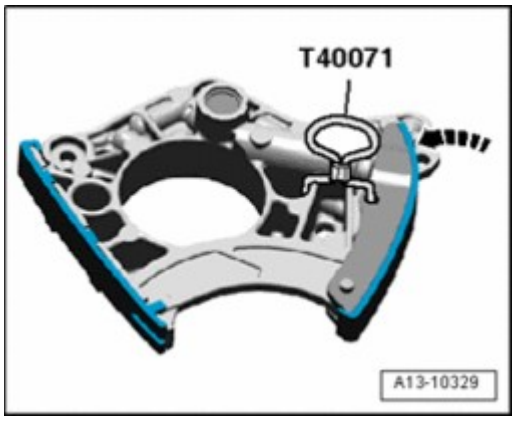

Fig. 305: Pressing Left/Right Camshaft Timing Chain Guide Rail Inward And Securing Chain Tensioner With Locking Pin T40071
Courtesy of VOLKSWAGEN UNITED STATES, INC.

- Press left and right camshaft timing chain guide rail inward - **arrow** - as far as stop and secure chain tensioner with Locking Pin T40071.

 © 2011 Mitchell Repair Information Company, LLC.

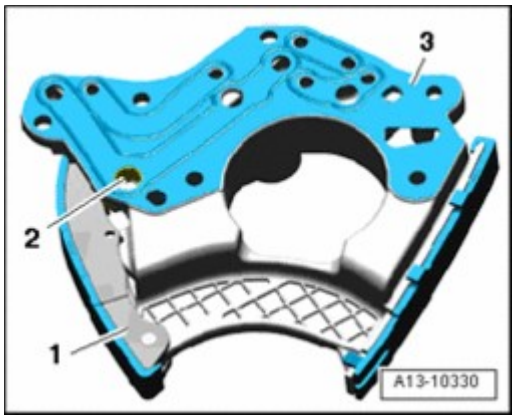

Fig. 306: Identifying Chain Tensioner Oil Screen, Gasket & Chain Tensioner
Courtesy of VOLKSWAGEN UNITED STATES, INC.

- Clean oil strainer - **2** - in both chain tensioners if necessary.
- Place seal - **3** - on rear of chain tensioner - **1** -.

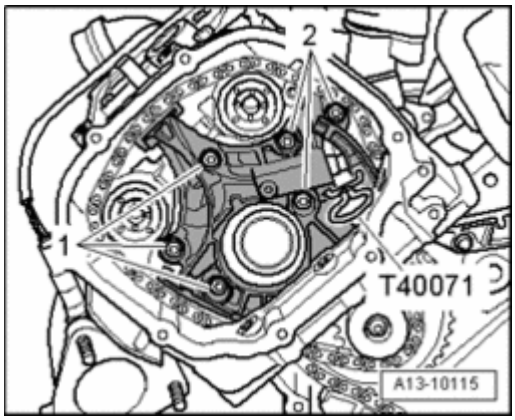

Fig. 307: Tightening Bolts & Replacing Camshaft Bolts
Courtesy of VOLKSWAGEN UNITED STATES, INC.

- Insert chain tensioner in left cylinder head and position camshaft timing chain according to mark applied during removal, as shown in illustration.
- Tighten bolts - **1 and 2** -.

 © 2011 Mitchell Repair Information Company, LLC.

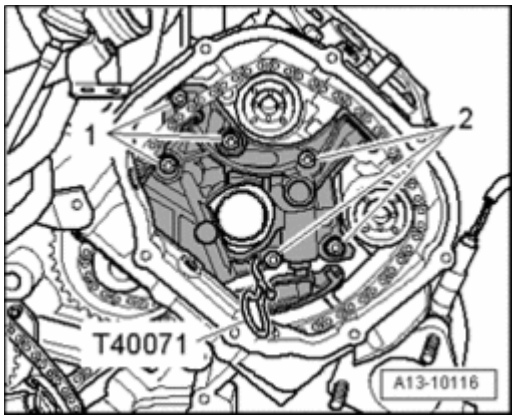

Fig. 308: Tightening Bolts & Replacing Camshaft Bolts
Courtesy of VOLKSWAGEN UNITED STATES, INC.

- Insert chain tensioner in right cylinder head and position camshaft timing chain according to mark applied during removal, as shown in illustration.
- Tighten bolts - **1 and 2** -.

Further installation is in reverse order of removal, note the following:

- Position camshaft timing chains on camshafts **Installing**.
- Install lower timing chain cover --> **Timing chain lower cover, removing and installing**.
- Install crankshaft seal, transmission side --> **Transmission-side crankshaft sealing ring, replacing**.
- Install oil filter housing --> **Oil filter housing, removing and installing**.
- Install intake manifold --> **24 - MULTIPORT FUEL INJECTION (MFI)** .
- Install left and right timing chain covers **Installing**.
- Install cylinder head cover: Left --> **Left cylinder head cover, removing and installing** , right --> **Right cylinder head cover, removing and installing**.
- Install drive plate --> **Drive plate, removing and installing**.
- Install automatic transmission --> **37 - AUTOMATIC TRANSMISSION - CONTROLS, HOUSING** .
- Add engine oil and check oil level --> **Oil level, checking**.

Timing mechanism drive chain, assembly overview

 © 2011 Mitchell Repair Information Company, LLC.

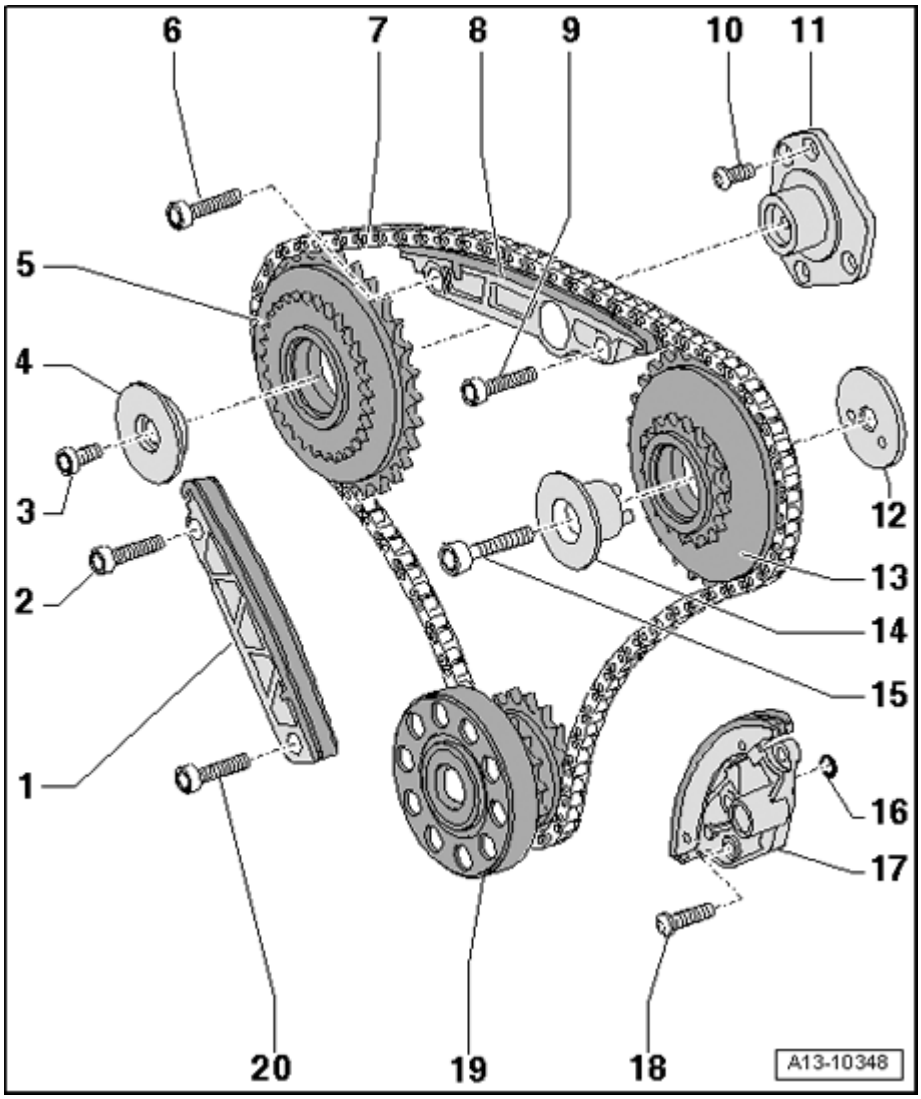

Fig. 309: Timing Mechanism Drive Chain, Assembly Overview
Courtesy of VOLKSWAGEN UNITED STATES, INC.

1 - Guide rail

2 - Bolt

- Replace
- 10 Nm plus an additional 90° ($^{1}/_{4}$ turn).

3 - Bolt

- 22 Nm

4 - Thrust washer for drive sprocket

 © 2011 Mitchell Repair Information Company, LLC.

5 - Drive sprocket for left timing chain

6 - Bolt

- Replace
- 10 Nm plus an additional 90° ($^{1}/_{4}$ turn).

7 - Drive chain for timing mechanism

CAUTION: Risk of destroying due to reversed running direction on a used drive chain.

- **Mark drive chain running direction with arrows using paint for reinstallation.**

- Removing and installing --> **Drive chain for timing mechanism, removing and installing**

8 - Guide rail

9 - Bolt

- Replace
- 10 Nm plus an additional 90° ($^{1}/_{4}$ turn).

10 - Bolt

- 9 Nm

11 - Mounting bracket for drive sprocket

- For right camshaft timing chain
- Asymmetrical version
- Installed location **Right camshaft timing chain drive sprocket mounting bracket location**

12 - Thrust washer

13 - Drive sprocket for right timing chain

14 - Pivot pin for drive sprocket

15 - Bolt

- Tightening torque --> **Camshaft timing chain, assembly overview**

16 - O-ring

 © 2011 Mitchell Repair Information Company, LLC.

- Replace

17 - Chain tensioner

18 - Bolt

- Replace
- 5 Nm plus an additional 90° ($^{1}/_{4}$ turn).

19 - Crankshaft

20 - Bolt

- Replace
- 10 Nm plus an additional 90° ($^{1}/_{4}$ turn).

Right camshaft timing chain drive sprocket mounting bracket location

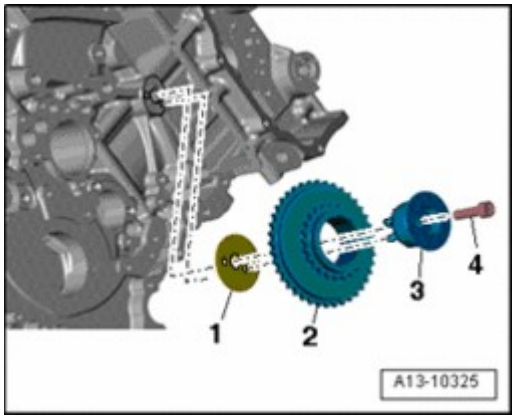

Fig. 310: Right Camshaft Timing Chain Drive Sprocket Mounting Bracket Location
Courtesy of VOLKSWAGEN UNITED STATES, INC.

- Alignment bushings in right camshaft timing chain drive sprocket mounting pins - **3** - must engage in holes in thrust washer - **1** - and cylinder block.

2 - Drive sprocket for right camshaft timing chain

4 - Bolt

Drive chain for timing mechanism, removing and installing

Special tools, testers and auxiliary items required

 © 2011 Mitchell Repair Information Company, LLC.

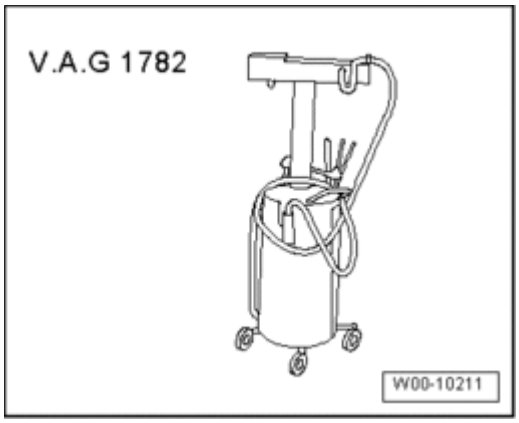

Fig. 311: Identifying Old Oil Collecting And Extracting Device V.A.G 1782
Courtesy of VOLKSWAGEN UNITED STATES, INC.

- Old oil collecting and extracting device V.A.G 1782

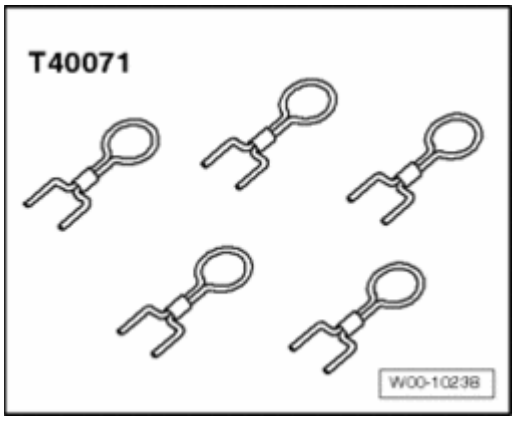

Fig. 312: Securing Pin T40071
Courtesy of VOLKSWAGEN UNITED STATES, INC.

- Securing pin T40071

Removing

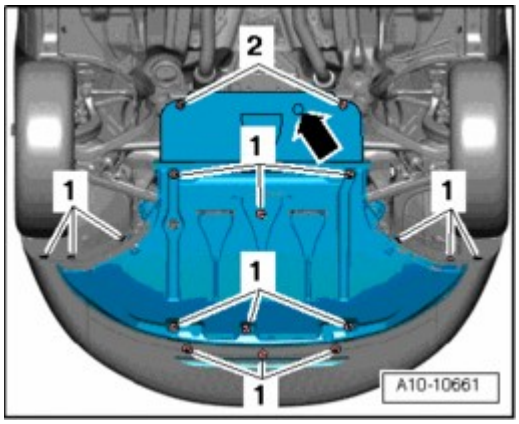

 © 2011 Mitchell Repair Information Company, LLC.

Fig. 313: Identifying Noise Insulation And Mountings
Courtesy of VOLKSWAGEN UNITED STATES, INC.

- Remove sound insulation by loosening securing pieces - **1, 2 and arrow** -.
- Place old oil collecting and extracting device V.A.G 1782 under engine and drain engine oil.
- Remove automatic transmission --> **37 - AUTOMATIC TRANSMISSION - CONTROLS, HOUSING** .
- Remove drive plate --> **Drive plate, removing and installing**.

- Remove cylinder head cover: left --> **Left cylinder head cover, removing and installing** , right --> **Right cylinder head cover, removing and installing**.
- Remove left and right timing chain covers --> **Left and right timing chain covers, removing and installing**.
- Remove intake manifold --> **24 - MULTIPORT FUEL INJECTION (MFI)** .
- Remove oil filter housing --> **Oil filter housing, removing and installing**.

- Remove lower timing chain cover --> **Timing chain lower cover, removing and installing**.
- Remove camshaft timing chains --> **Camshaft timing chain, removing and installing**.
- Remove power take-off drive chain --> **Power take-off drive chain, removing and installing**.

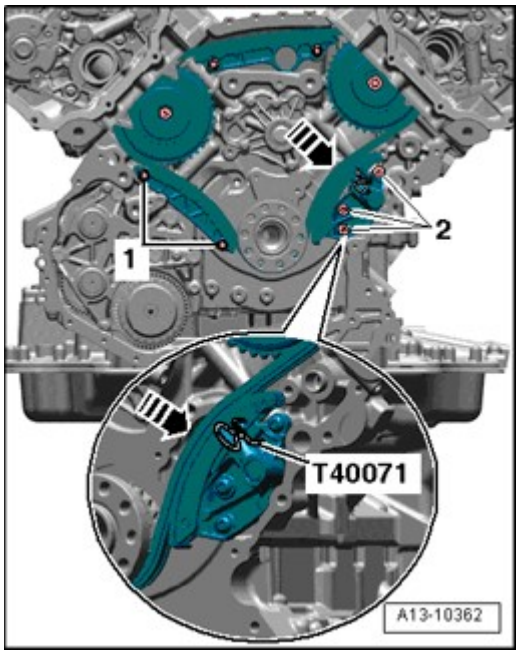

Fig. 314: Pushing Drive Chain Tensioner Guide Rail And Securing Chain Tensioner Using Locking Pin T40071
Courtesy of VOLKSWAGEN UNITED STATES, INC.

- Push drive chain tensioner guide rail in direction of - **arrow** - and secure chain tensioner using Locking Pin T40071.
- Identify running direction of drive chain with paint for reinstallation.

 © 2011 Mitchell Repair Information Company, LLC.

- Remove bolts - **1** - and remove guide rail.
- Remove bolts - **2 to 4** - and remove chain tensioner.
- Remove timing mechanism drive chain.

Installing

- Tightening torques --> **Timing mechanism drive chain, assembly overview**.

Installation is in reverse order of removal, note the following:

NOTE:

- **Replace bolts which have been tightened to torque.**

- Route timing mechanism drive chain according to marks applied to drive chain sprockets during removal.

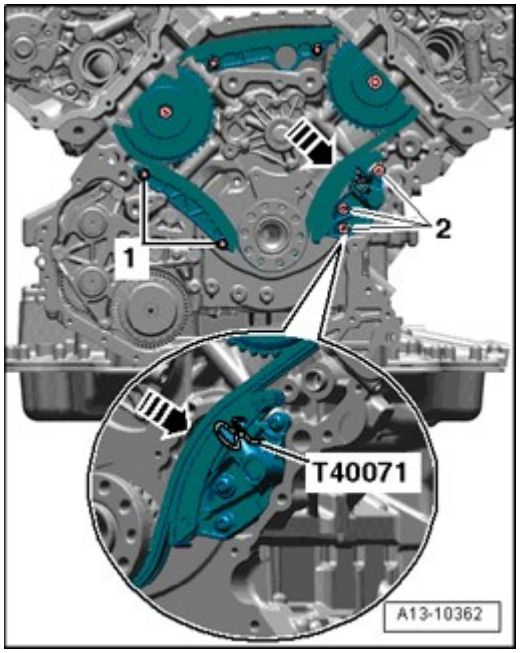

Fig. 315: Pushing Drive Chain Tensioner Guide Rail And Securing Chain Tensioner Using Locking Pin T40071
Courtesy of VOLKSWAGEN UNITED STATES, INC.

- Install guide rail and tighten bolts - **1** -.
- Install chain tensioner and tighten bolts - **2** -.
- Press drive chain tensioner guide rail in direction of - **arrow** - and remove Locking Pin T40071 from chain tensioner.
- Install power take-off drive chain --> **Power take-off drive chain, removing and installing**.
- Install camshaft timing chains **Installing**.
- Install lower timing chain cover --> **Timing chain lower cover, removing and installing**.

 © 2011 Mitchell Repair Information Company, LLC.

- Install crankshaft seal, transmission side --> **Transmission-side crankshaft sealing ring, replacing**.
- Install oil filter housing --> **Oil filter housing, removing and installing**.

- Install intake manifold --> **24 - MULTIPORT FUEL INJECTION (MFI)** .
- Install left and right timing chain covers **Installing**.
- Install cylinder head covers: Left --> **Left cylinder head cover, removing and installing** , right --> **Right cylinder head cover, removing and installing**.
- Install drive plate --> **Drive plate, removing and installing**.

- Install automatic transmission --> **37 - AUTOMATIC TRANSMISSION - CONTROLS, HOUSING** .
- Add engine oil and check oil level --> **Oil level, checking**.

Power take-off drive chain, assembly overview

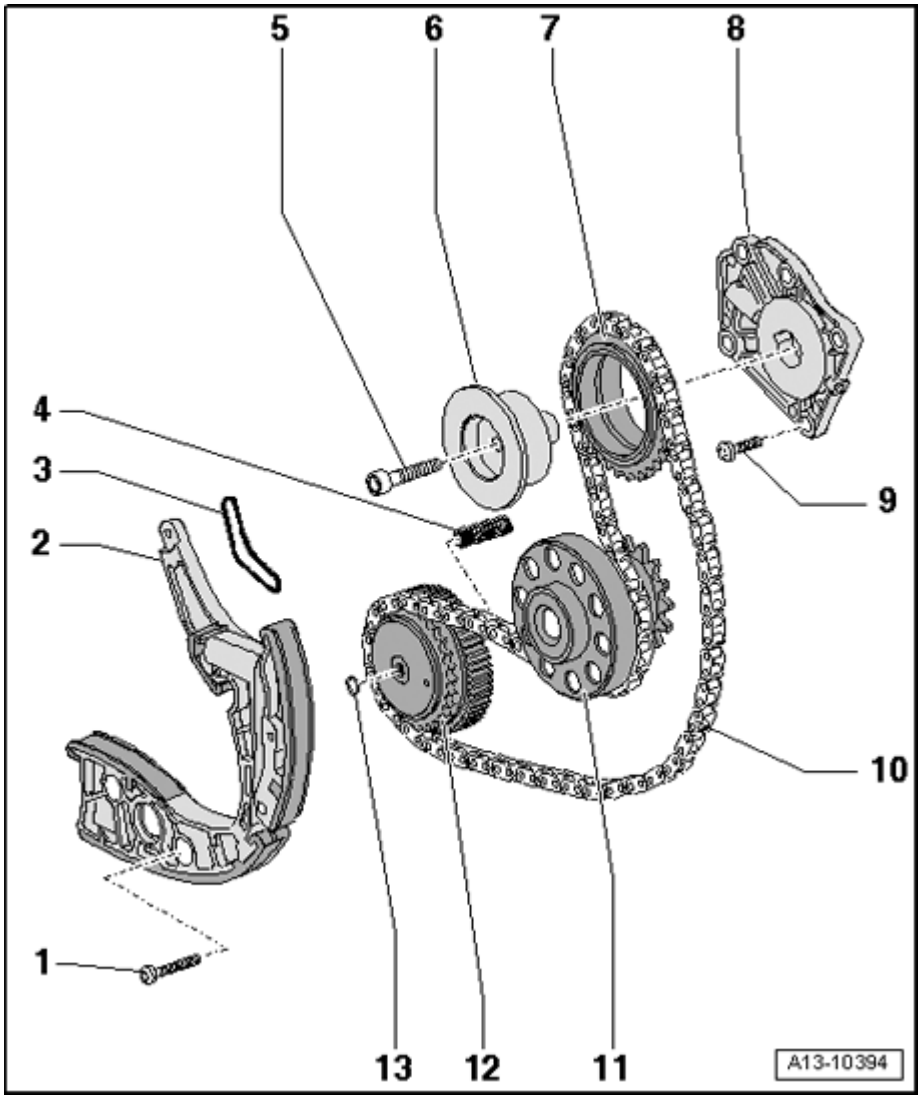

Fig. 316: Power Take-Off Drive Chain, Assembly Overview
Courtesy of VOLKSWAGEN UNITED STATES, INC.

 © 2011 Mitchell Repair Information Company, LLC.

1 - Bolt

- 9 Nm

2 - Chain tensioner

- With glide track

3 - Gasket

- Replace

4 - Spring

5 - Bolt

- 42 Nm

6 - Pivot pin for idler sprocket

7 - Idler sprocket for chain for power take-off

8 - Idler sprocket mounting bracket

9 - Bolt

- 9 Nm

10 - Power take-off drive chain

CAUTION: Risk of destroying due to reversed running direction on a used drive chain.

- **Mark drive chain running direction with arrows using paint for reinstallation.**

- Removing and installing --> **Power take-off drive chain, removing and installing**

11 - Crankshaft

12 - Drive sprocket for power take-off

13 - Circlip

Power take-off drive chain, removing and installing

Special tools, testers and auxiliary items required

 © 2011 Mitchell Repair Information Company, LLC.

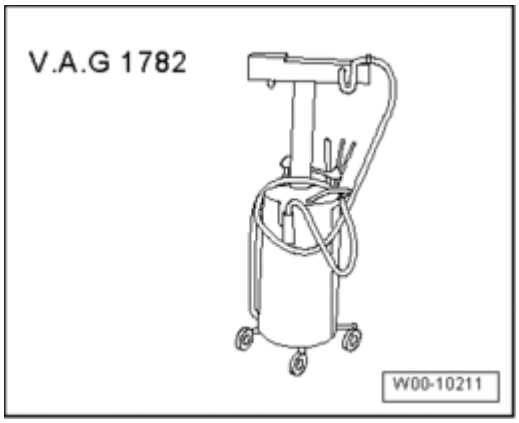

Fig. 317: Identifying Old Oil Collecting And Extracting Device V.A.G 1782
Courtesy of VOLKSWAGEN UNITED STATES, INC.

- Old oil collecting and extracting device V.A.G 1782

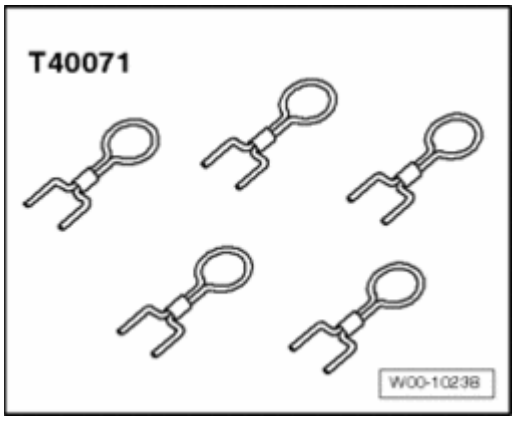

Fig. 318: Securing Pin T40071
Courtesy of VOLKSWAGEN UNITED STATES, INC.

- Securing pin T40071

Removing

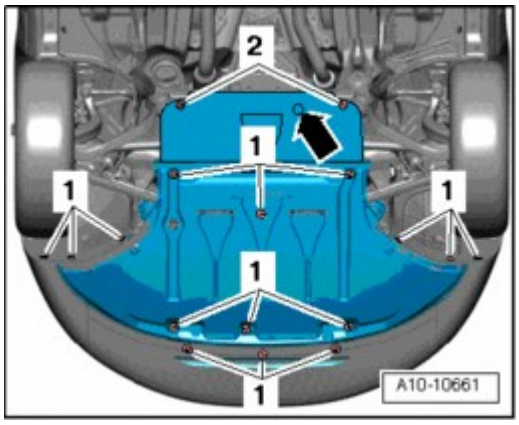

 © 2011 Mitchell Repair Information Company, LLC.

Fig. 319: Identifying Noise Insulation And Mountings
Courtesy of VOLKSWAGEN UNITED STATES, INC.

- Remove sound insulation by loosening securing pieces - **1, 2 and arrow** -.
- Place old oil collecting and extracting device V.A.G 1782 under engine and drain engine oil.
- Remove automatic transmission --> **37 - AUTOMATIC TRANSMISSION - CONTROLS, HOUSING** .
- Remove drive plate --> **Drive plate, removing and installing**.
- Remove left and right timing chain covers --> **Left and right timing chain covers, removing and installing**.
- Remove intake manifold --> **24 - MULTIPORT FUEL INJECTION (MFI)** .
- Remove oil filter housing --> **Oil filter housing, removing and installing**.
- Remove lower timing chain cover --> **Timing chain lower cover, removing and installing**.

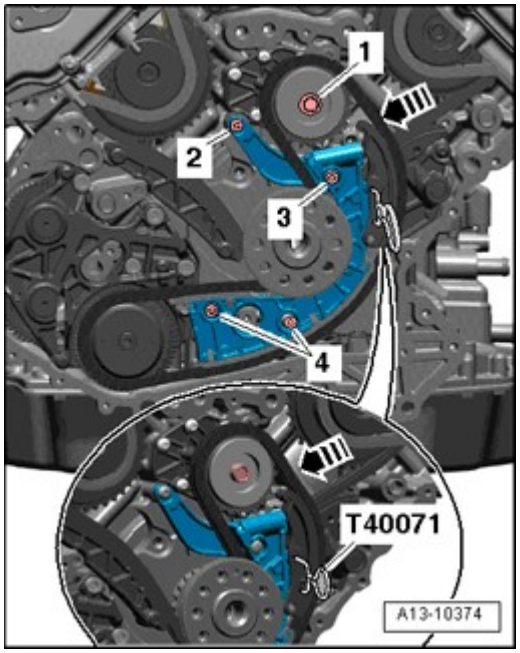

Fig. 320: Pressing Tensioning Rail And Securing Chain Tensioner With Locking Pin T40071
Courtesy of VOLKSWAGEN UNITED STATES, INC.

- Identify running direction of power take-off drive chain with paint for reinstallation.
- Press tensioning rail in direction of - **arrow** - and secure chain tensioner with Locking Pin T40071.
- Remove bolt - **1** - and remove idler sprocket.

NOTE:

- **When removing, be careful of spring in drive spur gear shaft.**

- Remove bolts - **2, 3, 4** - and remove chain tensioner.
- Remove power take-off drive chain.

 © 2011 Mitchell Repair Information Company, LLC.

Installing

- Tightening torques --> **Power take-off drive chain, assembly overview**.

Installation is in reverse order of removal, note the following:

NOTE:

- **Replace the gasket.**
- **Secure all hose connections using hose clamps appropriate for the model type .**

- Install lower timing chain cover --> **Timing chain lower cover, removing and installing**.
- Install crankshaft seal, transmission side --> **Transmission-side crankshaft sealing ring, replacing**.
- Install oil filter housing --> **Oil filter housing, removing and installing**.
- Install intake manifold --> **24 - MULTIPORT FUEL INJECTION (MFI)** .
- Install left and right timing chain covers --> **Left and right timing chain covers, removing and installing**.
- Install drive plate --> **Drive plate, removing and installing**.
- Install automatic transmission --> **37 - AUTOMATIC TRANSMISSION - CONTROLS, HOUSING** .
- Add engine oil and check oil level --> **Oil level, checking**.

Power take-off, assembly overview

 © 2011 Mitchell Repair Information Company, LLC.

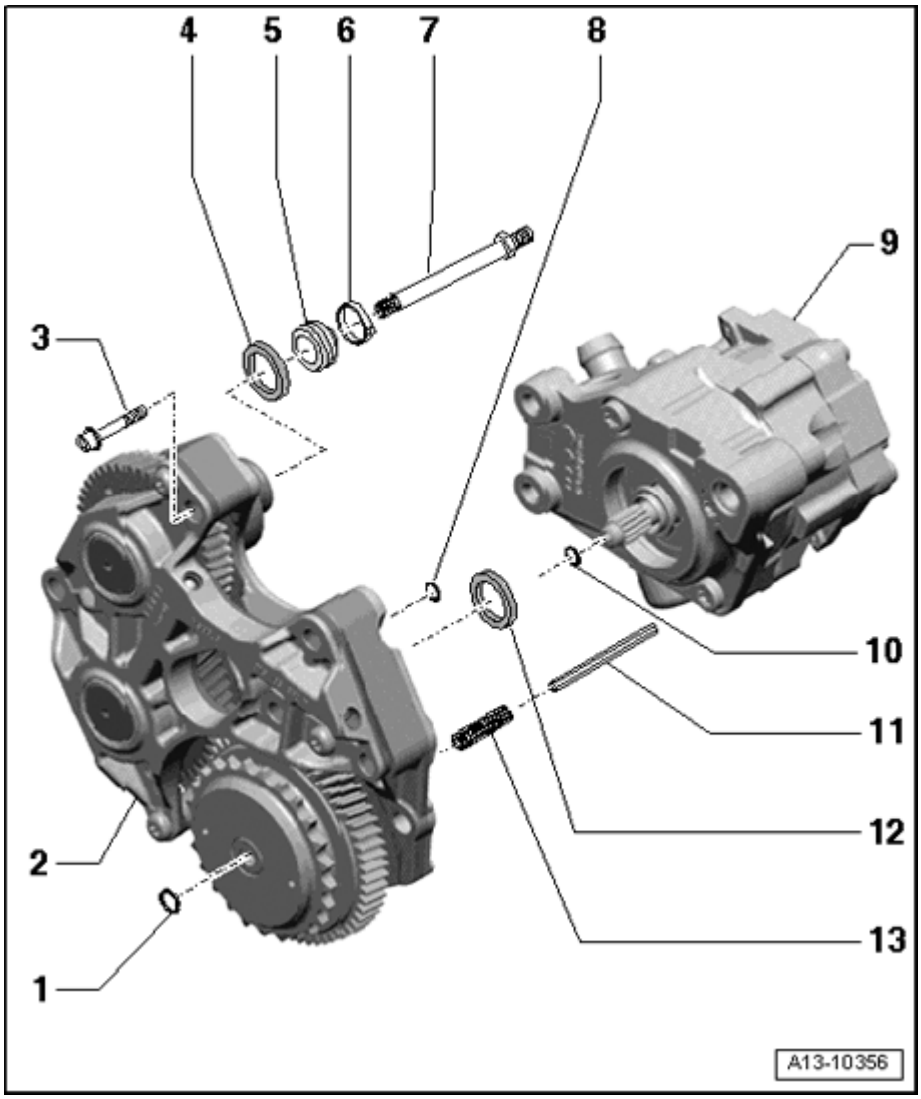

Fig. 321: Power Take-Off, Assembly Overview
Courtesy of VOLKSWAGEN UNITED STATES, INC.

1 - Circlip

2 - Spur gear unit

- Cannot be replaced separately
- Removing and installing --> **Spur gear unit, removing and installing**

3 - Bolt

- 22 Nm

4 - Sealing ring for A/C compressor drive

- Replacing --> **Seals for power take-off, replacing**.

 © 2011 Mitchell Repair Information Company, LLC.

5 - Dust seal cap for A/C compressor drive

6 - Clamp

7 - Drive shaft for A/C compressor

- 60 Nm

8 - O-ring

- Replace

9 - Power-steering pump

10 - O-ring

- Replace

11 - Drive shaft for oil pump

12 - Sealing ring for power-steering pump drive

- Replacing --> **Seals for power take-off, replacing**.

13 - Spring

Seals for power take-off, replacing

 © 2011 Mitchell Repair Information Company, LLC.

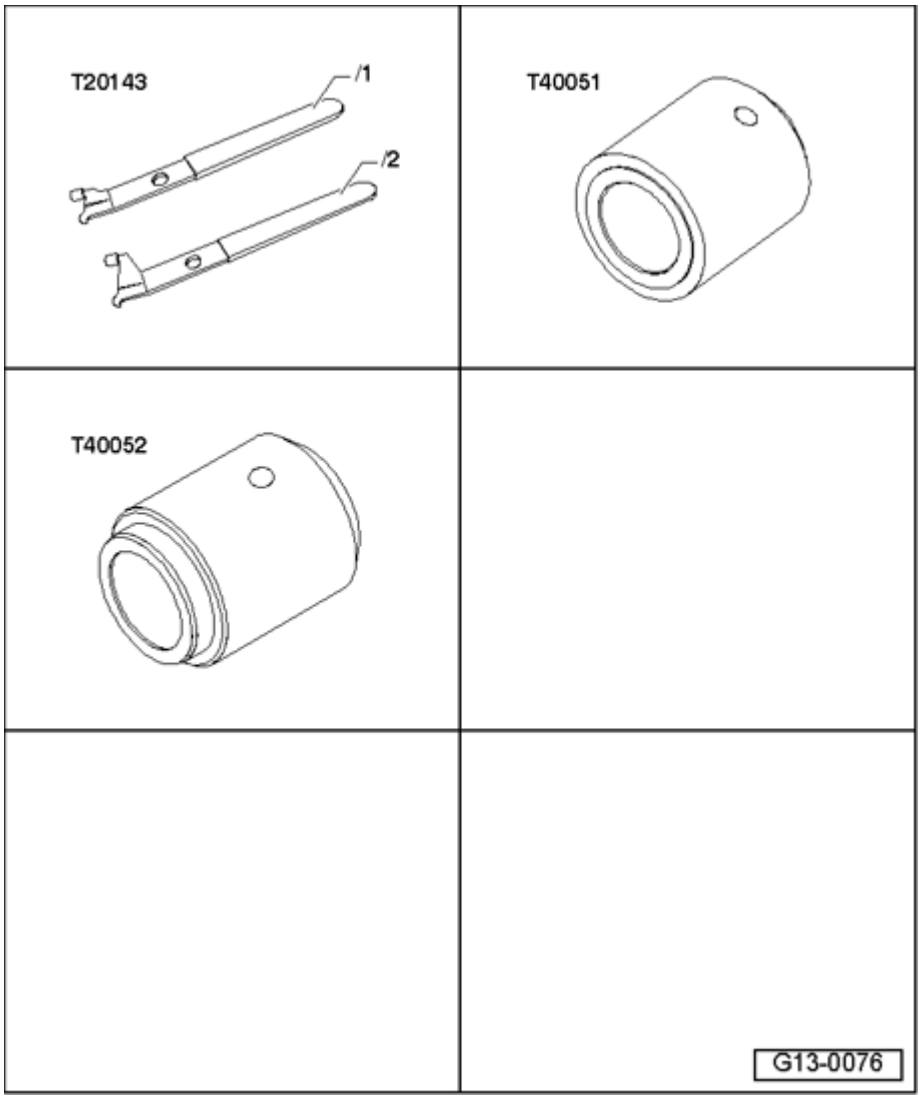

Fig. 322: Identifying Special Tools - Seals For Power Take-Off, Replacing
Courtesy of VOLKSWAGEN UNITED STATES, INC.

Special tools, testers and auxiliary items required

- Extractor hook T20143
- Pressure piece T40051
- Pressure piece T40052

Work procedure

- Remove air conditioning compressor --> **87 - AIR CONDITIONING** .
- Remove power steering pump --> **48 - STEERING** .

 © 2011 Mitchell Repair Information Company, LLC.

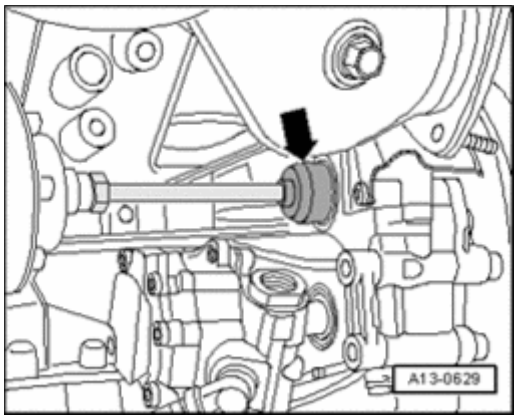

Fig. 323: Sliding Dust Seal Cap Onto Shaft End Of A/C Compressor Drive Spur Gear
Courtesy of VOLKSWAGEN UNITED STATES, INC.

- Remove hose clamp at dust cap - **arrow** -.
- Remove dust cap together with A/C compressor input shaft from shaft end of A/C compressor drive spur gear.

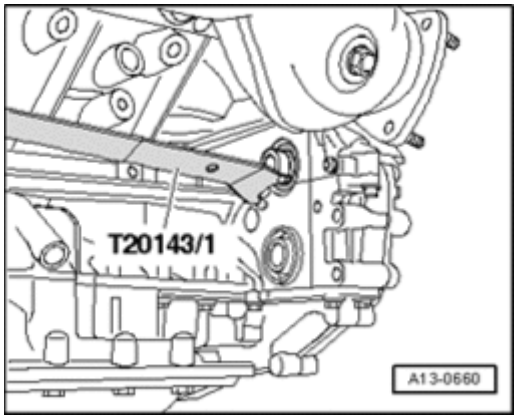

Fig. 324: Prying Out Sealing Ring For A/C Compressor Drive Using Pulling Hook T20143/1
Courtesy of VOLKSWAGEN UNITED STATES, INC.

- Pry out A/C compressor drive seal using pulling hook T20143/1.

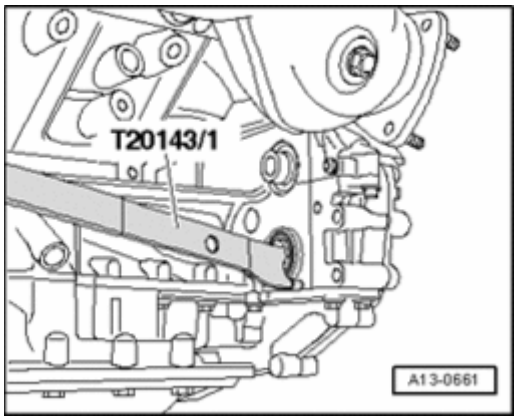

 © 2011 Mitchell Repair Information Company, LLC.

Fig. 325: Prying Out Power-Steering Pump Drive Seal Using Pulling Hook T20143/1
Courtesy of VOLKSWAGEN UNITED STATES, INC.

- Pry out power-steering pump drive seal using pulling hook T20143/1.

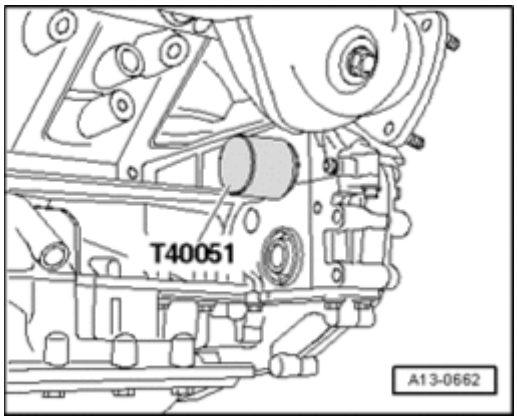

Fig. 326: Driving In Sealing Ring For A/C Compressor Drive Using Thrust Piece T40051
Courtesy of VOLKSWAGEN UNITED STATES, INC.

- Drive in sealing ring for A/C compressor drive using thrust piece T40051.

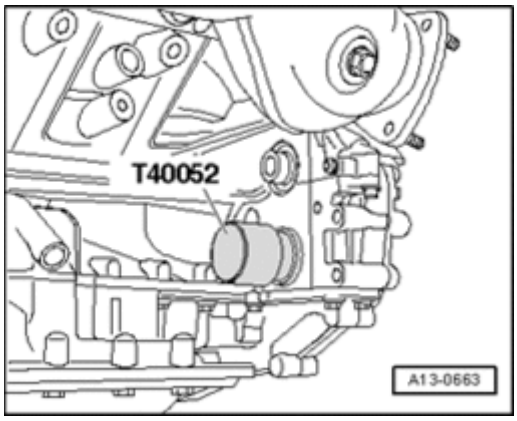

Fig. 327: Driving In Sealing Ring For Power-Steering Pump Drive Using Thrust Piece T40052
Courtesy of VOLKSWAGEN UNITED STATES, INC.

- Drive in sealing ring for power-steering pump drive using thrust piece T40052.

The rest of installation is in reverse order of removal, note the following:

- Install the power steering pump --> **48 - STEERING** .

NOTE:

- **Secure dust cap with a hose clamp appropriate to model type .**

 © 2011 Mitchell Repair Information Company, LLC.

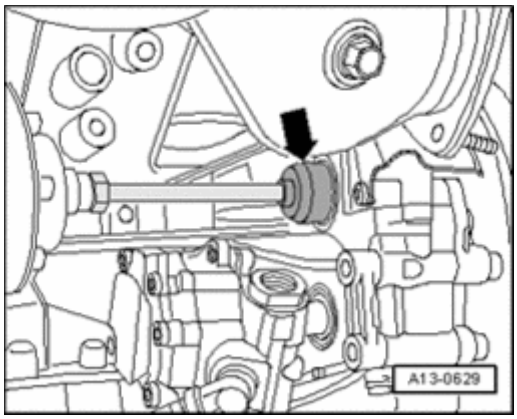

Fig. 328: Sliding Dust Seal Cap Onto Shaft End Of A/C Compressor Drive Spur Gear
Courtesy of VOLKSWAGEN UNITED STATES, INC.

- Slide dust seal cap - **arrow** - with hose clamp already installed onto shaft end of A/C compressor drive spur gear.
- Install A/C compressor --> **87 - AIR CONDITIONING** .

Spur gear unit, removing and installing

 © 2011 Mitchell Repair Information Company, LLC.

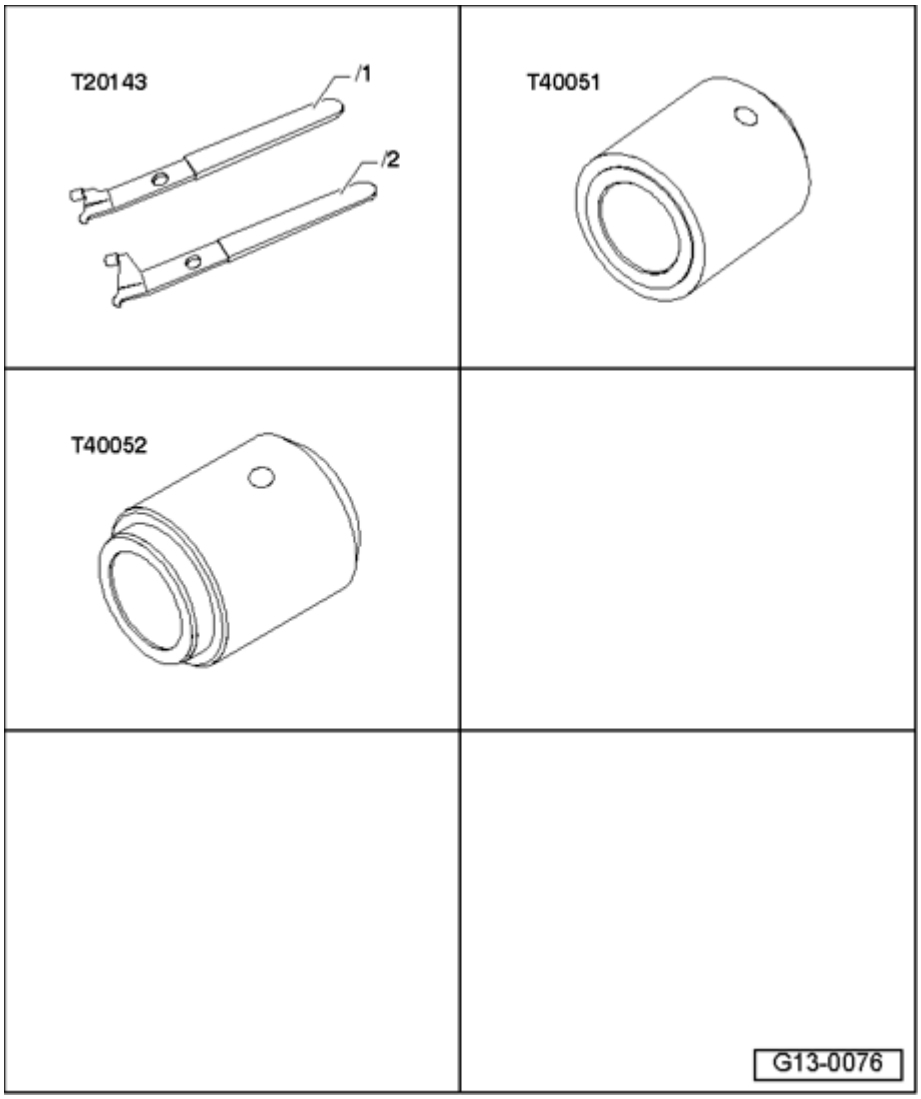

Fig. 329: Identifying Special Tools - Spur Gear Unit, Removing And Installing
Courtesy of VOLKSWAGEN UNITED STATES, INC.

Special tools, testers and auxiliary items required

- Extractor hook T20143
- Pressure piece T40051
- Pressure piece T40052

Special tools, testers and auxiliary items required

 © 2011 Mitchell Repair Information Company, LLC.

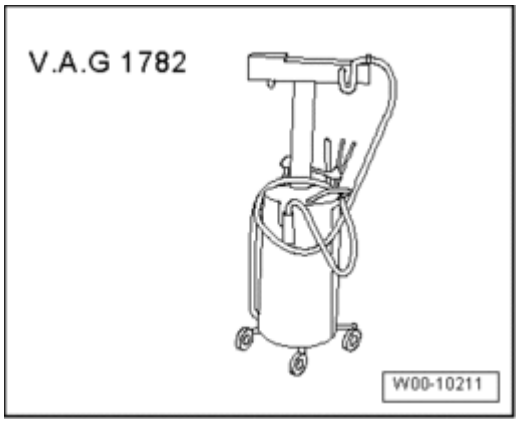

Fig. 330: Identifying Old Oil Collecting And Extracting Device V.A.G 1782
Courtesy of VOLKSWAGEN UNITED STATES, INC.

- Old oil collecting and extracting device V.A.G 1782
- Sealant

Removing

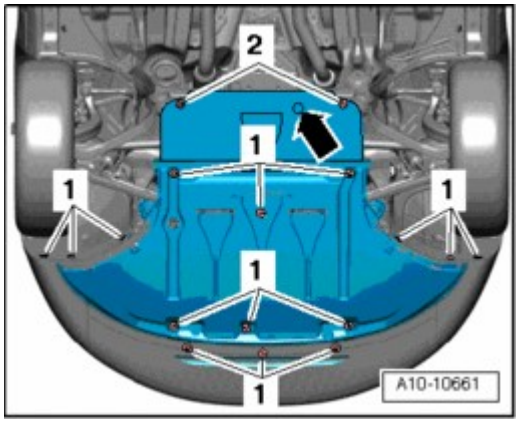

Fig. 331: Identifying Noise Insulation And Mountings
Courtesy of VOLKSWAGEN UNITED STATES, INC.

- Remove sound insulation by loosening securing pieces - **1, 2 and arrow** -.
- Place old oil collecting and extracting device V.A.G 1782 under engine and drain engine oil.
- Remove automatic transmission --> **37 - AUTOMATIC TRANSMISSION - CONTROLS, HOUSING** .
- Remove drive plate --> **Drive plate, removing and installing**.
- Remove left and right timing chain covers --> **Left and right timing chain covers, removing and installing**.
- Remove intake manifold --> **24 - MULTIPORT FUEL INJECTION (MFI)** .
- Remove oil filter housing --> **Oil filter housing, removing and installing**.
- Remove lower timing chain cover --> **Timing chain lower cover, removing and installing**.

 © 2011 Mitchell Repair Information Company, LLC.

- Remove power-steering pump from cylinder block.

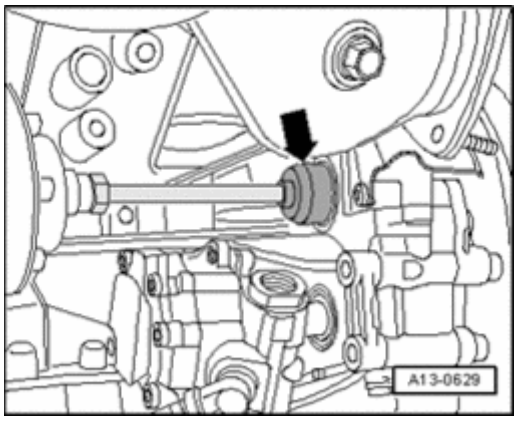

Fig. 332: Sliding Dust Seal Cap Onto Shaft End Of A/C Compressor Drive Spur Gear
Courtesy of VOLKSWAGEN UNITED STATES, INC.

- Remove hose clamp at A/C compressor dust cap - **arrow** -.
- Remove power take-off drive chain --> **Power take-off drive chain, removing and installing**.

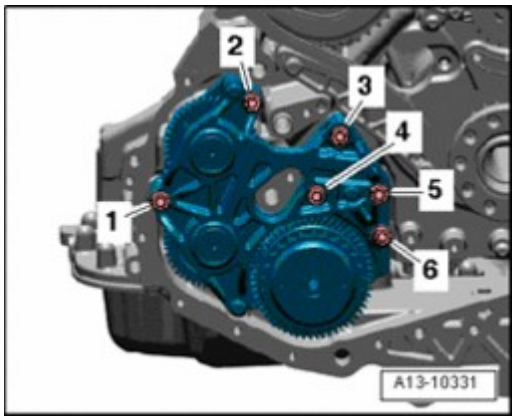

Fig. 333: Removing Bolts & Spur Gear Unit
Courtesy of VOLKSWAGEN UNITED STATES, INC.

- Remove bolts - **1 to 6** -.
- Remove spur gear unit.

 © 2011 Mitchell Repair Information Company, LLC.

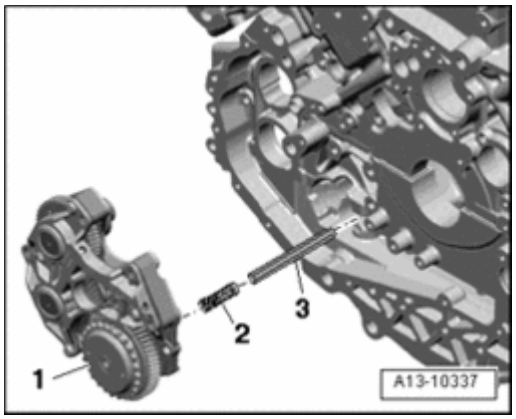

Fig. 334: Removing Compression Spring Between Spur Gear Unit And Oil Pump Input Shaft
Courtesy of VOLKSWAGEN UNITED STATES, INC.

- Remove compression spring - **2** - between spur gear unit - **1** - and oil pump input shaft - **3** -.

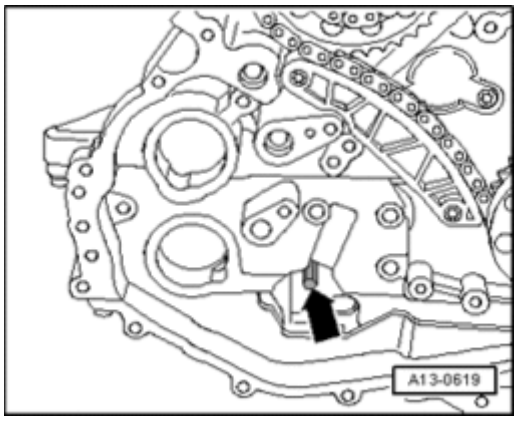

Fig. 335: Removing Drive Shaft For Oil Pump
Courtesy of VOLKSWAGEN UNITED STATES, INC.

- Remove drive shaft - **arrow** - for oil pump.

Installing

- Tightening torque --> **Power take-off, assembly overview**.

NOTE:

- **Replace sealing rings and O-rings.**

 © 2011 Mitchell Repair Information Company, LLC.

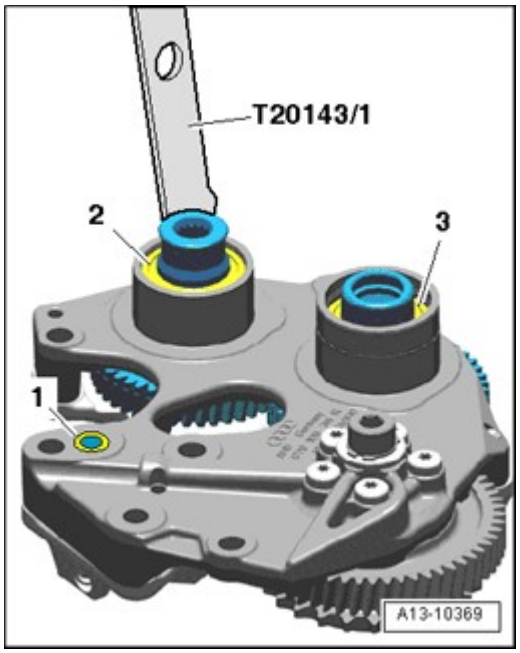

Fig. 336: Removing A/C Compressor Drive Seal And Power Steering Pump Drive Seal Using Pulling Hook T20143/1
Courtesy of VOLKSWAGEN UNITED STATES, INC.

- Remove A/C compressor drive seal - **2** - and power steering pump drive seal - **3** - using pulling hook T20143/1.
- Remove O-ring - **1** -.
- Remove sealant residue on spur gear unit and cylinder block.
- Clean sealing surfaces so they are completely free of any oil or grease.

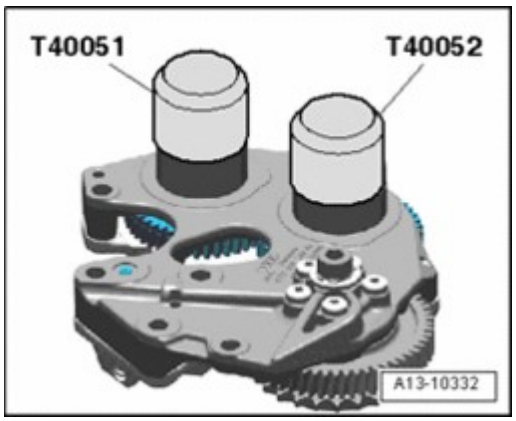

Fig. 337: Driving In Sealing Ring For A/C Compressor Drive Using Thrust Piece T40051 & Sealing Ring For Power-Steering Pump Drive Using Thrust Piece T40052
Courtesy of VOLKSWAGEN UNITED STATES, INC.

- Drive in sealing ring for A/C compressor drive using thrust piece T40051.
- Drive in sealing ring for power-steering pump drive using thrust piece T40052.

 © 2011 Mitchell Repair Information Company, LLC.

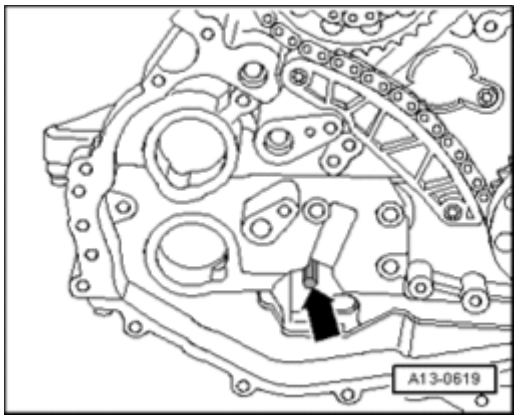

Fig. 338: Removing Drive Shaft For Oil Pump
Courtesy of VOLKSWAGEN UNITED STATES, INC.

- Insert drive shaft - **arrow** - for oil pump into guide on oil pump.

NOTE:

- **To guarantee that the drive shaft engages correctly in oil pump, insert drive shaft only into oil pump, do not install together with front bearing cap.**

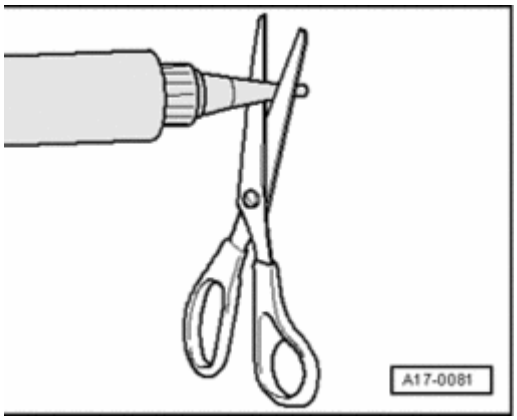

Fig. 339: Cutting Tube Nozzle At Front Marking
Courtesy of VOLKSWAGEN UNITED STATES, INC.

- Cut off nozzle on tube of sealant at front mark (dia. of nozzle approx. 1.5 mm).

 © 2011 Mitchell Repair Information Company, LLC.

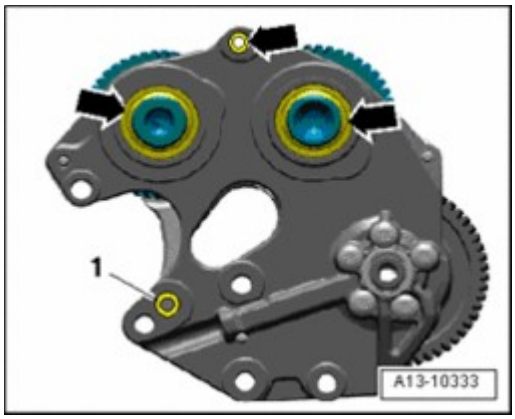

Fig. 340: Applying Sealant Beads To Clean Sealing Surfaces Of Spur Gear Unit
Courtesy of VOLKSWAGEN UNITED STATES, INC.

- Apply sealant beads - **arrows** - to clean sealing surfaces of spur gear unit as shown in illustration.
- Thickness of sealant beads: 2.0 mm.
- Position O-ring - **1** - and secure it with some grease.

NOTE:

- **The spur gear unit must be installed within 5 minutes after application of sealant.**

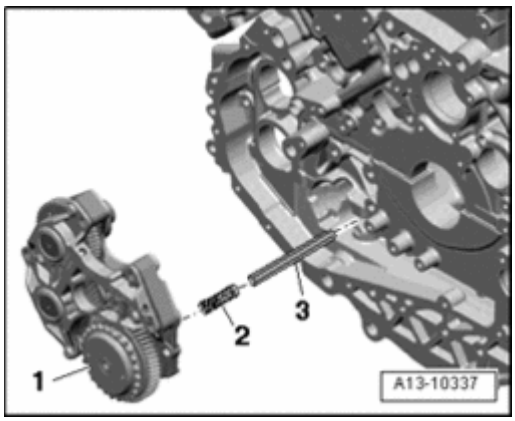

Fig. 341: Removing Compression Spring Between Spur Gear Unit And Oil Pump Input Shaft
Courtesy of VOLKSWAGEN UNITED STATES, INC.

- Position compress spring - **2** - for input shaft - **3** - in spur gear unit - **1** -.

 © 2011 Mitchell Repair Information Company, LLC.

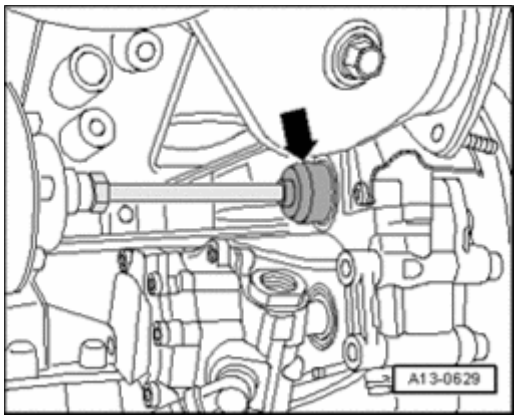

Fig. 342: Sliding Dust Seal Cap Onto Shaft End Of A/C Compressor Drive Spur Gear
Courtesy of VOLKSWAGEN UNITED STATES, INC.

NOTE:

- **Secure dust cap with a hose clamp appropriate to model type .**

- Slide dust seal cap - **arrow** - with hose clamp already installed onto shaft end of A/C compressor drive spur gear.

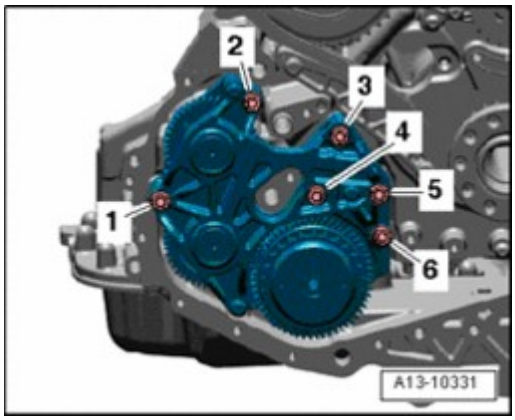

Fig. 343: Removing Bolts & Spur Gear Unit
Courtesy of VOLKSWAGEN UNITED STATES, INC.

- Position spur gear unit and tighten bolts - **1 to 6** - in a diagonal sequence in stages.
- Install power take-off drive chain --> **Power take-off drive chain, removing and installing**.
- Slide power steering pump with new O-ring onto spur gear for power-steering pump drive.

The rest of installation is in reverse order of removal, note the following:

- Install lower timing chain cover --> **Timing chain lower cover, removing and installing**.
- Install crankshaft seal, transmission side --> **Transmission-side crankshaft sealing ring, replacing**.
- Install oil filter housing --> **Oil filter housing, removing and installing**.
- Install intake manifold --> **24 - MULTIPORT FUEL INJECTION (MFI)** .

 © 2011 Mitchell Repair Information Company, LLC.

- Install left and right timing chain covers **Installing**.
- Install drive plate --> **Drive plate, removing and installing**.
- Install automatic transmission --> **37 - AUTOMATIC TRANSMISSION - CONTROLS, HOUSING** .
- Add engine oil and check oil level --> **Oil level, checking**.

VALVETRAIN

Valvetrain

NOTE:

- **Cylinder heads with cracks between valve seats or between valve seat and spark plug thread can still be used without loss of service life if the cracks are minute (max. 0.3 mm width) or only the first four threads of a spark plug thread are cracked.**

CAUTION: Risk of damaging valves and piston heads after working on valvetrain.

- **The motor must not be started for about 30 minutes after installing camshafts because the hydraulic equalization elements must seat themselves.**
- **To ensure valves do not strike pistons when starting, carefully rotate engine at least 2 full revolutions.**

Valvetrain, assembly overview

NOTE:

- **Cylinder head for cylinder bank 2 (left) is shown in illustration.**

 © 2011 Mitchell Repair Information Company, LLC.

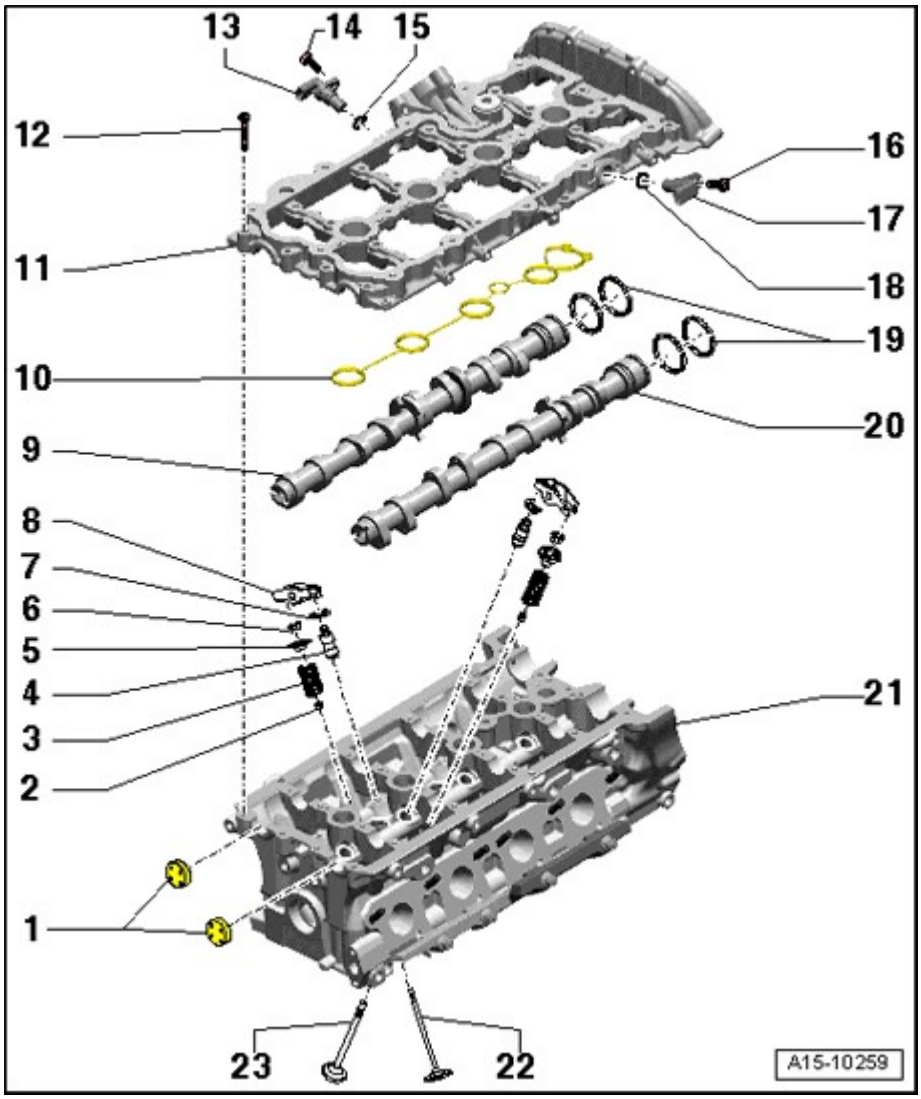

Fig. 344: Valvetrain, Assembly Overview
Courtesy of VOLKSWAGEN UNITED STATES, INC.

1 - Sealing plug

2 - Valve stem seal

- Replacing --> **Valve stem seals, replacing**.

3 - Valve spring

- Installed location **Installed position of valve spring**

4 - Support element

- With hydraulic valve clearance compensation
- Clipped into roller rocker lever - **8** -

 © 2011 Mitchell Repair Information Company, LLC.

- Checking --> **Support elements with hydraulic adjustment, checking**
- Mark for re-installation

- Lubricate contact surface

5 - Valve spring plate

6 - Valve keys

7 - Securing clip

- Check for secure seat

8 - Roller rocker lever

- Mark for re-installation
- Check roller for easy movement
- Lubricate contact surface
- To assemble, clip onto support element - **4** - with securing clip - **7** -

9 - Intake camshaft

- Removing and installing --> **Camshafts, removing and installing**
- Measuring axial play --> **Camshaft axial play, measuring**
- Measure radial clearance using Plastigage (roller rocker lever removed)
- Radial clearance at bearing-dia. 24 mm: 0.024 to 0.066 mm

- Radial clearance at bearing-dia. 36 mm: 0.032 to 0.078 mm
- Run-out: maximum 0.04 mm

10 - Gasket

- Replace

11 - Bearing bracket

- With integrated camshaft bearings
- Removing and installing --> **Camshafts, removing and installing**

12 - Bolt

- Tightening order **Bearing frame tightening sequence**

13 - Camshaft position (CMP) sensor 2 G163

 © 2011 Mitchell Repair Information Company, LLC.

14 - Bolt

- 9 Nm

15 - O-ring

- Replace

16 - Bolt

- 9 Nm

17 - Camshaft position (CMP) sensor 4 G301

18 - O-ring

- Replace

19 - Compression ring

- For camshaft adjuster

20 - Exhaust camshaft

- Removing and installing --> **Camshafts, removing and installing**
- Measuring axial play --> **Camshaft axial play, measuring**
- Measure radial clearance using Plastigage (roller rocker lever removed)
- Radial clearance at bearing-dia. 24 mm: 0.024 to 0.066 mm
- Radial clearance at bearing-dia. 36 mm: 0.032 to 0.078 mm
- Run-out: maximum 0.04 mm

21 - Cylinder head

- Check valve guides --> **Valve guides, checking**

22 - Intake valve

- Do not rework, only lapping is permitted
- Mark installed position for re-installation
- Valve dimensions --> **Valve dimensions**
- Check valve guides --> **Valve guides, checking**

23 - Exhaust valve

 © 2011 Mitchell Repair Information Company, LLC.

- Do not rework, only lapping is permitted
- Mark installed position for re-installation
- Valve dimensions --> **Valve dimensions**
- Check valve guides --> **Valve guides, checking**

Bearing frame tightening sequence

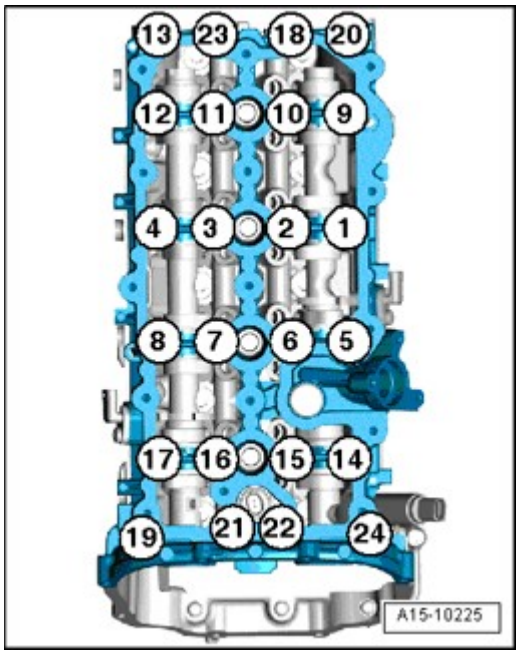

Fig. 345: Loosen Guide Frame Bolts Sequence
Courtesy of VOLKSWAGEN UNITED STATES, INC.

- Tighten bolts in 2 stages - **1 to 24** - in sequence as follows.
- Install bolts by hand as far as stop.
- Tighten bolts to 8 Nm.

Installed position of valve spring

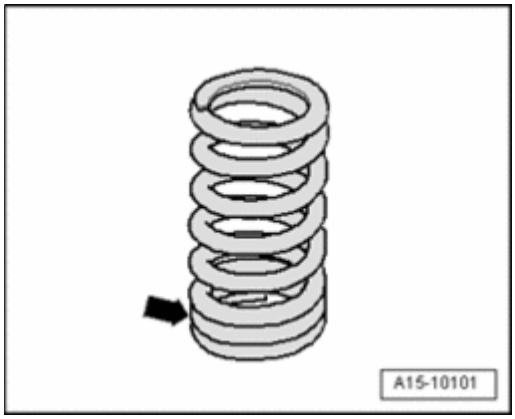

 © 2011 Mitchell Repair Information Company, LLC.

Fig. 346: Identifying Tight Spring Coils Face Toward Cylinder Head
Courtesy of VOLKSWAGEN UNITED STATES, INC.

- The tight spring coils - **arrow** - face toward cylinder head.

Camshaft axial play, measuring

Special tools, testers and auxiliary items required

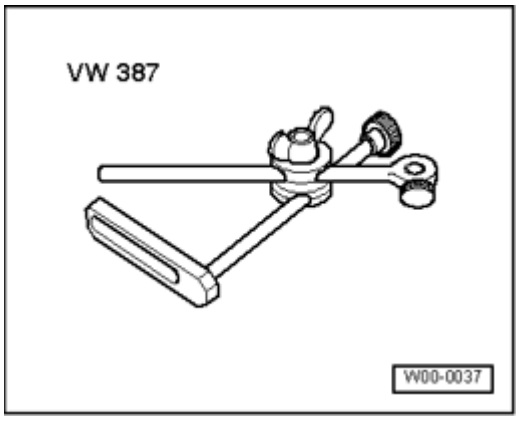

Fig. 347: Dial Gauge Holder VW 387
Courtesy of VOLKSWAGEN UNITED STATES, INC.

- Dial gauge holder VW 387

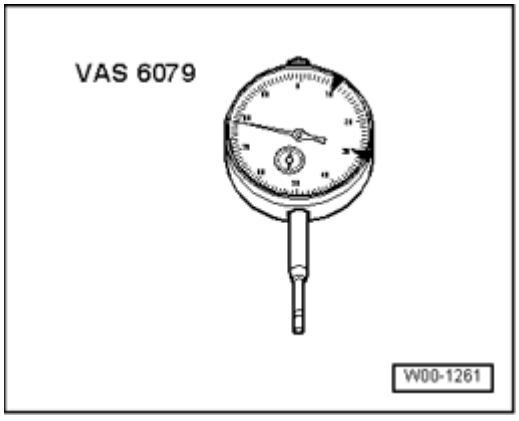

Fig. 348: Dial Gauge VAS 6079
Courtesy of VOLKSWAGEN UNITED STATES, INC.

- Dial gauge VAS 6079

Work procedure

- Perform measurement with guide frame removed.

 © 2011 Mitchell Repair Information Company, LLC.

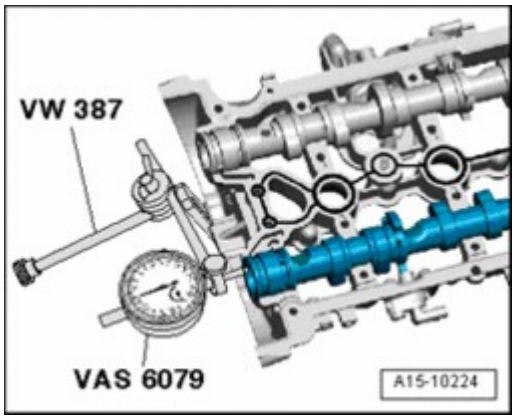

Fig. 349: Securing Dial Gauge Holder VW 387 To Dial Gauge VAS 6079 On Cylinder Head
Courtesy of VOLKSWAGEN UNITED STATES, INC.

- Secure Dial Gauge Holder VW 387 with Dial Gauge VAS 6079 on cylinder head as shown in illustration.
- Determine axial clearance.

- Axial clearance: 0.100 to 0.191 mm.

Camshafts, removing and installing

 © 2011 Mitchell Repair Information Company, LLC.

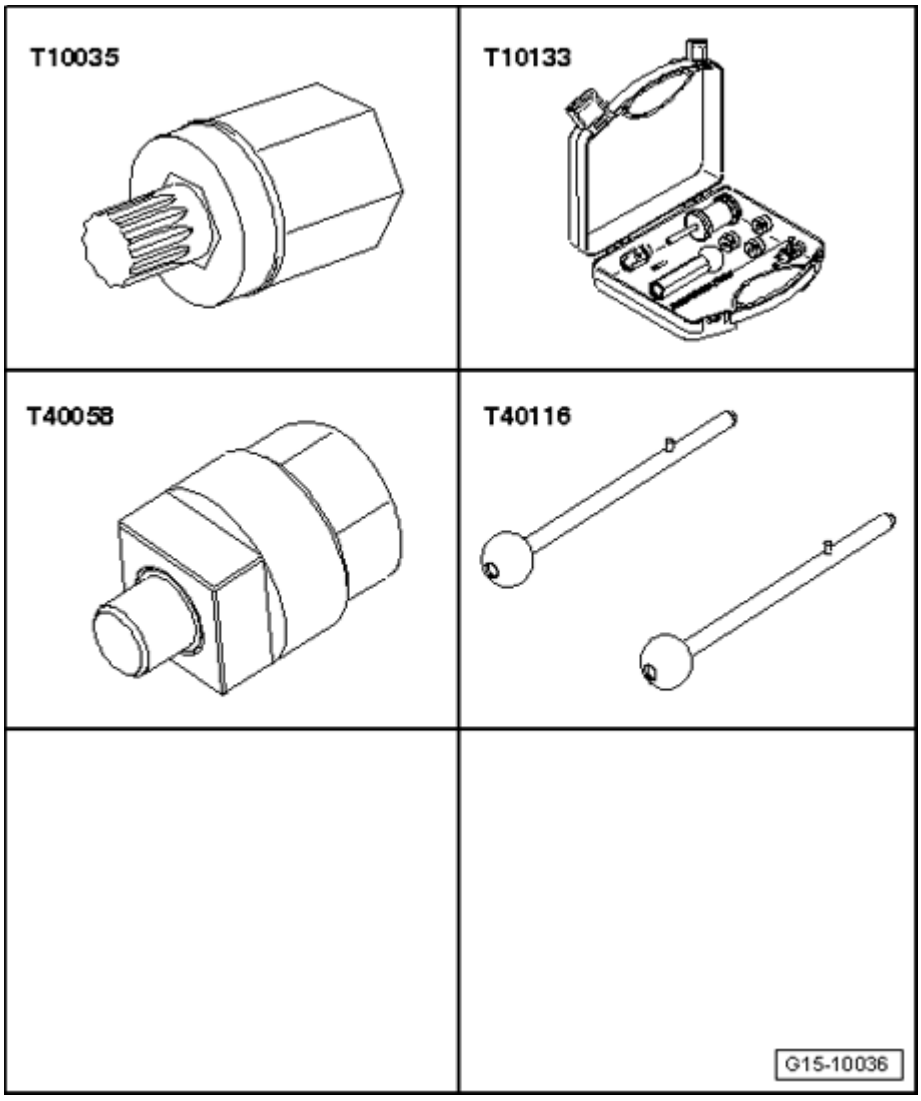

Fig. 350: Identifying Special Tools - Camshafts, Removing And Installing
Courtesy of VOLKSWAGEN UNITED STATES, INC.

Special tools, testers and auxiliary items required

- Multi-point socket T10035
- Tool set T10133
- Adapter T40058
- Securing pins 1 set = qty. 2 T40116
- Hand drill with plastic brush attachment
- Protective glasses
- Sealant

NOTE:

- **Here, removal and installation at left cylinder head is depicted in the**

 © 2011 Mitchell Repair Information Company, LLC.

following description.

Removing

- Remove cylinder head cover: Left --> **Left cylinder head cover, removing and installing** , right --> **Right cylinder head cover, removing and installing**.
- Remove left and right timing chain covers **Installing**.
- Remove camshaft timing chains from camshafts --> **Camshaft timing chains, removing from camshafts**.

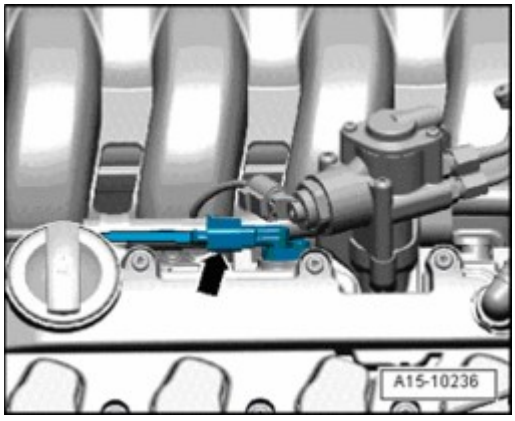

Fig. 351: Disconnecting Electrical Connector At Intake Camshaft Position Sensor
Courtesy of VOLKSWAGEN UNITED STATES, INC.

- Disconnect electrical connector at intake camshaft position sensor - **arrow** -.
- Remove high-pressure pump --> **24 - MULTIPORT FUEL INJECTION (MFI)** .

CAUTION: Risk of damaging valves and piston crowns.

- **In the course of the following steps, the crankshaft must not stand with any piston at "TDC".**

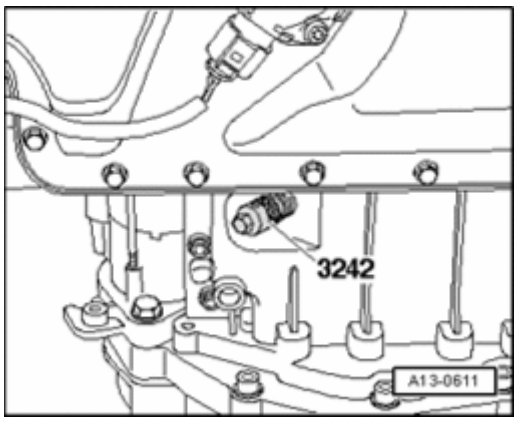

Fig. 352: Removing/Installing Crankshaft Holder 3242 Into Hole
Courtesy of VOLKSWAGEN UNITED STATES, INC.

 © 2011 Mitchell Repair Information Company, LLC.

- Remove Crankshaft Holder 3242 from upper part of oil pan.

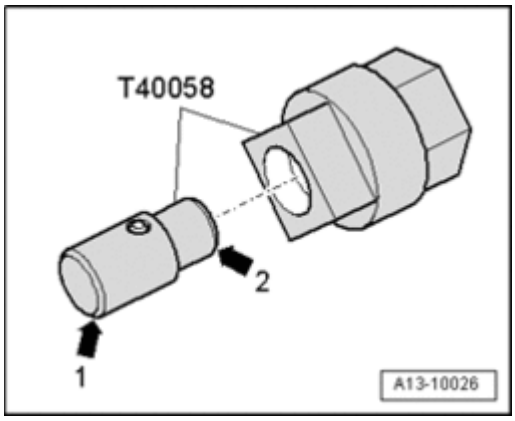

Fig. 353: Inserting Guide Pin Of Adapter T40058 So That Large Diameter Points To Engine
Courtesy of VOLKSWAGEN UNITED STATES, INC.

- Insert guide pin of adapter T40058 so that large diameter - **arrow 1** - points to adapter. Small diameter - **arrow 2** - points to engine.

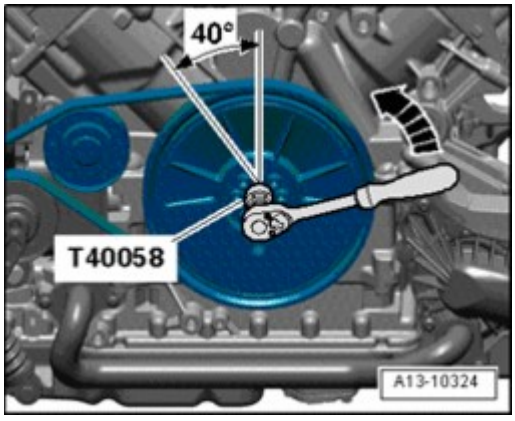

Fig. 354: Rotating Crankshaft With Socket T40058 Opposite Engine Rotation Direction 40 Degrees Out Of "TDC" Position
Courtesy of VOLKSWAGEN UNITED STATES, INC.

- Rotate crankshaft with Socket T40058 opposite engine rotation direction 40° out of "TDC" position - **arrow** -.

 © 2011 Mitchell Repair Information Company, LLC.

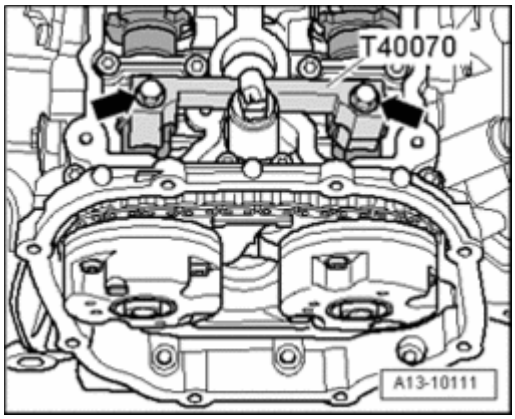

Fig. 355: Removing/Installing Camshaft Locators T40070 On Both Cylinder Heads
Courtesy of VOLKSWAGEN UNITED STATES, INC.

- Remove Camshaft Clamp T40070 at cylinder head.

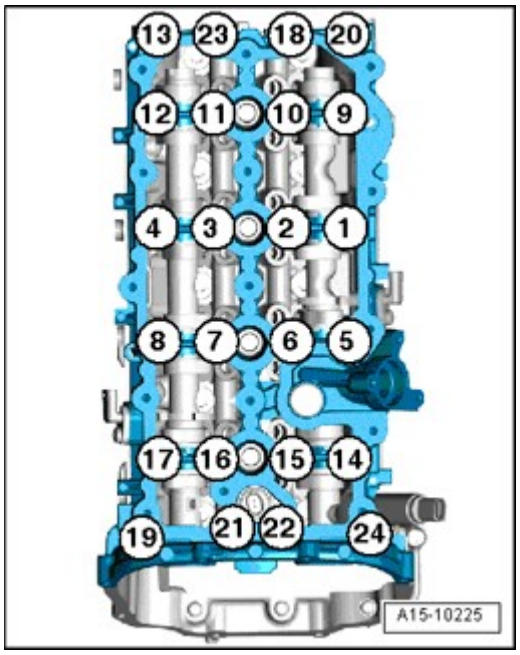

Fig. 356: Loosen Guide Frame Bolts Sequence
Courtesy of VOLKSWAGEN UNITED STATES, INC.

- Loosen guide frame bolts in sequence - **24 to 1** -.

NOTE:

- **Proceed in the same way with right guide frame.**

- Carefully remove guide frame.
- Mark camshafts for reinstallation and remove them.

 © 2011 Mitchell Repair Information Company, LLC.

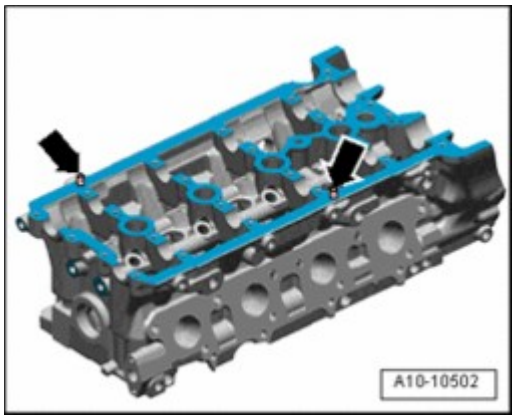

Fig. 357: Identifying Guide Frame Alignment Pins
Courtesy of VOLKSWAGEN UNITED STATES, INC.

NOTE:

- **Because the special tool cannot be used during installation, the alignment pins - arrows - on an engine with alignment pins must be driven out with a cotter pin driver.**

Installing

- Tightening torque **Bearing frame tightening sequence**

NOTE:

- **Replace seals and sealing rings.**

CAUTION: Risk of eye injury.

- **Wear safety glasses.**

CAUTION: Risk of contaminating lubricating system and bearing.

- **Cover open parts of engine.**

- Remove sealant residue on cylinder head and guide frame, e.g. with rotating plastic brush.
- Clean sealing surfaces so they are completely free of any oil or grease.
- Oil journal surfaces of camshafts.
- Place camshafts in cylinder head, noting position of camshafts so that guide frame can be installed without tension.

 © 2011 Mitchell Repair Information Company, LLC.

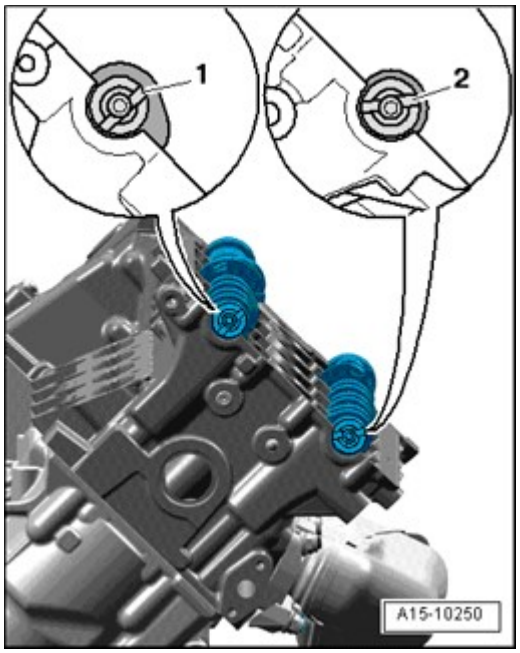

Fig. 358: Identifying Intake Camshaft & Exhaust Camshaft (Left Cylinder Head)
Courtesy of VOLKSWAGEN UNITED STATES, INC.

Left cylinder head:

1. Intake camshaft
2. Exhaust camshaft

- Groove on end of shaft must lie as shown in illustration.

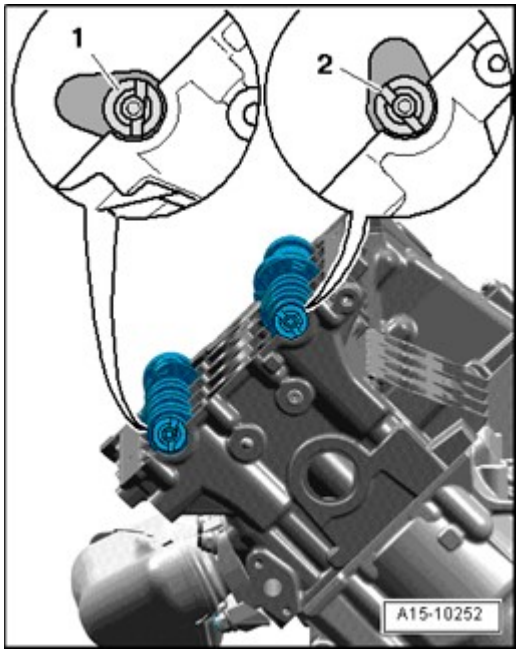

Fig. 359: Identifying Intake Camshaft & Exhaust Camshaft (Right Cylinder Head)

 © 2011 Mitchell Repair Information Company, LLC.

Courtesy of VOLKSWAGEN UNITED STATES, INC.

Right cylinder head:

1. Exhaust camshaft
2. Intake camshaft

- Groove on end of shaft must lie as shown in illustration.

Continued for both sides:

- Check location of compression ring ends.

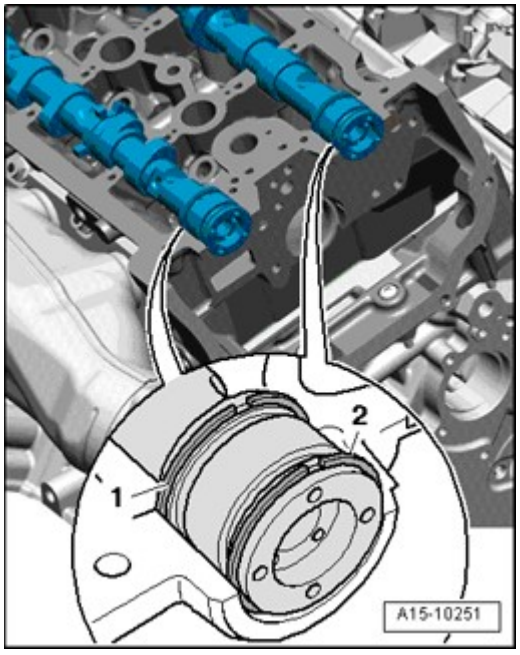

Fig. 360: Identifying Compression Ring Ends Face Upward Or Downward
Courtesy of VOLKSWAGEN UNITED STATES, INC.

- The compression ring ends - **1 and 2** - must face upward or downward, and must never face sideways.

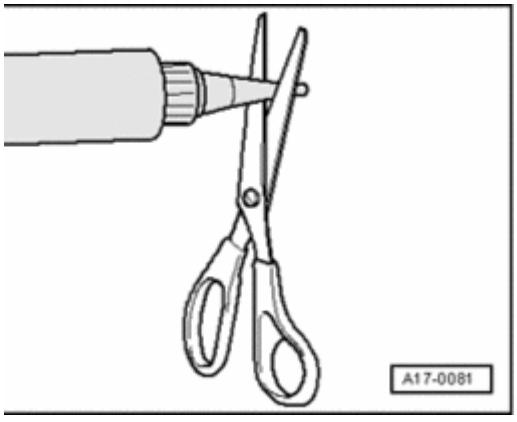

 © 2011 Mitchell Repair Information Company, LLC.

Fig. 361: Cutting Tube Nozzle At Front Marking
Courtesy of VOLKSWAGEN UNITED STATES, INC.

- Cut off nozzle on tube of sealant at front mark (dia. of nozzle approx. 2 mm).

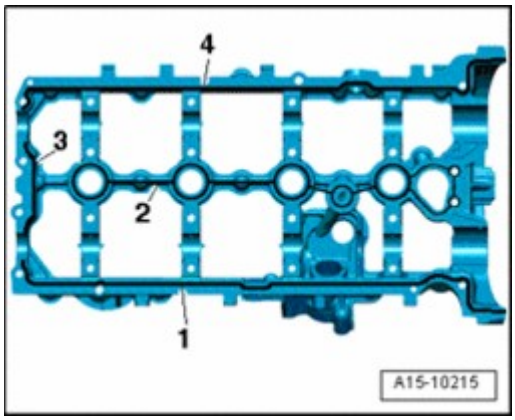

Fig. 362: Laying New Seal In Guide Frame Groove & Applying Sealant Beads On Clean Guide Frame Sealing Surfaces
Courtesy of VOLKSWAGEN UNITED STATES, INC.

- Lay seal - **2** - in guide frame groove.
- Apply sealant beads - **1, 3, 4** - on clean guide frame sealing surfaces as shown in illustration.

- Thickness of sealant beads: 2.5 mm.

CAUTION: Risk of contaminating camshaft bearing with excess sealant.

- **Do not apply sealant beads thicker than specified.**

- Place guide frame on cylinder head.

NOTE:

- **Ensure camshafts can be inserted in guide frame axial bearing without force.**

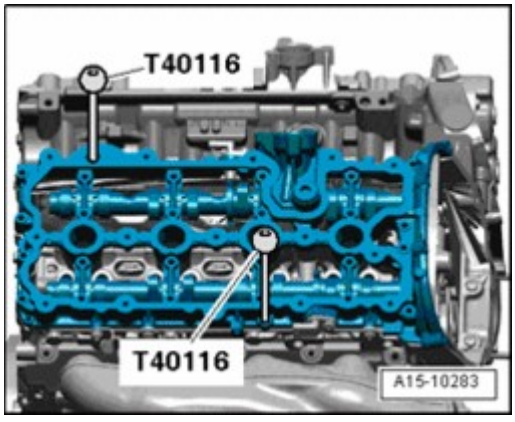

 © 2011 Mitchell Repair Information Company, LLC.

Fig. 363: Inserting Guide Frame Securing Pins T40116 In Guide Frame And Cylinder Head
Courtesy of VOLKSWAGEN UNITED STATES, INC.

- Insert locating pins T40116 in guide frame and cylinder head.

NOTE:

- **Because the sealant begins hardening immediately, guide frame must be promptly positioned and tightened.**
- **After the guide frame has been installed, sealant must dry approx. 30 minutes.**

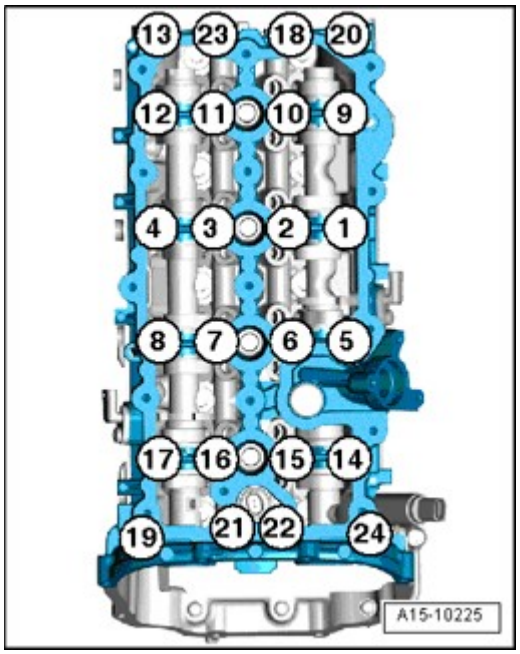

Fig. 364: Loosen Guide Frame Bolts Sequence
Courtesy of VOLKSWAGEN UNITED STATES, INC.

- Tighten guide frame bolts **Bearing frame tightening sequence**

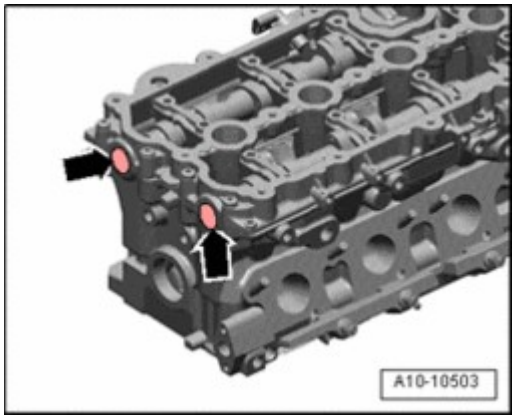

Fig. 365: Driving Sealing Plugs In Flush
Courtesy of VOLKSWAGEN UNITED STATES, INC.

 © 2011 Mitchell Repair Information Company, LLC.

- Drive sealing plugs - **arrows** - in flush.

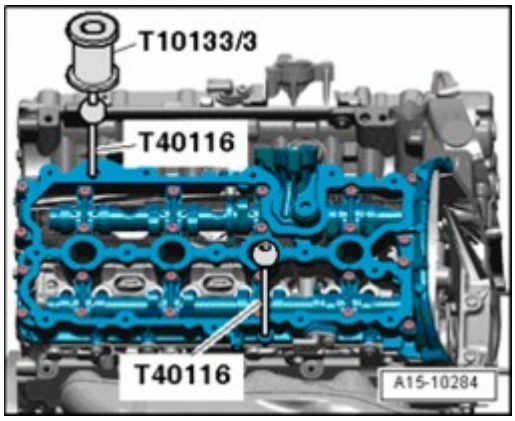

Fig. 366: Removing Guide Frame Securing Pins T40116 With Impact Puller T10133/3
Courtesy of VOLKSWAGEN UNITED STATES, INC.

- Remove locating pins T40116 with impact puller T10133/3.

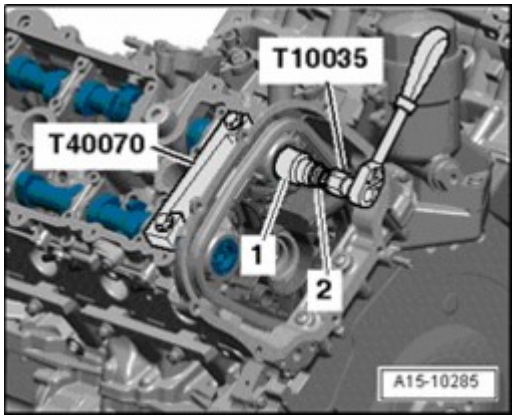

Fig. 367: Rotating Intake Camshaft To "TDC" And Tightening Camshaft Adjuster Screw On Camshaft With A Socket SW 24 Inserted Between
Courtesy of VOLKSWAGEN UNITED STATES, INC.

- Rotate intake camshaft to "TDC" and tighten camshaft adjuster screw - **2** - on camshaft with a socket SW 24 - **1** - inserted between.

NOTE:

- **Use pliers to counter-hold socket when tightening bolt.**

- Position a lever or ratchet with Socket T10035 on screw and rotate camshaft until threaded holes for Camshaft Clamp T40070 face up.
- Next, loosely fasten Camshaft Clamp T40070 to intake camshaft.

- The Camshaft Locating Tool T40070 is correctly positioned when the holes for cylinder head bolts remain free.

 © 2011 Mitchell Repair Information Company, LLC.

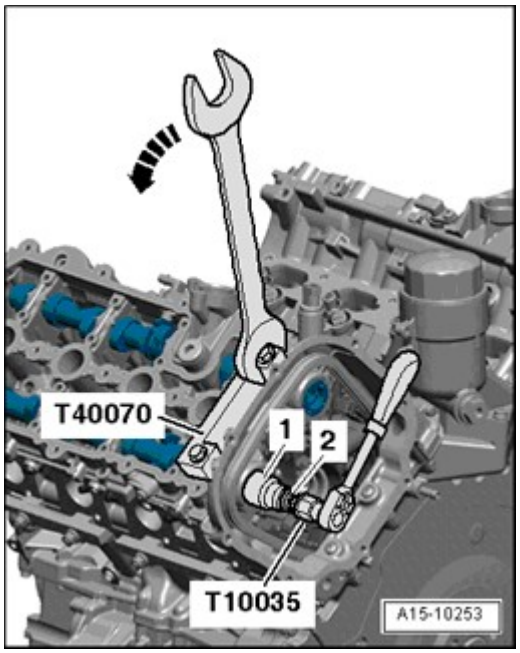

Fig. 368: Adapting Camshaft Adjuster Screw And Socket 24 To Exhaust Camshaft
Courtesy of VOLKSWAGEN UNITED STATES, INC.

- Adapt camshaft adjuster screw - **2** - and socket 24 - **1** - to exhaust camshaft.
- Rotate exhaust camshaft until threaded hole for Camshaft Clamp T40070 faces up.
- At the same time, position a counter-hold SW 24 on Camshaft Clamp T40070 and swing Camshaft Clamp T40070 against exhaust camshaft to install - **arrow** -.
- Tighten Camshaft Clamp T40070 by hand onto exhaust camshaft to avoid damaging threads (2nd technician needed).

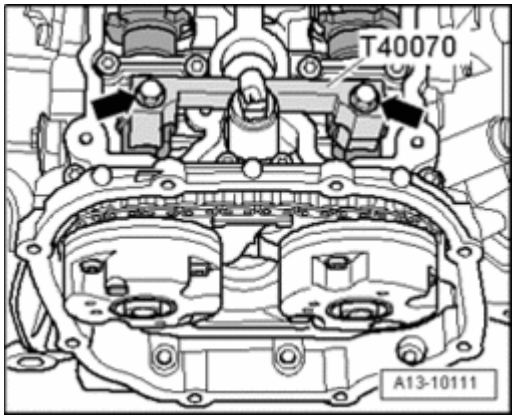

Fig. 369: Removing/Installing Camshaft Locators T40070 On Both Cylinder Heads
Courtesy of VOLKSWAGEN UNITED STATES, INC.

- Tighten Camshaft Clamp T40070 bolts to 25 Nm.

 © 2011 Mitchell Repair Information Company, LLC.

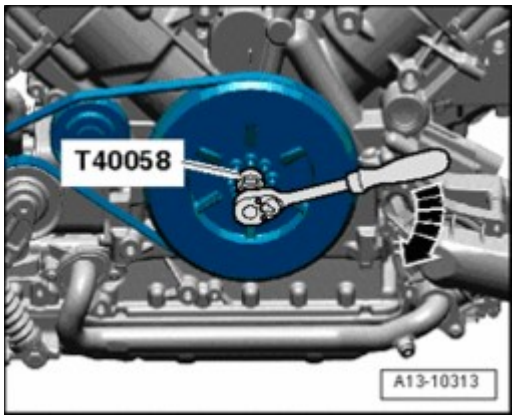

Fig. 370: Using Socket T40058 To Rotate Crankshaft To TDC
Courtesy of VOLKSWAGEN UNITED STATES, INC.

- Using Socket T40058 , rotate crankshaft in direction of engine rotation - **arrow** - to "TDC".

CAUTION: Risk of injury when touching "TDC" hole with finger.

- **Do not rotate crankshaft.**

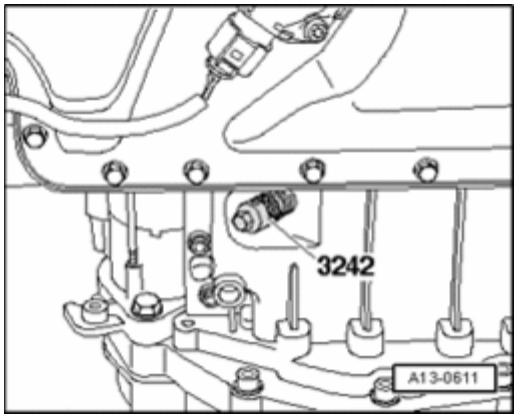

Fig. 371: Removing/Installing Crankshaft Holder 3242 Into Hole
Courtesy of VOLKSWAGEN UNITED STATES, INC.

- Install crankshaft holder 3242 into hole to 20 Nm, if necessary rotate crankshaft very slightly back and forth to completely center the holder.

The rest of installation is in reverse order of removal, note the following:

- Install high pressure pump --> **24 - MULTIPORT FUEL INJECTION (MFI)** .
- Position camshaft timing chains on camshafts **Installing**.
- Install left and right timing chain covers **Installing**.
- Install cylinder head covers: Left --> **Left cylinder head cover, removing and installing** , right --> **Right cylinder head cover, removing and installing**.

 © 2011 Mitchell Repair Information Company, LLC.

CAUTION: Risk of damaging valves and piston heads after working on valvetrain.

- **The motor must not be started for about 30 minutes after installing camshafts because the hydraulic equalization elements must seat themselves.**
- **To ensure valves do not strike pistons when starting, carefully rotate engine at least 2 full revolutions.**

Support elements with hydraulic adjustment, checking

NOTE:

- **The support elements with hydraulic adjustment cannot be serviced.**
- **Irregular valve noises are normal while starting the engine.**

Special tools, testers and auxiliary items required

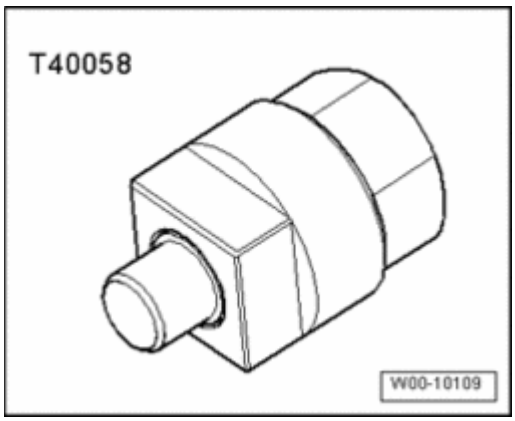

Fig. 372: Adapter T40058
Courtesy of VOLKSWAGEN UNITED STATES, INC.

- Adapter T40058
- Feeler gauge

Work procedure

- Start engine and allow it to run until coolant fan has switched on once.
- Increase RPM to approx. 2500 for 2 minutes and perform road test if necessary.

NOTE:

- **If irregular valve noises disappear but return during short drives, oil check valve must be replaced. Oil check valve location --> Oil check valve and spray nozzle valve, assembly overview.**

- If support elements with hydraulic adjustment are still loud, locate faulty support element as follows:
- Remove cylinder head cover: Left --> **Left cylinder head cover, removing and installing** , right --> **Right cylinder head cover, removing and installing**.

 © 2011 Mitchell Repair Information Company, LLC.

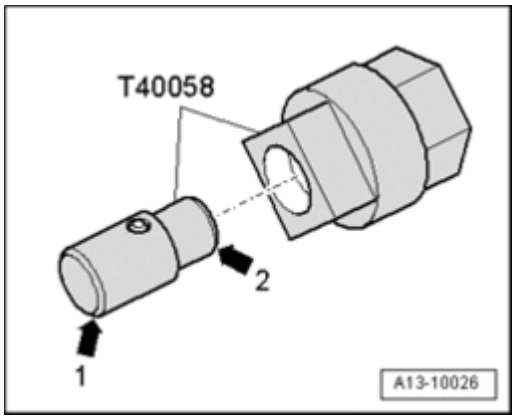

Fig. 373: Inserting Guide Pin Of Adapter T40058 So That Large Diameter Points To Engine
Courtesy of VOLKSWAGEN UNITED STATES, INC.

- Insert guide pin of adapter T40058 so that large diameter - **arrow 1** - points to engine. Small diameter - **arrow 2** - points to adapter.

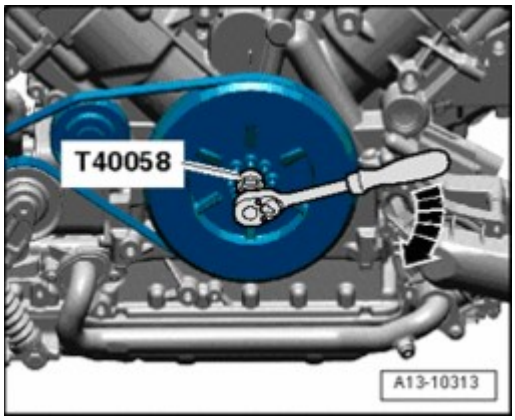

Fig. 374: Using Socket T40058 To Rotate Crankshaft To TDC
Courtesy of VOLKSWAGEN UNITED STATES, INC.

- Rotate crankshaft until cam lobes on support element to be checked point upward.

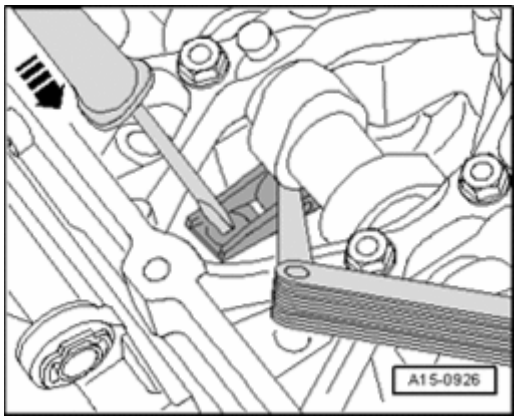

Fig. 375: Checking Play Between Cam Lobes And Roller Rocker Lever
Courtesy of VOLKSWAGEN UNITED STATES, INC.

 © 2011 Mitchell Repair Information Company, LLC.

- To determine play between cam lobes and roller rocker lever, press lever down - **arrow** -.
- If a 0.20 mm feeler gauge can slide between cam lobes and roller rocker lever, replace support element --> **Camshafts, removing and installing**.

Final procedures

- Install cylinder head cover: Left --> **Left cylinder head cover, removing and installing** , right --> **Right cylinder head cover, removing and installing**.

Valve stem seals, replacing

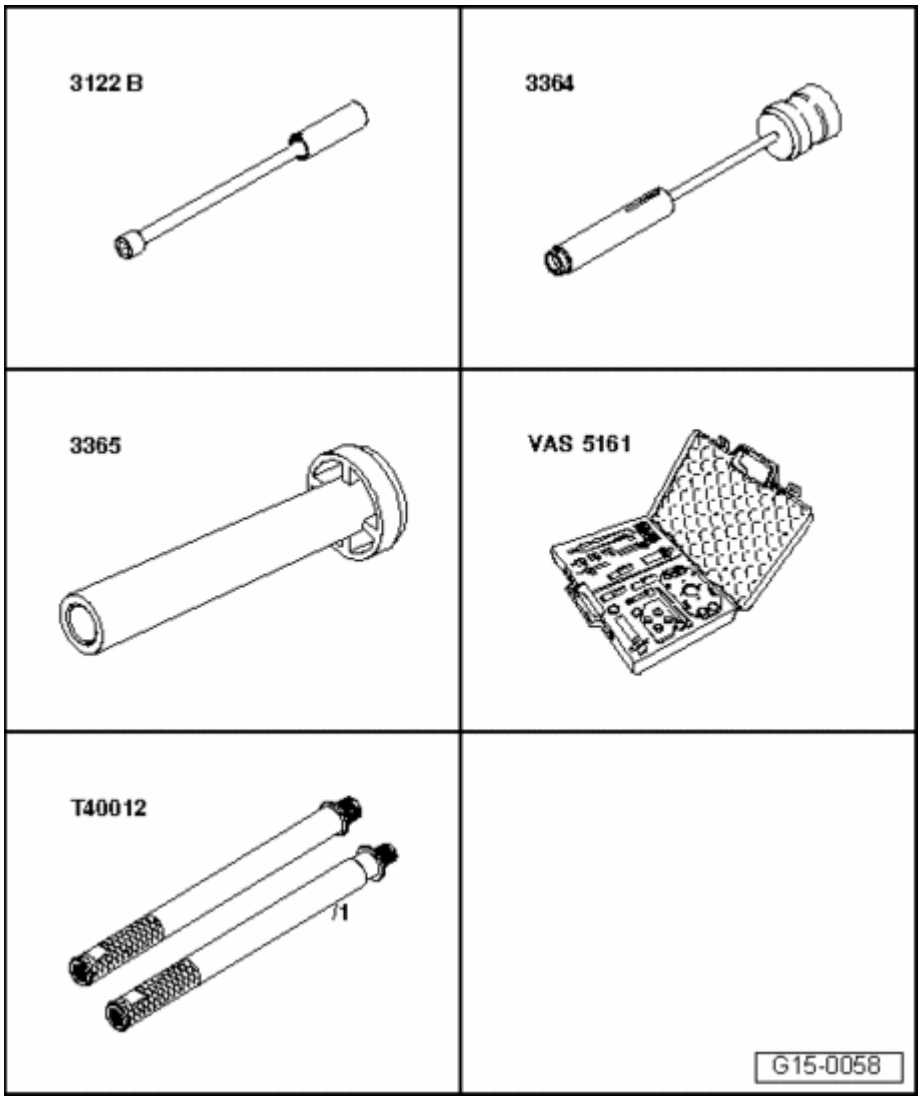

Fig. 376: Identifying Special Tools - Valve Stem Seals, Replacing
Courtesy of VOLKSWAGEN UNITED STATES, INC.

Special tools, testers and auxiliary items required

- Spark plug removal tool 3122 B

 © 2011 Mitchell Repair Information Company, LLC.

- Valve seal removal tool 3364
- Valve stem seal driver 3365
- Valve cotter disassembly and assembly device VAS 5161
- Adapter T40012

Removing

- Remove camshaft timing chains from camshafts --> **Camshaft timing chains, removing from camshafts**.
- Remove camshafts --> **Camshafts, removing and installing**.
- Using spark plug removal tool 3122 B , remove spark plugs.

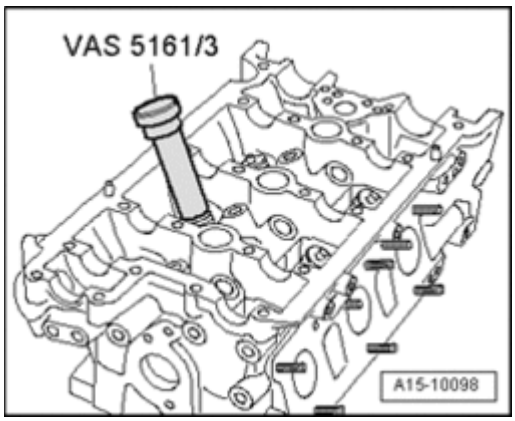

Fig. 377: Placing Drift VAS 5161/3 On Valve Spring Plate And Loosening Stuck Valve Keepers Using Plastic Hammer
Courtesy of VOLKSWAGEN UNITED STATES, INC.

- Place drift VAS 5161/3 on valve spring plate and loosen stuck valve cotters using a plastic hammer.

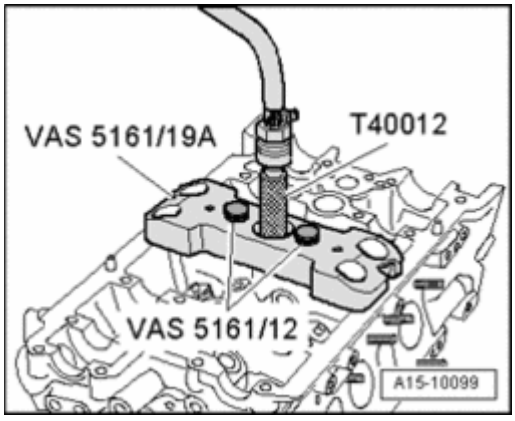

Fig. 378: Placing Guide Plate VAS 5161/19 A From Valve Cotter Disassembly And Assembly Device VAS 5161 On Cylinder Head
Courtesy of VOLKSWAGEN UNITED STATES, INC.

 © 2011 Mitchell Repair Information Company, LLC.

- Place guide plate VAS 5161/19A from Valve Cotters Asm/Dis-Asm Device VAS 5161 on cylinder head.
- Secure Guide Plate VAS5161/19A with knurled screws VAS 5161/12.
- Install adapter T40012 with gasket by hand into respective spark plug thread and apply constant pressure.

- Minimum pressure: 6 bar positive pressure.

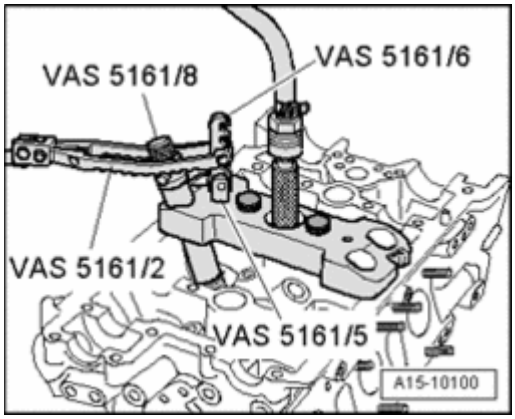

Fig. 379: Installing Engaging Device VAS 5161/6 With Installation Fork VAS 5161/5 Into Guide Plate
Courtesy of VOLKSWAGEN UNITED STATES, INC.

- Secure engaging device VAS 5161/6 with installation fork VAS 5161/5 to guide plate.
- Push installation cartridge VAS 5161/8 into guide plate.
- Engage pressure fork VAS 5161/2 at engaging device and press down installation cartridge.
- At the same time, turn knurled bolt of installation cartridge to the right, until points engage in valve keepers.

- Lightly move knurled bolt back and forth, causing valve keepers to be pressed apart and be captured in the installation cartridge.
- Release pressure fork.
- Remove installation cartridge.
- Unfasten guide plate and turn it aside.

- Pressurized air hose remains connected.

- Remove valve spring with valve spring plate.

 © 2011 Mitchell Repair Information Company, LLC.

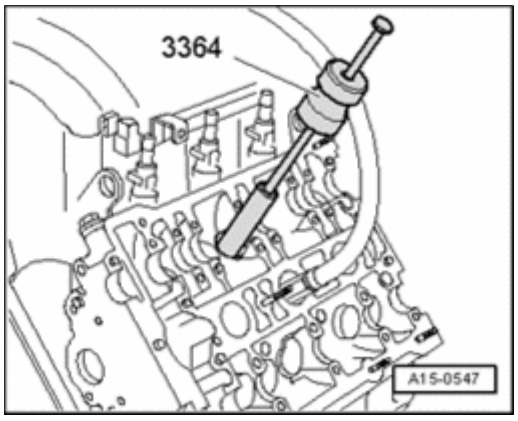

Fig. 380: Removing Valve Stem Oil Seals Using Valve Seal Removal Tool 3364
Courtesy of VOLKSWAGEN UNITED STATES, INC.

- Remove valve stem seal with Valve Seal Removal Tool 3364.

If Valve Seal Removal Tool 3364 cannot be used on some valve stem seals due to restricted clearance, proceed as follows:

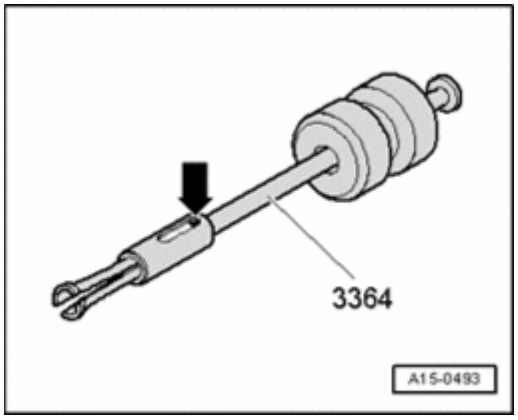

Fig. 381: Identifying Valve Seal Removal Tool 3364
Courtesy of VOLKSWAGEN UNITED STATES, INC.

- Using a drift, drive out roll pin - **arrow** - at puller with a drift and remove impact puller attachment.

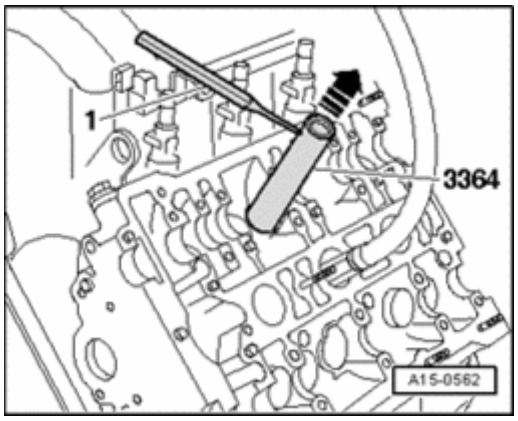

 © 2011 Mitchell Repair Information Company, LLC.

Fig. 382: Securing Valve Seal Removal Tool 3364 With Drift Or Cotter Pin Driver
Courtesy of VOLKSWAGEN UNITED STATES, INC.

- Place lower part of puller on valve stem seal.
- Secure puller with a drift or cotter pin driver - **1** - , as shown in illustration.
- Place lever on puller and pull off valve stem seal - **arrow** -.

Installing

CAUTION: Risk of damage when installing valve stem seals.

- **Place plastic sleeve - A - that is attached to valve stem seals - B - on valve stem.**

- Lightly coat sealing lips of valve stem seal with oil.
- Push valve stem seal onto plastic sleeve.

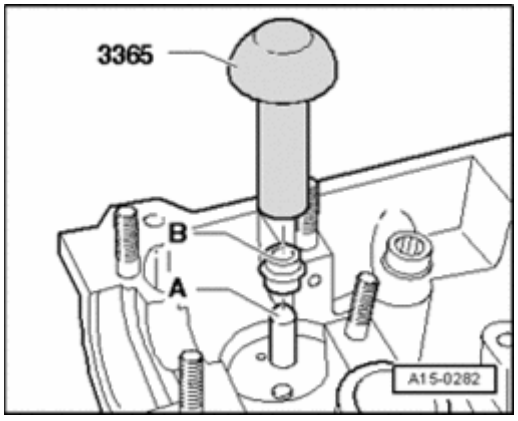

Fig. 383: Identifying Plastic Sleeve, Valve Stem Oil Seal & Valve Stem Seal Driver 3365
Courtesy of VOLKSWAGEN UNITED STATES, INC.

- Carefully press valve stem oil seal onto valve guide using valve stem seal driver 3365.
- Remove plastic sleeve again.

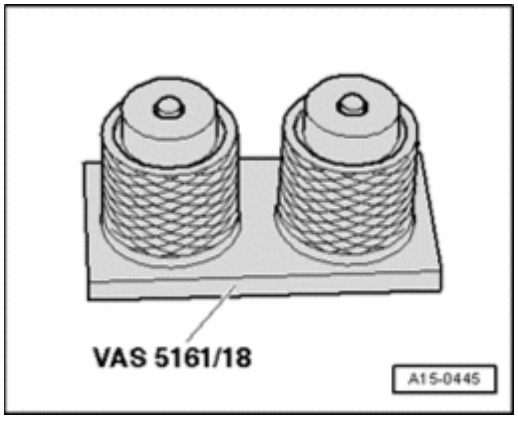

 © 2011 Mitchell Repair Information Company, LLC.

Fig. 384: Identifying Installation Cartridge VAS 5161/8
Courtesy of VOLKSWAGEN UNITED STATES, INC.

If the valve keepers were removed from the installation cartridge, they must then be inserted into the insertion device VAS 5161/18.

- The large diameter of the valve keepers point upward.

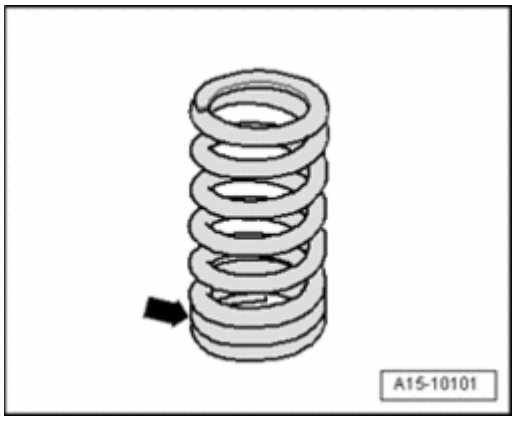

Fig. 385: Identifying Tight Spring Coils Face Toward Cylinder Head
Courtesy of VOLKSWAGEN UNITED STATES, INC.

- Install valve spring and valve spring plate.
- The tight spring coils - **arrow** - face toward cylinder head.

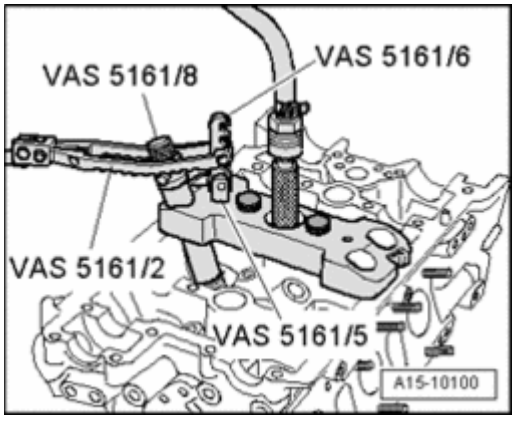

Fig. 386: Installing Engaging Device VAS 5161/6 With Installation Fork VAS 5161/5 Into Guide Plate
Courtesy of VOLKSWAGEN UNITED STATES, INC.

- Install guide plate onto cylinder head again.
- Insert installation cartridge into guide plate.
- Press down pressure fork and pull knurled bolt upward turning to left and right, valve keepers are inserted in this manner.
- Release pressure fork with knurled bolt still pulled.

 © 2011 Mitchell Repair Information Company, LLC.

- Ensure that all roller rocker levers seat properly on valve stem ends and are clipped onto respective support elements.
- Install sparks plugs 405.
- Install camshafts --> **Camshafts, removing and installing**.
- Position camshaft timing chains on camshafts **Installing**.

- Install left and right timing chain covers **Installing**.
- Install cylinder head cover: Left --> **Left cylinder head cover, removing and installing** , right --> **Right cylinder head cover, removing and installing**.

CAUTION: Risk of damaging valves and piston heads after working on valvetrain.

- **The motor must not be started for about 30 minutes after installing camshafts because the hydraulic equalization elements must seat themselves.**
- **To ensure valves do not strike pistons when starting, carefully rotate engine at least 2 full revolutions.**

Valve dimensions

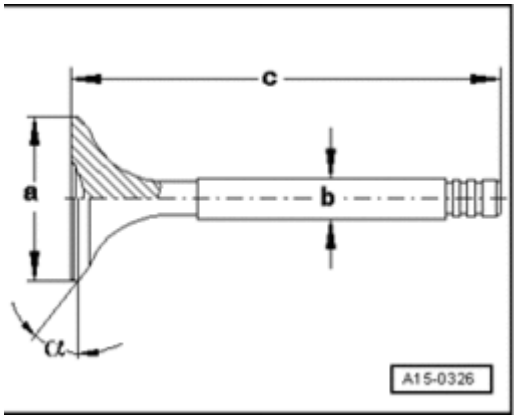

Fig. 387: Valve Dimensions
Courtesy of VOLKSWAGEN UNITED STATES, INC.

NOTE:

- **Intake and exhaust valves must not be refaced by grinding. Only lapping is permitted.**

Dimension		Intake valve	Exhaust valve
Dia. a	mm	33.85 ± 0.10	28.0 ± 0.1
Dia. b	mm	5.98 ± 0.01	5.96 ± 0.01
c	mm	103.97 ± 0.20	101.9 ± 0.2
a	Angle°	45	45

 © 2011 Mitchell Repair Information Company, LLC.

CAUTION: Risk of injury if exhaust valves with sodium filling are disposed of improperly.

- **Cut exhaust valve with sodium filling into 2 parts with a metal saw between shaft center and valve plate. While doing this, do not come into contact with water.**
- **Throw at the most 10 such sawed exhaust valves in a bucket filled with water and step back immediately.**
- **When there is contact with water, a sudden chemical reaction occurs which burns the sodium filling.**
- **The treated parts may then be discarded through conventional disposal channels.**

Valve guides, checking

Special tools, testers and auxiliary items required

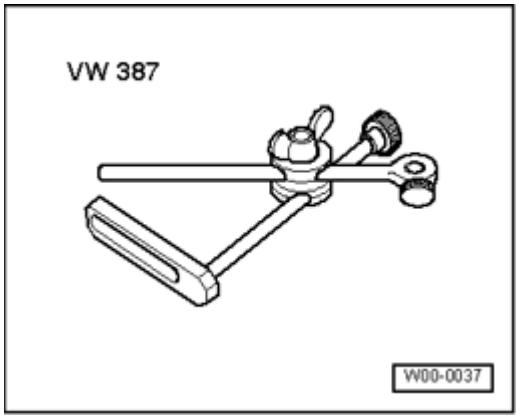

Fig. 388: Dial Gauge Holder VW 387
Courtesy of VOLKSWAGEN UNITED STATES, INC.

- Dial gauge holder VW 387

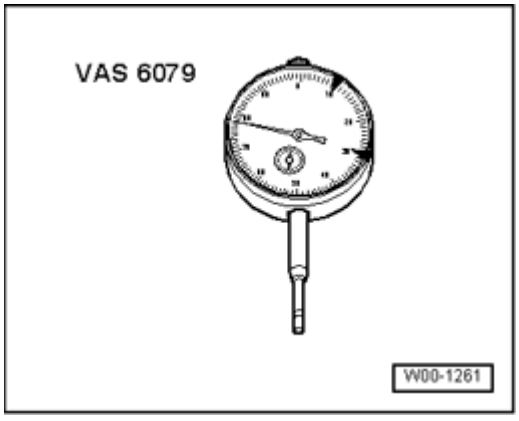

Fig. 389: Dial Gauge VAS 6079

 © 2011 Mitchell Repair Information Company, LLC.

Courtesy of VOLKSWAGEN UNITED STATES, INC.

- Dial gauge VAS 6079

Work procedure

NOTE:

- **If valve is replaced during repair, use new valve for measurement.**
- **Due to different stem diameters, only use an intake valve in the intake guide and an exhaust valve in the exhaust guide.**

- Insert valve into valve guide.

- Valve stem tip must seal with valve guide.

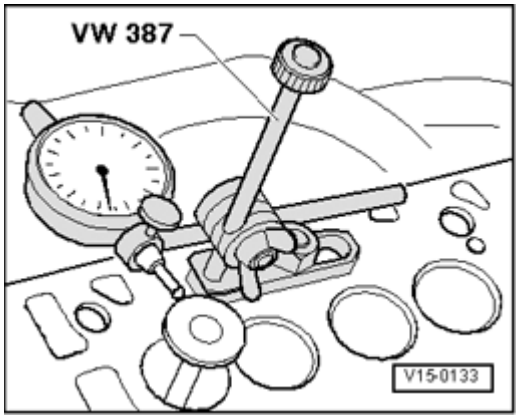

Fig. 390: Identifying Special Tool - VW 387 Installed
Courtesy of VOLKSWAGEN UNITED STATES, INC.

- Determine tilt clearance.

- Wear limit: 0.8 mm.

- If wear limit is exceeded, re-measure using new valves.
- If wear limit is still exceeded, replace cylinder head.

NOTE:

- **The valve guides cannot be replaced.**

Valves, checking

- Check valves at stem and seating surface for traces of wear.
- If there are clear traces of wear, replace valve.

17 - ENGINE - LUBRICATION

 © 2011 Mitchell Repair Information Company, LLC.

OIL PUMP AND LOWER PART OF OIL PAN

Oil pump and lower part of oil pan

NOTE:

- **If large quantities of metal particles or abraded material are detected during engine repairs, it may be an indication for a damaged crankshaft or rod bearings. To prevent subsequent damage, the following work must be performed after the repair: Oil channels must be cleaned carefully; replace oil spray jets, oil cooler and oil filter.**
- **Viscosity classes, oil specifications, oil capacities Maintenance tables.**

CAUTION: Danger of catalytic converter damage.

- **Oil level must not exceed "max" marking.**

Oil pump and lower part of oil pan, assembly overview

 © 2011 Mitchell Repair Information Company, LLC.

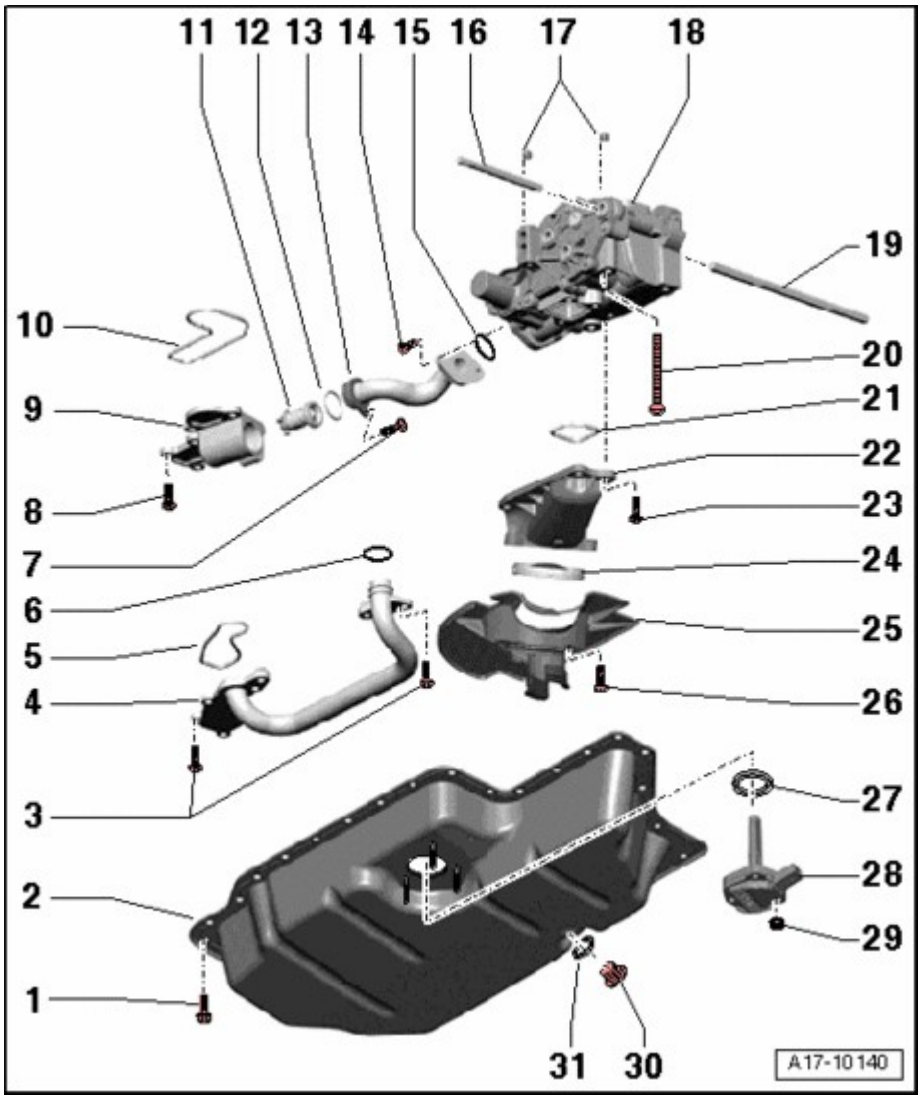

Fig. 391: Oil Pump And Lower Part Of Oil Pan, Assembly Overview
Courtesy of VOLKSWAGEN UNITED STATES, INC.

1 - Bolt

- 9 Nm

2 - Oil pan (lower section)

- Removing and installing --> **Lower part of oil pan, removing and installing**

3 - Bolt

- 9 Nm

4 - Oil pipe

 © 2011 Mitchell Repair Information Company, LLC.

5 - Gasket

- Replace

6 - O-ring

- Replace

7 - Bolt

- 9 Nm

8 - Bolt

- 9 Nm

9 - Oil check valve housing

10 - Gasket

- Replace

11 - Oil check valve

12 - O-ring

- Replace

13 - Oil pipe

14 - Bolt

- 9 Nm

15 - O-ring

- Replace

16 - Drive shaft for coolant pump

17 - Fitting sleeves

- 2 pieces

18 - Oil pump

- Do not disassemble

 © 2011 Mitchell Repair Information Company, LLC.

- With relief valve approx. 5.5 bar
- Removing and installing --> **Oil pump, removing and installing**

19 - Drive shaft for oil pump

20 - Bolt

- Replace
- 8 Nm plus an additional 90° ($^{1}/_{4}$ turn).

21 - Gasket

- Replace

22 - Intake tube

- For oil pump

23 - Bolt

- 9 Nm

24 - Oil strainer

- Clean

25 - Oil baffle

26 - Bolt

- 9 Nm

27 - Seal

- Replace

28 - Oil Level Thermal Sensor G266

29 - Bolt

- 9 Nm

30 - Oil drain plug

- 25 Nm

 © 2011 Mitchell Repair Information Company, LLC.

31 - Seal

- Replace

Lower part of oil pan, tightening sequence

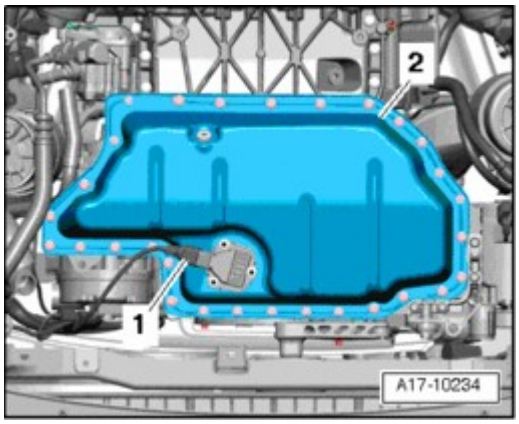

Fig. 392: Identifying Oil Level Thermal Sensor G266 Electrical Connector & Oil Pan (Lower Part)
Courtesy of VOLKSWAGEN UNITED STATES, INC.

- Tighten bolts in 3 stages as follows:
- Tight bolts by hand in a diagonal sequence.
- Pre-tighten all bolts in a diagonal sequence to 5 Nm.
- Tighten bolts diagonally to 9 Nm.

Lower part of oil pan, removing and installing

Special tools, testers and auxiliary items required

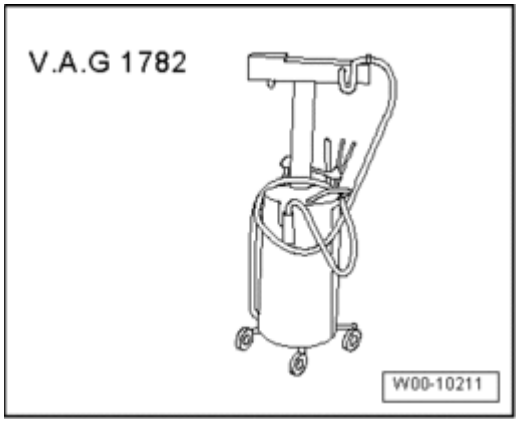

Fig. 393: Identifying Old Oil Collecting And Extracting Device V.A.G 1782
Courtesy of VOLKSWAGEN UNITED STATES, INC.

- Old oil collecting and extracting device V.A.G 1782
- Hand drill with plastic brush attachment

 © 2011 Mitchell Repair Information Company, LLC.

- Protective glasses
- Sealant

Removing

- Drain coolant --> **Cooling system, draining and filling**.
- Remove front coolant pipe --> **Front coolant line, removing and installing**.

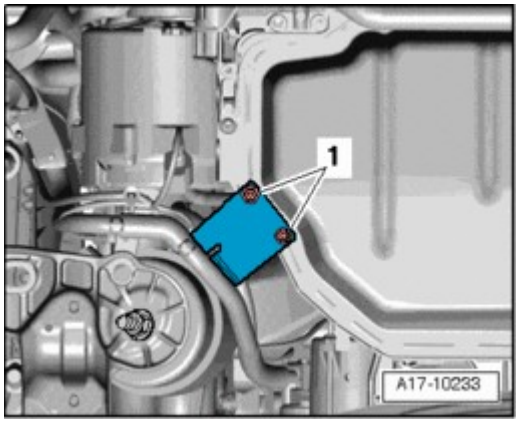

Fig. 394: Removing Nuts And Laying Aside Bracket With Electrical Wiring
Courtesy of VOLKSWAGEN UNITED STATES, INC.

- Remove nuts - **1** - and lay aside bracket with electrical wiring.

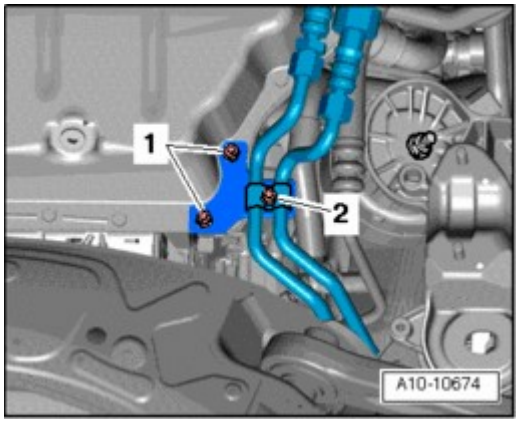

Fig. 395: Removing Nuts & ATF Line Bracket
Courtesy of VOLKSWAGEN UNITED STATES, INC.

- Remove nuts - **1 and 2** -.
- Remove ATF line bracket.

 © 2011 Mitchell Repair Information Company, LLC.

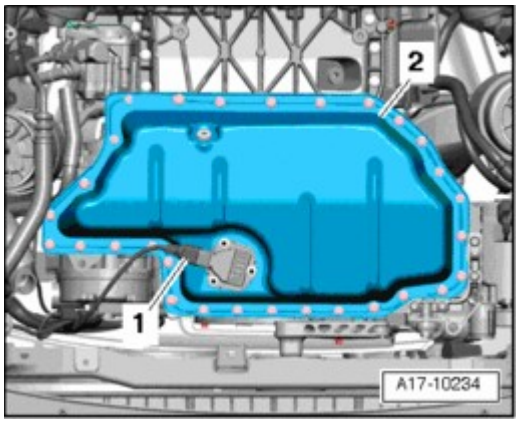

Fig. 396: Identifying Oil Level Thermal Sensor G266 Electrical Connector & Oil Pan (Lower Part)
Courtesy of VOLKSWAGEN UNITED STATES, INC.

- Disconnect electrical connector - **1** - at Oil Level Thermal Sensor G266.
- Place old oil collecting and extracting device V.A.G 1782 under engine and drain engine oil.
- Remove oil pan (lower part) - **2** - and pry out carefully.

NOTE:

- **There is still a residual amount of oil in lower section of oil pan.**

Installing

- Tightening torque **Lower part of oil pan, tightening sequence**

NOTE:

- **Replace sealing rings.**

CAUTION: Risk of eye injury.

- **Wear safety glasses.**

CAUTION: Risk of contaminating lubricating system and bearing.

- **Cover open parts of engine.**

 © 2011 Mitchell Repair Information Company, LLC.

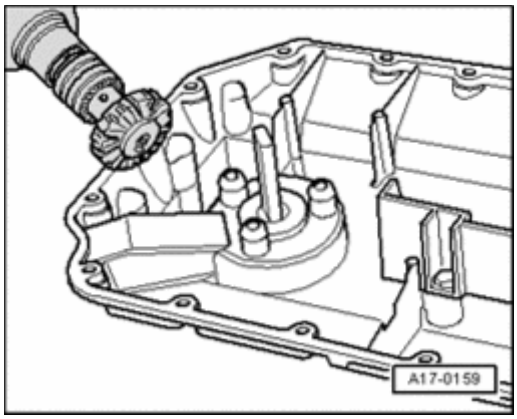

Fig. 397: Using Rotating Plastic Brush To Remove Any Remaining Sealant From Oil Pan (Lower Part) And At Upper Part
Courtesy of VOLKSWAGEN UNITED STATES, INC.

- Remove sealant residue lower part and upper part of oil pan, e.g. with rotating plastic brush.
- Clean sealing surfaces so they are completely free of any oil or grease.

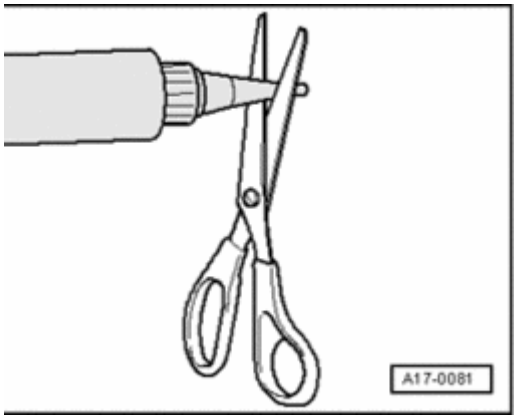

Fig. 398: Cutting Tube Nozzle At Front Marking
Courtesy of VOLKSWAGEN UNITED STATES, INC.

- Cut off nozzle on tube of sealant at front mark (dia. of nozzle approx. 2 mm).

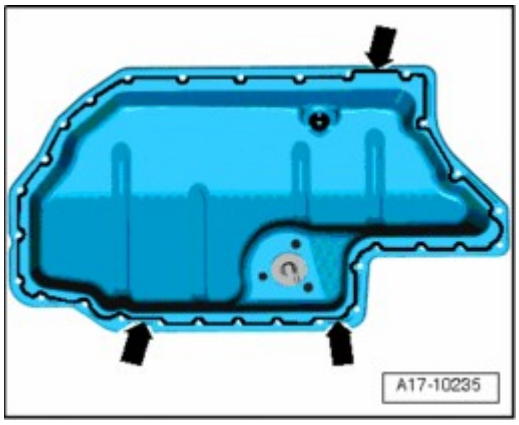

 © 2011 Mitchell Repair Information Company, LLC.

Fig. 399: Applying Sealant Bead On Clean Sealing Surface Of Lower Part Of Oil Pan
Courtesy of VOLKSWAGEN UNITED STATES, INC.

- Apply sealant bead - **arrow** - on clean sealing surface of lower part of oil pan as shown in illustration.
- Thickness of sealant bead: 2.5 mm.

CAUTION: Risk of plugging oil pump strainer with excess sealant.

- **Do not apply sealant bead thicker than specified.**

NOTE:

- **The oil pan (lower part) must be installed within 5 minutes after application of sealant.**

- Position lower part of oil pan and tighten bolts **Lower part of oil pan, tightening sequence**

The rest of installation is in reverse order of removal, note the following:

- Install front coolant pipe --> **Front coolant line, removing and installing**.
- Add engine oil and check oil level --> **Oil level, checking**.
- Fill with coolant **Filling**.

Oil pump, removing and installing

Special tools, testers and auxiliary items required

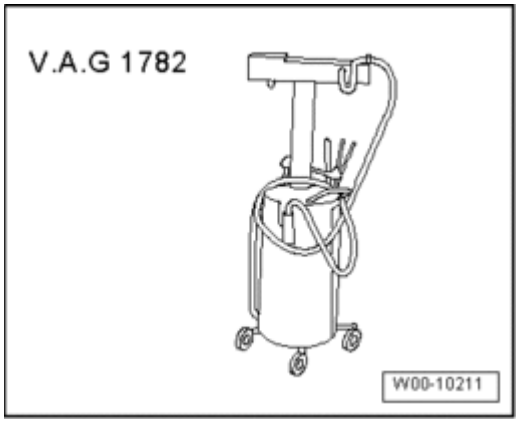

Fig. 400: Identifying Old Oil Collecting And Extracting Device V.A.G 1782
Courtesy of VOLKSWAGEN UNITED STATES, INC.

- Old oil collecting and extracting device V.A.G 1782

 © 2011 Mitchell Repair Information Company, LLC.

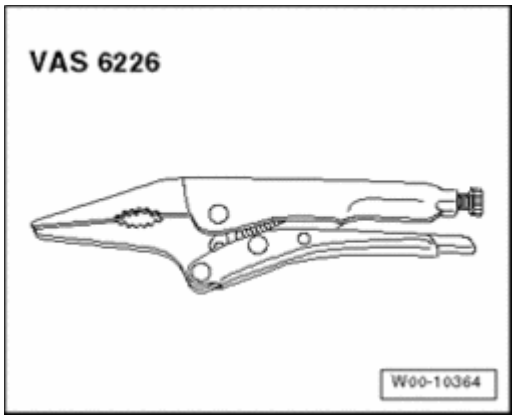

Fig. 401: Long-Nose Gripping Pliers VAS 6226
Courtesy of VOLKSWAGEN UNITED STATES, INC.

- Long-nose gripping pliers VAS 6226

Removing

- Drain coolant --> **Cooling system, draining and filling**.
- Remove front coolant pipe --> **Front coolant line, removing and installing**.
- Remove coolant pump --> **Coolant pump, removing and installing**.
- Remove lower section of oil pan --> **Lower part of oil pan, removing and installing**.

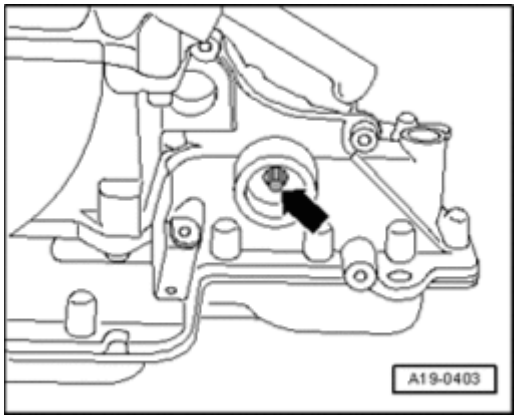

Fig. 402: Removing/Installing Drive Shaft For Coolant Pump From Oil Pump
Courtesy of VOLKSWAGEN UNITED STATES, INC.

- Remove drive shaft - **arrow** - for coolant pump from oil pump.
- Place old oil collecting and extracting device V.A.G 1782 under engine.

 © 2011 Mitchell Repair Information Company, LLC.

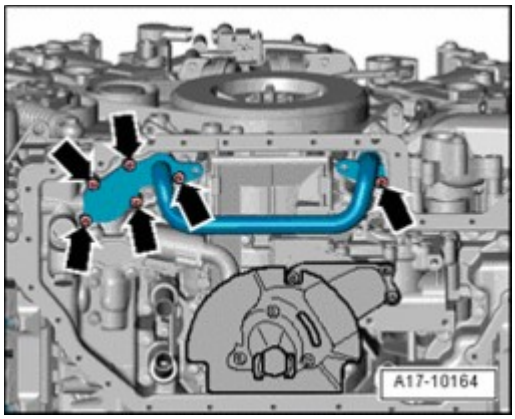

Fig. 403: Removing Bolts And Oil Pipe
Courtesy of VOLKSWAGEN UNITED STATES, INC.

- Remove bolts - **arrows** - and remove oil pipe.

NOTE:

- **Oil escapes when removing oil pipes.**

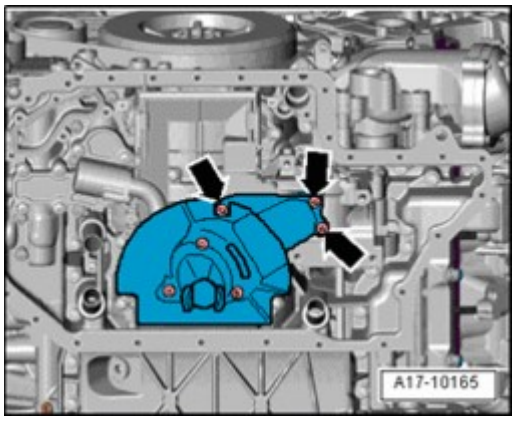

Fig. 404: Removing Bolts And Intake Tube
Courtesy of VOLKSWAGEN UNITED STATES, INC.

- Remove bolts - **arrows** - and remove intake tube.

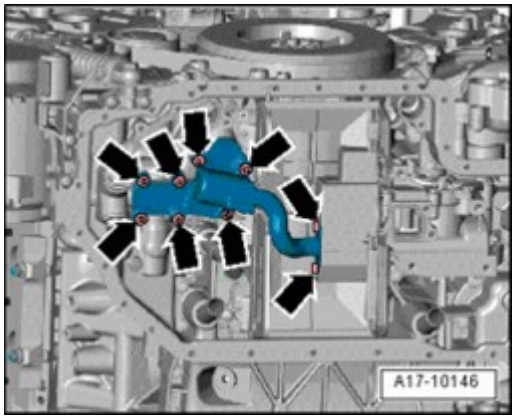

 © 2011 Mitchell Repair Information Company, LLC.

Fig. 405: Removing Oil Pipe Together With Oil Check Valve Housing
Courtesy of VOLKSWAGEN UNITED STATES, INC.

- Remove oil pipe together with oil check valve housing.

NOTE:

- **Oil escapes when removing oil pipes.**

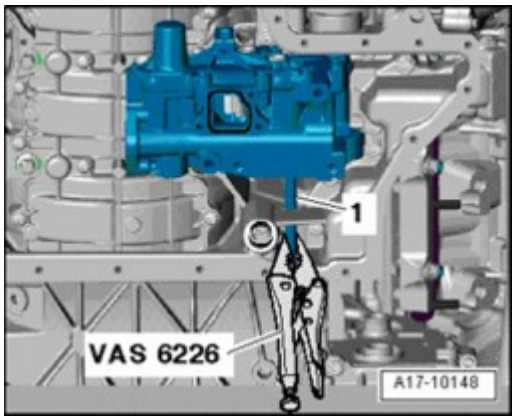

Fig. 406: Pressing Back Drive Shaft For Oil Pump Against Spring Force And Clamping Tightly Using Long-Nose Gripping Pliers VAS 6226
Courtesy of VOLKSWAGEN UNITED STATES, INC.

- Press back drive shaft - **1** - for oil pump against spring force and clamp tightly using Long-nose gripping pliers VAS 6226.

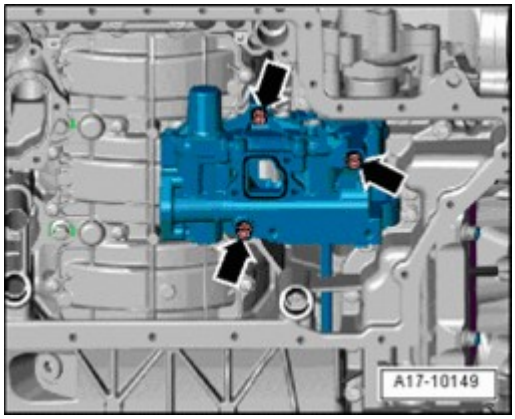

Fig. 407: Removing Bolts And Oil Pump
Courtesy of VOLKSWAGEN UNITED STATES, INC.

- Remove bolts - **arrows** - and remove oil pump.

Installing

- Tightening torques --> **Oil pump and lower part of oil pan, assembly overview**.

 © 2011 Mitchell Repair Information Company, LLC.

NOTE:

- **Replace sealing rings and O-rings.**

- Check whether 2 alignment bushings are present in cylinder block, install if necessary.
- Tighten oil pump - **arrows** -.

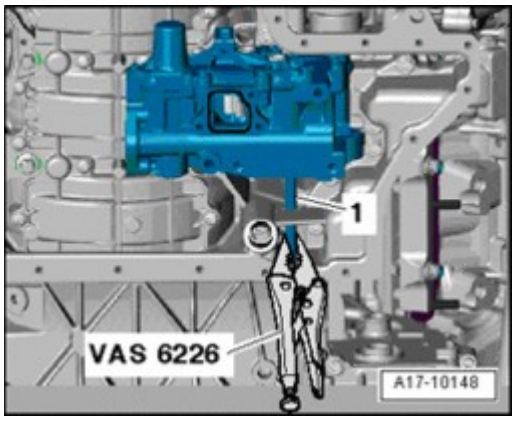

Fig. 408: Pressing Back Drive Shaft For Oil Pump Against Spring Force And Clamping Tightly Using Long-Nose Gripping Pliers VAS 6226
Courtesy of VOLKSWAGEN UNITED STATES, INC.

- Unlock Long-nose gripping pliers VAS 6226 and let drive shaft - **1** - glide into oil pump.

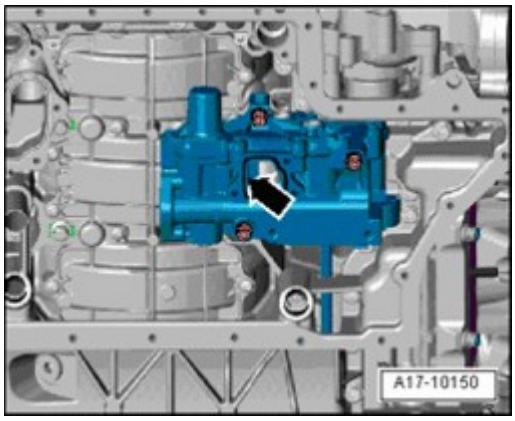

Fig. 409: Checking Whether Drive Shaft Is Friction Locked To Oil Pump
Courtesy of VOLKSWAGEN UNITED STATES, INC.

- Check whether drive shaft is friction locked to oil pump. To do so, reach into intake opening - **arrow** - of oil pump and try to rotate oil pump gears.

- Toothed gears must not be able to be rotated.

The rest of installation is in reverse order of removal, note the following:

- Install coolant pump --> **Coolant pump, removing and installing**.
- Install lower section of oil pan **Installing**.

 © 2011 Mitchell Repair Information Company, LLC.

- Install front coolant pipe --> **Front coolant line, removing and installing**.
- Add engine oil and check oil level --> **Oil level, checking**.
- Fill with coolant **Filling**.

OIL PAN (UPPER SECTION)

Upper part of oil pan, assembly overview

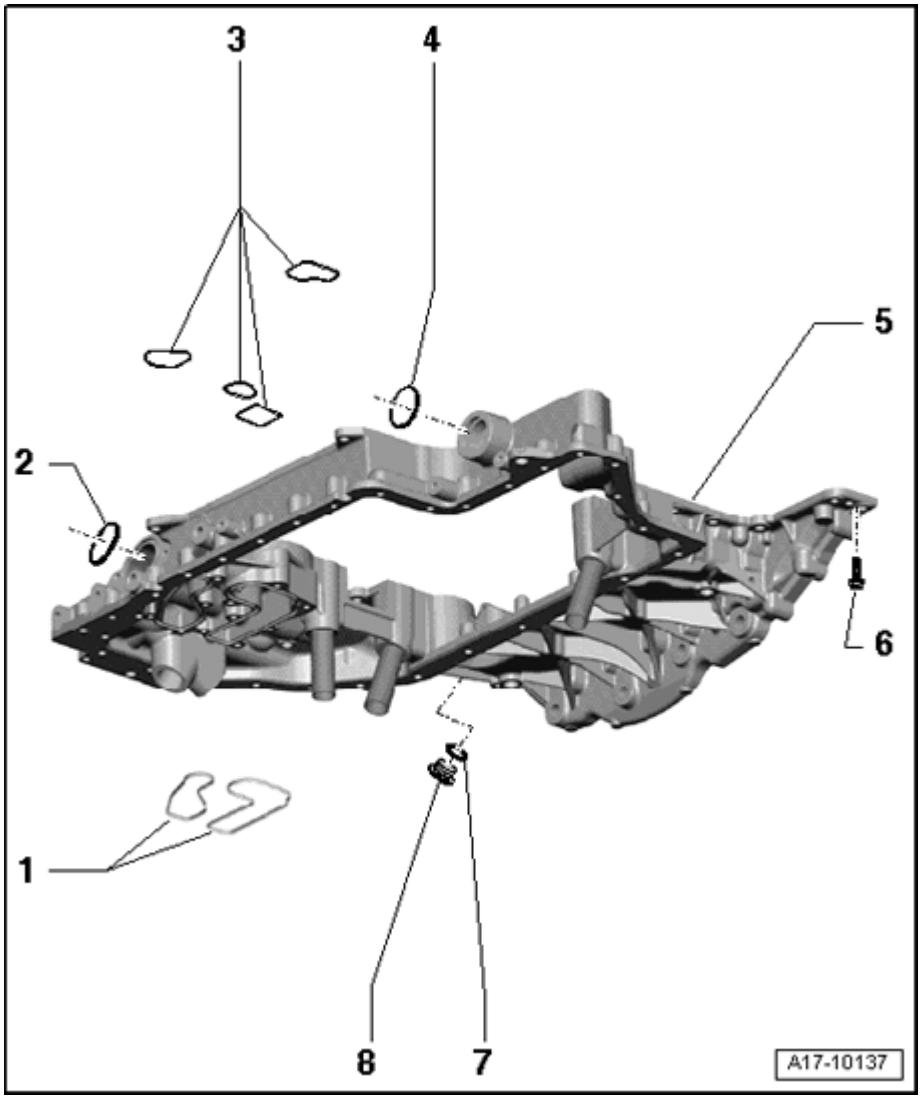

Fig. 410: Upper Part Of Oil Pan, Assembly Overview
Courtesy of VOLKSWAGEN UNITED STATES, INC.

1 - Seals

- Replace

 © 2011 Mitchell Repair Information Company, LLC.

2 - O-ring

- Replace

3 - Seals

- Replace

4 - O-ring

- Replace

5 - Oil pan (upper section)

- Removing and installing --> **Upper part of oil pan, removing and installing**

6 - Bolt

- Tightening order **Upper part of oil pan, tightening sequence**

7 - Seal

- Replace

8 - Locking bolt

- 35 Nm

Upper part of oil pan, tightening sequence

 © 2011 Mitchell Repair Information Company, LLC.

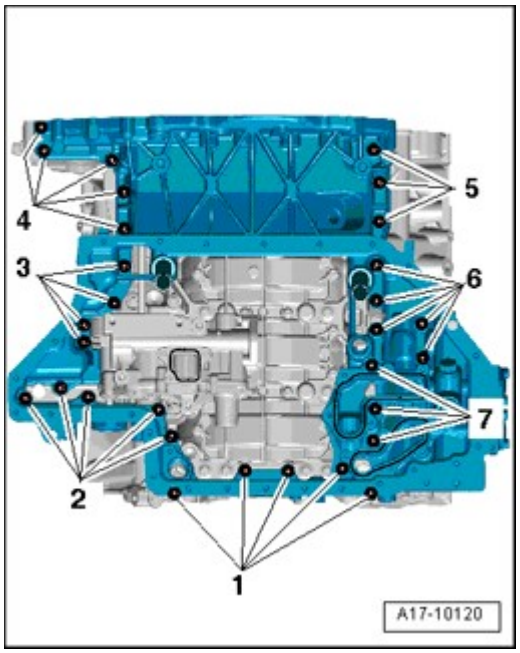

Fig. 411: Removing/Installing Bolts For/To Upper Section Of Oil Pan
Courtesy of VOLKSWAGEN UNITED STATES, INC.

- Tighten bolts - **1 through 7** - in 2 stages as follows:
- Pre-tighten all bolts in a diagonal sequence to 5 Nm.
- Tighten bolts diagonally to 14 Nm.

Upper part of oil pan, removing and installing

Special tools, testers and auxiliary items required

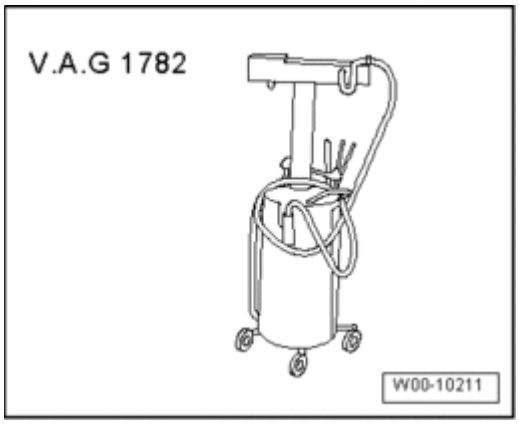

Fig. 412: Identifying Old Oil Collecting And Extracting Device V.A.G 1782
Courtesy of VOLKSWAGEN UNITED STATES, INC.

- Old oil collecting and extracting device V.A.G 1782
- Protective glasses
- Hand drill with plastic brush attachment

 © 2011 Mitchell Repair Information Company, LLC.

- Sealant

Removing

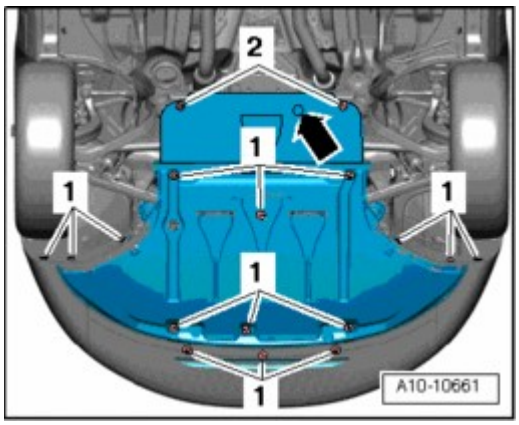

Fig. 413: Identifying Noise Insulation And Mountings
Courtesy of VOLKSWAGEN UNITED STATES, INC.

- Remove sound insulation by loosening securing pieces - **1, 2 and arrow** -.
- Place old oil collecting and extracting device V.A.G 1782 under engine and drain engine oil.
- Remove engine --> **Engine, removing**.
- Separate engine and transmission --> **Engine and transmission, separating**.

- Secure engine to assembly stand --> **Engine, securing to assembly stand**.
- Remove drive plate --> **Drive plate, removing and installing**.
- Remove left and right timing chain covers --> **Left and right timing chain covers, removing and installing**.
- Remove intake manifold --> **24 - MULTIPORT FUEL INJECTION (MFI)** .

- Remove oil filter housing --> **Oil filter housing, removing and installing**.
- Remove lower timing chain cover --> **Timing chain lower cover, removing and installing**.
- Remove ribbed belt tensioner --> **Ribbed belt tensioner, removing and installing**.
- Remove front coolant pipe --> **Front coolant line, removing and installing**.

- Remove generator --> **27 - STARTER, GENERATOR, CRUISE CONTROL** .

 © 2011 Mitchell Repair Information Company, LLC.

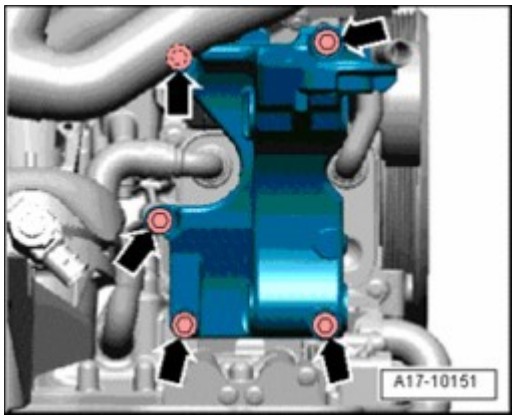

Fig. 414: Removing Bolts And Air Generator Bracket
Courtesy of VOLKSWAGEN UNITED STATES, INC.

- Remove bolts - **arrows** - and remove air generator bracket.

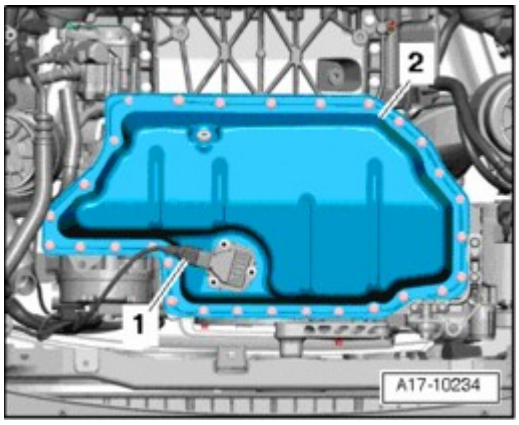

Fig. 415: Identifying Oil Level Thermal Sensor G266 Electrical Connector & Oil Pan (Lower Part)
Courtesy of VOLKSWAGEN UNITED STATES, INC.

- Disconnect electrical connector - **1** - at Oil Level Thermal Sensor G266.
- Place old oil collecting and extracting device V.A.G 1782 under engine.

NOTE:

- **There is still a residual amount of oil in lower section of oil pan.**

- Remove oil pan (lower part) - **2** - and pry out carefully.

 © 2011 Mitchell Repair Information Company, LLC.

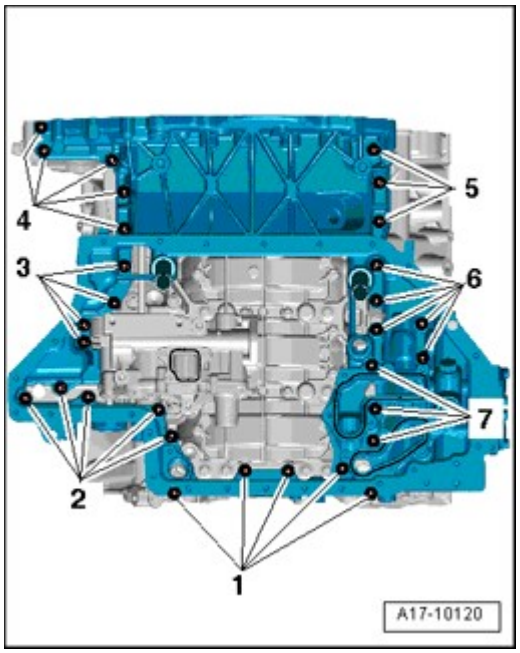

Fig. 416: Removing/Installing Bolts For/To Upper Section Of Oil Pan
Courtesy of VOLKSWAGEN UNITED STATES, INC.

- Remove oil pump --> **Oil pump, removing and installing**.
- Remove bolts - **1 to 7** - for upper section of oil pan.
- Press upper part of oil pan from alignment pins of cylinder block.

Installing

- Tightening torques --> **Ribbed belt drive, assembly overview** , **Upper part of oil pan, tightening sequence**

NOTE:

- **Replace sealing rings and O-rings.**

CAUTION: Risk of eye injury.

- **Wear safety glasses.**

 © 2011 Mitchell Repair Information Company, LLC.

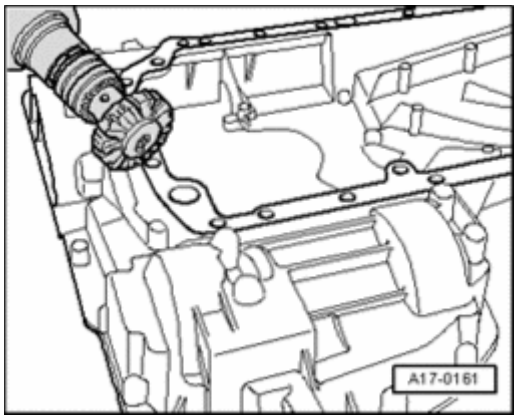

Fig. 417: Using Rotating Plastic Brush To Remove Remaining Sealant From Oil Pan (Upper Part) And At Cylinder Block
Courtesy of VOLKSWAGEN UNITED STATES, INC.

- Using rotating plastic brush, remove any remaining sealant from oil pan (upper part) and at cylinder block.
- Clean sealing surfaces so they are completely free of any oil or grease.

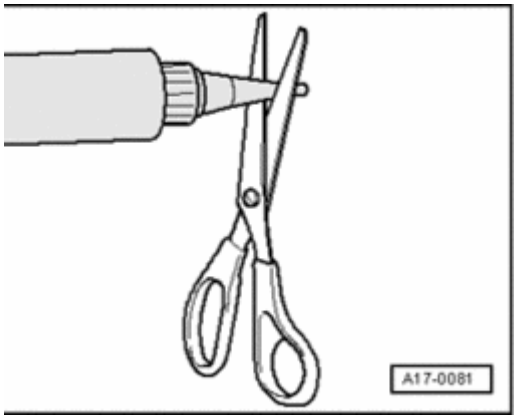

Fig. 418: Cutting Tube Nozzle At Front Marking
Courtesy of VOLKSWAGEN UNITED STATES, INC.

- Cut off nozzle on tube of sealant at front mark (dia. of nozzle approx. 1 mm).

 © 2011 Mitchell Repair Information Company, LLC.

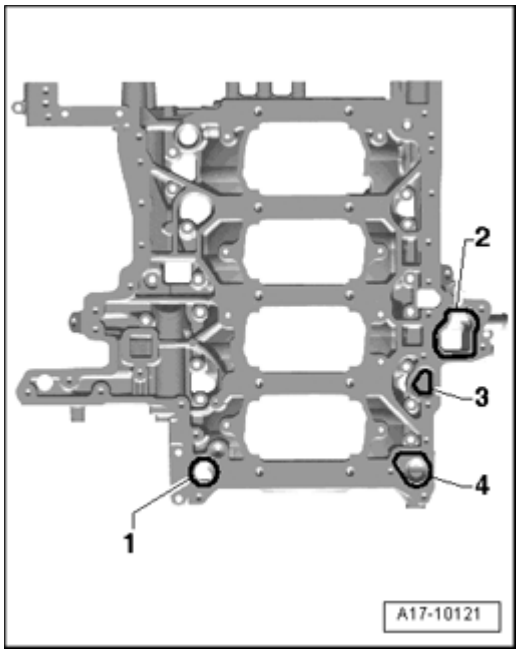

Fig. 419: Inserting New Seals Into Grooves On Cylinder Block
Courtesy of VOLKSWAGEN UNITED STATES, INC.

- Insert new seals - **1 to 4** - into grooves on cylinder block.

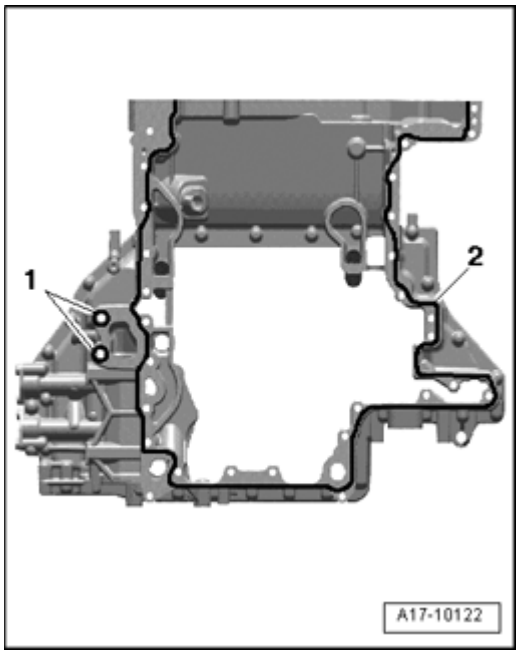

Fig. 420: Applying Sealant Beads On Clean Sealing Surfaces Of Upper Part Of Oil Pan
Courtesy of VOLKSWAGEN UNITED STATES, INC.

- Apply sealant beads - **1 and 2** - on clean sealing surfaces of upper part of oil pan, as shown in illustration.

- Thickness of sealant beads: 2.5 mm.

 © 2011 Mitchell Repair Information Company, LLC.

CAUTION: Risk of plugging oil pump strainer with excess sealant.

- **Do not apply sealant bead thicker than specified.**

NOTE:

- **The oil pan (upper part) must be installed within 5 minutes after application of sealant.**

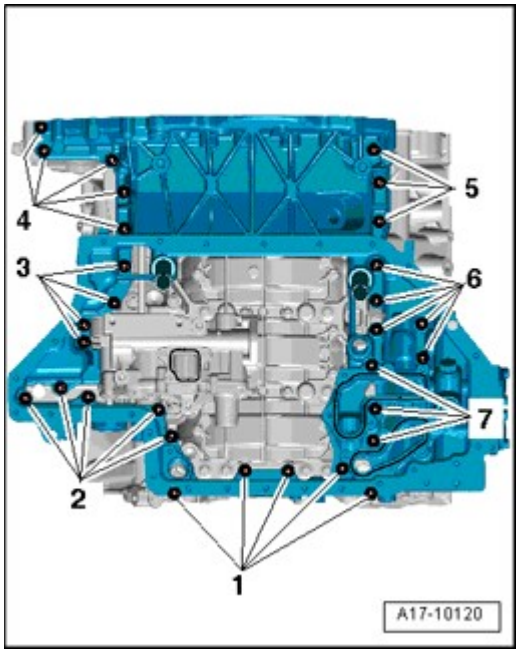

Fig. 421: Removing/Installing Bolts For/To Upper Section Of Oil Pan
Courtesy of VOLKSWAGEN UNITED STATES, INC.

- Position lower part of oil pan and tighten bolts **Upper part of oil pan, tightening sequence**

The rest of installation is in reverse order of removal, note the following:

- Install oil pump --> **Oil pump, removing and installing**.
- Install coolant pump --> **Coolant pump, removing and installing**.
- Install lower section of oil pan **Installing**.
- Install front coolant pipe --> **Front coolant line, removing and installing**.

- Install ribbed belt tensioner --> **Ribbed belt tensioner, removing and installing**.
- Install generator --> **27 - STARTER, GENERATOR, CRUISE CONTROL** .
- Install lower timing chain cover --> **Timing chain lower cover, removing and installing**.
- Install crankshaft seal, transmission side --> **Transmission-side crankshaft sealing ring, replacing**.

- Install oil filter housing --> **Oil filter housing, removing and installing**.
- Install intake manifold --> **24 - MULTIPORT FUEL INJECTION (MFI)** .

 © 2011 Mitchell Repair Information Company, LLC.

- Install left and right timing chain covers --> **Left and right timing chain covers, removing and installing**.
- Install drive plate --> **Drive plate, removing and installing**.

- Install engine --> **Engine, installing**.
- Add engine oil and check oil level --> **Oil level, checking**.

OIL CHECK VALVE, SPRAY NOZZLE VALVE, OIL FILTER HOUSING, OIL COOLER, OIL PRESSURE SWITCH

Oil check valve and spray nozzle valve, assembly overview

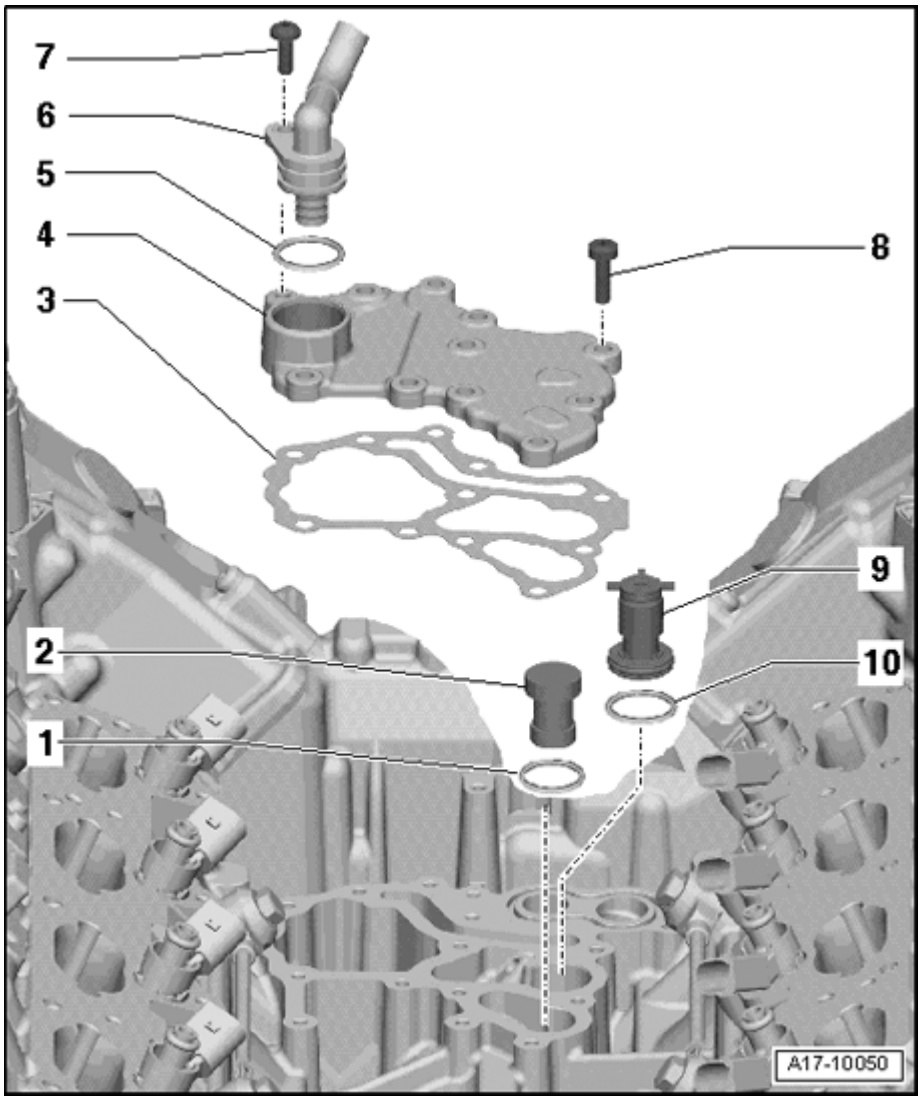

Fig. 422: Oil Check Valve And Spray Nozzle Valve, Assembly Overview
Courtesy of VOLKSWAGEN UNITED STATES, INC.

1 - O-ring

 © 2011 Mitchell Repair Information Company, LLC.

- Replace

2 - Spray nozzle valve

- Removing and installing --> **Oil check valve and spray nozzle valve, removing and installing**

3 - Gasket

- Replace

4 - Cover

5 - O-ring

- Replace

6 - Hose

- For crankcase ventilation

7 - Bolt

- 9 Nm

8 - Bolt

- 9 Nm

9 - Oil check valve

- Removing and installing --> **Oil check valve and spray nozzle valve, removing and installing**

10 - O-ring

- Replace

Oil check valve and spray nozzle valve, removing and installing

NOTE:

- **If irregular valve noises disappear after a long drive but always return on short drives, oil check valve must be replaced.**

Removing

- Remove intake manifold --> **24 - MULTIPORT FUEL INJECTION (MFI)** .

 © 2011 Mitchell Repair Information Company, LLC.

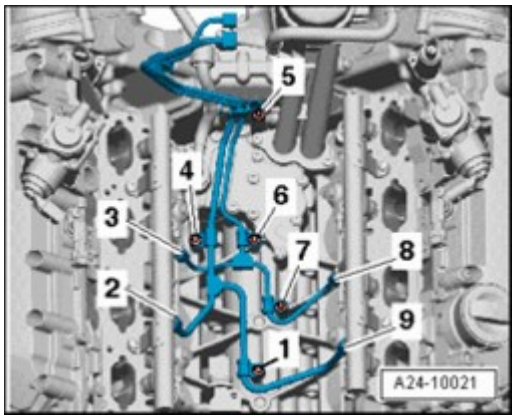

Fig. 423: Identifying Bolts On High Pressure Line Retaining Clamps, Fuel Injectors Electrical Harness Connectors & High Pressure Lines
Courtesy of VOLKSWAGEN UNITED STATES, INC.

- Remove bolts - **1, 4, 5, 6, 7** - on high pressure line retaining clamps.
- Disconnect electrical harness connectors at fuel injectors.
- Remove high pressure lines - **2 and 9** - from connections on fuel rail.
- Remove high pressure lines - **3 and 8** - from connections on fuel rail. To do this, counter-hold at hex head with and open-end wrench and loosen union nut.

- Remove high pressure lines.

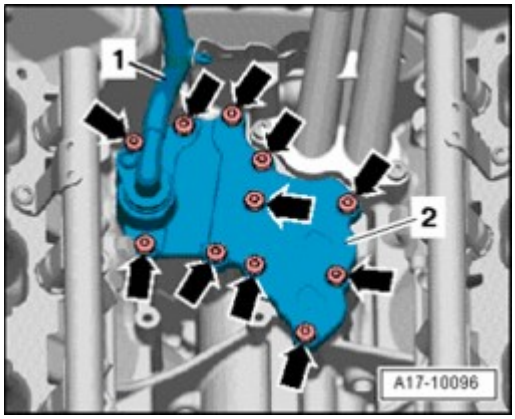

Fig. 424: Removing Bolts & Cover With Crankcase Ventilation Hose
Courtesy of VOLKSWAGEN UNITED STATES, INC.

- Remove bolts - **arrows** -.
- Remove cover - **2** - with crankcase ventilation hose - **1** -.
- Remove seal.

 © 2011 Mitchell Repair Information Company, LLC.

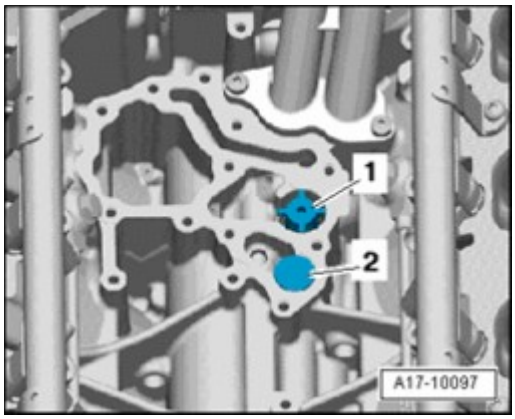

Fig. 425: Removing Oil Check Valve And Spraying Nozzle Valve
Courtesy of VOLKSWAGEN UNITED STATES, INC.

- Remove oil check valve - **1** - and spray nozzle valve - **2** -.

Installing

- Tightening torques --> **Oil check valve and spray nozzle valve, assembly overview**.

Installation is in reverse order of removal, note the following:

NOTE:

- **Replace gaskets and O-rings.**

- Install high pressure lines --> **24 - MULTIPORT FUEL INJECTION (MFI)** as described under "Fuel injectors, removing and installing".
- Install intake manifold --> **24 - MULTIPORT FUEL INJECTION (MFI)** .

Crankcase ventilation hose, removing and installing

Removing

- Remove intake manifold --> **24 - MULTIPORT FUEL INJECTION (MFI)** .

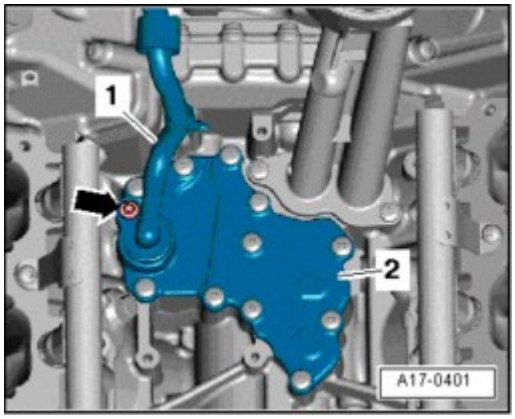

 © 2011 Mitchell Repair Information Company, LLC.

Fig. 426: Removing Bolt And Crankcase Ventilation Hose From Cover
Courtesy of VOLKSWAGEN UNITED STATES, INC.

- Remove bolt - **arrow** - and remove crankcase ventilation hose - **1** - from cover - **2** -.

Installing

- Tightening torque --> **Oil check valve and spray nozzle valve, assembly overview**.

Installation is in reverse order of removal, note the following:

NOTE:

- **Replace O-ring.**

- Install intake manifold --> **24 - MULTIPORT FUEL INJECTION (MFI)** .

Oil filter housing, assembly overview

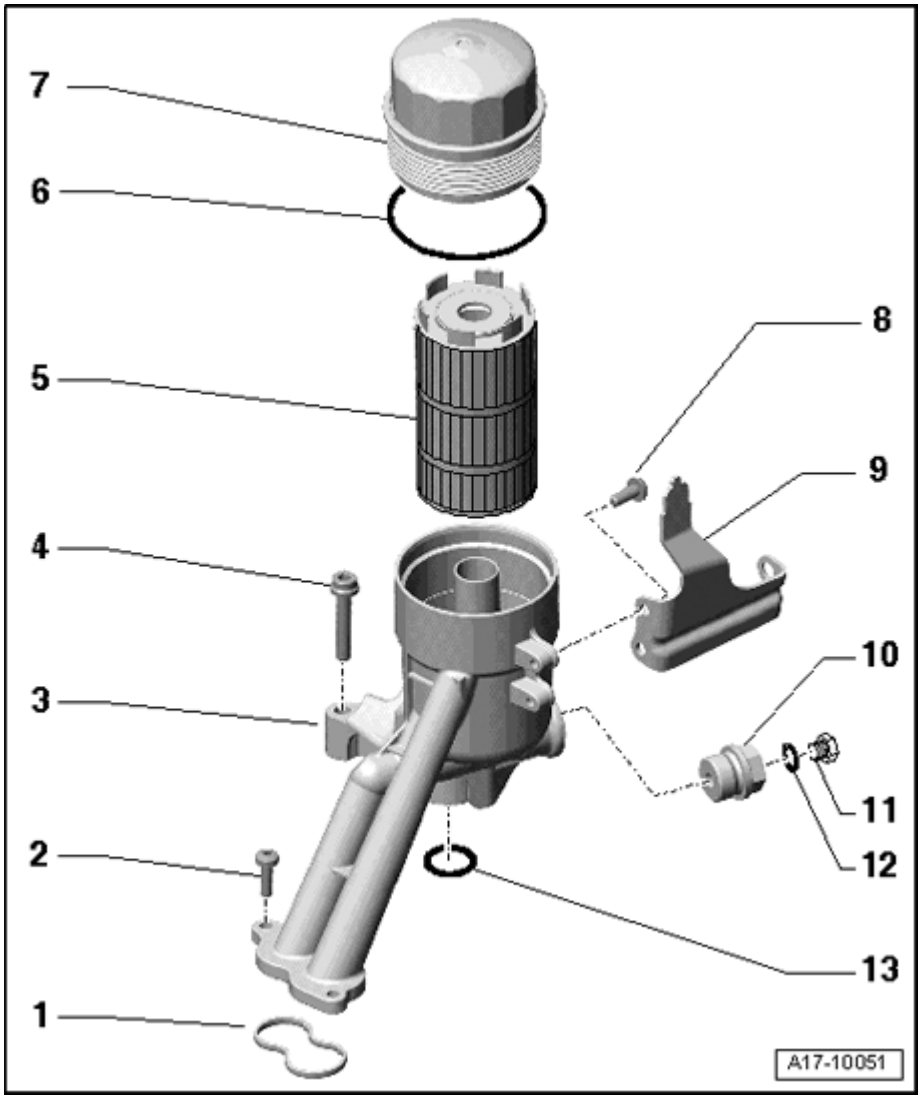

 © 2011 Mitchell Repair Information Company, LLC.

Fig. 427: Oil Filter Housing, Assembly Overview
Courtesy of VOLKSWAGEN UNITED STATES, INC.

1 - Gasket

- Replace

2 - Bolt

- 9 Nm

3 - Oil filter housing

- With oil filter by-pass valve 1.3 bar

4 - Bolt

- 22 Nm

5 - Oil filter element

- Replace O-ring - **6** - when filter is changed
- Observe change intervals 405

6 - O-ring

- Replace

7 - Cap

- 25 Nm

8 - Bolt

- 9 Nm

9 - Bracket

- For evaporative emission (EVAP) canister purge regulator valve N80

10 - Locking bolt

- 50 Nm

11 - Locking bolt

- 9 Nm

 © 2011 Mitchell Repair Information Company, LLC.

12 - Seal

- Replace

13 - O-ring

- Replace

Oil cooler

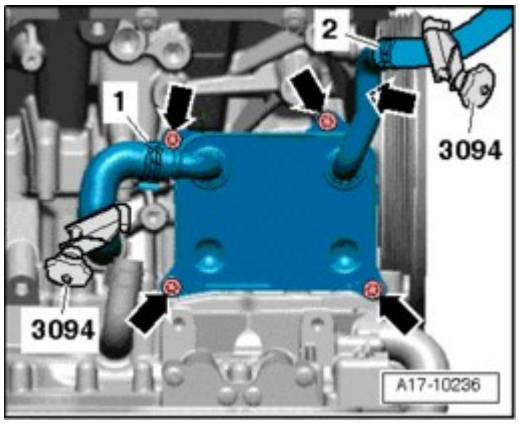

Fig. 428: Identifying Oil Cooler
Courtesy of VOLKSWAGEN UNITED STATES, INC.

Bolts - **arrows** -

- 9 Nm

Oil pressure switch F1

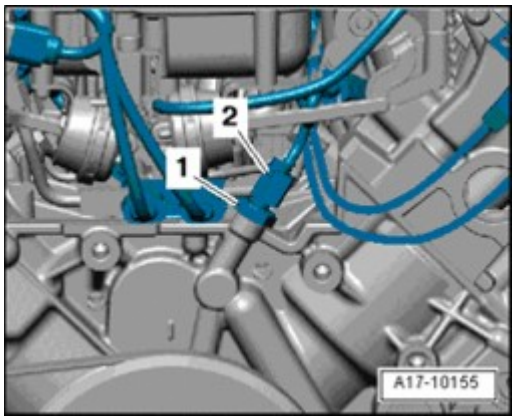

Fig. 429: Oil Pressure Switch F1
Courtesy of VOLKSWAGEN UNITED STATES, INC.

Oil Pressure Switch F1 - **1** -

 © 2011 Mitchell Repair Information Company, LLC.

- 20 Nm
- Replace seal

Oil filter housing, removing and installing

Removing

- Remove intake manifold --> **24 - MULTIPORT FUEL INJECTION (MFI)** .

NOTE:

- **To collect escaping engine oil, place a clean cloth around oil filter housing.**

- Remove cover and remove oil filter insert.

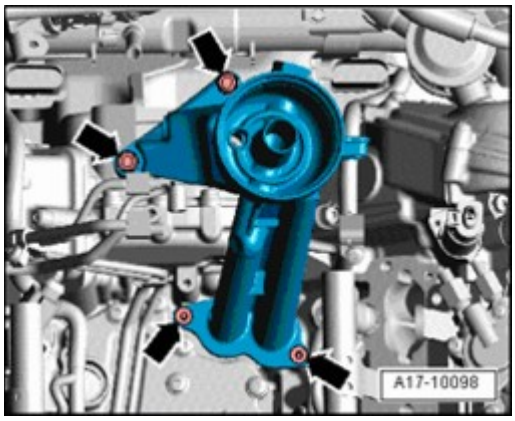

Fig. 430: Removing Bolts And Oil Filter Housing
Courtesy of VOLKSWAGEN UNITED STATES, INC.

- Remove bolts - **arrows** - and remove oil filter housing.

Installing

- Tightening torques --> **Oil filter housing, assembly overview**.

Installation is in reverse order of removal, note the following:

NOTE:

- **Replace sealing rings and O-rings.**

- Install intake manifold --> **24 - MULTIPORT FUEL INJECTION (MFI)** .
- Check oil level --> **Oil level, checking**.

Oil cooler, removing and installing

Special tools, testers and auxiliary items required

 © 2011 Mitchell Repair Information Company, LLC.

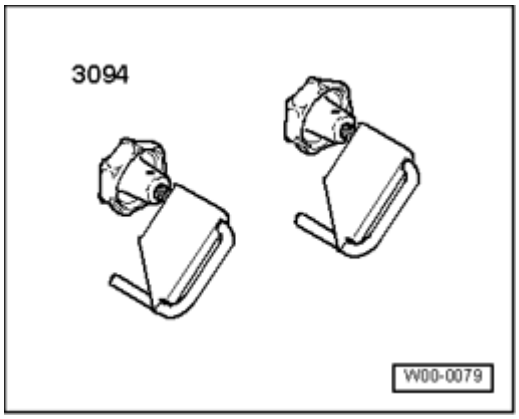

Fig. 431: Identifying Hose Clamps 3094
Courtesy of VOLKSWAGEN UNITED STATES, INC.

- Hose clamps up to 25 mm dia. 3094

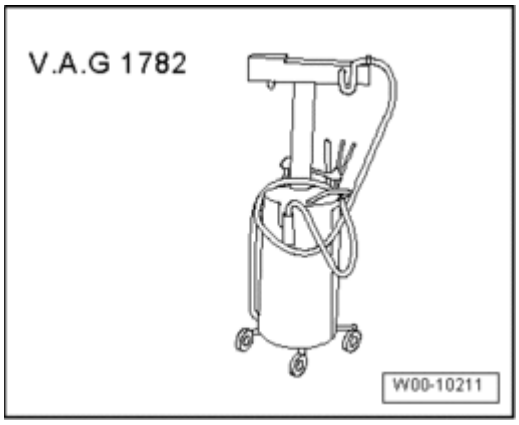

Fig. 432: Identifying Old Oil Collecting And Extracting Device V.A.G 1782
Courtesy of VOLKSWAGEN UNITED STATES, INC.

- Old oil collecting and extracting device V.A.G 1782

Removing

- Remove generator --> **27 - STARTER, GENERATOR, CRUISE CONTROL** .

 © 2011 Mitchell Repair Information Company, LLC.

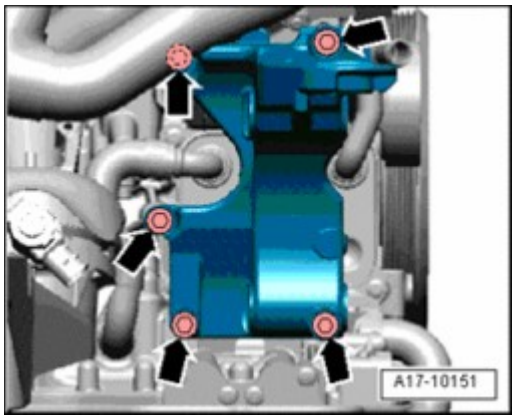

Fig. 433: Removing Bolts And Air Generator Bracket
Courtesy of VOLKSWAGEN UNITED STATES, INC.

- Remove bolts - **arrows** - and remove air generator bracket.

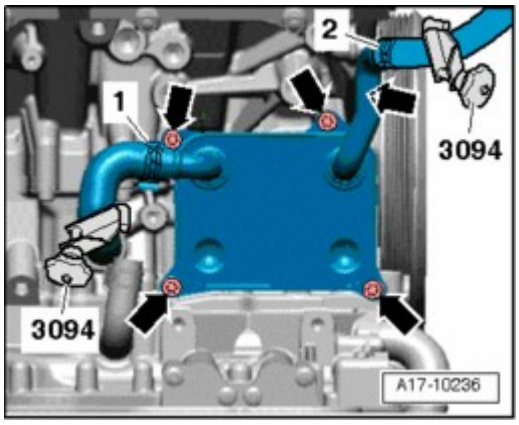

Fig. 434: Clamping Off Coolant Hoses With Hose Clamps Hose Clamps Up To 25 mm Dia. 3094
Courtesy of VOLKSWAGEN UNITED STATES, INC.

- Clamp off coolant hoses with hose clamps Hose clamps up to 25 mm dia. 3094 as shown in illustration.

NOTE:

- **Lay a cloth below to catch escaping coolant.**

- Remove coolant hoses - **1 and 2** - from oil cooler.
- Place old oil collecting and extracting device V.A.G 1782 under engine.
- Remove bolts - **arrows** - and remove oil cooler.

Installing

- Tightening torques --> **Ribbed belt drive, assembly overview** , --> **Oil filter housing, assembly overview**.

Installation is in reverse order of removal, note the following:

 © 2011 Mitchell Repair Information Company, LLC.

NOTE:

- **Replace O-rings.**
- **Secure all hose connections using hose clamps appropriate for the model type .**

- Install generator --> **27 - STARTER, GENERATOR, CRUISE CONTROL** .
- Check coolant level **Filling**.

Oil Pressure Switch F1 , removing and installing

Removing

- Bring lock carrier into service position --> **50 - BODY - FRONT** .

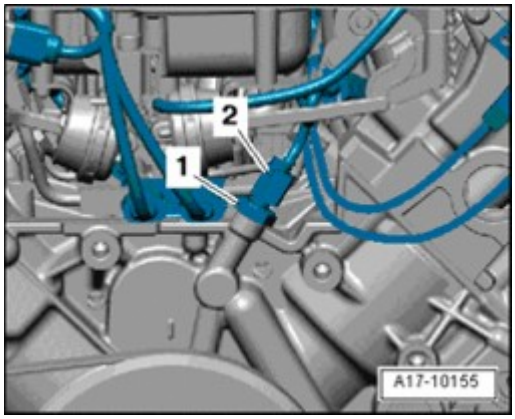

Fig. 435: Oil Pressure Switch F1
Courtesy of VOLKSWAGEN UNITED STATES, INC.

- Disconnect electrical connector - **2** - on Oil Pressure Switch F1 - **1** -.
- Remove Oil Pressure Switch F1.

Installing

- Tightening torque --> **Oil filter housing, assembly overview**.

Installation is in reverse order of removal, note the following:

NOTE:

- **Replace sealing ring.**
- **Secure all hose connections using hose clamps appropriate for the model type .**

- Install lock carrier with attachments --> **50 - BODY - FRONT** .

Oil pressure and oil pressure switch F1 , checking

 © 2011 Mitchell Repair Information Company, LLC.

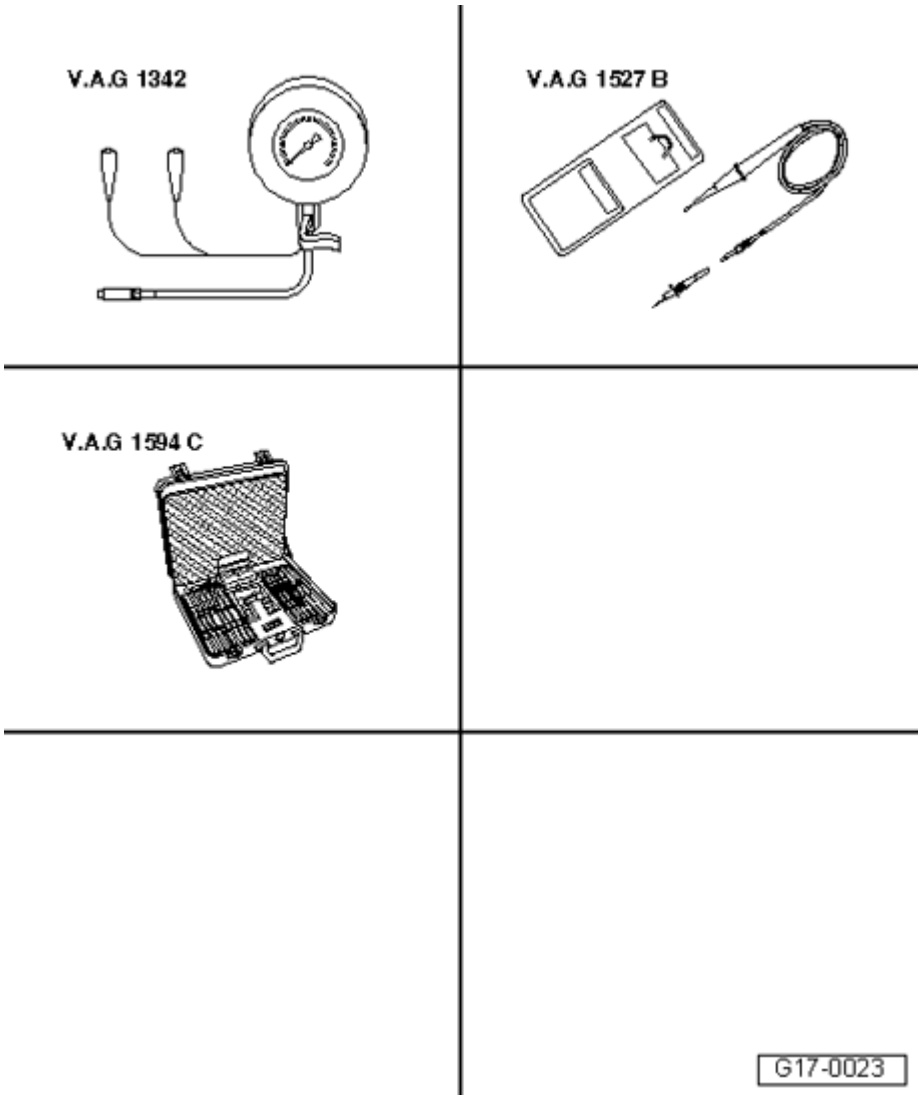

Fig. 436: Identifying Special Tools - Oil Pressure And Oil Pressure Switch F1 , Checking
Courtesy of VOLKSWAGEN UNITED STATES, INC.

Special tools, testers and auxiliary items required

- Oil pressure gauge V.A.G 1342 with adapter V.A.G 1342/14
- Voltage tester V.A.G 1527B
- Connector test set V.A.G 1594C

Work procedure

- Oil level OK
- Engine oil temperature approximately 80° C.

- Remove Oil Pressure Switch F1 --> **Oil Pressure Switch F1 , removing and installing**.

 © 2011 Mitchell Repair Information Company, LLC.

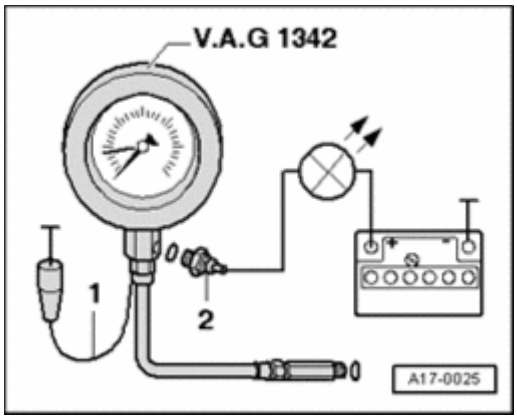

Fig. 437: Connecting Oil Pressure Gauge V.A.G 1342 With Adapter V.A.G 1342/14 To Hole For Oil Pressure Switch
Courtesy of VOLKSWAGEN UNITED STATES, INC.

- Connect oil pressure gauge V.A.G 1342 with adapter V.A.G 1342/14 to hole for oil pressure switch.
- Install oil pressure switch - **2** - into oil pressure gauge V.A.G 1342.
- Place brown wire of oil pressure gauge on Ground (GND) ("").

Oil pressure switch, checking

- Connect voltage tester V.A.G 1527B using adapter cables from connector test kit V.A.G 1594C to oil pressure switch and battery plus ("+").

- LED must not light up.

If LED lights up:

- Replace Oil Pressure Switch.
- Start engine.

NOTE:

- **While starting engine, watch Pressure Tester and LED as oil pressure switch may open during start.**
- **At 1.2 to 1.6 bar pressure, LED must light up.**

If LED does not light up:

- Replace Oil Pressure Switch.

Oil pressure, checking

- Start engine.

- Oil pressure at idle: at least 1.5 bar.
- Oil pressure at 2000 RPM: at least 3.5 bar.

 © 2011 Mitchell Repair Information Company, LLC.

If specifications are not obtained: Check-valve or oil pump malfunctioning.

- Replace oil pump --> **Oil pump, removing and installing**.

Assembling

- Install Oil Pressure Switch F1 --> **Oil Pressure Switch F1 , removing and installing**.

Engine oil

Viscosity classes, oil specifications, oil capacities Maintenance tables.

Oil level, checking

NOTE:

- **Oil level must not exceed "max" marking danger of catalytic converter damage!**

Work procedure

- Engine oil temperature at least 60° C.
- Vehicle in level position.
- After stopping engine, wait a few minutes to allow oil to flow back into oil pan.

- Pull out oil dipstick, wipe off with a clean cloth and re-insert dipstick again up to stop.
- Withdraw dipstick again and read oil level.

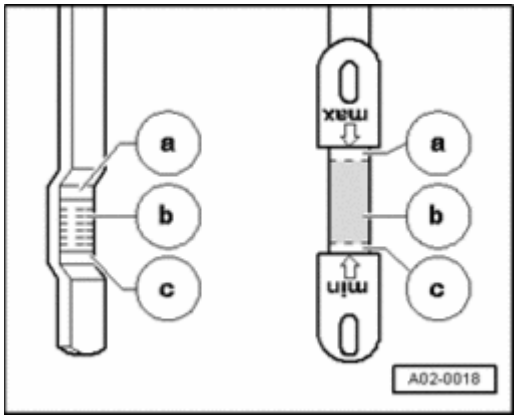

Fig. 438: Range Of Markings On Dipstick:
Courtesy of VOLKSWAGEN UNITED STATES, INC.

Range of markings on dipstick:

a - Oil must not be added.

b - Oil may be topped off.

 © 2011 Mitchell Repair Information Company, LLC.

c - Oil must be added.

NOTE:

- **The oil level may not exceed the "max" marking - a - or fall below the "min" marking - c -.**

19 - ENGINE - COOLING SYSTEM

COOLING SYSTEM

Cooling system

CAUTION: Risk of scalding due to hot steam and hot coolant.

- **When the engine is warm the cooling system is under pressure.**
- **To reduce pressure, cover coolant reservoir cap with cloth and carefully open.**

NOTE:

- **Secure all hose connections using hose clamps appropriate for the model type .**
- **The arrows on the coolant pipes and ends of coolant hoses must align.**

Coolant hose connection diagrams

Vehicles without auxiliary heater

 © 2011 Mitchell Repair Information Company, LLC.

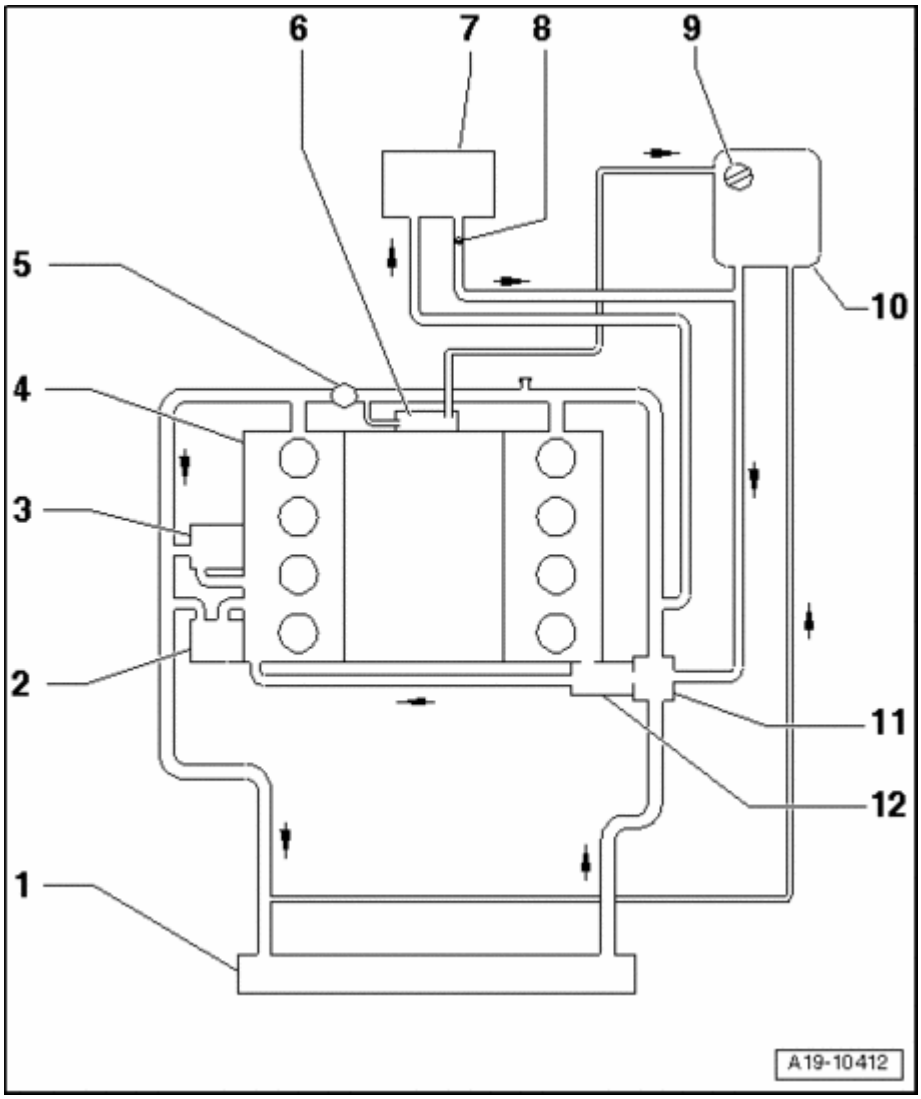

Fig. 439: Coolant Hose Connection Diagrams (Vehicles Without Auxiliary Heater)
Courtesy of VOLKSWAGEN UNITED STATES, INC.

1 - Radiator

- Removing and installing --> **Radiator, removing and installing**
- Change coolant after replacing

2 - Generator

3 - Oil cooler

- Removing and installing --> **Oil cooler, removing and installing**
- Change coolant after replacing

4 - Cylinder head and cylinder block

 © 2011 Mitchell Repair Information Company, LLC.

- Change coolant after replacing

5 - Engine Coolant Temperature (ECT) Sensor G62

- Removing and installing --> **Engine Coolant Temperature (ECT) Sensor G62 , removing and installing**

6 - Throttle valve connection

7 - Heater core

- Change coolant after replacing

8 - Bleeder screw

- In coolant hose to heater core

9 - Cap

- Pressure relief valve, checking **Pressure relief valve in cap, checking**

10 - Coolant expansion tank

11 - Map Controlled Engine Cooling Thermostat F265

- Removing and installing --> **Map Controlled Engine Cooling Thermostat F265 , removing and installing**

12 - Coolant pump

- Removing and installing --> **Coolant pump, removing and installing**

Vehicles with auxiliary heater

 © 2011 Mitchell Repair Information Company, LLC.

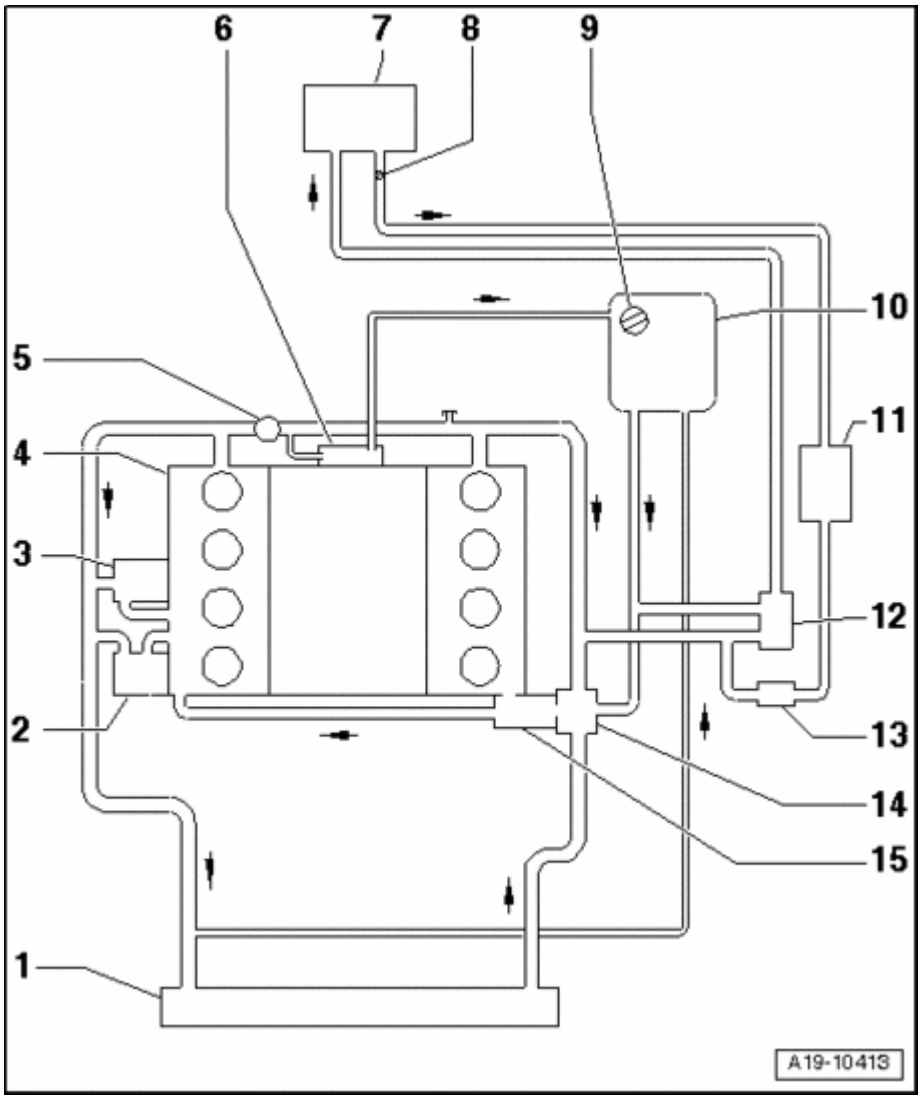

Fig. 440: Coolant Hose Connection Diagrams (Vehicles With Auxiliary Heater)
Courtesy of VOLKSWAGEN UNITED STATES, INC.

1 - Radiator

- Removing and installing --> **Radiator, removing and installing**
- Change coolant after replacing

2 - Generator

3 - Oil cooler

- Removing and installing --> **Oil cooler, removing and installing**
- Change coolant after replacing

4 - Cylinder head and cylinder block

 © 2011 Mitchell Repair Information Company, LLC.

- Change coolant after replacing

5 - Engine Coolant Temperature (ECT) Sensor G62

- Removing and installing --> **Engine Coolant Temperature (ECT) Sensor G62 , removing and installing**

6 - Throttle valve connection

7 - Heater core

- Change coolant after replacing

8 - Bleeder screw

- In coolant hose to heater core

9 - Cap

- Pressure relief valve, checking **Pressure relief valve in cap, checking**

10 - Coolant expansion tank

11 - Auxiliary heater

12 - Engine Coolant (EC) Switch-off Valve (heater) N279

13 - Recirculation Pump V55

- Removing and installing --> **87 - AIR CONDITIONING**

14 - Map Controlled Engine Cooling Thermostat F265

- Removing and installing --> **Map Controlled Engine Cooling Thermostat F265 , removing and installing**

15 - Coolant pump

- Removing and installing --> **Coolant pump, removing and installing**

Vehicles with auxiliary cooler

 © 2011 Mitchell Repair Information Company, LLC.

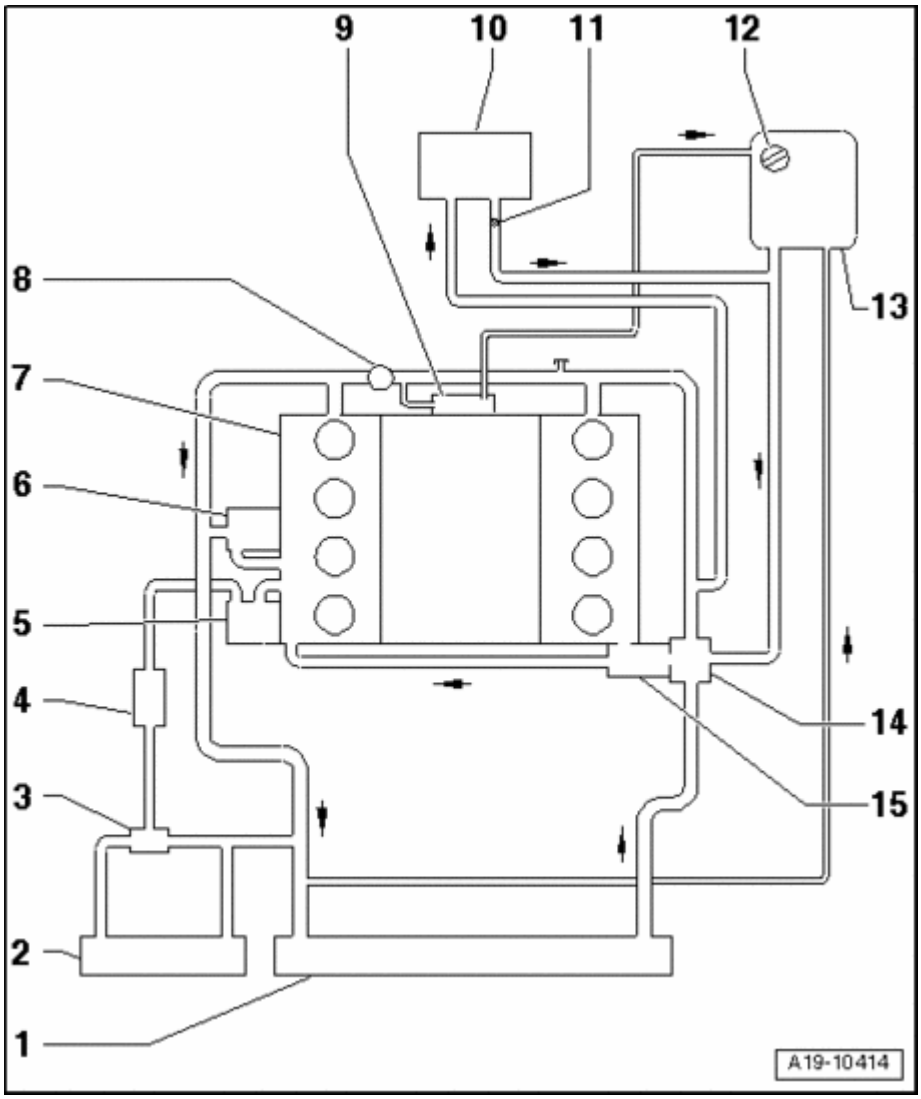

Fig. 441: Coolant Hose Connection Diagrams (Vehicles With Auxiliary Cooler)
Courtesy of VOLKSWAGEN UNITED STATES, INC.

1 - Radiator

- Removing and installing --> **Radiator, removing and installing**
- Change coolant after replacing

2 - Auxiliary cooler

3 - Coolant regulator for auxiliary cooler

4 - After-run coolant pump V51

- Removing and installing --> **After-Run Coolant Pump V51 , removing and installing**

5 - Generator

 © 2011 Mitchell Repair Information Company, LLC.

6 - Oil cooler

- Removing and installing --> **Oil cooler, removing and installing**
- Change coolant after replacing

7 - Cylinder head and cylinder block

- Change coolant after replacing

8 - Engine Coolant Temperature (ECT) Sensor G62

- Removing and installing --> **Engine Coolant Temperature (ECT) Sensor G62 , removing and installing**

9 - Throttle valve connection

10 - Heater core

- Change coolant after replacing

11 - Bleeder screw

- In coolant hose to heater core

12 - Cap

- Pressure relief valve, checking **Pressure relief valve in cap, checking**

13 - Coolant expansion tank

14 - Map Controlled Engine Cooling Thermostat F265

- Removing and installing --> **Map Controlled Engine Cooling Thermostat F265 , removing and installing**

15 - Coolant pump

- Removing and installing --> **Coolant pump, removing and installing**

Cooling system, draining and filling

 © 2011 Mitchell Repair Information Company, LLC.

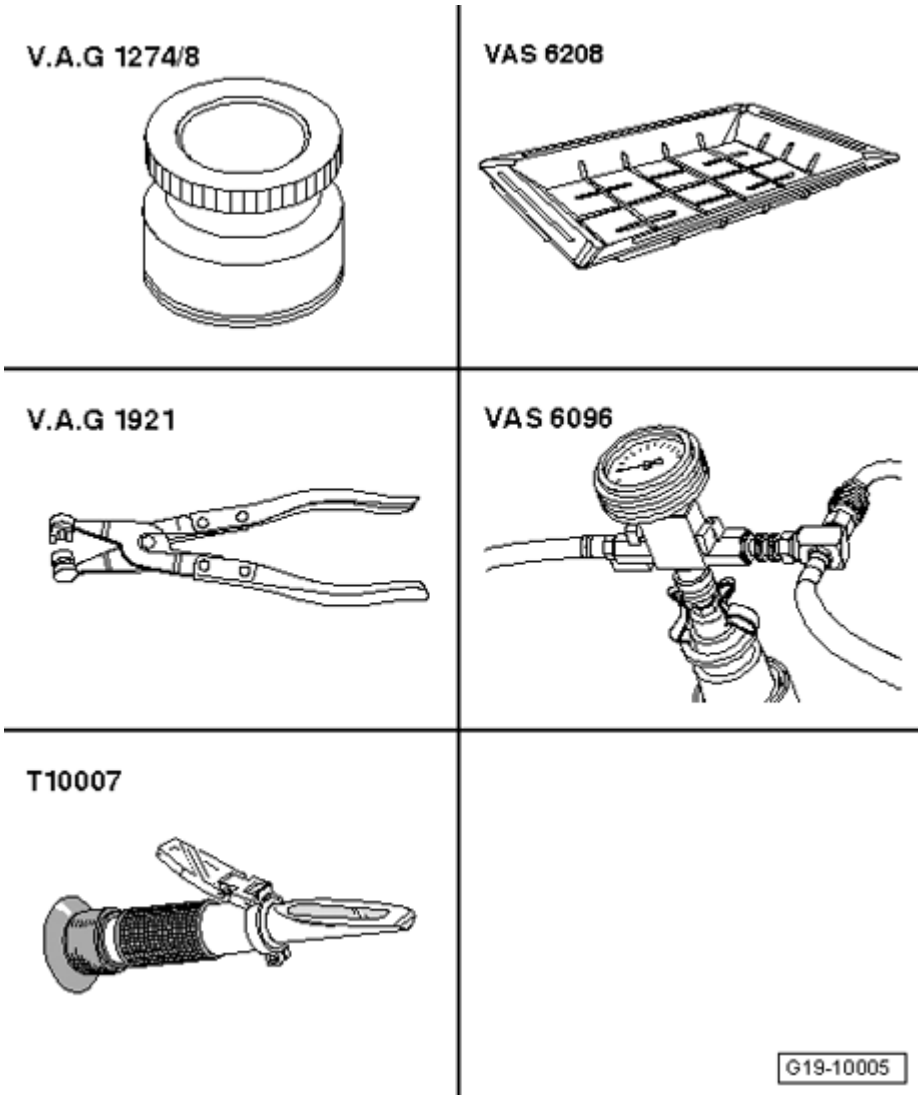

Fig. 442: Identifying Special Tools - Cooling System, Draining And Filling
Courtesy of VOLKSWAGEN UNITED STATES, INC.

Special tools, testers and auxiliary items required

- Adapter V.A.G 1274/8
- Drip tray for workshop crane VAS 6208
- Hose clamp pliers V.A.G 1921
- Cooling system charge unit VAS 6096
- Refractometer T10007

Special tools, testers and auxiliary items required

 © 2011 Mitchell Repair Information Company, LLC.

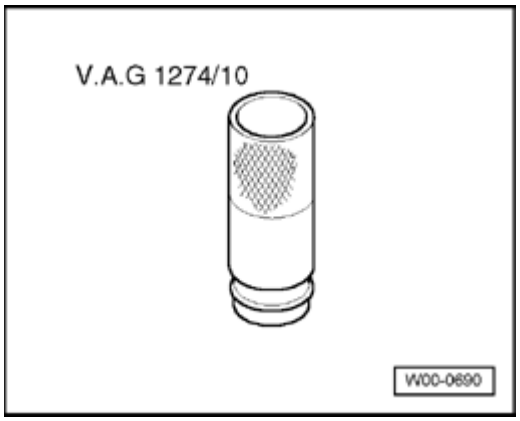

Fig. 443: Adapter V.A.G 1274/10
Courtesy of VOLKSWAGEN UNITED STATES, INC.

- Adapter V.A.G 1274 tester V.A.G 1274/10

Draining

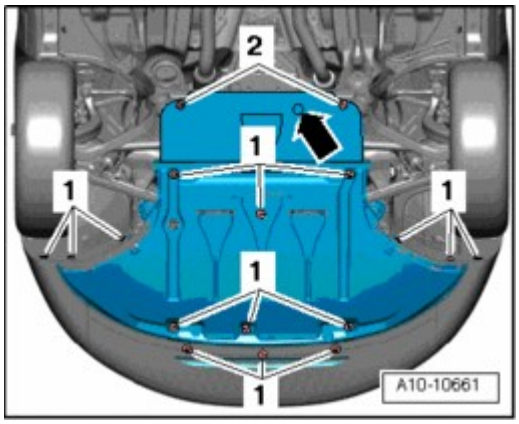

Fig. 444: Identifying Noise Insulation And Mountings
Courtesy of VOLKSWAGEN UNITED STATES, INC.

- Remove sound insulation by loosening securing pieces - **1, 2 and arrow** -.

NOTE:

- **Drained coolant must be stored in a clean container for disposal or reuse.**

CAUTION: Risk of scalding due to hot steam and hot coolant.

- **When the engine is warm the cooling system is under pressure.**
- **To reduce pressure, cover coolant reservoir cap with cloth and carefully open.**

- Open cap on coolant expansion tank.
- Place drip tray for workshop crane VAS 6208 under engine.

 © 2011 Mitchell Repair Information Company, LLC.

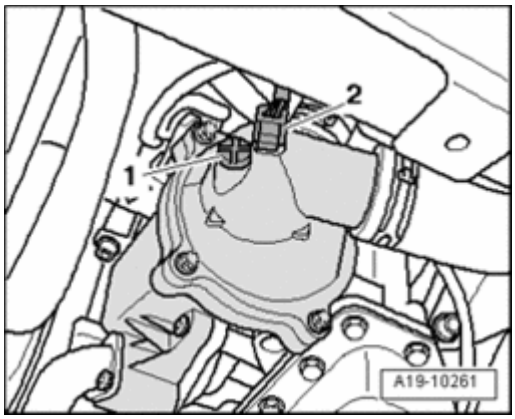

Fig. 445: Removing/Installing Drain Plug On Map Controlled Engine Cooling Thermostat F265
Courtesy of VOLKSWAGEN UNITED STATES, INC.

- Remove drain plug - **1** - on Map Controlled Engine Cooling Thermostat F265 and allow coolant to drain.

NOTE:

- **Ignore - 2 -.**

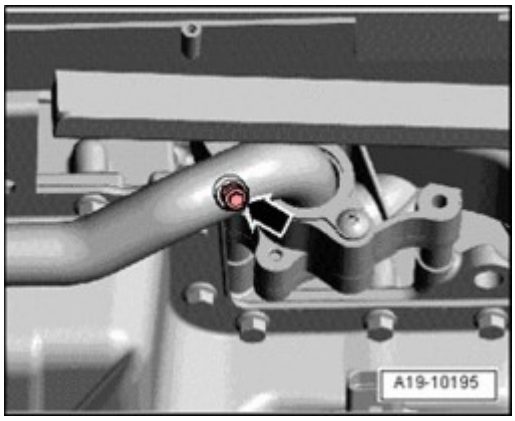

Fig. 446: Removing/Installing Drain Plug On Front Coolant Pipe
Courtesy of VOLKSWAGEN UNITED STATES, INC.

- Remove drain plug - **arrow** - at front coolant pipe and drain coolant.

Filling

- Tightening torques --> **Coolant pump and coolant thermostat, assembly overview** , --> **Coolant pipes, assembly overview**.
- Ignition switched off.

NOTE:

- **The cooling system is filled all year round with a mixture of frost and corrosion protection additives and water.**
- **Use only *coolant additive Plus G 012 A8F A1* (short: G12+) "according to TL VW 774 F". Other coolant additives may above all reduce the corrosion protection effect significantly. The damage resulting from this may lead to**

 © 2011 Mitchell Repair Information Company, LLC.

loss of coolant and consequently to severe engine damage.

- **Coolant additive G12+ can be combined with additives G11 and G12.**
- **G12+ and coolant additives with the designation "according to TL VW 774 F" reduce frost and corrosion damage as well as lime deposits. They also raise the boiling point. For this reason the system must be filled all year round with frost and corrosion protection additives.**
- **Because of its high boiling point, the coolant improves engine reliability under heavy loads, particularly in countries with tropical climates.**
- **Protection against frost must be assured to about -25° C (in arctic climatic countries to about -35° C).**
- **The coolant concentration must not be reduced by adding water even in warmer seasons and in warmer countries. The coolant additive portion must be at least 40%.**
- **If for climatic reasons greater frost protection is required, the amount of G12+ can be increased, but only up to 60% (frost protection to about -40° C), otherwise frost protection and cooling effectiveness will be reduced.**
- **Only clean drinking water may be used for mixing coolant.**
- **If the radiator, heater core, cylinder head and cylinder head gasket or cylinder block is replaced, completely replace the engine coolant.**
- **Do not reuse contaminated coolant.**
- **For coolant G12+ , use refractometer T10007 to test frost protection in cooling system.**

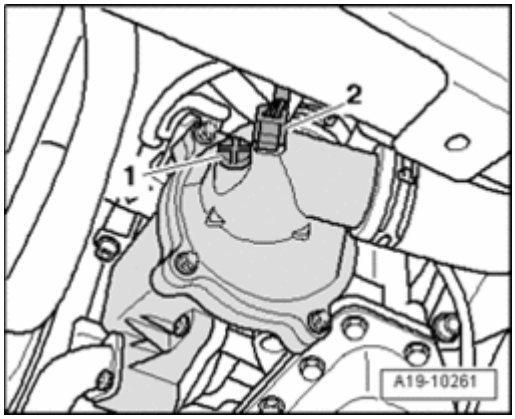

Fig. 447: Removing/Installing Drain Plug On Map Controlled Engine Cooling Thermostat F265
Courtesy of VOLKSWAGEN UNITED STATES, INC.

- Install drain plug - **1** - with new O-ring on Map Controlled Engine Cooling Thermostat F265.

NOTE:

- **Ignore - 2 -.**

 © 2011 Mitchell Repair Information Company, LLC.

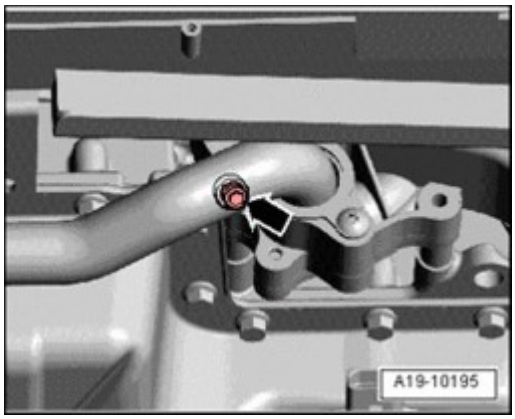

Fig. 448: Removing/Installing Drain Plug On Front Coolant Pipe
Courtesy of VOLKSWAGEN UNITED STATES, INC.

- Reinstall drain plug - **arrow** - with new gasket at front coolant pipe.

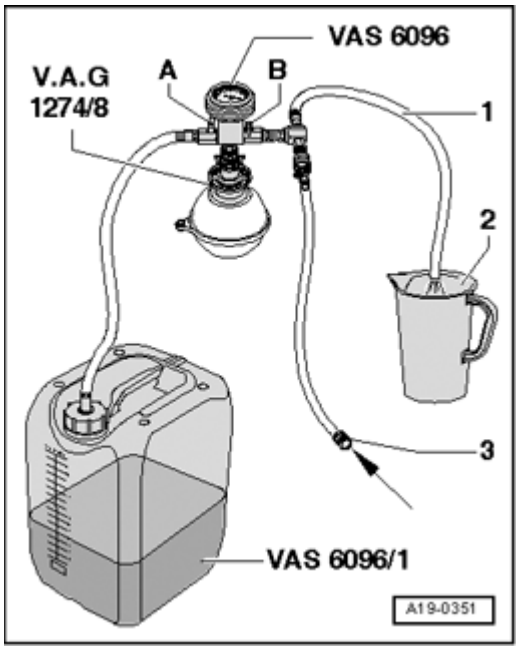

Fig. 449: Filling Reservoir VAS 6096/1 With At Least 15 Liters Of Premixed Coolant
Courtesy of VOLKSWAGEN UNITED STATES, INC.

- Fill coolant reservoir of Cooling System Charge Unit VAS 6096 with at least 15 liters of pre-mixed coolant with correct mixture ratio:

- G12+ (40%) and water (60%) for frost protection up to -25° C
- G12+ (50%) and water (50%) for frost protection up to -35° C
- G12+ (60%) and water (40%) for frost protection up to -40° C

- Attach adapter V.A.G 1274/8 to coolant expansion tank.
- Install Cooling System Charge Unit VAS 6096 on adapter V.A.G 1274/8.

 © 2011 Mitchell Repair Information Company, LLC.

- Place air outlet hose - **1** - into a small container - **2** -. (A small amount of coolant is drawn off which should be reserved with discharged air.)
- Close both valves - **A and B** - by turning lever perpendicular to direction of flow.
- Connect hose - **3** - to pressurized air.

- Pressure: 6 to 10 bar positive pressure.

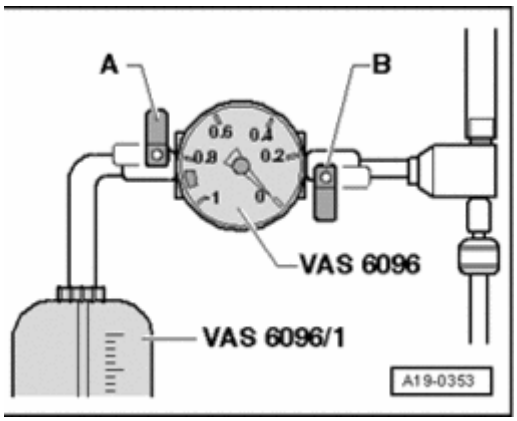

Fig. 450: Cooling System, Draining And Filling
Courtesy of VOLKSWAGEN UNITED STATES, INC.

- Open valve - **B** - , to do this turn lever in direction of flow.

A vacuum is created in the cooling system by the suction jet pump.

- Needle on instrument display must travel into green region.
- Also briefly open valve - **A** - by turning lever in direction of flow so that Cooling System Charge Unit VAS 6096 coolant reservoir hose is filled with coolant.
- Close valve - **A** - again.
- Let valve - **B** - remain open another 2 minutes.

- A further vacuum is created in cooling system by suction jet pump.
- Needle on instrument display must still remain in green region.

- Close valve - **B** -.

- Needle in display instrument must remain in green region, then sufficient vacuum in cooling system is obtained for upcoming filling.

If needle stands below green region, repeat procedure.

If vacuum decreases, cooling system is leaking.

 © 2011 Mitchell Repair Information Company, LLC.

- Disconnect pressurized air hose.
- Open valve - **A** -.

The vacuum in cooling system has the effect of extracting coolant from coolant reservoir VAS 6096/1 ; cooling system is filled.

- Detach Cooling System Charge Unit VAS 6096 from adapter V.A.G 1274/8 on coolant expansion tank.

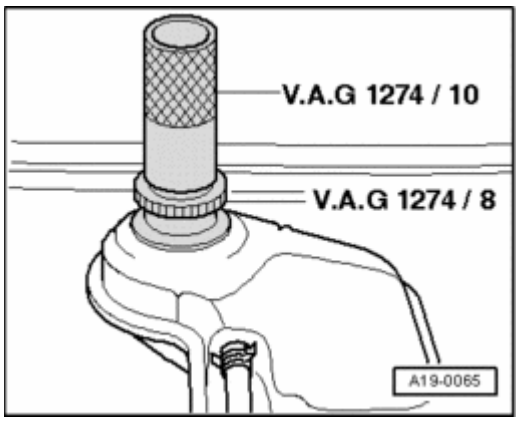

Fig. 451: Connecting Adapter For Cooling System Tester V.A.G 1274/10 To Adapter V.A.G 1274/8
Courtesy of VOLKSWAGEN UNITED STATES, INC.

- Connect pipe for cooling system tester V.A.G 1274/10 to adapter.

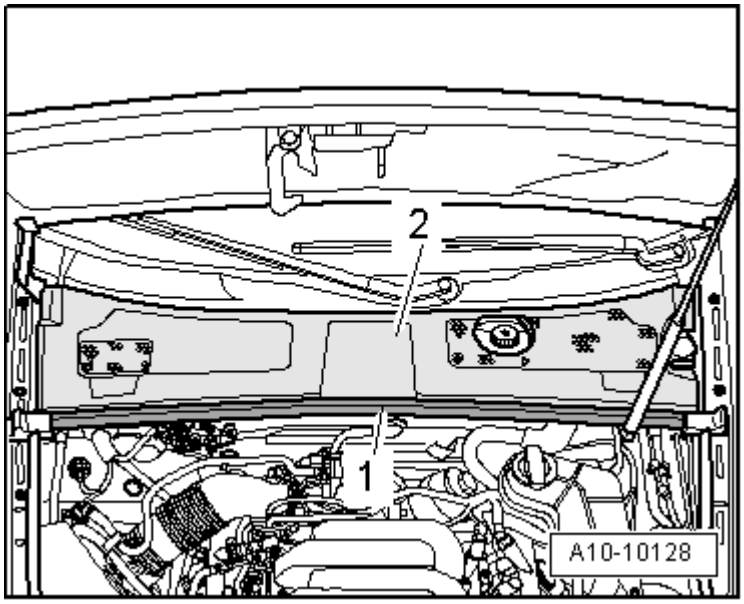

Fig. 452: Removing Rubber Seal And Plenum Chamber Cover
Courtesy of VOLKSWAGEN UNITED STATES, INC.

- Remove rubber seal - **1** - and remove plenum chamber cover - **2** -.

 © 2011 Mitchell Repair Information Company, LLC.

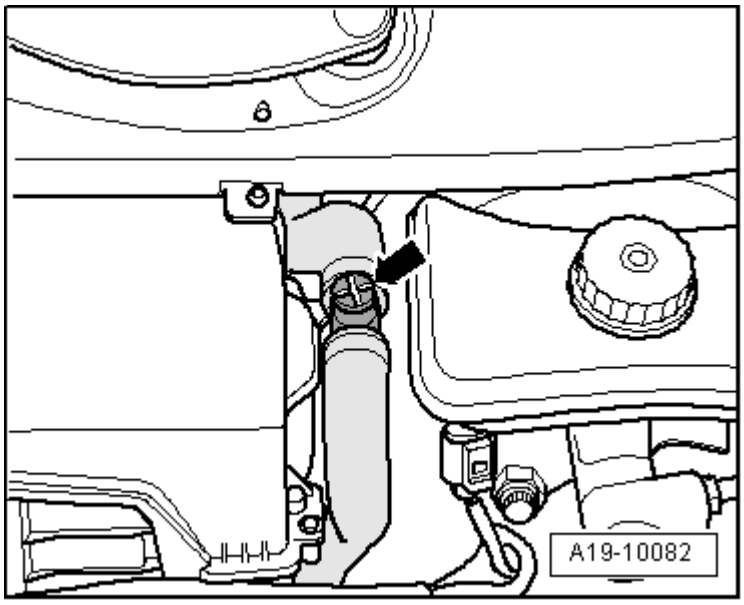

Fig. 453: Opening Bleeder Screw
Courtesy of VOLKSWAGEN UNITED STATES, INC.

- Open bleeder screw - **arrow** -.
- Fill up coolant until it escapes from coolant hose bleeder hole.
- Close bleeder screw.
- If present, switch on auxiliary heater for about 30 seconds.

- Twist cap for expansion tank closed.
- Start engine.
- Set left and right heating/air conditioning system to "HI".
- Let engine run at 2000 RPM for 3 minutes.

- Let engine run at idle long enough until both large coolant hoses on main cooler are warm.
- Let engine run at 2000 RPM for 1 minute.
- Turn off engine and allow it to cool off.

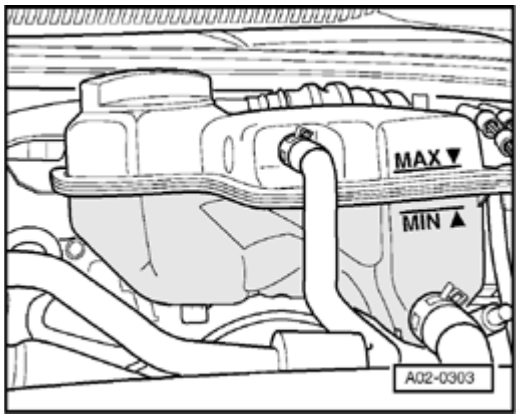

 © 2011 Mitchell Repair Information Company, LLC.

Fig. 454: Check Coolant Level
Courtesy of VOLKSWAGEN UNITED STATES, INC.

- Check coolant level.

- With cold engine, coolant level must be at MAX marking.
- Coolant level may be above MAX-marking with engine at operating temperature.

COOLANT PUMP, COOLANT THERMOSTAT, COOLANT PIPES

Coolant pump and coolant thermostat, assembly overview

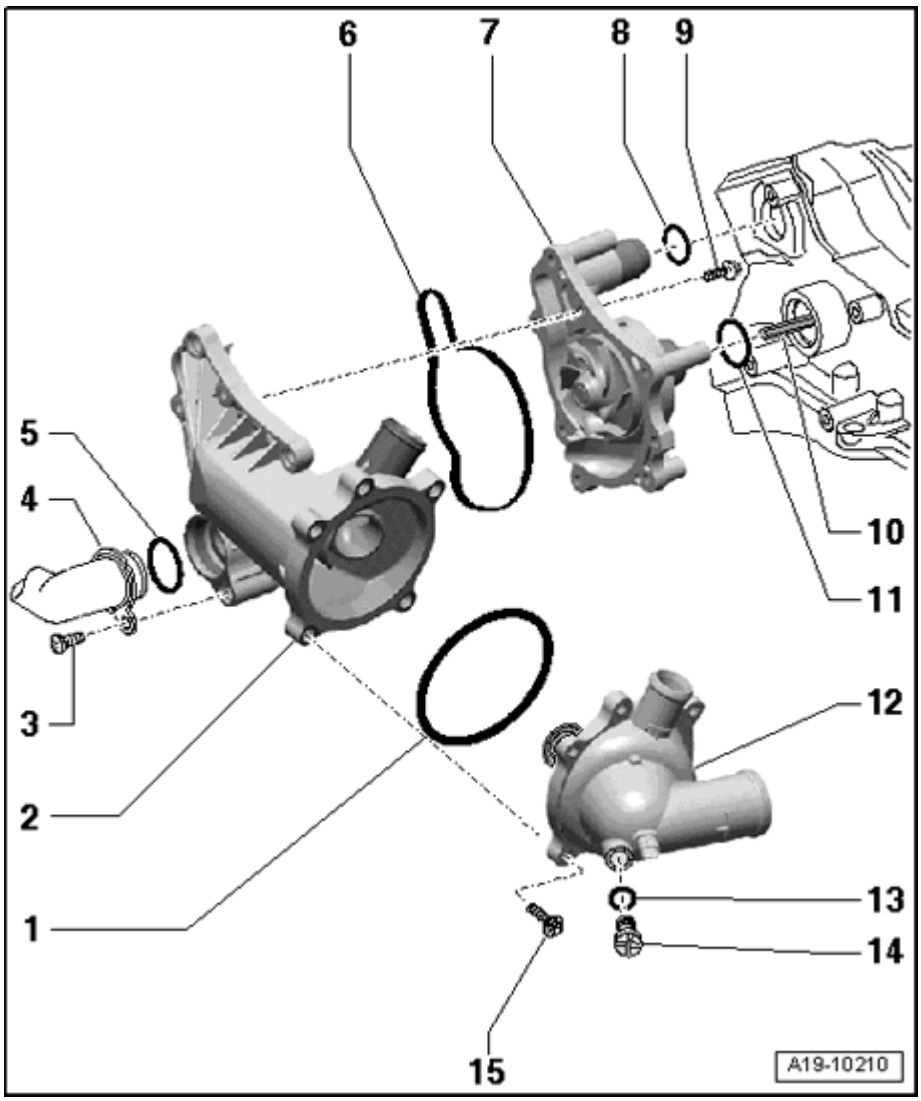

Fig. 455: Coolant Pump And Coolant Thermostat, Assembly Overview
Courtesy of VOLKSWAGEN UNITED STATES, INC.

1 - Seal

 © 2011 Mitchell Repair Information Company, LLC.

- Replace

2 - Coolant pump housing

- Removing and installing --> **Coolant pump, removing and installing**

3 - Bolt

- Tightening torque --> **Coolant pipes, assembly overview**

4 - Front coolant line

- Removing and installing --> **Front coolant line, removing and installing**

5 - O-ring

- Replace

6 - Seal

- Replace

7 - Coolant pump

- Removing and installing --> **Coolant pump, removing and installing**

8 - O-ring

- Replace

9 - Bolt

- 9 Nm

10 - Drive shaft for coolant pump

11 - O-ring

- Replace

12 - Map Controlled Engine Cooling Thermostat F265

- Removing and installing --> **Map Controlled Engine Cooling Thermostat F265 , removing and installing**
- Coolant thermostat opening data --> **Coolant thermostat opening data**

13 - O-ring

 © 2011 Mitchell Repair Information Company, LLC.

- Replace

14 - Drain plug

- 4 Nm

15 - Bolt

- 9 Nm

After-run coolant pump V51

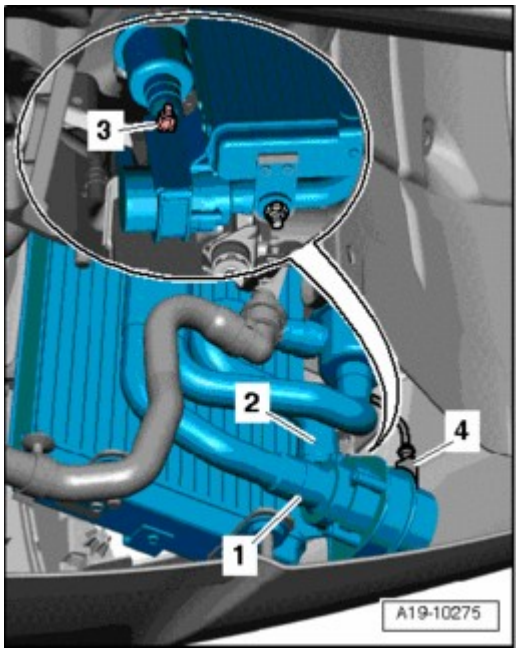

Fig. 456: After-Run Coolant Pump V51
Courtesy of VOLKSWAGEN UNITED STATES, INC.

Nut - **3** -

- 5 Nm

Coolant pump, removing and installing

Special tools, testers and auxiliary items required

 © 2011 Mitchell Repair Information Company, LLC.

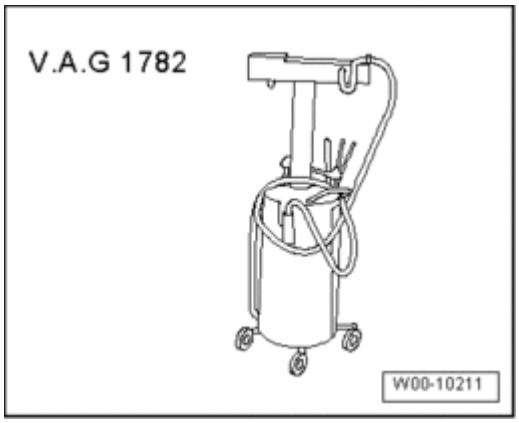

Fig. 457: Identifying Old Oil Collecting And Extracting Device V.A.G 1782
Courtesy of VOLKSWAGEN UNITED STATES, INC.

- Old oil collecting and extracting device V.A.G 1782

Removing

- Drain coolant --> **Cooling system, draining and filling**.
- Remove front coolant pipe --> **Front coolant line, removing and installing**.

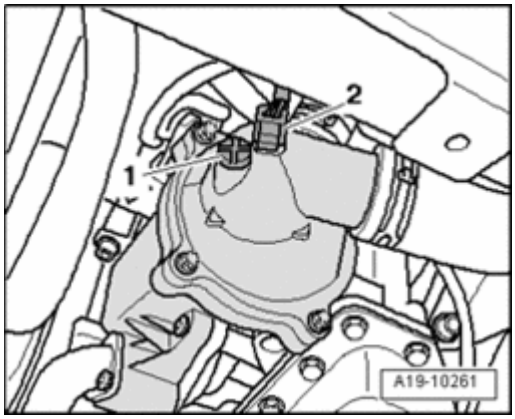

Fig. 458: Removing/Installing Drain Plug On Map Controlled Engine Cooling Thermostat F265
Courtesy of VOLKSWAGEN UNITED STATES, INC.

- Disconnect electrical connection - **2** - at Map Controlled Engine Cooling Thermostat F265.

NOTE:

- **Ignore - 1 -.**

 © 2011 Mitchell Repair Information Company, LLC.

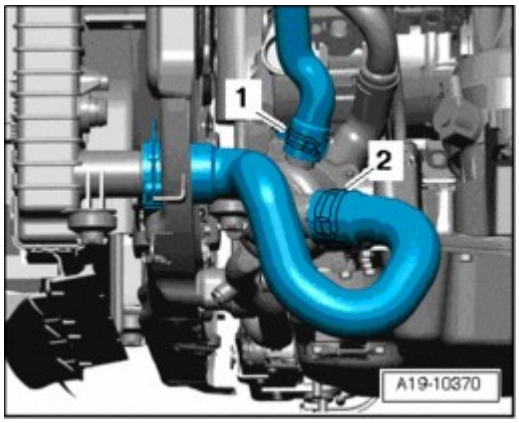

Fig. 459: Removing Coolant Hoses From Map Controlled Engine Cooling Thermostat F265
Courtesy of VOLKSWAGEN UNITED STATES, INC.

- Remove coolant hoses - **1 and 2** - from Map Controlled Engine Cooling Thermostat F265.

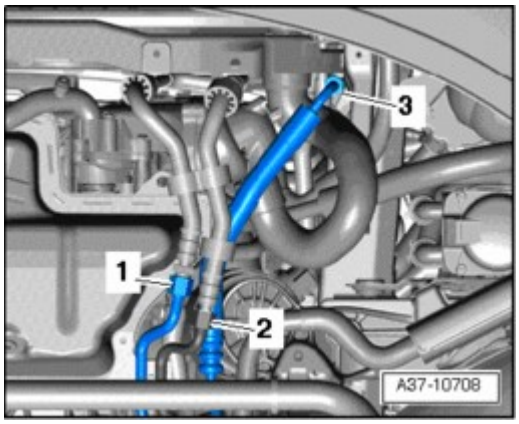

Fig. 460: Disconnecting ATF Lines And Power Steering Hydraulic Line
Courtesy of VOLKSWAGEN UNITED STATES, INC.

- Place old oil collecting and extracting device V.A.G 1782 under engine.

NOTE:

- **Observe the rules of cleanliness for working on automatic transmissions --> 00 - GENERAL, TECHNICAL DATA .**

- Disconnect ATF lines - **1 and 2** - and drain ATF.

NOTE:

- **To prevent dirt and moisture from entering, seal off open lines and connections with clean plugs or protective caps.**
- **Ignore - 3 -.**

 © 2011 Mitchell Repair Information Company, LLC.

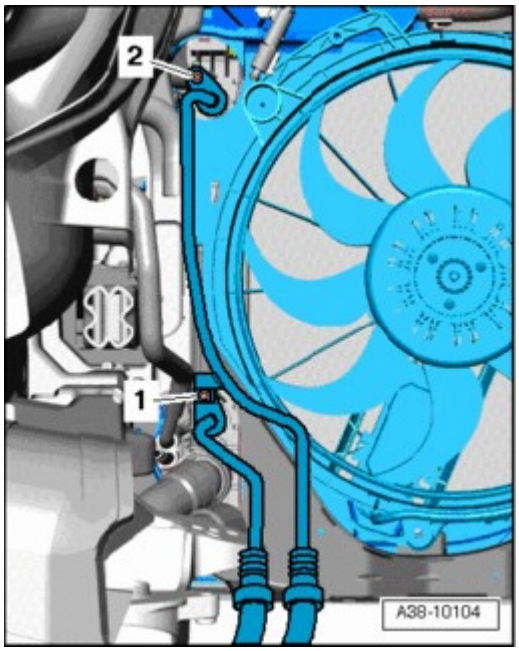

Fig. 461: Removing Bolts And Pivot ATF Lines
Courtesy of VOLKSWAGEN UNITED STATES, INC.

- Remove bolts - **1 and 2** - and pivot ATF lines to side.

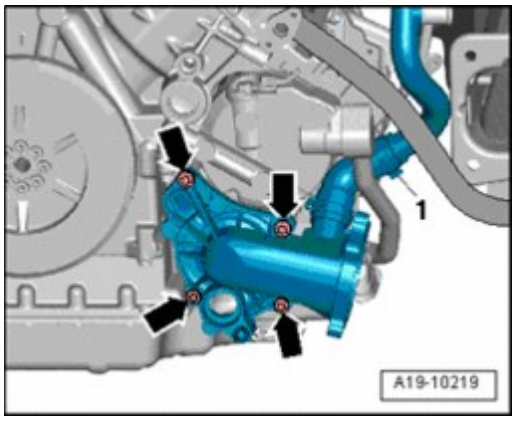

Fig. 462: Loosening Hose Clip At Coolant Hose
Courtesy of VOLKSWAGEN UNITED STATES, INC.

- Loosen hose clip - **1** - at coolant hose.
- Remove bolts - **arrows** -.
- Remove coolant pump housing toward front, while doing this pay attention to drive shaft for coolant pump.

NOTE:

- **Coolant hose can only be removed with coolant pump removed.**
- **The coolant pump input shaft must remain in oil pump mount because otherwise the coolant pump cannot be removed.**

 © 2011 Mitchell Repair Information Company, LLC.

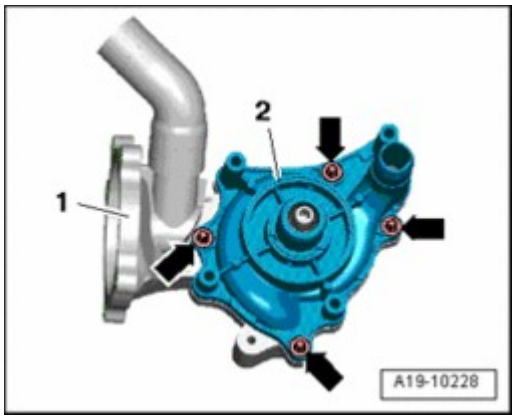

Fig. 463: Removing Bolts & Coolant Pump From Housing
Courtesy of VOLKSWAGEN UNITED STATES, INC.

- Remove bolts - **arrows** - and remove coolant pump - **2** - from housing - **1** -.

Installing

- Tightening torques --> **Coolant pump and coolant thermostat, assembly overview**.

NOTE:

- **Replace sealing rings and O-rings.**
- **Secure all hose connections using hose clamps appropriate for the model type .**

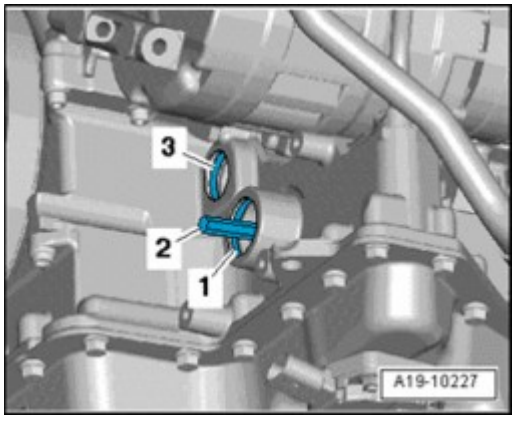

Fig. 464: Inserting New O-Rings & Coolant Pump Input Shaft In Oil Pump Mount
Courtesy of VOLKSWAGEN UNITED STATES, INC.

- Insert O-rings - **1 and 3** -.
- Insert coolant pump input shaft - **2** - in oil pump mount as far as stop.
- Slide coolant pump into mounts in upper part of oil pan.

NOTE:

- **To connect drive flange onto hex head of drive shaft, reach with the finger into the lower pipe connection of coolant pump and twist at impeller until**

 © 2011 Mitchell Repair Information Company, LLC.

coolant pump can be inserted completely.

The rest of installation is in reverse order of removal, note the following:

- Install ATF lines --> **37 - AUTOMATIC TRANSMISSION - CONTROLS, HOUSING** .
- Install front coolant pipe --> **Front coolant line, removing and installing**.
- Install torque support --> **Torque support, removing and installing**.
- Fill with coolant **Filling**.
- Check ATF level --> **37 - AUTOMATIC TRANSMISSION - CONTROLS, HOUSING** .

Map Controlled Engine Cooling Thermostat F265 , removing and installing

Removing

- Drain coolant --> **Cooling system, draining and filling**.

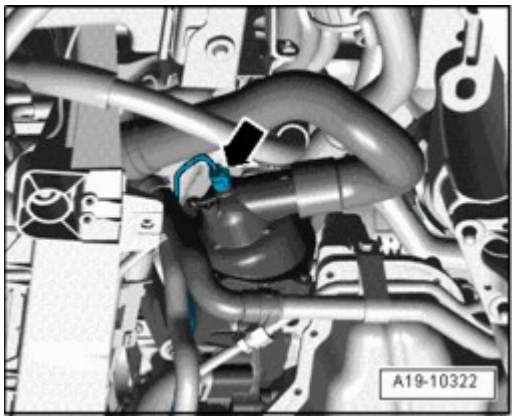

Fig. 465: Disconnecting Electrical Connector On Map Controlled Engine Cooling Thermostat F265
Courtesy of VOLKSWAGEN UNITED STATES, INC.

- Disconnect electrical connector - **arrow** - on Map Controlled Engine Cooling Thermostat F265.

NOTE:

- **Ignore - 1 -.**

 © 2011 Mitchell Repair Information Company, LLC.

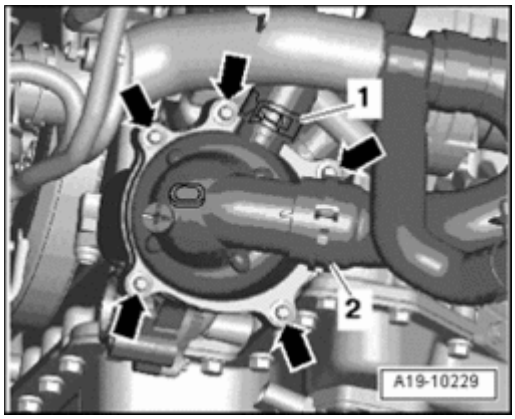

Fig. 466: Identifying Coolant Hose, Bolts & Coolant Thermostat Housing
Courtesy of VOLKSWAGEN UNITED STATES, INC.

- Remove coolant hoses - **1 and 2** - from Map Controlled Engine Cooling Thermostat F265 and drain coolant.
- Remove bolts - **arrows** - and remove Map Controlled Engine Cooling Thermostat F265.

Installing

- Tightening torque --> **Coolant pump and coolant thermostat, assembly overview**.

Installation is in reverse order of removal, note the following:

NOTE:

- **Replace sealing rings and O-rings.**
- **Secure all hose connections using hose clamps appropriate for the model type .**

- Fill with coolant **Filling**.

Coolant thermostat opening data

Opening begins	Opening ends	Opening lift	Voltage at thermostat
approx. 105° C	approx. 117° C	min. 8 mm	0 V
	approx. 105° C	min. 8 mm	14 V

NOTE:

- **The coolant thermostat cannot be checked with workshop equipment.**

After-Run Coolant Pump V51 , removing and installing

 © 2011 Mitchell Repair Information Company, LLC.

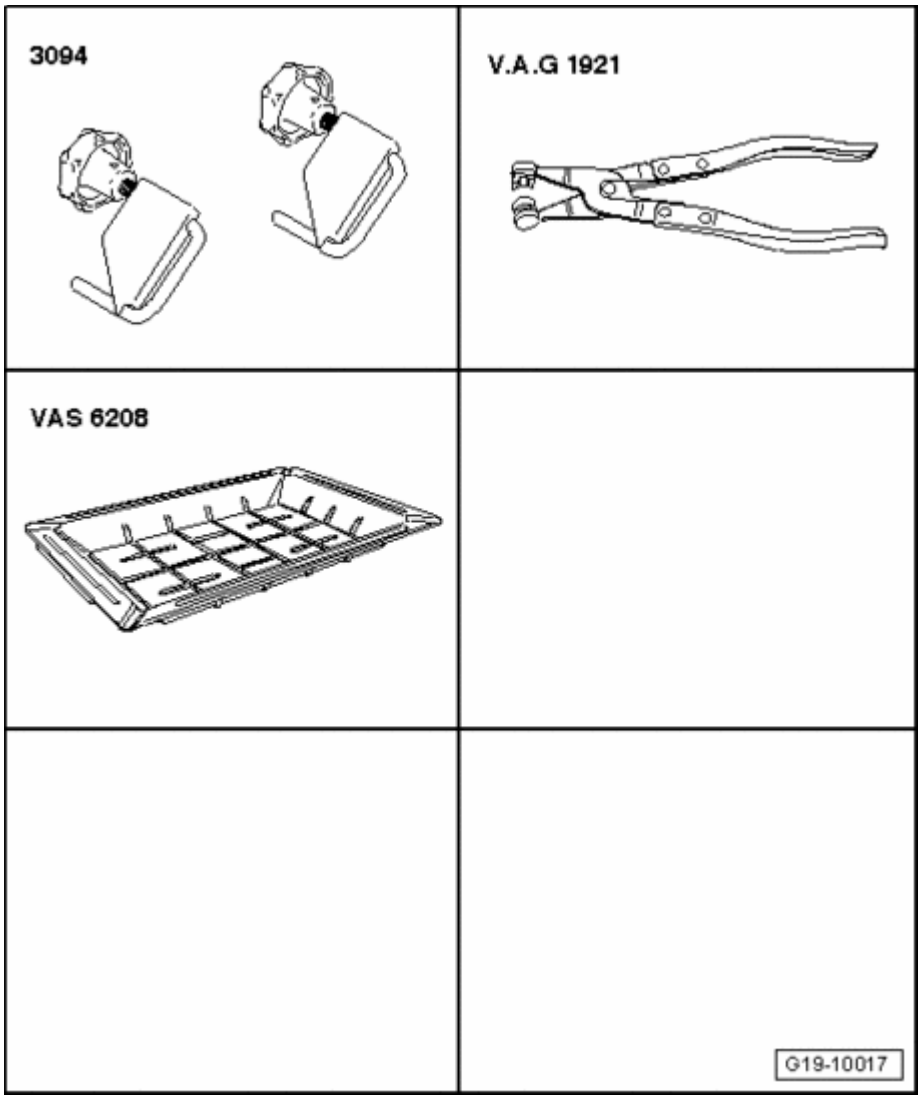

Fig. 467: Identifying Special Tools - After-Run Coolant Pump V51 , Removing And Installing
Courtesy of VOLKSWAGEN UNITED STATES, INC.

Special tools, testers and auxiliary items required

- Hose clamps up to 25 mm dia. 3094
- Hose clamp pliers V.A.G 1921
- Drip tray for workshop crane VAS 6208

Removing

CAUTION: Risk of scalding due to hot steam and hot coolant.

- **When the engine is warm the cooling system is under pressure.**
- **To reduce pressure, cover coolant reservoir cap with cloth and carefully open.**

 © 2011 Mitchell Repair Information Company, LLC.

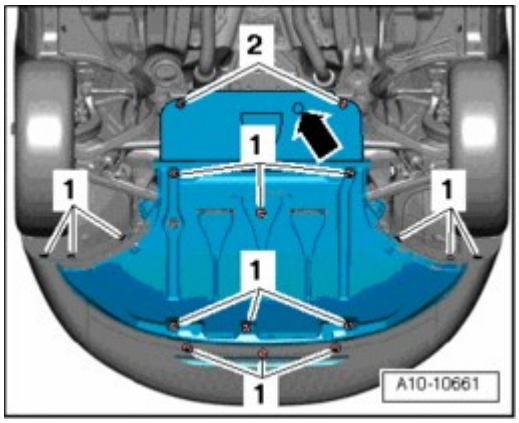

Fig. 468: Identifying Noise Insulation And Mountings
Courtesy of VOLKSWAGEN UNITED STATES, INC.

- Remove sound insulation by loosening securing pieces - **1, 2 and arrow** -.

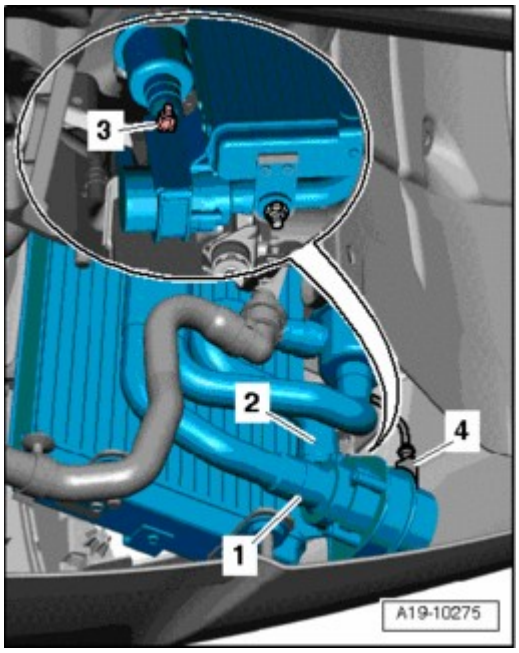

Fig. 469: After-Run Coolant Pump V51
Courtesy of VOLKSWAGEN UNITED STATES, INC.

- Clamp off coolant hoses - **1 and 2** - with Hose Clamps Up to 25 mm dia. 3094.
- Disconnect electrical connector - **4** -.
- Remove nut - **3** -.
- Place Drip Tray for VAS 6100 VAS 6208 below After-Run Coolant Pump V51.

- Remove coolant hoses from After-Run Coolant Pump V51.
- Remove After-Run Coolant Pump V51.

Installing

 © 2011 Mitchell Repair Information Company, LLC.

- Tightening torque --> **Coolant pump and coolant thermostat, assembly overview**.

Installation is in reverse order of removal, note the following:

NOTE:

- **Secure all hose connections using hose clamps appropriate for the model type .**

  - Fill with coolant **Filling**.

Coolant pipes, assembly overview

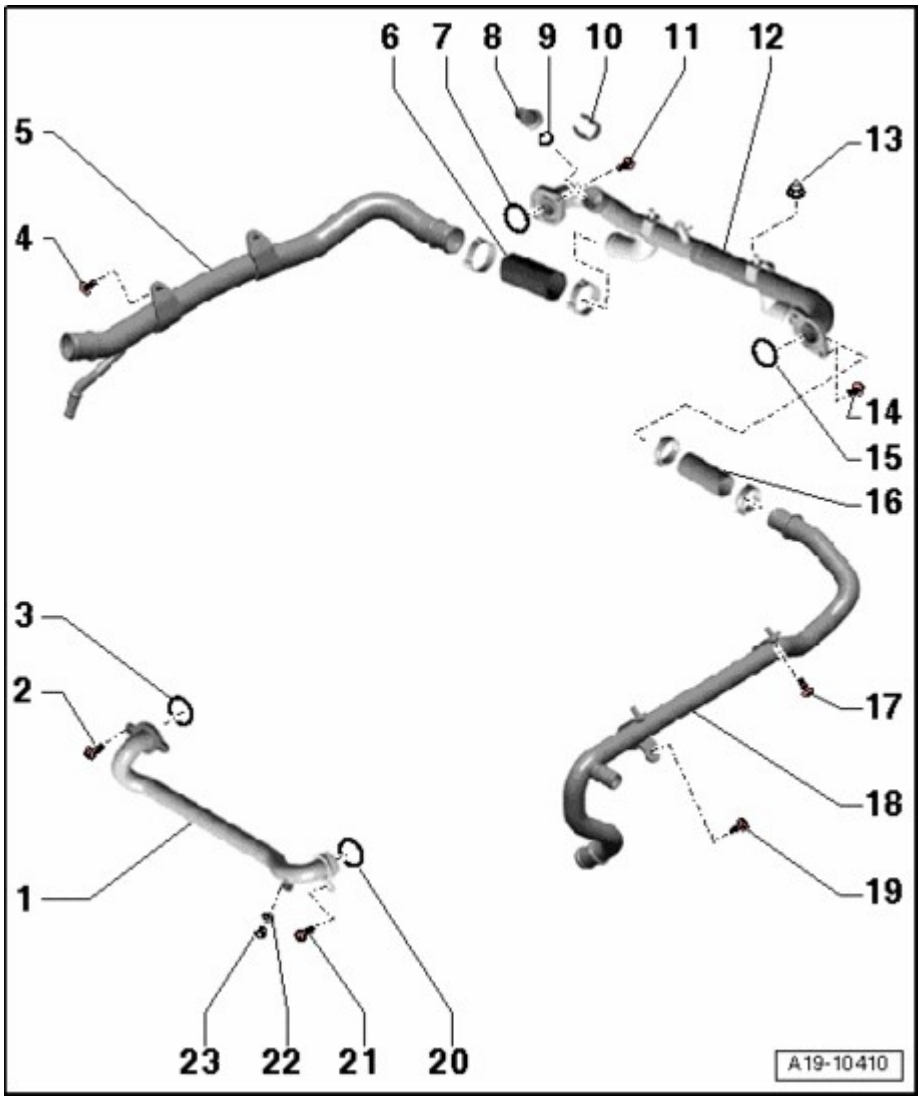

Fig. 470: Coolant Pipes, Assembly Overview
Courtesy of VOLKSWAGEN UNITED STATES, INC.

1 - Front coolant line

 © 2011 Mitchell Repair Information Company, LLC.

- Removing and installing --> **Front coolant line, removing and installing**

2 - Bolt

- 9 Nm

3 - O-ring

- Replace

4 - Bolt

- 9 Nm

5 - Right coolant line

- Removing and installing --> **Right coolant pipe, removing and installing**

6 - Coolant hose

7 - O-ring

- Replace

8 - Engine Coolant Temperature (ECT) Sensor G62

- Removing and installing --> **Engine Coolant Temperature (ECT) Sensor G62 , removing and installing**

9 - O-ring

- Replace

10 - Retaining clip

11 - Bolt

- 9 Nm

12 - Rear coolant pipe

- Removing and installing --> **Rear coolant line, removing and installing**

13 - Nut

- 9 Nm

 © 2011 Mitchell Repair Information Company, LLC.

14 - Bolt

- 9 Nm

15 - O-ring

- Replace

16 - Coolant hose

17 - Bolt

- 9 Nm

18 - Left coolant line

- Removing and installing --> **Left coolant pipe, removing and installing**

19 - Bolt

- 9 Nm

20 - O-ring

- Replace

21 - Bolt

- 9 Nm

22 - Seal

- Replace

23 - Drain plug

- 10 Nm

Engine Coolant Temperature (ECT) Sensor G62 , removing and installing

Removing

- Engine cold.
  - Briefly open coolant expansion tank cap to reduce residual pressure in cooling system.

 © 2011 Mitchell Repair Information Company, LLC.

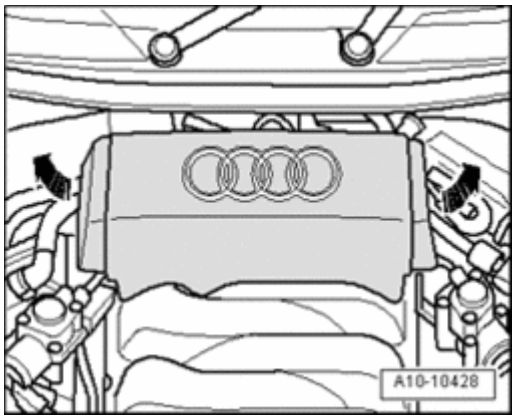

Fig. 471: Removing Rear Engine Cover
Courtesy of VOLKSWAGEN UNITED STATES, INC.

- Pull rear engine cover - **arrows** - off.

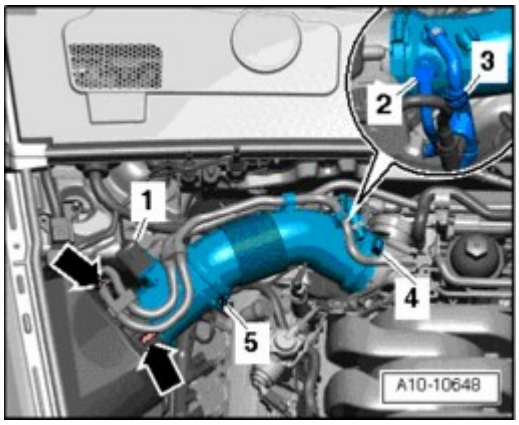

Fig. 472: Identifying Mass Air Flow (MAF) Sensor G70 Electrical Harness Connector, Vacuum Line, Hose Connection, Crankcase Ventilation Hose & Hose Clamps
Courtesy of VOLKSWAGEN UNITED STATES, INC.

- Free up fuel line and line to EVAP canister on air guide pipe.
- Remove air guide hose from air filter housing by loosening hose clamps - **4 and 5** -.
- Lay aside air guide hose with connected lines - **2 and 3** -.

NOTE:

- **Ignore - 1 and arrows -.**

 © 2011 Mitchell Repair Information Company, LLC.

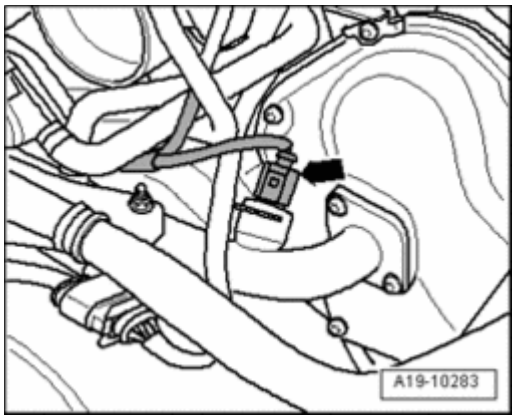

Fig. 473: Identifying Electrical Harness Connector At Engine Coolant Temperature (ECT) Sensor G62
Courtesy of VOLKSWAGEN UNITED STATES, INC.

- Disconnect electrical connector - **arrow** - at Engine Coolant Temperature (ECT) Sensor G62.

NOTE:

- **Lay a cloth below to catch escaping coolant.**

- Remove retaining clip and remove Engine Coolant Temperature (ECT) Sensor G62.

NOTE:

- **To improve clarity, the removed engine is shown.**

Installing

Installation is in reverse order of removal, note the following:

NOTE:

- **Replace O-ring.**
- **To prevent coolant loss, immediately insert new Engine Coolant Temperature (ECT) Sensor G62 in support.**
- **Secure all hose connections using hose clamps appropriate for the model type .**

- Check coolant level **Filling**.

Front coolant line, removing and installing

Special tools, testers and auxiliary items required

 © 2011 Mitchell Repair Information Company, LLC.

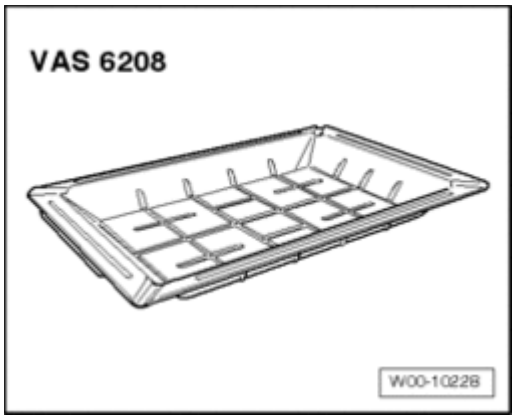

Fig. 474: Drip Tray For VAS 6100, VAS 6208
Courtesy of VOLKSWAGEN UNITED STATES, INC.

- Drip tray for workshop crane VAS 6208

Removing

- Drain coolant --> **Cooling system, draining and filling**.

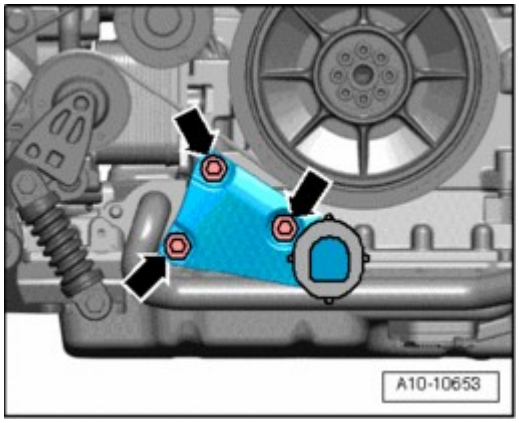

Fig. 475: Removing Bolts For Torque Support
Courtesy of VOLKSWAGEN UNITED STATES, INC.

- Remove bolts - **arrows** - for torque support.

NOTE:

- **The torque support remains in installation location.**

- Place drip tray for workshop crane VAS 6208 under engine.

 © 2011 Mitchell Repair Information Company, LLC.

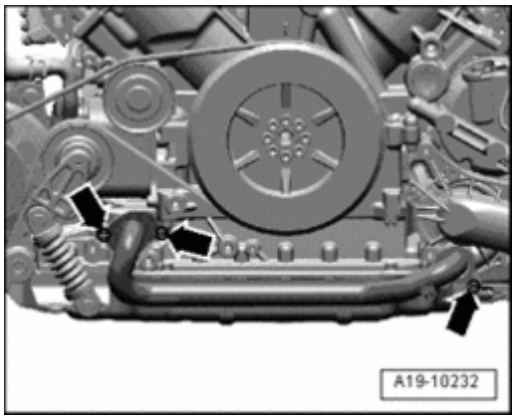

Fig. 476: Removing Bolts, Front Coolant Pipe At Engine And At Coolant Pump
Courtesy of VOLKSWAGEN UNITED STATES, INC.

- Remove bolts - **arrows** -.
- Remove front coolant pipe from engine and from coolant pump.

Installing

- Tightening torques --> **Coolant pipes, assembly overview**.

Installation is in reverse order of removal, note the following:

NOTE:

- **Replace O-rings.**

- Install torque support --> **Torque support, removing and installing**.
- Fill with coolant **Filling**.

Rear coolant line, removing and installing

Special tools, testers and auxiliary items required

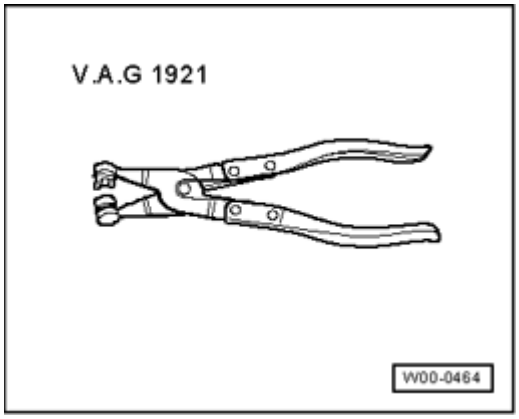

Fig. 477: Hose Clip Pliers V.A.G 1921
Courtesy of VOLKSWAGEN UNITED STATES, INC.

 © 2011 Mitchell Repair Information Company, LLC.

- Hose clamp pliers V.A.G 1921

Removing

NOTE:

- **During installation, all cable ties must be re-installed at the same location.**

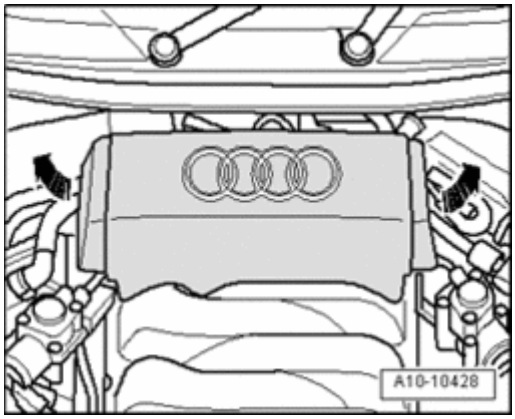

Fig. 478: Removing Rear Engine Cover
Courtesy of VOLKSWAGEN UNITED STATES, INC.

- Pull rear engine cover - **arrows** - off.
- Drain coolant --> **Cooling system, draining and filling**.
- Remove left coolant pipe --> **Left coolant pipe, removing and installing**.
- Remove right secondary air injection combi-valve --> **Right combination valve for Secondary Air Injection, removing and installing**.

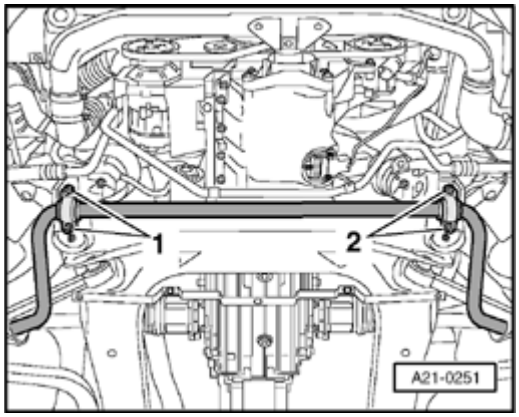

Fig. 479: Removing Bolts For Left And Right Stabilizer Bar Mount
Courtesy of VOLKSWAGEN UNITED STATES, INC.

- Remove stabilizer bar mounting bolts - **1 and 2** -.
- Slightly lower stabilizer bar.

 © 2011 Mitchell Repair Information Company, LLC.

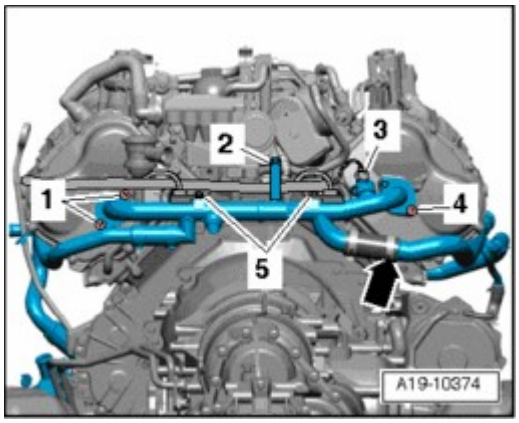

Fig. 480: Identifying Coolant Hose, Intake Manifold, Electrical Connector, Nuts & Bolts
Courtesy of VOLKSWAGEN UNITED STATES, INC.

- Loosen hose clamp - **arrow** - from below.

NOTE:

- **Ignore items - 1 to 5 -.**

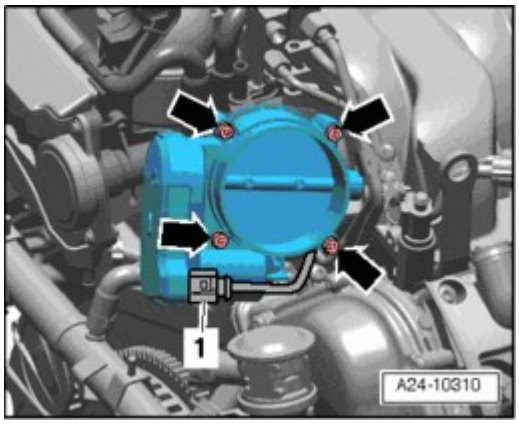

Fig. 481: Disconnecting Electrical Connection At Throttle Valve Control Module J338 & Removing Bolts And Throttle Valve Control Module J338
Courtesy of VOLKSWAGEN UNITED STATES, INC.

- Disconnect electrical connection - **1** - at throttle valve control module J338.
- Remove bolts - **arrows** - and remove Throttle Valve Control Module J338.

 © 2011 Mitchell Repair Information Company, LLC.

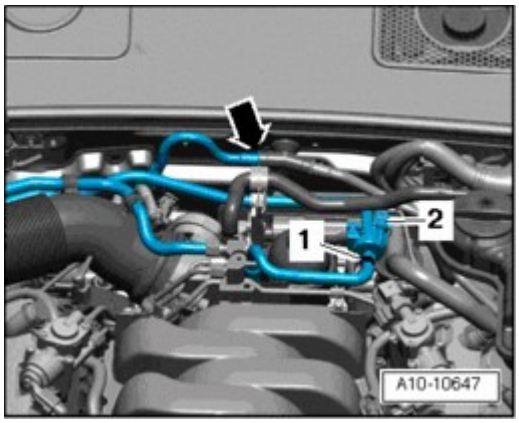

Fig. 482: Disconnecting Electrical Connector On Evaporative Emission (EVAP) Canister Purge Regulator Valve N80 And Removing Vacuum Hose
Courtesy of VOLKSWAGEN UNITED STATES, INC.

- Disconnect electrical connector - **2** - on Evaporative Emission (EVAP) Canister Purge Regulator Valve N80 and remove vacuum hose - **1** -.
- Remove Evaporative Emission (EVAP) Canister Purge Regulator Valve N80 from bracket and lay aside with hose connected.

NOTE:

- **Disregard - arrow -.**

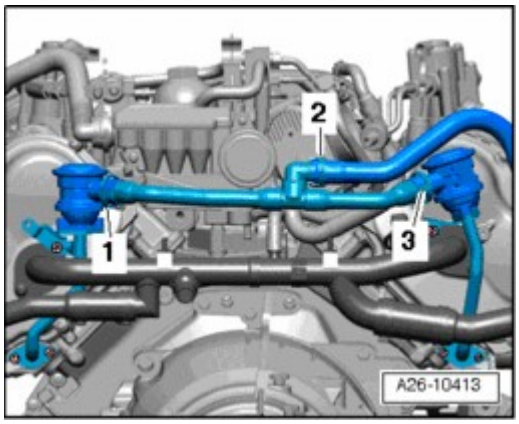

Fig. 483: Removing Air Guide Hose
Courtesy of VOLKSWAGEN UNITED STATES, INC.

- Remove air guide hose - **1** -.

NOTE:

- **Ignore - 2 and 3 -.**
- **To improve clarity, the removed engine is shown from the rear.**

 © 2011 Mitchell Repair Information Company, LLC.

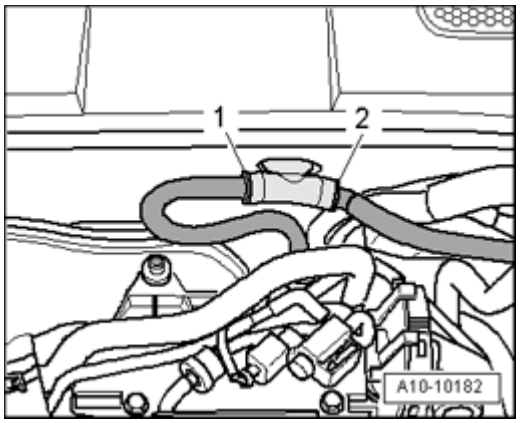

Fig. 484: Removing Vacuum Hoses From T-Piece On Bulkhead
Courtesy of VOLKSWAGEN UNITED STATES, INC.

- Remove vacuum hose - **2** - from T-piece on bulkhead.

NOTE:

- **Ignore - 1 -.**

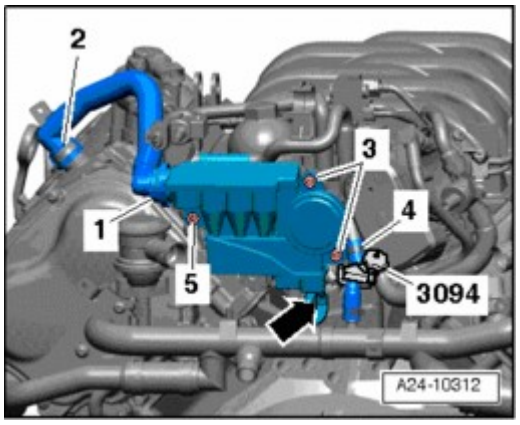

Fig. 485: Removing Crankcase Ventilation Hose, Bolts & Oil Drain Hose
Courtesy of VOLKSWAGEN UNITED STATES, INC.

- Remove crankcase ventilation hose - **1 and 2** -.
- Remove bolts - **3 and 5** - and press crankcase ventilation pressure regulator valve from throttle valve connections.
- Remove oil drain hose - **arrow** -.

NOTE:

- **Ignore - 4 - and 3094.**
- **To improve clarity, the removed engine is shown from the rear.**

 © 2011 Mitchell Repair Information Company, LLC.

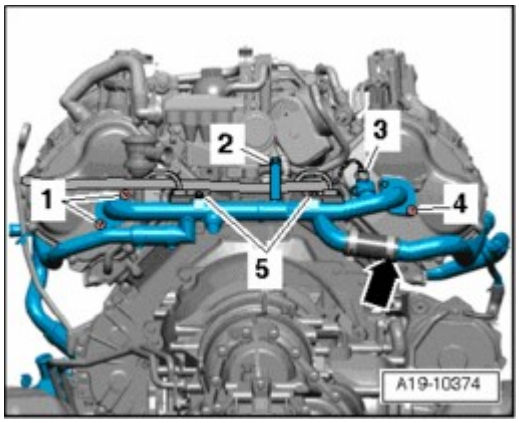

Fig. 486: Identifying Coolant Hose, Intake Manifold, Electrical Connector, Nuts & Bolts
Courtesy of VOLKSWAGEN UNITED STATES, INC.

- Remove coolant hose - **2** - to intake manifold.
- Free up engine wiring harness on rear coolant pipe.
- Disconnect electrical connector - **3** - on Engine Coolant Temperature (ECT) Sensor G62.
- Remove nuts - **5** -.

- Remove engine wiring harness bracket from rear coolant pipe.
- Remove bolts - **1 and 4** -.
- Remove rear coolant pipe from right coolant pipe - **arrow** -.
- Remove rear coolant pipe to right side of vehicle.

Installing

- Tightening torques --> **Coolant pipes, assembly overview**.

Installation is in reverse order of removal, note the following:

NOTE:

- **Replace O-rings.**
- **Secure all hose connections using hose clamps appropriate for the model type .**
- **During installation, all cable ties must be re-installed at the same location.**

- Clean or smooth O-ring sealing surfaces.
- Install right secondary air injection combi-valve --> **Right combination valve for Secondary Air Injection, removing and installing**.
- Install left coolant pipe --> **Left coolant pipe, removing and installing**.
- Place oil dipstick guide tube in hole on upper part of oil pan.

- Install Throttle Valve Control Module J338 --> **24 - MULTIPORT FUEL INJECTION (MFI)** .
- Install crankcase ventilation pressure regulator valve --> **24 - MULTIPORT FUEL INJECTION (MFI)**

 © 2011 Mitchell Repair Information Company, LLC.

as described under "Intake manifold, removing and installing".

- Fill with coolant **Filling**.

Left coolant pipe, removing and installing

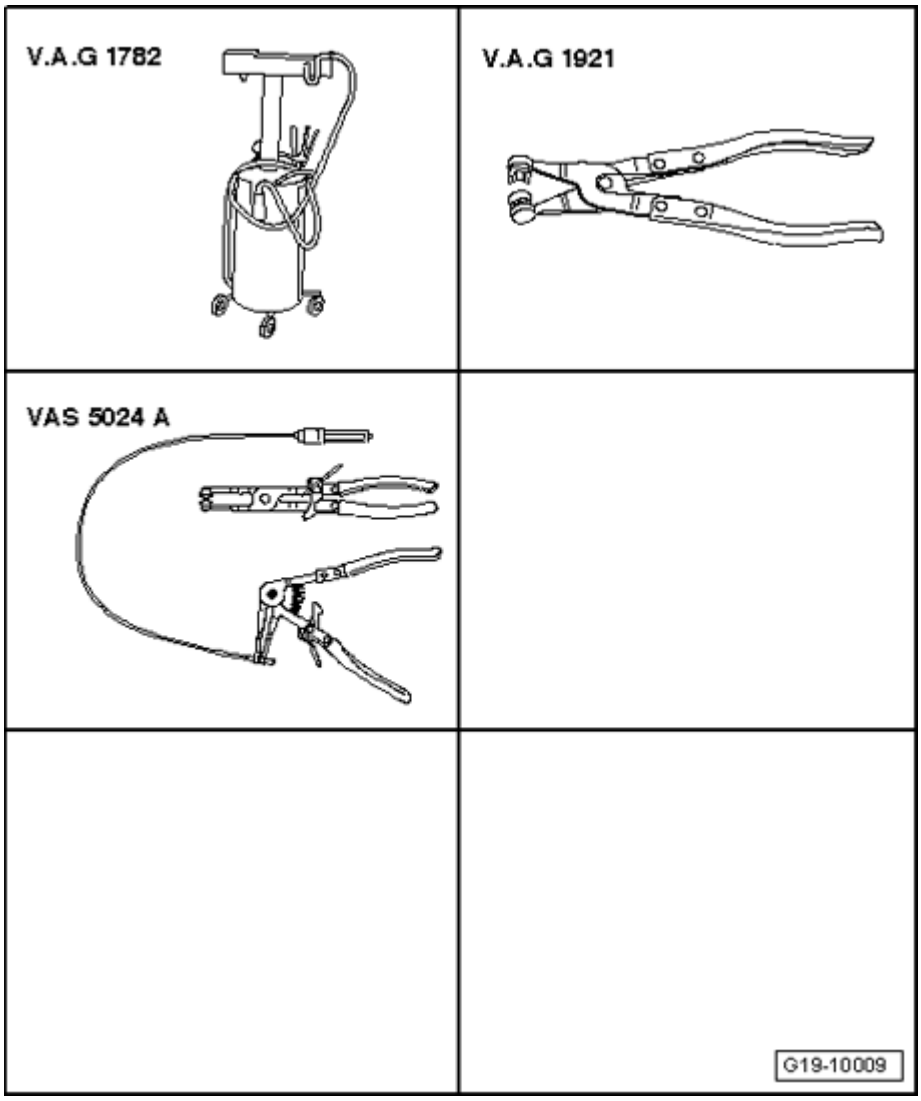

Fig. 487: Identifying Special Tools - Left Coolant Pipe, Removing And Installing
Courtesy of VOLKSWAGEN UNITED STATES, INC.

Special tools, testers and auxiliary items required

- Old oil collecting and extracting device V.A.G 1782
- Hose clamp pliers V.A.G 1921
- Spring-type clip pliers VAS 5024 A

Special tools, testers and auxiliary items required

 © 2011 Mitchell Repair Information Company, LLC.

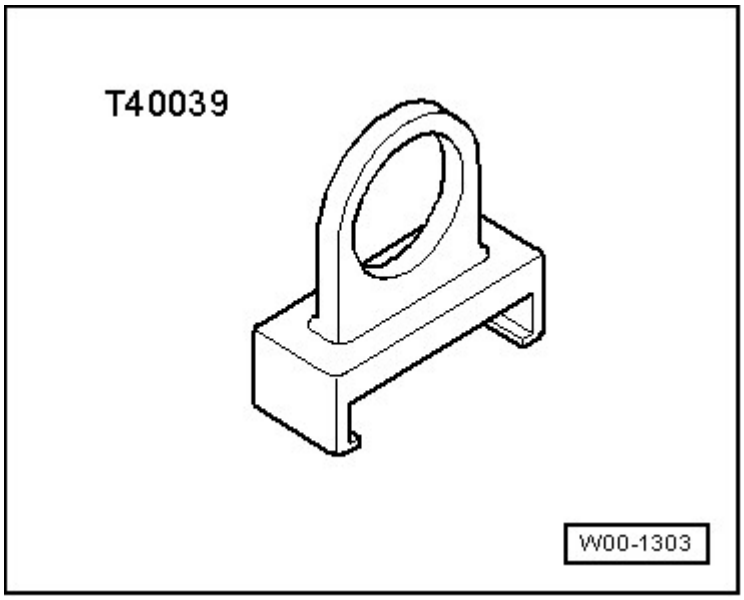

Fig. 488: Ignition Coil Puller T40039
Courtesy of VOLKSWAGEN UNITED STATES, INC.

- Ignition Coil Puller T40039

Removing

- Drain coolant --> **Cooling system, draining and filling**.

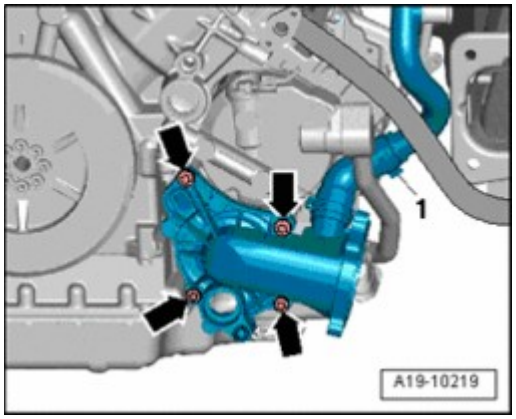

Fig. 489: Loosening Hose Clip At Coolant Hose
Courtesy of VOLKSWAGEN UNITED STATES, INC.

- Loosen hose clip - **1** - at coolant hose.

NOTE:

- **Ignore - arrows -.**

 © 2011 Mitchell Repair Information Company, LLC.

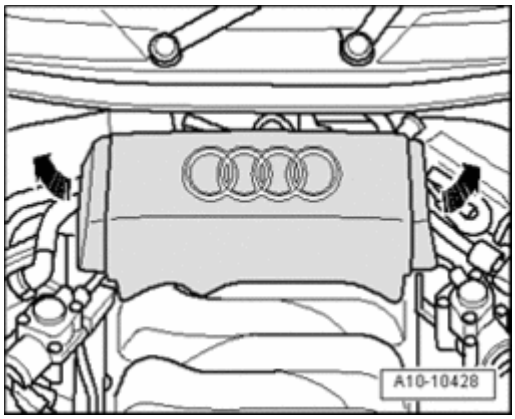

Fig. 490: Removing Rear Engine Cover
Courtesy of VOLKSWAGEN UNITED STATES, INC.

- Pull rear engine cover - **arrows** - off.

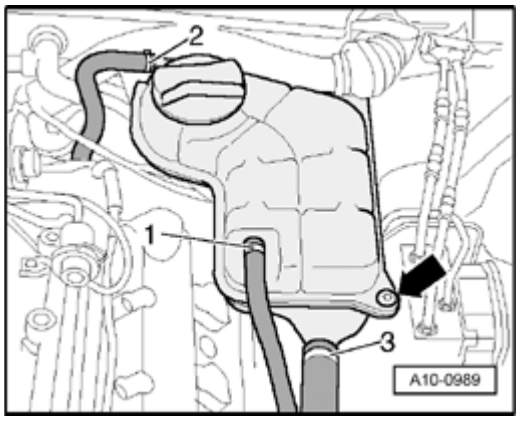

Fig. 491: Removing Coolant Hoses
Courtesy of VOLKSWAGEN UNITED STATES, INC.

- Remove coolant hose - **2** - from coolant reservoir.
- Remove coolant reservoir - **arrow** - and disconnect electrical connector on Engine Coolant Level (ECL) Warning Switch F66 at bottom of coolant reservoir.
- Lay aside coolant reservoir with connected coolant hoses - **1 and 3** -.

 © 2011 Mitchell Repair Information Company, LLC.

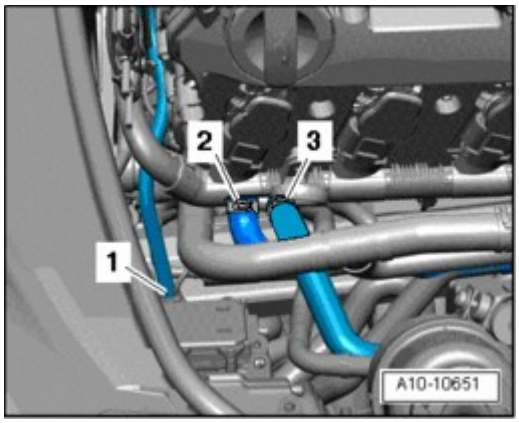

Fig. 492: Identifying Vacuum Hose, Coolant Hose & Power Steering Hydraulic Hose
Courtesy of VOLKSWAGEN UNITED STATES, INC.

- Disconnect coolant hose - **2** -.

NOTE:

- **Ignore - 1 and 3 -.**

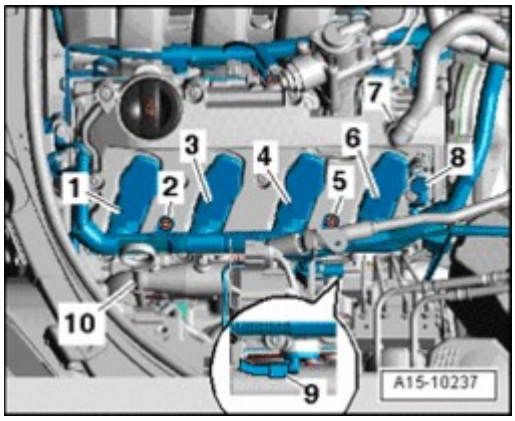

Fig. 493: Removing Oil Dipstick From Guide Tube, Bolts Electrical Connectors & Crankcase Ventilation Hose
Courtesy of VOLKSWAGEN UNITED STATES, INC.

- Remove oil dipstick - **10** - from guide tube.
- Remove bolts - **2 and 5** -.
- Disconnect electrical connectors - **1, 3, 4, 6, 8** - and free up wiring harness.
- Remove Hall sensor - **9** -.

- Remove crankcase ventilation hose - **7** - by pressing release buttons.
- Place wiring harness on engine.

 © 2011 Mitchell Repair Information Company, LLC.

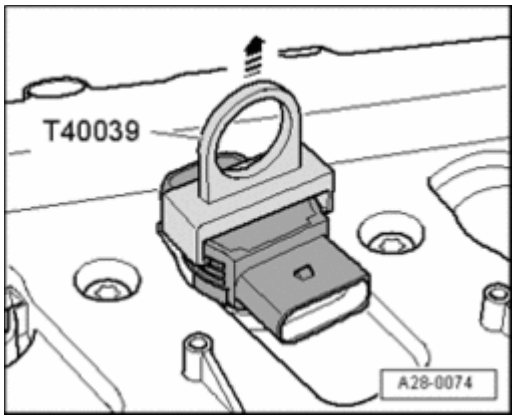

Fig. 494: Removing Ignition Coils Using Ignition Coil Puller T40039
Courtesy of VOLKSWAGEN UNITED STATES, INC.

- Remove ignition coil with Ignition Coil Puller T40039 on cylinder 5.

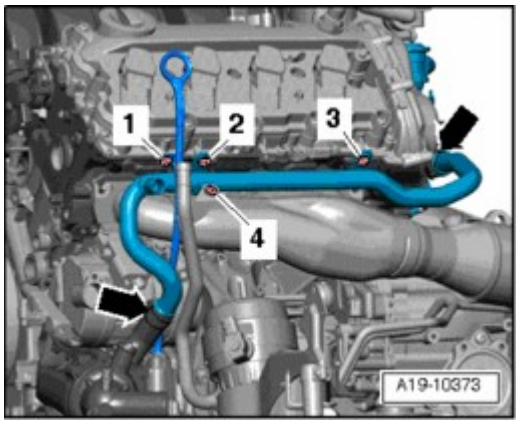

Fig. 495: Removing Oil Dipstick Guide Tube Bolt, Guide Tube, Bolts & Coolant Pipe From Coolant Hoses
Courtesy of VOLKSWAGEN UNITED STATES, INC.

- Remove bolt - **1** - and remove oil dipstick guide tube upward.
- Remove bolts - **2, 3, 4** - and remove left coolant pipe from coolant hoses - **arrows** -.

Installing

- Tightening torques --> **Crankshaft, assembly overview** , --> **Coolant pipes, assembly overview**.

Installation is in reverse order of removal, note the following:

NOTE:

- **Replace oil dipstick guide tube O-ring.**
- **Secure all hose connections using hose clamps appropriate for the model type .**

- Place oil dipstick guide tube in hole on upper part of oil pan.

 © 2011 Mitchell Repair Information Company, LLC.

- Install Hall sensor --> **Valvetrain, assembly overview**.
- Fill with coolant **Filling**.

Right coolant pipe, removing and installing

Special tools, testers and auxiliary items required

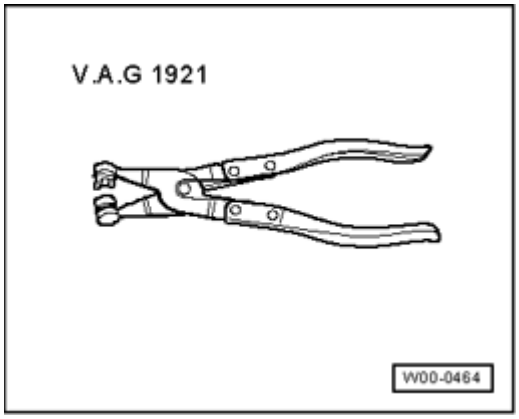

Fig. 496: Hose Clip Pliers V.A.G 1921
Courtesy of VOLKSWAGEN UNITED STATES, INC.

- Hose clamp pliers V.A.G 1921

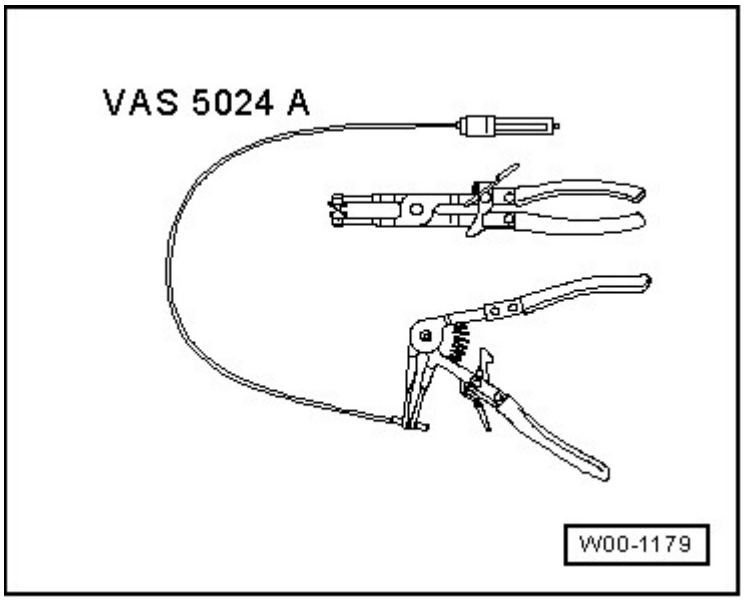

Fig. 497: Spring-Type Clip Pliers VAS 5024 A
Courtesy of VOLKSWAGEN UNITED STATES, INC.

- Spring-type clip pliers VAS 5024 A

Removing

 © 2011 Mitchell Repair Information Company, LLC.

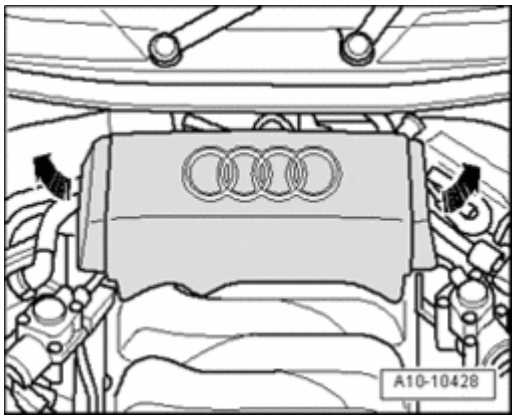

Fig. 498: Removing Rear Engine Cover
Courtesy of VOLKSWAGEN UNITED STATES, INC.

- Pull rear engine cover - **arrows** - off.
- Drain coolant --> **Cooling system, draining and filling**.

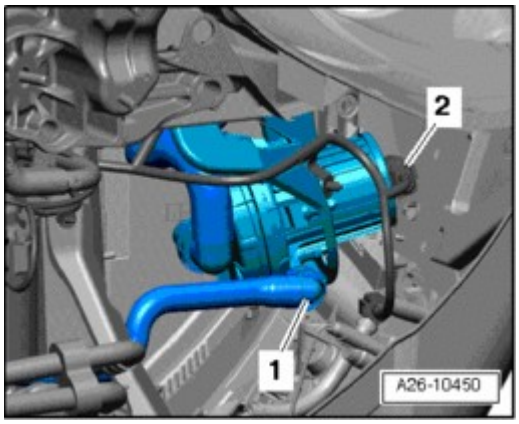

Fig. 499: Removing air guide hose - 1 - from secondary air injection pump and free it up
Courtesy of VOLKSWAGEN UNITED STATES, INC.

- Remove air guide hose - **1** - from secondary air injection pump and free it up.

NOTE:

- **Ignore - 2 -.**

 © 2011 Mitchell Repair Information Company, LLC.

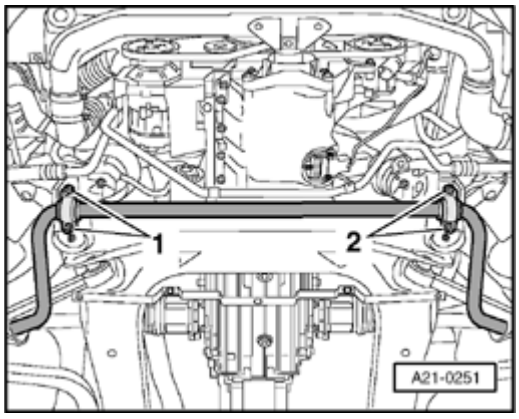

Fig. 500: Removing Bolts For Left And Right Stabilizer Bar Mount
Courtesy of VOLKSWAGEN UNITED STATES, INC.

- Remove stabilizer bar mounting bolts - **1 and 2** -.
- Slightly lower stabilizer bar.

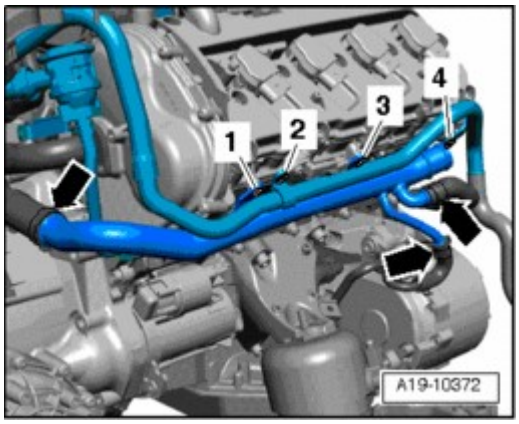

Fig. 501: Removing Secondary Air Injection Air Guide Pipe & Right Coolant Pipe Bolts
Courtesy of VOLKSWAGEN UNITED STATES, INC.

- Loosen hose clamp - **left arrow** - from below.

NOTE:

- **Ignore - 1 through 4 and right arrow -.**

 © 2011 Mitchell Repair Information Company, LLC.

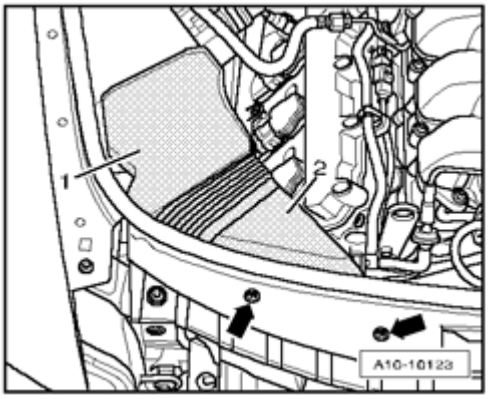

Fig. 502: Removing Bolts & Air Duct
Courtesy of VOLKSWAGEN UNITED STATES, INC.

- Remove bolts - **arrows** -.
- Remove air duct - **1 and 2** -.

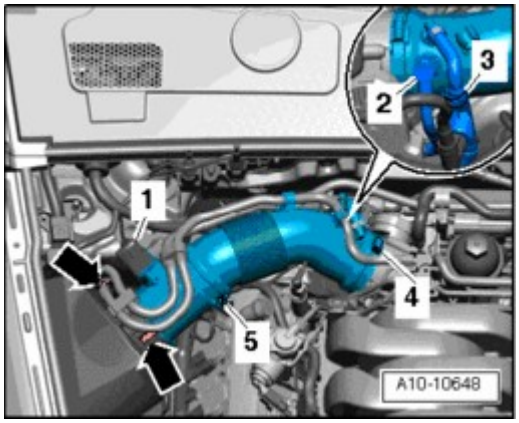

Fig. 503: Identifying Mass Air Flow (MAF) Sensor G70 Electrical Harness Connector, Vacuum Line, Hose Connection, Crankcase Ventilation Hose & Hose Clamps
Courtesy of VOLKSWAGEN UNITED STATES, INC.

- Free up fuel line and line to EVAP canister on air filter housing and air guide pipe.
- Disconnect electrical harness connector - **1** - at Mass Air Flow (MAF) Sensor G70.
- Remove vacuum line - **3** - to air guide hose.
- Lay aside air guide hose with connected crankcase ventilation hose - **2** - by loosening hose clamp - **4** - and opening clips - **arrows** -.

CAUTION: Risk of violating emissions legislation.

- **Do not open hose connection - 2 - !**

NOTE:

- **Ignore - 5 -.**

 © 2011 Mitchell Repair Information Company, LLC.

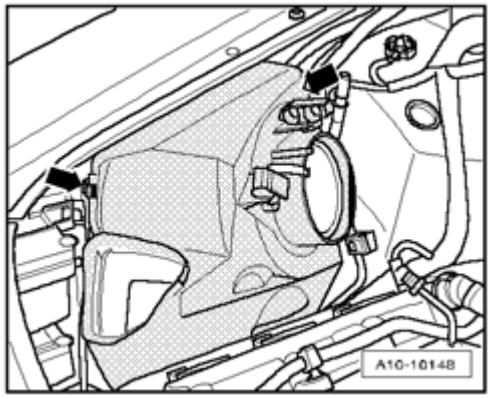

Fig. 504: Opening Clips And Removing Upper Part Of Air Filter Housing
Courtesy of VOLKSWAGEN UNITED STATES, INC.

- Open clips - **arrows** - and remove upper part of air filter housing.

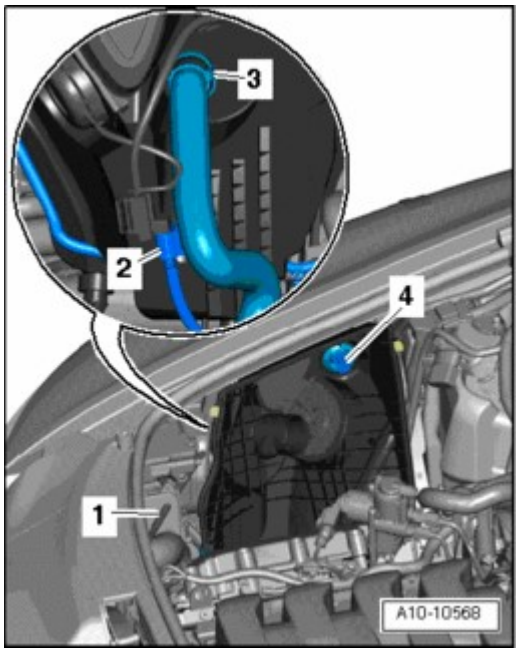

Fig. 505: Identifying Vacuum Line, Spreader Clips, Intake Air Switch-Over Valve N335 Electrical Connection & Air Guide Hose
Courtesy of VOLKSWAGEN UNITED STATES, INC.

- Disconnect vacuum line - **1** -.
- Remove pin from spreader clips - **4** -.
- Remove lower part of air filter housing and, on backside, separate electrical connection - **2** - at intake air switch-over valve N335.
- Disconnect Secondary Air Injection (AIR) pump air guide hose - **3** -.

 © 2011 Mitchell Repair Information Company, LLC.

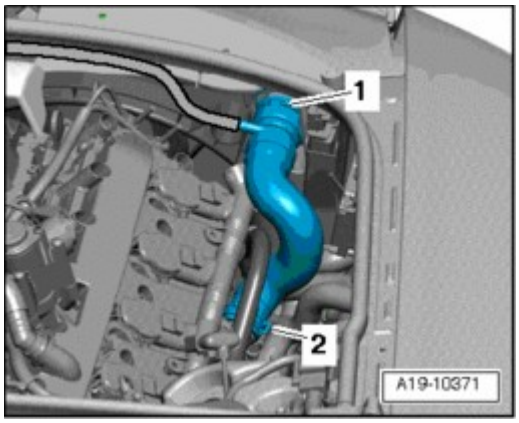

Fig. 506: Removing Coolant Hose From Radiator And Right Coolant Pipe
Courtesy of VOLKSWAGEN UNITED STATES, INC.

- Remove coolant hose - **1** - from radiator and right coolant pipe - **2** -.
- Lay coolant hose on lock carrier.

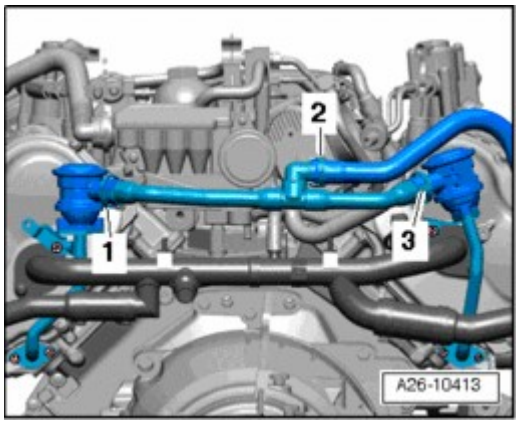

Fig. 507: Removing Air Guide Hose
Courtesy of VOLKSWAGEN UNITED STATES, INC.

- Remove air guide hose - **2** -.

NOTE:

- **Ignore - 1 and 3 -.**
- **To improve clarity, the removed engine is shown from the rear.**

 © 2011 Mitchell Repair Information Company, LLC.

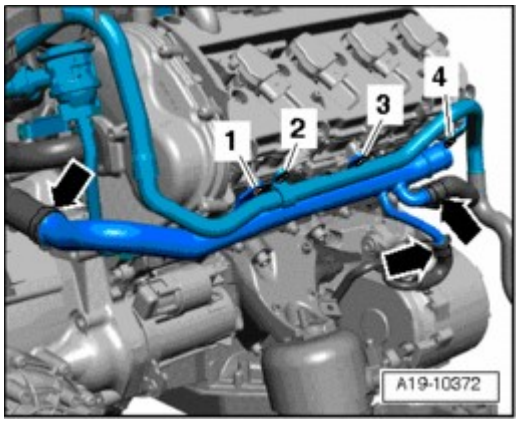

Fig. 508: Removing Secondary Air Injection Air Guide Pipe & Right Coolant Pipe Bolts
Courtesy of VOLKSWAGEN UNITED STATES, INC.

- Remove bolts - **2 and 4** - and remove Secondary Air Injection (AIR) air guide pipe.
- Remove bolts - **1 and 3** - and remove right coolant pipe from coolant hoses - **arrows** -.

Installing

- Tightening torques --> **Coolant pipes, assembly overview** , --> **Secondary air injection (AIR) system, assembly overview**.

Installation is in reverse order of removal, note the following:

NOTE:

- **Secure all hose connections using hose clamps appropriate for the model type .**
- **During installation, all cable ties must be re-installed at the same location.**

- Install stabilizer bar --> **40 - FRONT SUSPENSION** .
- Fill with coolant **Filling**.

RADIATOR AND COOLANT FAN

Radiator and coolant fan

CAUTION: Risk of injury from coolant fan starting by itself.

- **Before working in fan shroud area, disconnect electrical connectors.**

Radiator and coolant fan, assembly overview

 © 2011 Mitchell Repair Information Company, LLC.

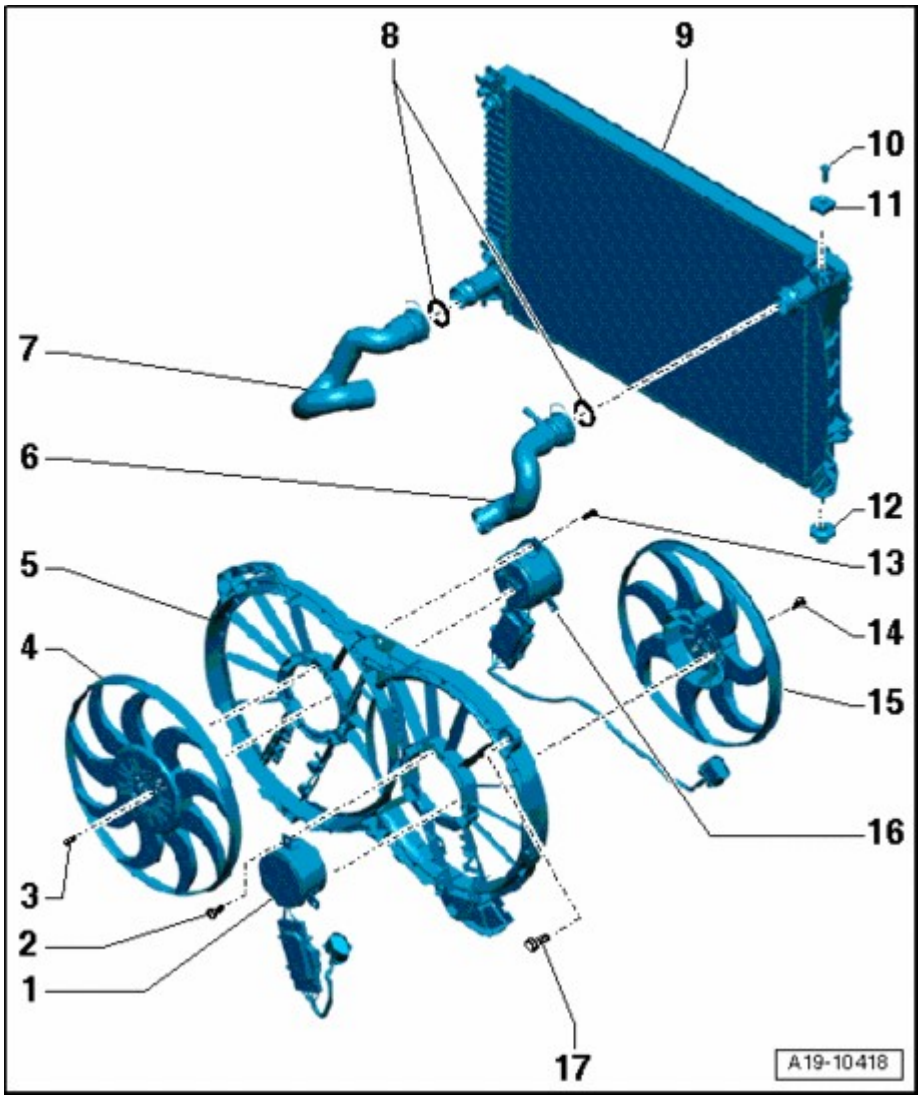

Fig. 509: Radiator And Coolant Fan, Assembly Overview
Courtesy of VOLKSWAGEN UNITED STATES, INC.

1 - Coolant Fan V7

- With Coolant Fan Control (FC) Control Module J293
- Removing and installing --> **Coolant fan, removing and installing**

2 - Bolt

- 5 Nm

3 - Bolt

- 3.5 Nm

4 - Fan wheel

 © 2011 Mitchell Repair Information Company, LLC.

- Not delivered separately

5 - Fan rib

- Removing and installing --> **Fan shroud, removing and installing**

6 - Coolant hose

- To pull off, disengage retaining clip

7 - Coolant hose

- To pull off, disengage retaining clip

8 - O-rings

- Replace

9 - Radiator

- Removing and installing --> **Radiator, removing and installing**
- After replacing, replace entire amount of coolant

10 - Retaining pin

11 - Rubber buffer

- Disengage and remove using screwdriver

12 - Rubber bushing

13 - Bolt

- 4.5 Nm

14 - Bolt

- 3.5 Nm

15 - Fan wheel

- Not delivered separately

16 - Coolant Fan 2 V177

- With Coolant Fan Control (FC) Control Module 2 J671

 © 2011 Mitchell Repair Information Company, LLC.

- Removing and installing --> **Coolant fan, removing and installing**

17 - Bolt

- 2 Nm

Radiator, removing and installing

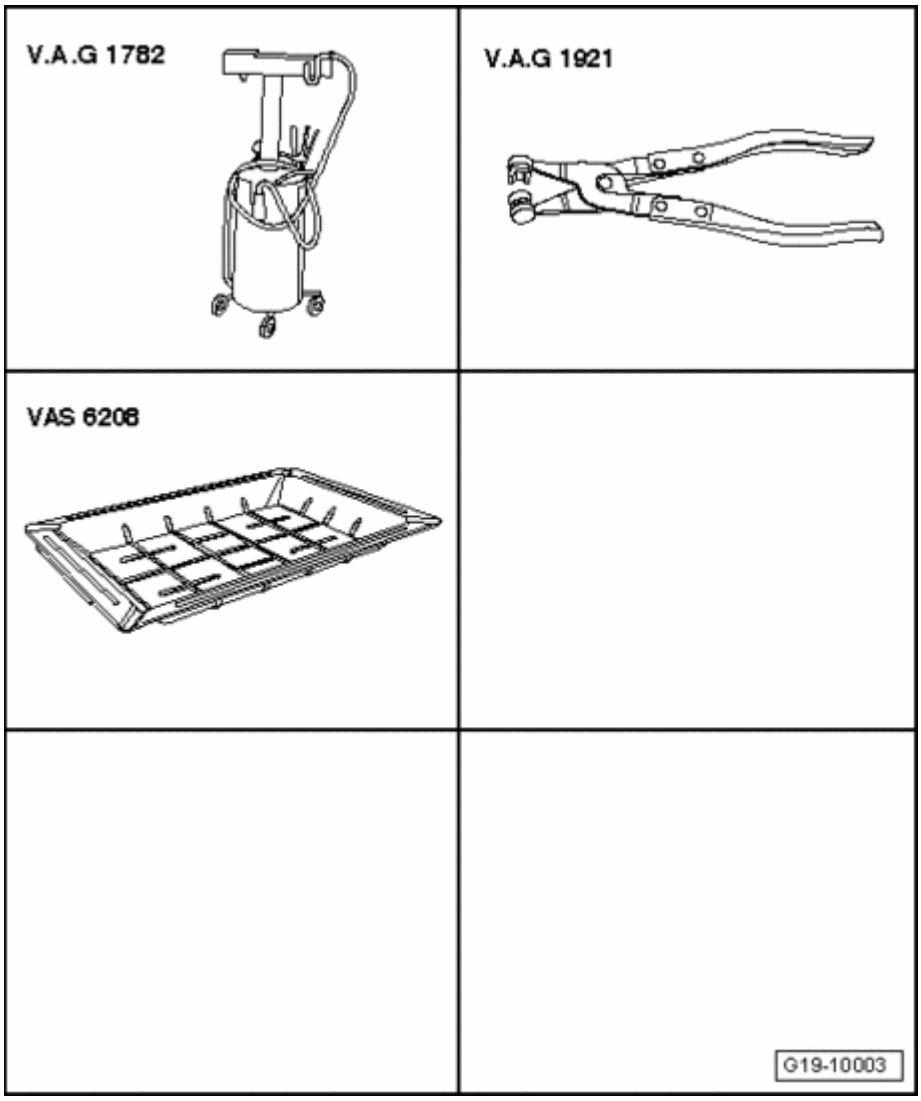

Fig. 510: Identifying Special Tools - Radiator, Removing And Installing
Courtesy of VOLKSWAGEN UNITED STATES, INC.

Special tools, testers and auxiliary items required

- Old oil collecting and extracting device V.A.G 1782
- Hose clamp pliers V.A.G 1921
- Drip tray for workshop crane VAS 6208

 © 2011 Mitchell Repair Information Company, LLC.

Removing

CAUTION: Risk of scalding due to hot steam and hot coolant.

- **When the engine is warm the cooling system is under pressure.**
- **To reduce pressure, cover coolant reservoir cap with cloth and carefully open.**

- Open cap on coolant expansion tank.

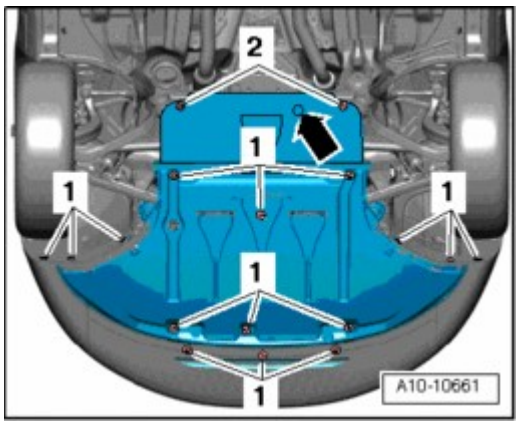

Fig. 511: Identifying Noise Insulation And Mountings
Courtesy of VOLKSWAGEN UNITED STATES, INC.

- Remove sound insulation by loosening securing pieces - **1, 2, arrow** -.
- Remove left and right front wheel housing liners --> **66 - EXTERIOR EQUIPMENT** .
- Remove front bumper --> **63 - BUMPERS** .
- Place drip tray for workshop crane VAS 6208 under engine.

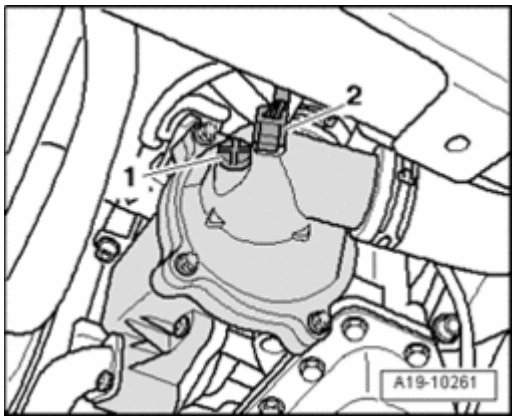

Fig. 512: Removing/Installing Drain Plug On Map Controlled Engine Cooling Thermostat F265
Courtesy of VOLKSWAGEN UNITED STATES, INC.

- Remove drain plug - **1** - on Map Controlled Engine Cooling Thermostat F265 and allow coolant to drain.

 © 2011 Mitchell Repair Information Company, LLC.

NOTE:

- **Ignore - 2 -.**

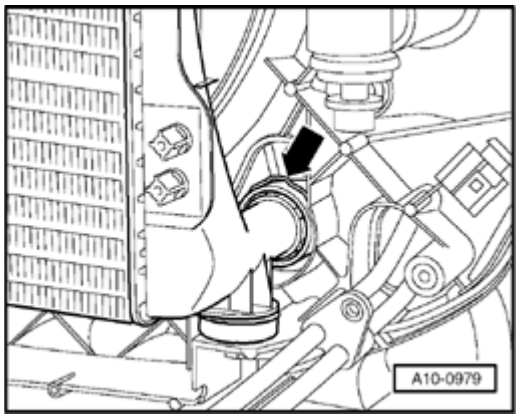

Fig. 513: Disconnecting Left Lower Coolant Hose From Radiator And Draining Coolant
Courtesy of VOLKSWAGEN UNITED STATES, INC.

- Disconnect left lower coolant hose from radiator - **arrow** - and drain coolant.
- Place old oil collecting and extracting device V.A.G 1782 under engine.

NOTE:

- **Observe the rules of cleanliness for working on automatic transmissions -- > 00 - GENERAL, TECHNICAL DATA .**

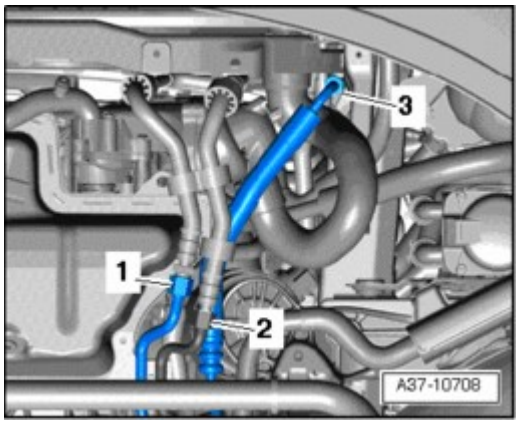

Fig. 514: Disconnecting ATF Lines And Power Steering Hydraulic Line
Courtesy of VOLKSWAGEN UNITED STATES, INC.

- Disconnect ATF lines - **1 and 2** -.

NOTE:

- **To prevent dirt and moisture from entering, seal off open lines and connections with clean plugs or protective caps.**
- **Ignore - 3 -.**

 © 2011 Mitchell Repair Information Company, LLC.

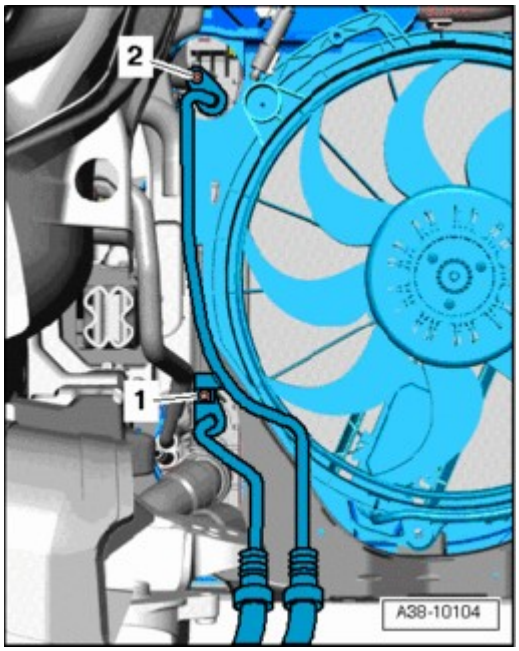

Fig. 515: Removing Bolts And Pivot ATF Lines
Courtesy of VOLKSWAGEN UNITED STATES, INC.

- Remove bolts - **1 and 2** - and pivot ATF lines to side.

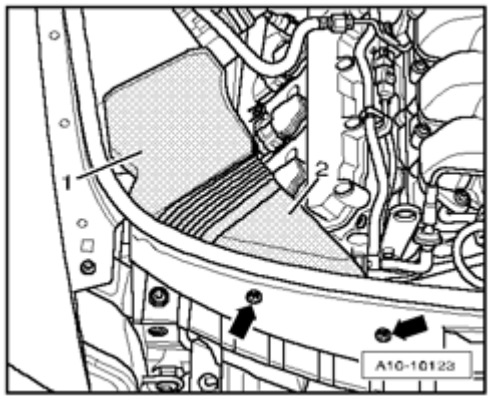

Fig. 516: Removing Bolts & Air Duct
Courtesy of VOLKSWAGEN UNITED STATES, INC.

- Remove bolts - **arrows** -.
- Remove air duct - **1 and 2** -.

 © 2011 Mitchell Repair Information Company, LLC.

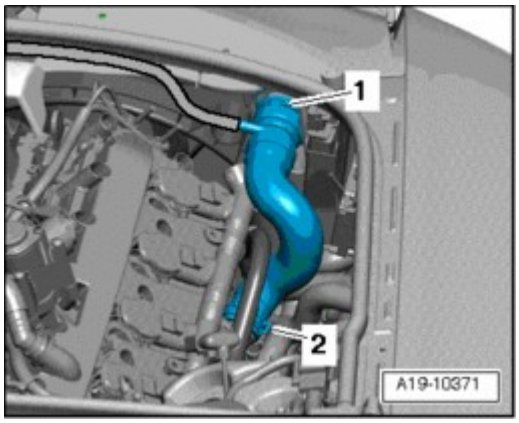

Fig. 517: Disconnecting Coolant Hose At Top Of Radiator
Courtesy of VOLKSWAGEN UNITED STATES, INC.

- Disconnect coolant hose - **1** - at top of radiator.

NOTE:

- **Ignore - 2 -.**

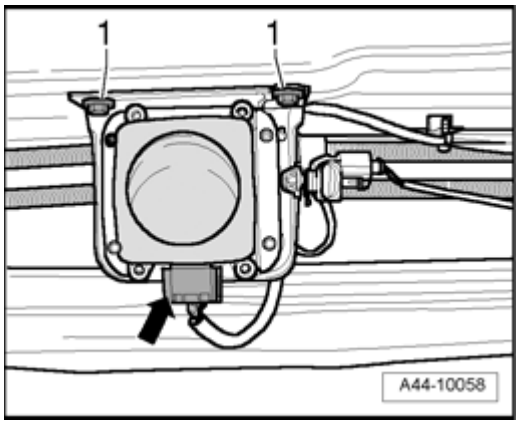

Fig. 518: Disconnecting Electrical Connector On Distance Regulation Control Module J428
Courtesy of VOLKSWAGEN UNITED STATES, INC.

- On a vehicle with distance regulation, disconnect electrical connector - **arrow** - on Distance Regulation Control Module J428.

NOTE:

- **Ignore - 1 -.**

 © 2011 Mitchell Repair Information Company, LLC.

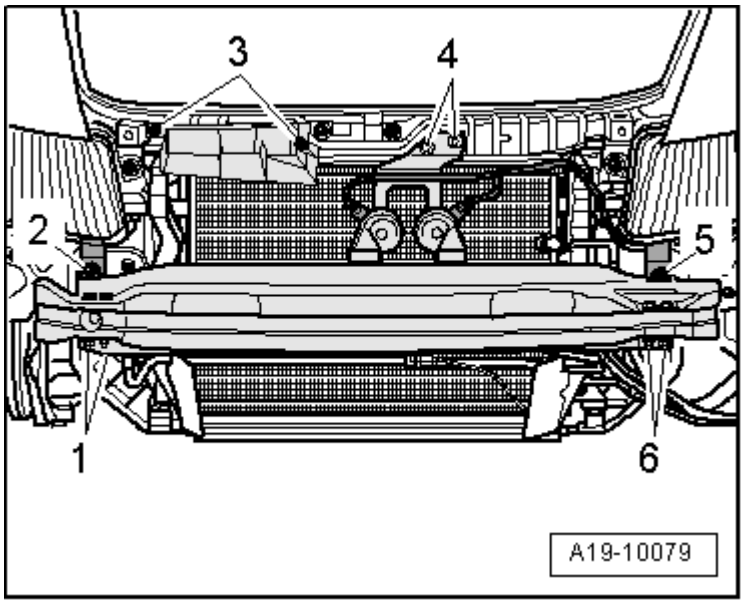

Fig. 519: Identifying Bolts, Brackets, Bumper & Air Duct
Courtesy of VOLKSWAGEN UNITED STATES, INC.

- Remove bolts - **3** - and remove air duct.
- Remove bolts - **4** - and remove bracket for horns; leave electrical connections intact.
- Remove headlamp brackets - **2 and 5** -.
- Remove nuts - **1 and 6** - and remove bumper.

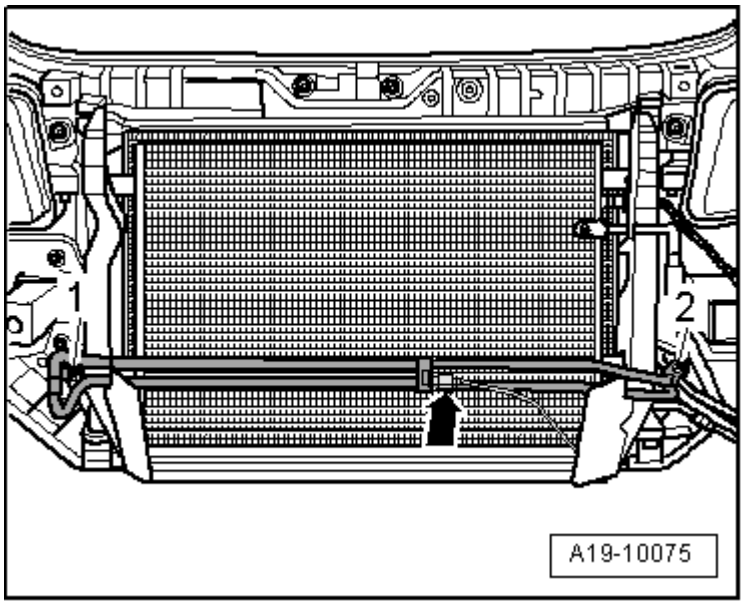

Fig. 520: Unclipping Outside Air Temperature Sensor G17 From Bracket & Removing Power Steering Cooling Coil Bolts
Courtesy of VOLKSWAGEN UNITED STATES, INC.

- Unclip Outside Air Temperature Sensor G17 - **arrow** - from the bracket.

 © 2011 Mitchell Repair Information Company, LLC.

- Remove power steering cooling coil bolts - **1 and 2** - ; hydraulic hoses remain connected.
- Remove air guides at left and right of radiator.

CAUTION: Risk of injury from refrigerant.

- **The air conditioning refrigerant circuit must not be opened.**

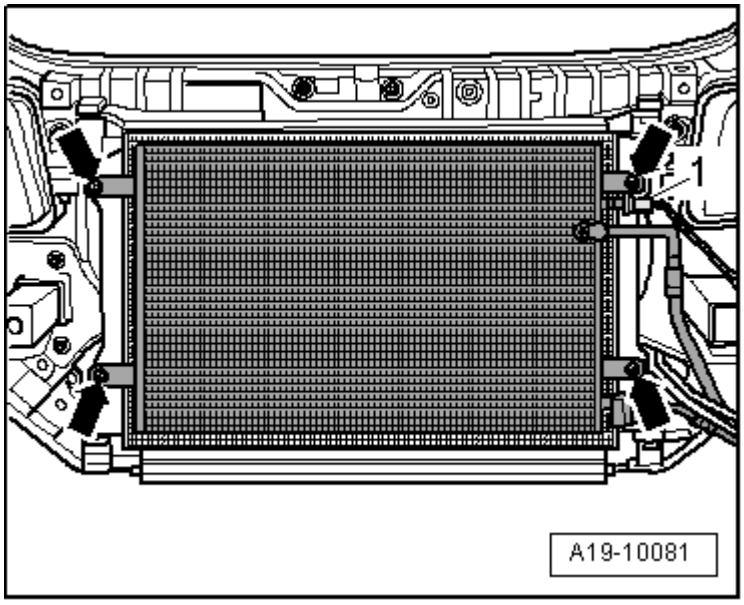

Fig. 521: Separating Electrical Connector & Removing Bolts
Courtesy of VOLKSWAGEN UNITED STATES, INC.

- Separate electrical connector - **1** -.
- Remove bolts - **arrows** -.

CAUTION: Risk of damage to condenser and refrigerant lines and hoses.

- **Do not stretch, kink or bend coolant lines and hoses.**

- Pivot condenser downward with lines connected.

 © 2011 Mitchell Repair Information Company, LLC.

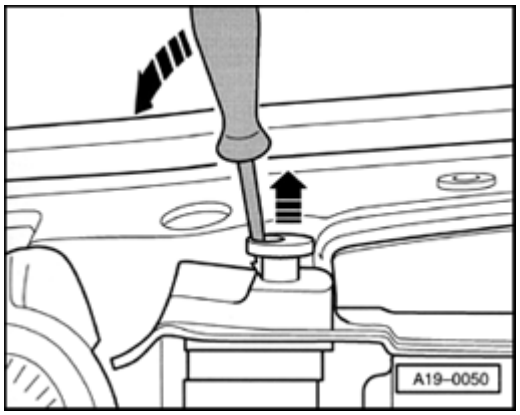

Fig. 522: Releasing Both Radiator Retaining Pins And Removing By Pulling Upward
Courtesy of VOLKSWAGEN UNITED STATES, INC.

- Release both radiator retaining pins and remove by pulling upward - **arrows** -.
- Pivot radiator forward, pull up and remove.

Installing

- Tightening torques --> **Radiator and coolant fan, assembly overview**.

Installation is in reverse order of removal, note the following:

NOTE:

- **Secure all hose connections using hose clamps appropriate for the model type .**

- Install ATF lines --> **37 - AUTOMATIC TRANSMISSION - CONTROLS, HOUSING** .
- Install signal horn bracket --> **96 - LIGHTS, SWITCHES - INTERIOR, ANTI-THEFT** .
- Install front bumper --> **63 - BUMPERS** .
- Fill with coolant **Filling**.

NOTE:

- **Complete coolant must be replaced if the radiator was replaced.**

- Check ATF level --> **37 - AUTOMATIC TRANSMISSION - CONTROLS, HOUSING** .

Cooling system, checking for leaks

 © 2011 Mitchell Repair Information Company, LLC.

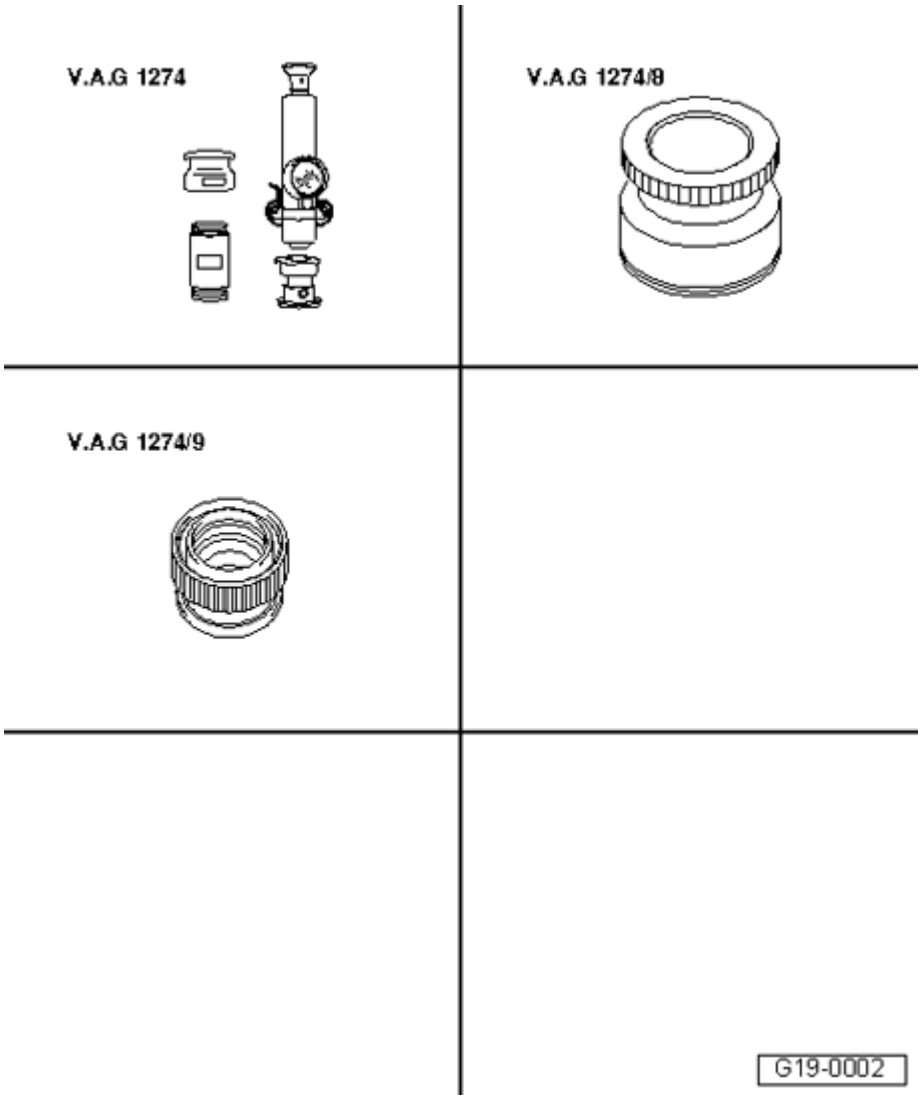

Fig. 523: Identifying Special Tools - Cooling System, Checking For Leaks
Courtesy of VOLKSWAGEN UNITED STATES, INC.

Special tools, testers and auxiliary items required

- Cooling system tester V.A.G 1274
- Adapter V.A.G 1274/8
- Adapter V.A.G 1274/9

Work procedure

- Engine at operating temperature.

CAUTION: Risk of scalding due to hot steam and hot coolant.

- **When the engine is warm the cooling system is under pressure.**

 © 2011 Mitchell Repair Information Company, LLC.

- **To reduce pressure, cover coolant reservoir cap with cloth and carefully open.**

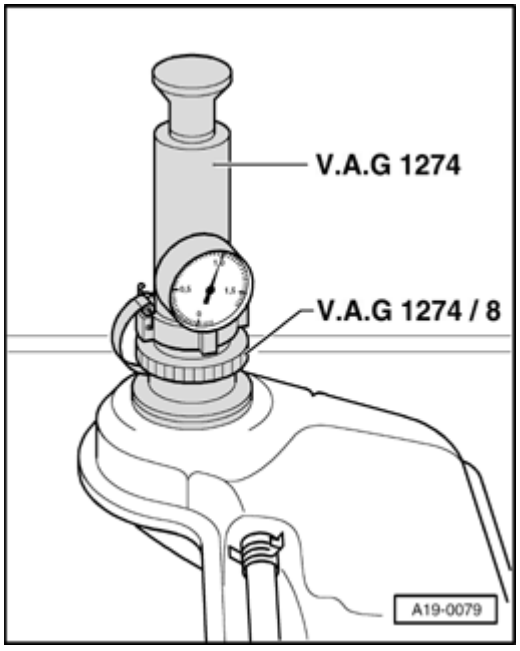

Fig. 524: Positioning Cooling System Tester V.A.G 1274 With Adapter V.A.G 1274/8 On Expansion Tank
Courtesy of VOLKSWAGEN UNITED STATES, INC.

- Position Cooling System Tester V.A.G 1274 with adapter V.A.G 1274/8 on expansion tank.
- Generate a positive pressure of approx. 1.0 bar using hand pump of cooling system tester.

If pressure drops:

- Look for leaking places and fix them.

Pressure relief valve in cap, checking

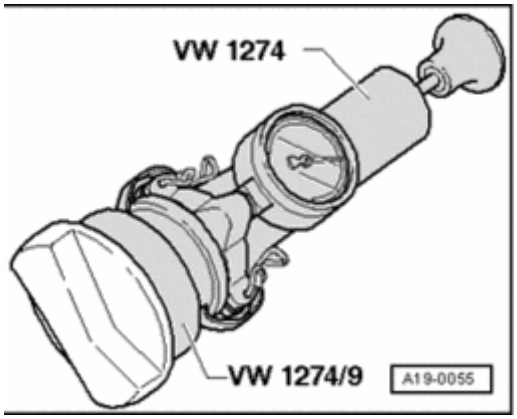

Fig. 525: Pressure Relief Valve In Cap, Checking
Courtesy of VOLKSWAGEN UNITED STATES, INC.

 © 2011 Mitchell Repair Information Company, LLC.

- Attach cooling system tester V.A.G 1274 with adapter V.A.G 1274/9 on sealing cap.
- Generate a positive pressure using hand pump of cooling system tester.

- Pressure release valve must open at a positive pressure of 1.4 to 1.6 bar.

If check-valve does not open as indicated:

- Replace cap.

Fan shroud, removing and installing

Removing

- Bring lock carrier into service position --> **50 - BODY - FRONT** .

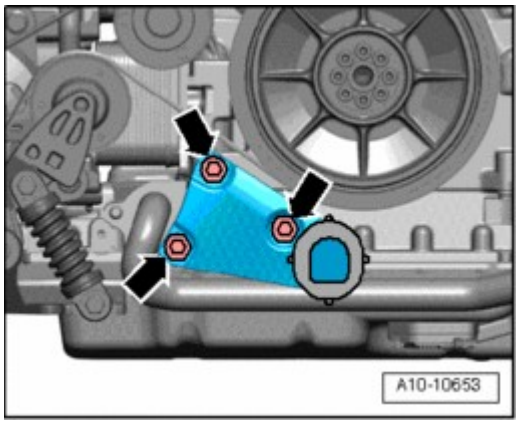

Fig. 526: Removing Bolts For Torque Support
Courtesy of VOLKSWAGEN UNITED STATES, INC.

- Remove bolts - **arrows** - for torque support.

NOTE:

- **The torque support remains in installation location.**

CAUTION: Risk of injury from coolant fan starting by itself.

- **Before working in fan shroud area, disconnect electrical connectors.**

 © 2011 Mitchell Repair Information Company, LLC.

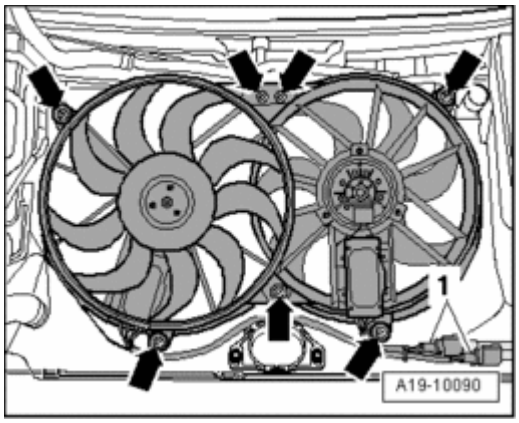

Fig. 527: Removing Bolts And Fan Shroud Upward And Out
Courtesy of VOLKSWAGEN UNITED STATES, INC.

- Disconnect electrical connectors - **1** - to coolant fans.
- Remove bolts - **arrows** - and remove fan shroud upward and out.

Installing

- Tightening torques --> **Radiator and coolant fan, assembly overview**.

Installation is in reverse order of removal, note the following:

NOTE:

- **Secure all hose connections using hose clamps appropriate for the model type .**

- Install torque support --> **Torque support, removing and installing**.
- Install lock carrier with attachments --> **50 - BODY - FRONT** .

Coolant fan, removing and installing

Removing

NOTE:

- **During installation, all cable ties must be re-installed at the same location.**

- Bring lock carrier into service position --> **50 - BODY - FRONT** .
- Remove fan shroud --> **Fan shroud, removing and installing**.

 © 2011 Mitchell Repair Information Company, LLC.

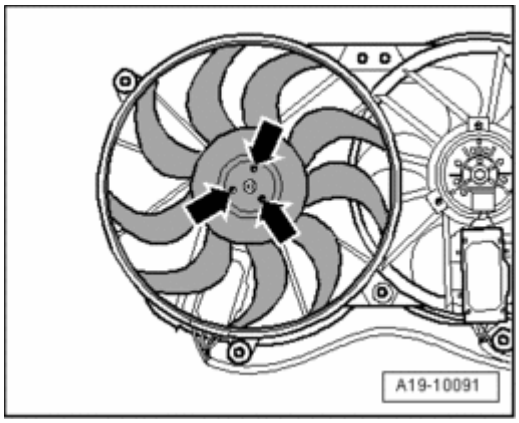

Fig. 528: Removing Bolts And Fan Wheel
Courtesy of VOLKSWAGEN UNITED STATES, INC.

Coolant Fan V7 (left):

- Remove bolts - **arrows** - and remove fan wheel.

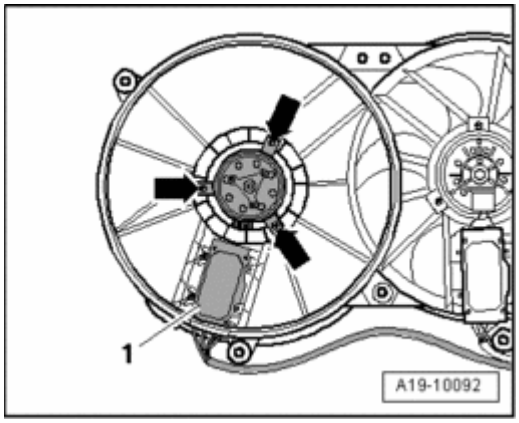

Fig. 529: Removing Bolts, Unclipping Coolant Fan Control (FC) Control Module J293 And Removing Coolant Fan And Coolant Fan Control Module
Courtesy of VOLKSWAGEN UNITED STATES, INC.

- Remove bolts - **arrows** -.
- Unclip Coolant Fan Control (FC) Control Module J293 - **1** - and remove coolant fan and coolant fan control module.

 © 2011 Mitchell Repair Information Company, LLC.

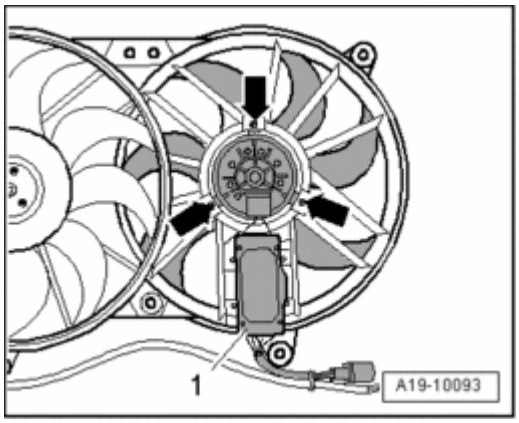

Fig. 530: Removing Bolts, Unclipping Coolant Fan Control (FC) Control Module 2 J671 And Removing Coolant Fan And Coolant Fan Control Module
Courtesy of VOLKSWAGEN UNITED STATES, INC.

Coolant Fan 2 V177 (right):

- Remove bolts - **arrows** -.
- Unclip Coolant Fan Control (FC) Control Module 2 J671 - **1** - and remove coolant fan and coolant fan control module.

Installing

- Tightening torques --> **Radiator and coolant fan, assembly overview**.

Installation is in reverse order of removal, note the following:

NOTE:

- **Secure all hose connections using hose clamps appropriate for the model type .**
- **During installation, all cable ties must be re-installed at the same location.**

- Install fan shroud --> **Fan shroud, removing and installing**.
- Install lock carrier with attachments --> **50 - BODY - FRONT** .

26 - EXHAUST SYSTEM, EMISSION CONTROLS

MUFFLER

Muffler, assembly overview

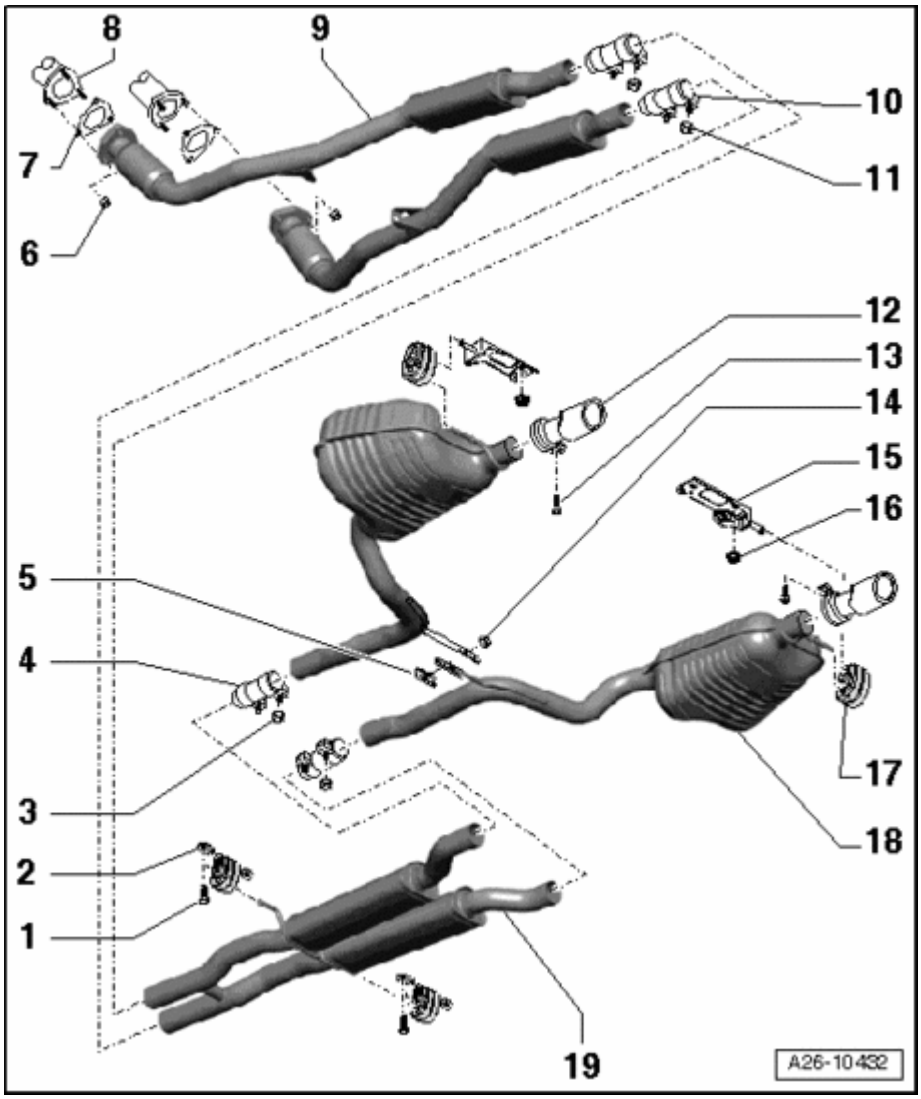

Fig. 531: Muffler, Assembly Overview
Courtesy of VOLKSWAGEN UNITED STATES, INC.

1 - Bolt

- 23 Nm

2 - Suspended mount

- Replace if damaged

3 - Nut

- 23 Nm

4 - Rear clamping sleeve

 © 2011 Mitchell Repair Information Company, LLC.

- For individual replacement of center and rear mufflers
- Installed location **Installed position of rear double clamps**
- Before tightening, align exhaust system tension-free --> **Exhaust system, installing free of tension**
- Tighten threaded connections evenly.

5 - Clamping piece

6 - Nut

- 23 Nm

7 - Gasket

- Replace

8 - Exhaust manifold with catalytic converter

- Protect from shocks and impact stress
- Removing and installing: Left --> **Left exhaust manifold with catalytic converter, removing and installing** , right --> **Right exhaust manifold with catalytic converter, removing and installing**

9 - Front muffler

- With flex joint

CAUTION: Risk of damaging decoupling elements in front muffler.

- **Do not bend decoupling elements in front muffler more than 10°.**

- Removing and installing: Left --> **Left front muffler, removing and installing** , right --> **Right front muffler, removing and installing**
- Install exhaust system free of stress --> **Exhaust system, installing free of tension**

10 - Front clamping sleeve

- Installed location **Installed position of front double clamps**
- Before tightening, align exhaust system tension-free --> **Exhaust system, installing free of tension**
- Tighten threaded connections evenly.

11 - Nut

- 23 Nm

12 - End pipe

 © 2011 Mitchell Repair Information Company, LLC.

- Original equipment as one unit with rear muffler. For repairs, replace each separately.
- Separating point --> **End pipe, replacing**
- Aligning --> **Tail pipes, aligning**

13 - Bolt

- 23 Nm

14 - Nut

- Replace
- 23 Nm

15 - Suspended mount

16 - Nut

- 23 Nm

17 - Suspended mount

- Replace if damaged

18 - Rear muffler

- Original equipment as one unit with center muffler. For repairs, replace each separately.
- Separating point --> **Fig. 546**
- Install exhaust system free of stress --> **Exhaust system, installing free of tension**

19 - Center muffler

- Original equipment as one unit with rear muffler. For repairs, replace each separately.
- Separating point --> **Fig. 546**
- Install exhaust system free of stress --> **Exhaust system, installing free of tension**

Installed position of front double clamps

 © 2011 Mitchell Repair Information Company, LLC.

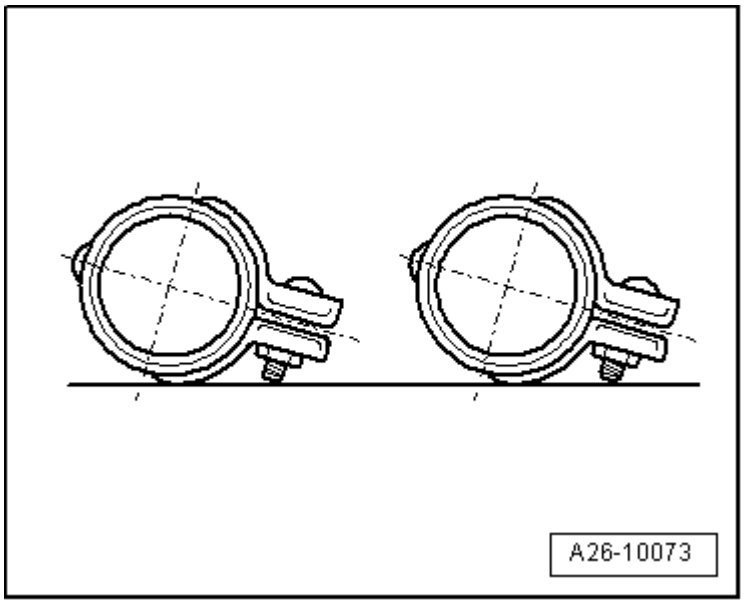

Fig. 532: Installed Position Of Front Double Clamps
Courtesy of VOLKSWAGEN UNITED STATES, INC.

- When installing double clamps, ensure that the bolt ends do not project beyond lower edge of double clamp.
- Threaded connections point toward right.

Installed position of rear double clamps

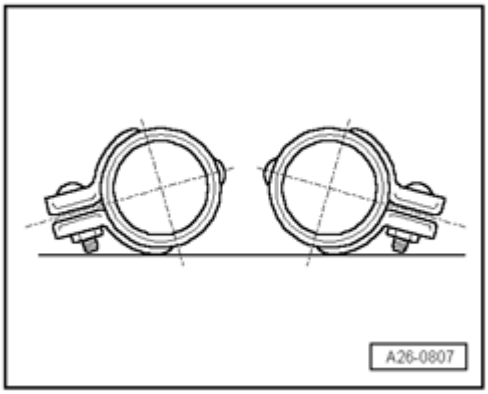

Fig. 533: Installed Position Of Rear Double Clamps
Courtesy of VOLKSWAGEN UNITED STATES, INC.

- Install double clamps so that the bolt ends do not project over lower edge of double clamp.
- Threaded connections point toward outside.

Individual components of center bracket mounting for front muffler

 © 2011 Mitchell Repair Information Company, LLC.

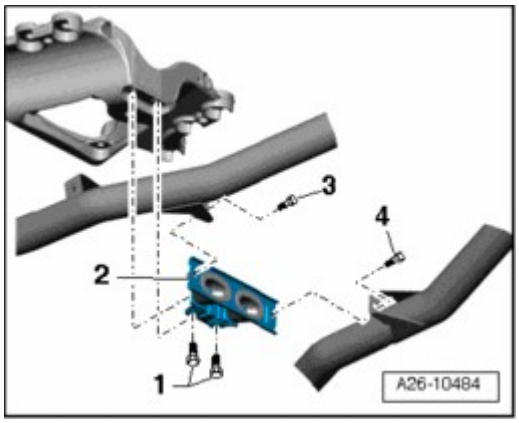

Fig. 534: Individual Components Of Center Bracket Mounting For Front Muffler
Courtesy of VOLKSWAGEN UNITED STATES, INC.

1. Bolt, 23 Nm
2. Bracket
3. Bolt, 23 Nm
4. Bolt, 23 Nm

Left front muffler, removing and installing

Removing

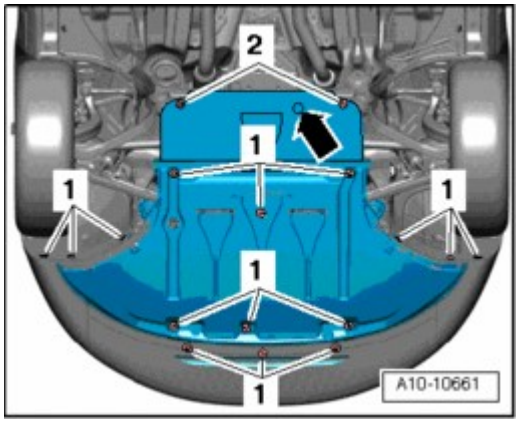

Fig. 535: Identifying Noise Insulation And Mountings
Courtesy of VOLKSWAGEN UNITED STATES, INC.

- Remove rear sound insulation by loosening securing pieces - **2 and arrow** -.

NOTE:

- **Ignore - 1 -.**

 © 2011 Mitchell Repair Information Company, LLC.

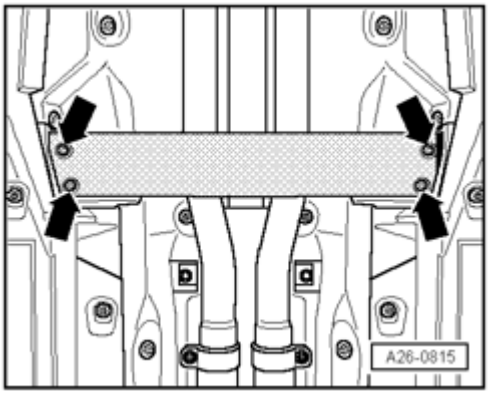

Fig. 536: Removing Front Transverse Beam
Courtesy of VOLKSWAGEN UNITED STATES, INC.

- Remove front transverse beam - **arrows** -.

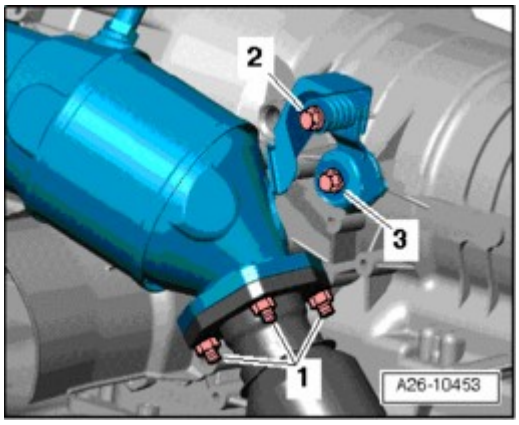

Fig. 537: Removing Left Front Muffler Nuts
Courtesy of VOLKSWAGEN UNITED STATES, INC.

- Remove left front muffler nuts - **1** -.

NOTE:

- **Ignore items - 2 and 3 -.**

CAUTION: Risk of damaging decoupling elements in front muffler.

- **Do not bend decoupling elements in front muffler more than 10°.**

 © 2011 Mitchell Repair Information Company, LLC.

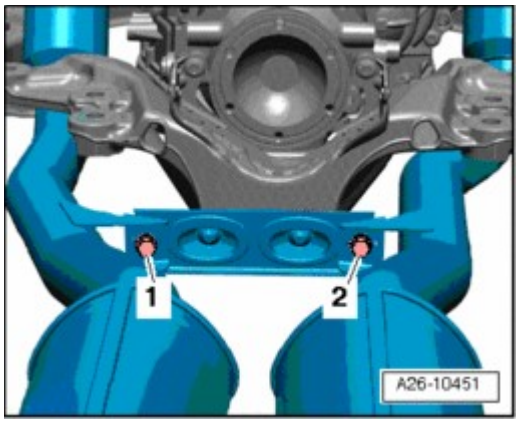

Fig. 538: Removing Bolts
Courtesy of VOLKSWAGEN UNITED STATES, INC.

- Remove bolts - **1** -.

NOTE:

- **Ignore - 2 -.**

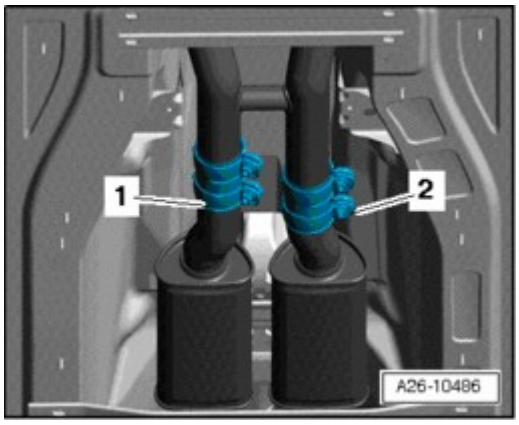

Fig. 539: Loosening Left/Right Clamping Sleeve
Courtesy of VOLKSWAGEN UNITED STATES, INC.

- Loosen left clamping sleeve - **1** - and slide it back.
- Remove left front muffler.

NOTE:

- **Ignore - 2 -.**

Installing

- Tightening torque --> **Muffler, assembly overview**.

Installation is in reverse order of removal, note the following:

NOTE:

- **Replace seals and self-locking nuts.**

 © 2011 Mitchell Repair Information Company, LLC.

- Align exhaust system free of tension --> **Exhaust system, installing free of tension**.
- Install front cross member --> **40 - FRONT SUSPENSION** .

Right front muffler, removing and installing

Removing

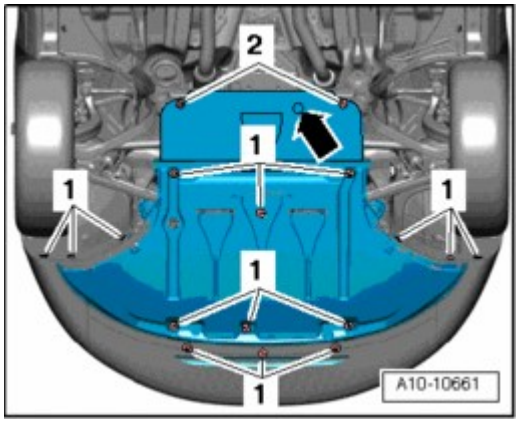

Fig. 540: Identifying Noise Insulation And Mountings
Courtesy of VOLKSWAGEN UNITED STATES, INC.

- Remove rear sound insulation by loosening securing pieces - **2 and arrow** -.

NOTE:

- **Ignore - 1 -.**

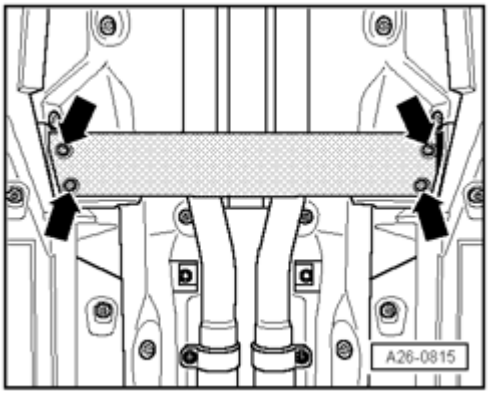

Fig. 541: Removing Front Transverse Beam
Courtesy of VOLKSWAGEN UNITED STATES, INC.

- Unbolt front transverse beam - **arrows** -.

 © 2011 Mitchell Repair Information Company, LLC.

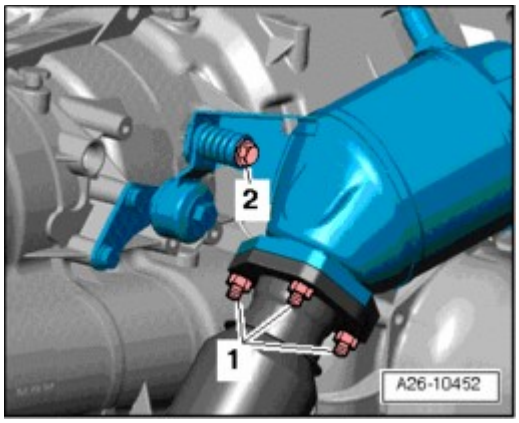

Fig. 542: Removing Right Front Muffler Nuts
Courtesy of VOLKSWAGEN UNITED STATES, INC.

- Remove right front muffler nuts - **1** -.

NOTE:

- **Ignore - 2 -.**

CAUTION: Risk of damaging decoupling elements in front muffler.

- **Do not bend decoupling elements in front muffler more than 10°.**

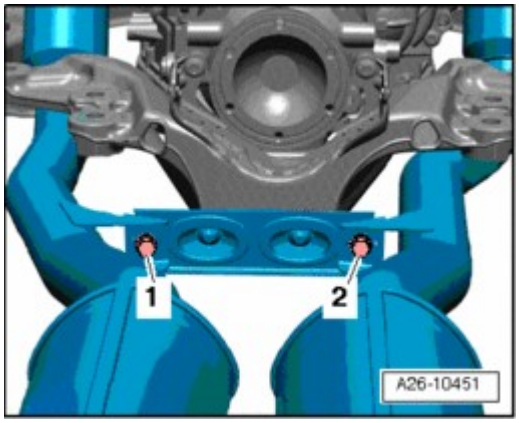

Fig. 543: Removing Bolts
Courtesy of VOLKSWAGEN UNITED STATES, INC.

- Remove bolts - **2** -.

NOTE:

- **Ignore - 1 -.**

 © 2011 Mitchell Repair Information Company, LLC.

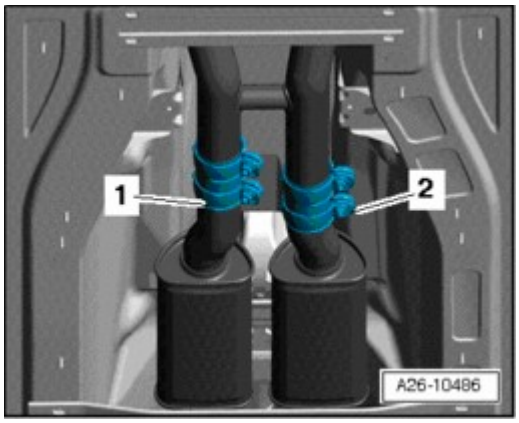

Fig. 544: Loosening Left/Right Clamping Sleeve
Courtesy of VOLKSWAGEN UNITED STATES, INC.

- Loosen right clamping sleeve - **2** - and slide it back.
- Remove right front muffler.

NOTE:

- **Ignore - 1 -.**

Installing

- Tightening torque --> **Muffler, assembly overview**.

Installation is in reverse order of removal, note the following:

NOTE:

- **Replace seals and self-locking nuts.**

- Align exhaust system free of tension --> **Exhaust system, installing free of tension**.
- Install front cross member --> **40 - FRONT SUSPENSION** .

Center muffler and rear muffler, separating

- A separating point has been provided in the connecting pipe for individual replacement of the center or rear muffler
- The separating point is marked by a depression around circumference of the exhaust pipe.

Special tools, testers and auxiliary items required

 © 2011 Mitchell Repair Information Company, LLC.

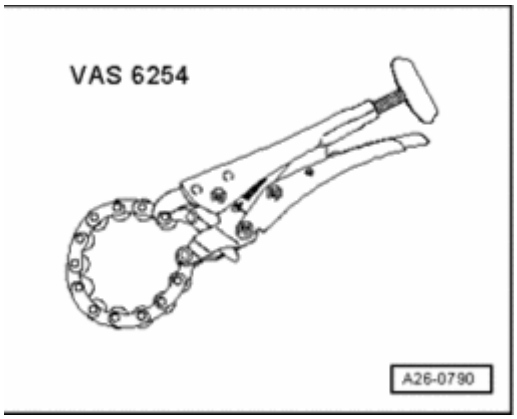

Fig. 545: Chain Pipe Cutter VAS 6254
Courtesy of VOLKSWAGEN UNITED STATES, INC.

- Chain pipe cutter VAS 6254

Work procedure

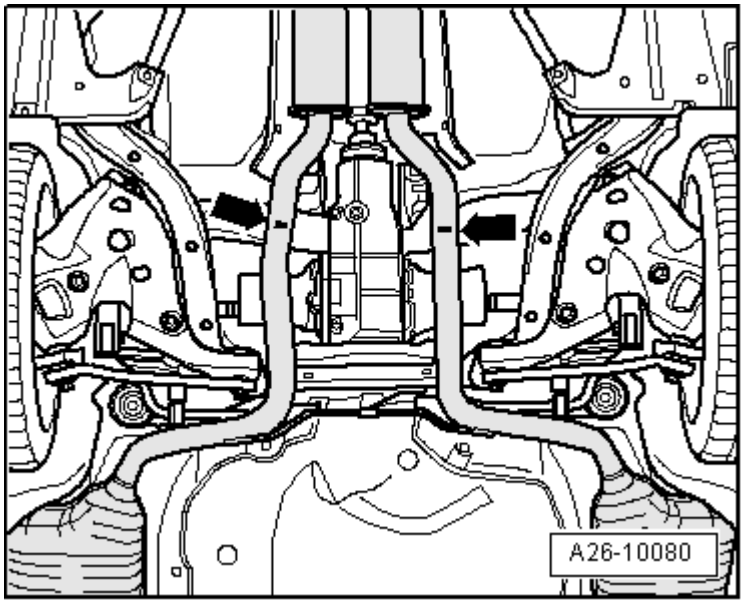

Fig. 546: Separating Exhaust Pipes At Separating Point Using Chain Pipe Cutter VAS 6254 At Right Angle
Courtesy of VOLKSWAGEN UNITED STATES, INC.

- Separate exhaust pipes at separating point - **arrows** - using chain pipe cutter VAS 6254 at a right angle.

 © 2011 Mitchell Repair Information Company, LLC.

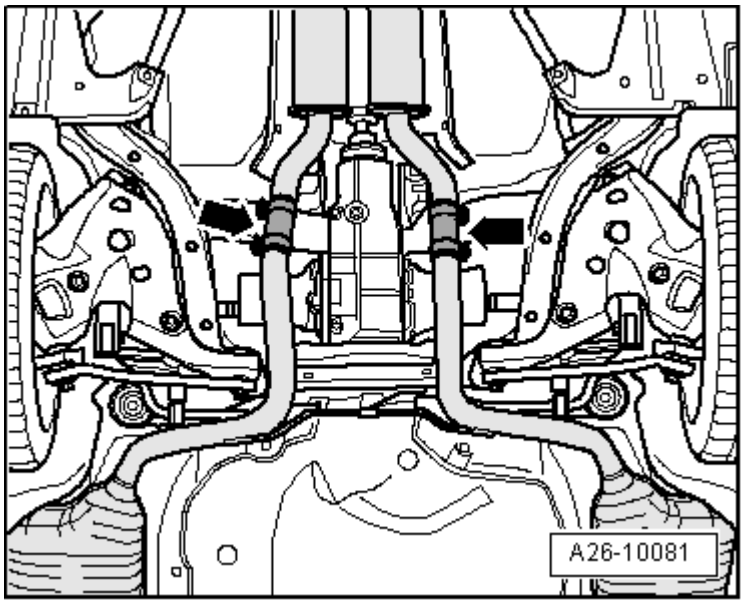

Fig. 547: Positioning Clamping Sleeves At Center Of Separating Cut
Courtesy of VOLKSWAGEN UNITED STATES, INC.

- Position clamping sleeves - **arrows** - at center of separating cut.

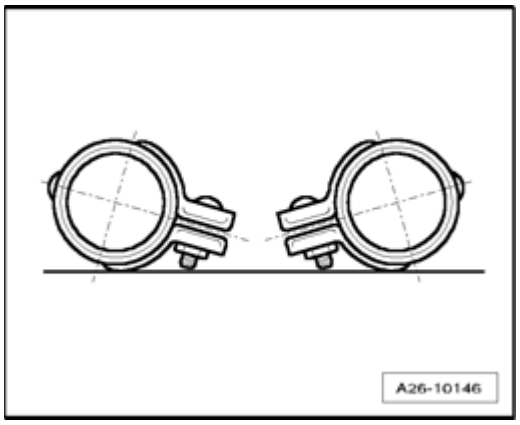

Fig. 548: Installed Position Of Front Double Clamps
Courtesy of VOLKSWAGEN UNITED STATES, INC.

- When installing double clamps, ensure that the bolt ends do not project beyond lower edge of double clamp.

- The threaded connections face each other.

- Align exhaust system free of tension --> **Exhaust system, installing free of tension**.

End pipe, replacing

Special tools, testers and auxiliary items required

 © 2011 Mitchell Repair Information Company, LLC.

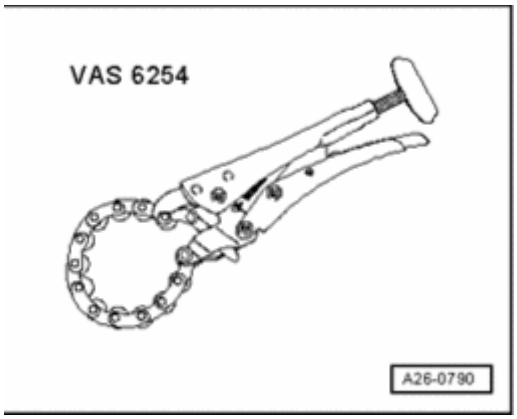

Fig. 549: Chain Pipe Cutter VAS 6254
Courtesy of VOLKSWAGEN UNITED STATES, INC.

- Chain pipe cutter VAS 6254

Work procedure

- Tightening torque --> **Muffler, assembly overview**.

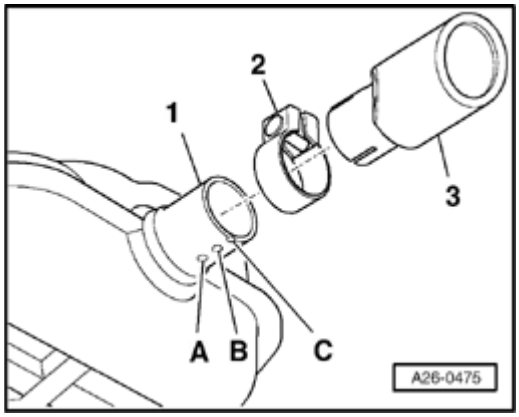

Fig. 550: Identifying End Pipes, Separating Point, Markings & Clamps
Courtesy of VOLKSWAGEN UNITED STATES, INC.

- Separate end pipe - **1** - at separating point - **C** - using Chain Pipe Cutter VAS 6254.
- Connect end pipe - **3** - up to marking - **A** - so that slot on end pipe lines up with marking - **B** -.
- Tighten clamping sleeve nut - **2** -.

Exhaust system, installing free of tension

- Align exhaust system when cold.
- Tightening torques --> **Muffler, assembly overview**.

 © 2011 Mitchell Repair Information Company, LLC.

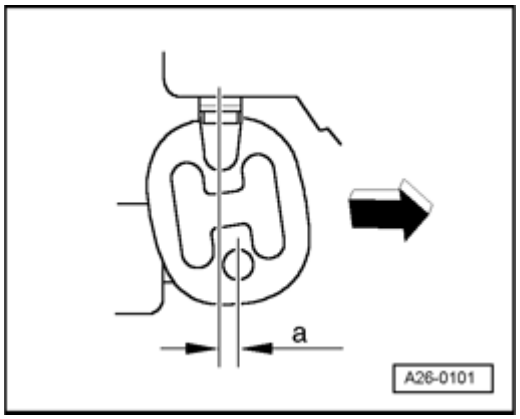

Fig. 551: Pushing Exhaust System Toward Front Of Vehicle
Courtesy of VOLKSWAGEN UNITED STATES, INC.

Vehicles without double clamps between center and rear muffler

- Loosen clamping sleeves bolts.
- Press exhaust system forward - **arrow** - far enough until pretension on retaining loops at rear mufflers - **a** - = 13 to 17 mm.
- Tighten clamping sleeve threaded connections evenly.
- Align end pipes --> **Tail pipes, aligning**.

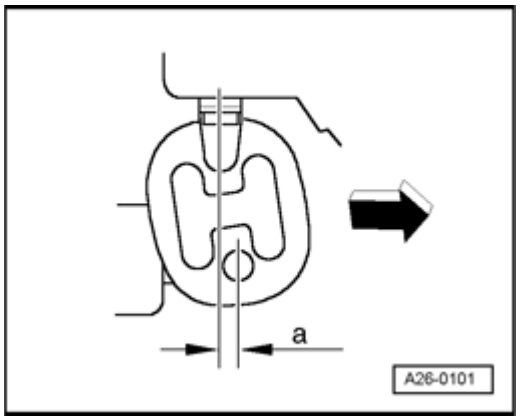

Fig. 552: Pushing Exhaust System Toward Front Of Vehicle
Courtesy of VOLKSWAGEN UNITED STATES, INC.

Vehicles with double clamps between center and rear muffler

NOTE:

- **Only for vehicles with double clamps between center and rear mufflers, the center muffler must also be aligned.**

- Loosen bolts of double clamps and.
- Push forward part of exhaust system far enough forward - **arrow** - until pre-load on retaining loops on center muffler - **a** - = 9 to 13 mm.

 © 2011 Mitchell Repair Information Company, LLC.

- Tighten front clamping sleeve threaded connections evenly.

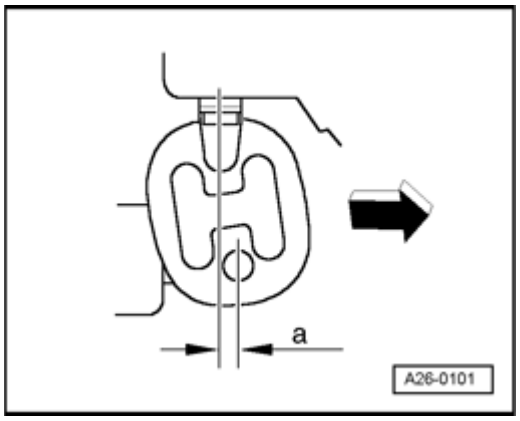

Fig. 553: Pushing Exhaust System Toward Front Of Vehicle
Courtesy of VOLKSWAGEN UNITED STATES, INC.

- Push rear part of exhaust system far enough forward - **arrow** - until pre-load on retaining loops at rear on rear muffler - **a** - = 13 to 17 mm.
- Align rear muffler horizontally.
- Tighten rear clamping sleeve threaded connections evenly.
- Align end pipes --> **Tail pipes, aligning**.

Tail pipes, aligning

Work procedure

- Tightening torque --> **Muffler, assembly overview**.

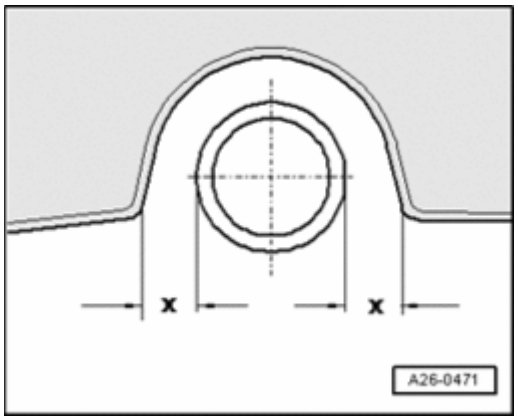

Fig. 554: Checking Distance Of End Pipes At Left/Right To Bumper
Courtesy of VOLKSWAGEN UNITED STATES, INC.

- Check distance of end pipes at left and right to bumper cover:

- Dimension - **x** - left = dimension - **x** - right.

 © 2011 Mitchell Repair Information Company, LLC.

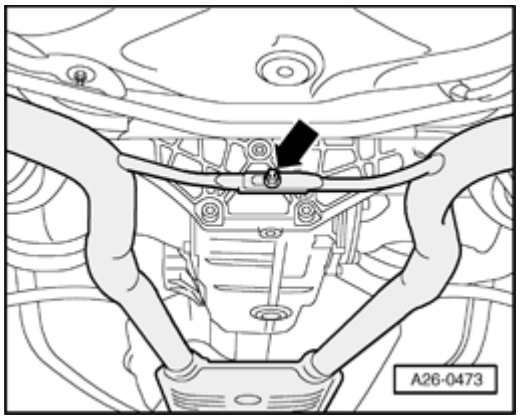

Fig. 555: Loosening Nut Of Brace Between Exhaust Pipes
Courtesy of VOLKSWAGEN UNITED STATES, INC.

If necessary, correct dimension "x" as follows:

- Loosen threaded connections - **arrow** - of brace between exhaust pipes.
- Adjust distance between rear mufflers.
- Tighten bolts.

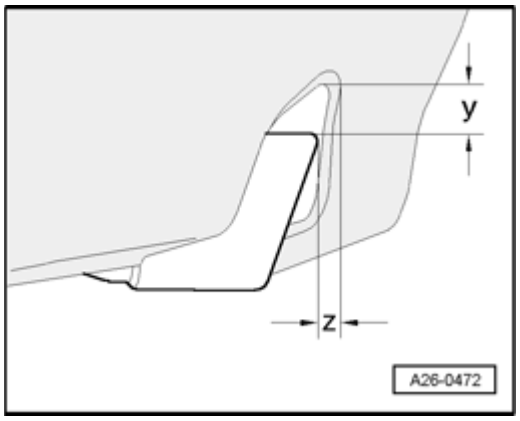

Fig. 556: Checking Distances Of End Pipes To Bumper
Courtesy of VOLKSWAGEN UNITED STATES, INC.

- Check distances - **y** - and - **z** - of end pipes to bumper cover:

- Dimension - **y** - Sedan and Avant = 16.0 to 21.0 mm.
- Dimension - **y** - Allroad = 17.5 to 22.0 mm.
- Dimension - **z** - Sedan and Avant = 8.5 to 13.5 mm.
- Dimension - **z** - Avant S-line = 13.5 to 18.5 mm.
- Dimension - **z** - Allroad = -1.5 to 6.5 mm (end pipe is over).

- If end pipes cannot be aligned, check whether exhaust system is aligned tension-free --> **Exhaust system, installing free of tension**.

 © 2011 Mitchell Repair Information Company, LLC.

EXHAUST MANIFOLD

Exhaust manifold, assembly overview

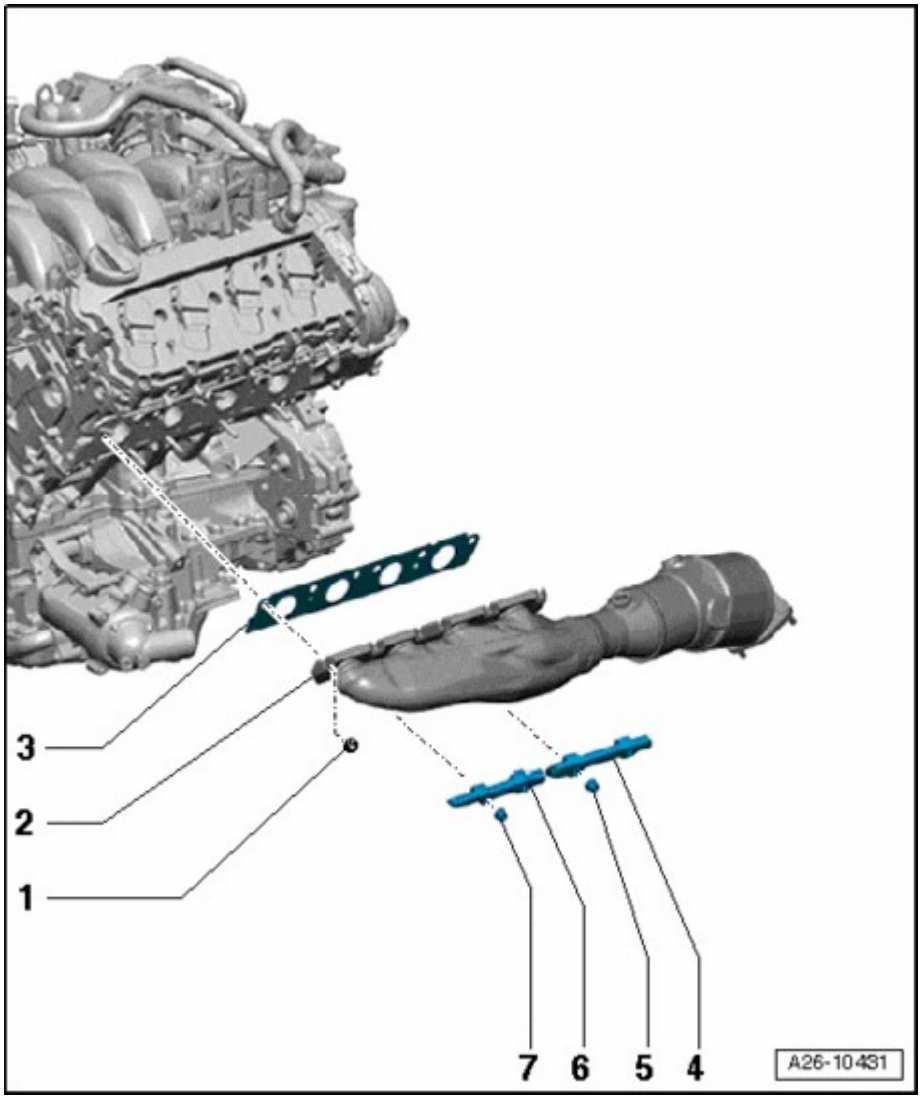

Fig. 557: Identifying Special Tools - Exhaust Manifold, Assembly Overview
Courtesy of VOLKSWAGEN UNITED STATES, INC.

1 - Nut

- Replace
- Lubricate with hot bolt paste; Hot bolt paste
- Tightening sequence: Left exhaust manifold **Left exhaust manifold tightening sequence** , right exhaust manifold **Right exhaust manifold tightening sequence**

2 - Exhaust manifold with catalytic converter

- Individual components of mounting: Left **Individual suspension components, left side** , right

 © 2011 Mitchell Repair Information Company, LLC.

Individual components of suspension, right side

- Removing and installing: Left --> **Left exhaust manifold with catalytic converter, removing and installing** , right --> **Right exhaust manifold with catalytic converter, removing and installing**

3 - Gasket

- Replace

4 - Securing strip

- Remains installed when removing exhaust manifold

5 - Nut

- Replace
- Lubricate with hot bolt paste; Hot bolt paste
- 25 Nm

6 - Securing strip

- Remains installed when removing exhaust manifold

7 - Nut

- Replace
- Lubricate with hot bolt paste; Hot bolt paste
- 25 Nm

Left exhaust manifold tightening sequence

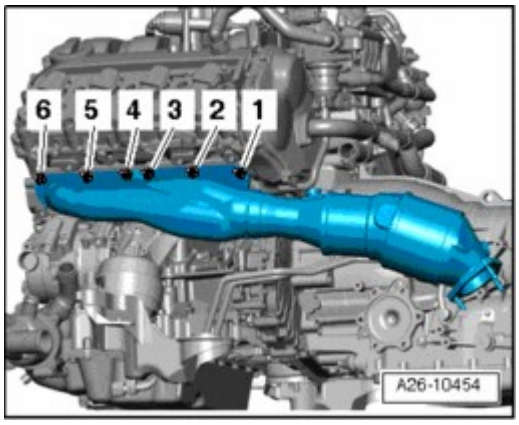

Fig. 558: Removing Nuts And Left Exhaust Manifold With Catalytic Converter
Courtesy of VOLKSWAGEN UNITED STATES, INC.

- Tighten nuts in 3 stages in - **1 to 6** - sequence as follows:

 © 2011 Mitchell Repair Information Company, LLC.

- Tighten nuts by hand.
- Pre-tighten nuts to 20 Nm.
- Tighten nuts to 30 Nm.

Right exhaust manifold tightening sequence

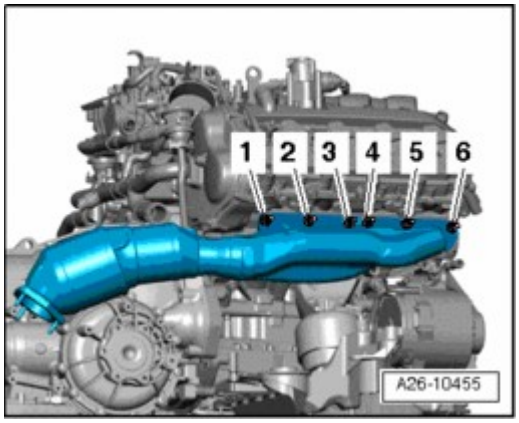

Fig. 559: Removing Nuts And Right Exhaust Manifold With Catalytic Converter
Courtesy of VOLKSWAGEN UNITED STATES, INC.

- Tighten nuts in 3 stages in - **1 to 6** - sequence as follows:

- Tighten nuts by hand.
- Pre-tighten nuts to 20 Nm.
- Tighten nuts to 30 Nm.

Individual suspension components, left side

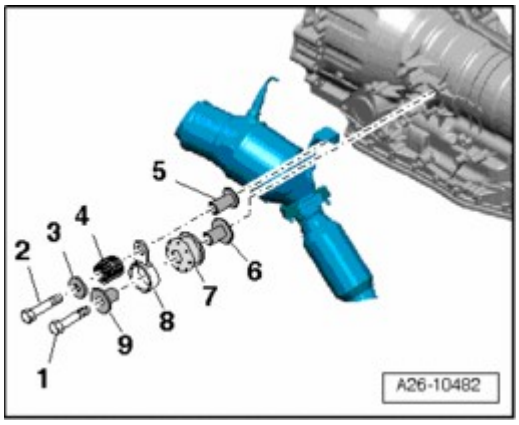

Fig. 560: Individual Suspension Components, Left Side
Courtesy of VOLKSWAGEN UNITED STATES, INC.

1. Bolt, 23 Nm

 © 2011 Mitchell Repair Information Company, LLC.

2. Bolt, 23 Nm
3. Washer
4. Spring
5. Spacing sleeve
6. Spacing sleeve
7. Buffer
8. Tab
9. Spacing sleeve

Individual components of suspension, right side

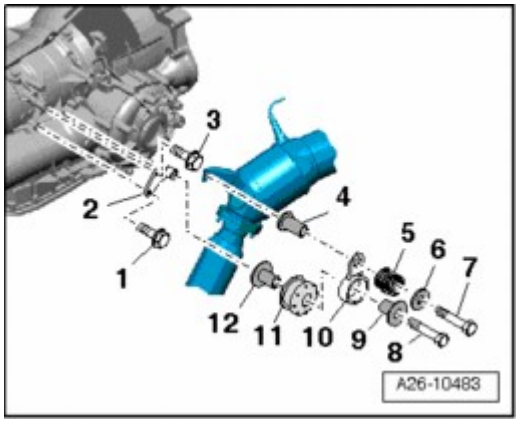

Fig. 561: Individual Components Of Suspension, Right Side
Courtesy of VOLKSWAGEN UNITED STATES, INC.

1. Bolt, 23 Nm
2. Bracket
3. Bolt, 23 Nm
4. Spacing sleeve
5. Spring
6. Washer
7. Bolt, 23 Nm
8. Bolt, 23 Nm
9. Spacing sleeve
10. Tab
11. Buffer
12. Spacing sleeve

Left exhaust manifold with catalytic converter, removing and installing

Removing

 © 2011 Mitchell Repair Information Company, LLC.

NOTE:

- **During installation, all cable ties must be re-installed at the same location.**

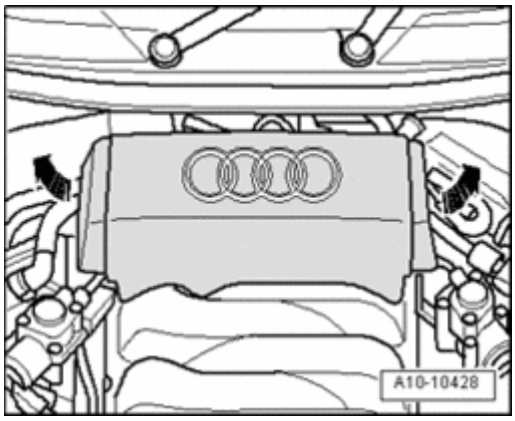

Fig. 562: Removing Rear Engine Cover
Courtesy of VOLKSWAGEN UNITED STATES, INC.

- Pull rear engine cover - **arrows** - off.
- Drain coolant --> **Cooling system, draining and filling**.
- Remove left coolant pipe --> **Left coolant pipe, removing and installing**.
- Remove left front muffler --> **Left front muffler, removing and installing**.

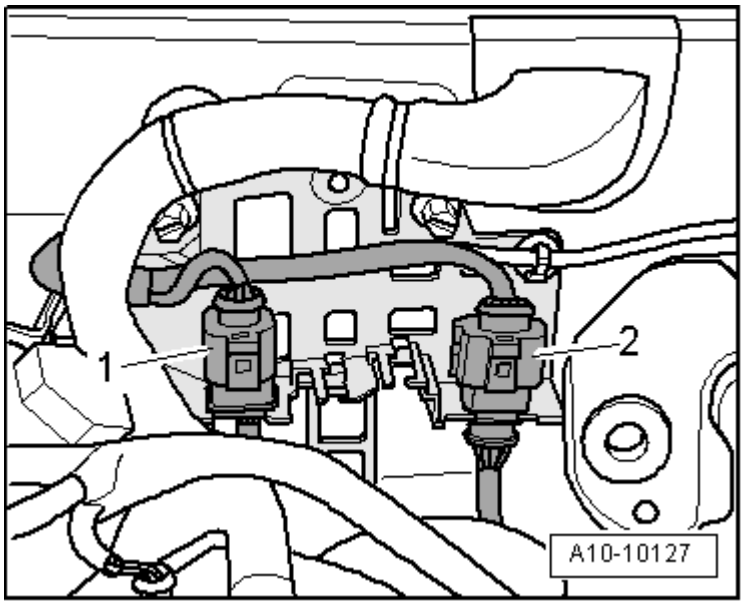

Fig. 563: Disconnecting Electrical Harness Connector For Oxygen Sensor (O2S) 2 Behind Three Way Catalytic Converter (TWC) G131
Courtesy of VOLKSWAGEN UNITED STATES, INC.

- Remove electrical harness connectors from bracket and disconnect it:

1. For Heated Oxygen Sensor (HO2S) 2 G108

 © 2011 Mitchell Repair Information Company, LLC.

2. For Oxygen Sensor (O2S) 2 Behind Three Way Catalytic Converter (TWC) G131

- Free up electrical wires to oxygen sensors.

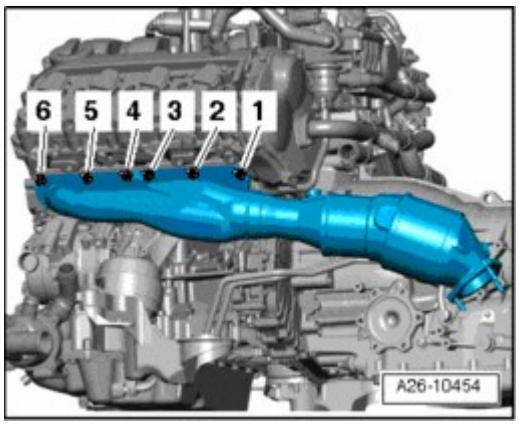

Fig. 564: Removing Nuts And Left Exhaust Manifold With Catalytic Converter
Courtesy of VOLKSWAGEN UNITED STATES, INC.

- Remove nuts - **6 to 1** -.

NOTE:

- **To improve clarity, the removed engine is shown.**
- **Both lower securing strips remain installed.**

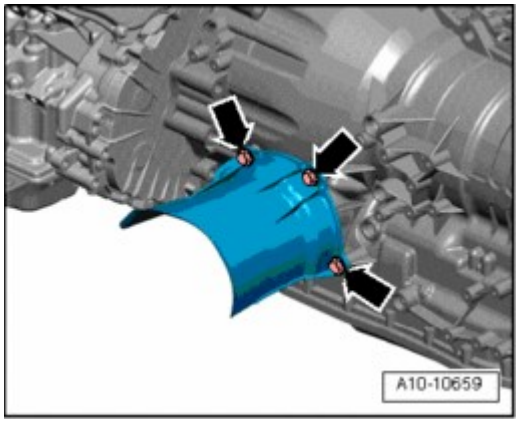

Fig. 565: Removing Left Drive Shaft Heat Shield From Transmission
Courtesy of VOLKSWAGEN UNITED STATES, INC.

- Remove left front wheel.
- Remove left drive shaft heat shield from transmission - **arrows** -.

NOTE:

- **To improve clarity, the removed engine is shown.**

 © 2011 Mitchell Repair Information Company, LLC.

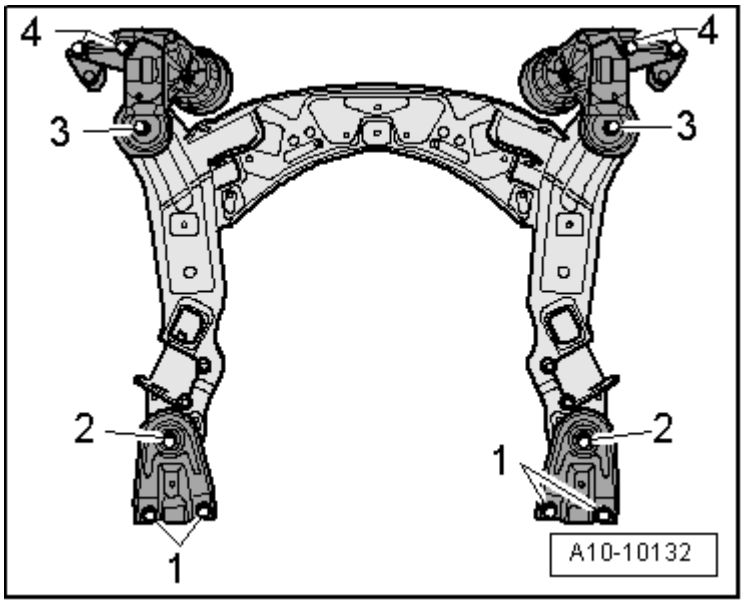

Fig. 566: Engine Mount Plate Bolts Removal/Installing Sequence
Courtesy of VOLKSWAGEN UNITED STATES, INC.

- Remove bolts - **1 and 2** -.

NOTE:

- **Ignore items - 3 and 4 -.**

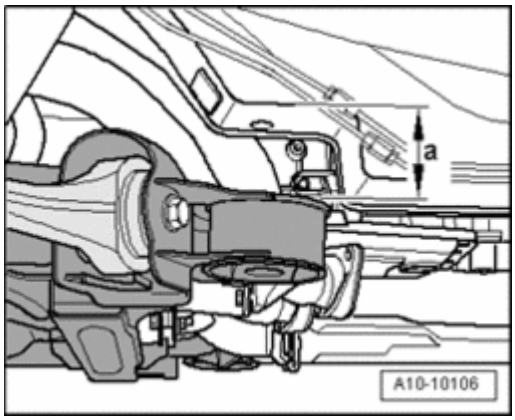

Fig. 567: Lowering Engine/Transmission Assembly Using Scissor Lift Platform VAS 6131 Only Approx. By Dimension
Courtesy of VOLKSWAGEN UNITED STATES, INC.

- Lower rear of subframe by dimension - **a** -.

- Dimension - **a** - = 85 mm maximum.

 © 2011 Mitchell Repair Information Company, LLC.

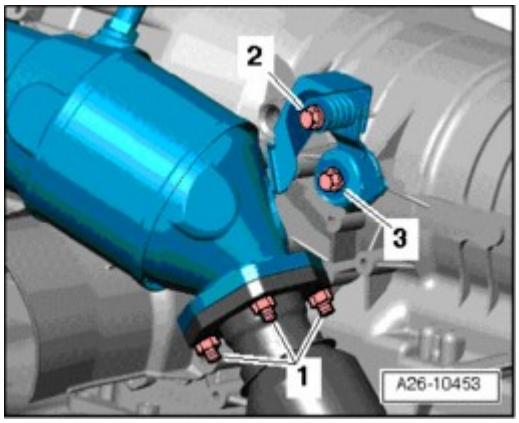

Fig. 568: Removing Left Front Muffler Nuts
Courtesy of VOLKSWAGEN UNITED STATES, INC.

- Remove bolts - **2 and 3** - and remove tab.

NOTE:

- **Ignore - 1 -.**

CAUTION: Risk of damaging drive shaft boots.

- **Carefully guide left exhaust manifold with catalytic converter when removing.**

- Remove left exhaust manifold with catalytic converter toward rear.

Installing

- Tightening torques --> **Engine, installing** , **Left exhaust manifold tightening sequence**

Installation is in reverse order of removal, note the following:

NOTE:

- **Replace seal, self-locking nuts and oil dipstick guide tube O-ring.**

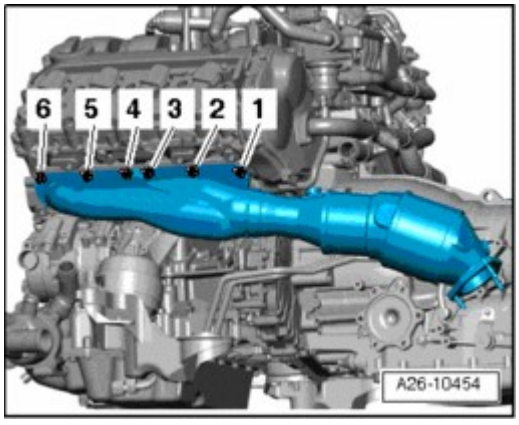

 © 2011 Mitchell Repair Information Company, LLC.

Fig. 569: Removing Nuts And Left Exhaust Manifold With Catalytic Converter
Courtesy of VOLKSWAGEN UNITED STATES, INC.

- Place gasket onto stud bolts.
- Insert exhaust manifold in securing strips and tighten **Left exhaust manifold tightening sequence**.
- Install left coolant pipe --> **Left coolant pipe, removing and installing**.
- Place oil dipstick guide tube in hole on upper part of oil pan.

- Install subframe --> **40 - FRONT SUSPENSION** .
- Install left front muffler --> **Left front muffler, removing and installing**.
- Align exhaust system free of tension --> **Exhaust system, installing free of tension**.
- Fill with coolant **Filling**.

Right exhaust manifold with catalytic converter, removing and installing

Special tools, testers and auxiliary items required

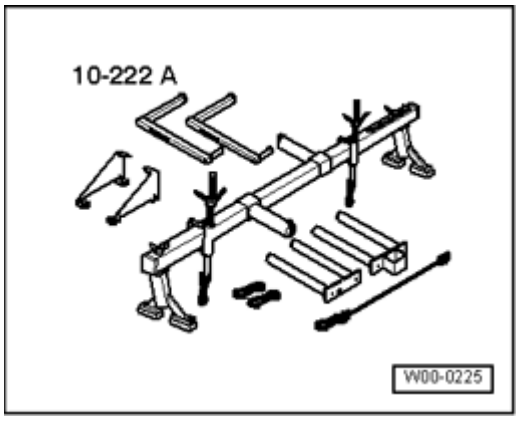

Fig. 570: Identifying Engine Support Bridge 10 - 222 A
Courtesy of VOLKSWAGEN UNITED STATES, INC.

- Engine support bridge 10 - 222 A

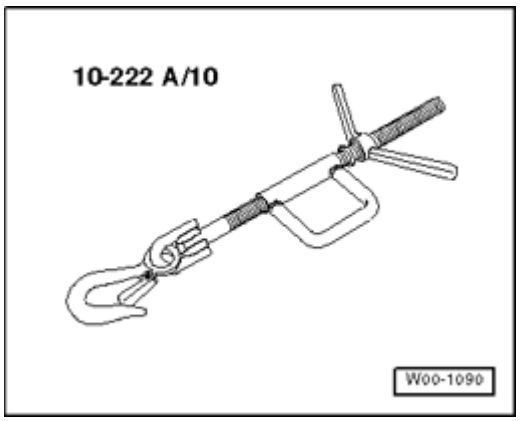

Fig. 571: Hook 10 - 222 A/10

 © 2011 Mitchell Repair Information Company, LLC.

Courtesy of VOLKSWAGEN UNITED STATES, INC.

- Hook 10 - 222 A/10

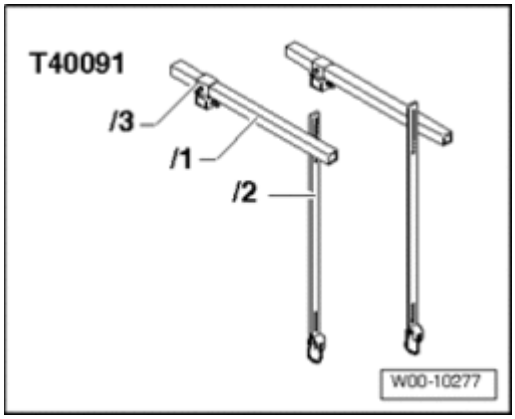

Fig. 572: Engine Support Basic Set T40091
Courtesy of VOLKSWAGEN UNITED STATES, INC.

- Engine Support Basic Set T40091

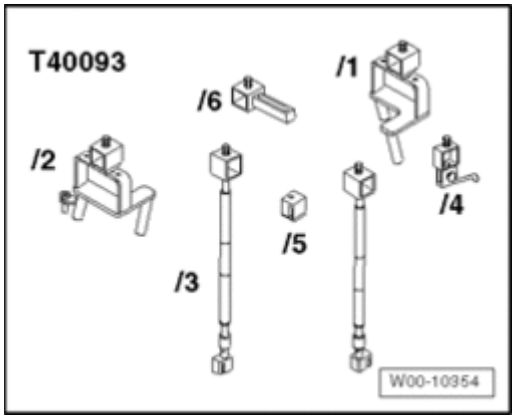

Fig. 573: Engine Support Supplement Set T40093
Courtesy of VOLKSWAGEN UNITED STATES, INC.

- Engine Support Supplement Set T40093

Removing

NOTE:

- **During installation, all cable ties must be re-installed at the same location.**

CAUTION: Risk of destroying electrical components when battery is disconnected.

- **Observe measures when disconnecting battery.**

- With ignition switched off, disconnect Battery Ground (GND) wire --> **27 - STARTER, GENERATOR,**

 © 2011 Mitchell Repair Information Company, LLC.

CRUISE CONTROL .

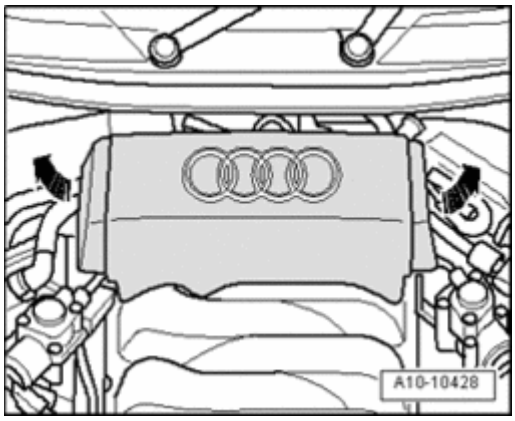

Fig. 574: Removing Rear Engine Cover
Courtesy of VOLKSWAGEN UNITED STATES, INC.

- Pull rear engine cover - **arrows** - off.
- Drain coolant --> **Cooling system, draining and filling**.
- Remove right coolant pipe --> **Right coolant pipe, removing and installing**.
- Remove ribbed belt --> **Ribbed belt, removing and installing**

- Remove generator --> **27 - STARTER, GENERATOR, CRUISE CONTROL** .
- Remove right front muffler --> **Right front muffler, removing and installing**.

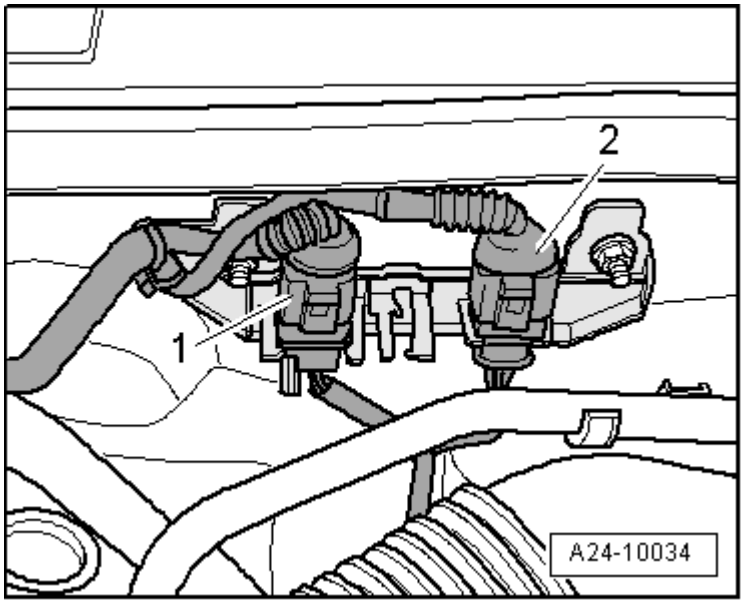

Fig. 575: Disconnecting Electrical Harness Connector For Oxygen Sensor (O2S) Behind Three Way Catalytic Converter (TWC) G130
Courtesy of VOLKSWAGEN UNITED STATES, INC.

- Remove electrical harness connectors from bracket and disconnect it:

 © 2011 Mitchell Repair Information Company, LLC.

1. For Heated Oxygen Sensor (HO2S) G39
2. For Oxygen Sensor (O2S) Behind Three Way Catalytic Converter (TWC) G130

- Free up electrical wires to oxygen sensors.

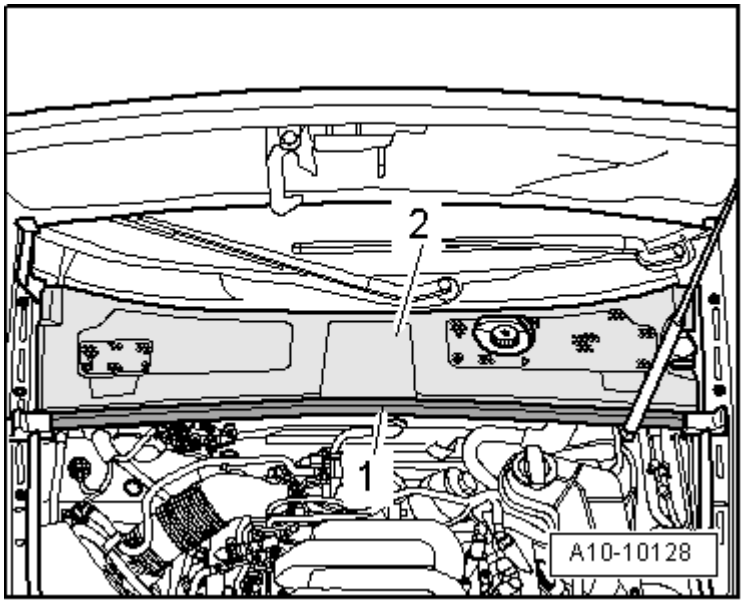

Fig. 576: Removing Rubber Seal And Plenum Chamber Cover
Courtesy of VOLKSWAGEN UNITED STATES, INC.

- Remove rubber seal - **1** - and remove plenum chamber cover - **2** -.

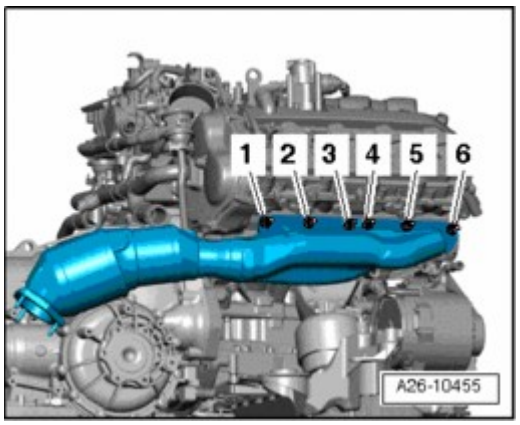

Fig. 577: Removing Nuts And Right Exhaust Manifold With Catalytic Converter
Courtesy of VOLKSWAGEN UNITED STATES, INC.

- Remove nuts - **6 to 1** -.

NOTE:

- **To improve clarity, the removed engine is shown.**
- **Both lower securing strips remain installed.**

 © 2011 Mitchell Repair Information Company, LLC.

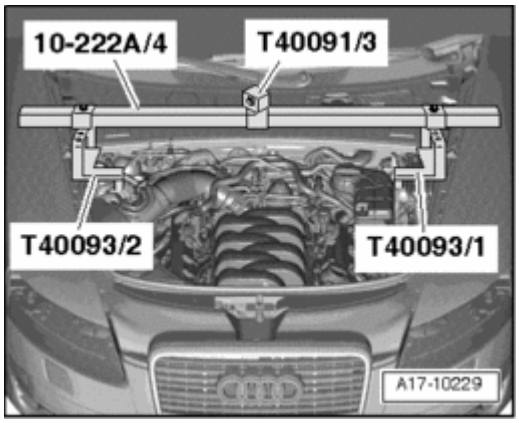

Fig. 578: Securing Adapter 10 - 222 A/4 Using Binder T40091/3 As Well As Supports T40093/1 And T40093/2 At Suspension Strut Domes
Courtesy of VOLKSWAGEN UNITED STATES, INC.

- Secure Adapter 10 - 222 A/4 with connector T40091/3 and supports T40093/1 and T40093/2 to suspension strut towers.
- Support for left and right side of vehicle is marked.

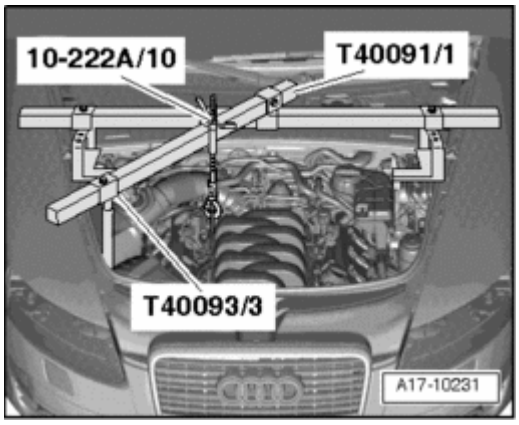

Fig. 579: Assembling Other Components Of Engine Support Bridge 10 - 222 A
Courtesy of VOLKSWAGEN UNITED STATES, INC.

- Install additional Engine Support Bridge parts as shown in illustration. Position supports T40093/3 on long member notches.
- Engage Hook 10 - 222 A/10 in left engine lifting eye.
- Tension engine with spindle.

 © 2011 Mitchell Repair Information Company, LLC.

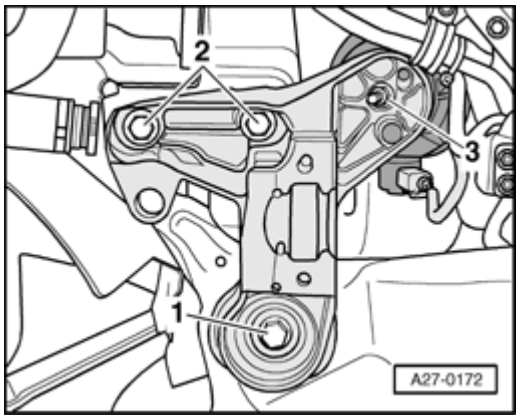

Fig. 580: Identifying Nuts, Bolts, And Right Side Engine Mount Carrier
Courtesy of VOLKSWAGEN UNITED STATES, INC.

- Remove nut - **3** -.
- Remove bolts - **1 and 2** - and remove right engine mount plate.

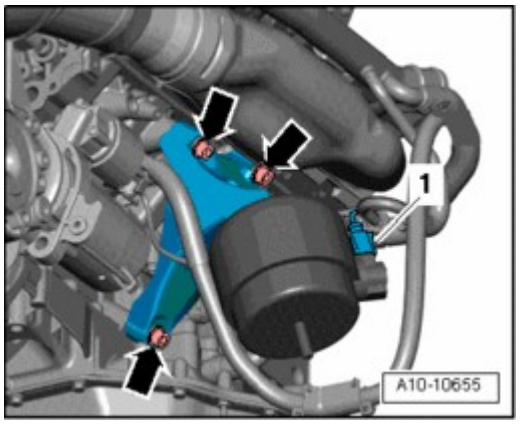

Fig. 581: Identifying Electrical Harness Connector And Bolts
Courtesy of VOLKSWAGEN UNITED STATES, INC.

- Disconnect electrical connector at engine mount - **1** -.
- Remove bolts - **arrows** - and remove engine support with engine mount.

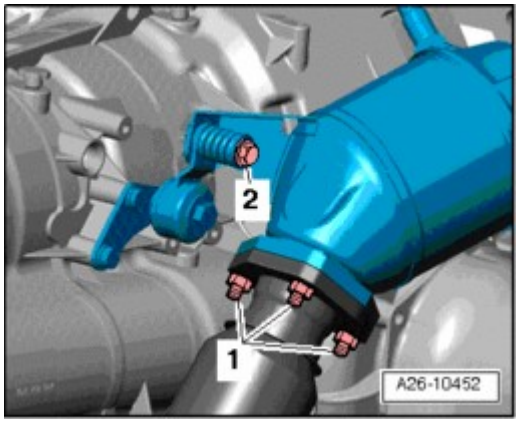

 © 2011 Mitchell Repair Information Company, LLC.

Fig. 582: Removing Right Front Muffler Nuts
Courtesy of VOLKSWAGEN UNITED STATES, INC.

- Remove bolt - **2** - and remove left exhaust manifold with catalytic converter toward front.

NOTE:

- **Ignore - 1 -.**

Installing

- Tightening torques **Left exhaust manifold tightening sequence** , --> **Secondary air injection (AIR) system, assembly overview**.

Installation is in reverse order of removal, note the following:

NOTE:

- **Replace seal and self-locking nuts.**

- Place gasket onto stud bolts.

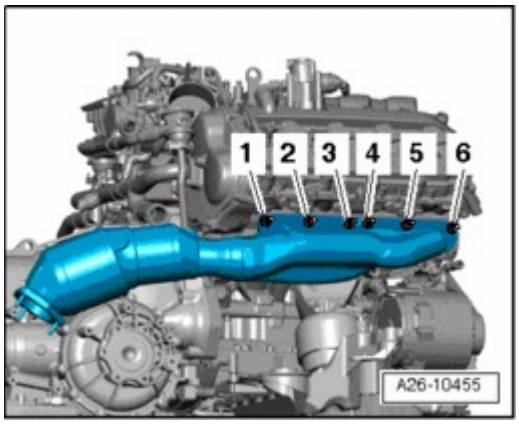

Fig. 583: Removing Nuts And Right Exhaust Manifold With Catalytic Converter
Courtesy of VOLKSWAGEN UNITED STATES, INC.

- Insert exhaust manifold in securing strips and tighten **Left exhaust manifold tightening sequence**
- Install right front muffler --> **Right front muffler, removing and installing**.
- Install generator --> **27 - STARTER, GENERATOR, CRUISE CONTROL** .
- Install ribbed belt --> **Ribbed belt, removing and installing**.

- Install engine support and right engine mount plate --> **Right engine mount, removing and installing**.
- Install right coolant pipe --> **Right coolant pipe, removing and installing**.
- Install stabilizer bar --> **40 - FRONT SUSPENSION** .
- Align exhaust system free of tension --> **Exhaust system, installing free of tension**.

- Observe safety precautions after connecting battery --> **27 - STARTER, GENERATOR, CRUISE CONTROL** .

 © 2011 Mitchell Repair Information Company, LLC.

- Fill with coolant **Filling**.

SECONDARY AIR INJECTION (AIR) SYSTEM

Principle and function

Principle

Due to the rich mixture during the cold start phase, the exhaust emissions contain an increased level of unburned hydrocarbons. The Secondary Air Injection (AIR) system improves the secondary oxidation within the catalytic converter, thereby reducing harmful emissions. The heat released by secondary oxidation shortens the start-up time of the catalytic converter considerably, as well as significantly improves emissions quality during the cold-running phase.

Function

In the cold start phase, the engine control module controls the Secondary Air Injection (AIR) pump via the pump relay. The stream of air from the Secondary Air Injection (AIR) pump opens the combination valves and allows air to flow into the exhaust system before the catalytic converter.

Secondary air injection (AIR) system, assembly overview

 © 2011 Mitchell Repair Information Company, LLC.

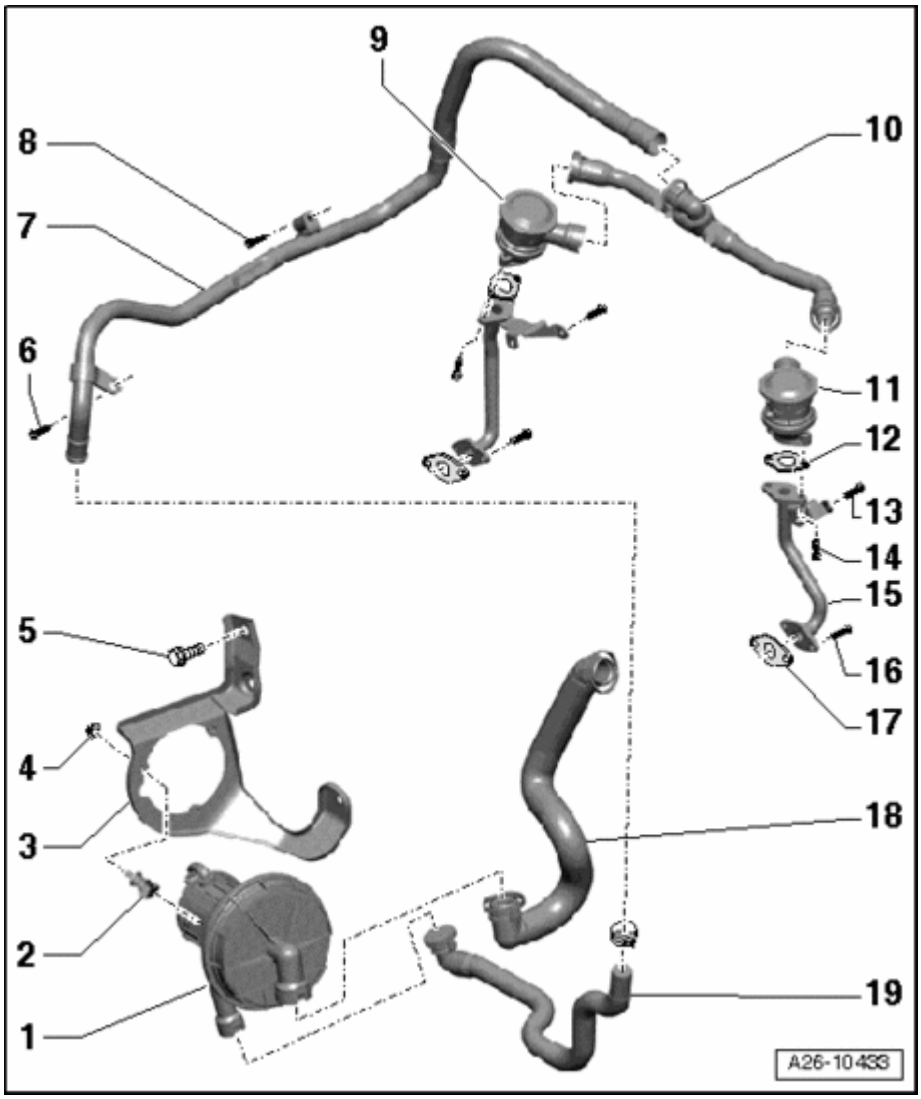

Fig. 584: Secondary Air Injection (AIR) System, Assembly Overview
Courtesy of VOLKSWAGEN UNITED STATES, INC.

1 - Secondary Air Injection (AIR) Pump Motor V101

- Component location: At front right in engine compartment below the longmember
- Removing and installing --> **Secondary Air Injection (AIR) pump, removing and installing**
- Check in "Guided Fault-Finding" operating mode

2 - Bonded rubber bushing

3 - Bracket

- For Secondary Air Injection (AIR) pump motor V101

4 - Nut

 © 2011 Mitchell Repair Information Company, LLC.

- 9 Nm

5 - Bolt

- 9 Nm

6 - Bolt

- 9 Nm

7 - Air guide pipe

- To Secondary Air Injection (AIR) combi-valves

8 - Bolt

- 22 Nm

9 - Right secondary air injection (AIR) combi-valve

- Component location: Back of right cylinder head
- Checking --> **Combination valve for secondary air injection (AIR), checking function and for leaks**
- Removing and installing --> **Right combination valve for Secondary Air Injection, removing and installing**

10 - Air guide hose

- To Secondary Air Injection (AIR) combi-valves

11 - Left secondary air injection (AIR) combi-valve

- Component location: back of left cylinder head
- Checking --> **Combination valve for secondary air injection (AIR), checking function and for leaks**
- Removing and installing --> **Left combination valve for Secondary Air Injection, removing and installing**

12 - Gasket

- Replace

13 - Bolt

- 9 Nm

14 - Bolt

 © 2011 Mitchell Repair Information Company, LLC.

- 9 Nm

15 - Connecting pipe

- To cylinder head

16 - Bolt

- 9 Nm

17 - Gasket

- Replace

18 - Air guide hose

- From air filter housing

19 - Air guide hose

- From Secondary Air Injection (AIR) Pump Motor V101 to secondary air injection combi-valves

Secondary Air Injection (AIR) pump, removing and installing

Removing

NOTE:

- **During installation, all cable ties must be re-installed at the same location.**

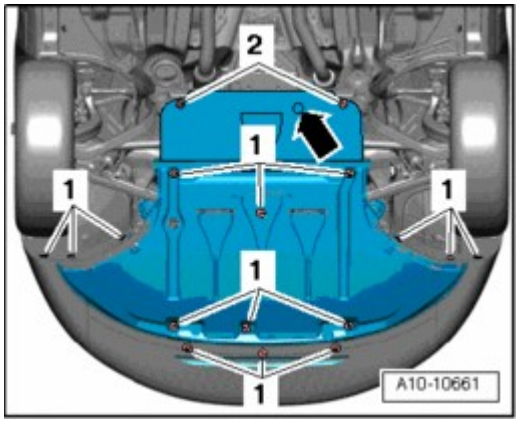

Fig. 585: Identifying Noise Insulation And Mountings
Courtesy of VOLKSWAGEN UNITED STATES, INC.

- Remove sound insulation by loosening securing pieces - **1, 2 and arrow** -.

 © 2011 Mitchell Repair Information Company, LLC.

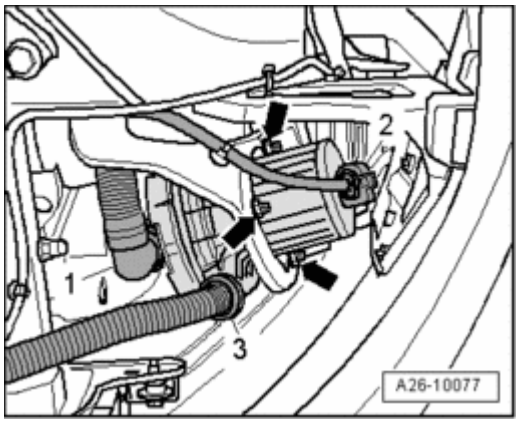

Fig. 586: Identifying Air Guide Hoses, Electrical Connector, Nuts & Secondary Air Injection (AIR) Pump
Courtesy of VOLKSWAGEN UNITED STATES, INC.

- Remove air guide hoses - **1 and 3** - from secondary air injection pump by pressing release buttons.
- Disconnect electrical connector - **2** -.
- Remove nuts - **arrows** - and remove secondary air injection (AIR) pump from bracket.

Installing

- Tightening torques --> **Secondary air injection (AIR) system, assembly overview**.

Installation is in reverse order of removal, note the following:

NOTE:

- **During installation, all cable ties must be re-installed at the same location.**

Combination valve for secondary air injection (AIR), checking function and for leaks

Work procedure

- Hose connections properly sealed.

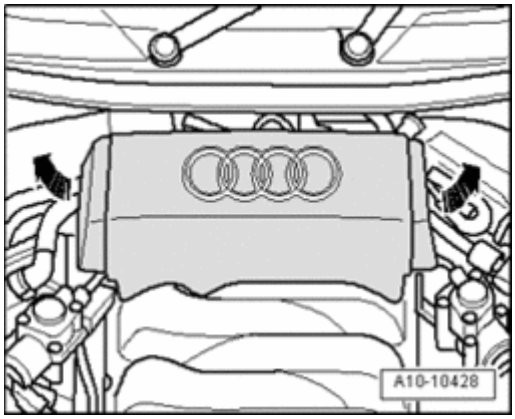

Fig. 587: Removing Rear Engine Cover

 © 2011 Mitchell Repair Information Company, LLC.

Courtesy of VOLKSWAGEN UNITED STATES, INC.

- Pull rear engine cover - **arrows** - off.

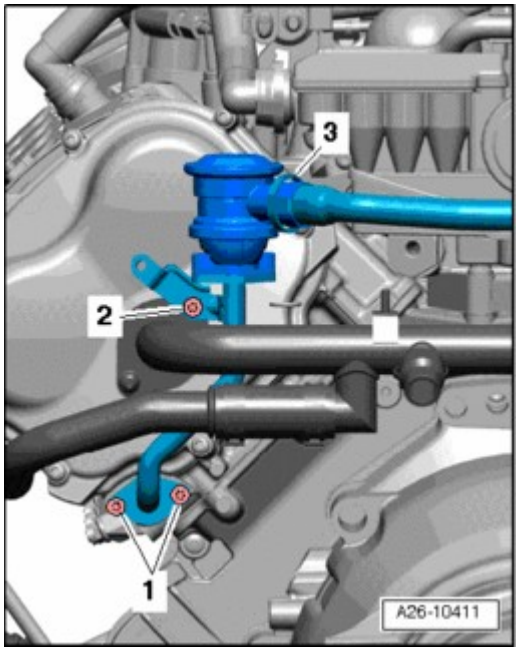

Fig. 588: Disconnecting Air Guide Hose From Secondary Air Injection (AIR) Combi-Valve
Courtesy of VOLKSWAGEN UNITED STATES, INC.

- Disconnect air guide hose - **3** - from Secondary Air Injection (AIR) combi-valve.

NOTE:

- **The left combination valve for Secondary Air Injection (AIR) is depicted in the illustration.**
- **Ignore items - 1 and 2 -.**

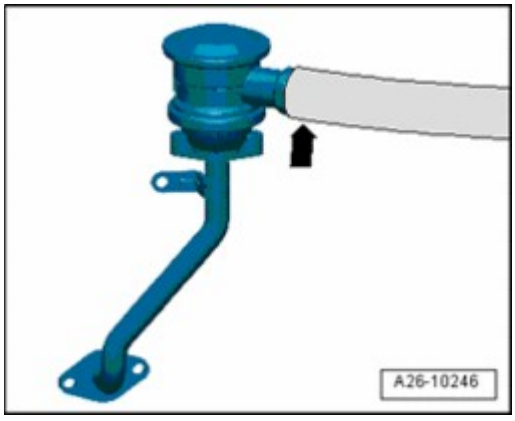

Fig. 589: Connecting An Assisting Hose To Secondary Air Injection (AIR) Combi-Valve
Courtesy of VOLKSWAGEN UNITED STATES, INC.

- Connect an assisting hose - **arrow** - to Secondary Air Injection (AIR) combi-valve.

 © 2011 Mitchell Repair Information Company, LLC.

- Blow into assisting hose using light pressure (do not use pressurized air).
- Secondary Air Injection (AIR) combi-valve must be closed, it must not be possible to blow through.
- Blow into assisting hose using higher pressure (do not use pressurized air).
- The Secondary Air Injection (AIR) combi-valve must open, it must be possible to blow through.

If switching point is not recognized:

- Replace Secondary Air Injection (AIR) combi-valve: Left --> **Left combination valve for Secondary Air Injection, removing and installing** , right --> **Right combination valve for Secondary Air Injection, removing and installing**.

Left combination valve for Secondary Air Injection, removing and installing

Removing

NOTE:

- **During installation, all cable ties must be re-installed at the same location.**

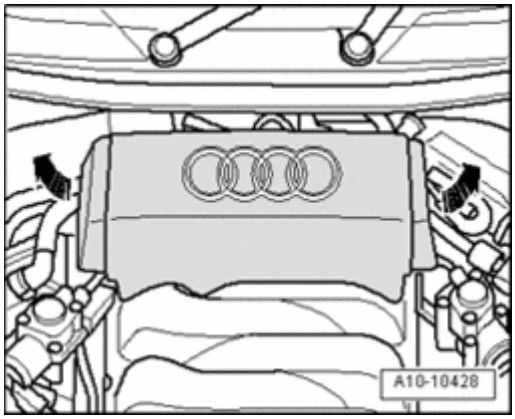

Fig. 590: Removing Rear Engine Cover
Courtesy of VOLKSWAGEN UNITED STATES, INC.

- Pull rear engine cover - **arrows** - off.
- Drain coolant --> **Cooling system, draining and filling**.
- Remove left coolant pipe --> **Left coolant pipe, removing and installing**.
- Remove Heated Oxygen Sensor (HO2S) 2 G108 (in front of catalytic converter) --> **24 - MULTIPORT FUEL INJECTION (MFI)** .

 © 2011 Mitchell Repair Information Company, LLC.

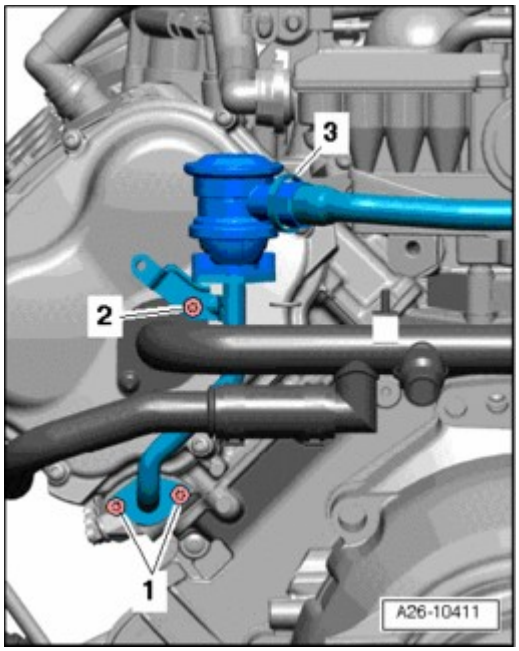

Fig. 591: Disconnecting Air Guide Hose From Secondary Air Injection (AIR) Combi-Valve
Courtesy of VOLKSWAGEN UNITED STATES, INC.

- Disconnect air guide hose - **3** - from Secondary Air Injection (AIR) combi-valve.
- Remove bolts - **1 and 2** -.
- Free up electrical wiring and remove secondary air injection (AIR) combi-valve.

NOTE:

- **The engine is shown from behind to provide a better illustration.**

Installing

- Tightening torque --> **Secondary air injection (AIR) system, assembly overview**.

Installation is in reverse order of removal, note the following:

NOTE:

- **Replace seals and O-rings.**
- **Secure all hose connections using hose clamps appropriate for the model type .**
- **During installation, all cable ties must be re-installed at the same location.**

- Install Heated Oxygen Sensor (HO2S) 2 G108 (in front of catalytic converter) --> **24 - MULTIPORT FUEL INJECTION (MFI)** .
- Install left coolant pipe --> **Left coolant pipe, removing and installing**.
- Place oil dipstick guide tube in hole on upper part of oil pan.
- Fill with coolant **Filling**.

 © 2011 Mitchell Repair Information Company, LLC.

Right combination valve for Secondary Air Injection, removing and installing

Removing

NOTE:

- **During installation, all cable ties must be re-installed at the same location.**

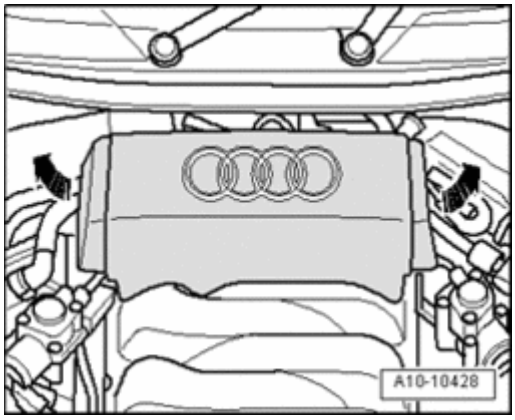

Fig. 592: Removing Rear Engine Cover
Courtesy of VOLKSWAGEN UNITED STATES, INC.

- Pull rear engine cover - **arrows** - off.

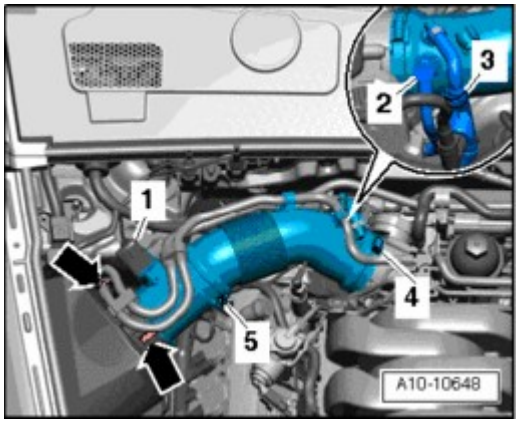

Fig. 593: Identifying Mass Air Flow (MAF) Sensor G70 Electrical Harness Connector, Vacuum Line, Hose Connection, Crankcase Ventilation Hose & Hose Clamps
Courtesy of VOLKSWAGEN UNITED STATES, INC.

- Free up fuel line and line to EVAP canister on air filter housing and air guide pipe.
- Remove vacuum line - **3** - to air guide hose.
- Remove air guide hose from air filter housing by loosening hose clamps - **4 and 5** -.
- Lay aside air guide hose with connected line - **2** -.

NOTE:

- **Ignore - 1 - and - arrows -.**

 © 2011 Mitchell Repair Information Company, LLC.

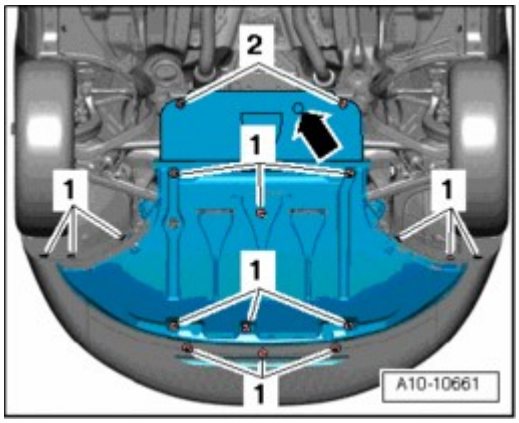

Fig. 594: Identifying Noise Insulation And Mountings
Courtesy of VOLKSWAGEN UNITED STATES, INC.

- Remove sound insulation by loosening securing pieces - **1, 2, arrow** -.

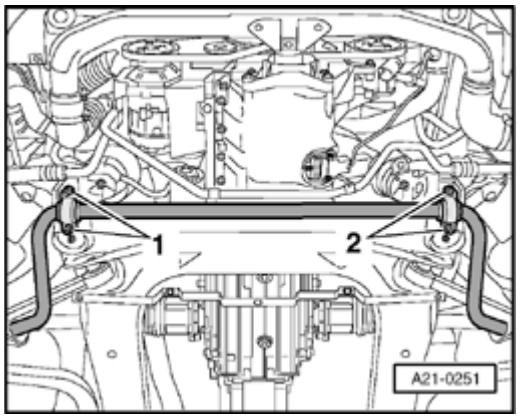

Fig. 595: Removing Bolts For Left And Right Stabilizer Bar Mount
Courtesy of VOLKSWAGEN UNITED STATES, INC.

- Remove bolts - **1 and 2** - for left and right stabilizer bar mount.
- Slightly lower stabilizer bar.

 © 2011 Mitchell Repair Information Company, LLC.

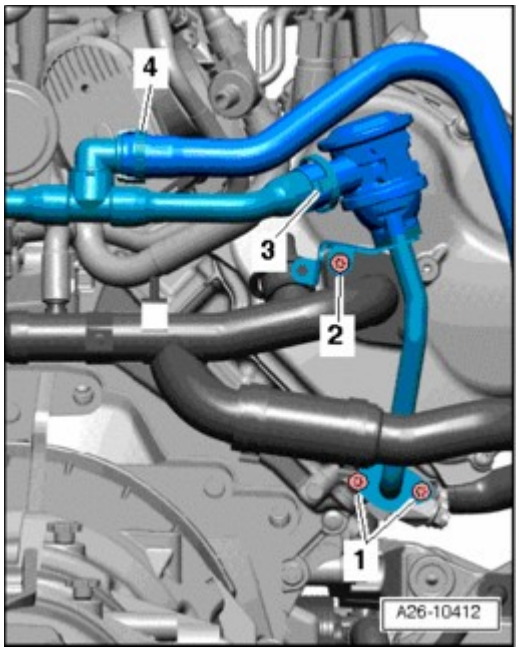

Fig. 596: Identifying Bolts, Air Guide Hoses & Secondary Air Injection (AIR) Combi-Valve
Courtesy of VOLKSWAGEN UNITED STATES, INC.

- Remove bolts - **1** - from below.
- Remove air guide hoses - **3 and 4** - from above and lay them aside.
- Remove bolts - **2** -.
- Free up electrical wiring and remove secondary air injection (AIR) combi-valve.

NOTE:

- **The engine is shown from behind to provide a better illustration.**

Installing

- Tightening torque --> **Secondary air injection (AIR) system, assembly overview**.

Installation is in reverse order of removal, note the following:

NOTE:

- **Replace seals and O-rings.**
- **Secure all hose connections using hose clamps appropriate for the model type .**
- **During installation, all cable ties must be re-installed at the same location.**

- Install stabilizer bar --> **40 - FRONT SUSPENSION** .

 © 2011 Mitchell Repair Information Company, LLC.