ENGINE

3.2 V6 4V Engine Mechanical, Engine Code(s): BKH

00 - TECHNICAL DATA

SAFETY PRECAUTIONS

Safety Precautions

Note the following when working on the fuel system:

CAUTION: There is a risk of injury because the fuel is under very high pressure.

- **Before opening high pressure area of the fuel injection system, fuel pressure must be relieved to residual pressure.**
- **To reduce remaining residual pressure, lay a clean cloth around the connector and carefully loosen connector.**

- Procedures before opening high pressure fuel injection system --> **Before Opening High Pressure Fuel Injection System**.

To prevent personal injury and damage to the injection and ignition system, observe the following:

- The ignition must be switched off before connecting or disconnecting injection and ignition system wiring or tester cables.
- Only clean engine with ignition switched off.
- If electrical connectors were disconnected, faults are saved in ECM:

- Connect Vehicle Diagnosis, Testing and Information System VAS 5051B.
- Start "Guided Functions" operating mode.
- Generate readiness code in ECM.

CAUTION: Risk of destroying electrical components when battery is disconnected.

- **Observe measures when disconnecting battery.**
- **Only disconnect battery with ignition switched off.**

- Disconnect battery --> **27 - STARTER, GENERATOR, CRUISE CONTROL** .

Note the following when working on the cooling system:

CAUTION: Risk of scalding due to hot steam and hot coolant.

- **When the engine is warm the cooling system is under pressure.**
- **To reduce pressure, cover coolant reservoir cap with cloth and carefully open.**

If it is necessary to use testing and measuring devices on road tests, observe the following:

CAUTION: Distraction and improperly secured test equipment can lead to accidents.

Risk of passenger airbag deploying in an accident.

- **Operating testing and measuring equipment while driving creates a distraction.**
- **There is an increased risk of injury due to unsecured testing and measuring equipment.**
- **Always secure testers on the rear seat with a strap and have a second person on the rear seat operate them.**

Before Opening High Pressure Fuel Injection System

Before Opening High Pressure Fuel Injection System

- The fuel injection system is separated into a high-pressure section (max. approximately 120 bar) and a low-pressure section (approximately 6 bar).
- Before opening high pressure area, fuel pressure must be reduced to a residual pressure of approximately 6 bar. The procedure for this is as follows.

Special tools, testers and auxiliary items required

- Vehicle diagnostic, testing, and information system VAS 5051B

Procedure

Proceed as follows:

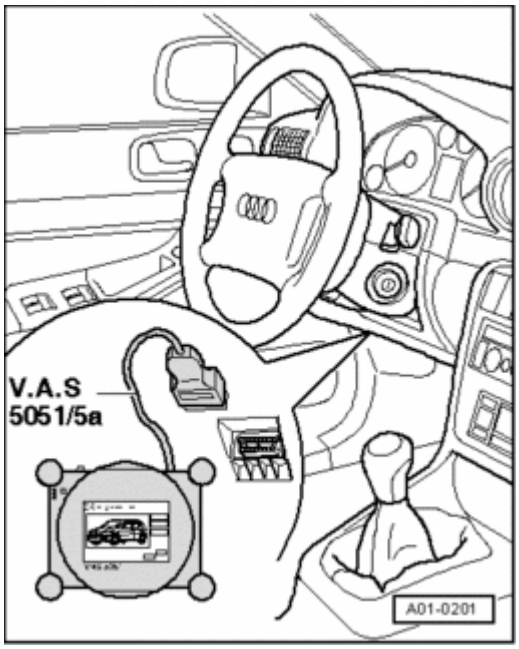

Fig. 1: Connecting Vehicle Diagnosis, Testing And Information System VAS 5051B
Courtesy of VOLKSWAGEN UNITED STATES, INC.

- Connect vehicle diagnosis, testing and information system VAS 5051B while the ignition is switched off.

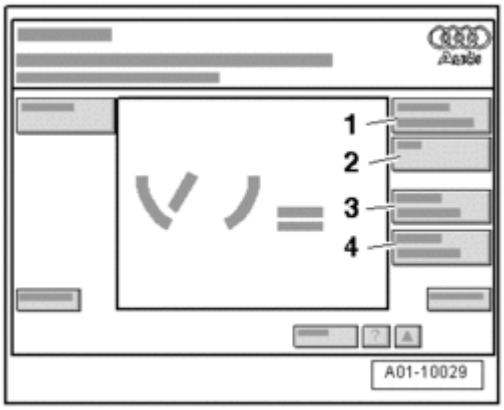

Fig. 2: Display On VAS 5051B - Vehicle Self-Diagnosis Button
Courtesy of VOLKSWAGEN UNITED STATES, INC.

Display on VAS 5051B :

- Press Vehicle Self-Diagnosis button - **1** - in selection.

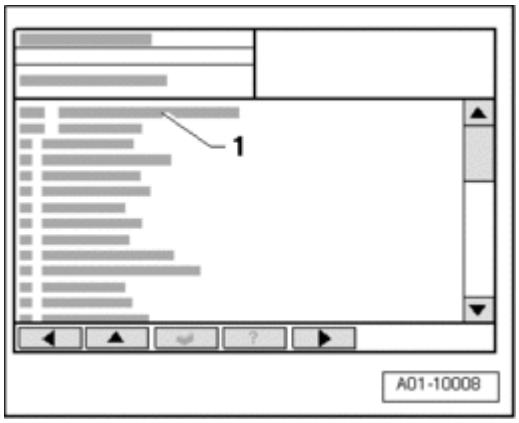

Fig. 3: Display On VAS 5051 - "01 - Engine Electronics"
Courtesy of VOLKSWAGEN UNITED STATES, INC.

Display on VAS 5051B :

- In selection - **1** - , press "01 - Engine electronics" vehicle system and continue by pressing button.

Fig. 4: Display On VAS 5051 - "006 - Basic Setting"
Courtesy of VOLKSWAGEN UNITED STATES, INC.

Display on VAS 5051B :

- In selection - **1** - , press diagnostic function "006 - Basic setting" and continue by pressing the button.

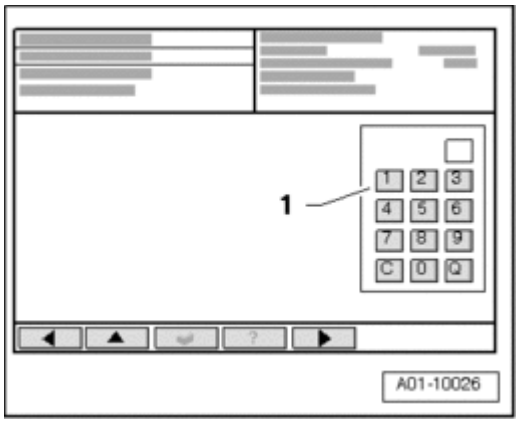

Fig. 5: Display On VAS 5051 - "Display Group 140"
Courtesy of VOLKSWAGEN UNITED STATES, INC.

Display on VAS 5051B :

- In button field - **1** - , press the 1 4 0 buttons for "Display group 140" and confirm the entry by pressing the Q button.

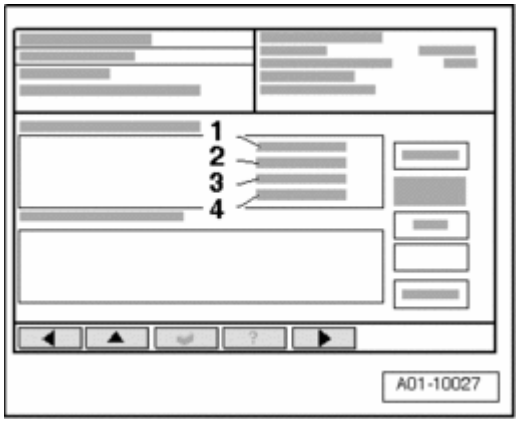

Fig. 6: Display On VAS 5051 - (Read-Out For Fuel Pressure In Fuel Rail)
Courtesy of VOLKSWAGEN UNITED STATES, INC.

Display on VAS 5051B :

Example:

1. 42%
2. 39.76 bar
3. 40.63 bar
4. Inactive

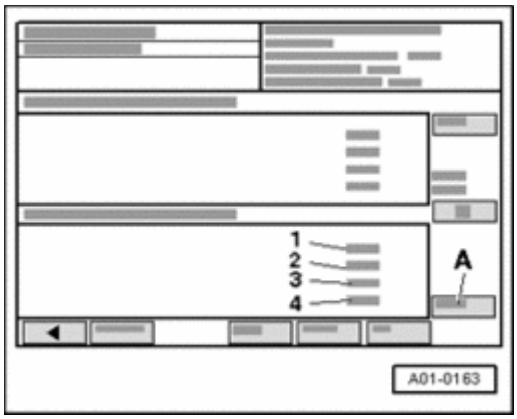

Fig. 7: Diagnostic System VAS 5051: Display - Display Fields
Courtesy of VOLKSWAGEN UNITED STATES, INC.

- Press button A to activate basic setting.

Display on VAS 5051B :

Example:

1. 0%
2. 0 bar
3. 5.46 bar
4. Lower

The fuel rail will continue to be filled with fuel, but it will no longer be under high pressure.

Now components or lines can be opened.

- Lay clean cloths around connectors and catch escaping fuel.

Final procedures

- Start "Guided Functions" operating mode.
- Generate readiness code in ECM.

GENERAL REPAIR INFORMATION

General Repair Information

--> **Clean Working Conditions**

--> **Contact Corrosion**

--> **Lines, Routing and Securing**

Clean Working Conditions

Clean Working Conditions

Even a little contamination can lead to faults. When working on the fuel supply and on the fuel injection system, observe the following guidelines for a clean working environment:

- Before loosening, connections and surrounding areas must be cleaned thoroughly with engine or brake cleaner, and then cleaned area must be dried completely.
- Plug open lines and connections immediately with appropriate protective caps.
- Place parts that have been removed on a clean surface and cover them. Use lint-free cloths.
- Only install clean components: Only unpack replacement parts immediately prior to installation. Do not use parts that have been stored unpacked (e.g. in tool boxes etc.).
- When the system is open: Do not work with compressed air. Do not move vehicle unless absolutely necessary.
- Protect disconnected electrical connectors from dirt and moisture and only connect if dry.

Contact Corrosion

Contact Corrosion

Contact corrosion can occur if incorrect fasteners (bolts, nuts, washers, etc.) are used.

For this reason, only install connecting elements that are treated with a special coating.

Also, rubber or plastic parts and adhesive consist of non-conductive materials.

If there are doubts about the suitability of parts, generally use new parts .

NOTE:

- **Only original replacement parts are recommended, they are checked and compatible with aluminum.**
- **Audi accessories are recommended.**
- **Damage due to contact corrosion is not covered by warranty.**

Lines, Routing and Securing

Lines, Routing and Securing

To prevent mistakes and ensure the original installation location is kept, mark the hydraulic lines, vacuum lines or electrical lines before removing them. If necessary, draw sketches or take pictures.

ENGINE DATA

Engine Data

Code letters		**BKH**
Displacement	Liter	3.123
Output	kW at RPM	188/6500
Torque	Nm at RPM	330/3250
Bore	Diameter mm	84.5
Stroke	mm	92.8
Compression ratio		12.5
RON	min.	95 1)
Fuel injection and ignition system		Simos
Ignition sequence		1-4-3-6-2-5
Exhaust gas recirculation		No
Turbocharger, G-Charger		No
Knock control		Yes
Variable valve timing		Yes
Variable intake manifold		No
Secondary Air Injection System		No
Valves per cylinder		4
1) Unleaded RON 91 is also permitted, but performance is reduced.		

ENGINE NUMBER

Engine Number

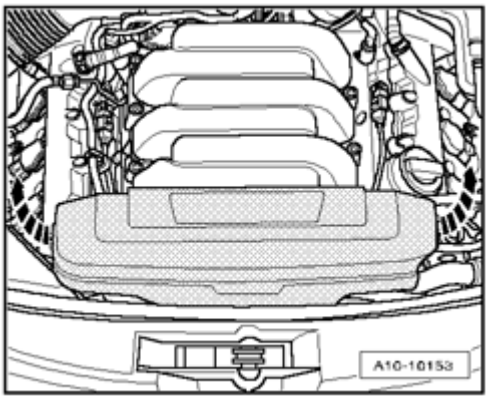

Fig. 8: Identifying Front Engine Cover
Courtesy of VOLKSWAGEN UNITED STATES, INC.

- Remove front engine cover - **arrows** -.

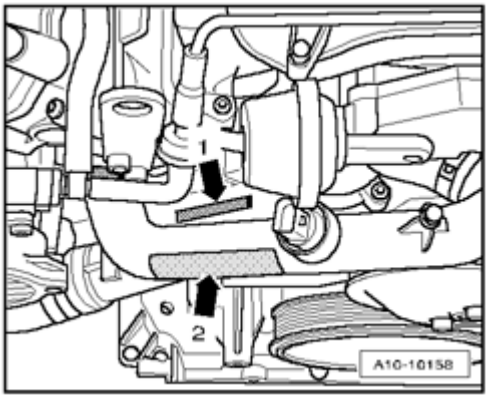

Fig. 9: Identifying "Engine Code" And "Serial Number"
Courtesy of VOLKSWAGEN UNITED STATES, INC.

- The engine number ("engine code" and "serial number") is located at front on cylinder block, below the right cylinder head - **arrow 1** -.
- Additionally, a sticker - **arrow 2** - is affixed to the front coolant line with the "engine code" and "serial number".
- The engine code is also located on the vehicle data plate.

10 - ENGINE, REMOVING AND INSTALLING

ENGINE, WITH MULTITRONIC TRANSMISSION, REMOVING AND INSTALLING

Engine, with Multitronic Transmission, Removing and Installing

Engine, with Multitronic Transmission, Removing and Installing

--> **Engine, Removing**

--> **Engine and Transmission, Separating**

--> **Engine, Securing to Engine and Transmission Holder**

--> **Engine, Installing**

Engine, Removing

Engine, Removing

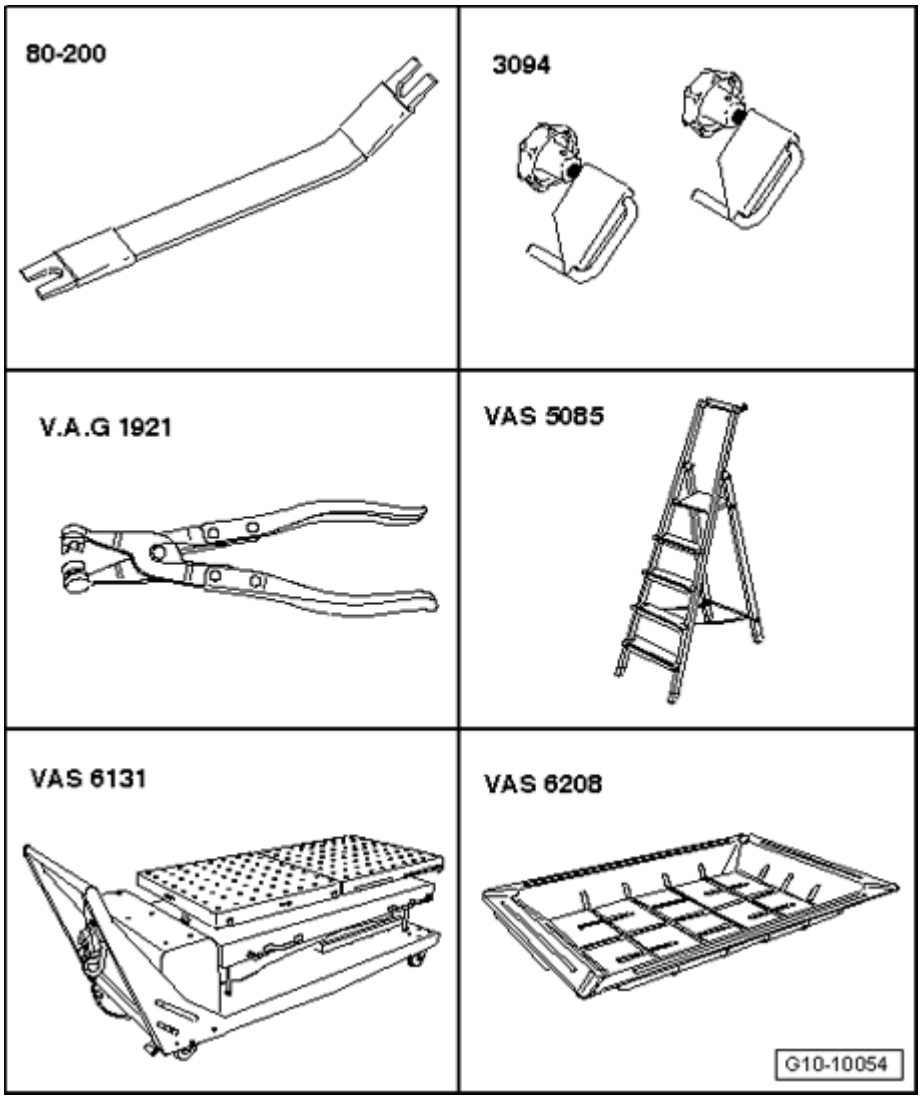

Fig. 10: Identifying Special Tools - Engine, Removing
Courtesy of VOLKSWAGEN UNITED STATES, INC.

Special tools, testers and auxiliary items required

- Pry Lever - Rmv Outside Mirror 80-200
- Hose Clamps Up to 25 mm dia. 3094
- Hose clamp pliers V.A.G 1921
- Step ladder VAS 5085
- Scissor lift platform VAS 6131 A with support set for Audi VAS 6131/10
- Drip tray for workshop crane VAS 6208

Special tools, testers and auxiliary items required

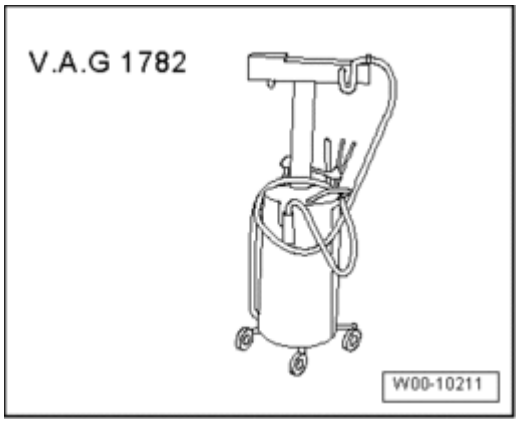

Fig. 11: Identifying Old Oil Collecting And Extracting Device V.A.G 1782
Courtesy of VOLKSWAGEN UNITED STATES, INC.

- Old oil collecting and extracting device V.A.G 1782

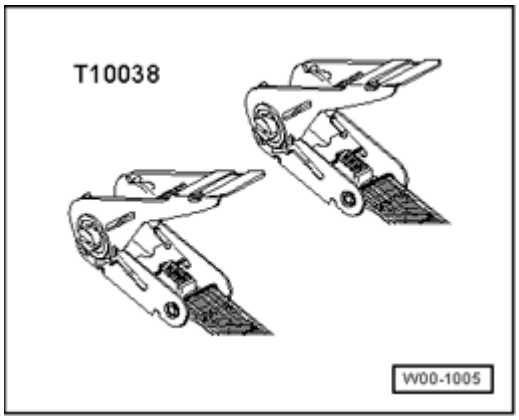

Fig. 12: Identifying Tensioning Strap T10038
Courtesy of VOLKSWAGEN UNITED STATES, INC.

- Tension strap T10038

NOTE:

- **If engine and transmission are to be separated after removal, the Supplementary Set Audi A6 (C6) VAS 6131/12 will also be required.**

Procedure

NOTE:

- **With lock carrier installed, engine is removed downward with transmission and subframe.**
- **All cable ties which are opened or cut open when removing engine, must be replaced in the same position when installing engine.**
- **Drained coolant must be stored in a clean container for disposal or reuse.**

CAUTION: Before removing engine, secure vehicle against tipping over. For this the

luggage compartment must be empty.

CAUTION: Observe safety precautions when disconnecting the battery --> 27 - STARTER, GENERATOR, CRUISE CONTROL .

NOTE:

- **So that the front wheels can still be turned with the battery disconnected, the battery must only be disconnected with ignition key inserted.**

- Remove luggage compartment floor trim.

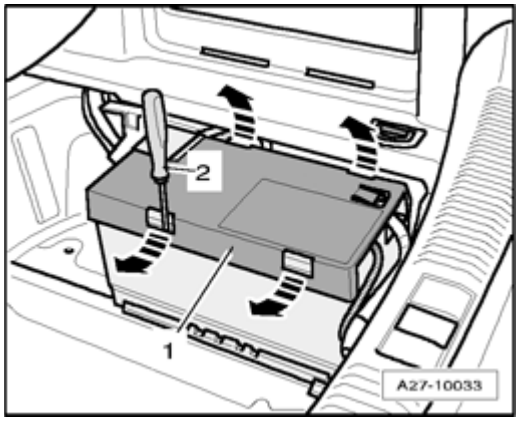

Fig. 13: Releasing Retaining Clips With A Screwdriver And Removing Battery Ground Cover
Courtesy of VOLKSWAGEN UNITED STATES, INC.

- Release retaining clips - **arrows** - with a screwdriver - **2** - and remove cover - **1** -.

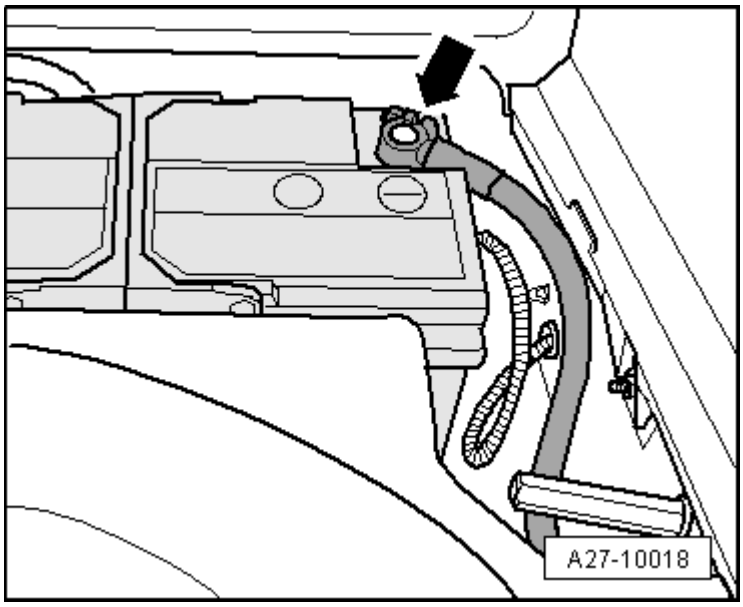

Fig. 14: Disconnecting Ground (GND) Cable At Battery
Courtesy of VOLKSWAGEN UNITED STATES, INC.

- Disconnect Ground (GND) cable - **arrow** - at battery.

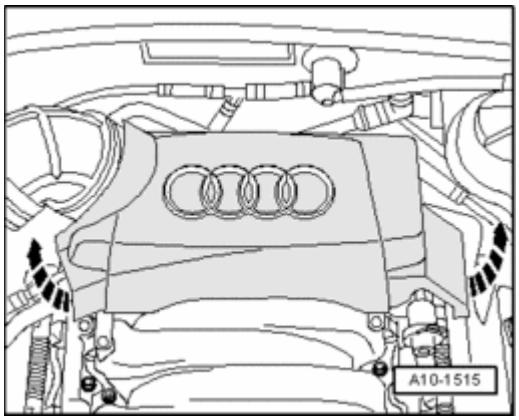

Fig. 15: Removing Rear Engine Cover
Courtesy of VOLKSWAGEN UNITED STATES, INC.

- Remove rear engine cover - **arrows** -.

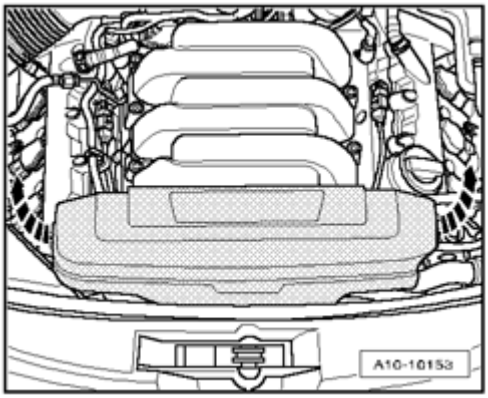

Fig. 16: Identifying Front Engine Cover
Courtesy of VOLKSWAGEN UNITED STATES, INC.

- Remove front engine cover - **arrows** -.

CAUTION: Cover cap of expansion tank with rag and open carefully, as hot steam i.e. hot coolant may escape when opening.

- Open cap of coolant expansion tank.

NOTE:

- **Before removing ribbed belt, mark the turning direction on it with chalk or a felt tip pen. A reversed direction of rotation can cause damage to the belt under operating conditions.**

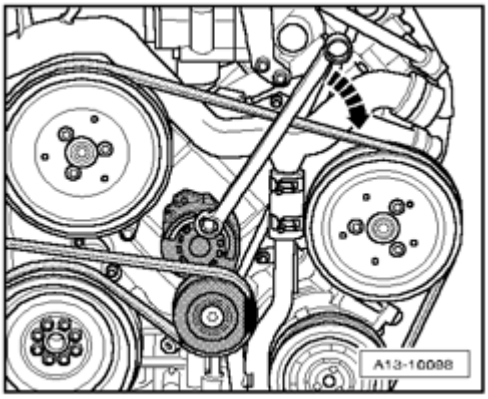

Fig. 17: Pivoting Tensioning Device To Relieve Tension On Ribbed Belt
Courtesy of VOLKSWAGEN UNITED STATES, INC.

- Pivot tensioning device in direction of - **arrow** - to relieve tension on ribbed belt.
- Remove ribbed belt and release tensioning device.
- Remove both front wheels.

NOTE:

- **Secure brake discs using a wheel bolts.**

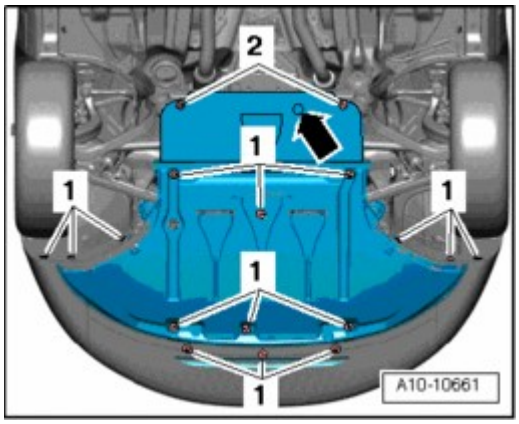

Fig. 18: Identifying Noise Insulation And Mountings
Courtesy of VOLKSWAGEN UNITED STATES, INC.

- Remove noise insulation and mountings - **1, 2** - - **arrow** - where present.

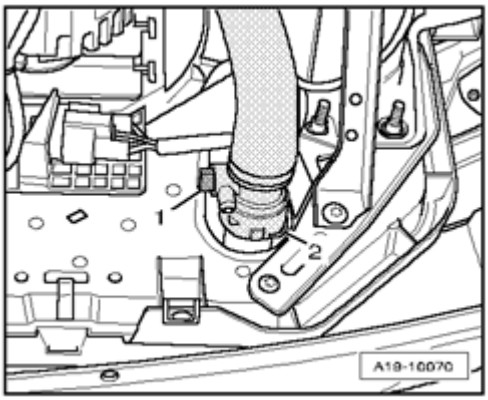

Fig. 19: Identifying Drain Plug & Coolant Hose
Courtesy of VOLKSWAGEN UNITED STATES, INC.

- Place drip tray for workshop crane VAS 6208 under engine.
- Open drain plug - **1** - and allow coolant to drain.
- Then disconnect coolant hose - **2** - from radiator.

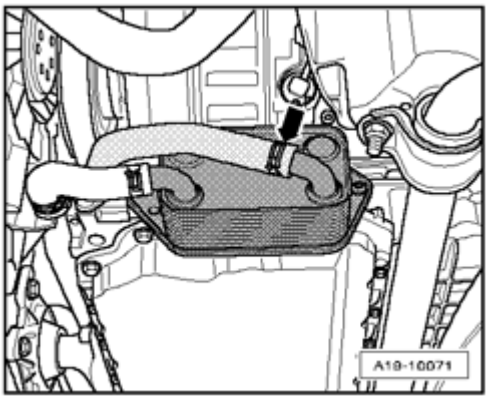

Fig. 20: Disconnecting Coolant Hose From Oil Cooler
Courtesy of VOLKSWAGEN UNITED STATES, INC.

- Disconnect coolant hose - **arrow** - from oil cooler and drain remaining coolant.
- Then remove coolant hose.

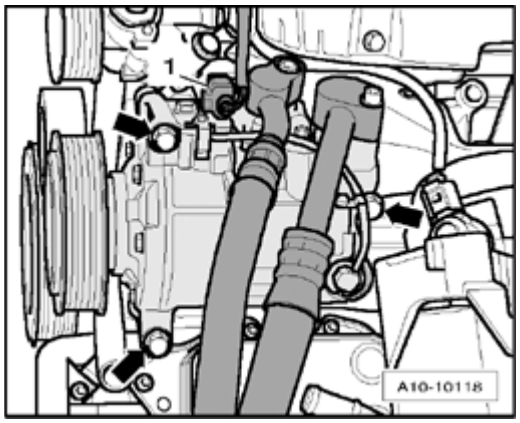

Fig. 21: Disconnecting Connector For Wiring To Air Conditioning Compressor Clutch Solenoid
Courtesy of VOLKSWAGEN UNITED STATES, INC.

- Disconnect connector - **1** - for wiring to air conditioning compressor clutch solenoid.

CAUTION: The air conditioning refrigerant circuit must not be opened.

- Remove air conditioning compressor from bracket - **arrows** -.

NOTE:

- **To prevent damage to the refrigerant lines/hoses, ensure that the lines and hoses are not stretched, kinked or bent.**

- Hang up air conditioning compressor with attached lines on left side of vehicle.

NOTE:

- **Place a rag under hydraulic lines to catch escaping hydraulic fluid.**

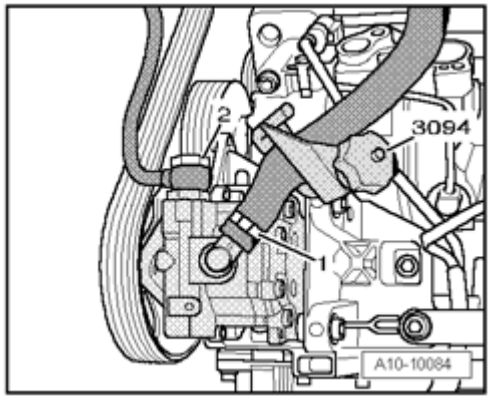

Fig. 22: Identifying Hydraulic Hose, Hydraulic Pressure Line & Hose Clamps 3094
Courtesy of VOLKSWAGEN UNITED STATES, INC.

- Clamp off hydraulic hose - **1** - for power steering pump with a Hose Clamps Up to 25 mm dia. 3094.
- Remove hydraulic hose from power steering pump.

- Remove hydraulic pressure line - **2** - at power steering pump and set it aside on top of the longitudinal member.

Vehicles with auxiliary heater:

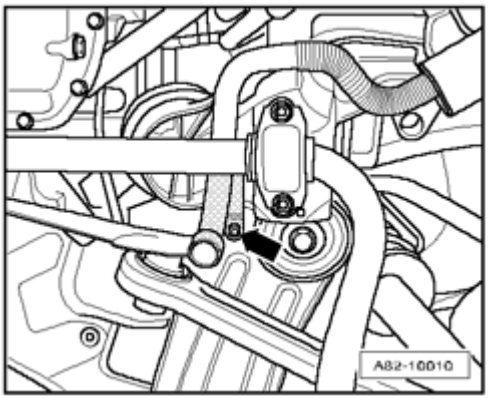

Fig. 23: Removing Bolt For Corrugated Exhaust Pipe
Courtesy of VOLKSWAGEN UNITED STATES, INC.

- Remove right front wheel housing liner in front area --> **66 - EXTERIOR EQUIPMENT** .
- Remove bolt - **arrow** - for corrugated exhaust pipe.

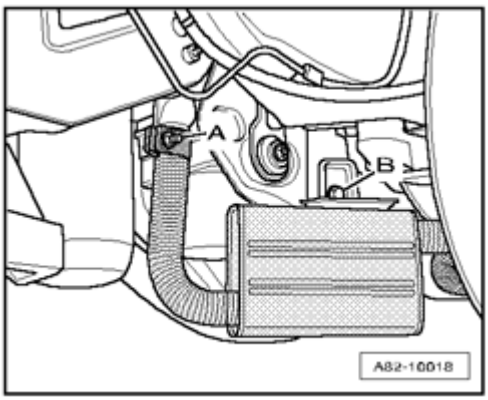

Fig. 24: Loosening Nut On Clamp For Corrugated Exhaust Pipe & Removing Bolt & Muffler With Corrugated Exhaust Pipe
Courtesy of VOLKSWAGEN UNITED STATES, INC.

- Loosen nut - **A** - on clamp for corrugated exhaust pipe.
- Remove bolt - **B** - and remove muffler with corrugated exhaust pipe.

All:

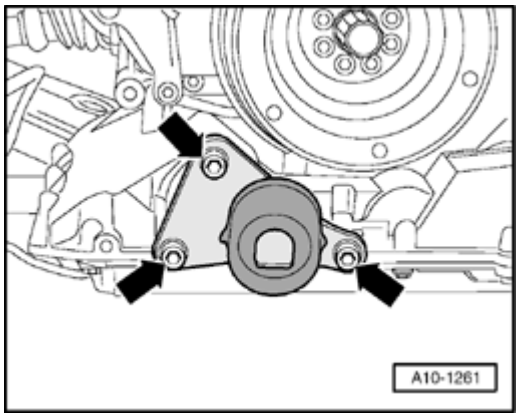

Fig. 25: Removing Bolts And Torque Support From Engine
Courtesy of VOLKSWAGEN UNITED STATES, INC.

- Remove bolts - **arrows** - and remove torque support from engine.

NOTE:

- **Observe the rules of cleanliness for working on automatic transmissions --> 00 TECHNICAL DATA .**

- Place old oil collecting and extracting device V.A.G 1782 under engine.

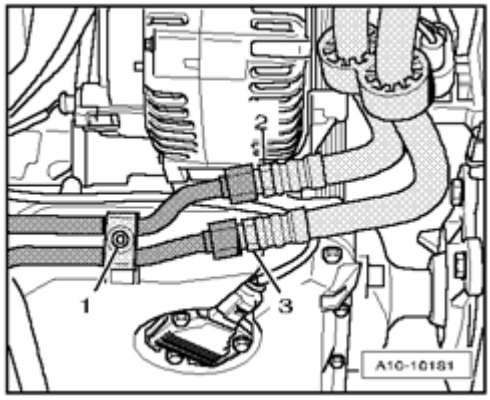

Fig. 26: Loosening Union Nuts And Disconnecting ATF Lines
Courtesy of VOLKSWAGEN UNITED STATES, INC.

- Loosen union nuts - **2** - and - **3** - and disconnect ATF lines.

NOTE:

- **Ignore - 1 -.**

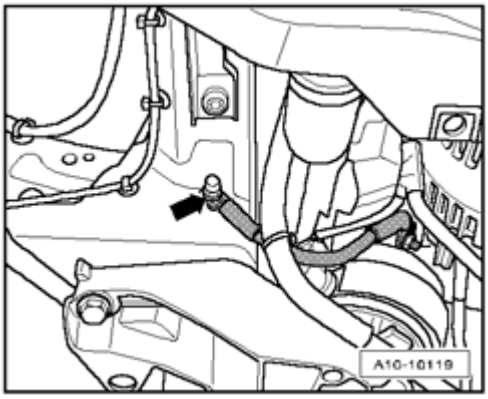

Fig. 27: Removing Ground (GND) Strap From Right Longitudinal Member
Courtesy of VOLKSWAGEN UNITED STATES, INC.

- Remove Ground (GND) cable - **arrow** - from right longitudinal member.

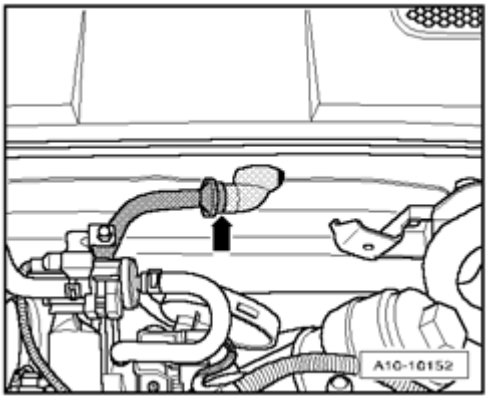

Fig. 28: Removing Vacuum Hose For Brake Booster At Bulkhead
Courtesy of VOLKSWAGEN UNITED STATES, INC.

- Remove vacuum hose - **arrow** - for brake booster at bulkhead.

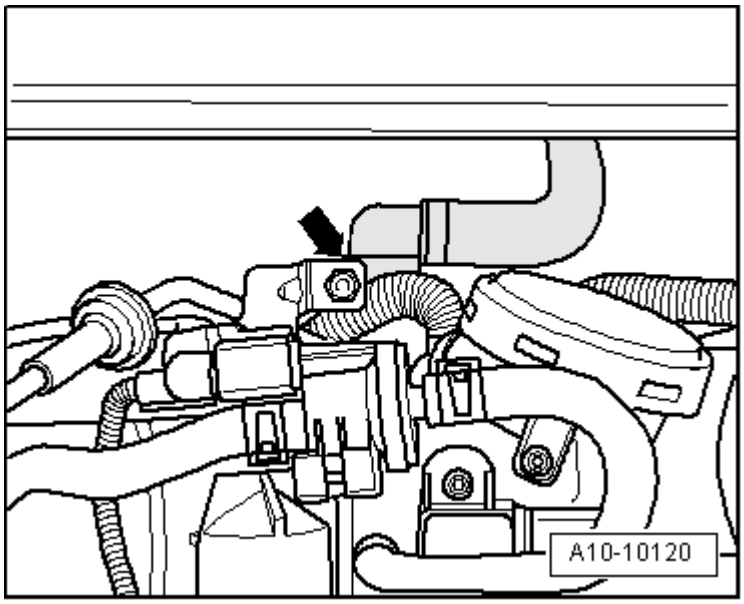

Fig. 29: Removing Coolant Hose To Heater Core On Rear Of Engine
Courtesy of VOLKSWAGEN UNITED STATES, INC.

- Remove coolant hose - **arrow** - to heater core on rear of engine.

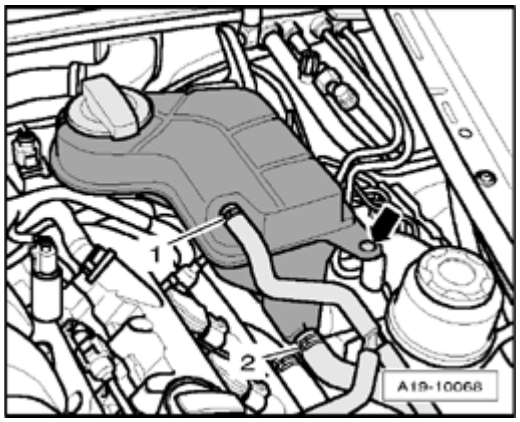

Fig. 30: Removing Coolant Hoses At Coolant Expansion Tank
Courtesy of VOLKSWAGEN UNITED STATES, INC.

- Remove coolant hoses - **1** - and - **2** - at coolant expansion tank.
- Remove coolant expansion tank - **arrow** -.
- Disconnect electrical connector on Engine Coolant Level (ECL) Warning Switch F66 at bottom of expansion tank.

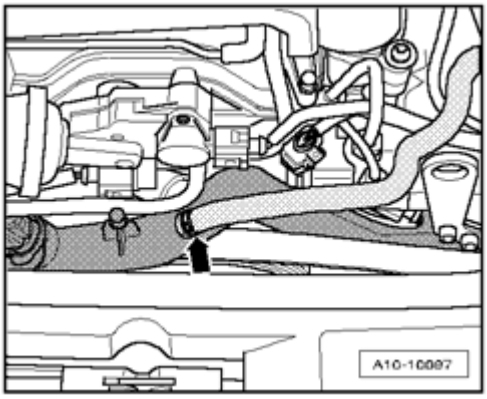

Fig. 31: Removing Coolant Hose From Front Coolant Line
Courtesy of VOLKSWAGEN UNITED STATES, INC.

- Remove coolant hose - **arrow** - from front coolant line.

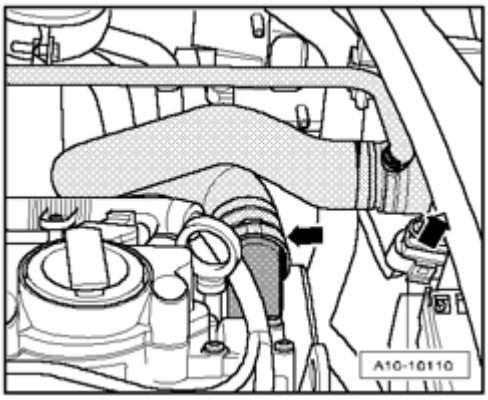

Fig. 32: Removing Left Front Coolant Hose In Engine Compartment
Courtesy of VOLKSWAGEN UNITED STATES, INC.

- Remove left front coolant hose in engine compartment - **arrows** -.

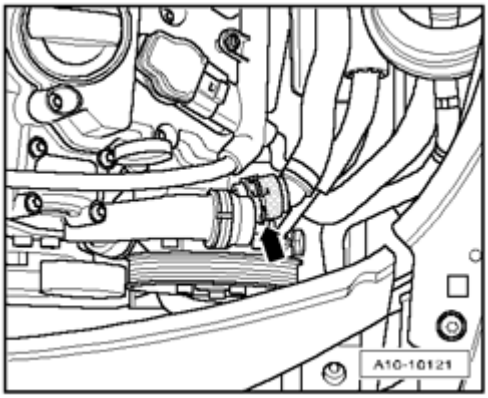

Fig. 33: Removing Coolant Hose From Front Coolant Line
Courtesy of VOLKSWAGEN UNITED STATES, INC.

- Remove coolant hose - **arrow** - from front coolant line.

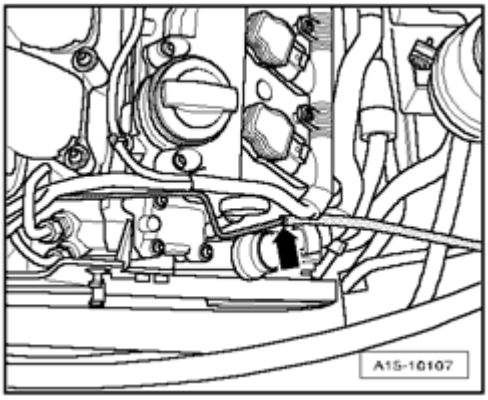

Fig. 34: Disconnecting Vacuum Hose To Leak Detection Pump
Courtesy of VOLKSWAGEN UNITED STATES, INC.

- Disconnect vacuum hose - **arrow** - to leak detection pump.

CAUTION: Note rules of cleanliness for working on the fuel injection system --> Clean Working Conditions .

CAUTION: Fuel system is under pressure! Before opening system, place rags around the connection area. Then release pressure by carefully loosening the connection.

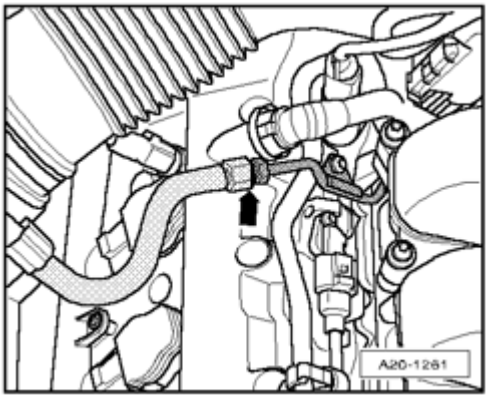

Fig. 35: Separating Fuel Line
Courtesy of VOLKSWAGEN UNITED STATES, INC.

- Separate fuel line - **arrow** - and lay aside.

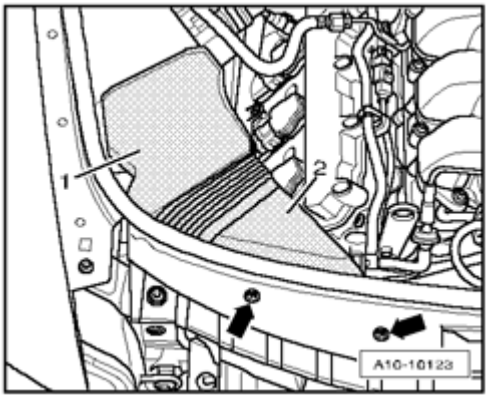

Fig. 36: Removing Air Duct Screws & Air Ducts
Courtesy of VOLKSWAGEN UNITED STATES, INC.

- Remove bolts - **arrows** -.
- Remove air duct - **1** - and - **2** -.

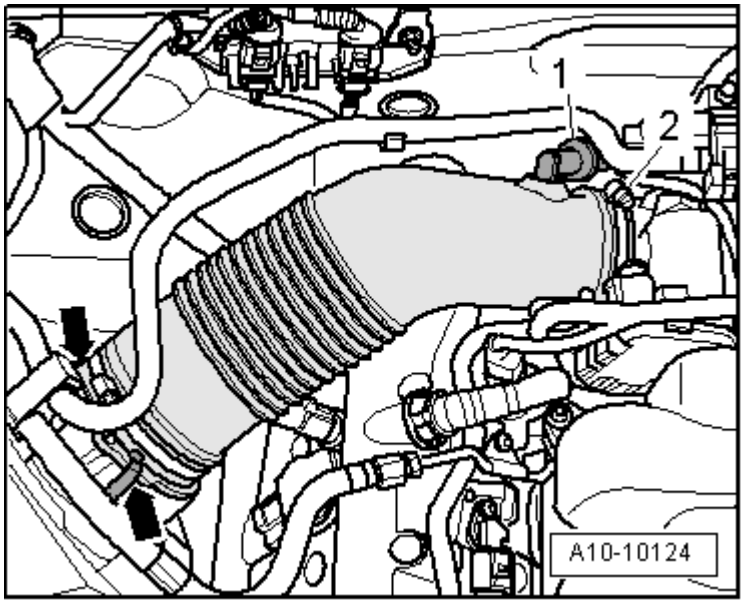

Fig. 37: Disconnecting Check Valve From Connection At Air Duct Hose & Removing Air Duct Hose
Courtesy of VOLKSWAGEN UNITED STATES, INC.

- Disconnect check valve - **1** - from air duct hose.
- Remove air duct hose, thereby loosening the hose clamp - **2** - and opening clips - **arrows** -.

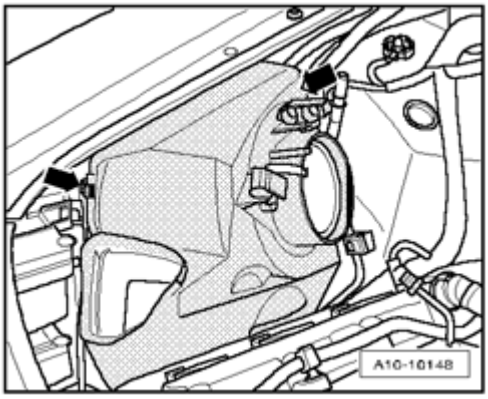

Fig. 38: Opening Clips And Removing Upper Part Of Air Filter Housing
Courtesy of VOLKSWAGEN UNITED STATES, INC.

- Open clips - **arrows** - and remove upper part of air filter housing.

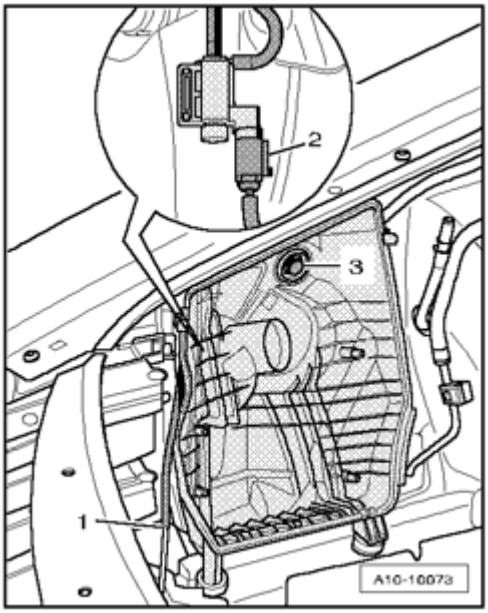

Fig. 39: Identifying Vacuum Line, Spreader Clips & Electrical Connection
Courtesy of VOLKSWAGEN UNITED STATES, INC.

- Disconnect vacuum line - **1** -.
- Remove pin from spreader clips - **3** -.
- Remove lower part of air filter housing and, on the backside, disconnect electrical connection - **2** - at the intake air switch-over valve N335.

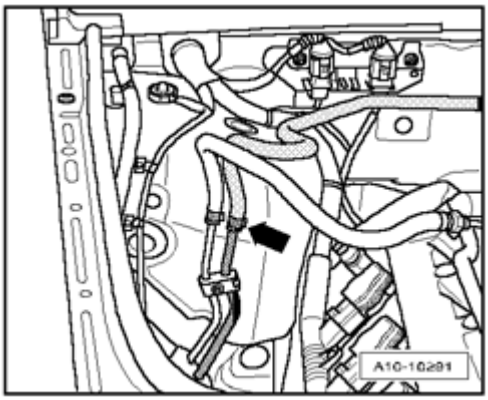

Fig. 40: Disconnecting Vacuum Hose To EVAP Canister
Courtesy of VOLKSWAGEN UNITED STATES, INC.

- Disconnect vacuum hose - **arrow** - to EVAP canister.

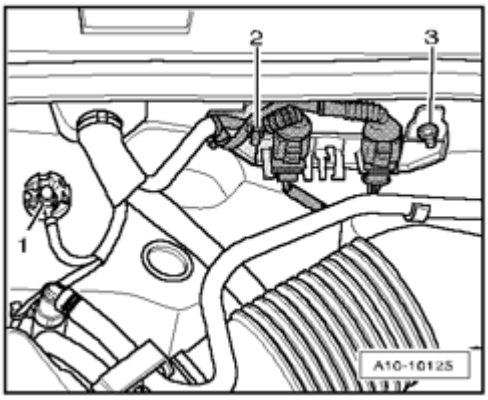

Fig. 41: Removing Nuts & Ground (GND) Wire
Courtesy of VOLKSWAGEN UNITED STATES, INC.

- Remove nuts - **2** - and - **3** - and remove right bracket for harness connectors from bulkhead.
- Remove Ground (GND) wire - **1** - on right strut tower.

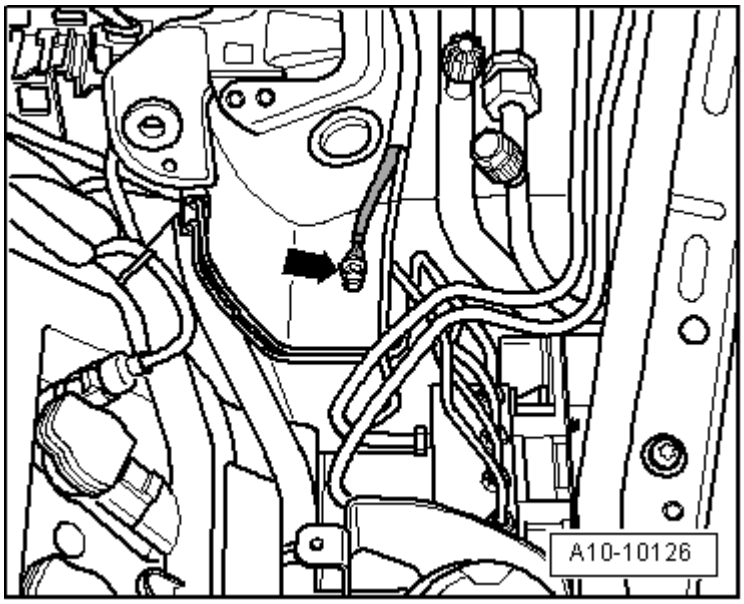

Fig. 42: Removing Ground (GND) Wire On Left Strut Tower
Courtesy of VOLKSWAGEN UNITED STATES, INC.

- Remove Ground (GND) wire - **arrow** - on left strut tower.

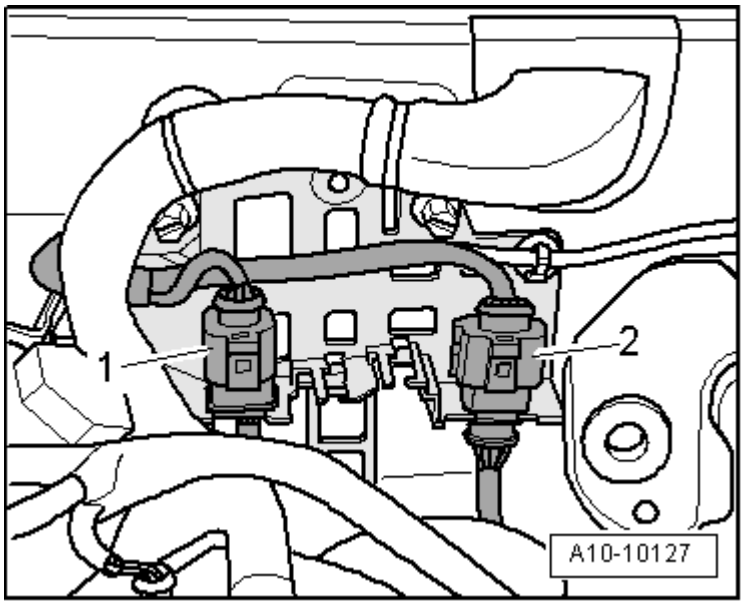

Fig. 43: Disconnecting Electrical Harness Connector For Oxygen Sensor (O2S) 2 Behind Three Way Catalytic Converter (TWC) G131
Courtesy of VOLKSWAGEN UNITED STATES, INC.

- Remove left bracket for harness connectors - **1** - and - **2** - from bulkhead.

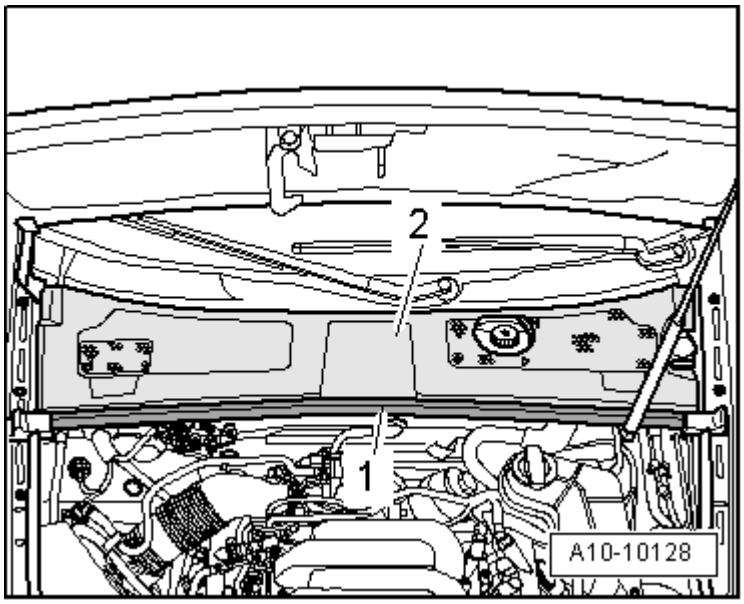

Fig. 44: Removing Rubber Seal For Plenum Chamber Cover & Plenum Chamber Cover
Courtesy of VOLKSWAGEN UNITED STATES, INC.

- Remove rubber seal - **1** - for plenum chamber cover.
- Remove plenum chamber cover - **2** -.

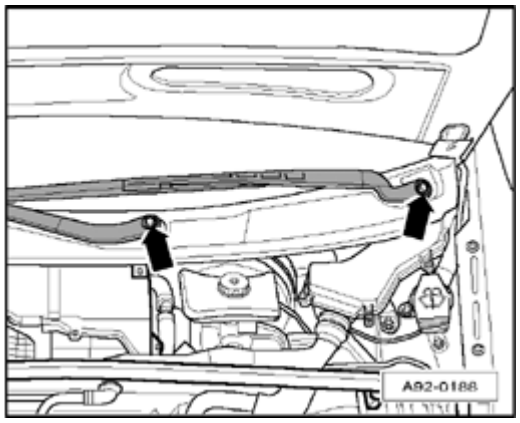

Fig. 45: Identifying Wiper Arm Nuts
Courtesy of VOLKSWAGEN UNITED STATES, INC.

- Pry off caps on the wiper arms using a screwdriver.
- Loosen nuts - **arrows** - by several turns.
- Loosen wiper arms by gently rocking the wiper arm. Remove the nuts and remove the wiper arms.

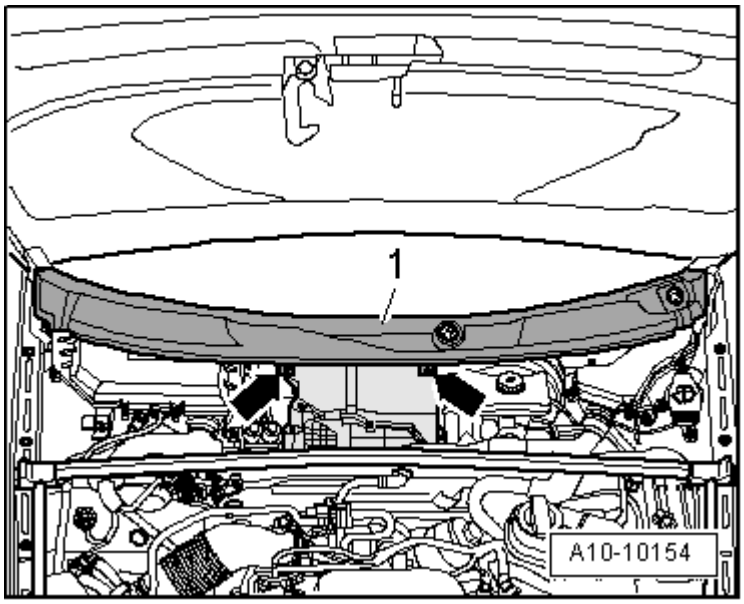

Fig. 46: Removing Bolts For Cowl Grill
Courtesy of VOLKSWAGEN UNITED STATES, INC.

- Remove bolts - **arrows** - for cowl grill - **1** -.

CAUTION: To prevent the cowl grille - 1 - from tearing when removing, coat transition between windshield and cowl grille with a soapy solution and pull grille up vertically out of fastening strip beginning at edge of window.

- Pull cowl grill off from windshield.

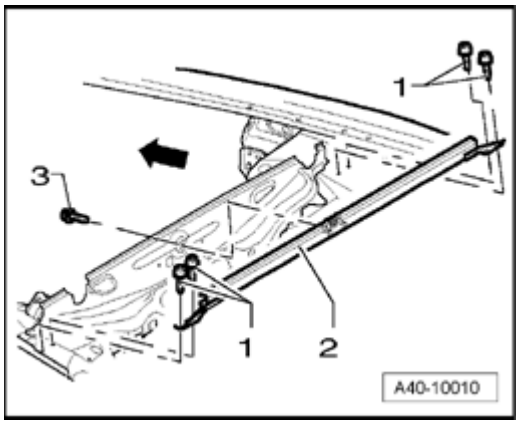

Fig. 47: Removing Bolts And Strut Tower Brace
Courtesy of VOLKSWAGEN UNITED STATES, INC.

- If equipped, remove bolts - **1** - and - **3** - and remove strut tower brace - **2** -.

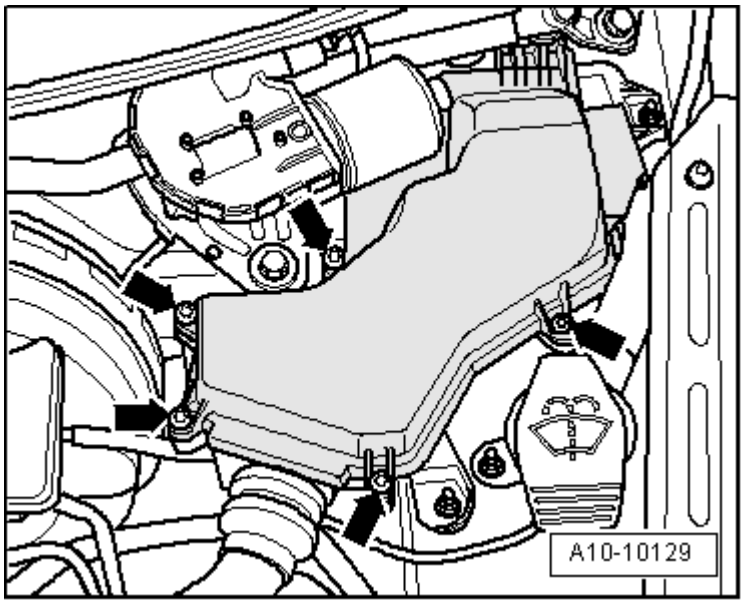

Fig. 48: Removing Bolts And Cover Form E-Box At Left In Engine Compartment
Courtesy of VOLKSWAGEN UNITED STATES, INC.

- Remove bolts - **arrows** - and remove cover form E-box at left in engine compartment.

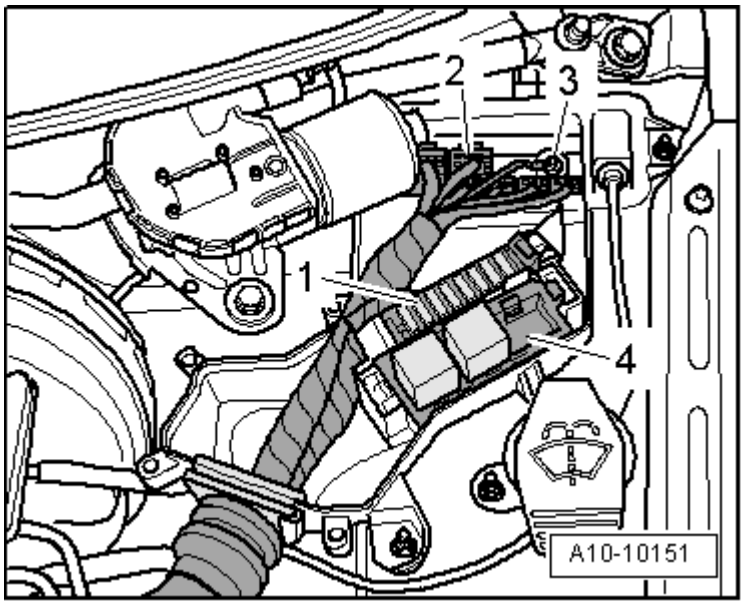

Fig. 49: Identifying Fuse Holder, 3-Socket Relay Carrier, Electrical Wire Connection & Electrical Connections
Courtesy of VOLKSWAGEN UNITED STATES, INC.

- Release retaining tabs and pull fuse holder - **1** - and 3-socket relay carrier - **4** - upward and off.
- Remove electrical wire connection - **3** -.
- Disconnect all electrical connections - **2** - at rear on the connector strip.
- Disengage and free up engine wiring harness at E-Box.

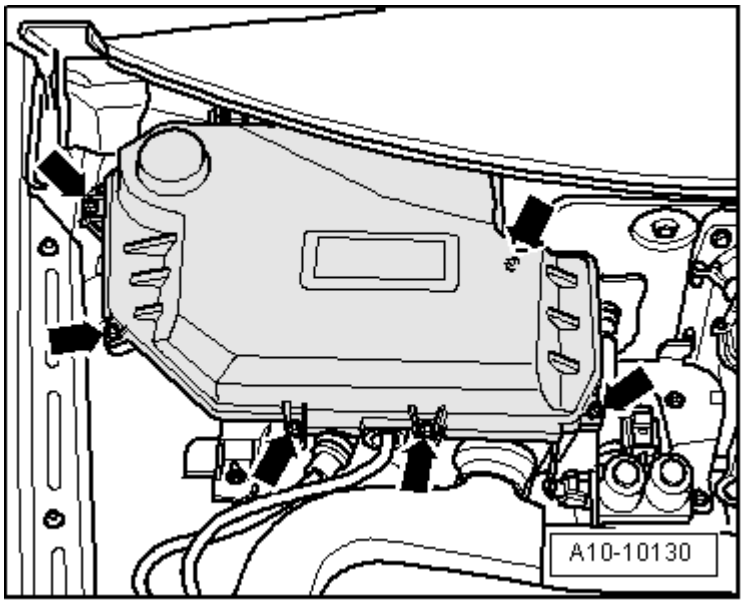

Fig. 50: Removing Bolts And Cover For E-Box At Right In Engine Compartment
Courtesy of VOLKSWAGEN UNITED STATES, INC.

- Remove bolts - **arrows** - and remove cover for E-box at right in engine compartment.

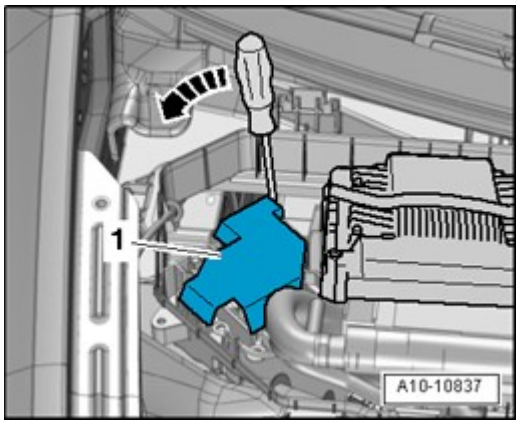

Fig. 51: Opening Cover Using Screwdriver
Courtesy of VOLKSWAGEN UNITED STATES, INC.

- Where present, open cover - **1** - using a screwdriver - **arrow** - and remove.

CAUTION: The heater pump valve unit (left of E-box) becomes very hot during operation - Risk of burning!

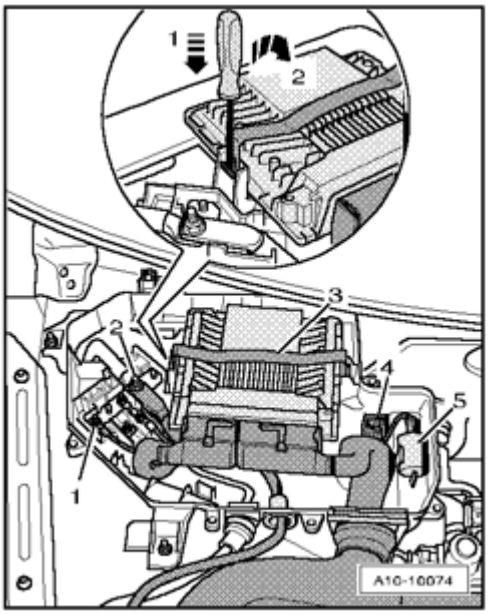

Fig. 52: Prying Off Retaining Clip With Screwdriver And Removing ECM From E-Box
Courtesy of VOLKSWAGEN UNITED STATES, INC.

- Carefully pry off the retaining clip - **3** - with a screwdriver - **arrows 1 and 2** - and remove the ECM from the E-box.

NOTE:

- **Engine Control Module (ECM) remains connected at wiring harness.**

- Unclip suppression capacitor - **5** - from bracket in E-box.
- Disconnect electrical connection - **4** - at rear on connector strip.
- Remove electrical wiring connections - **1** - and - **2** -.

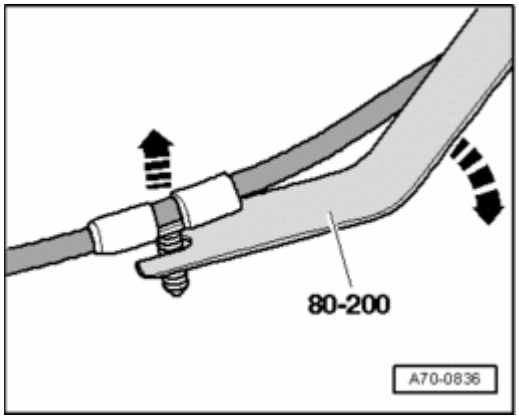

Fig. 53: Using Pry Lever 80 - 200 To Remove Instrument Panel Central Tube
Courtesy of VOLKSWAGEN UNITED STATES, INC.

- Free electrical wiring up to generator using Pry Lever - Rmv Outside Mirror 80-200.
- Set both wiring harnesses on engine and secure Engine Control Module (ECM) against falling down.

- Have a second technician press brake pedal.

CAUTION: To loosen collar bolt for drive axle, the wheel bearing must not be under load (vehicle must not be standing on its wheels).

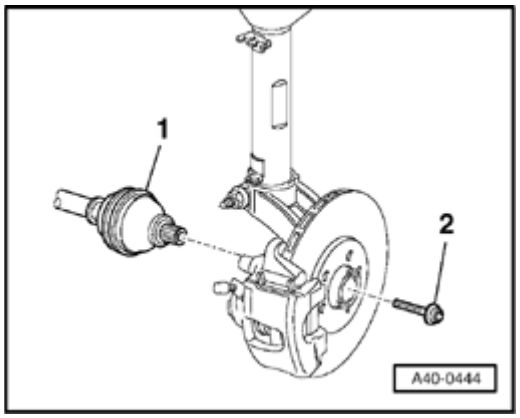

Fig. 54: Removing Collar Bolt At Left/Right Drive Axles
Courtesy of VOLKSWAGEN UNITED STATES, INC.

- Remove collar bolt - **2** - at left and right drive axles - **1** -.

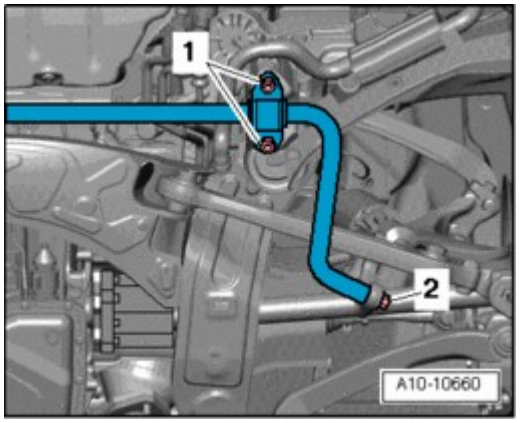

Fig. 55: Removing Left/Right Nuts, Bolts & Stabilizer Bar
Courtesy of VOLKSWAGEN UNITED STATES, INC.

- Evenly remove left and right nuts - **1** -.
- Remove left and right bolts - **2** - and remove stabilizer bar.

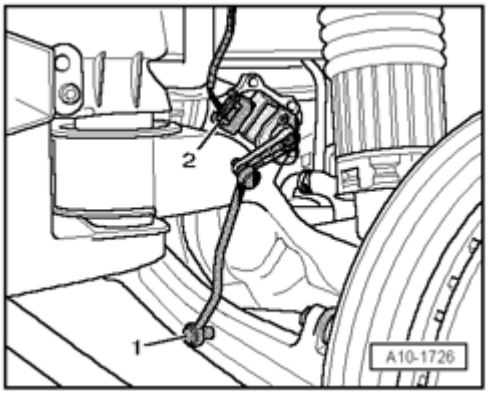

Fig. 56: Disconnecting Electrical Harness Connector At Level Control System Sensor
Courtesy of VOLKSWAGEN UNITED STATES, INC.

- Disconnect electrical harness connector - **2** - at Level Control System Sensor.

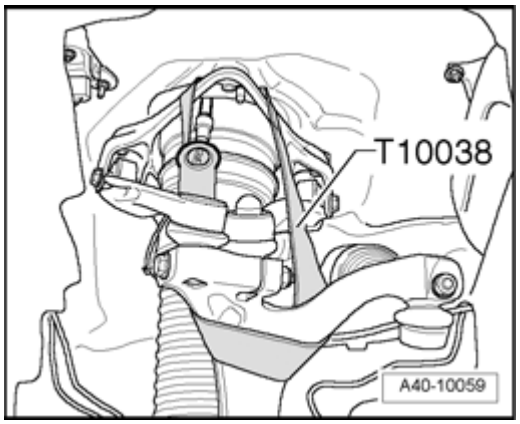

Fig. 57: Disconnecting Connecting Link At Control Arm
Courtesy of VOLKSWAGEN UNITED STATES, INC.

- Disconnect connecting link - **1** - at control arm.

CAUTION: Risk of damaging axle joints on upper control arms.

- **Support wheel bearing housing.**

- Tie up wheel bearing housing with Tension Strap T10038 as shown in illustration.

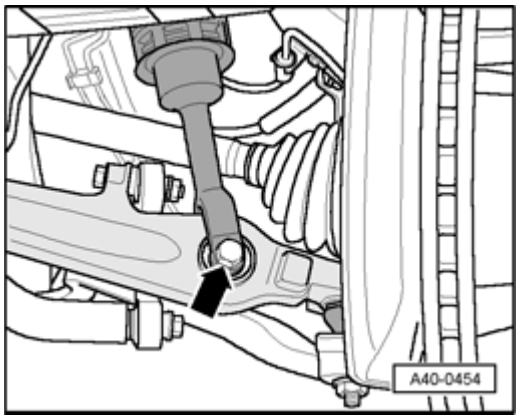

Fig. 58: Removing Suspension Strut From Control Arm
Courtesy of VOLKSWAGEN UNITED STATES, INC.

- Remove suspension strut from control arm - **arrow** -.

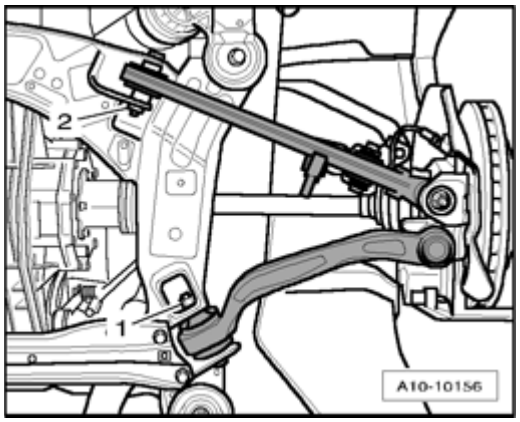

Fig. 59: Removing Guide Control Arm And Control Arm On Subframe
Courtesy of VOLKSWAGEN UNITED STATES, INC.

- Remove guide control arm - **1** - and control arm - **2** - on subframe.

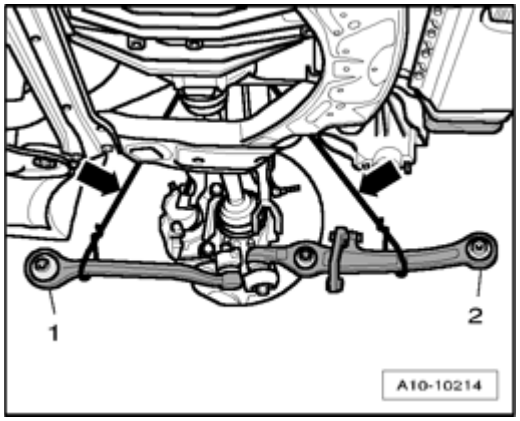

Fig. 60: Swinging Guide Control Arm And Control Arm Outward
Courtesy of VOLKSWAGEN UNITED STATES, INC.

- Swing guide control arm - **1** - and control arm - **2** - outward.

CAUTION: Guide control arm and control arm must not hang free. Tie up both control arms on wheel bearing housing - arrows - as shown in illustration.

- Repeat work procedure on opposite side of the vehicle.

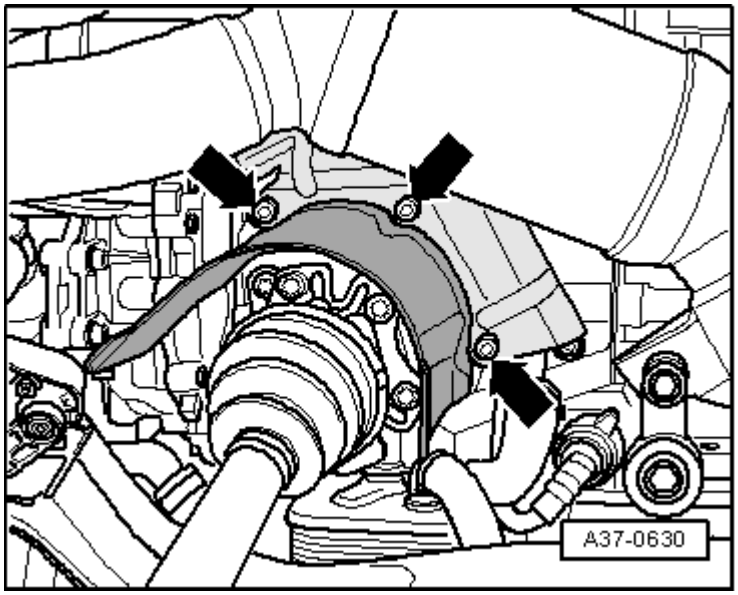

Fig. 61: Removing Heat Shield For Drive Axle
Courtesy of VOLKSWAGEN UNITED STATES, INC.

- Remove heat shield for drive axle - **arrows** -.
- Remove drive axle from transmission flanged shaft.

CAUTION: Do not damage brake hose!

- Swing wheel bearing housing outward and remove drive axle.
- Repeat work procedure on opposite side of the vehicle.

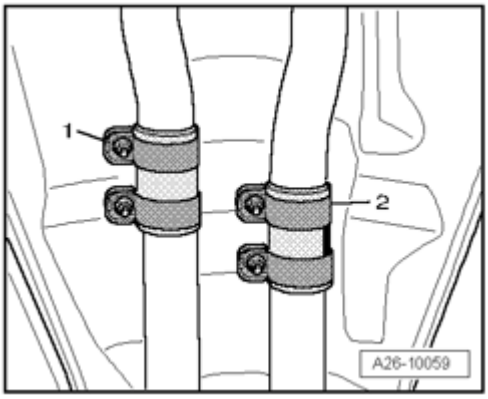

Fig. 62: Loosening Clamping Sleeves
Courtesy of VOLKSWAGEN UNITED STATES, INC.

- Loosen clamping sleeves - **1** - and - **2** -.

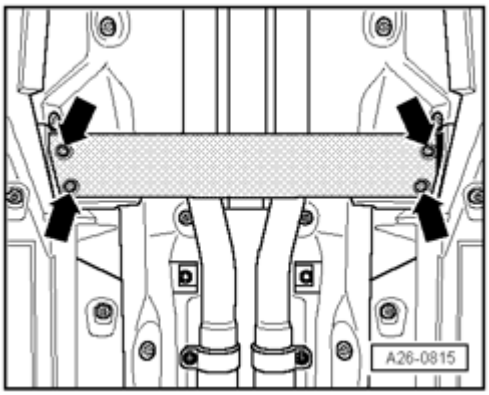

Fig. 63: Removing Front Transverse Beam
Courtesy of VOLKSWAGEN UNITED STATES, INC.

- Remove front transverse beam - **arrows** -.

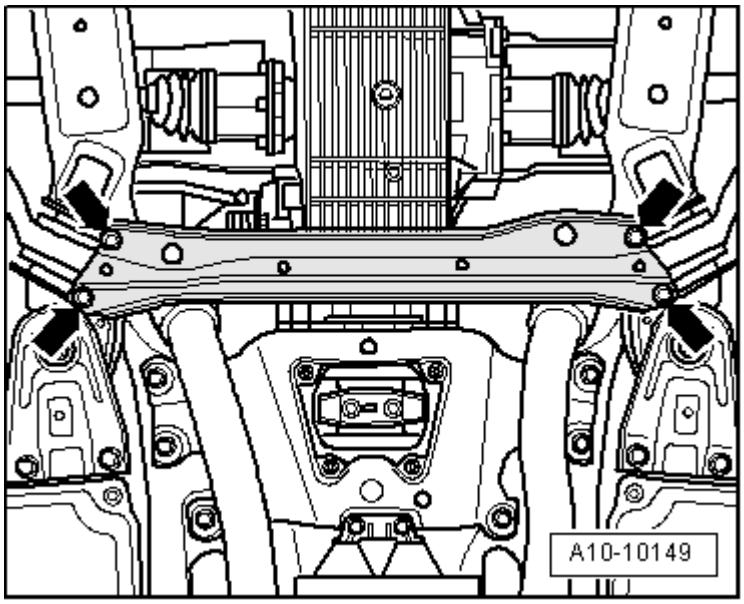

Fig. 64: Removing Subframe Transverse Beam
Courtesy of VOLKSWAGEN UNITED STATES, INC.

- Remove subframe transverse beam - **arrows** -.

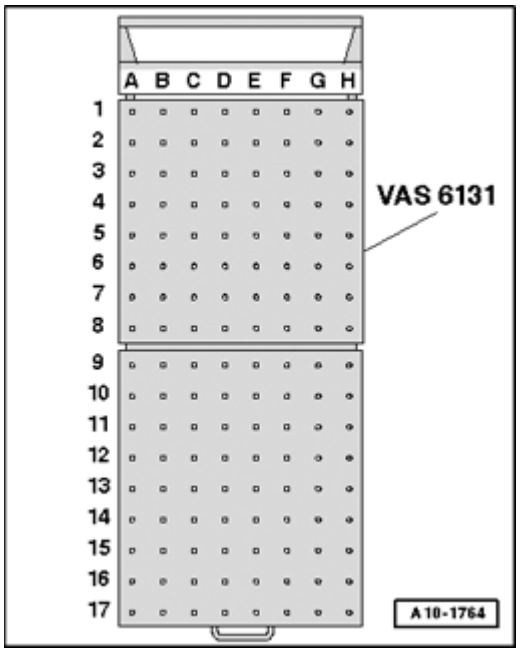

Fig. 65: Identifying Scissor Lift Platform VAS 6131 A
Courtesy of VOLKSWAGEN UNITED STATES, INC.

Prepare scissor lift platform:

- Equip scissor lift platform VAS 6131 A with support set for Audi VAS 6131/10 as follows:

Platform coordinates	Parts of support set for Audi VAS 6131/10			
B4	/10-1	/10-4	/10-5	/10-11
G4	/10-1	/10-4	/10-5	/10-12
B10	/10-1	/10-2	/10-5	/10-8
G	/10-1	/10-2	/10-5	/10-8
E13	/10-1	/10-3	/10-5	/10-6
D16	/10-1	/10-3	/10-5	/10-6

- Install support elements first tightly by hand on scissor lift platform.
- Place scissor lift platform VAS 6131 A in horizontal position.

- Note bubble level (sight glass) on support platform.

- Drive scissor lift platform VAS 6131 A under engine/transmission subassembly.

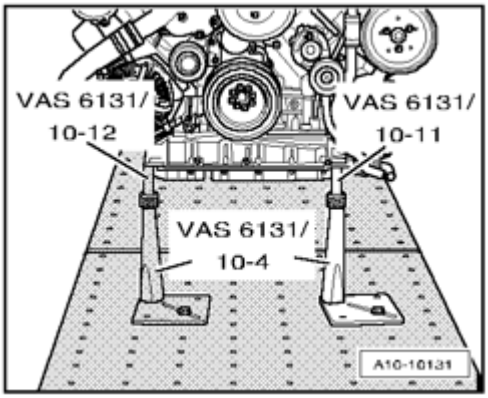

Fig. 66: Positioning Support Elements From VAS 6131/10 At Front On Engine
Courtesy of VOLKSWAGEN UNITED STATES, INC.

- Position support elements from VAS 6131/10 at front on engine as shown in illustration.
- Make sure that the threaded spindles are completely screwed in.

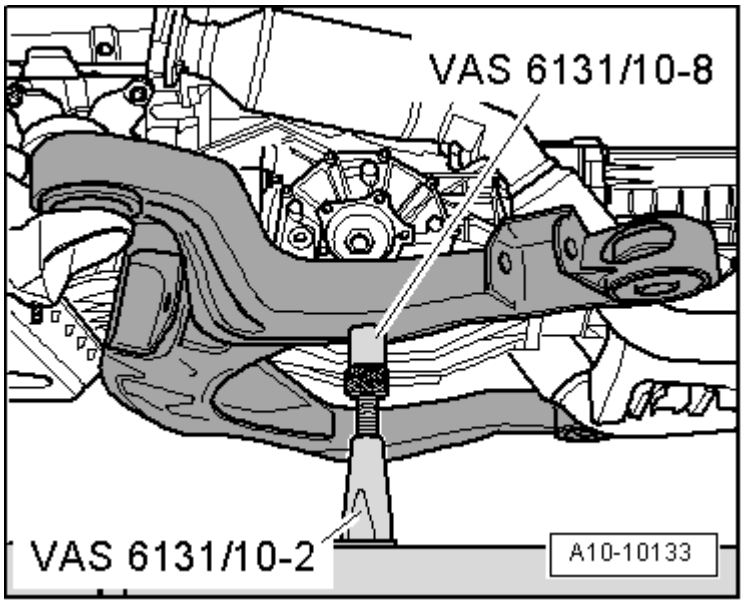

Fig. 67: Positioning Support Elements From VAS 6131/10 At Left/Right On Subframe
Courtesy of VOLKSWAGEN UNITED STATES, INC.

- Position support elements from VAS 6131/10 at left and right on subframe as shown in illustration.

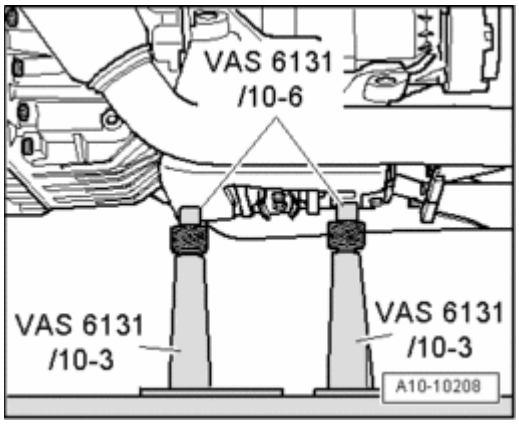

Fig. 68: Positioning Support Elements From VAS 6131/10 At Rear On Tunnel Cross Member
Courtesy of VOLKSWAGEN UNITED STATES, INC.

- Position support elements from VAS 6131/10 at rear on tunnel cross member, as shown in illustration.
- Twist all spindles of support elements upward far enough until all support pins make contact at support points.
- Tighten base plates for support elements to 20 Nm on scissor lift platform VAS 6131 A.

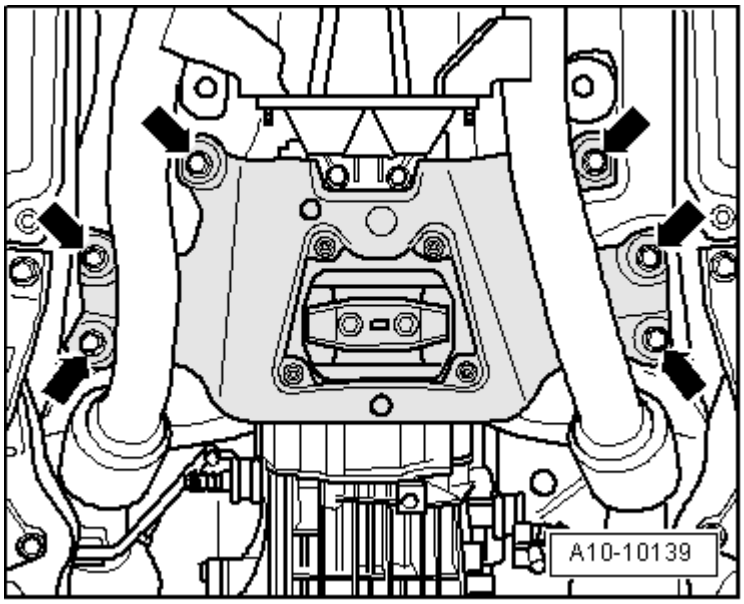

Fig. 69: Removing Bolts On Tunnel Cross Member
Courtesy of VOLKSWAGEN UNITED STATES, INC.

- Remove bolts - **arrows** - on tunnel cross member.

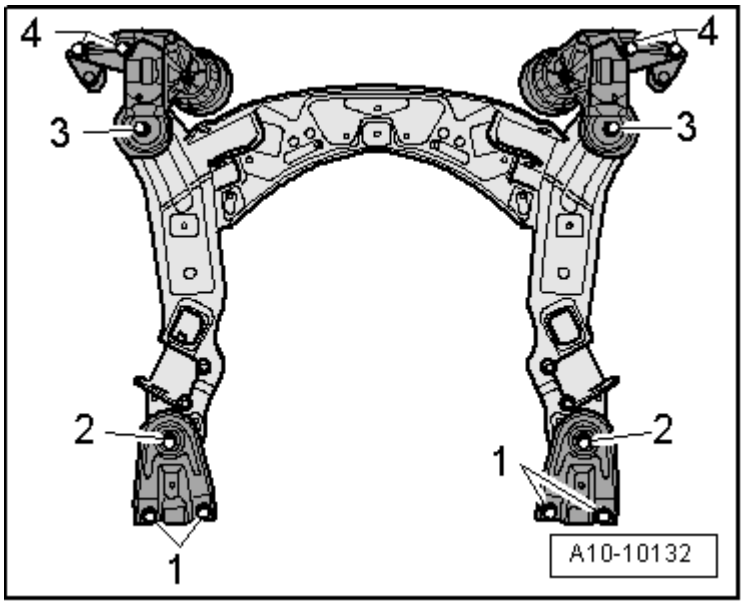

Fig. 70: Bolts Removal Sequence
Courtesy of VOLKSWAGEN UNITED STATES, INC.

- Remove bolts - **1** -.
- Mark installation position of subframe and of both engine mount consoles to longmembers using a felt-tip marker.
- Remove bolts - **2** - , - **3** - and - **4** - in diagonal sequence and in stages.

NOTE:

- **Verify that all hoses and lines between engine, transmission, subframe and body have been disconnected.**
- **While lowering, carefully guide engine/transmission subassembly with subframe out of engine compartment in order to prevent damage.**

- Slowly lower engine/transmission subassembly downward (approximately 10 cm).
- Mark selector lever cable bracket installation location.

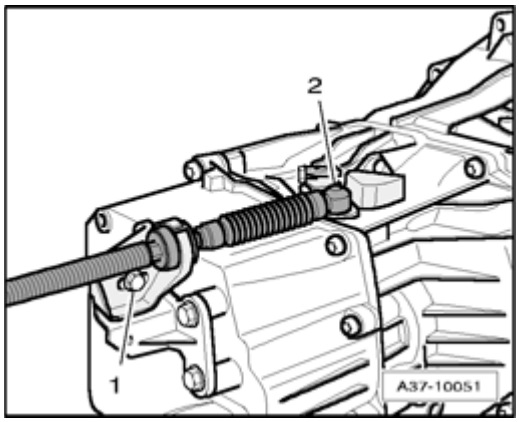

Fig. 71: Removing Support Bracket For Selector Lever Cable
Courtesy of VOLKSWAGEN UNITED STATES, INC.

- Remove selector lever cable bracket bolt - **1** -.
- Press ball socket - **2** - of selector lever cable from selector shaft lever.

NOTE:

- **Do not bend or kink selector lever cable.**

- Completely lower Scissor Lift Table VAS 6131 A and remove it with engine/transmission assembly under vehicle.

Engine and Transmission, Separating

Engine and Transmission, Separating

Special tools, testers and auxiliary items required

- Support Set VAS 6131/10 and Supplementary Set Audi A6 (C6) VAS 6131/12

Procedure

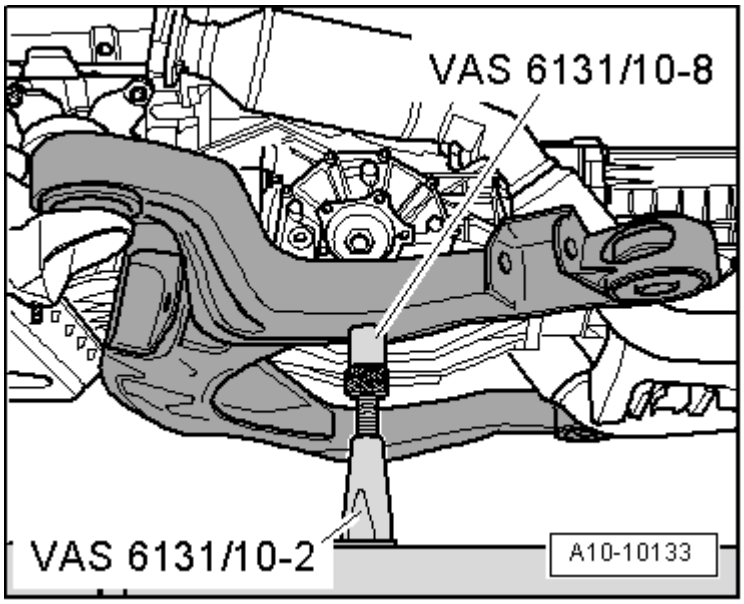

Fig. 72: Positioning Support Elements From VAS 6131/10 At Left/Right On Subframe
Courtesy of VOLKSWAGEN UNITED STATES, INC.

- Engine/transmission assembly removed and placed on Scissor Lift Table VAS 6131 A.

- Twist spindles of support elements at left and right at subframe completely downward.
- Remove support pins from spindles.
- Remove subframe to side.
- Remove both base plates of the subframe support elements on scissor lift table VAS 6131 A.

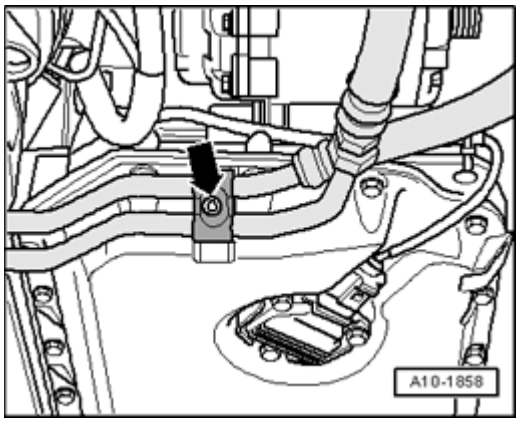

Fig. 73: Removing ATF Line Bracket
Courtesy of VOLKSWAGEN UNITED STATES, INC.

- Remove ATF line bracket - **arrow** -.

NOTE:

- **Observe the rules of cleanliness for working on automatic transmissions --> 00 TECHNICAL DATA .**

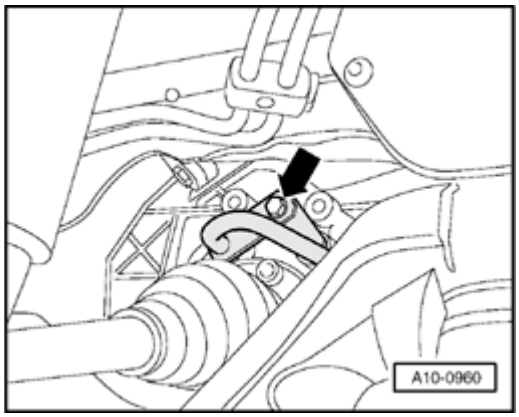

Fig. 74: Removing Bolt And Disconnecting ATF Lines From Transmission
Courtesy of VOLKSWAGEN UNITED STATES, INC.

- Remove bolt - **arrow** - and disconnect ATF lines from transmission.

NOTE:

- **The support points for front of engine and tunnel cross member remain unchanged.**

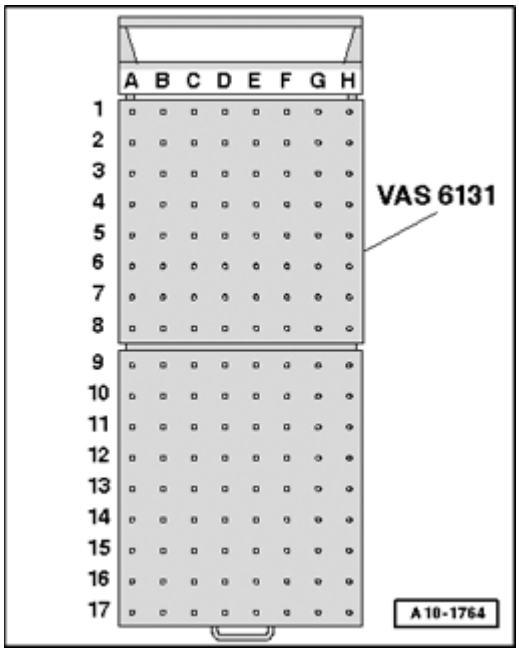

Fig. 75: Identifying Scissor Lift Platform VAS 6131
Courtesy of VOLKSWAGEN UNITED STATES, INC.

- Equip scissor lift platform VAS 6131 A with support set for Audi VAS 6131/10 and VAS 6131/12 as follows:

Platform coordinates	Parts of Support Set VAS 6131/10 and VAS 6131/12			
B4 1)	/10-1	/10-4	/10-5	/10-11

G4 1)	/10-1	/10-4	/10-5	/10-12
B7	/10-1	/10-4	/10-5	/10-11
G7	/10-1	/10-4	/10-5	/10-10
C10	/10-1	/10-4	/10-5	/12-1
G	/10-1	/12-2	/10-5	/12-1
E13 1)	/10-1	/10-3	/10-5	/10-6
D16 1)	/10-1	/10-3	/10-5	/10-6
1) The support elements remain unchanged.				

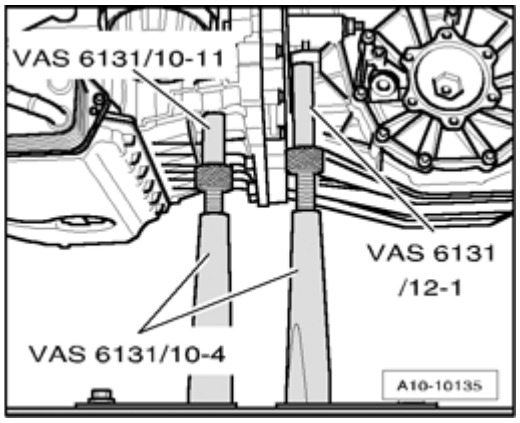

Fig. 76: Positioning/Removing Support Elements From VAS 6131/10 And VAS 6131/12 At Left On Engine
Courtesy of VOLKSWAGEN UNITED STATES, INC.

- Position support elements from VAS 6131/10 and VAS 6131/12 at left on engine/transmission assembly as shown in illustration.

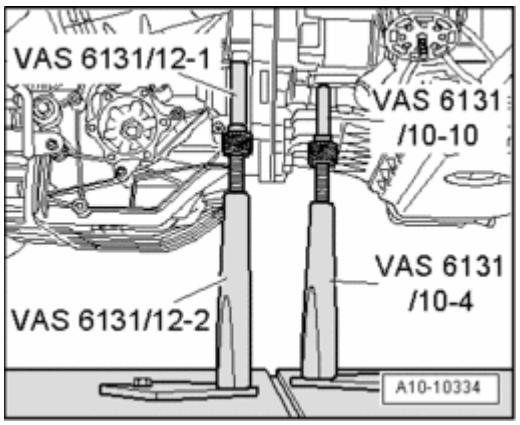

Fig. 77: Removing Both Base Plates For Right Support Element On Scissor Lift Table VAS 6131 A
Courtesy of VOLKSWAGEN UNITED STATES, INC.

- Position support elements from VAS 6131/10 and VAS 6131/12 at right on engine/transmission assembly as shown in illustration.
- Twist spindles of attachments upward far enough until all support pins make contact at support points.

- Tighten base plates for support elements to 20 Nm on scissor lift platform VAS 6131 A.

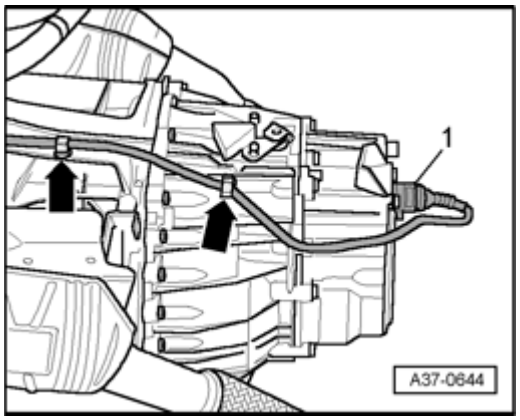

Fig. 78: Releasing Electrical Connector And Removing From Transmission
Courtesy of VOLKSWAGEN UNITED STATES, INC.

- Release electrical connector - **1** - and remove from transmission.
- Free up wiring harness to engine - **arrows** -.

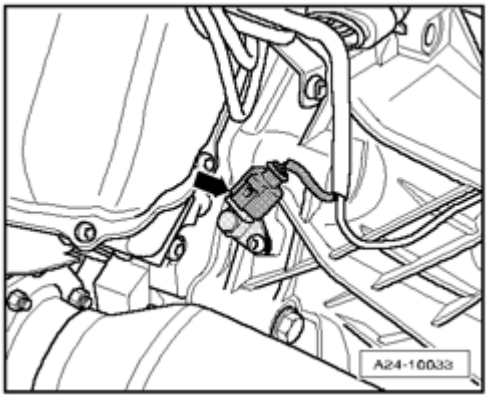

Fig. 79: Disconnecting Electrical Connector For Engine Speed (RPM) Sensor G28
Courtesy of VOLKSWAGEN UNITED STATES, INC.

- Disconnect electrical connector - **arrow** - for Engine Speed (RPM) Sensor G28.

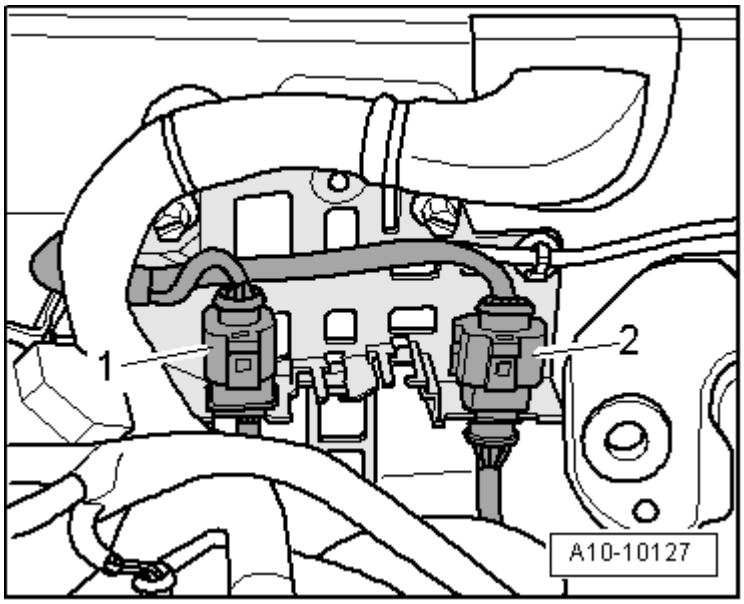

Fig. 80: Disconnecting Electrical Harness Connector For Oxygen Sensor (O2S) 2 Behind Three Way Catalytic Converter (TWC) G131
Courtesy of VOLKSWAGEN UNITED STATES, INC.

- Disconnect electrical harness connector - **2** - for Oxygen Sensor (O2S) 2 Behind Three Way Catalytic Converter (TWC) G131 and free up wire.

NOTE:

- **In the illustration, the electrical harness connector is depicted as installed.**
- **Ignore - 1 -.**

NOTE:

- **Do not bend the flex joint in front of the exhaust pipe more than 10 or it could be damaged.**

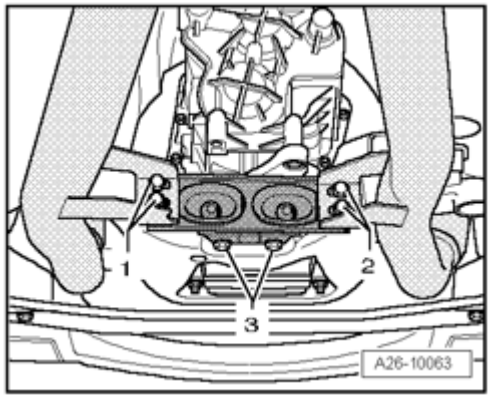

Fig. 81: Removing/Installing Mounting Bolts For Front Exhaust Pipes
Courtesy of VOLKSWAGEN UNITED STATES, INC.

- Remove bolts - **1** - at rear bracket for exhaust system.

NOTE:

- **Ignore - 2 - and - 3 -.**

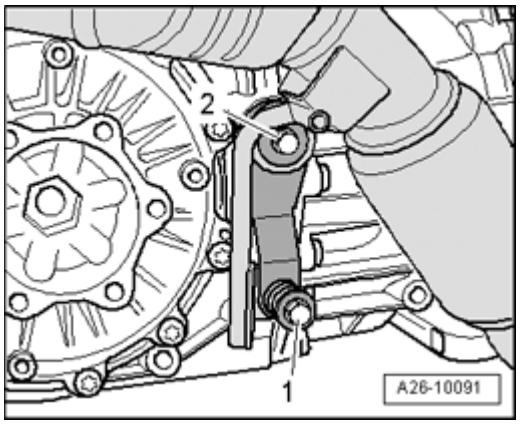

Fig. 82: Removing Bolt At Left Bracket For Front Exhaust Pipe
Courtesy of VOLKSWAGEN UNITED STATES, INC.

- Remove bolt - **1** - at left bracket for front exhaust pipe.

NOTE:

- **Ignore - 2 -.**

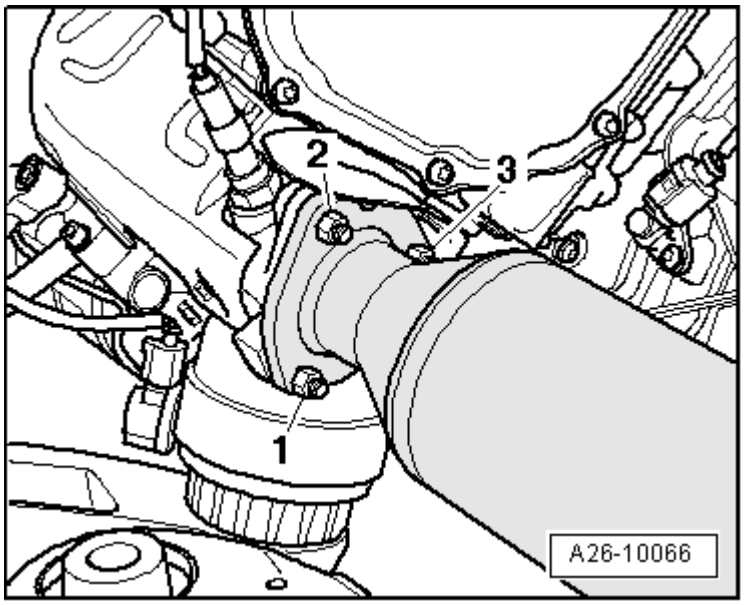

Fig. 83: Removing Nuts & Left Front Exhaust Pipe With Catalytic Converter
Courtesy of VOLKSWAGEN UNITED STATES, INC.

- Remove nuts - **1 to 3** -.
- Remove left front exhaust pipe with catalytic converter.

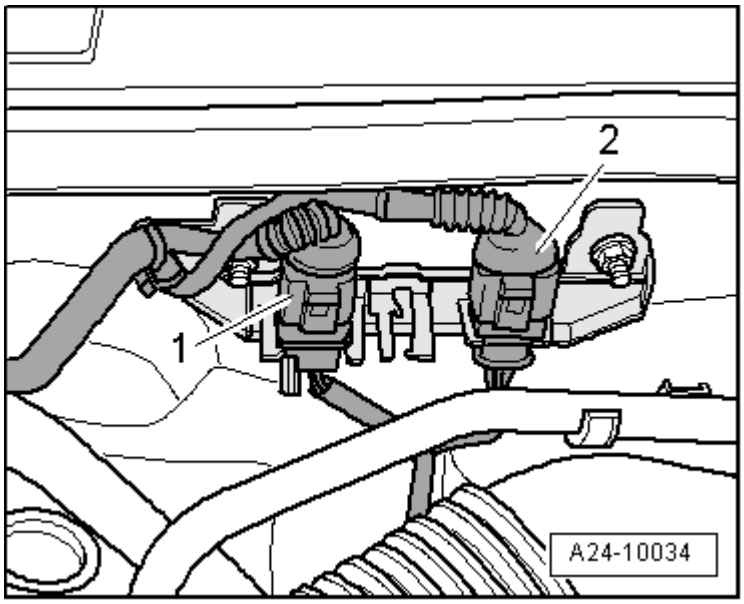

Fig. 84: Disconnecting Electrical Harness Connector For Oxygen Sensor (O2S) Behind Three Way Catalytic Converter (TWC) G130
Courtesy of VOLKSWAGEN UNITED STATES, INC.

- Disconnect electrical harness connector - **2** - for Oxygen Sensor (O2S) Behind Three Way Catalytic Converter (TWC) G130 and free up wire.

NOTE:

- **In the illustration, the electrical harness connector is depicted as installed.**
- **Ignore - 1 -.**

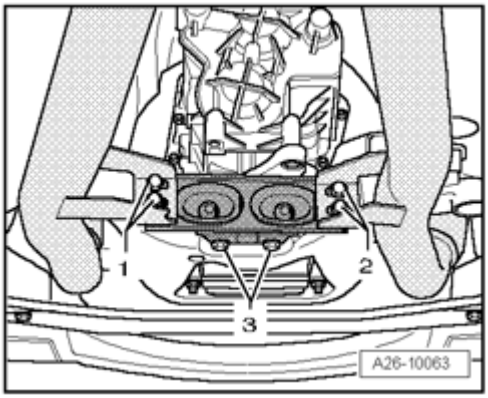

Fig. 85: Removing/Installing Mounting Bolts For Front Exhaust Pipes
Courtesy of VOLKSWAGEN UNITED STATES, INC.

NOTE:

- **Do not bend the flex joint in front of the exhaust pipe more than 10 or it could be damaged.**

- Remove bolts - **2** - at rear bracket for exhaust system.

NOTE:

- **Ignore - 1 - and - 3 -.**

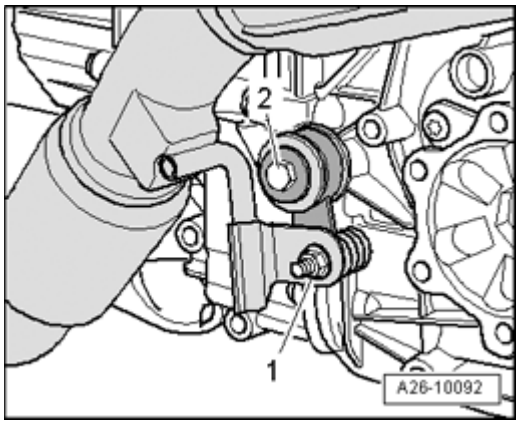

Fig. 86: Removing Bolt At Right Bracket For Front Exhaust Pipe
Courtesy of VOLKSWAGEN UNITED STATES, INC.

- Remove bolt - **1** - at right bracket for front exhaust pipe.

NOTE:

- **Ignore - 2 -.**

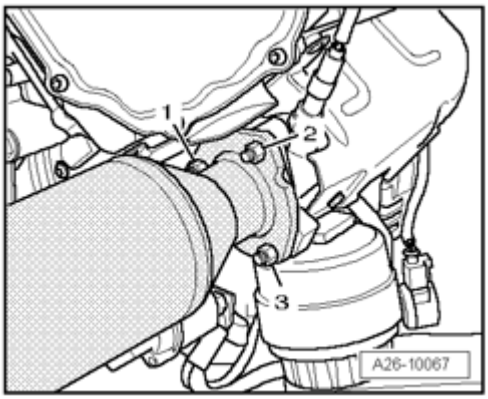

Fig. 87: Removing Nuts & Right Front Exhaust Pipe With Catalytic Converter
Courtesy of VOLKSWAGEN UNITED STATES, INC.

- Remove nuts - **1 to 3** -.
- Remove right front exhaust pipe with catalytic converter.

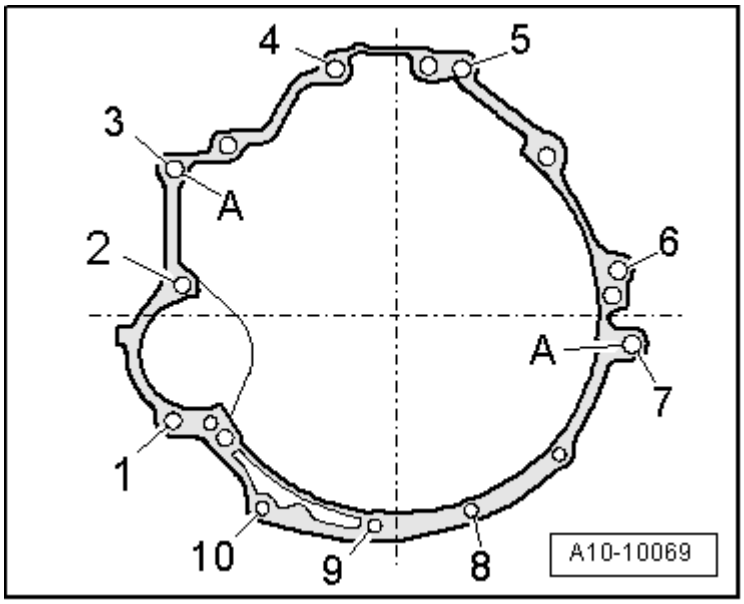

Fig. 88: Identifying Engine/Transmission Threaded Connections
Courtesy of VOLKSWAGEN UNITED STATES, INC.

- Remove engine/transmission threaded connections - **1 to 10** -.

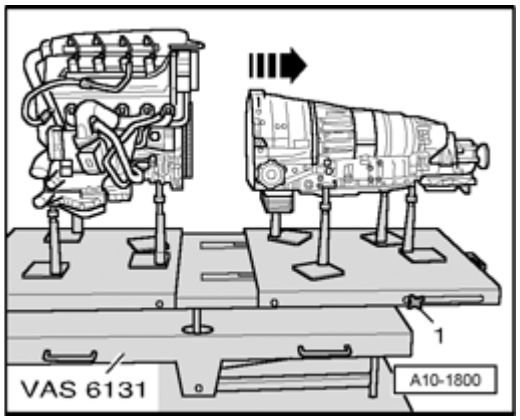

Fig. 89: Loosening Clamping Bolts On Side Of Scissor Lift Table VAS 6131 And Pulling Rear Table Section With Transmission Rearward
Courtesy of VOLKSWAGEN UNITED STATES, INC.

- Loosen clamping bolts - **1** - on side of scissor lift table VAS 6131 A and pull rear table section with transmission rearward - **arrow** -.

Engine, Securing to Engine and Transmission Holder

Engine, Securing to Engine and Transmission Holder

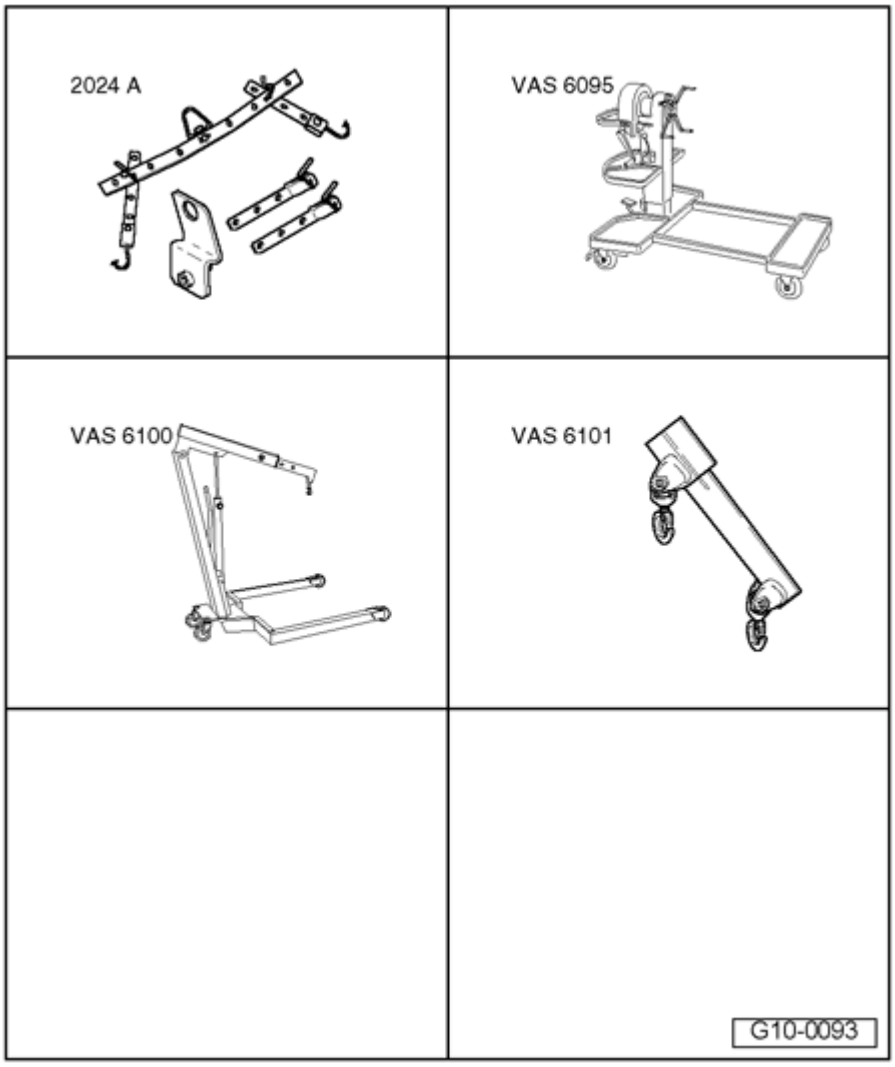

Fig. 90: Identifying Special Tools - Engine, Securing To Engine And Transmission Holder
Courtesy of VOLKSWAGEN UNITED STATES, INC.

Special tools, testers and auxiliary items required

- Lifting tackle 2024 A
- Engine and transmission holder VAS 6095 with bracket VAS 6095/1-5
- Shop crane VAS 6100
- Lift arm extension for workshop crane VAS 6101

Procedure

- Engine separated from transmission --> **Engine and Transmission, Separating**.

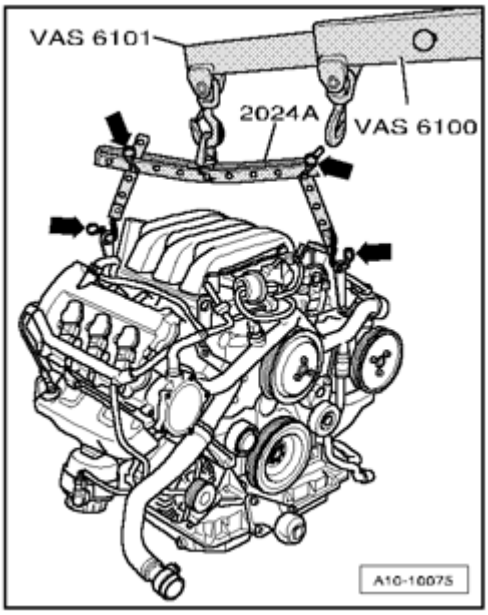

Fig. 91: Hooking Engine Sling 2024 A Onto Engine And Onto Workshop Crane VAS 6100 With Lift Arm Extension For Workshop Crane VAS 6101
Courtesy of VOLKSWAGEN UNITED STATES, INC.

- Hook engine sling 2024 A onto engine and onto workshop crane VAS 6100 with lift arm extension for workshop crane VAS 6101 as shown in the illustration.

NOTE:

- **To be aligned to the center of gravity of the engine assembly, the hole rails of the lifting hook must be inserted as shown in the illustration.**

CAUTION: Risk of accident due to loose engine sling components.

- **Use securing pins - arrows - to secure the lifting hooks and alignment pins.**

- Remove engine supports from cylinder block.

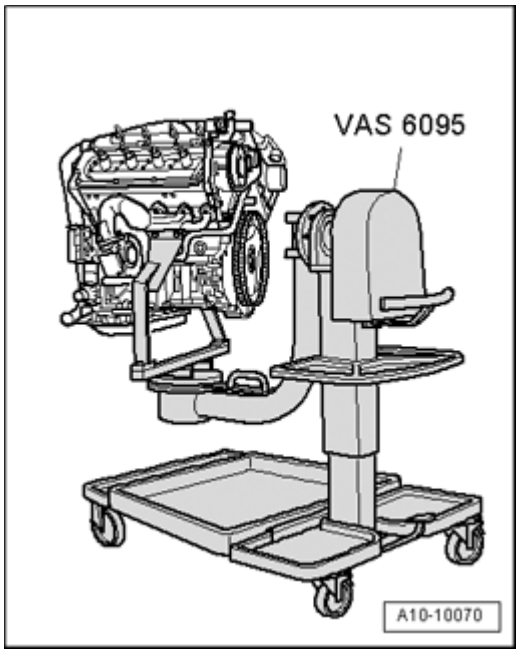

Fig. 92: Securing Engine Using Bracket VAS 6095/1-5 To 40 Nm Engine And Transmission Holder VAS 6095
Courtesy of VOLKSWAGEN UNITED STATES, INC.

- Secure engine using bracket VAS 6095/1-5 to 40 Nm Engine and Transmission Holder VAS 6095 as shown in illustration.

Engine, Installing

Engine, Installing

NOTE:

- **During assembly, replace self-locking nuts and bolts.**
- **Always replace bolts that are tightened to torque as well as sealing rings, gaskets and O-rings.**
- **Secure all hose connections with hose clamps appropriate for the model .**
- **During installation, all cable ties must be re-installed at the same location.**
- **Clean the transmission input shaft splines and the splines of the damper unit on the flywheel, remove corrosion and apply only a very thin coating of *lubricant G 000 100* on splines. Remove all excess grease.**

- Make sure centering sleeves for engine to transmission are installed in cylinder block. Install if necessary.
- Attach transmission to engine with new bolts.

NOTE:

- **Tightening specifications only apply to lightly greased, oiled, phosphated or blackened nuts and bolts.**
- **Additional lubricants, such as engine or transmission oil are permissible, although lubricants containing graphite are not.**

- **Do not use any degreased parts.**
- **Tolerance for torque specifications 15%.**

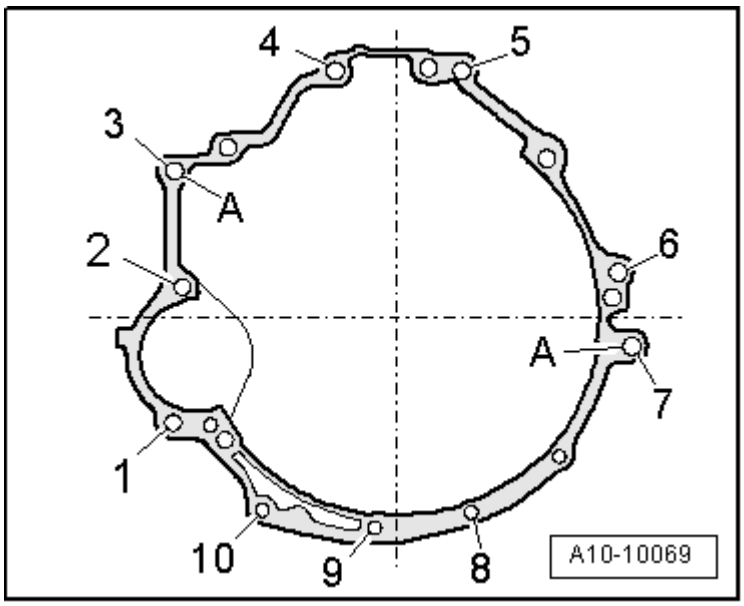

Fig. 93: Identifying Engine/Transmission Threaded Connections
Courtesy of VOLKSWAGEN UNITED STATES, INC.

Engine/transmission, fastening

Item	Bolt 1)	Nm
1, 7	M10x100	65 2)
2	M12x120	65
3, 5	M12x100	65
4, 6	M12x95	65
8, 9, 10	M10x70	45
A	Alignment sleeves for centering	
1) Replace engine/transmission securing bolts. 2) Bolt class 10.9.		

Further installation is in reverse order of removal, noting the following.

- Install front exhaust pipes with catalytic converter: Left --> **Left Front Exhaust Pipe with Catalytic Converter, Removing and Installing** , right --> **Right Exhaust Pipe with Catalytic Converter, Removing and Installing** .
- Fasten ATF lines --> **37 CONTROLS, HOUSING** .

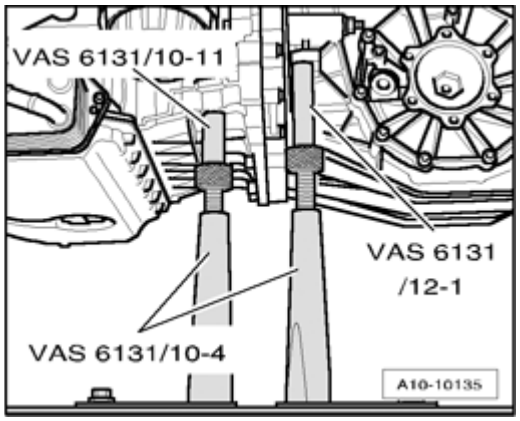

Fig. 94: Positioning/Removing Support Elements From VAS 6131/10 And VAS 6131/12 At Left On Engine
Courtesy of VOLKSWAGEN UNITED STATES, INC.

- Rotate attachment spindles at left of engine/transmission assembly downward.
- Remove both base plates for left support element on scissor lift platform VAS 6131 A.

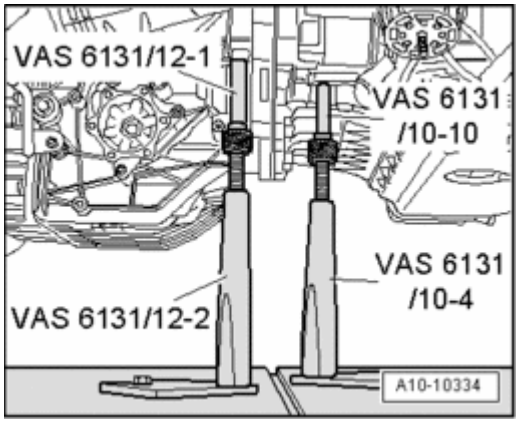

Fig. 95: Removing Both Base Plates For Right Support Element On Scissor Lift Table VAS 6131 A
Courtesy of VOLKSWAGEN UNITED STATES, INC.

- Rotate attachment spindles at right of engine/transmission assembly downward.
- Remove both base plates for right support element on Scissor Lift Table VAS 6131 A.

NOTE:

- **The support points for front of engine and tunnel cross member remain unchanged.**

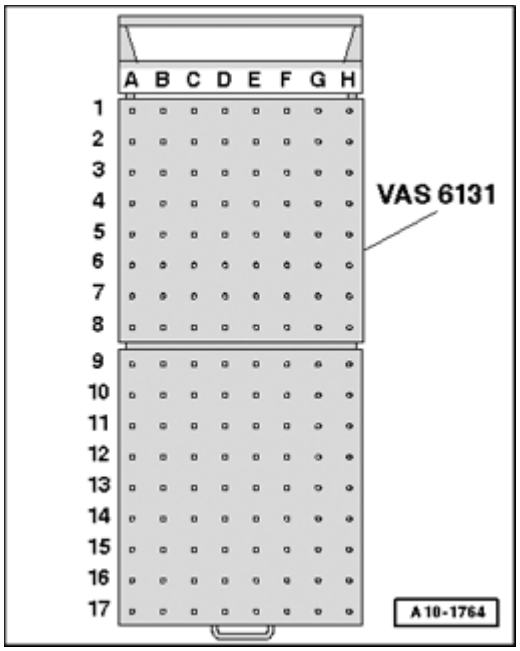

Fig. 96: Identifying Scissor Lift Platform VAS 6131
Courtesy of VOLKSWAGEN UNITED STATES, INC.

- Equip scissor lift platform VAS 6131 A with support set for Audi VAS 6131/10 as follows:

Platform coordinates	Parts of support set for Audi VAS 6131/10			
B4 1)	/10-1	/10-4	/10-5	/10-11
G4 1)	/10-1	/10-4	/10-5	/10-12
B10	/10-1	/10-2	/10-5	/10-8 2)
G	/10-1	/10-2	/10-5	/10-8 2)
E13 1)	/10-1	/10-3	/10-5	/10-6
D16 1)	/10-1	/10-3	/10-5	/10-6
1) The support elements remain unchanged. 2) Only install support elements after installing subframe.				

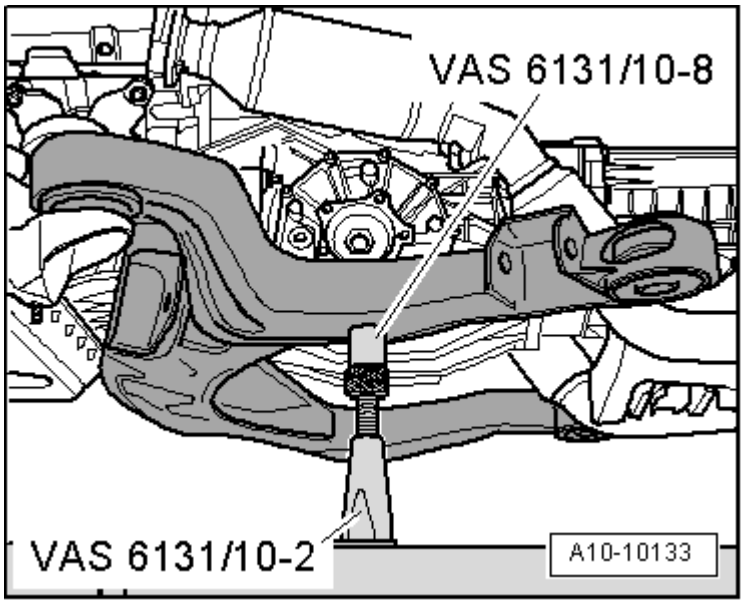

Fig. 97: Positioning Support Elements From VAS 6131/10 At Left/Right On Subframe
Courtesy of VOLKSWAGEN UNITED STATES, INC.

- Position subframe on both Attachments VAS 6131/10-8.
- Twist spindles of support elements upward on both sides.
- Tighten base plates for support elements to 20 Nm on scissor lift platform VAS 6131 A.
- Using Scissor Lift Platform VAS 6131 A , slowly guide engine/transmission unit with subframe into body from below.

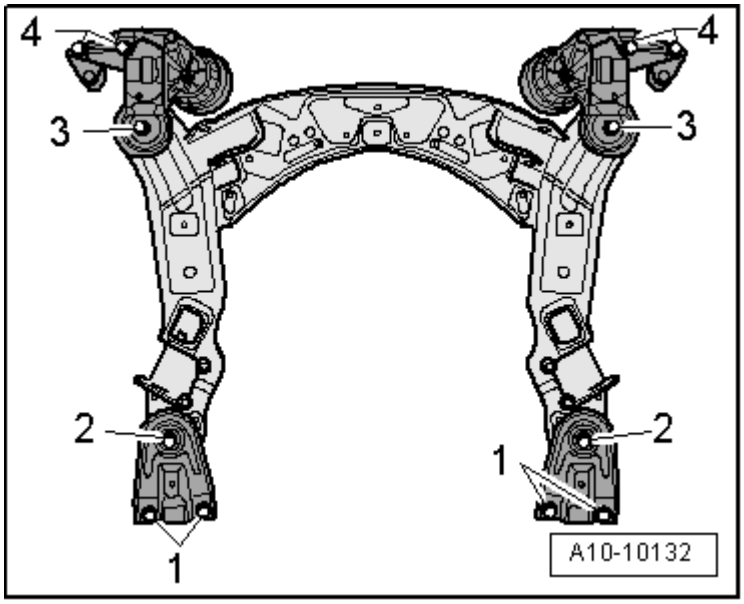

Fig. 98: Bolts Removal Sequence
Courtesy of VOLKSWAGEN UNITED STATES, INC.

- Align subframe and engine bearing plates according to markings applied on longmembers during

removal.

- Tighten bolts for subframe and engine mount consoles only to specified torque. Do not tighten further (tighten bolts only after axle alignment).

1. 55 Nm
2. 115 Nm
3. 115 Nm
4. 75 Nm

CAUTION: Vehicle must not be driven in this condition.

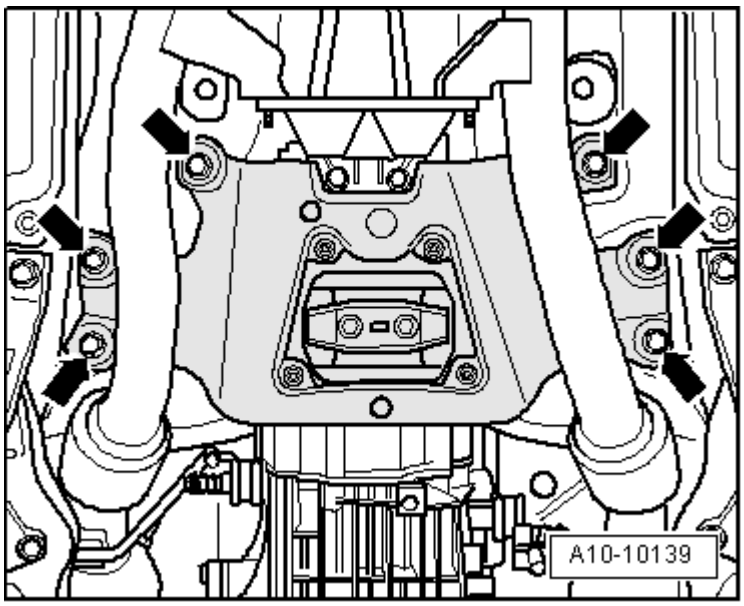

Fig. 99: Removing Bolts On Tunnel Cross Member
Courtesy of VOLKSWAGEN UNITED STATES, INC.

- Tighten bolts - **arrows** - at tunnel cross member.

Further installation is in reverse order of removal, noting the following:

- Install selector lever cable, adjust if necessary --> **37 CONTROLS, HOUSING** .
- Install drive axles --> **40 - FRONT SUSPENSION** .
- Install guide control arm, control arm, stabilizer bar and suspension strut --> **40 - FRONT SUSPENSION** .
- Align exhaust system free of tension --> **Exhaust System, Installing**.
- Install front cross member --> **50 - BODY - FRONT** .
- Install subframe front cross member --> **40 - FRONT SUSPENSION** .
- Install A/C compressor --> **87 - AIR CONDITIONING** .

- Install ribbed belt --> **Ribbed Belt, Removing and Installing** .

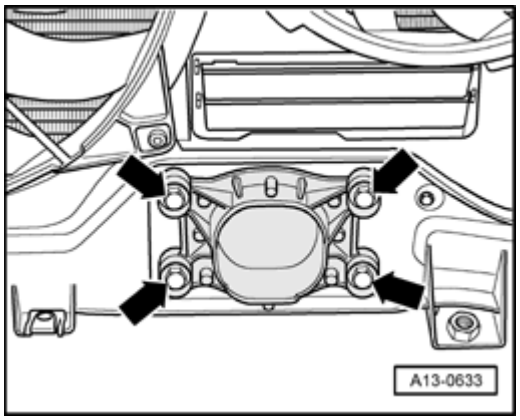

Fig. 100: Placing Torque Support On Rubber Buffer For Torque Support And Tightening Bolts
Courtesy of VOLKSWAGEN UNITED STATES, INC.

- Place torque support on rubber buffer for torque support and tighten bolts - **arrows** -.
- Electrical connections and routing --> Electrical Wiring Diagrams, Troubleshooting and Component Locations.
- Observe safety precautions after connecting battery --> **27 - STARTER, GENERATOR, CRUISE CONTROL** .

CAUTION: Do not use a battery charger for starting assistance! There is the risk that the vehicle control modules could be damaged.

- Mount wiper arms and adjust --> **92 - WINDSHIELD WIPER AND WASHER SYSTEM** .
- Check oil level --> **Oil Level, Checking** .
- Bleed fuel system --> **24 - FUEL INJECTION SYSTEM** .
- Fill with coolant --> **Cooling System, Draining and Filling** .

NOTE:

- **Only reuse drained coolant if cylinder head or engine block was not replaced.**
- **Dirty coolant must not be re-used.**

- Fill power-steering system oil and bleed steering system --> **48 - STEERING** .
- Check ATF level --> **37 CONTROLS, HOUSING** .
- Align subframe and both engine bearing plates --> **40 - FRONT SUSPENSION**
- Perform axle alignment --> **44 - WHEELS, TIRES, WHEEL ALIGNMENT** .

CAUTION: After wheel alignment, tighten subframe bolts to final torque.

Tightening Specifications

NOTE:

- **Tightening specifications only apply to lightly greased, oiled, phosphated or blackened nuts and bolts.**
- **Additional lubricants, such as engine or transmission oil are permissible, although lubricants containing graphite are not.**
- **Do not use any degreased parts.**
- **Tolerance for torque specifications 15%.**

Component		Nm
Bolts/nuts	M6	9
	M8	20
	M10	40
	M12	65
Exceptions:		
Engine mount console to longitudinal member		75
Tunnel cross member to body		40
Hydraulic pressure line to power steering pump		47
Fuel hose to fuel line		22
Torque bracket to engine		40
Torque support stop to lock carrier		23
Hose clamps 9 mm wide		3
Hose clamps 13 mm wide		5,5

ENGINE, WITH AUTOMATIC TRANSMISSION 09L, REMOVING AND INSTALLING

Engine, with Automatic Transmission 09L, Removing and Installing

--> **Engine, Removing**

--> **Engine and Automatic Transmission 09L, Separating**

--> **Engine, Securing to Engine and Transmission Holder**

--> **Engine, Installing**

Engine, Removing

Engine, Removing

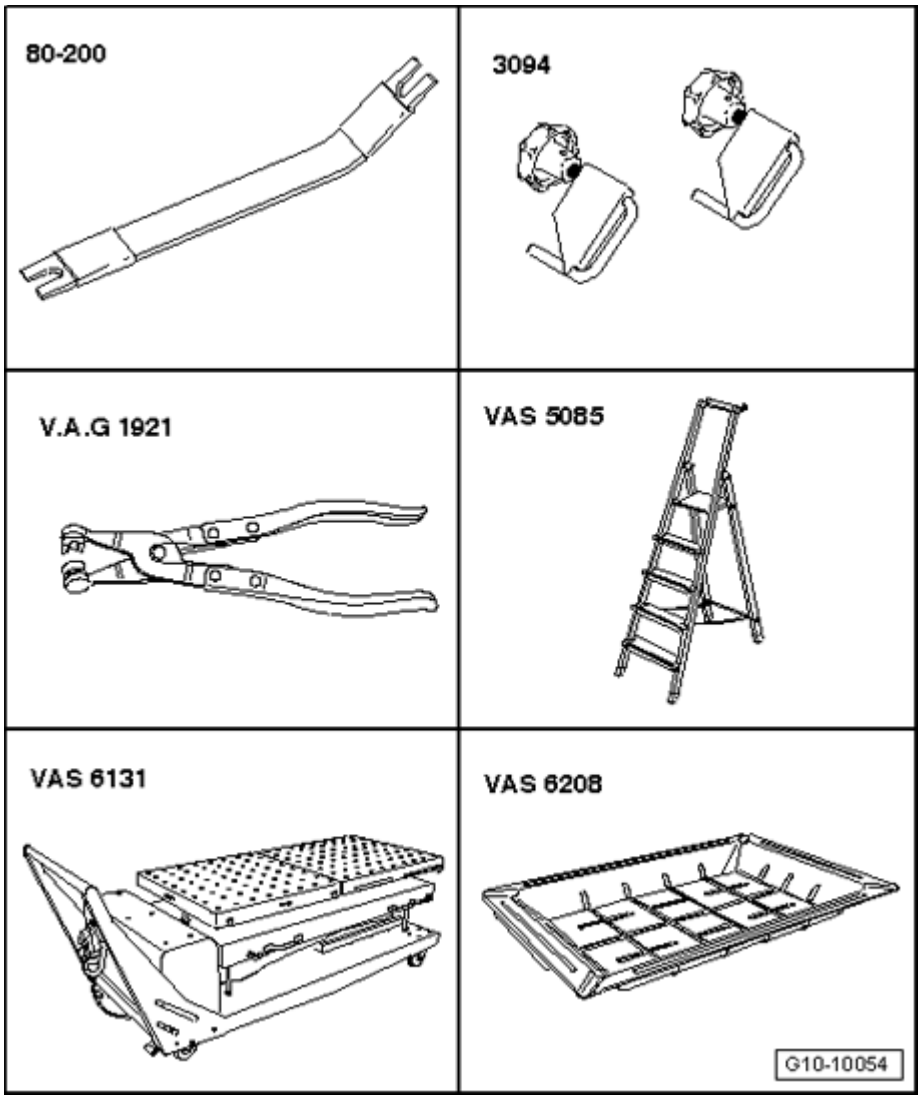

Fig. 101: Identifying Special Tools - Engine, Removing
Courtesy of VOLKSWAGEN UNITED STATES, INC.

Special tools, testers and auxiliary items required

- Pry Lever - Rmv Outside Mirror 80-200
- Hose Clamps Up to 25 mm dia. 3094
- Hose clamp pliers V.A.G 1921
- Step ladder VAS 5085
- Scissor lift platform VAS 6131 A with support set for Audi VAS 6131/10
- Drip tray for workshop crane VAS 6208

Special tools, testers and auxiliary items required

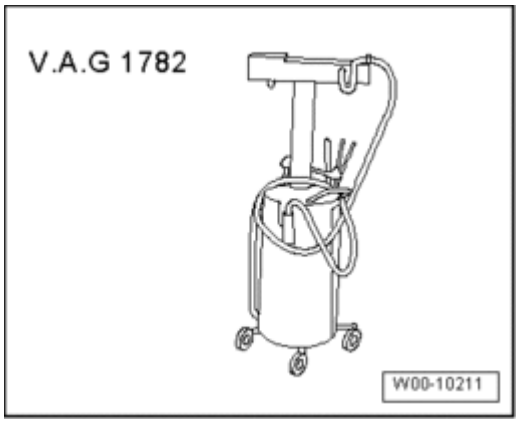

Fig. 102: Identifying Old Oil Collecting And Extracting Device V.A.G 1782
Courtesy of VOLKSWAGEN UNITED STATES, INC.

- Old oil collecting and extracting device V.A.G 1782

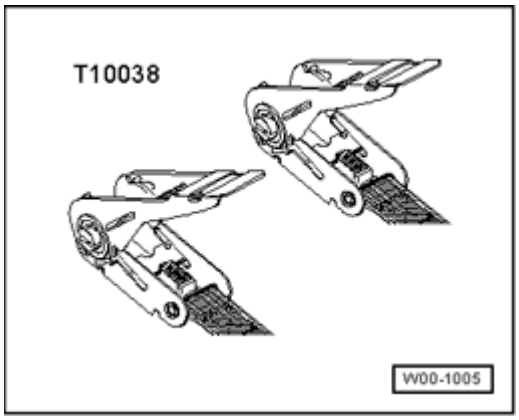

Fig. 103: Identifying Tensioning Strap T10038
Courtesy of VOLKSWAGEN UNITED STATES, INC.

- Tension strap T10038

Procedure

NOTE:

- **With lock carrier installed, engine is removed downward with transmission and subframe.**
- **All cable ties which are opened or cut open when removing engine, must be replaced in the same position when installing engine.**
- **Drained coolant must be stored in a clean container for disposal or reuse.**

CAUTION: Before removing engine, secure vehicle against tipping over. For this the luggage compartment must be empty.

CAUTION: Observe safety precautions when disconnecting the battery --> 27 -

STARTER, GENERATOR, CRUISE CONTROL .

NOTE:

- **So that the front wheels can still be turned with the battery disconnected, the battery must only be disconnected with ignition key inserted.**
- **On vehicles with all-wheel drive, the electrical parking brake must be released before disconnecting the battery, so that the driveshaft can be rotated for removal.**

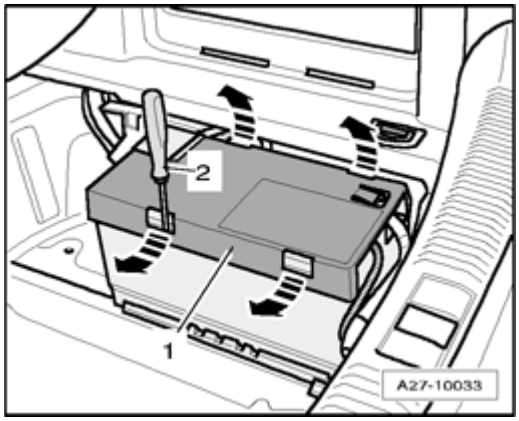

Fig. 104: Releasing Retaining Clips With A Screwdriver And Removing Battery Ground Cover
Courtesy of VOLKSWAGEN UNITED STATES, INC.

- Remove luggage compartment floor trim.
- Release retaining clips - **arrows** - with a screwdriver - **2** - and remove cover - **1** -.

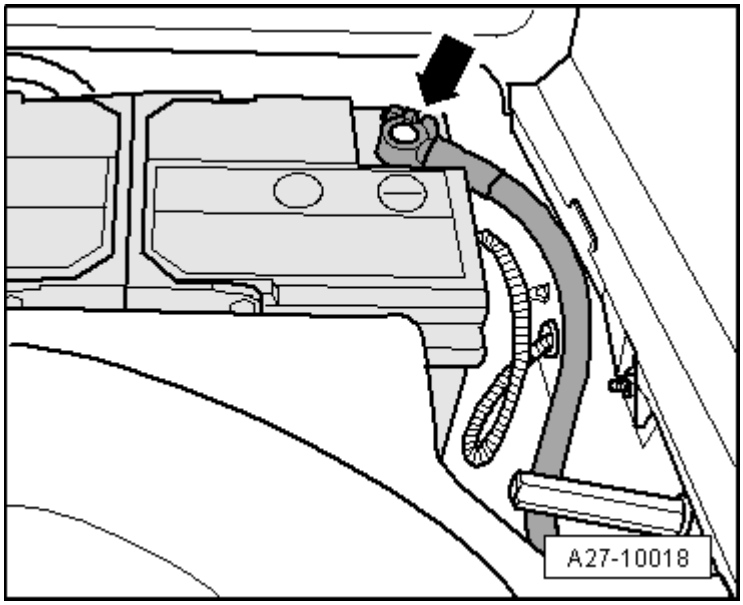

Fig. 105: Disconnecting Ground (GND) Cable At Battery
Courtesy of VOLKSWAGEN UNITED STATES, INC.

- Disconnect Ground (GND) cable - **arrow** - at battery.

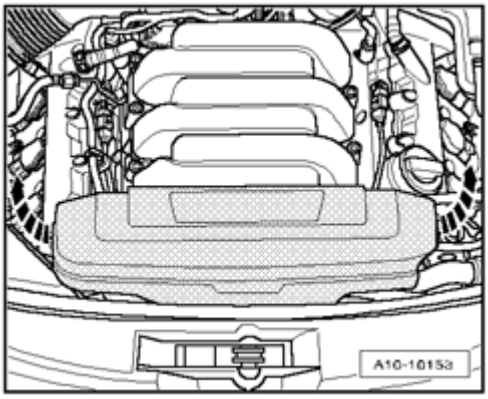

Fig. 106: Identifying Front Engine Cover
Courtesy of VOLKSWAGEN UNITED STATES, INC.

- Remove front engine cover - **arrows** -.

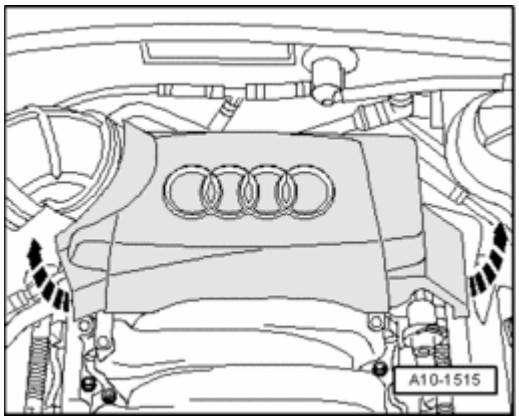

Fig. 107: Removing Rear Engine Cover
Courtesy of VOLKSWAGEN UNITED STATES, INC.

- Remove rear engine cover - **arrows** -.

CAUTION: Cover cap of expansion tank with rag and open carefully, as hot steam i.e. hot coolant may escape when opening.

- Open cap of coolant expansion tank.

NOTE:

- **Before removing ribbed belt, mark the turning direction on it with chalk or a felt tip pen. A reversed direction of rotation can cause damage to the belt under operating conditions.**

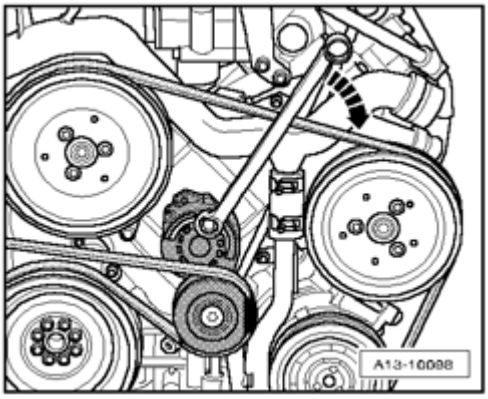

Fig. 108: Pivoting Tensioning Device To Relieve Tension On Ribbed Belt
Courtesy of VOLKSWAGEN UNITED STATES, INC.

- Pivot tensioning device in direction of - **arrow** - to relieve tension on ribbed belt.
- Remove ribbed belt and release tensioning device.
- Remove both front wheels.

NOTE:

- **Secure brake discs using a wheel bolt.**

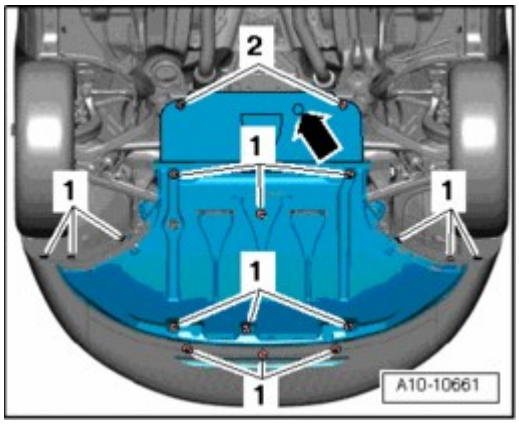

Fig. 109: Identifying Noise Insulation And Mountings
Courtesy of VOLKSWAGEN UNITED STATES, INC.

- Remove noise insulation and mountings - **1, 2** - - **arrow** - where present.

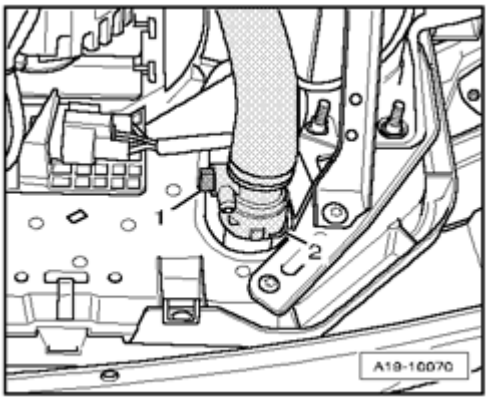

Fig. 110: Identifying Drain Plug & Coolant Hose
Courtesy of VOLKSWAGEN UNITED STATES, INC.

- Place drip tray for workshop crane VAS 6208 under engine.
- Open drain plug - **1** - and allow coolant to drain.
- Then disconnect coolant hose - **2** - from radiator.

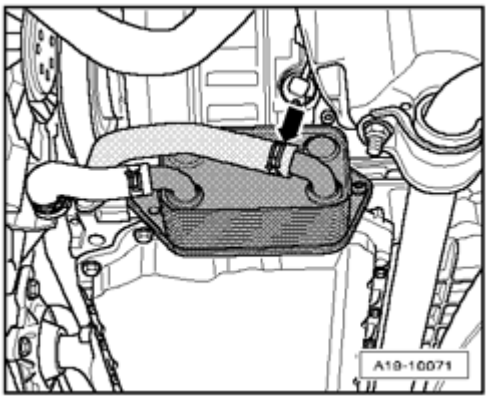

Fig. 111: Disconnecting Coolant Hose From Oil Cooler
Courtesy of VOLKSWAGEN UNITED STATES, INC.

- Disconnect coolant hose - **arrow** - from oil cooler and drain remaining coolant.
- Then remove coolant hose.

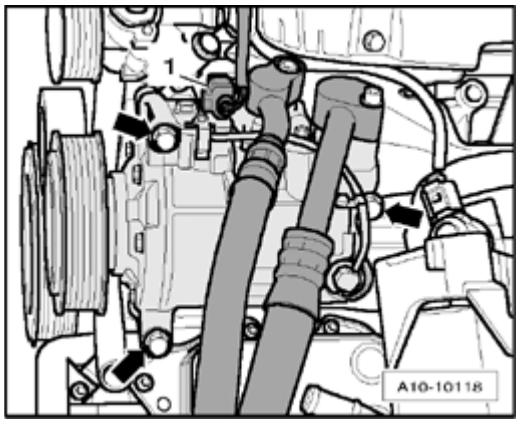

Fig. 112: Disconnecting Connector For Wiring To Air Conditioning Compressor Clutch Solenoid
Courtesy of VOLKSWAGEN UNITED STATES, INC.

- Separate connector - **1** - for wiring to air conditioning compressor clutch solenoid.

CAUTION: The air conditioning refrigerant circuit must not be opened.

- Remove air conditioning compressor from bracket - **arrows** -.

NOTE:

- **To prevent damage to the refrigerant lines/hoses, ensure that the lines and hoses are not stretched, kinked or bent.**

- Hang up the air conditioning compressor with attached lines on left side of vehicle.

NOTE:

- **Place a rag under hydraulic lines to catch escaping hydraulic fluid.**

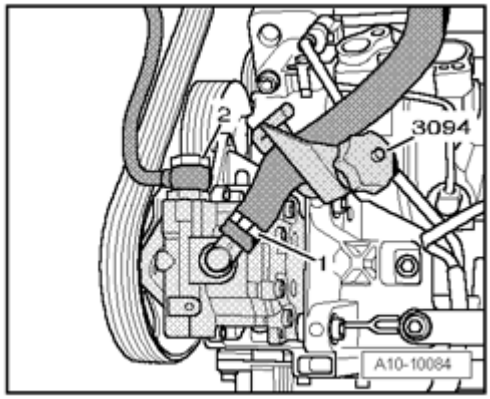

Fig. 113: Identifying Hydraulic Hose, Hydraulic Pressure Line & Hose Clamps 3094
Courtesy of VOLKSWAGEN UNITED STATES, INC.

- Clamp off hydraulic hose - **1** - for power steering pump with a Hose Clamps Up to 25 mm dia. 3094.
- Remove hydraulic hose from power steering pump.

- Remove hydraulic pressure line - **2** - at power steering pump and set it aside on top of the longitudinal member.

Vehicles with auxiliary heater:

- Remove right front wheel housing liner in front area --> **66 - EXTERIOR EQUIPMENT** .

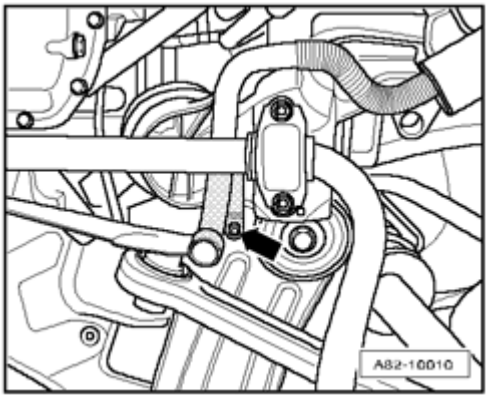

Fig. 114: Removing Bolt For Corrugated Exhaust Pipe
Courtesy of VOLKSWAGEN UNITED STATES, INC.

- Remove bolt - **arrow** - for corrugated exhaust pipe.

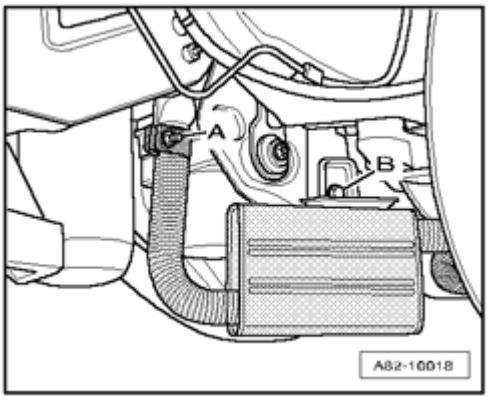

Fig. 115: Loosening Nut On Clamp For Corrugated Exhaust Pipe & Removing Bolt & Muffler With Corrugated Exhaust Pipe
Courtesy of VOLKSWAGEN UNITED STATES, INC.

- Loosen nut - **A** - on clamp for corrugated exhaust pipe.
- Remove bolt - **B** - and remove muffler with corrugated exhaust pipe.

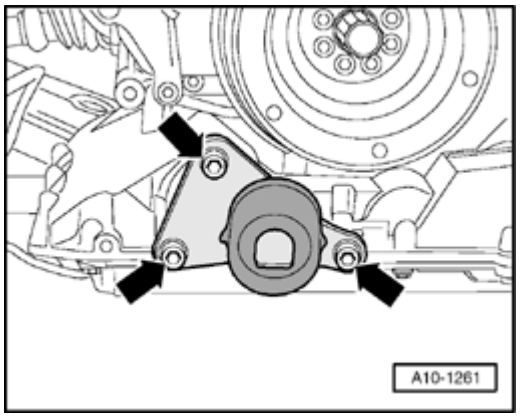

Fig. 116: Removing Bolts And Torque Support From Engine
Courtesy of VOLKSWAGEN UNITED STATES, INC.

All:

- Remove bolts - **arrows** - and remove torque support from engine.

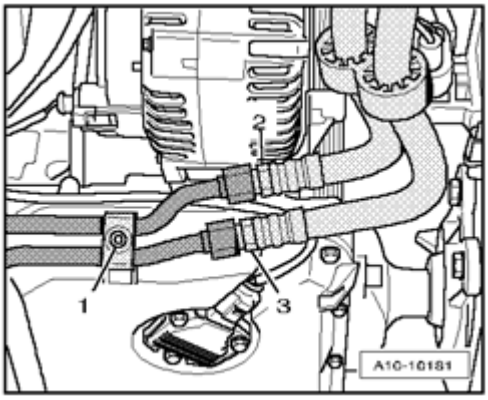

Fig. 117: Loosening Union Nuts And Disconnecting ATF Lines
Courtesy of VOLKSWAGEN UNITED STATES, INC.

NOTE:

- **Observe the rules of cleanliness for working on automatic transmissions --> 00 TECHNICAL DATA .**

- Place old oil collecting and extracting device V.A.G 1782 under engine.
- Loosen union nuts - **2** - and - **3** - and disconnect ATF lines.

NOTE:

- **Ignore - 1 -.**

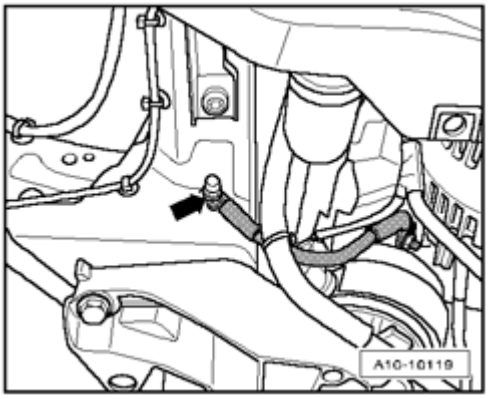

Fig. 118: Removing Ground (GND) Strap From Right Longitudinal Member
Courtesy of VOLKSWAGEN UNITED STATES, INC.

- Remove Ground (GND) cable - **arrow** - from right longitudinal member.

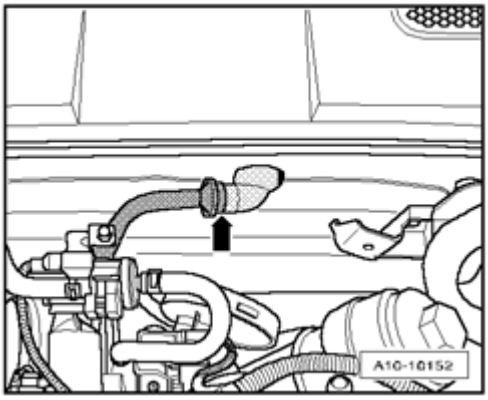

Fig. 119: Removing Vacuum Hose For Brake Booster At Bulkhead
Courtesy of VOLKSWAGEN UNITED STATES, INC.

- Disconnect brake booster vacuum hose from grommet - **arrow** - on bulkhead.

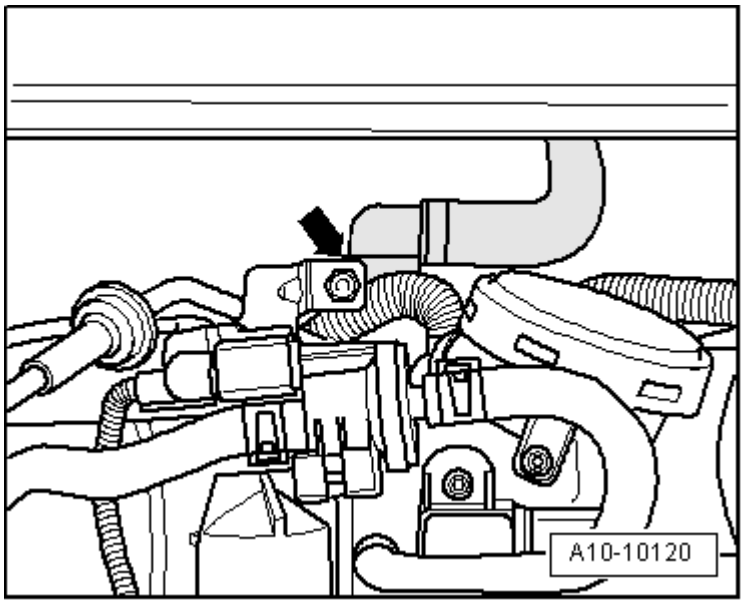

Fig. 120: Removing Coolant Hose To Heater Core On Rear Of Engine
Courtesy of VOLKSWAGEN UNITED STATES, INC.

- Remove coolant hose - **arrow** - to heater core on rear of engine.

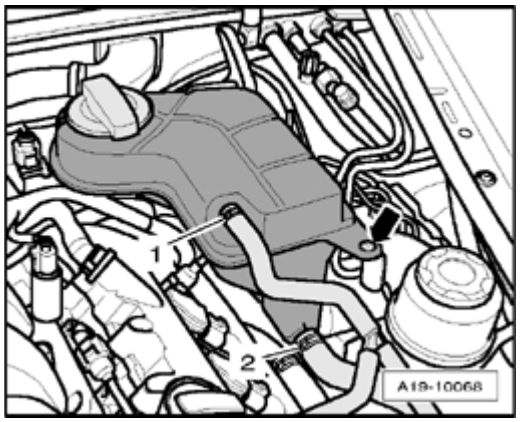

Fig. 121: Removing Coolant Hoses At Coolant Expansion Tank
Courtesy of VOLKSWAGEN UNITED STATES, INC.

- Remove coolant hoses - **1** - and - **2** - at coolant expansion tank.
- Remove coolant expansion tank - **arrow** -.
- Disconnect electrical connection at Engine Coolant Level (ECL) Warning Switch F66 at bottom of coolant expansion tank.

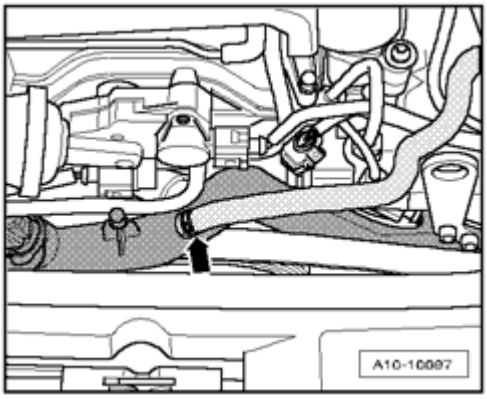

Fig. 122: Removing Coolant Hose From Front Coolant Line
Courtesy of VOLKSWAGEN UNITED STATES, INC.

- Remove coolant hose - **arrow** - from front coolant line.

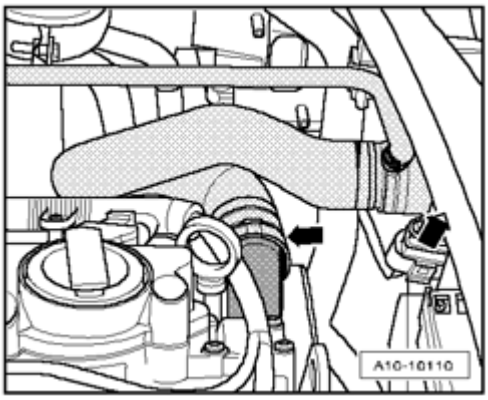

Fig. 123: Removing Left Front Coolant Hose In Engine Compartment
Courtesy of VOLKSWAGEN UNITED STATES, INC.

- Remove left front coolant hose in engine compartment - **arrows** -.

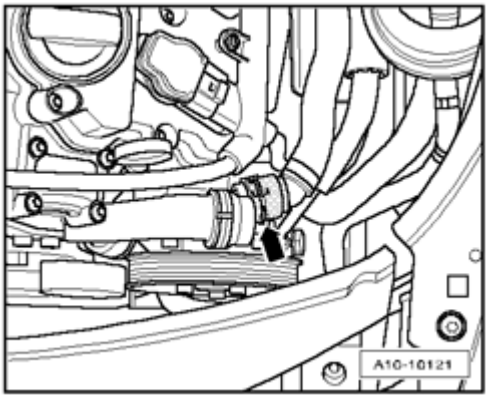

Fig. 124: Removing Coolant Hose From Front Coolant Line
Courtesy of VOLKSWAGEN UNITED STATES, INC.

- Remove coolant hose - **arrow** - from front coolant line.

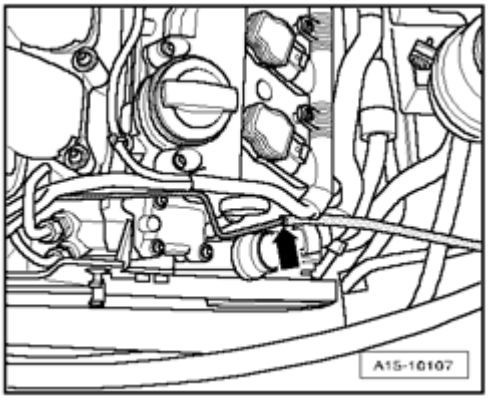

Fig. 125: Disconnecting Vacuum Hose To Leak Detection Pump
Courtesy of VOLKSWAGEN UNITED STATES, INC.

- Disconnect vacuum hose - **arrow** - to leak detection pump.

CAUTION: Note rules of cleanliness for working on the fuel injection system --> Clean Working Conditions .

CAUTION: Fuel system is under pressure! Before opening the low pressure section of the fuel injection system, wrap a clean rag around the connection and relieve residual pressure by carefully loosening the connection.

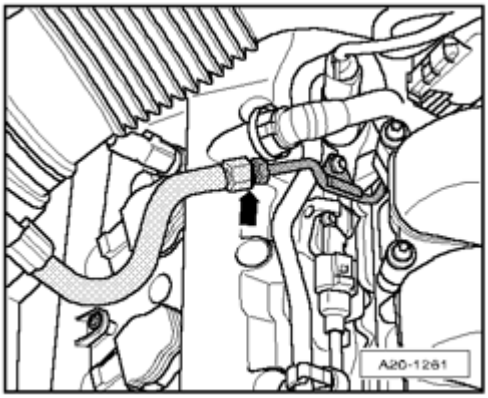

Fig. 126: Separating Fuel Line
Courtesy of VOLKSWAGEN UNITED STATES, INC.

- Separate fuel line - **arrow** - and lay aside.

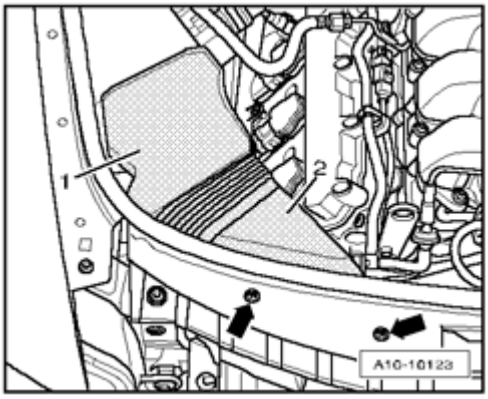

Fig. 127: Removing Air Duct Screws & Air Ducts
Courtesy of VOLKSWAGEN UNITED STATES, INC.

- Remove bolts - **arrows** -.
- Remove air duct - **1** - and - **2** -.

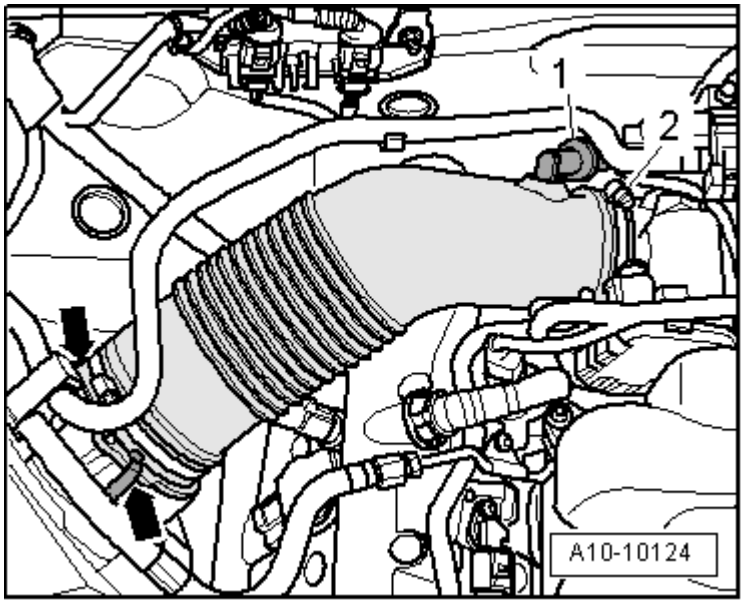

Fig. 128: Disconnecting Check Valve From Connection At Air Duct Hose & Removing Air Duct Hose
Courtesy of VOLKSWAGEN UNITED STATES, INC.

- Disconnect check valve - **1** - from connection at air duct hose.
- Remove air duct hose, thereby loosening hose clamp - **2** - and opening the clips - **arrows** -.

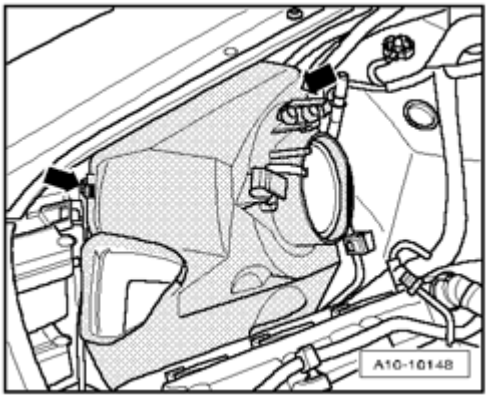

Fig. 129: Opening Clips And Removing Upper Part Of Air Filter Housing
Courtesy of VOLKSWAGEN UNITED STATES, INC.

- Open clips - **arrows** - and remove upper part of air filter housing.

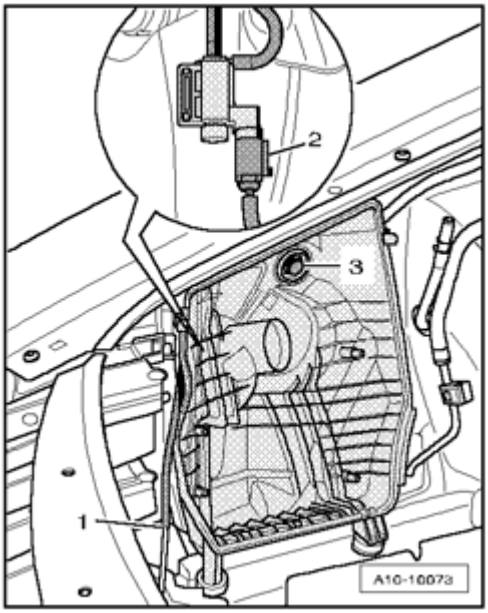

Fig. 130: Identifying Vacuum Line, Spreader Clips & Electrical Connection
Courtesy of VOLKSWAGEN UNITED STATES, INC.

- Disconnect vacuum line - **1** -.
- Remove pin from spreader clips - **3** -.
- Remove lower part of air filter housing and, on the backside, disconnect electrical connection - **2** - at the intake air switch-over valve N335.

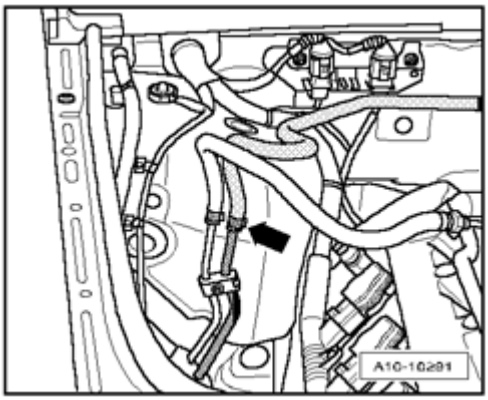

Fig. 131: Disconnecting Vacuum Hose To EVAP Canister
Courtesy of VOLKSWAGEN UNITED STATES, INC.

- Disconnect vacuum hose - **arrow** - to EVAP canister.

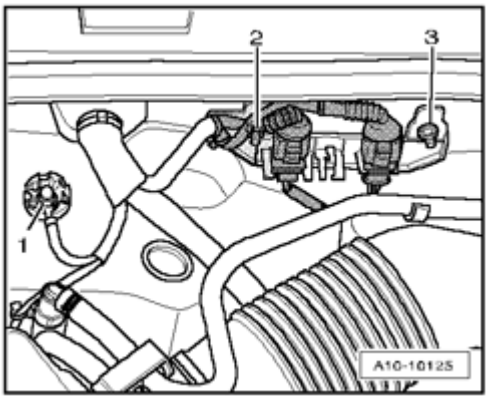

Fig. 132: Removing Nuts & Ground (GND) Wire
Courtesy of VOLKSWAGEN UNITED STATES, INC.

- Remove nuts - **2** - and - **3** - and remove right bracket for harness connectors from bulkhead.
- Remove Ground (GND) wire - **1** - on right strut tower.

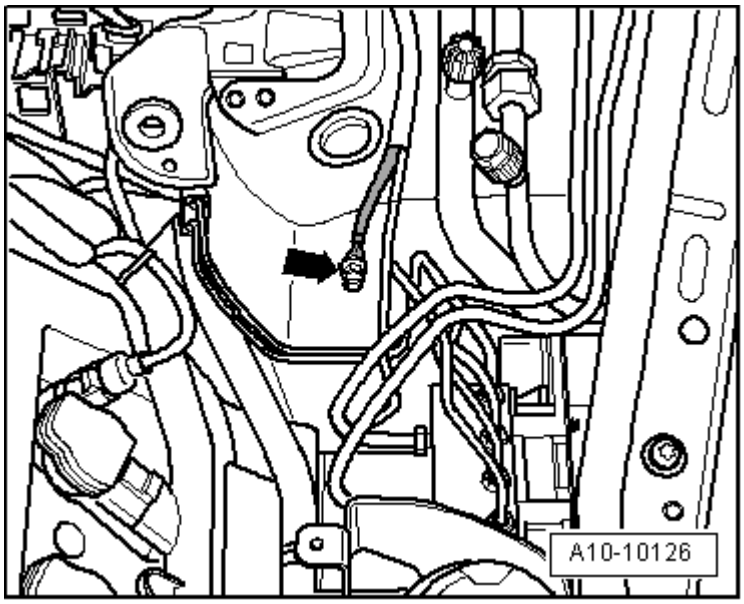

Fig. 133: Removing Ground (GND) Wire On Left Strut Tower
Courtesy of VOLKSWAGEN UNITED STATES, INC.

- Remove Ground (GND) wire - **arrow** - on left strut tower.

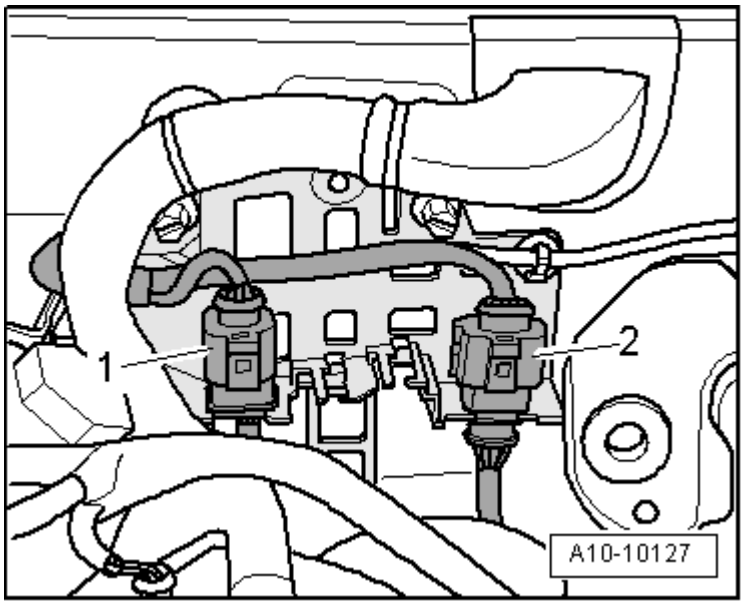

Fig. 134: Disconnecting Electrical Harness Connector For Oxygen Sensor (O2S) 2 Behind Three Way Catalytic Converter (TWC) G131
Courtesy of VOLKSWAGEN UNITED STATES, INC.

- Remove left bracket for harness connectors - **1** - and - **2** - from bulkhead.

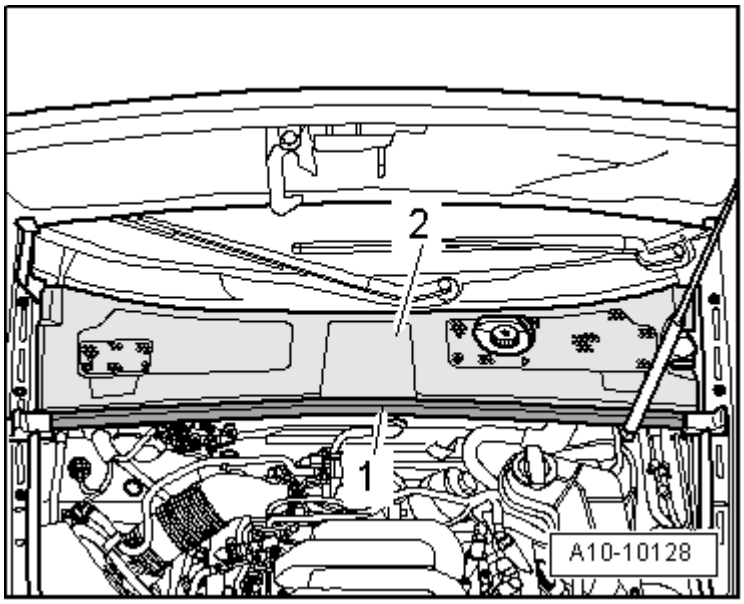

Fig. 135: Removing Rubber Seal For Plenum Chamber Cover & Plenum Chamber Cover
Courtesy of VOLKSWAGEN UNITED STATES, INC.

- Remove rubber seal - **1** - for plenum chamber cover.
- Remove plenum chamber cover - **2** -.

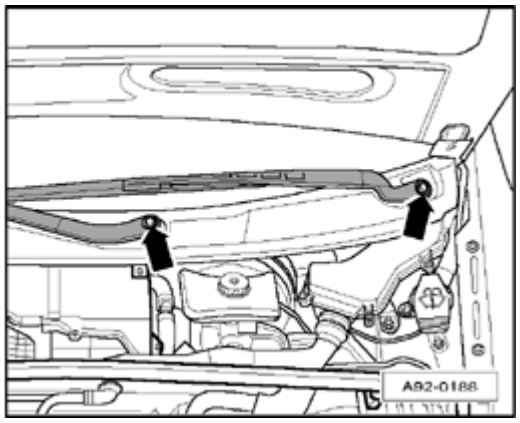

Fig. 136: Identifying Wiper Arm Nuts
Courtesy of VOLKSWAGEN UNITED STATES, INC.

- Pry off caps on the wiper arms using a screwdriver.
- Loosen nuts - **arrows** - by several turns.
- Loosen wiper arms by gently rocking the wiper arm. Remove nuts and wiper arms.

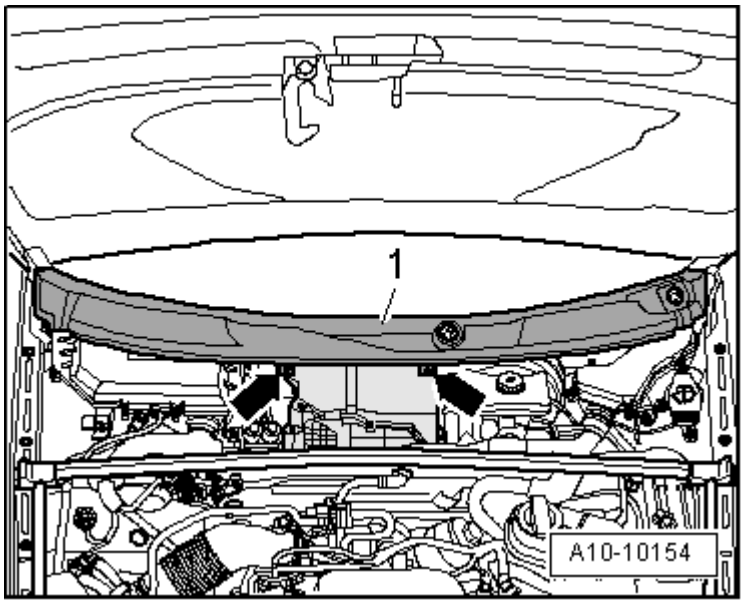

Fig. 137: Removing Bolts For Cowl Grill
Courtesy of VOLKSWAGEN UNITED STATES, INC.

- Remove bolts - **arrows** - for cowl grill - **1** -.

CAUTION: To prevent the cowl grille - 1 - from tearing when removing, coat transition between windshield and cowl grille with a soapy solution and pull grille up vertically out of fastening strip beginning at edge of window.

- Pull cowl grill off from windshield.

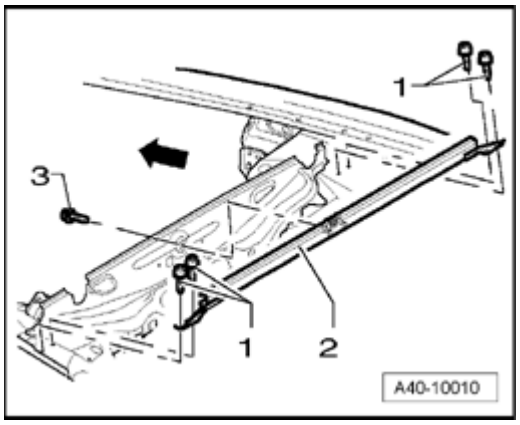

Fig. 138: Removing Bolts And Strut Tower Brace
Courtesy of VOLKSWAGEN UNITED STATES, INC.

- If equipped, remove bolts - **1** - and - **3** - and remove strut tower brace - **2** -.

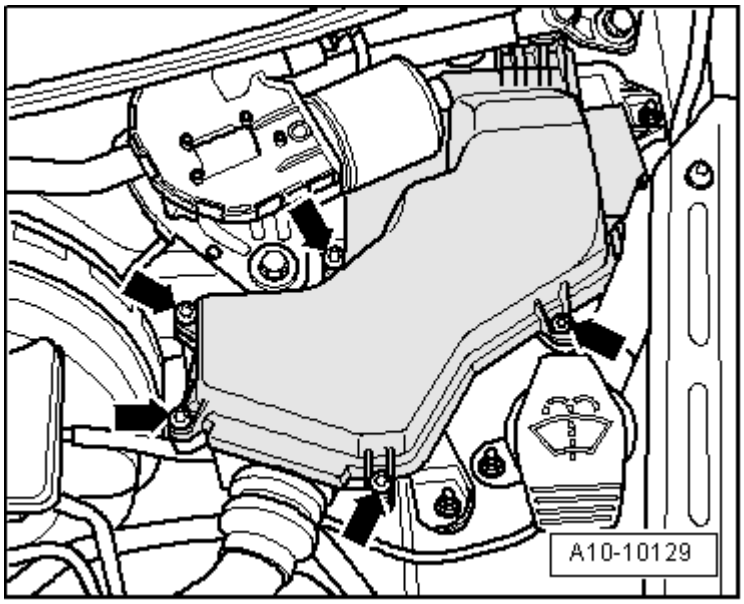

Fig. 139: Removing Bolts And Cover Form E-Box At Left In Engine Compartment
Courtesy of VOLKSWAGEN UNITED STATES, INC.

- Remove bolts - **arrows** - and remove cover form E-box at left in engine compartment.

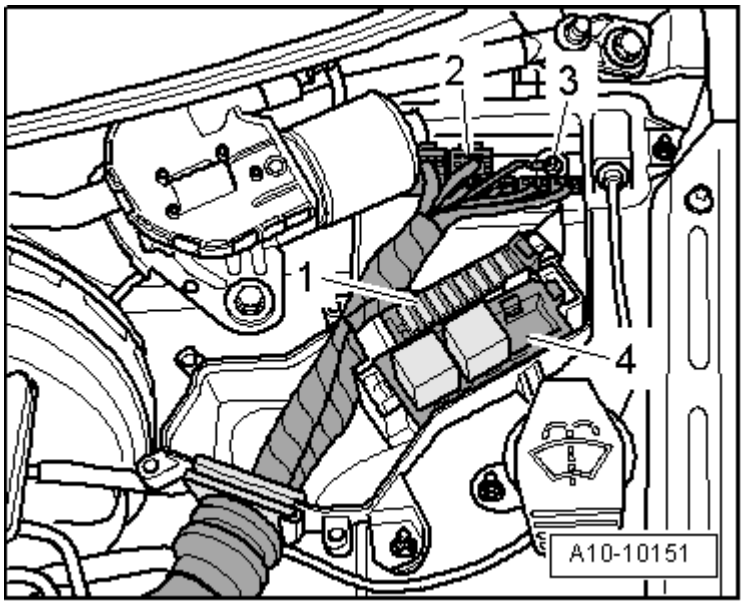

Fig. 140: Identifying Fuse Holder, 3-Socket Relay Carrier, Electrical Wire Connection & Electrical Connections
Courtesy of VOLKSWAGEN UNITED STATES, INC.

- Release retaining tabs and pull fuse holder - **1** - and 3-socket relay carrier - **4** - upward and off.
- Remove electrical wire connection - **3** -.
- Disconnect all electrical connections - **2** - at rear on the connector strip.
- Disengage and free up engine wiring harness at E-Box.

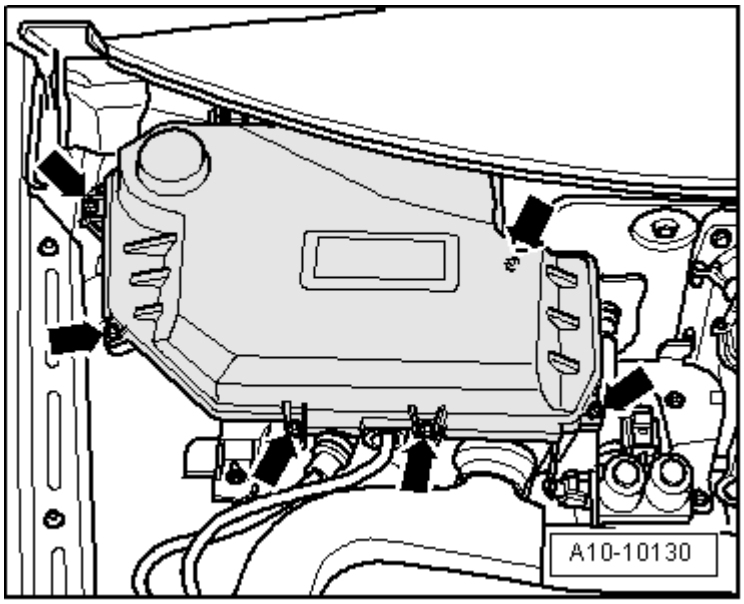

Fig. 141: Removing Bolts And Cover For E-Box At Right In Engine Compartment
Courtesy of VOLKSWAGEN UNITED STATES, INC.

- Remove bolts - **arrows** - and remove cover for E-box at right in engine compartment.

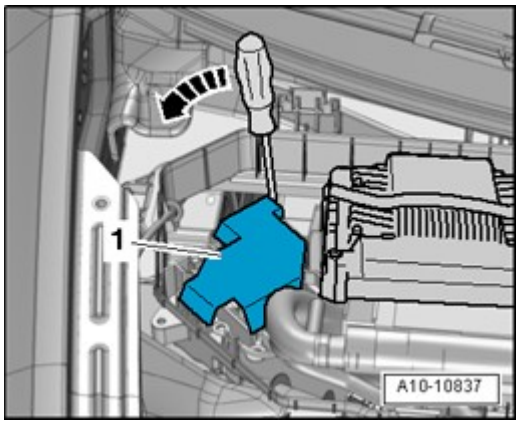

Fig. 142: Opening Cover Using Screwdriver
Courtesy of VOLKSWAGEN UNITED STATES, INC.

- Where present, open cover - **1** - using a screwdriver - **arrow** - and remove.

CAUTION: The heater pump valve unit (left of E-box) becomes very hot during operation - Risk of burning!

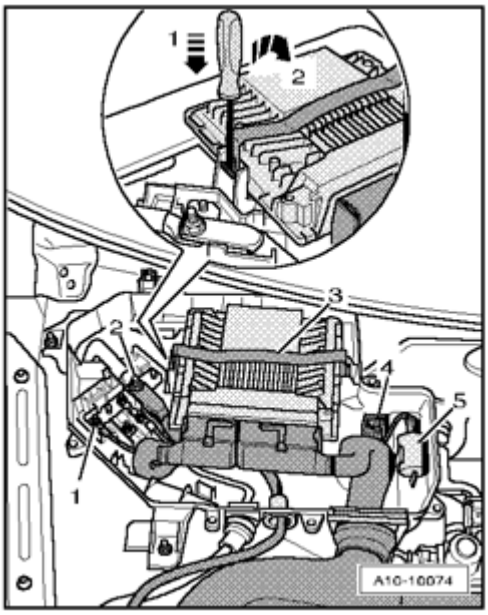

Fig. 143: Prying Off Retaining Clip With Screwdriver And Removing ECM From E-Box
Courtesy of VOLKSWAGEN UNITED STATES, INC.

- Carefully pry off retaining clip - **3** - with a screwdriver - **arrows 1 and 2** - and remove ECM from the E-box.

NOTE:

- **Engine Control Module (ECM) remains connected at wiring harness.**

- Unclip suppression capacitor - **5** - from bracket in E-box.
- Disconnect electrical connection - **4** - at rear on the connector strip.
- Remove electrical wiring connections - **1** - and - **2** -.

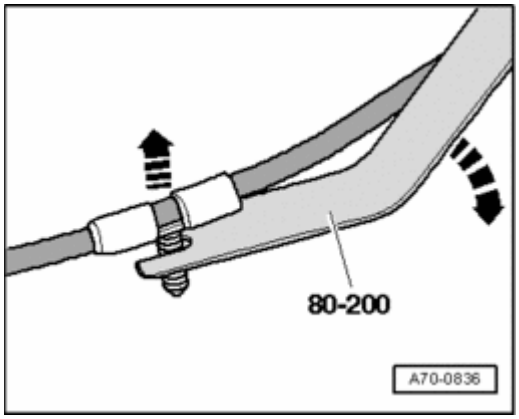

Fig. 144: Using Pry Lever 80 - 200 To Remove Instrument Panel Central Tube
Courtesy of VOLKSWAGEN UNITED STATES, INC.

- Free electrical wiring up to generator using Pry Lever - Rmv Outside Mirror 80-200.
- Set both wiring harnesses on engine and secure Engine Control Module (ECM) against falling down.

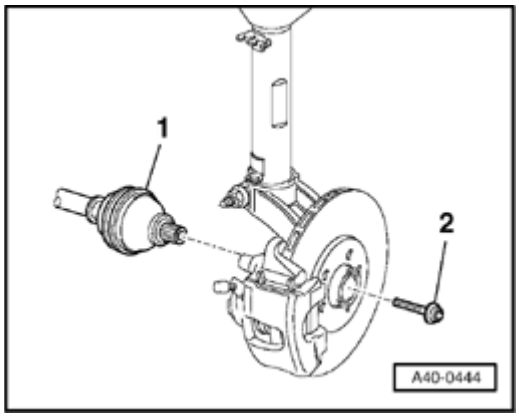

Fig. 145: Removing Collar Bolt At Left/Right Drive Axles
Courtesy of VOLKSWAGEN UNITED STATES, INC.

- Have a second technician press brake pedal.

CAUTION: To loosen collar bolt for drive axle, the wheel bearing must not be under load (vehicle must not be standing on its wheels).

- Remove collar bolt - **2** - at left and right drive axles - **1** -.

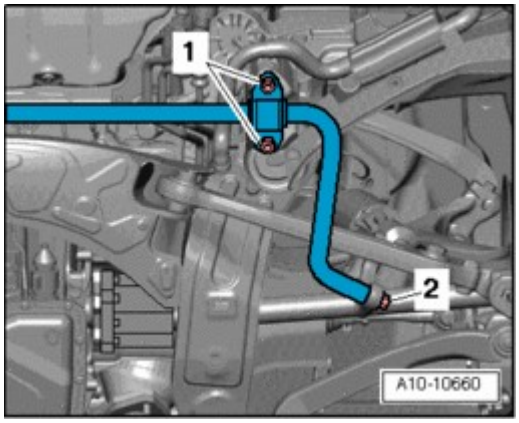

Fig. 146: Removing Left/Right Nuts, Bolts & Stabilizer Bar
Courtesy of VOLKSWAGEN UNITED STATES, INC.

- Evenly remove left and right nuts - **1** -.
- Remove left and right bolts - **2** - and remove stabilizer bar.

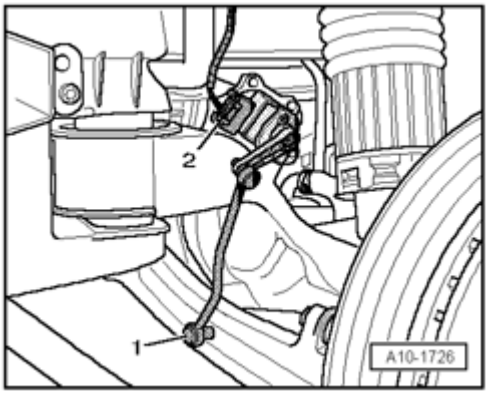

Fig. 147: Disconnecting Electrical Harness Connector At Level Control System Sensor
Courtesy of VOLKSWAGEN UNITED STATES, INC.

- Disconnect electrical harness connector - **2** - at Level Control System Sensor.
- Disconnect connecting link - **1** - at control arm.

CAUTION: Risk of damaging axle joints on upper control arms.

- **Support wheel bearing housing.**

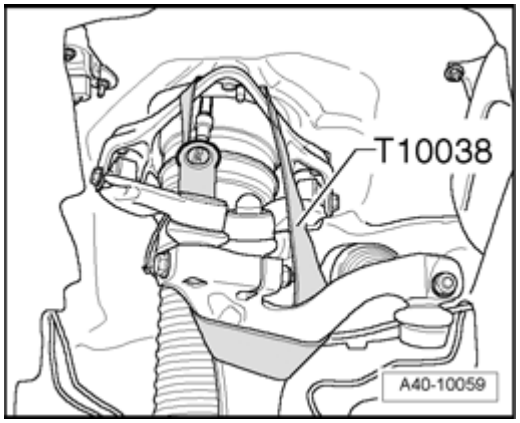

Fig. 148: Disconnecting Connecting Link At Control Arm
Courtesy of VOLKSWAGEN UNITED STATES, INC.

- Tie up wheel bearing housing with Tension Strap T10038 as shown in illustration.

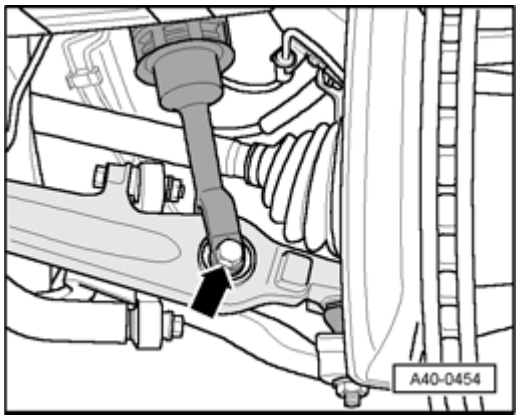

Fig. 149: Removing Suspension Strut From Control Arm
Courtesy of VOLKSWAGEN UNITED STATES, INC.

- Remove suspension strut from control arm - **arrow** -.

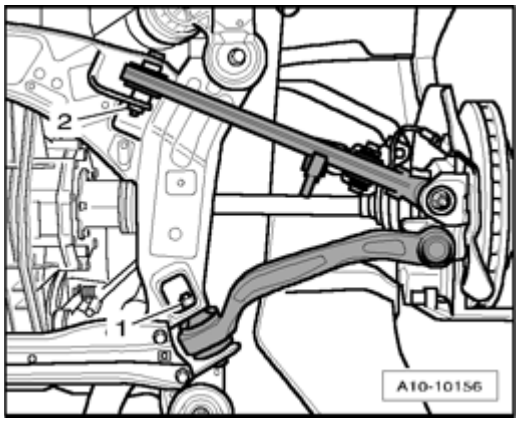

Fig. 150: Removing Guide Control Arm And Control Arm On Subframe
Courtesy of VOLKSWAGEN UNITED STATES, INC.

- Remove guide control arm - **1** - and control arm - **2** - on subframe.

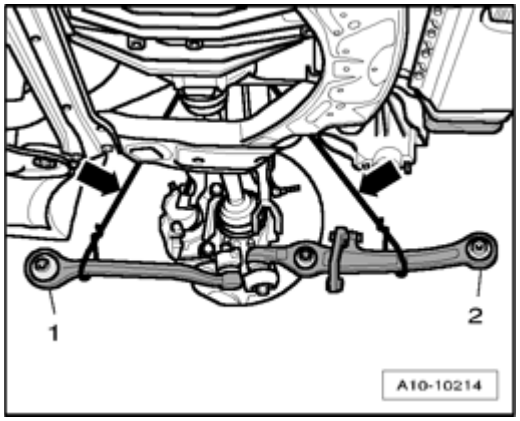

Fig. 151: Swinging Guide Control Arm And Control Arm Outward
Courtesy of VOLKSWAGEN UNITED STATES, INC.

- Swing guide control arm - **1** - and control arm - **2** - outward.

CAUTION: Guide control arm and control arm must not hang free. Tie up both control arms on wheel bearing housing - arrows - as shown in illustration.

- Repeat work procedure on opposite side of the vehicle.
- Remove drive axle from transmission flanged shaft.

CAUTION: Do not damage brake hose!

- Swing wheel bearing housing outward and remove drive axle.
- Repeat work procedure on opposite side of the vehicle.

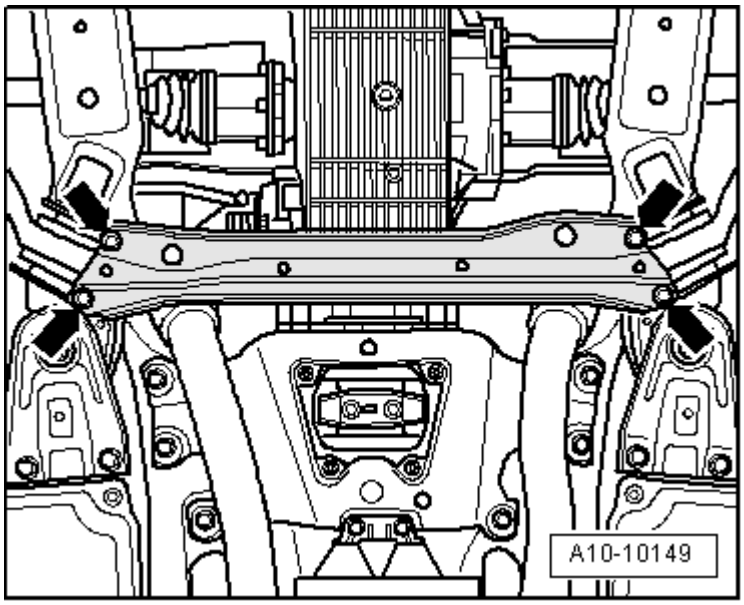

Fig. 152: Removing Subframe Transverse Beam
Courtesy of VOLKSWAGEN UNITED STATES, INC.

- Remove subframe transverse beam - **arrows** -.

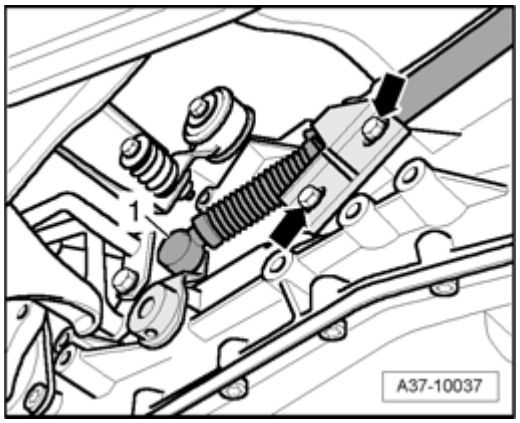

Fig. 153: Pressing Ball Socket Of Selector Lever Cable From Selector Shaft Lever & Removing Bracket On Transmission
Courtesy of VOLKSWAGEN UNITED STATES, INC.

NOTE:

- **Mark the installation position of bracket for selector lever cable using a felt-tip marker.**

- Press ball socket - **1** - of selector lever cable from selector shaft lever.
- Remove bracket on transmission - **arrows** -.
- Move selector lever cable clear.

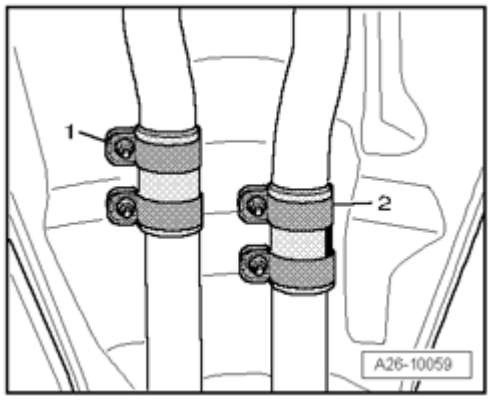

Fig. 154: Loosening Clamping Sleeves
Courtesy of VOLKSWAGEN UNITED STATES, INC.

- Loosen clamping sleeves - **1** - and - **2** -.

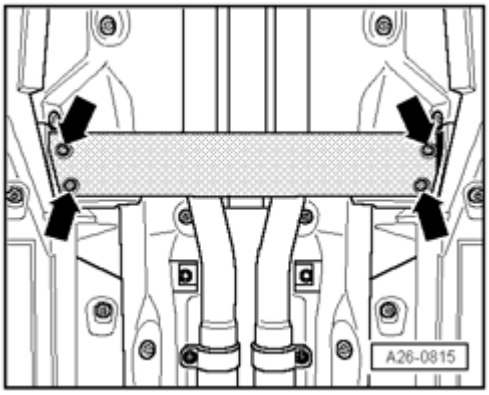

Fig. 155: Removing Front Transverse Beam
Courtesy of VOLKSWAGEN UNITED STATES, INC.

- Remove front transverse beam - **arrows** -.

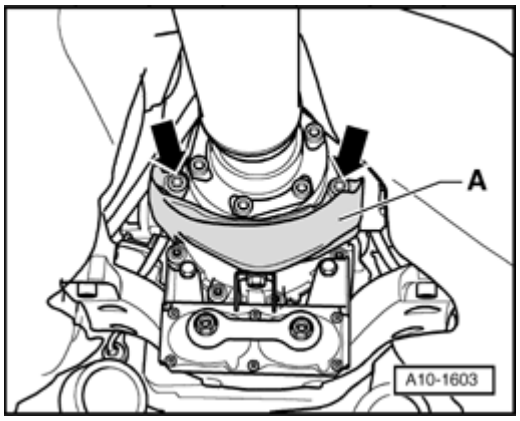

Fig. 156: Removing/Installing Heat Shield For Driveshaft
Courtesy of VOLKSWAGEN UNITED STATES, INC.

- Remove heat shield - **A** - for driveshaft - **arrows** -.
- Remove bolts at transmission/driveshaft flange.
- Push driveshaft together with rear final drive. The constant velocity (CV) joints can move axially.

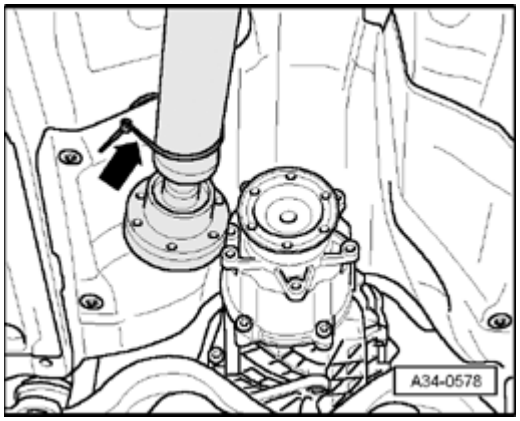

Fig. 157: Drive Shaft Tied To Side, Onto Heat Shield
Courtesy of VOLKSWAGEN UNITED STATES, INC.

- Tie driveshaft up and to the side against heat shield - **arrow** -.

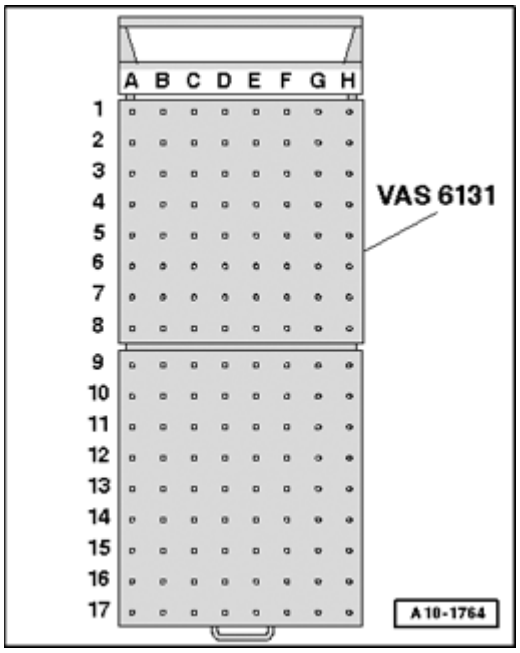

Fig. 158: Identifying Scissor Lift Platform VAS 6131
Courtesy of VOLKSWAGEN UNITED STATES, INC.

Prepare scissor lift platform:

- Equip scissor lift platform VAS 6131 A with support set for Audi VAS 6131/10 , VAS 6131/11 and VAS 6131/12 as follows:

Platform coordinates	**Parts of support set for Audi VAS 6131/10 , VAS 6131/11 and VAS 6131/12**			
B5	/10-1	/10-4	/10-5	/10-11
F5	/10-1	/10-4	/10-5	/10-12
B11	/10-1	/10-2	/10-5	/10-8
G11	/10-1	/10-2	/10-5	/10-8
E9	/10-1	/10-3	/10-5	/11-3
D10	/10-1	/10-2	/10-5	/12-1
G14	/10-1	/10-4	/10-5	/10-13
D16	/10-1	/10-3	/10-5	/10-6

- Install support elements first tightly by hand on scissor lift platform.
- Place scissor lift platform VAS 6131 A in horizontal position.

- Note bubble level (sight glass) on support platform.

- Drive scissor lift platform VAS 6131 A under engine/transmission subassembly.

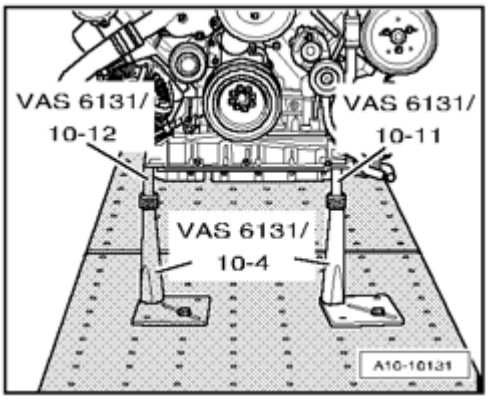

Fig. 159: Positioning Support Elements From VAS 6131/10 At Front On Engine
Courtesy of VOLKSWAGEN UNITED STATES, INC.

- Position support elements from VAS 6131/10 at front on engine as shown in illustration.

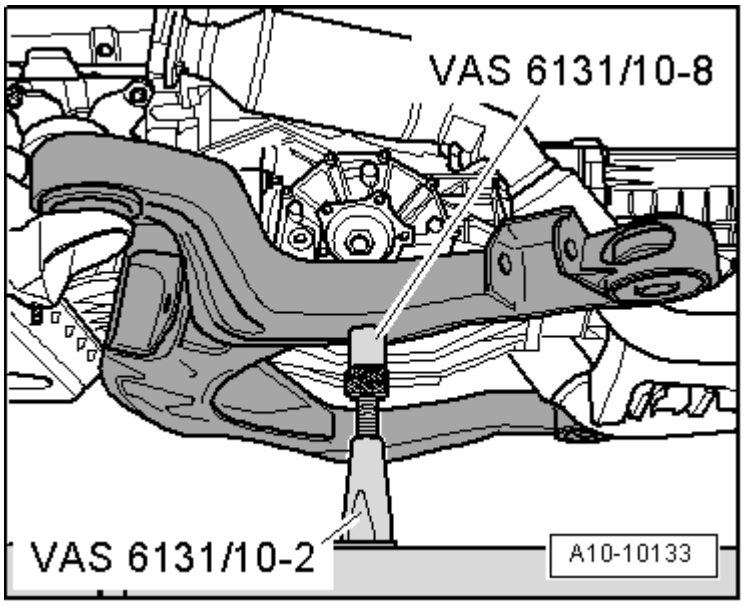

Fig. 160: Positioning Support Elements From VAS 6131/10 At Left/Right On Subframe
Courtesy of VOLKSWAGEN UNITED STATES, INC.

- Position support elements from VAS 6131/10 at left and right on subframe as shown in illustration.

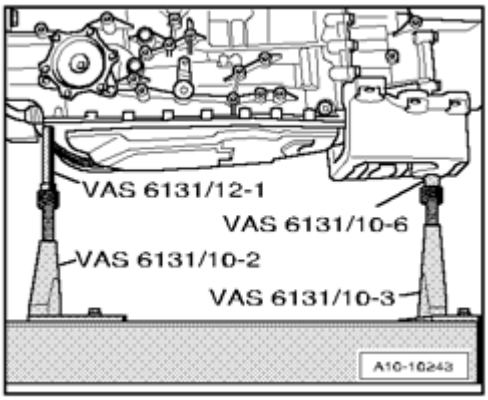

Fig. 161: Positioning Support Elements From VAS 6131/10 And VAS 6131/12 At Left On Transmission And Tunnel Cross Member
Courtesy of VOLKSWAGEN UNITED STATES, INC.

- Position support elements from VAS 6131/10 and VAS 6131/12 at left on transmission and tunnel cross member as shown in illustration.

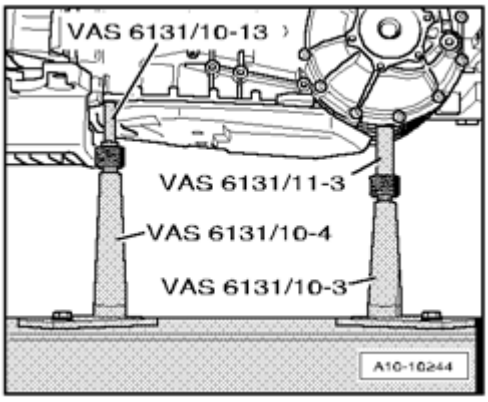

Fig. 162: Positioning Support Elements From VAS 6131/10 And VAS 6131/11 At Right On Transmission
Courtesy of VOLKSWAGEN UNITED STATES, INC.

- Position support elements from VAS 6131/10 and VAS 6131/11 at right on transmission as shown in illustration.
- Twist all spindles of support elements upward far enough until all support pins make contact at support points.
- Tighten base plates for support elements to 20 Nm on scissor lift platform VAS 6131 A.

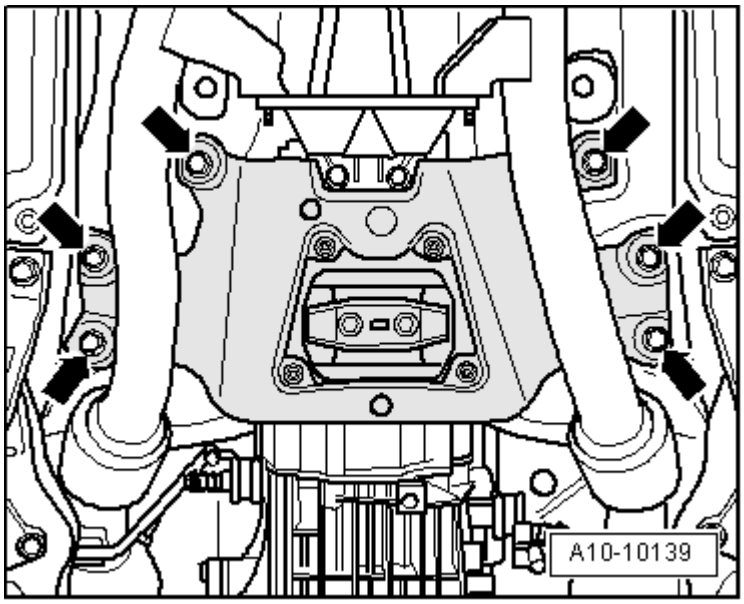

Fig. 163: Removing Bolts On Tunnel Cross Member
Courtesy of VOLKSWAGEN UNITED STATES, INC.

- Remove bolts - **arrows** - on tunnel cross member.

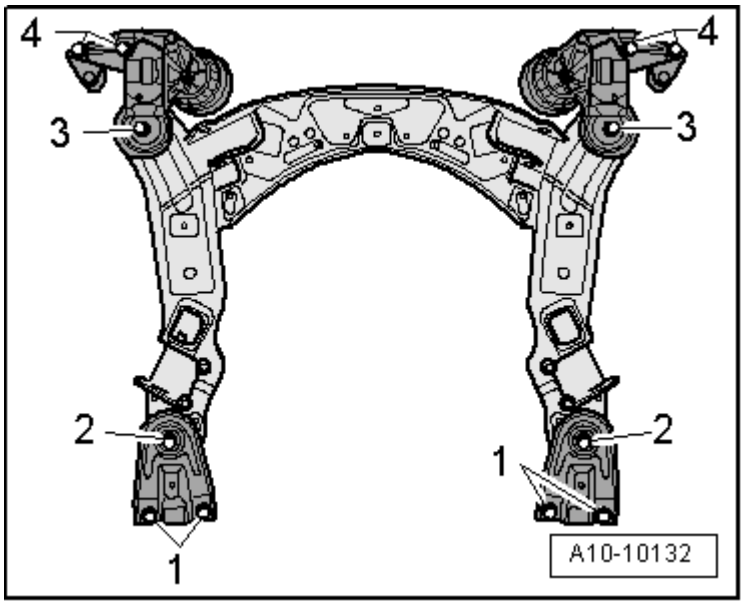

Fig. 164: Bolts Removal Sequence
Courtesy of VOLKSWAGEN UNITED STATES, INC.

- Remove bolts - **1** -.
- Mark installation position of subframe and of both engine mount consoles to longmembers using a felt-tip marker.
- Remove bolts - **2** - , - **3** - and - **4** - in diagonal sequence and in stages.

NOTE:

- **Verify that all hoses and lines between engine, transmission, subframe and body have been disconnected.**
- **While lowering, carefully guide engine/transmission subassembly with subframe out of engine compartment in order to prevent damage.**

- Slowly lower engine/transmission subassembly downward.
- Remove scissor lift table VAS 6131 A under vehicle.

Engine and Automatic Transmission 09L, Separating

Engine and Automatic Transmission 09L, Separating

Special tools, testers and auxiliary items required

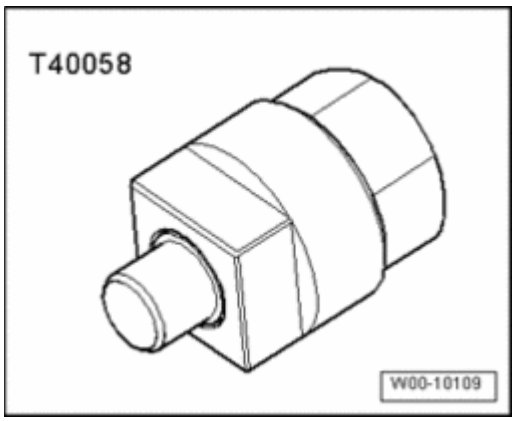

Fig. 165: Adapter T40058
Courtesy of VOLKSWAGEN UNITED STATES, INC.

- Adapter T40058

Procedure

- Engine/transmission assembly removed and placed on Scissor Lift Table VAS 6131 A.

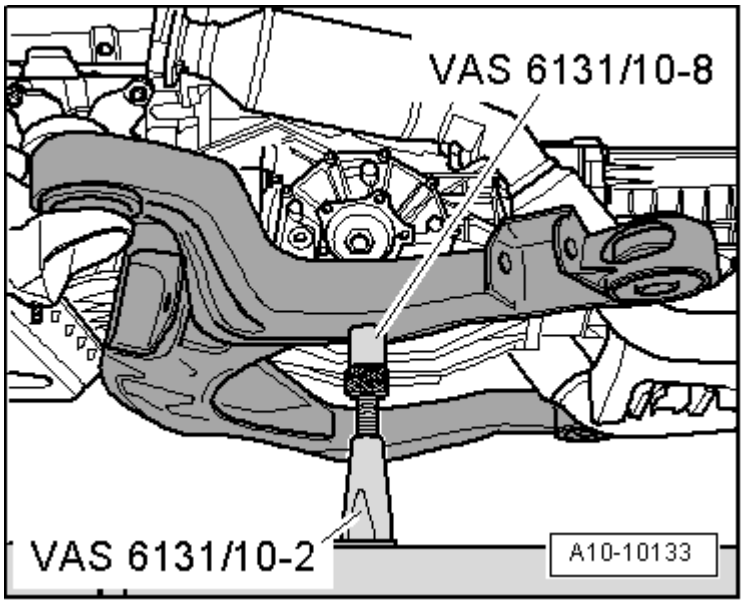

Fig. 166: Positioning Support Elements From VAS 6131/10 At Left/Right On Subframe
Courtesy of VOLKSWAGEN UNITED STATES, INC.

- Twist spindles of support elements at left and right at subframe completely downward.
- Remove support pins from spindles.
- Remove subframe to the side.

NOTE:

- **A second technician is required to remove subframe.**

- Remove both base plates of the subframe support elements on scissor lift table VAS 6131 A.

NOTE:

- **Support points for front of engine, transmission and tunnel cross member remain unchanged.**

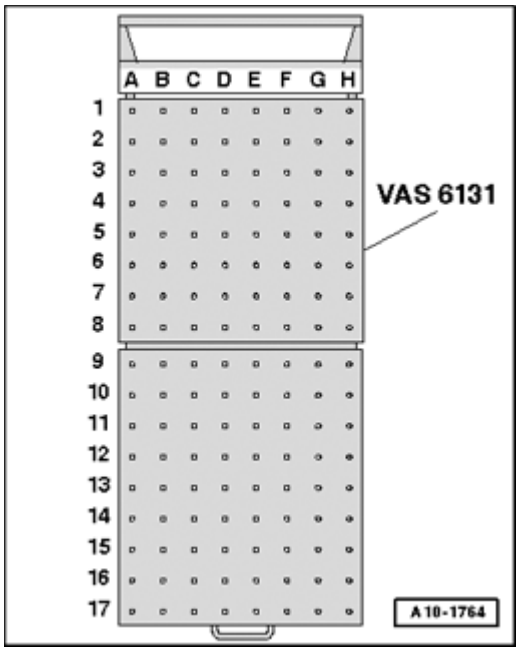

Fig. 167: Identifying Scissor Lift Platform VAS 6131
Courtesy of VOLKSWAGEN UNITED STATES, INC.

- Equip scissor lift platform VAS 6131 A with support set for Audi VAS 6131/10 , VAS 6131/11 and VAS 6131/12 as follows:

Platform coordinates	Parts of support set for Audi VAS 6131/10 , VAS 6131/11 and VAS 6131/12			
B5 1)	/10-1	/10-4	/10-5	/10-11
F5 1)	/10-1	/10-4	/10-5	/10-12
B8	/10-1	/10-4	/10-5	/10-11
G8	/10-1	/10-4	/10-5	/10-10
E9 1)	/10-1	/10-3	/10-5	/11-3
D10 1)	/10-1	/10-4	/10-5	/12-1
G14 1)	/10-1	/10-4	/10-5	/10-13
D16 1)	/10-1	/10-3	/10-5	/10-6
1) The support elements remain unchanged.				

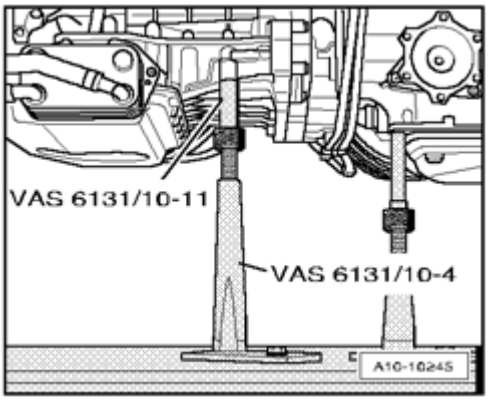

Fig. 168: Positioning Support Elements From VAS 6131/10 At Left On Engine
Courtesy of VOLKSWAGEN UNITED STATES, INC.

- Position support elements from VAS 6131/10 at left on engine as shown in illustration.

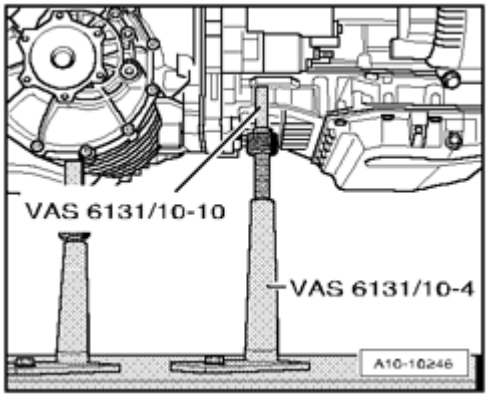

Fig. 169: Removing Base Plate For Right Support Element On Scissor Lift Platform VAS 6131 A
Courtesy of VOLKSWAGEN UNITED STATES, INC.

- Position support elements from VAS 6131/10 at right on engine as shown in illustration.
- Twist spindles of attachments upward far enough until all support pins make contact at support points.
- Tighten base plates for support elements to 20 Nm on scissor lift platform VAS 6131 A.

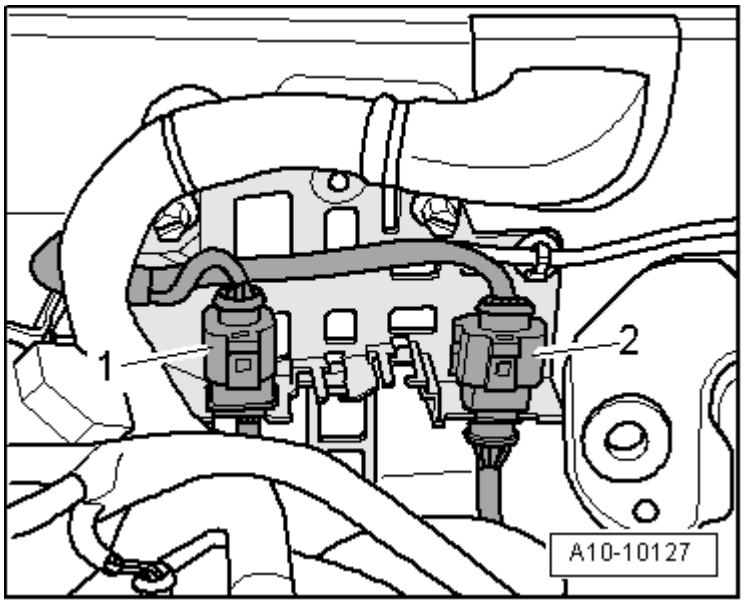

Fig. 170: Disconnecting Electrical Harness Connector For Oxygen Sensor (O2S) 2 Behind Three Way Catalytic Converter (TWC) G131
Courtesy of VOLKSWAGEN UNITED STATES, INC.

- Disconnect electrical harness connector - **2** - for Oxygen Sensor (O2S) 2 Behind Three Way Catalytic Converter (TWC) G131 and free up wire.

NOTE:

- **In the illustration, the electrical harness connector is depicted as installed.**
- **Ignore - 1 -.**

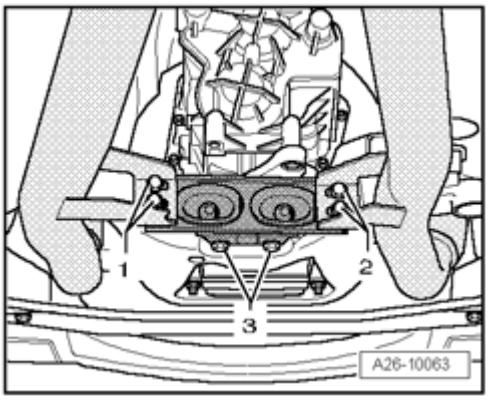

Fig. 171: Removing/Installing Mounting Bolts For Front Exhaust Pipes
Courtesy of VOLKSWAGEN UNITED STATES, INC.

NOTE:

- **Do not bend the flex joint in front of the exhaust pipe more than 10 or it could be damaged.**

- Remove bolts - **1** - at rear bracket for exhaust system.

NOTE:

- **Ignore - 2 - and - 3 -.**

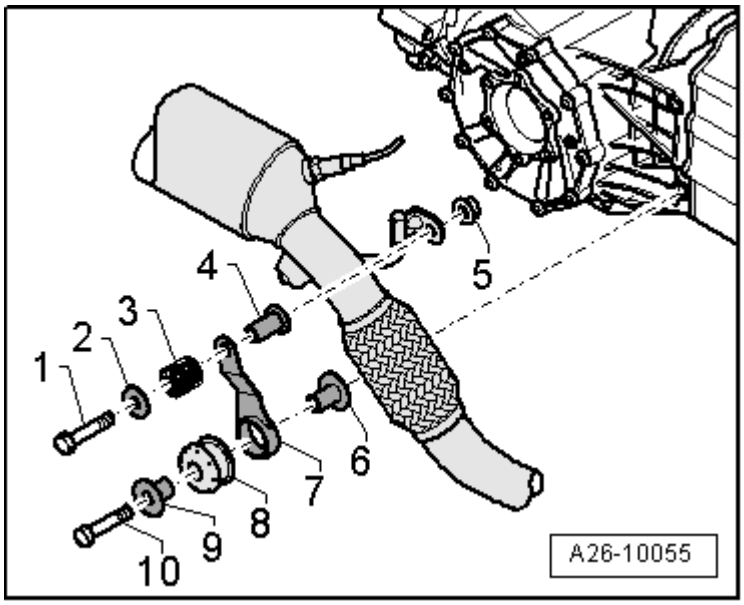

Fig. 172: Removing Bolt At Left Bracket For Front Exhaust Pipe
Courtesy of VOLKSWAGEN UNITED STATES, INC.

- Remove bolt - **1** - at left bracket for front exhaust pipe.

NOTE:

- **Disregard the other items.**

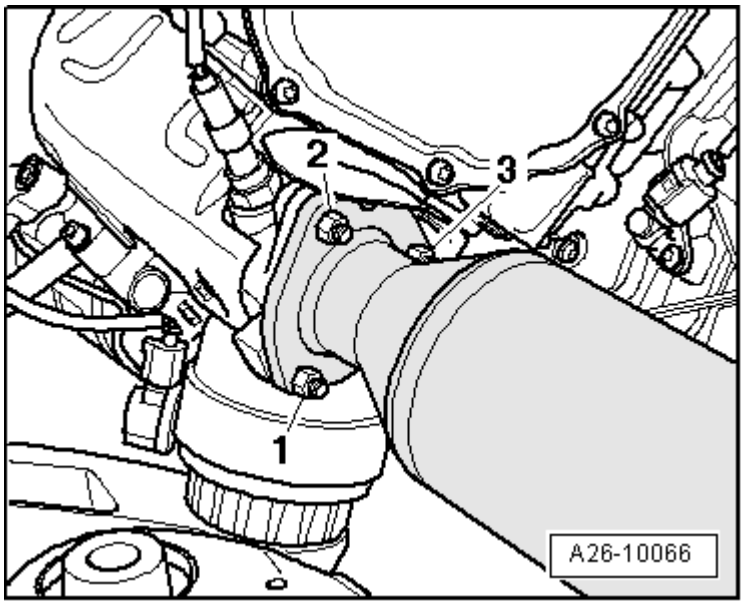

Fig. 173: Removing Nuts & Left Front Exhaust Pipe With Catalytic Converter
Courtesy of VOLKSWAGEN UNITED STATES, INC.

- Remove nuts - **1 to 3** -.

- Remove left front exhaust pipe with catalytic converter.

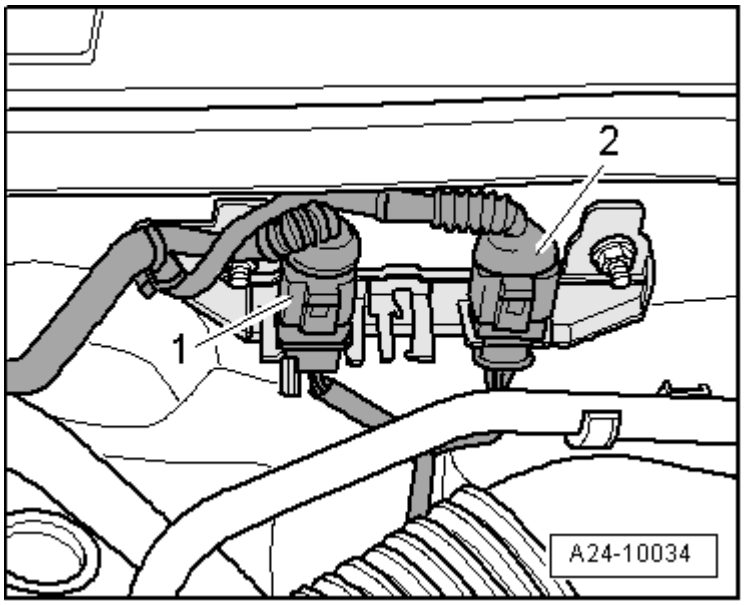

Fig. 174: Disconnecting Electrical Harness Connector For Oxygen Sensor (O2S) Behind Three Way Catalytic Converter (TWC) G130
Courtesy of VOLKSWAGEN UNITED STATES, INC.

- Disconnect electrical harness connector - **2** - for Oxygen Sensor (O2S) Behind Three Way Catalytic Converter (TWC) G130 and free up wire.

NOTE:

- **In the illustration, the electrical harness connector is depicted as installed.**
- **Ignore - 1 -.**

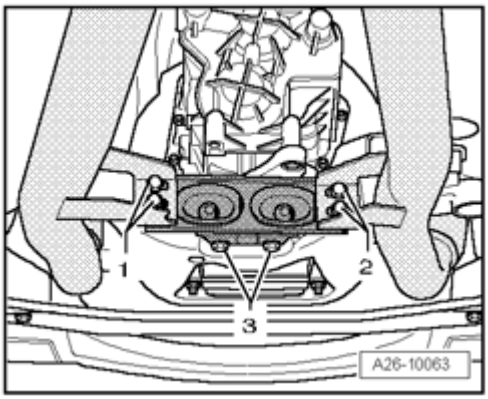

Fig. 175: Removing/Installing Mounting Bolts For Front Exhaust Pipes
Courtesy of VOLKSWAGEN UNITED STATES, INC.

NOTE:

- **Do not bend the flex joint in front of the exhaust pipe more than 10 or it could be damaged.**

- Remove bolts - **2** - at rear bracket for exhaust system.

NOTE:

- **Ignore - 1 - and - 3 -.**

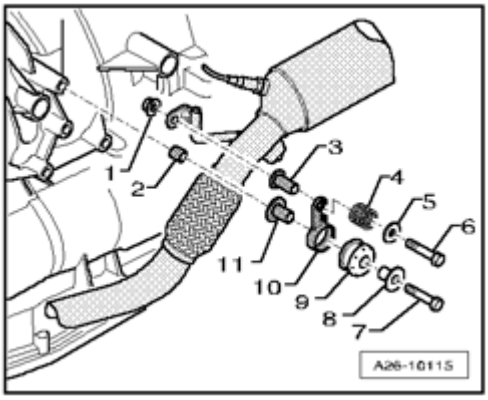

Fig. 176: Removing Bolt At Right Bracket For Front Exhaust Pipe
Courtesy of VOLKSWAGEN UNITED STATES, INC.

- Remove bolt - **6** - at right bracket for front exhaust pipe.

NOTE:

- **Disregard the other items.**

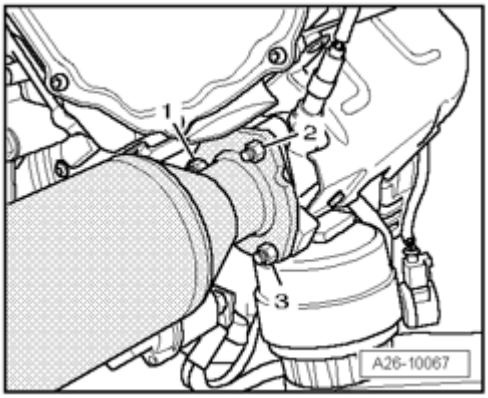

Fig. 177: Removing Nuts & Right Front Exhaust Pipe With Catalytic Converter
Courtesy of VOLKSWAGEN UNITED STATES, INC.

- Remove nuts - **1 to 3** -.
- Remove right front exhaust pipe with catalytic converter.

NOTE:

- **Observe the rules of cleanliness for working on automatic transmissions --> 00 TECHNICAL DATA .**

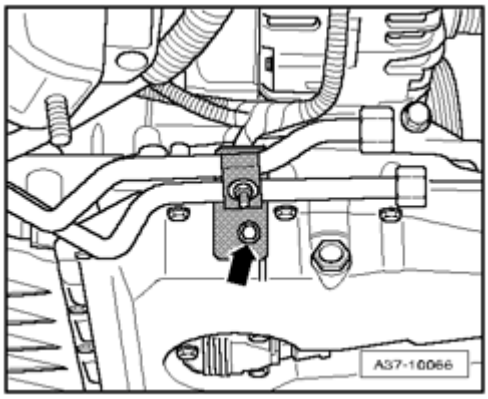

Fig. 178: Removing Bracket For ATF Lines On Oil Pan
Courtesy of VOLKSWAGEN UNITED STATES, INC.

- Remove bracket - **arrow** - for ATF lines on oil pan.

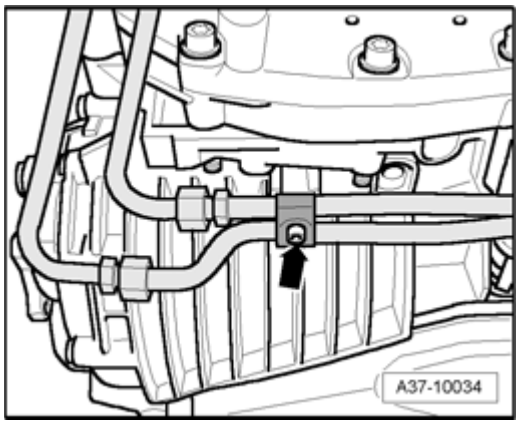

Fig. 179: Removing Bracket For ATF Lines At Bottom On Transmission
Courtesy of VOLKSWAGEN UNITED STATES, INC.

- Remove bracket - **arrow** - for ATF lines at bottom on transmission.

NOTE:

- **Place a rag under the ATF lines to catch escaping ATF.**

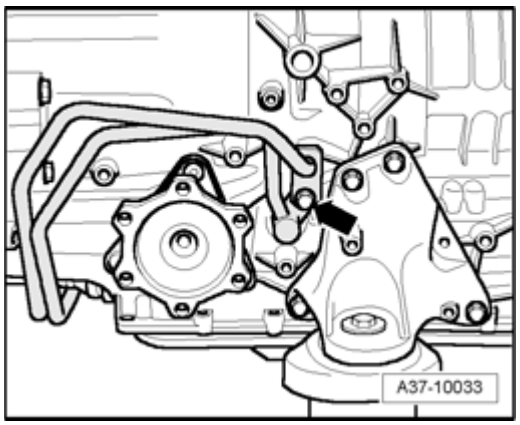

Fig. 180: Removing Bolt & Disconnecting ATF Lines From Transmission
Courtesy of VOLKSWAGEN UNITED STATES, INC.

- Remove bolt - **arrow** -.
- Disconnect ATF lines from transmission.

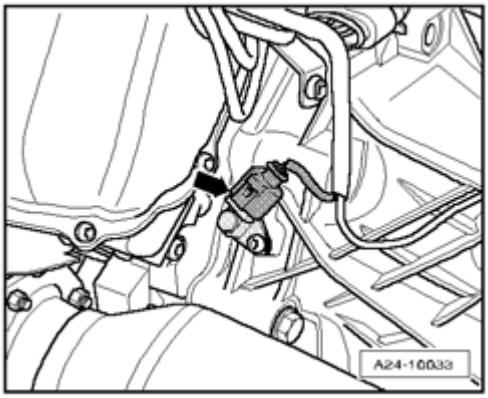

Fig. 181: Disconnecting Electrical Connector For Engine Speed (RPM) Sensor G28
Courtesy of VOLKSWAGEN UNITED STATES, INC.

- Disconnect electrical connector - **arrow** - on Engine Speed (RPM) Sensor G28.

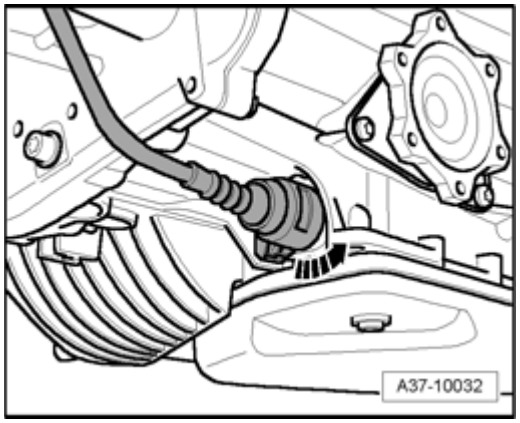

Fig. 182: Disconnecting Electrical Harness Connector On Transmission
Courtesy of VOLKSWAGEN UNITED STATES, INC.

- Disconnect electrical harness connector on transmission, to do this swing twist lock counterclockwise - **arrow** -.

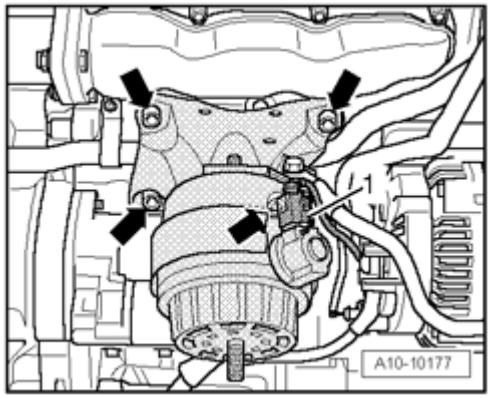

Fig. 183: Disconnecting Electrical Harness Connector At Right Engine Mount
Courtesy of VOLKSWAGEN UNITED STATES, INC.

- Disconnect electrical harness connector - **1** - at right engine mount.
- Free up electrical wire on engine mount console.
- Remove bolts - **arrows** - and remove right engine mount.

NOTE:

- **Shown without engine mount console to provide a better illustration.**

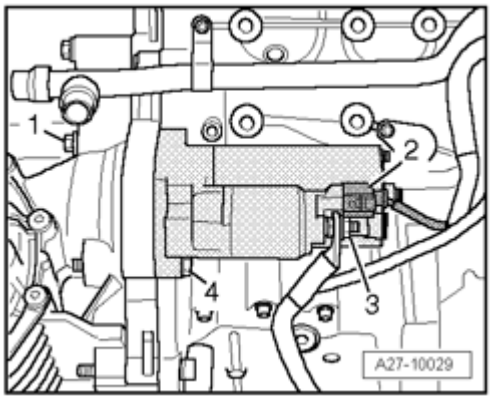

Fig. 184: Disconnecting Electrical Wires On Starter, Removing Bolts & Starter
Courtesy of VOLKSWAGEN UNITED STATES, INC.

- Disconnect electrical wires - **2** - and - **3** - on starter.
- Remove bolts - **1** - and - **4** - and remove starter.

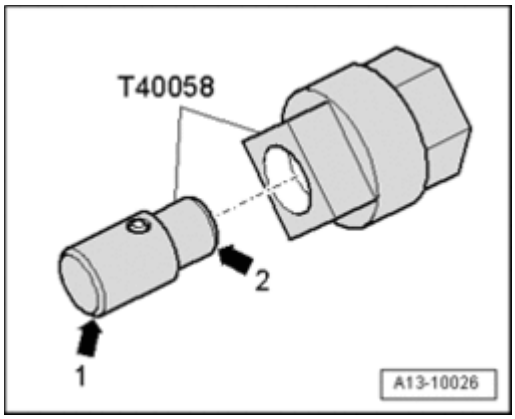

Fig. 185: Inserting Guide Pin Of Adapter T40058 So That Large Diameter Points To Engine
Courtesy of VOLKSWAGEN UNITED STATES, INC.

- Insert guide pin of adapter T40058 so that large diameter - **arrow 1** - points to engine. Small diameter - **arrow 2** - points to adapter.

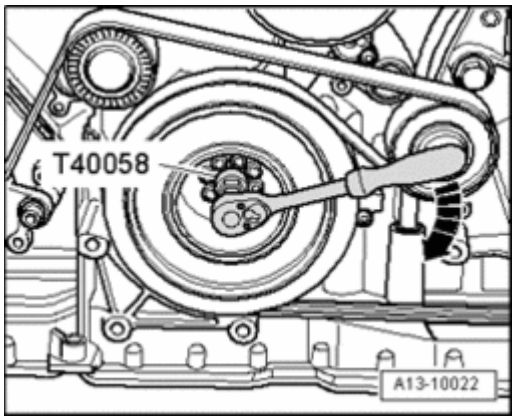

Fig. 186: Loosening Torque Converter Bolts Using Adapter T40058
Courtesy of VOLKSWAGEN UNITED STATES, INC.

- To loosen torque converter bolts, counterhold crankshaft using adapter T40058.

NOTE:

- **Disregard - arrow -.**

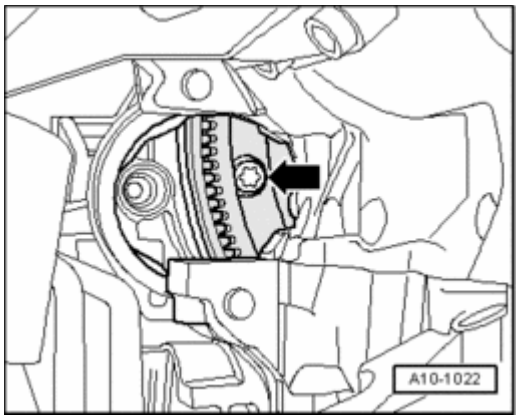

Fig. 187: Torque Converter Bolts
Courtesy of VOLKSWAGEN UNITED STATES, INC.

- Remove 3 torque converter bolts - **arrows** - in opening on removed starter (turn crankshaft $^{1}/_{3}$ rotation in each case).

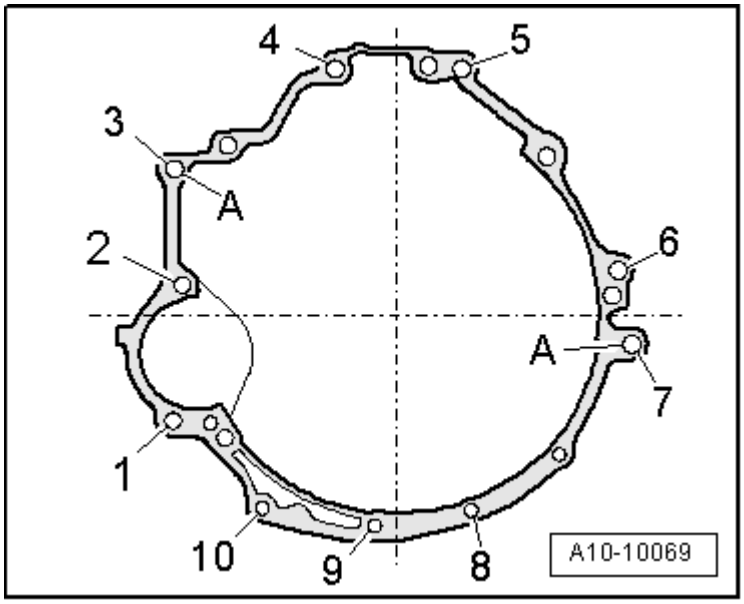

Fig. 188: Identifying Engine/Transmission Threaded Connections
Courtesy of VOLKSWAGEN UNITED STATES, INC.

- Remove engine/transmission threaded connections - **3 to 10** -.

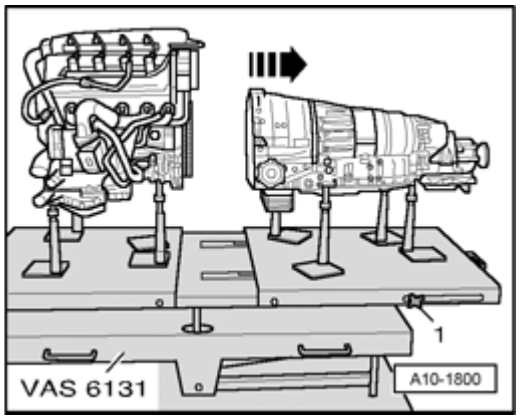

Fig. 189: Loosening Clamping Bolts On Side Of Scissor Lift Table VAS 6131 And Pull Rear Table Section With Transmission Rearward
Courtesy of VOLKSWAGEN UNITED STATES, INC.

- Loosen side clamping screws - **1** - on scissor lift platform VAS 6131 A and pull rear platform top with transmission toward rear - **arrow** - , simultaneously push torque converter through opening of drive plate while doing this.
- Secure torque converter in transmission to prevent it from falling out.

Engine, Securing to Engine and Transmission Holder

Engine, Securing to Engine and Transmission Holder

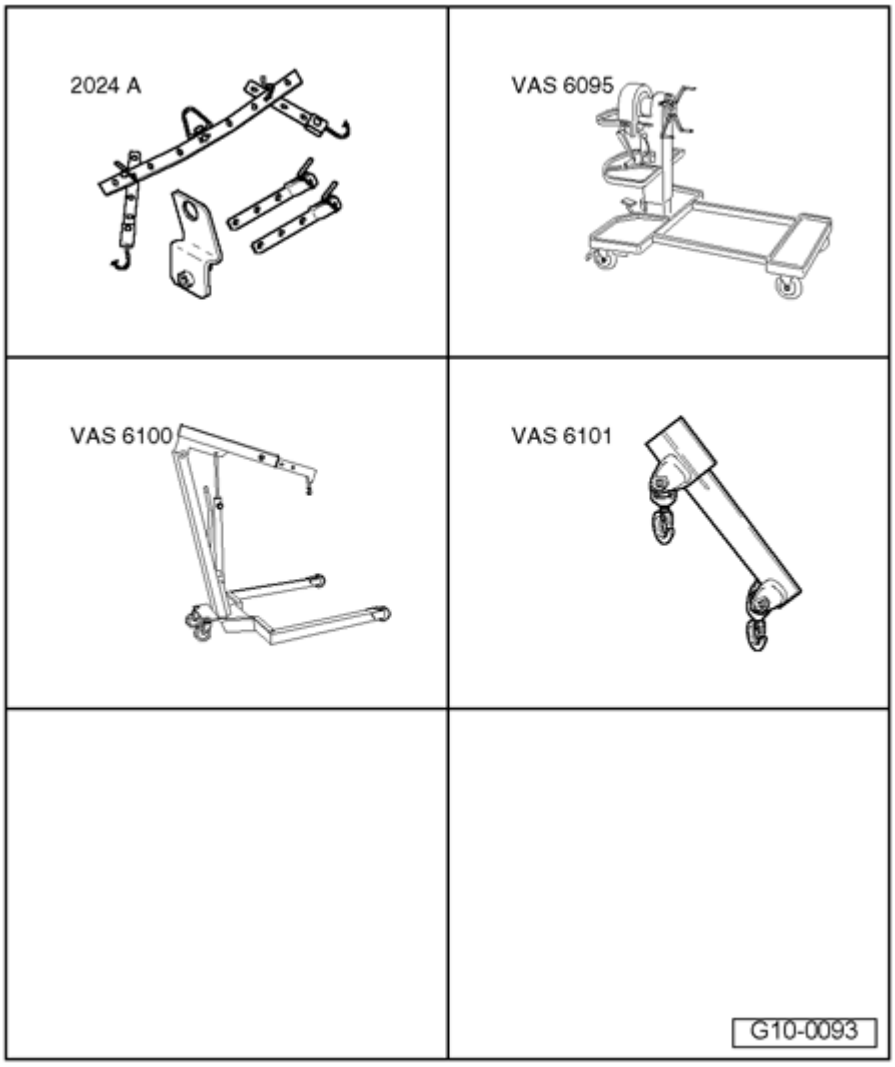

Fig. 190: Identifying Special Tools - Engine, Securing To Engine And Transmission Holder
Courtesy of VOLKSWAGEN UNITED STATES, INC.

Special tools, testers and auxiliary items required

- Lifting tackle 2024 A
- Engine and transmission holder VAS 6095 with bracket VAS 6095/1-5
- Shop crane VAS 6100
- Lift arm extension for workshop crane VAS 6101

Procedure

- Engine separated from transmission.

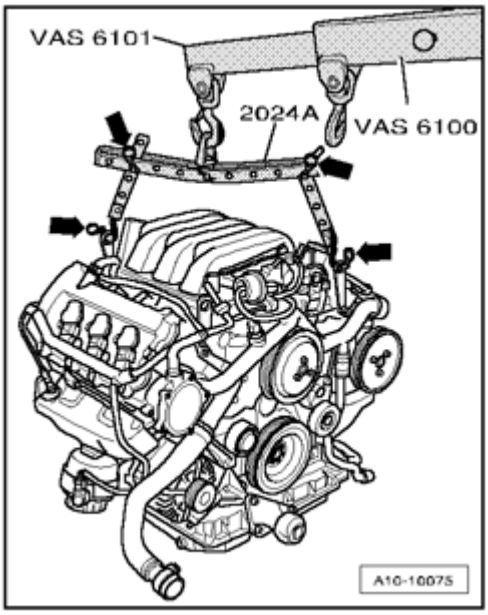

Fig. 191: Hooking Engine Sling 2024 A Onto Engine And Onto Workshop Crane VAS 6100 With Lift Arm Extension For Workshop Crane VAS 6101
Courtesy of VOLKSWAGEN UNITED STATES, INC.

- Hook engine sling 2024 A onto engine and onto workshop crane VAS 6100 with lift arm extension for workshop crane VAS 6101 as shown in the illustration.

NOTE:

- **To be aligned to the center of gravity of the engine assembly, the hole rails of the lifting hook must be inserted as shown in the illustration.**

CAUTION: Lifting hooks and alignment pins on the engine sling must be secured with securing pins - arrows -.

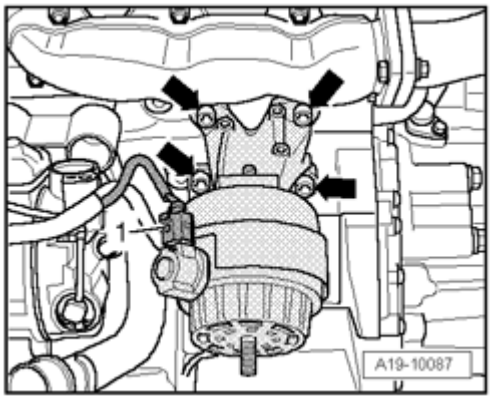

Fig. 192: Removing Bolts And Left/Right Engine Support
Courtesy of VOLKSWAGEN UNITED STATES, INC.

- Disconnect electrical harness connector - **1** - at left engine mount.
- Remove bolts - **arrows** - and remove left engine mount.

NOTE:

- **Shown without engine mount console to provide a better illustration.**

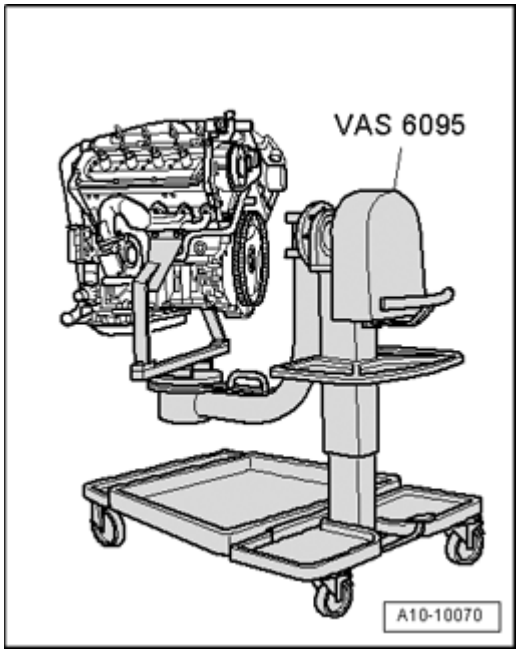

Fig. 193: Securing Engine Using Bracket VAS 6095/1-5 To 40 Nm Engine And Transmission Holder VAS 6095
Courtesy of VOLKSWAGEN UNITED STATES, INC.

- Secure engine using bracket VAS 6095/1-5 to 40 Nm Engine and Transmission Holder VAS 6095 as shown in illustration.

Engine, Installing

Engine, Installing

Special tools, testers and auxiliary items required

- Depth gauge

Procedure

NOTE:

- **During assembly, replace self-locking nuts and bolts.**
- **Always replace bolts that are tightened to torque as well as sealing rings, gaskets and O-rings.**
- **Secure all hose connections with hose clamps appropriate for the model .**
- **During installation, all cable ties must be re-installed at the same location.**

Installation dimension for torque converter, checking

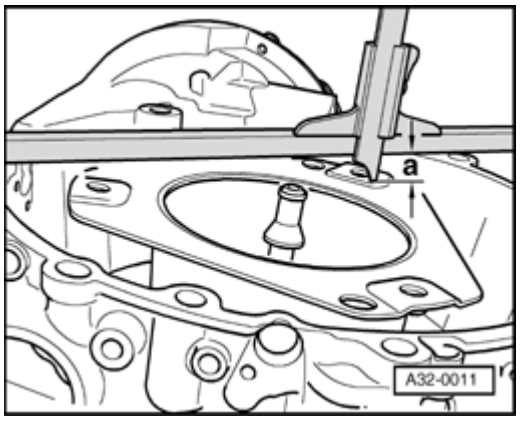

Fig. 194: Checking Installation Dimension For Torque Converter
Courtesy of VOLKSWAGEN UNITED STATES, INC.

When torque converter is installed correctly, distance between contact surface of threaded holes at torque converter and contact surface of converter housing on Automatic Transmission 09L is minimum 19 mm.

CAUTION: If torque converter is incorrectly installed, torque converter coupling and ATF pump could be damaged when transmission and engine are flanged together.

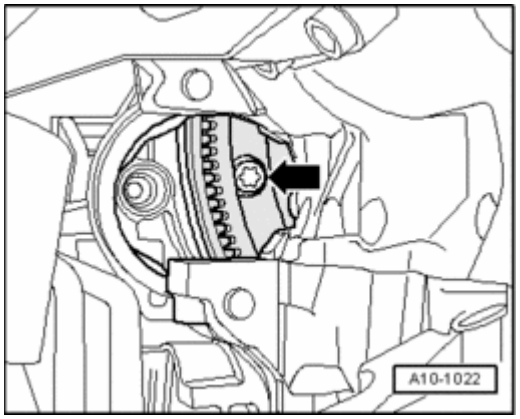

Fig. 195: Torque Converter Bolts
Courtesy of VOLKSWAGEN UNITED STATES, INC.

- Before connecting engine and transmission, rotate torque converter and engine drive plate so that one hole or one threaded hole stands at height of opening of the removed starter - **arrow** -.
- To secure torque converter to drive plate, use new original ribbed bolts .
- Make sure alignment sleeves for engine to transmission are installed in cylinder block. Install if necessary.
- Install intermediate plate between engine and transmission onto alignment bushings.
- Bolt transmission to engine.

CAUTION: Keep checking whether the torque converter behind the drive plate can be turned before and during tightening of the bolts at engine/transmission flange. If the torque converter cannot be turned, it must be assumed that it has not been inserted properly and that the coupling plate of the ATF pump and therefore the transmission will be destroyed during final tightening of the bolts.

NOTE:

- **Tightening specifications only apply to lightly greased, oiled, phosphated or blackened nuts and bolts.**
- **Additional lubricants, such as engine or transmission oil are permissible, although lubricants containing graphite are not.**
- **Do not use any degreased parts.**
- **Tolerance for torque specifications 15%.**

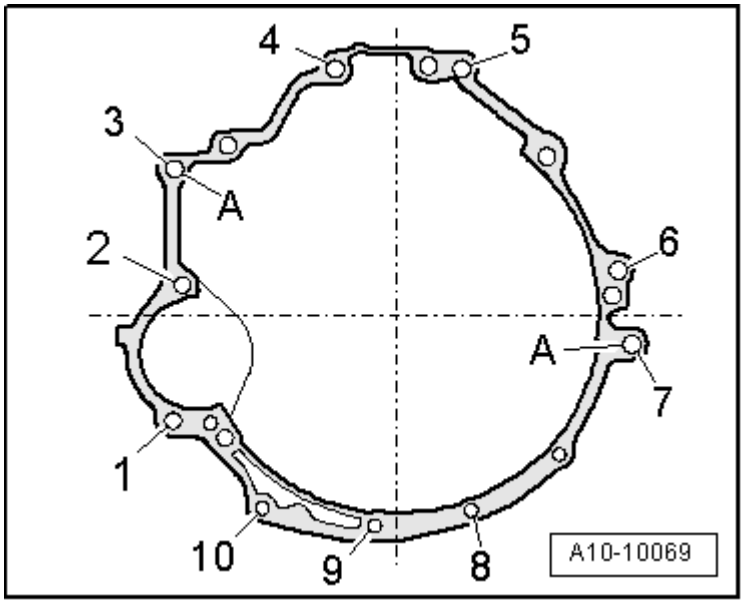

Fig. 196: Identifying Engine/Transmission Threaded Connections
Courtesy of VOLKSWAGEN UNITED STATES, INC.

Engine/transmission, fastening

Item	Bolt	Nm
1	M10x100	65 1)
2, 6	M12x120	65
3, 4, 5	M12x105	65
7	M12x130	65
8, 9, 10	M10x80	45
A	Alignment sleeves for centering	
1) Bolt class 10.9.		

Further installation is in reverse order of removal, noting the following.

- Fasten the ATF lines --> **37 CONTROLS, HOUSING** .
- Install front exhaust pipes: Left --> **Left Front Exhaust Pipe with Catalytic Converter, Removing and Installing** , right --> **Right Exhaust Pipe with Catalytic Converter, Removing and Installing** .
- Always clean threaded bores in transmission flanged shaft for locking fluid residue using a tap before installation.

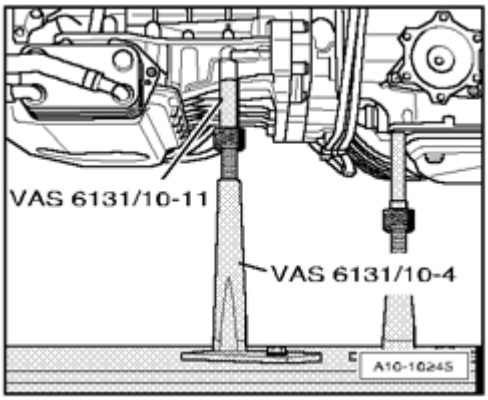

Fig. 197: Positioning Support Elements From VAS 6131/10 At Left On Engine
Courtesy of VOLKSWAGEN UNITED STATES, INC.

- Turn spindle of left support element on engine downward.
- Remove base plate for left support element on scissor lift platform VAS 6131 A.

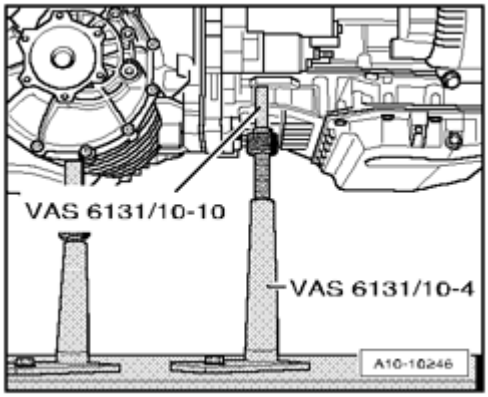

Fig. 198: Removing Base Plate For Right Support Element On Scissor Lift Platform VAS 6131 A
Courtesy of VOLKSWAGEN UNITED STATES, INC.

- Turn spindle of right support element on engine downward.
- Remove base plate for right support element on scissor lift platform VAS 6131 A.

NOTE:

- **Support points for front of engine, transmission and tunnel cross member remain unchanged.**

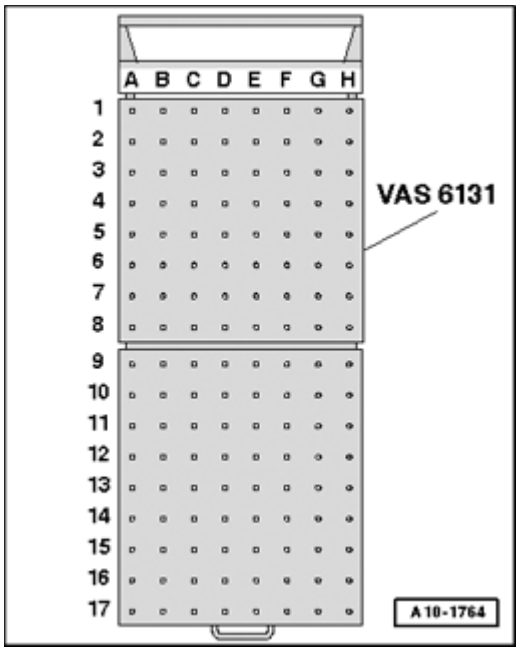

Fig. 199: Identifying Scissor Lift Platform VAS 6131
Courtesy of VOLKSWAGEN UNITED STATES, INC.

- Equip scissor lift platform VAS 6131 A with support set for Audi VAS 6131/10 as follows:

Platform coordinates	Parts of support set for Audi VAS 6131/10			
B5 1)	/10-1	/10-4	/10-5	/10-11
F5 1)	/10-1	/10-4	/10-5	/10-12
B11	/10-1	/10-2	/10-5	/10-8 2)
G11	/10-1	/10-2	/10-5	/10-8 2)
E9 1)	/10-1	/10-3	/10-5	/11-3
D10 1)	/10-1	/10-2	/10-5	/12-1
G14 1)	/10-1	/10-4	/10-5	/10-13
D16 1)	/10-1	/10-3	/10-5	/10-6
1) The support elements remain unchanged. 2) Only install support elements after installing subframe.				

NOTE:

- **A second technician is required to position subframe onto support elements.**

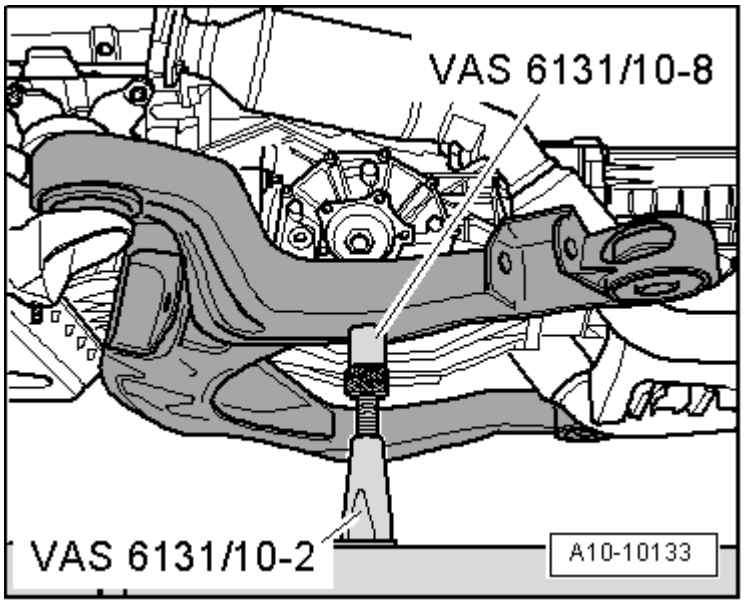

Fig. 200: Positioning Support Elements From VAS 6131/10 At Left/Right On Subframe
Courtesy of VOLKSWAGEN UNITED STATES, INC.

- Position subframe on both support elements VAS 6131/10-8.
- Twist spindles of support elements upward on both sides.
- Tighten base plates for support elements to 20 Nm on scissor lift platform VAS 6131 A.
- Using Scissor Lift Platform VAS 6131 A , slowly guide engine/transmission unit with subframe into body from below.

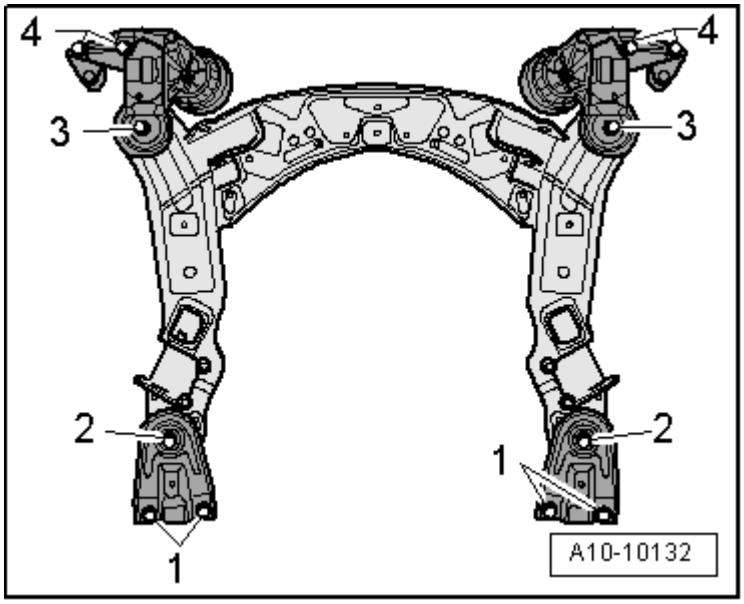

Fig. 201: Bolts Removal Sequence
Courtesy of VOLKSWAGEN UNITED STATES, INC.

- Align subframe and engine bearing consoles according to markings applied on longmembers during

removal.

- Tighten bolts for subframe and engine mount consoles only to specified torque. Do not tighten further (tighten bolts only after axle alignment).

1. 55 Nm
2. 115 Nm
3. 115 Nm
4. 75 Nm

CAUTION: Vehicle must not be driven in this condition.

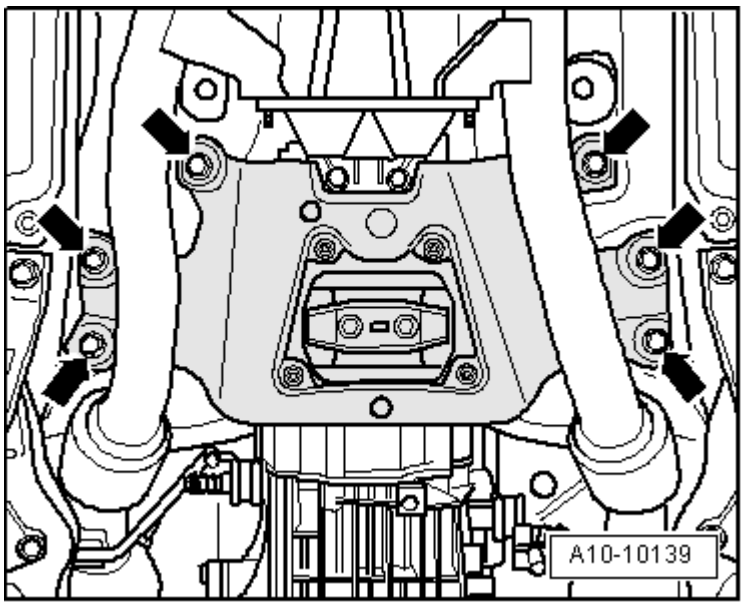

Fig. 202: Removing Bolts On Tunnel Cross Member
Courtesy of VOLKSWAGEN UNITED STATES, INC.

- Fasten bolts - **arrows** - for tunnel cross member.

Further installation is in reverse order of removal, noting the following:

- Install selector lever cable, adjust if necessary --> **37 CONTROLS, HOUSING** .
- Install drive axles --> **40 - FRONT SUSPENSION** .
- Install guide control arm, control arm, stabilizer bar and suspension strut --> **40 - FRONT SUSPENSION** .
- Install subframe cross member --> **40 - FRONT SUSPENSION** .
- Install front cross member --> **50 - BODY - FRONT** .
- Install driveshaft -->
  - **39 FINAL DRIVE, REAR DIFFERENTIAL** for REAR FINAL DRIVE 01R

- **39 - FINAL DRIVE, DIFFERENTIAL** for REAR FINAL DRIVE 0AR

.

- Align exhaust system --> **Exhaust System, Installing**.
- Install A/C compressor --> **87 - AIR CONDITIONING** .
- Install ribbed belt --> **Ribbed Belt, Removing and Installing** .

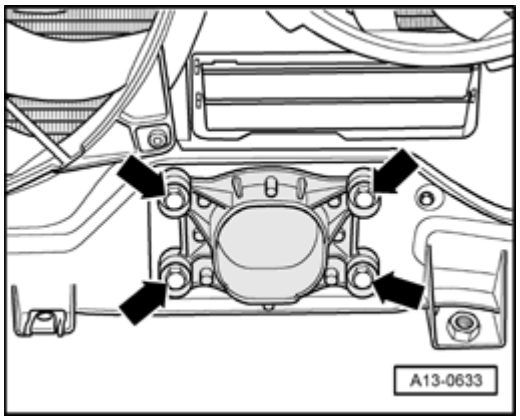

Fig. 203: Placing Torque Support On Rubber Buffer For Torque Support And Tightening Bolts
Courtesy of VOLKSWAGEN UNITED STATES, INC.

- Place torque support on rubber buffer for torque support and tighten bolts - **arrows** -.
- Electrical connections and routing --> Electrical Wiring Diagrams, Troubleshooting and Component Locations.
- Observe safety precautions after connecting battery --> **27 - STARTER, GENERATOR, CRUISE CONTROL** .

CAUTION: Do not use a battery charger for starting assistance! There is the risk that the vehicle control modules could be damaged.

- Mount wiper arms and adjust --> **92 - WINDSHIELD WIPER AND WASHER SYSTEM** .
- Install dome brace --> **40 - FRONT SUSPENSION** .
- Check oil level --> **Oil Level, Checking** .
- Bleed fuel system --> **24 - FUEL INJECTION SYSTEM** .
- Fill with coolant -->**Cooling System, Draining and Filling** .

NOTE:

- **Only reuse drained coolant if cylinder head or engine block was not replaced.**
- **Dirty coolant must not be re-used.**

- Fill power-steering system oil and bleed steering system --> **48 - STEERING** .
- Check ATF level --> **37 CONTROLS, HOUSING** .

- Align subframe and both engine bearing consoles --> **40 - FRONT SUSPENSION**
- Perform axle alignment --> **44 - WHEELS, TIRES, WHEEL ALIGNMENT** .

CAUTION: After axle alignment, tighten subframe bolts to final torque.

Tightening Specifications

NOTE:

- **Tightening specifications only apply to lightly greased, oiled, phosphated or blackened nuts and bolts.**
- **Additional lubricants, such as engine or transmission oil are permissible, although lubricants containing graphite are not.**
- **Do not use any degreased parts.**
- **Tolerance for torque specifications 15%.**

Component		Nm
Bolts/nuts	M6	9
	M8	20
	M10	40
	M12	65
Exceptions:		
Drive plate to torque converter		85 1)
Clamp B+ to starter		16
Engine support to cylinder block		40
Engine mount console to longitudinal member		75
Tunnel cross member to body		40
Hydraulic pressure line to power steering pump		47
Fuel hose to fuel line		22
Torque bracket to engine		40
Torque support stop to lock carrier		23
Hose clamps 9 mm wide		3
Hose clamps 13 mm wide		5,5
1) Replace ribbed bolts; only use original equipment bolts .		

13 - ENGINE - CRANKSHAFT, CYLINDER BLOCK

BELT PULLEY SIDE, SERVICING

Belt Pulley Side, Servicing

--> **Ribbed Belt Drive, Component Overview**

--> **Coolant Pump Ribbed Belt Pulley, Removing and Installing**

--> **Power Steering Pump Ribbed Belt Pulley, Removing and Installing**

--> **Ribbed Belt, Removing and Installing**

--> **Vibration Damper, Removing and Installing**

--> **Ribbed Belt Side Sealing Flange with Crankshaft Seal, Replacing**

Ribbed Belt Drive, Component Overview

Ribbed Belt Drive, Component Overview

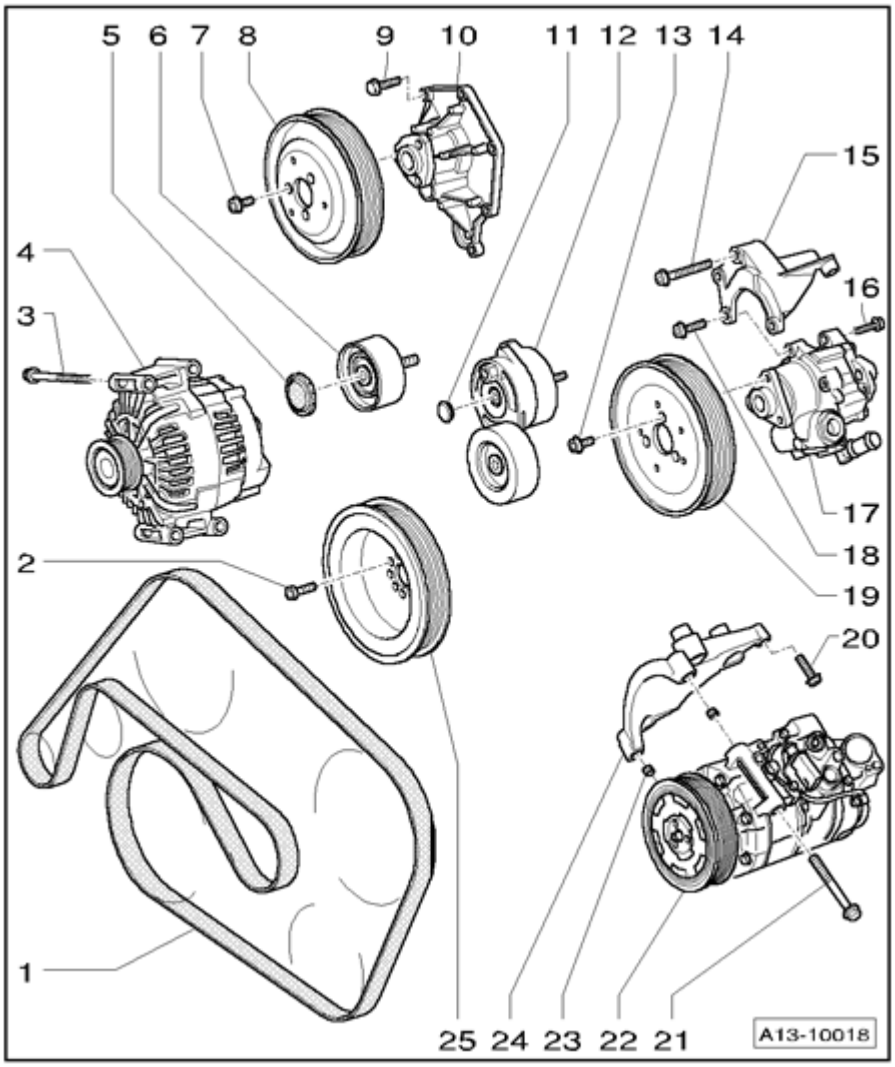

Fig. 204: Ribbed Belt Drive, Component Overview
Courtesy of VOLKSWAGEN UNITED STATES, INC.

1 - Ribbed belt

- Check for wear
- Before removing, mark direction of rotation using chalk or felt-tip marker. Reversing the direction of rotation of a run-in belt can destroy the belt
- Removing and installing --> **Ribbed Belt, Removing and Installing**
- When installing, make sure it is seated correctly on the pulleys

2 - 20 Nm plus an additional 90 ($^1/_4$ turn)

- Replace

3 - 22 Nm

4 - Generator

- Removing and installing --> **27 - STARTER, GENERATOR, CRUISE CONTROL**

5 - Cap for idler pulley

6 - Idler roller for ribbed belt

- Tighten to 40 Nm

7 - 20 Nm

8 - Ribbed belt pulley for coolant pump

- Removing and installing --> **Coolant Pump Ribbed Belt Pulley, Removing and Installing**

9 - 9 Nm

10 - Coolant pump

- Removing and installing --> **Coolant Pump, Removing and Installing**

11 - Cap for tensioning element

12 - Tensioning element for ribbed belt

- Tighten to 40 Nm.

13 - 20 Nm

14 - 20 Nm

15 - Bracket for power steering pump

16 - 20 Nm

17 - Power-steering pump

- Removing and installing --> **48 - STEERING**

18 - 20 Nm

19 - Belt pulley for power steering pump

- Removing and installing --> **Power Steering Pump Ribbed Belt Pulley, Removing and Installing**

20 - 20 Nm

21 - 25 Nm

22 - Air conditioner compressor

- Do not unfasten/separate refrigerant lines
- Removing and installing --> **87 - AIR CONDITIONING**

23 - Alignment bushing

- 2 pieces

24 - Bracket for air conditioning compressor

25 - Vibration damper

- With belt pulley for ribbed belt
- Various versions. Sequence
- Removing and installing --> **Vibration Damper, Removing and Installing**

Coolant Pump Ribbed Belt Pulley, Removing and Installing

Coolant Pump Ribbed Belt Pulley, Removing and Installing

Special tools, testers and auxiliary items required

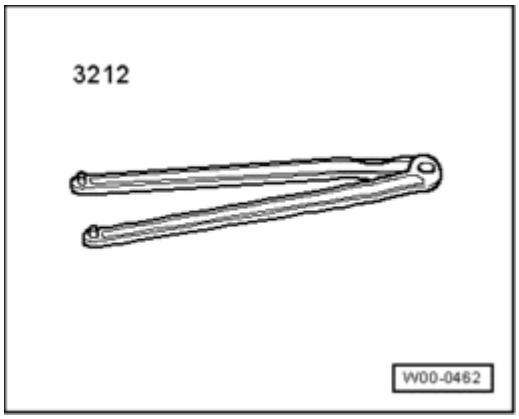

Fig. 205: Spanner Wrench 3212
Courtesy of VOLKSWAGEN UNITED STATES, INC.

- Spanner Wrench 3212

Removing

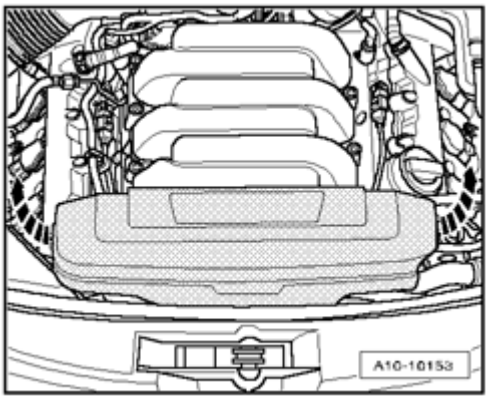

Fig. 206: Identifying Front Engine Cover
Courtesy of VOLKSWAGEN UNITED STATES, INC.

- Remove front engine cover - **arrows** -.

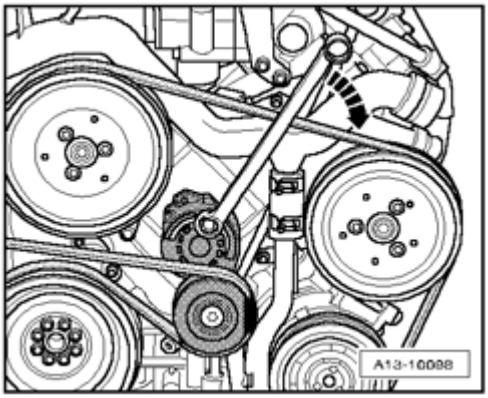

Fig. 207: Pivoting Tensioning Device To Relieve Tension On Ribbed Belt
Courtesy of VOLKSWAGEN UNITED STATES, INC.

- Pivot tensioning device in direction of - **arrow** - to relieve tension on ribbed belt.
- Remove ribbed belt from coolant pump belt pulley.
- Release tensioner unit

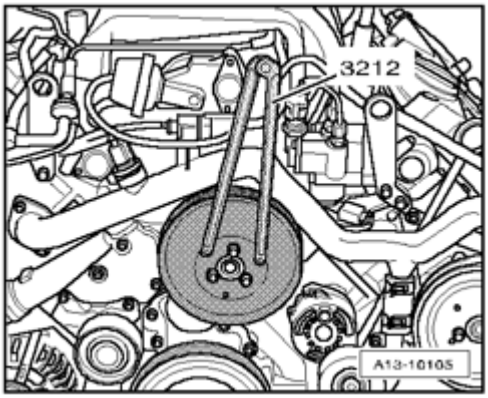

Fig. 208: Loosening Bolts Use Spanner Wrench 3212 To Counter-Hold
Courtesy of VOLKSWAGEN UNITED STATES, INC.

- Remove ribbed belt pulley from coolant pump.
- When loosening bolts use spanner wrench 3212 to counter-hold.

Installing

Installation is in reverse order of removal, noting the following:

NOTE:

- **When installing the ribbed belt, make sure it is seated correctly on the pulleys.**

- Start engine and check belt running.

Tightening specifications

Component	Nm
Ribbed belt pulley to coolant pump	20

Power Steering Pump Ribbed Belt Pulley, Removing and Installing

Power Steering Pump Ribbed Belt Pulley, Removing and Installing

Special tools, testers and auxiliary items required

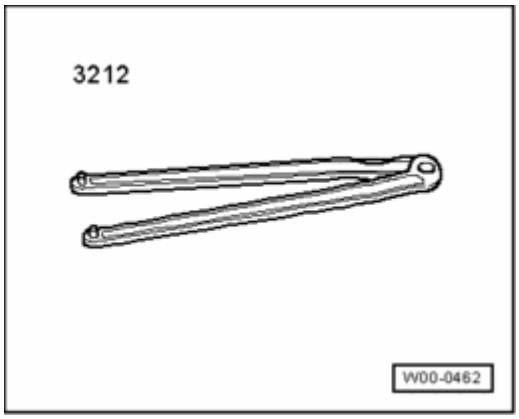

Fig. 209: Spanner Wrench 3212
Courtesy of VOLKSWAGEN UNITED STATES, INC.

- Spanner Wrench 3212

Removing

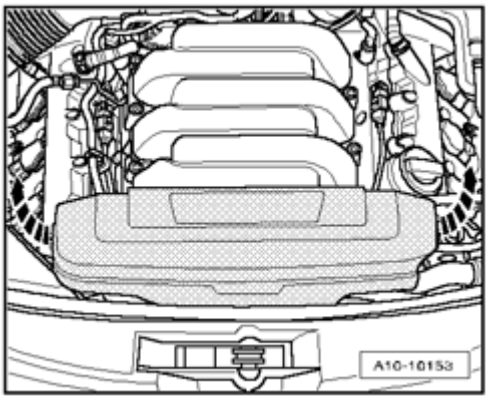

Fig. 210: Identifying Front Engine Cover
Courtesy of VOLKSWAGEN UNITED STATES, INC.

- Remove front engine cover - **arrows** -.

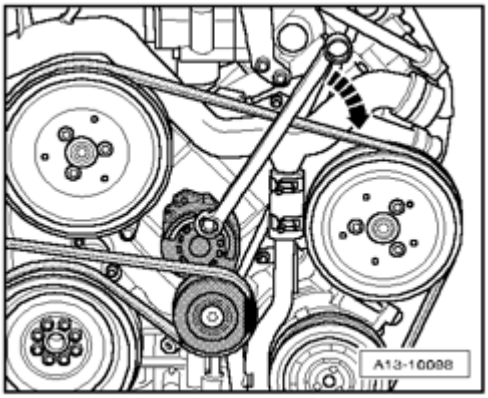

Fig. 211: Pivoting Tensioning Device To Relieve Tension On Ribbed Belt
Courtesy of VOLKSWAGEN UNITED STATES, INC.

- Pivot tensioning device in direction of - **arrow** - to relieve tension on ribbed belt.
- Remove ribbed belt from power steering pump belt pulley.
- Release tensioner unit

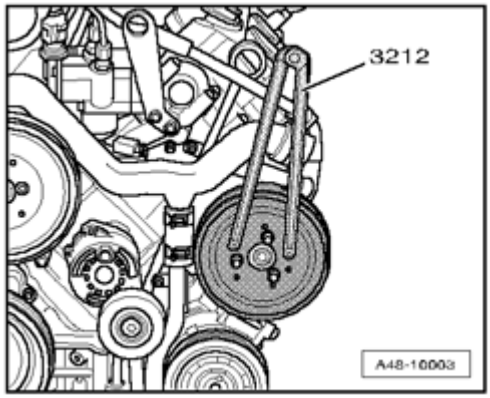

Fig. 212: Loosening Bolts Use Spanner Wrench 3212 To Counter-Hold
Courtesy of VOLKSWAGEN UNITED STATES, INC.

- Remove ribbed belt pulley from power steering pump.
- When loosening bolts use spanner wrench 3212 to counter-hold.

Installing

Installation is in reverse order of removal, noting the following:

- Installation position: Designation "Front" points in direction of travel.

NOTE:

- **When installing the ribbed belt, make sure it is seated correctly on the pulleys.**

- Start engine and check belt running.

Tightening specifications

Component	Nm
Ribbed belt pulley to power steering pump	20

Ribbed Belt, Removing and Installing

Ribbed Belt, Removing and Installing

Removing

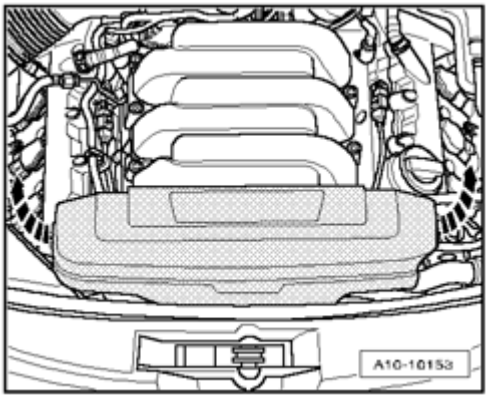

Fig. 213: Identifying Front Engine Cover
Courtesy of VOLKSWAGEN UNITED STATES, INC.

- Remove front engine cover - **arrows** -.

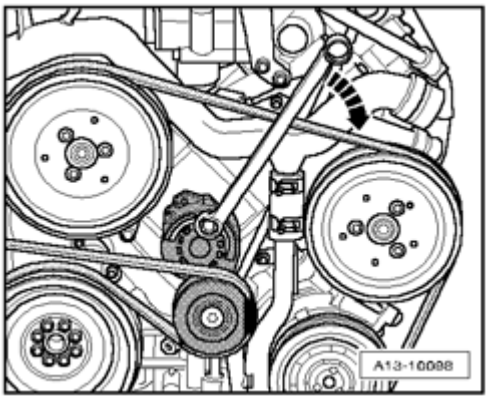

Fig. 214: Pivoting Tensioning Device To Relieve Tension On Ribbed Belt
Courtesy of VOLKSWAGEN UNITED STATES, INC.

NOTE:

- **Before removing ribbed belt, mark the turning direction on it with chalk or a felt tip pen. A reversed turning direction can cause damage to the belt under operating conditions.**

- Pivot tensioning device in direction of - **arrow** - to relieve tension on ribbed belt.
- Remove ribbed belt and release tensioning device.

Installing

Installation is in reverse order of removal, noting the following:

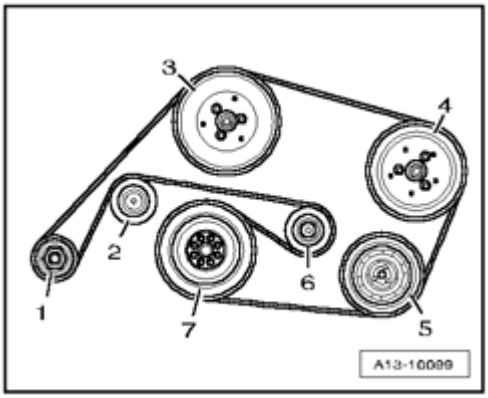

Fig. 215: Placing Ribbed Belt Over Belt Pulley
Courtesy of VOLKSWAGEN UNITED STATES, INC.

- Place ribbed belt over belt pulley as shown in the illustration.
- Generator
- Idler roller
- Coolant pump
- Power-steering pump
- Air conditioner compressor
- Tensioning device for ribbed belt
- Crankshaft

NOTE:

- **When installing the ribbed belt, make sure it is seated correctly on the pulleys.**

- Start engine and check belt running.

Vibration Damper, Removing and Installing

Vibration Damper, Removing and Installing

NOTE:

- **Different vibration dampers are allocated to the various engine versions .**

Removing

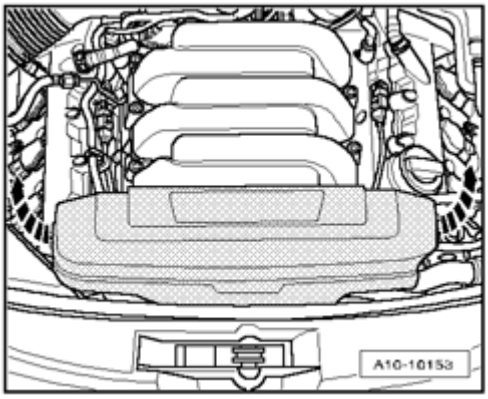

Fig. 216: Identifying Front Engine Cover
Courtesy of VOLKSWAGEN UNITED STATES, INC.

- Remove front engine cover - **arrows** -.

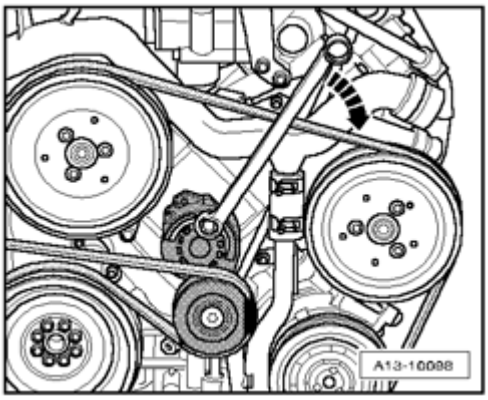

Fig. 217: Pivoting Tensioning Device To Relieve Tension On Ribbed Belt
Courtesy of VOLKSWAGEN UNITED STATES, INC.

NOTE:

- **Before removing ribbed belt, mark the turning direction on it with chalk or a felt tip pen. A reversed turning direction can cause damage to the belt under operating conditions.**

- Pivot tensioning device in direction of - **arrow** - to relieve tension on ribbed belt.
- Remove ribbed belt and release tensioning device.

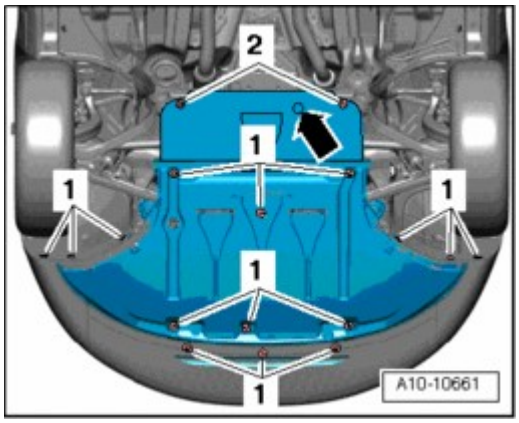

Fig. 218: Identifying Noise Insulation And Mountings
Courtesy of VOLKSWAGEN UNITED STATES, INC.

- Remove noise insulation and the mountings - **1, 2** - - **arrow** - where present.

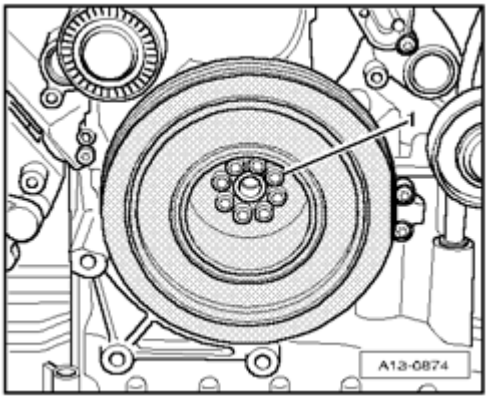

Fig. 219: Removing Vibration Damper
Courtesy of VOLKSWAGEN UNITED STATES, INC.

- Mark vibration damper for re-installation.
- Remove bolts - **1** -.
- Remove vibration damper.

Installing

Installation is in reverse order of removal, noting the following:

- Install ribbed belt --> **Ribbed Belt, Removing and Installing** .

Tightening specifications

Component	Nm
Vibration damper to crankshaft	20 + 90° 1)2)
1) Replace bolts. 2) 90° corresponds to a quarter turn.	

Ribbed Belt Side Sealing Flange with Crankshaft Seal, Replacing

Ribbed Belt Side Sealing Flange with Crankshaft Seal, Replacing

Special tools, testers and auxiliary items required

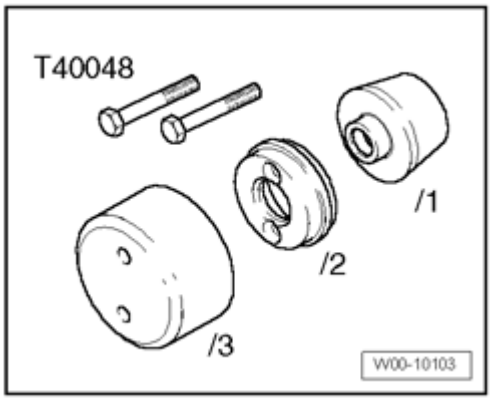

Fig. 220: Assembly Tool T40048
Courtesy of VOLKSWAGEN UNITED STATES, INC.

- Assembly tool T40048
- Hand drill with plastic brush attachment
- Protective glasses
- Sealant

Procedure

- Remove ribbed belt from the coolant pump --> **Coolant Pump Ribbed Belt Pulley, Removing and Installing**.
- Remove vibration damper --> **Vibration Damper, Removing and Installing** .

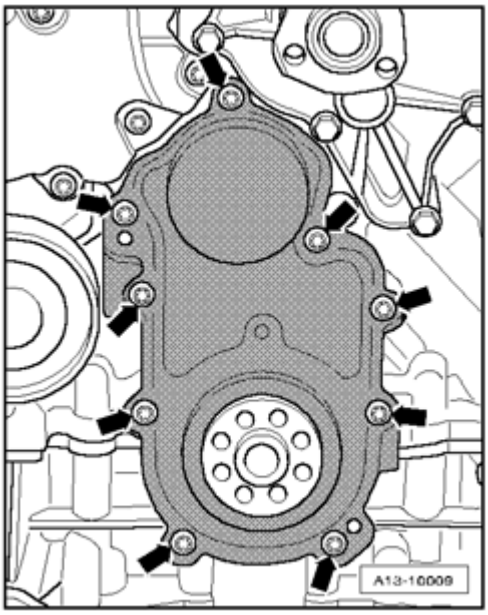

Fig. 221: Removing Bolts & Front Sealing Flange
Courtesy of VOLKSWAGEN UNITED STATES, INC.

- Remove bolts - **arrows** -.
- Remove sealing flange on the belt pulley side.

NOTE:

- **Replace the ribbed belt side sealing flange.**

CAUTION: Make sure that no sealant residue enters the engine.

CAUTION: Wear safety glasses.

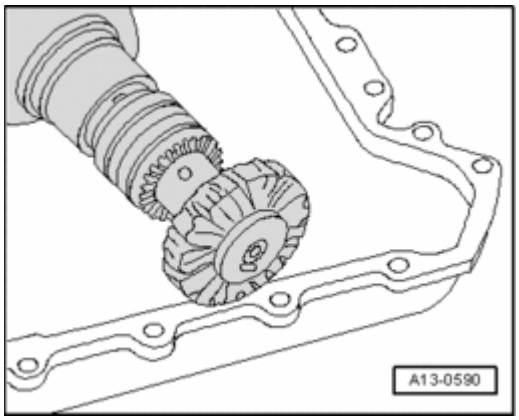

Fig. 222: Using Rotating Plastic Brush To Remove Any Sealant Residue From Sealing Flange, Cylinder Block And Upper Part Of Oil Pan

Courtesy of VOLKSWAGEN UNITED STATES, INC.

- Remove any sealant residue remaining on the cylinder block and the upper part of the oil pan; use a rotating plastic brush, for example.
- Clean sealing surfaces so they are completely free of any oil or grease.

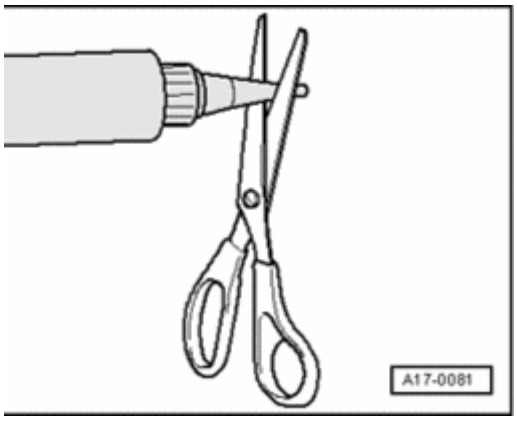

Fig. 223: Cutting Tube Nozzle At Front Marking
Courtesy of VOLKSWAGEN UNITED STATES, INC.

- Cut tube nozzle at front marking (diameter of nozzle approximately 1.5 mm).

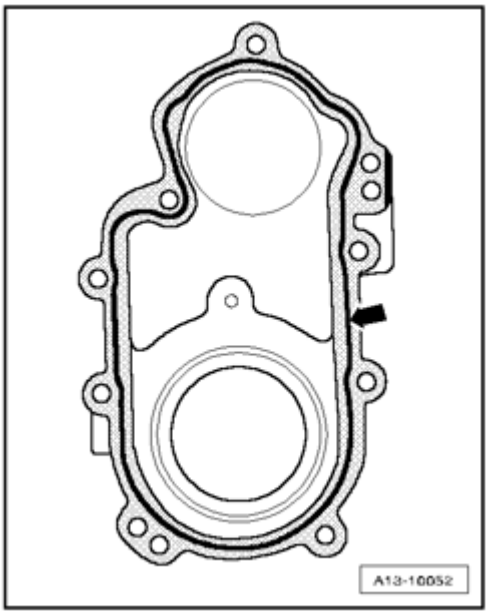

Fig. 224: Applying Bead Of Sealant To Clean Sealing Surface Of Sealing Flange
Courtesy of VOLKSWAGEN UNITED STATES, INC.

- Apply bead of sealant as illustrated to the clean sealing surface of the sealing flange.

- The groove - **arrow** - of sealing surface must be completely filled with sealant.

- The sealant bead must be 1.5 to 2.0 mm above the sealing surface.

NOTE:

- **Sealant bead must not be thicker than specified, otherwise sealant could get into oil pan and clog the oil pump strainer.**
- **The sealing flange on the belt pulley side must be installed within 5 minutes after applying the sealant.**

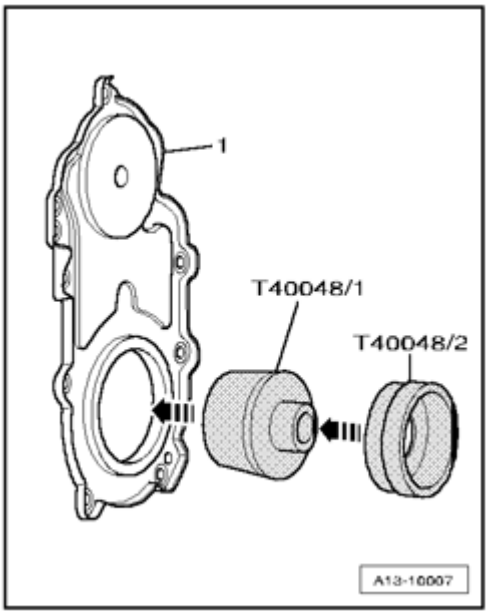

Fig. 225: Inserting Assembly Device T40048/1 Onto Pull Sleeve T40048/2 And Sliding Sealing Flange Onto Pull Sleeve
Courtesy of VOLKSWAGEN UNITED STATES, INC.

- Insert assembly device T40048/1 onto pull sleeve T40048/2 and slide sealing flange - **1** - onto pull sleeve.
- Remove assembly device.

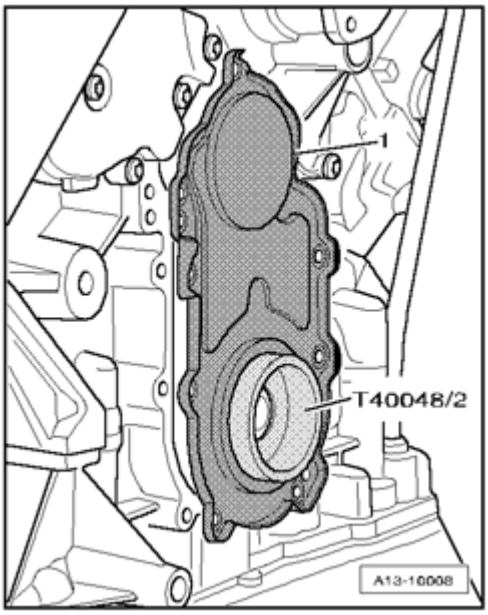

Fig. 226: Placing Sealing Flange With Inserted Pull Sleeve T40048/2 Onto Crankshaft
Courtesy of VOLKSWAGEN UNITED STATES, INC.

- Place sealing flange with inserted pull sleeve T40048/2 onto crankshaft.
- Without tipping, push the sealing flange onto engine sealing surface and fasten.

Further installation is in reverse order of removal, noting the following:

- Install vibration damper --> **Vibration Damper, Removing and Installing** .
- Install coolant pump ribbed belt --> **Coolant Pump Ribbed Belt Pulley, Removing and Installing**.
- Install ribbed belt --> **Ribbed Belt, Removing and Installing** .

Tightening specifications

Component	Nm
Sealing flange belt pulley side on the cylinder block	9 1)
1) Tighten diagonally in stages.	

TIMING CHAIN SIDE, SERVICING

Timing Chain Side, Servicing

--> **Flywheel, Multitronic, Component Overview**

--> **Damper Unit, Removing and Installing**

--> **Flywheel, Multitronic Transmission, Removing and Installing**

--> **Drive Plate, Automatic Transmission 09L, Component Overview**

--> **Drive Plate, Automatic Transmission 09L, Removing and Installing**

--> **Crank Shaft Seal, Timing Chain Side, Replacing**

Flywheel, Multitronic, Component Overview

Flywheel, Multitronic, Component Overview

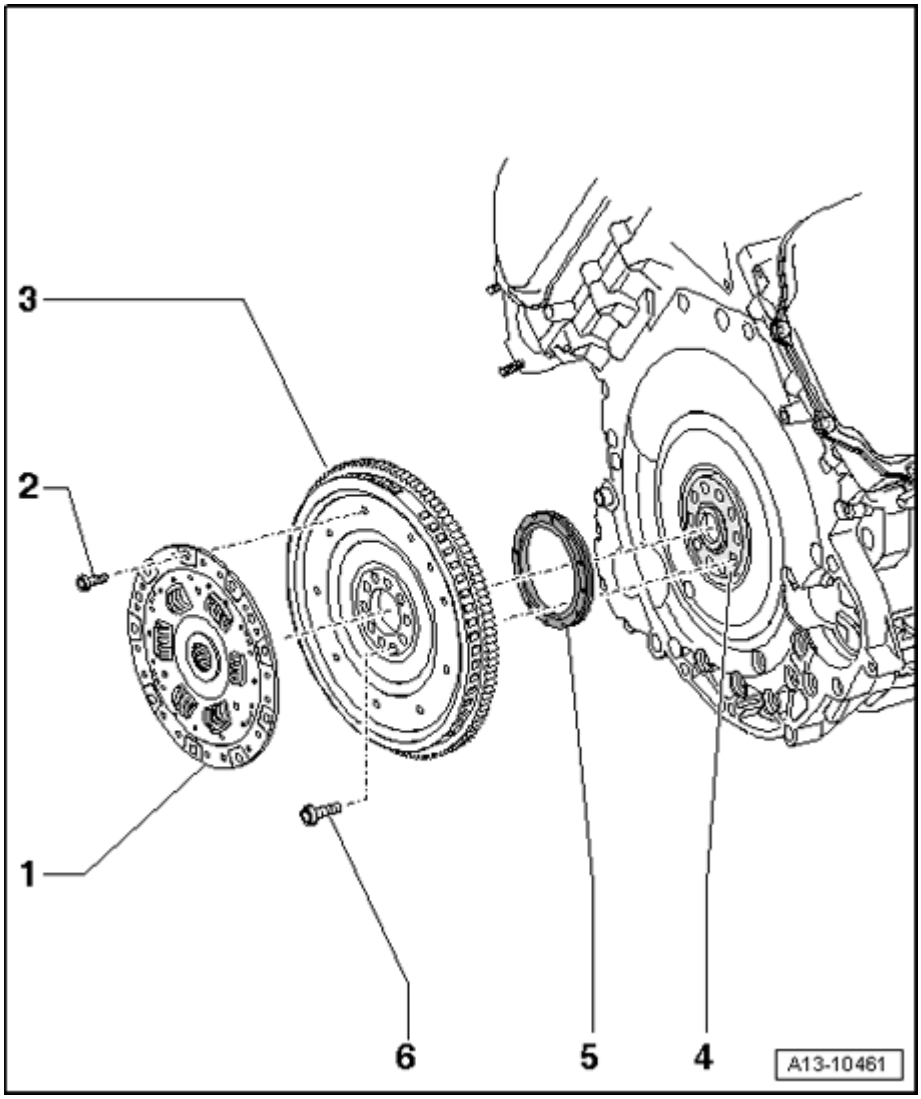

Fig. 227: Flywheel, Multitronic, Component Overview
Courtesy of VOLKSWAGEN UNITED STATES, INC.

1 - Damper unit

- Removing and installing --> **Damper Unit, Removing and Installing**

2 - 22 Nm

3 - Flywheel

- Removing and installing --> **Flywheel, Multitronic Transmission, Removing and Installing**

4 - Crankshaft

5 - Shaft seal for crankshaft -timing chain side-

- Replacing --> **Crank Shaft Seal, Timing Chain Side, Replacing** .

6 - 60 Nm plus an additional 90 ($^1/_4$ turn)

- Replace

Damper Unit, Removing and Installing

Damper Unit, Removing and Installing

Special tools, testers and auxiliary items required

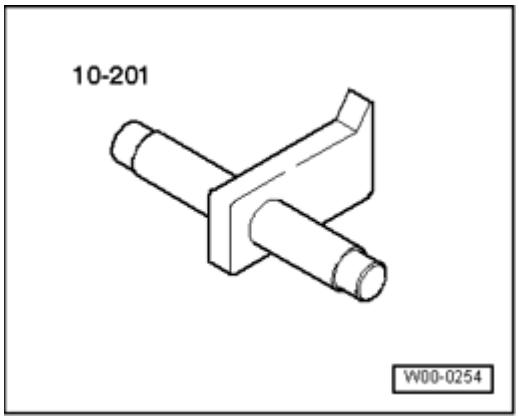

Fig. 228: Counter-Holder Tool 10 - 201
Courtesy of VOLKSWAGEN UNITED STATES, INC.

- Counter-holder tool 10 - 201

Removing

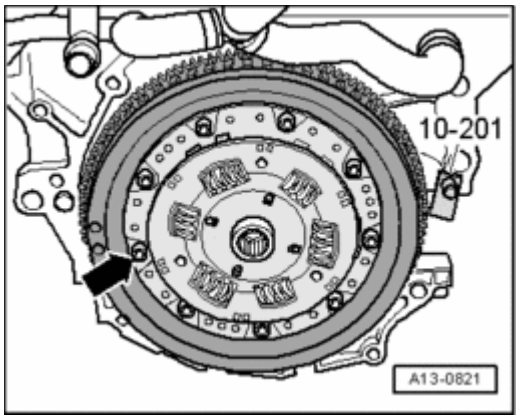

Fig. 229: Inserting Counterhold Tool 10 - 201 To Loosen Bolts
Courtesy of VOLKSWAGEN UNITED STATES, INC.

- Remove multitronic transmission --> **37 CONTROLS, HOUSING** .
- Insert counterhold tool 10 - 201 to loosen bolts - **arrow** -.

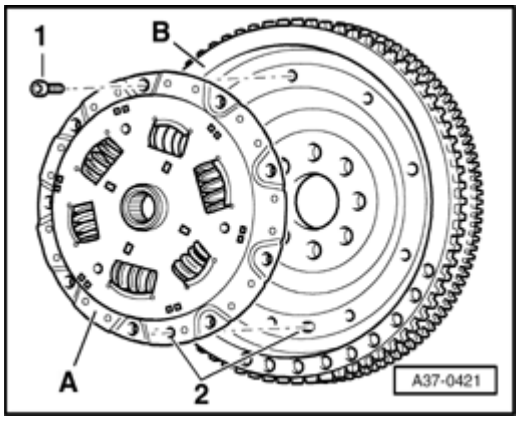

Fig. 230: Removing Bolts And Disconnecting Damper Unit From Flywheel
Courtesy of VOLKSWAGEN UNITED STATES, INC.

- Remove bolts - **1** - and disconnect damper unit - **A** - from the flywheel - **B** -.

Installing

Installation is in reverse order of removal, noting the following:

NOTE:

- **The damper unit part number is assigned to the transmission code .**

- Align damper unit - **A** - on the flywheel - **B** -.

- Both tabs - **2** - must match up with each other.

- Install bolts - **1** - hand-tight and then tighten diagonally.
- Install multitronic transmission --> **37 CONTROLS, HOUSING** .

Tightening specifications

Component	Nm
Damper unit on flywheel	22

Flywheel, Multitronic Transmission, Removing and Installing

Flywheel, Multitronic Transmission, Removing and Installing

Special tools, testers and auxiliary items required

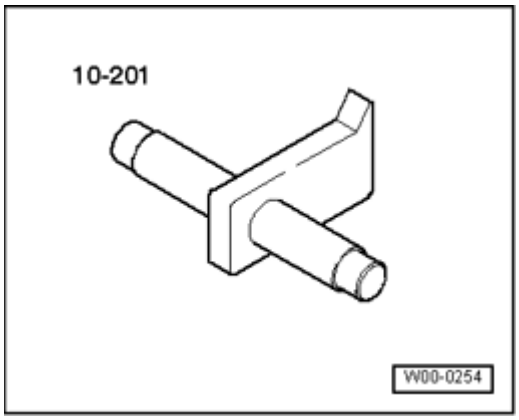

Fig. 231: Counter-Holder Tool 10 - 201
Courtesy of VOLKSWAGEN UNITED STATES, INC.

- Counter-holder tool 10 - 201

Removing

- Remove multitronic transmission --> **37 CONTROLS, HOUSING** .
- Remove damper unit --> **Damper Unit, Removing and Installing**.
- Mark crankshaft flywheel

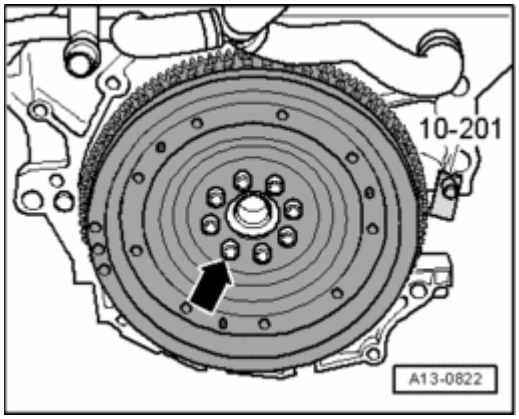

Fig. 232: Removing Bolts And Flywheel Using Counterhold Tool 10 - 201

Courtesy of VOLKSWAGEN UNITED STATES, INC.

- Insert counterhold tool 10 - 201 to loosen bolts - **arrow** -.
- Remove bolts and the flywheel.

Installing

Installation is in reverse order of removal, noting the following:

NOTE:

- **Replace the flywheel bolts.**

- Turn over counterhold tool 10 - 201 to tighten bolts.
- Install damper unit --> **Damper Unit, Removing and Installing**.
- Install multitronic transmission --> **37 CONTROLS, HOUSING** .

Tightening specifications

Component	Nm
Flywheel to crankshaft	60 + 90° 1)2)
1) Replace bolts. 2) 90° corresponds to a quarter turn.	

Drive Plate, Automatic Transmission 09L, Component Overview

Drive Plate, Automatic Transmission 09L, Component Overview

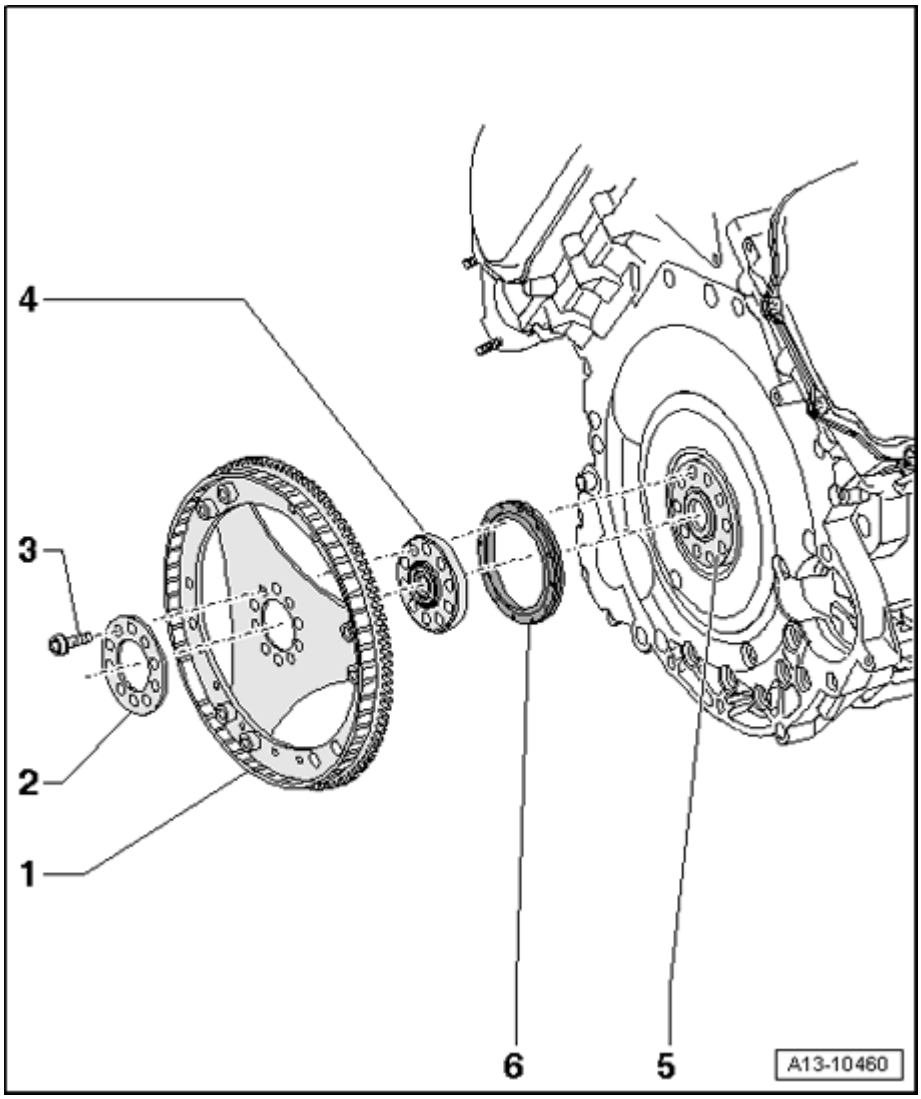

Fig. 233: Drive Plate, Automatic Transmission 09L, Component Overview
Courtesy of VOLKSWAGEN UNITED STATES, INC.

1 - Drive plate

- Removing and installing --> **Drive Plate, Automatic Transmission 09L, Removing and Installing**

2 - Backing plate

3 - 60 Nm plus an additional 90 ($^1/_4$ turn)

- Replace

4 - Centering washer

- Installed location --> **Centering washer for drive plate on automatic transmission 09L**

5 - Crankshaft

6 - Shaft seal for crankshaft -timing chain side-

- Replacing --> **Crank Shaft Seal, Timing Chain Side, Replacing** .

Drive Plate, Automatic Transmission 09L, Removing and Installing

Drive Plate, Automatic Transmission 09L, Removing and Installing

Special tools, testers and auxiliary items required

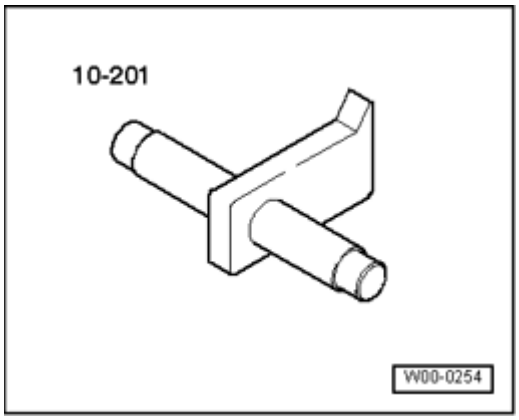

Fig. 234: Counter-Holder Tool 10 - 201
Courtesy of VOLKSWAGEN UNITED STATES, INC.

- Counter-holder tool 10-201

Removing

- Remove automatic transmission --> **37 CONTROLS, HOUSING** .

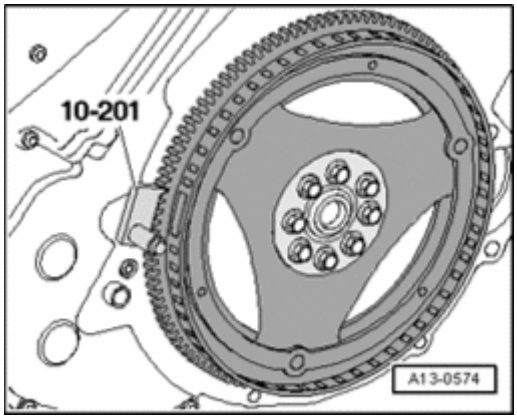

Fig. 235: Inserting Counter Hold Tool 10-201 To Loosen Bolts
Courtesy of VOLKSWAGEN UNITED STATES, INC.

- Insert counter hold tool 10-201 to loosen the bolts.
- Mark drive plate to engine.
- Remove drive plate.
- Remove centering washer from behind it.

Installing

Installation is in reverse order of removal, noting the following:

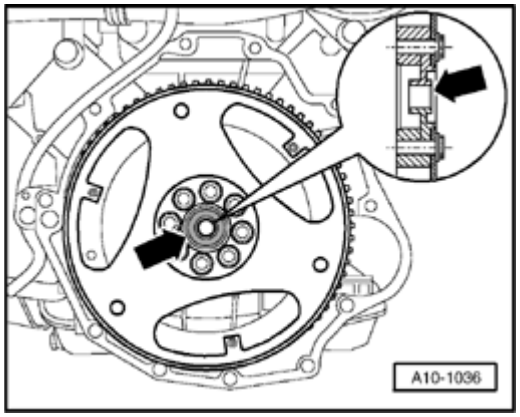

Fig. 236: Installing Drive Plate With Centering Washer And Backing Plate
Courtesy of VOLKSWAGEN UNITED STATES, INC.

- Install drive plate with centering washer - **arrow** - and backing plate.
- Use new bolts when securing.
- Turn over counterhold tool 10-201 to tighten bolts.
- Install automatic transmission --> **37 CONTROLS, HOUSING** .

Tightening specifications

Component	Nm
Drive plate to crankshaft	60 + 90° 1)2)
1) Replace bolts. 2) 90° corresponds to a quarter turn.	

Crank Shaft Seal, Timing Chain Side, Replacing

Crank Shaft Seal, Timing Chain Side, Replacing

Special tools, testers and auxiliary items required

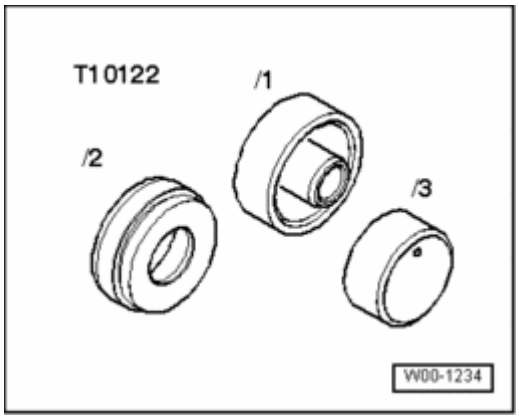

Fig. 237: Pulling Fixture T10122
Courtesy of VOLKSWAGEN UNITED STATES, INC.

- Pulling fixture T10122

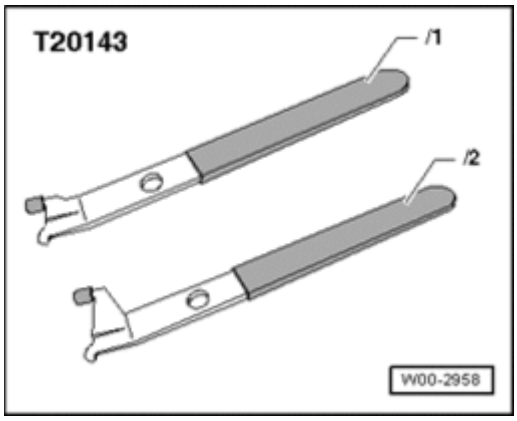

Fig. 238: Extractor Lever T20143/2
Courtesy of VOLKSWAGEN UNITED STATES, INC.

- Extractor lever T20143/2

Procedure

- Remove transmission --> **37 CONTROLS, HOUSING** .
- Vehicles with multitronic transmission: Remove damper unit --> **Damper Unit, Removing and Installing** and flywheel --> **Flywheel, Multitronic Transmission, Removing and Installing**.
- Vehicles with automatic transmission 09L: Remove drive plate --> **Drive Plate, Automatic Transmission 09L, Removing and Installing**.

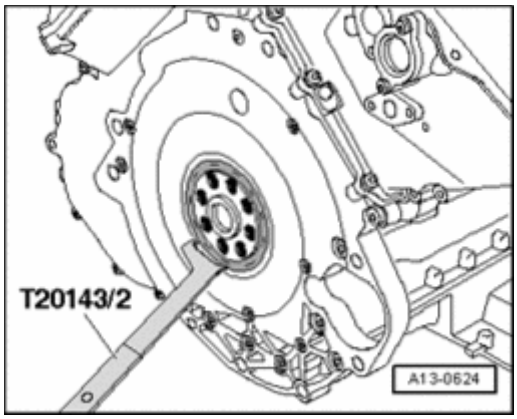

Fig. 239: Prying Out Shaft Seal Using Extractor Lever T20143/2
Courtesy of VOLKSWAGEN UNITED STATES, INC.

- Pry out shaft seal using extractor lever T20143/2.
- Clean operating and sealing surfaces.

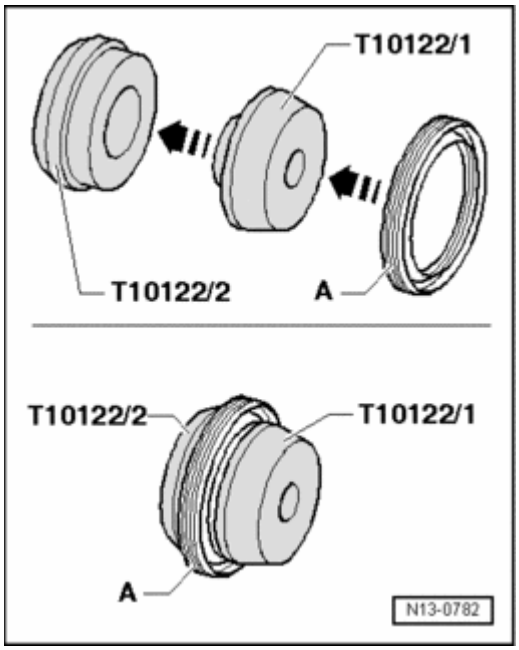

Fig. 240: Inserting Assembly Device T10122/1 Onto Pull Sleeve T10122/2 And Shaft Seal Onto Pull Sleeve
Courtesy of VOLKSWAGEN UNITED STATES, INC.

- Insert assembly device T10122/1 onto pull sleeve T10122/2 and shaft seal - **A** - onto pull sleeve.
- Remove assembly device T10122/1.

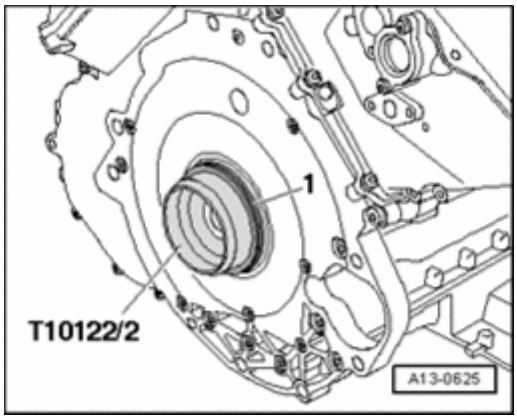

Fig. 241: Installing Pull Sleeve T10122/2 With Sealing Ring Onto Crankshaft
Courtesy of VOLKSWAGEN UNITED STATES, INC.

- Install pull sleeve T10122/2 with shaft seal - **1** - onto crankshaft.

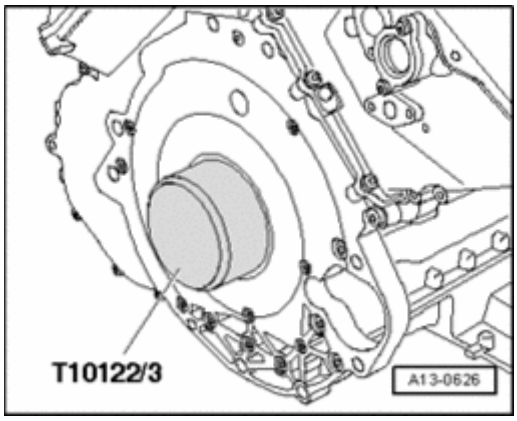

Fig. 242: Pressing In Sealing Ring All Around Evenly And Flush Using Pressure Sleeve T10122/3
Courtesy of VOLKSWAGEN UNITED STATES, INC.

- Press shaft seal in, evenly and flush, using pressure sleeve T10122/3.

Further installation is in reverse order of removal, noting the following:

- Vehicles with multitronic transmission: Install flywheel --> **Flywheel, Multitronic Transmission, Removing and Installing** and damper unit --> **Damper Unit, Removing and Installing**.
- Vehicles with automatic transmission 09L: Install drive plate --> **Drive Plate, Automatic Transmission 09L, Removing and Installing**.
- Install transmission --> **37 CONTROLS, HOUSING** .

TIMING CHAIN COVERS

Timing Chain Covers

--> **Timing Chain Covers, Component Overview**

--> **Timing Chain Covers, Removing and Installing**

--> **Lower Timing Chain Cover, Removing and Installing**

Timing Chain Covers, Component Overview

Timing Chain Covers, Component Overview

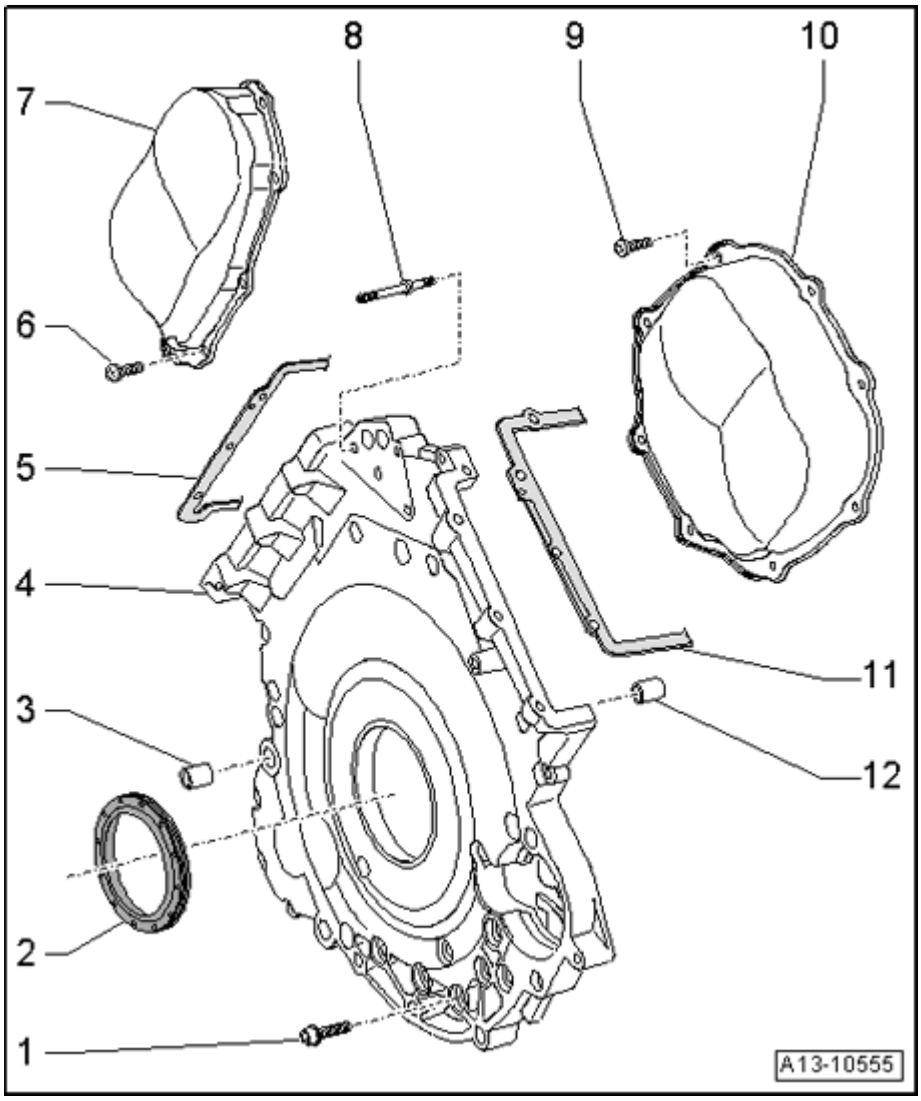

Fig. 243: Timing Chain Covers, Component Overview
Courtesy of VOLKSWAGEN UNITED STATES, INC.

1 - M6 - 9 Nm; M8 - 20 Nm

- Observe sequence for tightening: Vehicles through 04.2005 --> *Set lower timing chain cover in place, guiding the cover at an angle from below onto the sealing surface of the cylinder block and cylinder head.* under **Lower Timing Chain Cover, Removing and Installing** , vehicles from 05.2005 --> *Set lower timing chain cover in place, guiding the cover at an angle from below onto the sealing surface of*

the cylinder block and cylinder head. under **Lower Timing Chain Cover, Removing and Installing**

2 - Shaft seal for crankshaft timing chain side

- Replacing --> **Crank Shaft Seal, Timing Chain Side, Replacing** .

3 - Alignment bushing

- 2 pieces

4 - Lower timing chain cover

- Removing and installing --> **Lower Timing Chain Cover, Removing and Installing**

5 - Left cylinder head gasket

6 - 5 Nm plus an additional 90 ($^1/_4$ turn)

- Replace
- Observe sequence for tightening --> *Position right timing chain cover and tighten bolts in sequence 1 to 8.* under **Timing Chain Covers, Removing and Installing**

7 - Left timing chain cover

- Removing and installing --> **Timing Chain Covers, Removing and Installing**

8 - 16 Nm

- For vehicles from 05.2005

9 - 5 Nm plus an additional 90 ($^1/_4$ turn)

- Replace
- Observe sequence for tightening --> *Position right timing chain cover and tighten bolts in sequence 1 to 8.* under **Timing Chain Covers, Removing and Installing**

10 - Right timing chain cover

- Removing and installing --> **Timing Chain Covers, Removing and Installing**

11 - Right cylinder head gasket

12 - Alignment bushing

- 2 pieces

Timing Chain Covers, Removing and Installing

Timing Chain Covers, Removing and Installing

Special tools, testers and auxiliary items required

- Hand drill with plastic brush attachment
- Protective glasses
- Sealant

Removing

NOTE:

- **All cable ties which are opened or cut open when removing, must be replaced in the same position when installing.**

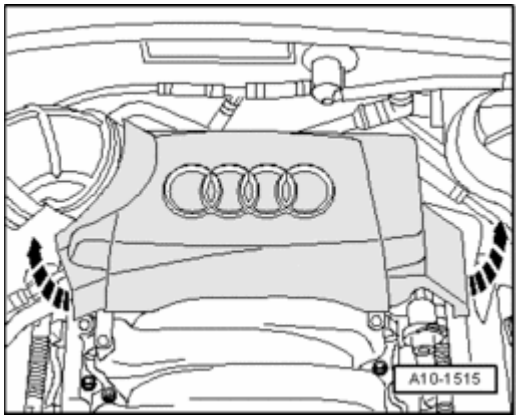

Fig. 244: Removing Rear Engine Cover
Courtesy of VOLKSWAGEN UNITED STATES, INC.

- Remove rear engine cover - **arrows** -.

Left timing chain cover:

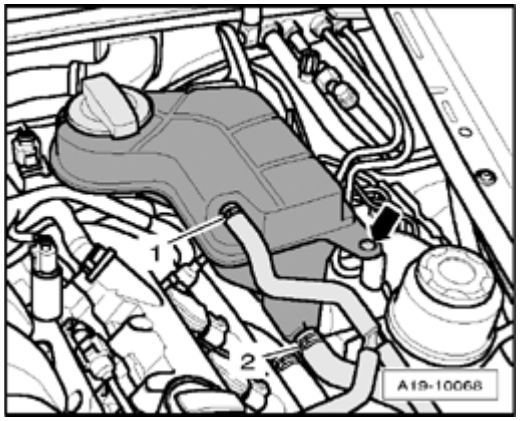

Fig. 245: Removing Coolant Hoses At Coolant Expansion Tank

Courtesy of VOLKSWAGEN UNITED STATES, INC.

- Remove coolant expansion tank - **arrow** -.
- Disconnect electrical connection from Engine Coolant Level (ECL) Warning Switch F66 at bottom of coolant reservoir and set aside coolant reservoir with coolant hoses - **1** - and - **2** - connected.

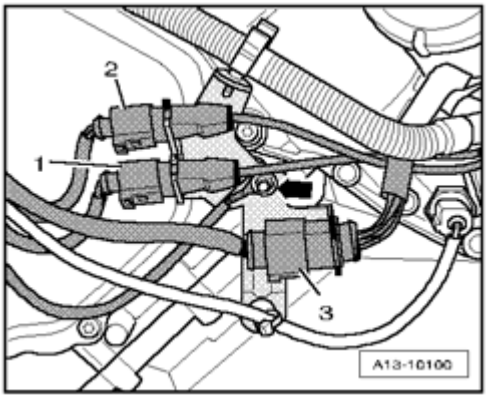

Fig. 246: Disconnecting Electrical Harness Connectors
Courtesy of VOLKSWAGEN UNITED STATES, INC.

- Disconnect electrical harness connectors - **1 to 3** -.
- Remove nut - **arrow** -.
- Remove retainer for connection - **3** -.
- Remove double-bolt lying beneath.

- Remove retainer for connections - **1** - and - **2** -.

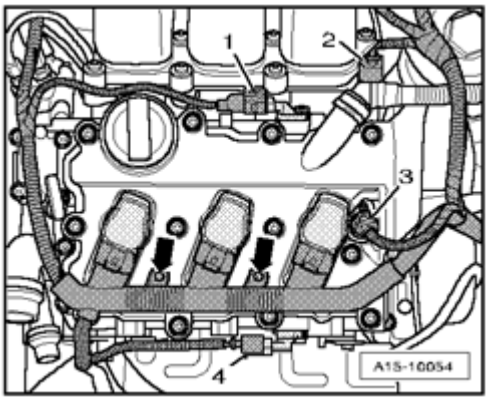

Fig. 247: Remove Bolts & Disconnecting Electrical Harness Connectors At Ignition Coils
Courtesy of VOLKSWAGEN UNITED STATES, INC.

- Remove bolts - **arrows** - and separate electrical connections at the ignition coils.

NOTE:

- **Ignore items - 1 to 4 -.**

- Free up electrical wiring.

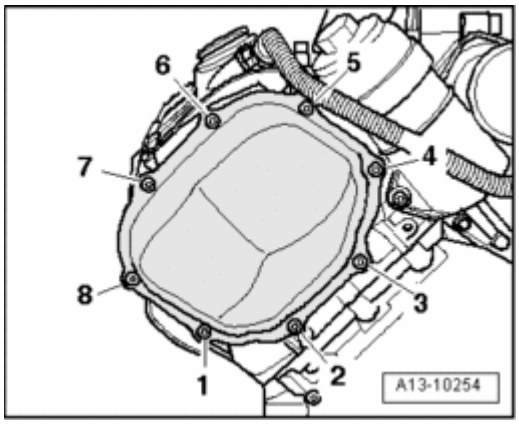

Fig. 248: Removing/Tighten Bolts In Sequence For Left Timing Chain Cover
Courtesy of VOLKSWAGEN UNITED STATES, INC.

- Remove bolts - **1 to 8** - and remove left timing chain cover.

Right timing chain cover:

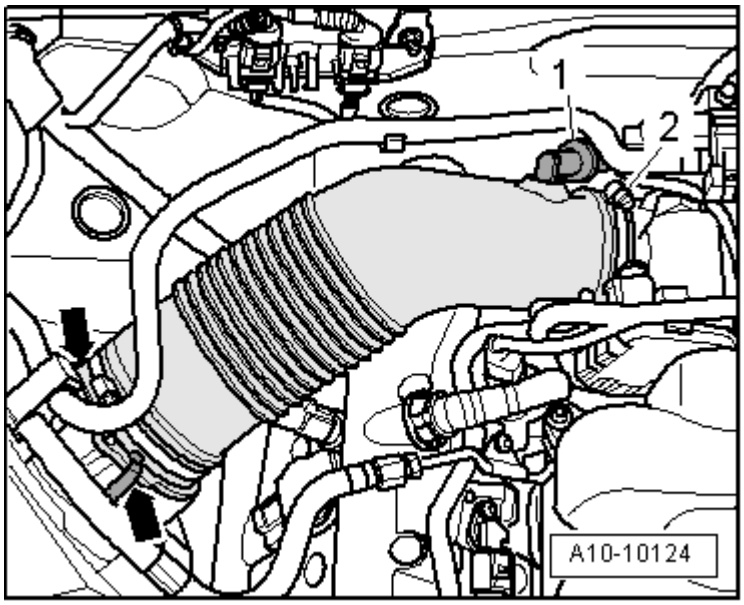

Fig. 249: Disconnecting Check Valve From Connection At Air Duct Hose & Removing Air Duct Hose
Courtesy of VOLKSWAGEN UNITED STATES, INC.

- Disconnect check valve - **1** - from connection at air duct hose.
- Remove air duct hose, thereby loosening hose clamp - **2** - and opening the clips - **arrows** -.

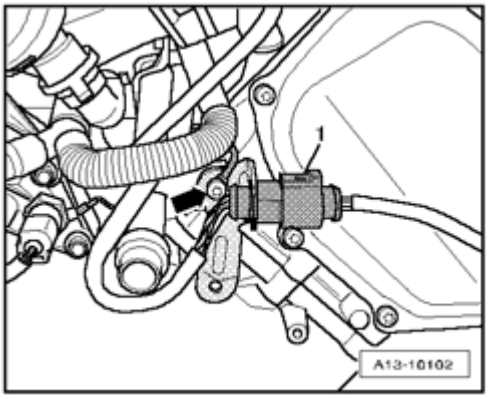

Fig. 250: Disconnecting Electrical Connector & Removing Bolt & Retainer For Connection
Courtesy of VOLKSWAGEN UNITED STATES, INC.

- Disconnect electrical connector - **1** -.
- Remove bolt - **arrow** - and remove retainer for connection.

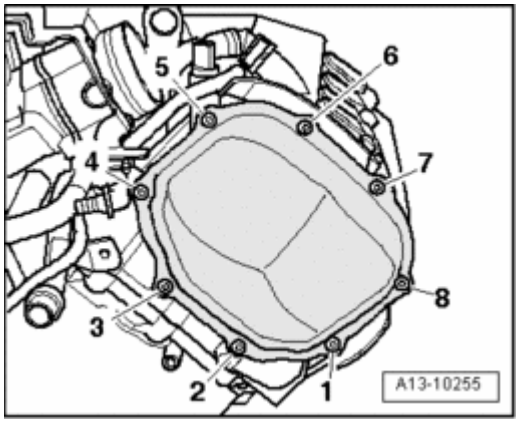

Fig. 251: Removing/Tighten Bolts In Sequence For Right Timing Chain Cover
Courtesy of VOLKSWAGEN UNITED STATES, INC.

- Remove bolts - **1 to 8** - and remove right timing chain cover.

Installing

NOTE:

- **During installation, all cable ties must be re-installed at the same location.**

CAUTION: Wear safety glasses.

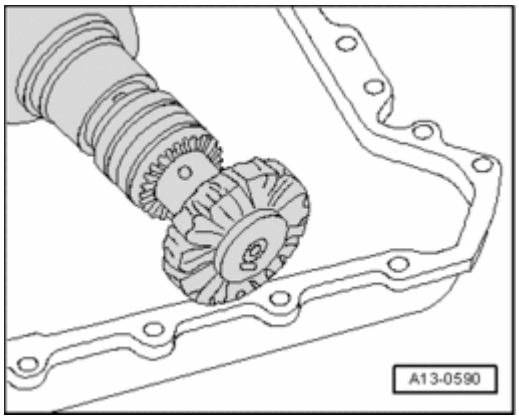

Fig. 252: Using Rotating Plastic Brush To Remove Any Sealant Residue From Sealing Flange, Cylinder Block And Upper Part Of Oil Pan
Courtesy of VOLKSWAGEN UNITED STATES, INC.

- Using e.g. a rotating plastic brush, remove sealant residue on covers for timing chain and on cylinder block and head.

CAUTION: Make sure that no sealant residue enters the engine.

- Clean sealing surfaces so they are completely free of any oil or grease.

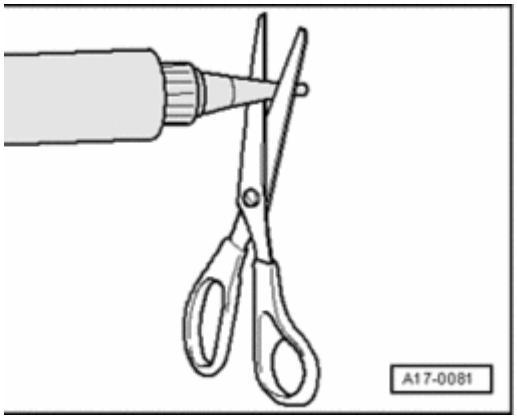

Fig. 253: Cutting Tube Nozzle At Front Marking
Courtesy of VOLKSWAGEN UNITED STATES, INC.

- Cut tube nozzle at front marking (diameter of nozzle approximately 1 mm).

NOTE:

- **Covers for timing chain must be installed within 5 minutes after applying sealant.**

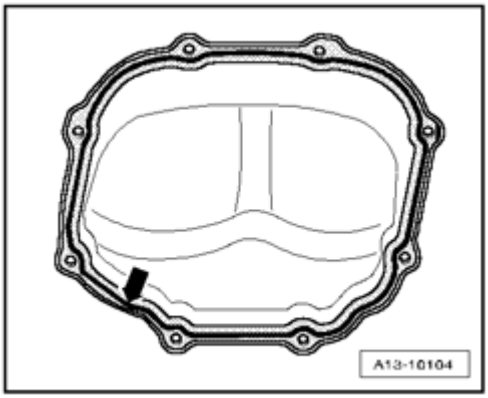

Fig. 254: Applying Sealant Bead On Clean Sealing Surfaces Of Left/Right Cover For Timing Chain
Courtesy of VOLKSWAGEN UNITED STATES, INC.

- Apply sealant bead - **arrow** - , as shown in illustration, on clean sealing surfaces of left cover for timing chain.

- The groove of sealing surface must be completely filled with sealant.
- Sealant bead must stand 1.5 to 2.0 mm above sealing surface.

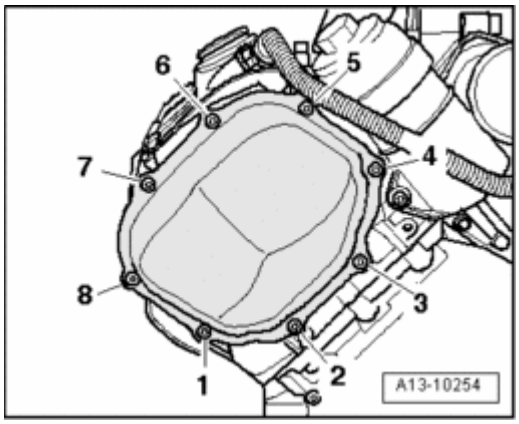

Fig. 255: Removing/Tighten Bolts In Sequence For Left Timing Chain Cover
Courtesy of VOLKSWAGEN UNITED STATES, INC.

- Position left timing chain cover and tighten bolts in sequence - **1 to 8** -.

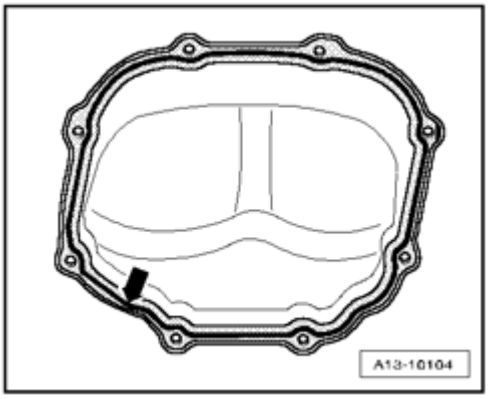

Fig. 256: Applying Sealant Bead On Clean Sealing Surfaces Of Left/Right Cover For Timing Chain
Courtesy of VOLKSWAGEN UNITED STATES, INC.

- Apply sealant bead - **arrow** - , as shown in illustration, on clean sealing surfaces of right cover for timing chain.

- The groove of sealing surface must be completely filled with sealant.
- Sealant bead must stand 1.5 to 2.0 mm above sealing surface.

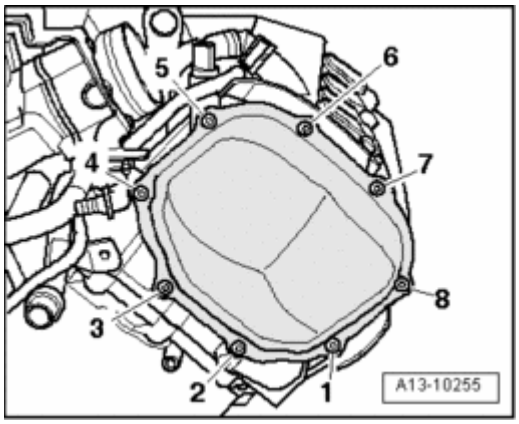

Fig. 257: Removing/Tighten Bolts In Sequence For Right Timing Chain Cover
Courtesy of VOLKSWAGEN UNITED STATES, INC.

- Position right timing chain cover and tighten bolts in sequence - **1 to 8** -.

Further installation is in reverse order.

Tightening Specifications

Component	Nm
Left and right cover for timing chain on engine	5 + 90° 1)2)
Retainer for connections to cylinder head	9
Hose clamps 9 mm wide	3
1) Replace bolts. 2) 90° corresponds to a quarter turn.	

Lower Timing Chain Cover, Removing and Installing

Lower Timing Chain Cover, Removing and Installing

Special tools, testers and auxiliary items required

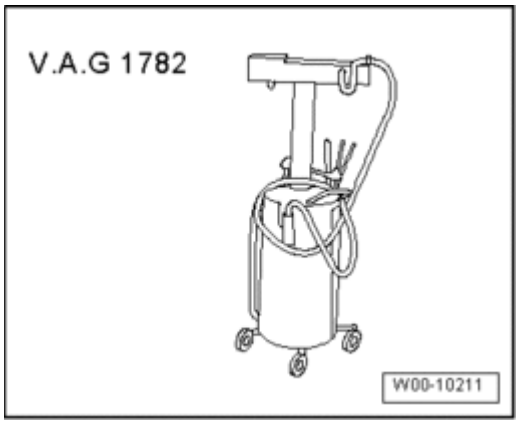

Fig. 258: Identifying Old Oil Collecting And Extracting Device V.A.G 1782
Courtesy of VOLKSWAGEN UNITED STATES, INC.

- Old oil collecting and extracting device V.A.G 1782
- Hand drill with plastic brush attachment
- Protective glasses
- Sealant

Removing

NOTE:

- **All cable ties which are opened or cut open when removing, must be replaced in the same position when installing.**

- Remove transmission --> **37 CONTROLS, HOUSING** .

CAUTION: To continue performing the repair procedure, ensure lock carrier is installed and torque support is tightened.

- Vehicles with multitronic transmission: Remove damper unit --> **Damper Unit, Removing and Installing** and flywheel --> **Flywheel, Multitronic Transmission, Removing and Installing**.
- Vehicles with automatic transmission 09L: Remove drive plate --> **Drive Plate, Automatic Transmission 09L, Removing and Installing**.

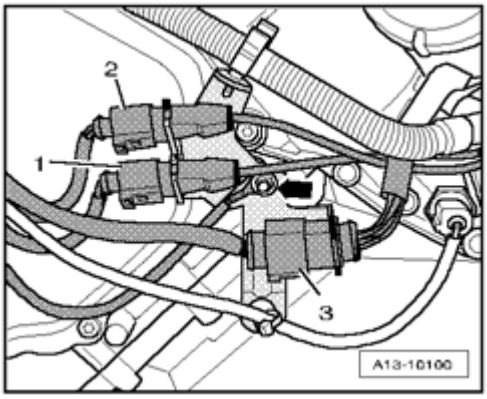

Fig. 259: Disconnecting Electrical Harness Connectors
Courtesy of VOLKSWAGEN UNITED STATES, INC.

- Disconnect electrical harness connectors - **1 to 3** -.
- Remove nut - **arrow** -.
- Remove retainer for connection - **3** -.
- Remove double-bolt lying beneath.

- Remove retainer for connections - **1** - and - **2** -.

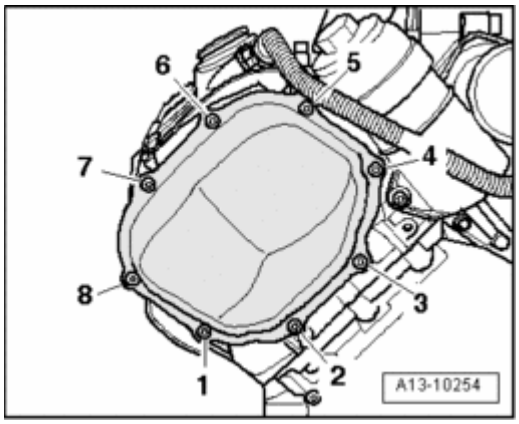

Fig. 260: Removing/Tighten Bolts In Sequence For Left Timing Chain Cover
Courtesy of VOLKSWAGEN UNITED STATES, INC.

- Remove bolts - **1 to 8** - and remove left timing chain cover.

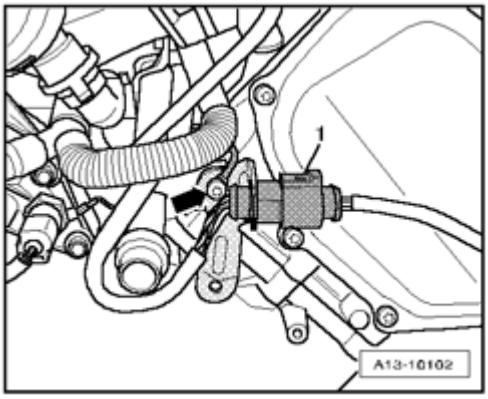

Fig. 261: Disconnecting Electrical Connector & Removing Bolt & Retainer For Connection
Courtesy of VOLKSWAGEN UNITED STATES, INC.

- Disconnect electrical connector - **1** -.
- Remove bolt - **arrow** - and remove retainer for connection.

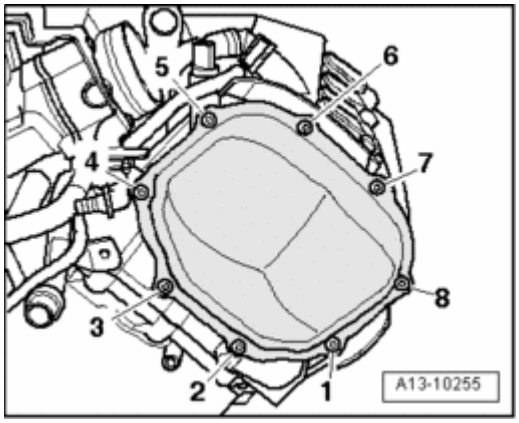

Fig. 262: Removing/Tighten Bolts In Sequence For Right Timing Chain Cover
Courtesy of VOLKSWAGEN UNITED STATES, INC.

- Remove bolts - **1 to 8** - and remove right timing chain cover.

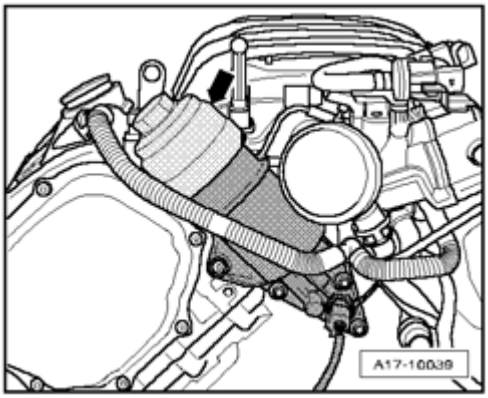

Fig. 263: Removing Cap For Oil Filter Housing

Courtesy of VOLKSWAGEN UNITED STATES, INC.

- Remove cap - **arrow** - for oil filter housing.
- Remove oil filter element.
- Extract engine oil using old oil collecting and extracting device V.A.G 1782 from oil filter housing.

NOTE:

- **Place a rag under oil filter housing to catch escaping engine oil.**

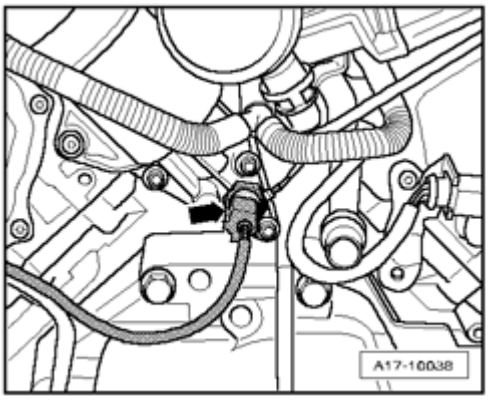

Fig. 264: Disconnecting Electrical Harness Connector From Oil Pressure Switch F1
Courtesy of VOLKSWAGEN UNITED STATES, INC.

- Disconnect electrical harness connector from Oil Pressure Switch F1 - **arrow** -.
- Remove oil pressure switch.

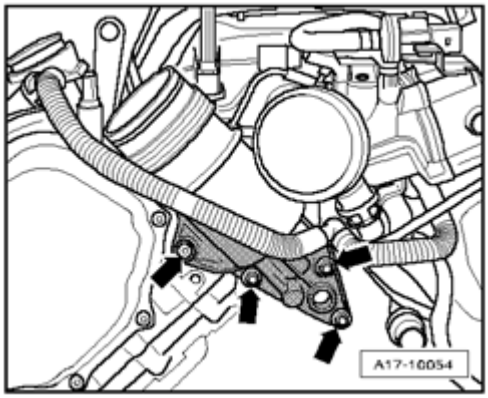

Fig. 265: Removing Oil Filter Housing Bolts
Courtesy of VOLKSWAGEN UNITED STATES, INC.

- Remove bolts - **arrows** -.
- Remove oil filter housing.
- Place old oil collecting and extracting device V.A.G 1782 under engine.
- Drain engine oil.

Vehicles through 04.2005:

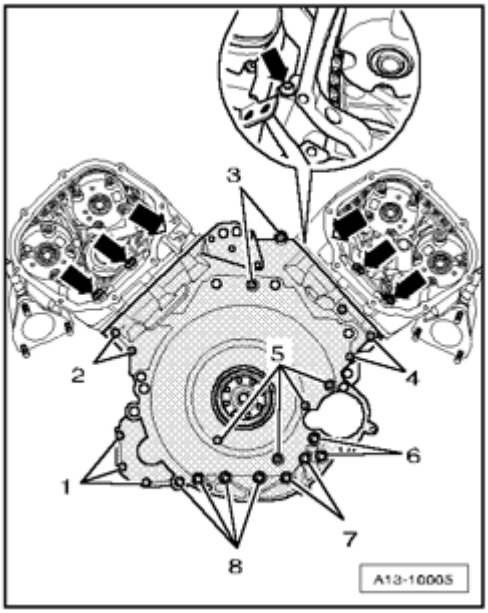

Fig. 266: Removing/Installing Bolts And Lower Timing Chain Cover
Courtesy of VOLKSWAGEN UNITED STATES, INC.

- Remove bolts - **arrows** -.
- Remove bolts - **1 to 9** - and remove lower timing chain cover.

Vehicles from 05.2005:

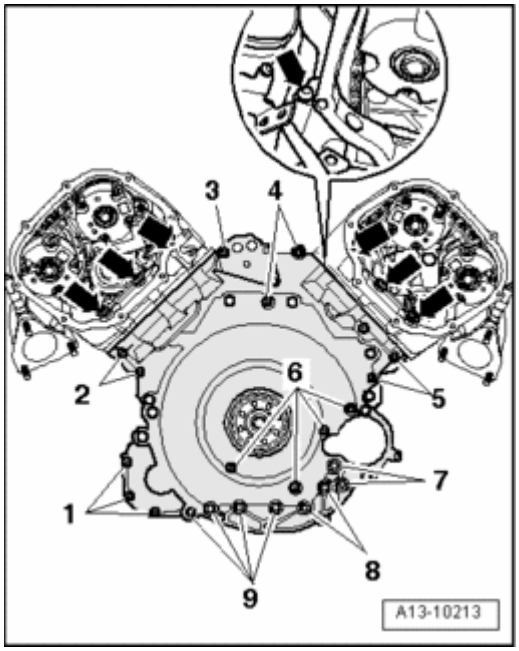

Fig. 267: Removing Bolts And Lower Timing Chain Cover

Courtesy of VOLKSWAGEN UNITED STATES, INC.

- Remove bolts - **1 to 9** - and remove lower timing chain cover.

All:

- Press rear crankshaft seal out of lower timing chain cover.

Installing

NOTE:

- **Replace gaskets, seals and O-rings.**
- **During installation, all cable ties must be re-installed at the same location.**

- Pull alignment bushing out of top right of cylinder block.

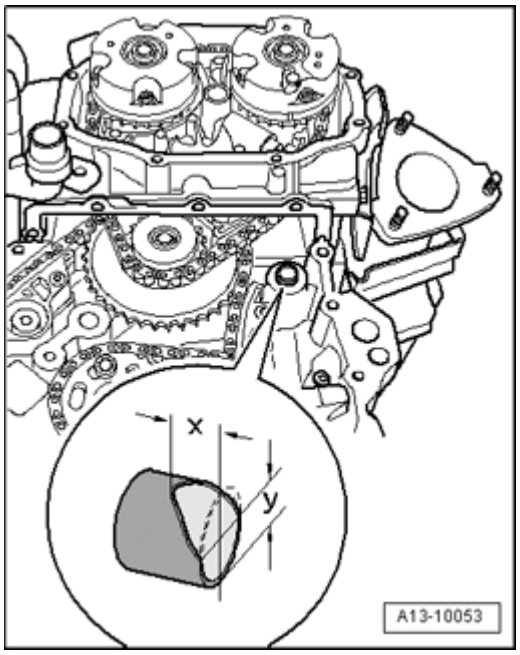

Fig. 268: Chamfering Alignment Bushing With A File
Courtesy of VOLKSWAGEN UNITED STATES, INC.

- Chamfer alignment bushing with a file, as shown in the illustration.

- Dimension - **x** - = 6.5 mm.
- Dimension - **y** - = 8 mm.

- Install alignment bushing into the cylinder block so that the chamfered side faces upward.

NOTE:

- **The chamfer simplifies installation of the lower timing chain cover with cylinder head installed.**

CAUTION: Wear safety glasses.

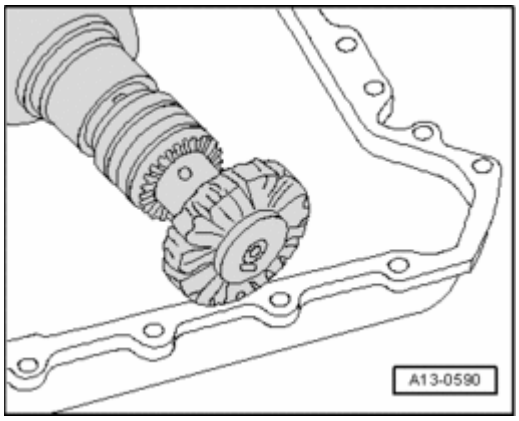

Fig. 269: Using Rotating Plastic Brush To Remove Any Sealant Residue From Sealing Flange, Cylinder Block And Upper Part Of Oil Pan
Courtesy of VOLKSWAGEN UNITED STATES, INC.

- Using e.g. a rotating plastic brush, remove sealant residue on timing chain cover, cylinder block and head.

CAUTION: Make sure that no sealant residue enters the engine.

- Clean sealing surfaces so they are completely free of any oil or grease.

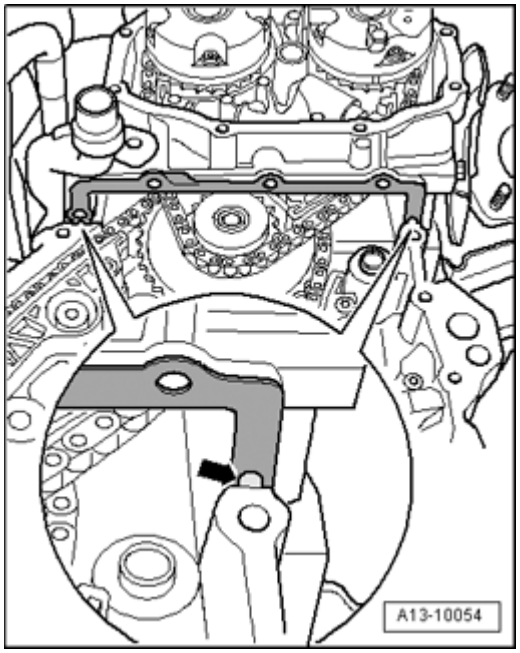

Fig. 270: Cleaning Old Sealant From Holes In Cylinder Head Gaskets
Courtesy of VOLKSWAGEN UNITED STATES, INC.

- Clean old sealant from the holes - **arrow** - in the cylinder head gaskets.

NOTE:

- **With the cylinder head installed only half of the holes in the cylinder head gasket are visible.**

CAUTION: Cylinder head gasket must not be kinked. A kinked cylinder head gasket must be replaced.

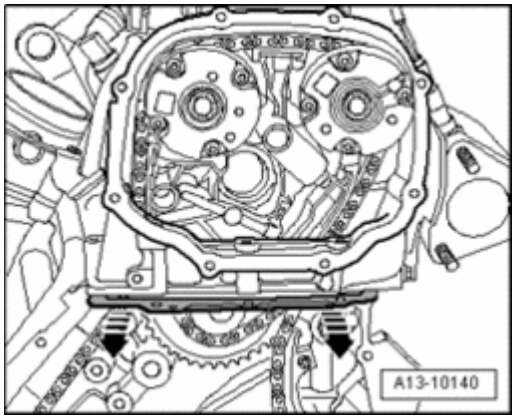

Fig. 271: Bending Ends Of Cylinder Head Gaskets Very Slightly Downward Until Upper Sealing Surface Of Gasket And Cylinder Head Can Be Cleaned
Courtesy of VOLKSWAGEN UNITED STATES, INC.

- Bend the ends of the cylinder head gaskets very slightly downward - **arrows** - until the upper sealing surface of the gasket and cylinder head can be cleaned.
- Clean both cylinder head gaskets, top and bottom, so they are completely free of any oil or grease.

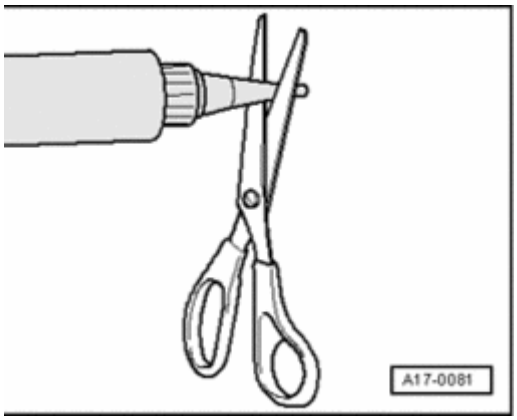

Fig. 272: Cutting Tube Nozzle At Front Marking
Courtesy of VOLKSWAGEN UNITED STATES, INC.

- Cut tube nozzle at front marking (diameter of nozzle approximately 2 mm).

NOTE:

- **The sealant must be applied to several places on the engine, as described**

in the following.

- **The curing time for the sealant after application is only approximately 5 minutes.**

CAUTION: Cylinder head gasket must not be kinked. A kinked cylinder head gasket must be replaced.

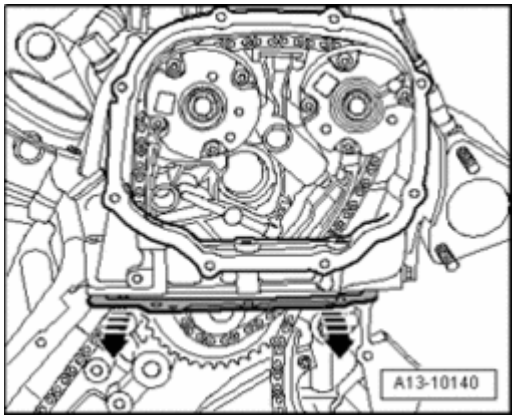

Fig. 273: Bending Ends Of Cylinder Head Gaskets Very Slightly Downward Until Upper Sealing Surface Of Gasket And Cylinder Head Can Be Cleaned
Courtesy of VOLKSWAGEN UNITED STATES, INC.

- Coat sealing surfaces of the cylinder head gaskets, top and bottom, with a thin layer of sealant, slightly bending the cylinder head gaskets downward again to do this.
- To coat the surface between the cylinder head and gasket, use a flat object, e.g. a feeler gauge.

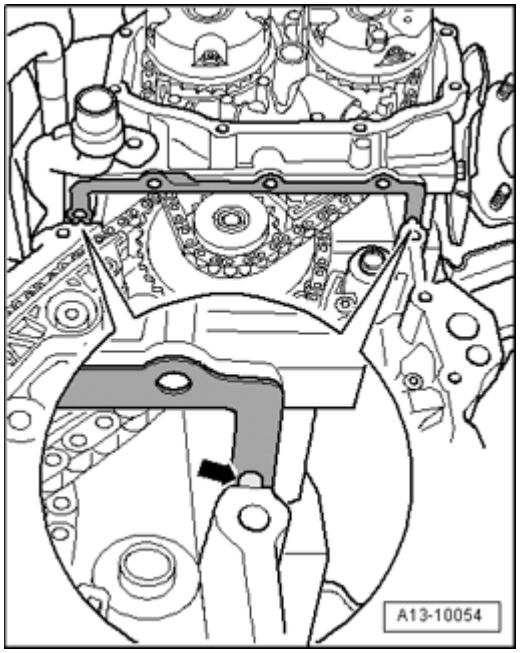

Fig. 274: Cleaning Old Sealant From Holes In Cylinder Head Gaskets

Courtesy of VOLKSWAGEN UNITED STATES, INC.

- Fill the cleaned holes - **arrow** - in the cylinder head seal with sealant.

Vehicles through 04.2005:

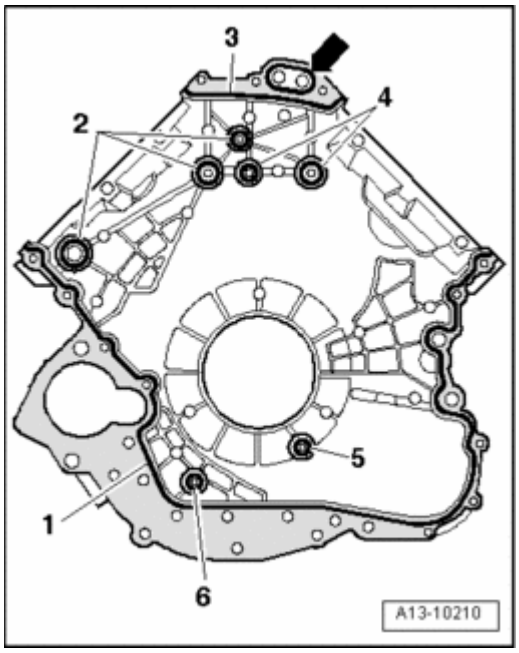

Fig. 275: Applying Sealant Beads On Clean Sealing Surfaces Of Lower Timing Chain Cover
Courtesy of VOLKSWAGEN UNITED STATES, INC.

- Apply sealant beads - **1 to 6** - on clean sealing surfaces of lower timing chain cover, as shown in illustration.

- The groove of sealing surface must be completely filled with sealant.
- Sealant beads must be 1.5 to 2.0 mm above the sealing surface.
- The sealant bead - **3** - must be pulled through as shown in the illustration even though the groove is intermittent.

- Lay O-ring - **arrow** - in lower timing chain cover groove.
- Secure O-ring with some sealant.

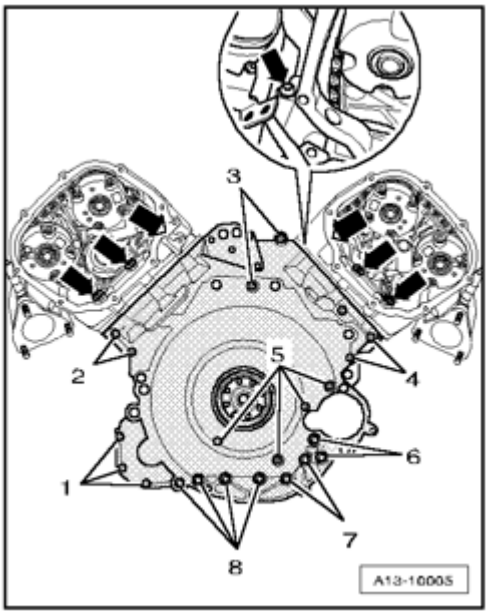

Fig. 276: Removing/Installing Bolts And Lower Timing Chain Cover
Courtesy of VOLKSWAGEN UNITED STATES, INC.

- Set lower timing chain cover in place, guiding the cover at an angle from below onto the sealing surface of the cylinder block and cylinder head.
- When installing, make sure that the cylinder head gaskets do not become damaged. A damaged gasket must be replaced.
- Tighten bolts as follows:

Insert bolts arrows with locking compound and tighten to 5 Nm. Tighten bolts 1 to 8 in a diagonal sequence to 9 Nm using a torque wrench. Tighten bolts arrows to 9 Nm. Tighten bolts 6 , 7 and 8 to 20 Nm.

- Then immediately install the oil filter housing --> **Oil Filter Housing, Removing and Installing** .

Vehicles from 05.2005:

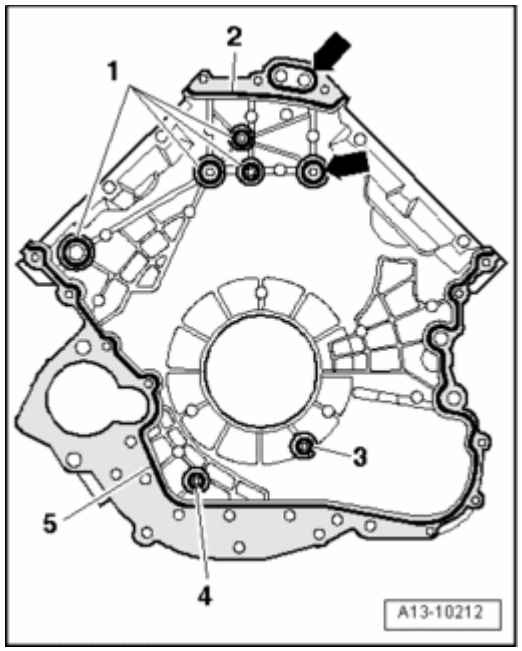

Fig. 277: Applying sealant beads on clean sealing surfaces of lower timing chain cover
Courtesy of VOLKSWAGEN UNITED STATES, INC.

- Apply sealant beads - **1 to 5** - on clean sealing surfaces of lower timing chain cover, as shown in illustration.
  - The groove of sealing surface must be completely filled with sealant.
  - Sealant beads must be 1.5 to 2.0 mm above the sealing surface.
  - The sealant bead - **2** - must be pulled through as shown in the illustration even though the groove is intermittent.
- Insert seals - **arrows** - in lower timing chain cover grooves.

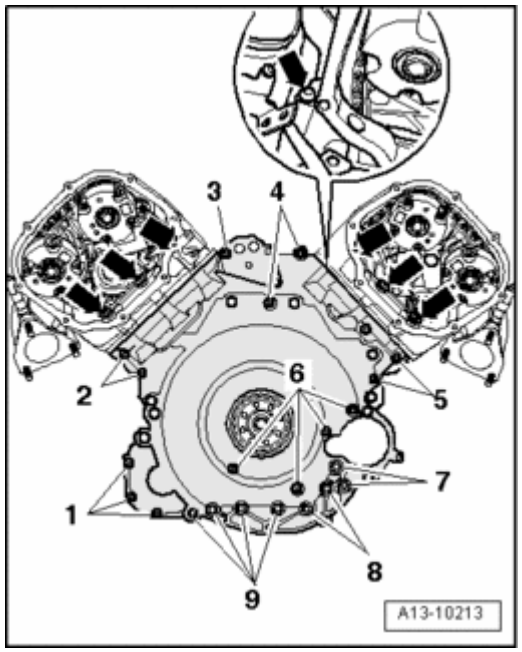

Fig. 278: Setting Lower Timing Chain Cover In Place, Guiding Cover At An Angle From Below Onto Sealing Surface Of Cylinder Block And Cylinder Head
Courtesy of VOLKSWAGEN UNITED STATES, INC.

- Set lower timing chain cover in place, guiding the cover at an angle from below onto the sealing surface of the cylinder block and cylinder head.
- When installing, make sure that the cylinder head gaskets do not become damaged. A damaged gasket must be replaced.
- Tighten bolts as follows:

Insert bolts arrows with locking compound and tighten to 5 Nm. Tighten bolts 1 to 9 in a diagonal sequence to 9 Nm using a torque wrench. Tighten bolts arrows to 9 Nm. Tighten bolts 7 , 8 and 9 to 20 Nm. Tighten stud bolt 3 to 16 Nm.

All:

Further installation is in reverse order of removal, noting the following:

- Install left and right timing chain covers --> **Timing Chain Covers, Removing and Installing** .
- Install oil filter housing --> **Oil Filter Housing, Removing and Installing** .
- Install crankshaft seal, timing chain side --> **Crank Shaft Seal, Timing Chain Side, Replacing** .
- Vehicles with multitronic transmission: Install flywheel --> **Flywheel, Multitronic Transmission, Removing and Installing** and damper unit --> **Damper Unit, Removing and Installing**.
- Vehicles with automatic transmission 09L: Install drive plate --> **Drive Plate, Automatic Transmission 09L, Removing and Installing**.
- Install transmission --> **37 CONTROLS, HOUSING** .
- Add engine oil and check oil level --> **Oil Level, Checking** .

Tightening Specifications

Component		Nm
Lower timing chain cover to engine	M6	9 1)
M7	16	
M8	20	
Left and right cover for timing chain on engine		5 + 90° 2)3)
Retainer for connections to cylinder head		9
1) Install threaded fasteners between cylinder head and lower timing chain cover with locking compound; Locking compound . 2) Replace bolts. 3) 90° corresponds to a quarter turn.		

CAMSHAFT DRIVE

Camshaft Drive

--> Camshaft Timing Chain, Component Overview

--> Timing Chains, Removing from Camshafts and Chain Tensioner, Removing and Installing

--> Timing Mechanism Drive Chain, Component Overview

--> Timing Mechanism Drive Chain, Removing and Installing

--> Power Take-Off Drive Chain, through 03.06, Component Overview

--> Power Take-Off Drive Chain, from 04.06, Removing and Installing

--> Power Take-Off Drive Chain, from 04.06, Component Overview

--> Power Take-Off Drive Chain, from 04.06, Removing and Installing

--> Balancing Shaft, Component Overview

--> Balancing Shaft, Removing and Installing

NOTE:

- **Crankshaft and camshafts must only be rotated when chain drive is installed completely. Otherwise the valves impact on the pistons danger of damage to valves/piston heads.**

Camshaft Timing Chain, Component Overview

Camshaft Timing Chain, Component Overview

NOTE:

- **Before removing camshaft timing chain, mark direction of travel with paint. Reversing the rotation direction of a used chain can destroy it.**

Left camshaft timing chain

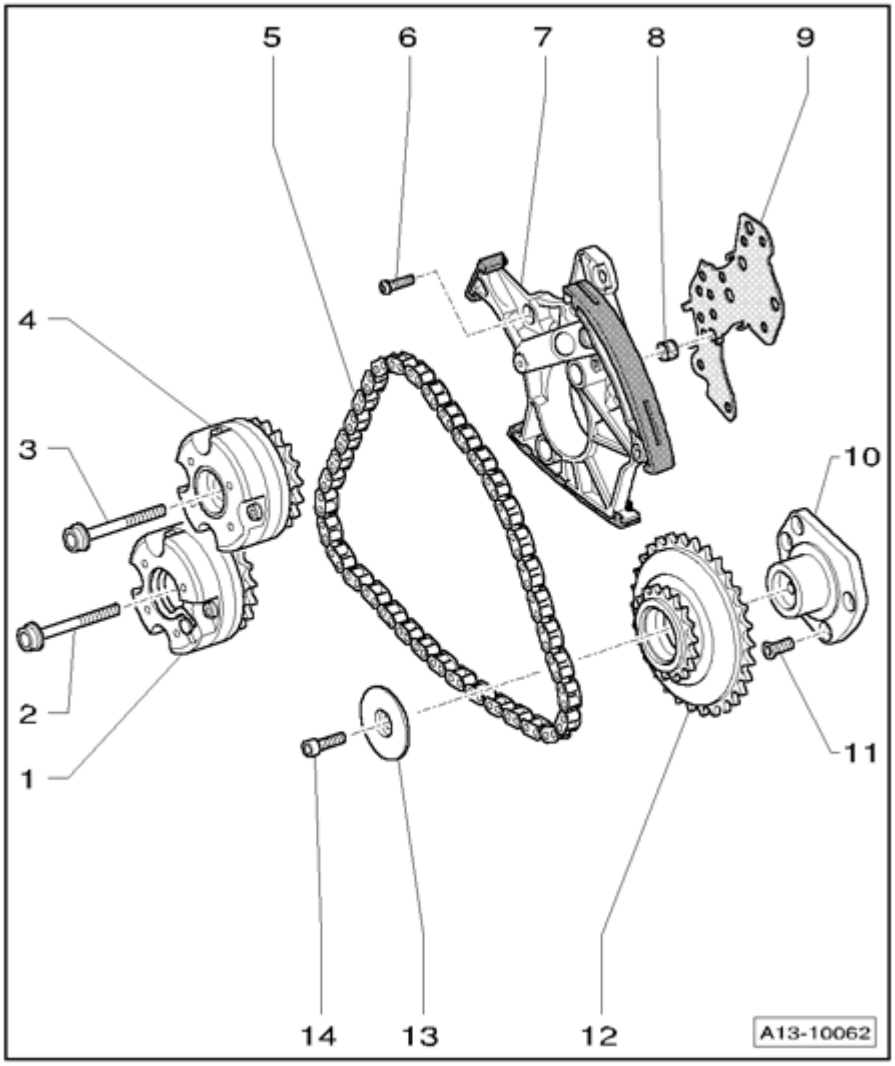

Fig. 279: Camshaft Timing Chain, Component Overview (Left Camshaft Timing Chain)
Courtesy of VOLKSWAGEN UNITED STATES, INC.

1 - Camshaft adjuster for exhaust camshaft

- Identification "Exhaust"
- Removing and installing --> **Timing Chains, Removing from Camshafts and Chain Tensioner, Removing and Installing**

2 - Camshaft bolt

- Replace
- Initial tightening specifications: 40 Nm
- Final tightening specifications: 80 Nm plus an additional 90 ($^1/_4$ turn)

3 - Camshaft bolt

- Replace
- Initial tightening specifications: 40 Nm
- Final tightening specifications: 80 Nm plus an additional 90 ($^1/_4$ turn)

4 - Camshaft adjuster for intake camshaft

- Identification "Intake"
- Removing and installing --> **Timing Chains, Removing from Camshafts and Chain Tensioner, Removing and Installing**

5 - Left camshaft timing chain

- Removing and installing --> **Timing Chains, Removing from Camshafts and Chain Tensioner, Removing and Installing**

6 - 9 Nm

7 - Chain tensioner for left camshaft timing chain

- Removing and installing --> **Timing Chains, Removing from Camshafts and Chain Tensioner, Removing and Installing**

8 - Oil strainer

- Set into chain tensioner
- Observe locating tabs on circumference

9 - Gasket

- Replace
- Clipped onto chain tensioner

10 - Mounting bracket for drive sprocket

11 - 8 Nm plus an additional 45 ($^1/_8$ turn)

- Replace
- To be oiled for installation

12 - Drive sprocket for left camshaft timing chain

13 - Thrust washer for drive sprocket

14 - 6 Nm plus an additional 60 ($^1/_6$ turn)

- Replace

Right camshaft timing chain

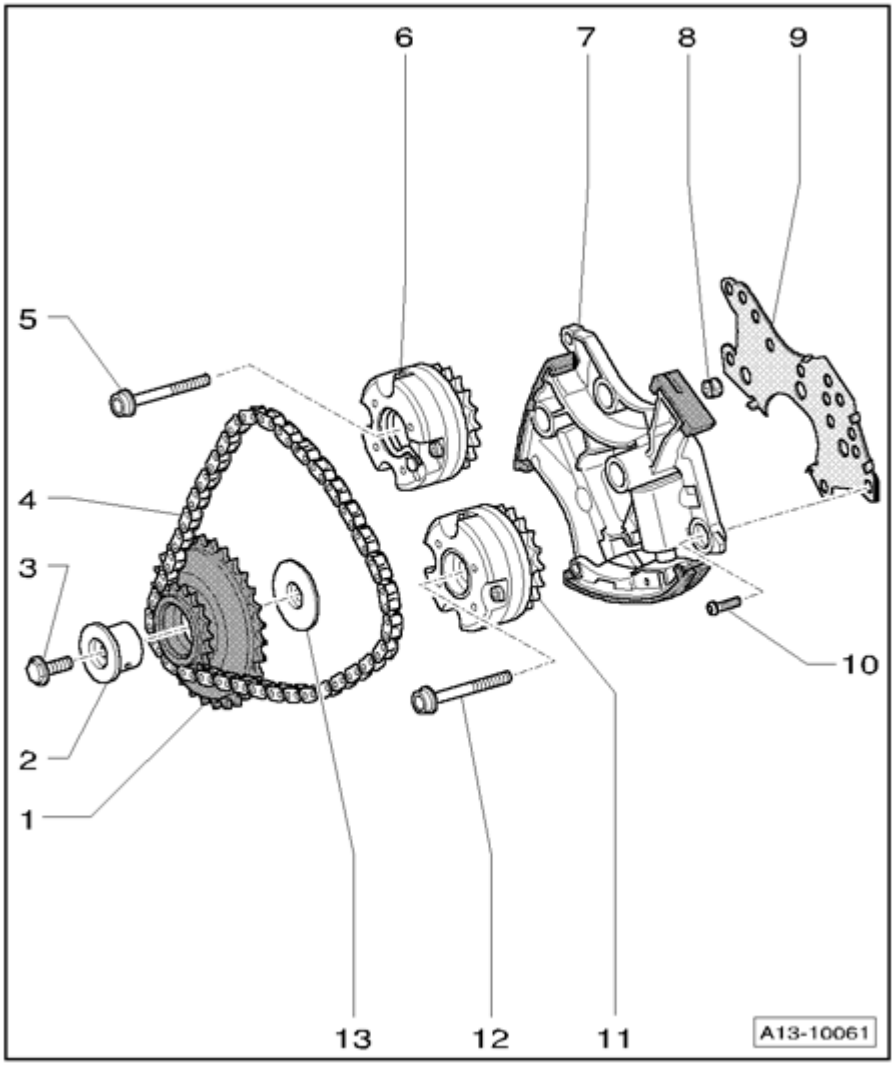

Fig. 280: Camshaft Timing Chain, Component Overview (Right Camshaft Timing Chain)
Courtesy of VOLKSWAGEN UNITED STATES, INC.

1 - Drive sprocket for right camshaft timing chain

2 - Pivot pin for drive sprocket

3 - 30 Nm plus an additional 90 ($^1/_4$ turn)

4 - Right camshaft timing chain

- Removing and installing --> **Timing Chains, Removing from Camshafts and Chain Tensioner,**

Removing and Installing

5 - Camshaft bolt

- Replace
- Initial tightening specifications: 40 Nm
- Final tightening specifications: 80 Nm plus an additional 90 ($^1/_4$ turn)

6 - Camshaft adjuster for intake camshaft

- Identification "Intake"
- Removing and installing --> **Timing Chains, Removing from Camshafts and Chain Tensioner, Removing and Installing**

7 - Chain tensioner for right camshaft timing chain

- Removing and installing --> **Timing Chains, Removing from Camshafts and Chain Tensioner, Removing and Installing**

8 - Oil strainer

- Set into chain tensioner
- Installation position: Locating tabs on circumference

9 - Gasket

- Replace
- Clipped onto chain tensioner

10 - 9 Nm

11 - Camshaft adjuster for exhaust camshaft

- Identification "Exhaust"
- Removing and installing --> **Timing Chains, Removing from Camshafts and Chain Tensioner, Removing and Installing**

12 - Camshaft bolt

- Replace
- Initial tightening specifications: 40 Nm
- Final tightening specifications: 80 Nm plus an additional 90 ($^1/_4$ turn)

13 - Thrust washer for drive sprocket

Timing Chains, Removing from Camshafts and Chain Tensioner, Removing and Installing

Timing Chains, Removing from Camshafts and Chain Tensioner, Removing and Installing

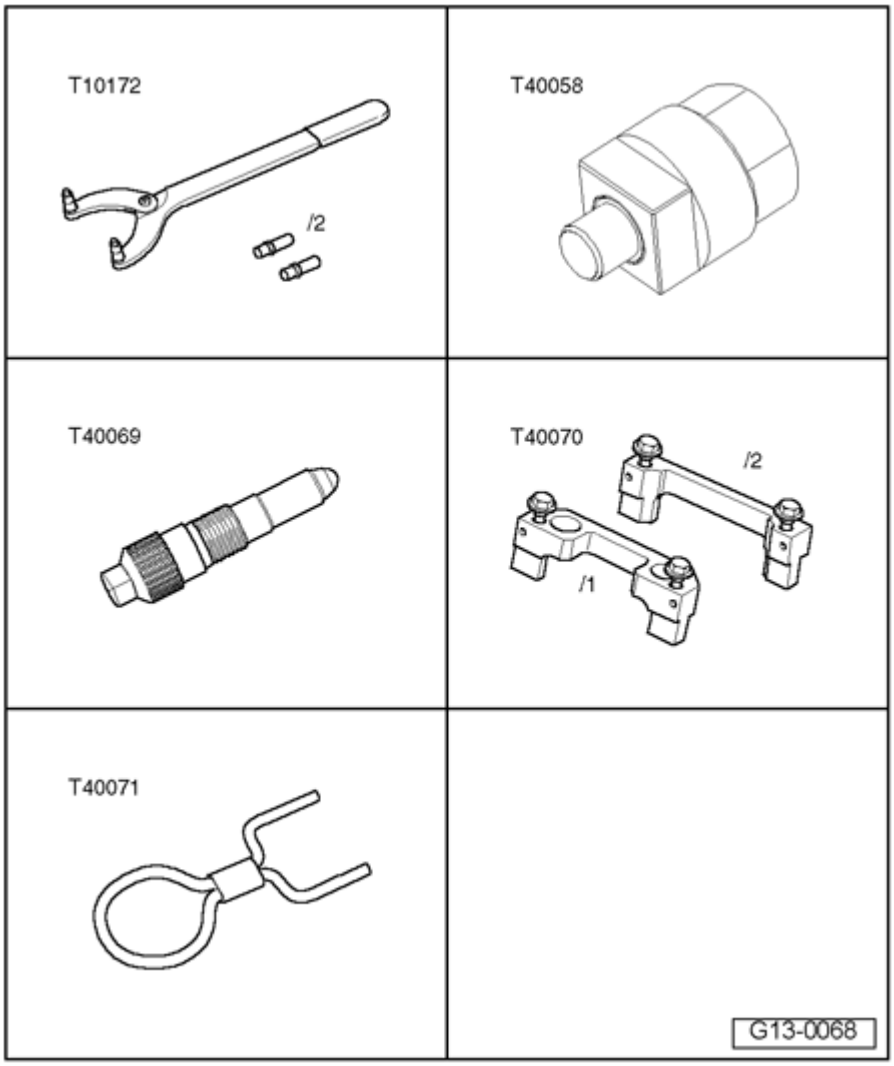

Fig. 281: Identifying Special Tools - Timing Chains, Removing From Camshafts And Chain Tensioner, Removing And Installing
Courtesy of VOLKSWAGEN UNITED STATES, INC.

Special tools, testers and auxiliary items required

- Counter-holder T10172 with pin T10172/2
- Adapter T40058
- Locking pin T40069
- Camshaft locator T40070 (qty. 2)
- Securing pin T40071 (qty. 2)

Special tools, testers and auxiliary items required

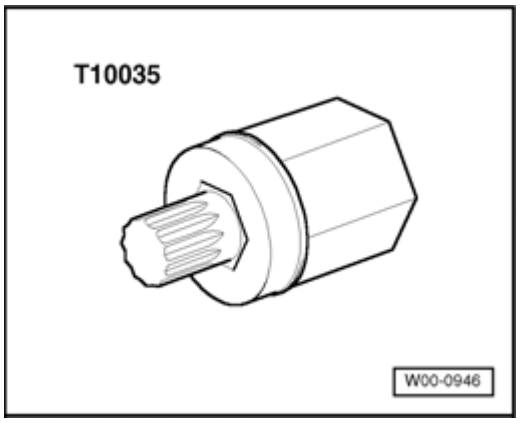

Fig. 282: Multi-Point Socket T10035
Courtesy of VOLKSWAGEN UNITED STATES, INC.

- Multi-point socket T10035

Removing

NOTE:

- **According to the following description, the timing chains for camshafts remain on engine. If the timing chains for camshafts are to be completely removed, the lower timing chain cover must also be removed --> Lower Timing Chain Cover, Removing and Installing .**

- Remove cylinder head cover.
- Remove left and right timing chain covers --> **Timing Chain Covers, Removing and Installing** .

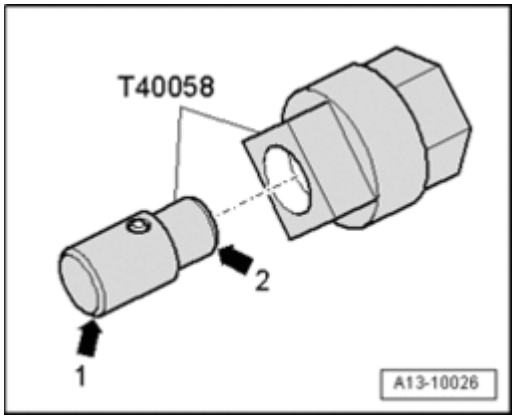

Fig. 283: Inserting Guide Pin Of Adapter T40058 So That Large Diameter Points To Engine
Courtesy of VOLKSWAGEN UNITED STATES, INC.

- Insert guide pin of adapter T40058 so that large diameter - **arrow 1** - points to engine. Small diameter - **arrow 2** - points to adapter.

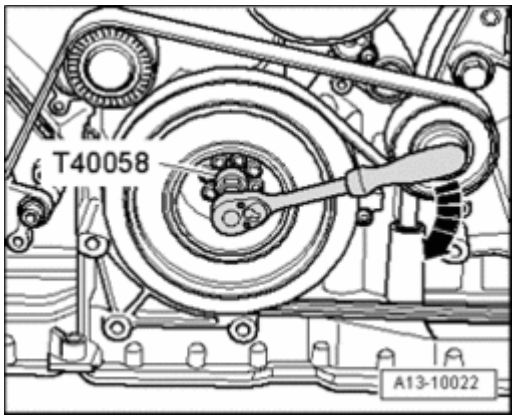

Fig. 284: Loosening Torque Converter Bolts Using Adapter T40058
Courtesy of VOLKSWAGEN UNITED STATES, INC.

- Using socket T40058 , rotate crankshaft in direction of engine rotation - **arrow** - to TDC.

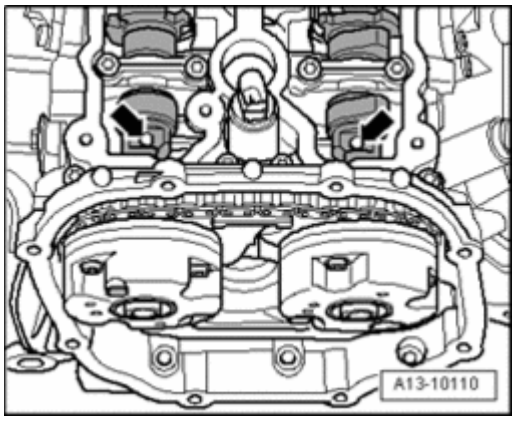

Fig. 285: Identifying Threaded Holes In Camshafts Must Face Upward
Courtesy of VOLKSWAGEN UNITED STATES, INC.

- The threaded holes - **arrows** - in the camshafts must face upward.

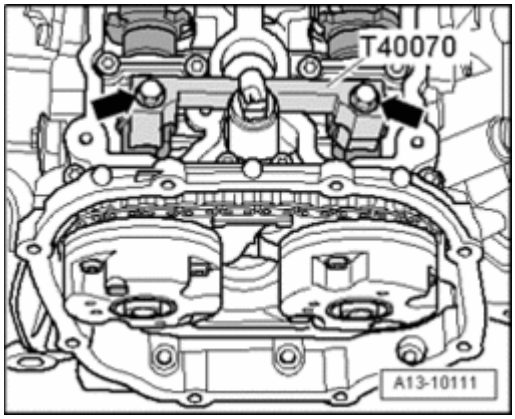

Fig. 286: Mounting Camshaft Locating Tool T40070 To Both Cylinder Heads And Tightening Bolts
Courtesy of VOLKSWAGEN UNITED STATES, INC.

- Mount camshaft locating tool T40070 on both cylinder heads and tighten bolts - **arrows** - to 20 Nm.

- The camshaft locating tool T40070 is correctly positioned when the holes for the cylinder head bolts remain free.

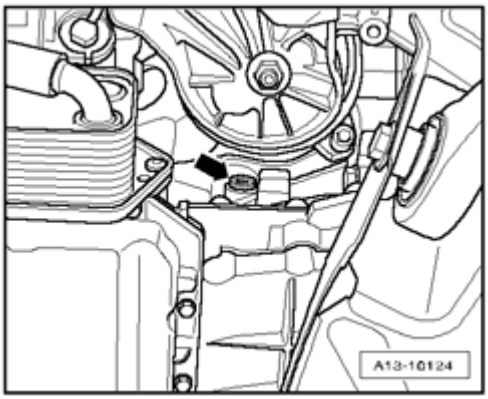

Fig. 287: Removing/Installing Sealing Plug From Cylinder Block
Courtesy of VOLKSWAGEN UNITED STATES, INC.

- Remove sealing plug - **arrow** - from cylinder block.

CAUTION: Do not turn crankshaft while touching TDC hole with finger - Risk of injury.

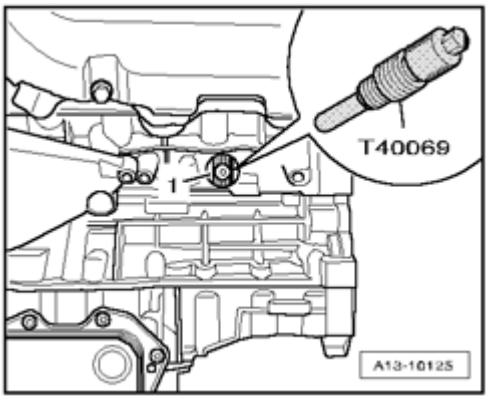

Fig. 288: Installing Crankshaft Holder T40069 Into Hole
Courtesy of VOLKSWAGEN UNITED STATES, INC.

- Install crankshaft holder T40069 into hole - **1** - to 10 Nm, if necessary rotate crankshaft very slightly back and forth to completely center the holder.

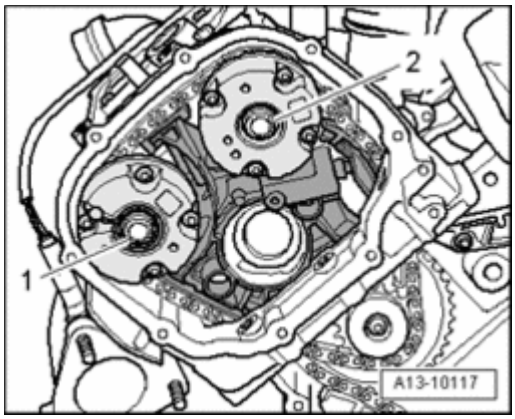

Fig. 289: Removing/Installing Camshaft Adjuster Screws On Left Cylinder Head
Courtesy of VOLKSWAGEN UNITED STATES, INC.

- Mark running direction of left camshaft timing chain with paint.
- Remove bolts - **1** - and - **2** - for camshaft adjuster using multipoint socket T10035.
- Remove both camshaft adjusters.

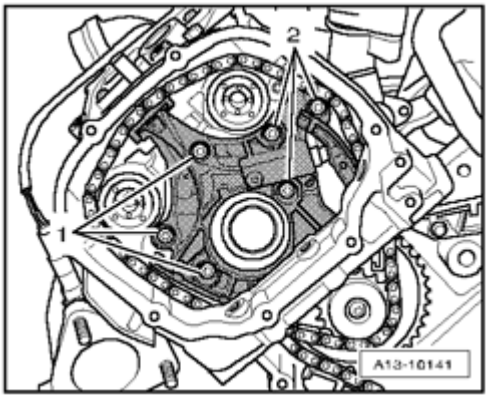

Fig. 290: Removing Bolts And Chain Tensioner
Courtesy of VOLKSWAGEN UNITED STATES, INC.

- Remove bolts - **1** - and - **2** - and remove chain tensioner.

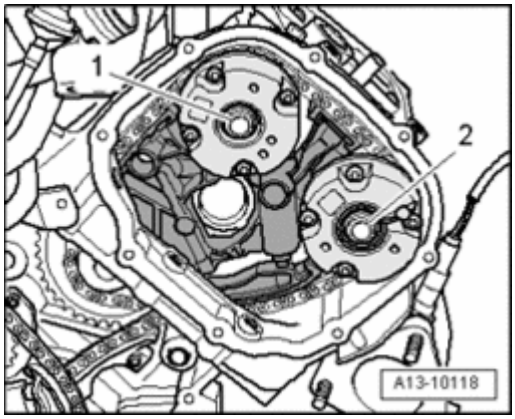

Fig. 291: Removing Bolts For Camshaft Adjuster Using Multipoint Socket T10035
Courtesy of VOLKSWAGEN UNITED STATES, INC.

- Mark running direction of right camshaft timing chain with paint.
- Remove bolts - **1** - and - **2** - for camshaft adjuster using multipoint socket T10035.
- Remove both camshaft adjusters.

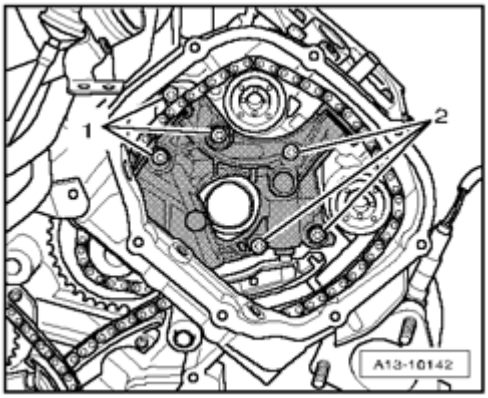

Fig. 292: Removing Bolts And Chain Tensioner
Courtesy of VOLKSWAGEN UNITED STATES, INC.

- Remove bolts - **1** - and - **2** - and remove chain tensioner.

Installing

NOTE:

- **Always replace bolts that are tightened to torque as well as O-rings and gaskets.**
- **When turning camshaft, crankshaft must not be at TDC for any cylinder. Valves and/or pistons may be damaged.**
- **Drive chain for timing mechanism installed --> Timing Mechanism Drive Chain, Removing and Installing .**

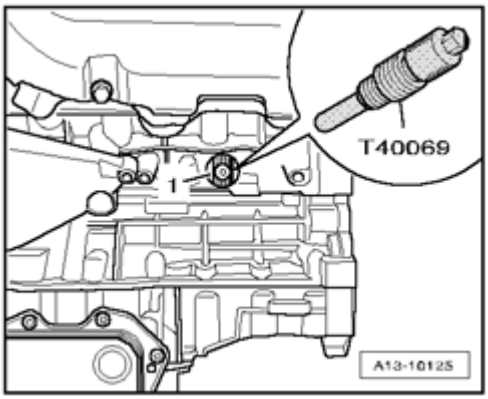

Fig. 293: Installing Crankshaft Holder T40069 Into Hole

Courtesy of VOLKSWAGEN UNITED STATES, INC.

- **Secure crankshaft in TDC position using crankshaft holder T40069.**

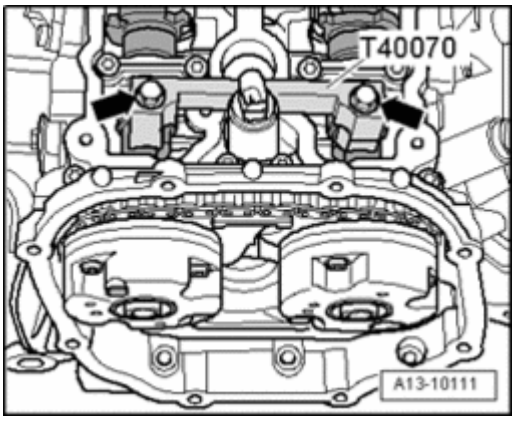

Fig. 294: Mounting Camshaft Locating Tool T40070 To Both Cylinder Heads And Tightening Bolts
Courtesy of VOLKSWAGEN UNITED STATES, INC.

- **Camshaft locating tool T40070 mounted on both cylinder heads and tightened to 20 Nm.**

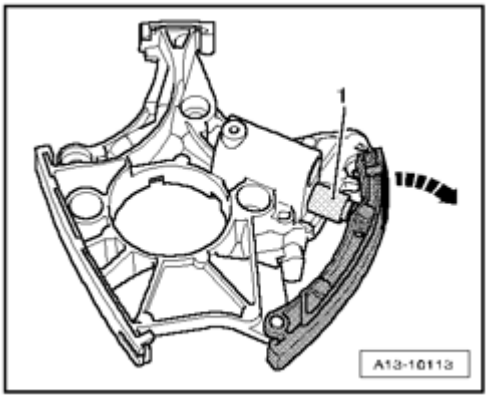

Fig. 295: Fully Relieving Tension Of Guide Rail For Left/Right Camshaft Timing Chain Tensioner
Courtesy of VOLKSWAGEN UNITED STATES, INC.

- Fully relieve tension of guide rail for left and right camshaft timing chain tensioner - **arrow** -.

- The piston of the tensioning element - **1** - must be driven out completely, thereby releasing the retainer - for this the chain tensioner must be removed.

NOTE:

- **If the tensioning element is to be removed from the chain tensioner, observe the installed position: Hole in housing floor faces toward chain tensioner, piston faces toward tensioning rail.**

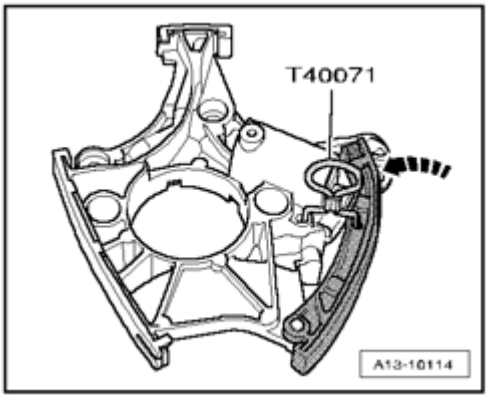

Fig. 296: Pressing Guide Rail Of Left/Right Camshaft Timing Chain Inward Up To Stop And Secure Chain Tensioner With Securing Pin T40071
Courtesy of VOLKSWAGEN UNITED STATES, INC.

- Press guide rail of the left and right camshaft timing chain inward - **arrow** - up to stop and secure chain tensioner with the securing pin T40071.

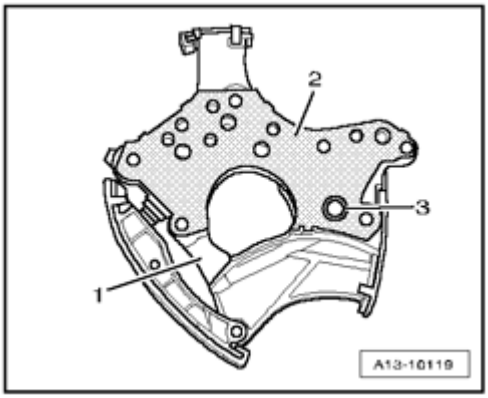

Fig. 297: Cleaning Oil Strainer In Both Chain Tensioners & Placing New Gasket Onto Rear Of Chain Tensioner
Courtesy of VOLKSWAGEN UNITED STATES, INC.

- Clean oil strainer - **3** - in both chain tensioners if necessary.
- Place a new gasket - **2** - onto the rear of the chain tensioner - **1** -.

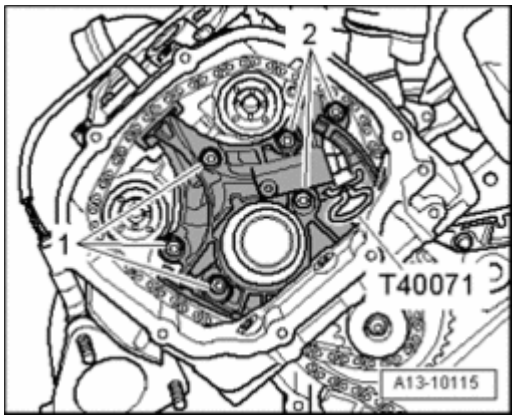

Fig. 298: Tightening Bolts & Replacing Camshaft Bolts
Courtesy of VOLKSWAGEN UNITED STATES, INC.

- Set chain tensioner in place on the left cylinder head and install the camshaft timing chain, as shown in the illustration.
- Tighten bolts - **1** - and - **2** -.

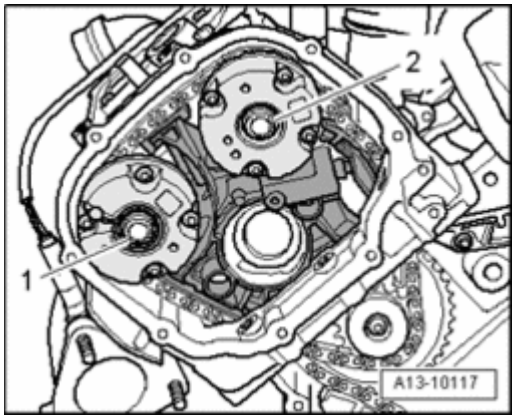

Fig. 299: Removing/Installing Camshaft Adjuster Screws On Left Cylinder Head
Courtesy of VOLKSWAGEN UNITED STATES, INC.

- Replace camshaft bolts.
- Place camshaft timing chain onto drive sprocket and onto camshaft adjusters and loosely thread in the bolts - **1** - and - **2** -.

- Both camshaft adjusters must be able to still be rotated on camshaft and must not tip.

- Remove Locking Pin T40071.

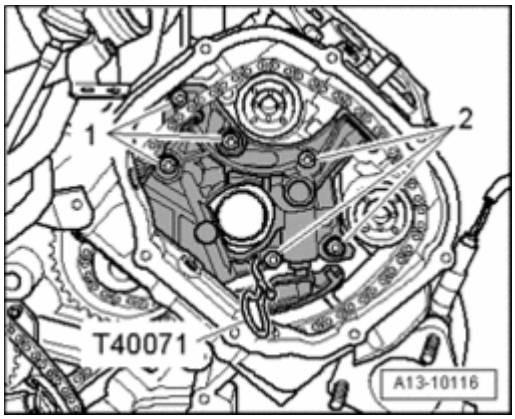

Fig. 300: Tightening Bolts & Replacing Camshaft Bolts
Courtesy of VOLKSWAGEN UNITED STATES, INC.

- Set chain tensioner in place on the right cylinder head and install the camshaft timing chain, as shown in the illustration.
- Tighten bolts - **1** - and - **2** -.
- Replace camshaft bolts.

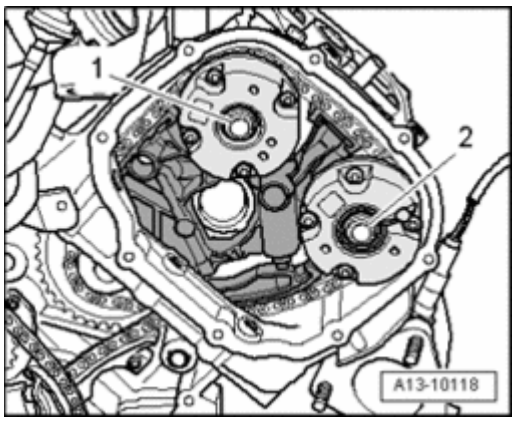

Fig. 301: Removing Bolts For Camshaft Adjuster Using Multipoint Socket T10035
Courtesy of VOLKSWAGEN UNITED STATES, INC.

- Place camshaft timing chain onto drive sprocket and onto camshaft adjusters and loosely thread in the bolts - **1** - and - **2** -.

- Both camshaft adjusters must be able to still be rotated on camshaft and must not tip.

- Remove Locking Pin T40071.

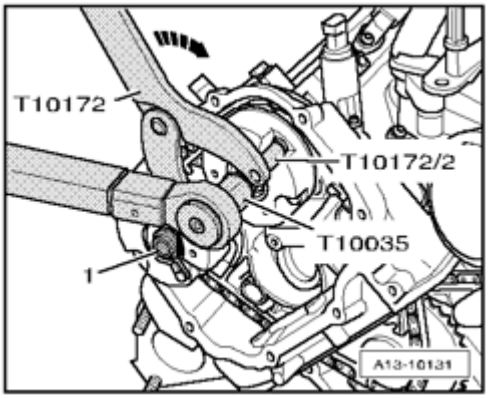

Fig. 302: Setting Counter-Holder T10172 With Pin T10172/2 In Place On Camshaft Adjuster Of Left Intake Camshaft
Courtesy of VOLKSWAGEN UNITED STATES, INC.

- Set counter-holder T10172 with pin T10172/2 in place on the camshaft adjuster of the left intake camshaft.
- Hold camshaft timing chain pretensioned by pressing on counter-holder in direction of - **arrow** -.
- Simultaneously, pre-torque the camshaft bolt using the multipoint socket T10035 and torque wrench.

- Tightening Specifications 40 Nm.

- Continue holding the pretension on the intake camshaft and pre-torque the bolt - **1** - on the exhaust camshaft.

- Tightening Specifications 40 Nm.

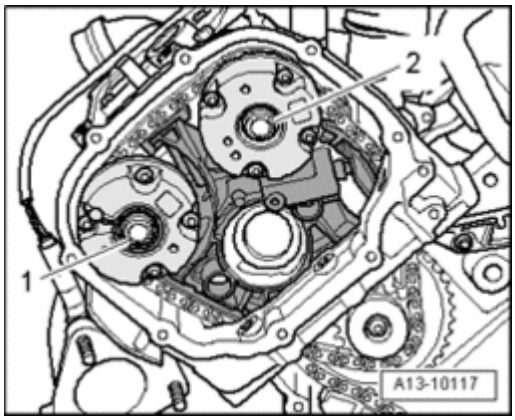

Fig. 303: Removing/Installing Camshaft Adjuster Screws On Left Cylinder Head
Courtesy of VOLKSWAGEN UNITED STATES, INC.

- Tighten camshaft bolts - **1** - and - **2** - on left cylinder head to final torque specification.

- Tightening Specifications 80 Nm plus an additional 90 ($^{1}/_{4}$ turn).

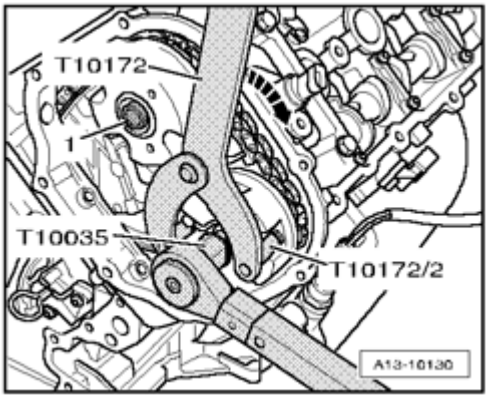

Fig. 304: Setting Counter-Holder T10172 With Pin T10172/2 In Place On Camshaft Adjuster Of Right Exhaust Camshaft
Courtesy of VOLKSWAGEN UNITED STATES, INC.

- Set counter-holder T10172 with pin T10172/2 in place on the camshaft adjuster of the right exhaust camshaft.
- Hold camshaft timing chain pretensioned by pressing on counter-holder in direction of - **arrow** -.
- Simultaneously, pre-torque camshaft bolt using the multipoint socket T10035 and torque wrench.

- Tightening Specifications 40 Nm.

- Continue holding the pretension on the exhaust camshaft and pre-torque the bolt - **1** - on the intake camshaft.

- Tightening Specifications 40 Nm.

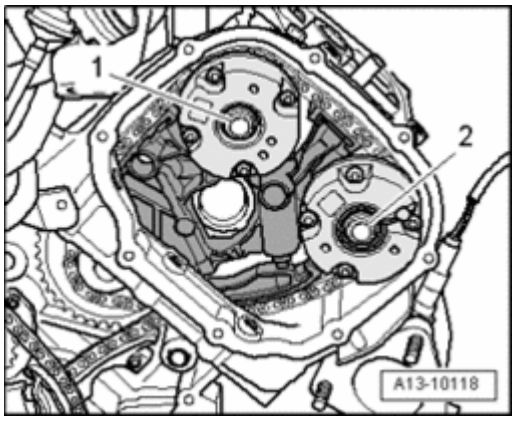

Fig. 305: Removing Bolts For Camshaft Adjuster Using Multipoint Socket T10035
Courtesy of VOLKSWAGEN UNITED STATES, INC.

- Tighten camshaft bolts - **1** - and - **2** - on right cylinder head to final torque specification.

- Tightening Specifications 80 Nm plus an additional 90 ($^{1}/_{4}$ turn).

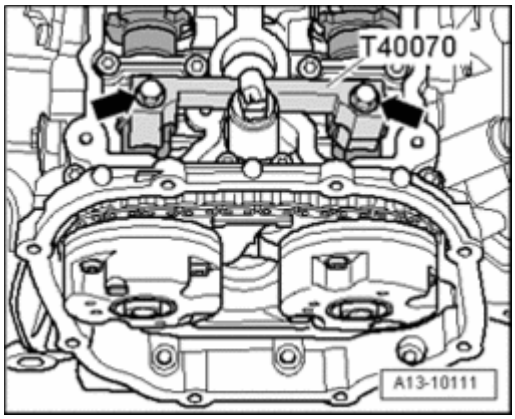

Fig. 306: Mounting Camshaft Locating Tool T40070 To Both Cylinder Heads And Tightening Bolts
Courtesy of VOLKSWAGEN UNITED STATES, INC.

- Remove camshaft locators T40070 on both cylinder heads.

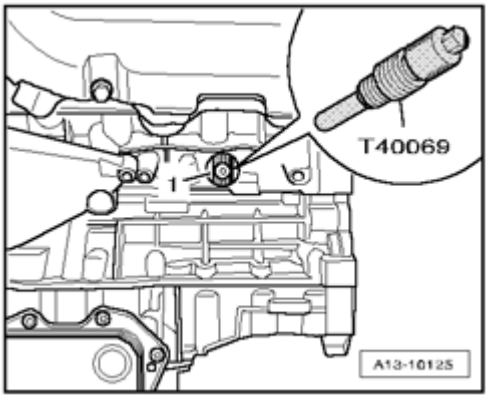

Fig. 307: Installing Crankshaft Holder T40069 Into Hole
Courtesy of VOLKSWAGEN UNITED STATES, INC.

- Remove crankshaft holder T40069.

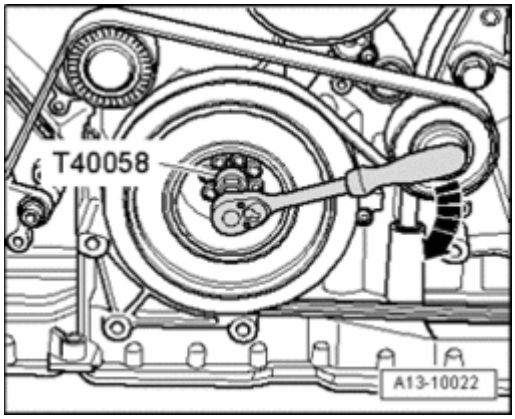

Fig. 308: Loosening Torque Converter Bolts Using Adapter T40058
Courtesy of VOLKSWAGEN UNITED STATES, INC.

- Using key T40058 turn crankshaft two complete rotations in direction of engine rotation - **arrow** - until crankshaft stands at TDC again.

NOTE:

- **If rotated unintentionally beyond TDC, turn back crankshaft again approximately 30 and set to TDC again.**

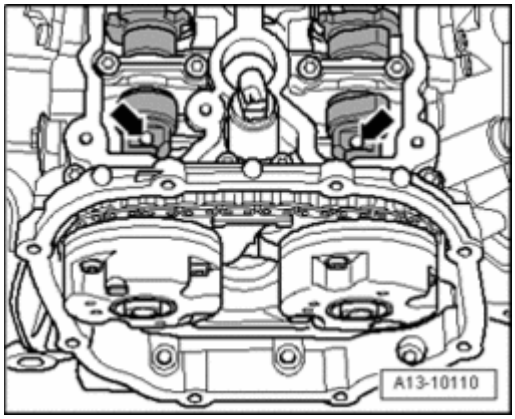

Fig. 309: Identifying Threaded Holes In Camshafts Must Face Upward
Courtesy of VOLKSWAGEN UNITED STATES, INC.

- The threaded holes - **arrows** - in the camshafts must face upward.

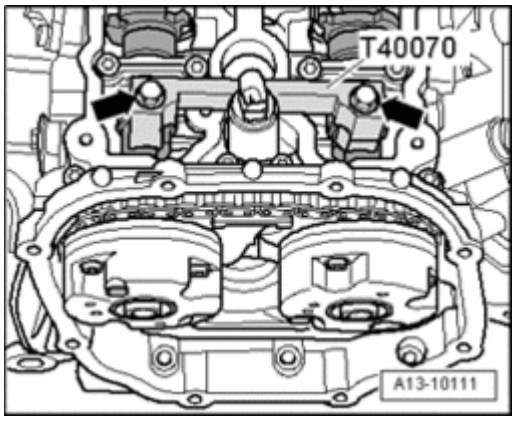

Fig. 310: Mounting Camshaft Locating Tool T40070 To Both Cylinder Heads And Tightening Bolts
Courtesy of VOLKSWAGEN UNITED STATES, INC.

- Mount camshaft locating tools T40070 to both cylinder heads and tighten the bolts - **arrows** - to 20 Nm.

- The camshaft locating tool T40070 is correctly positioned when the holes for the cylinder head bolts remain free.

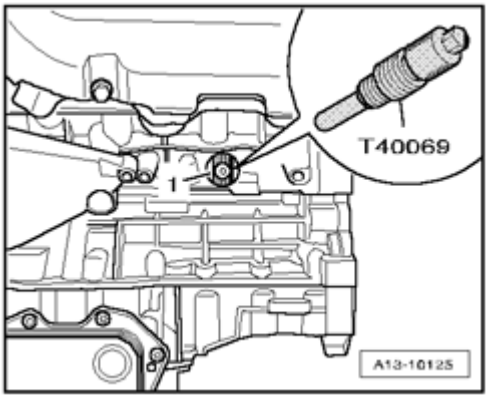

Fig. 311: Installing Crankshaft Holder T40069 Into Hole
Courtesy of VOLKSWAGEN UNITED STATES, INC.

- Install crankshaft holder T40069 directly into the hole.
- The crankshaft holder T40069 must engage in the locating hole of the crankshaft - **1** - , otherwise repeat the adjustment.
- Remove camshaft locating tools on both cylinder heads.
- Remove crankshaft holder.

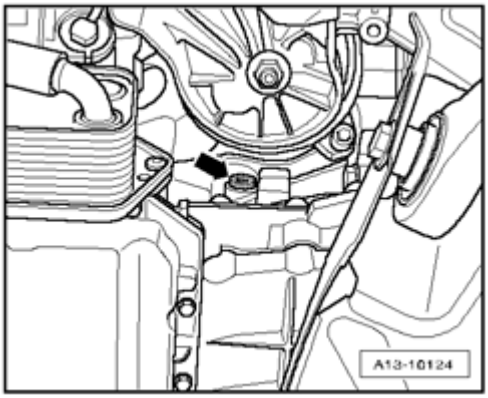

Fig. 312: Removing/Installing Sealing Plug From Cylinder Block
Courtesy of VOLKSWAGEN UNITED STATES, INC.

- Install sealing plug of TDC marking with new seal into cylinder block.

Further installation is in reverse order of removal, noting the following:

- Install left and right timing chain covers --> **Timing Chain Covers, Removing and Installing** .
- Install cylinder head cover.

Tightening Specifications

Component	Nm
Chain tensioner to cylinder head	9
Camshaft bolts	80 + 90° 1)2)
Sealing plug in cylinder block	14 3)
1) Replace bolts. 2) 90° corresponds to a quarter turn. 3) Install with new gasket.	

Timing Mechanism Drive Chain, Component Overview

Timing Mechanism Drive Chain, Component Overview

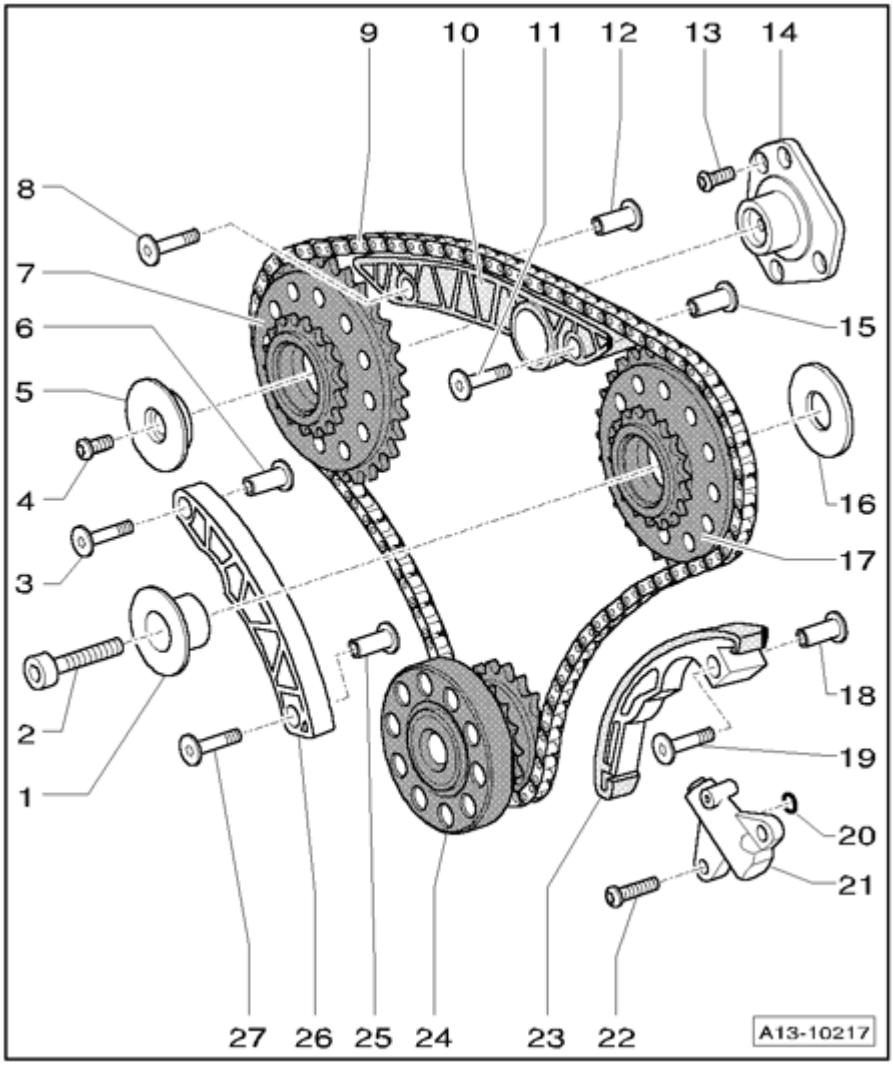

Fig. 313: Drive Chain For Timing Mechanism, Component Overview
Courtesy of VOLKSWAGEN UNITED STATES, INC.

1 - Pivot pin for drive sprocket

2 - 30 Nm plus an additional 90 ($^1/_4$ turn)

- Replace

3 - Bolt

- Replace
- Version and tightening specifications, depending on the version --> **Different glide track mountings**

4 - 6 Nm plus an additional 60 ($^{1}/_{6}$ turn)

- Replace

5 - Thrust washer for drive sprocket

6 - Bushing

- Depending on the version --> **Different glide track mountings**

7 - Drive sprocket for left camshaft timing chain

8 - Bolt

- Replace
- Version and tightening specifications, depending on the version --> **Different glide track mountings**

9 - Timing Mechanism Drive Chain

- Before removing, mark the direction of rotation with paint

10 - Guide rail

11 - Bolt

- Replace
- Version and tightening specifications, depending on the version --> **Different glide track mountings**

12 - Bushing

- Depending on the version --> **Different glide track mountings**

13 - 8 Nm plus an additional 45 ($^{1}/_{8}$ turn)

- Replace
- To be oiled for installation

14 - Mounting bracket for drive sprocket

15 - Bushing

- Depending on the version --> **Different glide track mountings**

16 - Thrust washer

17 - Drive sprocket for right camshaft timing chain

18 - Bushing

- Depending on the version --> **Different glide track mountings**

19 - Bolt

- Replace
- Version and tightening specifications, depending on the version --> **Different glide track mountings**

20 - O-ring

- Replace

21 - Chain tensioner

22 - 6 Nm plus an additional 45 ($^{1}/_{8}$ turn)

- Replace

23 - Glide track for chain tensioner

24 - Crankshaft

25 - Bushing

- Depending on the version --> **Different glide track mountings**

26 - Guide rail

- Note installation position

27 - Bolt

- Replace
- Version and tightening specifications, depending on the version --> **Different glide track mountings**

Different glide track mountings

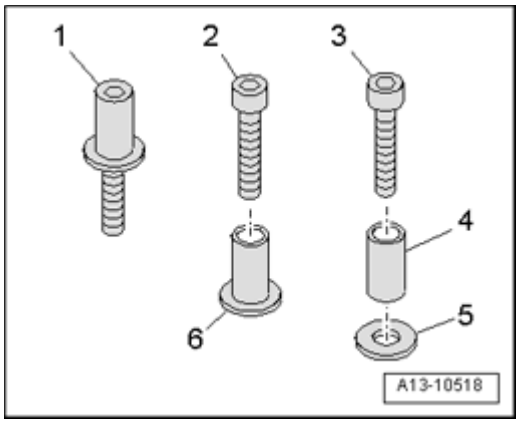

Fig. 314: Different Glide Track Mountings
Courtesy of VOLKSWAGEN UNITED STATES, INC.

Depending on the version, the timing chain glide tracks are mounted differently:

1 -	Bolt with shaft Replace 10 Nm plus an additional 30° (1/12 turn)
2 -	Convex headed bolt 6 and collar Replace 10 Nm plus an additional 90° (1/4 turn)
3 -	Convex headed bolt 4 and washer 5 Replace 10 Nm plus an additional 90° (1/4 turn)

Timing Mechanism Drive Chain, Removing and Installing

Timing Mechanism Drive Chain, Removing and Installing

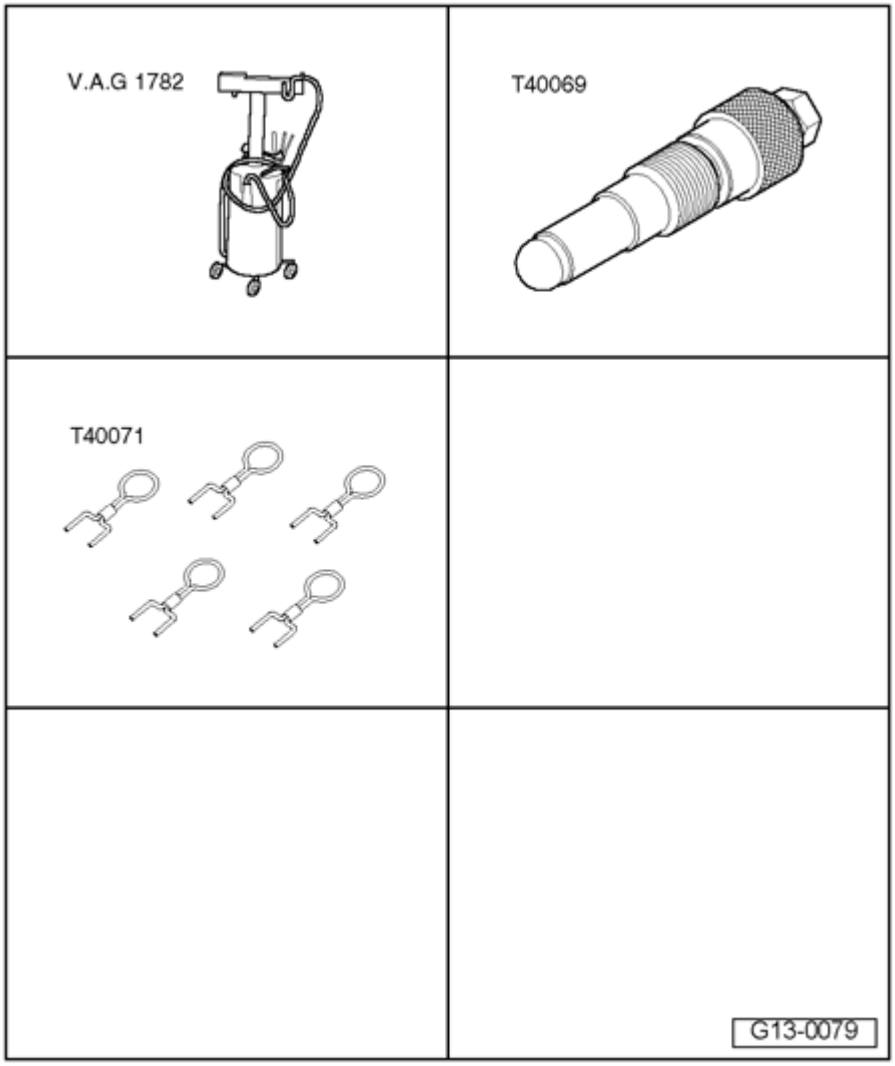

Fig. 315: Identifying Special Tools - Timing Mechanism Drive Chain, Removing And Installing
Courtesy of VOLKSWAGEN UNITED STATES, INC.

Special tools, testers and auxiliary items required

- Old oil collecting and extracting device V.A.G 1782
- Locking pin T40069
- Securing pin T40071

Removing

- Remove transmission --> **37 CONTROLS, HOUSING** .

CAUTION: To continue performing the repair procedure, ensure lock carrier is installed and torque support is tightened.

- Vehicles with multitronic transmission: Remove damper unit --> **Damper Unit, Removing and Installing** and flywheel --> **Flywheel, Multitronic Transmission, Removing and Installing**.
- Vehicles with automatic transmission 09L: Remove drive plate --> **Drive Plate, Automatic Transmission 09L, Removing and Installing**.
- Place old oil collecting and extracting device V.A.G 1782 under engine.
- Drain engine oil.

- Remove left and right timing chain covers --> **Timing Chain Covers, Removing and Installing** .
- Remove lower timing chain cover --> **Lower Timing Chain Cover, Removing and Installing** .
- Remove camshaft timing chains from camshafts --> **Timing Chains, Removing from Camshafts and Chain Tensioner, Removing and Installing** .
- Remove power take-off drive chain: Vehicles up to 04.2006 --> **Power Take-Off Drive Chain, from 04.06, Removing and Installing** , vehicle from 04.2006 --> **Power Take-Off Drive Chain, from 04.06, Removing and Installing**.

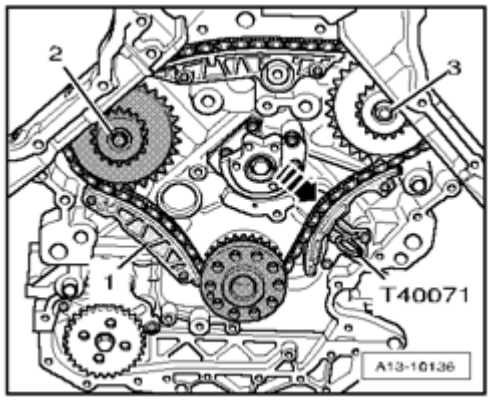

Fig. 316: Pushing Drive Chain Tensioner Guide Rail And Securing Chain Tensioner Using Securing Pin T40071
Courtesy of VOLKSWAGEN UNITED STATES, INC.

- Push drive chain tensioner guide rail in direction of - **arrow** - and secure chain tensioner using securing pin T40071.
- Mark running direction of timing chain with paint.
- Remove bolts - **2** - and - **3** - and remove chain sprockets with drive chain and glide track - **1** -.

Installing

Installation is in reverse order of removal, noting the following:

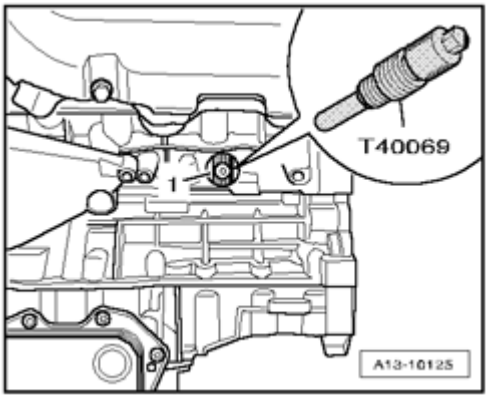

Fig. 317: Installing Crankshaft Holder T40069 Into Hole
Courtesy of VOLKSWAGEN UNITED STATES, INC.

- Secure crankshaft - **1** - in TDC position using crankshaft holder T40069.

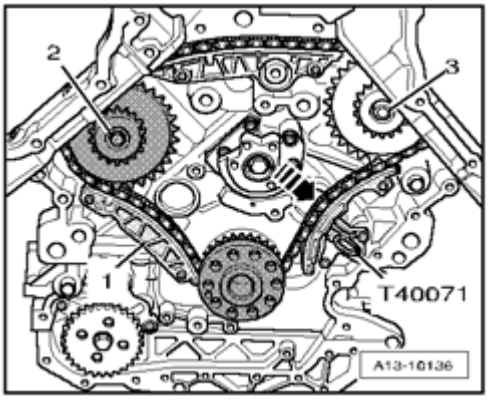

Fig. 318: Pushing Drive Chain Tensioner Guide Rail And Securing Chain Tensioner Using Securing Pin T40071
Courtesy of VOLKSWAGEN UNITED STATES, INC.

- First, install the left camshaft timing chain sprocket - **2** -.
- Install guide rail - **1** - with installed drive chain.
- Now install the right camshaft timing chain sprocket - **3** -.
- Press drive chain tensioner guide rail in direction of - **arrow** - and pull securing pin T40071 out of the chain tensioner.

- Install power take-off drive chain: Vehicles up to 04.2006 --> **Power Take-Off Drive Chain, from 04.06, Removing and Installing** , vehicle from 04.2006 --> **Power Take-Off Drive Chain, from 04.06, Removing and Installing**.
- Install camshaft timing chains --> **Timing Chains, Removing from Camshafts and Chain Tensioner, Removing and Installing** .
- Install lower timing chain cover --> **Lower Timing Chain Cover, Removing and Installing** .
- Install left and right timing chain covers --> **Timing Chain Covers, Removing and Installing** .

- Vehicles with multitronic transmission: Install flywheel --> **Flywheel, Multitronic Transmission, Removing and Installing** and damper unit --> **Damper Unit, Removing and Installing**.
- Vehicles with automatic transmission 09L: Install drive plate --> **Drive Plate, Automatic Transmission 09L, Removing and Installing**.
- Install transmission --> **37 CONTROLS, HOUSING** .
- Add engine oil and check oil level --> **Oil Level, Checking** .

Tightening Specifications

Component	Nm
Left drive sprocket to mounting bracket	6 + 60° 1) 2)
Right drive sprocket to cylinder block	30 + 90° 1) 3)
Sealing plug in cylinder block	14 4)
1) Replace bolts. 2) 60° corresponds to a 1/6 turn. 3) 90° corresponds to a quarter turn. 4) Install with new gasket.	

Power Take-Off Drive Chain, through 03.06, Component Overview

Power Take-Off Drive Chain, through 03.06, Component Overview

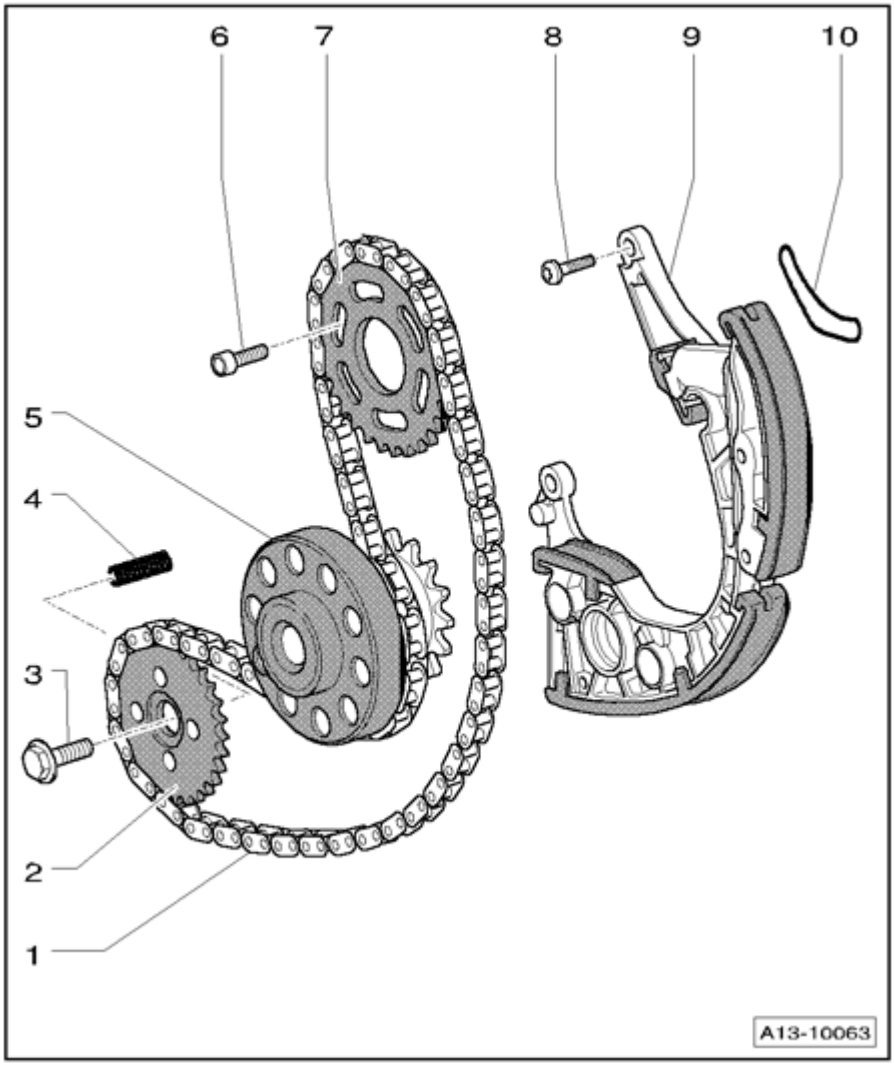

Fig. 319: Power Take-Off Drive Chain, Through 03.06, Component Overview
Courtesy of VOLKSWAGEN UNITED STATES, INC.

1 - Power take-off drive chain

- Before removing, mark the direction of rotation with paint
- Removing and installing --> **Power Take-Off Drive Chain, from 04.06, Removing and Installing**

2 - Drive sprocket for oil pump

- Installation position: Labeled side faces engine

3 - 30 Nm plus an additional 90 ($^1/_4$ turn)

- Replace

4 - Spring

5 - Crankshaft

6 - 15 Nm plus an additional 90 ($^{1}/_{4}$ turn)

- Replace

7 - Chain sprocket for balance shaft

- Installation position: Labeled side faces transmission

8 - 6 Nm plus an additional 45 ($^{1}/_{8}$ turn)

- Replace

9 - Chain tensioner

- With glide track

10 - Gasket

- Depending on version
- Replace

Power Take-Off Drive Chain, from 04.06, Removing and Installing

Power Take-Off Drive Chain, from 04.06, Removing and Installing

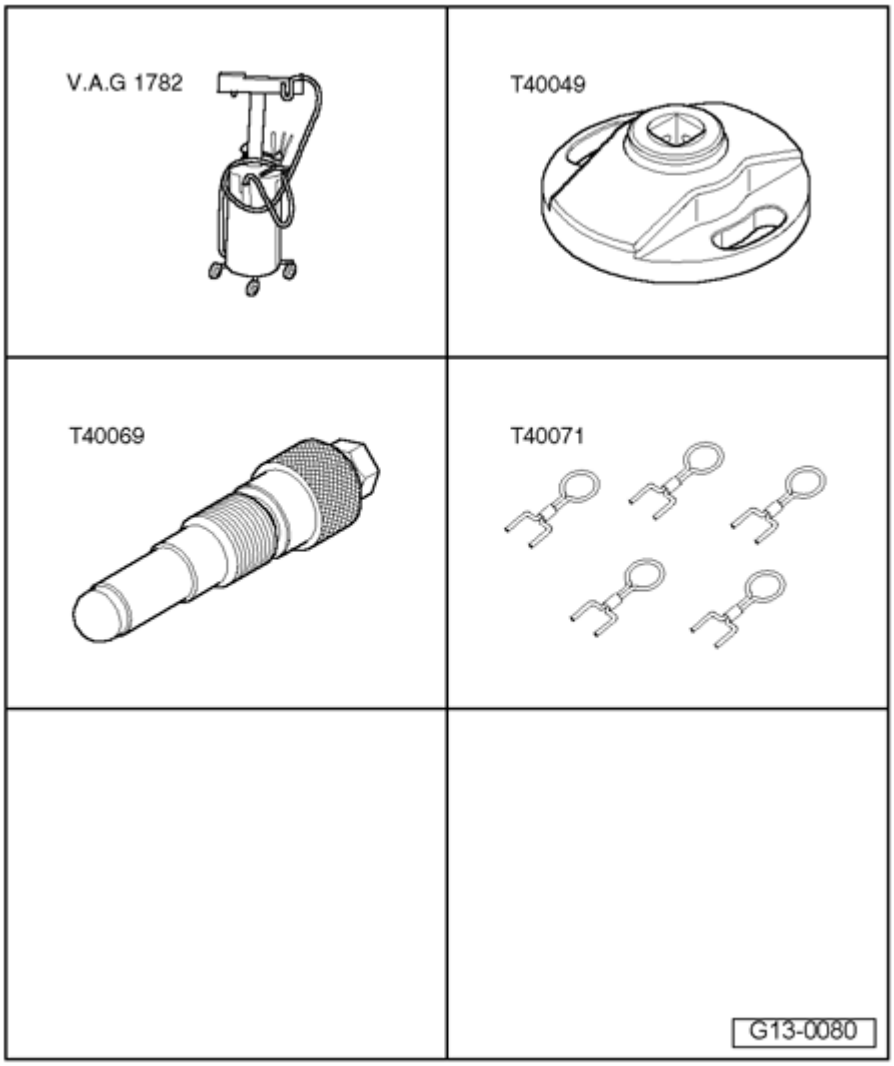

Fig. 320: Identifying Special Tools - Power Take-Off Drive Chain, From 04.06, Removing And Installing
Courtesy of VOLKSWAGEN UNITED STATES, INC.

Special tools, testers and auxiliary items required

- Old oil collecting and extracting device V.A.G 1782
- Adapter T40049
- Locking pin T40069
- Securing pin T40071

- Drill 8 mm diameter

Removing

- Remove transmission --> **37 CONTROLS, HOUSING** .

CAUTION: To continue performing the repair procedure, ensure lock carrier is installed and torque support is tightened.

- Vehicles with multitronic transmission: Remove damper unit --> **Damper Unit, Removing and Installing** and flywheel --> **Flywheel, Multitronic Transmission, Removing and Installing**.
- Vehicles with automatic transmission 09L: Remove drive plate --> **Drive Plate, Automatic Transmission 09L, Removing and Installing**.
- Place old oil collecting and extracting device V.A.G 1782 under engine.
- Drain engine oil.

- Remove lower timing chain cover --> **Lower Timing Chain Cover, Removing and Installing** .

CAUTION: Place a washer under the bolt heads, to prevent the chain from being pinched by the bolts.

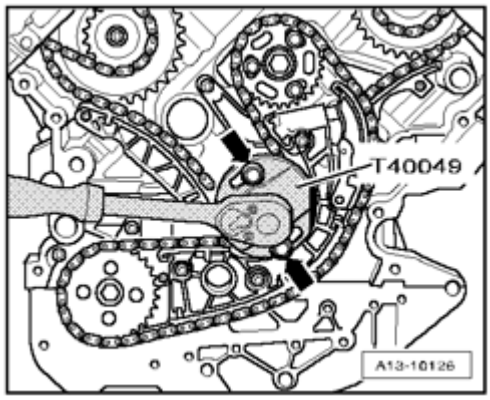

Fig. 321: Installing Key T40049 At Rear On Crankshaft Using 2 Old Bolts For Dual-Mass Flywheel
Courtesy of VOLKSWAGEN UNITED STATES, INC.

- Install key T40049 at rear on crankshaft using 2 old bolts for dual-mass flywheel.

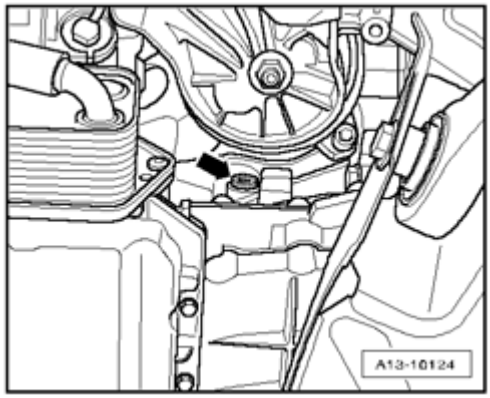

Fig. 322: Removing/Installing Sealing Plug From Cylinder Block
Courtesy of VOLKSWAGEN UNITED STATES, INC.

- Remove sealing plug - **arrow** - from cylinder block.

CAUTION: Do not turn crankshaft while touching TDC hole with finger - Risk of injury.

- Rotate crankshaft in direction of engine rotation to TDC of ignition timing.

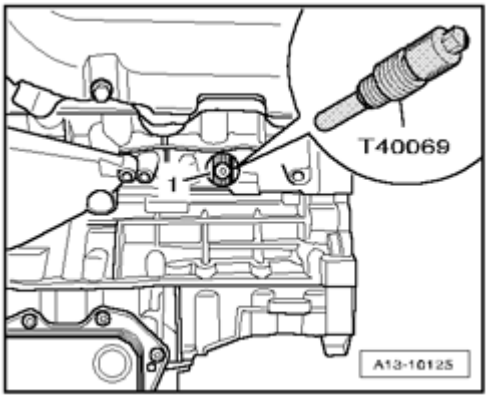

Fig. 323: Installing Crankshaft Holder T40069 Into Hole
Courtesy of VOLKSWAGEN UNITED STATES, INC.

- Install crankshaft holder T40069 into hole to 20 Nm, if necessary rotate crankshaft very slightly back and forth to completely center the holder.
- Mark running direction of power take-off chain with paint.

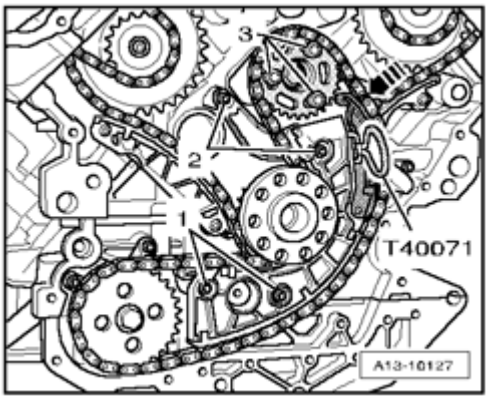

Fig. 324: Pressing Chain Tensioner Guide Rail And Securing Chain Tensioner With Securing Pin T40071
Courtesy of VOLKSWAGEN UNITED STATES, INC.

- Press chain tensioner guide rail in direction of - **arrow** - and secure chain tensioner with securing pin T40071.
- Remove bolts - **1 through 3** - and remove chain tensioner, balance shaft sprocket and chain.

Installing

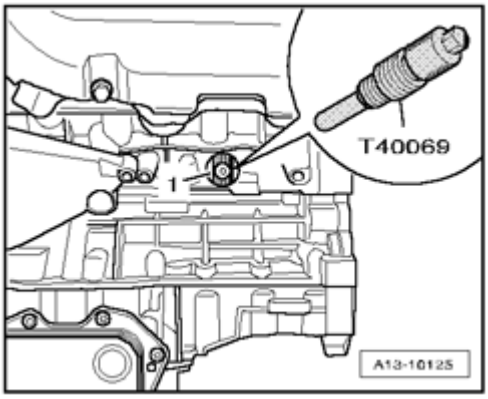

Fig. 325: Installing Crankshaft Holder T40069 Into Hole
Courtesy of VOLKSWAGEN UNITED STATES, INC.

- Secure crankshaft - **1** - in TDC position using crankshaft holder T40069.

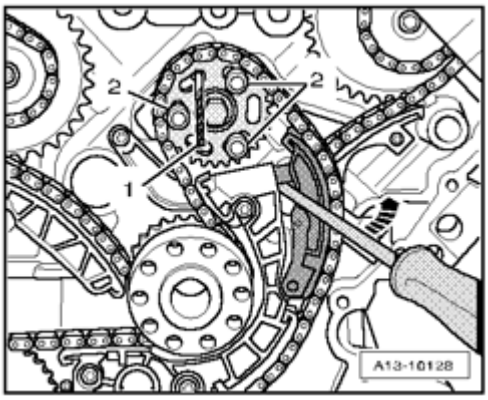

Fig. 326: Mounting Chain Tensioner With Chain And Balance Shaft Sprocket
Courtesy of VOLKSWAGEN UNITED STATES, INC.

- Mount chain tensioner with chain and balance shaft sprocket.
- To protect against cuts, wrap point and cutting edges of 8 mm dia. drill bit with insulating tape.
- Secure the balance shaft with drill 8 mm dia. - **item 1** - in TDC position.

- The slots in the balance shaft sprocket must be at the middle position in relation to the threaded holes of the balance shaft. If necessary, adjust chain by one tooth.

- Tighten chain tensioner bolts.
- Loosely screw in bolts - **2** - for sprocket.

- Chain sprocket must still be able to be rotated on balance shaft and must not tip.

- Pull out securing pin T40071 to release the chain tensioner.
- Press against chain tensioner guide rail - **arrow** - with screwdriver and simultaneously fasten the bolts - **2** - for sprocket.

- Pull drill - **1** - out of the balance shaft.

Further installation is in reverse order of removal, noting the following:

- Install lower timing chain cover --> **Timing Chain Covers, Removing and Installing** .
- Install left and right timing chain covers --> **Timing Chain Covers, Removing and Installing** .
- Install crankshaft seal, timing chain side --> **Crank Shaft Seal, Timing Chain Side, Replacing** .
- Vehicles with multitronic transmission: Install flywheel --> **Flywheel, Multitronic Transmission, Removing and Installing** and damper unit --> **Damper Unit, Removing and Installing**.
- Vehicles with automatic transmission 09L: Install drive plate --> **Drive Plate, Automatic Transmission 09L, Removing and Installing**.
- Install transmission --> **37 CONTROLS, HOUSING** .
- Add engine oil and check oil level --> **Oil Level, Checking** .

Tightening Specifications

Component	Nm
Chain tensioner on cylinder block	6 + 45° 1)2)
Balance shaft sprocket to balance weight	15 + 90° 1)3)
Sealing plug in cylinder block	14 4)
1) Replace bolts. 2) 45° corresponds to one eighth turn. 3) 90° corresponds to a quarter turn. 4) Install with new gasket.	

Power Take-Off Drive Chain, from 04.06, Component Overview

Power Take-Off Drive Chain, from 04.06, Component Overview

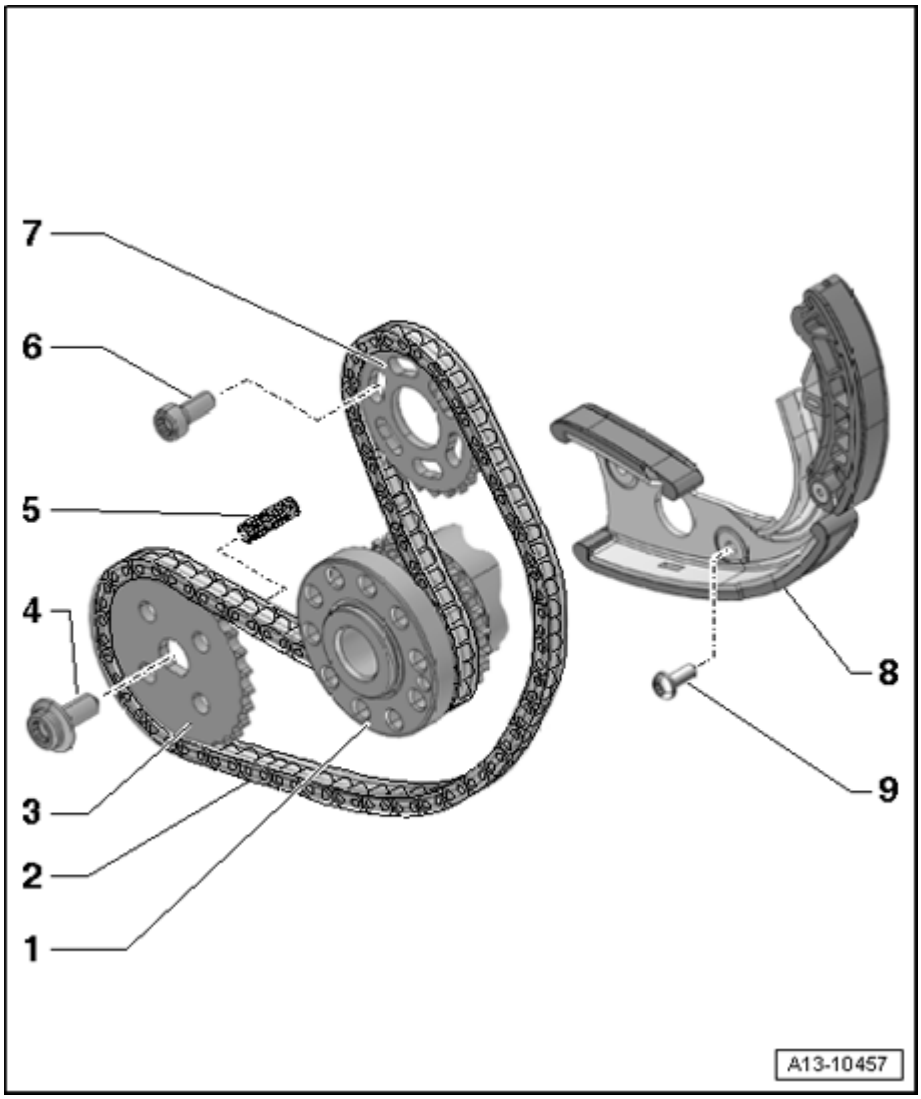

Fig. 327: Power Take-Off Drive Chain, From 04.06, Component Overview
Courtesy of VOLKSWAGEN UNITED STATES, INC.

1 - Crankshaft

2 - Power take-off drive chain

- Before removing, mark the direction of rotation with paint
- Removing and installing --> **Power Take-Off Drive Chain, from 04.06, Removing and Installing**

3 - Drive sprocket for oil pump

- Installation position: Labeled side faces engine

4 - 30 Nm plus an additional 90 ($^1/_4$ turn)

- Replace

5 - Spring

6 - 15 Nm plus an additional 90 ($^1/_4$ turn)

- Replace

7 - Balance shaft chain sprocket

- Installation position: Labeled side faces transmission

8 - Chain tensioner

- With glide track

9 - 10 Nm plus an additional 45 ($^1/_8$ turn)

- Replace

Power Take-Off Drive Chain, from 04.06, Removing and Installing

Power Take-Off Drive Chain, from 04.06, Removing and Installing

Special tools, testers and auxiliary items required

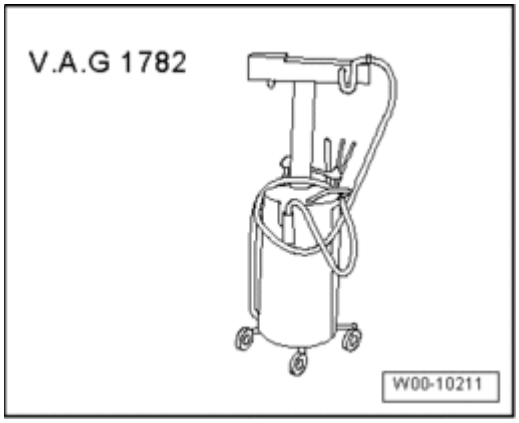

Fig. 328: Identifying Old Oil Collecting And Extracting Device V.A.G 1782
Courtesy of VOLKSWAGEN UNITED STATES, INC.

- Old oil collecting and extracting device V.A.G 1782

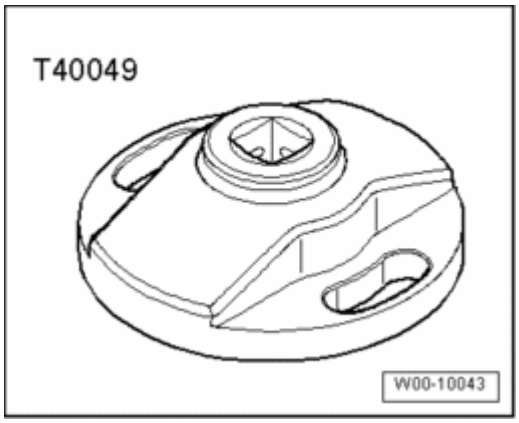

Fig. 329: Wrench T40049
Courtesy of VOLKSWAGEN UNITED STATES, INC.

- Wrench T40049

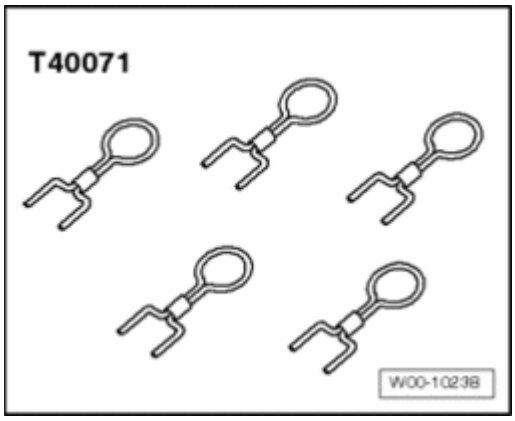

Fig. 330: Securing Pin T40071
Courtesy of VOLKSWAGEN UNITED STATES, INC.

- Securing pin T40071
- Drill bit 8 mm dia.

Removing

CAUTION: To continue performing the repair procedure, ensure lock carrier is installed and torque support is tightened.

- Remove transmission --> **37 CONTROLS, HOUSING** .
- Vehicles with multitronic transmission: Remove damper unit --> **Damper Unit, Removing and Installing** and flywheel --> **Flywheel, Multitronic Transmission, Removing and Installing**.
- Vehicles with automatic transmission 09L: Remove drive plate --> **Drive Plate, Automatic Transmission 09L, Removing and Installing**.
- Place Used Oil Collecting and Extracting Device V.A.G 1782 under engine and drain engine oil.

- Remove lower timing chain cover --> **Lower Timing Chain Cover, Removing and Installing** .

CAUTION: If necessary, place a washer under the bolt heads, to prevent the chain from being pinched by the bolts.

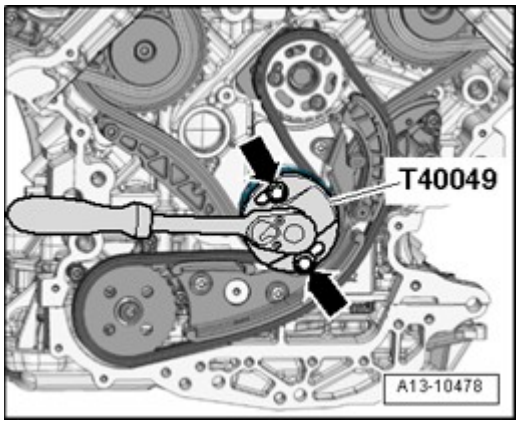

Fig. 331: Installing Key T40049 At Rear On Crankshaft Using Old Bolts For Dual-Mass Flywheel
Courtesy of VOLKSWAGEN UNITED STATES, INC.

- Install key T40049 at rear on crankshaft using 2 old bolts for dual-mass flywheel.

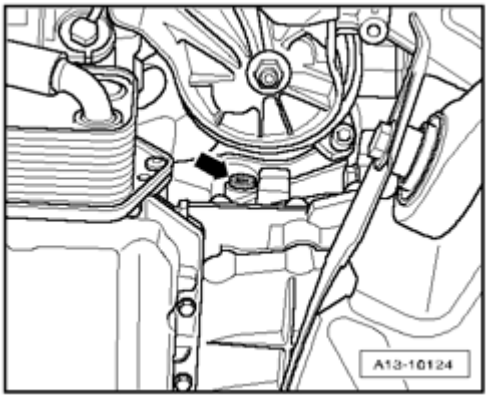

Fig. 332: Removing/Installing Sealing Plug From Cylinder Block
Courtesy of VOLKSWAGEN UNITED STATES, INC.

- Remove locking bolt - **arrow** - for the "TDC" marking from the upper part of the oil pan.
- Rotate crankshaft in direction of engine rotation to "TDC".

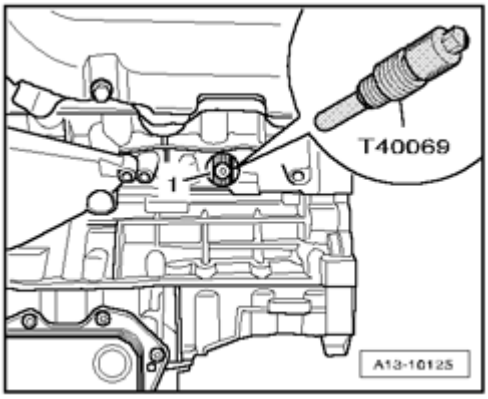

Fig. 333: Installing Crankshaft Holder T40069 Into Hole
Courtesy of VOLKSWAGEN UNITED STATES, INC.

- Install crankshaft holder T40069 into hole to 20 Nm, if necessary rotate crankshaft very slightly back and forth to completely center the holder.

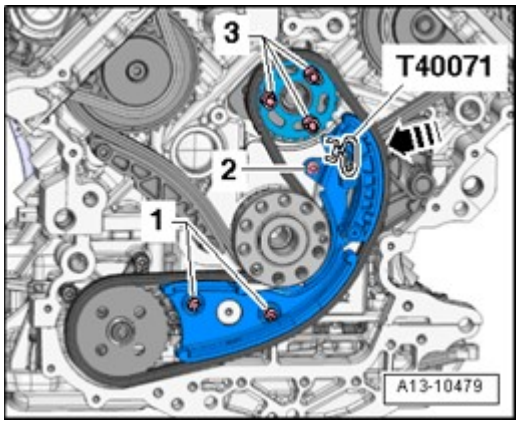

Fig. 334: Pressing Chain Tensioner Guide Rail And Securing Chain Tensioner Using Locking Pin T40071
Courtesy of VOLKSWAGEN UNITED STATES, INC.

- Mark running direction of power take-off chain with paint.
- Press chain tensioner guide rail in direction of - **arrow** - and secure chain tensioner using a locking pin T40071.
- Remove bolts - **3** - and balance shaft chain sprocket.
- Remove bolts - **1** - and - **2** - and chain tensioner with the chain.

Installing

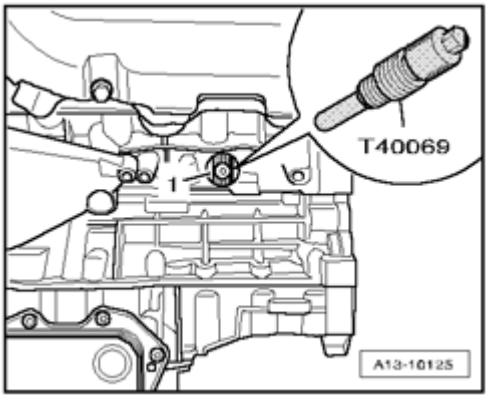

Fig. 335: Installing Crankshaft Holder T40069 Into Hole
Courtesy of VOLKSWAGEN UNITED STATES, INC.

- Secure crankshaft - **1** - in "TDC" position using crankshaft holder T40069.

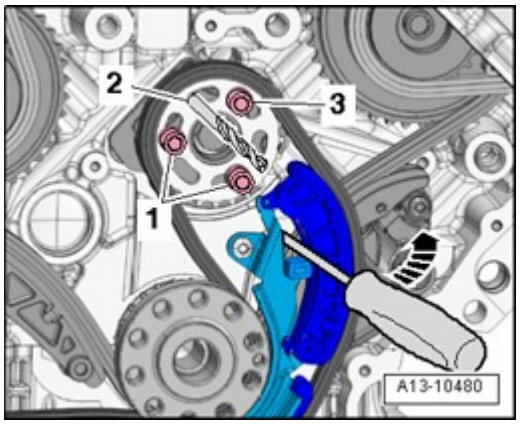

Fig. 336: Securing Balance Shaft Using An 8 Mm Dia. Drill Bit At "TDC"
Courtesy of VOLKSWAGEN UNITED STATES, INC.

- Mount chain tensioner with chain and balance shaft sprocket.
- To protect against cuts, wrap point and cutting edges of 8 mm dia. drill bit with insulating tape.
- Secure balance shaft using an 8 mm dia. drill bit - **2** - at "TDC".

- The slots in the balance shaft sprocket must be at the middle position in relation to the threaded holes of the balance shaft. If necessary, adjust chain by one tooth.

- Tighten chain tensioner bolts.
- Loosely install chain sprocket bolts - **1** - and - **3** -.

- It must still be possible to rotate the chain sprocket on the balance shaft and it must not tip.

- Pull out securing pin T40071 to release the chain tensioner.
- Press against the chain tensioner guide rail - **arrow** - using a screwdriver while tightening the chain sprocket bolts - **1** - and - **3** -.

- Pull drill bit - **2** - out of the balance shaft.

The rest of installation is in reverse order of removal, noting the following:

- Install timing chain lower cover --> **Lower Timing Chain Cover, Removing and Installing** .
- Install left and right timing chain covers --> **Timing Chain Covers, Removing and Installing** .
- Install transmission-side crankshaft shaft seal --> **Crank Shaft Seal, Timing Chain Side, Replacing** .
- Vehicles multitronic transmission: Install flywheel --> **Flywheel, Multitronic Transmission, Removing and Installing** and damper unit --> **Damper Unit, Removing and Installing**.
- Vehicles with automatic transmission 09L: Install drive plate --> **Drive Plate, Automatic Transmission 09L, Removing and Installing**.
- Install transmission --> **37 CONTROLS, HOUSING** .
- Add engine oil and check oil level --> **Oil Level, Checking** .

Tightening Specifications

Component	Nm
Chain tensioner on cylinder block	10 + 45° 1)2)
Balance shaft sprocket to balance weight	15 + 90° 1)3)
Sealing plug in cylinder block	14 4)
1) Replace bolts. 2) 45° corresponds to one eighth turn. 3) 90° corresponds to a quarter turn. 4) Install with new gasket.	

Balancing Shaft, Component Overview

Balancing Shaft, Component Overview

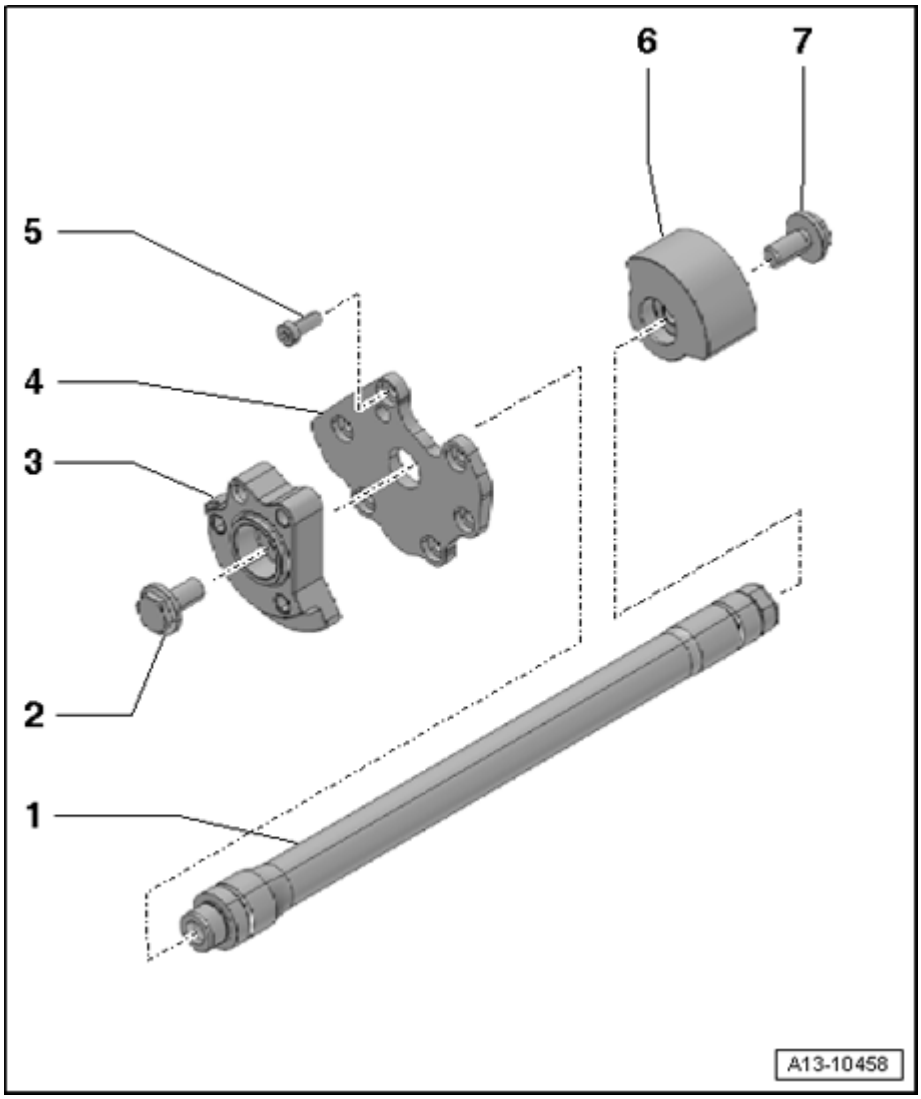

Fig. 337: Balancing Shaft, Component Overview
Courtesy of VOLKSWAGEN UNITED STATES, INC.

1 - Differential shaft

- Removing and installing --> **Balancing Shaft, Removing and Installing**

2 - 60 Nm

- To loosen and fasten, use drill 8 mm dia. as counter-holder

3 - Balance weight (timing chain side)

- Can only be positioned one way on balance shaft

4 - Bearing end bracket

5 - 13 Nm

6 - Balance weight (belt pulley side)

- Can only be positioned one way on balance shaft

7 - 60 Nm

- To loosen and fasten, use drill 8 mm dia. as counter-holder

Balancing Shaft, Removing and Installing

Balancing Shaft, Removing and Installing

Special tools, testers and auxiliary items required

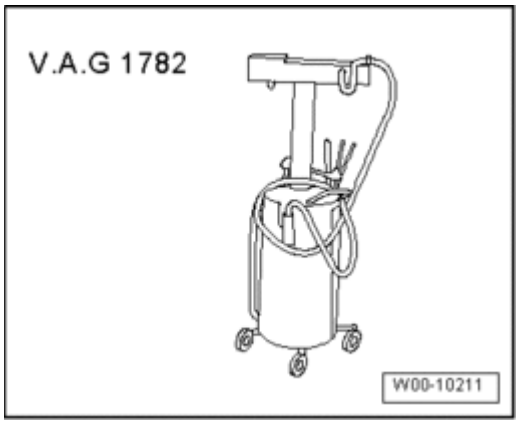

Fig. 338: Identifying Old Oil Collecting And Extracting Device V.A.G 1782
Courtesy of VOLKSWAGEN UNITED STATES, INC.

- Old oil collecting and extracting device V.A.G 1782

Removing

- Remove transmission --> **37 CONTROLS, HOUSING** .

CAUTION: To continue performing the repair procedure, ensure lock carrier is installed and torque support is tightened.

- Vehicles with multitronic transmission: Remove damper unit --> **Damper Unit, Removing and Installing** and flywheel --> **Flywheel, Multitronic Transmission, Removing and Installing**.
- Vehicles with automatic transmission 09L: Remove drive plate --> **Drive Plate, Automatic Transmission 09L, Removing and Installing**.
- Place old oil collecting and extracting device V.A.G 1782 under engine.
- Drain engine oil.

- Remove sealing flange, belt pulley side --> **Ribbed Belt Side Sealing Flange with Crankshaft Seal, Replacing**.
- Remove lower timing chain cover --> **Lower Timing Chain Cover, Removing and Installing** .
- Remove power take-off drive chain: Vehicles up to 04.2006 --> **Power Take-Off Drive Chain, from 04.06, Removing and Installing** , vehicle from 04.2006 --> **Power Take-Off Drive Chain, from 04.06, Removing and Installing**.

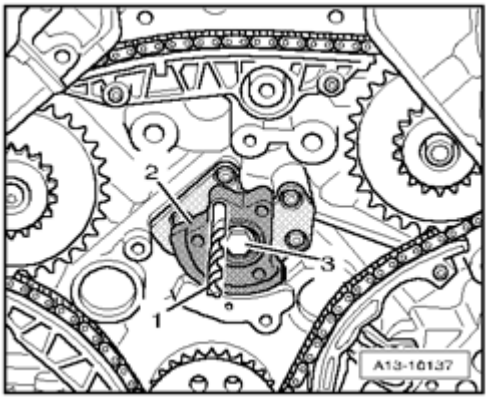

Fig. 339: Securing Balance Weight At Rear Of Engine With Drill Bit
Courtesy of VOLKSWAGEN UNITED STATES, INC.

- To protect against cuts, wrap point and cutting edges of 8 mm dia. drill bit with insulating tape.
- Secure balance weight - **2** - at rear of engine with drill bit 8 mm dia. - **1** -.
- Remove bolt - **3** - and remove balance weight from balance shaft.

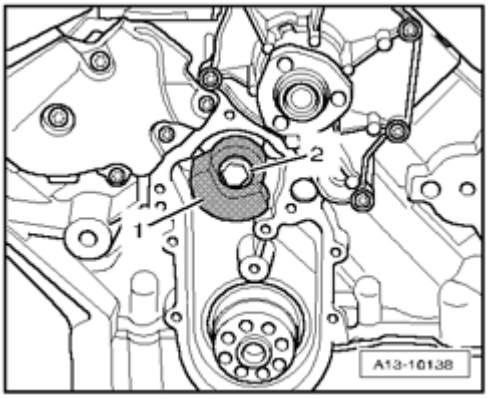

Fig. 340: Removing Bolt, Counter-Holding Balance Weight With Drift And Removing Balance Weight From Balance Shaft At Front Of Engine
Courtesy of VOLKSWAGEN UNITED STATES, INC.

- Remove bolt - **2** - , thereby counter-hold balance weight with drift and remove balance weight - **1** - from balance shaft at front of engine.

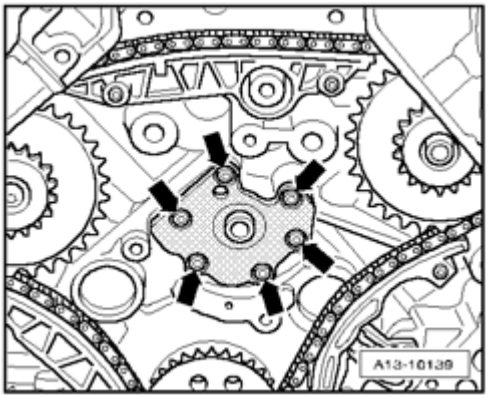

Fig. 341: Removing Bolts And Bearing End Bracket From Balance Shaft At Rear Of Engine
Courtesy of VOLKSWAGEN UNITED STATES, INC.

- Remove bolts - **arrows** - and remove bearing end bracket from balance shaft at rear of engine.
- Pull balance shaft rearward and out from cylinder block.

Installing

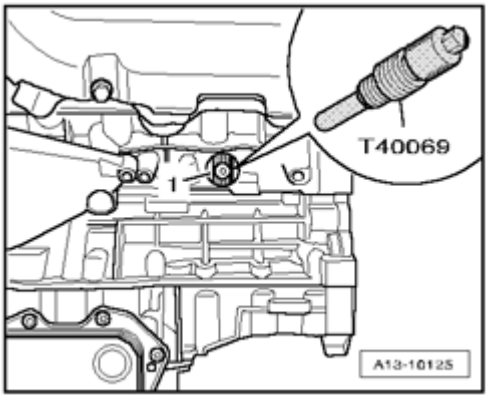

Fig. 342: Installing Crankshaft Holder T40069 Into Hole
Courtesy of VOLKSWAGEN UNITED STATES, INC.

- Secure crankshaft - **1** - in TDC position using crankshaft holder T40069.

Installation is in reverse order of removal, noting the following:

NOTE:

- **The balance weights can only be positioned one way on balance shaft.**

- Install power take-off drive chain: Vehicles up to 04.2006 --> **Power Take-Off Drive Chain, from 04.06, Removing and Installing** , vehicle from 04.2006 --> **Power Take-Off Drive Chain, from 04.06, Removing and Installing**.
- Install lower timing chain cover --> **Lower Timing Chain Cover, Removing and Installing** .
- Install sealing flange, belt pulley side --> **Ribbed Belt Side Sealing Flange with Crankshaft Seal,**

Replacing.

- Vehicles with multitronic transmission: Install flywheel --> **Flywheel, Multitronic Transmission, Removing and Installing** and damper unit --> **Damper Unit, Removing and Installing**.
- Vehicles with automatic transmission 09L: Install drive plate --> **Drive Plate, Automatic Transmission 09L, Removing and Installing**.
- Install transmission --> **37 CONTROLS, HOUSING** .
- Add engine oil and check oil level --> **Oil Level, Checking** .

Tightening Specifications

Component	Nm
Bearing end bracket to cylinder block	9
Balance weight to balance shaft	60
Sealing plug in cylinder block	14 1)
1) Install with new gasket.	

CRANKSHAFT, REMOVING AND INSTALLING

Crankshaft, Removing and Installing

--> **Crankshaft, Component Overview**

--> **Crankshaft Dimensions**

--> **Axial Clearance, Measuring**

--> **Radial Clearance, Measuring**

Crankshaft, Component Overview

Crankshaft, Component Overview

NOTE:

- **Secure engine to Engine and Transmission Holder VAS 6095 when working on engine. Vehicles with multitronic transmission --> Engine, Securing to Engine and Transmission Holder , vehicles with automatic transmission 09L --> Engine, Securing to Engine and Transmission Holder.**

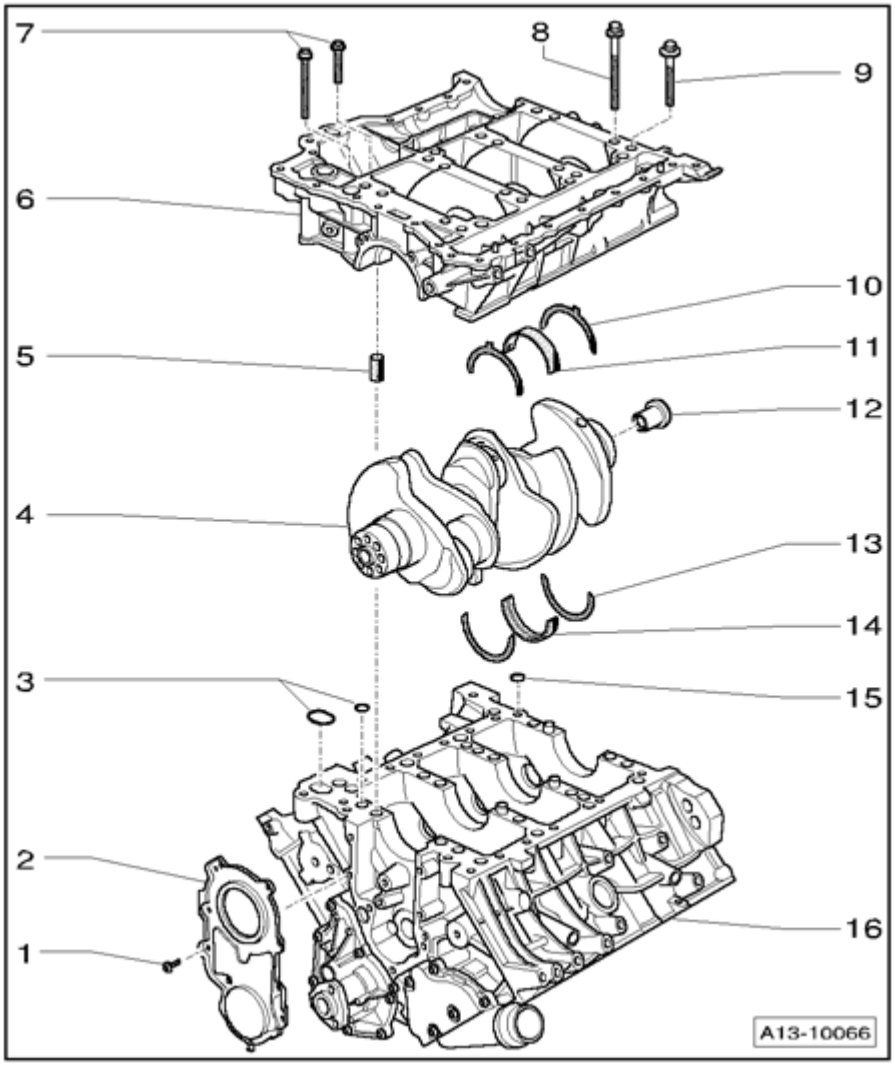

Fig. 343: Crankshaft, Component Overview
Courtesy of VOLKSWAGEN UNITED STATES, INC.

1 - 9 Nm

- Fasten in diagonal sequence in steps

2 - Sealing flange (belt pulley side)

- Removing and installing --> **Ribbed Belt Side Sealing Flange with Crankshaft Seal, Replacing**

3 - Seals

- Different versions
- Replace

4 - Crankshaft

- Measuring axial play --> **Axial Clearance, Measuring**
- Radial clearance, measuring --> **Radial Clearance, Measuring**
- Do not turn crankshaft when measuring radial play
- Crankshaft dimensions --> **Crankshaft Dimensions**

5 - Alignment bushing

- 4 pieces
- Insert into guide frame --> **Sealant application for guide frame, position of alignment bushings**

6 - Bearing bracket

- Sealant application --> **Sealant application for guide frame, position of alignment bushings**
- Tightening sequence for manifold mounting bolts --> **Installing guide frame**

7 - Bolt

- For sealing surfaces of cylinder block/guide frame
- Varying bolt lengths and bolt heads
- Tightening order --> **Installing guide frame**

8 - Long bolt, large shoulder

- For inner row of guide frame
- Tightening order --> **Installing guide frame**

9 - Short bolt, small shoulder

- For outer row of guide frame
- Tightening order --> **Installing guide frame**

10 - Thrust washer

- Only on 3rd crankshaft bearing
- Lubricating grooves face outward
- Note locating point in guide frame
- Measuring crankshaft axial clearance --> **Axial Clearance, Measuring**

11 - Bearing shell

- For guide frame without lubricating groove
- Do not interchange used bearing shells (mark)
- Note installation position

- Insert new bearing shells for guide frame with proper color marking --> **Allocation of crankshaft bearing shells for guide frame**

12 - Centering washer

- For vehicles with automatic transmission 09L --> **Centering washer for drive plate on automatic transmission 09L**

13 - Thrust washer

- Only on 3rd crankshaft bearing
- Lubricating grooves face outward
- Note locating point in guide frame
- Measuring crankshaft axial clearance --> **Axial Clearance, Measuring**

14 - Bearing shell

- For cylinder block with oil groove
- Do not interchange used bearing shells (mark)
- Note installation position
- Insert new bearing shells for cylinder block with proper color marking --> **Allocation of crankshaft bearing shells for cylinder block**

15 - O-ring or sealing ring

- Depending on version
- Replace

16 - Cylinder block

Centering washer for drive plate on automatic transmission 09L

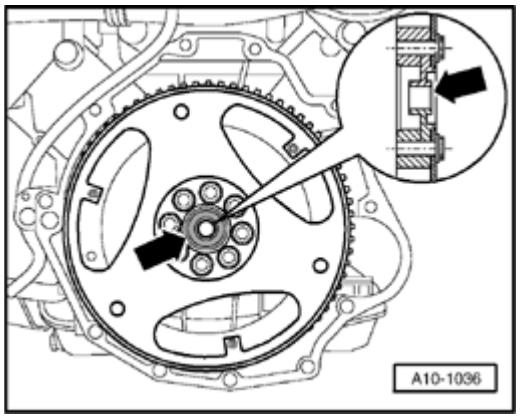

Fig. 344: Installing Drive Plate With Centering Washer And Backing Plate
Courtesy of VOLKSWAGEN UNITED STATES, INC.

NOTE:

- **On vehicles with automatic transmission 09L, the drive plate is bolted to the crankshaft with a centering washer - arrow -.**

Sealant application for guide frame, position of alignment bushings

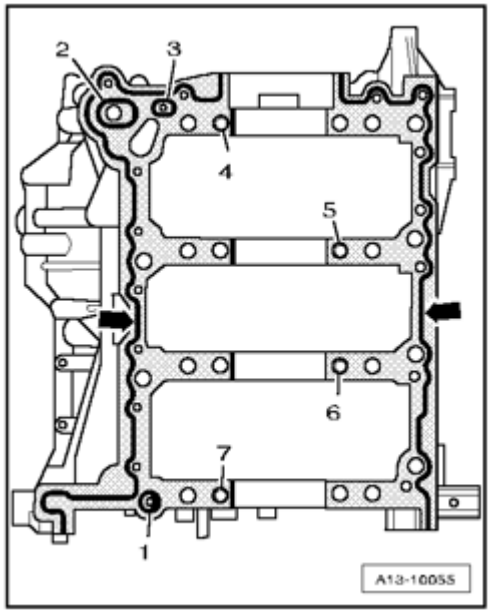

Fig. 345: Sealant Application For Guide Frame, Position Of Alignment Bushings
Courtesy of VOLKSWAGEN UNITED STATES, INC.

- Clean sealing surfaces, they must be free of oil and grease on top and bottom.
- Apply sealant beads - **arrows** - on clean sealing surfaces of guide frame as shown in illustration.

- The groove of sealing surface must be completely filled with sealant.
- Sealant beads must be 1.5 to 2.0 mm above the sealing surface.

- Install seals - **1 to 3** -.

NOTE:

- **Depending on the version, the seals - 2 - and - 3 - are connected by a rib.**

- Check whether alignment bushings - **4 through 7** - are inserted at locations in guide frame as shown in the illustration.

Installing guide frame

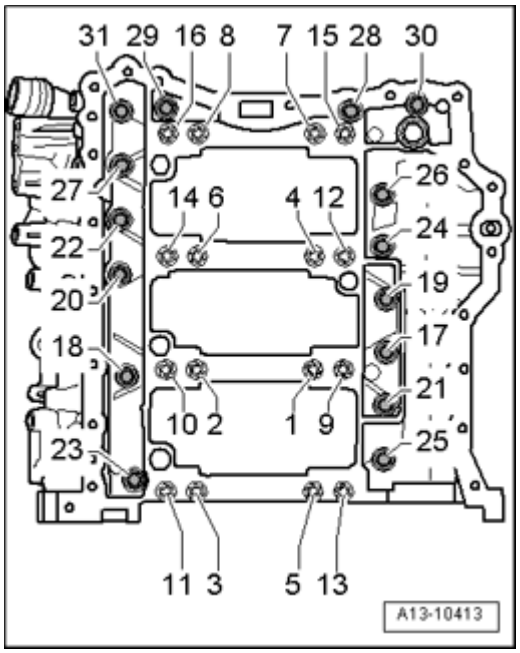

Fig. 346: Guide Frame Bolts Tightening Sequence
Courtesy of VOLKSWAGEN UNITED STATES, INC.

- Replace guide frame bolts - **1 through 16** -.
- Insert long bolts in the inner row of the guide frame.
- Tighten bolts - **1 through 31** - in 3 stages as follows:
- Tighten bolts to 50 Nm in sequence - **1 to 16** -.
- Tighten bolts an additional 90 in the sequence - **1 to 16** -.
- Tighten bolts for guide frame sealing surfaces on the cylinder block to 23 Nm in sequence - **17 to 31** -.

Allocation of crankshaft bearing shells for cylinder block

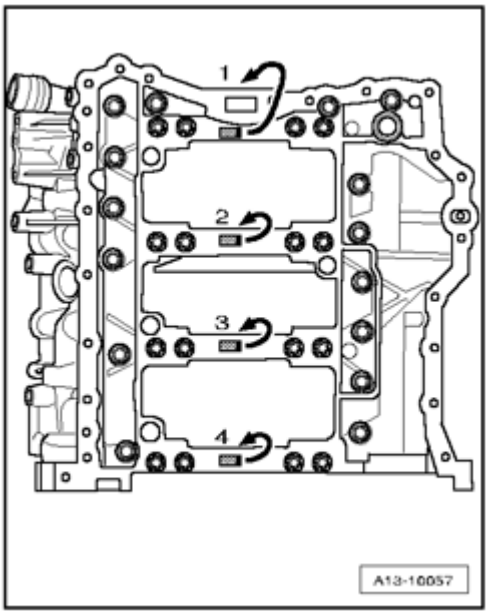

Fig. 347: Allocation Of Crankshaft Bearing Shells For Cylinder Block
Courtesy of VOLKSWAGEN UNITED STATES, INC.

- Bearing shells with the correct thickness are allocated to the cylinder block in the factory. Colored dots on sides of bearing shells serve for identifying bearing shell thickness.
- Allocation of bearing shells to cylinder block is marked by a letter on the respective bearing on guide frame

Through engine no. AUK 028 000 or BKH 033 000:

On engines through no. AUK 028 000 or BKH 033 000 another allocation of letters on guide frame to bearing shell color applies to bearing 1 (front).

Bearing no.	Letter on guide frame		Color of bearing
1	G	=	Red
	B	=	Yellow
	S	=	Blue
2 4	G	=	Yellow
	B	=	Blue
	S	=	Black

From engine no. AUK 028 001 or BKH 033 001:

Letter on guide frame		Color of bearing
R	=	Red
G	=	Yellow
B	=	Blue

S	=	Black

Allocation of crankshaft bearing shells for guide frame

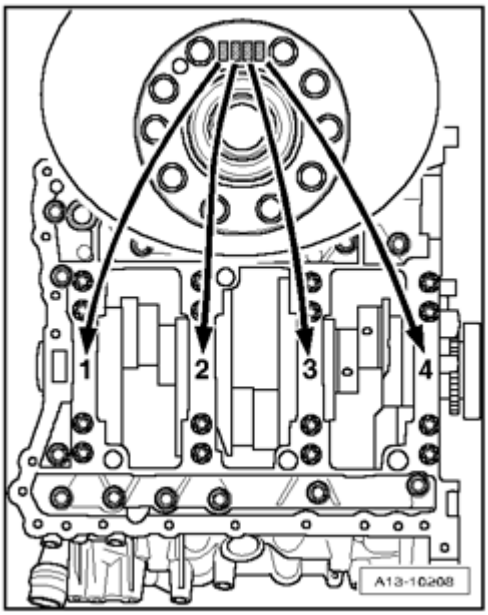

Fig. 348: Allocation Of Crankshaft Bearing Shells For Guide Frame
Courtesy of VOLKSWAGEN UNITED STATES, INC.

- Bearing shells with the correct thickness are allocated to the guide frame in the factory. Colored dots on sides of bearing shells serve for identifying bearing shell thickness.
- Allocation of bearing shells to guide frame is marked on flywheel flange of crankshaft by a row of letters. The first letter of the row of letters represents bearing "1" , the second letter is for bearing "2" , etc.

Through engine no. AUK 028 000 or BKH 033 000:

On engines through no. AUK 028 000 or BKH 033 000 another allocation of letters on crankshaft to bearing shell color applies to bearing 1 (front).

Bearing no.	Letter on crankshaft		Color of bearing
1	G	=	red
	B	=	yellow
	S	=	Blue
2 4	G	=	yellow
	B	=	Blue
	S	=	black

From engine no. AUK 028 001 or BKH 033 001:

Letter on crankshaft		Color of bearing

R	=	red
G	=	yellow
B	=	Blue
S	=	black

Crankshaft Dimensions

Crankshaft Dimensions

Reconditioning dimension in mm	Crankshaft bearing journal diameter		Connecting rod journal diameter	
Basic dimension	65.00	0.022 0.042	56.00	0.022 0.042

Axial Clearance, Measuring

Axial Clearance, Measuring

Special tools, testers and auxiliary items required

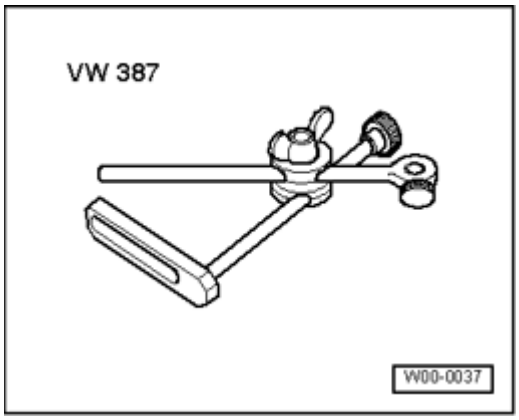

Fig. 349: Dial Gauge Holder VW 387
Courtesy of VOLKSWAGEN UNITED STATES, INC.

- Dial gauge holder VW 387

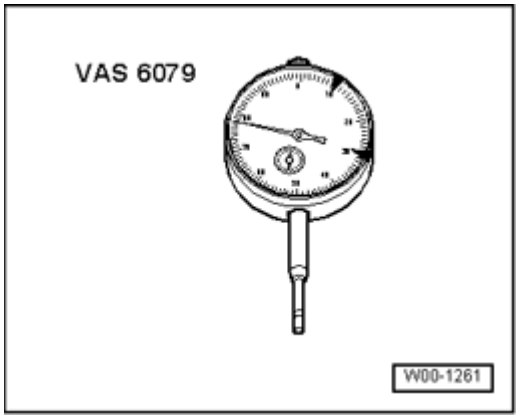

Fig. 350: Dial Gauge VAS 6079
Courtesy of VOLKSWAGEN UNITED STATES, INC.

- Dial gauge VAS 6079

Procedure

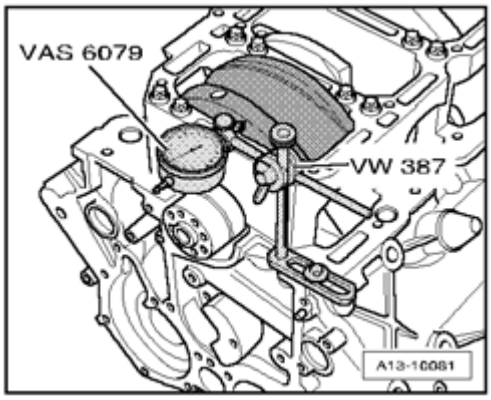

Fig. 351: Attaching Dial Indicator VAS 6079 Together With Dial Gauge Holder VW 387 To Cylinder Block And Setting Indicator Against Crankshaft Counterweight
Courtesy of VOLKSWAGEN UNITED STATES, INC.

- Attach dial indicator VAS 6079 together with dial gauge holder VW 387 to cylinder block and set indicator against crankshaft counterweight.
- Press crankshaft against dial indicator by hand, set indicator to - **0** -.
- Press crankshaft off dial indicator and read off value:

- Axial clearance: 0.15 to 0.25 mm.

Radial Clearance, Measuring

Radial Clearance, Measuring

Special tools, testers and auxiliary items required

- Plastigage

Procedure

NOTE:

- **Do not interchange used bearings**
- **Bearing shells that are worn down to the nickel layer must be replaced.**

- Remove guide frame and clean journals.
- Place Plastigage over entire width of bearing journal or into bearing shells.

- Plastigage must rest in center of bearing shell.

  - Install guide frame and tighten to 30 Nm. Do not turn crankshaft.
  - Remove guide frame again.
  - Compare width of Plastigage with measuring scale:

- Radial clearance, new: 0.015 to 0.055 mm.
- Radial clearance wear limit: 0.08 mm.

PISTON AND CONNECTING ROD, DISASSEMBLING AND ASSEMBLING

Piston and Connecting Rod, Disassembling and Assembling

--> **Piston and Connecting Rod, Component Overview**

--> **Piston and Cylinder Dimensions**

--> **Connecting Rod, Checking Radial Clearance**

Piston and Connecting Rod, Component Overview

Piston and Connecting Rod, Component Overview

NOTE:

- **Oil injector jet for piston cooling --> Oil spray jet for piston cooling**

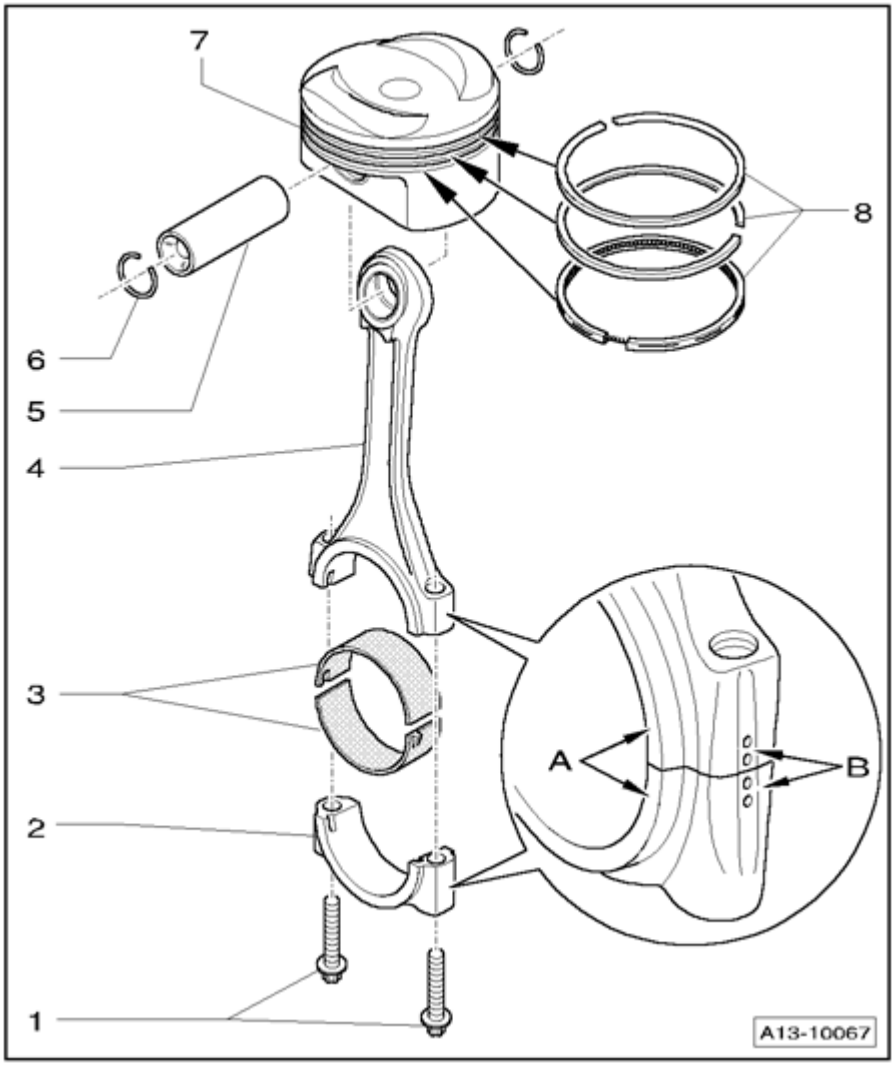

Fig. 352: Piston And Connecting Rod, Component Overview
Courtesy of VOLKSWAGEN UNITED STATES, INC.

1 - Connecting rod bolt - 30 Nm plus an additional 90 ($^1/_4$ turn)

- Replace
- Lubricate threads and contact surface
- Tighten to 30 Nm to measure radial play, do not turn further

2 - Connecting rod bearing cap

- Do not interchange
- Mark allocation to cylinder using a color marker - **B** - --> **Mark connecting rod**
- When installing bearing cap, observe: The wide thrust flange - **A** - must point to the same side on connecting rod and connecting rod bearing cap

- Installation position of connecting rod pairs --> **Connecting rod, installed location**

3 - Bearing shell

The version depends on the construction:

- Lower bearing shell (for bearing cap), identified by a dark-colored bearing. Upper bearing shell (for connecting rod) made of wear-resistant material, identified by a light-colored bearing

or

- The same bearing, no allocation
- Check that retaining tabs are secured
- Do not interchange used bearing shells (mark)
- Radial clearance, measuring --> **Connecting Rod, Checking Radial Clearance**

4 - Connecting rod

- Only replace as set
- Mark allocation to cylinder with paint - **B** - --> **Mark connecting rod**
- When installing bearing cap, observe: The wide thrust flange - **A** - must point to the same side on connecting rod and connecting rod bearing cap
- Installation position of connecting rod pairs --> **Connecting rod, installed location**

5 - Piston pin

- If tight, heat piston to 60 C
- Removing and installing using a drift VW 222 A

6 - Circlip

- Replace

7 - Piston

- Installed position and allocation, piston/cylinder --> **Installed position of piston and piston/cylinder allocation**
- Arrow on piston face points toward belt pulley side
- Checking --> **Checking piston**
- Install with piston ring compressor

- Piston and cylinder dimensions --> **Piston and Cylinder Dimensions**
- Cylinder bore, checking --> **Checking cylinder bores**

8 - Piston rings

- Offset gaps by 120
- Use piston ring pliers for removal and installation
- "TOP" marking or inscribed side must point to piston head
- Checking ring gap --> **Checking piston ring gap**
- Check piston ring groove clearance --> **Checking ring to groove clearance**

Checking piston ring gap

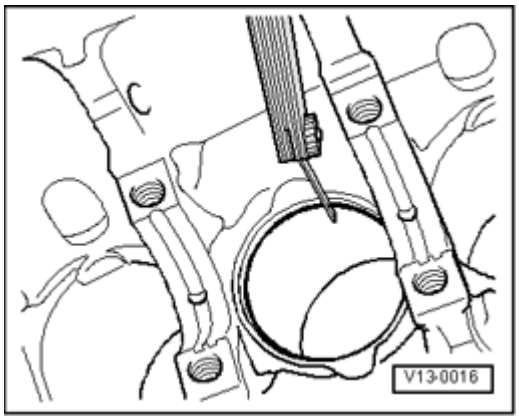

Fig. 353: Checking Piston Ring Gap
Courtesy of VOLKSWAGEN UNITED STATES, INC.

- Push ring squarely from above down to approximately 15 mm from bottom end of cylinder. To do this use a piston without rings.

Piston ring dimensions in mm	New	Wear limit
1. Compression ring	0.20 to 0.35	0.8
2. Compression ring	0.50 to 0.70	1.0
Oil scraping ring	0.20 to 0.40	0.8

Checking ring to groove clearance

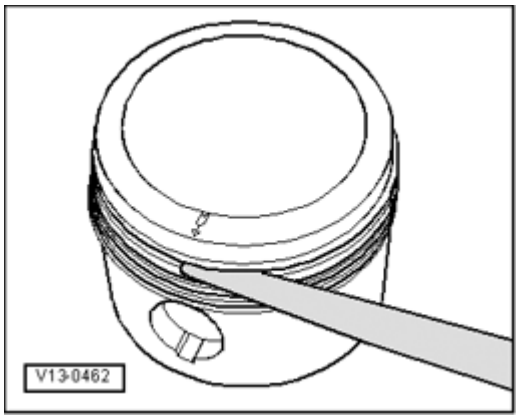

Fig. 354: Checking Ring To Groove Clearance
Courtesy of VOLKSWAGEN UNITED STATES, INC.

- Clean ring groove of piston before checking.

Piston ring dimensions in mm	New	Wear limit
Compression rings	0.02 to 0.08	0.20
Oil scraping ring	0.02 to 0.08	0.15

Checking piston

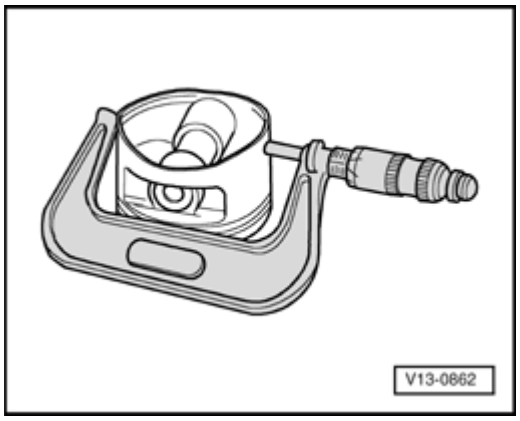

Fig. 355: Checking Piston
Courtesy of VOLKSWAGEN UNITED STATES, INC.

- Measure approximately 10 mm from the lower edge, at a 90 angle to piston pin axis using an external micrometer 75 to 100 mm.

- Maximum deviation from nominal dimension: 0.04 mm.

Nominal dimension --> **Piston and Cylinder Dimensions**.

Checking cylinder bores

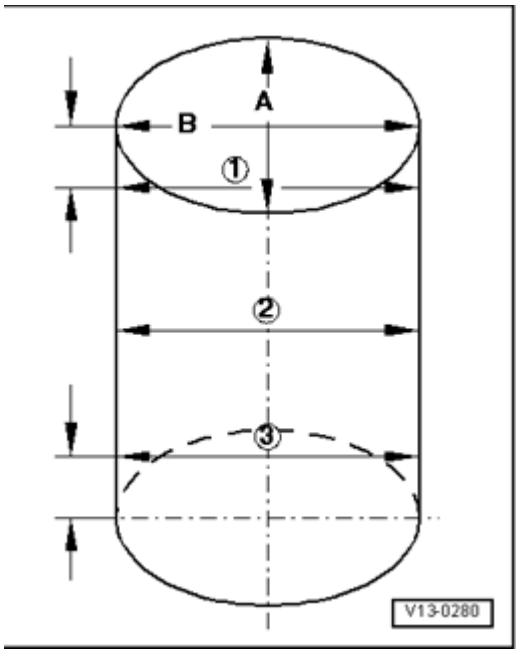

Fig. 356: Checking Cylinder Bores
Courtesy of VOLKSWAGEN UNITED STATES, INC.

- Using an internal dial gauge 50 to 100 mm, measure at 3 points in diagonal sequence horizontally - **A** - and vertically - **B** -.

- Maximum deviation from nominal dimension: 0.08 mm.

Nominal dimension --> **Piston and Cylinder Dimensions**.

Installed position of piston and piston/cylinder allocation

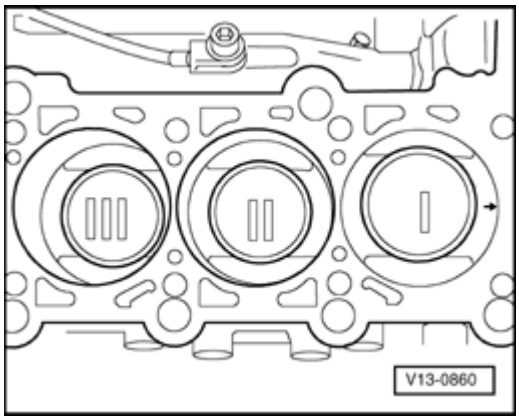

Fig. 357: Installed Position Of Piston And Piston/Cylinder Allocation
Courtesy of VOLKSWAGEN UNITED STATES, INC.

- Mark installed position and allocation to cylinder on piston head using chalk or waterproof felt pen.

NOTE:

- **Do not use a center punch or scribe, since the piston head coating will be damaged.**
- **Installation position: Arrow on piston face points toward belt pulley side.**

Mark connecting rod

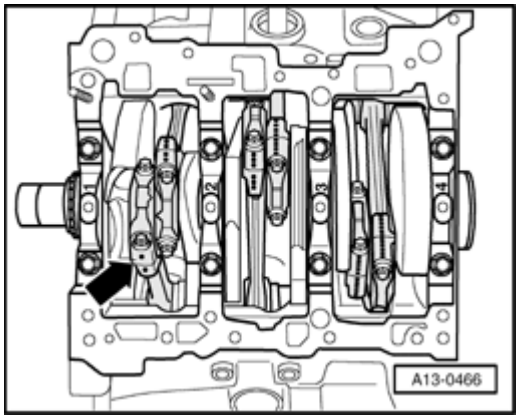

Fig. 358: Mark Connecting Rod
Courtesy of VOLKSWAGEN UNITED STATES, INC.

NOTE:

- **Only replace connecting rod as a set.**
- **Do not interchange connecting rod bearings.**

- Before removing, mark allocation of connecting rod and connecting rod bearing caps to each other and to cylinder with paint - **arrow** -.

Connecting rod, installed location

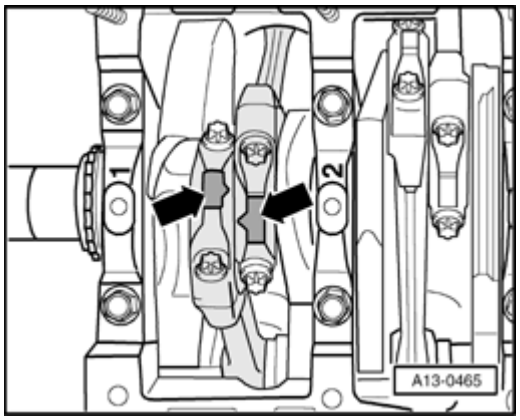

Fig. 359: Connecting Rod, Installed Location
Courtesy of VOLKSWAGEN UNITED STATES, INC.

- The molded tabs - **arrows** - at the beveled surfaces of the connecting rod pairs 1 and 2, 3 and 4, and 5 and 6 must point toward each other.

Oil spray jet for piston cooling

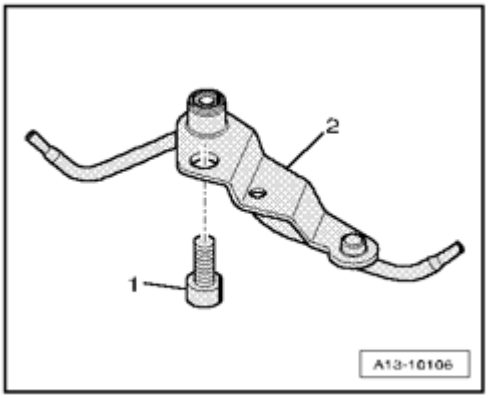

Fig. 360: Oil Spray Jet For Piston Cooling
Courtesy of VOLKSWAGEN UNITED STATES, INC.

1. Install bolt - 9 Nm - using a locking compound
2. Oil spray jet with spray nozzle valve

Piston and Cylinder Dimensions

Piston and Cylinder Dimensions

Reconditioning dimension in mm	Piston diameter	Cylinder bore diameter
Basic dimension	84.49 1)	84.51
1) Measurement with coating (thickness = 0.02 mm). The coating wears off.		

Connecting Rod, Checking Radial Clearance

Connecting Rod, Checking Radial Clearance

Special tools, testers and auxiliary items required

- Plastigage

Procedure

- Remove connecting rod bearing cap. Clean bearing cap and journal.
- Place Plastigage over entire width of bearing journal or into bearing shells.
- Install connecting rod bearing cap and tighten to 30 Nm. Do not turn crankshaft.
- Remove connecting rod bearing caps again.

- Compare width of Plastigage with measuring scale:

- Radial clearance, new: 0.010 to 0.052 mm.

- Radial clearance wear limit: 0.12 mm.
  - Replace bolts for connecting rod bearings.

15 - ENGINE - CYLINDER HEAD, VALVETRAIN

CYLINDER HEAD, REMOVING AND INSTALLING

Cylinder Head, Removing and Installing

--> **Cylinder Head, Component Overview**

--> **Left Cylinder Head Cover, Removing and Installing**

--> **Right Cylinder Head Cover, Removing and Installing**

--> **Cylinder Head, Removing and Installing**

--> **Brake Booster Vacuum Pump, Removing and Installing**

--> **Compression, Checking**

Cylinder Head, Component Overview

Cylinder Head, Component Overview

NOTE:

- **Illustration depicts left cylinder head.**
- **Both cylinder heads can be removed and installed when engine is installed in engine compartment.**

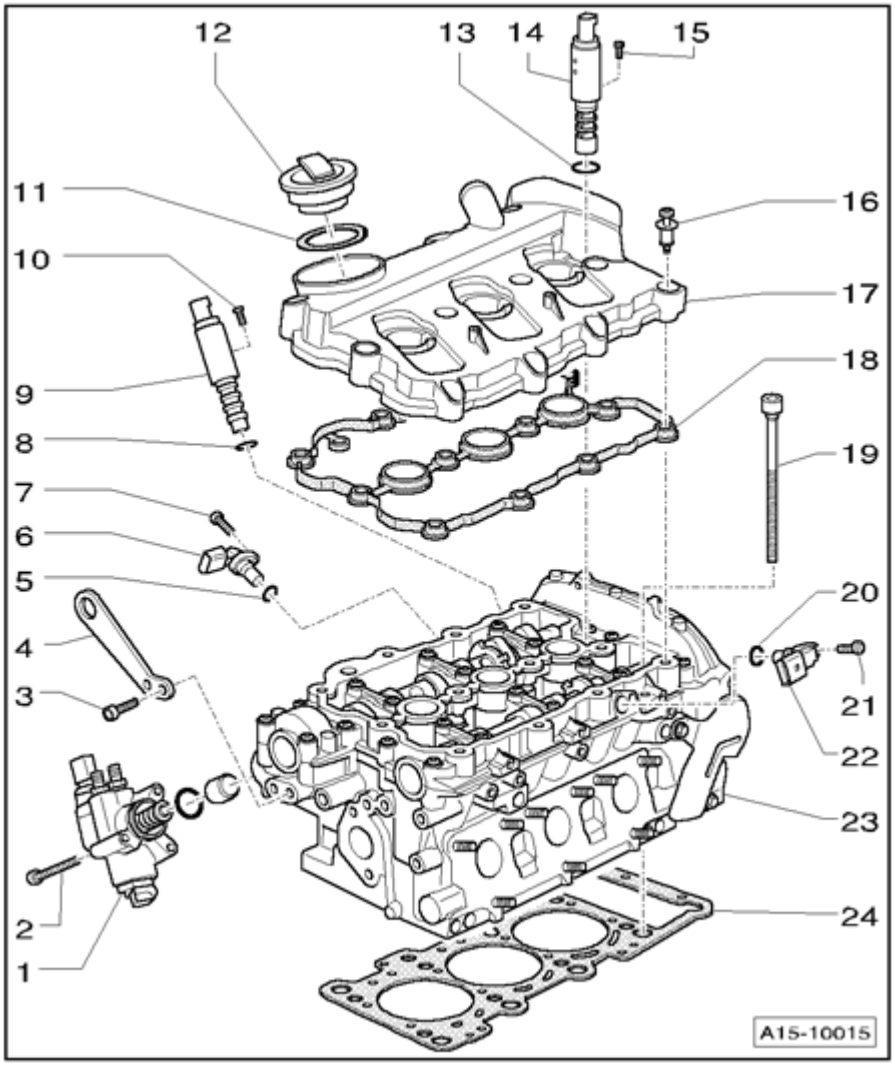

Fig. 361: Cylinder Head, Component Overview
Courtesy of VOLKSWAGEN UNITED STATES, INC.

1 - High pressure pump

- Removing and installing --> **24 - FUEL INJECTION SYSTEM**

2 - 9 Nm

3 - 20 Nm

4 - Lifting eye

5 - O-ring

- Replace

6 - Camshaft position sensor, intake camshaft

- Cylinder bank 1 (right) Camshaft Position (CMP) Sensor G40
- Cylinder bank 2 (left) Camshaft Position (CMP) Sensor 2 G163

7 - 8 Nm plus an additional 90 ($^{1}/_{4}$ turn)

- Replace

8 - O-ring

- Replace

9 - Solenoid valve for camshaft adjustment - intake side

- Cylinder bank 1 (right) Camshaft Adjustment Valve 1 N205
- Cylinder bank 2 (left) Camshaft Adjustment Valve 2 N208

10 - 2.5 Nm

11 - Gasket

- Replace if damaged or leaking

12 - Cap

13 - O-ring

- Replace

14 - Solenoid valve for camshaft adjustment - exhaust side

- Cylinder bank 1 (right) Exhaust camshaft control valve 1 N318
- Cylinder bank 2 (left) Camshaft Adjustment Valve 2 (exhaust) N319

15 - 2.5 Nm

16 - Special bolt - 9 Nm

- Replace if damaged or leaking

17 - Cylinder head cover

18 - Cylinder head cover gasket

- Replace if damaged or leaking

19 - Cylinder head bolt

- Replace
- Observe sequence for loosening --> *Follow sequence 1 to 8 when loosening cylinder head bolts.* under **Cylinder Head, Removing and Installing**
- Observe sequence for tightening --> *Tighten cylinder head in sequence indicated, in 3 stages as follows:* under **Cylinder Head, Removing and Installing**

20 - O-ring

- Replace

21 - 8 Nm plus an additional 90 ($^1/_4$ turn)

- Replace

22 - Camshaft position sensor, exhaust camshaft

- Cylinder bank 1 (right) Camshaft Position (CMP) Sensor 3 G300
- Cylinder bank 2 (left) Camshaft Position (CMP) Sensor 4 G301

23 - Cylinder Head

- Removing --> **Cylinder Head, Removing and Installing**
- Check for distortion --> **Checking cylinder head for distortion**
- Reworking dimension --> **Reworking dimension, cylinder head**
- Installing --> **Cylinder Head, Removing and Installing**

- After replacing, change coolant and engine oil

24 - Cylinder head gasket

- Replacing --> **Cylinder Head, Removing and Installing**.
- Installation position: Part Number, points to cylinder head
- After replacing, change coolant and engine oil

Checking cylinder head for distortion

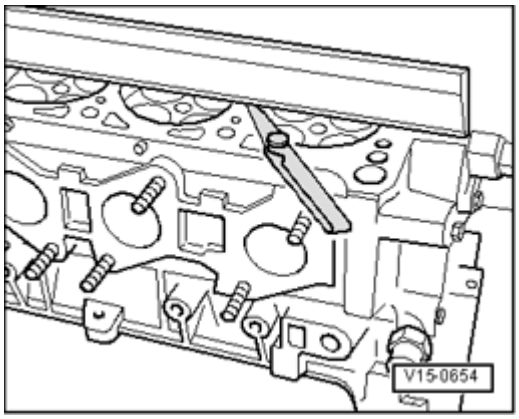

Fig. 362: Checking Cylinder Head For Distortion
Courtesy of VOLKSWAGEN UNITED STATES, INC.

- Check cylinder head at multiple points for distortion, using straight edge and feeler gauges.
- Max. distortion: 0.05 mm.

Reworking dimension, cylinder head

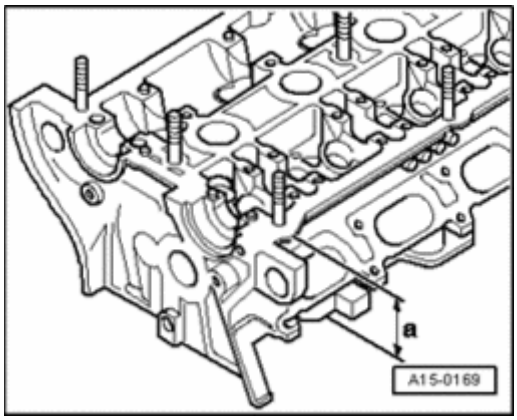

Fig. 363: Reworking Dimension, Cylinder Head
Courtesy of VOLKSWAGEN UNITED STATES, INC.

Resurfacing cylinder head (face grinding) is only permissible to minimum dimension - **a** -.

- Minimum dimension - **a** - = 139.20 mm.

Left Cylinder Head Cover, Removing and Installing

Left Cylinder Head Cover, Removing and Installing

Special tools, testers and auxiliary items required

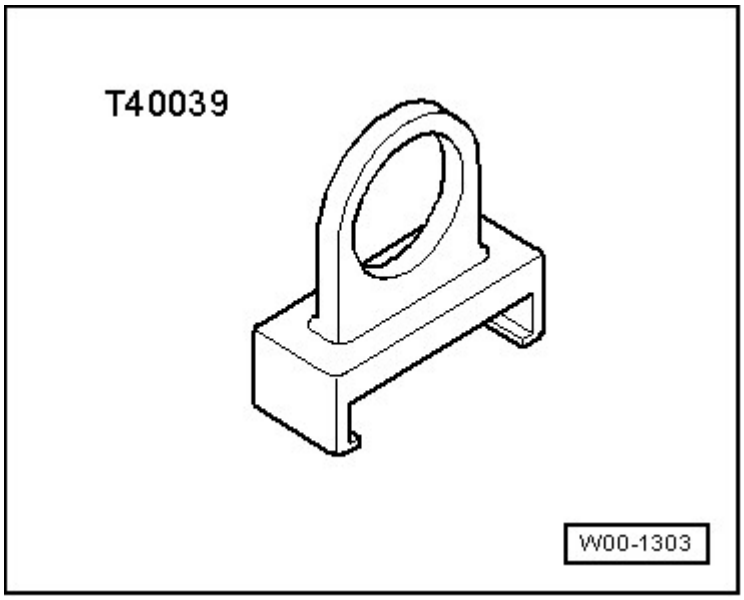

Fig. 364: Ignition Coil Puller T40039
Courtesy of VOLKSWAGEN UNITED STATES, INC.

- Ignition Coil Puller T40039

Removing

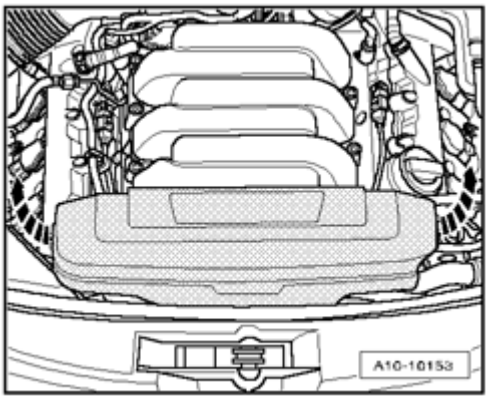

Fig. 365: Identifying Front Engine Cover
Courtesy of VOLKSWAGEN UNITED STATES, INC.

- Remove front engine cover - **arrows** -.

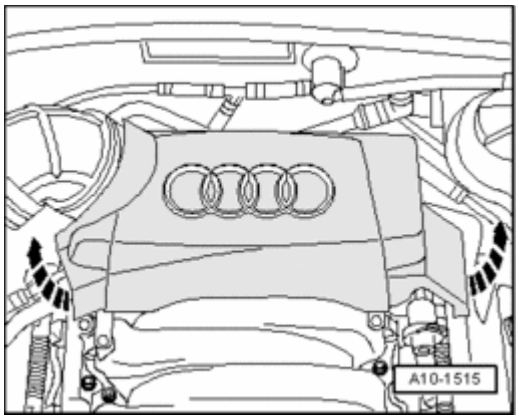

Fig. 366: Removing Rear Engine Cover
Courtesy of VOLKSWAGEN UNITED STATES, INC.

- Remove rear engine cover - **arrows** -.

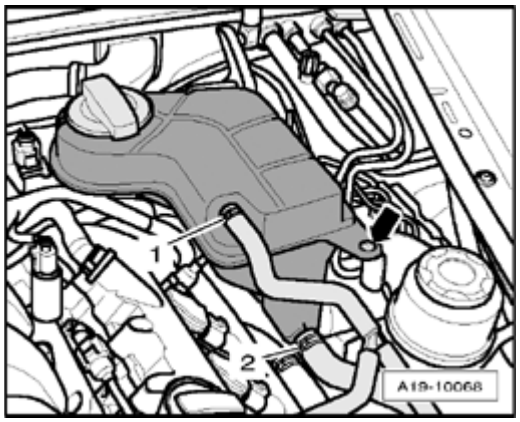

Fig. 367: Removing Coolant Hoses At Coolant Expansion Tank
Courtesy of VOLKSWAGEN UNITED STATES, INC.

- Remove coolant expansion tank - **arrow** -.
- Disconnect electrical connection from Engine Coolant Level (ECL) Warning Switch F66 at bottom of coolant reservoir and set aside coolant reservoir with coolant hoses - **1** - and - **2** - connected.

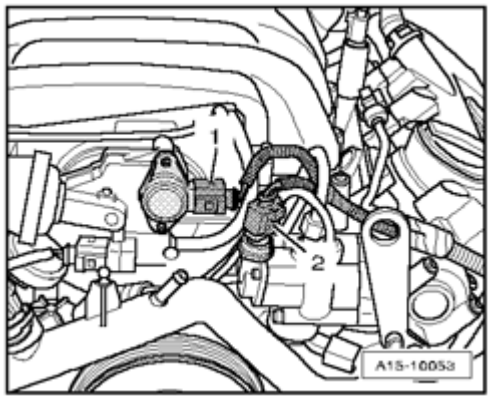

Fig. 368: Disconnecting Electrical Harness Connectors
Courtesy of VOLKSWAGEN UNITED STATES, INC.

- Disconnect electrical harness connectors.

1. Change-over valve for intake manifold flap N239
2. Intake Manifold Tuning (IMT) Valve Position Sensor G513

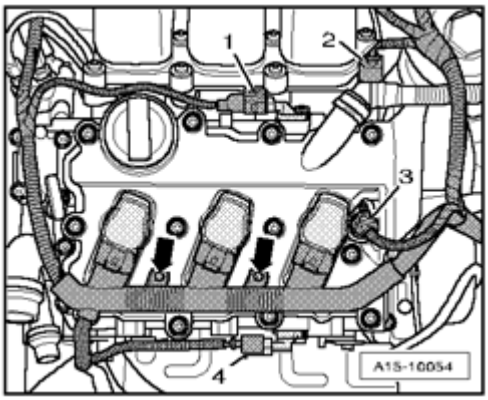

Fig. 369: Remove Bolts & Disconnecting Electrical Harness Connectors At Ignition Coils
Courtesy of VOLKSWAGEN UNITED STATES, INC.

- Disconnect electrical harness connectors.

1. Camshaft position (CMP) sensor 2 G163
2. Camshaft Adjustment Valve 2 N208
3. Camshaft Adjustment Valve 2 (exhaust) N319
4. Camshaft position (CMP) sensor 4 G301

- Remove bolts - **arrows** - and disconnect electrical connections at the ignition coils.
- Set electrical wiring harness aside.

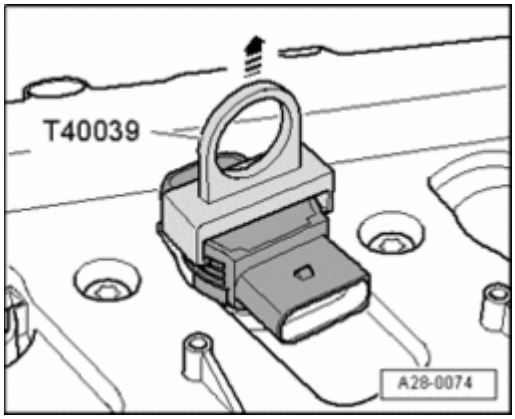

Fig. 370: Removing Ignition Coils Using Ignition Coil Puller T40039
Courtesy of VOLKSWAGEN UNITED STATES, INC.

- Remove ignition coils using ignition coil puller T40039.

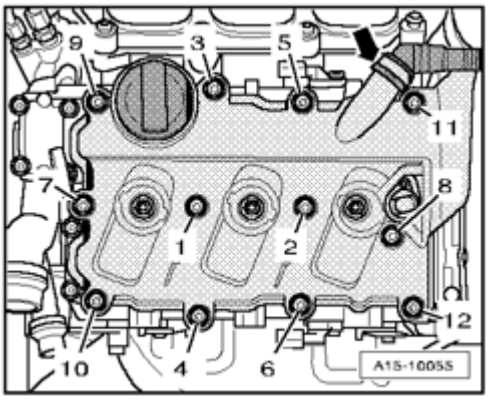

Fig. 371: Removing Left Cylinder Head Cover Bolts
Courtesy of VOLKSWAGEN UNITED STATES, INC.

- Remove left cylinder head cover bolts in sequence - **12 to 1** -.

NOTE:

- **Disregard - arrow -.**

CAUTION: Crankcase ventilation must not be removed.

- Lay aside removed cylinder head cover with connected crankcase ventilation hose.

Installing

Installation is in reverse order of removal, noting the following:

NOTE:

- **Replace cylinder head cover gaskets if damaged.**
- **Replace bolts for cylinder head cover if gasket is damaged.**

- Clean sealing surfaces so they are completely free of any oil or grease.
- Tighten cylinder head cover in sequence - **1 to 12** -.

Tightening specifications

Component	Nm
Cylinder head cover to cylinder head	9

Right Cylinder Head Cover, Removing and Installing

Right Cylinder Head Cover, Removing and Installing

Special tools, testers and auxiliary items required

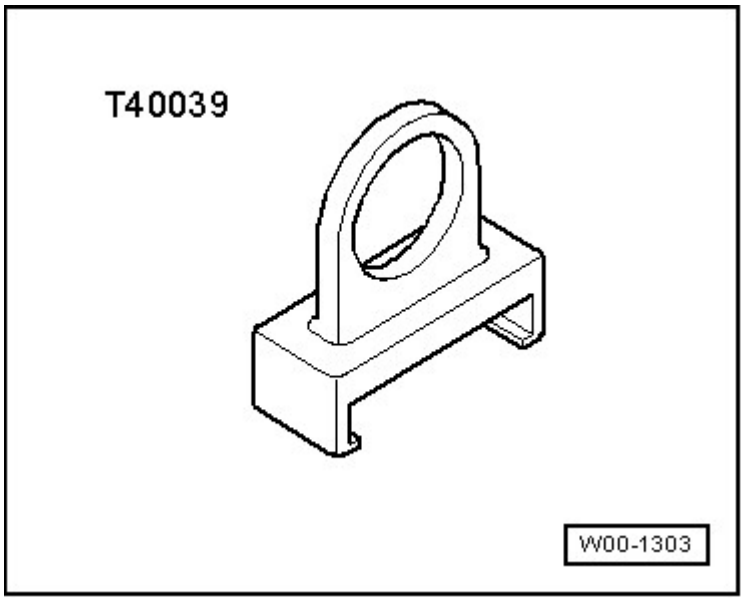

Fig. 372: Ignition Coil Puller T40039
Courtesy of VOLKSWAGEN UNITED STATES, INC.

- Ignition Coil Puller T40039

Removing

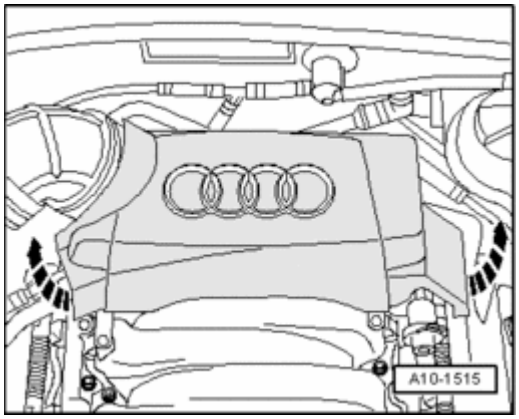

Fig. 373: Removing Rear Engine Cover
Courtesy of VOLKSWAGEN UNITED STATES, INC.

- Remove rear engine cover - **arrows** -.

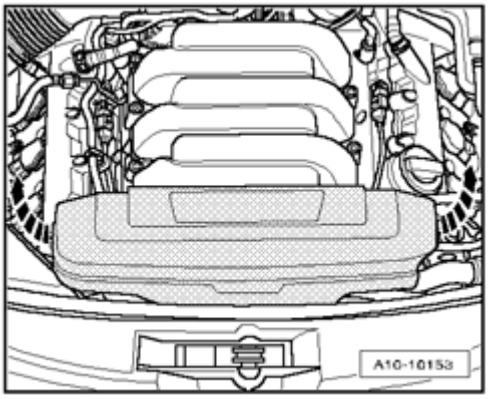

Fig. 374: Identifying Front Engine Cover
Courtesy of VOLKSWAGEN UNITED STATES, INC.

- Remove front engine cover - **arrows** -.

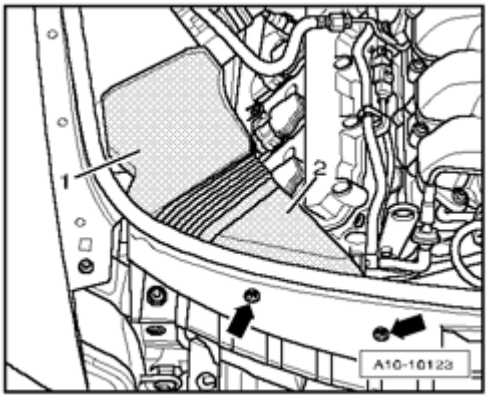

Fig. 375: Removing Air Duct Screws & Air Ducts
Courtesy of VOLKSWAGEN UNITED STATES, INC.

- Remove bolts - **arrows** -.
- Remove air duct - **1** - and - **2** -.

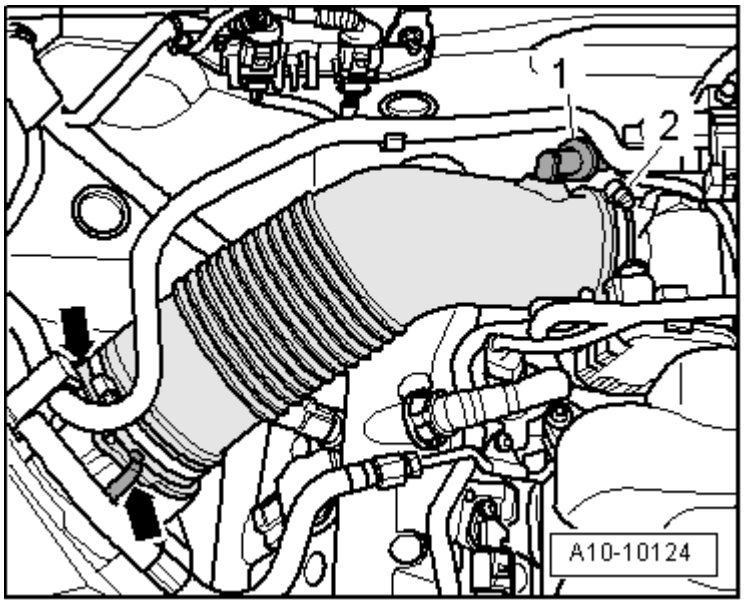

Fig. 376: Disconnecting Check Valve From Connection At Air Duct Hose & Removing Air Duct Hose
Courtesy of VOLKSWAGEN UNITED STATES, INC.

- Disconnect check valve - **1** - from air duct hose.
- Remove air duct hose, thereby loosening the hose clamp - **2** - and opening the clips - **arrows** -.

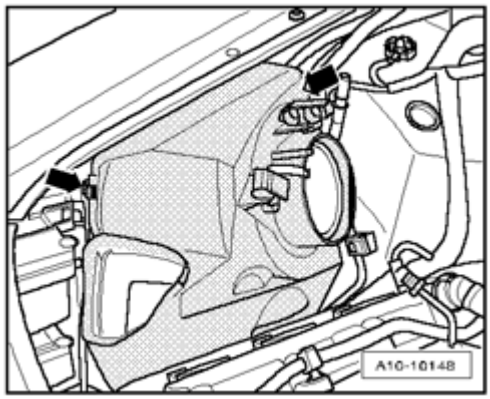

Fig. 377: Opening Clips And Removing Upper Part Of Air Filter Housing
Courtesy of VOLKSWAGEN UNITED STATES, INC.

- Open clips - **arrows** - and remove upper part of air filter housing.

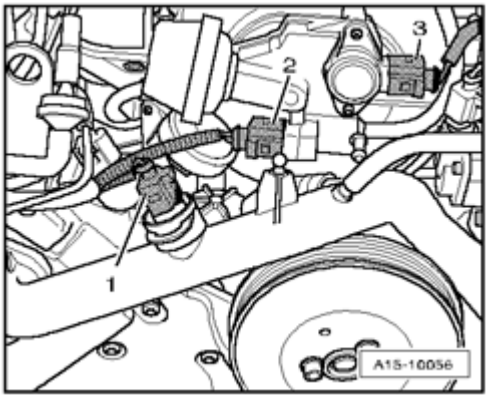

Fig. 378: Disconnecting Electrical Harness Connectors
Courtesy of VOLKSWAGEN UNITED STATES, INC.

- Disconnect electrical harness connectors.

1. Engine Coolant Temperature (ECT) Sensor G62
2. Change-over valve for intake manifold flap N239

NOTE:

- **Ignore - 3 -.**

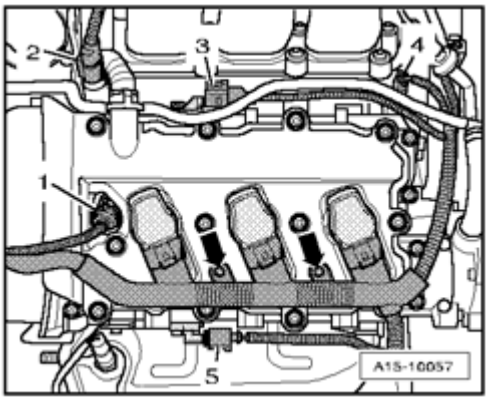

Fig. 379: Disconnecting Electrical Harness Connectors
Courtesy of VOLKSWAGEN UNITED STATES, INC.

- Disconnect electrical harness connectors.

1 - Camshaft Adjustment Valve 1 (exhaust) N318

3 - Camshaft Position (CMP) sensor G40

4 - Intake Manifold Runner Position Sensor G336

5 - Camshaft position (CMP) sensor 3 G300

NOTE:

- **Ignore - 2 -.**

- Remove bolts - **arrows** - and separate electrical connections at the ignition coils.
- Set electrical wiring harness aside.

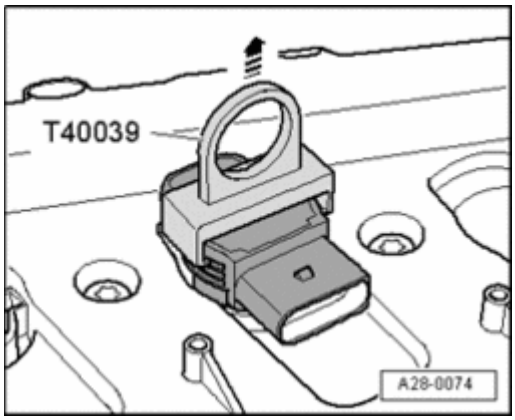

Fig. 380: Removing Ignition Coils Using Ignition Coil Puller T40039
Courtesy of VOLKSWAGEN UNITED STATES, INC.

- Remove ignition coils using ignition coil puller T40039.

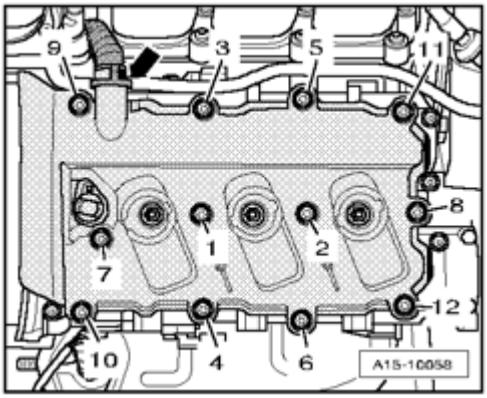

Fig. 381: Removing Crankshaft Housing Ventilation Hose & Right Cylinder Head Cover Bolts In Sequence
Courtesy of VOLKSWAGEN UNITED STATES, INC.

- Remove right cylinder head cover bolts in sequence - **12 to 1** -.

NOTE:

- **Disregard - arrow -.**

CAUTION: Crankcase ventilation must not be removed.

- Lay aside removed cylinder head cover with connected crankcase ventilation hose.

Installing

Installation is in reverse order of removal, noting the following:

NOTE:

- **Replace cylinder head cover gaskets if damaged.**
- **Replace bolts for cylinder head cover if gasket is damaged.**

- Clean sealing surfaces so they are completely free of any oil or grease.
- Tighten cylinder head cover in sequence **- 1 to 12 -**.

Tightening Specifications

Component	Nm
Cylinder head cover to cylinder head	9
Hose clamps 9 mm wide	3

Cylinder Head, Removing and Installing

Cylinder Head, Removing and Installing

Special tools, testers and auxiliary items required

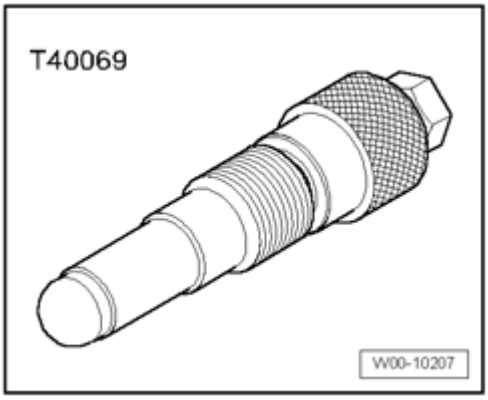

Fig. 382: Locking Pin T40069
Courtesy of VOLKSWAGEN UNITED STATES, INC.

- Locking pin T40069

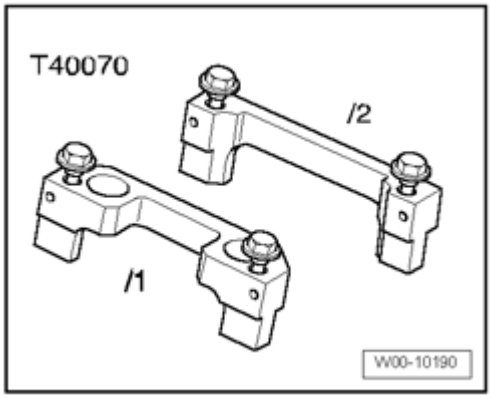

Fig. 383: Camshaft Locator T40070
Courtesy of VOLKSWAGEN UNITED STATES, INC.

- Camshaft locator T40070

Removing

- Engine installed.

NOTE:

- **The following removal and installation procedure is for the left cylinder head. The procedure for the other side is identical.**

CAUTION: Fuel system is under high pressure! Before opening high pressure components of the fuel injection system, pressure must be relieved to residual pressure --> Before Opening High Pressure Fuel Injection System. Then wrap a clean rag around the connection and relieve residual pressure by carefully loosening the connection.

- Drain coolant --> **Cooling System, Draining and Filling**.
- Remove front exhaust pipe: Left --> **Left Front Exhaust Pipe with Catalytic Converter, Removing and Installing** , right --> **Right Exhaust Pipe with Catalytic Converter, Removing and Installing** .
- Remove ribbed belt --> **Ribbed Belt, Removing and Installing**
- Remove front coolant pipe --> **Front Coolant Line, Removing and Installing**.
- Remove power steering pump --> **48 - STEERING** .

NOTE:

- **To remove the right cylinder head, the vacuum pump for brake booster must be removed --> Brake Booster Vacuum Pump, Removing and Installing.**

- Remove upper part of intake manifold --> **24 - FUEL INJECTION SYSTEM** .
- Remove intake manifold lower part --> **24 - FUEL INJECTION SYSTEM** .
- Disconnect electrical harness connectors at fuel injectors.

- Remove oil filter housing --> **Oil Filter Housing, Removing and Installing** .

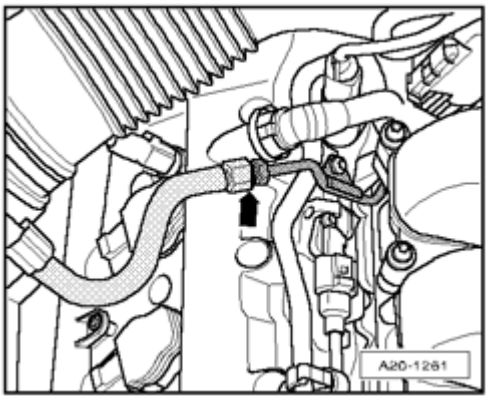

Fig. 384: Separating Fuel Line
Courtesy of VOLKSWAGEN UNITED STATES, INC.

- Disconnect fuel line - **arrow** -.

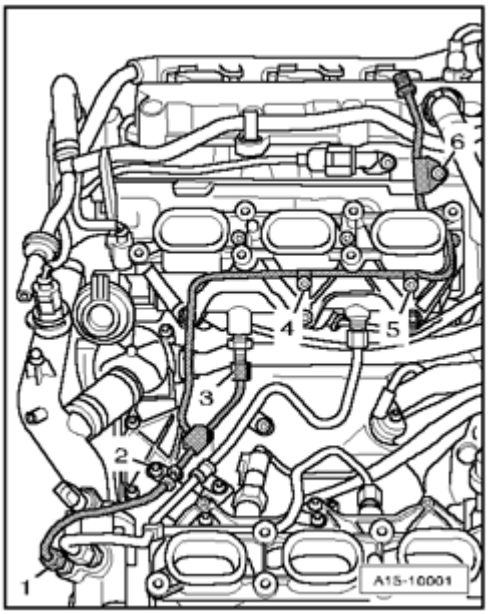

Fig. 385: Removing Low Pressure Line, Thereby Removing Bolts And Union Nuts
Courtesy of VOLKSWAGEN UNITED STATES, INC.

- Remove low pressure line, thereby removing bolts and union nuts - **1 through 6** -.

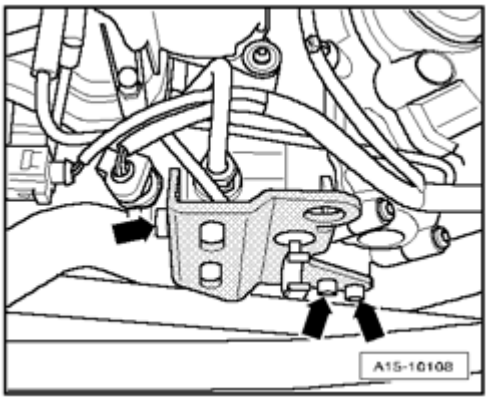

Fig. 386: Removing Large Lifting Eye
Courtesy of VOLKSWAGEN UNITED STATES, INC.

- If equipped, unbolt large lifting eye - **arrows** -.

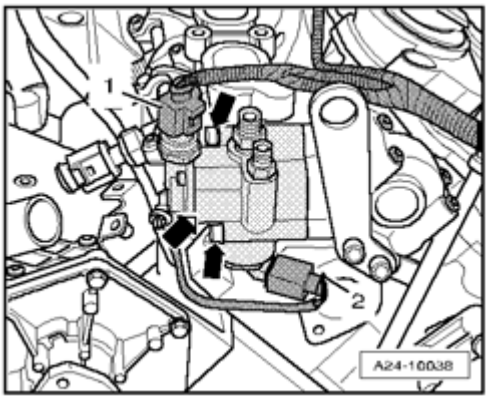

Fig. 387: Disconnecting Electrical Connectors & Removing High Pressure Pump From Left Cylinder Head
Courtesy of VOLKSWAGEN UNITED STATES, INC.

- Disconnect electrical connectors - **1** - and - **2** -.
- If necessary, remove high pressure pump from left cylinder head - **arrows** -.

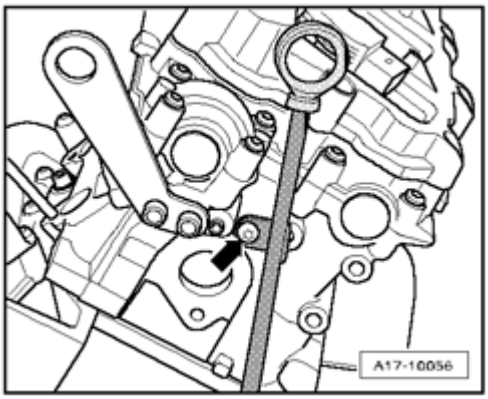

Fig. 388: Removing Bolt And Pulling Oil Dipstick Guide Tube Upward And Out
Courtesy of VOLKSWAGEN UNITED STATES, INC.

- Remove bolt - **arrow** - and pull oil dipstick guide tube upward and out.
- Remove cylinder head cover.
- Remove left and right timing chain covers --> **Timing Chain Covers, Removing and Installing** .
- Remove camshaft timing chains from camshafts --> **Timing Chains, Removing from Camshafts and Chain Tensioner, Removing and Installing** .

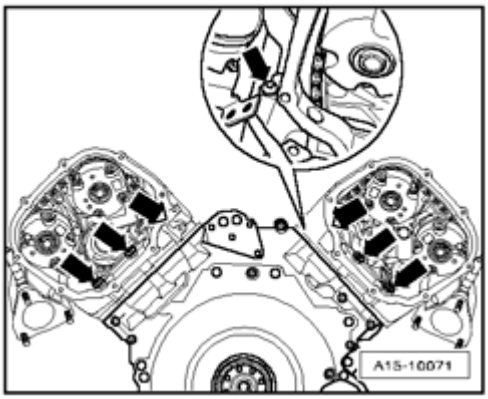

Fig. 389: Removing Bolts At Rear Of Cylinder Head
Courtesy of VOLKSWAGEN UNITED STATES, INC.

- Remove bolts - **arrows** - at rear of cylinder head.

- Left cylinder head: 3 bolts.
- Right cylinder head: 4 bolts.

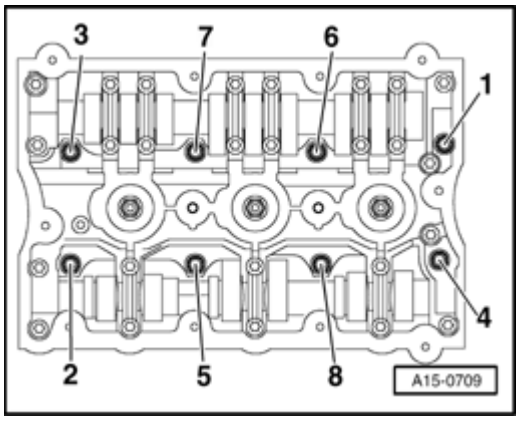

Fig. 390: Identifying Cylinder Head Bolts Loosening Sequence
Courtesy of VOLKSWAGEN UNITED STATES, INC.

- Follow sequence - **1 to 8** - when loosening cylinder head bolts.
- Carefully remove cylinder head.

Installing

NOTE:

- **Replace cylinder head bolts.**
- **During assembly, replace self-locking nuts and bolts.**
- **Always replace bolts that are tightened to torque as well as O-rings and gaskets.**
- **Carefully remove residual sealant from cylinder head and cylinder block. Make sure that no long scrapes or scratches result.**
- **Carefully remove all grinding and sanding residue.**
- **There must be no oil or coolant in the blind holes for the cylinder head bolts in the cylinder block.**
- **Checking cylinder head for distortion --> Checking cylinder head for distortion.**
- **Only unpack new cylinder head gasket immediately prior to installation.**
- **Handle gasket carefully. Damage in silicon layer and recessed area lead to leakage.**
- **Install cylinder head gasket onto guide sleeves. Marking "oben" (top) or part number must face toward cylinder head.**
- **After installing a replacement cylinder head with camshafts installed, oil contact surfaces between roller cam followers and cam lubricating surfaces after installing cylinder head.**
- **Do not remove plastic bases protecting freed up valves until immediately before installing cylinder head.**
- **When replacing cylinder head or cylinder head seal, coolant and engine oil must be changed.**
- **Secure all hose connections with hose clamps appropriate for the model .**
- **During installation, all cable ties must be re-installed at the same location.**
- **After working on the valvetrain, carefully rotate engine by hand at least 2 full revolutions to ensure that valves do not strike the pistons when starting.**

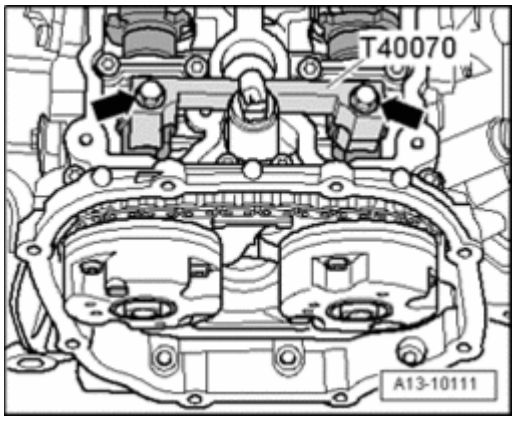

Fig. 391: Mounting Camshaft Locating Tool T40070 To Both Cylinder Heads And Tightening Bolts
Courtesy of VOLKSWAGEN UNITED STATES, INC.

- Before installing cylinder head, set crankshaft and camshafts to TDC setting, mounting camshaft locating tool T40070 on both cylinder heads and tightening to 20 Nm.

- The camshaft locating tool T40070 is correctly positioned when the holes for the cylinder head bolts remain free.

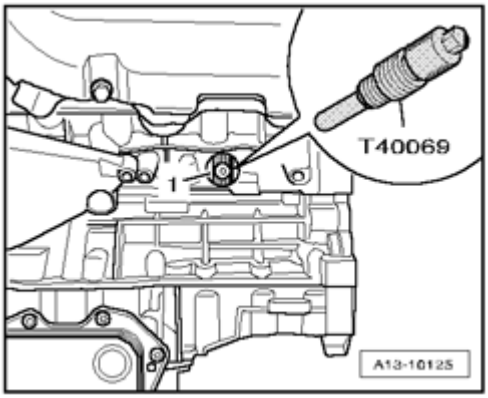

Fig. 392: Installing Crankshaft Holder T40069 Into Hole
Courtesy of VOLKSWAGEN UNITED STATES, INC.

- Crankshaft holder T40069 must be screwed into the crankshaft.

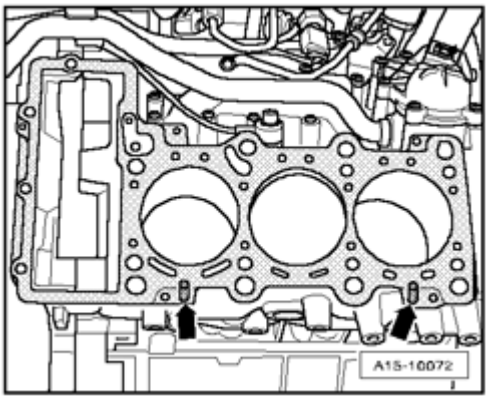

Fig. 393: Paying Close Attention To Centering Pins In Cylinder Block
Courtesy of VOLKSWAGEN UNITED STATES, INC.

- Position cylinder head gasket.

- Pay close attention to centering pins - **arrows** - in cylinder block.
- Pay attention to installation position of cylinder head gasket, marking "oben" (top) or part number must face toward cylinder head.

- Install cylinder head.

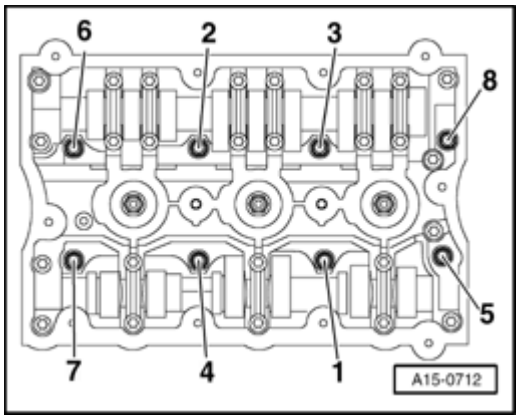

Fig. 394: Tightening Cylinder Head Bolts In Sequence
Courtesy of VOLKSWAGEN UNITED STATES, INC.

- Insert new cylinder head bolts and tighten by hand.
- Tighten cylinder head in sequence indicated, in 3 stages as follows:
- Using torque wrench, tighten to 40 Nm.
- With Torx key, 90 ($^1/_4$ turn) additional turn.
- With Torx key, 90 ($^1/_4$ turn) additional turn.

NOTE:

- **There is no requirement to retighten the cylinder head bolts.**

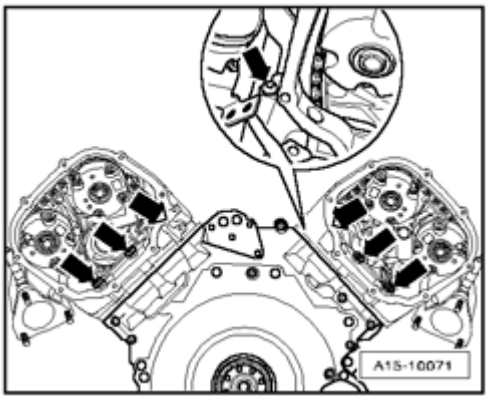

Fig. 395: Removing Bolts At Rear Of Cylinder Head
Courtesy of VOLKSWAGEN UNITED STATES, INC.

- Tighten bolts - **arrows** - to 9 Nm.
  - Left cylinder head: 3 bolts.
  - Right cylinder head: 4 bolts.

Further installation is in reverse order of removal, noting the following:

- Install camshaft timing chains --> **Timing Chains, Removing from Camshafts and Chain Tensioner,**

Removing and Installing .

- Install left and right timing chain covers --> **Timing Chain Covers, Removing and Installing** .
- Install cylinder head cover.
- Install high pressure pump --> **24 - FUEL INJECTION SYSTEM** .
- Install oil filter housing --> **Oil Filter Housing, Removing and Installing** .
- Install intake manifold lower-part with high and low-pressure lines --> **24 - FUEL INJECTION SYSTEM** .
- Install intake manifold upper-part --> **24 - FUEL INJECTION SYSTEM** .
- Install vacuum pump for brake booster --> **Brake Booster Vacuum Pump, Removing and Installing**.
- Install power steering pump --> **48 - STEERING** .
- Install front coolant pipe --> **Front Coolant Line, Removing and Installing**.
- Install ribbed belt --> **Ribbed Belt, Removing and Installing** .
- Install front exhaust pipe with catalytic converter: Left --> **Left Front Exhaust Pipe with Catalytic Converter, Removing and Installing** ; right --> **Right Exhaust Pipe with Catalytic Converter, Removing and Installing** .
- Align exhaust system --> **Exhaust System, Installing**.
- Replace engine oil --> **01 - MAINTENANCE** .
- Replace coolant --> **Cooling System, Draining and Filling**.
- Fill power-steering system oil and bleed steering system --> **48 - STEERING** .

Tightening Specifications

Component	Nm
Oil dip stick guide tube to cylinder head	9
Fuel hose to fuel line	22

Brake Booster Vacuum Pump, Removing and Installing

Brake Booster Vacuum Pump, Removing and Installing

Removing

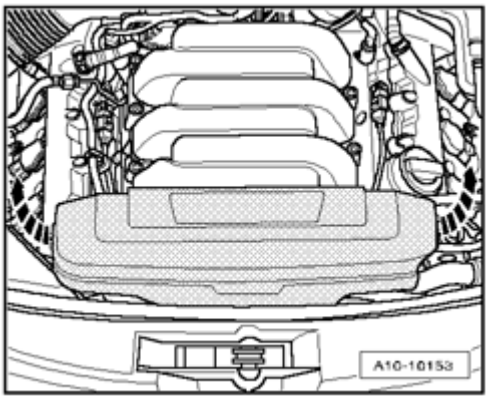

Fig. 396: Identifying Front Engine Cover
Courtesy of VOLKSWAGEN UNITED STATES, INC.

- Remove front engine cover - **arrows** -.

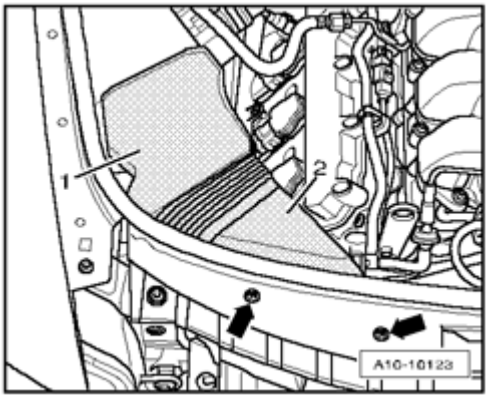

Fig. 397: Removing Air Duct Screws & Air Ducts
Courtesy of VOLKSWAGEN UNITED STATES, INC.

- Remove bolts - **arrows** -.
- Remove air duct - **1** - and - **2** -.

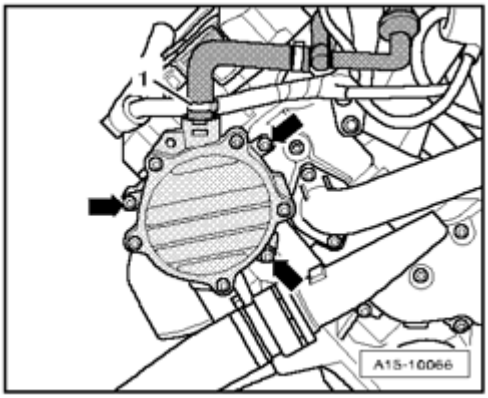

Fig. 398: Disconnecting Vacuum Hose At Vacuum Pump
Courtesy of VOLKSWAGEN UNITED STATES, INC.

- Disconnect vacuum hose - **1** - at vacuum pump.
- Remove bolts - **arrows** - and remove vacuum pump.

Installing

Installation is in reverse order of removal, noting the following:

NOTE:

- **Replace O-rings.**

- **Secure all hose connections with hose clamps appropriate for the model .**

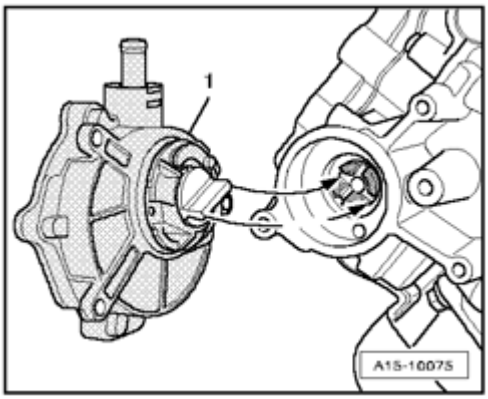

Fig. 399: Positioning Vacuum Pump Coupling So That It Engages Symmetrical Groove Of Camshaft When Installing Vacuum Pump
Courtesy of VOLKSWAGEN UNITED STATES, INC.

- Position vacuum pump coupling - **1** - so that it engages the symmetrical groove of the camshaft - **arrows** - when installing vacuum pump.

Tightening specifications

Component	Nm
Vacuum pump to cylinder head	9

Compression, Checking

Compression, Checking

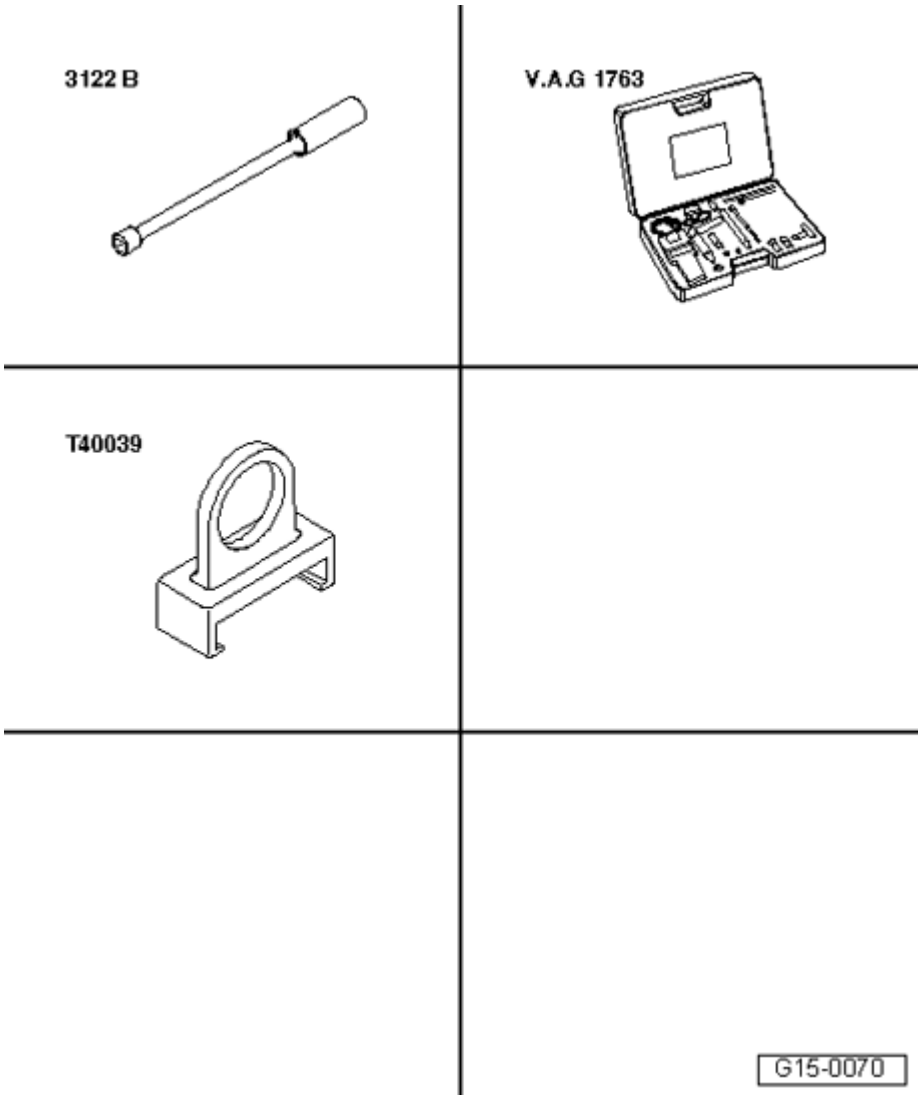

Fig. 400: Identifying Special Tools - Compression, Checking
Courtesy of VOLKSWAGEN UNITED STATES, INC.

Special tools, testers and auxiliary items required

- Spark plug removal tool 3122 B
- Compression tester V.A.G 1763
- Ignition Coil Puller T40039

Procedure

- Engine oil temperature min. 30 C.
- Battery voltage at least 12.5 V.

  - Switch off ignition.

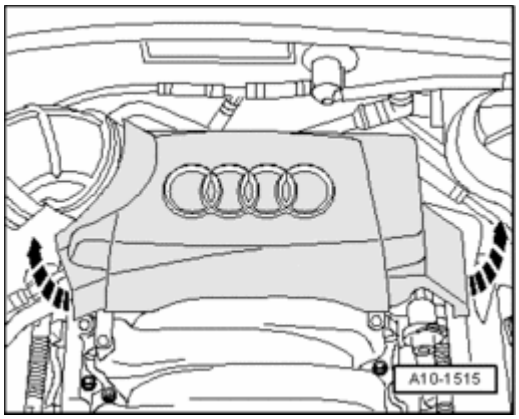

Fig. 401: Removing Rear Engine Cover
Courtesy of VOLKSWAGEN UNITED STATES, INC.

- Remove rear engine cover - **arrows** -.

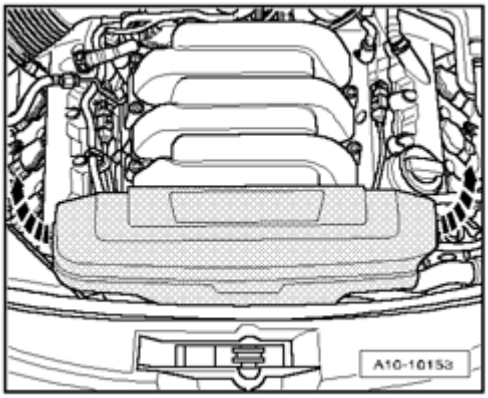

Fig. 402: Identifying Front Engine Cover
Courtesy of VOLKSWAGEN UNITED STATES, INC.

- Remove front engine cover - **arrows** -.

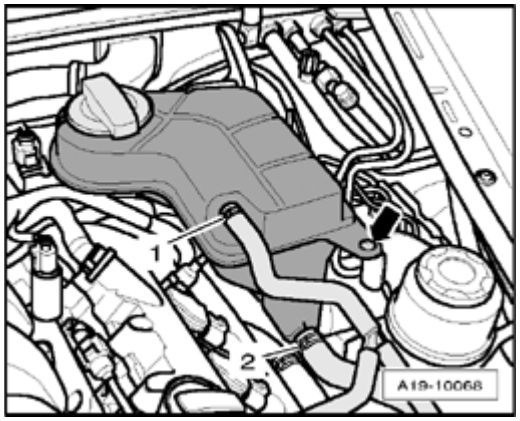

Fig. 403: Removing Coolant Hoses At Coolant Expansion Tank
Courtesy of VOLKSWAGEN UNITED STATES, INC.

- Remove coolant expansion tank - **arrow** -.
- Disconnect electrical connection from Engine Coolant Level (ECL) Warning Switch F66 at bottom of coolant reservoir and set aside coolant reservoir with coolant hoses - **1** - and - **2** - connected.

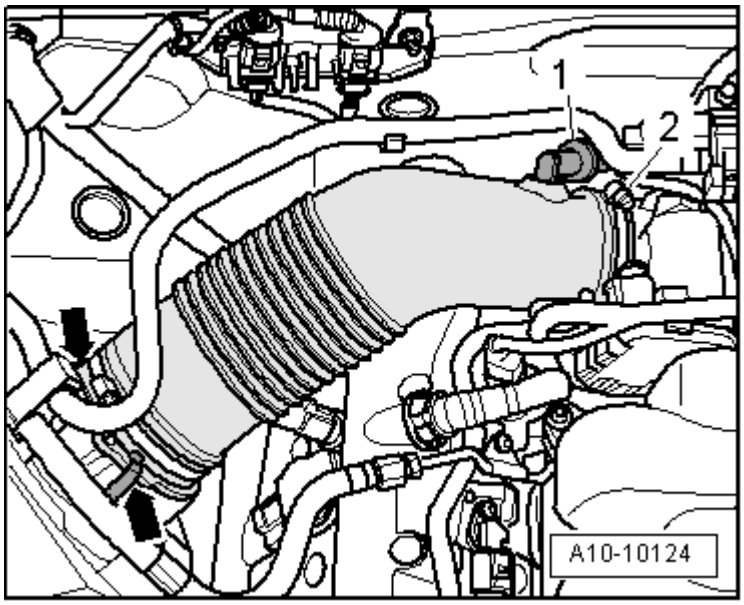

Fig. 404: Disconnecting Check Valve From Connection At Air Duct Hose & Removing Air Duct Hose
Courtesy of VOLKSWAGEN UNITED STATES, INC.

- Disconnect check valve - **1** - from connection at air duct hose.
- Remove air duct hose, thereby loosening the hose clamp - **2** - and opening clips - **arrows** -.

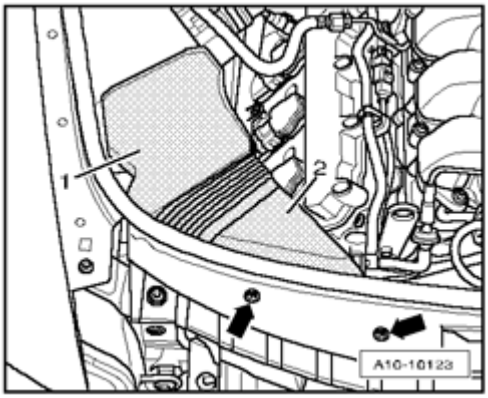

Fig. 405: Removing Air Duct Screws & Air Ducts
Courtesy of VOLKSWAGEN UNITED STATES, INC.

- Remove bolts - **arrows** -.
- Remove air duct - **1** - and - **2** -.

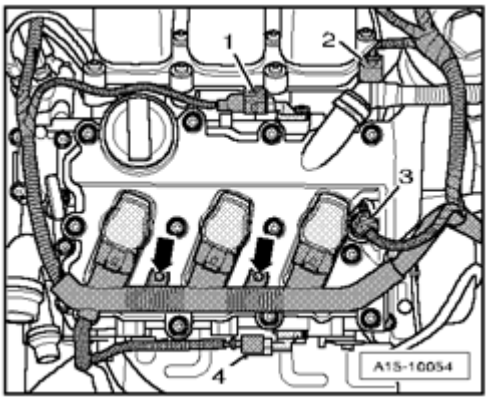

Fig. 406: Remove Bolts & Disconnecting Electrical Harness Connectors At Ignition Coils
Courtesy of VOLKSWAGEN UNITED STATES, INC.

- Remove bolts - **arrows** - and separate the electrical connections at the ignition coils of left cylinder head.

NOTE:

- **Ignore - 1 to 4 -.**

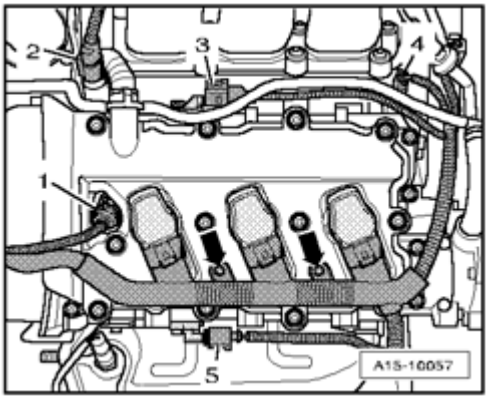

Fig. 407: Disconnecting Electrical Harness Connectors
Courtesy of VOLKSWAGEN UNITED STATES, INC.

- Remove bolts - **arrows** - and disconnect electrical connections at the ignition coils of right cylinder head.

NOTE:

- **Ignore items - 1 to 5 -.**

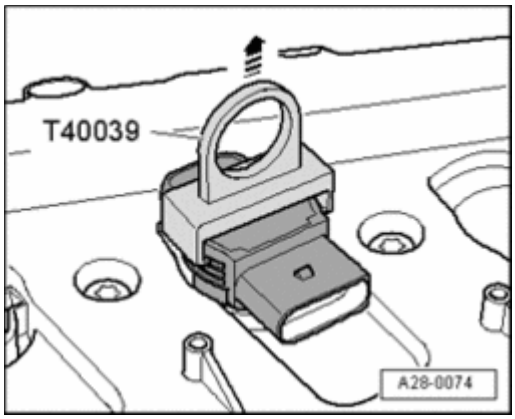

Fig. 408: Removing Ignition Coils Using Ignition Coil Puller T40039
Courtesy of VOLKSWAGEN UNITED STATES, INC.

- Remove ignition coils using ignition coil puller T40039.

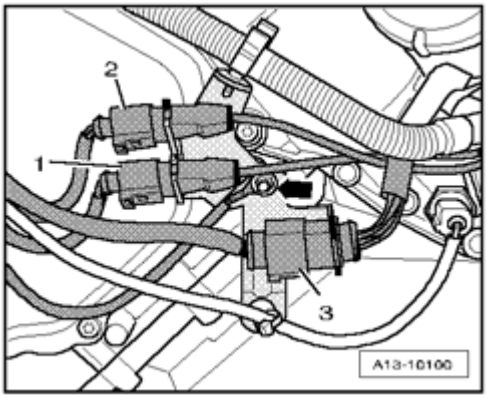

Fig. 409: Disconnecting Electrical Harness Connectors
Courtesy of VOLKSWAGEN UNITED STATES, INC.

- On rear of left cylinder head, disconnect electrical harness connector - **3** - for fuel injectors.

NOTE:

- **Ignore - 1 - , - 2 - and - arrow -.**

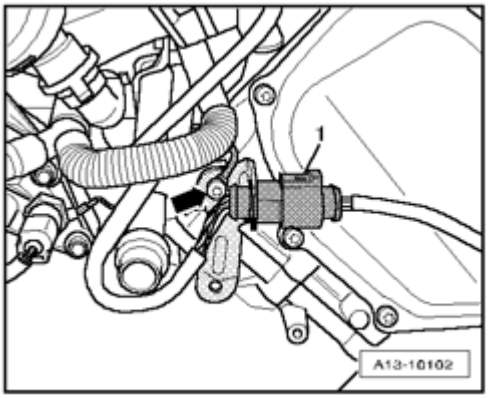

Fig. 410: Disconnecting Electrical Connector & Removing Bolt & Retainer For Connection
Courtesy of VOLKSWAGEN UNITED STATES, INC.

- On rear of right cylinder head, disconnect electrical harness connector - **1** - for fuel injectors.

NOTE:

- **Disregard - arrow -.**

- Using spark plug removal tool 3122 B , remove spark plugs.
- Check compression using compression tester V.A.G 1763.

NOTE:

- **Using tester --> operating instructions.**

- Have a second technician press accelerator pedal completely and at the same time operate starter long enough until pressure increase no longer appears on tester.

Compression pressure	Bar pressure
New	11.0 to 14.0
Wear limit	10.0
Difference between cylinders	max. 3.0

Assembly is in the reverse order of removal, noting the following:

- Install spark plugs --> **01 - MAINTENANCE** .
- Finally, check DTC memory and, if necessary, erase it. After DTC memory is erased, a readiness code must be generated for the engine control module using operating mode "Guided Fault-Finding".

Tightening specifications

Component	Nm
Hose clamps 9 mm wide	3

VALVETRAIN, SERVICING

Valvetrain, Servicing

--> **Valvetrain, Component Overview**

--> **Camshafts, Checking Axial Clearance**

--> **Camshafts, Removing and Installing**

--> **Valve Stem Seals, Cylinder Head Installed, Replacing**

--> **Valve Stem Seals, Cylinder Head Removed, Replacing**

--> **Hydraulic Adjusting Elements, Checking**

--> **Valve Dimensions**

--> **Valves, Checking**

NOTE:

- **Cylinder heads with cracks between the valve seats, or between the valve seat and the spark plug threads, can continue to be used without reducing the service life, as long as the cracks have a width of max. 0.3 mm, or only the first 4 threads of the spark plug threads are cracked.**
- **After installing the camshafts, the engine may not be started for approximately 30 minutes. The hydraulic adjusting elements must seat themselves (otherwise the valves will seat themselves on the pistons).**
- **After working on the valvetrain, carefully rotate engine by hand at least 2 full revolutions to ensure that valves do not strike the pistons when starting.**
- **Left cylinder head is shown in Fig. 411.**

Valvetrain, Component Overview

Valvetrain, Component Overview

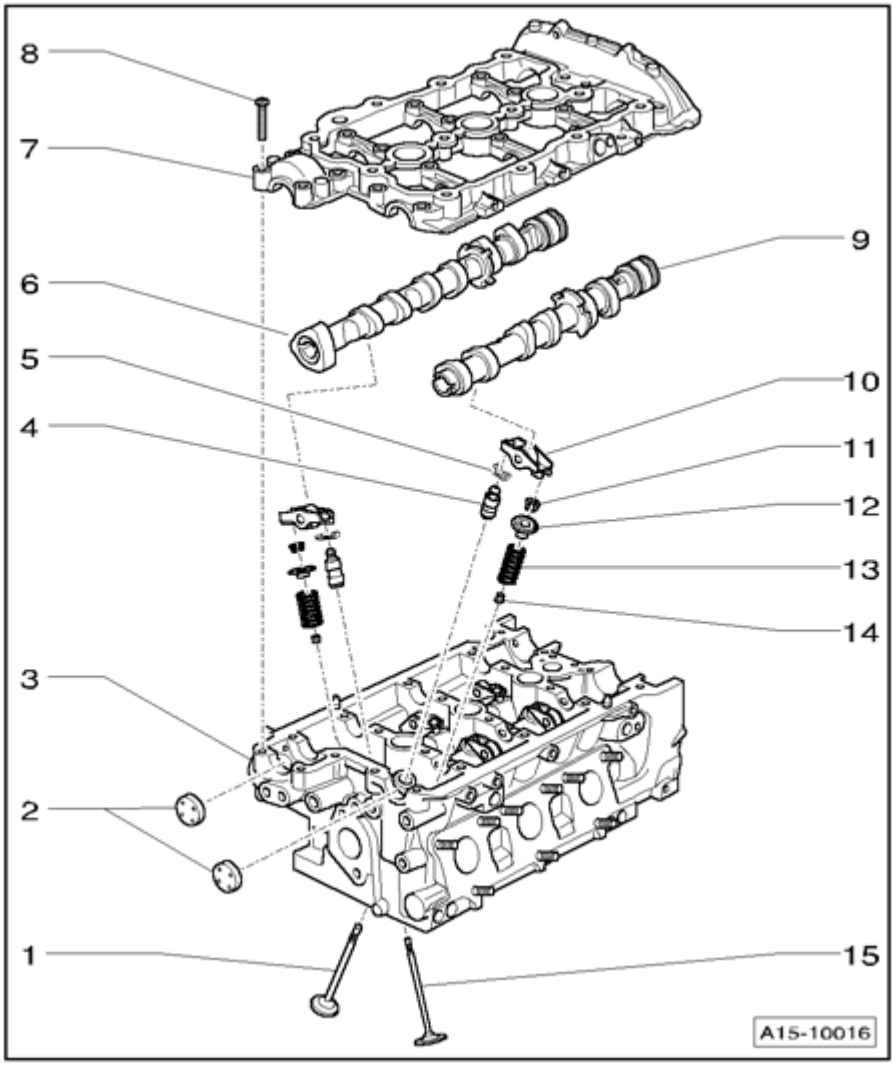

Fig. 411: Valvetrain, Component Overview
Courtesy of VOLKSWAGEN UNITED STATES, INC.

1 - Exhaust valve

- Different versions
- Do not rework, only lapping is permitted
- Mark installed position for re-installation
- Valve dimensions --> **Valve Dimensions**
- Check valve guides --> **Valve Guides, Checking**

2 - Sealing plug

- Install with sealant; sealant

3 - Cylinder Head

- Check valve guides --> **Valve Guides, Checking**

4 - Hydraulic adjusting element

- Checking --> **Hydraulic Adjusting Elements, Checking**
- Do not interchange
- Lubricate contact surface

5 - Securing clip

- Check for secure seat

6 - Intake camshaft

- Checking axial play --> **Camshafts, Checking Axial Clearance**
- Removing and installing --> **Camshafts, Removing and Installing**
- Check radial clearance using Plastigage (roller rocker lever removed)
- Radial clearance at bearing-dia. 24 mm: 0.024 to 0.066 mm

- Radial clearance at bearing-dia. 36 mm: 0.032 to 0.078 mm
- Run-out: max. 0.04 mm

7 - Bearing bracket

- With integrated camshaft bearings
- Removing and installing --> **Camshafts, Removing and Installing**

8 - 8 Nm plus an additional 90 ($^{1}/_{4}$ turn)

- Replace

9 - Exhaust camshaft

- Checking axial play --> **Camshafts, Checking Axial Clearance**
- Removing and installing --> **Camshafts, Removing and Installing**
- Check radial clearance using Plastigage (roller rocker lever removed)
- Radial clearance at bearing-dia. 24 mm: 0.024 to 0.066 mm

- Radial clearance at bearing-dia. 36 mm: 0.032 to 0.078 mm
- Run-out: max. 0.04 mm

10 - Roller rocker lever

- Do not interchange
- Check roller for easy movement
- Lubricate contact surface

11 - Valve keys

12 - Valve spring plate

13 - Valve spring

- Installation position: The tight spring coils face toward cylinder head

14 - Valve stem seal

- Replacing, Cylinder Head Installed --> **Valve Stem Seals, Cylinder Head Installed, Replacing**
- Replacing, Cylinder Head Removed --> **Valve Stem Seals, Cylinder Head Removed, Replacing**

15 - Intake valve

- Do not rework, only lapping is permitted
- Mark installed position for re-installation
- Valve dimensions --> **Valve Dimensions**
- Check valve guides --> **Valve Guides, Checking**

Camshafts, Checking Axial Clearance

Camshafts, Checking Axial Clearance

Special tools, testers and auxiliary items required

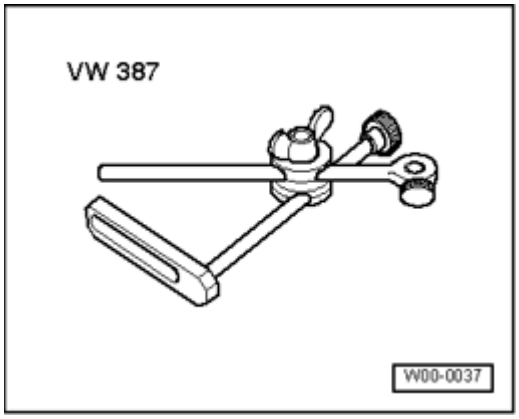

Fig. 412: Dial Gauge Holder VW 387
Courtesy of VOLKSWAGEN UNITED STATES, INC.

- Dial gauge holder VW 387

- Dial gauge VAS 6080

Procedure

- Perform measurement with roller rocker levers and hydraulic adjusting elements removed.

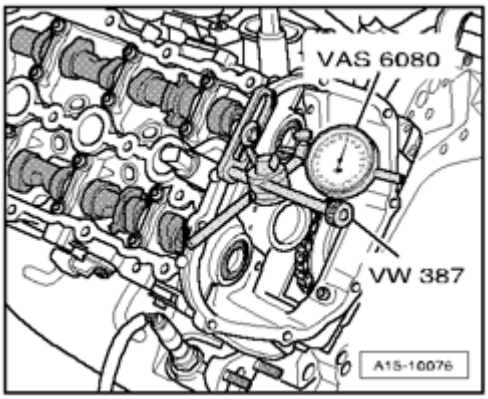

Fig. 413: Securing Dial Gauge Holder VW 387 To Dial Gauge VAS 6080 On Cylinder Head
Courtesy of VOLKSWAGEN UNITED STATES, INC.

- Secure dial gauge holder VW 387 to dial gauge VAS 6080 on cylinder head.
- Determine axial clearance.

- Axial clearance: 0.100 to 0.191 mm.

Camshafts, Removing and Installing

Camshafts, Removing and Installing

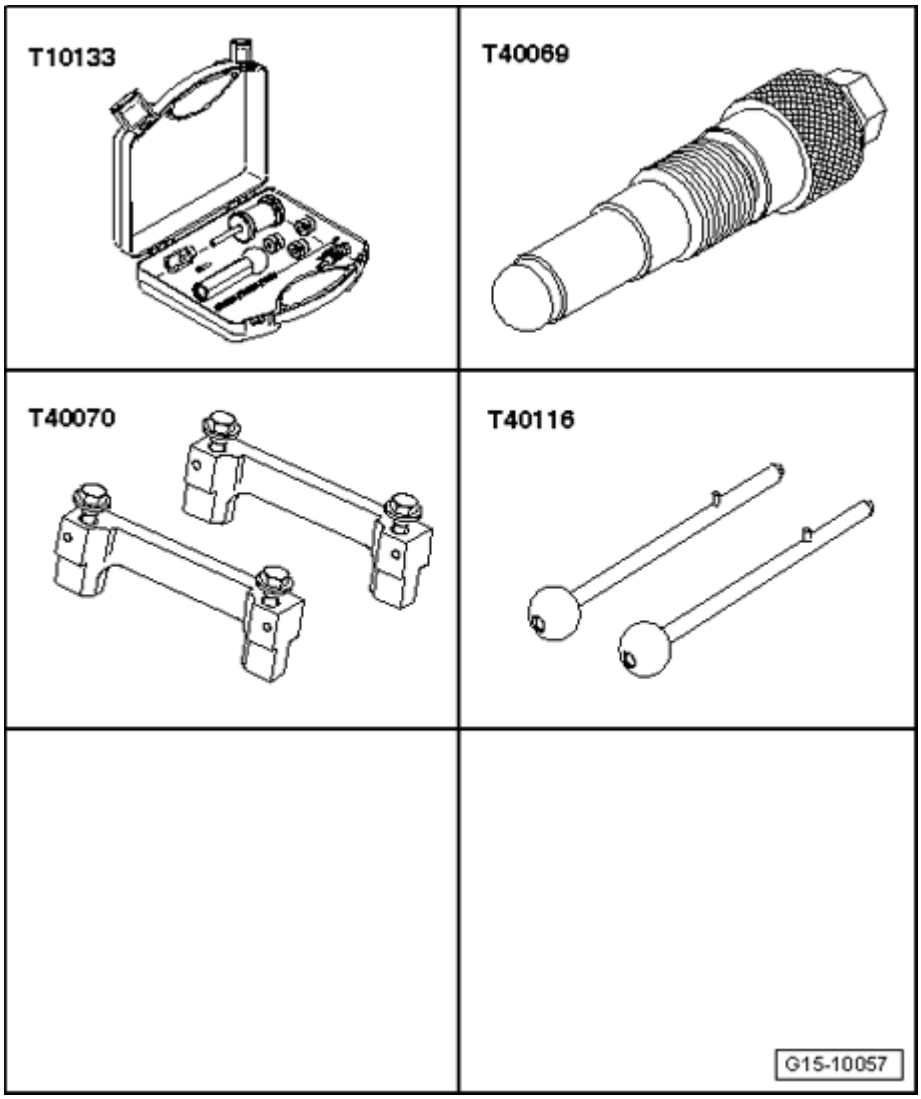

Fig. 414: Identifying Special Tools - Camshafts, Removing And Installing
Courtesy of VOLKSWAGEN UNITED STATES, INC.

Special tools, testers and auxiliary items required

- Impact puller T10133/3 from the tool set T10133
- Locking pin T40069
- Camshaft locator T40070 (qty. 2)
- Securing pins 1 set = qty. 2 T40116

- Hand drill with plastic brush attachment
- Protective glasses
- Sealant

Removing

- Remove cylinder head cover.
- Remove left and right timing chain covers --> **Timing Chain Covers, Removing and Installing** .
- Remove camshaft timing chains from camshafts --> **Timing Chains, Removing from Camshafts and Chain Tensioner, Removing and Installing** .
- To remove right camshafts, the vacuum pump for brake booster must be removed --> **Brake Booster Vacuum Pump, Removing and Installing**.

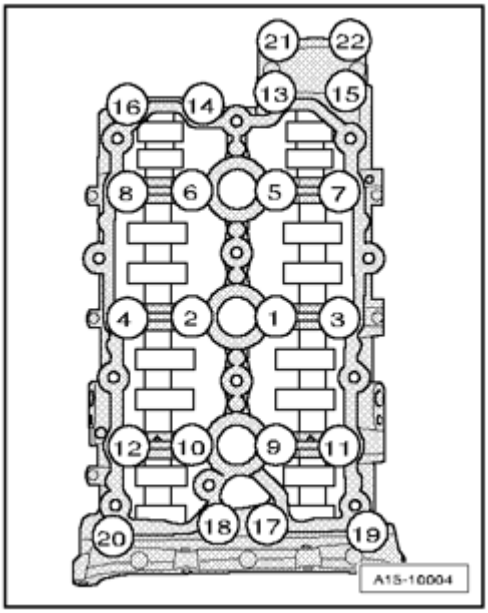

Fig. 415: Loosening/Tightening Guide Frame Bolts In Sequence
Courtesy of VOLKSWAGEN UNITED STATES, INC.

- Loosen guide frame bolts in sequence - **22 to 1** -.

NOTE:

- **Bearing bracket of left cylinder head is displayed in illustration.**

- Carefully remove guide frame.
- Mark camshafts and remove.

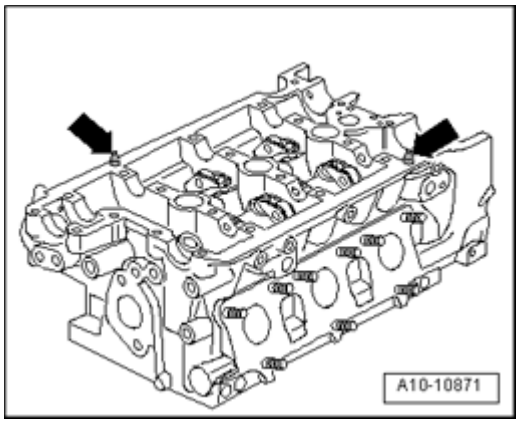

Fig. 416: Identifying Alignment Pins
Courtesy of VOLKSWAGEN UNITED STATES, INC.

NOTE:

- **Since the securing pins T40116 cannot be used during installation, the alignment pins - arrows - on an engine with alignment pins must be driven out with a cotter pin driver.**

Installing

NOTE:

- **Always replace gaskets and seals.**

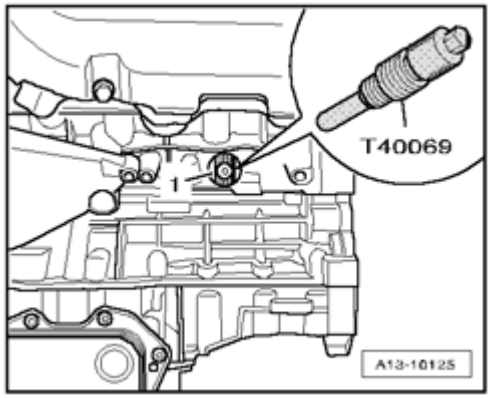

Fig. 417: Installing Crankshaft Holder T40069 Into Hole
Courtesy of VOLKSWAGEN UNITED STATES, INC.

- Secure crankshaft - **1** - using crankshaft holder T40069.

  CAUTION: Wear safety glasses.

  - Using rotating plastic brush, remove any remaining sealant from cylinder head and guide frame.

  CAUTION: Make sure that no sealant residue enters the cylinder head and bearings.

- Clean sealing surfaces, they must be free of oil and grease.
- Oil journal surfaces of camshafts.
- Place guide frame onto a soft surface on the workbench.

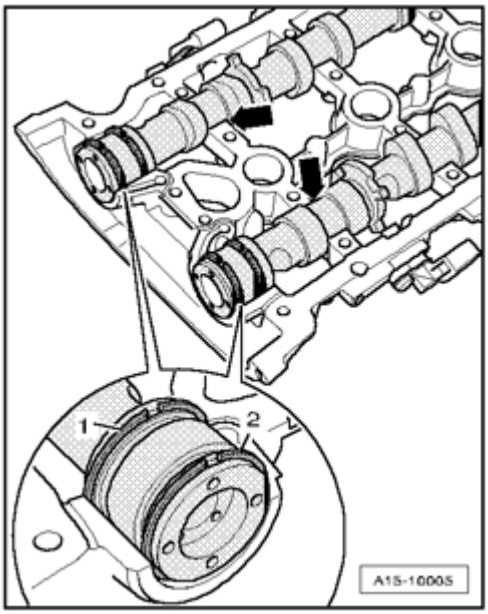

Fig. 418: Setting Camshafts Into Guide Frame
Courtesy of VOLKSWAGEN UNITED STATES, INC.

- Set camshafts into guide frame.

- The placement of the camshafts must be exactly within the axial bearings - **arrows** - of the guide frame.
- The ends of the piston rings - **1** - and - **2** - must face upward or downward, and must never face sideways.

- Turn over the guide frame with installed camshafts, thereby holding the camshafts tight within the guide frame.

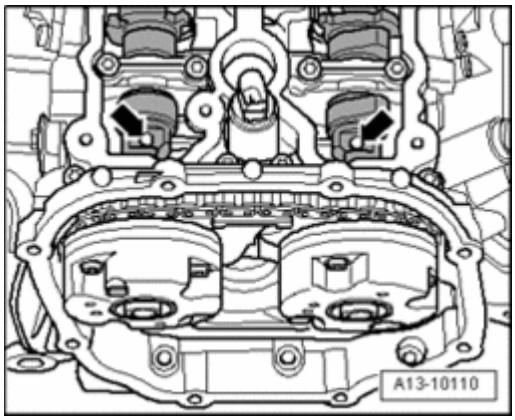

Fig. 419: Identifying Threaded Holes In Camshafts Must Face Upward
Courtesy of VOLKSWAGEN UNITED STATES, INC.

- Rotate camshafts until threaded holes - **arrows** - point upward.
- Check whether camshafts still lie exactly in axial bearings of guide frame.

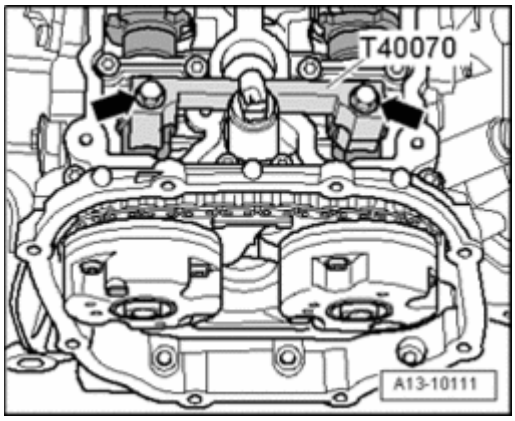

Fig. 420: Mounting Camshaft Locating Tool T40070 To Both Cylinder Heads And Tightening Bolts
Courtesy of VOLKSWAGEN UNITED STATES, INC.

- Mount camshaft locating tool T40070 as shown in the illustration and tighten the bolts - **arrows** - to 20 Nm.

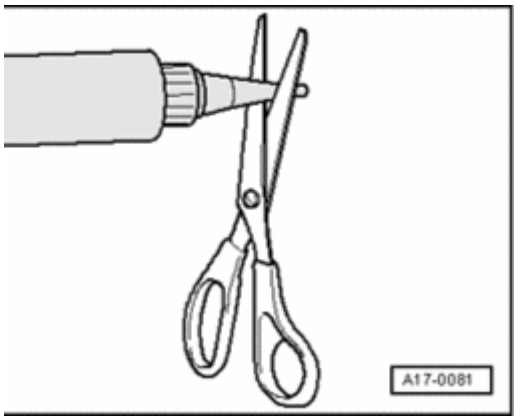

Fig. 421: Cutting Tube Nozzle At Front Marking
Courtesy of VOLKSWAGEN UNITED STATES, INC.

- Cut tube nozzle at front marking (diameter of nozzle approximately 1 mm).
- Turn around guide frame again.

Vehicles through approximately 08.2004:

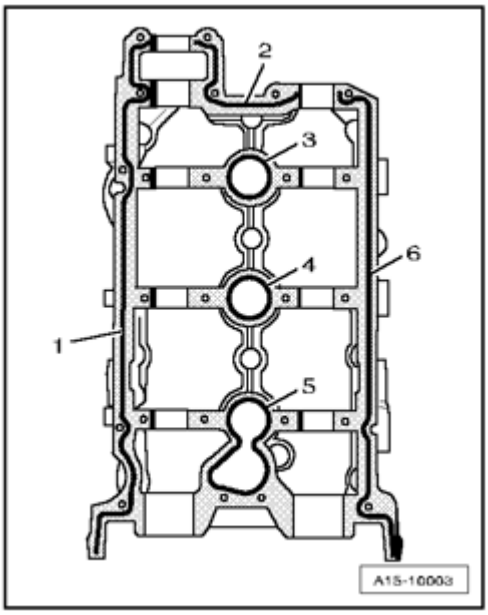

Fig. 422: Applying Sealant Beads On Clean Sealing Surfaces Of Guide Frame
Courtesy of VOLKSWAGEN UNITED STATES, INC.

- Apply sealant beads - **1 through 6** - on clean sealing surfaces of guide frame as shown in illustration.

- The grooves of sealing surface must be completely filled with sealant.
- Sealant beads must be 1.5 to 2.0 mm above the sealing surface.

NOTE:

- **Sealant beads must be applied according to exact specifications, otherwise excess sealant could get into the camshaft bearings.**

Vehicles from approximately 08:2004:

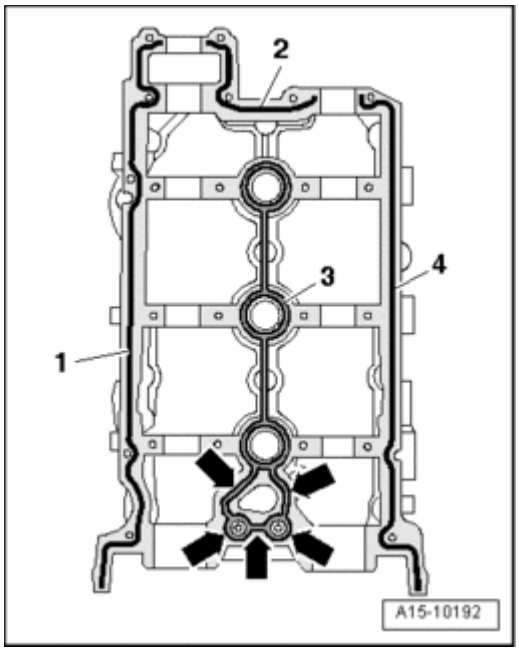

Fig. 423: Applying Small Quantity Of Sealant In Seal Groove In Area Of Camshaft Adjuster Solenoid Valve Opening
Courtesy of VOLKSWAGEN UNITED STATES, INC.

- Apply a small quantity of sealant in the seal groove - **3** - in the area of the camshaft adjuster solenoid valve opening - **arrows** -.
- Press seal into guide frame and wipe off escaping sealant on seal and guide frame.
- Apply sealant beads - **1** - , - **2** - and - **4** - on clean sealing surfaces of guide frame as shown in illustration.

- Thickness of sealant bead: 1.0 mm.

NOTE:

- **Sealant beads must be applied according to exact specifications, otherwise excess sealant could get into the camshaft bearings.**

All:

NOTE:

- **Because the sealant begins hardening immediately, guide frame must be promptly positioned and tightened.**

- Place guide frame on cylinder head.

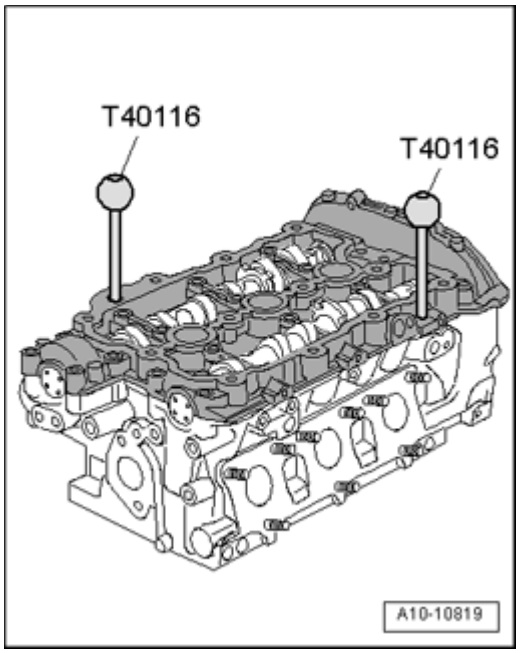

Fig. 424: Inserting locating pins T40116 in guide frame and cylinder head
Courtesy of VOLKSWAGEN UNITED STATES, INC.

- Insert locating pins T40116 in guide frame and cylinder head.

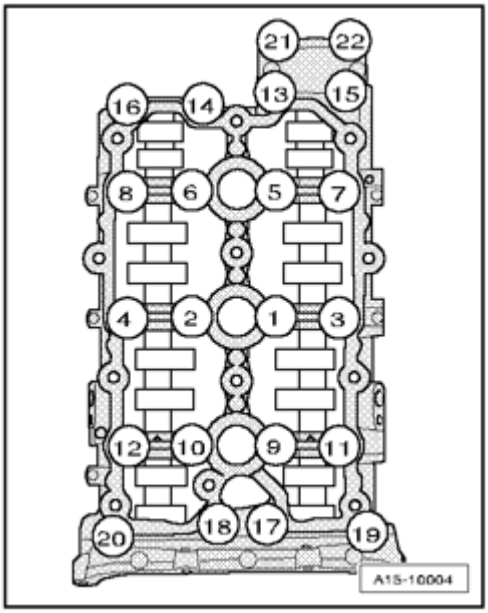

Fig. 425: Loosening/Tightening Guide Frame Bolts In Sequence
Courtesy of VOLKSWAGEN UNITED STATES, INC.

- Attach guide frame on cylinder head immediately.
- Hand-tighten guide frame bolts equally, in sequence - **1 to 22** -.

- The guide frame must be in contact with the entire contact surface of the cylinder head.

  - Fasten guide frame bolts in sequence - **22 to 1** - until they stop.

NOTE:

- **Bearing bracket of left cylinder head is displayed in illustration.**
- **After installing guide frame, sealant must dry for approximately 30 minutes.**

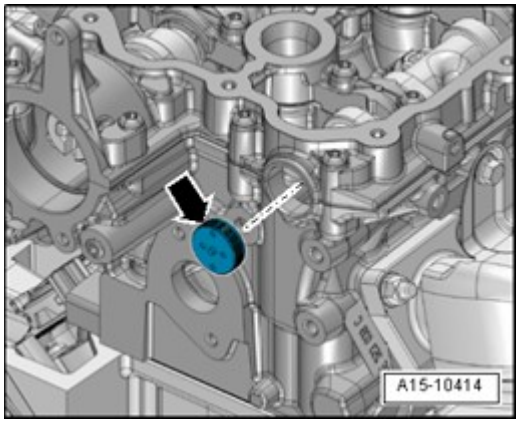

Fig. 426: Identifying Sealing Plug
Courtesy of VOLKSWAGEN UNITED STATES, INC.

  - Clean sealing plug hole in the cylinder head. It must be free of oil and grease.
  - Coat outer circumference of the sealing plug - **arrow** - with sealant; sealant
  - Drive in sealing plugs until they are flush.

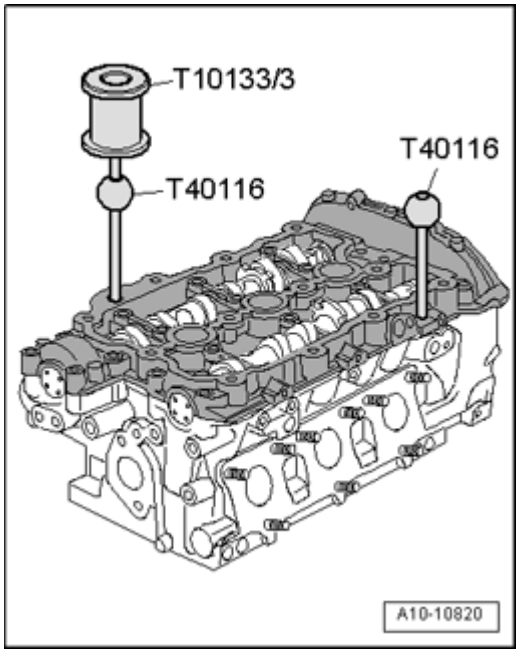

Fig. 427: Removing Locating Pins T40116 With Impact Puller T10133/3

Courtesy of VOLKSWAGEN UNITED STATES, INC.

- Remove locating pins T40116 with impact puller T10133/3.

Further installation is in reverse order of removal, noting the following:

NOTE:

- **After installing the camshafts, the engine may not be started for approximately 30 minutes. The hydraulic adjusting elements must seat themselves (otherwise the valves will seat themselves on the pistons).**
- **After working on the valvetrain, carefully rotate engine by hand at least 2 full revolutions to ensure that valves do not strike the pistons when starting.**

- Install vacuum pump for brake booster --> **Brake Booster Vacuum Pump, Removing and Installing**.
- Install camshaft timing chains --> **Timing Chains, Removing from Camshafts and Chain Tensioner, Removing and Installing** .
- Install left and right timing chain covers --> **Timing Chain Covers, Removing and Installing** .
- Install cylinder head cover.

Tightening specifications

Component	Nm
Bearing bracket to cylinder head	8 + 90° 1)2)
1) Replace bolts. 2) 90° corresponds to a quarter turn.	

Valve Stem Seals, Cylinder Head Installed, Replacing

Valve Stem Seals, Cylinder Head Installed, Replacing

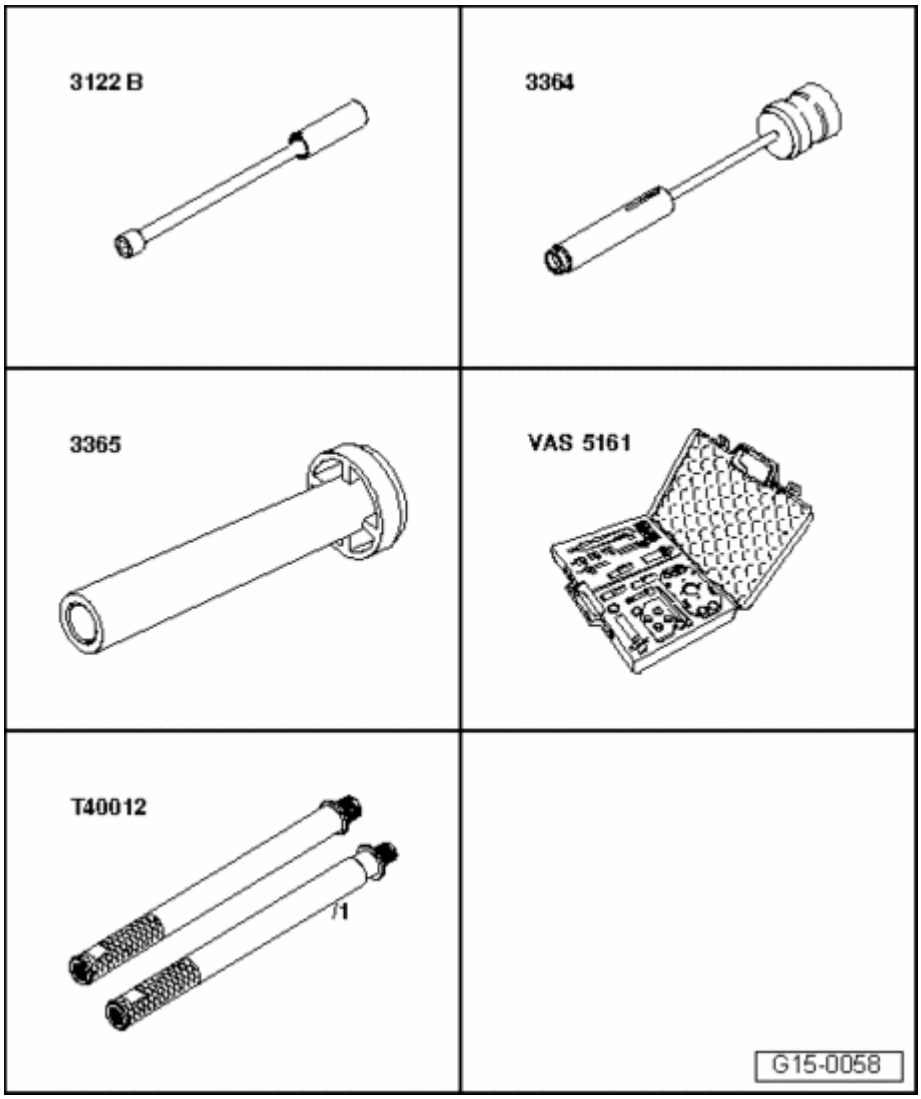

Fig. 428: Identifying Special Tools - Valve Stem Seals, Cylinder Head Installed, Replacing
Courtesy of VOLKSWAGEN UNITED STATES, INC.

Special tools, testers and auxiliary items required

- Spark plug removal tool 3122 B
- Valve seal removal tool 3364
- Valve stem seal driver 3365
- Valve cotter disassembly and assembly device VAS 5161 with guide plate VAS 5161/19 A
- Adapter T40012

Procedure

- Remove camshafts --> **Camshafts, Removing and Installing**.
- Mark the positioning of the roller rocker lever and hydraulic adjusting elements for re-installation.

- Remove roller rocker lever together with the hydraulic adjusting elements and place them on a clean surface.
- Using spark plug removal tool 3122 B , remove spark plugs.

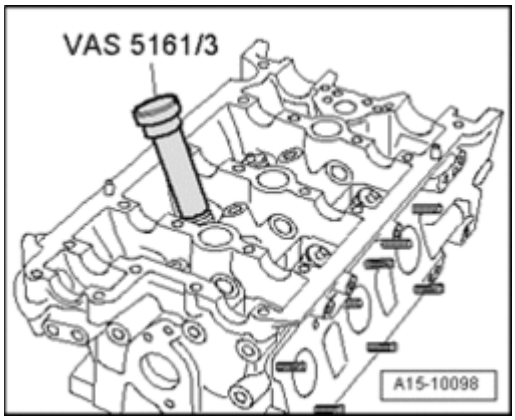

Fig. 429: Placing Drift VAS 5161/3 On Valve Spring Plate And Loosening Stuck Valve Keepers Using Plastic Hammer
Courtesy of VOLKSWAGEN UNITED STATES, INC.

- Place drift VAS 5161/3 on valve spring plate and loosen stuck valve keepers using a plastic hammer.

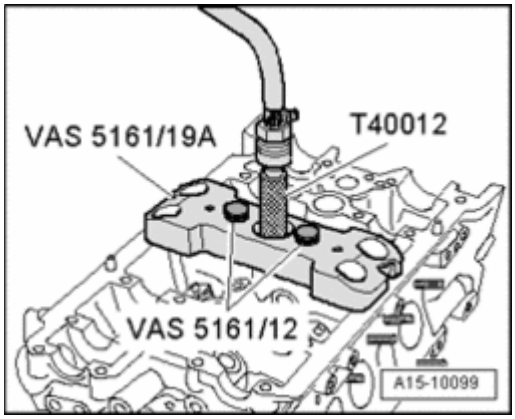

Fig. 430: Placing Guide Plate VAS 5161/19 A From Valve Cotter Disassembly And Assembly Device VAS 5161 On Cylinder Head
Courtesy of VOLKSWAGEN UNITED STATES, INC.

- Place guide plate VAS 5161/19 A from valve cotter disassembly and assembly device VAS 5161 on cylinder head.
- Secure guide plate with knurled screws VAS 5161/12.
- Install adapter T40012 with gasket by hand into respective spark plug thread and apply constant pressure.

- Minimum pressure: 6 bar positive pressure.

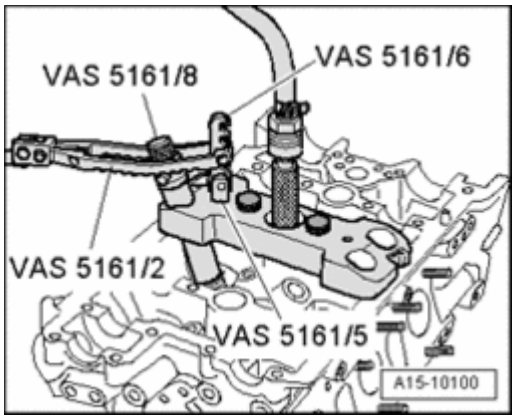

Fig. 431: Installing Engaging Device VAS 5161/6 With Installation Fork VAS 5161/5 Into Guide Plate
Courtesy of VOLKSWAGEN UNITED STATES, INC.

- Install engaging device VAS 5161/6 with installation fork VAS 5161/5 into guide plate.
- Push installation cartridge VAS 5161/8 into guide plate.
- Hook in pressure fork VAS 5161/2 at engaging device and press down installation cartridge.
- At the same time, turn knurled bolt of installation cartridge to the right, until the points engage in the valve keepers.

- Lightly move knurled bolt back and forth, causing the valve keepers to be pressed apart and be captured in the installation cartridge.
- Release pressure fork.
- Take out installation cartridge.
- Unfasten guide plate and turn it aside.

- Pressurized air hose remains connected.

- Remove valve spring with valve spring plate.

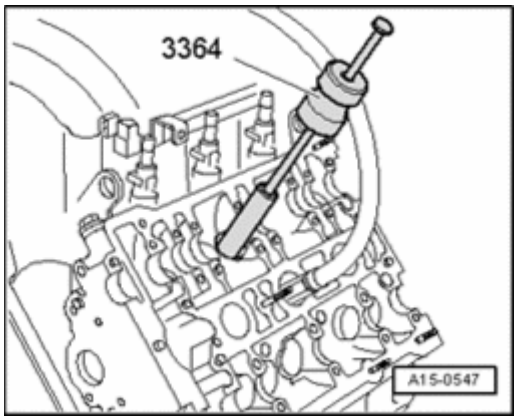

Fig. 432: Removing Valve Stem Oil Seals Using Valve Seal Removal Tool 3364
Courtesy of VOLKSWAGEN UNITED STATES, INC.

- Remove valve stem oil seals using Valve Seal Removal Tool 3364.

If Valve Seal Removal Tool 3364 cannot be used, on several valve stem seals due to restricted clearance, proceed as follows:

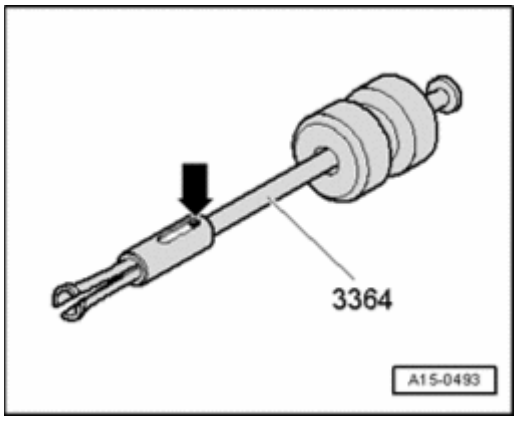

Fig. 433: Identifying Valve Seal Removal Tool 3364
Courtesy of VOLKSWAGEN UNITED STATES, INC.

- Using a drift, drive out the roll pin - **arrow** - at Valve Seal Removal Tool 3364 and remove the impact puller attachment.
- Place lower part of the Valve Seal Removal Tool 3364 on the valve stem seal.

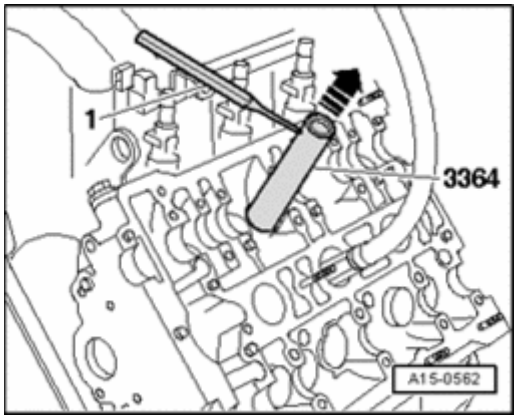

Fig. 434: Securing Valve Seal Removal Tool 3364 With Drift Or Cotter Pin Driver
Courtesy of VOLKSWAGEN UNITED STATES, INC.

- Secure Valve Seal Removal Tool 3364 with a drift or cotter pin driver - **1** - , as shown in the illustration.
- Place the valve lever on Valve Seal Removal Tool 3364 and pull off the valve stem seal - **arrow** -.

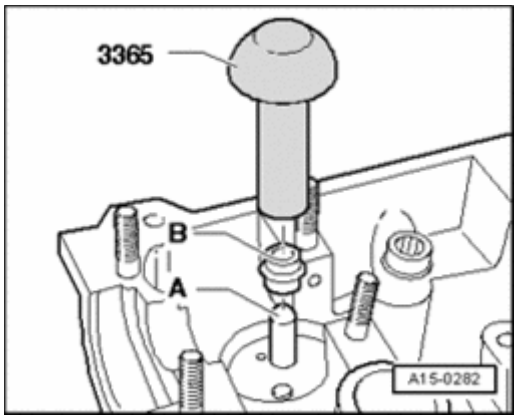

Fig. 435: Identifying Plastic Sleeve, Valve Stem Oil Seal & Valve Stem Seal Driver 3365
Courtesy of VOLKSWAGEN UNITED STATES, INC.

NOTE:

- **A plastic sleeve - A - is supplied with the new valve shaft seals.**

- Place plastic sleeve - **A** - on valve stem to prevent damage to new valve stem seals - **B** -.
- Lightly coat sealing lips of valve stem seal with oil.
- Push valve stem seal onto plastic sleeve.
- Carefully press valve stem oil seal onto valve guide using Valve Stem Seal Driver 3365.

- Remove plastic sleeve again.

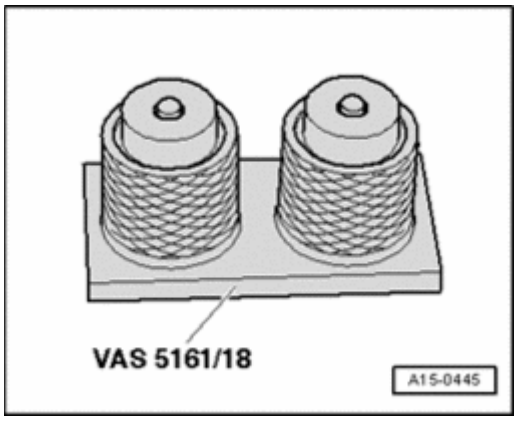

Fig. 436: Identifying Installation Cartridge VAS 5161/8
Courtesy of VOLKSWAGEN UNITED STATES, INC.

If the valve keepers were removed from the installation cartridge, they must then be inserted into the valve keeper insertion device VAS 5161/18.

- The large diameter of the valve keepers point upward.

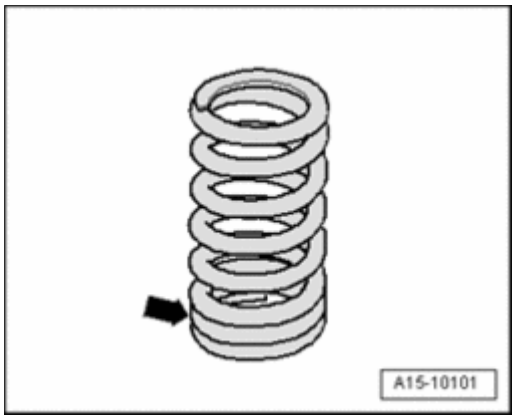

Fig. 437: Identifying Tight Spring Coils Face Toward Cylinder Head
Courtesy of VOLKSWAGEN UNITED STATES, INC.

- Install valve spring and valve spring plate.

- The tight spring coils - **arrow** - face toward cylinder head.

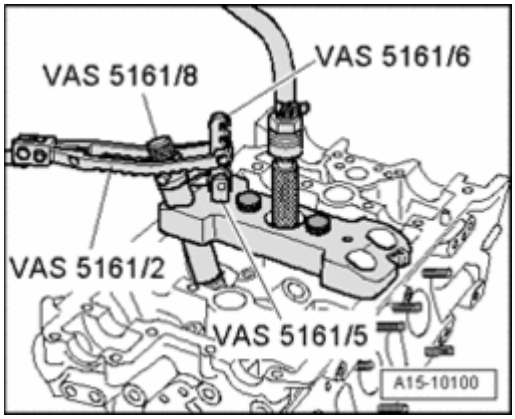

Fig. 438: Installing Engaging Device VAS 5161/6 With Installation Fork VAS 5161/5 Into Guide Plate
Courtesy of VOLKSWAGEN UNITED STATES, INC.

- Install guide plate onto cylinder head again.
- Insert installation cartridge into guide plate.
- Press the pressure fork down and pull the knurled bolt upward while turning it left and right to insert the valve keepers.
- Release pressure fork with the knurled bolt still pulled.

- Make sure all the roller rocker levers seat properly on the valve stem ends and are clipped onto the respective hydraulic adjusting elements.
- Install camshafts --> **Camshafts, Removing and Installing**.
- Install spark plugs --> **01 - MAINTENANCE** .

NOTE:

- **After installing the camshafts, the engine may not be started for**

approximately 30 minutes. The hydraulic adjusting elements must seat themselves (otherwise the valves will seat themselves on the pistons).

- **After working on the valvetrain and lifters, carefully rotate the crankshaft by hand at least 2 full revolutions before starting to be sure that valves do not strike the pistons.**

Valve Stem Seals, Cylinder Head Removed, Replacing

Valve Stem Seals, Cylinder Head Removed, Replacing

Special tools, testers and auxiliary items required

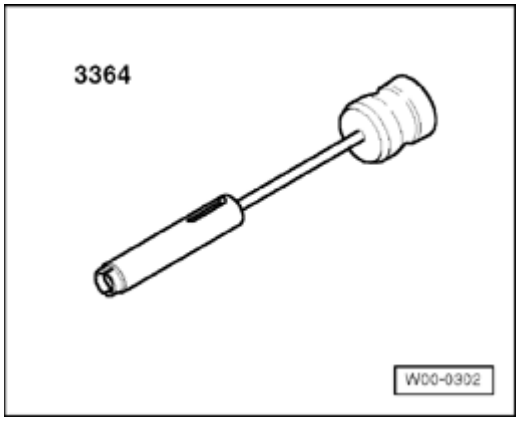

Fig. 439: Valve Seal Removal Tool 3364
Courtesy of VOLKSWAGEN UNITED STATES, INC.

- Valve Seal Removal Tool 3364

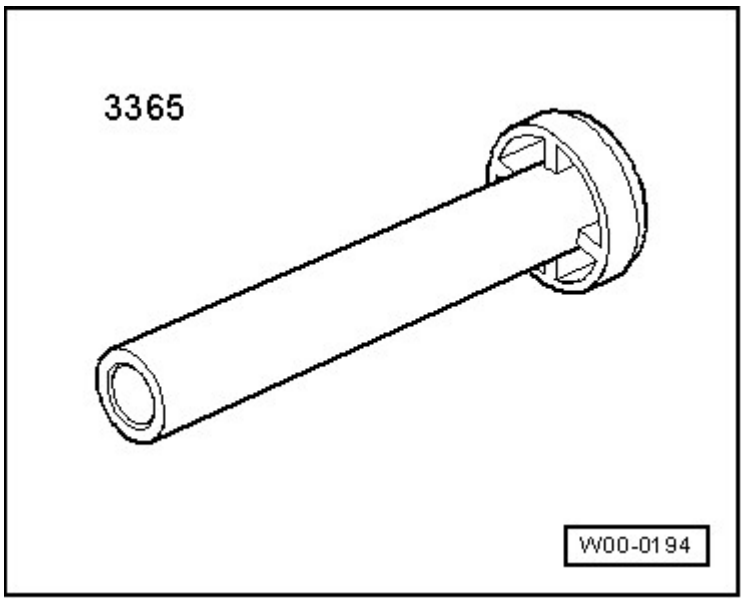

Fig. 440: Identifying Valve Stem Seal Driver 3365
Courtesy of VOLKSWAGEN UNITED STATES, INC.

- Valve stem seal driver 3365

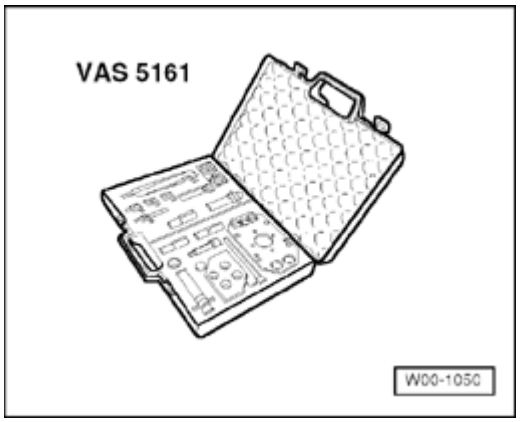

Fig. 441: Valve Cotter Disassembly/Assembly Device VAS 5161
Courtesy of VOLKSWAGEN UNITED STATES, INC.

- Valve cotter disassembly and assembly device VAS 5161

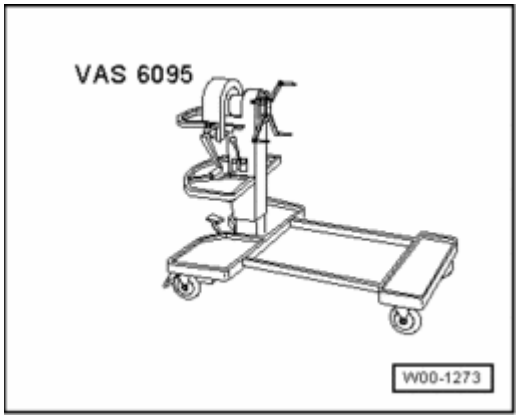

Fig. 442: Special Tool - Engine/Transmission Holder VAS 6095
Courtesy of VOLKSWAGEN UNITED STATES, INC.

- Engine and transmission holder VAS 6095
- Tensioning element VAS 6419

Procedure

- Remove camshafts --> **Camshafts, Removing and Installing**.

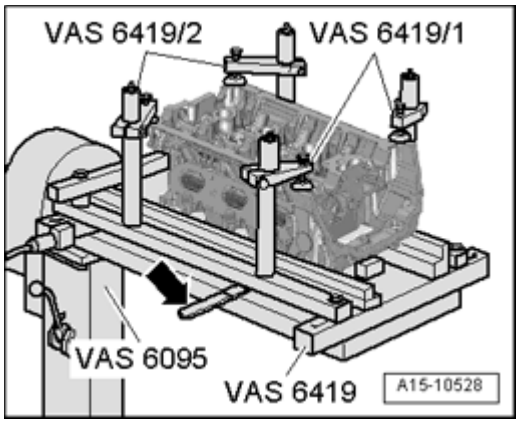

Fig. 443: Tensioning Cylinder Head On Tensioning Element VAS 6419
Courtesy of VOLKSWAGEN UNITED STATES, INC.

- Insert tensioning element VAS 6419 in the engine and transmission holder VAS 6095.
- Tension the cylinder head on the tensioning element VAS 6419 as shown in the illustration.
- Connect the tensioning element VAS 6419 to compressed air.
- Slide the air cushion with the lever - **arrow** - under the cylinder onto the valve stem seal that will be removed.
- Let enough compressed air flow into the air cushion until it contacts the valve plate.

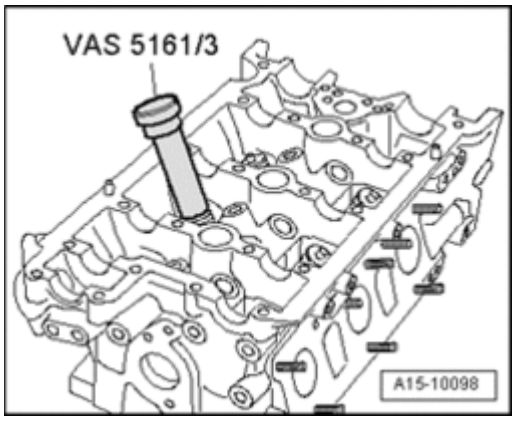

Fig. 444: Placing Drift VAS 5161/3 On Valve Spring Plate And Loosening Stuck Valve Keepers Using Plastic Hammer
Courtesy of VOLKSWAGEN UNITED STATES, INC.

- Place drift VAS 5161/3 on valve spring plate and loosen stuck valve keepers using a plastic hammer.

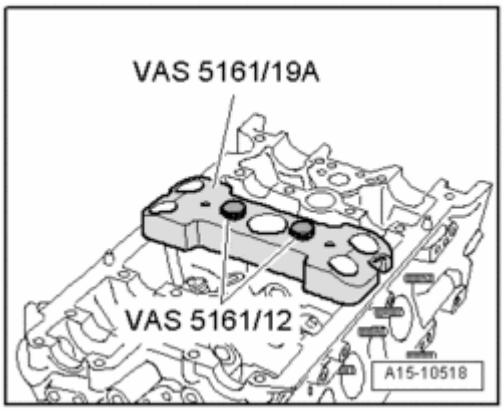

Fig. 445: Placing Guide Plate VAS 5161/19 A From Valve Cotter Disassembly/Assembly Device VAS 5161 On Cylinder Head
Courtesy of VOLKSWAGEN UNITED STATES, INC.

- Place guide plate VAS 5161/19 A from valve cotter disassembly and assembly device VAS 5161 on cylinder head.
- Secure guide plate with knurled screws VAS 5161/12.

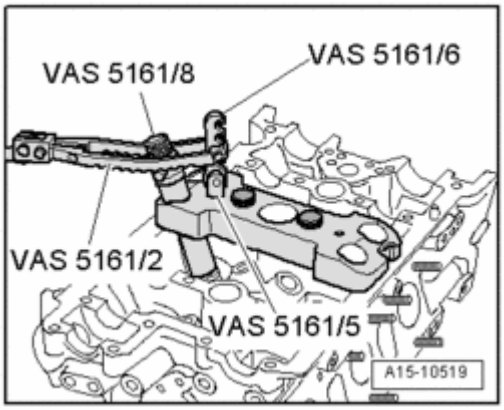

Fig. 446: Installing Engaging Device VAS 5161/6 With Installation Fork VAS 5161/5 Into Guide Plate
Courtesy of VOLKSWAGEN UNITED STATES, INC.

- Install engaging device VAS 5161/6 with installation fork VAS 5161/5 into guide plate.
- Push installation cartridge VAS 5161/8 into guide plate.
- Hook in pressure fork VAS 5161/2 at engaging device and press down installation cartridge.
- At the same time, turn knurled bolt of installation cartridge to the right, until the points engage in the valve keepers.

- Lightly move knurled bolt back and forth, causing the valve keepers to be pressed apart and be captured in the installation cartridge.
- Release pressure fork.
- Take out installation cartridge.
- Unfasten guide plate and turn it aside.

- Remove valve spring with valve spring plate.

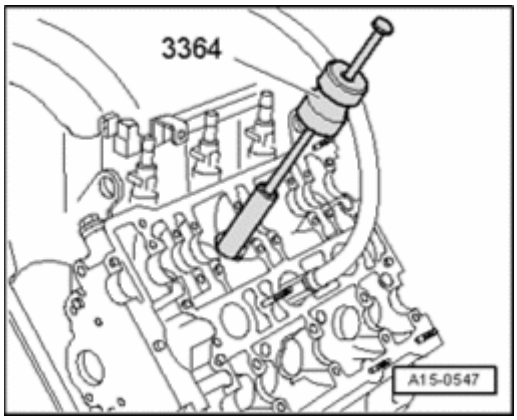

Fig. 447: Removing Valve Stem Oil Seals Using Valve Seal Removal Tool 3364
Courtesy of VOLKSWAGEN UNITED STATES, INC.

- Pull off valve stem oil seals using Valve Seal Removal Tool 3364.

NOTE:

- **A plastic sleeve - A - is supplied with the new valve shaft seals.**

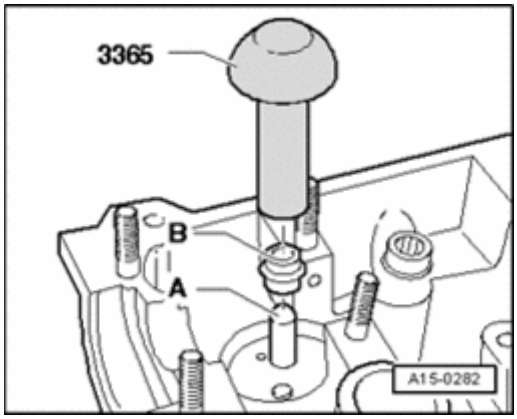

Fig. 448: Identifying Plastic Sleeve, Valve Stem Oil Seal & Valve Stem Seal Driver 3365
Courtesy of VOLKSWAGEN UNITED STATES, INC.

- Place plastic sleeve - **A** - on valve stem to prevent damage to new valve stem seals - **B** -.
- Lightly coat sealing lips of valve stem seal with oil.
- Push valve stem seal onto plastic sleeve.
- Carefully press valve stem oil seal onto valve guide using Valve Stem Seal Driver 3365.

- Remove plastic sleeve again.

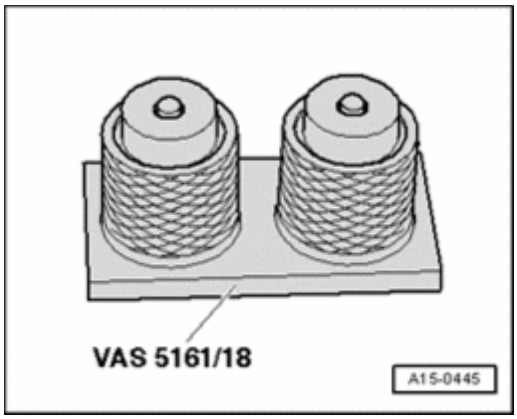

Fig. 449: Identifying Installation Cartridge VAS 5161/8
Courtesy of VOLKSWAGEN UNITED STATES, INC.

If the valve keys were removed from the installation cartridge, they must be inserted into insertion device VAS 5161/18 next.

- The large diameter of the valve keepers point upward.

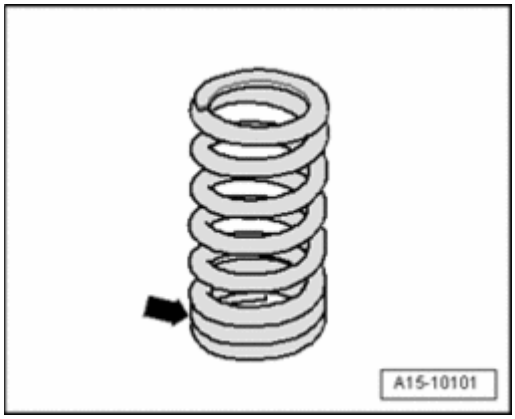

Fig. 450: Identifying Tight Spring Coils Face Toward Cylinder Head
Courtesy of VOLKSWAGEN UNITED STATES, INC.

- Install valve spring and valve spring plate.
- The tight spring coils - **arrow** - face toward cylinder head.

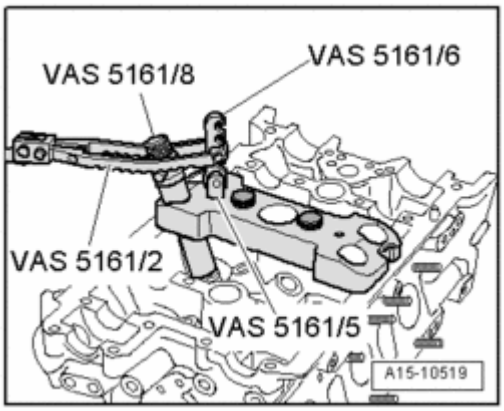

Fig. 451: Installing Engaging Device VAS 5161/6 With Installation Fork VAS 5161/5 Into Guide Plate
Courtesy of VOLKSWAGEN UNITED STATES, INC.

- Install guide plate onto cylinder head again.
- Insert installation cartridge into guide plate.
- Press pressure fork down and pull the knurled bolt upward while turning it left and right to insert the valve keepers.
- Release pressure fork with the knurled bolt still pulled.

- Make sure all the roller rocker levers seat properly on the valve stem ends and are clipped onto the respective hydraulic adjusting elements.
- Install camshafts --> **Camshafts, Removing and Installing**.

Hydraulic Adjusting Elements, Checking

Hydraulic Adjusting Elements, Checking

Special tools, testers and auxiliary items required

- Feeler gauge

NOTE:

- **The hydraulic adjusting elements cannot be repaired.**
- **Irregular valve noises are normal while starting the engine.**

Procedure

- Start the engine and let it run until the radiator fan has switched on once.
- Increase engine speed for about 2 minutes to approximately 2500 RPM, perform road test if necessary.

If the hydraulic adjusting elements are still loud, determine which element is faulty:

- Remove cylinder head cover.
- Rotate crankshaft until lobes on the adjusting element to be checked face upward:

- Vehicles with manual transmission: With 4th gear engaged and ignition switched off, slide forward.
- Vehicles with Multitronic transmission or automatic transmission 09L: Rotate crankshaft clockwise at ribbed belt pulley center bolt.

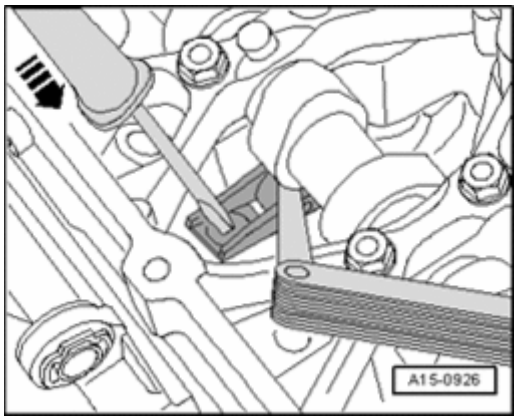

Fig. 452: Checking Play Between Cam Lobes And Roller Rocker Lever
Courtesy of VOLKSWAGEN UNITED STATES, INC.

- Check play between cam lobes and roller rocker lever.
- Press roller rocker lever down with screwdriver - **arrow** -.

If a 0.20 mm feeler gauge can be inserted between camshaft and roller rocker lever:

- Replace hydraulic adjuster --> **Camshafts, Removing and Installing**.

NOTE:

- **After installing the camshafts, the engine may not be started for approximately 30 minutes. The hydraulic adjusting elements must seat themselves (otherwise the valves will seat themselves on the pistons).**
- **After working on the valvetrain and lifters, carefully rotate the crankshaft by hand at least 2 full revolutions before starting to be sure that valves do not strike the pistons.**

Valve Dimensions

Valve Dimensions

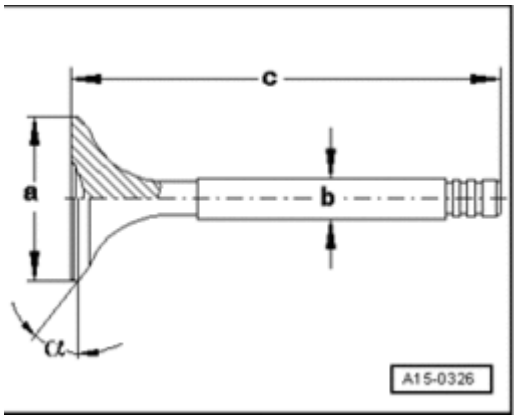

Fig. 453: Valve Dimensions
Courtesy of VOLKSWAGEN UNITED STATES, INC.

NOTE:

- **Intake and exhaust valves must not be refaced by grinding. Only lapping is permitted.**

Dimension		Intake valve	Exhaust valve
Dia. a	mm	33.85 ± 0.310	28.0 ± 0.1
Dia. b	mm	5.98 ± 0.01	5.96 ± 0.01
c	mm	104.0 ± 0.2	101.9 ± 0.2
a	Angle°	45	45

CAUTION:

- **Worn sodium-filled exhaust valves must not be scrapped without first being properly treated.**
- **Using a metal saw, the valves must be cut into two pieces between the shaft center and valve head. While doing this, do not come into contact with water. At the very most, throw 10 of the prepared valves into a bucket filled with water. Then, move quickly away, because a sudden chemical reaction will occur during which the sodium is burnt away.**
- **The treated parts may then be discarded through conventional disposal channels.**

Valve Guides, Checking

Valve Guides, Checking

Special tools, testers and auxiliary items required

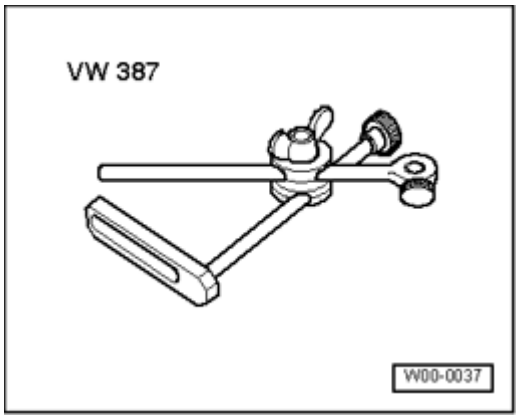

Fig. 454: Dial Gauge Holder VW 387
Courtesy of VOLKSWAGEN UNITED STATES, INC.

- Dial gauge holder VW 387

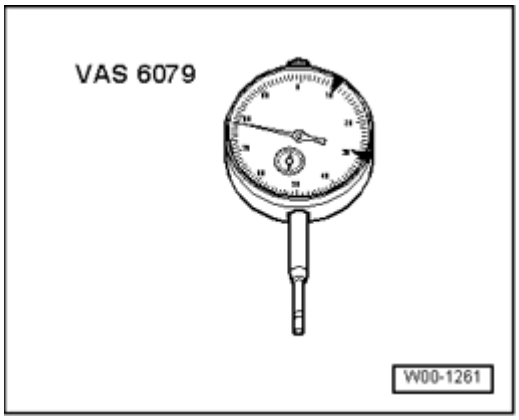

Fig. 455: Dial Gauge VAS 6079
Courtesy of VOLKSWAGEN UNITED STATES, INC.

- Dial gauge VAS 6079

Procedure

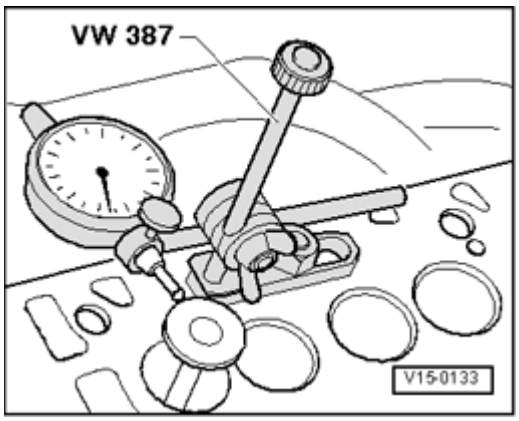

Fig. 456: Identifying Special Tool - VW 387 Installed

Courtesy of VOLKSWAGEN UNITED STATES, INC.

- Insert valve into valve guide. Due to the slight difference in stem dimensions, ensure that only an intake valve is used in the intake guide and an exhaust valve in the exhaust guide.
- Valve stem tip must seal with valve guide.
- Determine tilt clearance.
- Wear limit: 0.8 mm.

NOTE:

- **If the valve is to be replaced as part of a repair, use a new valve for the calculation.**
- **If wear limit is exceeded, re-measure using new valves. If wear limit is still exceeded, replace cylinder head.**

Valves, Checking

Valves, Checking

- Perform a visual check for signs of wear at stem and at seating surface.

If significant wear is discovered:

- Replace respective valve.

17 - ENGINE LUBRICATION

LUBRICATION SYSTEM COMPONENTS, REMOVING AND INSTALLING

Lubrication System Components, Removing and Installing

--> **Oil Pan Sections, Oil Pump and Oil Cooler, Component Overview**

--> **Oil Cooler, Removing and Installing**

--> **Oil Pan Lower Section, Removing and Installing**

--> **Oil Pump, Removing and Installing**

--> **Oil Pan Upper Section, Removing and Installing**

--> **Oil Filter Housing, Component Overview**

--> **Oil Filter Housing, Removing and Installing**

--> **Oil Check Valves, Oil Separator, Component Overview**

--> **Oil Pressure Switch, Removing and Installing**

--> **Oil Pressure, Checking**

--> **Engine Oil Specifications**

--> **Oil Level, Checking**

NOTE:

- **If large quantities of metal shavings or abraded material are found in the engine oil while servicing the engine, the oil passages must be carefully cleaned to prevent resulting damage and the oil cooler must be replaced.**
- **The oil level must not be above the max. mark - danger of damage to catalytic converter!**
- **Oil capacities, specifications and viscosity classes --> Fluid Capacity Chart located in ServiceNet.**

OIL PAN SECTIONS, OIL PUMP AND OIL COOLER, COMPONENT OVERVIEW

Oil Pan Sections, Oil Pump and Oil Cooler, Component Overview

NOTE:

- **Oil injector jet for piston cooling --> Oil spray jet for piston cooling**

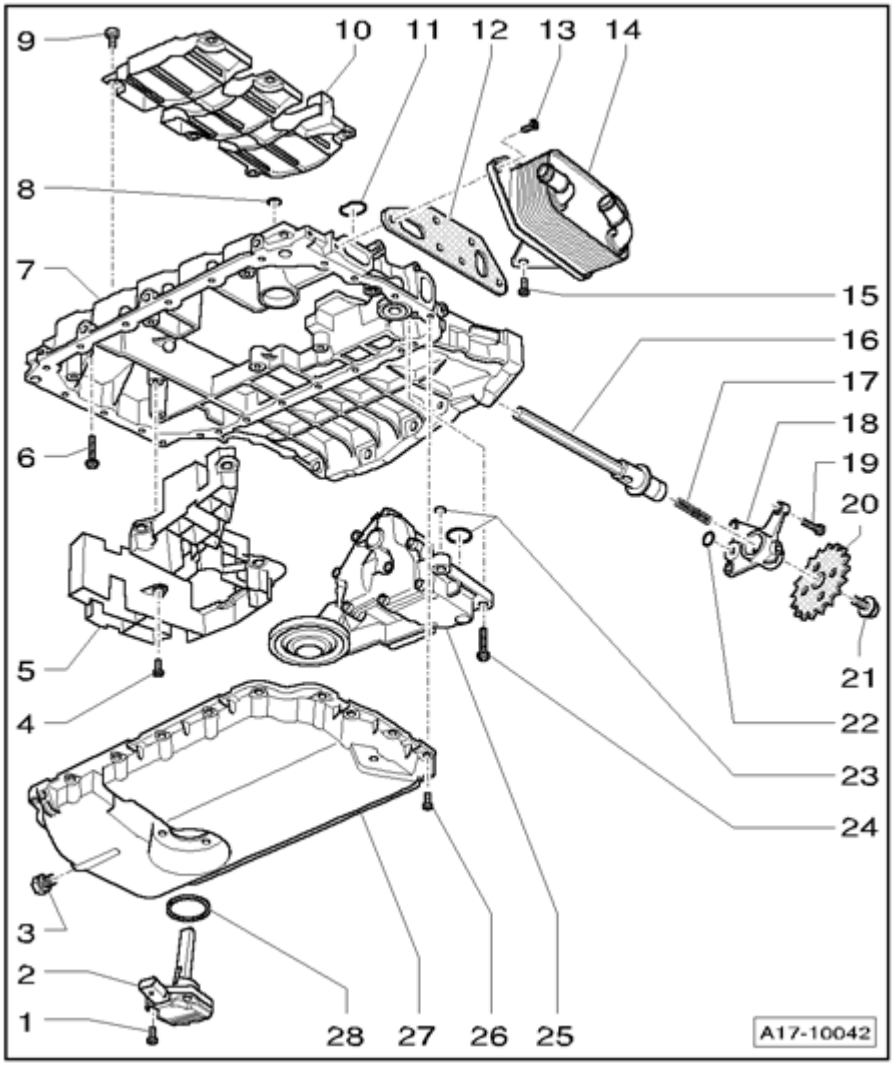

Fig. 457: Oil Pan Sections, Oil Pump And Oil Cooler, Component Overview
Courtesy of VOLKSWAGEN UNITED STATES, INC.

1 - 9 Nm

- Depending on the version, bolt or nut
- Insert with locking compound; Locking compound .

2 - Oil Level Thermal Sensor G266

3 - Oil drain plug - 30 Nm

4 - 9 Nm

5 - Lower oil baffle

6 - 16 Nm

- Fasten in diagonal sequence in steps

7 - Oil pan (upper section)

- Removing and installing --> **Oil Pan Upper Section, Removing and Installing**

8 - O-ring

- Replace

9 - 9 Nm

- Insert with locking compound; Locking compound .

10 - Upper oil baffle

11 - Gasket

- Replace

12 - Gasket

- Replace

13 - 9 Nm

14 - Oil cooler

- See note
- Removing and installing --> **Oil Cooler, Removing and Installing**
- With oil cooler by-pass valve

15 - 9 Nm

16 - Drive shaft for oil pump

17 - Spring

18 - Bracket

19 - 9 Nm

20 - Chain sprocket for oil pump

- Can only be placed onto drive shaft in one position

21 - 30 Nm plus an additional 90 ($^1/_4$ turn)

- Replace
- To loosen, counterhold on sprocket with Spanner Wrench 3212

22 - O-ring

- Replace

23 - O-rings

- Replace

24 - 20 Nm

25 - Oil pump

- Do not disassemble
- With cold pressure relief valve 11 bar and pressure regulator valve 4.3 bar
- Removing and Installing

26 - Bolt

Aluminum oil pan lower part:

- 9 Nm
- Fasten in diagonal sequence in steps

Metal oil pan lower part:

- Replace
- 5 Nm plus an additional 90 ($^1/_4$ turn)
- Fasten in diagonal sequence in steps

27 - Oil pan (lower section)

- Different versions
- Removing and installing --> **Oil Pan Lower Section, Removing and Installing**

28 - Seal

- Replace

Oil spray jet for piston cooling

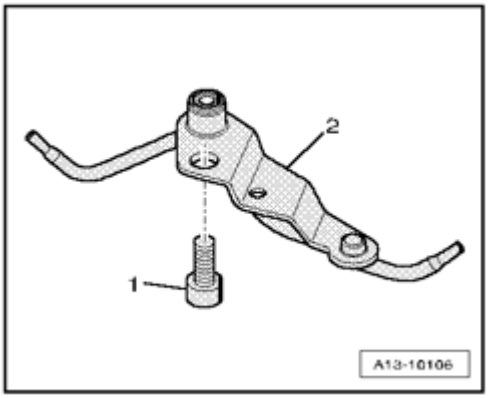

Fig. 458: Oil Spray Jet For Piston Cooling
Courtesy of VOLKSWAGEN UNITED STATES, INC.

1. Install bolt - 9 Nm - using a locking compound
2. Oil spray jet with spray nozzle valve

OIL COOLER, REMOVING AND INSTALLING

Oil Cooler, Removing and Installing

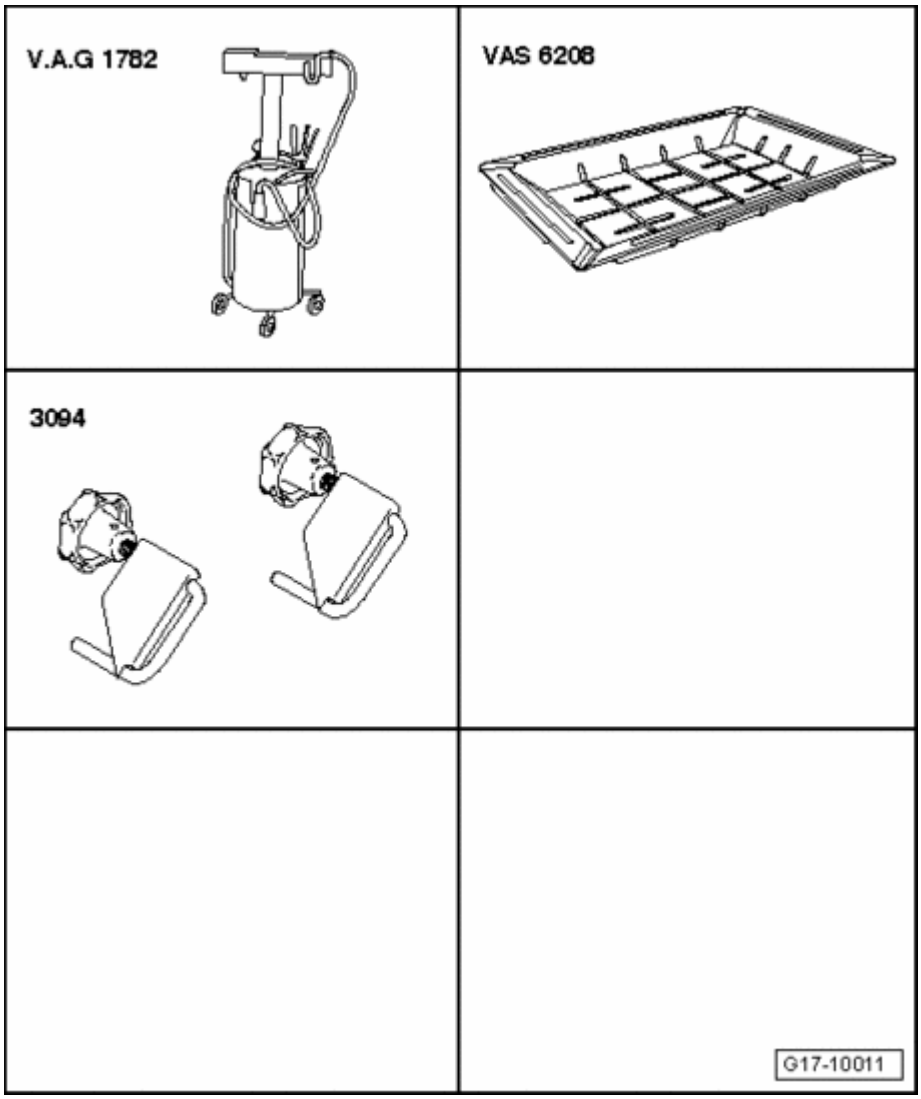

Fig. 459: Identifying Special Tools - Oil Cooler, Removing And Installing
Courtesy of VOLKSWAGEN UNITED STATES, INC.

Special tools, testers and auxiliary items required

- Old oil collecting and extracting device V.A.G 1782
- Drip tray for workshop crane VAS 6208
- Hose Clamps Up to 25 mm dia. 3094

Removing

CAUTION: Cover cap of expansion tank with rag and open carefully, as hot steam i.e. hot coolant may escape when opening.

- Open cap of coolant expansion tank.

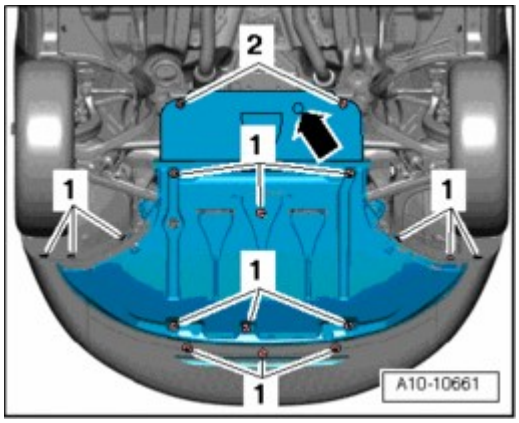

Fig. 460: Identifying Noise Insulation And Mountings
Courtesy of VOLKSWAGEN UNITED STATES, INC.

- Remove noise insulation and the mountings - **1, 2** - - **arrow** - where present.
- Place old oil collecting and extracting device V.A.G 1782 under engine.
- Drain engine oil.

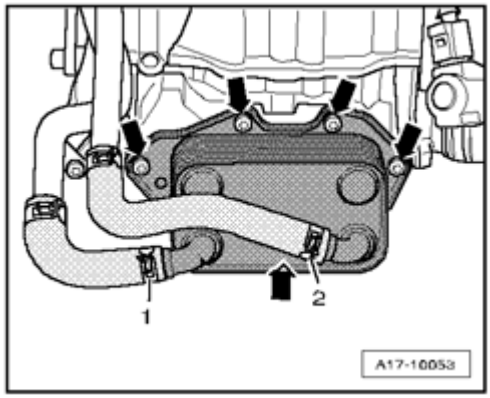

Fig. 461: Connecting/Removing Coolant Hoses With Hose Clamps
Courtesy of VOLKSWAGEN UNITED STATES, INC.

- Place drip tray for workshop crane VAS 6208 under engine.
- Connect coolant hoses - **21** - and - **2** - with Hose Clamps Up to 25 mm dia. 3094.
- Remove coolant hoses on oil cooler and drain coolant.
- Place old oil collecting and extracting device V.A.G 1782 under engine.

- Remove bolts - **arrows** - and remove oil cooler.

Installing

Installation is in reverse order of removal, noting the following:

NOTE:

- **Always replace gaskets and seals.**

- **Secure all hose connections with hose clamps appropriate for the model .**

- Add engine oil and check oil level --> **Oil Level, Checking** .
- Fill with coolant -->**Cooling System, Draining and Filling** .

Tightening Specifications

Component	Nm
Oil cooler to oil pan (upper part)	9
Oil drain plug	30

OIL PAN LOWER SECTION, REMOVING AND INSTALLING

Oil Pan Lower Section, Removing and Installing

Special tools, testers and auxiliary items required

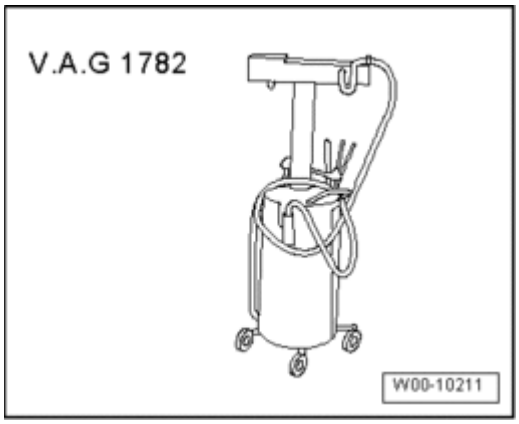

Fig. 462: Identifying Old Oil Collecting And Extracting Device V.A.G 1782
Courtesy of VOLKSWAGEN UNITED STATES, INC.

- Old oil collecting and extracting device V.A.G 1782
- Hand drill with plastic brush attachment
- Protective glasses
- Sealant

Removing

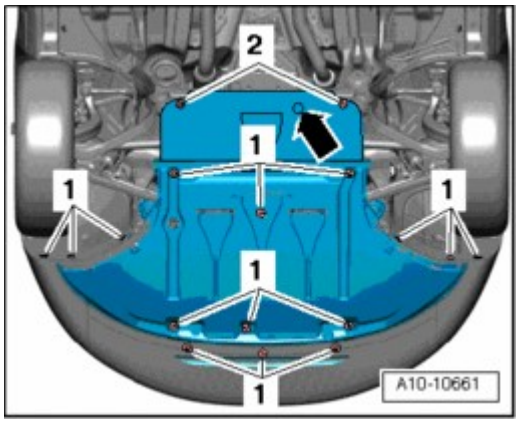

Fig. 463: Identifying Noise Insulation And Mountings
Courtesy of VOLKSWAGEN UNITED STATES, INC.

- Remove noise insulation and the mountings - **1, 2** - - **arrow** - where present.

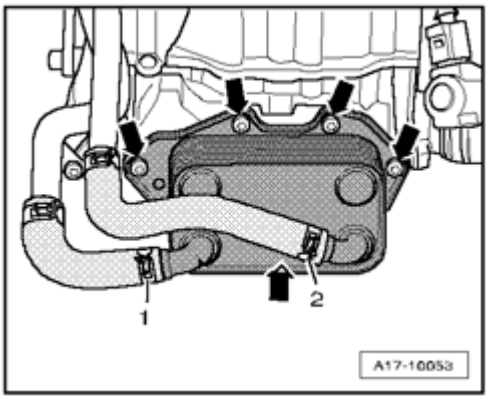

Fig. 464: Connecting/Removing Coolant Hoses With Hose Clamps
Courtesy of VOLKSWAGEN UNITED STATES, INC.

- Place old oil collecting and extracting device V.A.G 1782 under engine.
- Drain engine oil.
- Remove bolts - **arrows** - and remove oil cooler with coolant hoses - **1** - and - **2** - connected.

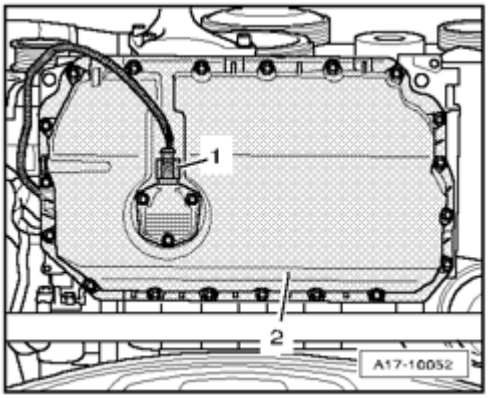

Fig. 465: Disconnecting Electrical Connector To Oil Level Thermal Sensor G266 And Free Up Lines
Courtesy of VOLKSWAGEN UNITED STATES, INC.

- Disconnect electrical connector - **1** - to Oil Level Thermal Sensor G266 - **arrow** - and free up lines.
- Carefully loosen the metal lower section of the oil pan from the bond without bending it.

Installing

NOTE:
- **Always replace gaskets and seal.**
- **Replace the metal lower section of the oil pan if the coating on it is damaged or if it is bent.**

CAUTION: Wear safety glasses.

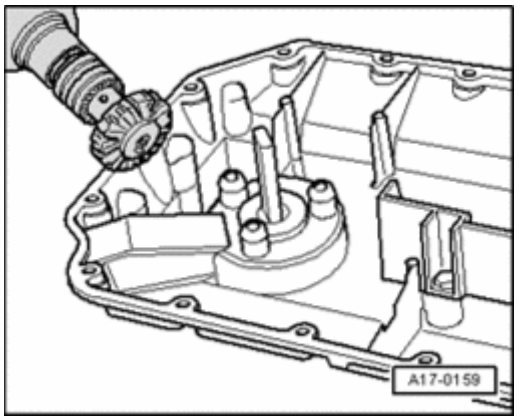

Fig. 466: Using Rotating Plastic Brush To Remove Any Remaining Sealant From Oil Pan (Lower Part) And At Upper Part
Courtesy of VOLKSWAGEN UNITED STATES, INC.

- Using rotating plastic brush, remove any remaining sealant from lower part of oil pan and upper part.

NOTE:
- **Make sure the coating on the metal lower section of the oil pan is not damaged.**

- Clean sealing surfaces so they are completely free of any oil or grease.

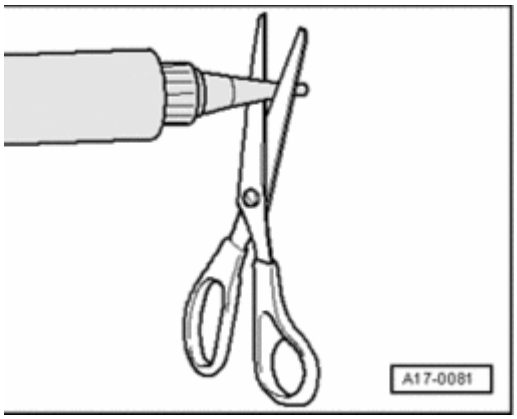

Fig. 467: Cutting Tube Nozzle At Front Marking
Courtesy of VOLKSWAGEN UNITED STATES, INC.

- Cut tube nozzle at front marking (dia. of nozzle approximately 1 mm).

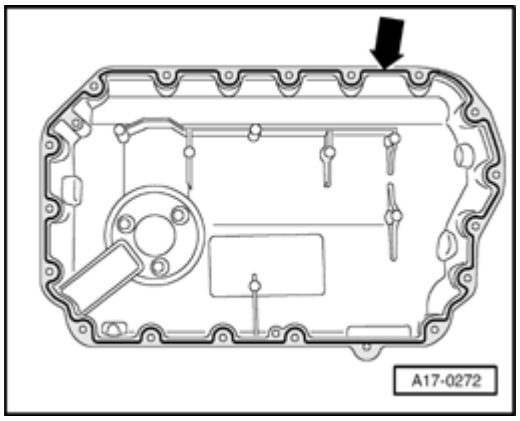

Fig. 468: Applying Sealant Bead To Clean Sealing Surfaces Of Oil Pan (Lower Part)
Courtesy of VOLKSWAGEN UNITED STATES, INC.

- Apply sealant bead - **arrow** - to clean sealing surfaces of oil pan (lower part) as shown in illustration.

- Thickness of sealant bead: approximately 1.5 mm.

NOTE:

- **Sealant bead must not be thicker than specified, otherwise excess sealant may get into lower section of oil pan and clog strainer in intake tube.**
- **The oil pan (lower part) must be installed within 5 minutes after application of sealant.**

- Position the oil pan lower section and tighten all the bolts in a diagonal sequence to 5 Nm.
- Fasten bolts for lower part of oil pan in a diagonal sequence.
- Install oil cooler --> **Oil Cooler, Removing and Installing**.
- Add engine oil and check oil level --> **Oil Level, Checking** .

Tightening Specifications

Component	Nm
Oil cooler to oil pan (upper part)	9
Aluminum oil pan lower part to oil pan upper part	9 1)
Metal oil pan lower part to oil pan upper part	5 + 90° 1)2)3)
Oil drain plug	30
1) Tighten diagonally. 2) Replace bolts. 3) 90° corresponds to a quarter turn.	

OIL PUMP, REMOVING AND INSTALLING

Oil Pump, Removing and Installing

Removing

- Remove lower section of oil pan --> **Oil Pan Lower Section, Removing and Installing**.

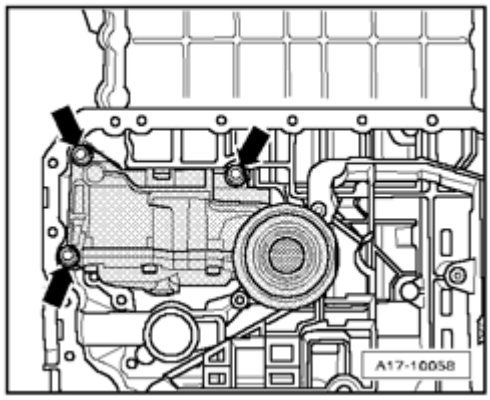

Fig. 469: Removing Oil Pump Bolts
Courtesy of VOLKSWAGEN UNITED STATES, INC.

- Remove bolts - **arrows** -.
- Pull oil pump forward from the drive shaft; if necessary, push the drive shaft slightly to the rear.

Installing

Installation is in reverse order of removal, noting the following:

NOTE:

- **Replace O-rings.**

- Install oil pump onto the drive shaft and fasten.
- Install lower section of oil pan --> **Oil Pan Lower Section, Removing and Installing**.
- Add engine oil and check oil level --> **Oil Level, Checking** .

Tightening specifications

Component	Nm
Oil pump to upper part of oil pan	20

OIL PAN UPPER SECTION, REMOVING AND INSTALLING

Oil Pan Upper Section, Removing and Installing

Special tools, testers and auxiliary items required

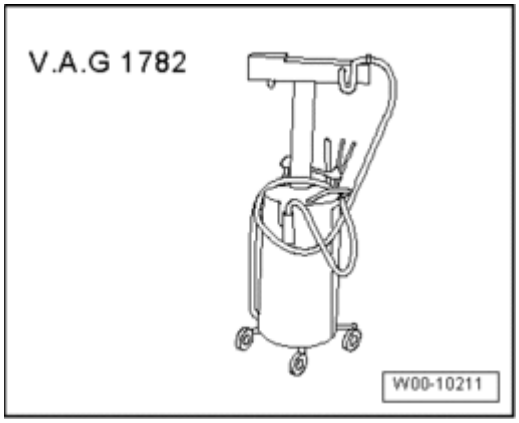

Fig. 470: Identifying Old Oil Collecting And Extracting Device V.A.G 1782
Courtesy of VOLKSWAGEN UNITED STATES, INC.

- Old oil collecting and extracting device V.A.G 1782
- Protective glasses
- Hand drill with plastic brush attachment
- Sealant

Removing

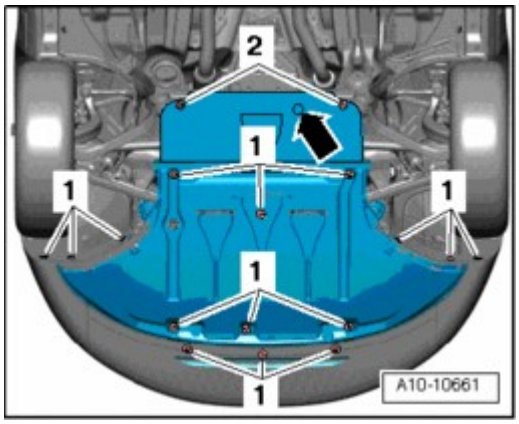

Fig. 471: Identifying Noise Insulation And Mountings
Courtesy of VOLKSWAGEN UNITED STATES, INC.

- Remove noise insulation and mountings - **1, 2** - - **arrow** - where present.

- Place old oil collecting and extracting device V.A.G 1782 under engine.
- Drain engine oil.
- Remove engine:

- Vehicles with multitronic transmission --> **Engine, with Multitronic Transmission, Removing and Installing**.
- Vehicles with automatic transmission 09L --> **Engine, Removing**.

- Separate engine/transmission assembly:

- Vehicles with multitronic transmission --> **Engine and Transmission, Separating**.
- Vehicles with automatic transmission 09L --> **Engine and Automatic Transmission 09L, Separating**.

- Secure engine to assembly stand:

- Vehicles with multitronic transmission --> **Engine, Securing to Engine and Transmission Holder**.
- Vehicles with automatic transmission 09L --> **Engine, Securing to Engine and Transmission Holder**.

- Vehicles with multitronic transmission: Remove damper unit --> **Damper Unit, Removing and Installing** and flywheel --> **Flywheel, Multitronic Transmission, Removing and Installing**.
- Vehicles with automatic transmission 09L: Remove drive plate --> **Drive Plate, Automatic Transmission 09L, Removing and Installing**.
- Remove lower timing chain cover --> **Lower Timing Chain Cover, Removing and Installing** .
- Remove lower section of oil pan --> **Oil Pan Lower Section, Removing and Installing**.

- Remove oil pump --> **Oil Pump, Removing and Installing**.

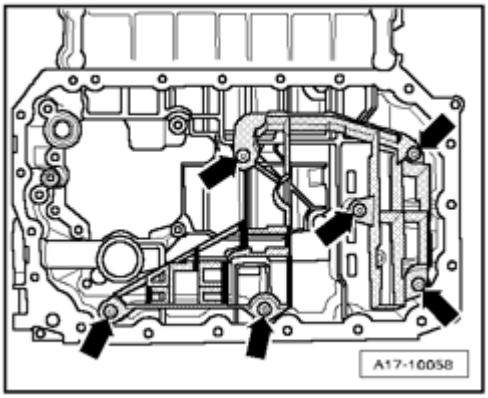

Fig. 472: Removing Bolts And Lower Oil Baffle
Courtesy of VOLKSWAGEN UNITED STATES, INC.

- Remove bolts - **arrows** - and remove lower oil baffle.

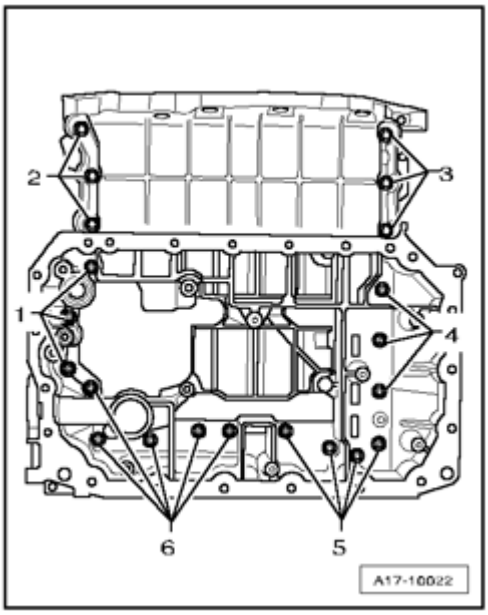

Fig. 473: Removing/Installing Bolts For Upper Section Of Oil Pan
Courtesy of VOLKSWAGEN UNITED STATES, INC.

- Remove bolts - **1 to 6** - for upper section of oil pan.
- Press upper part of oil pan from alignment pins of cylinder block.

Installing

NOTE:

- **Replace gaskets, seals and O-rings.**

- Remove sealant from grooves of upper part of oil pan and from sealing surfaces.

CAUTION: Wear safety glasses.

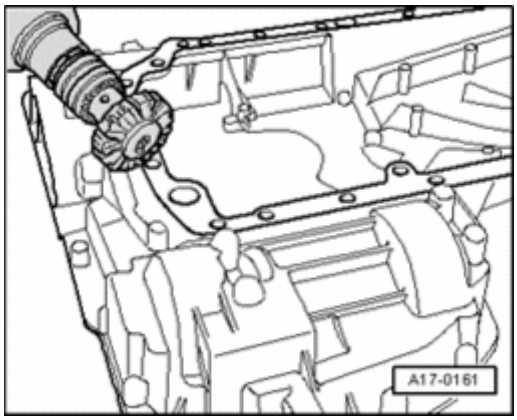

Fig. 474: Using Rotating Plastic Brush To Remove Remaining Sealant From Oil Pan (Upper Part) And

At Cylinder Block
Courtesy of VOLKSWAGEN UNITED STATES, INC.

- Using rotating plastic brush, remove any remaining sealant from upper part of oil pan and cylinder block.
- Clean sealing surfaces so they are completely free of any oil or grease.

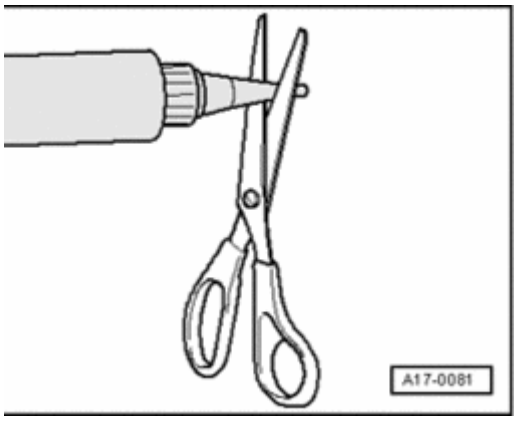

Fig. 475: Cutting Tube Nozzle At Front Marking
Courtesy of VOLKSWAGEN UNITED STATES, INC.

- Cut tube nozzle at front marking (dia. of nozzle approximately 2 mm).

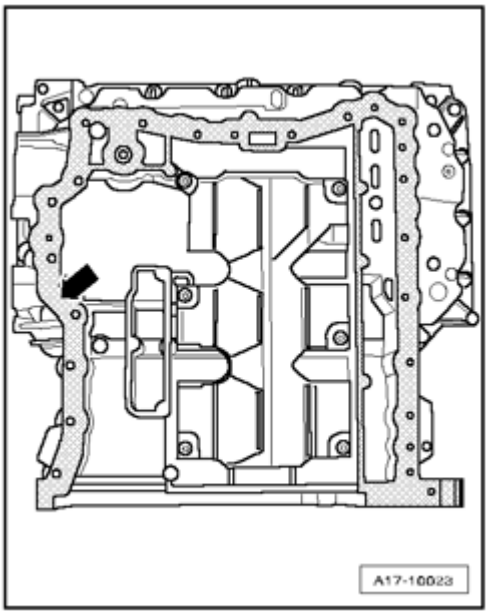

Fig. 476: Applying Sealant Bead On Clean Sealing Surface Of Upper Section Of Oil Pan
Courtesy of VOLKSWAGEN UNITED STATES, INC.

- Apply sealant bead - **arrows** - on clean sealing surface of upper section of oil pan as shown in illustration.

- The grooves - **arrows** - of sealing surfaces must be completely filled with sealant.

- The sealant bead must be 1.5 to 2.0 mm above the sealing surface.

NOTE:

- **Sealant bead must not be thicker than specified, otherwise sealant could get into oil pan and clog the oil pump strainer.**
- **The oil pan (upper part) must be installed within 5 minutes after application of sealant.**

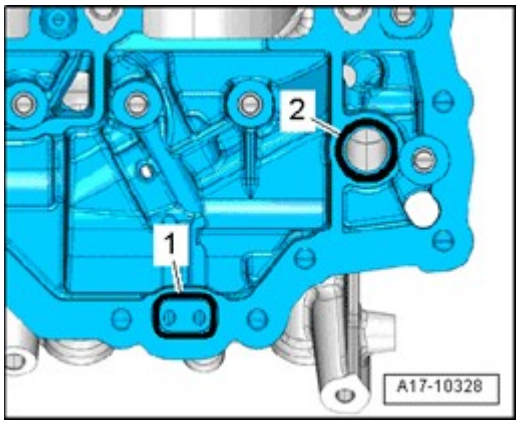

Fig. 477: Inserting Seal And O-Ring In Guide Frame
Courtesy of VOLKSWAGEN UNITED STATES, INC.

- Insert seal - **1** - and O-ring - **2** - in the guide frame.

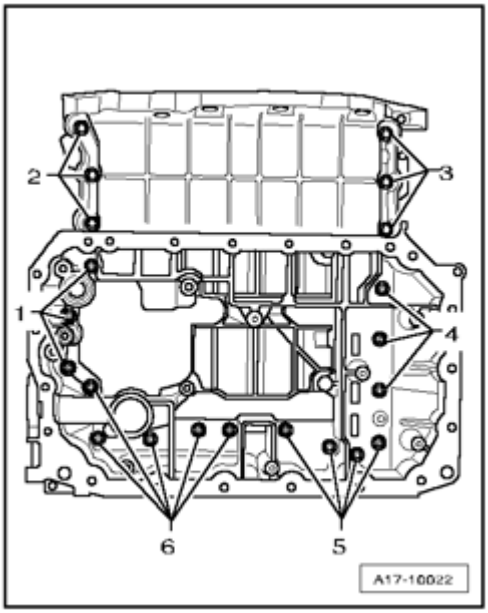

Fig. 478: Removing/Installing Bolts For Upper Section Of Oil Pan
Courtesy of VOLKSWAGEN UNITED STATES, INC.

- Position upper part of oil pan in place and tighten bolts - **1 through 6** - to 5 Nm in diagonal sequence.

- Tighten bolts - **1 to 6** - in a diagonal sequence.

Further installation is in reverse order of removal, noting the following:

- Install oil pump --> **Oil Pump, Removing and Installing**.
- Install lower section of oil pan --> **Oil Pan Lower Section, Removing and Installing**.
- Install lower timing chain cover --> **Lower Timing Chain Cover, Removing and Installing** .
- Vehicles with multitronic transmission: Install flywheel --> **Flywheel, Multitronic Transmission, Removing and Installing** and damper unit --> **Damper Unit, Removing and Installing**.
- Vehicles with automatic transmission 09L: Install drive plate --> **Drive Plate, Automatic Transmission 09L, Removing and Installing**.
- Attach transmission to engine and install engine/transmission assembly:

- Vehicles with multitronic transmission --> **Engine, Installing**
- Vehicles with automatic transmission 09L --> **Engine, Installing**

- Add engine oil and check oil level --> **Oil Level, Checking** .

Tightening Specifications

Component	Nm
Upper part of oil pan to cylinder block	16 1)
Upper oil baffle to upper part of oil pan	9 2)
Lower oil baffle to upper part of oil pan	9
1) Tighten diagonally. 2) Insert with locking compound; locking compound .	

OIL FILTER HOUSING, COMPONENT OVERVIEW

Oil Filter Housing, Component Overview

Vehicles through 04.2005

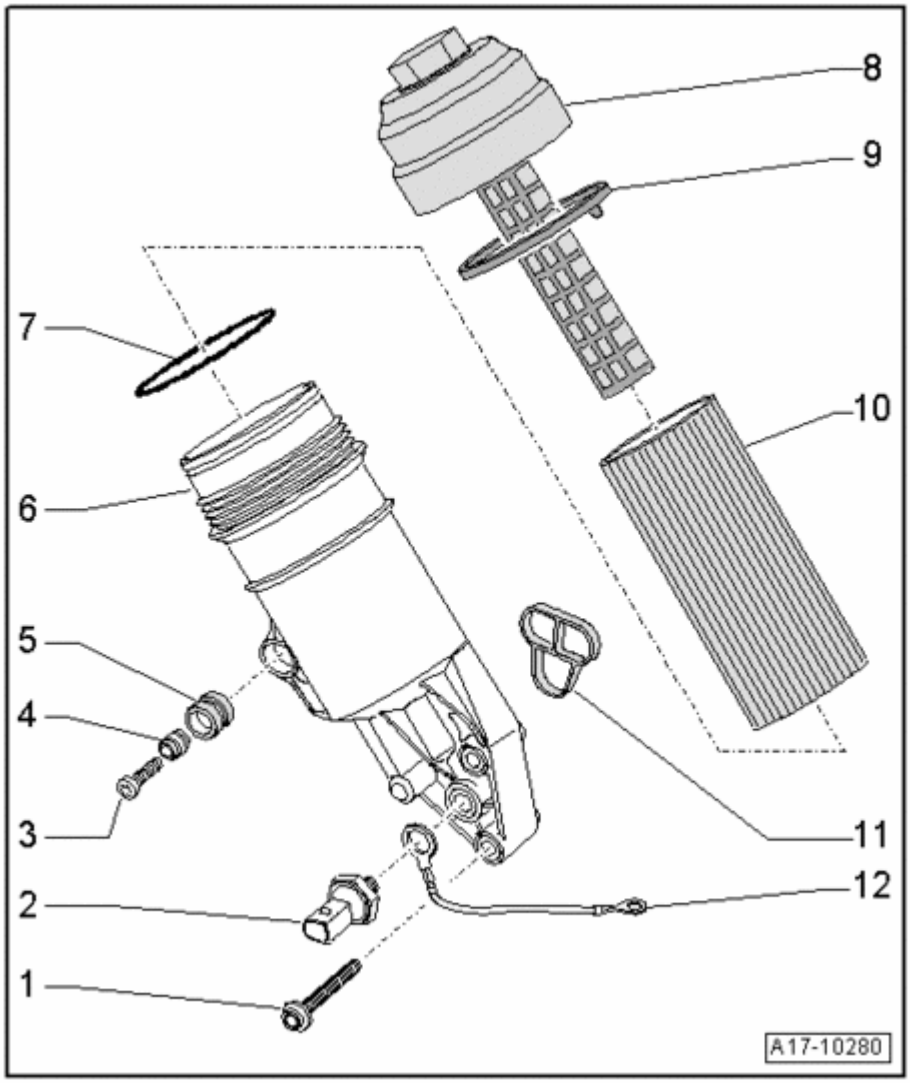

Fig. 479: Oil Filter Housing, Component Overview (Vehicles Through 04.2005)
Courtesy of VOLKSWAGEN UNITED STATES, INC.

1 - 13 Nm

2 - Oil pressure switch F1

- Black insulation
- Checking --> **Oil Pressure, Checking**
- Removing and installing --> **Oil Pressure Switch, Removing and Installing**
- Tighten to 20 Nm.

3 - 13 Nm

4 - Sleeve

5 - Rubber grommet

6 - Oil filter housing

- With filter by-pass valve 3.0 bar
- With oil check valve
- Oil check valve cannot be replaced
- Removing and installing --> **Oil Filter Housing, Removing and Installing**

7 - O-ring

- Replace
- Inserting --> **O-ring, inserting on oil filter housing**

8 - Cover - 25 Nm

9 - Seal

- Replace
- Removing and installing --> **Sealing ring on cap, replacing**

10 - Oil filter element

- Removing and installing --> **01 - MAINTENANCE**

11 - Gasket

- Replace

12 - Seal with Ground (GND) wire

- Replace

Vehicles from 05.2005

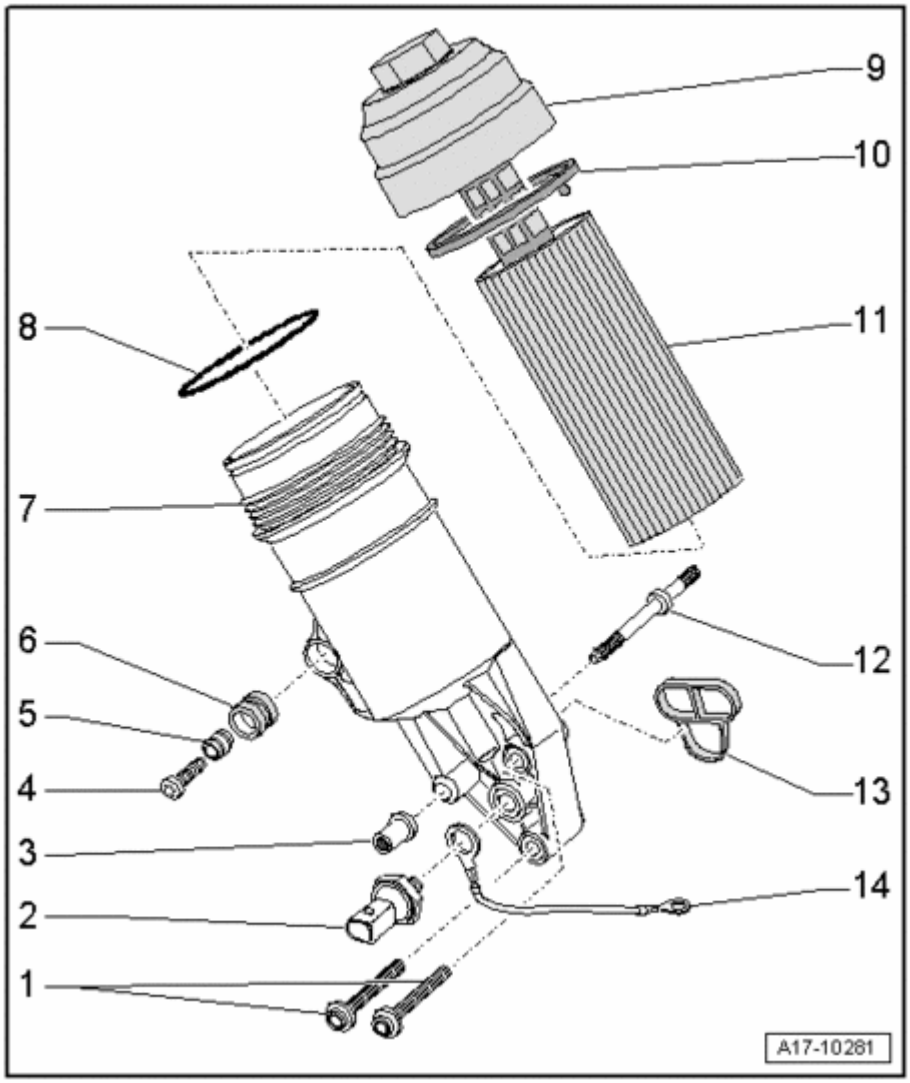

Fig. 480: Oil Filter Housing, Component Overview (Vehicles From 05.2005)
Courtesy of VOLKSWAGEN UNITED STATES, INC.

1 - 13 Nm

2 - Oil pressure switch F1

- Tighten to 20 Nm.
- Black insulation
- Removing and installing --> **Oil Pressure Switch, Removing and Installing**
- Checking --> **Oil Pressure, Checking**

3 - Multi-point socket head union nut - 13 Nm

4 - 13 Nm

5 - Sleeve

6 - Rubber grommet

7 - Oil filter housing

- With filter by-pass valve 3.0 bar
- With oil check valve
- Oil check valve cannot be replaced

8 - O-ring

- Replace
- Inserting --> **O-ring, inserting on oil filter housing**

9 - Cover - 25 Nm

10 - Seal

- Replace
- Removing and installing --> **Sealing ring on cap, replacing**

11 - Oil filter element

- Removing and installing --> **01 - MAINTENANCE**

12 - Stud bolt - 16 Nm

13 - Gasket

- Replace

14 - Seal with Ground (GND) wire

- Replace

Sealing ring on cap, replacing

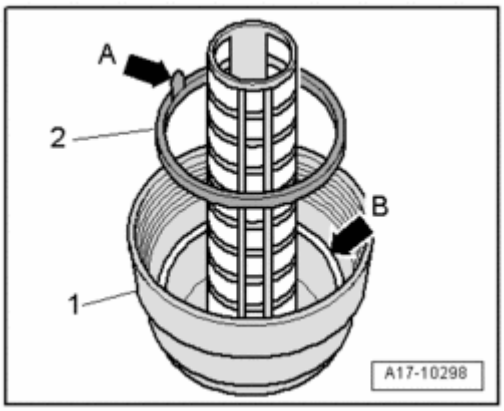

Fig. 481: Identifying Sealing Ring On Cap
Courtesy of VOLKSWAGEN UNITED STATES, INC.

- Remove sealing ring - **2** - at pull tab - **arrow A** - from cap - **1** -.
- Insert new sealing ring with semicircular profile in groove - **arrow B** - on cap.

- The pull tab - **arrow A** - must face up.

O-ring, inserting on oil filter housing

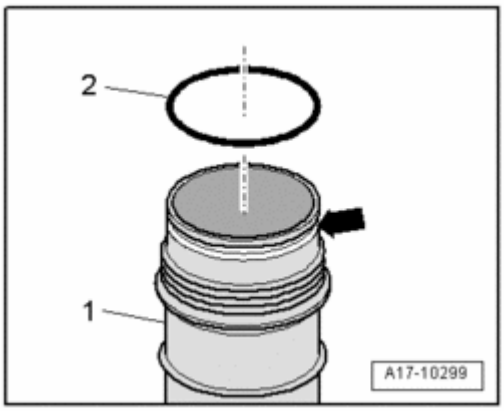

Fig. 482: Identifying Oil Filter Housing O-Ring
Courtesy of VOLKSWAGEN UNITED STATES, INC.

- Insert O-ring - **2** - in groove - **arrow** - on oil filter housing - **1** -.

OIL FILTER HOUSING, REMOVING AND INSTALLING

Oil Filter Housing, Removing and Installing

Special tools, testers and auxiliary items required

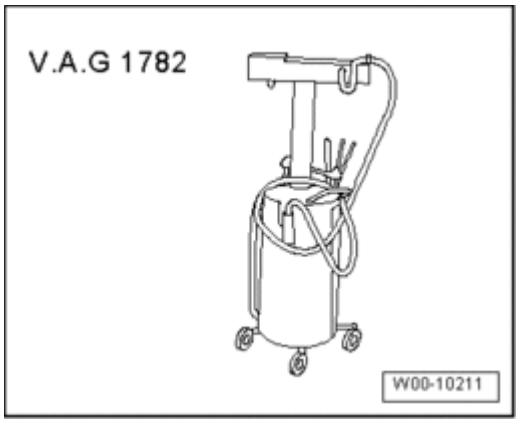

Fig. 483: Identifying Old Oil Collecting And Extracting Device V.A.G 1782
Courtesy of VOLKSWAGEN UNITED STATES, INC.

- Old oil collecting and extracting device V.A.G 1782

Removing

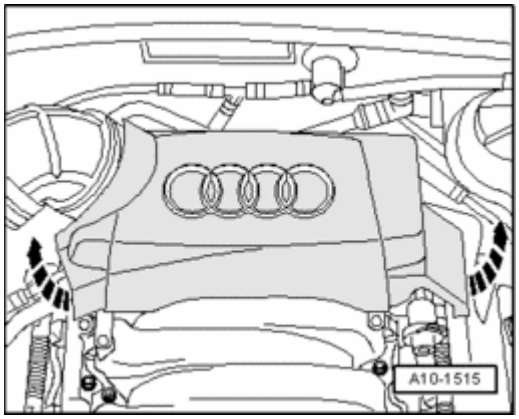

Fig. 484: Removing Rear Engine Cover
Courtesy of VOLKSWAGEN UNITED STATES, INC.

- Pull rear engine cover off - **arrows** -.

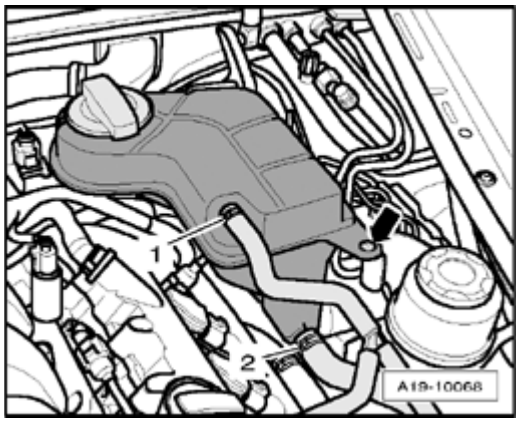

Fig. 485: Removing Coolant Hoses At Coolant Expansion Tank
Courtesy of VOLKSWAGEN UNITED STATES, INC.

- Remove coolant expansion tank - **arrow** -.
- Disconnect electrical connection from Engine Coolant Level (ECL) Warning Switch F66 at bottom of coolant reservoir and set aside coolant reservoir with coolant hoses - **1** - and - **2** - connected.

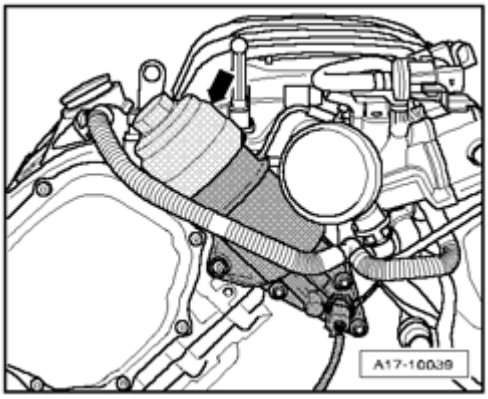

Fig. 486: Removing Cap For Oil Filter Housing
Courtesy of VOLKSWAGEN UNITED STATES, INC.

NOTE:

- **To improve clarity, the work procedures in the following illustrations are shown with the engine removed and viewed from the rear.**

- Remove cap - **arrow** - for oil filter housing.
- Remove oil filter element.
- Extract engine oil using old oil collecting and extracting device V.A.G 1782 from oil filter housing.

NOTE:

- **Place a rag under oil filter housing to catch escaping engine oil.**

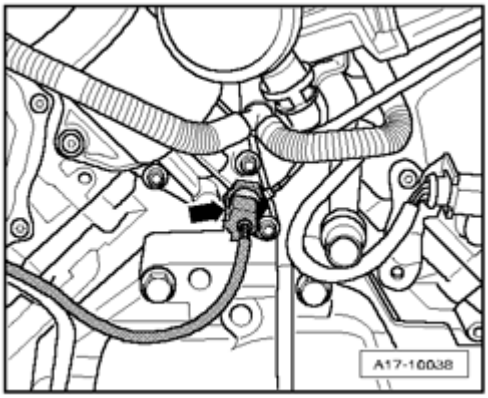

Fig. 487: Disconnecting Electrical Harness Connector From Oil Pressure Switch F1
Courtesy of VOLKSWAGEN UNITED STATES, INC.

- Disconnect electrical harness connector from Oil Pressure Switch F1 - **arrow** -.
- Remove oil pressure switch.

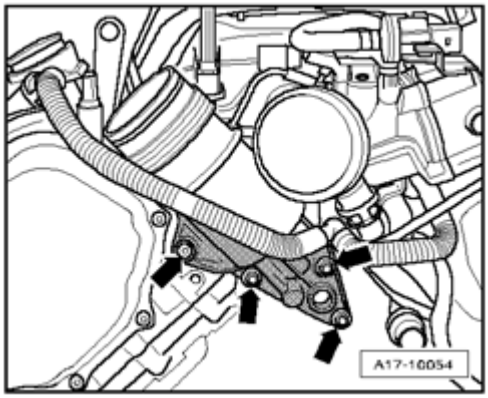

Fig. 488: Removing Oil Filter Housing Bolts
Courtesy of VOLKSWAGEN UNITED STATES, INC.

- Remove bolts - **arrows** -.
- On engines from 05.2005, also remove multi-point socket head union nut.
- Remove oil filter housing.

Installing

Installation is in reverse order of removal, noting the following:

NOTE:

- **Replace gaskets, seals and O-rings.**

- Add engine oil and check oil level --> **Oil Level, Checking** .

Tightening Specifications

Component	Nm
Oil filter housing to engine	13
Oil pressure switch to oil filter housing	20
Cap to oil filter housing	25

OIL CHECK VALVES, OIL SEPARATOR, COMPONENT OVERVIEW

Oil Check Valves, Oil Separator, Component Overview

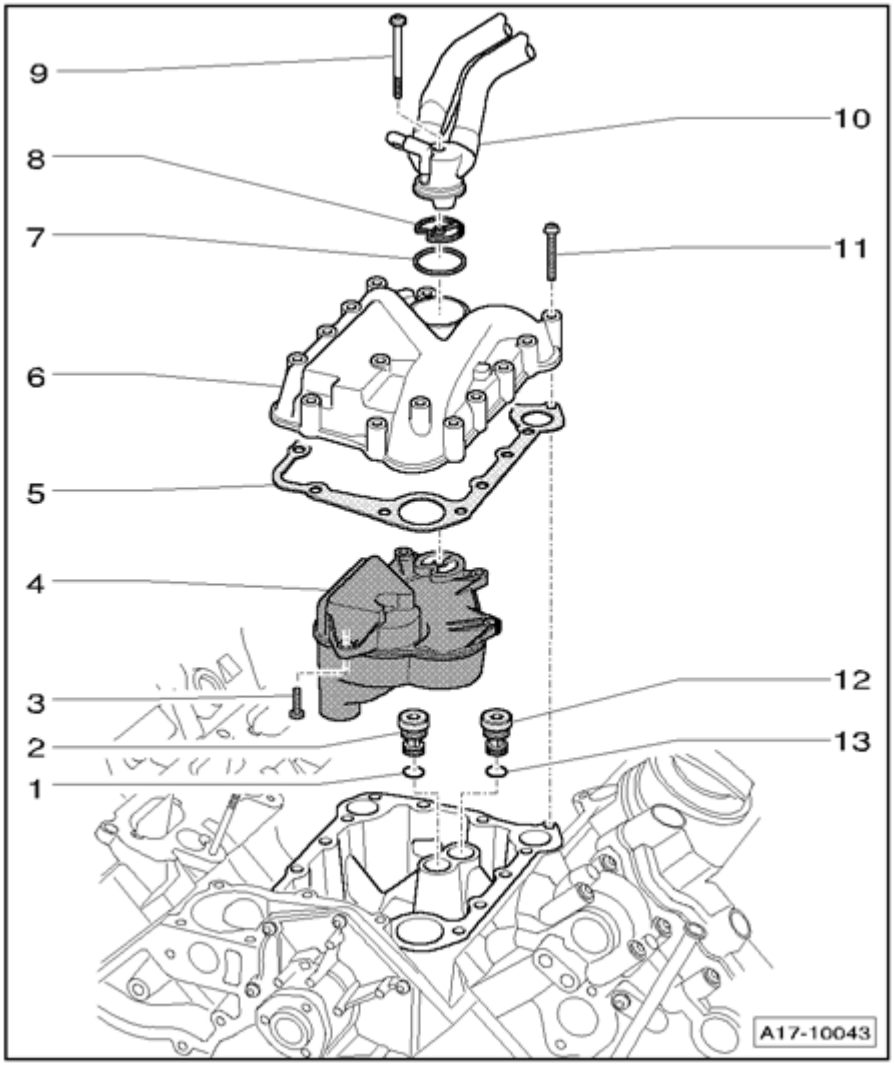

Fig. 489: Oil Check Valves, Oil Separator, Component Overview
Courtesy of VOLKSWAGEN UNITED STATES, INC.

1 - O-ring

- Replace

2 - Oil check valve - 20 Nm

- For oil supply to right cylinder head

3 - 9 Nm

4 - Oil separator

5 - Gasket

- Replace

6 - Cover

- With connection for crankshaft housing ventilation
- To remove, remove upper part of intake manifold and lower parts of left and right intake manifold --> **24 - FUEL INJECTION SYSTEM**

7 - O-ring

- Replace

8 - Gasket

- Replace

9 - 6 Nm

10 - Crankcase ventilation hoses

- Removing and installing

CAUTION: Crankcase ventilation must not be removed.

11 - 9 Nm

12 - Oil check valve - 20 Nm

- For oil supply to left cylinder head

13 - O-ring

- Replace

OIL PRESSURE SWITCH, REMOVING AND INSTALLING

Oil Pressure Switch, Removing and Installing

Removing

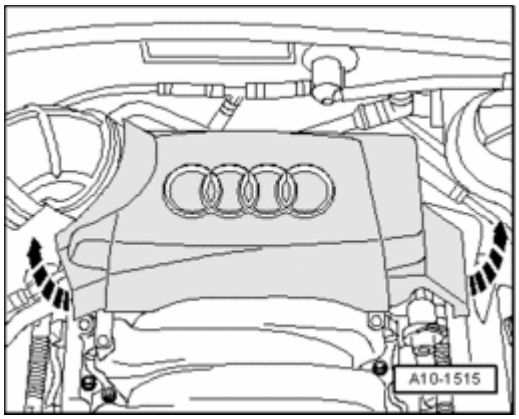

Fig. 490: Removing Rear Engine Cover
Courtesy of VOLKSWAGEN UNITED STATES, INC.

- Remove rear engine cover - **arrows** -.

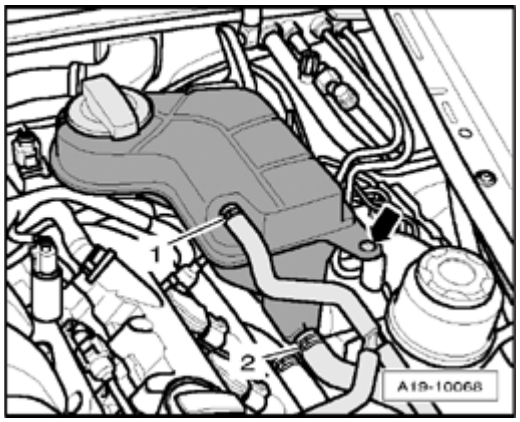

Fig. 491: Removing Coolant Hoses At Coolant Expansion Tank
Courtesy of VOLKSWAGEN UNITED STATES, INC.

- Remove coolant expansion tank - **arrow** -.
- Disconnect electrical connection from Engine Coolant Level (ECL) Warning Switch F66 at bottom of coolant reservoir and set aside coolant reservoir with coolant hoses - **1** - and - **2** - connected.

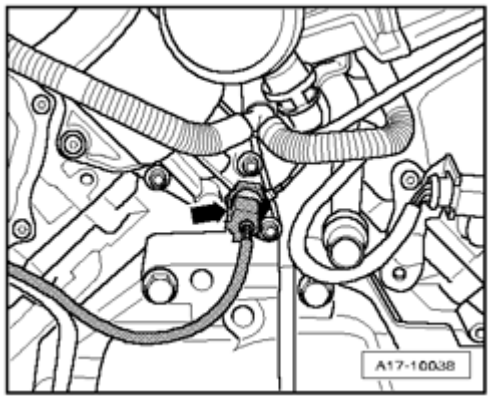

Fig. 492: Disconnecting Electrical Harness Connector From Oil Pressure Switch F1
Courtesy of VOLKSWAGEN UNITED STATES, INC.

NOTE:

- **Place a rag under oil filter housing to catch escaping engine oil.**

- Disconnect electrical harness connector from Oil Pressure Switch F1 - **arrow** -.
- Remove oil pressure switch.

Installing

Installation is in reverse order of removal, noting the following:

NOTE:

- **Replace seal.**

- Check oil level --> **Oil Level, Checking** .

Tightening specifications

Component	Nm
Oil pressure switch to oil filter housing	20

OIL PRESSURE, CHECKING

Oil Pressure, Checking

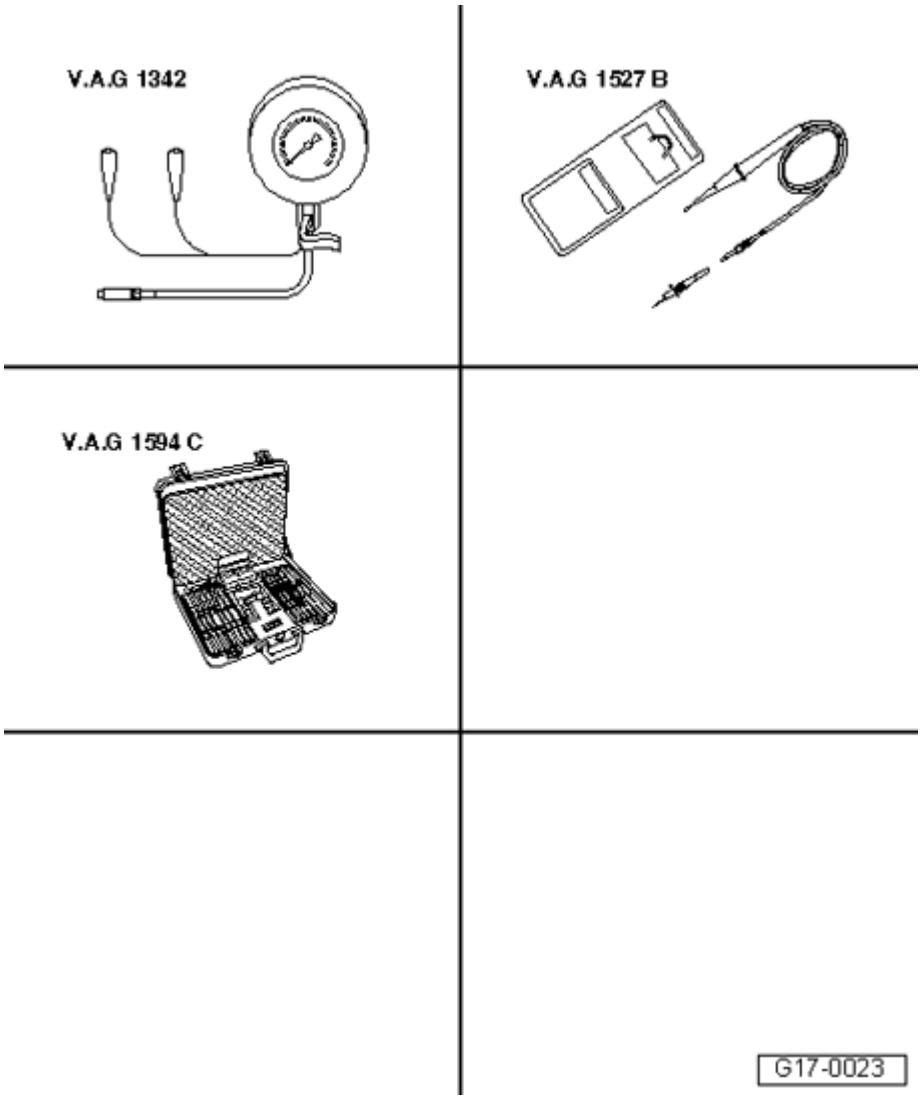

Fig. 493: Identifying Special Tools - Oil Pressure, Checking
Courtesy of VOLKSWAGEN UNITED STATES, INC.

Special tools, testers and auxiliary items required

- Oil pressure gauge V.A.G 1342
- Voltage tester V.A.G 1527 B
- Connector test set V.A.G 1594 C

Procedure

- Oil level OK
- Engine oil temperature approximately 80 C.

- Remove oil pressure switch --> **Oil Pressure Switch, Removing and Installing**.

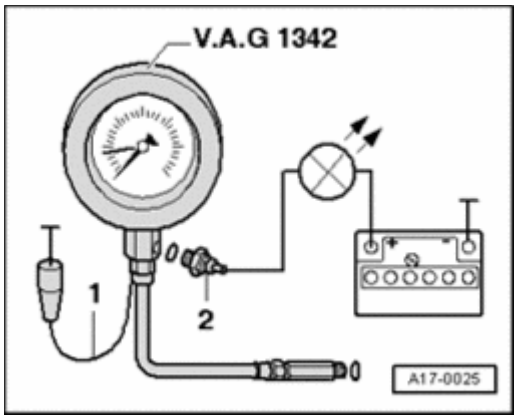

Fig. 494: Connecting Oil Pressure Tester V.A.G 1342 To Hole For Oil Pressure Switch
Courtesy of VOLKSWAGEN UNITED STATES, INC.

- Connect oil pressure tester V.A.G 1342 to hole for oil pressure switch.
- Install oil pressure switch - **2** - into oil pressure gauge V.A.G 1342.

Oil Pressure Switch, Checking

- Connect brown wire - **1** - of oil pressure gauge to Ground (GND).
- Connect voltage tester V.A.G 1527 B using adapter cables from connector test kit V.A.G 1594 C to oil pressure switch and battery plus (+).

- LED must not light up.

If LED lights up:

- Replace Oil Pressure Switch.
- Start engine.

NOTE:

- **While starting engine, watch Pressure Tester and LED as oil pressure switch may open during start.**
- **At 1.2 to 1.6 bar pressure, the LED must light up.**

If LED does not light up:

- Replace Oil Pressure Switch.

Oil Pressure, Checking

- Start engine.

- Oil pressure at idle: min. 1.2 bar positive pressure.
- Oil pressure at 2000 RPM: min. 3.4 bar positive pressure.

Assembling

- Install oil pressure switch --> **Oil Pressure Switch, Removing and Installing**.

ENGINE OIL SPECIFICATIONS

Engine Oil Specifications

Viscosity classes, oil specifications, oil capacities --> Fluid Capacity Chart located in ServiceNet.

OIL LEVEL, CHECKING

Oil Level, Checking

Procedure

- Engine oil temperature min. 60 C.
- Vehicle in level position.
- After stopping engine, wait a few minutes to allow oil to flow back into oil pan.

- Pull out oil dipstick, wipe off with a clean cloth and re-insert dipstick again up to stop.
- Withdraw dipstick again and read oil level.

Range of markings on dipstick:

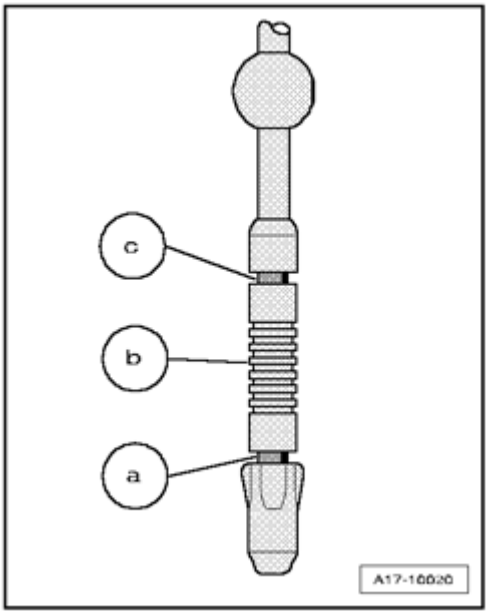

Fig. 495: Range Of Markings On Dipstick
Courtesy of VOLKSWAGEN UNITED STATES, INC.

a - Oil must be added.

b - Oil may be topped off.

c - Oil must not be added.

NOTE:

- **The oil level may not exceed the "max" marking - c - or fall below the "min" marking - a -.**
- **If the oil level exceeds the "max" marking, the catalytic converter could be damaged.**

19 - ENGINE - COOLING SYSTEM

COOLING SYSTEM COMPONENTS, REMOVING AND INSTALLING

Cooling System Components, Removing and Installing

--> **Coolant Hose Connection Diagram**

--> **Cooling System, Draining and Filling**

--> **Thermostat, Coolant Pump, Connecting Pieces, Component Overview**

--> **Coolant Pump, Removing and Installing**

--> **Coolant Thermostat, Removing and Installing**

--> **Thermostat, Checking**

--> **Coolant Pipes, Component Overview**

--> **Engine Coolant Temperature Sensor, Removing and Installing**

--> **Front Coolant Line, Removing and Installing**

--> **Left Coolant Pipes, Removing and Installing**

--> **Radiator, Removing and Installing**

--> **Fan Shroud, Removing and Installing**

--> **Coolant Fan, Removing and Installing**

--> **Cooling System, Checking for Leaks**

CAUTION: Steam can be released when the cap is removed from the expansion tank. Cover cap with a cloth and open carefully.

NOTE:

- **When the engine is warm the cooling system is under pressure. If necessary release pressure before commencing repair work.**
- **Always replace gaskets and seals.**
- **Secure all hose connections with hose clamps appropriate for the model --> .**
- **Arrows on coolant pipes and coolant hoses must line up across from each other.**

Coolant Hose Connection Diagram

Coolant Hose Connection Diagram

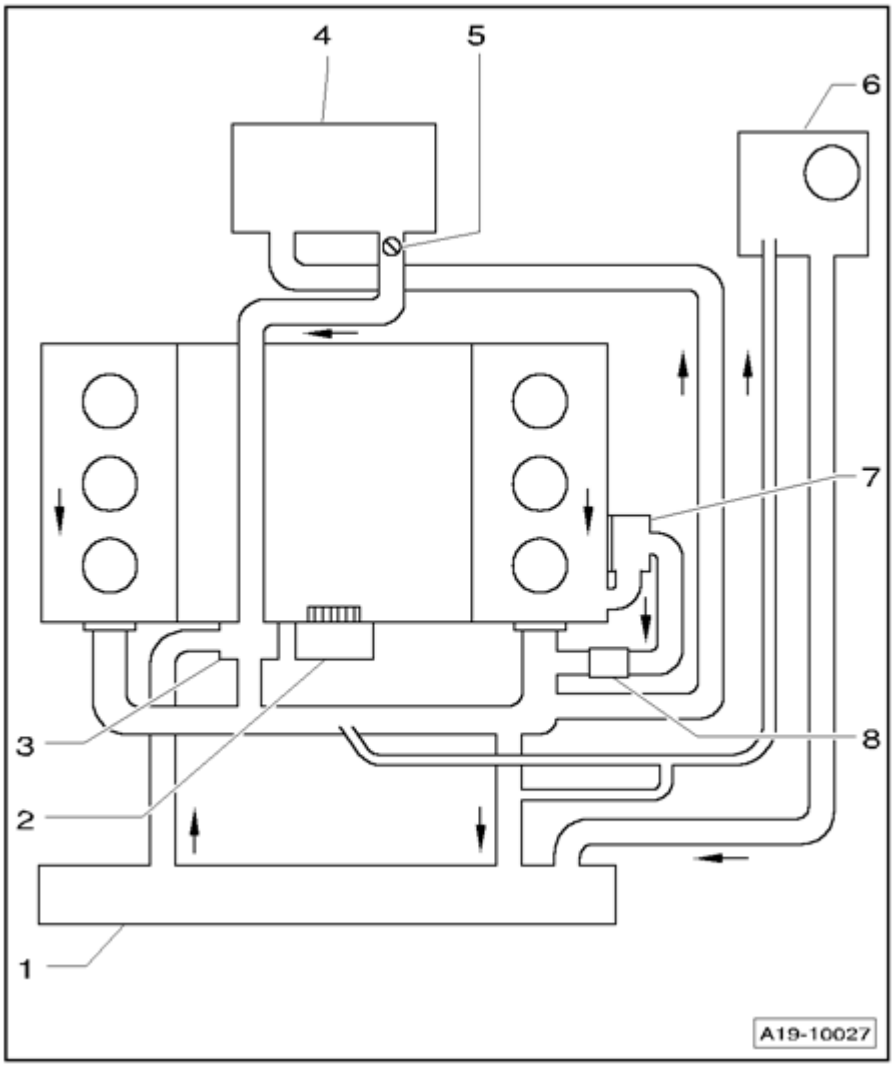

Fig. 496: Coolant Hose Connection Diagram
Courtesy of VOLKSWAGEN UNITED STATES, INC.

1 - Radiator

- Removing and installing --> **Oil Cooler, Removing and Installing**
- Renew coolant after replacing

2 - Coolant pump

- Removing and installing --> **Coolant Pump, Removing and Installing**

3 - Coolant thermostat

- Removing and installing --> **Coolant Thermostat, Removing and Installing**
- Checking --> **Thermostat, Checking**

4 - Heater core

- Replace coolant after replacing

5 - Bleeder screw

6 - Expansion tank

- With sealing cap
- Pressure relief valve in cap, checking

7 - Oil cooler

- Replace coolant after replacing
- Removing and installing --> **Oil Cooler, Removing and Installing**

8 - After-run coolant pump V51

- Only for vehicles in countries with hot climates

Cooling System, Draining and Filling

Cooling System, Draining and Filling

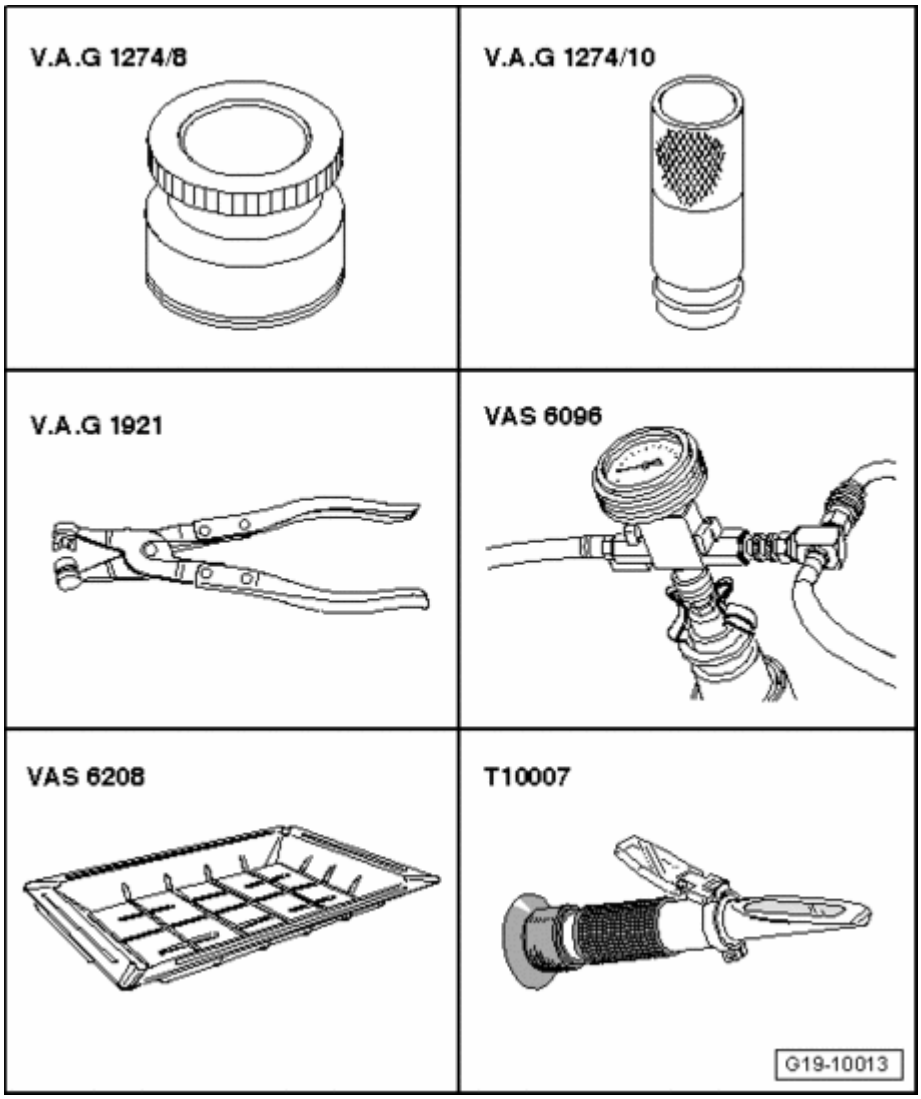

Fig. 497: Identifying Special Tools - Cooling System, Draining And Filling
Courtesy of VOLKSWAGEN UNITED STATES, INC.

Special tools, testers and auxiliary items required

- Adapter V.A.G 1274/8
- Adapter V.A.G 1274 tester V.A.G 1274/10
- Hose clamp pliers V.A.G 1921
- Cooling system charge unit VAS 6096
- Drip tray for workshop crane VAS 6208
- Refractometer T10007

Draining

NOTE:

- **Drained coolant must be stored in a clean container for disposal or reuse.**

CAUTION: Cover cap of expansion tank with rag and open carefully, as hot steam i.e. hot coolant may escape when opening.

- Open cap of coolant expansion tank.

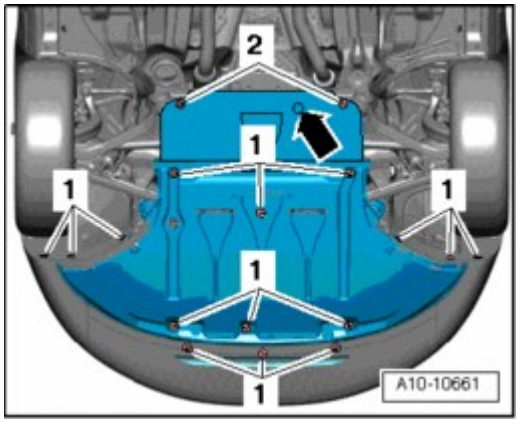

Fig. 498: Identifying Noise Insulation And Mountings
Courtesy of VOLKSWAGEN UNITED STATES, INC.

- Remove noise insulation and mountings - **1, 2** - - **arrow** - where present.
- Place drip tray for workshop crane VAS 6208 under engine.

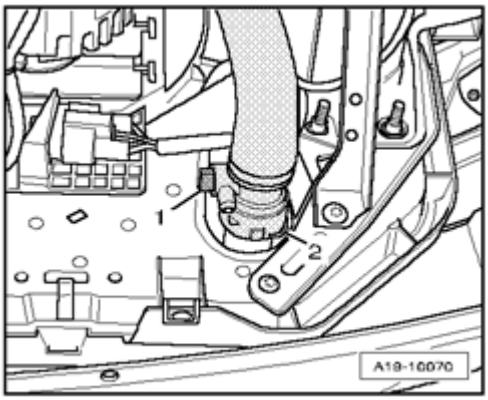

Fig. 499: Identifying Drain Plug & Coolant Hose
Courtesy of VOLKSWAGEN UNITED STATES, INC.

- Open drain plug - **1** - and allow coolant to drain.

NOTE:

- **Ignore - 2 -.**

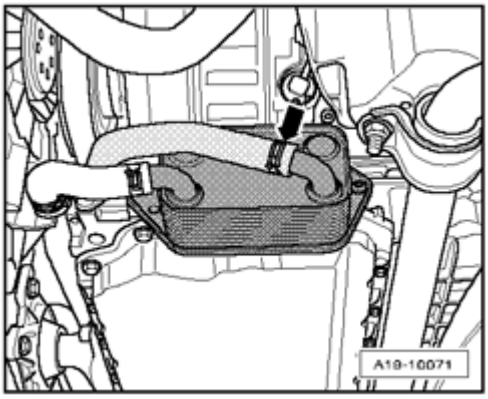

Fig. 500: Disconnecting Coolant Hose From Oil Cooler
Courtesy of VOLKSWAGEN UNITED STATES, INC.

- Disconnect coolant hose - **arrow** - from oil cooler and drain remaining coolant.

Filling

- Ignition switched off.

NOTE:

- **The cooling system is filled all year round with a mixture of frost and corrosion protection additives and water.**
- **Use only *coolant additive Plus G 012 A8F A1* (short: G12+) "according to TL VW 774 F". Other coolant additives may above all reduce the corrosion protection effect significantly. The damage resulting from this may lead to loss of coolant and consequently to severe engine damage.**
- **G12+ and coolant additives with the designation "according to TL VW 774 F" reduce frost and corrosion damage as well as lime deposits. They also raise the boiling point. For this reason the system must be filled all year round with frost and corrosion protection additives.**
- **Because of its high boiling point, the coolant improves engine reliability under heavy loads, particularly in countries with tropical climates.**
- **Protection against frost must be assured to about -25 C (in arctic climatic countries to about -35 C).**
- **The coolant concentration must not be reduced by adding water even in warmer seasons and in warmer countries. The coolant additive portion must be at least 40%.**
- **If for climatic reasons greater frost protection is required, the amount of G12+ can be increased, but only up to 60% (frost protection to about -40 C), otherwise frost protection and cooling effectiveness will be reduced.**
- **Only clean drinking water may be used for mixing coolant.**
- **If the radiator, heater core, cylinder head and cylinder head gasket or cylinder block is replaced, completely replace the engine coolant.**
- **Dirty coolant must not be re-used.**

- **For coolant G12+ , use refractometer T10007 to test frost protection in cooling system.**
- **Secure all hose connections with hose clamps appropriate for the model .**
- **Replace seal.**

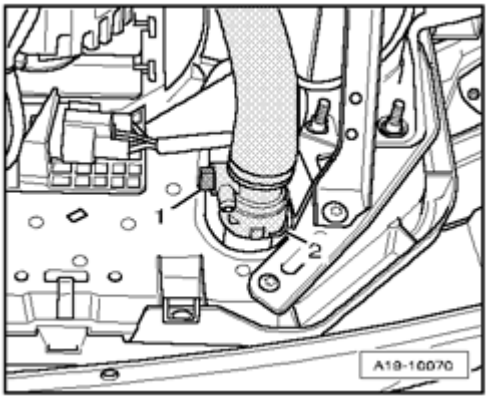

Fig. 501: Identifying Drain Plug & Coolant Hose
Courtesy of VOLKSWAGEN UNITED STATES, INC.

- Close drain plug - **1** -.

NOTE:

- **Ignore - 2 -.**

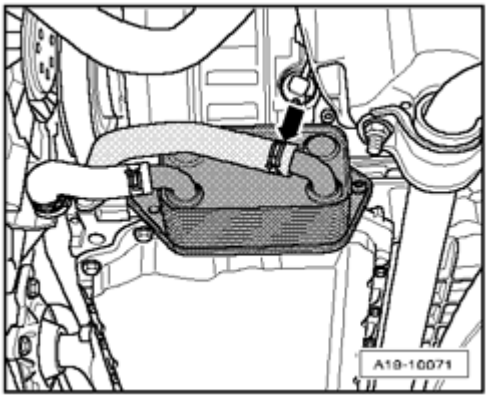

Fig. 502: Disconnecting Coolant Hose From Oil Cooler
Courtesy of VOLKSWAGEN UNITED STATES, INC.

- Connect coolant hose to oil cooler - **arrow** -.

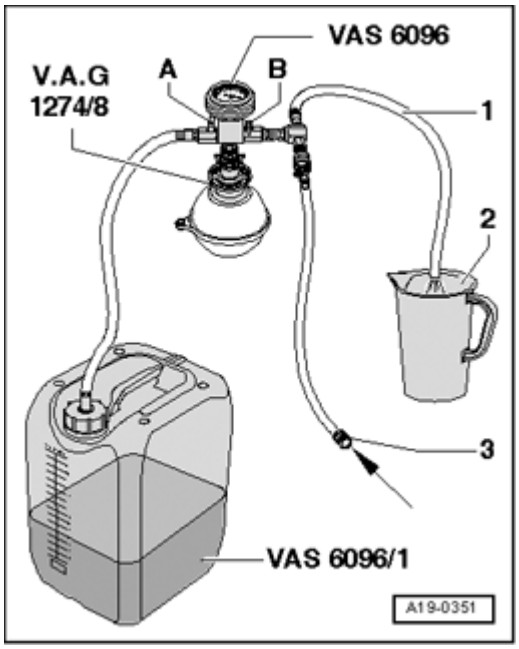

Fig. 503: Filling Reservoir VAS 6096/1 With At Least 12 Liters Of Premixed Coolant
Courtesy of VOLKSWAGEN UNITED STATES, INC.

- Fill replacement reservoir VAS 6096/1 with at least 12 liters of pre-mixed coolant with correct mixture ratio:

- G12+ (40%) and water (60%) for freeze protection down to -25 C
- G12+ (50%) and water (50%) for freeze protection down to -35 C
- G12+ (60%) and water (40%) for freeze protection down to -40 C

- Place air outlet hose - **1** - into a small container - **2** -. (A small amount of coolant is drawn off which should be reserved with the discharged air.)
- Close both valves - **A** - and - **B** - by turning lever perpendicular to direction of flow.
- Connect hose - **3** - to pressurized air.

- Pressure: 6 to 10 bar pressure.

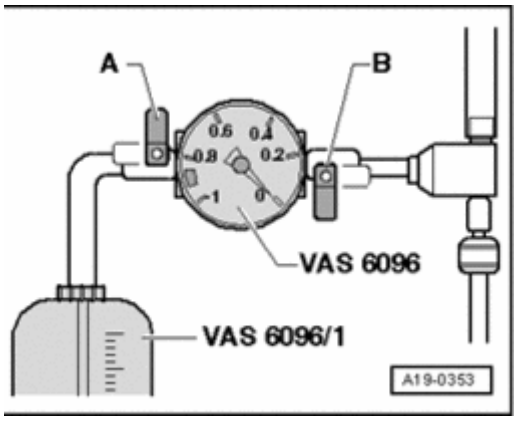

Fig. 504: Cooling System, Draining And Filling
Courtesy of VOLKSWAGEN UNITED STATES, INC.

- Open valve - **B** - , turn lever in direction of flow to do this.

A vacuum is created in the cooling system by the suction jet pump.

- Needle on the instrument display must travel into the green region.

- Also briefly open valve - **A** - , turn lever in direction of flow to do this, so that hose of the replacement reservoir VAS 6096/1 is filled with coolant.
- Close valve - **A** - again.
- Let valve - **B** - remain open another 2 minutes.

- A further vacuum is created in the cooling system by the suction jet pump.
- Needle on the instrument display must still remain in the green region.

- Close valve - **B** -.

- Needle in display must remain in green region, then vacuum in cooling system is sufficient for subsequent filling.

If needle stands below the green region, repeat procedure.

If the vacuum decreases, cooling system is leaking.

- Disconnect pressurized air hose.
- Open valve - **A** -.

The vacuum in the cooling system has the effect of extracting coolant from coolant reservoir VAS 6096/1 ; cooling system is filled.

- Remove cooling system charge unit VAS 6096 from coolant expansion tank.

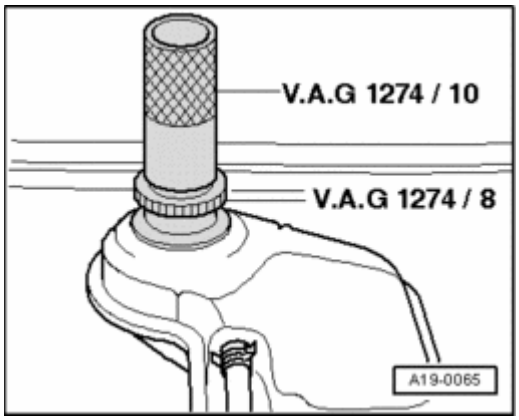

Fig. 505: Connecting Adapter For Cooling System Tester V.A.G 1274/10 To Adapter V.A.G 1274/8

Courtesy of VOLKSWAGEN UNITED STATES, INC.

- Connect adapter for VAG1274 tester V.A.G 1274/10 to adapter V.A.G 1274/8.

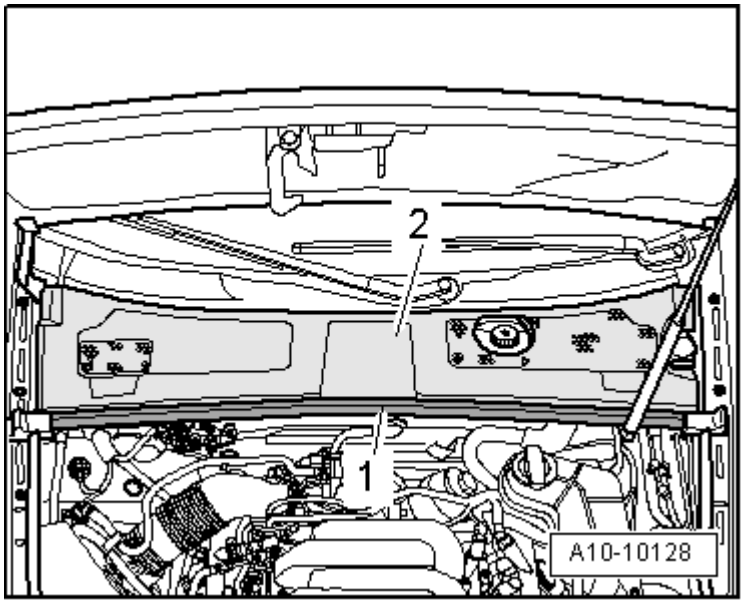

Fig. 506: Removing Rubber Seal For Plenum Chamber Cover & Plenum Chamber Cover
Courtesy of VOLKSWAGEN UNITED STATES, INC.

- Remove rubber seal - **1** - for plenum chamber cover.
- Remove plenum chamber cover - **2** -.

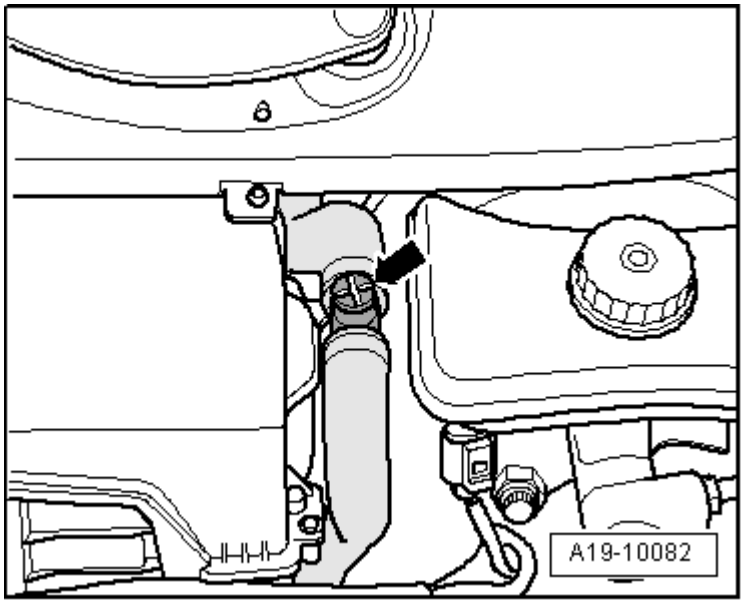

Fig. 507: Opening Bleeder Screw
Courtesy of VOLKSWAGEN UNITED STATES, INC.

- Open bleeder screw - **arrow** -.

- Fill up coolant until it escapes from the coolant hose bleeder hole.
- Close bleeder screw.
- If present, switch on auxiliary heater for about 30 seconds.

- Twist cap for expansion tank closed.
- Start engine.
- Set heating air conditioning system to "HI" on both sides.
- Let engine run at 2000 RPM for 3 minutes.

- Let engine run at idle long enough until both large coolant hoses on main cooler are warm.
- Let engine run at 2000 RPM for 1 minute.
- Turn off engine and allow it to cool off.

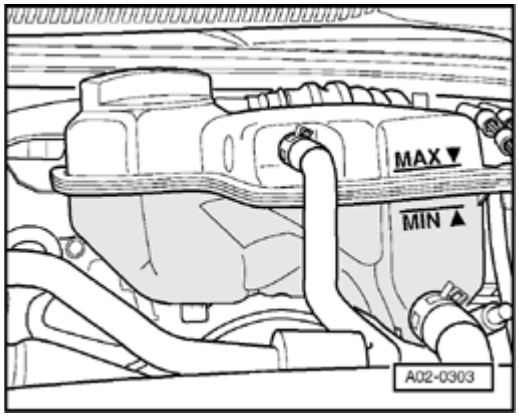

Fig. 508: Checking Coolant Level
Courtesy of VOLKSWAGEN UNITED STATES, INC.

- Check coolant level.

- With cold engine, coolant level must be at MAX marking.
- Coolant level may be above MAX marking with engine at operating temperature.

Thermostat, Coolant Pump, Connecting Pieces, Component Overview

Thermostat, Coolant Pump, Connecting Pieces, Component Overview

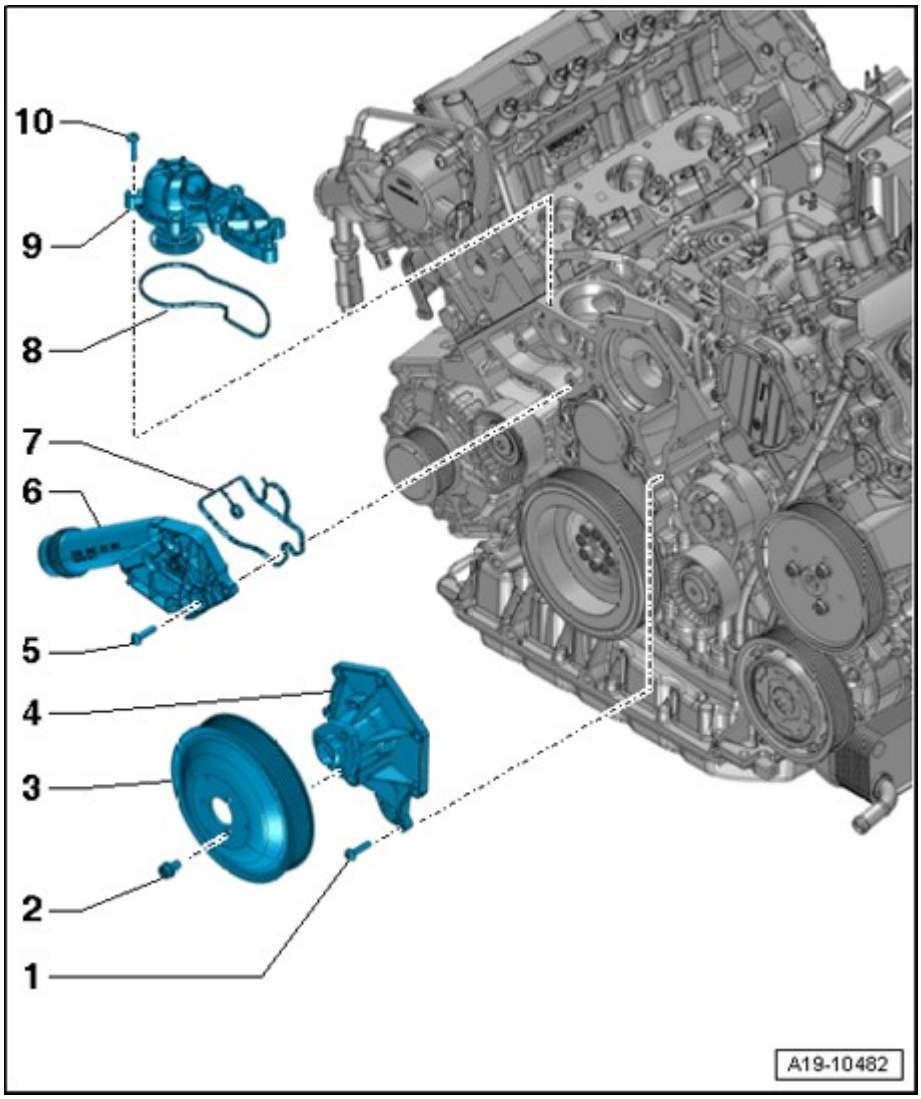

Fig. 509: Thermostat, Coolant Pump, Connecting Pieces, Component Overview
Courtesy of VOLKSWAGEN UNITED STATES, INC.

1 - 9 Nm

2 - 20 Nm

3 - Ribbed belt pulley for coolant pump

4 - Coolant pump

- With gasket
- Removing and installing --> **Coolant Pump, Removing and Installing**

5 - 9 Nm

6 - Connecting piece

- For coolant hose

7 - Gasket

- Replace

8 - Gasket

- Different versions
- Replace

9 - Coolant thermostat

- Removing and installing --> **Coolant Thermostat, Removing and Installing**
- Checking --> **Thermostat, Checking**

10 - 9 Nm

Coolant Pump, Removing and Installing

Coolant Pump, Removing and Installing

Special tools, testers and auxiliary items required

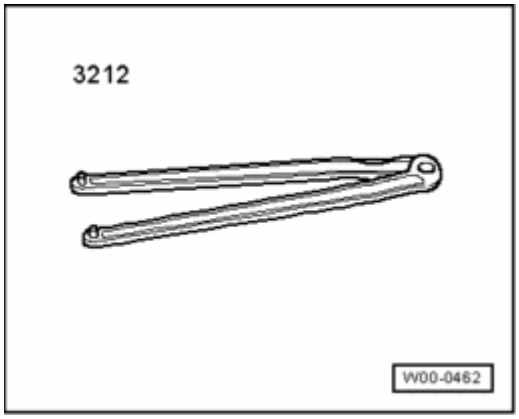

Fig. 510: Spanner Wrench 3212
Courtesy of VOLKSWAGEN UNITED STATES, INC.

- Spanner Wrench 3212

Removing

- Drain coolant --> **Cooling System, Draining and Filling**.

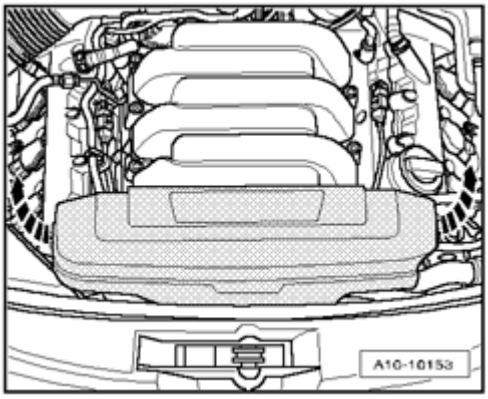

Fig. 511: Identifying Front Engine Cover
Courtesy of VOLKSWAGEN UNITED STATES, INC.

- Remove front engine cover - **arrows** -.

NOTE:

- **Before removing ribbed belt, mark the turning direction on it with chalk or a felt tip pen. A reversed turning direction can cause damage to the belt under operating conditions.**

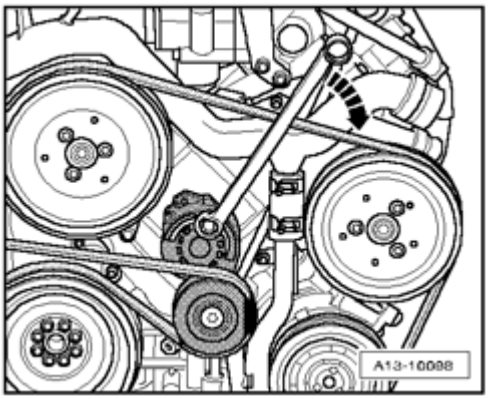

Fig. 512: Pivoting Tensioning Device To Relieve Tension On Ribbed Belt
Courtesy of VOLKSWAGEN UNITED STATES, INC.

- Pivot tensioning device in direction of - **arrow** - to relieve tension on ribbed belt.
- Remove ribbed belt from coolant pump.
- Release tensioner unit

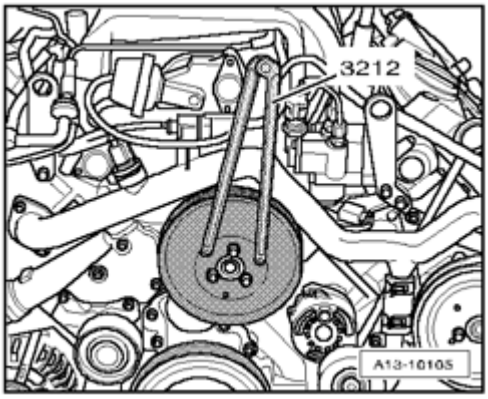

Fig. 513: Loosening Bolts Use Spanner Wrench 3212 To Counter-Hold
Courtesy of VOLKSWAGEN UNITED STATES, INC.

- Remove ribbed belt pulley from coolant pump.
- When loosening bolts use spanner wrench 3212 to counter-hold.
- Pry off cover cap.

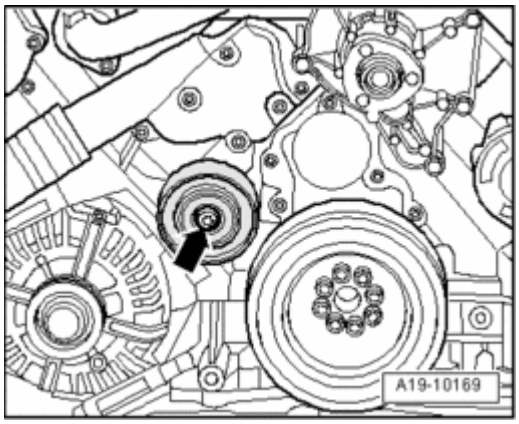

Fig. 514: Removing Bolt And Disconnecting Idler Roller
Courtesy of VOLKSWAGEN UNITED STATES, INC.

- Remove bolt - **arrows** - and disconnect idler roller.

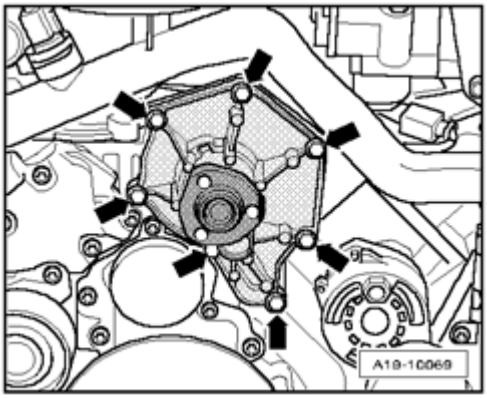

Fig. 515: Removing Bolts For Coolant Pump And Coolant Pump
Courtesy of VOLKSWAGEN UNITED STATES, INC.

- Remove bolts - **arrows** - for coolant pump and remove coolant pump.

Installing

Installation is in reverse order of removal, noting the following:

- Clean sealing surfaces so they are completely free of any oil or grease.

NOTE:

- **If the previously used coolant pump is reinstalled, apply a 1.5 mm thick sealant bead to the cleaned sealing surface in addition to the seal that has been vulcanized on.**

- Install ribbed belt --> **Ribbed Belt, Removing and Installing** .
- Fill with coolant -->**Cooling System, Draining and Filling** .

Tightening Specifications

Component	Nm
Coolant pump to cylinder block	9
Ribbed belt pulley to coolant pump	20
Idler roller to cylinder block	40

Coolant Thermostat, Removing and Installing

Coolant Thermostat, Removing and Installing

Removing

- Drain coolant --> **Cooling System, Draining and Filling**.
- Remove upper part of intake manifold --> **24 - FUEL INJECTION SYSTEM** .
- Remove front coolant pipe --> **Front Coolant Line, Removing and Installing**.

NOTE:

- **Place a rag beneath to catch escaping coolant.**

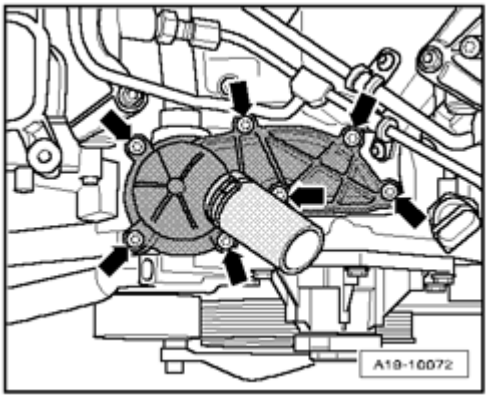

Fig. 516: Remove Bolts & Thermostat
Courtesy of VOLKSWAGEN UNITED STATES, INC.

- Remove bolts - **arrows** -.
- Remove thermostat with connecting piece.

Installing

Installation is in reverse order of removal, noting the following:

NOTE:

- **Replace seals.**

- Install front coolant pipe --> **Front Coolant Line, Removing and Installing**.
- Install intake manifold upper-part --> **24 - FUEL INJECTION SYSTEM** .
- Fill with coolant -->**Cooling System, Draining and Filling** .

Tightening specifications

Component	Nm
Thermostat with connecting piece to cylinder block	9

Thermostat, Checking

Thermostat, Checking

- Heat up removed thermostat in water.

Opening begins	Opening ends	Opening lift
approximately 87° C	approximately 102° C 1)	min. 8 mm
1) Cannot be tested.		

Coolant Pipes, Component Overview

Coolant Pipes, Component Overview

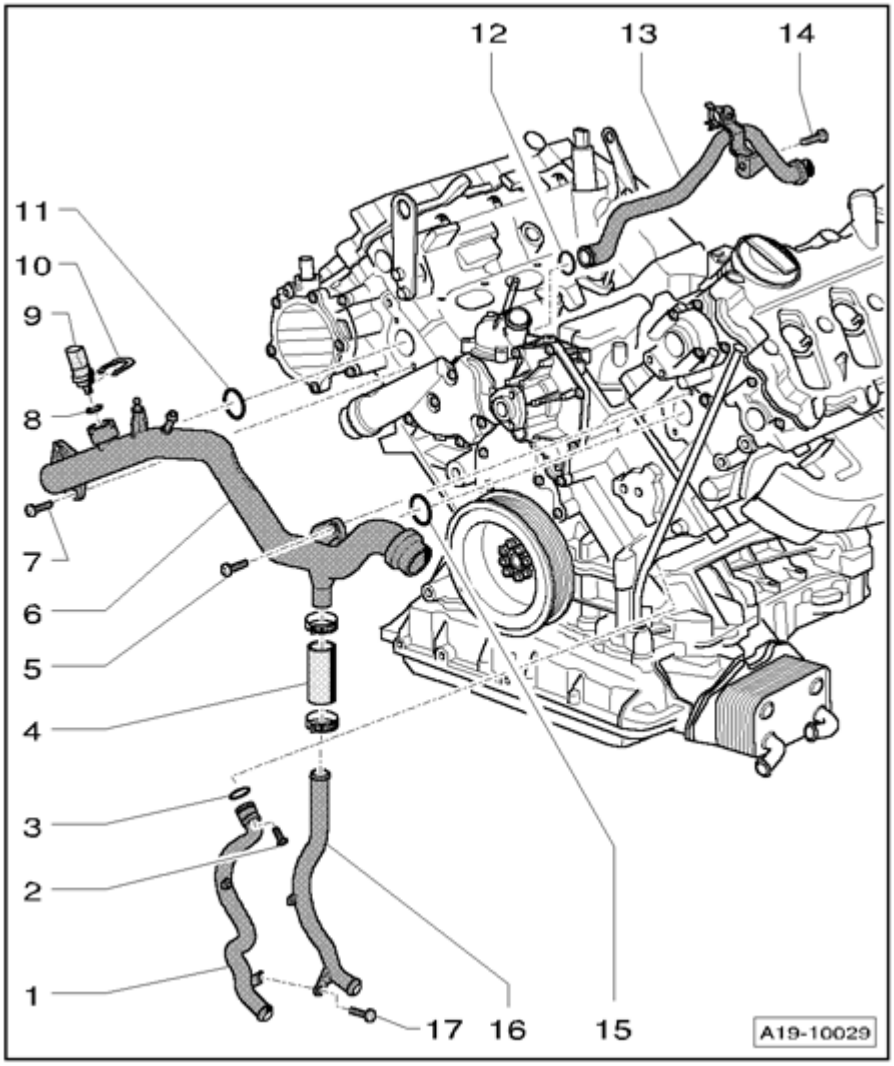

Fig. 517: Coolant Pipes, Component Overview
Courtesy of VOLKSWAGEN UNITED STATES, INC.

1 - Left coolant line

2 - 9 Nm

3 - O-ring

- Replace

4 - Connecting hose

5 - 9 Nm

6 - Front coolant line

- Removing and installing --> **Front Coolant Line, Removing and Installing**

7 - 9 Nm

8 - O-ring

- Replace

9 - Engine Coolant Temperature (ECT) Sensor G62

- Removing and installing --> **Engine Coolant Temperature Sensor, Removing and Installing**

10 - Retaining clip

11 - Seal

- Replace

12 - O-ring

- Replace

13 - Upper coolant line

- Removing and installing

14 - 9 Nm

15 - Seal

- Replace

16 - Left coolant line

17 - 9 Nm

Engine Coolant Temperature Sensor, Removing and Installing

Engine Coolant Temperature Sensor, Removing and Installing

Removing

- Drain coolant --> **Cooling System, Draining and Filling**.

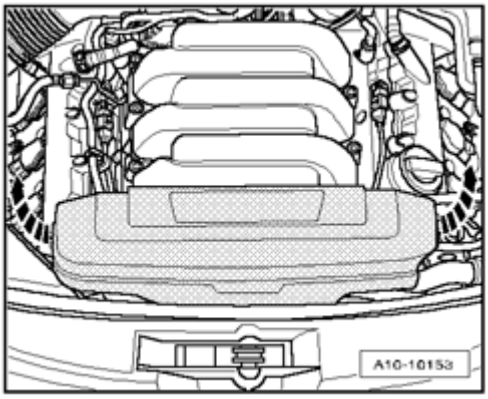

Fig. 518: Identifying Front Engine Cover
Courtesy of VOLKSWAGEN UNITED STATES, INC.

- Remove front engine cover - **arrows** -.

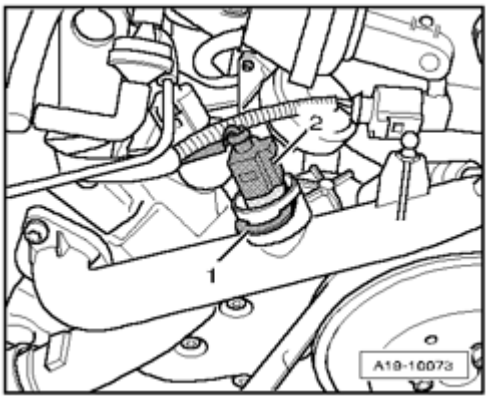

Fig. 519: Disconnecting Engine Coolant Temperature (ECT) Sensor G62 electrical connector & retaining clip
Courtesy of VOLKSWAGEN UNITED STATES, INC.

- Disconnect electrical connector - **2** - on Engine Coolant Temperature (ECT) Sensor G62.
- Remove retaining clip - **1** - and Engine Coolant Temperature (ECT) Sensor G62.

Installing

Installation is in reverse order of removal, noting the following:

NOTE:

- **Replace O-ring.**

- Fill with coolant -->**Cooling System, Draining and Filling** .

Front Coolant Line, Removing and Installing

Front Coolant Line, Removing and Installing

Special tools, testers and auxiliary items required

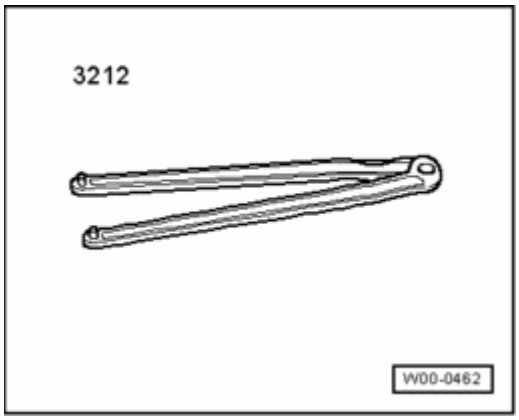

Fig. 520: Spanner Wrench 3212
Courtesy of VOLKSWAGEN UNITED STATES, INC.

- Spanner Wrench 3212

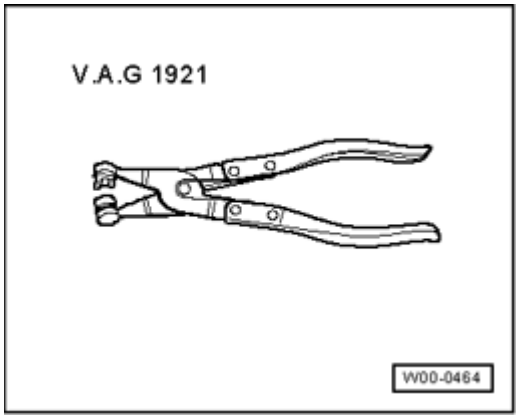

Fig. 521: Hose Clamp Pliers V.A.G 1921
Courtesy of VOLKSWAGEN UNITED STATES, INC.

- Hose clamp pliers V.A.G 1921

Removing

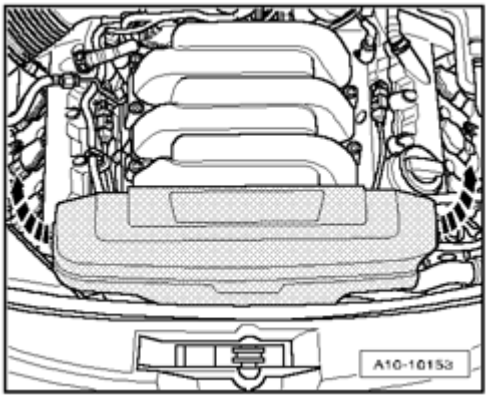

Fig. 522: Identifying Front Engine Cover
Courtesy of VOLKSWAGEN UNITED STATES, INC.

- Remove front engine cover - **arrows** -.

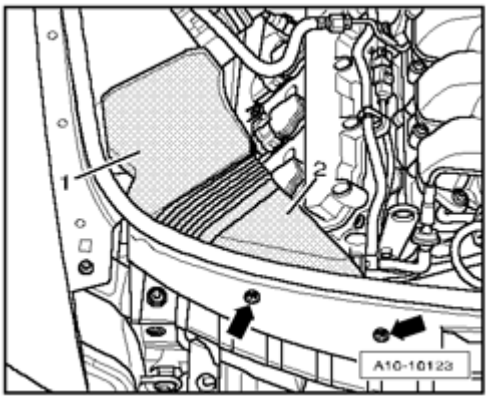

Fig. 523: Removing Air Duct Screws & Air Ducts
Courtesy of VOLKSWAGEN UNITED STATES, INC.

- Remove bolts - **arrows** -.
- Remove air duct - **1** - and - **2** -.

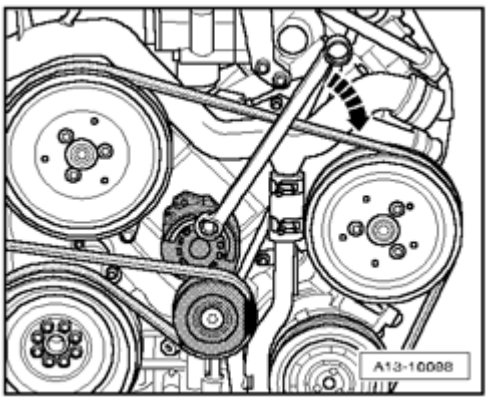

Fig. 524: Pivoting Tensioning Device To Relieve Tension On Ribbed Belt

Courtesy of VOLKSWAGEN UNITED STATES, INC.

NOTE:

- **Before removing ribbed belt, mark the turning direction on it with chalk or a felt tip pen. A reversed turning direction can cause damage to the belt under operating conditions.**

- Pivot tensioning device in direction of - **arrow** - to relieve tension on ribbed belt.
- Remove ribbed belt from coolant pump.
- Release tensioner unit

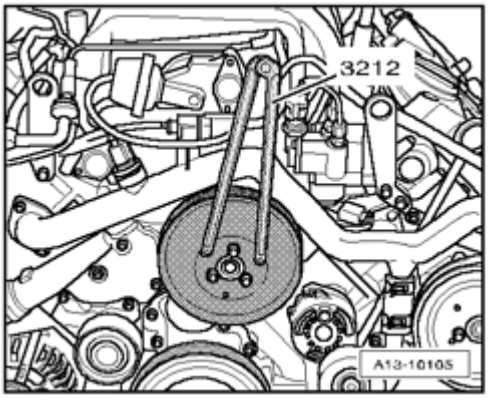

Fig. 525: Loosening Bolts Use Spanner Wrench 3212 To Counter-Hold
Courtesy of VOLKSWAGEN UNITED STATES, INC.

- Remove ribbed belt pulley from coolant pump.
- When loosening bolts use spanner wrench 3212 to counter-hold.

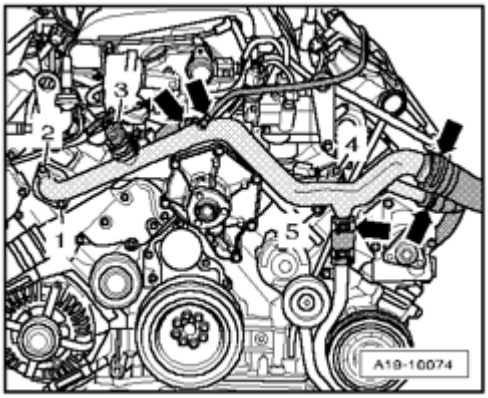

Fig. 526: Disconnecting Coolant Hoses From Front Coolant Pipe
Courtesy of VOLKSWAGEN UNITED STATES, INC.

- Disconnect electrical connector - **3** -.
- Disconnect coolant hoses - **arrows** - from front coolant pipe.
- Remove bolts - **1** - , - **2** - , - **4** - and - **5** - and remove front coolant pipe.

Installing

Installation is in reverse order of removal, noting the following:

NOTE:

- **Replace seals and O-rings.**
- **Secure all hose connections with hose clamps appropriate for the model .**

- Clean and/or smooth O-ring sealing surface before installing.
- Moisten new O-ring with G12+ and push onto coolant pipe.
- Install ribbed belt --> **Ribbed Belt, Removing and Installing** .
- Fill with coolant -->**Cooling System, Draining and Filling** .

Tightening Specifications

Component	Nm
Front coolant pipe to engine	9
Ribbed belt pulley to coolant pump	20

Left Coolant Pipes, Removing and Installing

Left Coolant Pipes, Removing and Installing

Special tools, testers and auxiliary items required

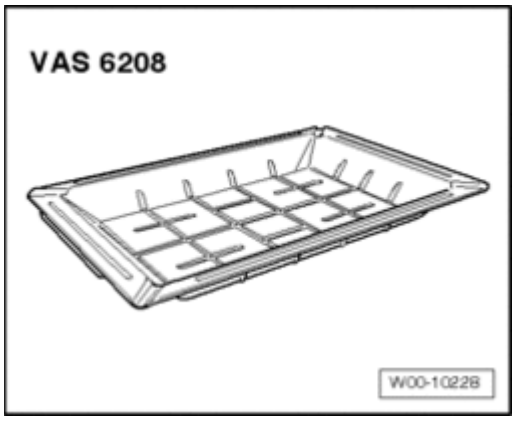

Fig. 527: Drip Tray For Workshop Crane VAS 6208
Courtesy of VOLKSWAGEN UNITED STATES, INC.

- Drip tray for workshop crane VAS 6208

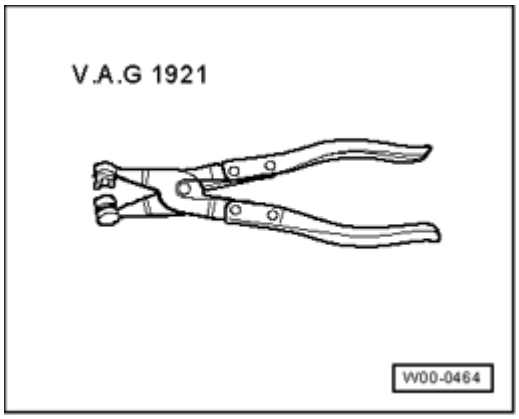

Fig. 528: Hose Clamp Pliers V.A.G 1921
Courtesy of VOLKSWAGEN UNITED STATES, INC.

- Hose clamp pliers V.A.G 1921

Removing

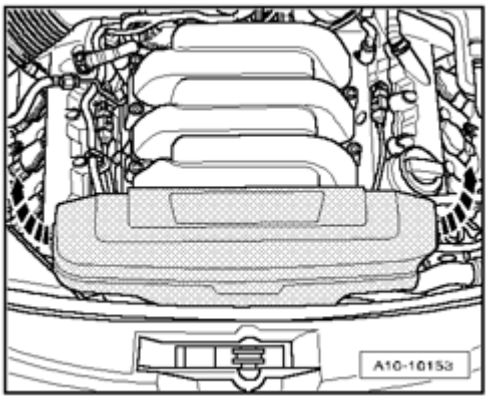

Fig. 529: Identifying Front Engine Cover
Courtesy of VOLKSWAGEN UNITED STATES, INC.

- Remove front engine cover - **arrows** -.

NOTE:

- **Before removing ribbed belt, mark the turning direction on it with chalk or a felt tip pen. A reversed turning direction can cause damage to the belt under operating conditions.**

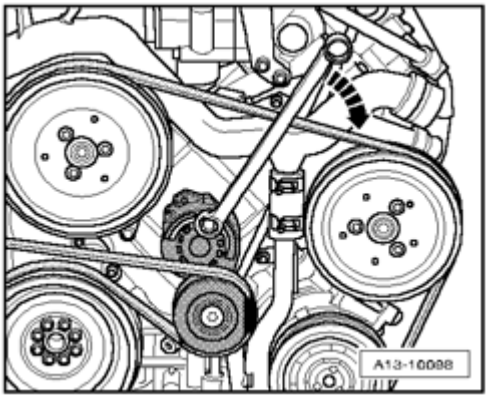

Fig. 530: Pivoting Tensioning Device To Relieve Tension On Ribbed Belt
Courtesy of VOLKSWAGEN UNITED STATES, INC.

- Pivot tensioning device in direction of - **arrow** - to relieve tension on ribbed belt.
- Remove ribbed belt from coolant pump.
- Release tensioner unit

CAUTION: Cover cap of expansion tank with rag and open carefully, as hot steam i.e. hot coolant may escape when opening.

- Open cap of coolant expansion tank.

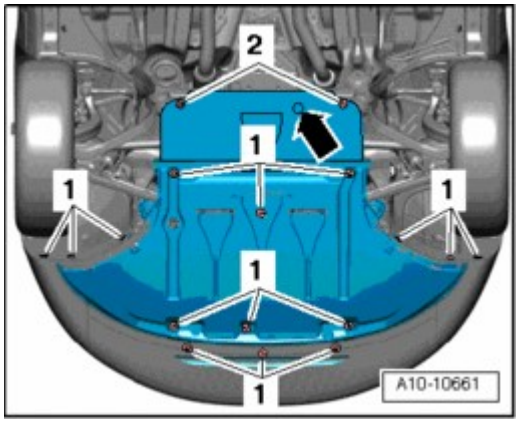

Fig. 531: Identifying Noise Insulation And Mountings
Courtesy of VOLKSWAGEN UNITED STATES, INC.

- Remove noise insulation and mountings - **1, 2** - - **arrow** - where present.
- Place drip tray for workshop crane VAS 6208 under engine.

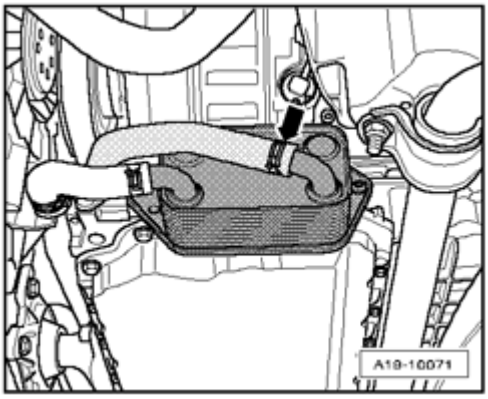

Fig. 532: Disconnecting Coolant Hose From Oil Cooler
Courtesy of VOLKSWAGEN UNITED STATES, INC.

- Disconnect coolant hose - **arrow** - from oil cooler and drain coolant.

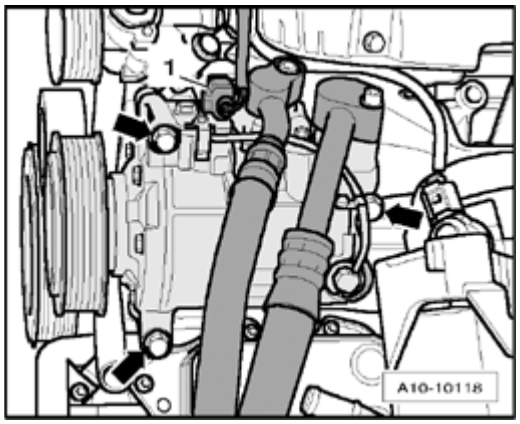

Fig. 533: Disconnecting Connector For Wiring To Air Conditioning Compressor Clutch Solenoid
Courtesy of VOLKSWAGEN UNITED STATES, INC.

- Separate connector - **1** - for wiring to air conditioning compressor clutch solenoid.

CAUTION: The air conditioning refrigerant circuit must not be opened.

- Remove air conditioning compressor from bracket - **arrows** -.

NOTE:

- **To prevent damage to the refrigerant lines/hoses, ensure that the lines and hoses are not stretched, kinked or bent.**

- Hang up the air conditioning compressor with attached lines on left side of vehicle.

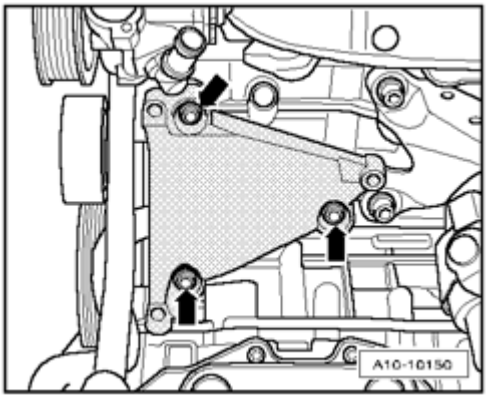

Fig. 534: Removing Bolts And Air Conditioning Compressor Bracket
Courtesy of VOLKSWAGEN UNITED STATES, INC.

- Remove bolts - **arrows** - and remove air conditioning compressor bracket.

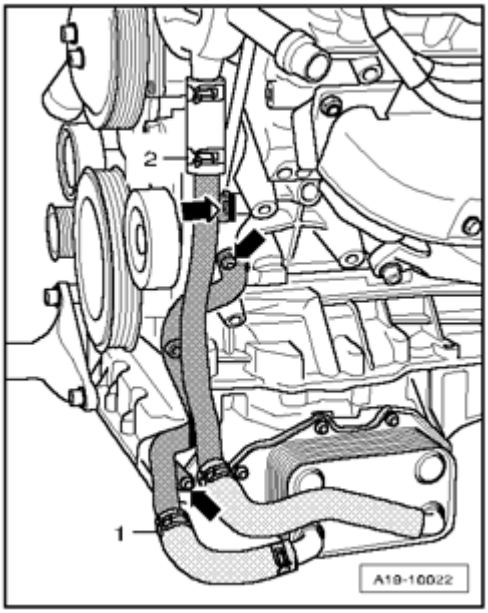

Fig. 535: Removing Bolts And Coolant Pipe From Engine
Courtesy of VOLKSWAGEN UNITED STATES, INC.

- Remove bolts - **arrows** -.
- Disconnect coolant pipes from coolant hoses - **1** - and - **2** -.

NOTE:

- **To improve clarity, the power steering pump is shown removed.**

Installing

Installation is in reverse order of removal, noting the following:

NOTE:

- **Replace O-rings.**
- **Secure all hose connections with hose clamps appropriate for the model .**

- Clean and/or smooth O-ring sealing surface before installing.
- Moisten new O-ring with G12+ and push onto coolant pipe.
- Install A/C compressor --> **87 - AIR CONDITIONING** .
- Install ribbed belt --> **Ribbed Belt, Removing and Installing** .
- Fill with coolant -->**Cooling System, Draining and Filling** .

Tightening specifications

Component	Nm
Coolant pipes to engine	9

Radiator, Removing and Installing

Radiator, Removing and Installing

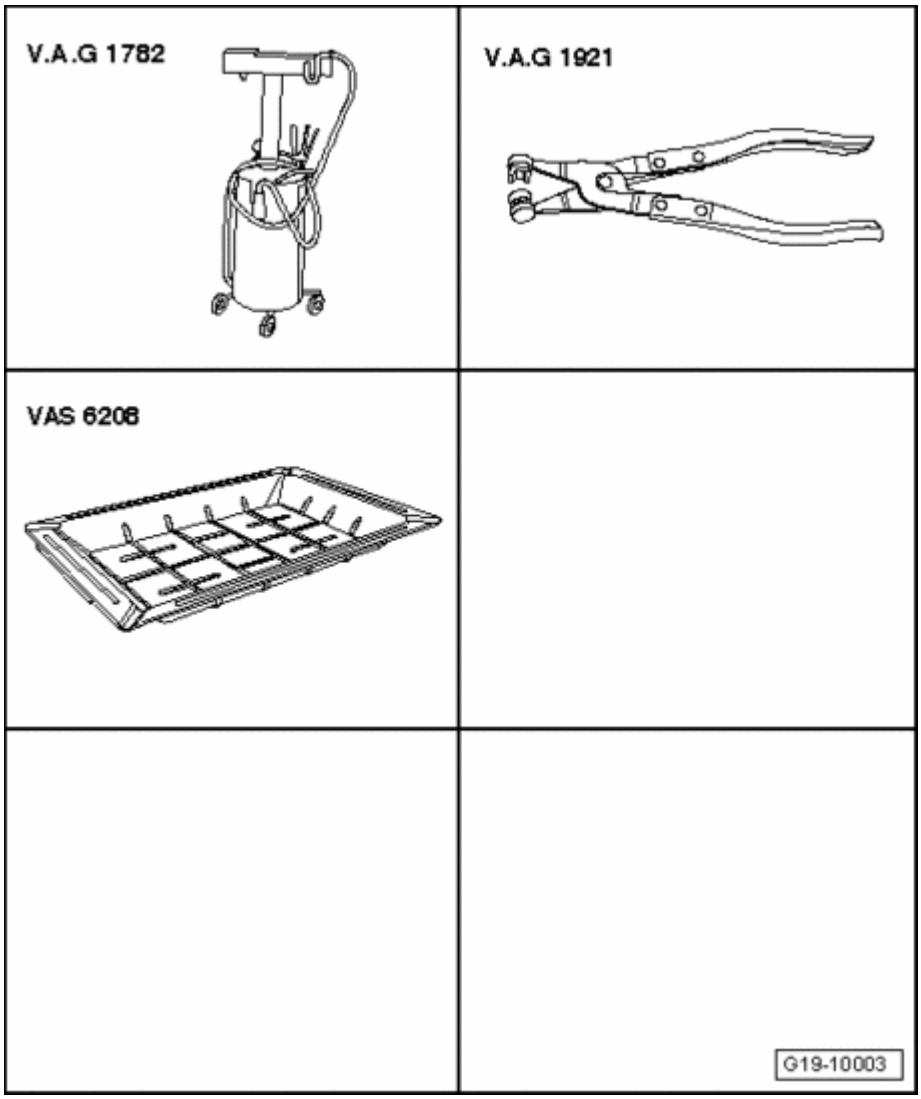

Fig. 536: Identifying Special Tools - Radiator, Removing And Installing
Courtesy of VOLKSWAGEN UNITED STATES, INC.

Special tools, testers and auxiliary items required

- Old oil collecting and extracting device V.A.G 1782
- Hose clamp pliers V.A.G 1921
- Drip tray for workshop crane VAS 6208

Removing

NOTE:

- **When assembled correctly, radiator and condenser can show slight impressions on fins. This is not damage. Radiators or condensers should not be replaced because of slight impressions like these.**

CAUTION: Cover cap of expansion tank with rag and open carefully, as hot steam i.e. hot coolant may escape when opening.

- Open cap of coolant expansion tank.

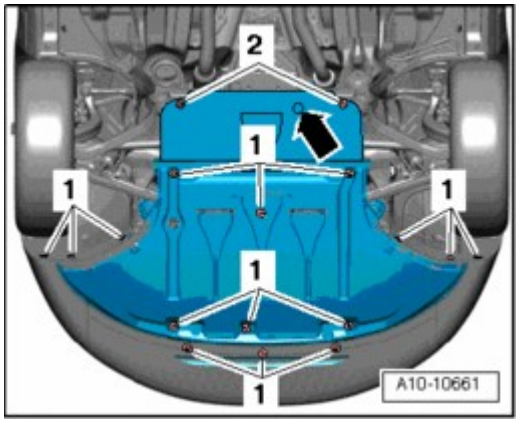

Fig. 537: Identifying Noise Insulation And Mountings
Courtesy of VOLKSWAGEN UNITED STATES, INC.

- Remove noise insulation and mountings - **1, 2** - - **arrow** - where present.
- Remove left and right front wheel housing liners --> **66 - EXTERIOR EQUIPMENT** .
- Remove front bumper cover --> **63 - BUMPERS** .

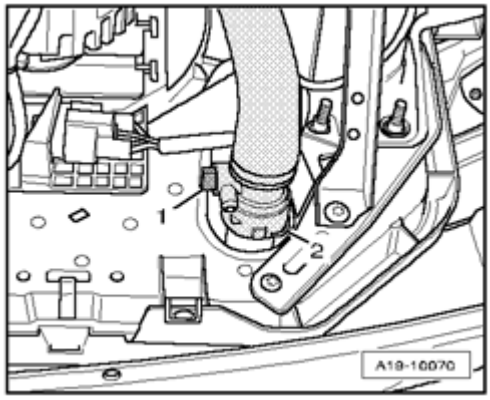

Fig. 538: Identifying Drain Plug & Coolant Hose
Courtesy of VOLKSWAGEN UNITED STATES, INC.

- Place drip tray for workshop crane VAS 6208 under engine.
- Open drain plug - **1** - and allow coolant to drain.
- Then disconnect coolant hose - **2** - from radiator.

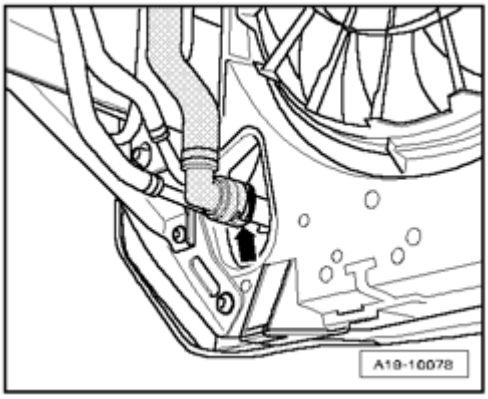

Fig. 539: Disconnecting Coolant Hose From Lower Left Of Radiator
Courtesy of VOLKSWAGEN UNITED STATES, INC.

- Disconnect coolant hose - **arrow** - from radiator at bottom left.

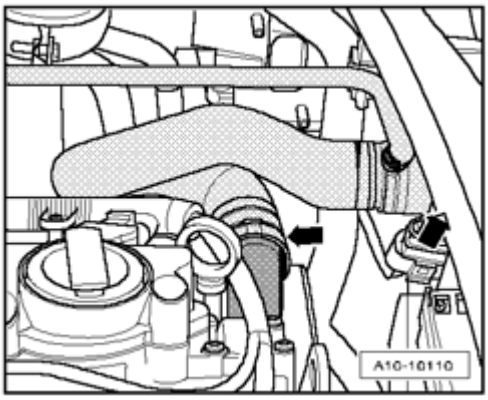

Fig. 540: Removing Left Front Coolant Hose In Engine Compartment
Courtesy of VOLKSWAGEN UNITED STATES, INC.

- Disconnect top coolant hose - **right arrow** - from radiator.

NOTE:

- **Ignore - left arrow -.**

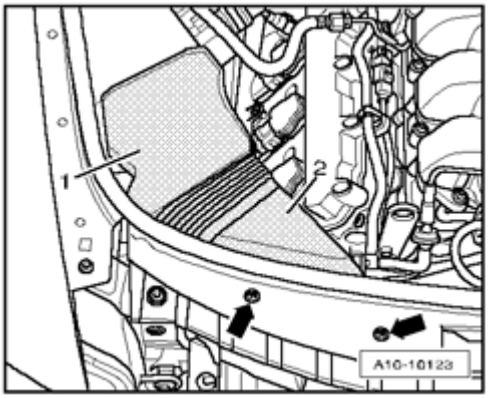

Fig. 541: Removing Air Duct Screws & Air Ducts
Courtesy of VOLKSWAGEN UNITED STATES, INC.

Vehicles with Multitronic transmission or automatic transmission 09L:

- Remove bolts - **arrows** -.
- Remove air duct - **1** - and - **2** -.

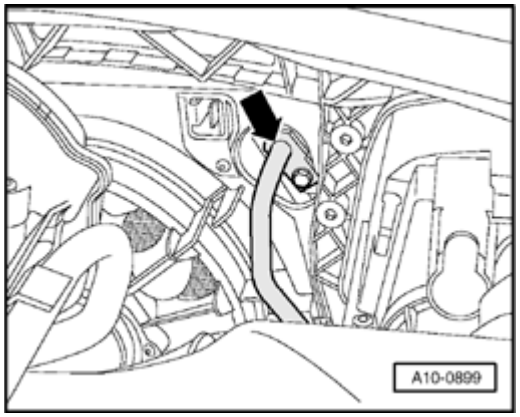

Fig. 542: Disconnecting ATF-Lines At Top And Bottom Of Radiator
Courtesy of VOLKSWAGEN UNITED STATES, INC.

NOTE:

- **Observe the rules of cleanliness for working on automatic transmissions --> 00 TECHNICAL DATA .**

- Place old oil collecting and extracting device V.A.G 1782 under engine.
- Remove upper and lower ATF lines - **arrow** - on cooler --> **37 CONTROLS, HOUSING** .
- Tie ATF lines up to longitudinal member to prevent fluid from escaping.

All:

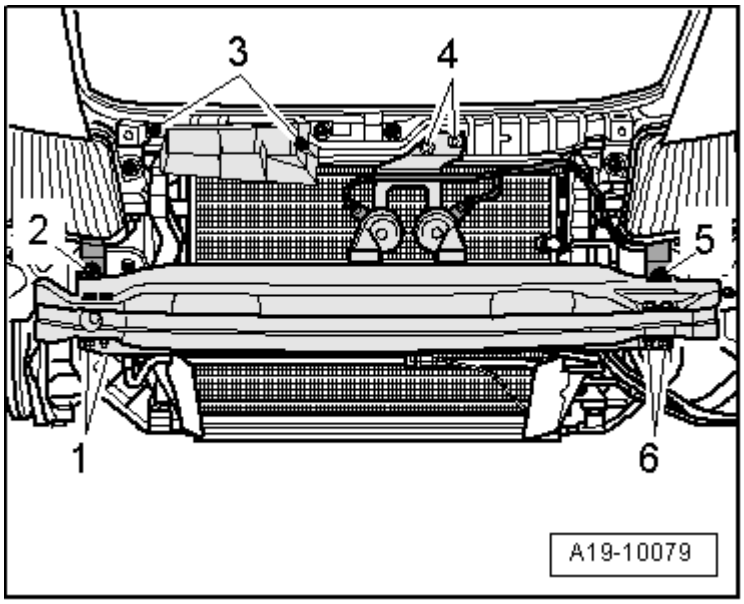

Fig. 543: Identifying Bolts, Brackets, Bumper & Air Duct
Courtesy of VOLKSWAGEN UNITED STATES, INC.

- Remove bolts - **3** - and remove air duct.
- Remove bolts - **4** - and remove bracket for horns; leave electrical connections intact.
- Unfasten bracket - **2** - and - **5** - for headlight.
- Remove nuts - **1** - and - **6** - and remove bumper.

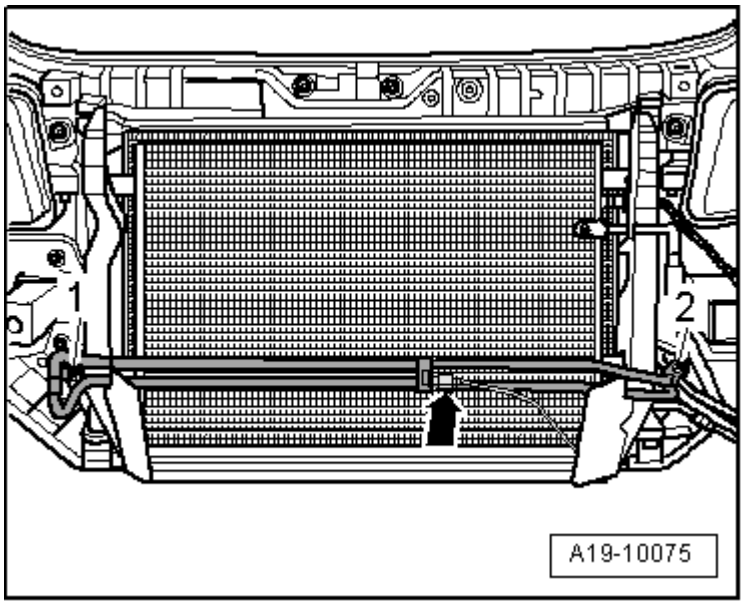

Fig. 544: Unclipping Outside Air Temperature Sensor G17 From Bracket & Removing Power Steering Cooling Coil Bolts
Courtesy of VOLKSWAGEN UNITED STATES, INC.

- Unclip Outside Air Temperature Sensor G17 - **arrow** - from the bracket.

- Remove power steering cooling coil bolts - **1** - and - **2** - hydraulic hoses remain connected.
- Remove air guides at left and right of radiator.

CAUTION: The air conditioning refrigerant circuit must not be opened.

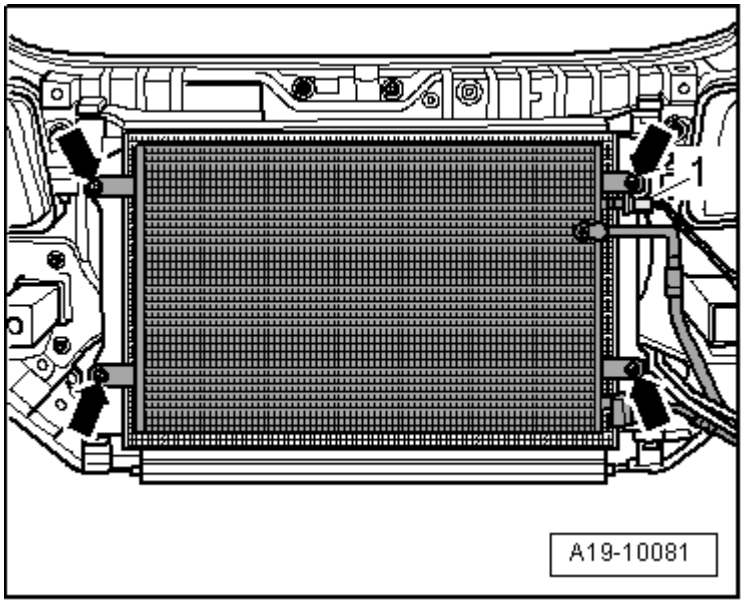

Fig. 545: Separating Electrical Connector & Removing Bolts
Courtesy of VOLKSWAGEN UNITED STATES, INC.

- Separate electrical connector - **1** -.
- Remove bolts - **arrows** -.

NOTE:

- **Do not bend or stretch lines or hoses as A/C compressor and/or refrigerant lines/hoses may be damaged.**

- Pivot condenser downward with lines connected.

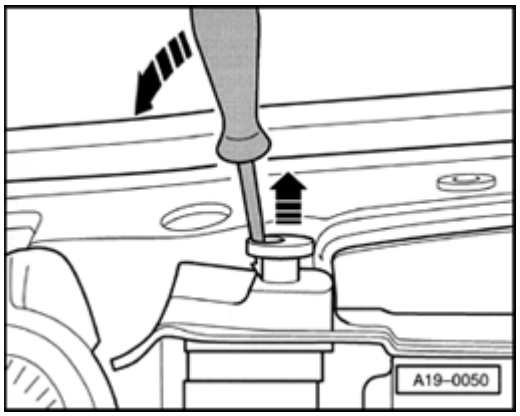

Fig. 546: Releasing Both Radiator Retaining Pins And Removing By Pulling Upward
Courtesy of VOLKSWAGEN UNITED STATES, INC.

- Release both radiator retaining pins and remove by pulling upward - **arrows** -.
- Pivot radiator forward, pull up and remove.

Installing

Installation is in reverse order of removal, noting the following:

NOTE:

- **Secure all hose connections with hose clamps appropriate for the model .**

- Install ATF lines --> **37 CONTROLS, HOUSING** .
- Install front bumper cover --> **63 - BUMPERS** .
- Install left and right front wheel housing liners --> **66 - EXTERIOR EQUIPMENT** .
- Fill with coolant -->**Cooling System, Draining and Filling** .

NOTE:

- **Complete coolant must be replaced if the radiator was replaced.**

- Check ATF level --> **37 CONTROLS, HOUSING** .

Tightening Specifications

Component	Nm
Condenser to lock carrier	6
Cooling coil for power steering to condenser	9
Bracket for horns to lock carrier	8

Fan Shroud, Removing and Installing

Fan Shroud, Removing and Installing

Removing

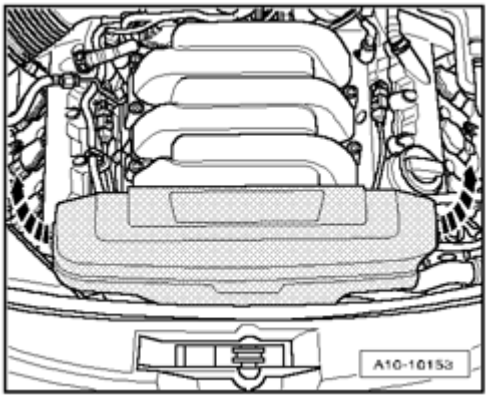

Fig. 547: Identifying Front Engine Cover
Courtesy of VOLKSWAGEN UNITED STATES, INC.

- Remove front engine cover - **arrows** -.

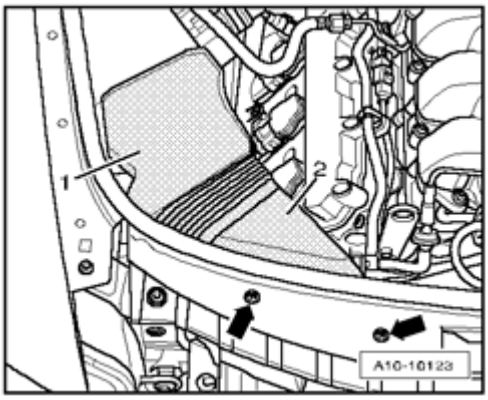

Fig. 548: Removing Air Duct Screws & Air Ducts
Courtesy of VOLKSWAGEN UNITED STATES, INC.

- Remove bolts - **arrows** -.
- Remove air duct - **1** - and - **2** -.

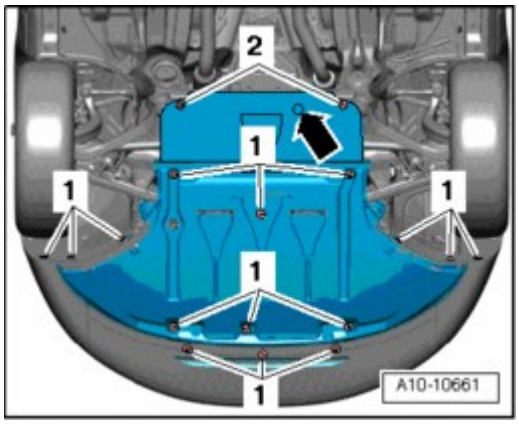

Fig. 549: Identifying Noise Insulation And Mountings

Courtesy of VOLKSWAGEN UNITED STATES, INC.

- Remove front noise insulation by loosening mounting parts - **1** -.

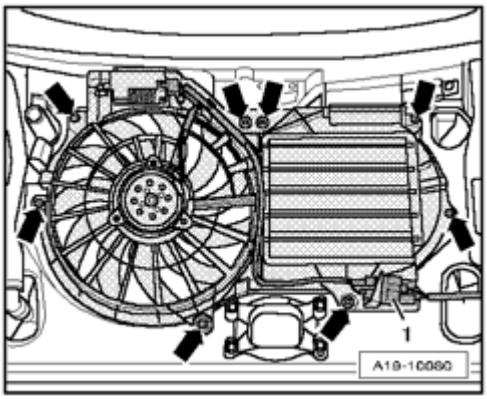

Fig. 550: Removing Bolts And Fan Shroud Upward/Out
Courtesy of VOLKSWAGEN UNITED STATES, INC.

- Disconnect electrical harness connector - **1** - for coolant fan.
- Remove bolts - **arrows** - and remove fan shroud upward and out.

Installing

Installation is in reverse order.

Tightening Specifications

Component		Nm
Fan shroud to	M6	11
Lock carrier	Metal screw	2

Coolant Fan, Removing and Installing

Coolant Fan, Removing and Installing

Removing

- Remove fan shroud --> **Fan Shroud, Removing and Installing**.
- Free up electrical wiring.

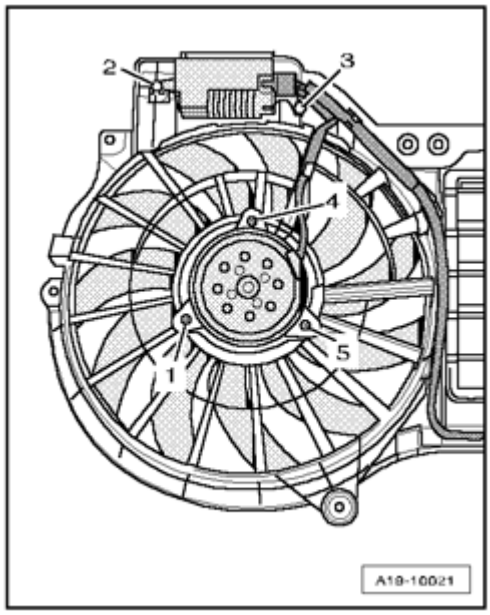

Fig. 551: Removing Bolts & Coolant Fan With Control Module
Courtesy of VOLKSWAGEN UNITED STATES, INC.

- Remove bolts - **1 to 5** -.
- Remove coolant fan with control module.

Installing

Installation is in reverse order of removal, noting the following:

- Install fan shroud --> **Fan Shroud, Removing and Installing**.

Tightening specifications

Component		Nm
Coolant fan	Single stage fan	3
To fan shroud	Double fan	4,5

Cooling System, Checking for Leaks

Cooling System, Checking for Leaks

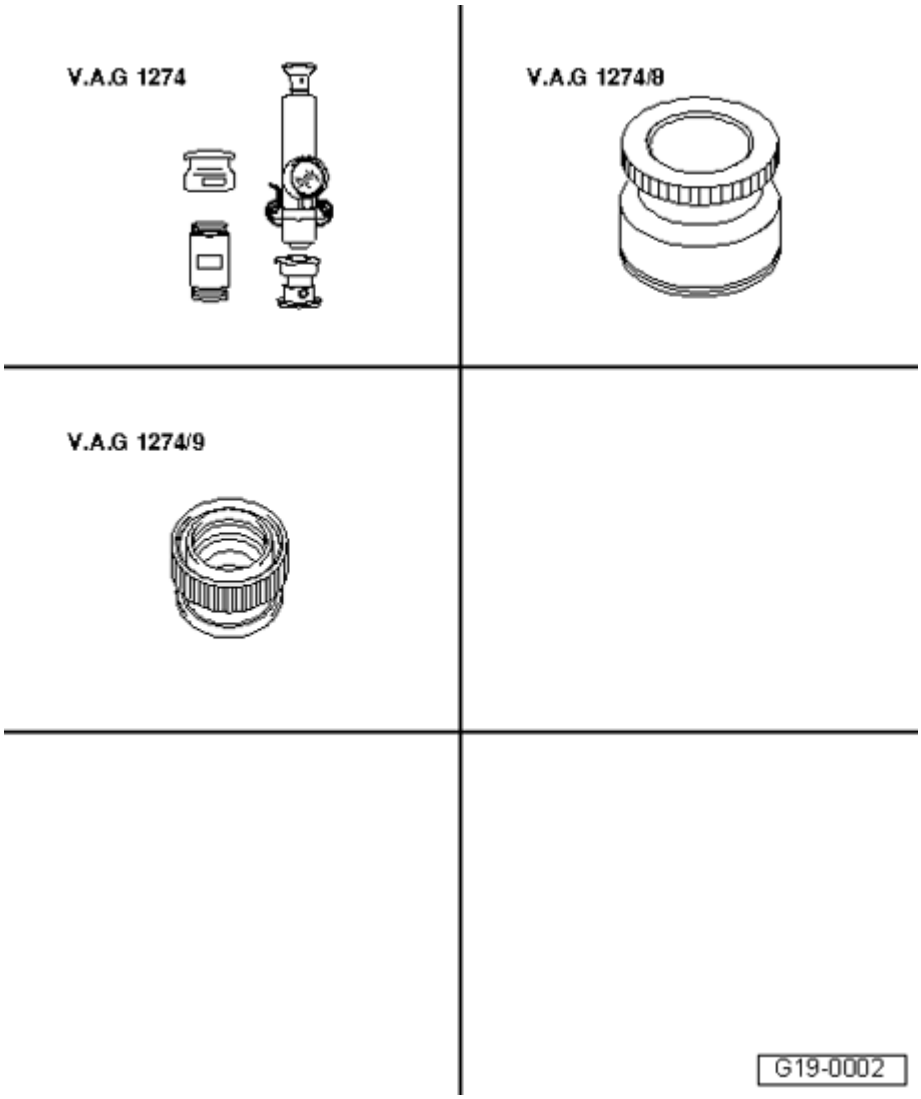

Fig. 552: Identifying Special Tools - Cooling System, Checking For Leaks
Courtesy of VOLKSWAGEN UNITED STATES, INC.

Special tools, testers and auxiliary items required

- Cooling system tester V.A.G 1274
- Adapter V.A.G 1274/8
- Adapter V.A.G 1274/9

Procedure

- Engine at operating temperature.

CAUTION: Cover cap of expansion tank with rag and open carefully, as hot steam i.e. hot coolant may escape when opening.

- Open cap of coolant expansion tank.

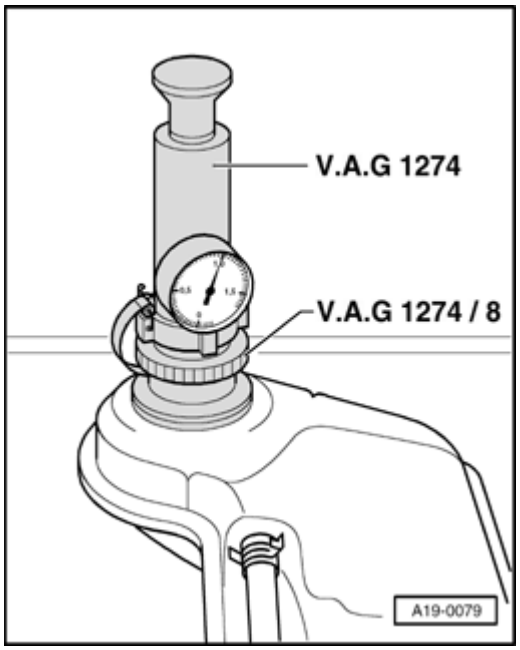

Fig. 553: Positioning Cooling System Tester V.A.G 1274 With Adapter V.A.G 1274/8 On Expansion Tank
Courtesy of VOLKSWAGEN UNITED STATES, INC.

- Position cooling system tester V.A.G 1274 with adapter V.A.G 1274/8 on expansion tank.
- Generate a positive pressure of approximately 1.0 bar using hand pump of cooling system tester.

If pressure drops:

- Search for leaking areas and repair the malfunction.

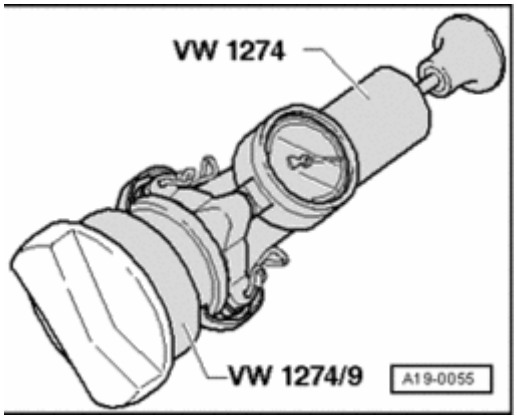

Fig. 554: Pressure Relief Valve In Cap, Checking
Courtesy of VOLKSWAGEN UNITED STATES, INC.

Pressure relief valve in cap, checking

- Position cooling system tester V.A.G 1274 with adapter V.A.G 1274/9 on cap.
- Generate a positive pressure using hand pump of cooling system tester.

- Pressure release valve must open at a positive pressure of 1.4 to 1.6 bar.

If check-valve does not open as indicated:

- Replace cap.

26 - EXHAUST SYSTEM, EMISSION CONTROLS

EXHAUST SYSTEM, REMOVING AND INSTALLING

Exhaust System, Removing and Installing

--> **Exhaust System, FWD, Component Overview**

--> **Exhaust System, AWD, Component Overview**

--> **Center Muffler and Rear Muffler, Separating**

--> **Tail Pipe, Replacing**

--> **Left Front Exhaust Pipe with Catalytic Converter, Removing and Installing**

--> **Right Exhaust Pipe with Catalytic Converter, Removing and Installing**

--> **Exhaust Manifold, Component Overview**

--> **Left Exhaust Manifold, Removing and Installing**

--> **Right Exhaust Manifold, Removing and Installing**

--> **Exhaust System, Installing**

--> **Exhaust System, Checking for Leaks**

NOTE:

- **After exhaust system repairs, make sure exhaust system is not under stress and is far enough from the body. If necessary, loosen clamping sleeves and align mufflers and exhaust pipes so that there is adequate distance to vehicle body, and weight is evenly distributed among the exhaust hangers.**

Exhaust System, FWD, Component Overview

Exhaust System, FWD, Component Overview

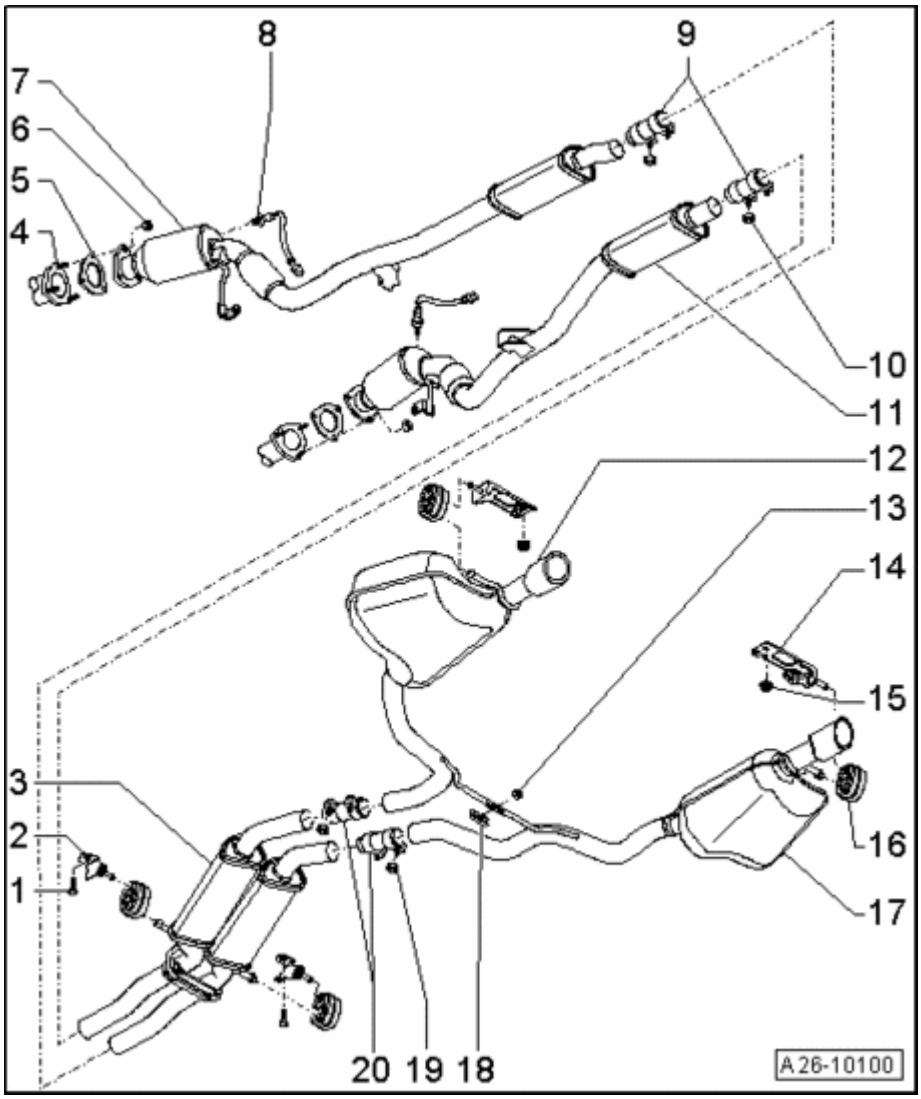

Fig. 555: Exhaust System, FWD, Component Overview
Courtesy of VOLKSWAGEN UNITED STATES, INC.

1 - 23 Nm

2 - Suspended mount

- Replace if damaged

3 - Center muffler

- Original equipment as one unit with rear muffler. For repairs, replace each separately.
- Separating point --> *Separate exhaust pipes at a right angle at separating point arrow using chain pipe cutter VAS 6254.* under **Center Muffler and Rear Muffler, Separating**
- Install exhaust system free of stress --> **Exhaust System, Installing**

4 - Exhaust Manifold

- Removing and installing: Left --> **Left Exhaust Manifold, Removing and Installing** , right --> **Right Exhaust Manifold, Removing and Installing**

5 - Gasket

- Replace

6 - 23 Nm

- Replace

7 - Front exhaust pipe with catalytic converter and front muffler

- For cylinder bank 2 (left)
- With decoupling element; the decoupling element must not be bent more than 10 otherwise it may be damaged
- Protect from shocks and impact stress
- Removing and installing --> **Left Front Exhaust Pipe with Catalytic Converter, Removing and Installing**
- Individual components of mounting: Vehicles with multitronic transmission --> **Individual left mounting components - vehicles with Multitronic transmission**
- Install exhaust system free of stress --> **Exhaust System, Installing**

8 - Oxygen Sensor (O2S) Behind Three Way Catalytic Converter (TWC)

- The threads of new oxygen sensors are coated with assembly paste; the paste must not get into slots of oxygen sensor body
- When re-using the old oxygen sensor, grease the threads with hot bolt paste; the paste must not get into slots of oxygen sensor body; hot bolt paste
- Removing and installing --> **24 - FUEL INJECTION SYSTEM**
- Tighten to 55 Nm.

9 - Front clamping sleeves

- Installed location --> **Installed position of front double clamps**
- Before tightening, align exhaust system so that it is tension-free --> **Exhaust System, Installing**
- Tighten threaded connections evenly.

10 - 23 Nm

11 - Front exhaust pipe with catalytic converter and front muffler

- For cylinder bank 1 (right)
- With decoupling element; the decoupling element must not be bent more than 10 otherwise it may be damaged
- Protect from shocks and impact stress
- Removing and installing --> **Right Exhaust Pipe with Catalytic Converter, Removing and Installing**
- Individual components of mounting: Vehicles with multitronic transmission --> **Individual right mounting components - vehicles with Multitronic transmission**
- Install exhaust system free of stress --> **Exhaust System, Installing**

12 - Rear muffler with tailpipe

- Left side of vehicle
- Original equipment as one unit with center muffler
- In case of repairs, center muffler end muffler and tailpipe should be replaced individually
- Separating point center muffler/rear muffler --> *Separate exhaust pipes at a right angle at separating point arrow using chain pipe cutter VAS 6254.* under **Center Muffler and Rear Muffler, Separating**
- Rear muffler/tailpipe separating point --> **Tail Pipe, Replacing**
- Install exhaust system free of stress --> **Exhaust System, Installing**

13 - 23 Nm

- Replace

14 - Suspended mount

15 - 23 Nm

16 - Suspended mount

- Replace if damaged

17 - Rear muffler with tailpipe

- Right side of vehicle
- Original equipment as one unit with center muffler
- In case of repairs, center muffler end muffler and tailpipe should be replaced individually
- Separating point center muffler/rear muffler --> *Separate exhaust pipes at a right angle at separating point arrow using chain pipe cutter VAS 6254.* under **Center Muffler and Rear Muffler, Separating**
- Rear muffler/tailpipe separating point --> **Tail Pipe, Replacing**
- Install exhaust system free of stress --> **Exhaust System, Installing**

18 - Bracket

19 - 23 Nm

20 - Rear clamping sleeves

- For individual replacement of center and rear mufflers
- Position clamping sleeve centrally to separation point
- Installed location --> **Installed position of rear double clamps**
- Before tightening, align exhaust system so that it is tension-free --> **Exhaust System, Installing**
- Tighten threaded connections evenly.

Installed position of front double clamps

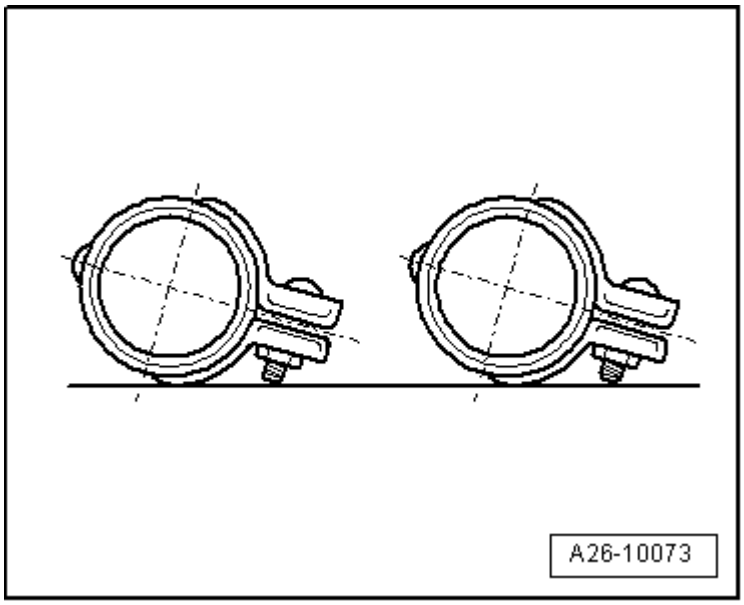

Fig. 556: Installed Position Of Front Double Clamps
Courtesy of VOLKSWAGEN UNITED STATES, INC.

- Install double clamps so that the bolt ends do not project over lower edge of double clamp.
- Threaded connections point toward the right.

Installed position of rear double clamps

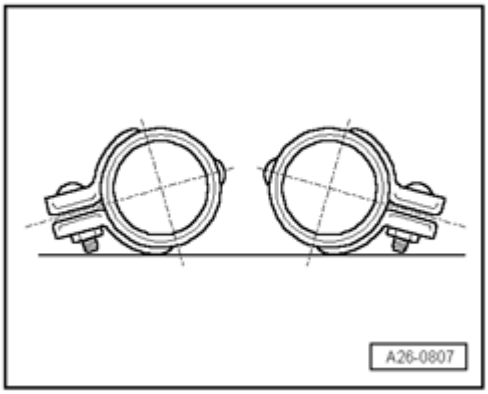

Fig. 557: Installing Double Clamps So That Bolt Ends Do Not Project Over Lower Edge Of Double Clamp
Courtesy of VOLKSWAGEN UNITED STATES, INC.

- Install double clamps so that the bolt ends do not project over lower edge of double clamp.
- Threaded connections point toward outside.

Individual left mounting components - vehicles with Multitronic transmission

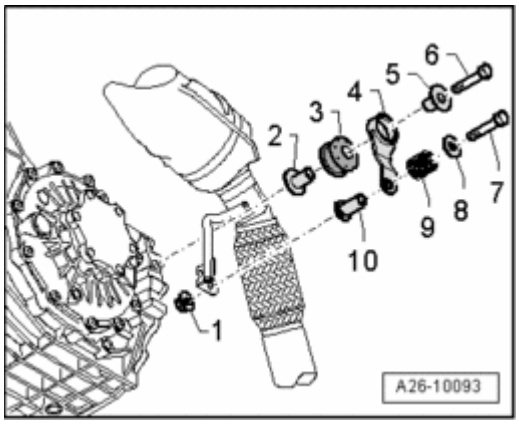

Fig. 558: Individual Left Mounting Components - Vehicles With Multitronic Transmission
Courtesy of VOLKSWAGEN UNITED STATES, INC.

1. Nut - 23 Nm
2. Spacing sleeve
3. Buffer
4. Spacing sleeve
5. Bolt
6. Bolt - 23 Nm
7. Bolt
8. Washer
9. Spring

10. Spacing sleeve

Individual right mounting components - vehicles with Multitronic transmission

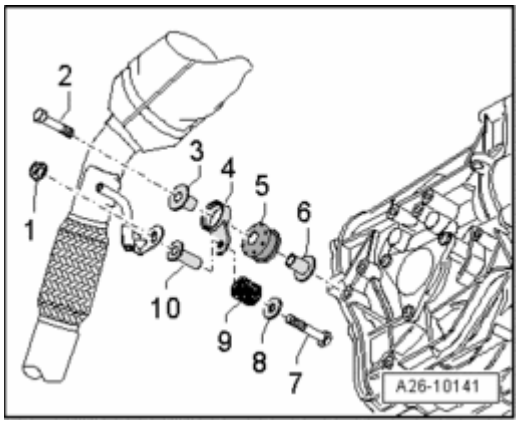

Fig. 559: Individual Right Mounting Components - Vehicles With Multitronic Transmission
Courtesy of VOLKSWAGEN UNITED STATES, INC.

1. Nut - 23 Nm
2. Bolt - 23 Nm
3. Spacing sleeve
4. Tab
5. Buffer
6. Spacing sleeve
7. Bolt
8. Washer
9. Spring
10. Spacing sleeve

Individual components of center bracket mounting for front exhaust pipe

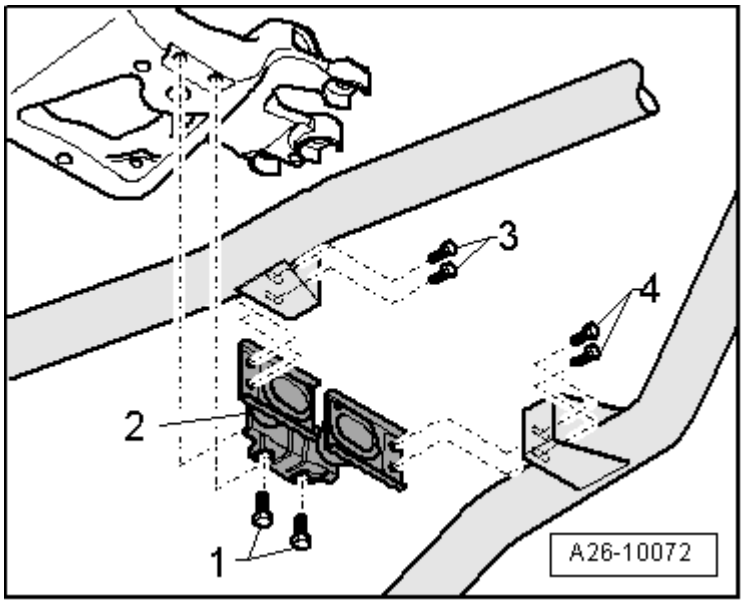

Fig. 560: Individual Components Of Center Bracket Mounting For Front Exhaust Pipe
Courtesy of VOLKSWAGEN UNITED STATES, INC.

1. 23 Nm
2. Bracket
3. 23 Nm
4. 23 Nm

Exhaust System, AWD, Component Overview

Exhaust System, AWD, Component Overview

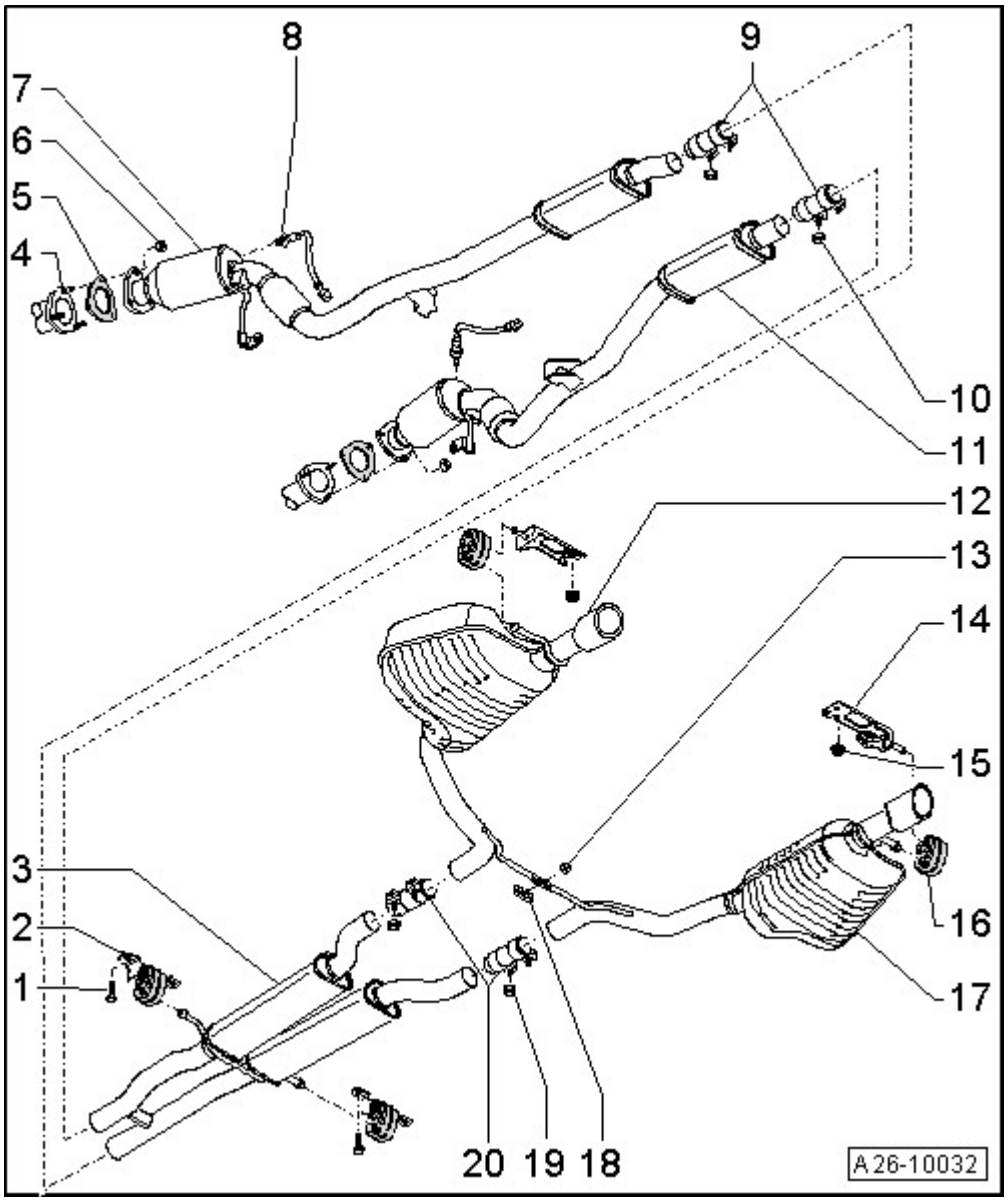

Fig. 561: Exhaust System, AWD, Component Overview
Courtesy of VOLKSWAGEN UNITED STATES, INC.

1 - 23 Nm

2 - Suspended mount

- Replace if damaged

3 - Center muffler

- Original equipment as one unit with rear muffler. For repairs, replace each separately.
- Separating point --> *Separate exhaust pipes at a right angle at separating point arrow using chain pipe cutter VAS 6254.* under **Center Muffler and Rear Muffler, Separating**

- Install exhaust system free of stress --> **Exhaust System, Installing**

4 - Exhaust Manifold

- Removing and installing: Left --> **Left Exhaust Manifold, Removing and Installing** , right --> **Right Exhaust Manifold, Removing and Installing**

5 - Gasket

- Replace

6 - 23 Nm

- Replace

7 - Front exhaust pipe with catalytic converter and front muffler

- For cylinder bank 2 (left)
- With decoupling element; the decoupling element must not be bent more than 10 otherwise it may be damaged
- Protect from shocks and impact stress
- Removing and installing --> **Left Front Exhaust Pipe with Catalytic Converter, Removing and Installing**
- Individual components of suspension --> **Individual left mounting components - vehicles with manual transmission and automatic transmission 09L**
- Install exhaust system free of stress --> **Exhaust System, Installing**

8 - Oxygen Sensor (O2S) Behind Three Way Catalytic Converter (TWC)

- The threads of new oxygen sensors are coated with assembly paste; the paste must not get into slots of oxygen sensor body
- When re-using the old oxygen sensor, grease the threads with hot bolt paste; the paste must not get into slots of oxygen sensor body; hot bolt paste
- Removing and installing --> **24 - FUEL INJECTION SYSTEM**
- Tighten to 55 Nm.

9 - Front clamping sleeves

- Installed location --> **Installed position of front double clamps**
- Before tightening, align exhaust system so that it is tension-free --> **Exhaust System, Installing**
- Tighten threaded connections evenly.

10 - 23 Nm

11 - Front exhaust pipe with catalytic converter and front muffler

- For cylinder bank 1 (right)
- With decoupling element; the decoupling element must not be bent more than 10 otherwise it may be damaged
- Protect from shocks and impact stress
- Removing and installing --> **Right Exhaust Pipe with Catalytic Converter, Removing and Installing**
- Individual components of suspension.
- Install exhaust system free of stress --> **Exhaust System, Installing**

12 - Rear muffler with tailpipe

- Left side of vehicle
- Original equipment as one unit with center muffler
- In case of repairs, center muffler end muffler and tailpipe should be replaced individually
- Separating point center muffler/rear muffler --> *Separate exhaust pipes at a right angle at separating point arrow using chain pipe cutter VAS 6254.* under **Center Muffler and Rear Muffler, Separating**
- Rear muffler/tailpipe separating point --> **Tail Pipe, Replacing**
- Install exhaust system free of stress --> **Exhaust System, Installing**

13 - 23 Nm

- Replace

14 - Suspended mount

15 - 23 Nm

16 - Suspended mount

- Replace if damaged

17 - Rear muffler with tailpipe

- Right side of vehicle
- Original equipment as one unit with center muffler
- In case of repairs, center muffler end muffler and tailpipe should be replaced individually
- Separating point center muffler/rear muffler --> *Separate exhaust pipes at a right angle at separating point arrow using chain pipe cutter VAS 6254.* under **Center Muffler and Rear Muffler, Separating**
- Rear muffler/tailpipe separating point --> **Tail Pipe, Replacing**
- Install exhaust system free of stress --> **Exhaust System, Installing**

18 - Bracket

19 - 23 Nm

20 - Rear clamping sleeves

- For individual replacement of center and rear mufflers
- Position clamping sleeve centrally to separation point
- Installed location --> **Installed position of rear double clamps**
- Before tightening, align exhaust system so that it is tension-free --> **Exhaust System, Installing**
- Tighten threaded connections evenly.

Installed position of front double clamps

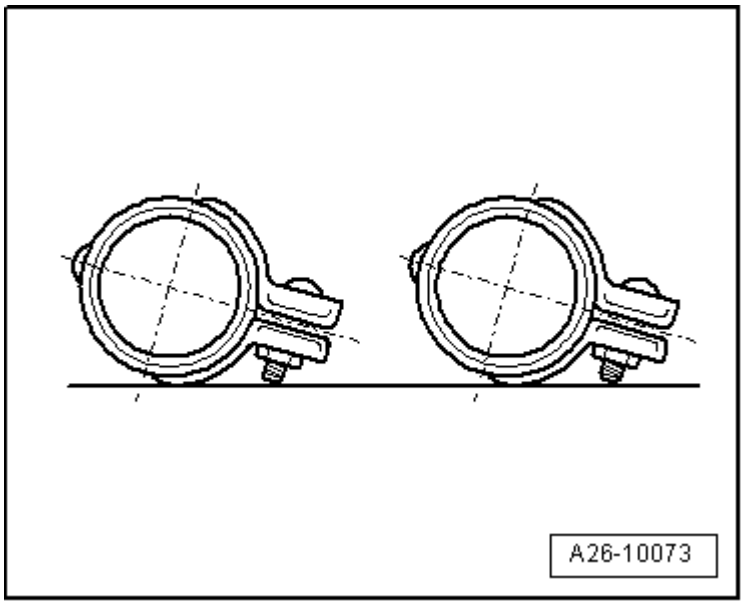

Fig. 562: Installed Position Of Front Double Clamps
Courtesy of VOLKSWAGEN UNITED STATES, INC.

- Install double clamps so that the bolt ends do not project over lower edge of double clamp.
- Threaded connections point toward the right.

Installed position of rear double clamps

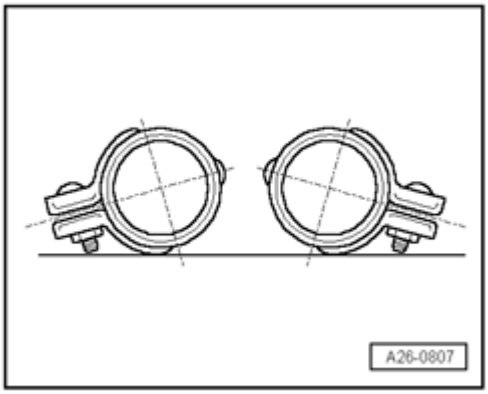

Fig. 563: Installing Double Clamps So That Bolt Ends Do Not Project Over Lower Edge Of Double Clamp
Courtesy of VOLKSWAGEN UNITED STATES, INC.

- Install double clamps so that the bolt ends do not project over lower edge of double clamp.
- Threaded connections point toward outside.

Individual left mounting components - vehicles with manual transmission and automatic transmission 09L

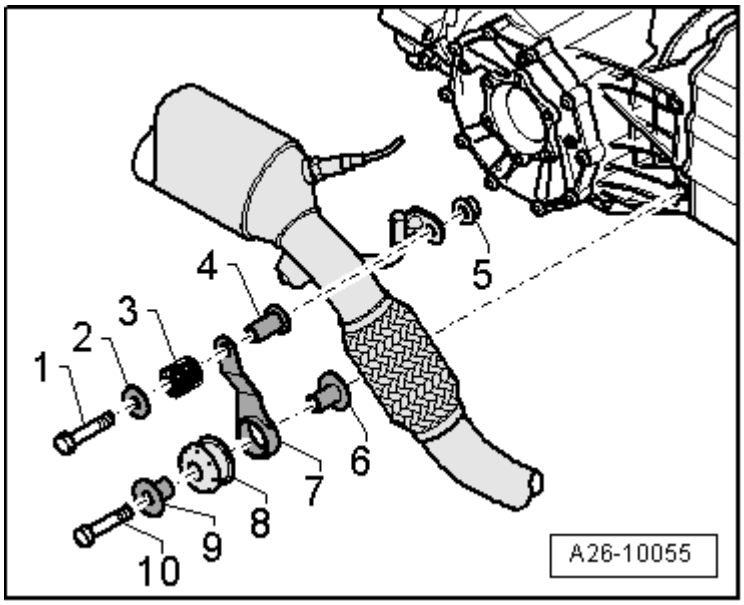

Fig. 564: Removing Bolt At Left Bracket For Front Exhaust Pipe
Courtesy of VOLKSWAGEN UNITED STATES, INC.

1. Bolt
2. Washer
3. Spring
4. Spacing sleeve
5. Nut - 23 Nm

6. Spacing sleeve
7. Tab
8. Buffer
9. Spacing sleeve
10. Bolt - 23 Nm

Individual right mounting components - vehicles with automatic transmission 09L

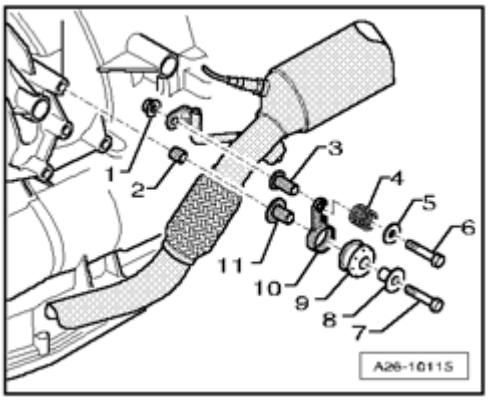

Fig. 565: Removing Bolt At Right Bracket For Front Exhaust Pipe
Courtesy of VOLKSWAGEN UNITED STATES, INC.

1. Nut - 23 Nm
2. Sleeve
3. Spacing sleeve
4. Spring
5. Washer
6. Bolt
7. Bolt - 23 Nm
8. Spacing sleeve
9. Buffer
10. Tab
11. Spacing sleeve

Individual components of center bracket mounting for front exhaust pipe

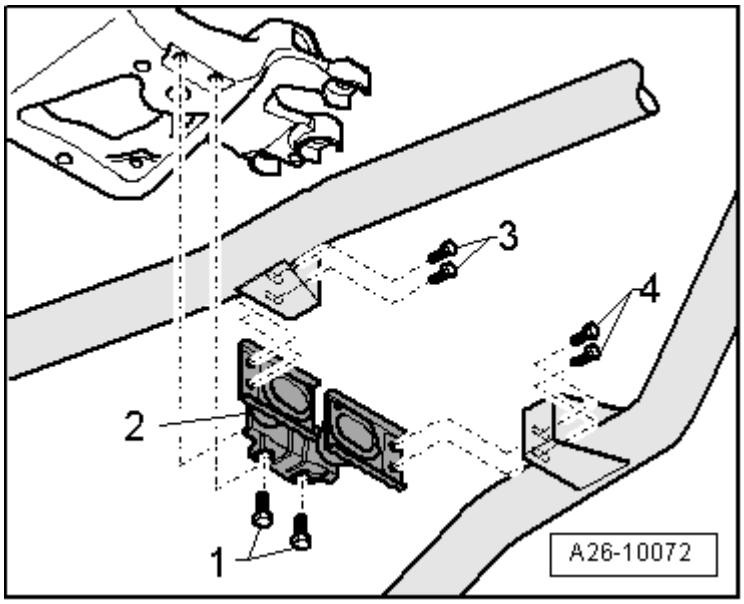

Fig. 566: Individual Components Of Center Bracket Mounting For Front Exhaust Pipe
Courtesy of VOLKSWAGEN UNITED STATES, INC.

1. 23 Nm
2. Bracket
3. 23 Nm
4. 23 Nm

Center Muffler and Rear Muffler, Separating

Center Muffler and Rear Muffler, Separating

- A separating point has been provided in the connecting pipe for individual replacement of the center or rear muffler.
- The separating point is marked by depressions around the circumference of the exhaust pipe.

Special tools, testers and auxiliary items required

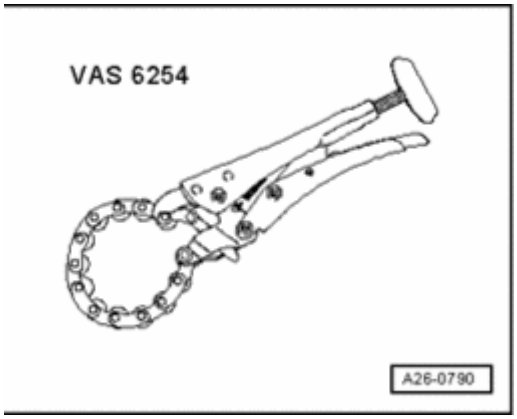

Fig. 567: Chain Pipe Cutter VAS 6254
Courtesy of VOLKSWAGEN UNITED STATES, INC.

- Chain pipe cutter VAS 6254

Procedure for vehicles with front wheel drive

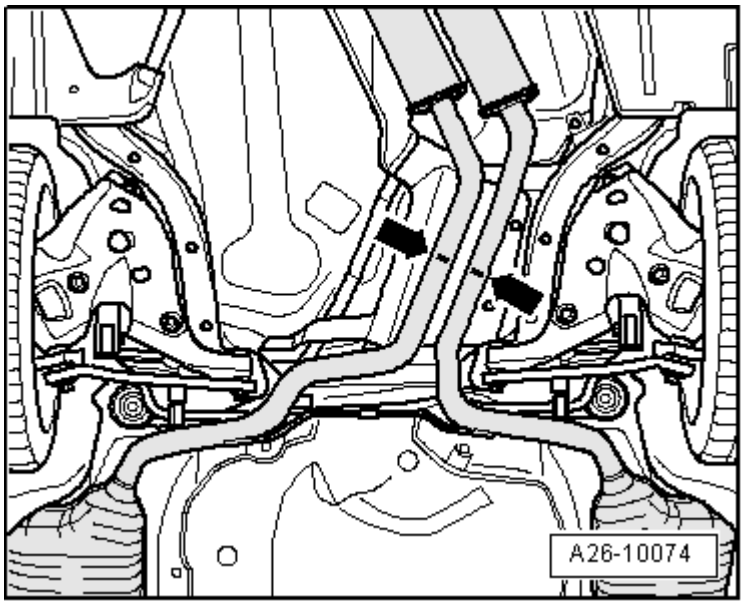

Fig. 568: Separating Exhaust Pipes At A Right Angle At Separating Point Using Chain Pipe Cutter VAS 6254
Courtesy of VOLKSWAGEN UNITED STATES, INC.

- Separate exhaust pipes at a right angle at separating point - **arrow** - using chain pipe cutter VAS 6254.

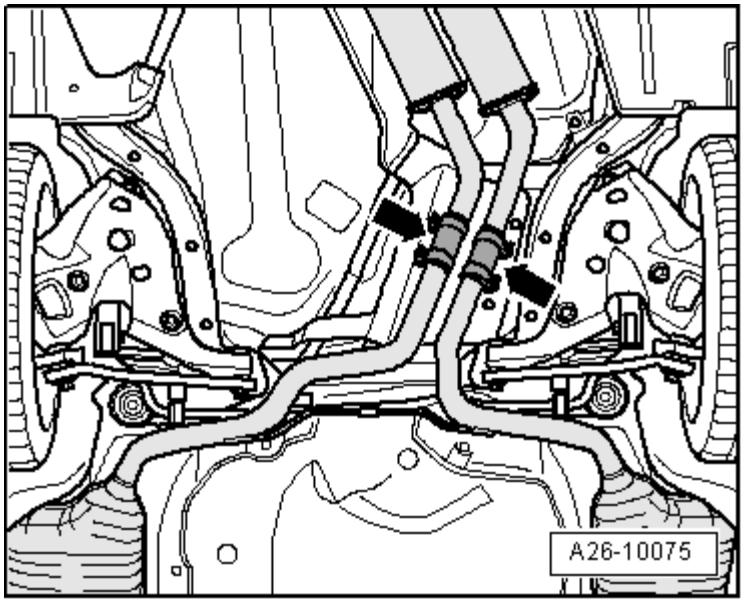

Fig. 569: Positioning Clamping Sleeves Centrally On Separation Point

Courtesy of VOLKSWAGEN UNITED STATES, INC.

- When installing, position clamping sleeves - **arrows** - centrally on separation point.

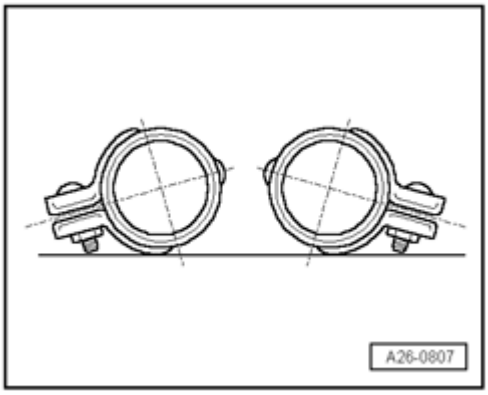

Fig. 570: Installing Double Clamps So That Bolt Ends Do Not Project Over Lower Edge Of Double Clamp
Courtesy of VOLKSWAGEN UNITED STATES, INC.

- Install double clamps so that the bolt ends do not project over lower edge of double clamp.
- Threaded connections point toward outside.
- Align exhaust system free of tension --> **Exhaust System, Installing**.

Procedure for vehicles with all wheel drive

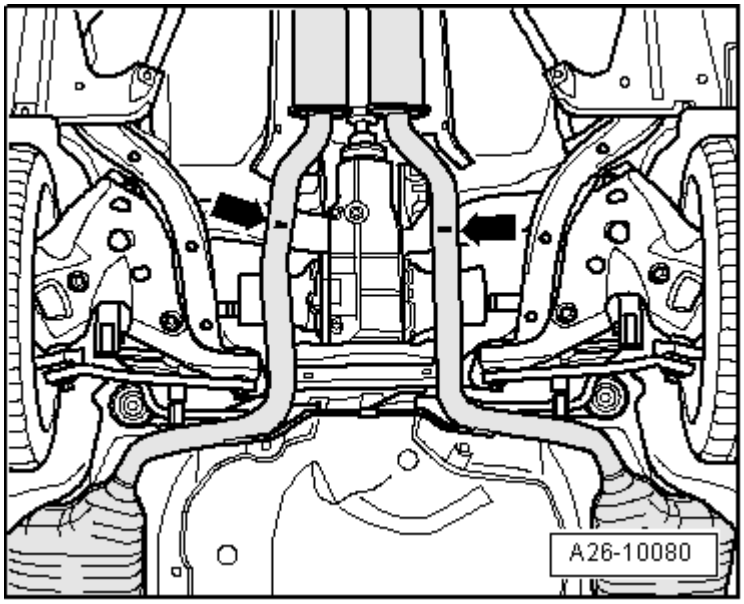

Fig. 571: Separating Exhaust Pipes At Separating Point Using Chain Pipe Cutter VAS 6254 At Right Angle
Courtesy of VOLKSWAGEN UNITED STATES, INC.

- Separate exhaust pipes at a right angle at separating point - **arrow** - using chain pipe cutter VAS 6254.

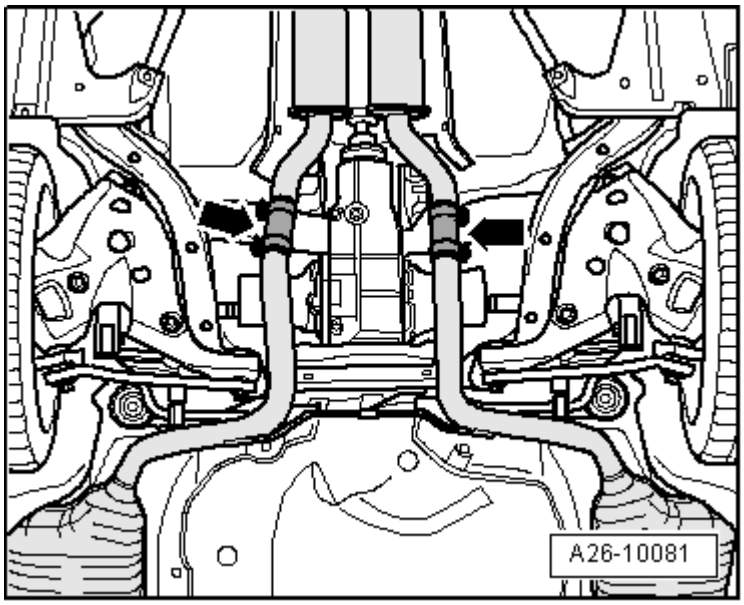

Fig. 572: Positioning Clamping Sleeves At Center Of Separating Cut
Courtesy of VOLKSWAGEN UNITED STATES, INC.

- When installing, position clamping sleeves - **arrows** - centrally on separation point.

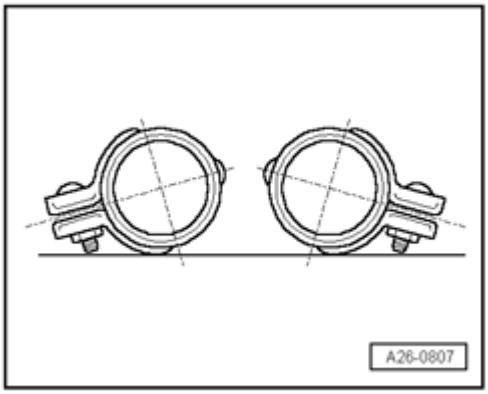

Fig. 573: Installing Double Clamps So That Bolt Ends Do Not Project Over Lower Edge Of Double Clamp
Courtesy of VOLKSWAGEN UNITED STATES, INC.

- Install double clamps so that the bolt ends do not project over lower edge of double clamp.
- Threaded connections point toward outside.
- Align exhaust system free of tension --> **Exhaust System, Installing**.

Tail Pipe, Replacing

Tail Pipe, Replacing

Special tools, testers and auxiliary items required

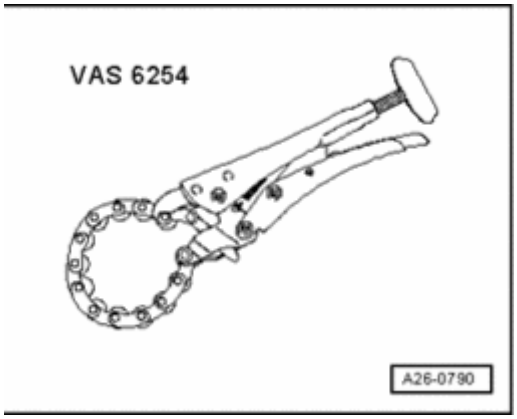

Fig. 574: Chain Pipe Cutter VAS 6254
Courtesy of VOLKSWAGEN UNITED STATES, INC.

- Chain pipe cutter VAS 6254

Procedure

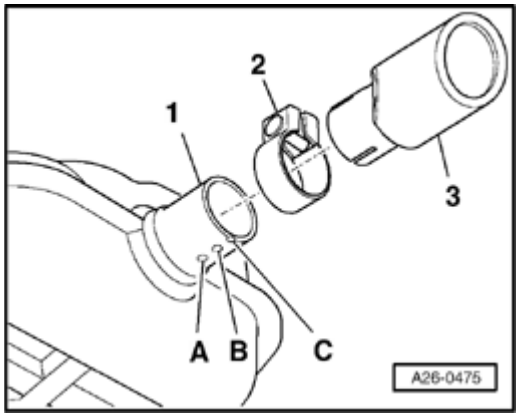

Fig. 575: Replacing Tailpipe
Courtesy of VOLKSWAGEN UNITED STATES, INC.

- Separate end pipe - **1** - using chain pipe cutter VAS 6254 at right angle at separating point - **C** -.
- Push end pipe - **3** - on up to marking - **A** - while aligning slit in end pipe with marking - **B** - on cover.
- Install clamp - **2** -.

Tightening specifications

Component	Nm
Clamp	25

Left Front Exhaust Pipe with Catalytic Converter, Removing and Installing

Left Front Exhaust Pipe with Catalytic Converter, Removing and Installing

Removing

NOTE:

- **All cable ties which are opened or cut open when removing, must be replaced in the same position when installing.**

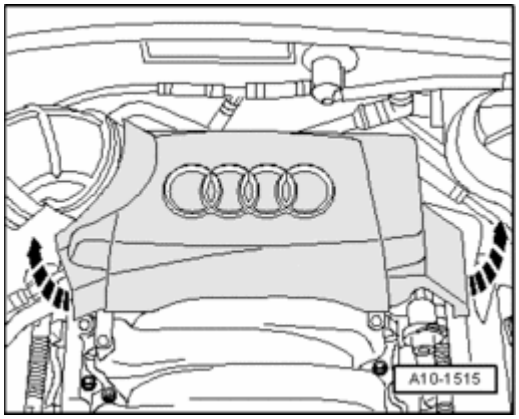

Fig. 576: Removing Rear Engine Cover
Courtesy of VOLKSWAGEN UNITED STATES, INC.

- Remove rear engine cover - **arrows** -.

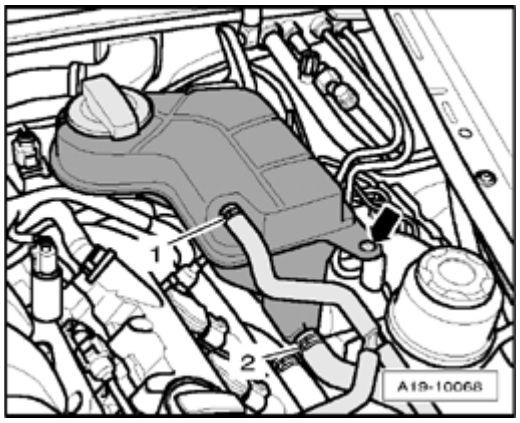

Fig. 577: Removing Coolant Hoses At Coolant Expansion Tank
Courtesy of VOLKSWAGEN UNITED STATES, INC.

- Remove coolant expansion tank - **arrow** -.
- Disconnect electrical connection from Engine Coolant Level (ECL) Warning Switch F66 at bottom of coolant reservoir and set aside coolant reservoir with coolant hoses - **1** - and - **2** - connected.

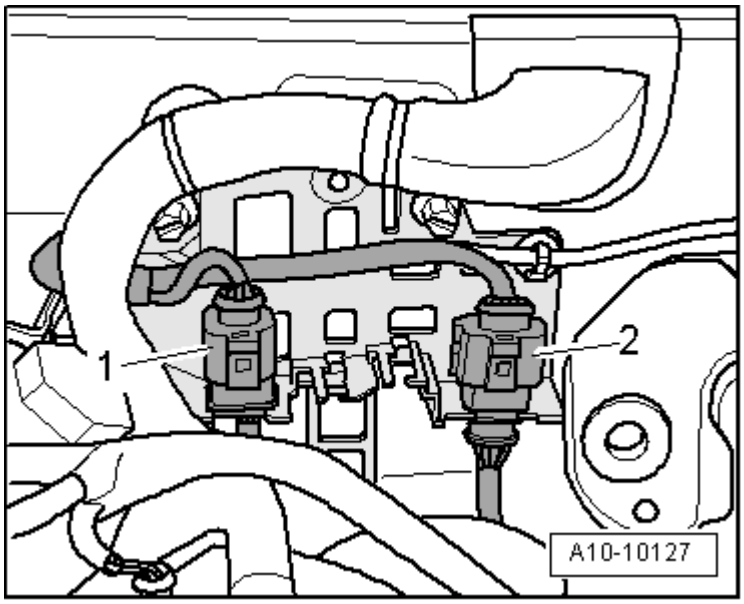

Fig. 578: Disconnecting Electrical Harness Connector For Oxygen Sensor (O2S) 2 Behind Three Way Catalytic Converter (TWC) G131
Courtesy of VOLKSWAGEN UNITED STATES, INC.

- Disconnect electrical harness connector - **2** - for Oxygen Sensor (O2S) 2 Behind Three Way Catalytic Converter (TWC) G131 and free up the wiring.

NOTE:

- **Ignore - 1 -.**

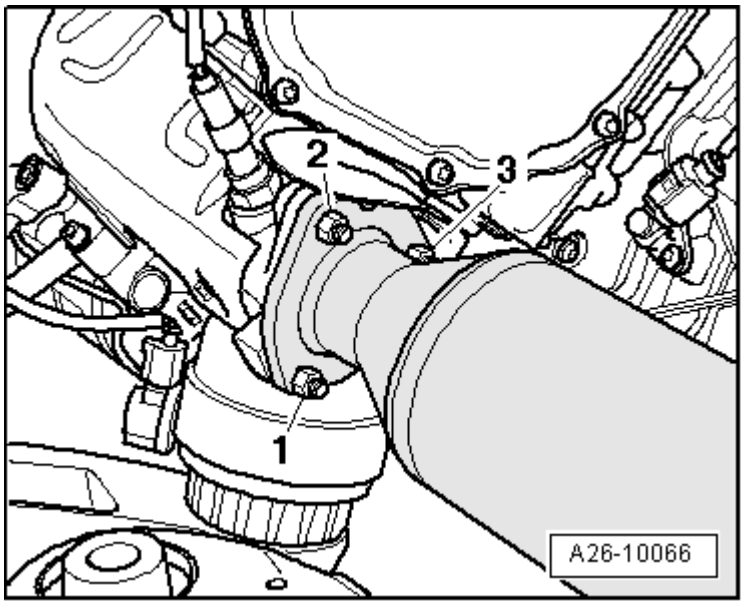

Fig. 579: Removing Nuts & Left Front Exhaust Pipe With Catalytic Converter
Courtesy of VOLKSWAGEN UNITED STATES, INC.

- Remove nut - **2** - which is accessible from top for front exhaust pipe/exhaust manifold.

NOTE:

- **To improve clarity, the removed engine is shown from the rear.**

- Remove left front wheel.

NOTE:

- **Secure brake disc with a wheel bolt.**

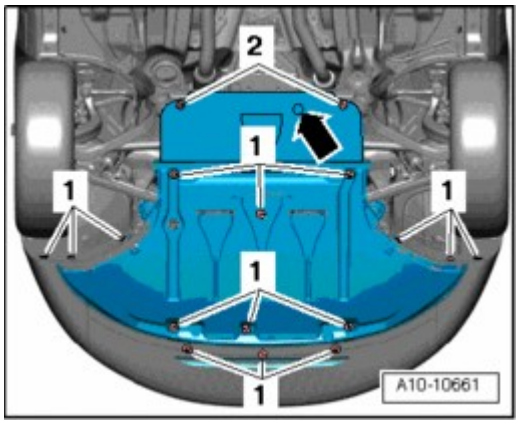

Fig. 580: Identifying Noise Insulation And Mountings
Courtesy of VOLKSWAGEN UNITED STATES, INC.

- Remove noise insulation and mountings - **1, 2** - - **arrow** - where present.

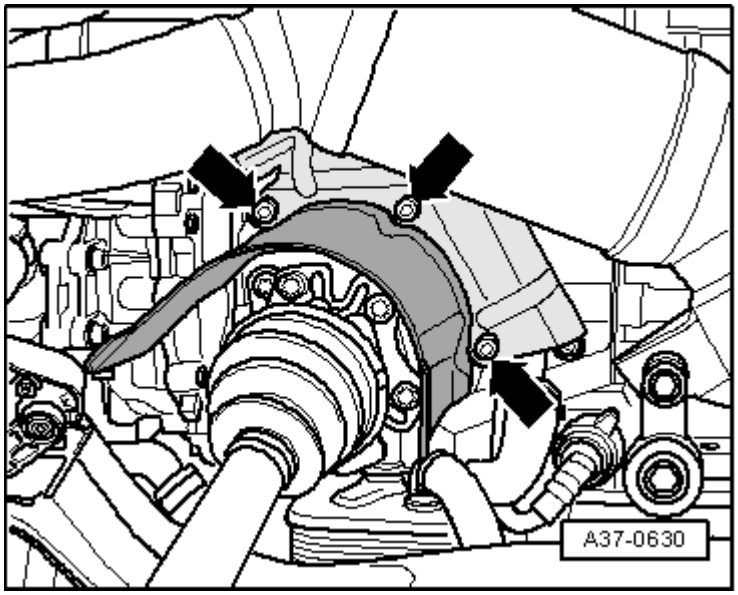

Fig. 581: Removing Heat Shield For Drive Axle
Courtesy of VOLKSWAGEN UNITED STATES, INC.

- Remove heat shield - **arrows** - for left drive axle.

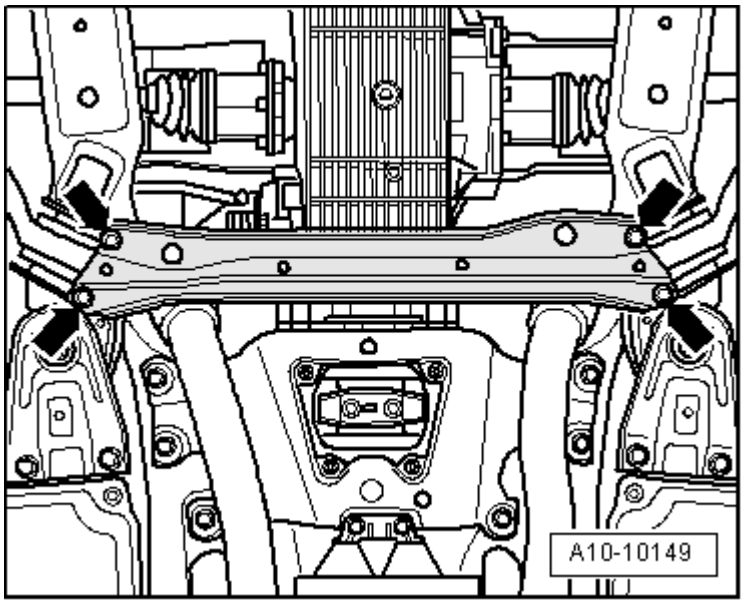

Fig. 582: Removing Subframe Transverse Beam
Courtesy of VOLKSWAGEN UNITED STATES, INC.

- Remove subframe transverse beam - **arrows** -.

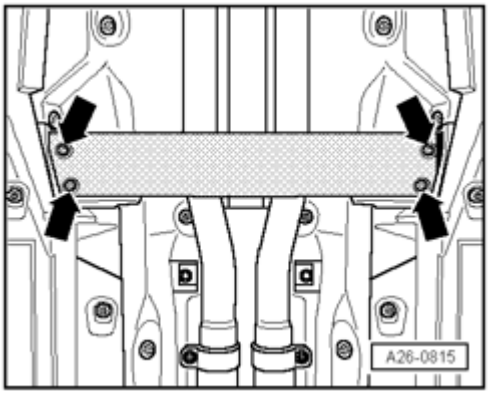

Fig. 583: Removing Front Transverse Beam
Courtesy of VOLKSWAGEN UNITED STATES, INC.

- Remove front transverse beam - **arrows** -.

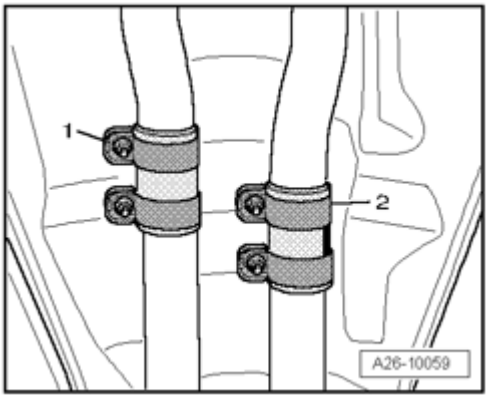

Fig. 584: Loosening Clamping Sleeves
Courtesy of VOLKSWAGEN UNITED STATES, INC.

Separate exhaust system at left clamping sleeve - **2** -.

NOTE:

- **Ignore - 1 -.**

NOTE:

- **Do not bend the flex joint in front of the exhaust pipe more than 10 or it could be damaged.**

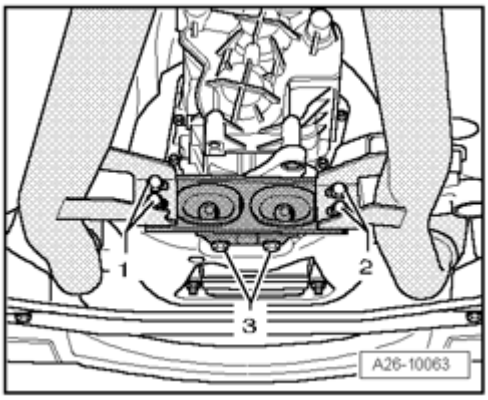

Fig. 585: Removing/Installing Mounting Bolts For Front Exhaust Pipes
Courtesy of VOLKSWAGEN UNITED STATES, INC.

- Remove bolts - **1** - at rear bracket for front exhaust pipe.

NOTE:

- **Ignore - 2 - and - 3 -.**

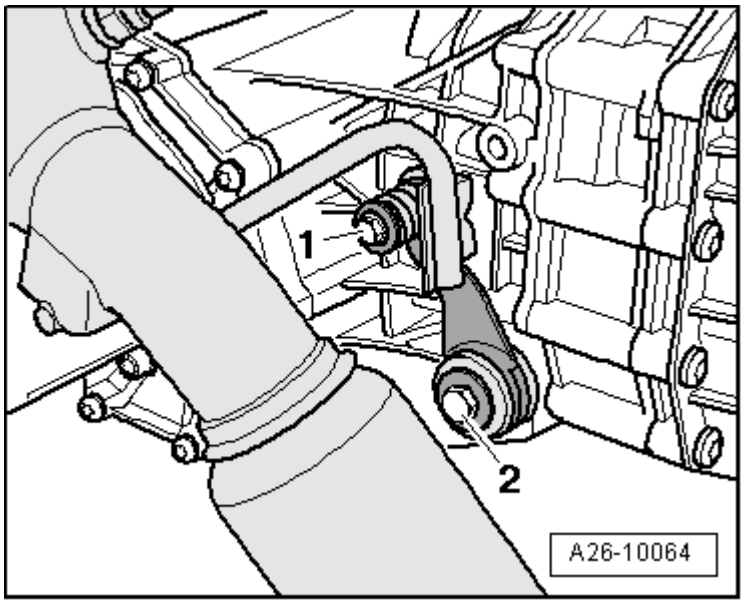

Fig. 586: Removing Bolt At Left Bracket For Front Exhaust Pipe
Courtesy of VOLKSWAGEN UNITED STATES, INC.

Vehicles with automatic transmission 09L:

- Remove bolt - **1** - at left bracket for front exhaust pipe.

NOTE:

- **Shown in illustration on a vehicle with manual transmission.**
- **Ignore - 2 -.**

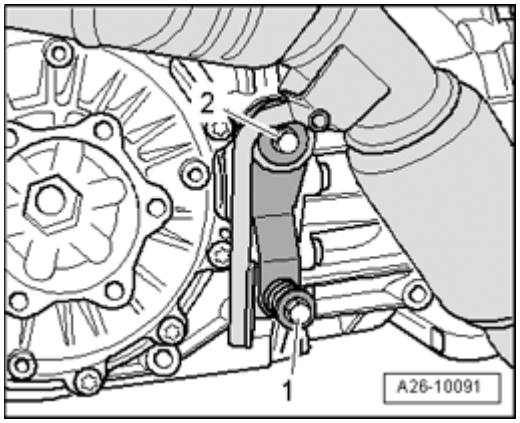

Fig. 587: Removing Bolt At Left Bracket For Front Exhaust Pipe
Courtesy of VOLKSWAGEN UNITED STATES, INC.

Vehicles with multitronic transmission:

- Remove bolts - **1** - and - **2** -.
- Remove left bracket for front exhaust pipe.

All:

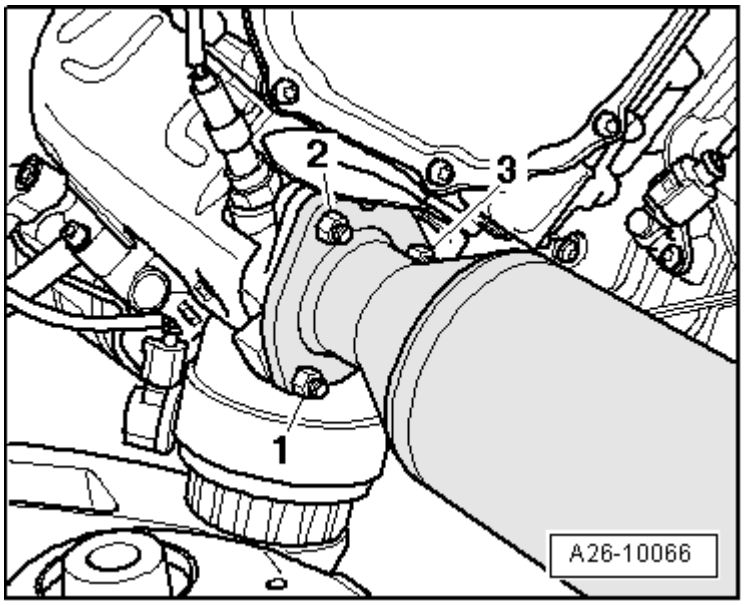

Fig. 588: Removing Nuts & Left Front Exhaust Pipe With Catalytic Converter
Courtesy of VOLKSWAGEN UNITED STATES, INC.

- Remove nuts - **1** - and - **3** - which are accessible from bottom for front exhaust pipe/exhaust manifold.

NOTE:

- **To improve clarity, removed engine is shown.**

- Remove front exhaust pipe with catalytic converter.

Installing

Installation is in reverse order of removal, noting the following:

NOTE:

- **Replace gaskets and self-locking nuts.**
- **During installation, all cable ties must be re-installed at the same location.**
- **Electrical wire of oxygen sensor must always be secured in the same position when installing so that contact with the exhaust pipe is avoided.**

- Install subframe cross member --> **40 - FRONT SUSPENSION** .
- Install front cross member --> **50 - BODY - FRONT** .
- Align exhaust system free of tension --> **Exhaust System, Installing**.

NOTE:

- **Individual components of exhaust system mounting: Vehicles with multitronic transmission --> Individual left mounting components - vehicles with Multitronic transmission , vehicles with automatic transmission 09L --> Individual left mounting components - vehicles with**

manual transmission and automatic transmission 09L

Tightening specifications

Component		Nm
Front exhaust pipe with catalytic converter to exhaust manifold		23 1)2)
Mounting strap to	Front exhaust pipe	23
	Transmission	23
Front exhaust pipe to center bracket		23
Heat shield for drive shaft to transmission		23
1) Replace nuts. 2) Grease with hot bolt paste; Hot bolt paste .		

Right Exhaust Pipe with Catalytic Converter, Removing and Installing

Right Exhaust Pipe with Catalytic Converter, Removing and Installing

Removing

NOTE:

- **All cable ties which are opened or cut open when removing, must be replaced in the same position when installing.**

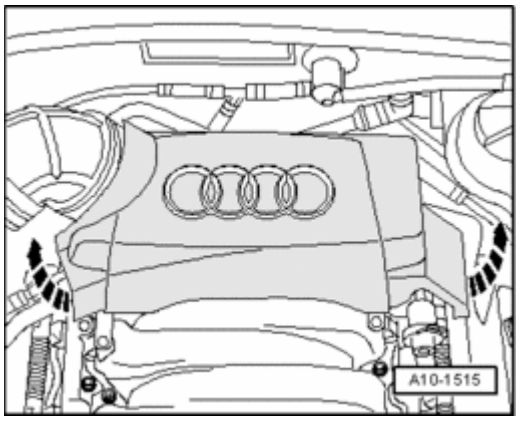

Fig. 589: Removing Rear Engine Cover
Courtesy of VOLKSWAGEN UNITED STATES, INC.

- Remove rear engine cover - **arrows** -.

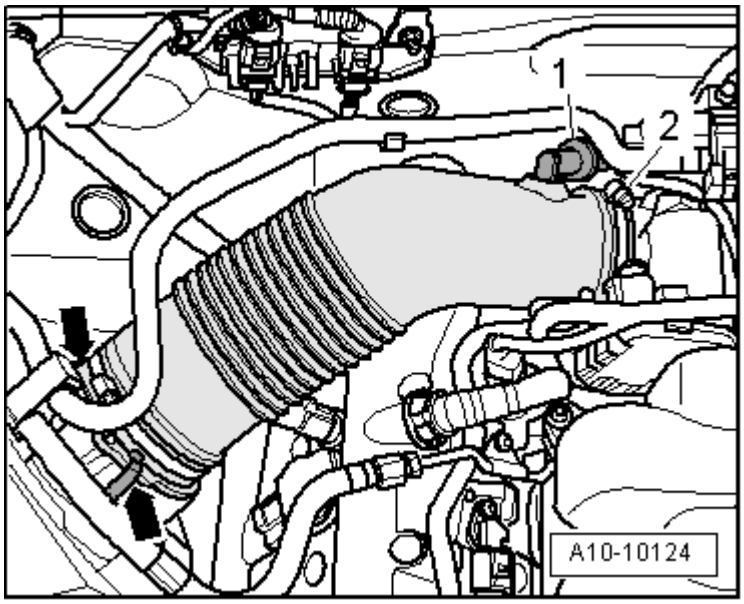

Fig. 590: Disconnecting Check Valve From Connection At Air Duct Hose & Removing Air Duct Hose
Courtesy of VOLKSWAGEN UNITED STATES, INC.

- Disconnect check valve - **1** - from connection at air duct hose.
- Remove air duct hose, thereby loosening the hose clamp - **2** - and opening clips - **arrows** -.

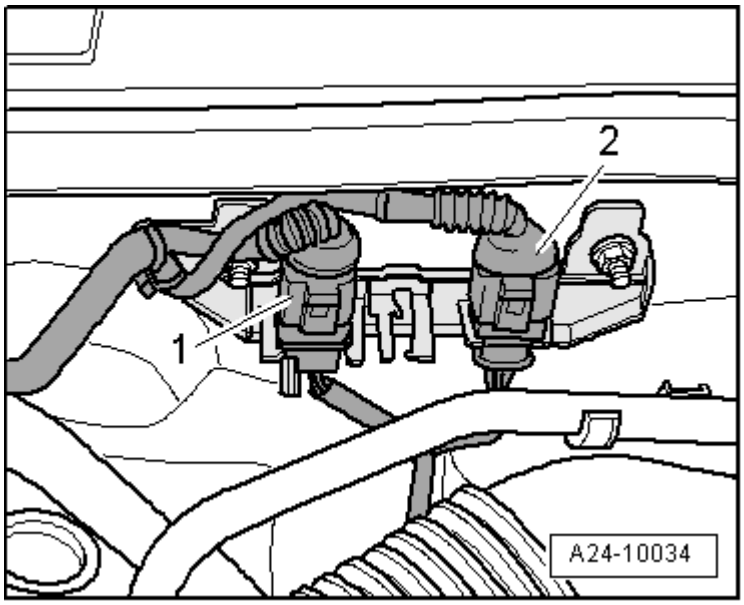

Fig. 591: Disconnecting Electrical Harness Connector For Oxygen Sensor (O2S) Behind Three Way Catalytic Converter (TWC) G130
Courtesy of VOLKSWAGEN UNITED STATES, INC.

- Disconnect electrical harness connector - **2** - for Oxygen Sensor (O2S) Behind Three Way Catalytic Converter (TWC) G130 and free up the wiring.

NOTE:

- **Ignore - 1 -.**

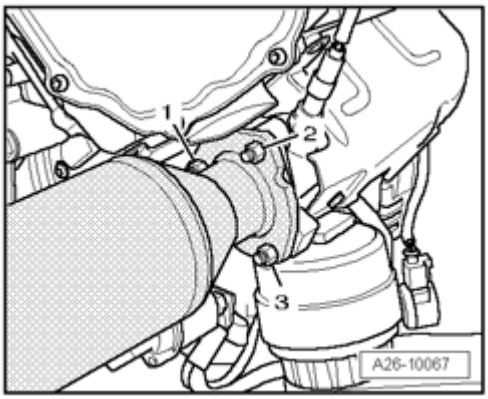

Fig. 592: Removing Nuts & Right Front Exhaust Pipe With Catalytic Converter
Courtesy of VOLKSWAGEN UNITED STATES, INC.

- Remove nut - **2** - which is accessible from top for front exhaust pipe/exhaust manifold.

NOTE:

- **To improve clarity, the removed engine is shown from the rear.**

- Remove right front wheel.

NOTE:

- **Secure brake disc with a wheel bolt.**

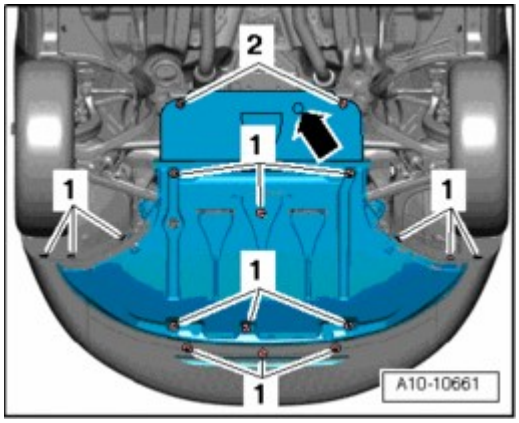

Fig. 593: Identifying Noise Insulation And Mountings
Courtesy of VOLKSWAGEN UNITED STATES, INC.

- Remove noise insulation and mountings - **1, 2** - - **arrow** - where present.

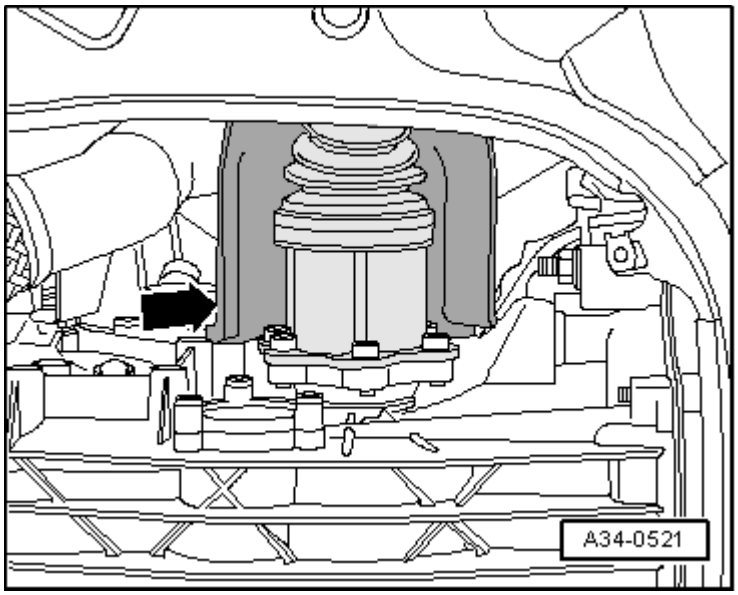

Fig. 594: Removing Heat Shield For Right Drive Axle
Courtesy of VOLKSWAGEN UNITED STATES, INC.

- Remove heat shield - **arrow** - for right drive axle.

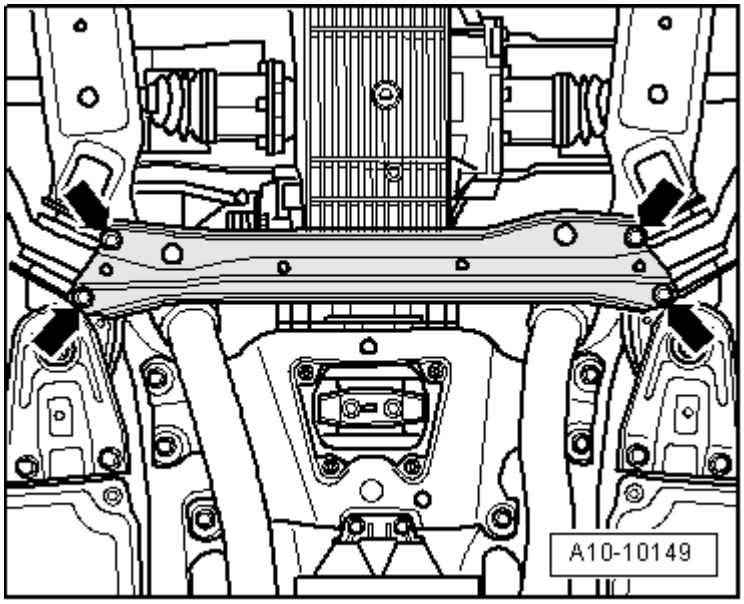

Fig. 595: Removing Subframe Transverse Beam
Courtesy of VOLKSWAGEN UNITED STATES, INC.

- Remove subframe transverse beam - **arrows** -.

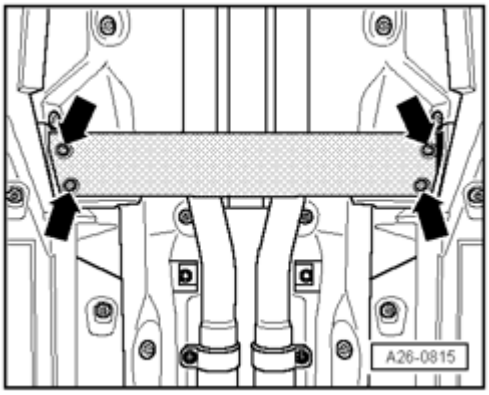

Fig. 596: Removing Front Transverse Beam
Courtesy of VOLKSWAGEN UNITED STATES, INC.

- Unbolt front transverse beam - **arrows** -.

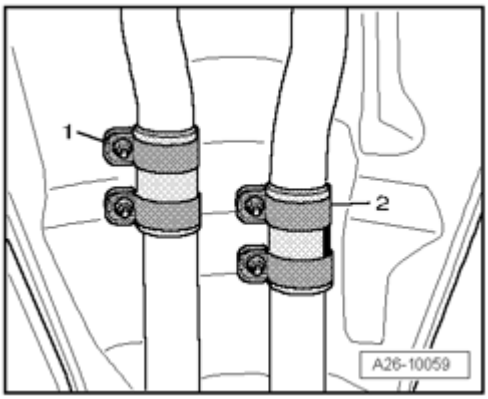

Fig. 597: Loosening Clamping Sleeves
Courtesy of VOLKSWAGEN UNITED STATES, INC.

Separate exhaust system at right clamping sleeve - **1** -.

NOTE:

- **Ignore - 2 -.**

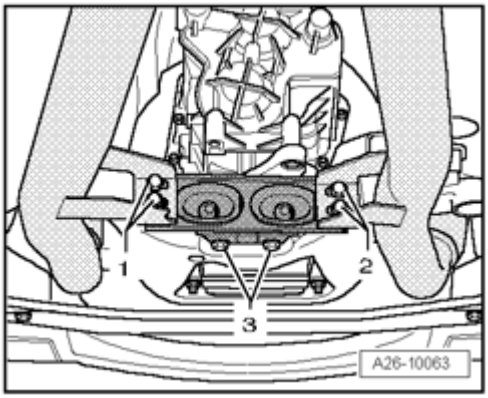

Fig. 598: Removing/Installing Mounting Bolts For Front Exhaust Pipes
Courtesy of VOLKSWAGEN UNITED STATES, INC.

NOTE:

- **Flex joint in front exhaust pipe must not be bent more than 10 otherwise it may be damaged.**

- Remove bolts - **2** - at rear bracket for front exhaust pipe.

NOTE:

- **Ignore - 1 - and - 3 -.**

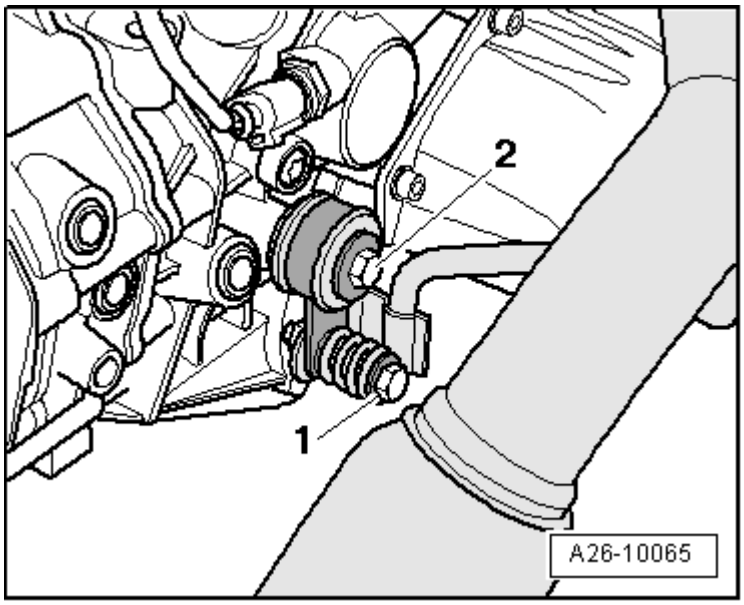

Fig. 599: Removing Bolt At Right Bracket For Front Exhaust Pipe
Courtesy of VOLKSWAGEN UNITED STATES, INC.

Vehicles with automatic transmission 09L:

- Remove bolt - **1** - at right bracket for front exhaust pipe.

NOTE:

- **Shown in illustration on a vehicle with manual transmission.**
- **Ignore - 2 -.**

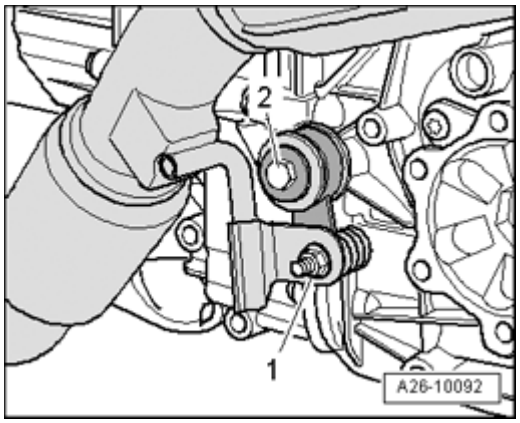

Fig. 600: Removing Bolt At Right Bracket For Front Exhaust Pipe
Courtesy of VOLKSWAGEN UNITED STATES, INC.

Vehicles with multitronic transmission:

- Remove nuts - **1** - and bolts - **2** -.
- Remove right bracket for front exhaust pipe.

All:

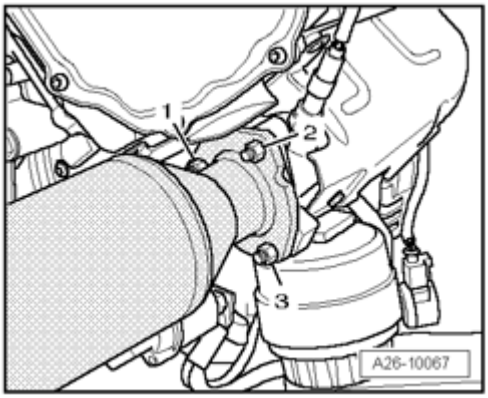

Fig. 601: Removing Nuts & Right Front Exhaust Pipe With Catalytic Converter
Courtesy of VOLKSWAGEN UNITED STATES, INC.

- Remove nuts - **1** - and - **3** - which are accessible from bottom for front exhaust pipe/exhaust manifold.

NOTE:

- **To improve clarity, the removed engine is shown.**

- Remove front exhaust pipe with catalytic converter.

Installing

Installation is in reverse order of removal, noting the following:

NOTE:

- **Replace gaskets, O-rings and self-locking nuts.**
- **Secure all hose connections with hose clamps appropriate for the model .**
- **During installation, all cable ties must be re-installed at the same location.**
- **Electrical wire of oxygen sensor must always be secured in the same position when installing so that contact with the exhaust pipe is avoided.**

- Install subframe cross member --> **40 - FRONT SUSPENSION** .
- Install front cross member --> **50 - BODY - FRONT** .
- Align exhaust system free of tension --> **Exhaust System, Installing**.

NOTE:

- **Individual components of exhaust system mounting: Vehicles with multitronic transmission --> Individual right mounting components - vehicles with Multitronic transmission , vehicles with automatic transmission 09L --> Individual right mounting components - vehicles with automatic transmission 09L**

Tightening Specifications

Component		Nm
Front exhaust pipe with catalytic converter to exhaust manifold		23 1)2)
Mounting strap to front exhaust pipe		23
Front exhaust pipe to	Transmission	23
	Center bracket	23
Heat shield for drive shaft to transmission		23
Hose clamps 9 mm wide		3
1) Replace nuts. 2) Grease with hot bolt paste; Hot bolt paste .		

Exhaust Manifold, Component Overview

Exhaust Manifold, Component Overview

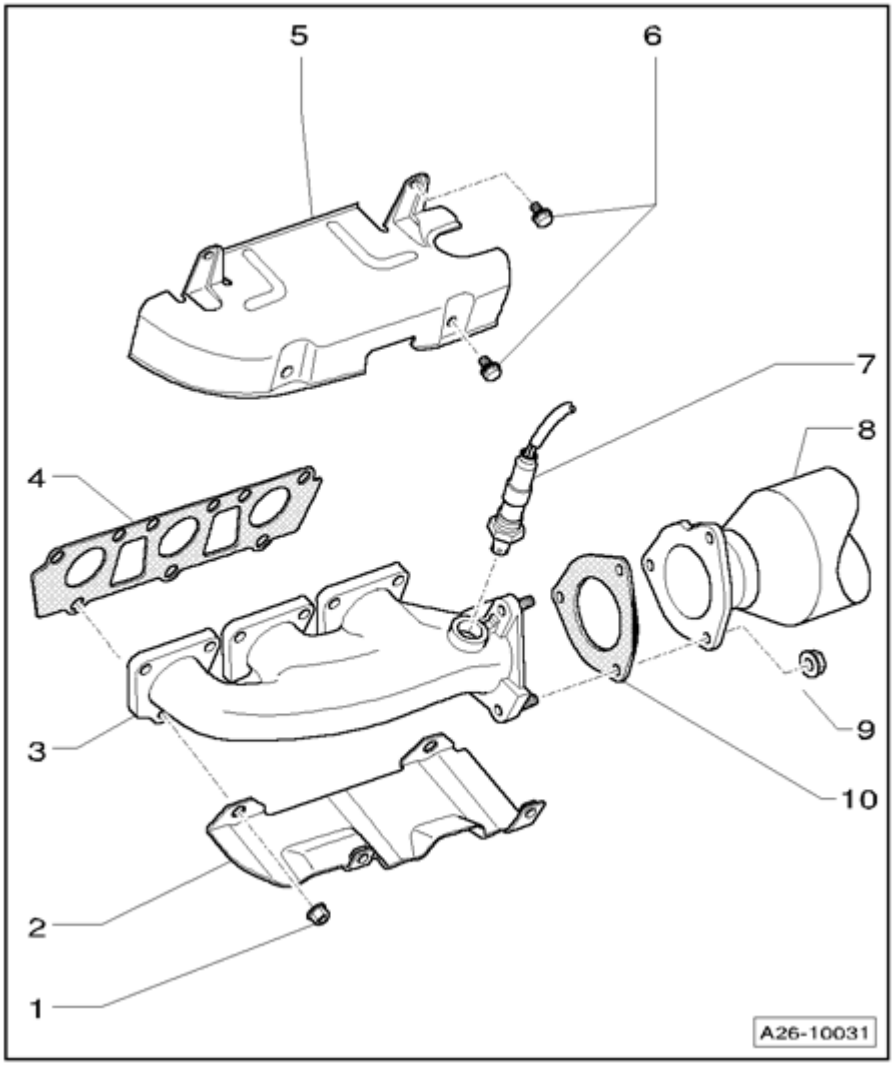

Fig. 602: Exhaust Manifold, Component Overview
Courtesy of VOLKSWAGEN UNITED STATES, INC.

1 - 25 Nm

- Replace
- Grease with hot bolt paste; Hot bolt paste
- Follow tightening sequence --> **Individual right mounting components - vehicles with automatic transmission 09L** or --> **Individual right mounting components - vehicles with automatic transmission 09L**

2 - Bracket for heat shield

3 - Exhaust Manifold

- Removing and installing: Left --> **Left Exhaust Manifold, Removing and Installing** , right --> **Right Exhaust Manifold, Removing and Installing**

4 - Gasket

- Replace

5 - Heat shield

6 - 10 Nm

7 - Oxygen sensor - 55 Nm

- Before catalytic converter
- The threads of new oxygen sensors are coated with assembly paste; the paste must not get into slots of oxygen sensor body
- When re-using the old oxygen sensor, grease the threads with hot bolt paste; the paste must not get into slots of oxygen sensor body. Hot bolt paste

8 - Front exhaust pipe

- For cylinder bank 2 (left)
- With decoupling element; the decoupling element must not be bent more than 10 otherwise it may be damaged
- Protect from shocks and impact stress
- Removing and installing --> **Left Front Exhaust Pipe with Catalytic Converter, Removing and Installing**
- Individual components of suspension --> **Individual left mounting components - vehicles with manual transmission and automatic transmission 09L**
- Install exhaust system free of stress --> **Exhaust System, Installing**

9 - 23 Nm

- Replace
- Grease with hot bolt paste; Hot bolt paste

10 - Gasket

- Replace

Left Exhaust Manifold, Removing and Installing

Left Exhaust Manifold, Removing and Installing

Removing

- Remove left front exhaust pipe with catalytic converter --> **Left Front Exhaust Pipe with Catalytic Converter, Removing and Installing** .

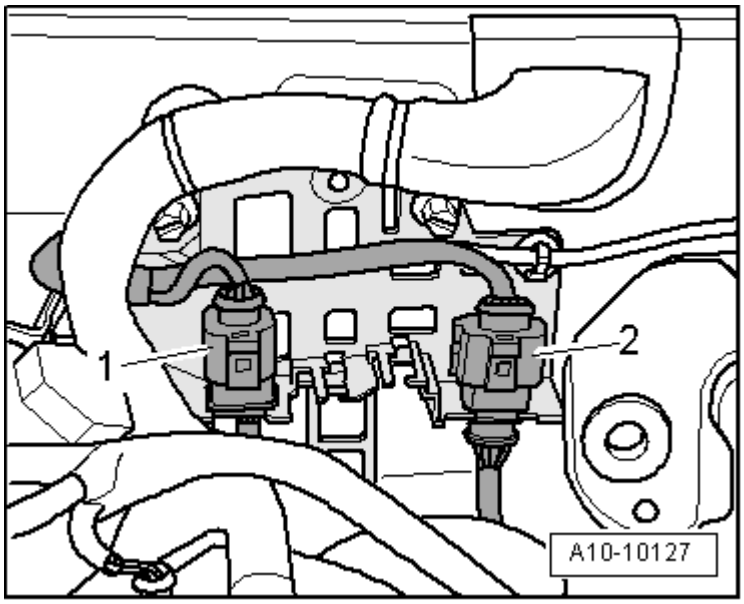

Fig. 603: Disconnecting Electrical Harness Connector For Oxygen Sensor (O2S) 2 Behind Three Way Catalytic Converter (TWC) G131
Courtesy of VOLKSWAGEN UNITED STATES, INC.

- Disconnect electrical harness connector - **1** - for Heated Oxygen Sensor (HO2S) 2 G108 and free up wire.

NOTE:

- **Ignore - 2 -.**

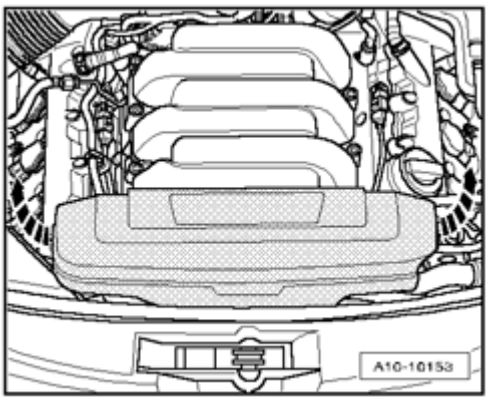

Fig. 604: Identifying Front Engine Cover
Courtesy of VOLKSWAGEN UNITED STATES, INC.

- Remove front engine cover - **arrows** -.

NOTE:

- **Before removing ribbed belt, mark the turning direction on it with chalk or a felt tip pen. A reversed direction of rotation can cause damage to the belt under operating conditions.**

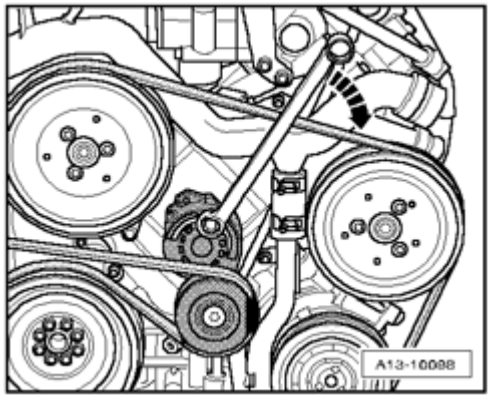

Fig. 605: Pivoting Tensioning Device To Relieve Tension On Ribbed Belt
Courtesy of VOLKSWAGEN UNITED STATES, INC.

- Pivot tensioning device in direction of - **arrow** - to relieve tension on ribbed belt.
- Remove ribbed belt from air conditioning compressor pulley.
- Release tensioner unit

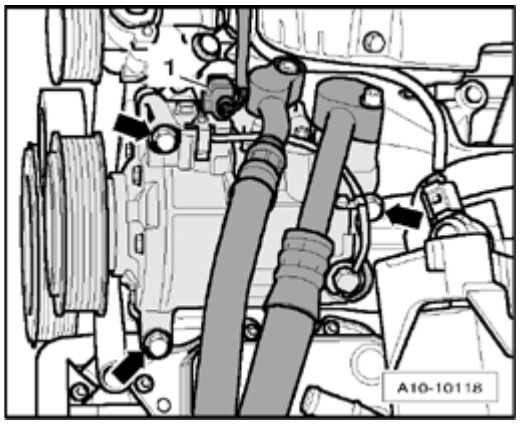

Fig. 606: Disconnecting Connector For Wiring To Air Conditioning Compressor Clutch Solenoid
Courtesy of VOLKSWAGEN UNITED STATES, INC.

- Separate connector - **1** - for wiring to air conditioning compressor clutch solenoid.

CAUTION: The air conditioning refrigerant circuit must not be opened.

- Remove air conditioning compressor from bracket - **arrows** -.

NOTE:

- **To prevent damage to the refrigerant lines/hoses, ensure that the lines and hoses are not stretched, kinked or bent.**

- Hang up air conditioning compressor with attached lines on left side of vehicle.

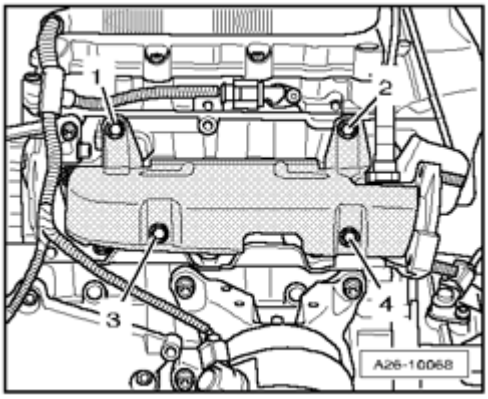

Fig. 607: Removing Bolts And Heat Shield
Courtesy of VOLKSWAGEN UNITED STATES, INC.

- Remove bolts - **1 through 4** - and remove heat shield.

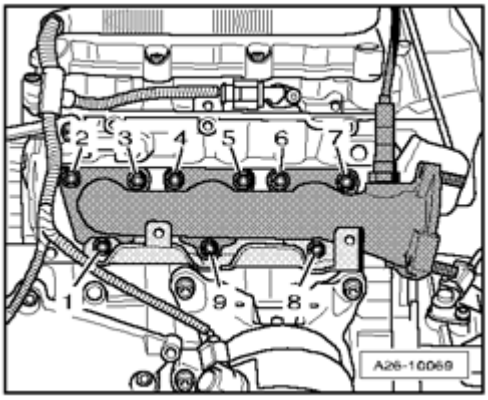

Fig. 608: Removing Nuts, Bracket For Heat Shield & Exhaust Manifold
Courtesy of VOLKSWAGEN UNITED STATES, INC.

- Remove nuts - **1** - and - **8** - and remove bracket for heat shield.
- Remove nuts - **2 through 7** - and - **9** - and remove exhaust manifold.

Installing

Installation is in reverse order of removal, noting the following:

NOTE:

- **Replace gaskets and self-locking nuts.**

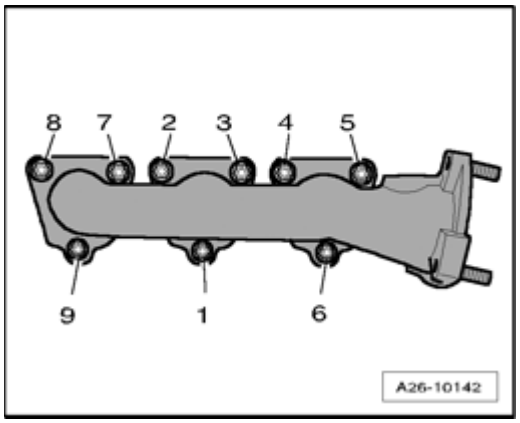

Fig. 609: Exhaust Manifold Tightening Sequence
Courtesy of VOLKSWAGEN UNITED STATES, INC.

- Tighten exhaust manifold in 2 stages in sequence indicated as follows:
- Pre-tighten to 15 Nm.
- Tighten to 25 Nm.
- Install left front exhaust pipe with catalytic converter --> **Left Front Exhaust Pipe with Catalytic Converter, Removing and Installing** .
- Align exhaust system free of tension --> **Exhaust System, Installing**.
- Install A/C compressor --> **87 - AIR CONDITIONING** .
- Install ribbed belt --> **Ribbed Belt, Removing and Installing** .

Tightening Specifications

Component	Nm
Exhaust manifold to cylinder head	25 1)2)
Heat shield to heat shield bracket	10
1) Replace nuts. 2) Grease with hot bolt paste; Hot bolt paste .	

Right Exhaust Manifold, Removing and Installing

Right Exhaust Manifold, Removing and Installing

Removing

- Remove right front exhaust pipe with catalytic converter --> **Right Exhaust Pipe with Catalytic Converter, Removing and Installing** .

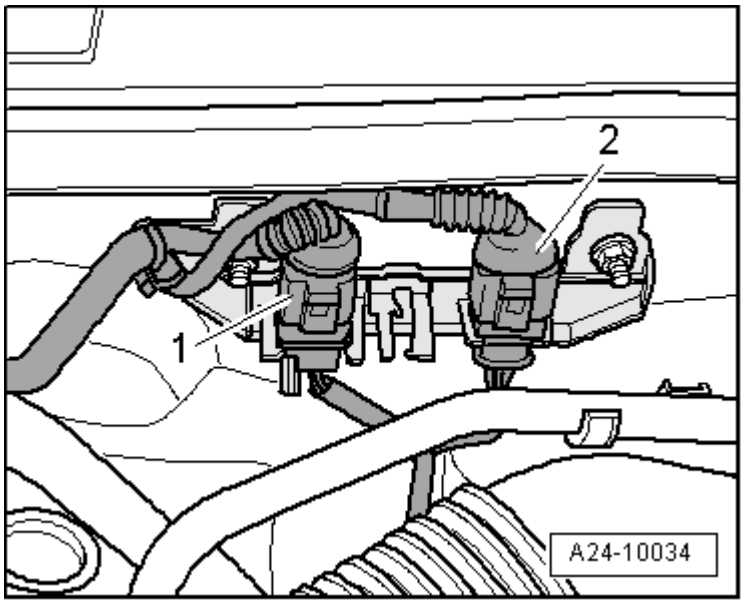

Fig. 610: Disconnecting Electrical Harness Connector For Oxygen Sensor (O2S) Behind Three Way Catalytic Converter (TWC) G130
Courtesy of VOLKSWAGEN UNITED STATES, INC.

- Disconnect electrical harness connector - **1** - for Heated Oxygen Sensor (HO2S) G39 and free up wire.

NOTE:

- **Ignore - 2 -.**

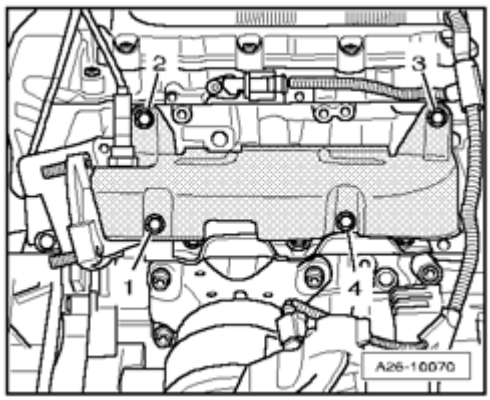

Fig. 611: Removing Bolts And Heat Shield
Courtesy of VOLKSWAGEN UNITED STATES, INC.

- Remove bolts - **1 through 4** - and remove heat shield.

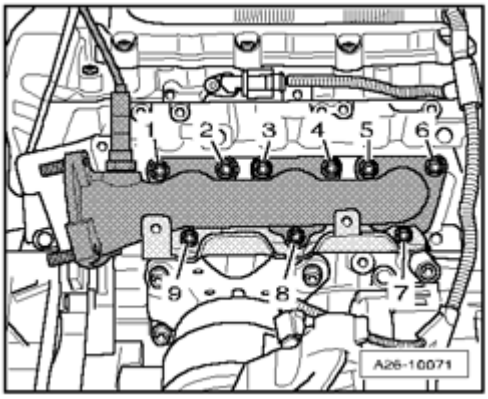

Fig. 612: Removing Nuts, Bracket For Heat Shield & Exhaust Manifold
Courtesy of VOLKSWAGEN UNITED STATES, INC.

- Remove nuts - **7** - and - **9** - and remove bracket for heat shield.
- Remove nuts - **1 through 6** - and - **8** - and remove exhaust manifold.

Installing

Installation is in reverse order of removal, noting the following:

NOTE:

- **Replace gaskets and self-locking nuts.**

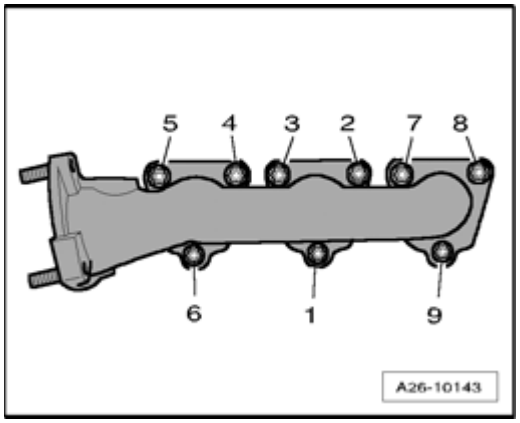

Fig. 613: Exhaust Manifold Tightening Sequence
Courtesy of VOLKSWAGEN UNITED STATES, INC.

- Tighten exhaust manifold in 2 stages in sequence indicated as follows:
- Pre-tighten nuts to 15 Nm.
- Tighten nuts to 25 Nm.
- Install right front exhaust pipe with catalytic converter --> **Right Exhaust Pipe with Catalytic Converter, Removing and Installing** .
- Align exhaust system free of tension --> **Exhaust System, Installing**.

Tightening Specifications

Component	Nm
Exhaust manifold to cylinder head	25 1)2)
Heat shield to heat shield bracket	10
1) Replace nuts. 2) Grease with hot bolt paste; Hot bolt paste .	

Exhaust System, Installing

Exhaust System, Installing

NOTE:

- **Align exhaust system when cold.**

Vehicles without double clamps between center and rear muffler

- Loosen bolts of clamping sleeves.

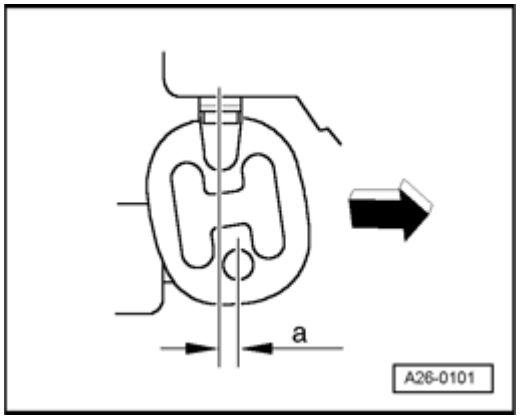

Fig. 614: Pushing Exhaust System Toward Front Of Vehicle
Courtesy of VOLKSWAGEN UNITED STATES, INC.

- Push exhaust system far enough forward - **arrow** - until pre-load on retaining loops at right on rear mufflers is - **a** - = 5 to 9 mm.
- Tighten clamping sleeve connections evenly to 23 Nm.
- Align end pipes --> **Tail Pipes, Aligning**.

Vehicles with double clamps between center and rear muffler

NOTE:

- **Only for vehicles with clamping sleeves between center and rear mufflers, the center muffler must also be aligned.**

- Loosen bolts of clamping sleeves and.

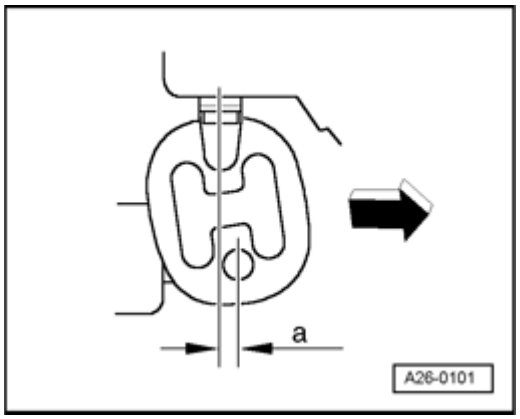

Fig. 615: Pushing Exhaust System Toward Front Of Vehicle
Courtesy of VOLKSWAGEN UNITED STATES, INC.

- Push front section of exhaust system far enough forward - **arrow** - until pre-load on retaining loops at center muffler - **a** - = 5 to 9 mm.
- Tighten from clamping sleeve connections evenly to 23 Nm.

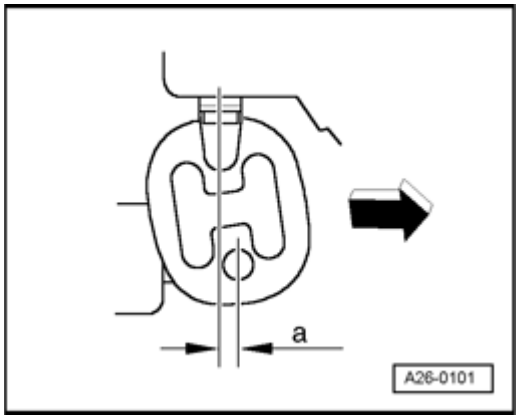

Fig. 616: Pushing Exhaust System Toward Front Of Vehicle
Courtesy of VOLKSWAGEN UNITED STATES, INC.

- Push rear part of exhaust system far enough forward - **arrow** - so that the pre-tension at rear retaining loops of rear mufflers is - **a** - = 5 to 9 mm.
- Align rear muffler horizontally.
- Tighten bolts for rear clamping sleeve uniformly to 23 Nm.
- Align end pipes --> **Tail Pipes, Aligning**.

Tail Pipes, Aligning

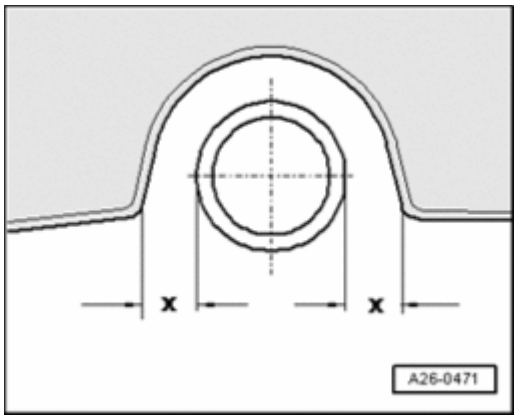

Fig. 617: Checking Distance Of End Pipes At Left/Right To Bumper
Courtesy of VOLKSWAGEN UNITED STATES, INC.

- Check distance of end pipes at left and right to bumper:

- Dimension - **x** - left = dimension - **x** - right.

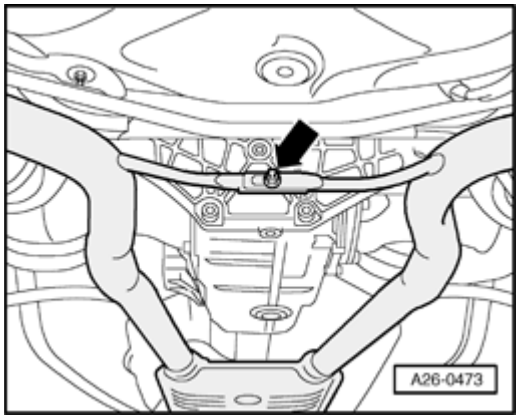

Fig. 618: Loosening Nut Of Brace Between Exhaust Pipes
Courtesy of VOLKSWAGEN UNITED STATES, INC.

If necessary, correct dimension "x" as follows:

- Loosen threaded connections - **arrow** - of brace between exhaust pipes.
- Adjust distance between rear mufflers.
- Tighten threaded fastener to 25 Nm.

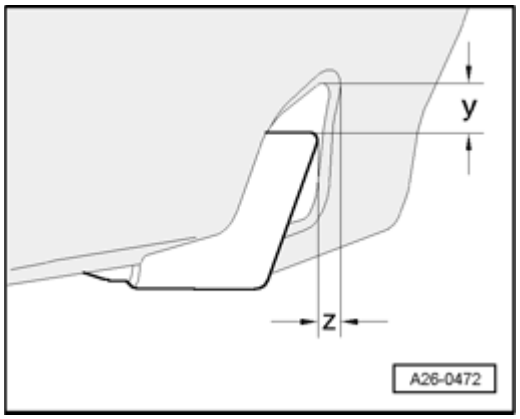

Fig. 619: Checking Distances Of End Pipes To Bumper
Courtesy of VOLKSWAGEN UNITED STATES, INC.

- Check distances - **y** - and - **z** - of end pipes to bumper:

- Dimension - **y** - = 17 to 19 mm.
- Dimension - **z** - = 0 2 mm.

- If necessary, check whether exhaust system is aligned --> **Exhaust System, Installing**.

Exhaust System, Checking for Leaks

Exhaust System, Checking for Leaks

- Start engine and let run at idle.
- Seal tailpipes with cloths or plug for the duration of the leak test.
- Check for leaks by listening at connection areas of cylinder head/exhaust manifold, exhaust manifold/front exhaust pipe etc.
- Repair leaks detected.

