ENGINE

2.0 Liter 4-Cyl. 4V Turbo Engine Mechanical, Engine Code(s): BPG, BWT

00 - GENERAL, TECHNICAL DATA

TECHNICAL DATA

Engine number

The engine number ("engine code" and "serial number") are located at front of engine/transmission joint.

In addition, a sticker with "engine code" and "serial number" is affixed to timing belt cover.

The engine code is also included on vehicle data plates.

Engine data

Code letters		BGB	BPG	BWE	BUL	BYK	BPJ	BWT
Displacement	ltr.	1.984	1.984	1.984	1.984	1.984	1.984	1.984
Output	kW at 1/rpm	147/5700	147/5700	147/5700	162/5900	125/4300	125/4300	147/5700
Torque	Nm at rpm	280/2000	280/2000	280/1800	300/2200	280/1800	280/1800	280/1800
Bore	Dia. mm	82.5	82.5	82.5	82.5	82.5	82.5	82.5
Stroke	mm	92.8	92.8	92.8	92.8	92.8	92.8	92.8
Compression ratio		10.5	10.5	10.3	10.3	10.5	10.5	10.5
RON		98 1)	98 1)	98 1)	98 1)	98 1)	98 1)	98 1)
Fuel injection and ignition system		FSI	FSI	FSI	FSI	FSI	FSI	FSI
Ignition sequence		1-3-4-2	1-3-4-2	1-3-4-2	1-3-4-2	1-3-4-2	1-3-4-2	1-3-4-2
Knock control		Yes	Yes	Yes	Yes	Yes	Yes	Yes
Charging		Yes	Yes	Yes	Yes	Yes	Yes	Yes
Exhaust gas recirculation		No	No	No	No	No	No	No
Variable intake manifold		No	No	No	No	No	No	No
Variable valve timing		Yes	Yes	Yes	Yes	Yes	Yes	Yes
Secondary air injection (AIR)		No	No	No	No	No	No	No

- 1) Unleaded RON 95 is also permissible, although with reduced power.

SAFETY PRECAUTIONS

Safety precautions

 © 2011 Mitchell Repair Information Company, LLC.

Note the following when working on the fuel system:

CAUTION: Fuel system is under pressure! Before opening system, place clean rags around the connection. Then release pressure by carefully loosening the connection.

To reduce the risk of personal injury and/or damage to the fuel injection and ignition system, always observe the following:

- The ignition must be switched off before connecting or disconnecting injection and ignition system wiring or tester cables.
- It is possible that the engine control module will recognize a malfunction and store a DTC during some tests. Therefore, when all tests and repairs are completed, the DTC memory must be checked and, if necessary, erased. After DTC memory is erased, a readiness code must be generated for the engine control module using operating mode "Guided Functions".
- Clean engine only with the ignition switched off.

CAUTION:

- **Observe safety precautions when disconnecting the battery --> 27 BATTERY, STARTER, GENERATOR, CRUISE CONTROL .**
- **The battery must only be disconnected and connected with the ignition switched off, since the Engine Control Module (ECM) can otherwise be damaged.**

Note the following when working on the cooling system:

CAUTION: Cover cap of coolant expansion tank with rag and open carefully, as hot steam or hot coolant may escape when opening.

If special testing equipment is required during road test, note the following:

CAUTION:

- **Test and measuring equipment must always be secured to the rear seat and be operated from there by a second person.**
- **If test and measuring instruments are operated from the front passengers seat and the vehicle is involved in an accident, there is a possibility that the person sitting in this seat may receive serious injuries when the airbag is triggered.**

RULES FOR CLEANLINESS

Rules for cleanliness

Fuel injection system/fuel system

Even minor contaminations can lead to malfunctions in the fuel injection system. When working on fuel

 © 2011 Mitchell Repair Information Company, LLC.

supply/fuel injection system, observe the following rules of cleanliness:

- Before loosening, connections and surrounding areas must be cleaned thoroughly with engine or brake cleaner, and then cleaned area must be dried completely.
- Plug open lines and connections immediately with appropriate protective caps.
- Place parts that have been removed on a clean surface and cover them. Do not use fluffy cloths!
- Only install clean parts: Only unpack replacement parts immediately prior to installation. Do not use parts that have been stored unpackaged (e.g. in tool boxes etc.).
- When the system is open: Do not work with compressed air. Do not move vehicle unless absolutely necessary.
- Separated electrical connections: Protect from dirt and moisture. Connect only when dry.

Turbocharger

When working on turbocharger, carefully observe the following "5 rules" of cleanliness:

- Thoroughly clean all connections and the surrounding area before disconnecting.
- Place parts that have been removed on a clean surface and cover them. Do not use fluffy cloths!
- Carefully cover over opened components or seal, if repairs are not performed immediately.
- Only install clean components: Only unpack replacement parts immediately prior to installation. Do not use parts that have been stored loose (e.g. in tool boxes etc.).
- When the system is open: Avoid working with compressed air if possible. Do not move vehicle unless absolutely necessary.

10 - ENGINE - ASSEMBLY

ENGINE, REMOVING AND INSTALLING

Engine, removing

NOTE:

- **The engine is removed toward the front with lock carrier removed.**
- **All cable ties opened or cut during engine removal must be reinstalled at the same locations during installation.**
- **Drained coolant must be stored in a clean container for disposal or reuse.**

Work procedure

- On a vehicle with automatic transmission, shift selector lever to position "N".

CAUTION: Observe procedures for disconnecting battery --> 27 BATTERY, STARTER, GENERATOR, CRUISE CONTROL .

 © 2011 Mitchell Repair Information Company, LLC.

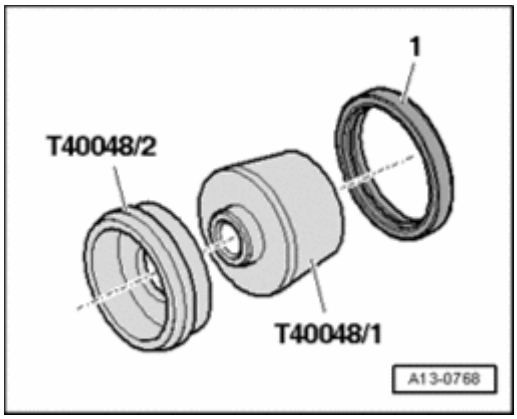

Fig. 1: Disconnecting Battery Ground (GND) Strap
Courtesy of VOLKSWAGEN UNITED STATES, INC.

- With ignition switched off, disconnect Battery Ground (GND) strap - **arrow** -.

CAUTION: Cover cap of expansion tank with rag and open carefully, as hot steam i.e. hot coolant may escape when opening.

- Open cap of coolant expansion tank.
- Remove both front wheels.

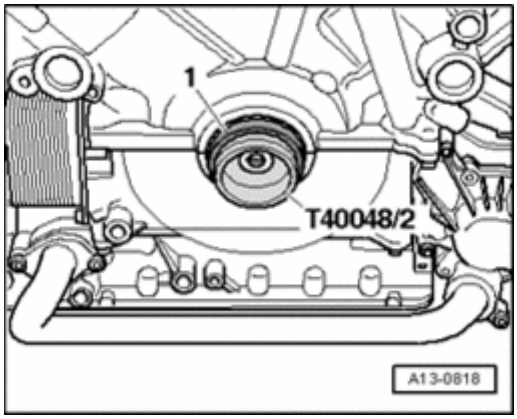

Fig. 2: Identifying Exhaust Pipe Fasteners
Courtesy of VOLKSWAGEN UNITED STATES, INC.

- For vehicles with auxiliary heater, remove bolts - **arrows** - for exhaust pipe of parking heater/auxiliary heater on noise insulation.

 © 2011 Mitchell Repair Information Company, LLC.

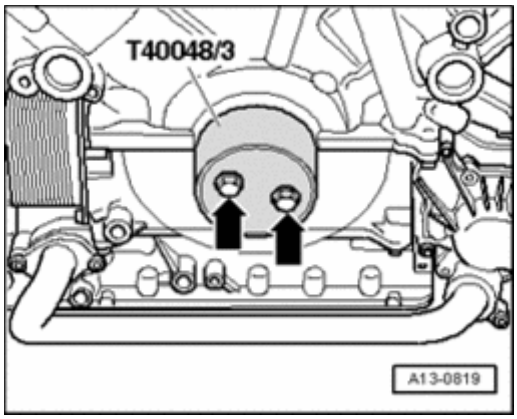

Fig. 3: Identifying Quick-Release Fasteners And Noise Insulation
Courtesy of VOLKSWAGEN UNITED STATES, INC.

- Loosen quick-release fasteners - **1** - and - **2** - and remove front noise insulation.
- Remove quick-release fasteners - **3** - and remove rear noise insulation, if installed.

 © 2011 Mitchell Repair Information Company, LLC.

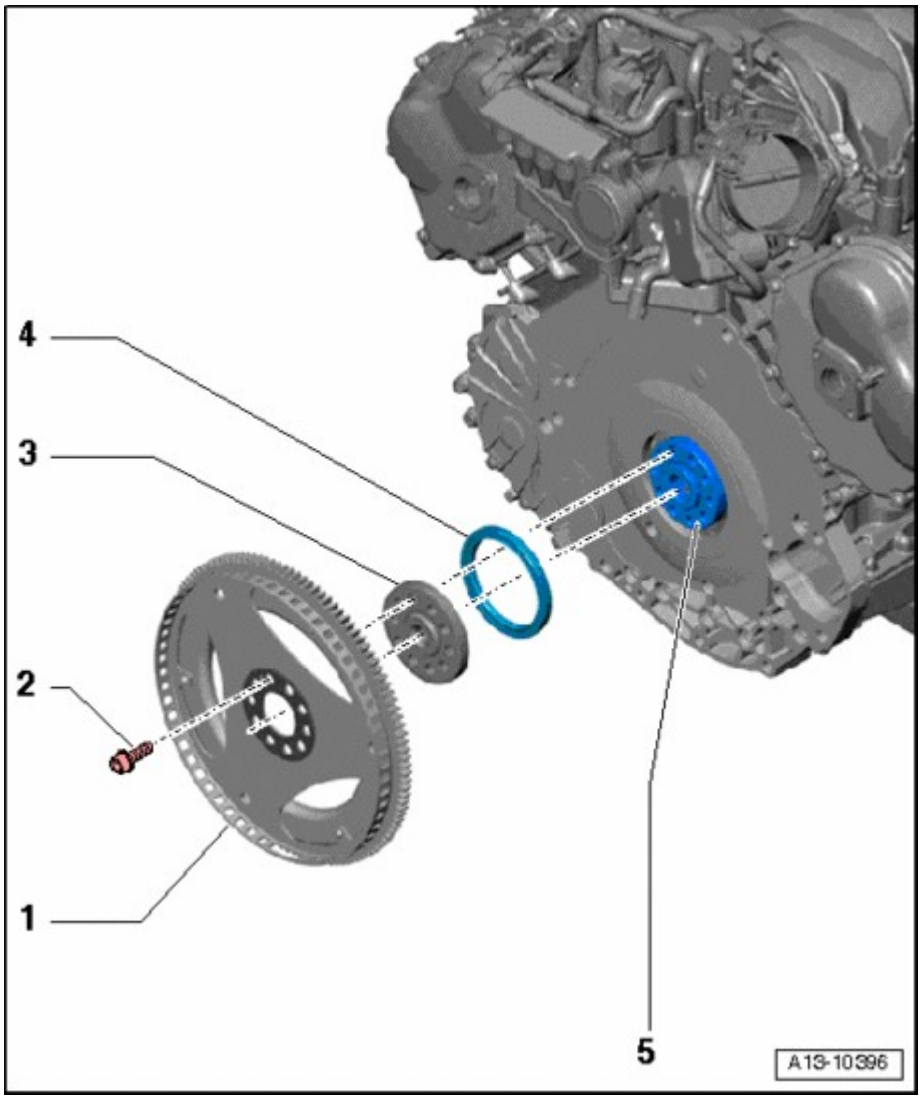

Fig. 4: Removing Bracket For Noise Insulation
Courtesy of VOLKSWAGEN UNITED STATES, INC.

- Remove bracket for noise insulation - **arrows** -.

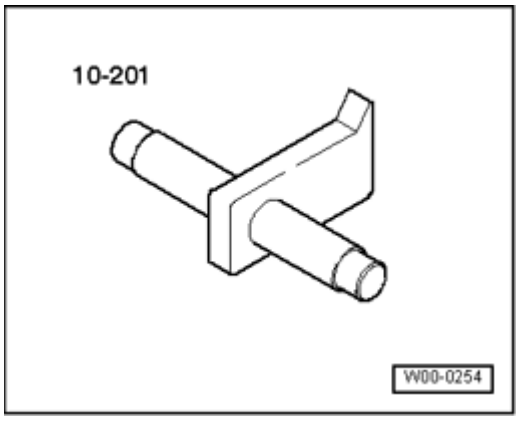

 © 2011 Mitchell Repair Information Company, LLC.

Fig. 5: Removing Air Guides From In Front Of Charge Air Coolers At Left/Right
Courtesy of VOLKSWAGEN UNITED STATES, INC.

- Remove front bumper cover -->
  - **63 BUMPER**
  - **63 - BUMPERS** for BODY EXTERIOR - CABRIOLET

  .
- Remove air guides from in front of charge air coolers at left and right - **arrows** -.

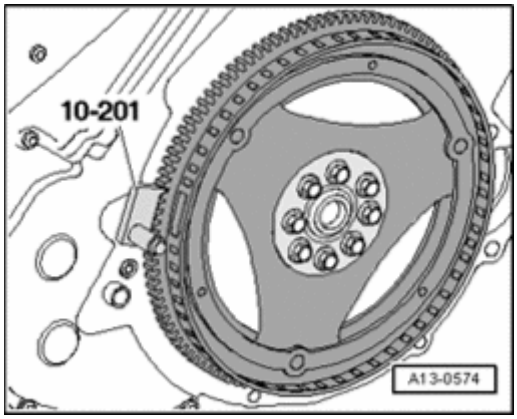

Fig. 6: Opening/Closing Drain Plug From Lower Left Coolant Hose
Courtesy of VOLKSWAGEN UNITED STATES, INC.

- Place drip tray for workshop crane VAS 6208 or drip tray V.A.G 1306 under engine.
- Open drain plug - **arrow** - from lower left coolant hose and drain coolant.

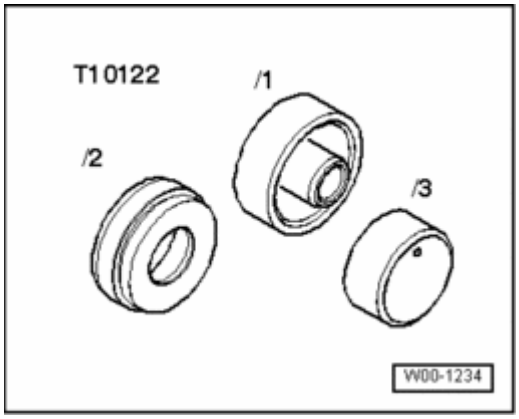

Fig. 7: Disconnecting Lower Coolant Hose From Radiator
Courtesy of VOLKSWAGEN UNITED STATES, INC.

- Disconnect lower coolant hose from radiator - **arrow** -.

 © 2011 Mitchell Repair Information Company, LLC.

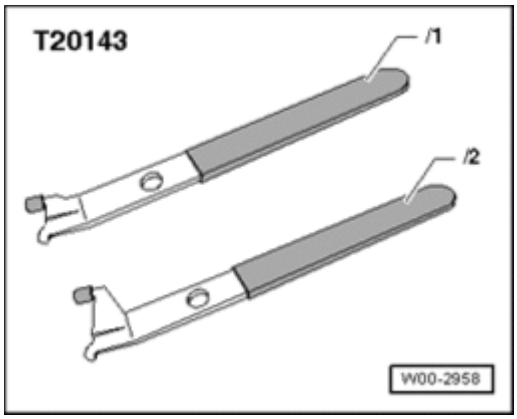

Fig. 8: Identifying Air Duct Hose & Bracket
Courtesy of VOLKSWAGEN UNITED STATES, INC.

- Remove air duct hose - **1** - to bottom of left charge air cooler.

CAUTION: The air conditioning refrigerant circuit must not be opened.

- Unhook refrigerant line from bracket - **2** -.

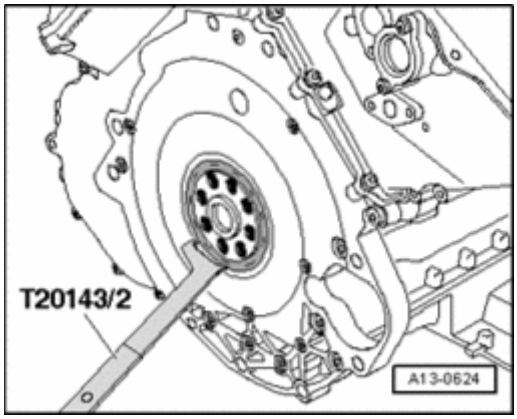

Fig. 9: Removing Air Duct Hoses
Courtesy of VOLKSWAGEN UNITED STATES, INC.

- Remove air duct hose - **1** - to turbocharger at bottom right.
- Remove air duct hose - **2** - to charge air cooler at lock carrier.

 © 2011 Mitchell Repair Information Company, LLC.

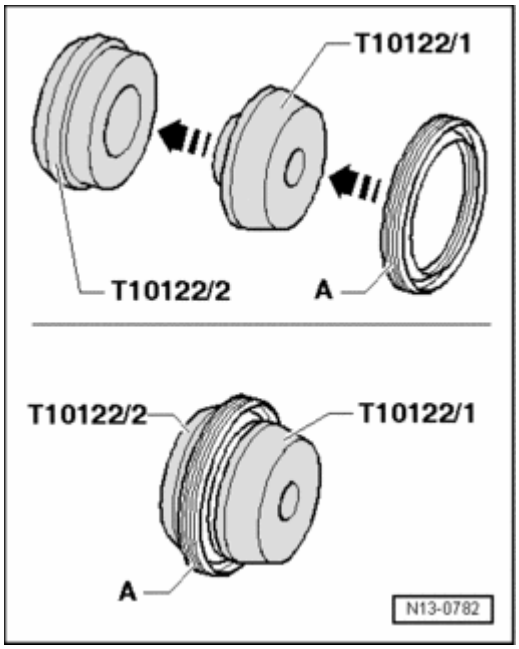

Fig. 10: Disconnecting Hydraulic Hoses
Courtesy of VOLKSWAGEN UNITED STATES, INC.

- Clamp off hydraulic hoses to power steering system cooling coil using Hose Clamps Up to 25 mm dia. 3094.
- Place old oil collecting and extracting device V.A.G 1782 underneath.
- Disconnect hydraulic hoses - **arrows** -.

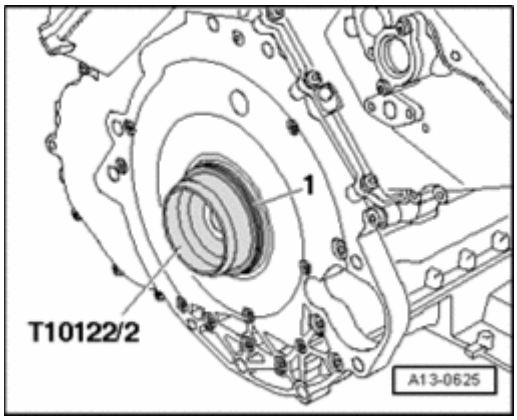

Fig. 11: Disconnecting ATF Lines & ATF Line Bracket
Courtesy of VOLKSWAGEN UNITED STATES, INC.

Vehicles with automatic transmission:

NOTE:

- **Observe the rules of cleanliness for working on automatic transmissions --->**
  - **37 - AUTOMATIC TRANSMISSION - CONTROLS, HOUSING for 5 SPD.**

 © 2011 Mitchell Repair Information Company, LLC.

AUTOMATIC TRANSMISSION 01V

- **37 - AUTOMATIC TRANSMISSION - CONTROLS, HOUSING for 5 SPD. AUTOMATIC TRANSMISSION 01V FRONT AND ALL WHEEL DRIVE - INTERNAL COMPONENTS, SERVICING**
- **37 CONTROLS, HOUSING for AUTOMATIC TRANSMISSION 09L, FOUR-WHEEL DRIVE**

.

- Place old oil collecting and extracting device V.A.G 1782 underneath.
- Disconnect ATF lines - **2 and 3** - at separating point.
- Remove ATF line bracket - **1** - on engine.

All:

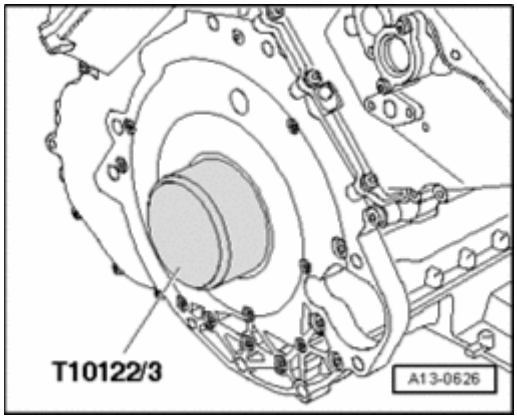

Fig. 12: Removing Engine Cover
Courtesy of VOLKSWAGEN UNITED STATES, INC.

- Remove engine cover - **arrows** -.

 © 2011 Mitchell Repair Information Company, LLC.

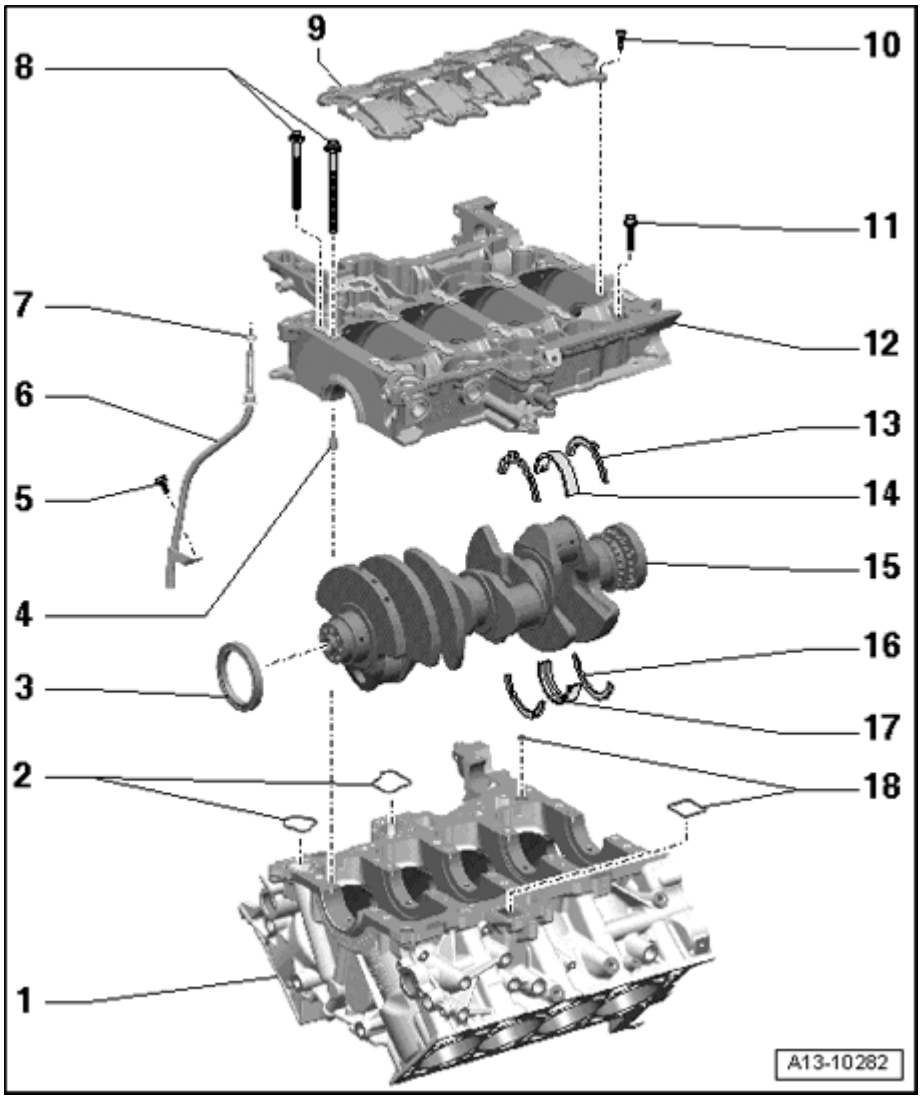

Fig. 13: Removing Bolts & Air Duct
Courtesy of VOLKSWAGEN UNITED STATES, INC.

- Remove bolts - **arrows** -.
- Remove air duct - **1** - and - **2** -.

 © 2011 Mitchell Repair Information Company, LLC.

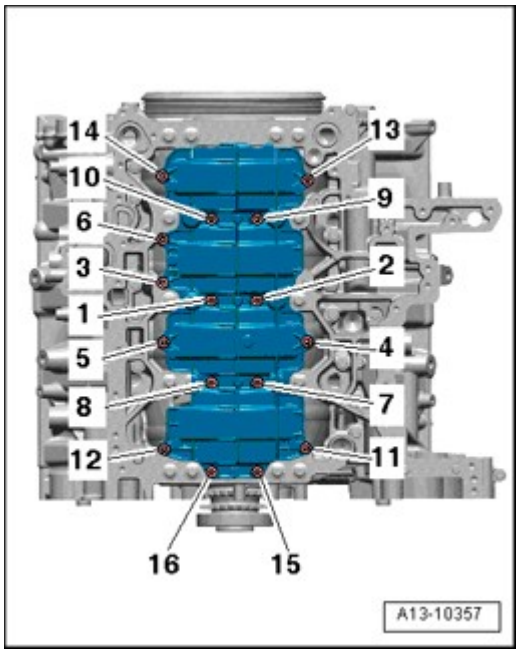

Fig. 14: Removing Top Coolant Hose From Radiator & Disconnecting Connectors For Left/Right Airbag Sensor
Courtesy of VOLKSWAGEN UNITED STATES, INC.

- Disconnect coolant hose - **1** - at top of radiator.
- Disconnect electrical harness connector - **2** - for left and right airbag sensors on lock carrier.

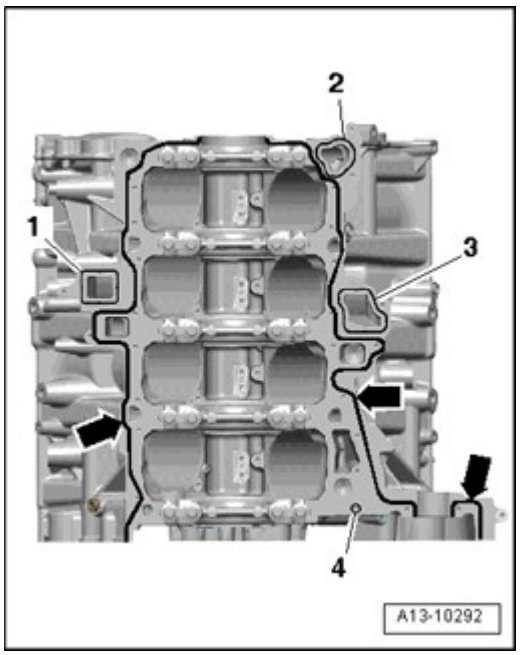

Fig. 15: Disconnecting Electrical Harness Connector For Headlights At Both Sides Of Vehicle
Courtesy of VOLKSWAGEN UNITED STATES, INC.

- Disconnect electrical harness connector - **arrow** - for headlights at both sides of vehicle.

 © 2011 Mitchell Repair Information Company, LLC.

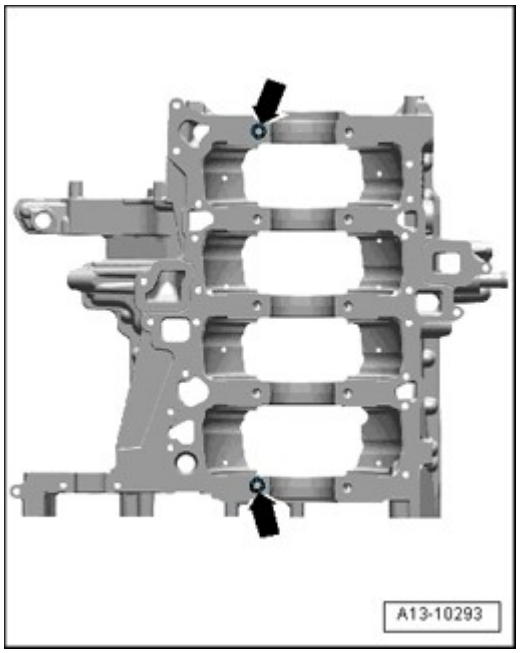

Fig. 16: Removing Electrical Harness Connectors From Bracket
Courtesy of VOLKSWAGEN UNITED STATES, INC.

- Remove electrical harness connectors - **1** - and - **2** - from bracket and disconnect them.
- Free up electrical wiring.

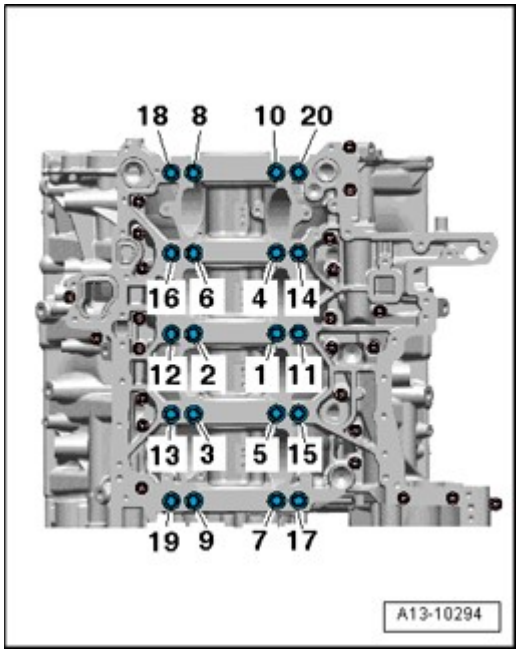

Fig. 17: Separating Left/Right Electrical Connectors Of Horns
Courtesy of VOLKSWAGEN UNITED STATES, INC.

- Separate left and right electrical connectors - **3** - of horns - **2** -.

 © 2011 Mitchell Repair Information Company, LLC.

NOTE:

- **Ignore - 1 -.**

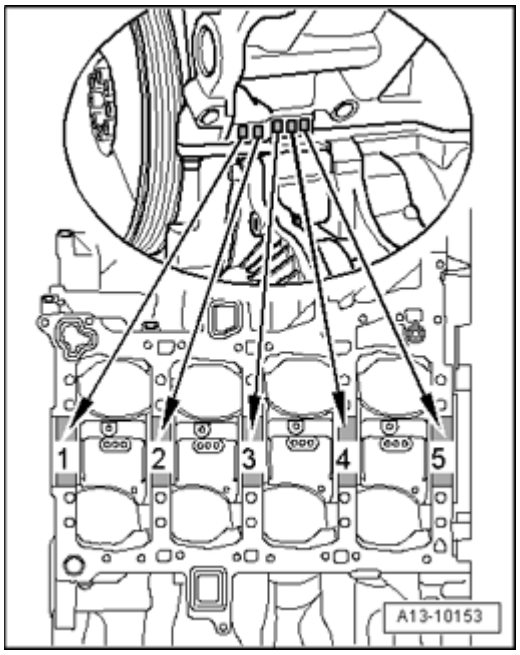

Fig. 18: Removing Bumper
Courtesy of VOLKSWAGEN UNITED STATES, INC.

- Remove bumper - **arrows** -.

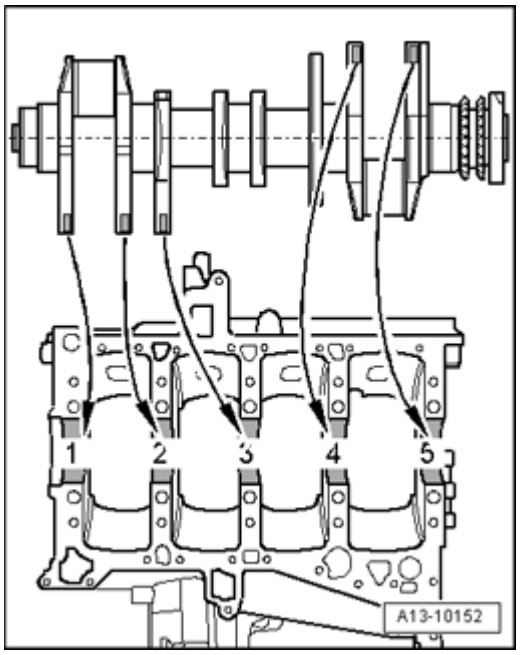

Fig. 19: Removing Left/Right Air Guides At Radiator
Courtesy of VOLKSWAGEN UNITED STATES, INC.

- Remove left and right air guides at radiator - **arrows** -.

 © 2011 Mitchell Repair Information Company, LLC.

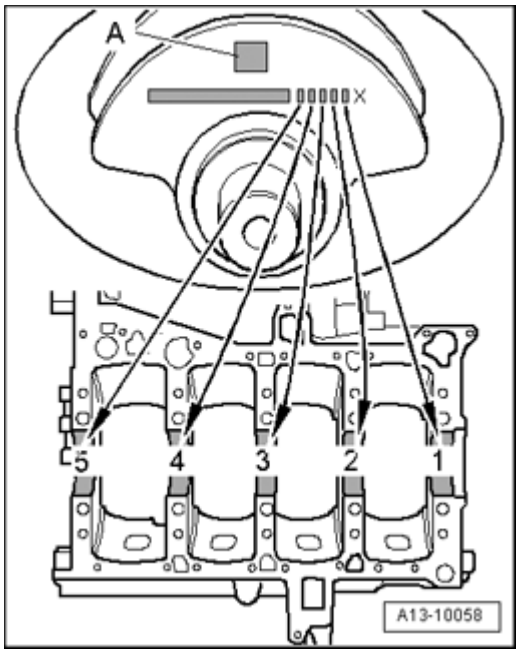

Fig. 20: Identifying Outside Air Temperature Sensor G17, Bolts & High Pressure Sensor G65 Electrical Harness Connector
Courtesy of VOLKSWAGEN UNITED STATES, INC.

- Unclip Outside Air Temperature Sensor G17 - **2** - from bracket.
- Remove bolts - **3** - and - **4** - and remove power steering system cooling coil.
- Disconnect electrical harness connector - **1** - at High Pressure Sensor G65.

CAUTION: The air conditioning refrigerant circuit must not be opened.

- Remove bolts - **arrows** - for condenser.

NOTE:

- **To prevent damage to condenser and also to the refrigerant lines/hoses, ensure that lines and hoses are not stretched, kinked or bent.**

- Pivot condenser downward with lines connected.

 © 2011 Mitchell Repair Information Company, LLC.

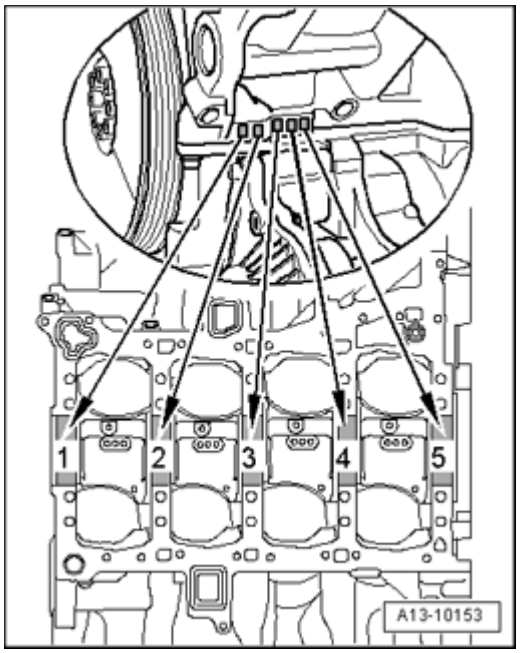

Fig. 21: Removing Bolts At Left/Right Side Of Bumper
Courtesy of VOLKSWAGEN UNITED STATES, INC.

- Remove bolts - **arrows** - at left and right side of bumper.
- Unhook cable for hood release at lock.
- Pull off hood seal from lock carrier and fender edges.

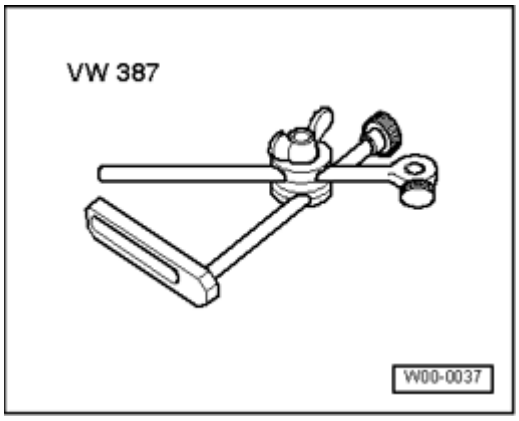

Fig. 22: Removing Bolts At Left/Right Impact Absorbers
Courtesy of VOLKSWAGEN UNITED STATES, INC.

- Remove bolts - **arrows** - at left and right impact absorbers.

NOTE:

- **A second technician is required to remove lock carrier.**

- Remove lock carrier and set aside so it cannot topple.

 © 2011 Mitchell Repair Information Company, LLC.

NOTE:

- **Before removing ribbed belt, mark turning direction on it with chalk or a felt tip pen. A reversed turning direction can cause damage to the belt under operating conditions.**

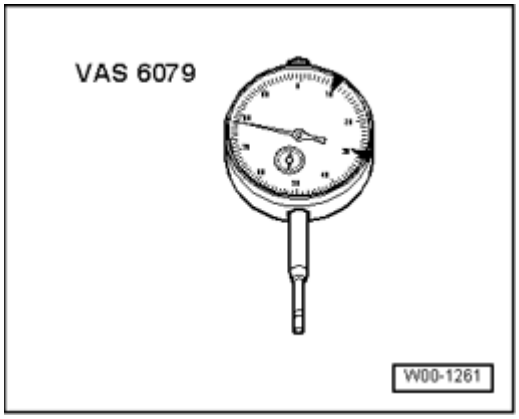

Fig. 23: Pivoting Belt Tensioner For Ribbed Belt To Relieve Tension On Ribbed Belt
Courtesy of VOLKSWAGEN UNITED STATES, INC.

- Pivot belt tensioner for ribbed belt in direction of - **arrow** - to relieve tension on ribbed belt.
- Secure tensioning element using Locking Tool T40098.
- Remove ribbed belt.

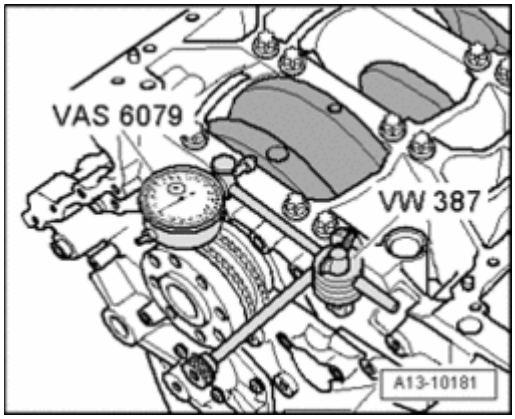

Fig. 24: Disconnecting Connector For Oil Level Thermal Sensor -G266-
Courtesy of VOLKSWAGEN UNITED STATES, INC.

- Disconnect electrical harness connector - **arrow** - at Oil Level Thermal Sensor G266.

 © 2011 Mitchell Repair Information Company, LLC.

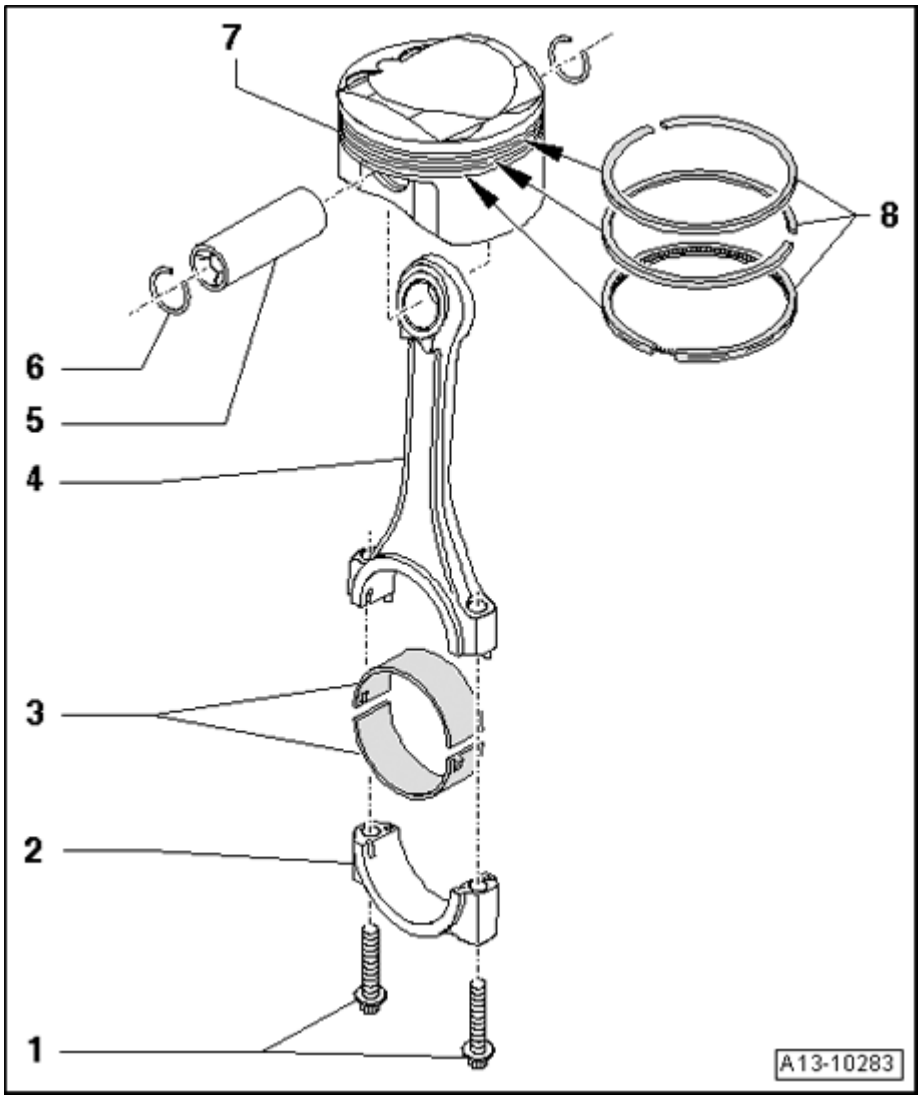

Fig. 25: Removing Bracket For Refrigerant Line On Oil Pan
Courtesy of VOLKSWAGEN UNITED STATES, INC.

- Remove bracket for refrigerant line on oil pan - **arrow** -.

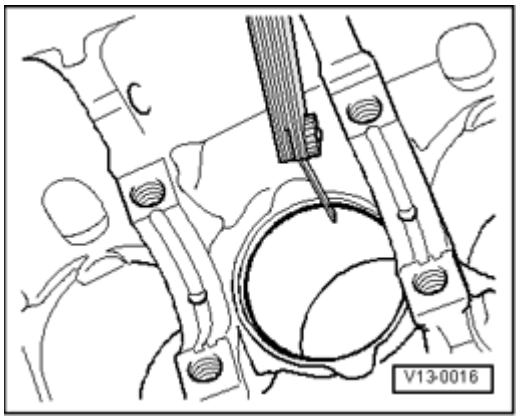

 © 2011 Mitchell Repair Information Company, LLC.

Fig. 26: Separating Connector For Wiring To Air Conditioning Compressor Clutch Solenoid
Courtesy of VOLKSWAGEN UNITED STATES, INC.

- Separate connector - **1** - for wiring to air conditioning compressor clutch solenoid.

CAUTION: The air conditioning refrigerant circuit must not be opened.

- Remove air conditioning compressor from bracket - **arrows** -.

NOTE:

- **To prevent damage to condenser and also to the refrigerant lines/hoses, ensure that the lines and hoses are not stretched, kinked or bent.**

- Hang up air conditioning compressor and condenser with attached lines on right side of vehicle.

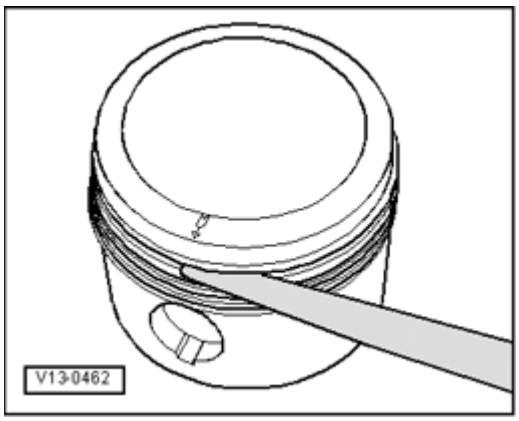

Fig. 27: Unfastening Ground (GND) Cable, Disconnecting Vacuum Line To Brake Booster At Bulkhead & EVAP Hose
Courtesy of VOLKSWAGEN UNITED STATES, INC.

- Unfasten Ground (GND) cable - **1** -.
- Disconnect vacuum line to brake booster at bulkhead - **2** -.
- Disconnect EVAP hose - **3** -.

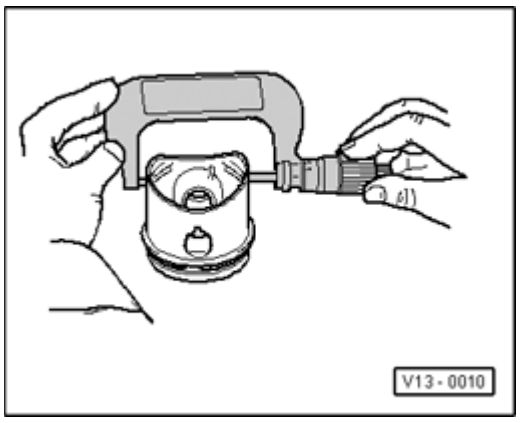

 © 2011 Mitchell Repair Information Company, LLC.

Fig. 28: Removing Coolant Hoses And Unfastening Coolant Expansion Tank
Courtesy of VOLKSWAGEN UNITED STATES, INC.

- Remove coolant hoses - **1 and 2** - and unfasten coolant expansion tank - **arrow** -.
- Disconnect electrical connection at Engine Coolant Level (ECL) Warning Switch F66 at bottom of coolant expansion tank.

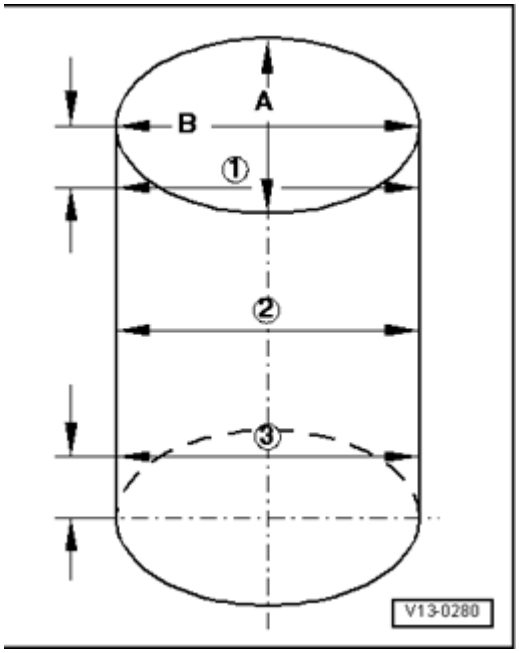

Fig. 29: Separating Electrical Connector From Charge Air Pressure Sensor G31 & Removing Left Charge Air Hose
Courtesy of VOLKSWAGEN UNITED STATES, INC.

- Separate electrical connector from Charge Air Pressure Sensor G31 - **1** -.
- Remove left charge air hose - **2** -.

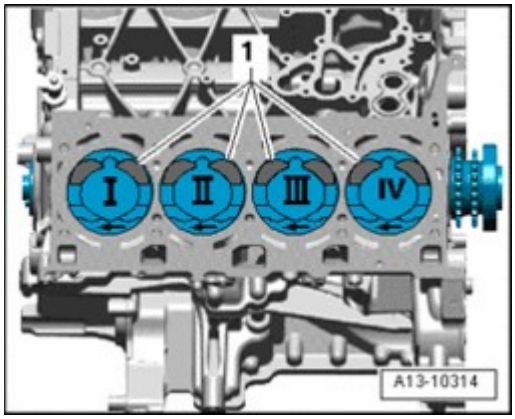

Fig. 30: Removing Right Charge Air Hose
Courtesy of VOLKSWAGEN UNITED STATES, INC.

 © 2011 Mitchell Repair Information Company, LLC.

- Remove right charge air hose - **1** -.

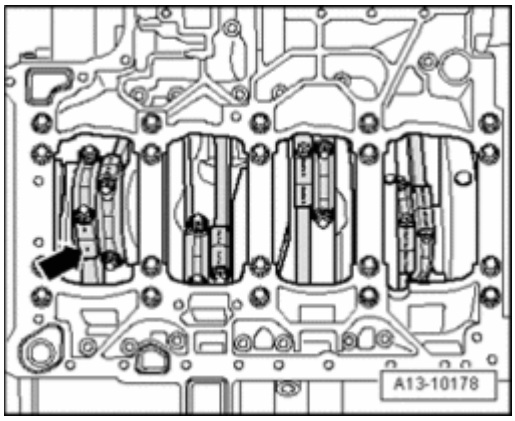

Fig. 31: Identifying Oxygen Sensor Electrical Connectors
Courtesy of VOLKSWAGEN UNITED STATES, INC.

- Pull electrical connector - **1** - for Oxygen Sensor (O2S) Behind Three Way Catalytic Converter (TWC) G130 and Oxygen Sensor (O2S) Heater 1 (behind Three Way Catalytic Converter (TWC)) Z29 (brown connector) out from retainer
- Pull electrical connector - **2** - for Heated Oxygen Sensor (HO2S) G39 and Oxygen Sensor (O2S) Heater Z19 (black connector) out from retainer

CAUTION: Before opening a component of the high-pressure section, the fuel pressure must be released. Pay absolute attention to the procedure on --> 24 - MULTIPORT FUEL INJECTION (MFI) .

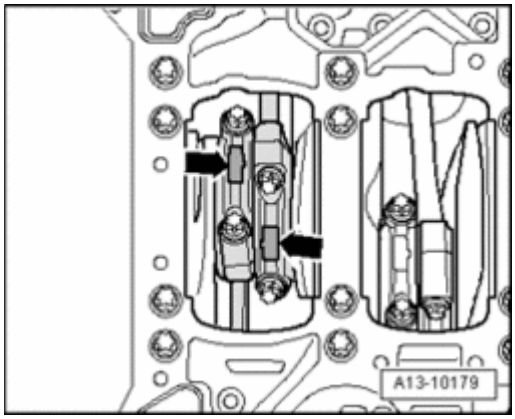

Fig. 32: Disconnecting Fuel Line
Courtesy of VOLKSWAGEN UNITED STATES, INC.

- Disconnect fuel line - **arrow** - (catch escaping fuel and plug open lines immediately).
- Disconnect coolant hoses to heater core on rear of engine.
- Remove windshield wiper arms.
- Remove cowl.

 © 2011 Mitchell Repair Information Company, LLC.

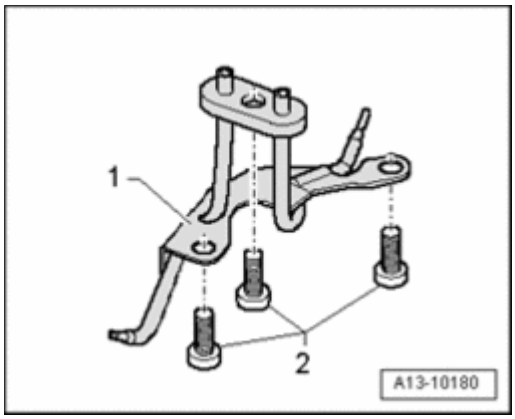

Fig. 33: Removing Screws And Cover From E-Box In Plenum Chamber
Courtesy of VOLKSWAGEN UNITED STATES, INC.

- Remove cover for E-Box in plenum chamber, by removing bolts - **arrows** -.

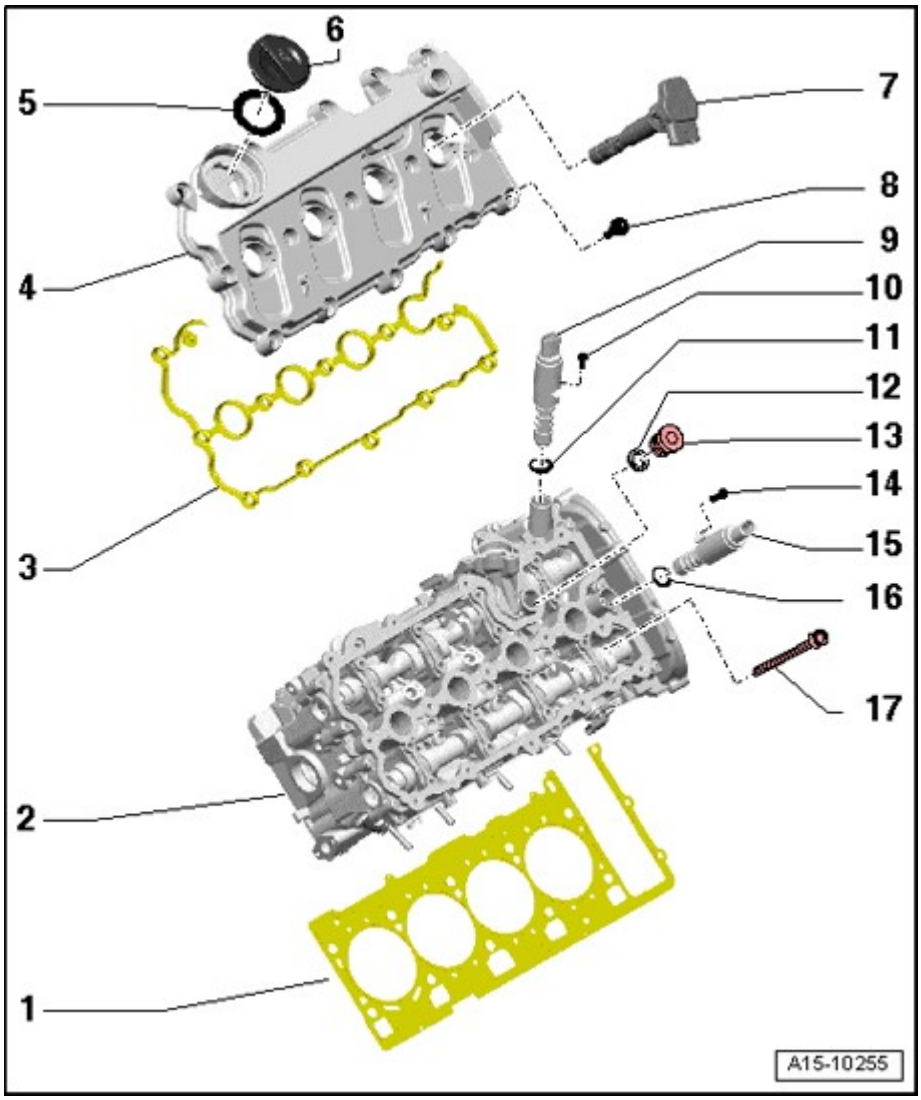

 © 2011 Mitchell Repair Information Company, LLC.

Fig. 34: Using Screwdriver To Remove Retainer Bar And Engine Control Module (ECM) J623
Courtesy of VOLKSWAGEN UNITED STATES, INC.

- Carefully pry off retainer bar with a screwdriver - **arrow** -.

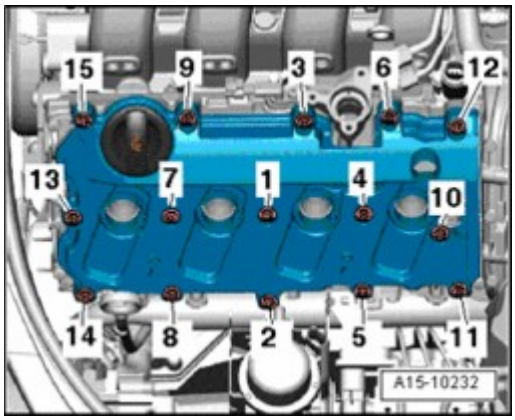

Fig. 35: Removing Electrical Cable & E-Box Electrical Connectors
Courtesy of VOLKSWAGEN UNITED STATES, INC.

- Remove electrical cable - **1** -.
- Disconnect electrical connectors - **2 to 4** - in E-box.

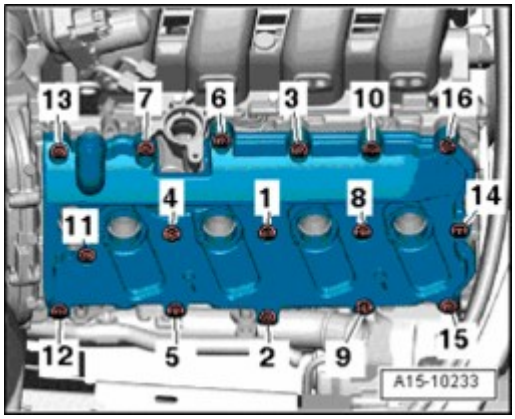

Fig. 36: Unclipping Fuse Carrier
Courtesy of VOLKSWAGEN UNITED STATES, INC.

- Unclip fuse carrier - **arrows** -.
- Free up cable and lay it aside on engine with Engine Control Module (ECM) J623 connected.

 © 2011 Mitchell Repair Information Company, LLC.

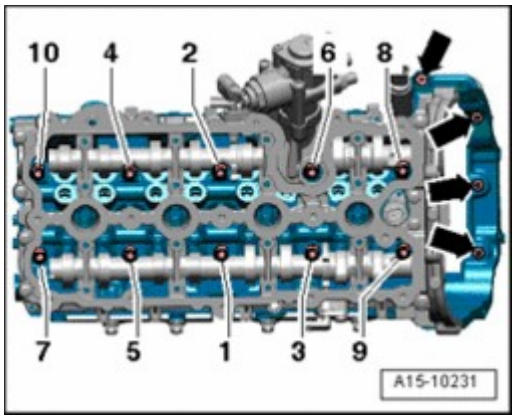

Fig. 37: Removing Threaded Connections
Courtesy of VOLKSWAGEN UNITED STATES, INC.

- Remove threaded connections - **1** - of power steering pump through holes in belt pulley.

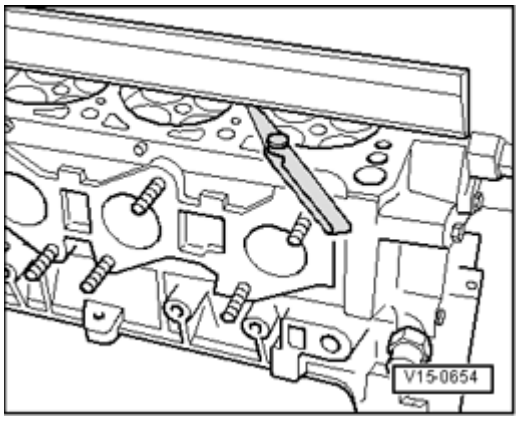

Fig. 38: Removing Threaded Connection On Backside Of Power Steering Pump
Courtesy of VOLKSWAGEN UNITED STATES, INC.

- Remove threaded connection - **arrow** - on backside of power steering pump.

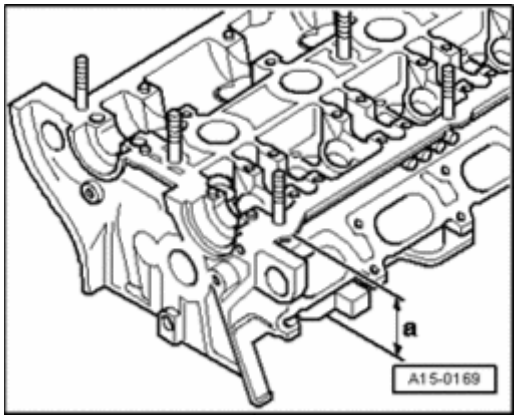

Fig. 39: Disconnecting Connector & Separating Intake Hose
Courtesy of VOLKSWAGEN UNITED STATES, INC.

 © 2011 Mitchell Repair Information Company, LLC.

- Disconnect connector - **1 and 2** - and free up cable.
- Separate intake hose - **3** - for air filter/turbocharger.

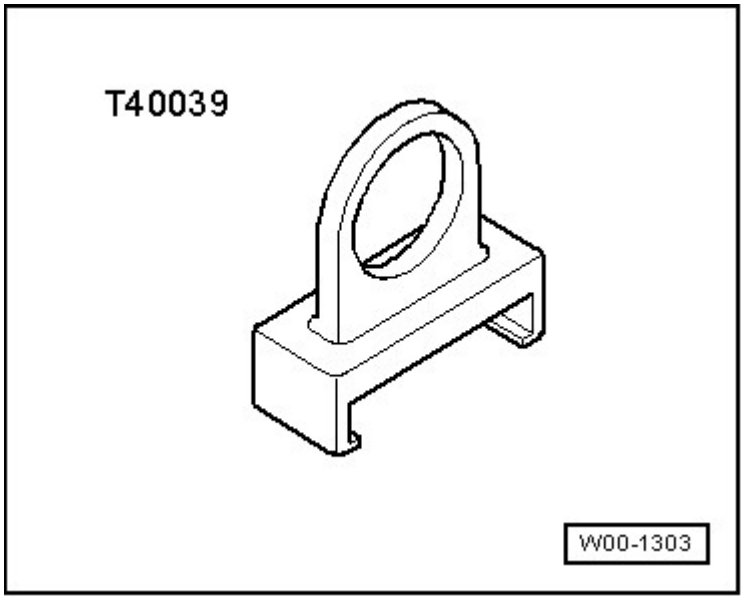

Fig. 40: Disconnecting Electrical Harness Connector At Mass Air Flow (MAF) Sensor G70
Courtesy of VOLKSWAGEN UNITED STATES, INC.

- Disconnect electrical harness connector - **1** - at Mass Air Flow (MAF) Sensor G70.
- Free up wiring harness on air filter housing and remove air filter housing - **arrow** -.

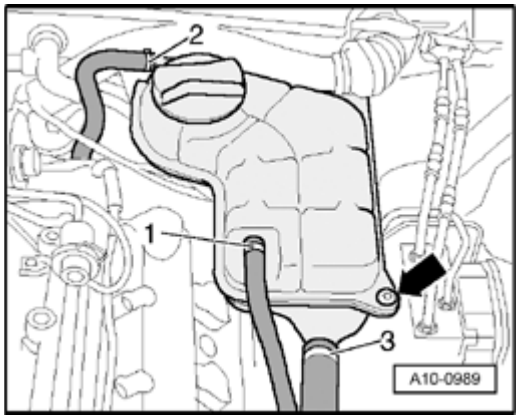

Fig. 41: Removing Ground (GND) Strap From Right Longitudinal Member
Courtesy of VOLKSWAGEN UNITED STATES, INC.

- Remove Ground (GND) strap - **arrow** - from right longitudinal member.

 © 2011 Mitchell Repair Information Company, LLC.

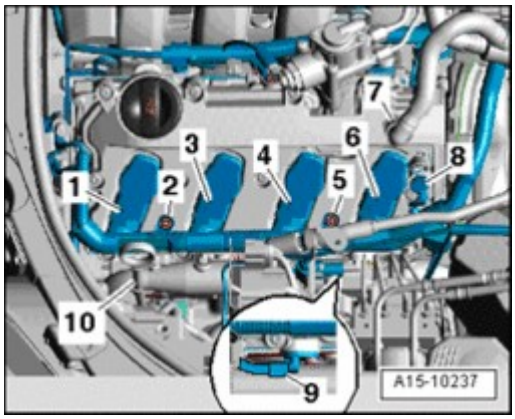

Fig. 42: Removing Heat Shield For Right Drive Axle
Courtesy of VOLKSWAGEN UNITED STATES, INC.

- Remove heat shield - **1** - for right drive axle.

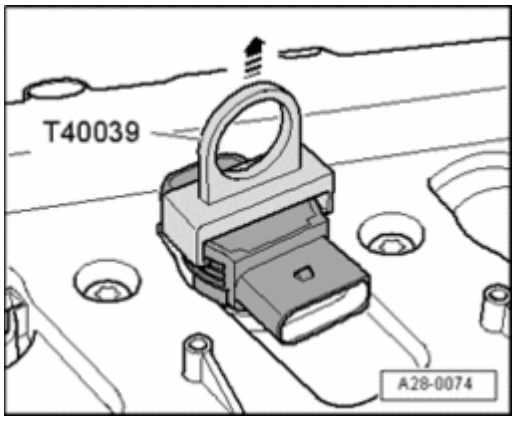

Fig. 43: Loosening Clamping Sleeve
Courtesy of VOLKSWAGEN UNITED STATES, INC.

NOTE:

- **Exhaust system decoupling element must not be bent more than 10 ° , otherwise it may be damaged.**

- Loosen clamping sleeve - **arrow** - and push it rearward.

 © 2011 Mitchell Repair Information Company, LLC.

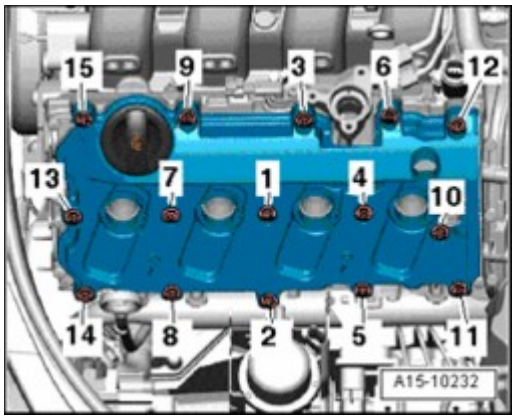

Fig. 44: Separating Front Exhaust Pipe/Catalytic Converter
Courtesy of VOLKSWAGEN UNITED STATES, INC.

- Separate front exhaust pipe/catalytic converter - **arrows** -.
- Remove bolt - **1** - at bracket for front exhaust pipe and remove front exhaust pipe.

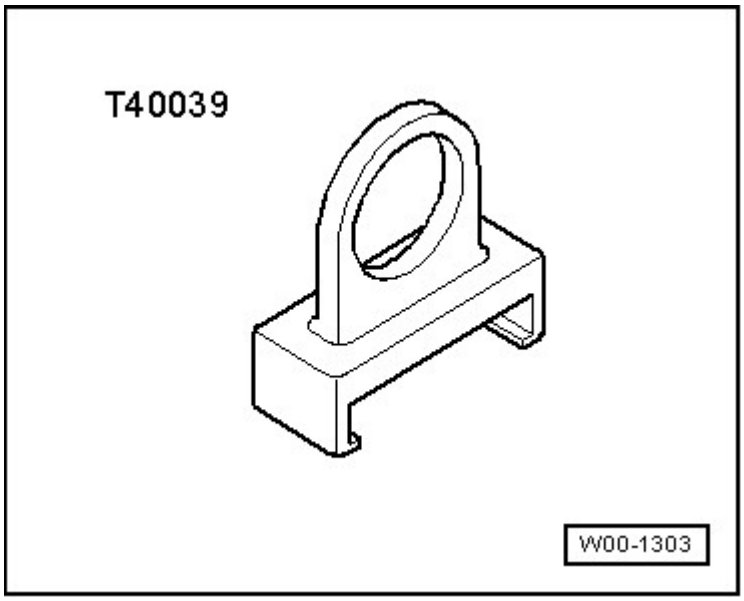

Fig. 45: Disconnecting Connector From Back-Up Light Switch F4 And Free Up Cable To Wiring Harness
Courtesy of VOLKSWAGEN UNITED STATES, INC.

- Disconnect connector - **arrow** - from Back-Up Light Switch F4 and free up cable to wiring harness.

 © 2011 Mitchell Repair Information Company, LLC.

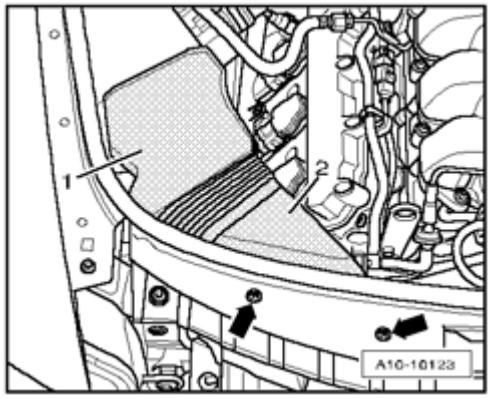

Fig. 46: Identifying Engine/Transmission Threaded Connections
Courtesy of VOLKSWAGEN UNITED STATES, INC.

- Disconnect accessible engine/transmission threaded connections - **1 to 3** - and - **7 to 11** - from below.

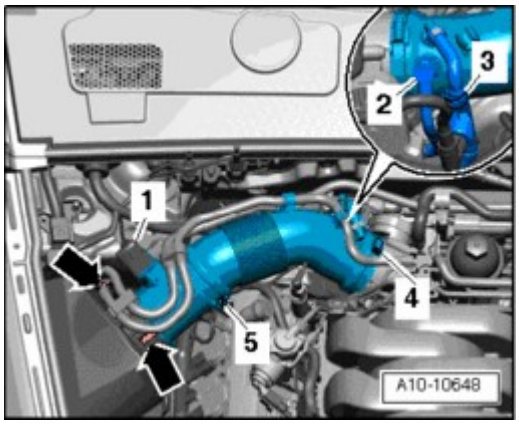

Fig. 47: Removing Starter
Courtesy of VOLKSWAGEN UNITED STATES, INC.

- Remove starter and pivot it aside.
- Disconnect electrical connector - **3** -.
- Remove nut - **1** - for clamp.
- Remove nut - **2** - and remove electrical wiring.

- Remove starter.

 © 2011 Mitchell Repair Information Company, LLC.

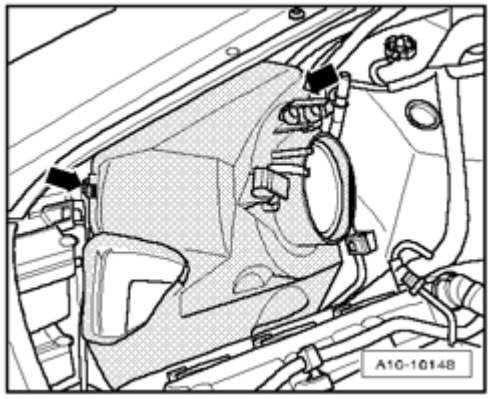

Fig. 48: Identifying Threaded Connections & Locating Sleeves
Courtesy of VOLKSWAGEN UNITED STATES, INC.

- Mark installed position of threaded connections - **1** - and locating sleeves - **2** - on lower left and right engine mounts.

NOTE:

- **Depending on engine version, different fastening holes are utilized.**

- Remove nuts - **1** - at bottom on left and right engine mounts.

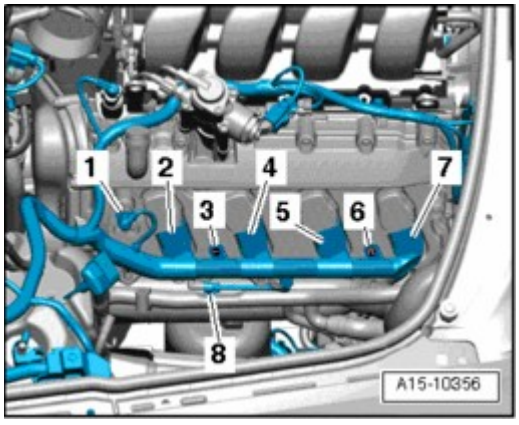

Fig. 49: Loosening Upper Nut On Left Engine Mount Several Turns
Courtesy of VOLKSWAGEN UNITED STATES, INC.

- Loosen upper nut - **arrow** - on left engine mount several turns.

 © 2011 Mitchell Repair Information Company, LLC.

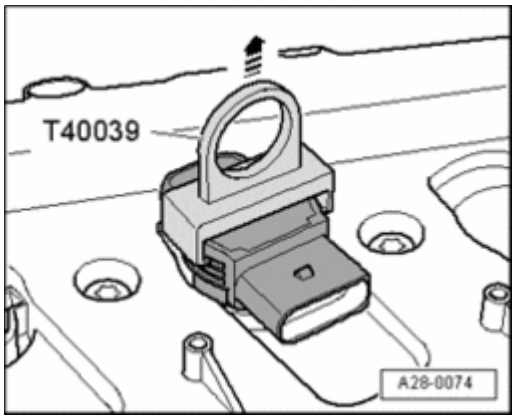

Fig. 50: Hooking Engine Sling 2024 A Onto Engine And Onto Workshop Crane VAS 6100
Courtesy of VOLKSWAGEN UNITED STATES, INC.

- Hook engine sling 2024 A onto engine and onto workshop crane VAS 6100 as shown in the illustration.

NOTE:

- **To be aligned to the center of gravity of the engine assembly, the hole rails of the lifting hook must be inserted as shown in the illustration.**

CAUTION: Lifting hooks and alignment pins on the engine sling must be secured with securing pins.

- Remove last engine/transmission connecting bolt.

NOTE:

- **Verify that all hose and line connections between engine and body have been disconnected.**

- Lift engine until engine mount studs are free.
- Lift floor jack until transmission is supported.
- Pull engine off from transmission and lift it forward and out of engine compartment.

Engine, securing to assembly stand

Special tools, testers and auxiliary items required

 © 2011 Mitchell Repair Information Company, LLC.

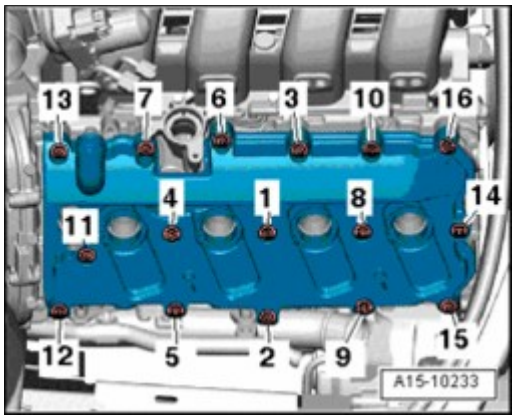

Fig. 51: Holding Fixture VW 540
Courtesy of VOLKSWAGEN UNITED STATES, INC.

- Engine and transmission holder VW 540

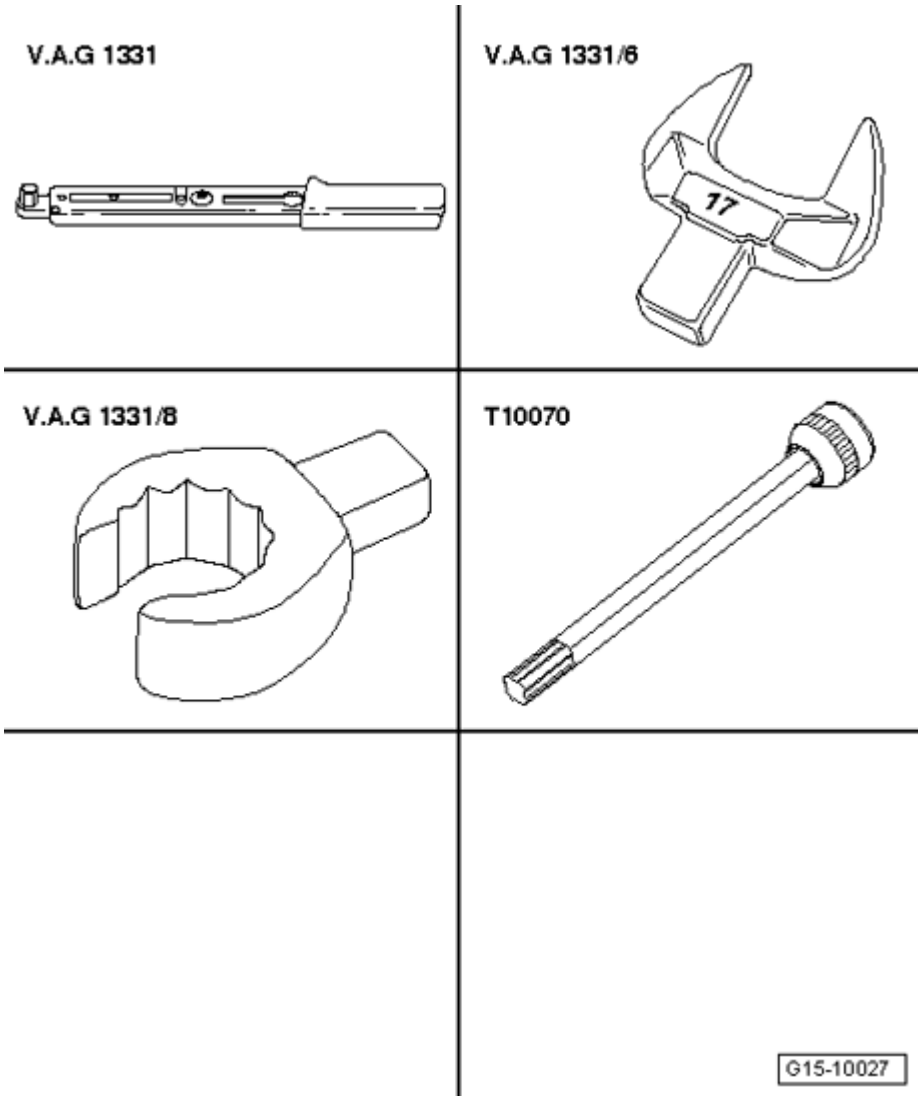

 © 2011 Mitchell Repair Information Company, LLC.

Fig. 52: Special Tool - Engine And Transmission Holder VAS 6095
Courtesy of VOLKSWAGEN UNITED STATES, INC.

- Engine and transmission holder VAS 6095

Work procedure

- Remove clutch, observe removal instructions -->
  - **30 CLUTCH** for 5 SPD. MANUAL TRANSMISSION 012/01W FRONT WHEEL DRIVE
  - **30 CLUTCH** for 5 SPD. MANUAL TRANSMISSION 01A ALL WHEEL DRIVE
  - **30 CLUTCH** for 6 SPD. MANUAL TRANSMISSION 01E ALL WHEEL DRIVE
  - **30 CLUTCH** for 6-SPEED MANUAL TRANSMISSION 01X, FRONT-WHEEL DRIVE
  - **30 CLUTCH** for 6-SPEED MANUAL TRANSMISSION 02X, FOUR-WHEEL DRIVE
  - **30 CLUTCH** for 6-SPEED MANUAL TRANSMISSION 0A3, ALL WHEEL DRIVE
- Remove dual-mass flywheel, observe removal instructions -->
  - **30 CLUTCH** for 5 SPD. MANUAL TRANSMISSION 012/01W FRONT WHEEL DRIVE
  - **30 CLUTCH** for 5 SPD. MANUAL TRANSMISSION 01A ALL WHEEL DRIVE
  - **30 CLUTCH** for 6 SPD. MANUAL TRANSMISSION 01E ALL WHEEL DRIVE
  - **30 CLUTCH** for 6-SPEED MANUAL TRANSMISSION 01X, FRONT-WHEEL DRIVE
  - **30 CLUTCH** for 6-SPEED MANUAL TRANSMISSION 02X, FOUR-WHEEL DRIVE
  - **30 CLUTCH** for 6-SPEED MANUAL TRANSMISSION 0A3, ALL WHEEL DRIVE

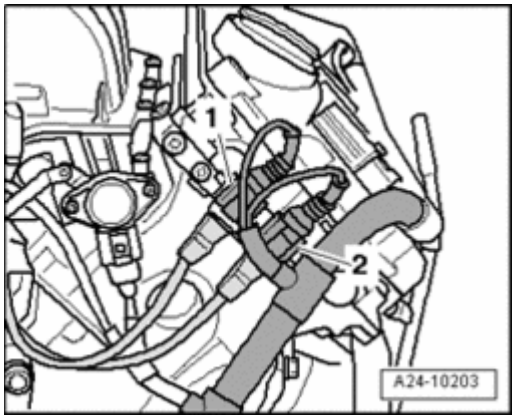

Fig. 53: Identifying Engine Transmission Bracket VW540
Courtesy of VOLKSWAGEN UNITED STATES, INC.

- For performing work, secure engine using holding fixture VW 540 on engine and transmission holder VAS 6095.

Engine, installing

NOTE:

- **During assembly, replace self-locking nuts and bolts.**
- **Always replace bolts that are tightened to torque as well as sealing rings,**

 © 2011 Mitchell Repair Information Company, LLC.

gaskets and O-rings.

- **Hose connections and charge air system hoses must be free of oil and grease before installing.**
- **Secure all hose connections using hose clamps .**
- **During installation, all cable ties must be re-installed at the same location.**

Vehicles with manual transmission:

- When installing a new clutch disc in combination with a used SAC clutch pressure plate (self-adjusting pressure plate), the adjustment ring of the pressure plate must be turned back to impact. Otherwise pressure plate works with decreased contact pressure (clutch slips) -->
  - **30 CLUTCH** for 5 SPD. MANUAL TRANSMISSION 012/01W FRONT WHEEL DRIVE
  - **30 CLUTCH** for 5 SPD. MANUAL TRANSMISSION 01A ALL WHEEL DRIVE
  - **30 CLUTCH** for 6 SPD. MANUAL TRANSMISSION 01E ALL WHEEL DRIVE
  - **30 CLUTCH** for 6-SPEED MANUAL TRANSMISSION 01X, FRONT-WHEEL DRIVE
  - **30 CLUTCH** for 6-SPEED MANUAL TRANSMISSION 02X, FOUR-WHEEL DRIVE
  - **30 CLUTCH** for 6-SPEED MANUAL TRANSMISSION 0A3, ALL WHEEL DRIVE

  .

NOTE:

- **If clutch disc is not being replaced, the adjustment ring must not be turned back.**
- **New SAC-pressure plates are already pre-adjusted and must not be reset.**

- Clean input shaft splines and (in case of used clutch plates) clean hub splines, remove corrosion and apply only a very thin coating of *lubricant G 000 100* on splines. Do not grease guide sleeve.
- If necessary, check centering of clutch drive plate.
- Check clutch release bearing for wear and replace if necessary.

If plastic ring of clutch release bearing is loose:

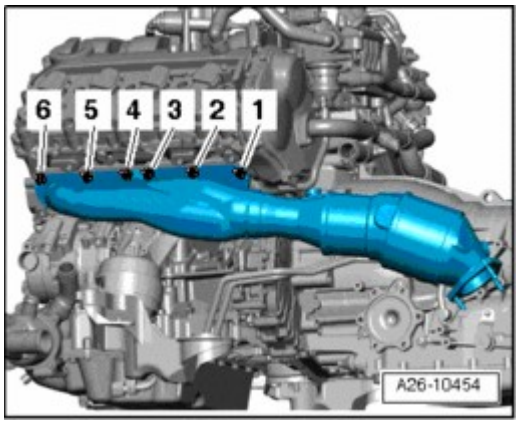

Fig. 54: Servicing Release Bearing With Plastic Ring

 © 2011 Mitchell Repair Information Company, LLC.

Courtesy of VOLKSWAGEN UNITED STATES, INC.

- Use *adhesive AMV 195 KD1 01* to glue plastic ring of clutch release bearing to bearing ring.

- 3 rectangular tabs - **arrows** - of the plastic ring reach into cutouts of bearing ring.
- If grooves with depth of more than 0.5 mm are present, release bearing must be replaced.

- A pilot needle bearing must be installed in crankshaft in engines for vehicles with manual transmission. Install needle bearing if necessary --> **Pulling out and driving in needle bearings from crankshaft**.

Vehicles with automatic transmission:

- Clean transmission input shaft splines and splines of damper unit on flywheel, remove corrosion and apply only a very thin coating of *lubricant G 000 100* on splines. Remove all excess grease.

All:

- Make sure centering sleeves for engine to transmission are installed in cylinder block. Install if necessary.

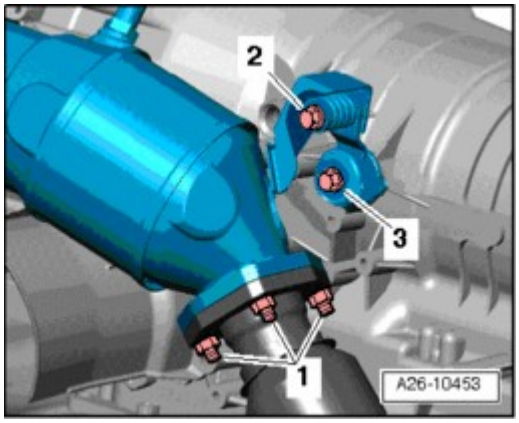

Fig. 55: Identifying Intermediate Plate Is Hooked In At Sealing Flange And Is Pushed Onto Alignment Sleeves
Courtesy of VOLKSWAGEN UNITED STATES, INC.

- Make sure that the intermediate plate is hooked in at sealing flange and is pushed onto alignment sleeves - **arrows** -.
- Install intermediate plate between engine and transmission onto alignment sleeves.
- Adjoin engine to transmission and install one bolt hand-tight.
- Lower engine and at the same time guide threaded studs of engine mount into engine mount plates.

NOTE:

- **Torque specifications only apply to lightly greased, oiled, phosphated or blackened nuts and bolts.**
- **Additional lubricants, such as engine or transmission oil are permissible, although lubricants containing graphite are not.**

 © 2011 Mitchell Repair Information Company, LLC.

- **Do not use any degreased parts.**
- **Tolerance for torque specifications ± 15%.**

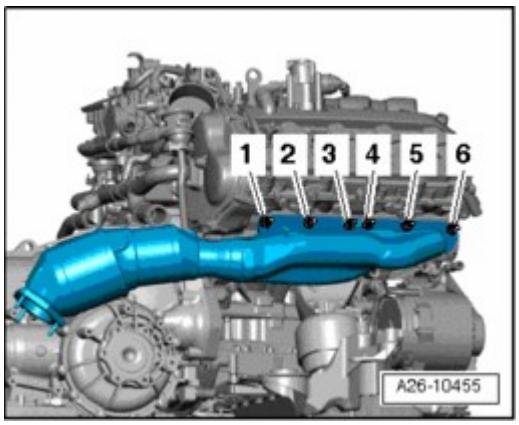

Fig. 56: Identifying Engine/Transmission Threaded Connections
Courtesy of VOLKSWAGEN UNITED STATES, INC.

Engine/manual transmission, fastening

Item	Bolt	Nm
1, 6	M12x105	65
2, 4	M12x80	65
3	M12x90	65
5, 7	M12x95	65
8	M10x50	45
9, 10, 11	M10x45	45
A	Alignment sleeves for centering	

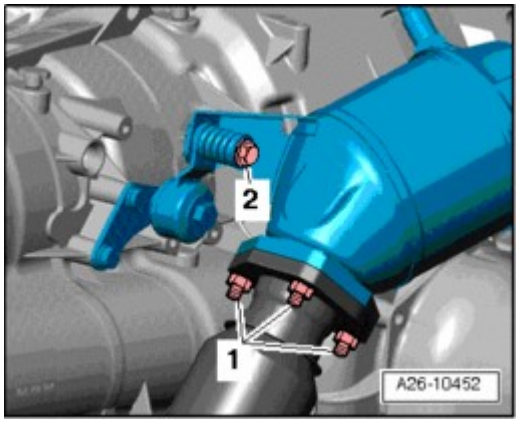

Fig. 57: Identifying Engine/Transmission Threaded Connections
Courtesy of VOLKSWAGEN UNITED STATES, INC.

Engine/multitronic transmission, fastening

 © 2011 Mitchell Repair Information Company, LLC.

Item	Bolt	Nm
1	M12x67	65
2	M10x70	45
3, 4, 5, 7	M12x75	65
6	M12x105	65
8	M10x60	45
9, 10, 11	M10x45	45
A	Alignment sleeves for centering	

All:

The rest of installation is in reverse order of removal, note the following:

- Install exhaust system and align it free of stress --> **Exhaust system, installing tension free**.
- Install A/C compressor --> **87 AIR CONDITIONING** .
- Install power steering pump --> **48 - STEERING** .
- Install ribbed belt --> **Ribbed belt, removing and installing**.

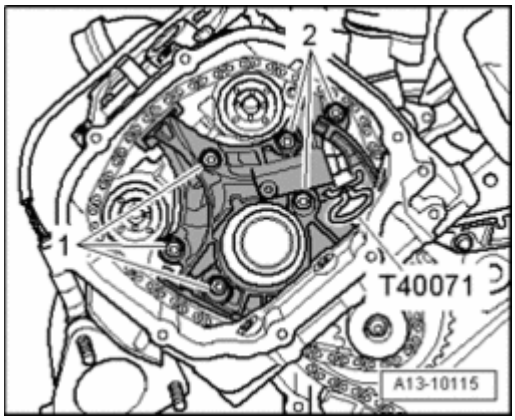

Fig. 58: Identifying Lock Carrier With Attachments
Courtesy of VOLKSWAGEN UNITED STATES, INC.

- Install lock carrier with attachments -->
  - **50 BODY, FRONT**
  - **50 - BODY - FRONT** for BODY EXTERIOR - CABRIOLET

  .
- Place torque support stop onto rubber buffer for torque support under its own weight and tighten nuts - **arrows** -.
- Install front bumper cover -->
  - **63 BUMPER**
  - **63 - BUMPERS** for BODY EXTERIOR - CABRIOLET

  .

 © 2011 Mitchell Repair Information Company, LLC.

- Fasten ATF lines -->
  - **37 - AUTOMATIC TRANSMISSION - CONTROLS, HOUSING** for 5 SPD. AUTOMATIC TRANSMISSION 01V
  - **37 - AUTOMATIC TRANSMISSION - CONTROLS, HOUSING** for 5 SPD. AUTOMATIC TRANSMISSION 01V FRONT AND ALL WHEEL DRIVE - INTERNAL COMPONENTS, SERVICING
  - **37 CONTROLS, HOUSING** for AUTOMATIC TRANSMISSION 09L, FOUR-WHEEL DRIVE

  .
- Electrical connections and routing --> Electrical Wiring Diagrams, Troubleshooting and Component Locations.
- Observe safety precautions after connecting battery --> **27 BATTERY, STARTER, GENERATOR, CRUISE CONTROL** .

CAUTION: Do not use a battery charger for starting assistance! There is the risk that the vehicle control modules could be damaged.

- Check oil level -->
  - **01 - MAINTENANCE**
  - **01 - MAINTENANCE** for MAINTENANCE PROCEDURES - CABRIOLET

  .
- Fill with coolant --> **Cooling system, draining and filling**.

NOTE:

- **Only reuse drained coolant if cylinder head or engine block was not replaced.**
- **Dirty coolant must not be re-used.**

- Check power steering fluid level --> **48 - STEERING** .
- Check ATF level -->
  - **37 - AUTOMATIC TRANSMISSION - CONTROLS, HOUSING** for 5 SPD. AUTOMATIC TRANSMISSION 01V
  - **37 - AUTOMATIC TRANSMISSION - CONTROLS, HOUSING** for 5 SPD. AUTOMATIC TRANSMISSION 01V FRONT AND ALL WHEEL DRIVE - INTERNAL COMPONENTS, SERVICING
  - **37 CONTROLS, HOUSING** for AUTOMATIC TRANSMISSION 09L, FOUR-WHEEL DRIVE

  .
- Check headlight adjustment -->
  - **01 - MAINTENANCE**
  - **01 - MAINTENANCE** for MAINTENANCE PROCEDURES - CABRIOLET

  .

 © 2011 Mitchell Repair Information Company, LLC.

Torque specifications

NOTE:

- **Torque specifications only apply to lightly greased, oiled, phosphated or blackened nuts and bolts.**
- **Additional lubricants, such as engine or transmission oil are permissible, although lubricants containing graphite are not.**
- **Do not use any degreased parts.**
- **Tolerance for torque specifications ± 15%.**

Component		Nm
Bolts/nuts	M6	9
	M8	20
	M10	40
	M12	65
Exceptions:		
Engine mount to engine plate		40
Engine mount to engine support		23
Electrical wiring to starter		16
Electrical wiring to generator		16
Heat shield for drive shaft to transmission		23
Torque support stop		28
Hose clamps 9 mm wide		3
Hose clamps 13 mm wide		5.5

OVERVIEW OF COMPONENT LOCATIONS

Overview of component locations

Components A through O are not depicted in exploded view illustration.

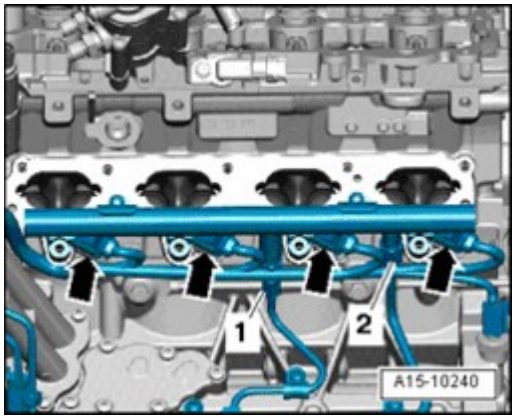

Fig. 59: Engine Remove/Install Components
Courtesy of VOLKSWAGEN UNITED STATES, INC.

 © 2011 Mitchell Repair Information Company, LLC.

1 - Mass air flow (MAF) sensor G70

- Refer to --> **Mass Air Flow (MAF) Sensor G70**

2 - Heated Oxygen Sensor (HO2S) G39 and Oxygen Sensor (O2S) Heater Z19

3 - Oxygen Sensor (O2S) Behind Three Way Catalytic Converter (TWC) G130 and Oxygen Sensor (O2S) Heater 1 (behind Three Way Catalytic Converter (TWC)) Z29

- **Oxygen sensors**

4 - Engine coolant temperature (ECT) sensor G62

- Refer to --> **Engine Coolant Temperature (ECT) Sensor G62**

5 - Camshaft Adjustment Valve 1 N205

- Refer to --> **Camshaft Adjustment Valve 1 N205 - 1 - and Fuel Pressure Regulator Valve N276 - 2 -**

6 - Fuel Pressure Regulator Valve N276

- and under **Camshaft Adjustment Valve 1 N205 - 1 - and Fuel Pressure Regulator Valve N276 - 2 -**

7 - Single piston high pressure pump

8 - Low Fuel Pressure Sensor G410

- 15 Nm

9 - Intake Flap Motor V157 with Intake Manifold Runner Position Sensor G336

10 - Engine Speed (RPM) Sensor G28

- **Electrical harness connectors**

11 - 6-pin harness connector Oxygen Sensor (O2S) Behind Three Way Catalytic Converter (TWC) G130 and Oxygen Sensor (O2S) Heater 1 (behind Three Way Catalytic Converter (TWC)) Z29 (brown connector)

12 - 6-pin harness connector

- For Heated Oxygen Sensor (HO2S) G39 and Oxygen Sensor (O2S) Heater Z19 (black) **Electrical harness connectors**

13 - Evaporative Emission (EVAP) Canister Purge Solenoid Valve 1 N80

14 - Engine Control Module (ECM) J623

 © 2011 Mitchell Repair Information Company, LLC.

- Removing and installing --> - **24 - MULTIPORT FUEL INJECTION (MFI)**

15 - Charge Air Pressure Sensor G31

- Refer to --> **Charge Air Pressure Sensor G31**

16 - Throttle Valve Control Module J338 , Throttle Drive (for Electronic Power Control (EPC)) G186 ,

- Throttle Drive Angle Sensor 1 (for Electronic Power Control (EPC)) G187 and Throttle Drive Angle Sensor 2 (for Electronic Power Control (EPC)) G188
- After replacing Throttle Valve Control Module J338 , it must be adapted to Engine Control Module (ECM) J623 again (basic setting, display group 60) see "Guided Fault Finding"
- Refer to --> **Intake Air Temperature (IAT) Sensor G42 Throttle Valve Control Module J338**

17 - Intake Air Temperature (IAT) Sensor G42

- Refer to --> **Intake Air Temperature (IAT) Sensor G42 Throttle Valve Control Module J338**

18 - Fuel Pressure Sensor G247

- Refer to --> **Fuel Pressure Sensor G247**

19 - Camshaft Position (CMP) Sensor G40

- Refer to --> **Camshaft Position (CMP) Sensor G40**

20 - Ignition coils with power output stages

- Ignition Coil 1 with Power Output Stage N70
- Ignition Coil 2 with Power Output Stage N127
- Ignition Coil 3 with Power Output Stage N291
- Ignition Coil 4 with Power Output Stage N292

- The ignition coils must be pulled out of cylinder head using Ignition Coil Puller T40039
- Removing and installing --> - **24 - MULTIPORT FUEL INJECTION (MFI)**

21 - Turbocharger Recalculating Valve N249

- Installed directly on turbocharger **Components on turbocharger**

22 - Wastegate Bypass Regulator Valve N75

- Installed directly on turbocharger **Components on turbocharger**

A - Data Link connector (DLC)

 © 2011 Mitchell Repair Information Company, LLC.

- In knee bolster on drivers side

B - Fuel Pump (FP) Control Module J538

- Refer to --> **Fuel Pump (FP) Control Module J538**

C - "EPC" indicator lamp

- In instrument cluster

D - Exhaust Malfunction Indicator Lamp "MIL"

- In instrument cluster

E - 8-pin harness connector for fuel injectors

- **Component locations beneath intake manifold**

F - Connector

- For Camshaft Position (CMP) Sensor G40 and Fuel Pressure Sensor G247
- **Component locations beneath intake manifold**

G - Brake Light Switch F and Brake Pedal Switch F63

- Refer to --> **Installed location Brake light switch F and Brake pedal switch F47 , Clutch pedal switch F36**

H - Throttle position (TP) sensor G79 and Accelerator Pedal Position Sensor 2 G185

- On accelerator pedal (both sensors are stored in one housing)

I - Clutch pedal switch F36

- Refer to --> **Installed location Brake light switch F and Brake pedal switch F47 , Clutch pedal switch F36**

J - Relay and fuse carrier in E-box

- **Installed location in 4-socket relay carrier, plenum chamber E-box**

K - Coolant Fan Control (FC) control module J293

- Installed in left coolant fan, when facing driving direction

L - Fuel injector

 © 2011 Mitchell Repair Information Company, LLC.

- In fuel rail pipe
- Cylinder 1 Fuel Injector N30
- Cylinder 2 Fuel Injector N31
- Cylinder 3 Fuel Injector N32
- Cylinder 4 Fuel Injector N33
- Removing and installing --> - **24 - MULTIPORT FUEL INJECTION (MFI)**

Fuel injectors referred to here are high pressure fuel injectors. They inject fuel directly into the cylinder under high pressure (max. approx. 120 bar).

M - Knock Sensor (KS) I G61

- For cylinder 1 and 2
- Torque specification: 20 Nm
- **Component locations beneath intake manifold**

N - Knock sensor 2 G66

- For cylinder 3 and 4
- Torque specification: 20 Nm
- **Component locations beneath intake manifold**

O - Oil Pressure Sensor G10

- **Electrical harness connectors**

Fuel Pressure Sensor G247, (torque specification 15 Nm)

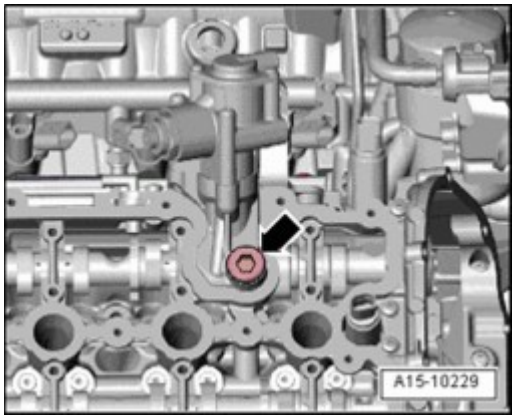

Fig. 60: Fuel Pressure Sensor G247
Courtesy of VOLKSWAGEN UNITED STATES, INC.

Camshaft Position (CMP) Sensor G40

 © 2011 Mitchell Repair Information Company, LLC.

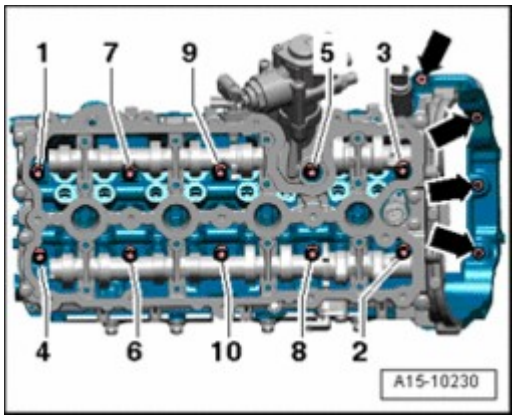

Fig. 61: Camshaft Position (CMP) Sensor G40
Courtesy of VOLKSWAGEN UNITED STATES, INC.

Mass Air Flow (MAF) Sensor G70

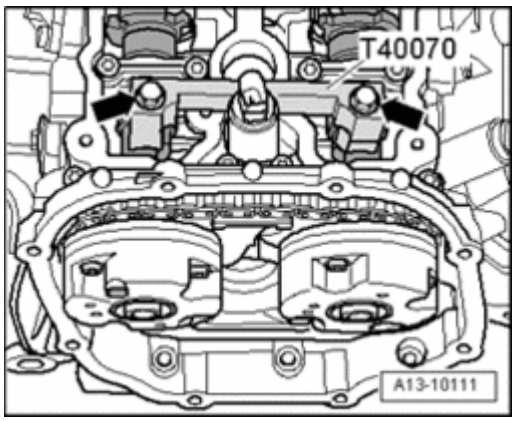

Fig. 62: Identifying Mass Air Flow (MAF) Sensor G70
Courtesy of VOLKSWAGEN UNITED STATES, INC.

Camshaft Adjustment Valve 1 N205 and Fuel Pressure Regulator Valve N276

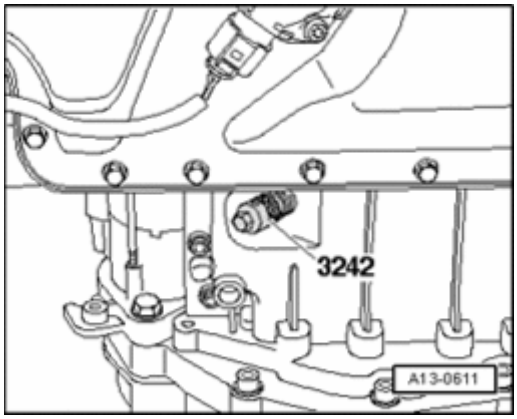

Fig. 63: Identifying Camshaft Adjustment Valve 1 N205 And Fuel Pressure Regulator Valve N276
Courtesy of VOLKSWAGEN UNITED STATES, INC.

 © 2011 Mitchell Repair Information Company, LLC.

Intake Air Temperature (IAT) Sensor G42 Throttle Valve Control Module J338

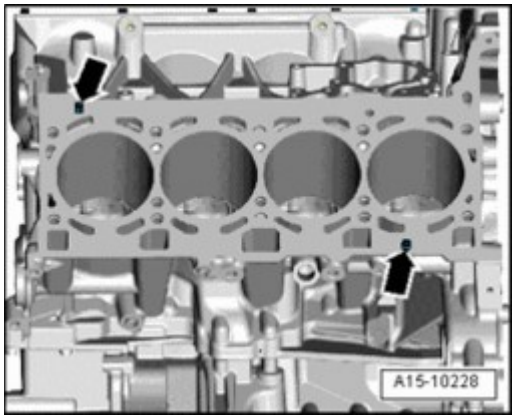

Fig. 64: Intake Air Temperature (IAT) Sensor G42 Throttle Valve Control Module J338
Courtesy of VOLKSWAGEN UNITED STATES, INC.

Fuel Pump (FP) Control Module J538

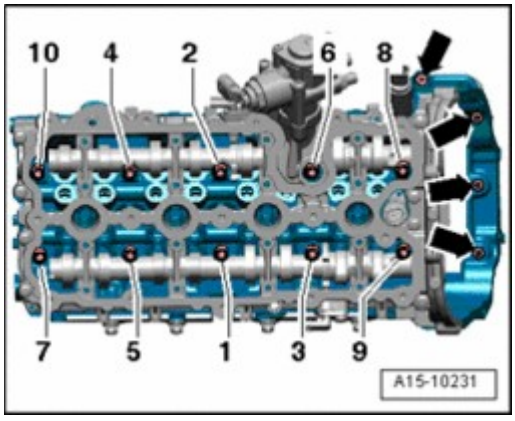

Fig. 65: Fuel Pump (FP) Control Module J538
Courtesy of VOLKSWAGEN UNITED STATES, INC.

Electrical harness connectors

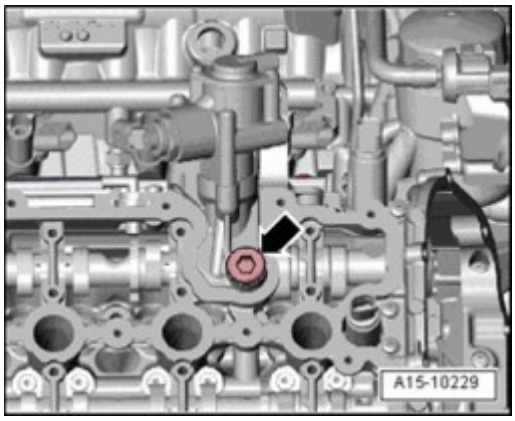

Fig. 66: Identifying Electrical Harness Connectors

 © 2011 Mitchell Repair Information Company, LLC.

Courtesy of VOLKSWAGEN UNITED STATES, INC.

1 - Oxygen Sensor (O2S) Behind Three Way Catalytic Converter (TWC) G130 and Oxygen Sensor (O2S) Heater 1 (behind Three Way Catalytic Converter (TWC)) Z29 (brown connector)

2 - Heated Oxygen Sensor (HO2S) G39 and Oxygen Sensor (O2S) Heater Z19 (black connector)

Oxygen sensors

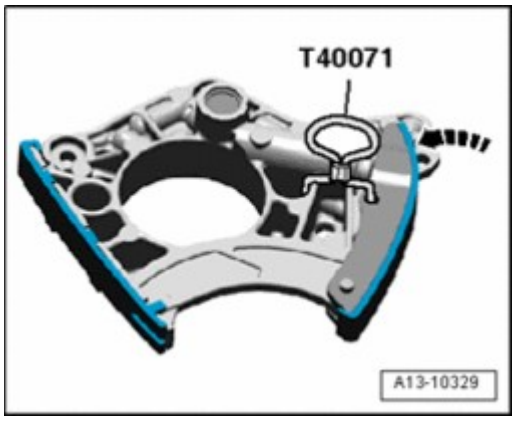

Fig. 67: Identifying Oxygen Sensors
Courtesy of VOLKSWAGEN UNITED STATES, INC.

1 - Oxygen Sensor (O2S) Behind Three Way Catalytic Converter (TWC) G130 and Oxygen Sensor (O2S) Heater 1 (behind Three Way Catalytic Converter (TWC)) Z29

2 - Heated Oxygen Sensor (HO2S) G39 and Oxygen Sensor (O2S) Heater Z19

Installed location of Engine Control Module (ECM) J623

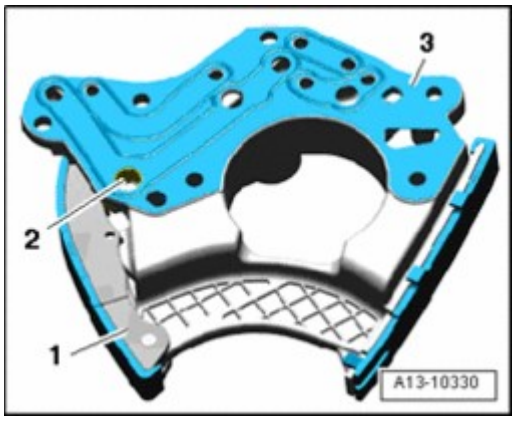

Fig. 68: Installed Location Of Engine Control Module (ECM) J623
Courtesy of VOLKSWAGEN UNITED STATES, INC.

Engine Coolant Temperature (ECT) Sensor G62

 © 2011 Mitchell Repair Information Company, LLC.

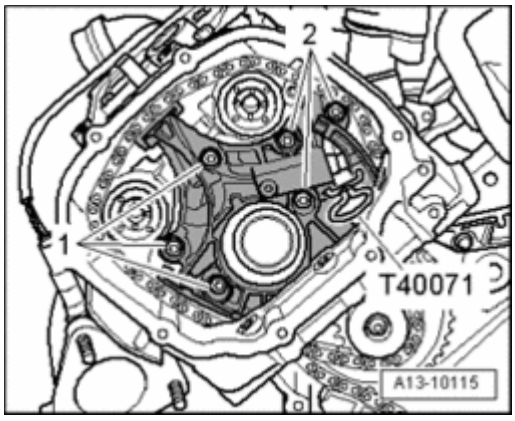

Fig. 69: Identifying Engine Coolant Temperature (ECT) Sensor G62
Courtesy of VOLKSWAGEN UNITED STATES, INC.

Installed location Brake light switch F and Brake pedal switch F47 , Clutch pedal switch F36

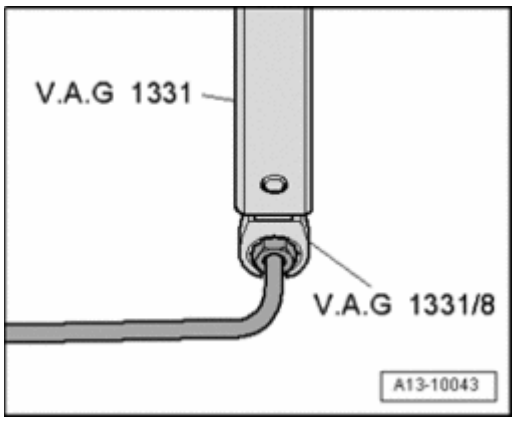

Fig. 70: Installed Location Brake Light Switch F And Brake Pedal Switch F47 , Clutch Pedal Switch F36
Courtesy of VOLKSWAGEN UNITED STATES, INC.

1. Brake light switch F , Brake pedal switch F47
2. Clutch pedal switch F36

NOTE:

- **To ensure that they are absolutely securely seated, the switches may only be installed once.**

Installed location in 4-socket relay carrier, plenum chamber E-box

 © 2011 Mitchell Repair Information Company, LLC.

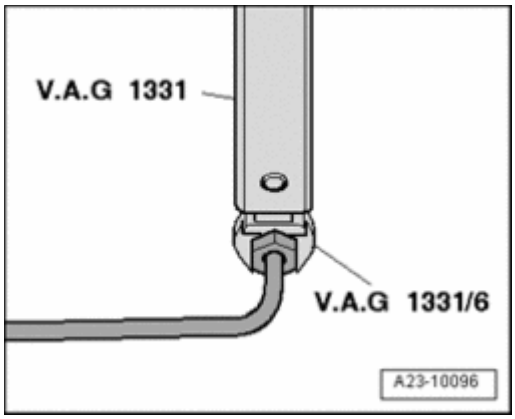

Fig. 71: Installed Location In 4-Socket Relay Carrier, Plenum Chamber E-Box
Courtesy of VOLKSWAGEN UNITED STATES, INC.

1.1 - Not used

1.2 -

2 - Motronic Engine Control Module (ECM) Power Supply Relay J271

3 - Engine Component Power Supply Relay J757

A -

B -

C -

Installed location on 9-socket relay carrier in driver footwell

 © 2011 Mitchell Repair Information Company, LLC.

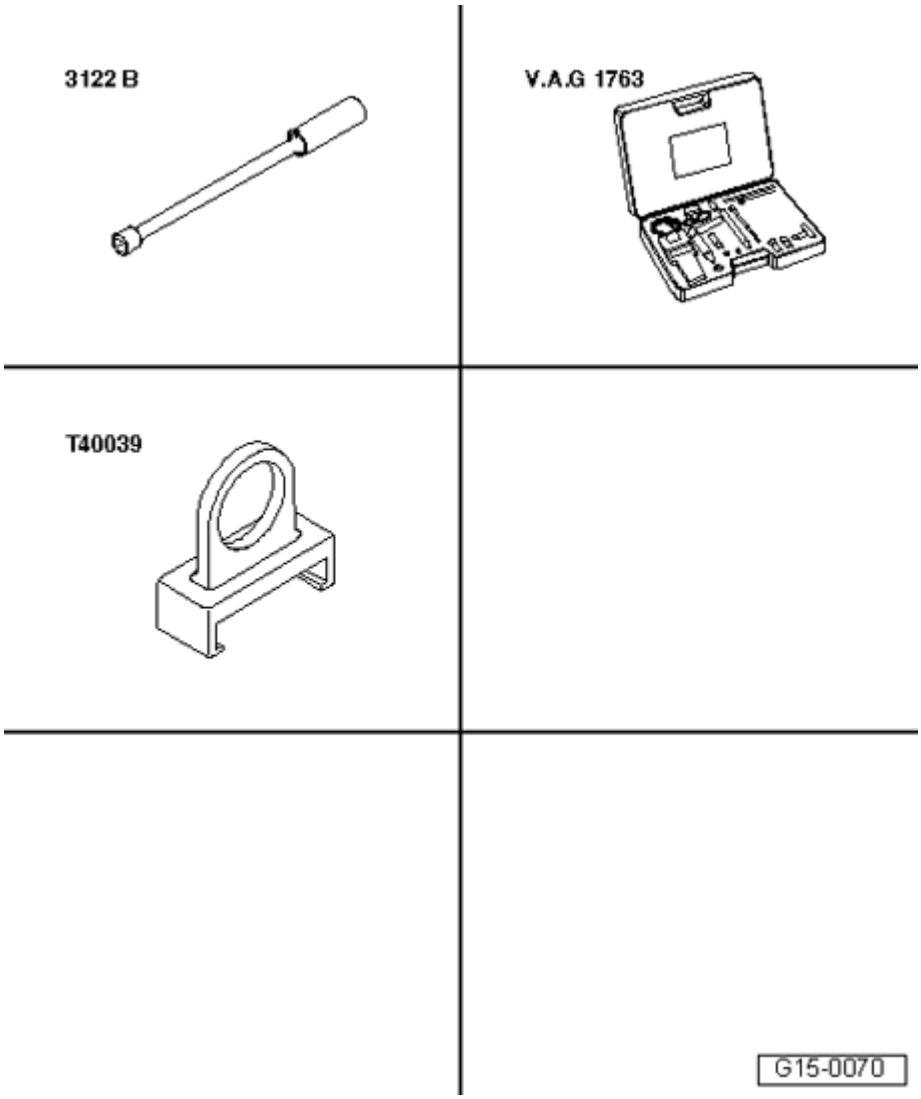

Fig. 72: Installed Location On 9-Socket Relay Carrier In Driver Footwell
Courtesy of VOLKSWAGEN UNITED STATES, INC.

1 - Fuel pump (FP) relay J17

Electrical harness connectors

 © 2011 Mitchell Repair Information Company, LLC.

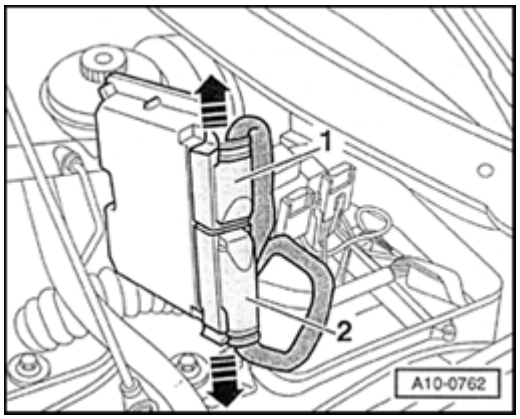

Fig. 73: Identifying Electrical Harness Connectors
Courtesy of VOLKSWAGEN UNITED STATES, INC.

1 - Oil Pressure Sensor G10

2 - 3-pin connection (gray) for engine speed (RPM) sensor G28

3 - Engine Speed (RPM) Sensor G28

Component locations beneath intake manifold

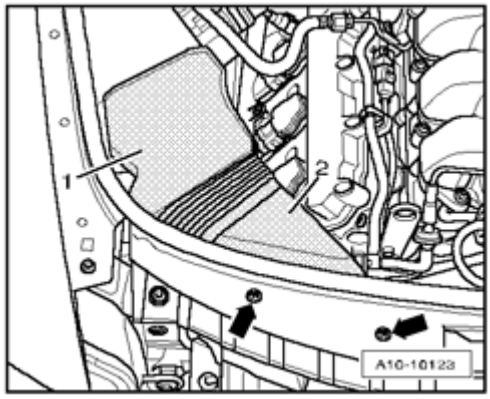

Fig. 74: Component Locations Beneath Intake Manifold
Courtesy of VOLKSWAGEN UNITED STATES, INC.

1 - Knock Sensor (KS) I G61

2 - Knock Sensor (KS) II G66

3 - Oil Pressure Sensor G10

4 - 3-pin connection (gray) for engine speed (RPM) sensor G28

5 - Electrical connection for Camshaft Position (CMP) Sensor G40 and Fuel Pressure Sensor G247

 © 2011 Mitchell Repair Information Company, LLC.

6 - 8-pin harness connector for fuel injectors

Charge Air Pressure Sensor G31

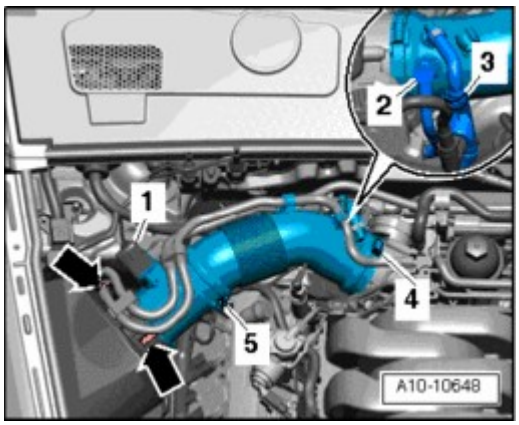

Fig. 75: Charge Air Pressure Sensor G31
Courtesy of VOLKSWAGEN UNITED STATES, INC.

Components on turbocharger

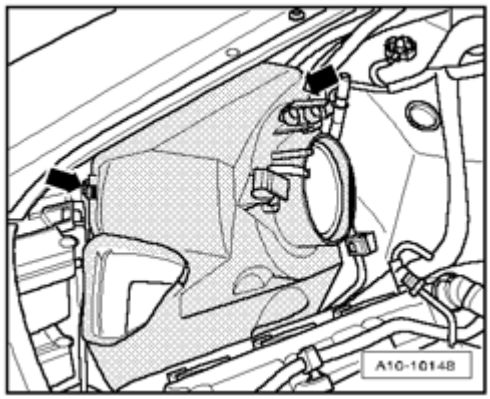

Fig. 76: Components On Turbocharger
Courtesy of VOLKSWAGEN UNITED STATES, INC.

1 - Turbocharger

2 - Wastegate Bypass Regulator Valve N75

3 - Turbocharger Recalculating Valve N249

13 - ENGINE - CRANKSHAFT, CYLINDER BLOCK

ENGINE, DISASSEMBLING AND ASSEMBLING

Lock carrier, moving into service position

 © 2011 Mitchell Repair Information Company, LLC.

Special tools, testers and auxiliary items required

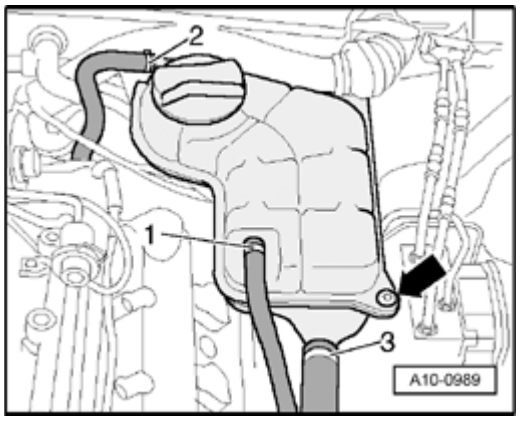

Fig. 77: Support Tool 3369
Courtesy of VOLKSWAGEN UNITED STATES, INC.

- Support tool 3369

Work procedure

- Remove both front wheels.

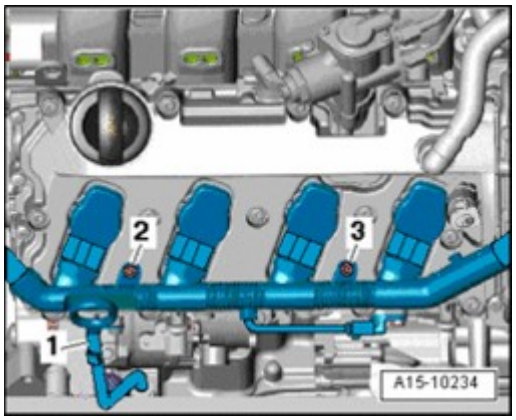

Fig. 78: Identifying Exhaust Pipe Fasteners
Courtesy of VOLKSWAGEN UNITED STATES, INC.

- For vehicles with auxiliary heater, remove bolts - **arrows** - for exhaust pipe of parking heater/auxiliary heater on noise insulation.

 © 2011 Mitchell Repair Information Company, LLC.

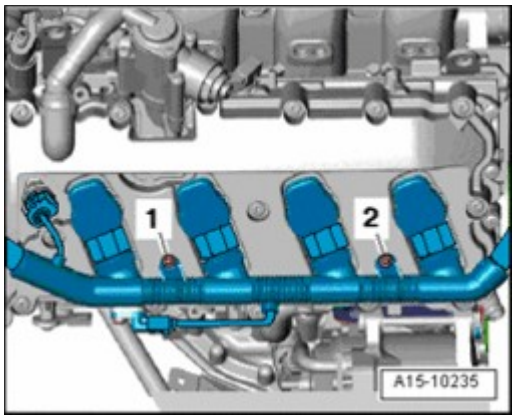

Fig. 79: Identifying Quick-Release Fasteners And Noise Insulation
Courtesy of VOLKSWAGEN UNITED STATES, INC.

- Loosen quick-release fasteners - **1** - and - **2** - and remove front noise insulation.

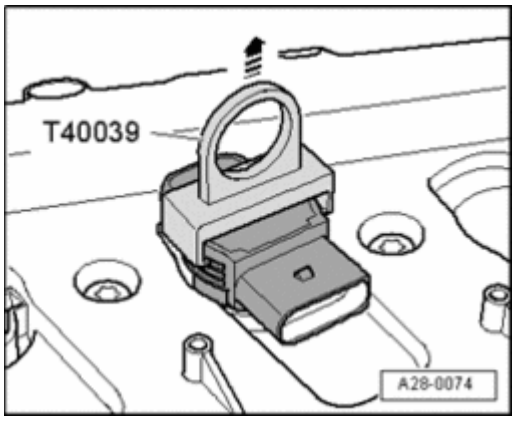

Fig. 80: Removing Air Guides From In Front Of Charge Air Coolers At Left/Right
Courtesy of VOLKSWAGEN UNITED STATES, INC.

- Remove front bumper cover -->
  - **63 BUMPER**
  - **63 - BUMPERS** for BODY EXTERIOR - CABRIOLET

  .
- Remove air duct from in front of charge air cooler at left and right - **arrows** -.

 © 2011 Mitchell Repair Information Company, LLC.

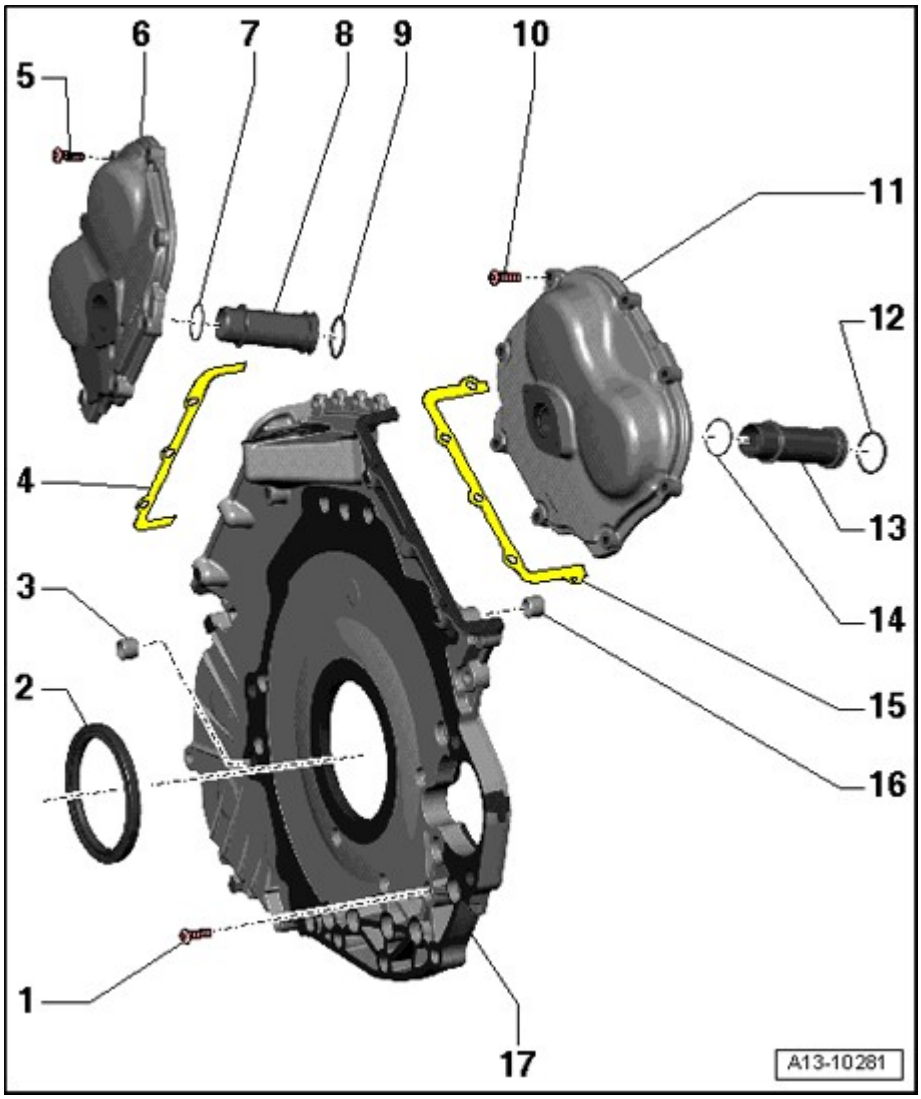

Fig. 81: Removing Air Duct Hose To Charge Air Cooler At Lower Left On Lock Carrier
Courtesy of VOLKSWAGEN UNITED STATES, INC.

- Remove air duct hose - **1** - to charge air cooler at lower left on lock carrier.

CAUTION: The air conditioning refrigerant circuit must not be opened.

- Unhook refrigerant line from bracket - **2** -.

 © 2011 Mitchell Repair Information Company, LLC.

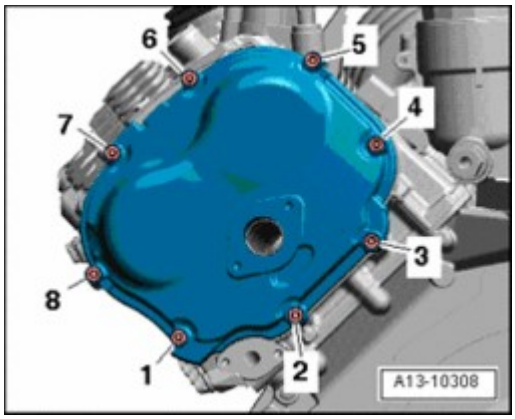

Fig. 82: Removing Bolts & Air Duct
Courtesy of VOLKSWAGEN UNITED STATES, INC.

- Remove bolts - **arrows** -.
- Remove air duct - **1** - and - **2** -.

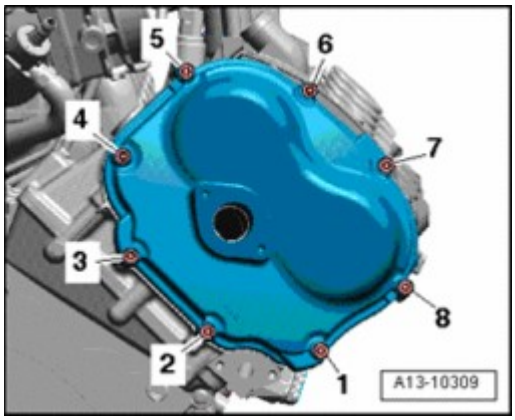

Fig. 83: Removing Electrical Harness Connectors From Bracket
Courtesy of VOLKSWAGEN UNITED STATES, INC.

- Remove electrical harness connectors - **1** - and - **2** - from bracket and free up electrical wiring.

 © 2011 Mitchell Repair Information Company, LLC.

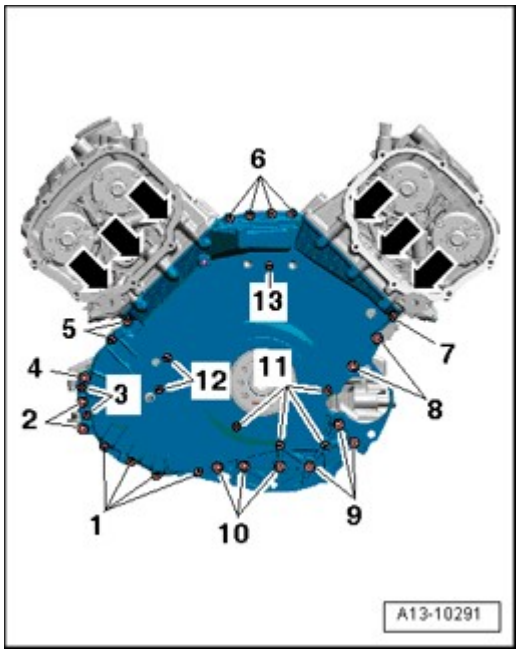

Fig. 84: Removing Bolts At Left/Right Side Of Bumper
Courtesy of VOLKSWAGEN UNITED STATES, INC.

- Remove hood seal from lock carrier and fender edges.
- Remove bolts - **arrows** - at left and right side of bumper.

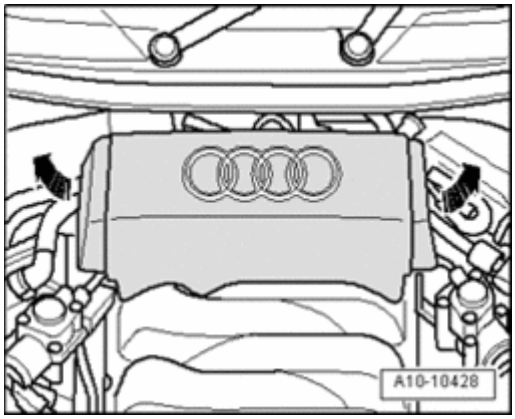

Fig. 85: Removing Bolts At Left/Right Impact Absorbers
Courtesy of VOLKSWAGEN UNITED STATES, INC.

- Thread support tool 3369 into empty bores at left and right.
- Remove bolts - **arrows** - at left and right impact absorbers.
- Carefully pull lock carrier toward front.

Installing

Installation is in reverse order of removal, note the following:

 © 2011 Mitchell Repair Information Company, LLC.

NOTE:

- **Hose connections and charge air system hoses must be free of oil and grease before installing. Do not use lubricant under any circumstances.**
- **Secure all hose connections using hose clamps .**

- Install lock carrier with attachments -->
  - **50 BODY, FRONT**
  - **50 - BODY - FRONT** for BODY EXTERIOR - CABRIOLET

.

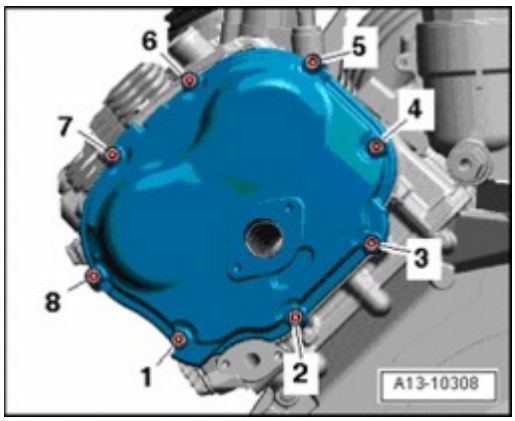

Fig. 86: Identifying Lock Carrier With Attachments
Courtesy of VOLKSWAGEN UNITED STATES, INC.

- Place torque support stop onto rubber buffer for torque support under its own weight and tighten the nuts **- arrows -**.
- Install front bumper cover -->
  - **63 BUMPER**
  - **63 - BUMPERS** for BODY EXTERIOR - CABRIOLET

.

- Check headlight adjustment -->
  - **01 - MAINTENANCE**
  - **01 - MAINTENANCE** for MAINTENANCE PROCEDURES - CABRIOLET

.

Torque specifications

Component	Nm
Torque support stop	28
Hose clamps 9 mm wide	3
Hose clamps 13 mm wide	5.5

Ribbed belt, component overview

 © 2011 Mitchell Repair Information Company, LLC.

NOTE:

- **Before removing ribbed belt, mark the turning direction on it with chalk or a felt tip pen. A reversed turning direction can cause damage to the belt under operating conditions. When installing, make sure the belt is correctly seated in the belt pulley.**

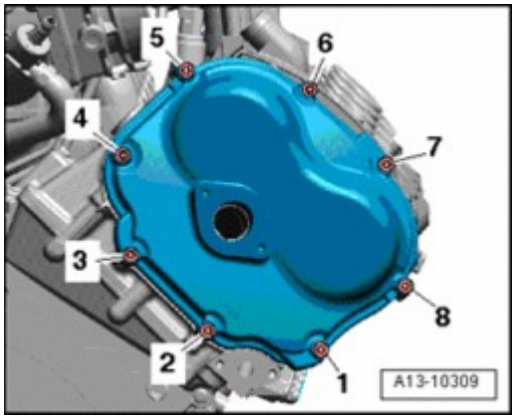

Fig. 87: Ribbed Belt, Component Overview
Courtesy of VOLKSWAGEN UNITED STATES, INC.

1 - Ribbed belt

- Ribbed belt routing --> **Ribbed belt, routing**
- Check for wear
- Do not kink
- Removing and installing --> **Ribbed belt, removing and installing**

2 - Pulley

- For ribbed belt
- Removing and installing --> **Crankshaft belt pulley, removing and installing**

3 - Special bolt

- Replace
- Torque specification 10 Nm plus an additional 90 °

4 - 23 Nm

5 - Engine lift eye

6 - Belt tensioner for ribbed belt

- To release tension on ribbed belt, pivot using open-end wrench.
- Secure tensioner with special tool Locking Tool T40098

 © 2011 Mitchell Repair Information Company, LLC.

7 - 23 Nm

8 - Bushing

9 - Bracket for assemblies

- Removing and installing --> **Accessory assembly bracket, removing and installing**

10 - 23 Nm

11 - Generator

- Removing and installing --> **27 BATTERY, STARTER, GENERATOR, CRUISE CONTROL**
- To facilitate installing the generator, slightly drive back threaded bushings for retaining bolts on generator.

12 - 23 Nm

13 - Power steering pump

- Removing and installing --> **48 - STEERING**

14 - 45 Nm

- Insert with locking fluid
- Locking fluid
- Observe tightening sequence --> **Accessory assembly bracket, removing and installing**

15 - Bushing

- 2 pieces

16 - Air conditioner compressor

- Removing and installing --> **87 AIR CONDITIONING**

17 - 25 Nm

18 - Idler roller for ribbed belt

- Note installation position

19 - 20 Nm plus an additional 90 ° ($^{1}/_{4}$ turn)

- Replace

 © 2011 Mitchell Repair Information Company, LLC.

Ribbed belt, routing

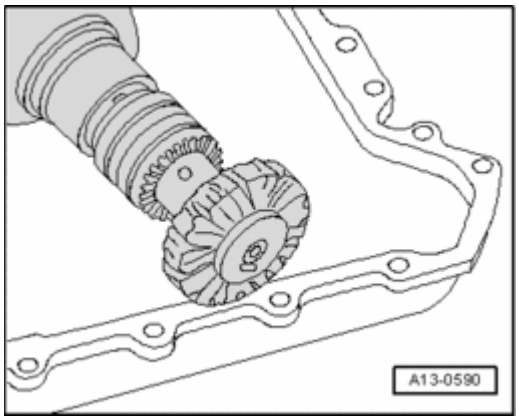

Fig. 88: Ribbed Belt, Routing
Courtesy of VOLKSWAGEN UNITED STATES, INC.

1 - Vibration damper

2 - Belt tensioner for ribbed belt

3 - Ribbed belt

4 - Generator

5 - Power steering pump

6 - Idler roller

7 - Air conditioner compressor

Ribbed belt, removing and installing

Special tools, testers and auxiliary items required

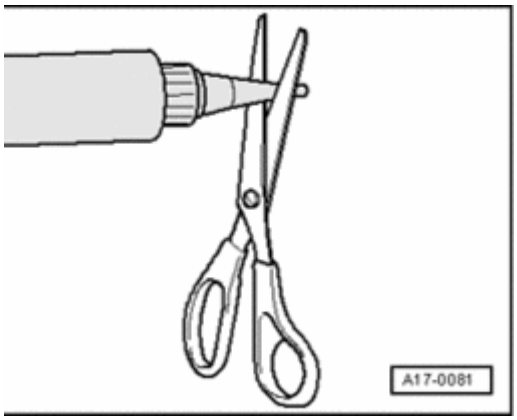

Fig. 89: Locking Tool T40098

 © 2011 Mitchell Repair Information Company, LLC.

Courtesy of VOLKSWAGEN UNITED STATES, INC.

- Locking Tool T40098

Removing

NOTE:

- **Before removing ribbed belt, mark the turning direction on it with chalk or a felt tip pen. A reversed turning direction can cause damage to the belt under operating conditions.**

  - Mark direction of rotation of ribbed belt.

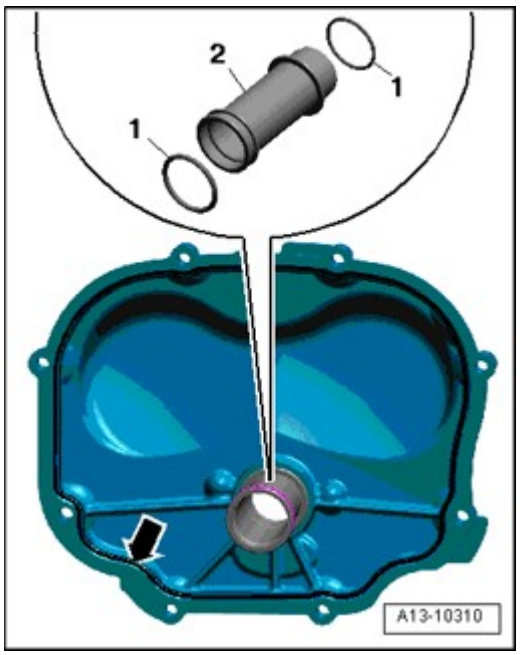

Fig. 90: Pivoting Belt Tensioner For Ribbed Belt To Relieve Tension On Ribbed Belt
Courtesy of VOLKSWAGEN UNITED STATES, INC.

  - Pivot belt tensioner for ribbed belt in direction of - **arrow** - to relieve tension on ribbed belt.
  - Secure tensioning element using Locking Tool T40098.
  - Remove ribbed belt.

Installing

NOTE:

- **Ribbed belt routing --> Ribbed belt, routing.**

  - Hold tensioning element with a box-end wrench, remove Locking Tool T40098 and relieve tension on tensioning element.
  - Check ribbed belt for correct positioning.
  - Start engine and check belt running.

 © 2011 Mitchell Repair Information Company, LLC.

Crankshaft belt pulley, removing and installing

Removing

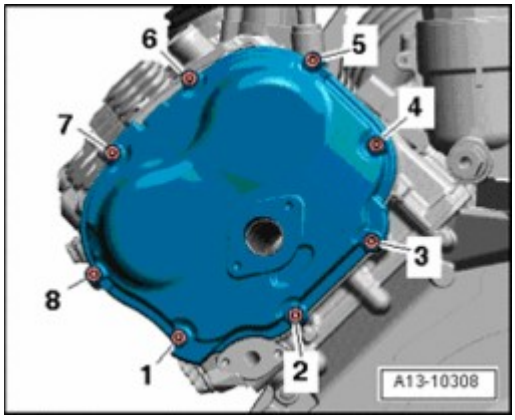

Fig. 91: Identifying Exhaust Pipe Fasteners
Courtesy of VOLKSWAGEN UNITED STATES, INC.

- For vehicles with auxiliary heater, remove bolts - **arrows** - for exhaust pipe of parking heater/auxiliary heater on noise insulation.

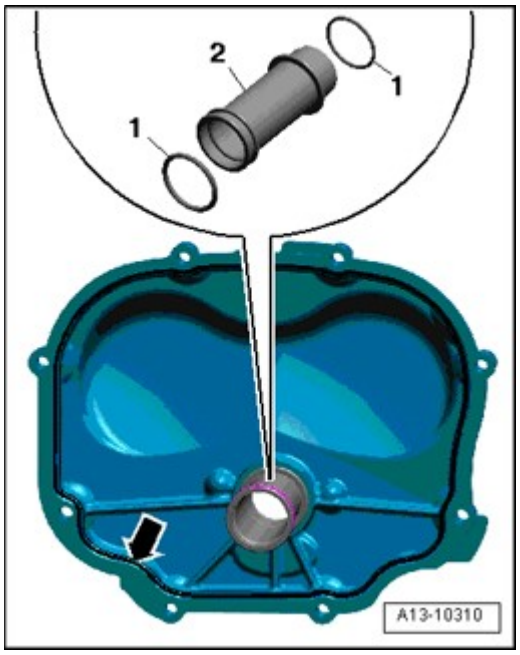

Fig. 92: Identifying Quick-Release Fasteners And Noise Insulation
Courtesy of VOLKSWAGEN UNITED STATES, INC.

- Loosen quick-release fasteners - **1** - and - **2** - and remove front noise insulation.
- Bring lock carrier into service position --> **Lock carrier, moving into service position**.
- Remove ribbed belt --> **Ribbed belt, removing and installing**

 © 2011 Mitchell Repair Information Company, LLC.

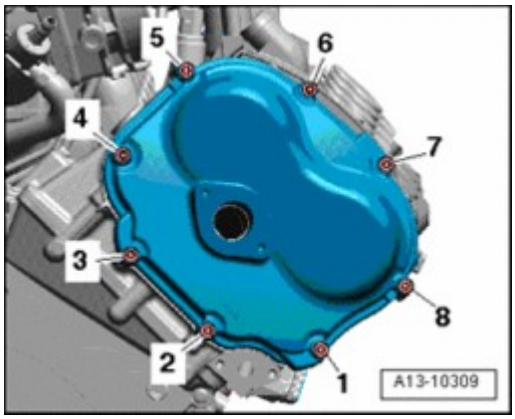

Fig. 93: Removing/Installing Vibration Damper/Belt Pulley
Courtesy of VOLKSWAGEN UNITED STATES, INC.

- Unfasten crankshaft belt pulley.

NOTE:

- **To loosen and tighten the crankshaft belt pulley, counter-hold at the central bolt using a box-end wrench.**

Installing

Installation is in reverse order of removal, note the following:

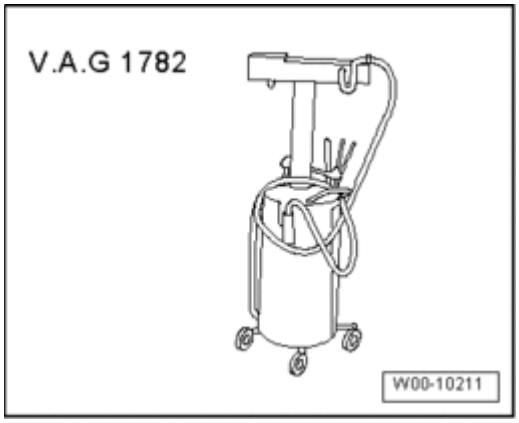

Fig. 94: Installing Crankshaft Belt Pulley With Original Bolts
Courtesy of VOLKSWAGEN UNITED STATES, INC.

- Only install crankshaft belt pulley with original bolts

- Only possible to install in one position: The hole - **arrow** - in crankshaft belt pulley must be positioned over protrusion on toothed belt sprocket

- Install lock carrier with attachments -->
  - **50 BODY, FRONT**
  - **50 - BODY - FRONT** for BODY EXTERIOR - CABRIOLET

 © 2011 Mitchell Repair Information Company, LLC.

.

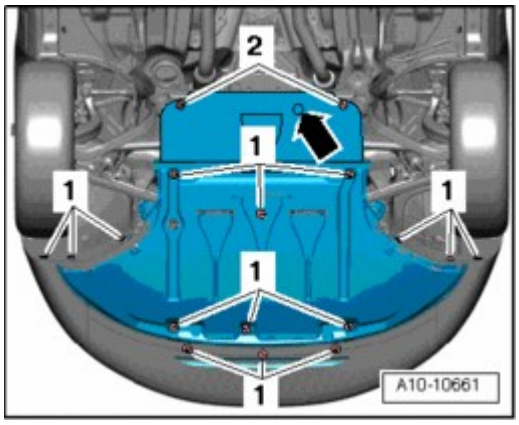

Fig. 95: Identifying Lock Carrier With Attachments
Courtesy of VOLKSWAGEN UNITED STATES, INC.

- Place torque support stop onto rubber buffer for torque support under its own weight and tighten nuts - **arrows** -.
- Install front bumper cover -->
  - **63 BUMPER**
  - **63 - BUMPERS** for BODY EXTERIOR - CABRIOLET

  .
- Check headlight adjustment -->
  - **01 - MAINTENANCE**
  - **01 - MAINTENANCE** for MAINTENANCE PROCEDURES - CABRIOLET

  .

Torque specifications

Component		Nm
Belt pulley to crankshaft		10 + 90 ° 1)2)

- 1) Replace bolt or nut
- 2) 90 °Corresponds to a 1/4 turn

Accessory assembly bracket, removing and installing

Special tools, testers and auxiliary items required

 © 2011 Mitchell Repair Information Company, LLC.

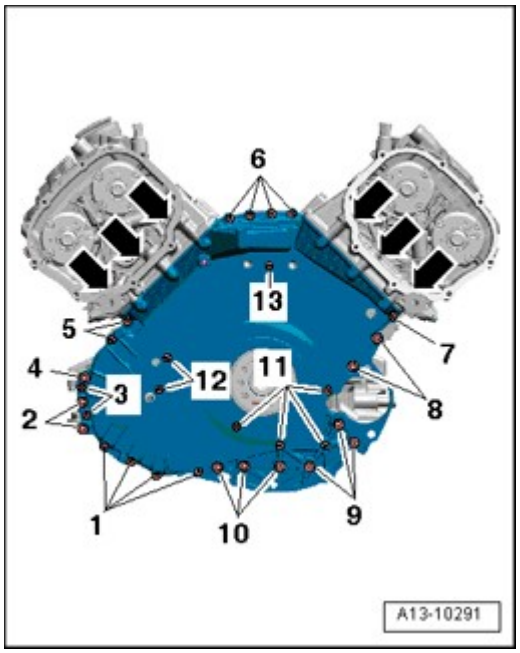

Fig. 96: Locking Tool T40098
Courtesy of VOLKSWAGEN UNITED STATES, INC.

- Locking Tool T40098

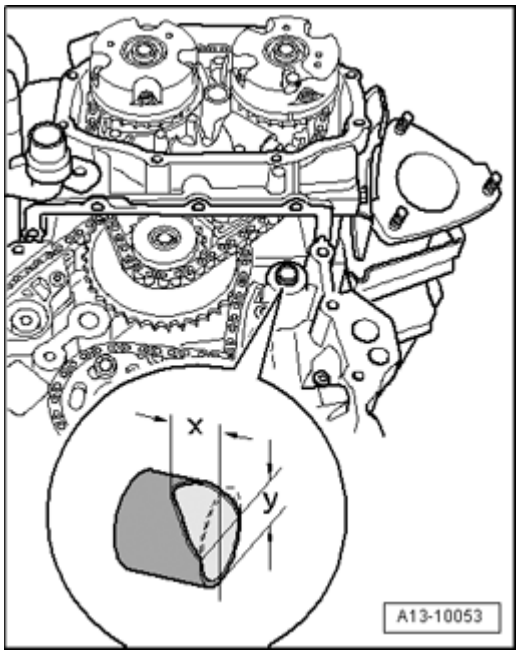

Fig. 97: Identifying Spring-Type Clip Pliers VAS 5024 A
Courtesy of VOLKSWAGEN UNITED STATES, INC.

- Spring-type clip pliers VAS 5024 A

Removing

 © 2011 Mitchell Repair Information Company, LLC.

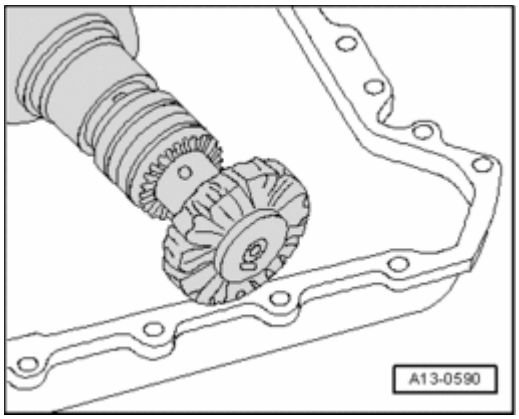

Fig. 98: Removing Engine Cover
Courtesy of VOLKSWAGEN UNITED STATES, INC.

- Remove engine cover - **arrows** -.

CAUTION: Observe procedures for disconnecting battery --> 27 BATTERY, STARTER, GENERATOR, CRUISE CONTROL .

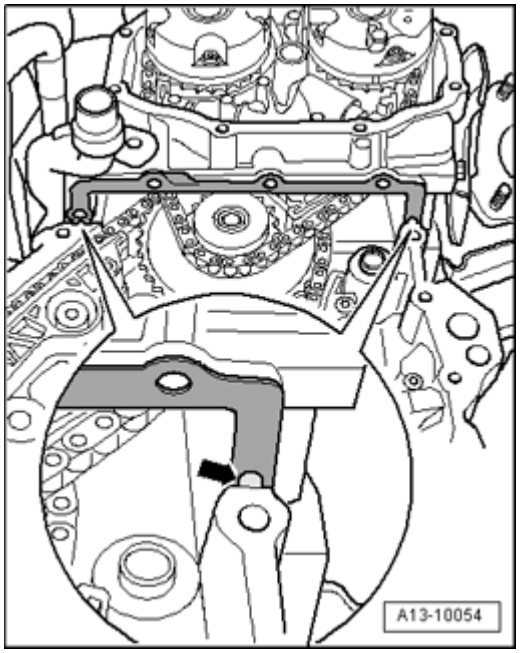

Fig. 99: Disconnecting Battery Ground (GND) Strap
Courtesy of VOLKSWAGEN UNITED STATES, INC.

- With ignition switched off, disconnect Battery Ground (GND) strap - **arrow** -.

NOTE:

- **Before removing ribbed belt, mark the turning direction on it with chalk or a felt tip pen. A reversed turning direction can cause damage to the belt under operating conditions.**

 © 2011 Mitchell Repair Information Company, LLC.

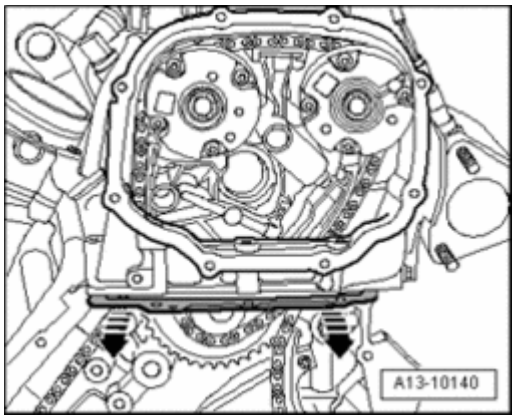

Fig. 100: Pivoting Belt Tensioner For Ribbed Belt To Relieve Tension On Ribbed Belt
Courtesy of VOLKSWAGEN UNITED STATES, INC.

- Pivot belt tensioner for ribbed belt in direction of - **arrow** - to relieve tension on ribbed belt.
- Secure tensioning element using Locking Tool T40098.
- Remove ribbed belt.

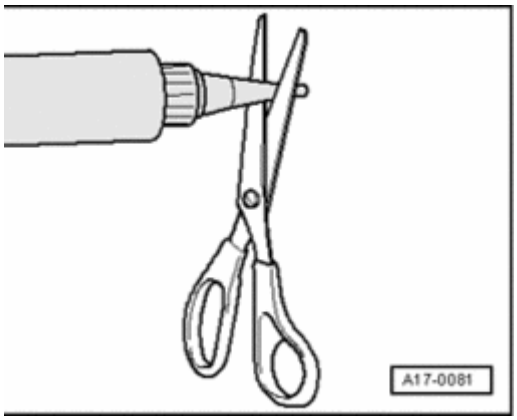

Fig. 101: Removing Ribbed Belt Tensioner With Engine Lifting Eye
Courtesy of VOLKSWAGEN UNITED STATES, INC.

- Remove ribbed belt tensioner with engine lifting eye - **arrows** -.
- Remove generator --> **27 BATTERY, STARTER, GENERATOR, CRUISE CONTROL**

 © 2011 Mitchell Repair Information Company, LLC.

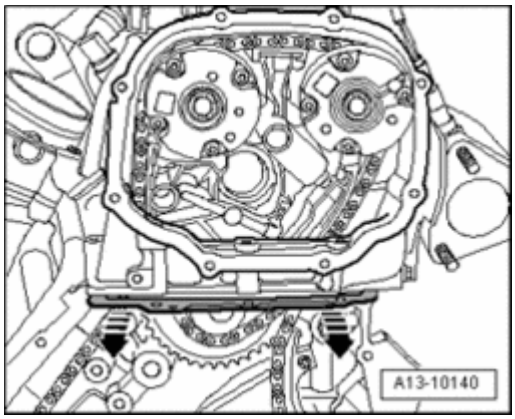

Fig. 102: Identifying Exhaust Pipe Fasteners
Courtesy of VOLKSWAGEN UNITED STATES, INC.

- For vehicles with auxiliary heater, remove bolts - **arrows** - for exhaust pipe of parking heater/auxiliary heater on noise insulation.

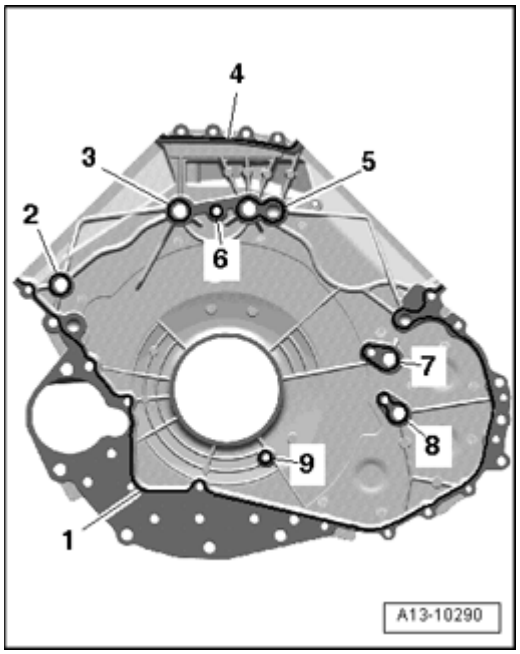

Fig. 103: Identifying Quick-Release Fasteners And Noise Insulation
Courtesy of VOLKSWAGEN UNITED STATES, INC.

- Loosen quick-release fasteners - **1** - and - **2** - and remove front noise insulation.

 © 2011 Mitchell Repair Information Company, LLC.

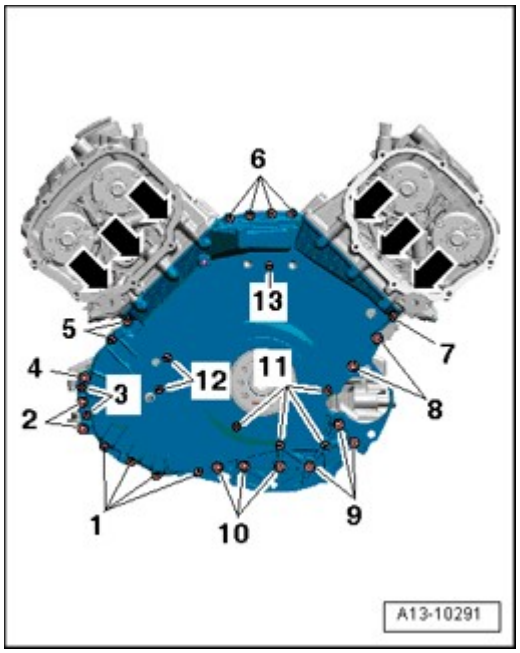

Fig. 104: Removing Bracket For Refrigerant Line On Oil Pan
Courtesy of VOLKSWAGEN UNITED STATES, INC.

- Remove bracket for refrigerant line on oil pan - **arrow** -.

 © 2011 Mitchell Repair Information Company, LLC.

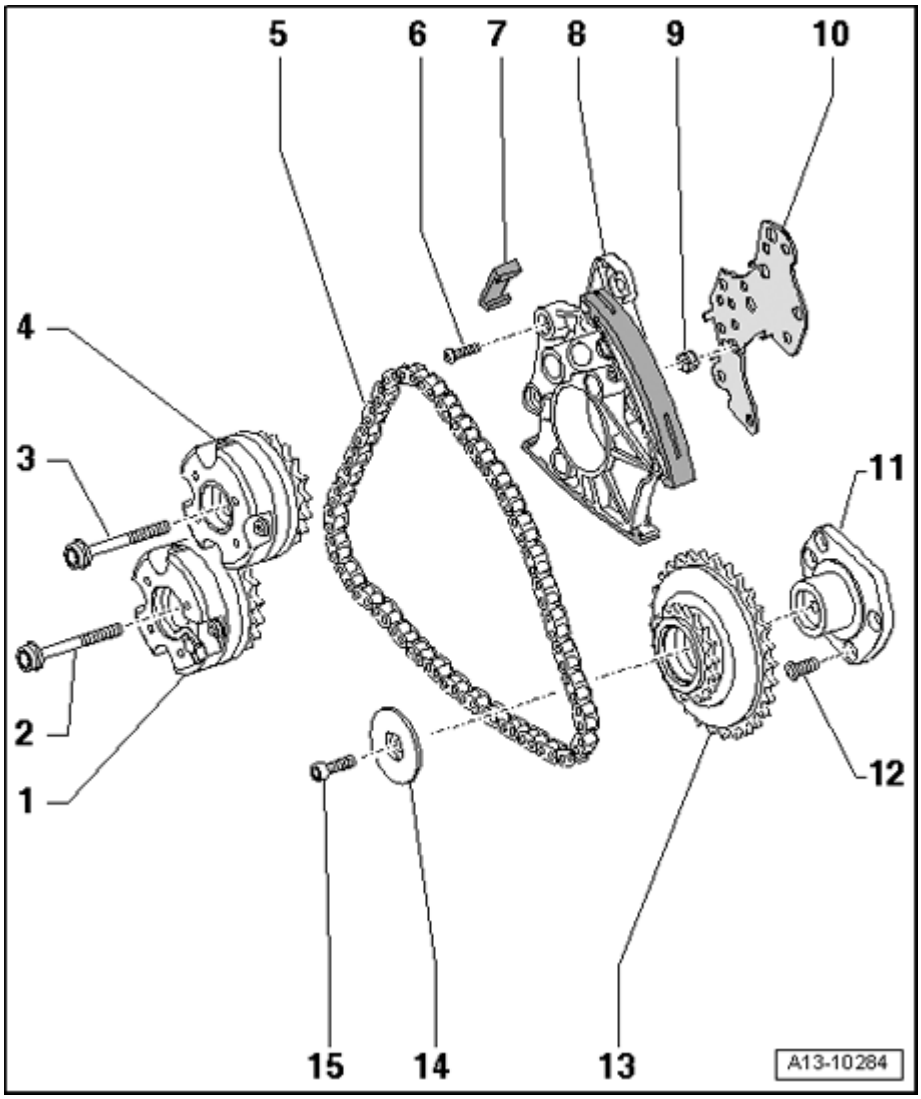

Fig. 105: Separating Connector For Wiring To Air Conditioning Compressor Clutch Solenoid
Courtesy of VOLKSWAGEN UNITED STATES, INC.

- Separate connector - **1** - for wiring to air conditioning compressor clutch solenoid.

CAUTION: The air conditioning refrigerant circuit must not be opened.

- Remove air conditioning compressor from bracket - **arrows** -.

NOTE:

- **To prevent damage to condenser and also to the refrigerant lines/hoses, ensure that the lines and hoses are not stretched, kinked or bent.**

- Hang up A/C compressor with attached lines at bottom of vehicle.

 © 2011 Mitchell Repair Information Company, LLC.

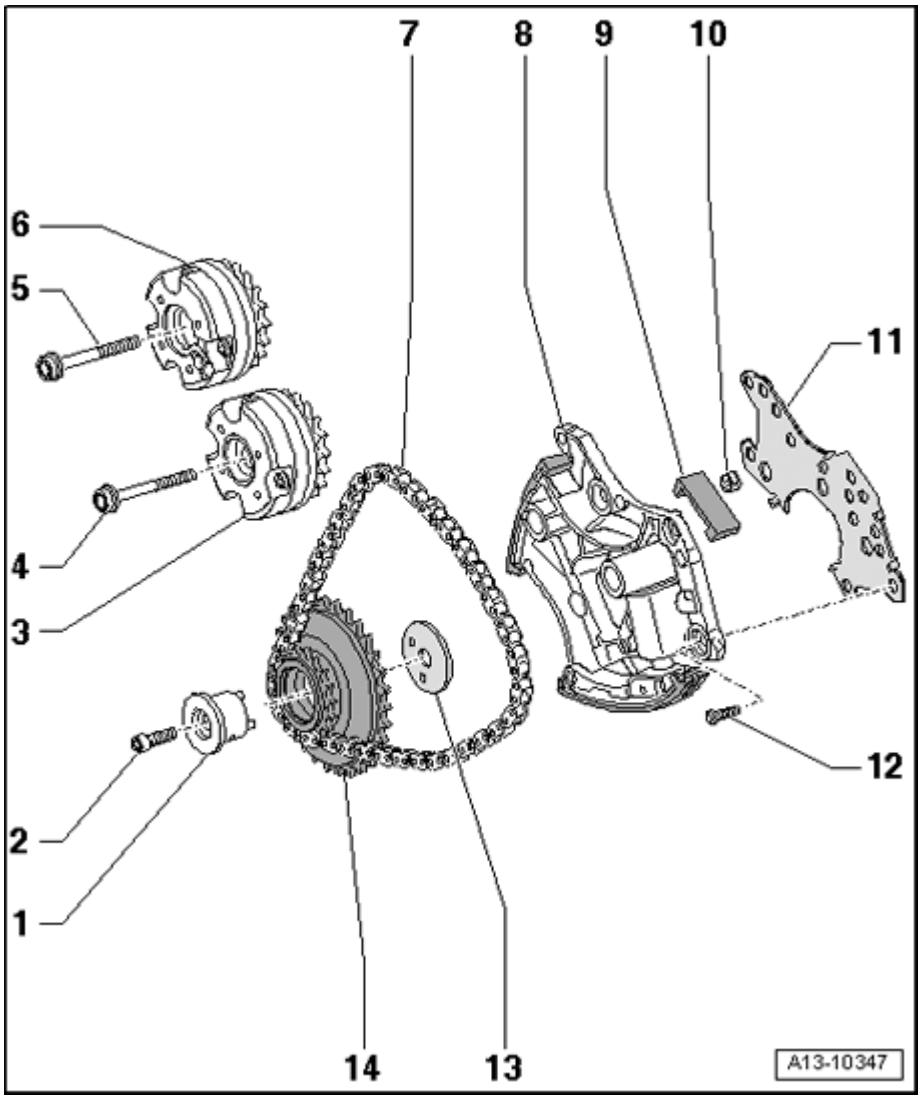

Fig. 106: Removing/Installing Accessory Assembly Bracket Bolts
Courtesy of VOLKSWAGEN UNITED STATES, INC.

- Remove accessory assembly bracket - bolts - **1 to 6** -.

Installing

Installation is in reverse order of removal, note the following:

 © 2011 Mitchell Repair Information Company, LLC.

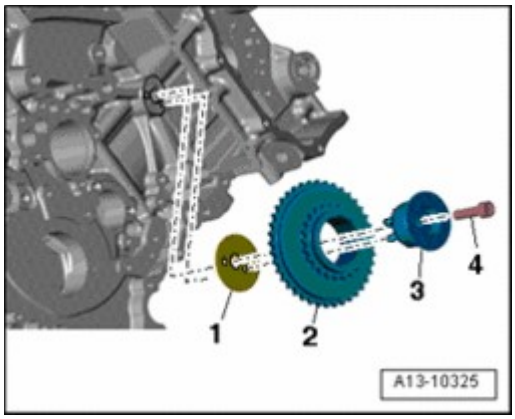

Fig. 107: Removing/Installing Accessory Assembly Bracket Bolts
Courtesy of VOLKSWAGEN UNITED STATES, INC.

- Then tighten bolts in sequence - **1 to 6** -.
- Install generator --> **27 BATTERY, STARTER, GENERATOR, CRUISE CONTROL**
- Install A/C compressor --> **87 AIR CONDITIONING**
- Install ribbed belt --> **Ribbed belt, removing and installing**.

- Connect battery. Necessary measures --> **27 BATTERY, STARTER, GENERATOR, CRUISE CONTROL**

Torque specifications

Component		Nm
Accessory assembly bracket to cylinder block		45 1)
Ribbed belt tensioner to accessory assembly bracket		23
• 1) Insert with locking fluid		

Toothed belt drive, overview

Before removing ribbed belt, mark running direction with chalk or felt tip marker. A reversed turning direction can cause damage to belt under operating conditions.

 © 2011 Mitchell Repair Information Company, LLC.

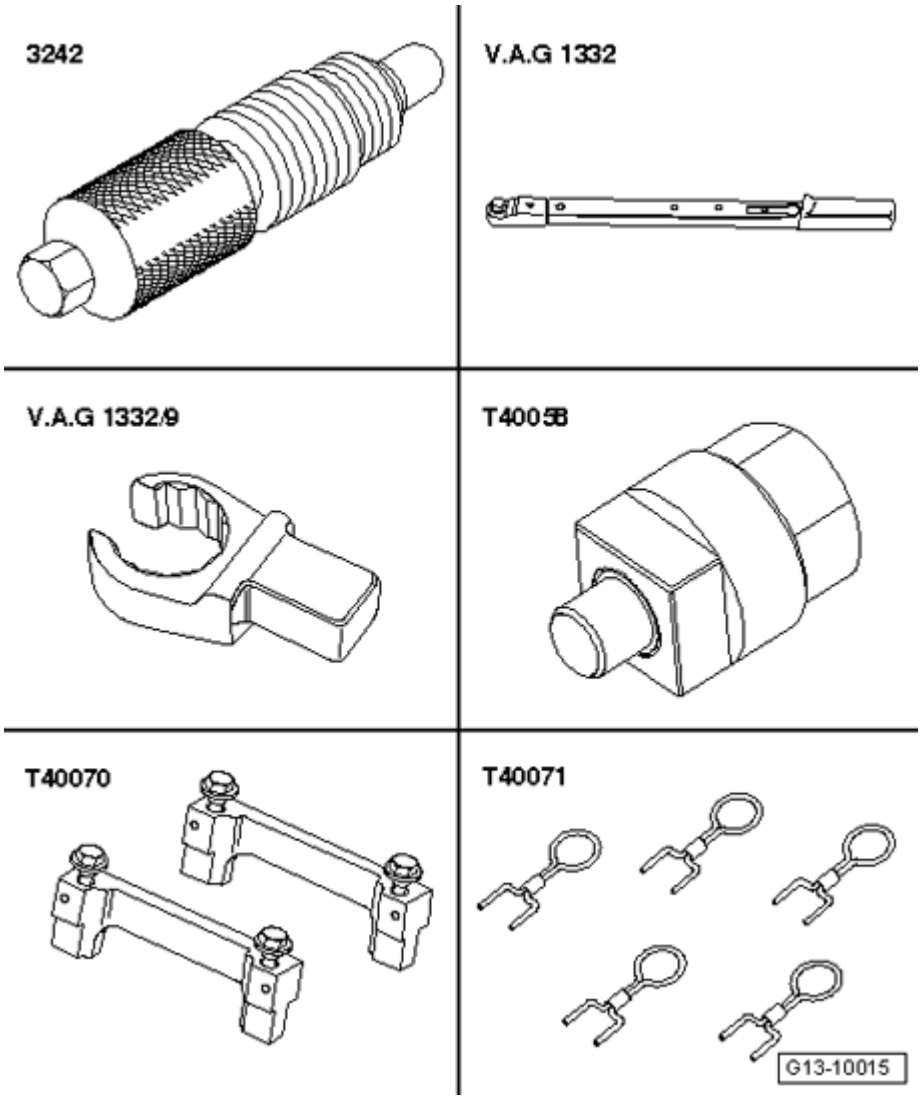

Fig. 108: Toothed Belt Drive, Overview
Courtesy of VOLKSWAGEN UNITED STATES, INC.

1 - 10 Nm

2 - Toothed belt cover, upper

3 - 50 Nm plus an additional 180 ° ($^{1}/_{2}$ turn)

- Use Retainer 3036 for loosening and tightening **Loosening camshaft sprocket**

4 - Camshaft sprocket

- When removing and installing, remove toothed belt --> **Toothed belt, removing and installing**
- Camshaft sprocket, removing **Pulling off camshaft sprocket**

 © 2011 Mitchell Repair Information Company, LLC.

5 - 10 Nm

- Insert with locking fluid
- Locking fluid

6 - Rear toothed belt cover

7 - Woodruff key

- Check for secure seat

8 - 25 Nm

9 - Semi-automatic tensioning roller

10 - Coolant pump

- Removing and installing --> **Coolant pump, removing and installing**

11 - O-ring

- Replace

12 - 25 Nm

13 - Damper roller

14 - 15 Nm

15 - 35 Nm

16 - Damper roller

17 - Sealing flange

- Removing and installing --> **Front sealing flange, removing and installing**

18 - Toothed belt gear diamond disc

- Replace after removing toothed belt gear

19 - Crankshaft toothed belt sprocket

- There must be no oil on contact surface between toothed belt sprocket and crankshaft
- Only possible to install in one position

 © 2011 Mitchell Repair Information Company, LLC.

20 - 90 Nm plus an additional 90 ° ($^{1}/_{4}$ turn)

- Replace
- Do not oil
- Fastening Counter Support 3415 **Crankshaft toothed belt sprocket, removing and installing**

21 - Toothed belt

- Before removing, mark direction of rotation using chalk or felt-tip marker
- Check for wear
- Removing --> **Toothed belt, removing and installing**
- Installing (adjusting valve timing) --> **Toothed belt, removing and installing**

22 - Toothed belt cover, lower

23 - Cover for toothed belt guard

Loosening camshaft sprocket

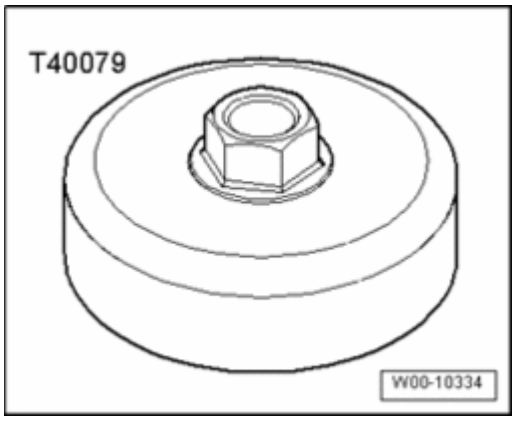

Fig. 109: Loosening Bolt For Camshaft Sprocket Using Retainer 3036
Courtesy of VOLKSWAGEN UNITED STATES, INC.

- When loosening and tightening centered bolt, use Retainer 3036.

Pulling off camshaft sprocket

 © 2011 Mitchell Repair Information Company, LLC.

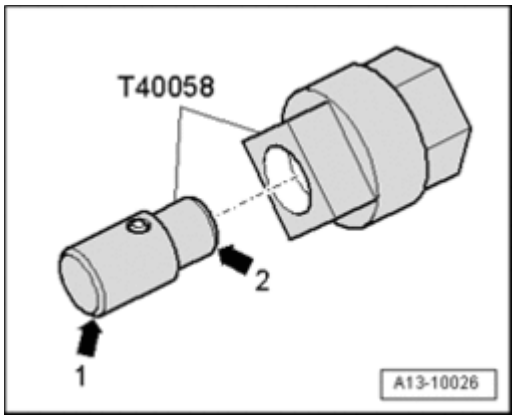

Fig. 110: Pulling Off Camshaft Gear Using Puller T40001, Claw T40001/6 And Claw T40001/7
Courtesy of VOLKSWAGEN UNITED STATES, INC.

- Remove camshaft sprocket using puller T40001 and Claw T40001/6 and Claw T40001/7.

Crankshaft toothed belt sprocket, removing and installing

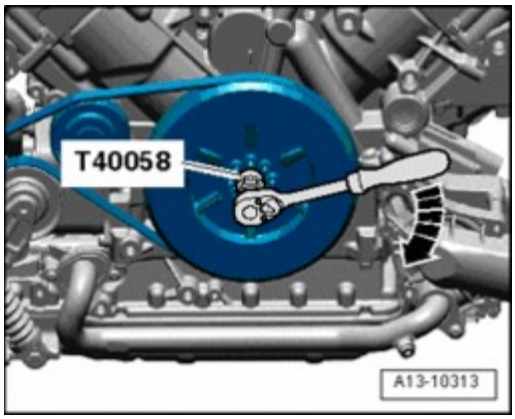

Fig. 111: Crankshaft Toothed Belt Sprocket, Removing And Installing
Courtesy of VOLKSWAGEN UNITED STATES, INC.

- When loosening and tightening centered bolt, use Retainer 3415.

Toothed belt, removing and installing

Special tools, testers and auxiliary items required

 © 2011 Mitchell Repair Information Company, LLC.

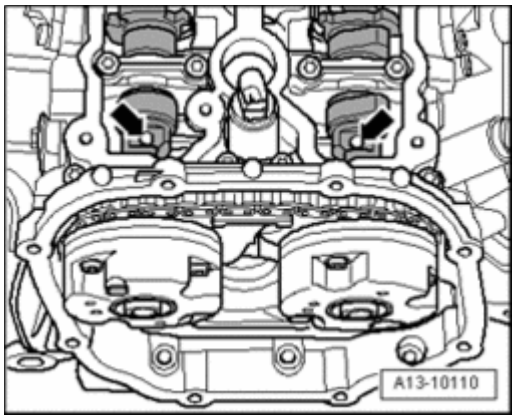

Fig. 112: Identifying Special Tool T10020 Two Hole Pin Wrench
Courtesy of VOLKSWAGEN UNITED STATES, INC.

- Toothed Belt Tensioner T10020

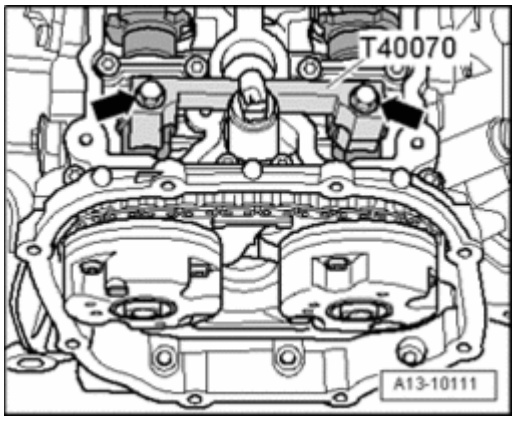

Fig. 113: Locking Tool T40098
Courtesy of VOLKSWAGEN UNITED STATES, INC.

- Locking Tool T40098

Removing

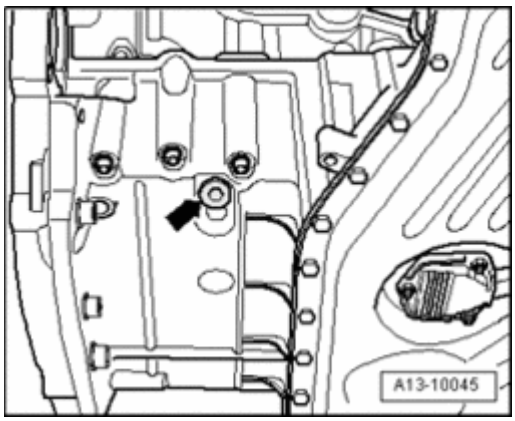

Fig. 114: Removing Engine Cover

 © 2011 Mitchell Repair Information Company, LLC.

Courtesy of VOLKSWAGEN UNITED STATES, INC.

- Remove engine cover - **arrows** -.

CAUTION: Cover cap of expansion tank with rag and open carefully, as hot steam or hot coolant may escape when opening.

- Open cap of coolant expansion tank.

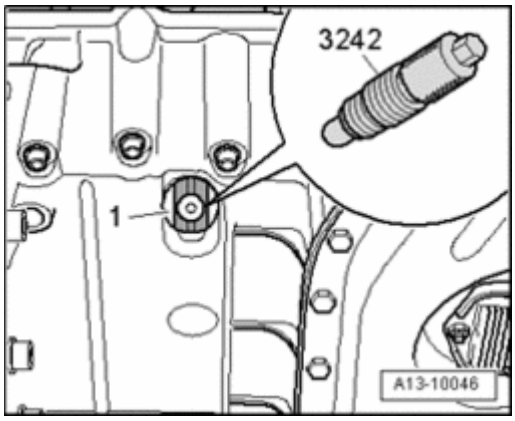

Fig. 115: Identifying Exhaust Pipe Fasteners
Courtesy of VOLKSWAGEN UNITED STATES, INC.

- For vehicles with auxiliary heater, remove bolts - **arrows** - for exhaust pipe of parking heater/auxiliary heater on noise insulation.

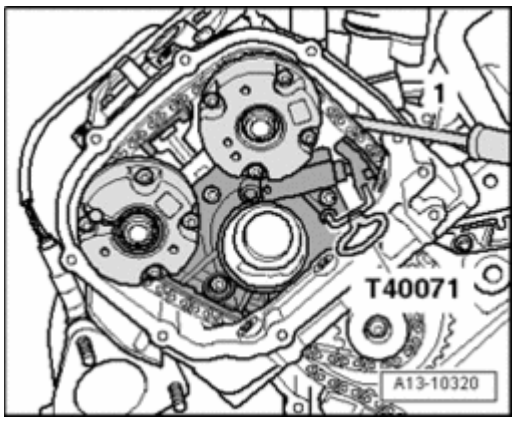

Fig. 116: Identifying Quick-Release Fasteners And Noise Insulation
Courtesy of VOLKSWAGEN UNITED STATES, INC.

- Loosen quick-release fasteners - **1** - and - **2** - and remove front noise insulation.
- Drain engine coolant --> **Cooling system, draining and filling**
- Bring lock carrier into service position --> **Lock carrier, moving into service position**.

 © 2011 Mitchell Repair Information Company, LLC.

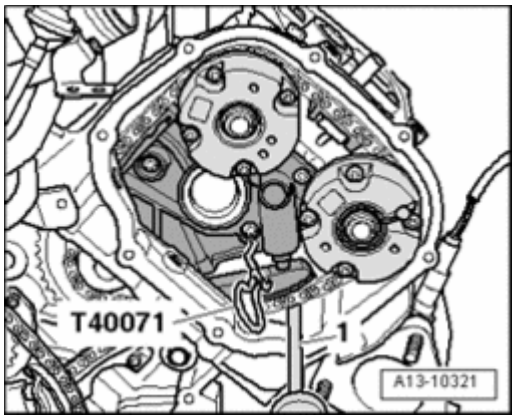

Fig. 117: Disconnecting Coolant Pipe
Courtesy of VOLKSWAGEN UNITED STATES, INC.

- Disconnect coolant pipe - **arrow** -.

NOTE:

- **Before removing ribbed belt, mark the turning direction on it with chalk or a felt tip pen. A reversed turning direction can cause damage to the belt under operating conditions.**

- Mark direction of rotation of ribbed belt.

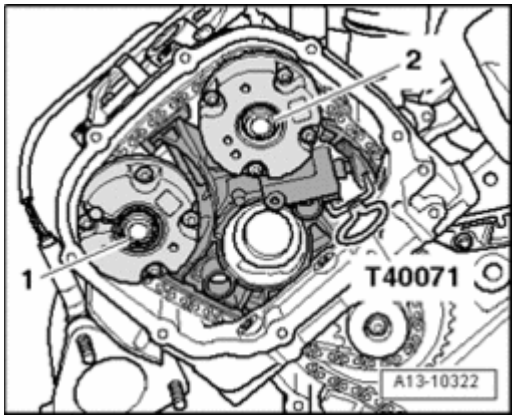

Fig. 118: Pivoting Belt Tensioner For Ribbed Belt To Relieve Tension On Ribbed Belt
Courtesy of VOLKSWAGEN UNITED STATES, INC.

- Pivot belt tensioner for ribbed belt in direction of - **arrow** - to relieve tension on ribbed belt.
- Secure tensioning element using Locking Tool T40098.
- Remove ribbed belt.

 © 2011 Mitchell Repair Information Company, LLC.

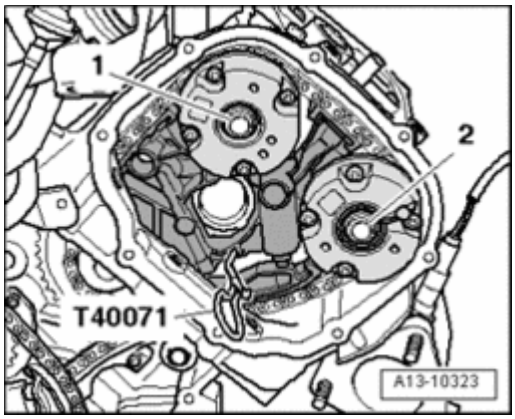

Fig. 119: Setting Crankshaft And Camshaft To TDC At Cylinder 1
Courtesy of VOLKSWAGEN UNITED STATES, INC.

- Bring camshaft gear to marking for TDC cylinder 1 by turning crankshaft. Marking on camshaft gear must align with arrow on toothed belt guard.

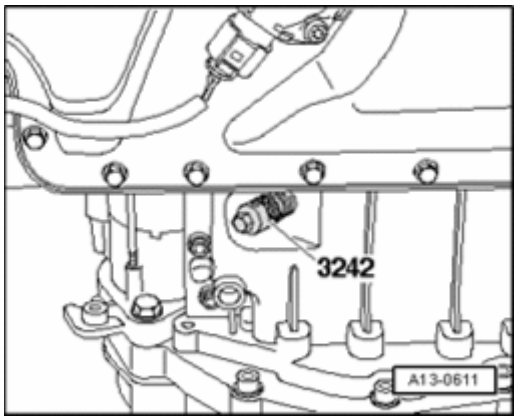

Fig. 120: Removing/Installing Vibration Damper/Belt Pulley
Courtesy of VOLKSWAGEN UNITED STATES, INC.

- Remove vibration damper/belt pulley.

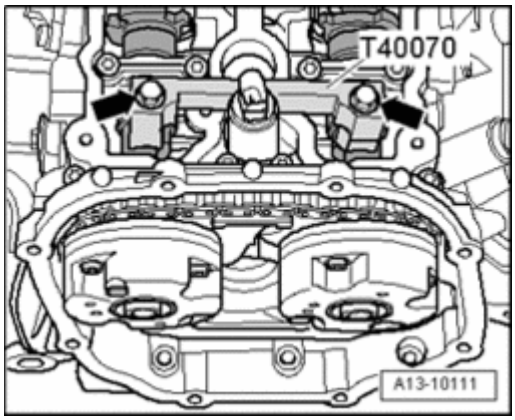

Fig. 121: Removing Bolts From Lower Section Of Toothed Belt Guard
Courtesy of VOLKSWAGEN UNITED STATES, INC.

 © 2011 Mitchell Repair Information Company, LLC.

- Remove bolts from lower toothed belt cover - **arrows** -.

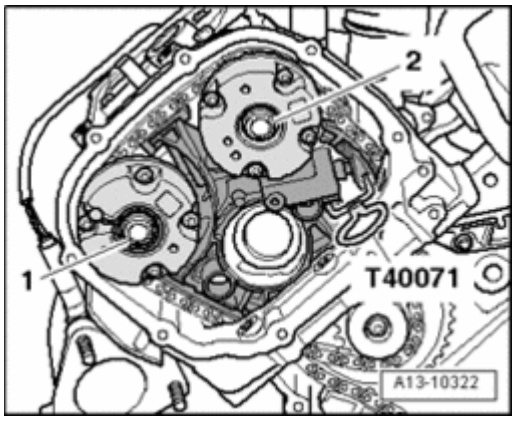

Fig. 122: Identifying Remaining Bolts From Toothed Belt Guard
Courtesy of VOLKSWAGEN UNITED STATES, INC.

- Remove remaining bolts from toothed belt guard - **arrows** - and remove toothed belt guard from engine.
- Mark rotational direction of toothed belt.
- Loosen tensioning roller and remove toothed belt.
- Then, turn crankshaft back slightly.

Installing

NOTE:

- **When turning camshaft, crankshaft must not be at TDC. Valves and/or pistons may be damaged.**
- **The engine must be no more than warm to touch.**

- Place toothed belt onto crankshaft sprocket (observe direction of rotation).
- Secure lower toothed belt cover with two lower bolts.
- Install vibration damper/belt pulley with new bolts.

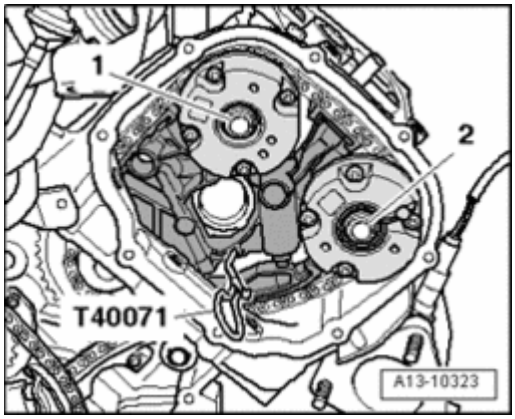

Fig. 123: Setting Crankshaft And Camshaft To TDC At Cylinder 1
Courtesy of VOLKSWAGEN UNITED STATES, INC.

 © 2011 Mitchell Repair Information Company, LLC.

- Set crankshaft and camshaft to TDC at cylinder 1 - **arrows** -.

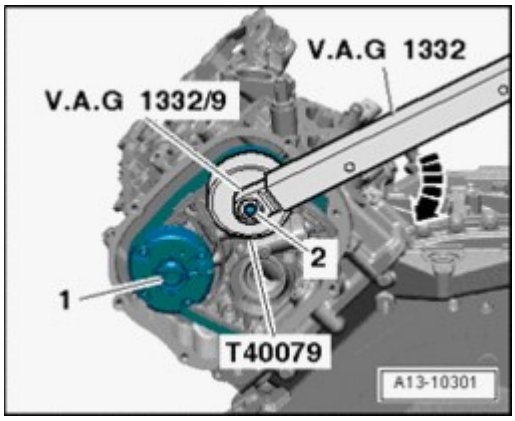

Fig. 124: Routing Toothed Belt In Sequence
Courtesy of VOLKSWAGEN UNITED STATES, INC.

- Route toothed belt in sequence: Tensioning roller, camshaft gear, coolant pump and last over relay pulley - **arrow** -.

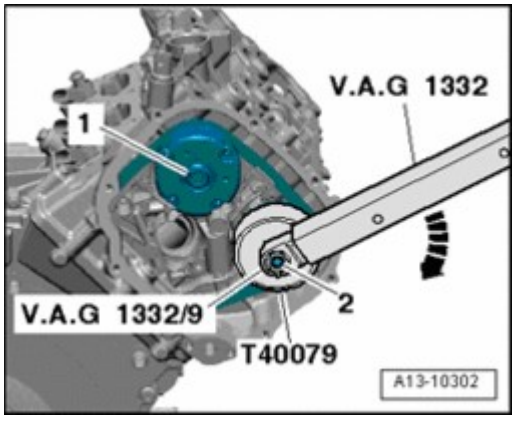

Fig. 125: Identifying Tensioning Roller Is Properly Seated In Cylinder Head
Courtesy of VOLKSWAGEN UNITED STATES, INC.

NOTE:

- **Be sure tensioning roller is properly seated in cylinder head.**

 © 2011 Mitchell Repair Information Company, LLC.

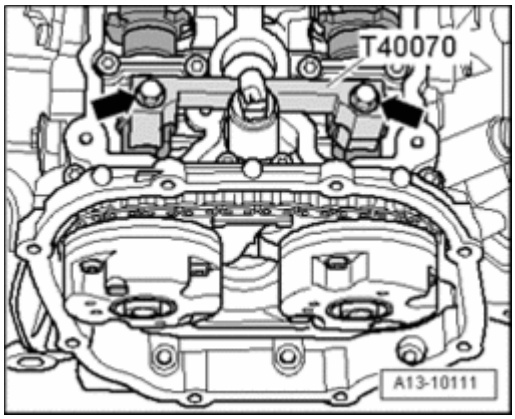

Fig. 126: Tensioning Toothed Belt
Courtesy of VOLKSWAGEN UNITED STATES, INC.

- Tension toothed belt. Do this by turning hex key at eccentric toward right (in direction of - **arrow** -) until notch is positioned above tab.
- Release tension on toothed belt again.
- Now tension toothed belt until notch and tab align.
- Tighten tensioning roller nut.
- Turn crankshaft 2 revolutions further in direction of engine rotation until engine is positioned at TDC again. For this it is necessary that the last 45 ° ($^{1}/_{8}$ rotation) is turned without interruption.
- Check tension of toothed belt again. Specified value: Tab and notch align.

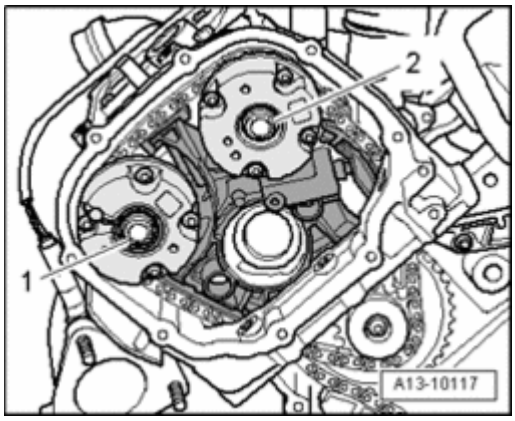

Fig. 127: Setting Crankshaft And Camshaft To TDC At Cylinder 1
Courtesy of VOLKSWAGEN UNITED STATES, INC.

- Check valve timing again.

If markings do not match:

- Repeat valve timing adjustment.

If markings match:

 © 2011 Mitchell Repair Information Company, LLC.

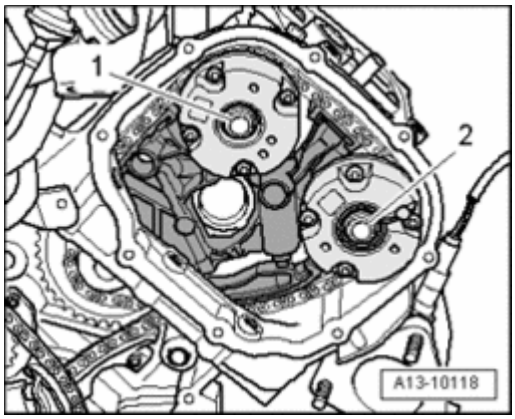

Fig. 128: Identifying Toothed Belt Guard Bolts
Courtesy of VOLKSWAGEN UNITED STATES, INC.

- Install toothed belt guard - **arrows** -.
- Install crankshaft belt pulley --> **Crankshaft belt pulley, removing and installing**.
- Install ribbed belt --> **Ribbed belt, removing and installing**.
- Fill with coolant --> **Cooling system, draining and filling**.

- Install lock carrier with attachments -->
  - **50 BODY, FRONT**
  - **50 - BODY - FRONT** for BODY EXTERIOR - CABRIOLET

.

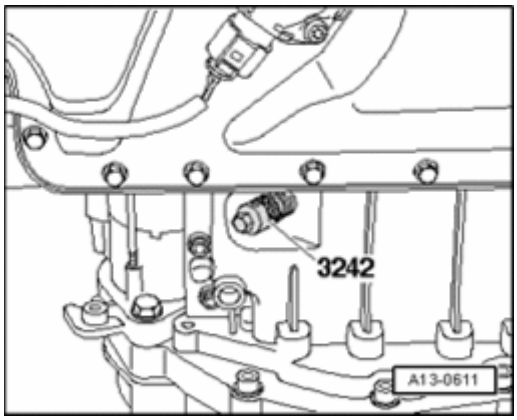

Fig. 129: Identifying Lock Carrier With Attachments
Courtesy of VOLKSWAGEN UNITED STATES, INC.

- Place torque support stop onto rubber buffer for torque support under its own weight and tighten nuts - **arrows** -.
- Install front bumper cover -->
  - **63 BUMPER**
  - **63 - BUMPERS** for BODY EXTERIOR - CABRIOLET

.

 © 2011 Mitchell Repair Information Company, LLC.

- Check headlight adjustment -->
  - **01 - MAINTENANCE**
  - **01 - MAINTENANCE** for MAINTENANCE PROCEDURES - CABRIOLET

  .
- Install noise insulation pan.
- Install engine cover.

Torque specifications

Component		Nm
Toothed belt tensioning roller to cylinder head		23
Lower toothed belt cover to cylinder block		10 3)
Center toothed belt guard to cylinder block		10 3)
Vibration damper/belt pulley		10 + 90 ° 1)2)
Torque support stop		28

- 1) Replace bolt
- 2) 90 °Corresponds to a 1/4 turn
- 3) Insert with locking fluid

SEALING FLANGES AND FLYWHEEL/DRIVE PLATE, REMOVING AND INSTALLING

Sealing flanges and flywheel/drive plate, removing and installing

NOTE:

- **Servicing clutch:**
- **Observe clutch removal instructions -->**
  - **30 CLUTCH for 5 SPD. MANUAL TRANSMISSION 012/01W FRONT WHEEL DRIVE**
  - **30 CLUTCH for 5 SPD. MANUAL TRANSMISSION 01A ALL WHEEL DRIVE**
  - **30 CLUTCH for 6 SPD. MANUAL TRANSMISSION 01E ALL WHEEL DRIVE**
  - **30 CLUTCH for 6-SPEED MANUAL TRANSMISSION 01X, FRONT-WHEEL DRIVE**
  - **30 CLUTCH for 6-SPEED MANUAL TRANSMISSION 02X, FOUR-WHEEL DRIVE**
  - **30 CLUTCH for 6-SPEED MANUAL TRANSMISSION 0A3, ALL WHEEL DRIVE**
- **30 CLUTCH ; Clutch mechanism, servicing**

 © 2011 Mitchell Repair Information Company, LLC.

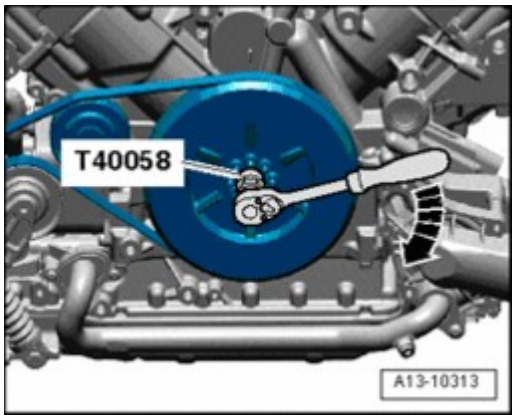

Fig. 130: Sealing Flanges And Flywheel/Drive Plate Remove/Install Components
Courtesy of VOLKSWAGEN UNITED STATES, INC.

1 - 15 Nm

2 - Seal

- Replacing --> **Crankshaft seal - ribbed belt side, replacing**.
- Do not oil

3 - Sealing flange, front

- Must be located on dowel sleeves
- Removing and installing --> **Front sealing flange, removing and installing**

4 - Cylinder block

- Removing and installing crankshaft --> **Crankshaft, removing and installing**
- Piston and connecting rod, disassembling and assembling --> **Piston and connecting rod, disassembling and assembling**

5 - Dual mass flywheel/drive plate bolt

- Replace
- Dual mass flywheel tightening torque **Torque specification**
- Drive plate tightening torque **Torque specification**

6 - Dual-mass flywheel/drive plate

- Dual-mass flywheel, removing and installing --> **Dual-mass flywheel and drive plate, removing and installing**
- Drive plate, removing and installing --> **Dual-mass flywheel and drive plate, removing and installing**
- Only possible to install in one position - Bores are offset

 © 2011 Mitchell Repair Information Company, LLC.

7 - Intermediate plate

- Must be located on dowel sleeves
- Do not damage or bend when doing assembly work
- Is hooked in at sealing flange **Installing intermediate plate**

8 - 15 Nm

9 - Sealing flange with rear oil seal

- Only replaced as complete unit
- To install, use provided guide sleeve
- Do not oil or grease sealing lip of oil seal
- Before installing, remove oil remains from crankshaft journal with a clean cloth
- Guide sleeve may only be removed after sealing flange has been slid onto crankshaft pin.

Installing intermediate plate

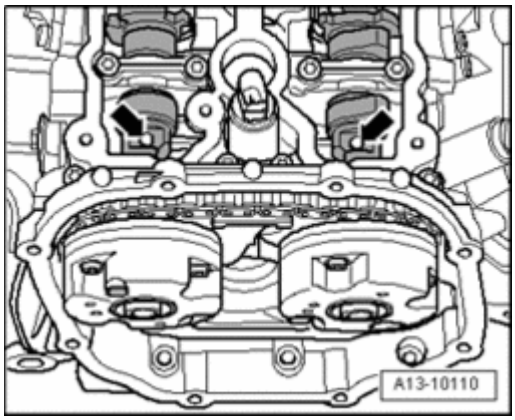

Fig. 131: Identifying Intermediate Plate, Sealing Flange And Dowel Sleeves
Courtesy of VOLKSWAGEN UNITED STATES, INC.

- Hook in intermediate plate at sealing flange and push it onto alignment sleeves - **arrows** -.

Crankshaft seal - ribbed belt side, replacing

 © 2011 Mitchell Repair Information Company, LLC.

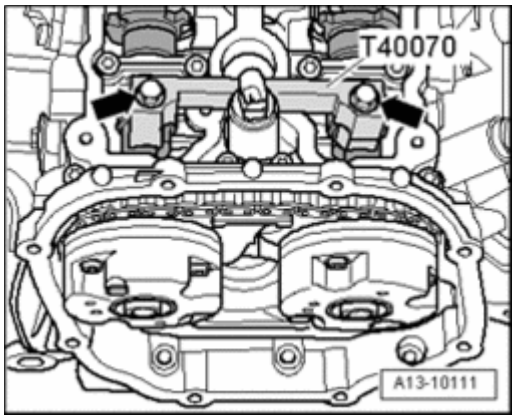

Fig. 132: Identifying Special Tools - Crankshaft Seal - Ribbed Belt Side, Replacing
Courtesy of VOLKSWAGEN UNITED STATES, INC.

Special tools, testers and auxiliary items required

- Seal Remover 3203
- Counter-holder tool 3415
- Assembly tool T10053
- Torque wrench V.A.G 1331
- Torque wrench V.A.G 1332

Removing

- Remove ribbed belt --> **Ribbed belt, removing and installing**.
- Toothed belt, removing --> **Toothed belt drive, overview**.

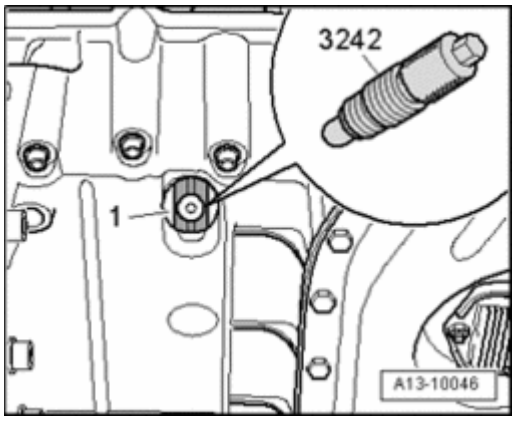

Fig. 133: Securing Toothed Belt Gear Using Counter Support 3415
Courtesy of VOLKSWAGEN UNITED STATES, INC.

- Loosen toothed belt crankshaft sprocket by holding sprocket with Counter Support 3415.

 © 2011 Mitchell Repair Information Company, LLC.

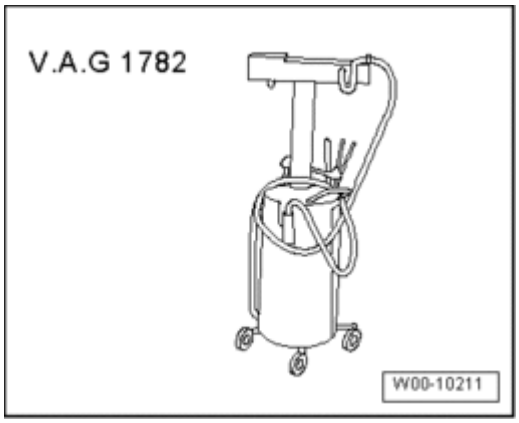

Fig. 134: Identifying Center Bolt, Crankshaft Toothed Belt Gear & Diamond Disc
Courtesy of VOLKSWAGEN UNITED STATES, INC.

- Remove toothed belt crankshaft sprocket center bolt - **1** - and remove sprocket - **2** - and diamond disc - **3** -.

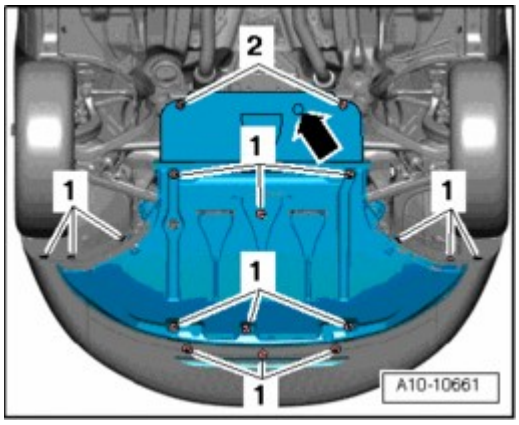

Fig. 135: Identifying Center Bolt & Crankshaft
Courtesy of VOLKSWAGEN UNITED STATES, INC.

- To guide seal puller, thread center bolt into crankshaft by hand until stop.
- Remove inner part of Seal Remover 3203 nine rotations (approx. 20 mm) from outer part and secure with knurled-head screw.

 © 2011 Mitchell Repair Information Company, LLC.

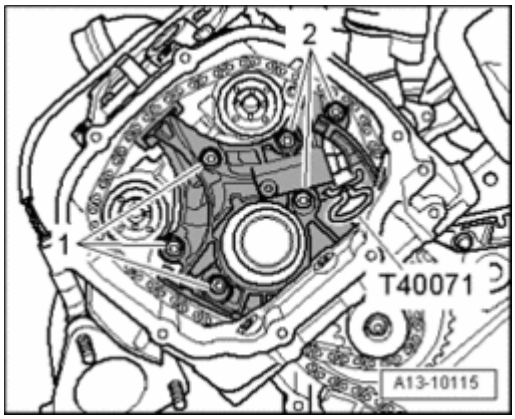

Fig. 136: Identifying Special Tool - Seal Puller 3203
Courtesy of VOLKSWAGEN UNITED STATES, INC.

- Grease threaded head of Seal Remover 3203 , position and install into oil seal as far as possible with forceful pressure.
- Loosen knurled screw and turn inner portion against crankshaft until oil seal is pulled out.
- Secure seal remover in a vise at the flat spots. Remove seal using pliers

Installing

- Clean running and sealing surface.
- Before installing, remove oil remains from end of crankshaft with a clean cloth.

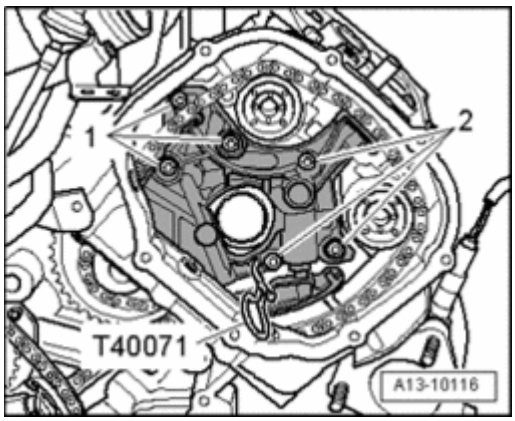

Fig. 137: Identifying Guide Sleeve T10053/1 Mounted Onto Crankshaft Journal
Courtesy of VOLKSWAGEN UNITED STATES, INC.

- Position guide sleeve T10053/1 of assembly tool T10053 on end of crankshaft.
- Slide sealing ring over guide sleeve onto crankshaft pin.

 © 2011 Mitchell Repair Information Company, LLC.

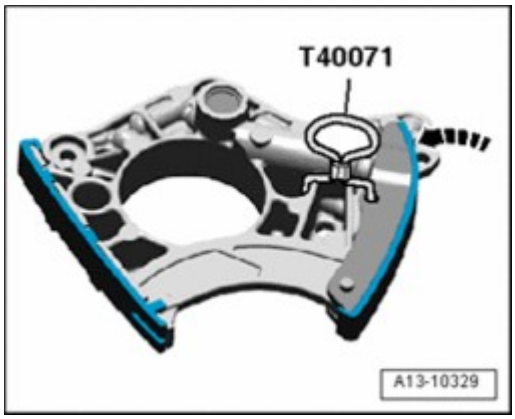

Fig. 138: Identifying Press Sleeve T10053 & Bolt Mounted
Courtesy of VOLKSWAGEN UNITED STATES, INC.

- Press in seal using center bolt of toothed belt sprocket and pressure sleeve of assembly tool T10053 until it is flush.
- Replace center bolt for toothed belt sprocket.

NOTE:

- **There must be no oil on the contact surface between the toothed belt sprocket and crankshaft.**
- **Do not oil the bolt for crankshaft toothed belt sprocket.**

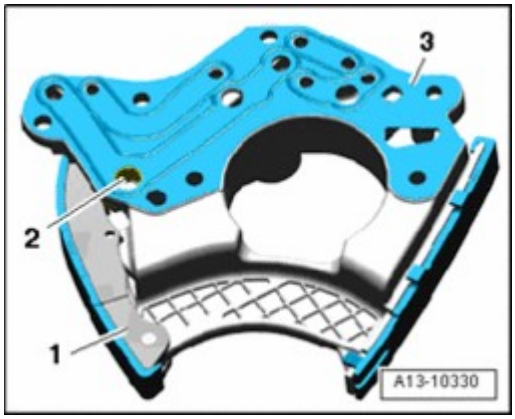

Fig. 139: Identifying Center Bolt, Crankshaft Toothed Belt Gear & Diamond Disc
Courtesy of VOLKSWAGEN UNITED STATES, INC.

- Install crankshaft toothed belt gear - **2** - with new diamond disc - **3** - and new center bolt - **1** -.

 © 2011 Mitchell Repair Information Company, LLC.

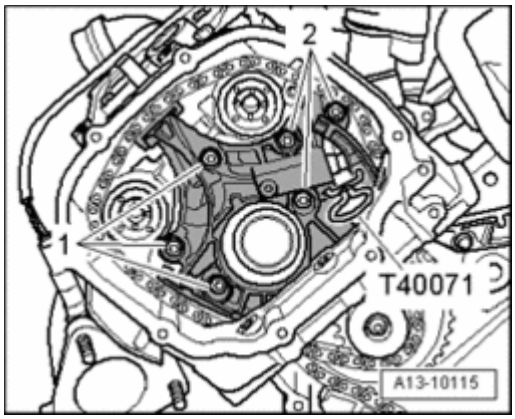

Fig. 140: Securing Toothed Belt Gear Using Counter Support 3415
Courtesy of VOLKSWAGEN UNITED STATES, INC.

- Hold toothed belt crankshaft sprocket with Counter Support 3415 and tighten.

Installing toothed belt (Adjusting valve timing) --> **Toothed belt, removing and installing**

- Install ribbed belt --> **Ribbed belt, removing and installing**.
- Install lock carrier with attachments -->
  - **50 BODY, FRONT**
  - **50 - BODY - FRONT** for BODY EXTERIOR - CABRIOLET

.

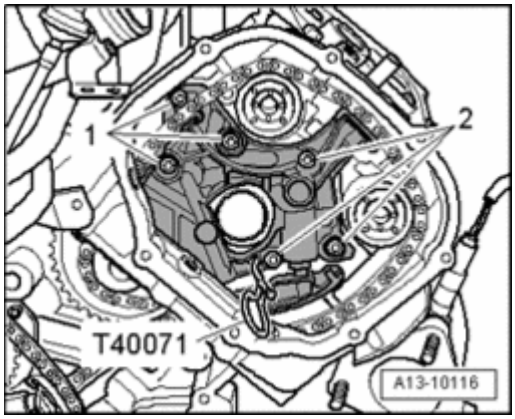

Fig. 141: Identifying Lock Carrier With Attachments
Courtesy of VOLKSWAGEN UNITED STATES, INC.

- Place torque support stop onto rubber buffer for torque support under its own weight and tighten nuts - **arrows** -.
- Install front bumper cover -->
  - **63 BUMPER**
  - **63 - BUMPERS** for BODY EXTERIOR - CABRIOLET

.

 © 2011 Mitchell Repair Information Company, LLC.

- Check headlight adjustment -->
  - **01 - MAINTENANCE**
  - **01 - MAINTENANCE** for MAINTENANCE PROCEDURES - CABRIOLET

.

Torque specifications

Component		Nm
Torque support stop		28
Toothed belt sprocket to crankshaft		90 + 90 ° 1)2)

- 1) Replace bolt
- 2) 90 °Corresponds to a 1/4 turn

Front sealing flange, removing and installing

 © 2011 Mitchell Repair Information Company, LLC.

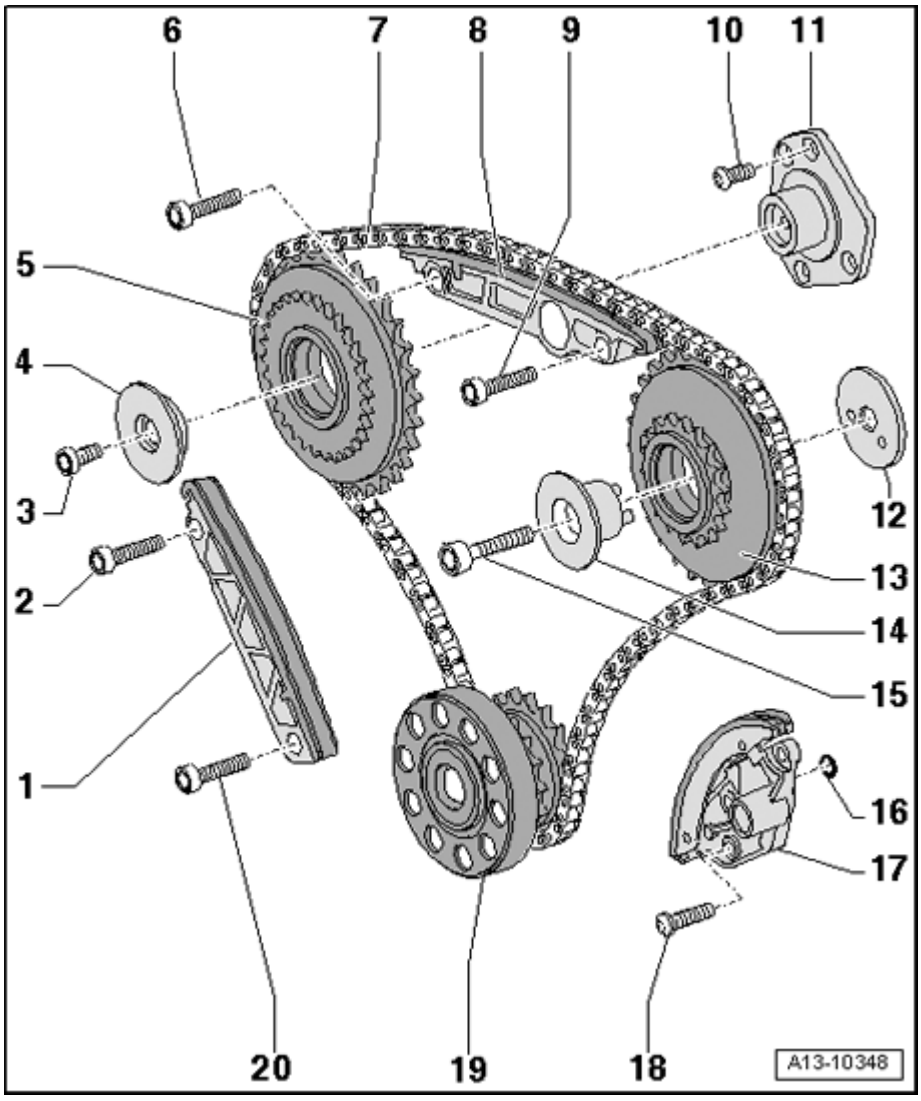

Fig. 142: Identifying Special Tools - Front Sealing Flange, Removing And Installing
Courtesy of VOLKSWAGEN UNITED STATES, INC.

Special tools, testers and auxiliary items required

- Counter-holder tool 3415
- Assembly tool T10053
- Torque wrench V.A.G 1331
- Torque wrench V.A.G 1332

- Hand drill with plastic brush attachment
- Protective glasses
- Sealant

Removing

 © 2011 Mitchell Repair Information Company, LLC.

- Remove ribbed belt --> **Ribbed belt, removing and installing**.
- Toothed belt, removing --> **Toothed belt drive, overview**.

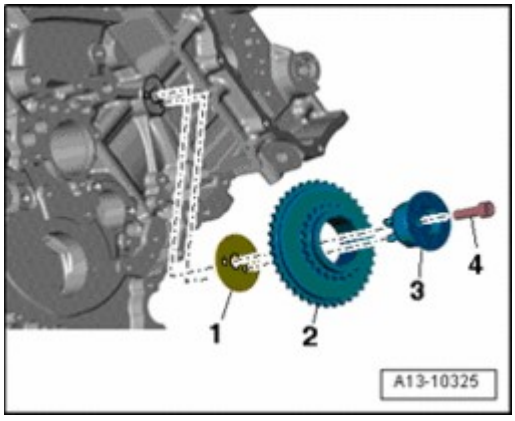

Fig. 143: Securing Toothed Belt Gear Using Counter Support 3415
Courtesy of VOLKSWAGEN UNITED STATES, INC.

- Loosen toothed belt crankshaft sprocket by holding sprocket with Counter Support 3415.

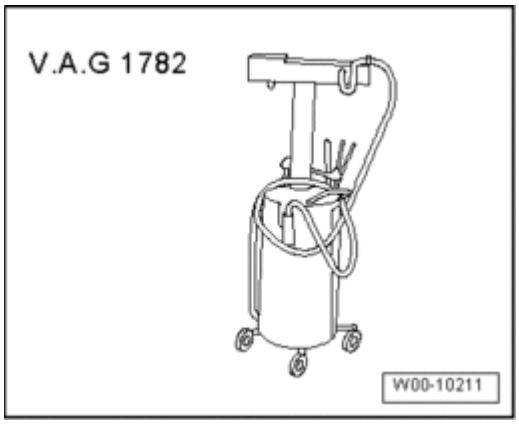

Fig. 144: Identifying Center Bolt, Crankshaft Toothed Belt Gear & Diamond Disc
Courtesy of VOLKSWAGEN UNITED STATES, INC.

- Remove toothed belt crankshaft sprocket center bolt - **1** - and remove sprocket - **2** - and diamond disc - **3** -.

 © 2011 Mitchell Repair Information Company, LLC.

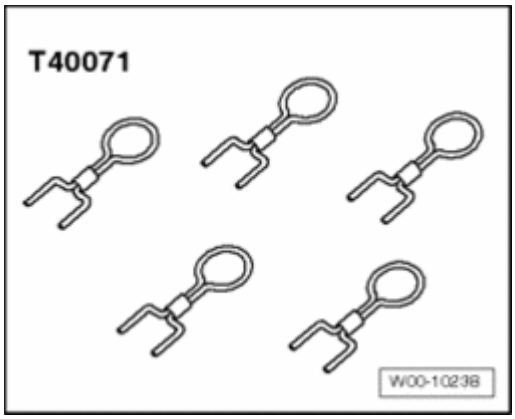

Fig. 145: Fastening Bolts In Specified Order
Courtesy of VOLKSWAGEN UNITED STATES, INC.

- Remove bolts - **1 to 10** -.
- Pry off and remove front sealing flange.
- Drive out seal from removed flange.

Installing

NOTE:

- **Place a rag over open part of oil pan.**

- Carefully remove any sealant residue from cylinder block and oil pan.

CAUTION: Wear safety glasses.

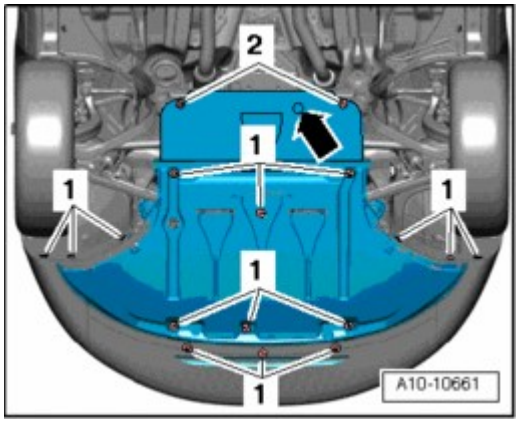

Fig. 146: Removing Sealant Remains On Sealing Flange With Rotating Plastic Brush
Courtesy of VOLKSWAGEN UNITED STATES, INC.

- Remove sealant residue from sealing flange e.g. with a rotating plastic brush.
- Clean sealing surfaces, they must be free of oil and grease.

 © 2011 Mitchell Repair Information Company, LLC.

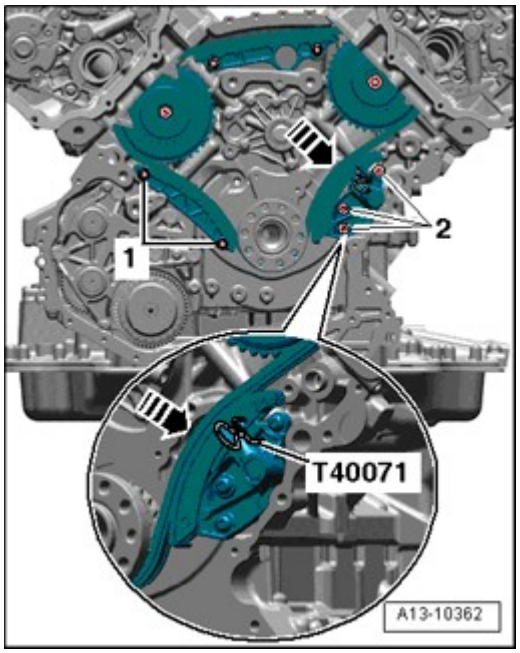

Fig. 147: Cutting Tube Nozzle At Front Marking
Courtesy of VOLKSWAGEN UNITED STATES, INC.

- Cut off nozzle on tube of sealant at front mark (dia. of nozzle approx. 2 mm).

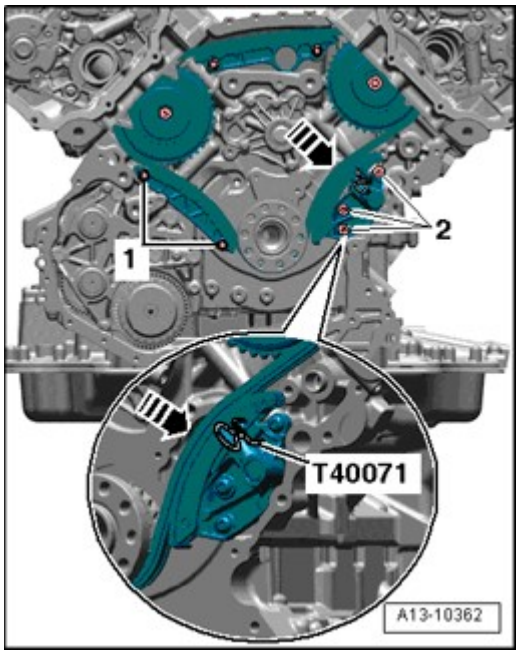

Fig. 148: Applying Thin Bead Of Sealant To Edge Between Cylinder Block And Oil Pan
Courtesy of VOLKSWAGEN UNITED STATES, INC.

- Apply a thin bead of sealant to edge between cylinder block and oil pan - **arrow** -.

 © 2011 Mitchell Repair Information Company, LLC.

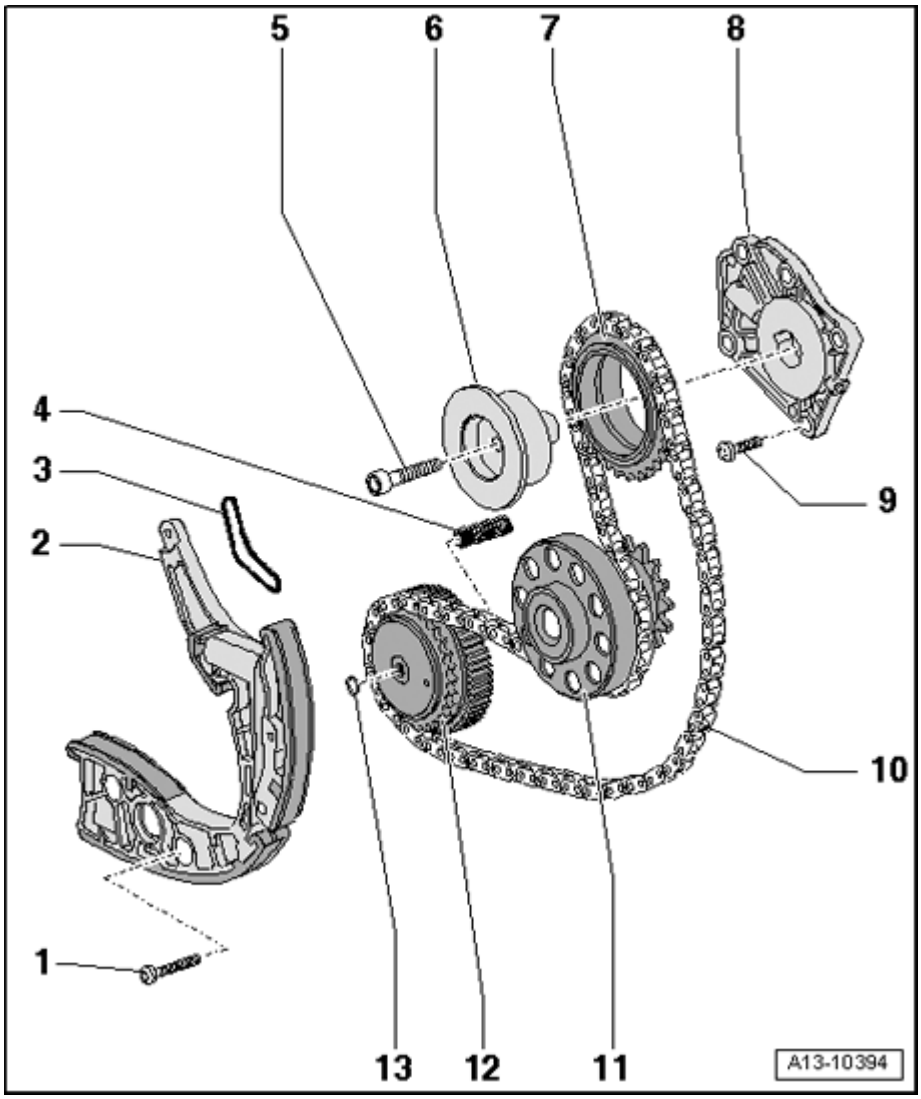

Fig. 149: Identifying Silicone Sealant Bead
Courtesy of VOLKSWAGEN UNITED STATES, INC.

- Apply a thin bead of sealant - **arrow** - to clean sealing surface of sealing flange, as shown in the illustration.

- Thickness of sealant bead: 2 to 3 mm.

NOTE:

- **The sealant bead may not be thicker than 3 mm, otherwise excess sealant could enter the oil pan and clog the oil intake tube.**

 © 2011 Mitchell Repair Information Company, LLC.

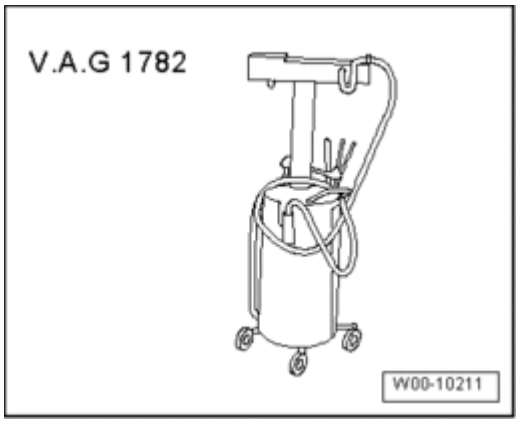

Fig. 150: Lightly Coating Lower Sealing Surface Of Sealing Flange With Sealant
Courtesy of VOLKSWAGEN UNITED STATES, INC.

- Lightly coat lower sealing surface of sealing flange with sealant - **shaded area** -.

NOTE:

- **The sealing flange must be installed within 5 minutes of being applied with sealant.**

- Carefully slide sealing flange onto reamed bolt at cylinder block.

NOTE:

- **To install the sealing flange with installed seal, use the guide sleeve T10053/1.**

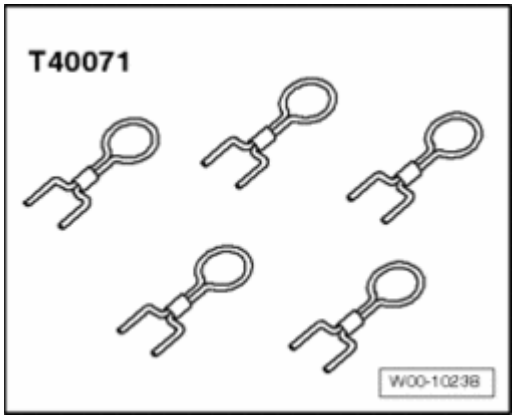

Fig. 151: Fastening Bolts In Specified Order
Courtesy of VOLKSWAGEN UNITED STATES, INC.

- Fasten bolts in specified order:
- Tighten bolts - **1 to 6** -.
- Tighten bolts - **7 to 10** -.
- Install crankshaft seal (belt pulley side) **Installing**.

- Replace center bolt for toothed belt sprocket.

 © 2011 Mitchell Repair Information Company, LLC.

NOTE:

- **There must be no oil on the contact surface between the toothed belt sprocket and crankshaft.**
- **Do not oil bolt for crankshaft toothed belt sprocket.**

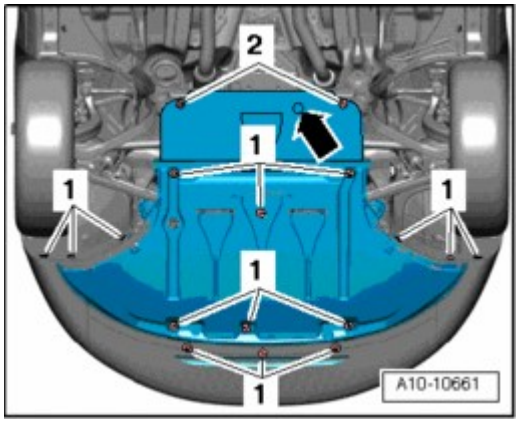

Fig. 152: Identifying Center Bolt, Crankshaft Toothed Belt Gear & Diamond Disc
Courtesy of VOLKSWAGEN UNITED STATES, INC.

- Install crankshaft toothed belt gear - **2** - with new diamond disc - **3** - and new center bolt - **1** -.

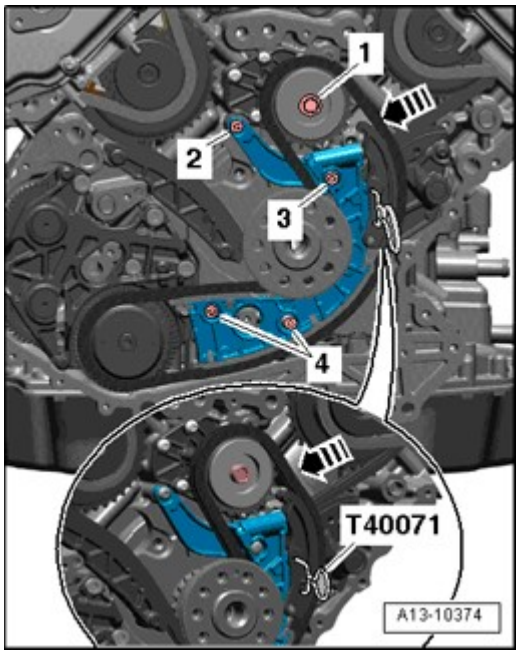

Fig. 153: Securing Toothed Belt Gear Using Counter Support 3415
Courtesy of VOLKSWAGEN UNITED STATES, INC.

- Hold toothed belt crankshaft sprocket with Counter Support 3415 and tighten.

The rest of installation is in reverse order of removal, note the following:

How to install toothed belt and adjust valve timing --> **Toothed belt, removing and installing**

 © 2011 Mitchell Repair Information Company, LLC.

- Install crankshaft belt pulley --> **Crankshaft belt pulley, removing and installing**
- Install ribbed belt --> **Ribbed belt, removing and installing**.
- Install lock carrier with attachments -->
  - **50 BODY, FRONT**
  - **50 - BODY - FRONT** for BODY EXTERIOR - CABRIOLET

.

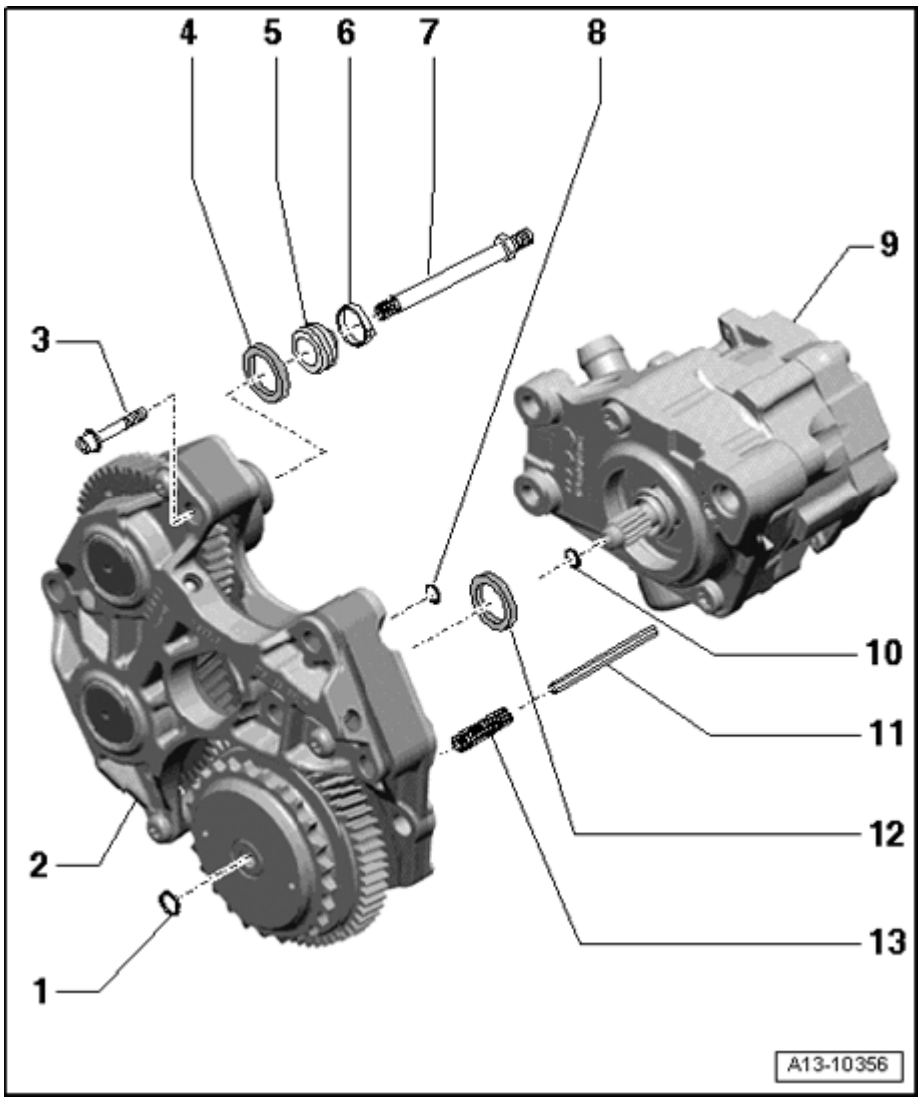

Fig. 154: Identifying Lock Carrier With Attachments
Courtesy of VOLKSWAGEN UNITED STATES, INC.

- Place torque support stop onto rubber buffer for torque support under its own weight and tighten nuts - **arrows** -.
- Install front bumper cover -->
  - **63 BUMPER**
  - **63 - BUMPERS** for BODY EXTERIOR - CABRIOLET

 © 2011 Mitchell Repair Information Company, LLC.

.

- Check headlight adjustment -->
  - **01 - MAINTENANCE**
  - **01 - MAINTENANCE** for MAINTENANCE PROCEDURES - CABRIOLET

.

Torque specifications

Component		Nm
Sealing flange to cylinder block		15
Toothed belt sprocket to crankshaft		90 + 90 ° 1)2)
Torque support stop		28

- 1) Replace bolt
- 2) 90 °Corresponds to a 1/4 turn

NOTE:

- **The threads and shoulder must be free of oil and grease.**

Dual-mass flywheel and drive plate, removing and installing

Dual-mass flywheel, removing and installing

Special tools, testers and auxiliary items required

 © 2011 Mitchell Repair Information Company, LLC.

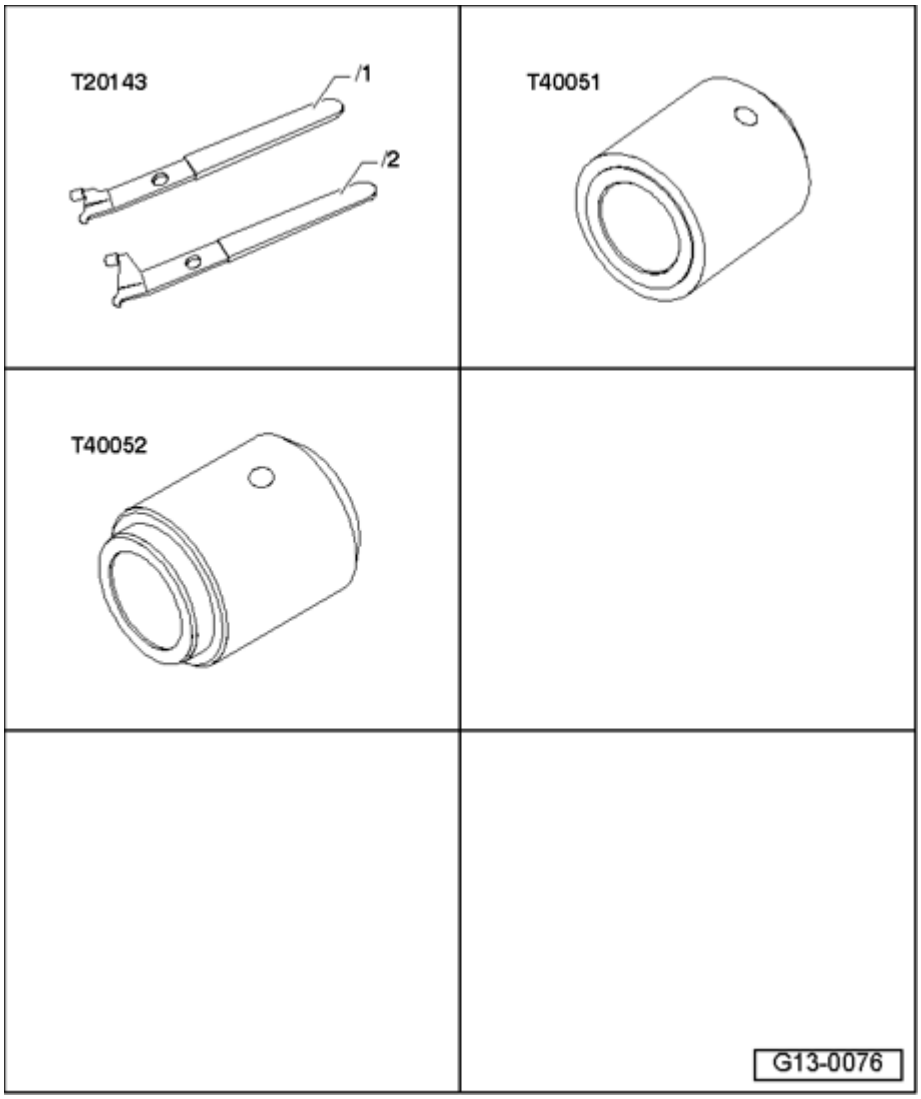

Fig. 155: Identifying Flywheel Retainer 3067
Courtesy of VOLKSWAGEN UNITED STATES, INC.

- Counter-holder tool 3067

Removing

- Engine or transmission removed.

- Remove clutch pressure plate -->
  - **30 CLUTCH** for 5 SPD. MANUAL TRANSMISSION 012/01W FRONT WHEEL DRIVE
  - **30 CLUTCH** for 5 SPD. MANUAL TRANSMISSION 01A ALL WHEEL DRIVE
  - **30 CLUTCH** for 6 SPD. MANUAL TRANSMISSION 01E ALL WHEEL DRIVE
  - **30 CLUTCH** for 6-SPEED MANUAL TRANSMISSION 01X, FRONT-WHEEL DRIVE
  - **30 CLUTCH** for 6-SPEED MANUAL TRANSMISSION 02X, FOUR-WHEEL DRIVE

 © 2011 Mitchell Repair Information Company, LLC.

- **30 CLUTCH** for 6-SPEED MANUAL TRANSMISSION 0A3, ALL WHEEL DRIVE

.

CAUTION: To prevent damage to dual-mass flywheel when removing, bolts - B - must not be removed using an air-powered or impact wrench. Only removing bolts by hand is permitted.

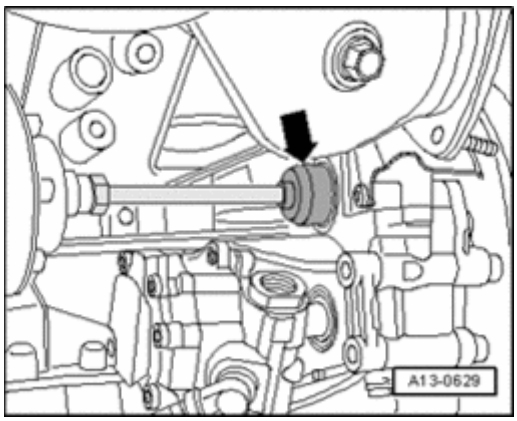

Fig. 156: Identifying Dual-Mass Flywheel & Bolts
Courtesy of VOLKSWAGEN UNITED STATES, INC.

- Rotate dual-mass flywheel - **A** - so that bolts - **B** - stand centered to holes - **arrows** -.
- When removing bolts - **B** - , make sure that bolt head does not contact dual-mass flywheel - **arrows** - and thereby cause damage when turning it further.

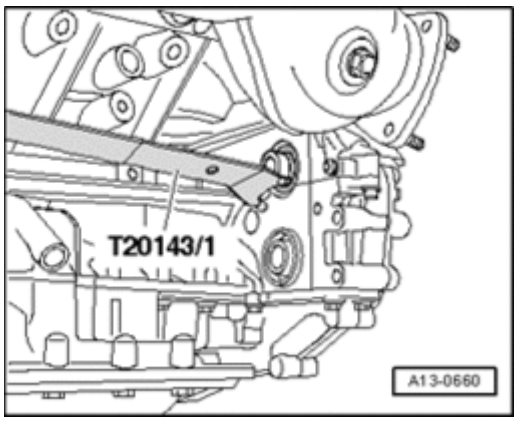

Fig. 157: Inserting Retainer 3067 In Hole On Cylinder Block
Courtesy of VOLKSWAGEN UNITED STATES, INC.

- Insert counter-holder 3067 into hole in cylinder block - **B** -.
- Mark dual-mass flywheel to engine.
- Remove dual-mass flywheel.

Installing

 © 2011 Mitchell Repair Information Company, LLC.

Installation is in reverse order of removal, note the following:

- Use new bolts when securing.

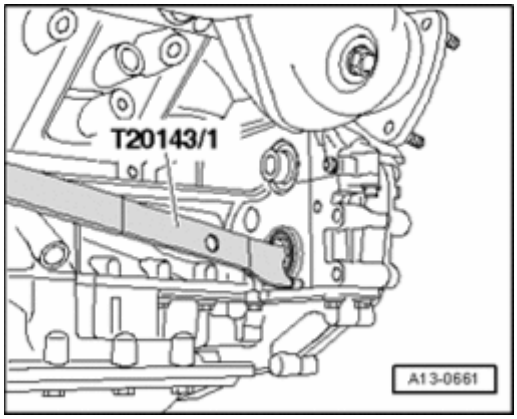

Fig. 158: Inserting Retainer 3067 In Hole On Cylinder Block
Courtesy of VOLKSWAGEN UNITED STATES, INC.

- Insert counter-holder 3067 into hole in cylinder block - **A** -.

Torque specification

Component		Nm
Dual-mass flywheel to crankshaft		
	Bolt length 22.5 mm	60 + 90 ° 1)2)
	35.0 mm	60 + 180 ° 1)3)
	43.0 mm	60 + 180 ° 1)3)

- 1) Replace bolt
- 2) 90 °Corresponds to a quarter turn
- 3) 180 °Corresponds to one half rotation

Drive plate, removing and installing

Special tools, testers and auxiliary items required

 © 2011 Mitchell Repair Information Company, LLC.

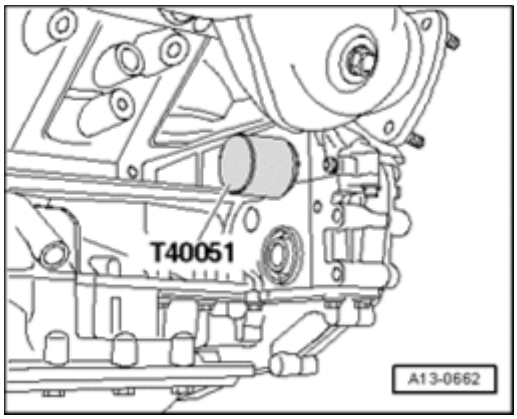

Fig. 159: Identifying Counterhold VW 558
Courtesy of VOLKSWAGEN UNITED STATES, INC.

- Flywheel lock adapter VW 558
- Hex bolt M8x45 and two M10 hex nuts
- Depth gauge

Removing

- Engine or transmission removed.

  - Mark drive plate to engine

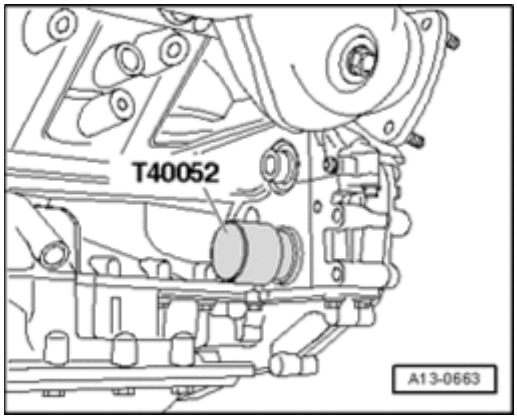

Fig. 160: Securing Flywheel Lock Adapter VW 558 With Hex Bolt M8X45 To Drive Plate
Courtesy of VOLKSWAGEN UNITED STATES, INC.

  - Secure flywheel lock adapter VW 558 with hex bolt M8x45 to drive plate. Insert two M10 hex nuts between flywheel lock adapter and drive plate. Installed location of flywheel retainer: - **A** - to loosen, - **B** - to tighten
  - Remove drive plate.
  - Remove shim from behind it.

Installing

 © 2011 Mitchell Repair Information Company, LLC.

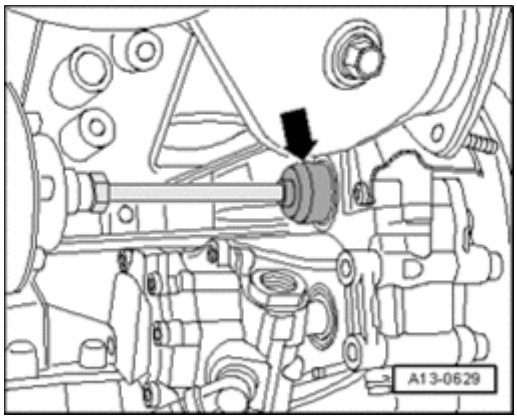

Fig. 161: Setting Drive Plate In Place, Using Washer With Notches & Inserting New Bolts
Courtesy of VOLKSWAGEN UNITED STATES, INC.

- Set drive plate in place, using washer with notches - **1** -.
- Insert new bolts - **3** - and tighten to 30 Nm.

 © 2011 Mitchell Repair Information Company, LLC.

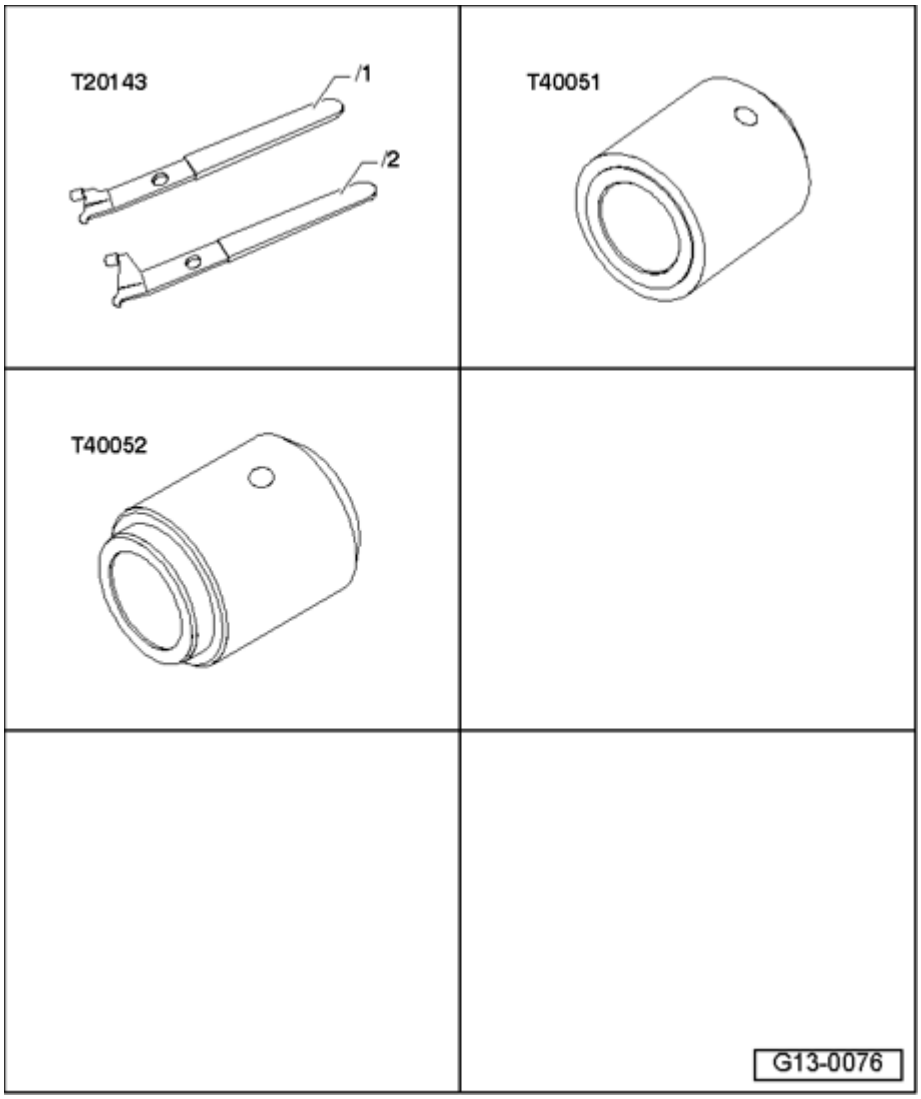

Fig. 162: Checking Dimension An Three Points And Calculate Mean Value
Courtesy of VOLKSWAGEN UNITED STATES, INC.

- Check dimension - **a** - an three points and calculate mean value.
- Specified value: 19.5 to 21.1 mm

NOTE:

- **This is measured through the hole in the drive plate to the machined surface of the cylinder block.**

If specification is not obtained:

 © 2011 Mitchell Repair Information Company, LLC.

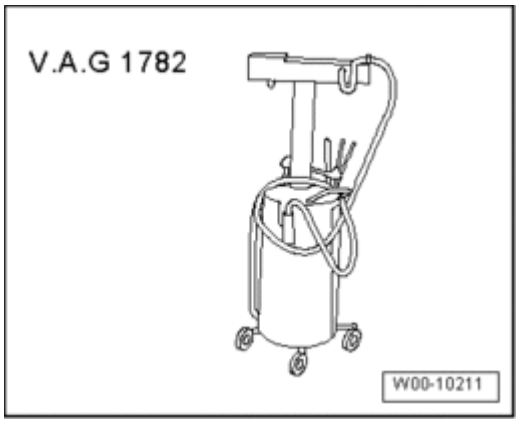

Fig. 163: Removing Driver Plate And Remove Or Add Shim
Courtesy of VOLKSWAGEN UNITED STATES, INC.

- Remove driver plate and remove or add shim - **2** -.
- Repeat measuring procedure by tightening drive plate to 30 Nm.

If specified value is achieved:

- Tighten bolt to torque specification.

Torque specification

Component		Nm
Drive plate to crankshaft		60 + 90 ° 1)2)

- 1) Replace bolt
- 2) 90 °Corresponds to a 1/4 turn

CRANKSHAFT, REMOVING AND INSTALLING

Crankshaft, removing and installing

NOTE:

- **Secure engine to assembly stand using engine and transmission holder VW 540 when performing repair work --> Engine, securing to assembly stand.**

 © 2011 Mitchell Repair Information Company, LLC.

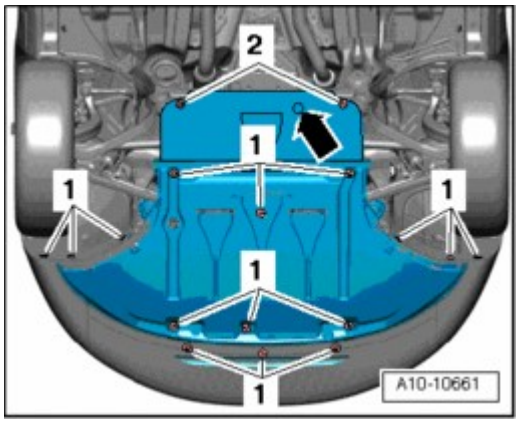

Fig. 164: Crankshaft Remove/Install Components
Courtesy of VOLKSWAGEN UNITED STATES, INC.

1 - 65 Nm plus an additional 90 ° ($^{1}/_{4}$ turn)

- Replace
- When measuring radial clearance, tighten crankshaft to 65 Nm, but do not turn further

2 - Bearing cap

- Bearing cap 1: Belt pulley side
- Bearing cap 3 with notches for thrust washers
- Retaining tabs of bearing shells and cylinder block/bearing caps must lie above one another

3 - 10 Nm plus an additional 90 ° ($^{1}/_{4}$ turn)

- Replace
- Replace sensor wheel every time bolts are loosened **Sensor wheel, removing and installing**

4 - Needle bearing

- For vehicles with manual transmission
- Pulling out and driving in --> **Pulling out and driving in needle bearings from crankshaft**

5 - Sensor wheel

- For engine speed (rpm) sensor G28
- Only possible to install in one position - Bores are offset
- Replace sensor wheel every time bolts are loosened
- Removing and installing **Sensor wheel, removing and installing**

6 - Crankshaft

 © 2011 Mitchell Repair Information Company, LLC.

- Axial play new: 0.07 to 0.23 mm. Wear limit: 0.30 mm
- Check radial clearance with Plastigage 0.02 to 0.04 mm Wear limit: 0.15 mm
- Do not turn crankshaft when measuring radial play
- Crankshaft dimensions --> **Crankshaft dimensions**

7 - Thrust washers

- For bearing 3
- Observe locating point

8 - Bearing shell for cylinder block

- With lubricating groove
- Do not interchange used bearing shells (mark)
- Insert bearing shells for cylinder block with proper color marking **Allocation of crankshaft bearing shells for cylinder block**

9 - Chain sprocket

- For chain for oil pump
- Replacing --> **Chain sprocket, removing and installing**.

10 - Bearing shell for bearing cap

- Without lubricating groove
- Do not interchange used bearing shells (mark)
- The crankshaft bearing shells in bearing caps are only available as a replacement part with a "yellow" color marking.

Sensor wheel, removing and installing

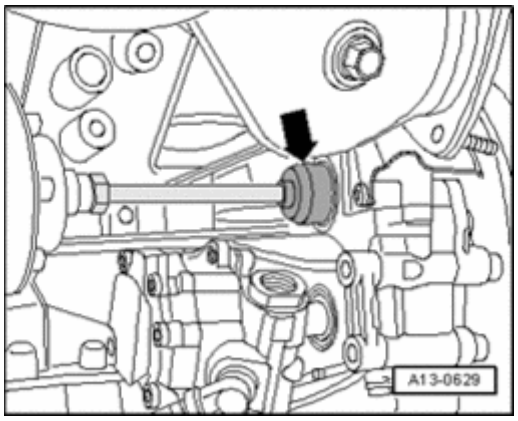

Fig. 165: Identifying Attachment Points, Countersunk Screws, Crankshaft & Sensor Wheel
Courtesy of VOLKSWAGEN UNITED STATES, INC.

 © 2011 Mitchell Repair Information Company, LLC.

- Always replace sensor wheel - **2** - whenever bolts are removed - **1** -.

NOTE:

- **After tightening a second time, the attachment point of the countersunk screws of the sensor wheel are so deformed that the screw heads lie on the crankshaft - 3 - - arrows - and the sensor wheel is loose underneath the screws.**
- **Installation of sensor wheel is only possible in one position - the bores are offset.**

Torque specifications

Component		Nm
Sensor wheel to crankshaft		10 + 90 ◦ 1)2)

- 1) Replace screw
- 2) 90 °Corresponds to a 1/4 turn

Allocation of crankshaft bearing shells for cylinder block

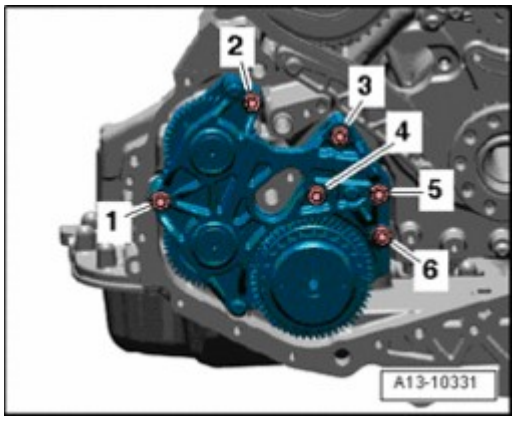

Fig. 166: Allocation Of Crankshaft Bearing Shells For Cylinder Block
Courtesy of VOLKSWAGEN UNITED STATES, INC.

The cylinder block is allocated with bearing shells of the correct thickness in the factory. Colored spots serve to identify the bearing thicknesses.

NOTE:

- **Arrow points in direction of travel.**

The letters marked on lower sealing surface of cylinder block identify which bearing shell must be installed in which location.

Letter on cylinder block		Color of bearing
S	=	black
R	=	red

 © 2011 Mitchell Repair Information Company, LLC.

G	=	yellow

NOTE:

- **The crankshaft bearing shells in the bearing caps are only available as a replacement part with a "yellow" color marking.**

Pulling out and driving in needle bearings from crankshaft

NOTE:

- **A pilot needle bearing must be installed in the crankshaft in engines for vehicles with manual transmission. Install needle bearing if necessary.**

Special tools, testers and auxiliary items required

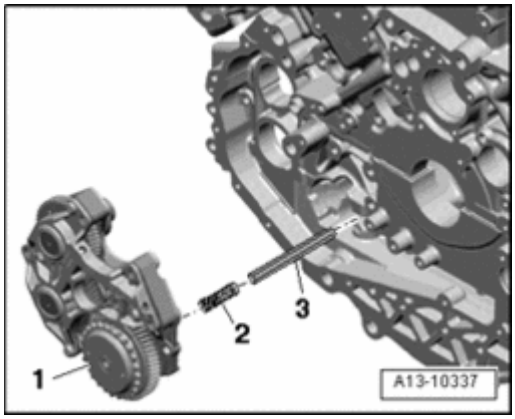

Fig. 167: Identifying Drift VW 207 C
Courtesy of VOLKSWAGEN UNITED STATES, INC.

- Drift VW 207 C 3176 or centering mandrel 3176

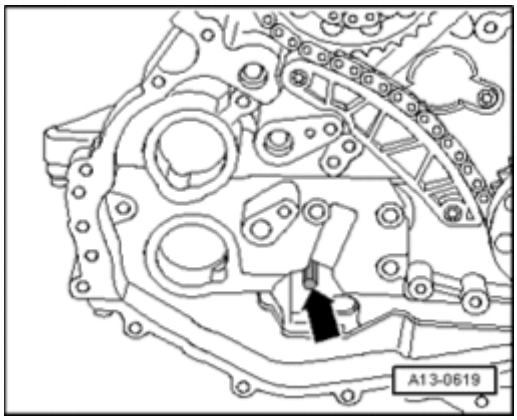

Fig. 168: Kukko 21/2 Internal puller, Kukko 21/4 Internal puller, Kukko 22/2 Counter support
Courtesy of VOLKSWAGEN UNITED STATES, INC.

- 1 - Internal puller Kukko 21/1
- 4 - Counter-support Kukko 22/1

 © 2011 Mitchell Repair Information Company, LLC.

Pulling out

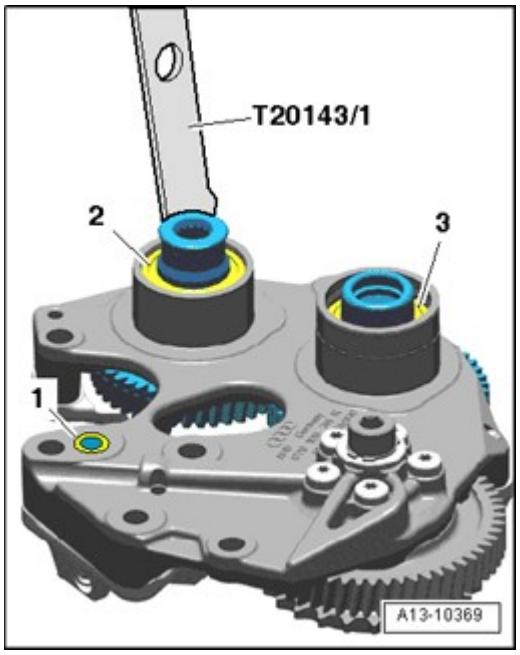

Fig. 169: Pulling Out Pilot Needle Bearing Using Kukko 21/1 And Kukko 22/1
Courtesy of VOLKSWAGEN UNITED STATES, INC.

- Pull out needle bearing using internal puller Kukko 21/1 and counter-support Kukko 22/1.

Driving in

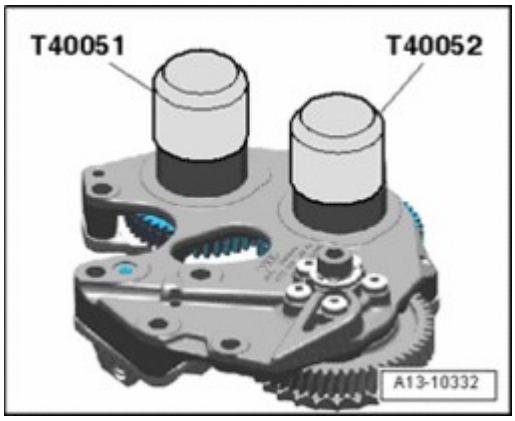

Fig. 170: Driving In Needle Bearing Using Drift VW 207 C
Courtesy of VOLKSWAGEN UNITED STATES, INC.

- Drive in needle bearing using drift VW 207 C or centering mandrel 3176 until it is flush.

- Side of needle bearing with writing on it must be readable when installed.

Crankshaft dimensions

 © 2011 Mitchell Repair Information Company, LLC.

(Dimensions in mm)

Honing dimension	Crankshaft bearing pins-diameter	Connecting rod pins-diameter
	-0.017	-0.022
Basic dimension	54.00	47.80
	-0.037	-0.042
	-0.017	-0.022
1st oversize	53.75	47.55
	-0.037	-0.042
	-0.017	-0.022
2nd oversize	53.50	47.30
	-0.037	-0.042
	-0.017	-0.022
Stage III	53.25	47.05
	-0.037	-0.042

Chain sprocket, removing and installing

Special tools, testers and auxiliary items required

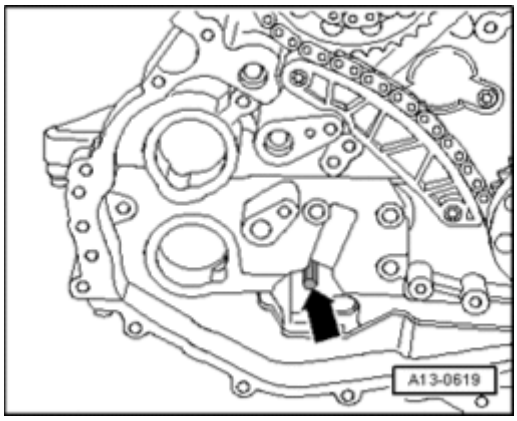

Fig. 171: Press Tube 30 - 100
Courtesy of VOLKSWAGEN UNITED STATES, INC.

- Press tube 30 - 100

 © 2011 Mitchell Repair Information Company, LLC.

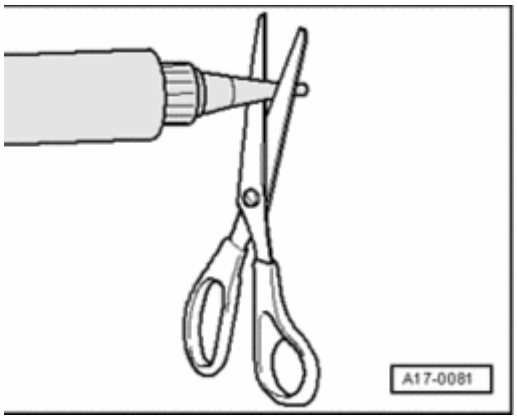

Fig. 172: Identifying Thrust Piece 40-105
Courtesy of VOLKSWAGEN UNITED STATES, INC.

- Thrust piece 40 - 105
- Two-arm puller, commercially available
- Protective gloves

Removing

- Remove oil pan with oil pump --> **Oil pan, removing and installing**.
- Remove front sealing flange --> **Front sealing flange, removing and installing**.

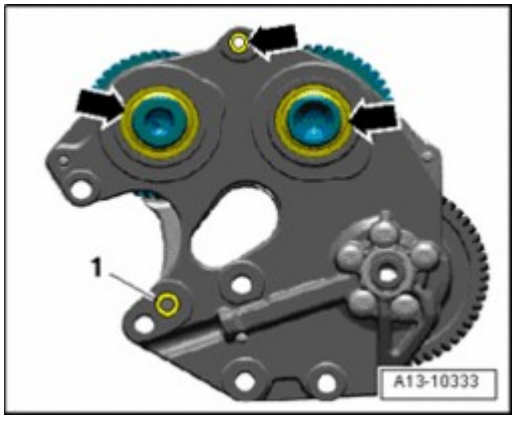

Fig. 173: Pulling Off Chain Sprocket From Crankshaft
Courtesy of VOLKSWAGEN UNITED STATES, INC.

- Pull off crankshaft chain sprocket with claw puller - **2** - e.g. Kukko 44-1, while protecting end of crankshaft with thrust piece 40 - 105.

Installing

Installation is in reverse order of removal, note the following:

CAUTION: Wear protective gloves!

 © 2011 Mitchell Repair Information Company, LLC.

- Heat up chain sprocket in an oven for approx. 15 minutes at 220 °C.

NOTE:

- **Installed location: Wider shoulder of chain sprocket faces toward engine.**

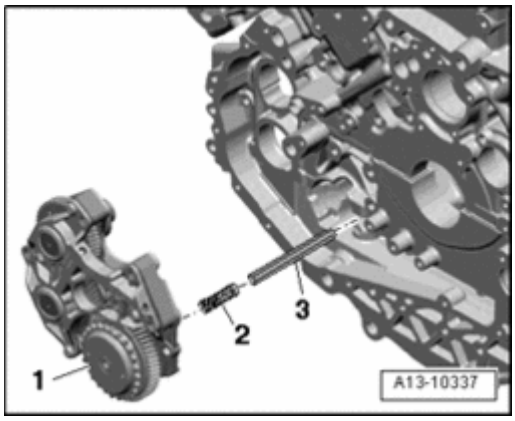

Fig. 174: Installing Chain Sprocket Onto Crankshaft Up To Limit Stop Using Press Tube 30-100
Courtesy of VOLKSWAGEN UNITED STATES, INC.

- Using pliers, install chain sprocket on crankshaft end and slide onto crankshaft to stop using press tube 30 - 100.
- Install oil pan with oil pump --> **Oil pan, removing and installing**.

PISTON AND CONNECTING ROD, DISASSEMBLING AND ASSEMBLING

Piston and connecting rod, disassembling and assembling

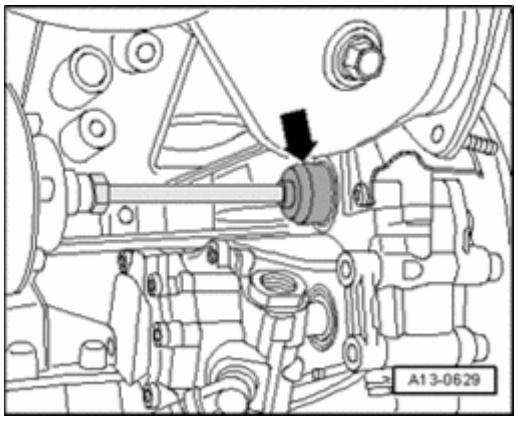

Fig. 175: Piston And Connecting Rod, Assembly Overview
Courtesy of VOLKSWAGEN UNITED STATES, INC.

1 - Connecting rod bolt - 30 Nm plus an additional $^{1}/_{4}$ (90 °)

- Replace

 © 2011 Mitchell Repair Information Company, LLC.

- Lubricate threads and contact surface
- Use old bolt to measure radial play
- Tighten to 30 Nm to measure radial play, do not turn further

2 - Pressure relief valve, 27 Nm

- Opening pressure 1.6 to 1.9 bar

3 - Oil spray jet

- For piston cooling

4 - Connecting rod bearing cap

- Note installation position
- Due to separation procedure (cracking) of connecting rod, cap only install in one position and only to corresponding connecting rod.
- Affiliation to cylinder mark - **B** -
- Installed location: Markings - **A** - point to belt pulley side

5 - Bearing shells

- Upper bearing shell with oil hole for piston pin lubrication
- Installed location **Installed position of bearing shell**
- Do not interchange used bearing shells (mark)
- Axial play new: 0.10 to 0.35 mm. Wear limit: 0.40 mm
- Measure radial clearance with Plastigage: New: 0.02 to 0.06 mm. Wear limit: 0.09 mm. Do not turn crankshaft when checking radial clearance

6 - Connecting rod

- Only replace as set
- Affiliation to cylinder mark - **B** -
- Installed location: Markings - **A** - point to belt pulley side
- With oil hole for piston pin lubrication

7 - Circlip

8 - Piston pin

- If difficult to move, heat piston to approx. 60 °C
- Use pilot drift VW 222 A for removal and installation

 © 2011 Mitchell Repair Information Company, LLC.

9 - Piston

- Checking **Checking piston**
- Mark installed position and cylinder allocation
- Arrow on piston face points toward belt pulley side
- Install with piston ring compressor

- Piston and cylinder dimensions --> **Piston and cylinder dimensions**
- Cylinder bore, checking **Checking cylinder bores**

10 - Piston rings

- Offset gaps by 120 °
- Use piston ring pliers for removal and installation
- "TOP" mark must face up toward piston crown
- Checking ring gap **Checking piston ring gap**

- Check piston ring groove clearance **Checking ring to groove clearance**

Checking piston ring gap

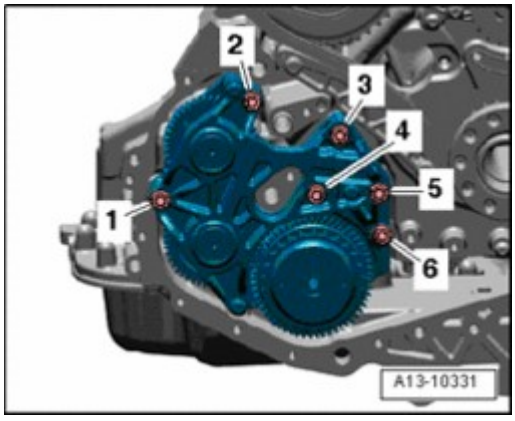

Fig. 176: Checking Piston Ring Gap
Courtesy of VOLKSWAGEN UNITED STATES, INC.

- Push ring squarely from above down to approx. 15 mm from bottom end of cylinder. To do this use a piston without rings.

Piston ring dimensions in mm	New	Wear limit
Compression ring	0.20 to 0.40	0.8
Oil scraping ring	0.25 to 0.50	0.8

Checking ring to groove clearance

 © 2011 Mitchell Repair Information Company, LLC.

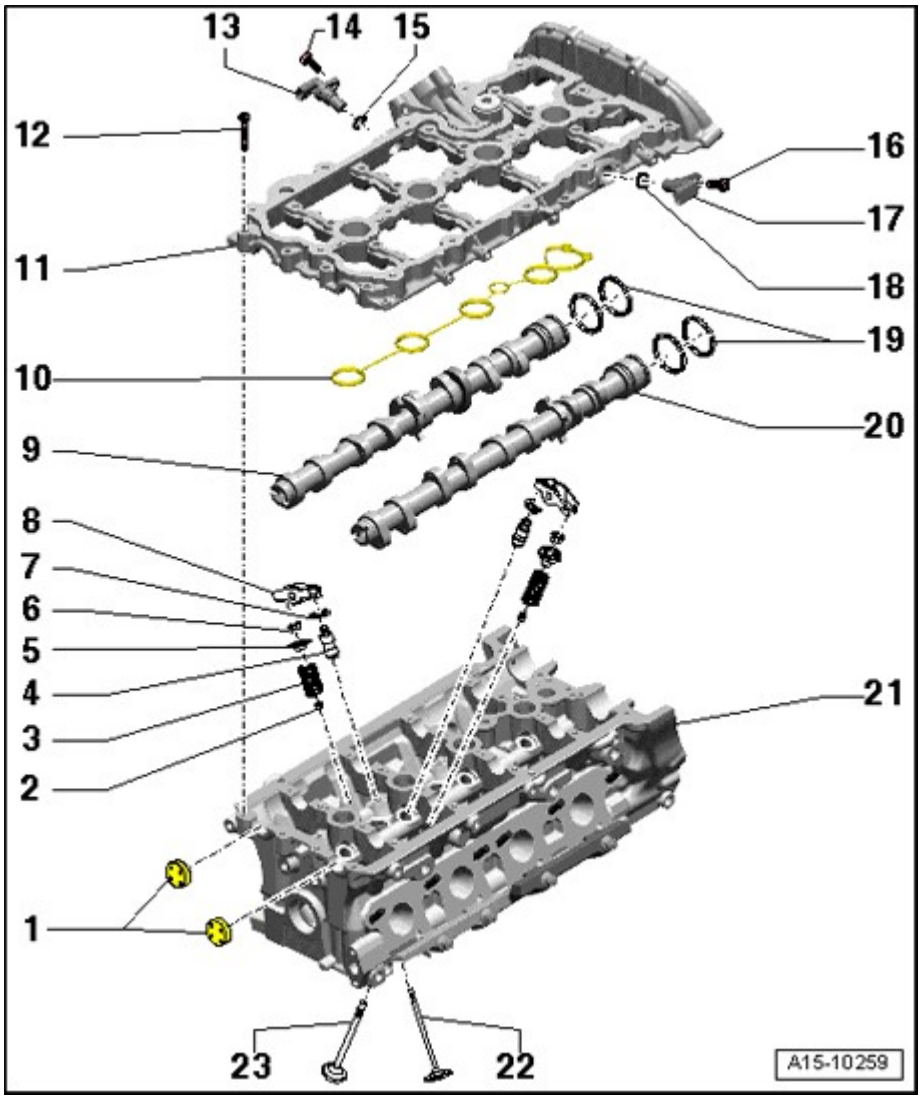

Fig. 177: Checking Ring To Groove Clearance
Courtesy of VOLKSWAGEN UNITED STATES, INC.

- Clean ring groove of piston before checking.

Piston ring dimensions in mm	New	Wear limit
Compression ring	0.06 to 0.09	0.20
Oil scraping ring	0.03 to 0.06	0.15

Checking piston

 © 2011 Mitchell Repair Information Company, LLC.

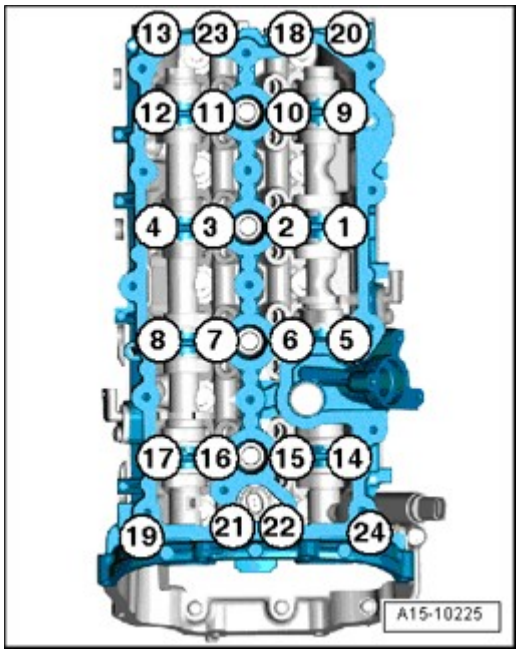

Fig. 178: Checking Piston
Courtesy of VOLKSWAGEN UNITED STATES, INC.

- Measure pistons approx. 10 mm from bottom edge and at points offset by 90 ° to piston pin axis.
- Deviation from nominal dimension: max. 0.04 mm

Checking cylinder bores

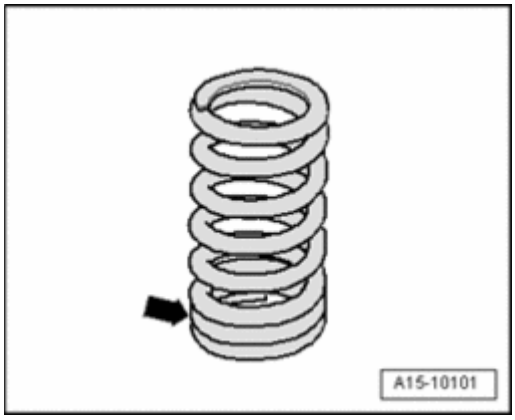

Fig. 179: Checking Cylinder Bores
Courtesy of VOLKSWAGEN UNITED STATES, INC.

Special tools, testers and auxiliary items required

- Internal dial gauge 50 to 100 mm
- Measure diagonally at 3 positions transversely - **A** - and longitudinally - **B** -.

 © 2011 Mitchell Repair Information Company, LLC.

- Deviation from nominal dimension: max. 0.08 mm

Installed position of bearing shell

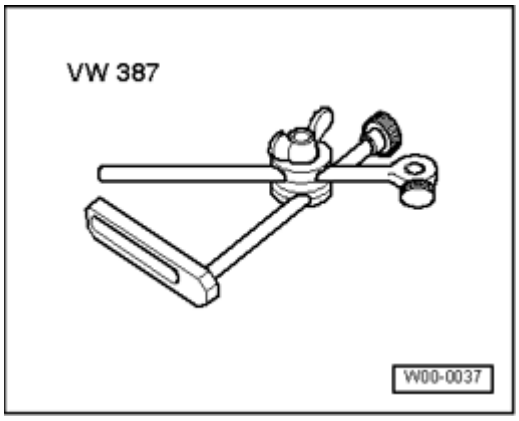

Fig. 180: Installation Position Of Bearing Shells
Courtesy of VOLKSWAGEN UNITED STATES, INC.

Bearing shell - **1** - with connecting rod oil bore - **arrow** -.

Bearing shell - **2** - without connected rod cover oil bore.

- Place bearing shells centrally into connecting rod and connecting rod cover.

Dimension - **a** - must be the same at left and right.

Piston and cylinder dimensions

Honing dimension		Piston diameter	Cylinder bore diameter
Basic dimension	mm	82.465 [1)]	82.51

- [1)] Measurement without graphite coating (0.02 mm thick). The graphite coating wears off.

15 - ENGINE - CYLINDER HEAD, VALVETRAIN

CYLINDER HEAD, REMOVING AND INSTALLING

Cylinder head, assembly overview

NOTE:

- **Replace cylinder head bolts.**
- **Always replace self-locking nuts, bolts which have been tightened to tightening torque as well as gaskets and O-rings.**
- **When installing a replacement cylinder head with camshafts installed, contact surfaces between roller rocker lever and cam running surfaces must be oiled.**

 © 2011 Mitchell Repair Information Company, LLC.

- **The plastic protectors installed to protect the open valves must only be removed immediately before installing the cylinder head.**
- **When replacing the cylinder head or cylinder head gasket, coolant must be completely replaced.**

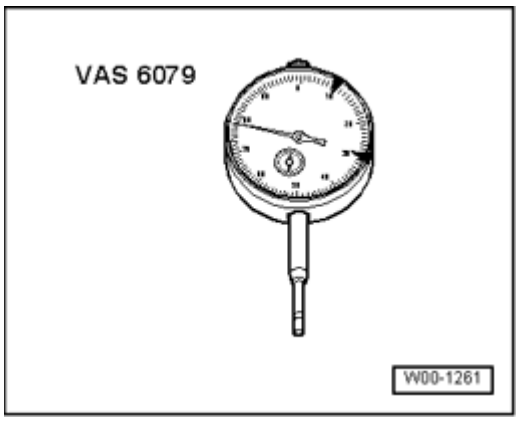

Fig. 181: Cylinder Head, Assembly Overview
Courtesy of VOLKSWAGEN UNITED STATES, INC.

1 - Bolt

- Tightening order **Cylinder head cover tightening sequence**

2 - Cylinder head cover

- Removing and installing --> **Cylinder head cover, removing and installing**

3 - Gasket

- Replace if damaged or leaking

4 - Valve housing

5 - Oil filler cap

6 - Gasket

- Replace if damaged or leaking

7 - 4 Nm

8 - Cylinder head cover gasket

- Replace if damaged or leaking

9 - Vacuum pump

 © 2011 Mitchell Repair Information Company, LLC.

10 - 4 Nm

11 - Camshaft Adjustment Valve 1 N205

- Removing --> **Camshaft Adjustment Valve 1 N205 , removing and installing**

12 - Seal

- Replace

13 - 10 Nm

14 - Cable bracket

15 - Seal

- Replace if damaged or leaking

16 - 10 Nm

17 - Housing

18 - Gasket

- Replace

19 - Transport strap

20 - 25 Nm

21 - 10 Nm

- Stud bolt for intake manifold

22 - Partition plate

23 - Cylinder head gasket

- Replace
- Note installation position: Part number facing cylinder head

24 - 10 Nm

25 - Camshaft Position (CMP) sensor G40

26 - Seal

 © 2011 Mitchell Repair Information Company, LLC.

27 - 10 Nm

- Stud bolt for tensioning roller

28 - 20 Nm

- Stud bolt for exhaust manifold

29 - Cylinder head bolt

- Replace
- Observe sequence for loosening. Refer to --> *Loosen cylinder head bolts, paying attention to sequence of cylinder head bolts.* under **Cylinder head, removing**
- Observe sequence for tighten cylinder head in sequence indicated, in two stages as follows:
- Torque specification: 40 Nm plus an additional $^{1}/_{2}$ turn (180 °)

Cylinder head cover tightening sequence

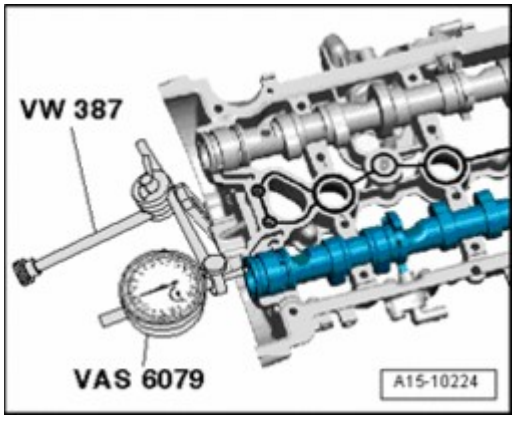

Fig. 182: Identifying Cylinder Head Cover Bolts Tightening Sequence
Courtesy of VOLKSWAGEN UNITED STATES, INC.

- Tighten bolts to 10 Nm in sequence given

Checking cylinder head for distortion

 © 2011 Mitchell Repair Information Company, LLC.

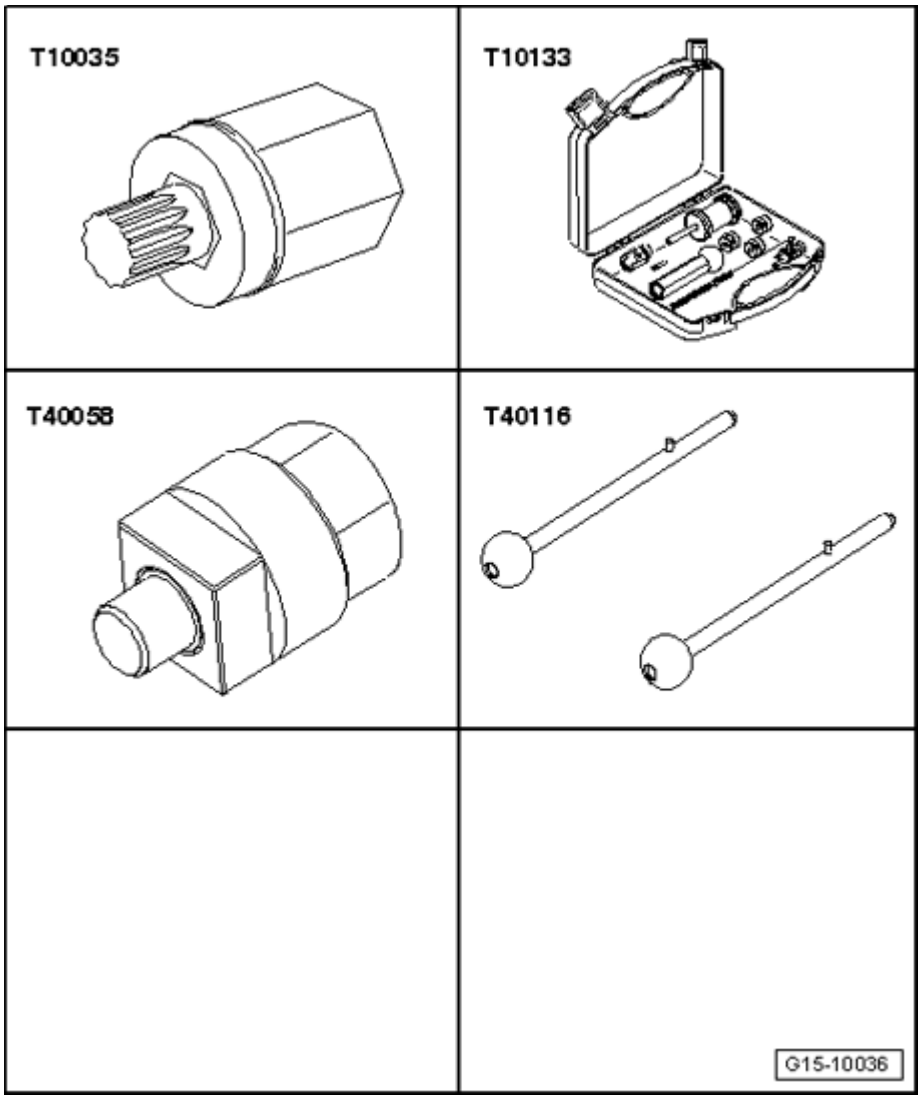

Fig. 183: Checking Cylinder Head For Distortion
Courtesy of VOLKSWAGEN UNITED STATES, INC.

- Check cylinder head at multiple points for distortion, using straight edge and feeler gauges.
- Max. permissible distortion: 0.05 mm

Reworking dimension, cylinder head

 © 2011 Mitchell Repair Information Company, LLC.

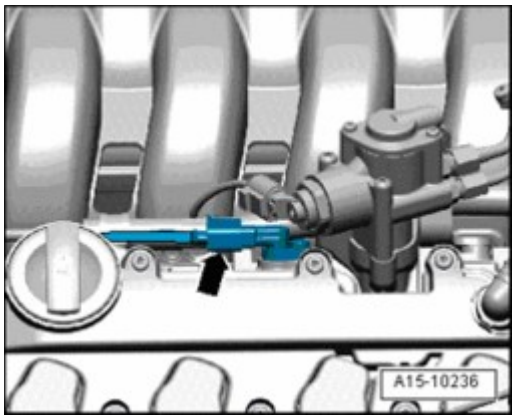

Fig. 184: Reworking Dimension, Cylinder Head
Courtesy of VOLKSWAGEN UNITED STATES, INC.

- Resurfacing cylinder head (face grinding) is only permissible to minimum dimension a.
- Minimum dimension: a = 139.20 mm

Camshaft Adjustment Valve 1 N205 , removing and installing

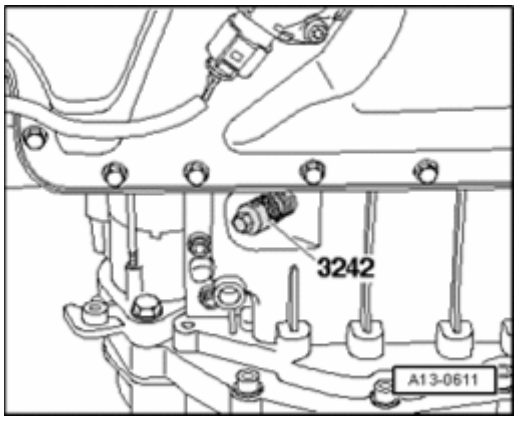

Fig. 185: Identifying Special Tools - Camshaft Adjustment Valve 1 N205 , Removing And Installing
Courtesy of VOLKSWAGEN UNITED STATES, INC.

Special tools, testers and auxiliary items required

- Torque wrench V.A.G 1783
- Torx bit assortment V.A.G 1766
- Ratchet 1/4" VAS 6234
- Spring-type clip pliers VAS 5024 A

Removing

NOTE:

- **Always replace gaskets and seals.**

 © 2011 Mitchell Repair Information Company, LLC.

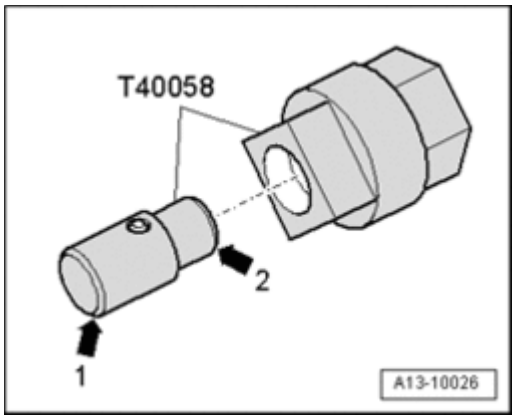

Fig. 186: Removing Engine Cover
Courtesy of VOLKSWAGEN UNITED STATES, INC.

- Remove engine cover - **arrows** -.

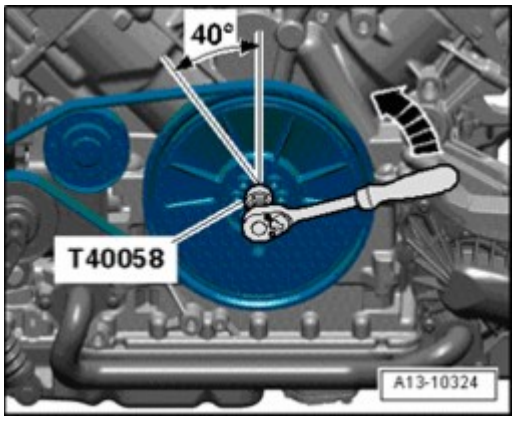

Fig. 187: Separating Electrical Connector
Courtesy of VOLKSWAGEN UNITED STATES, INC.

- Separate electrical connector - **1** -.
- Remove wiring harness bracket - **arrow** -.

NOTE:

- **Do not pull out Camshaft Adjustment Valve 1 N205 at connector.**

 © 2011 Mitchell Repair Information Company, LLC.

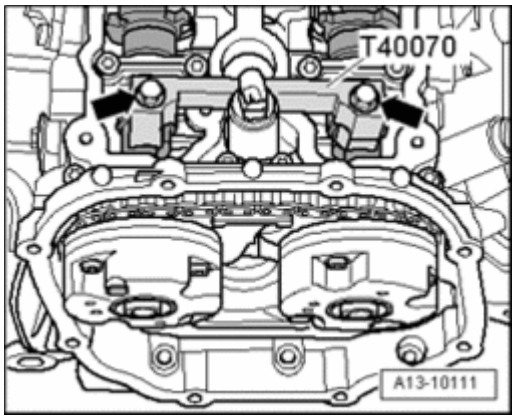

Fig. 188: Removing Bolts And Camshaft Adjustment Valve 1 N205 From Housing
Courtesy of VOLKSWAGEN UNITED STATES, INC.

- Remove bolts - **arrows** - and remove Camshaft Adjustment Valve 1 N205 from housing.

Installing

NOTE:

- **Camshaft Adjustment Valve 1 N205 as well as housing must be free of dirt and contamination.**
- **Remove new Camshaft Adjustment Valve 1 N205 from packaging only prior to installation.**

CAUTION:

- **The Camshaft Adjustment Valve 1 N205 must not experience any hits or impacts.**

- Coat sealing ring with engine oil.
- Carefully insert Camshaft Adjustment Valve 1 N205 into housing and press it in perpendicular to valve axle by hand as far as stop.
- Install bolts and tighten to 4 Nm with Torque Wrench V.A.G 1783 , Ratchet Adapter 1/4 VAS 6234 , TORX-Bit T20 and Bithalter from TORX bit set V.A.G 1766.

The rest of assembly is basically a reverse of disassembling sequence.

Torque specifications

Component	Nm
Camshaft Adjustment Valve 1 N205	4

Cylinder head cover, removing and installing

Removing

Special tools, testers and auxiliary items required

 © 2011 Mitchell Repair Information Company, LLC.

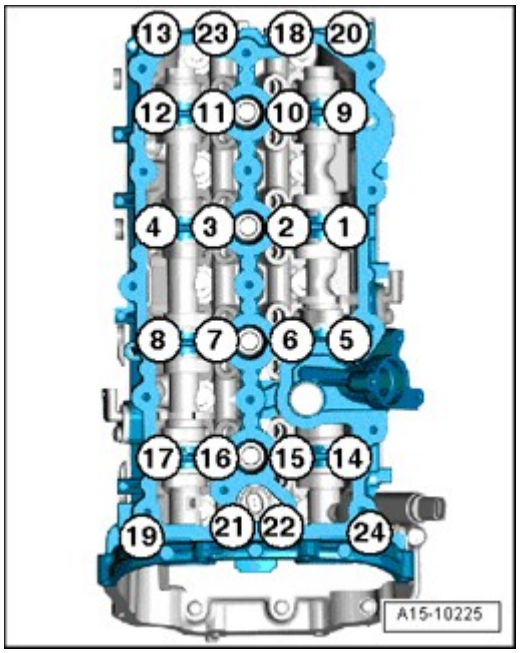

Fig. 189: Identifying Ignition Coil Puller T40039
Courtesy of VOLKSWAGEN UNITED STATES, INC.

- Ignition Coil Puller T40039

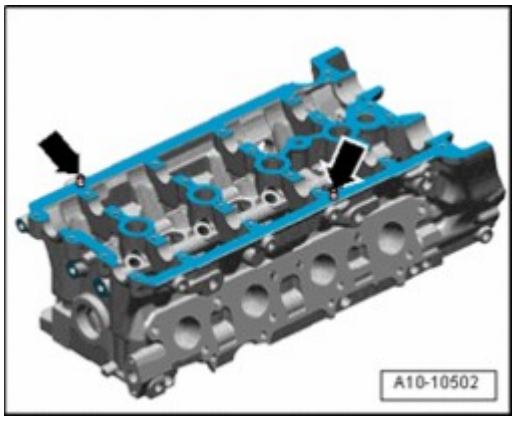

Fig. 190: Removing Engine Cover
Courtesy of VOLKSWAGEN UNITED STATES, INC.

- Remove engine cover - **arrows** -.

 © 2011 Mitchell Repair Information Company, LLC.

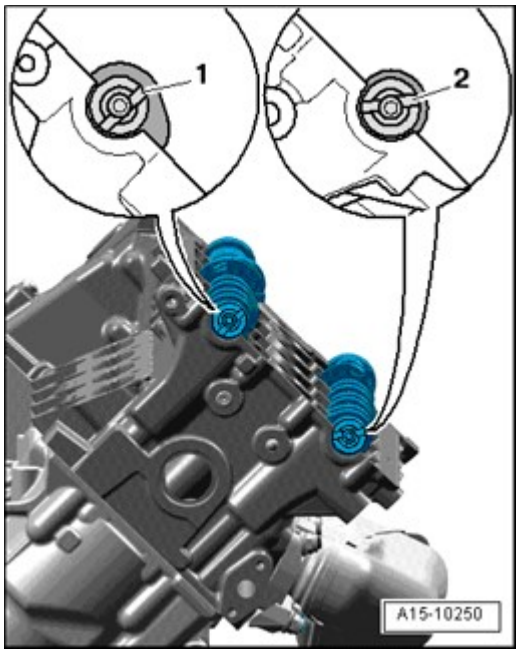

Fig. 191: Removing Bolts
Courtesy of VOLKSWAGEN UNITED STATES, INC.

- Remove bolts - **arrows** -.

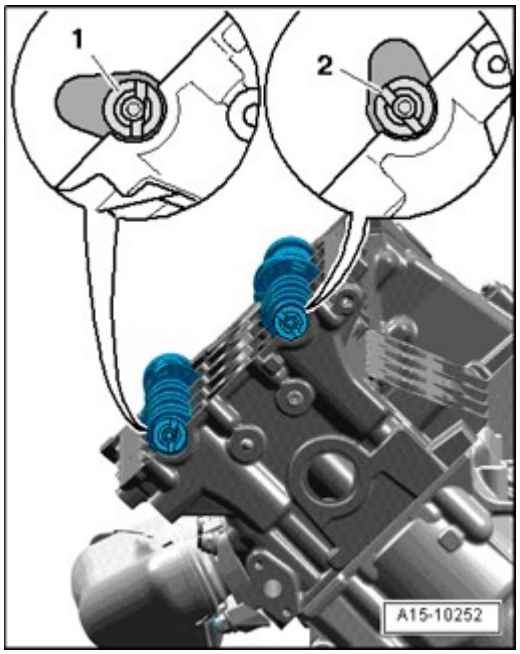

Fig. 192: Removing Bolts & Disconnecting Connector From Ignition Coils
Courtesy of VOLKSWAGEN UNITED STATES, INC.

- Remove bolts - **1** -.
- Disconnect connector - **2** - from ignition coils and free up cable.

 © 2011 Mitchell Repair Information Company, LLC.

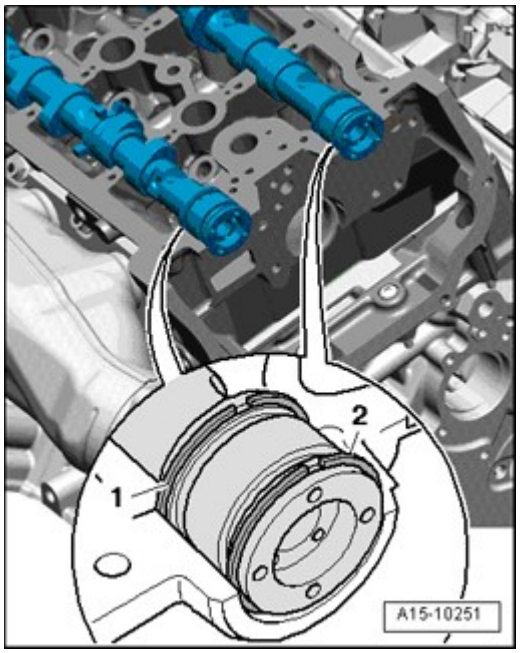

Fig. 193: Removing Ignition Coils With Power Output Stages Using Ignition Coil Puller T40039
Courtesy of VOLKSWAGEN UNITED STATES, INC.

- Remove ignition coils with power output stages - **2** - using Ignition Coil Puller T40039.

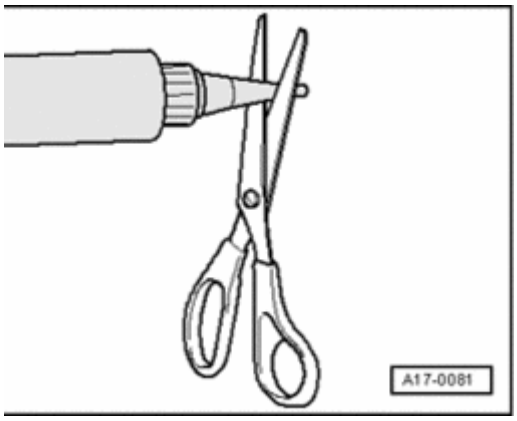

Fig. 194: Removing Valve Housing From Cylinder Head Cover
Courtesy of VOLKSWAGEN UNITED STATES, INC.

- Disconnect EVAP line from cylinder head cover - **1** -.
- Remove the valve housing from the cylinder head cover - **arrows** -.

 © 2011 Mitchell Repair Information Company, LLC.

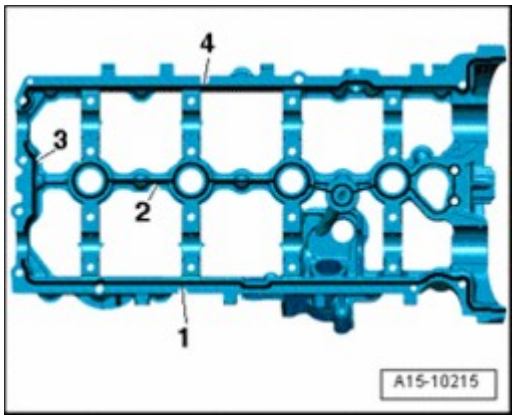

Fig. 195: Removing Line For Crankcase Ventilation With Heat Shield From Turbocharger
Courtesy of VOLKSWAGEN UNITED STATES, INC.

- Unfasten the crankcase ventilation line from the turbocharger - **1** -.
- Disconnect the EVAP line to the turbocharger from the cylinder head cover - **2** -.
- Loosen cylinder head cover from outside toward the inside.
- Remove cylinder head cover.

Installing

Installation is performed in the reverse order of removal, noting the following:

NOTE:

- **Replace cylinder head cover gaskets if damaged.**

- Tightening order **Cylinder head cover tightening sequence**
- Observe the correct positioning of the upper toothed belt cover.

Torque specifications

Component	Nm
Toothed belt guard to cylinder block	10 1)

- 1) insert with locking fluid

Cylinder head, removing

 © 2011 Mitchell Repair Information Company, LLC.

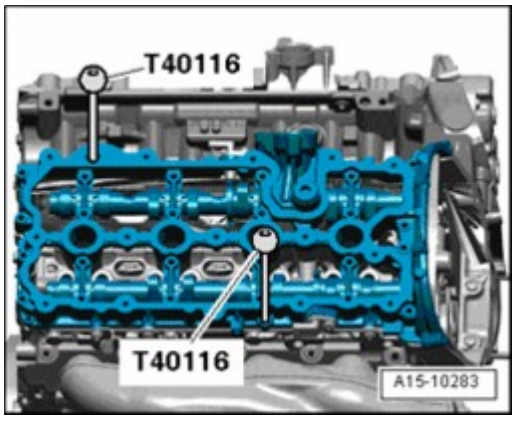

Fig. 196: Identifying Special Tools - Cylinder Head, Removing
Courtesy of VOLKSWAGEN UNITED STATES, INC.

Special tools, testers and auxiliary items required

- Drip tray for workshop crane VAS 6208
- Retainer 3036
- Puller T40001
- Ignition Coil Puller T40039
- Hose clamp pliers V.A.G 1921
- Polydrive bit and drive socket T10070

Special tools, testers and auxiliary items required

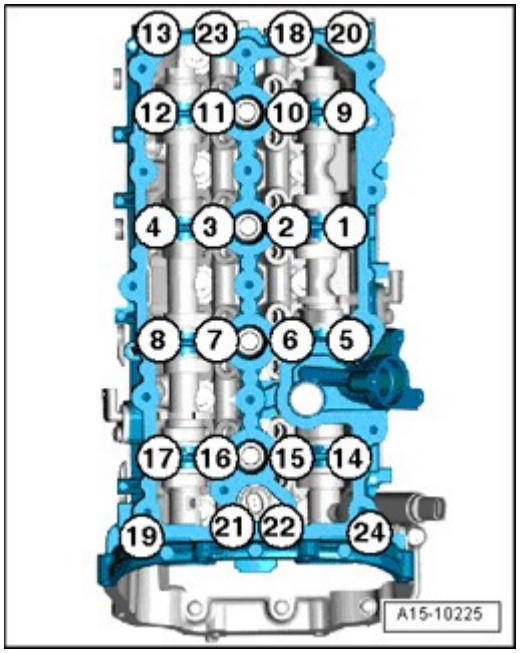

Fig. 197: Identifying Special Tool T10020 Two Hole Pin Wrench
Courtesy of VOLKSWAGEN UNITED STATES, INC.

 © 2011 Mitchell Repair Information Company, LLC.

- Toothed Belt Tensioner T10020

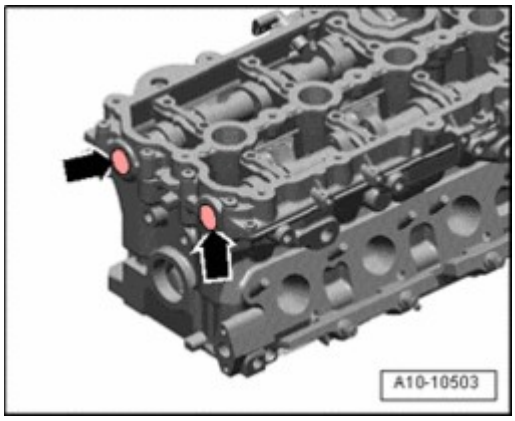

Fig. 198: Locking Tool T40098
Courtesy of VOLKSWAGEN UNITED STATES, INC.

- Locking Tool T40098

Removing

- Engine installed.

NOTE:

- **All cable ties which are opened or cut open when removing, must be replaced in the same position when installing.**
- **Perform oil change if engine oil is contaminated -->**
  - **01 - MAINTENANCE**
  - **01 - MAINTENANCE for MAINTENANCE PROCEDURES - CABRIOLET**
- **If using sealant, note current specifications**

  - Note radio code (for vehicles equipped with coded anti-theft radio/radio navigation system), obtain if necessary.

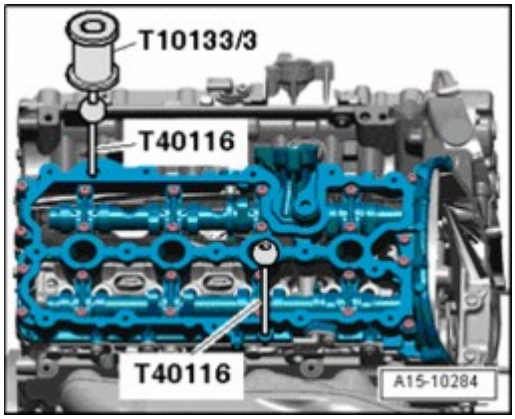

Fig. 199: Removing Engine Cover

 © 2011 Mitchell Repair Information Company, LLC.

Courtesy of VOLKSWAGEN UNITED STATES, INC.

- Remove engine cover - **arrows** -.

CAUTION: Cover cap of expansion tank with rag and open carefully, as hot steam or hot coolant may escape when opening.

- Open cap of coolant expansion tank.

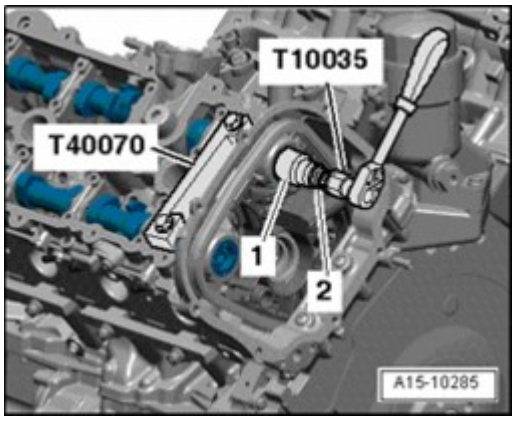

Fig. 200: Identifying Exhaust Pipe Fasteners
Courtesy of VOLKSWAGEN UNITED STATES, INC.

- For vehicles with auxiliary heater, remove bolts - **arrows** - for exhaust pipe of parking heater/auxiliary heater on noise insulation.

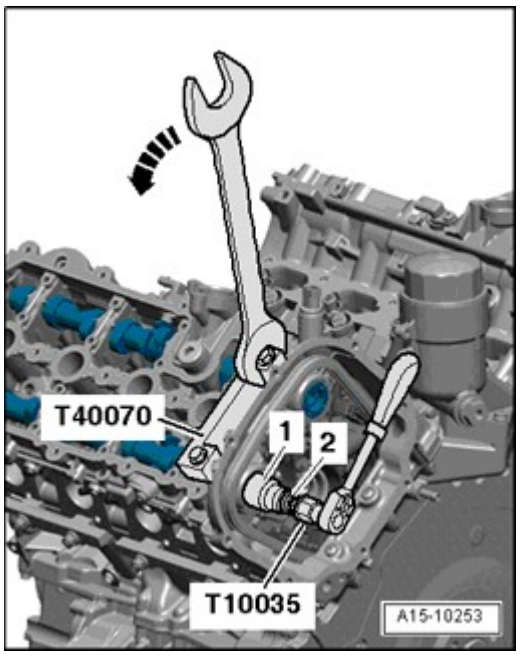

Fig. 201: Identifying Quick-Release Fasteners And Noise Insulation
Courtesy of VOLKSWAGEN UNITED STATES, INC.

 © 2011 Mitchell Repair Information Company, LLC.

- Loosen quick-release fasteners - **1** - and - **2** - and remove front noise insulation.
- Drain engine coolant --> **Cooling system, draining and filling**
- Remove toothed belt --> **Toothed belt, removing and installing**.

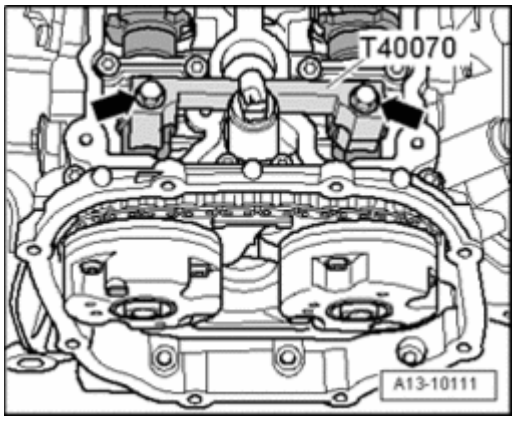

Fig. 202: Loosening Bolt For Camshaft Sprocket Using Retainer 3036
Courtesy of VOLKSWAGEN UNITED STATES, INC.

- Loosen bolt for camshaft sprocket using Retainer 3036.

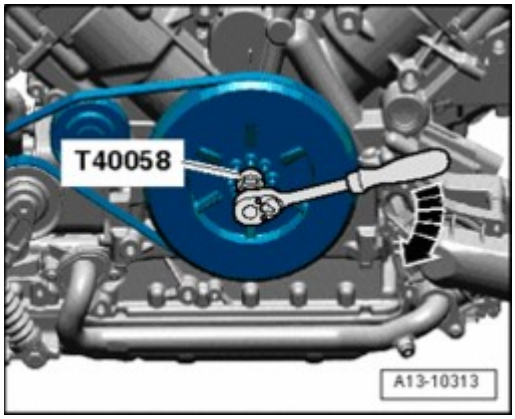

Fig. 203: Pulling Off Camshaft Gear Using Puller T40001, Claw T40001/6 And Claw T40001/7
Courtesy of VOLKSWAGEN UNITED STATES, INC.

- Remove camshaft sprocket using two-arm puller T40001 and claw T40001/6 and claw T40001/7.

 © 2011 Mitchell Repair Information Company, LLC.

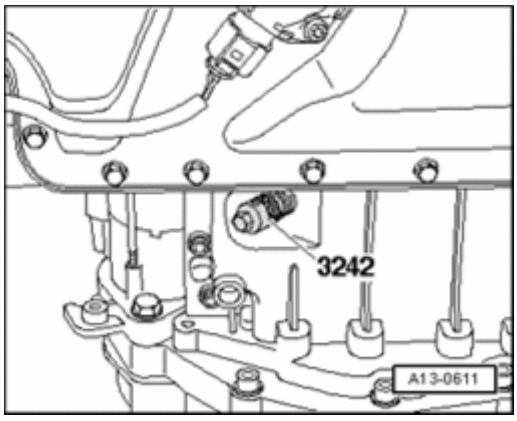

Fig. 204: Removing Rear Toothed Belt Housing From Cylinder Head
Courtesy of VOLKSWAGEN UNITED STATES, INC.

- Remove rear toothed belt housing - **arrows** - from cylinder head.

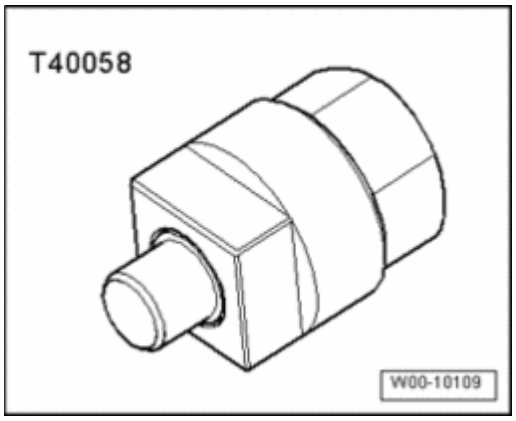

Fig. 205: Identifying Ground (GND) Cable, Vacuum Line To Brake Booster At Bulkhead & EVAP Hose
Courtesy of VOLKSWAGEN UNITED STATES, INC.

- Unfasten Ground (GND) cable - **1** -.
- Disconnect vacuum line to brake booster at bulkhead - **2** -.
- Disconnect EVAP hose - **3** -.

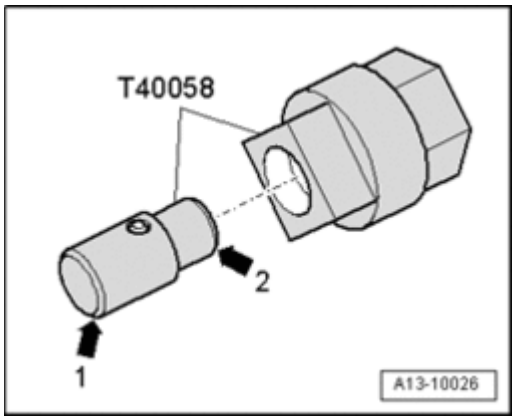

 © 2011 Mitchell Repair Information Company, LLC.

Fig. 206: Removing Coolant Hoses And Unfastening Coolant Expansion Tank
Courtesy of VOLKSWAGEN UNITED STATES, INC.

- Remove coolant hoses - **1 and 2** - and unfasten coolant expansion tank - **arrow** -.
- Disconnect electrical connection at Engine Coolant Level (ECL) Warning Switch F66 at bottom of coolant expansion tank.

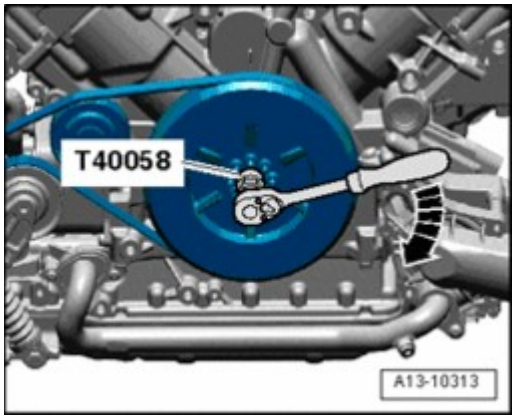

Fig. 207: Separating Electrical Connector From Charge Air Pressure Sensor G31 & Removing Left Charge Air Hose
Courtesy of VOLKSWAGEN UNITED STATES, INC.

- Separate electrical connector from Charge Air Pressure Sensor G31 - **1** -.
- Remove left charge air hose - **2** -.

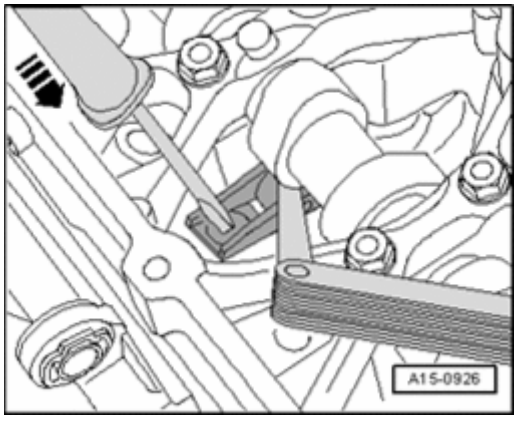

Fig. 208: Removing Air Duct Hoses
Courtesy of VOLKSWAGEN UNITED STATES, INC.

- Remove air duct hose - **1** - to turbocharger at bottom right.
- Remove air duct hose - **2** - to charge air cooler at lock carrier.

 © 2011 Mitchell Repair Information Company, LLC.

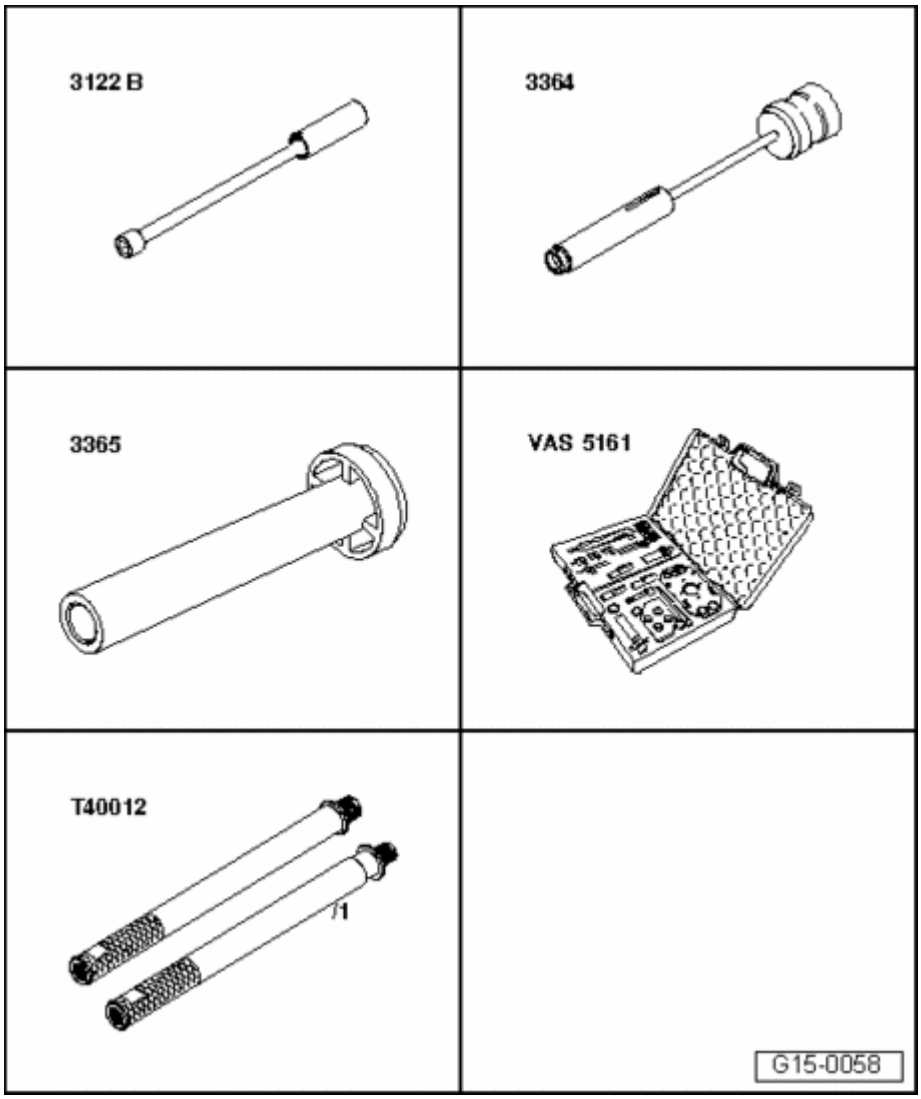

Fig. 209: Disconnecting Connector & Separating Intake Hose
Courtesy of VOLKSWAGEN UNITED STATES, INC.

- Disconnect connector - **1 and 2** - and free up cable.

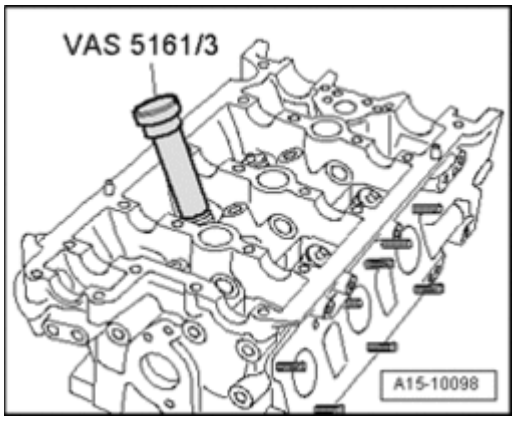

 © 2011 Mitchell Repair Information Company, LLC.

Fig. 210: Removing Oil Supply Line For Turbocharger At Cylinder Block & Bolting Of Support For Turbocharger
Courtesy of VOLKSWAGEN UNITED STATES, INC.

- Remove oil supply line for turbocharger at cylinder block - **1** -.
- Remove bolt - **2** - of support for turbocharger.

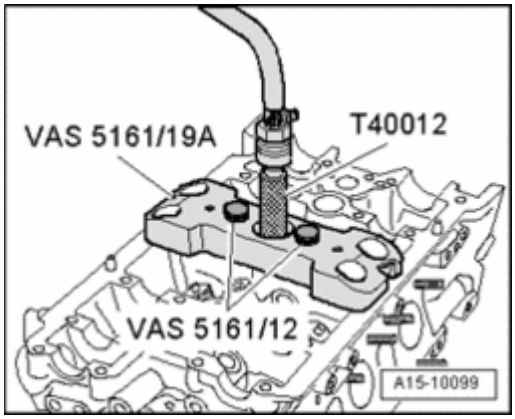

Fig. 211: Removing Oil Supply Line For Turbocharger
Courtesy of VOLKSWAGEN UNITED STATES, INC.

- Remove oil supply line for turbocharger - **arrows** -.

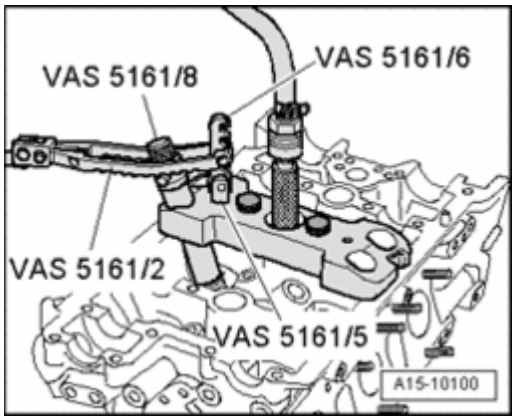

Fig. 212: Disconnecting Oil Return Line From Turbocharger
Courtesy of VOLKSWAGEN UNITED STATES, INC.

- Disconnect oil return line - **arrows** - from turbocharger.

 © 2011 Mitchell Repair Information Company, LLC.

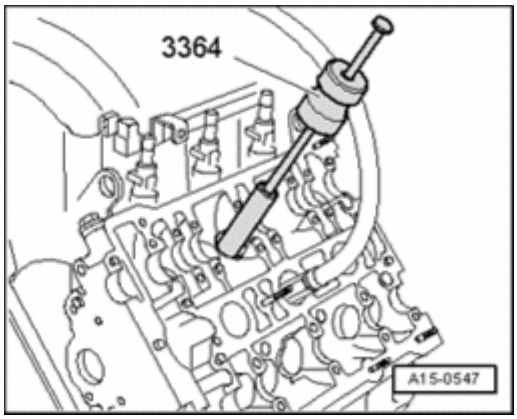

Fig. 213: Loosening Bolt Of Support For Turbocharger By 2 Turns
Courtesy of VOLKSWAGEN UNITED STATES, INC.

- Loosen bolt - **1** - of support for turbocharger by 2 turns.
- Remove intake manifold --> - **24 - MULTIPORT FUEL INJECTION (MFI)**
- Remove catalytic converter --> **Catalytic converter, removing and installing**
- Remove cylinder head cover --> **Cylinder head cover, removing and installing**

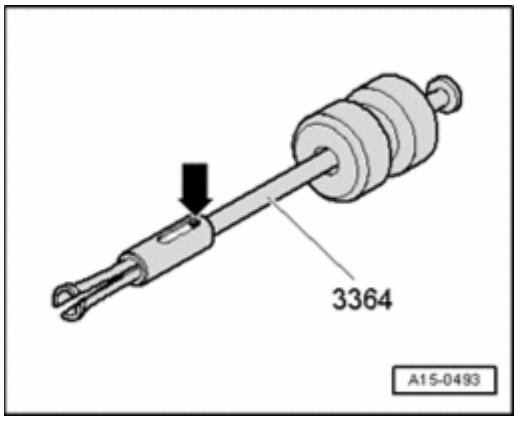

Fig. 214: Identifying Cylinder Head Bolts Loosing Sequence
Courtesy of VOLKSWAGEN UNITED STATES, INC.

- Loosen cylinder head bolts, paying attention to sequence of cylinder head bolts.

NOTE:

- **Verify that all hose and line connections between engine, transmission and body have been disconnected.**

- Remove cylinder head.

Cylinder head, installing

NOTE:

- **Replace cylinder head bolts.**
- **Always replace self-locking nuts, bolts which have been tightened to**

 © 2011 Mitchell Repair Information Company, LLC.

tightening torque as well as gaskets and O-rings.

- **Secure all hose connections using hose clamps of series-production status**
- **Carefully remove residual sealant from cylinder head and cylinder block. Make sure that no long scrapes or scratches result.**
- **Carefully remove all grinding and sanding residue.**
- **Only unpack new cylinder head gasket immediately prior to installation.**
- **Handle gasket carefully. Damages to the silicone layer and in areas of recesses may result in leaks.**
- **There must be no oil or coolant in the blind holes for the cylinder head bolts in the cylinder block.**
- **Hot bolt paste**

CAUTION: Only turn over the engine at the crankshaft in direction of engine rotation (clockwise).

NOTE:

- **Turning over the engine is performed at the center bolt of the crankshaft.**

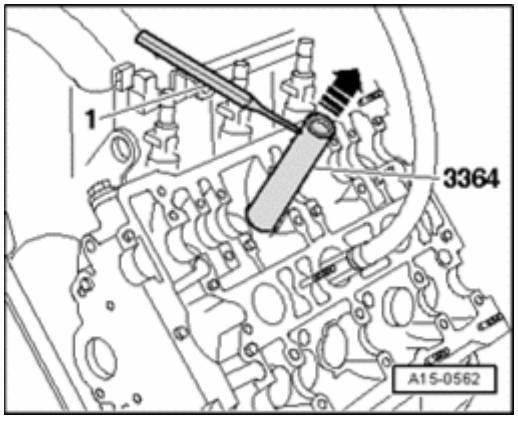

Fig. 215: Bringing Marking On Camshaft Gear To Alignment With Marking On Toothed Belt Guard
Courtesy of VOLKSWAGEN UNITED STATES, INC.

- Bring marking on camshaft gear to alignment with marking on toothed belt guard. Recesses - **arrows** - now point to each other vertically.
- In the event the crankshaft has been rotated in the meantime: Set piston of cylinder 1 to TDC and turn crankshaft back again slightly.
- Set cylinder head gasket in place.

 © 2011 Mitchell Repair Information Company, LLC.

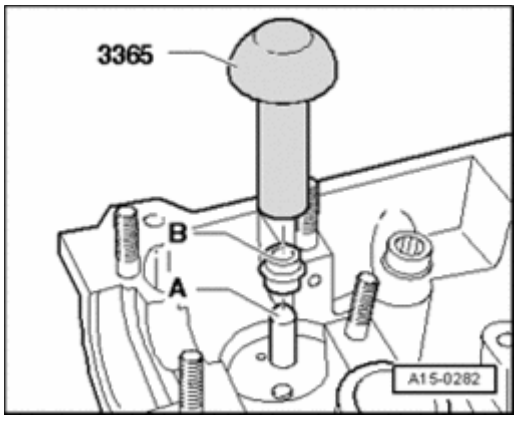

Fig. 216: Identifying Cylinder Block Centering Pins
Courtesy of VOLKSWAGEN UNITED STATES, INC.

Pay attention to centering pins in cylinder block - **arrows** -.

- Observe cylinder head seal location, identification: Replacement part number must be visible from intake side

- Set cylinder head in place.
- Insert cylinder head bolts and tighten by hand.

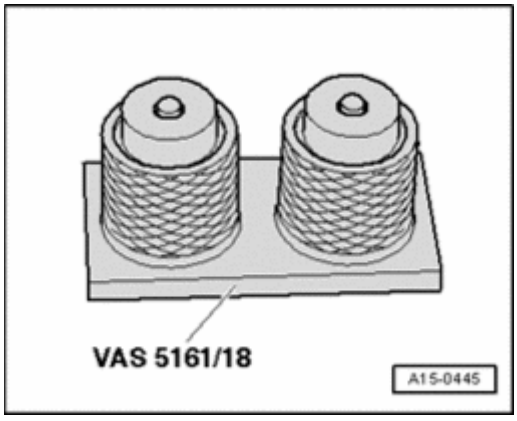

Fig. 217: Identifying Cylinder Head Bolts Tightening Sequence
Courtesy of VOLKSWAGEN UNITED STATES, INC.

- Tighten cylinder head in sequence indicated, in two stages as follows:
- Tighten with torque wrench:

- 1. Step: 40 Nm

- Tighten using a solid wrench:

- 2. Step: 180 ° ($^{1}/_{2}$ turn) further (2 x 90 ° further is permissible)

 © 2011 Mitchell Repair Information Company, LLC.

NOTE:

- **There is no requirement to retighten the cylinder head bolts after repairs.**

- Install cylinder head cover --> **Cylinder head, removing**.
- Install toothed belt --> **Toothed belt, removing and installing**.
- Install ribbed belt --> **Ribbed belt, removing and installing**.
- Electrical connections and routing --> Electrical Wiring Diagrams, Troubleshooting and Component Locations

- Install intake manifold --> - **24 - MULTIPORT FUEL INJECTION (MFI)**
- Connect battery --> **27 BATTERY, STARTER, GENERATOR, CRUISE CONTROL**
- Install fuel system --> - **24 - MULTIPORT FUEL INJECTION (MFI)**
- Check oil level -->
  - **01 - MAINTENANCE**
  - **01 - MAINTENANCE** for MAINTENANCE PROCEDURES - CABRIOLET

  .

- Fill with coolant --> **Cooling system, draining and filling**.

NOTE:

- **Only reuse drained coolant if cylinder head or engine block was not replaced.**
- **Dirty coolant must not be re-used.**

- Install lock carrier with attachments -->
  - **50 BODY, FRONT**
  - **50 - BODY - FRONT** for BODY EXTERIOR - CABRIOLET

  .

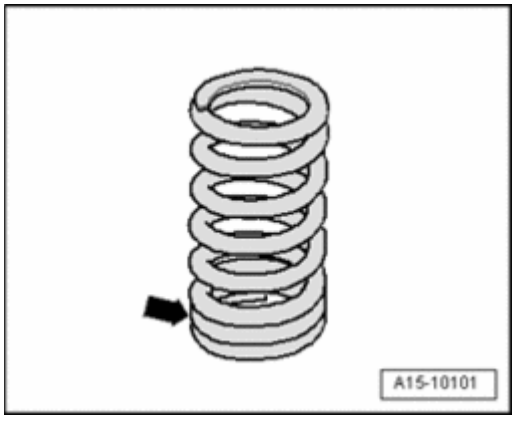

Fig. 218: Identifying Lock Carrier With Attachments
Courtesy of VOLKSWAGEN UNITED STATES, INC.

- Place torque support stop onto rubber buffer for torque support under its own weight and tighten nuts -

 © 2011 Mitchell Repair Information Company, LLC.

arrows -.

- Install front bumper cover -->
  - **63 BUMPER**
  - **63 - BUMPERS** for BODY EXTERIOR - CABRIOLET

.

- Check headlight adjustment -->
  - **01 - MAINTENANCE**
  - **01 - MAINTENANCE** for MAINTENANCE PROCEDURES - CABRIOLET

.

CAUTION: Do not use a battery charger for starting assistance! There is the risk that the vehicle control modules could be damaged.

Torque specifications

Component		Nm
Bolts/nuts	M6	10
	M8	20
Exceptions:		
Front exhaust pipe to turbocharger		30 1)3)
Cylinder head cover to cylinder head		10
Toothed belt guard to cylinder block		10 2)
Battery clamp to battery terminal		6
Torque support stop		28

- 1) Replace bolt or nut
- 2) Insert using locking compound
- 3) Coat studs of exhaust manifold and threads of oxygen sensor with hot bolt paste; Hot bolt paste

Compression pressures, checking

 © 2011 Mitchell Repair Information Company, LLC.

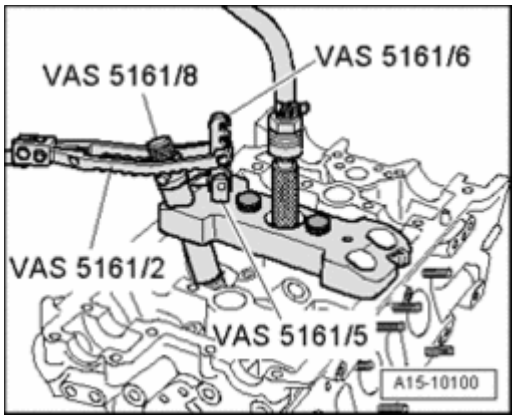

Fig. 219: Identifying Special Tools - Compression Pressures, Checking
Courtesy of VOLKSWAGEN UNITED STATES, INC.

Special tools, testers and auxiliary items required

- Compression tester V.A.G 1763
- Spark plug removal tool 3122 B
- Ignition Coil Puller T40039
- Spring-type clip pliers VAS 5024 A

Test sequence

NOTE:

- **Engine oil temperature min. 30 °C**
- **Battery voltage at least 12.7 V**

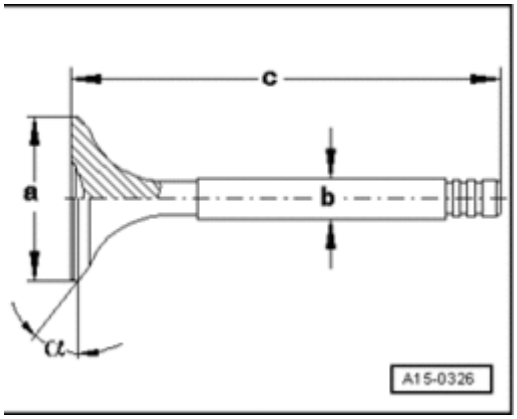

Fig. 220: Removing Engine Cover
Courtesy of VOLKSWAGEN UNITED STATES, INC.

- Remove engine cover - **arrows** -.

 © 2011 Mitchell Repair Information Company, LLC.

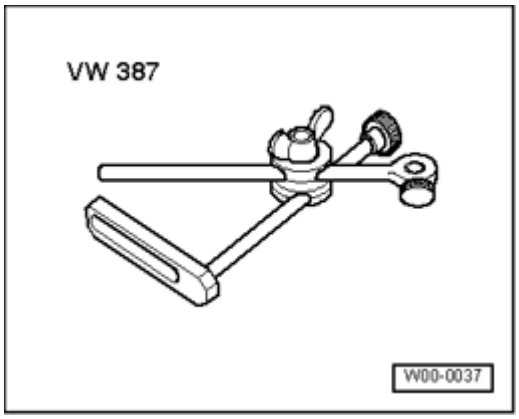

Fig. 221: Removing Bolts & Disconnecting Connector From Ignition Coils
Courtesy of VOLKSWAGEN UNITED STATES, INC.

- Remove bolts - **1** -.
- Disconnect connector - **2** - from ignition coils and free up cable.

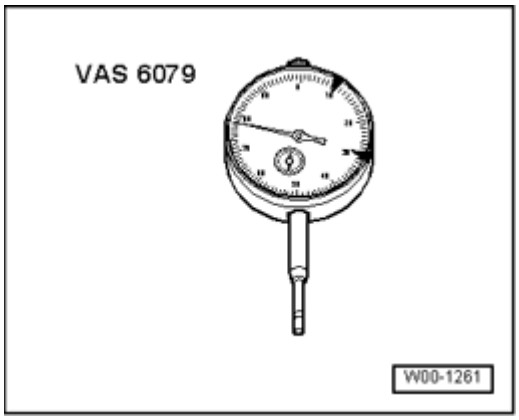

Fig. 222: Removing Ignition Coils With Power Output Stages Using Ignition Coil Puller T40039
Courtesy of VOLKSWAGEN UNITED STATES, INC.

- Remove ignition coils with power output stages - **2** - using Ignition Coil Puller T40039.
- Remove spark plugs, using spark plug removal tool 3122 B.
- Disconnect 8-pin connector from fuel injectors. Refer to *8-pin harness connector for fuel injectors* under **Component locations beneath intake manifold**
- Check compression using compression tester V.A.G 1763 and adapter V.A.G 1763/6.

NOTE:

- **Using tester: Operating instructions**

- Operate starter until tester shows no further pressure increase.

Compression pressure:

New bar positive pressure	Wear limit bar positive pressure	Difference between cylinders

 © 2011 Mitchell Repair Information Company, LLC.

		bar positive pressure
11.0 to 14.0	7.0	max. 3.0

- Install spark plugs and ignition coils.
- Read out ECM DTC memory Vehicle Diagnostic, Testing and Information System VAS 5051 in "Guided Fault Finding" function

NOTE:

- **By separating the connections, DTCs are stored to memory. After the test, check fault memory and erase, if necessary.**

Torque specifications

Component	Nm
Spark plugs in cylinder head	30

VALVETRAIN, SERVICING

Valvetrain, servicing

NOTE:

- **Cylinder head and guide frame may only be replaced together.**
- **After installing the camshafts, the engine may not be started for approx. 30 minutes. The hydraulic equalization elements must seat themselves (otherwise the valves will crash into the pistons).**
- **After working on the valvetrain and lifters, carefully rotate the crankshaft by hand at least 2 full revolutions before starting to be sure that valves do not strike the pistons.**
- **Always replace gaskets and seals.**

Cylinder head, camshafts, overview

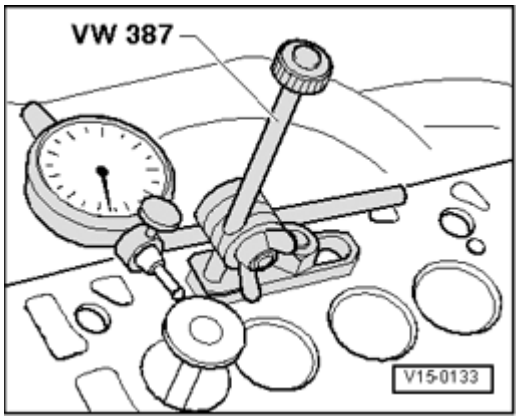

Fig. 223: Cylinder Head, Camshafts, Overview
Courtesy of VOLKSWAGEN UNITED STATES, INC.

 © 2011 Mitchell Repair Information Company, LLC.

1 - 50 Nm plus an additional 180 °

2 - Camshaft sprocket

3 - Seal

- Replacing --> **Sealing ring for exhaust camshaft, replacing**.

4 - Cylinder head

5 - Valve guide

- Checking --> **Valve guides, checking**

6 - Valve stem seal

7 - Valve spring

8 - Top valve spring retainer

9 - Valve keepers

10 - Hydraulic valve play balancing element

- Do not interchange
- Lubricate contact surface

11 - Fitted key

- Check for secure seat

12 - Exhaust camshaft

- Check radial clearance using Plastigage (roller cam follower removed) wear limit: 0.1 mm
- Run-out: max. 0.035 mm

13 - Bearing bracket

- With integrated camshaft bearings
- Clean sealing surface, reworking is not permitted.
- Remove old sealant residue.

14 - 8 Nm plus an additional 90 °

- Replace

 © 2011 Mitchell Repair Information Company, LLC.

15 - Camshaft adjuster

16 - 20 Nm plus an additional 45 °

- Replace

17 - Intake camshaft

- Check radial clearance using Plastigage (roller cam follower removed) wear limit: 0.1 mm
- Run-out: max. 0.035 mm

18 - Chain tensioner

- Removing --> **Camshaft adjuster, removing and installing** Camshaft timing adjusters, removing and installing
- Before removing, secure with Locking Pin T10115

19 - Drive chain

- Check for wear

20 - 10 Nm

21 - 10 Nm

22 - Phase sensor

23 - Exhaust valve

- Do not rework, only lapping is permitted
- Valve dimensions **Valve dimensions**
- Check valve guides --> **Valve guides, checking**

24 - Intake valve

- Do not rework, only lapping is permitted
- Valve dimensions **Valve dimensions**
- Check valve guides --> **Valve guides, checking**

25 - Sealing cap

- Replace
- Removing: When guide frame is installed: Pierce through one side of cover with an awl and pry it out
- Installing: Without sealant press in with thrust piece 3334 1 to 2 mm deep

 © 2011 Mitchell Repair Information Company, LLC.

Valve dimensions

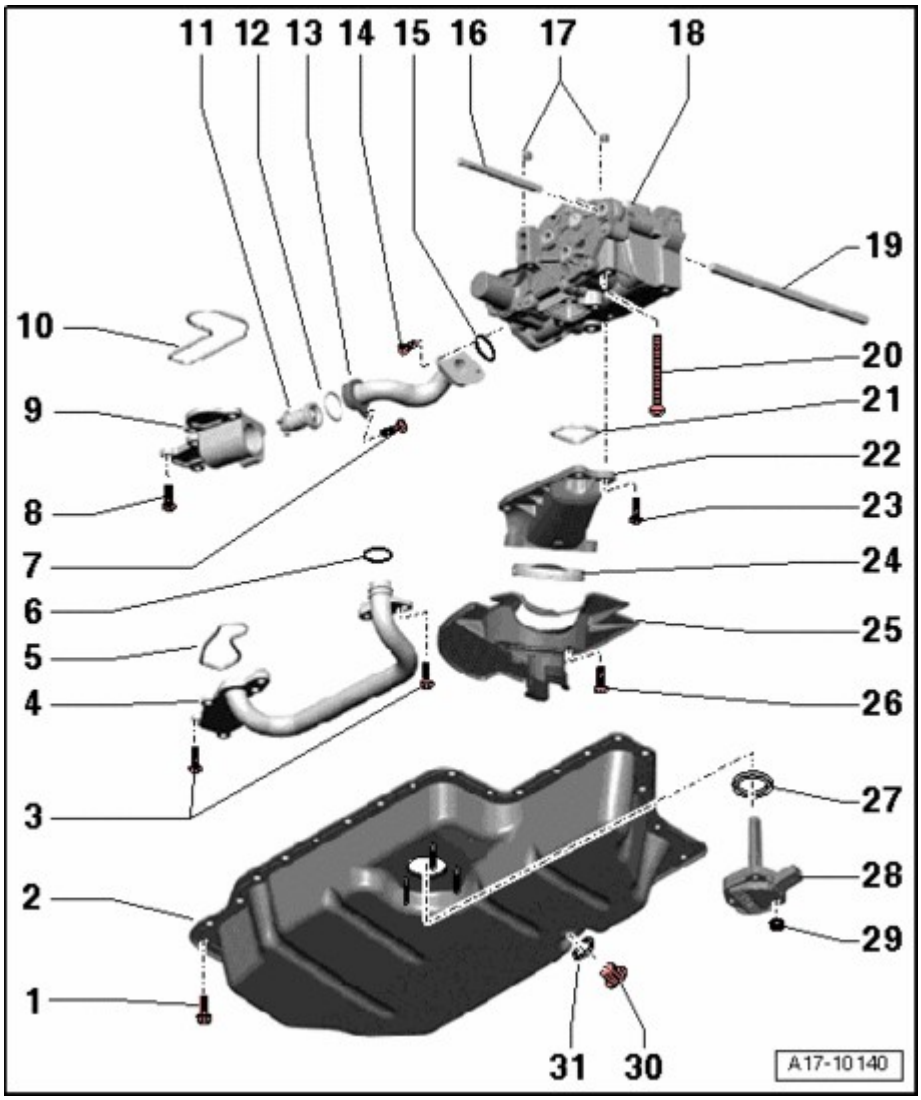

Fig. 224: Valve Dimensions
Courtesy of VOLKSWAGEN UNITED STATES, INC.

NOTE:

- **Intake and exhaust valves must not be refaced by grinding. Only lapping is permitted.**

Dimension		Intake valve	Exhaust valve
Dia. a	mm	33.85 ± 0.10	28.0 ± 0.1
Dia. b	mm	5.98 ± 0.01	5.96 ± 0.01
c	mm	104.0 ± 0.2	101.9 ± 0.2
a	Angle °	45	45

Camshaft adjuster, removing and installing

 © 2011 Mitchell Repair Information Company, LLC.

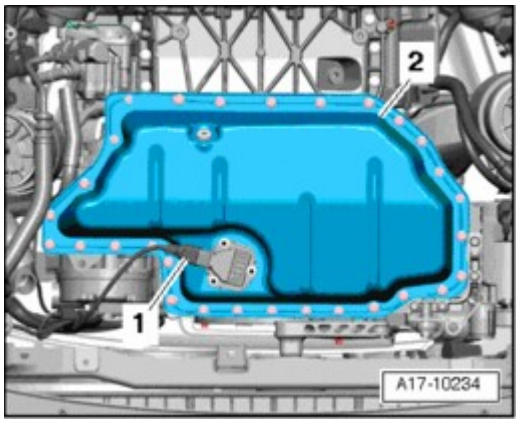

Fig. 225: Identifying Special Tools - Camshaft Adjuster, Removing And Installing
Courtesy of VOLKSWAGEN UNITED STATES, INC.

Special tools, testers and auxiliary items required

- Multi-point socket T40080
- Camshaft locator T10252
- Toothed Belt Tensioner T10020
- Locking Pin T10115

Removing

- Remove high-pressure pump. --> - **24 - MULTIPORT FUEL INJECTION (MFI)**

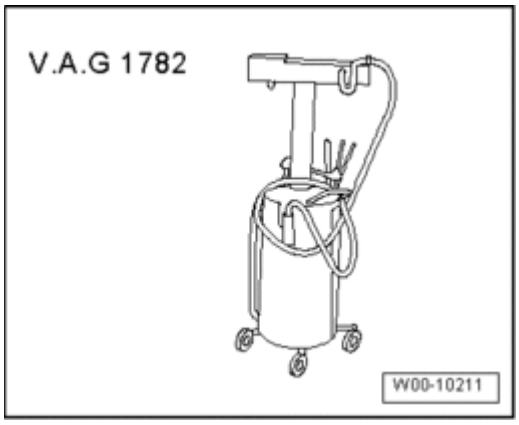

Fig. 226: Removing Bolts
Courtesy of VOLKSWAGEN UNITED STATES, INC.

- Remove bolts - **arrows** -.
- Remove cylinder head cover --> **Cylinder head cover, removing and installing**
- Remove vacuum pump.

 © 2011 Mitchell Repair Information Company, LLC.

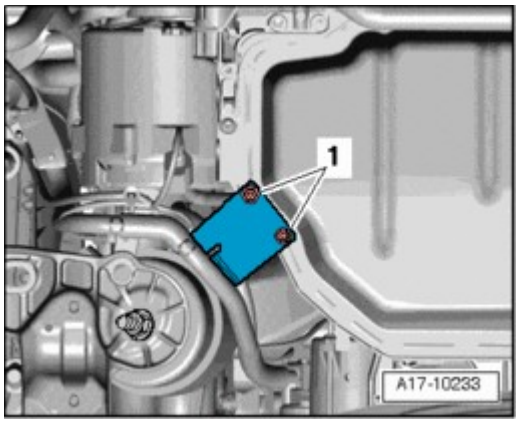

Fig. 227: Removing Camshaft Adjuster Housing
Courtesy of VOLKSWAGEN UNITED STATES, INC.

- Remove camshaft adjuster housing - **arrows** -.

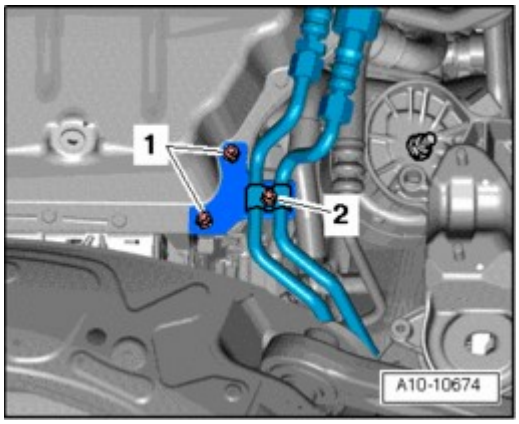

Fig. 228: Bringing Marking On Camshaft Gear To Alignment With Marking On Toothed Belt Guard
Courtesy of VOLKSWAGEN UNITED STATES, INC.

- Bring marking on camshaft gear to alignment with marking on toothed belt guard. Recesses - **arrows** - now point to each other vertically.

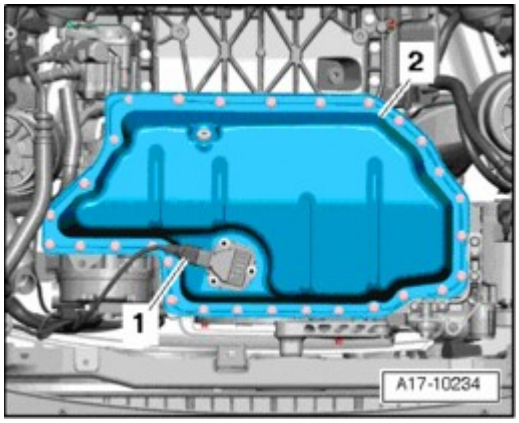

Fig. 229: Identifying Camshafts Secured Using Camshaft Locator T10252

 © 2011 Mitchell Repair Information Company, LLC.

Courtesy of VOLKSWAGEN UNITED STATES, INC.

- Install camshaft locator T10252 as shown and secure - **arrows** -.
- Loosen mounting bolt from camshaft adjuster using socket insert T40080.

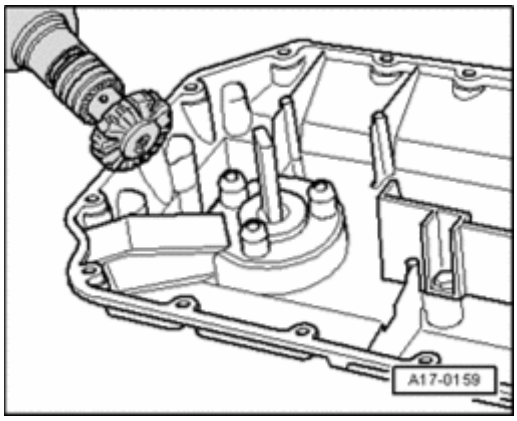

Fig. 230: Compressing Chain Tensioner And Securing Using Locking Pin T10115
Courtesy of VOLKSWAGEN UNITED STATES, INC.

- Compress chain tensioner - **arrow A** - and secure it using Locking Pin T10115 - **arrow B** -.
- Remove mounting bolt from camshaft adjuster and remove it with chain.

Installing

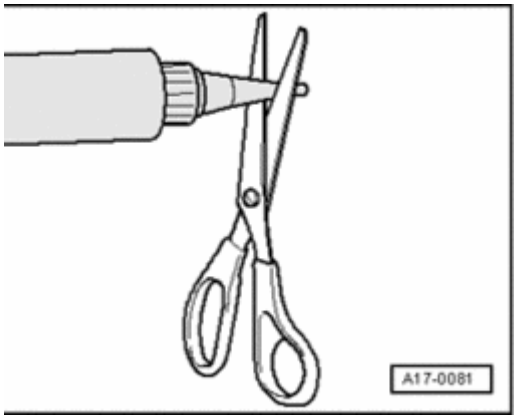

Fig. 231: Identifying Camshafts Secured Using Camshaft Locator T10252
Courtesy of VOLKSWAGEN UNITED STATES, INC.

- The camshafts must be fixed in place with camshaft locating tool T10252.

- Place chain on to camshaft adjuster.

 © 2011 Mitchell Repair Information Company, LLC.

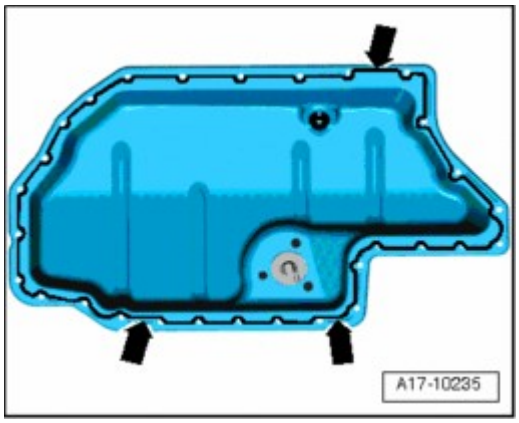

Fig. 232: Identifying Camshaft Adjuster & Exhaust Camshaft Notch And Pin
Courtesy of VOLKSWAGEN UNITED STATES, INC.

- Hold camshaft adjuster in front of exhaust camshaft so that the notch - **A** - and pin - **B** - are positioned across from one another.

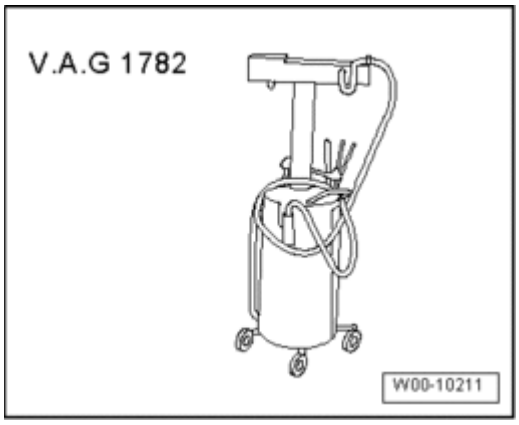

Fig. 233: Identifying Intake Camshaft Chain Position
Courtesy of VOLKSWAGEN UNITED STATES, INC.

- Place chain in this position on to chain sprocket of intake camshaft, first at top - **arrow** -.

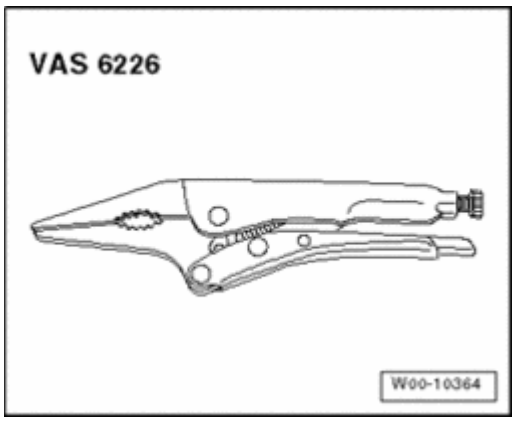

Fig. 234: Turning Intake Camshaft Using Pin Wrench T10020 Until Camshaft Adjuster Fits On To

 © 2011 Mitchell Repair Information Company, LLC.

Camshaft
Courtesy of VOLKSWAGEN UNITED STATES, INC.

- Slowly turn intake camshaft with Toothed Belt Tensioner T10020 in direction of - **arrow A** - until camshaft adjuster fits onto camshaft.

NOTE:

- **If pin does not fit into notch: Remove chain and place chain on again.**

- Tighten camshaft adjuster screw. To do so, use socket insert T40080.

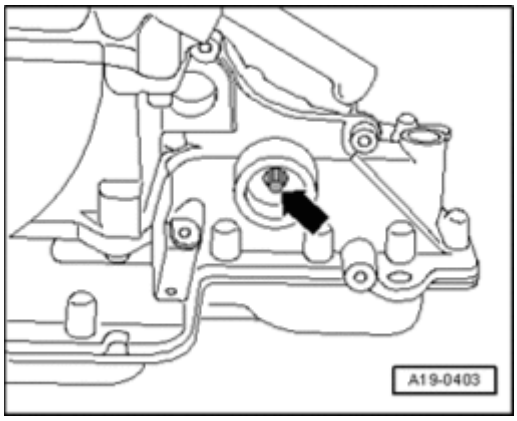

Fig. 235: Compressing Chain Tensioner And Securing Using Locking Pin T10115
Courtesy of VOLKSWAGEN UNITED STATES, INC.

- Remove Locking Pin T10115 - **arrow B** -.

The rest of assembly is basically a reverse of disassembling sequence.

- Install intake manifold --> - **24 - MULTIPORT FUEL INJECTION (MFI)**
- Install high pressure pump --> - **24 - MULTIPORT FUEL INJECTION (MFI)**
- Install vacuum pump --> **47 - BRAKES - HYDRAULIC COMPONENTS** .

Torque specifications

Cylinder head, camshafts --> **Cylinder head, camshafts, overview**

Cylinder head, assembly overview --> **Cylinder head, assembly overview**

Camshafts, removing and installing

Special tools, testers and auxiliary items required

 © 2011 Mitchell Repair Information Company, LLC.

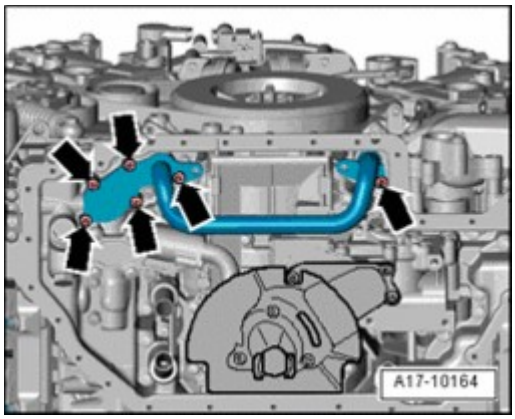

Fig. 236: Identifying Puller T40001
Courtesy of VOLKSWAGEN UNITED STATES, INC.

- Puller T40001

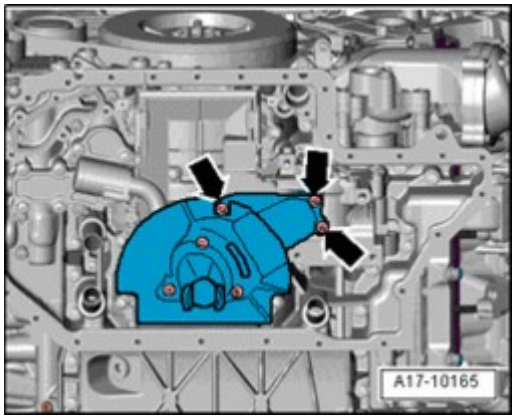

Fig. 237: Identifying Retainer 3036
Courtesy of VOLKSWAGEN UNITED STATES, INC.

- Retainer 3036

Removing

NOTE:

- **Sealing surfaces on guide frame at bottom and on cylinder head at top must not be worked.**
- **Camshaft bearings are integrated in cylinder head or in guide frame. Before removing guide frame, tension on toothed belt must be released.**
- **If guide frame was loosened, camshaft sealing ring and sealing cap must be replaced.**

- Remove cylinder head cover --> **Cylinder head cover, removing and installing**
- Remove camshaft adjuster --> **Camshaft adjuster, removing and installing**
- Remove toothed belt --> **Toothed belt, removing and installing**

 © 2011 Mitchell Repair Information Company, LLC.

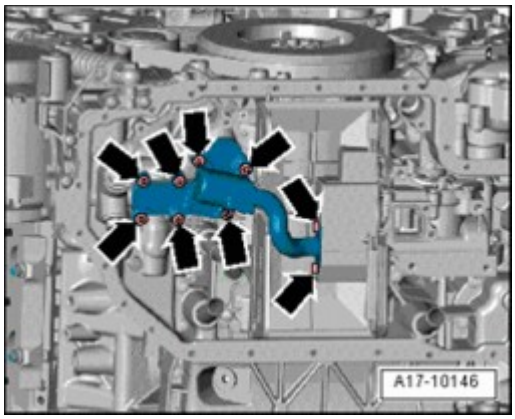

Fig. 238: Counterholding Camshaft Gear Using 3036 Retainer
Courtesy of VOLKSWAGEN UNITED STATES, INC.

- Loosen camshaft gear with Retainer 3036.

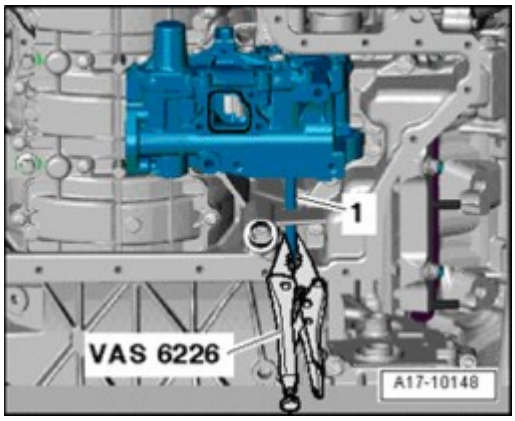

Fig. 239: Pulling Off Camshaft Gear Using Puller T40001, Claw T40001/6 And Claw T40001/7
Courtesy of VOLKSWAGEN UNITED STATES, INC.

- Pull off camshaft gear using puller T40001 , claw T40001/6 and claw T40001/7.
- Remove toothed belt guard at rear of cylinder head.
- Loosen bolts of guide frame evenly from outside toward inside and remove guide frame.
- Carefully remove camshaft upward and place on a clean surface.

 © 2011 Mitchell Repair Information Company, LLC.

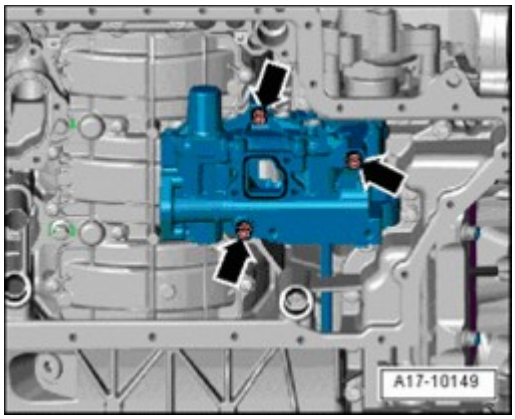

Fig. 240: Identifying Sealant Bead (D 154,103 A1) In Clean Groove Of Guide Frame
Courtesy of VOLKSWAGEN UNITED STATES, INC.

- Remove old sealant from guide frame groove and from sealing surfaces.
- Prevent dirt and adhesive residue from entering cylinder head.

Installing

NOTE:

- **Sealing surfaces must be completely free of oil and grease.**
- **The pistons must not be positioned at TDC.**
- **Make sure that all roller cam followers make contact correctly on valve stem ends.**

- Oil journal surfaces of camshafts.

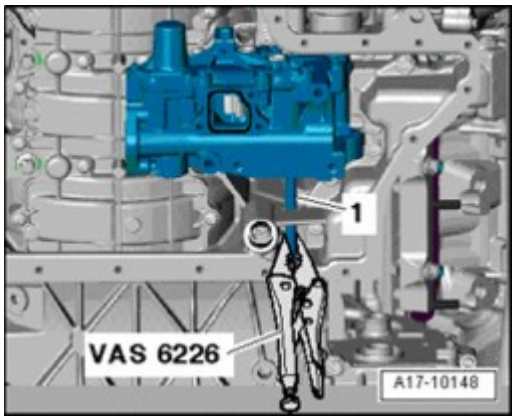

Fig. 241: Bringing Marking On Camshaft Gear To Alignment With Marking On Toothed Belt Guard
Courtesy of VOLKSWAGEN UNITED STATES, INC.

- Carefully insert camshafts into camshaft bearings of cylinder head. The cam lobes - **A** - of cylinder 4 must face toward one another.

 © 2011 Mitchell Repair Information Company, LLC.

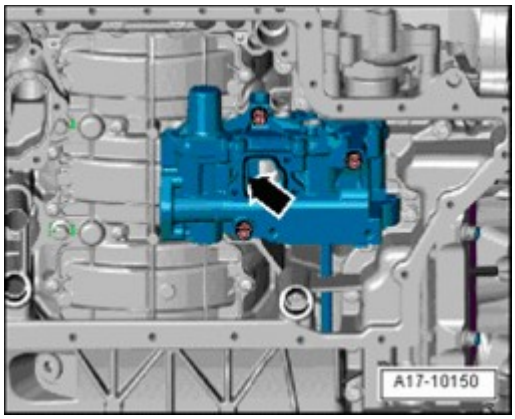

Fig. 242: Identifying Sealant Bead (D 154,103 A1) In Clean Groove Of Guide Frame
Courtesy of VOLKSWAGEN UNITED STATES, INC.

- Apply an even, light sealant bead into clean groove of guide frame.

NOTE:

- **Sealant must not be applied too thickly.**
- **Attaching and bolting the guide frame should be performed without interruption because the sealant begins to harden immediately as soon as it contacts the sealing surfaces.**
- **Note the expiration date of the sealing compound.**

 © 2011 Mitchell Repair Information Company, LLC.

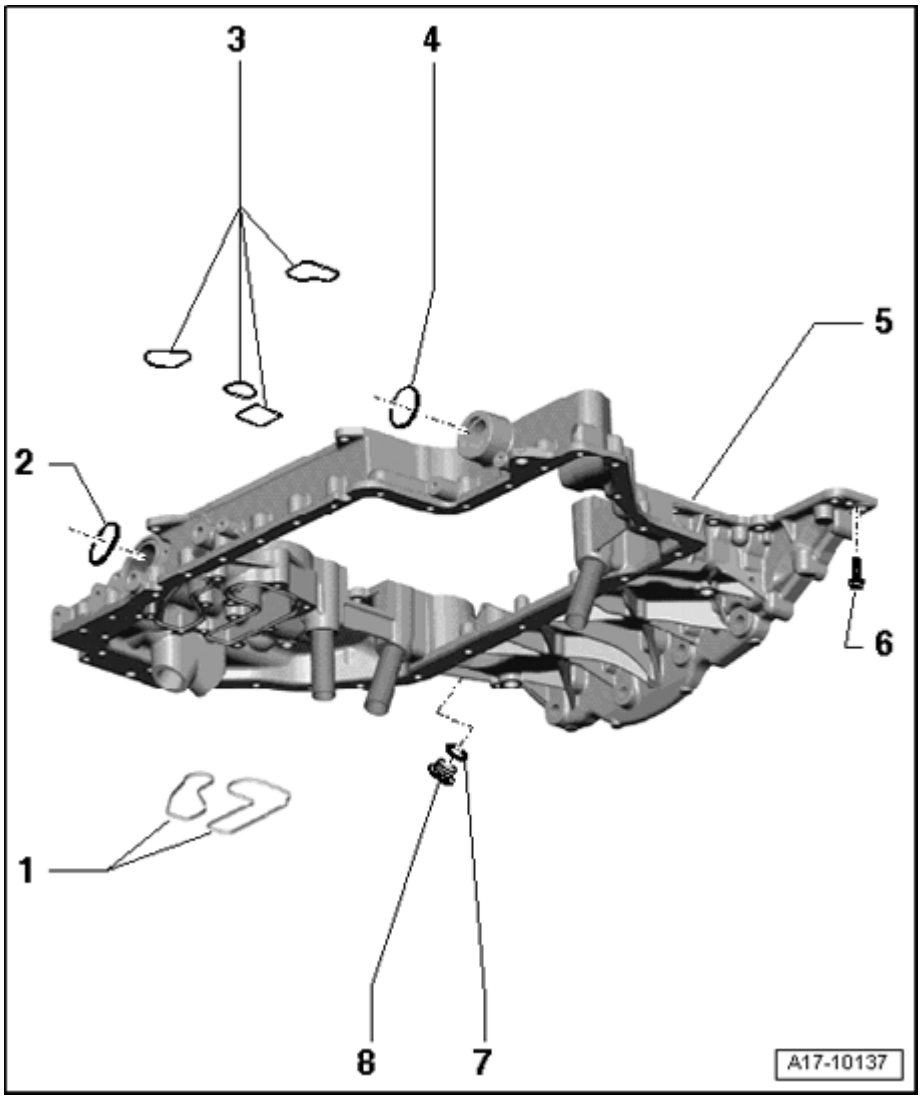

Fig. 243: Setting Guide Frame In Place So That It Can Get By EGR Vacuum Regulator Solenoid Valve N18
Courtesy of VOLKSWAGEN UNITED STATES, INC.

- Set guide frame in place so that it can get by EGR Vacuum Regulator Solenoid Valve N18 - **arrow** -.
- Replace guide frame bolts.
- Gently tighten bolts from inside working toward outside in several stages.

 © 2011 Mitchell Repair Information Company, LLC.

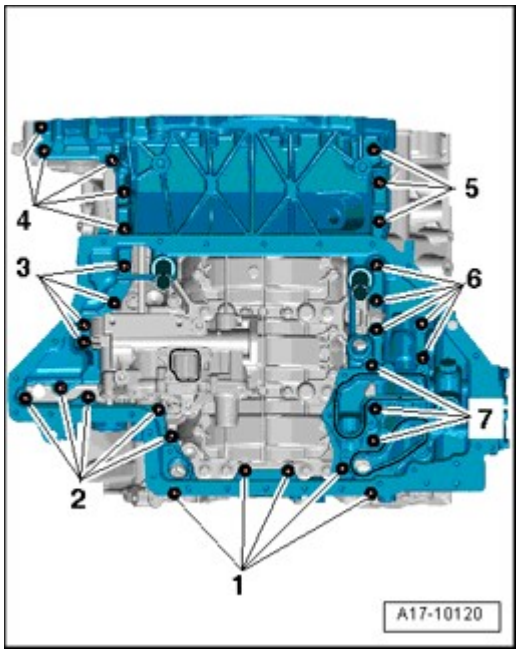

Fig. 244: Identifying Cylinder Head Bolts Tightening Sequence
Courtesy of VOLKSWAGEN UNITED STATES, INC.

- Finally, tighten bolts in sequence shown.
- Drive in sealing cap with thrust piece 3334 approx. 1 to 2 mm deep.
- Install camshaft seal --> **Sealing ring for exhaust camshaft, replacing**
- Install rear toothed belt cover.

- Insert fitting key into camshaft.

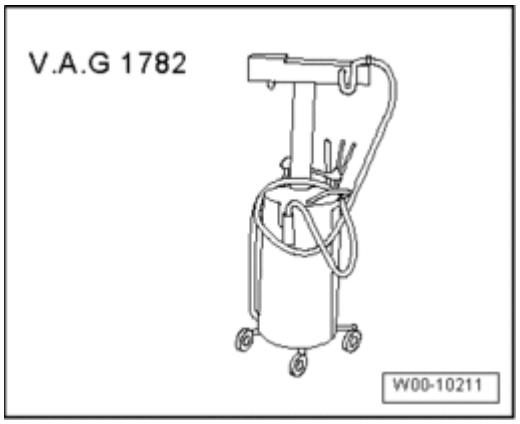

Fig. 245: Counterholding Camshaft Gear Using 3036 Retainer
Courtesy of VOLKSWAGEN UNITED STATES, INC.

- Install camshaft gear. To tighten bolt, hold camshaft gear in place using Retainer 3036.

NOTE:

- **When turning camshaft, pistons may not be at TDC for any cylinder.**

 © 2011 Mitchell Repair Information Company, LLC.

Valves/pistons may be damaged.

- **Be sure fitting keys are properly seated.**

- Install toothed belt --> **Toothed belt, removing and installing**
- Install camshaft adjuster --> **Camshaft adjuster, removing and installing**
- Install cylinder head cover --> **Cylinder head cover, removing and installing**
- Install lock carrier with attachments -->
  - **50 BODY, FRONT**
  - **50 - BODY - FRONT** for BODY EXTERIOR - CABRIOLET

.

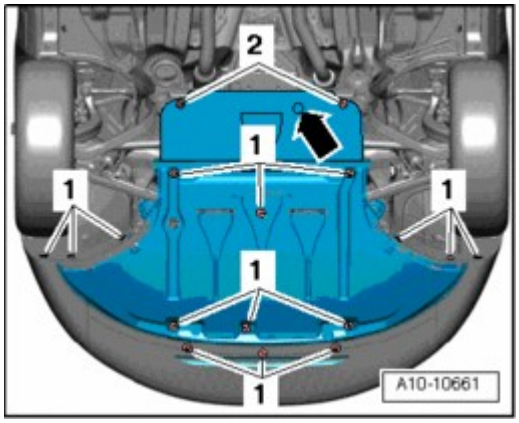

Fig. 246: Identifying Lock Carrier With Attachments
Courtesy of VOLKSWAGEN UNITED STATES, INC.

- Place torque support stop onto rubber buffer for torque support under its own weight and tighten nuts - **arrows** -.
- Install front bumper cover -->
  - **63 BUMPER**
  - **63 - BUMPERS** for BODY EXTERIOR - CABRIOLET

.

- Check headlight adjustment -->
  - **01 - MAINTENANCE**
  - **01 - MAINTENANCE** for MAINTENANCE PROCEDURES - CABRIOLET

.

The rest of assembly is basically a reverse of disassembling sequence.

Torque specifications

Cylinder head, camshafts --> **Cylinder head, camshafts, overview**

Valve stem seals, replacing

 © 2011 Mitchell Repair Information Company, LLC.

(with cylinder head installed)

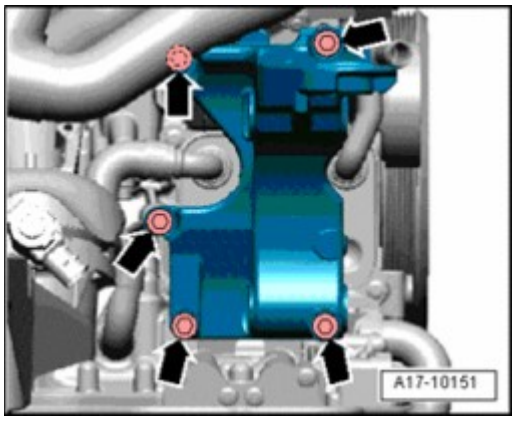

Fig. 247: Identifying Special Tools - Valve Stem Seals, Replacing
Courtesy of VOLKSWAGEN UNITED STATES, INC.

Special tools, testers and auxiliary items required

- Spark plug removal tool 3122 B
- Valve seal removal tool 3364
- Valve stem seal driver 3365
- Adapter T40012
- Torque wrench V.A.G 1331
- Valve cotters assembly/disassembly device VAS 5161
- Guide Plate F/2.0 Ltr FSI Engine VAS 5161/19A

Valve stem seals, removing

- Remove camshafts --> **Camshafts, removing and installing**

NOTE:

- **To replace the valve stem seals of the exhaust valves for cylinder 3 and 4, the EGR Vacuum Regulator Solenoid Valve N18 must also be removed.**

- Remove roller rocker levers and place them on a clean surface. Make sure that roller cam followers are not interchanged.
- Using spark plug removal tool 3122 B , remove spark plugs.

 © 2011 Mitchell Repair Information Company, LLC.

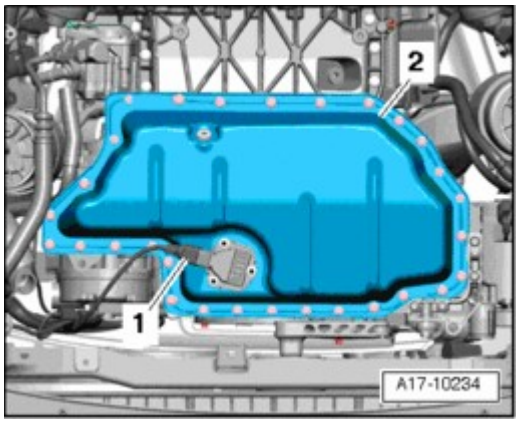

Fig. 248: Tightening Install Guide Plate VAS 5161/19 With Knurled Bolts VAS 5161/12 On Cylinder Head
Courtesy of VOLKSWAGEN UNITED STATES, INC.

- Fasten Guide Plate F/2.0 Ltr FSI Engine VAS 5161/19A to cylinder as shown using Knurled Screws VAS 5161/12.
- Adjust piston of respective cylinder to "Bottom Dead Center position".
- Install adapter T40012 into spark plug thread and connect compressed air of at least 6 bar positive pressure.

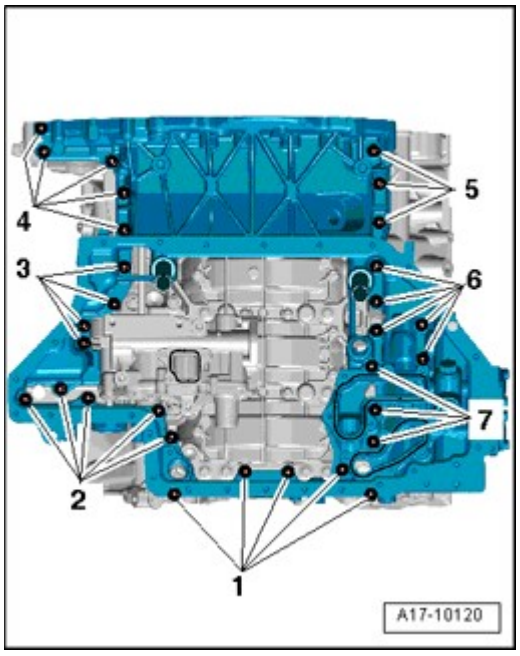

Fig. 249: Using Drift VAS 5161/3 And A Plastic Mallet To Loosen Stuck Valve Keepers
Courtesy of VOLKSWAGEN UNITED STATES, INC.

- Using drift VAS 5161/3 and a plastic mallet, tap to loosen stuck valve keepers.

 © 2011 Mitchell Repair Information Company, LLC.

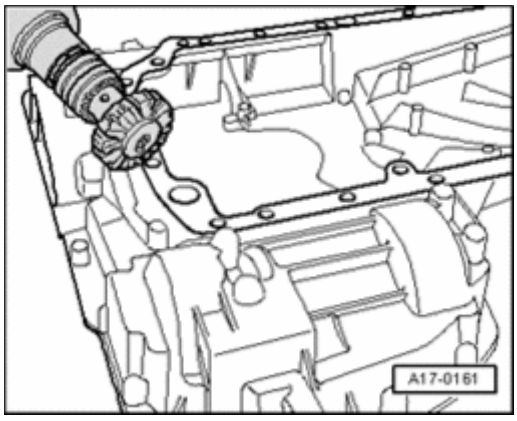

Fig. 250: Installing Valve Cotter Disassembly And Assembly Device VAS 5161 - Intake Side
Courtesy of VOLKSWAGEN UNITED STATES, INC.

- Install Engaging Device VAS 5161/6 with Installation Fork VAS 5161/5 in Guide Plate F/2.0 Ltr FSI Engine VAS 5161/19A.
- Insert Installation Cartridge VAS 5161/8 in Guide Plate F/2.0 Ltr FSI Engine VAS 5161/19A.
- Engage pressure fork VAS 5161/2 on engaging device VAS 5161/6.

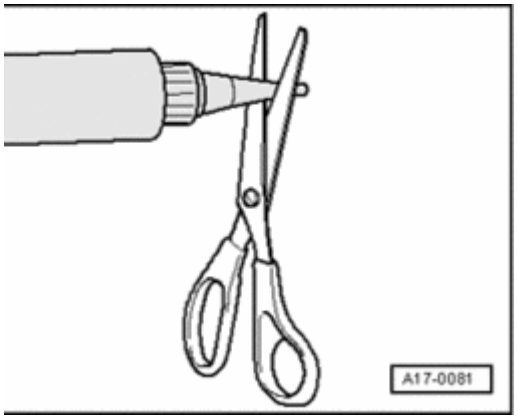

Fig. 251: Installing Valve Cotter Disassembly And Assembly Device VAS 5161 - Exhaust Side
Courtesy of VOLKSWAGEN UNITED STATES, INC.

NOTE:

- **On the exhaust side, the pressure fork VAS 5161/2 must be hooked in, as shown.**

- Press down installation cartridge VAS 5161/8. At the same time, turn knurled bolt of installation cartridge VAS 5161/8 clockwise until points engage in valve keepers.
- Lightly move knurled bolt back and forth, this causes the valve keepers to be pressed apart and captured in the installation cartridge.
- Release pressure fork VAS 5161/2.
- Remove installation cartridge VAS 5161/8.

 © 2011 Mitchell Repair Information Company, LLC.

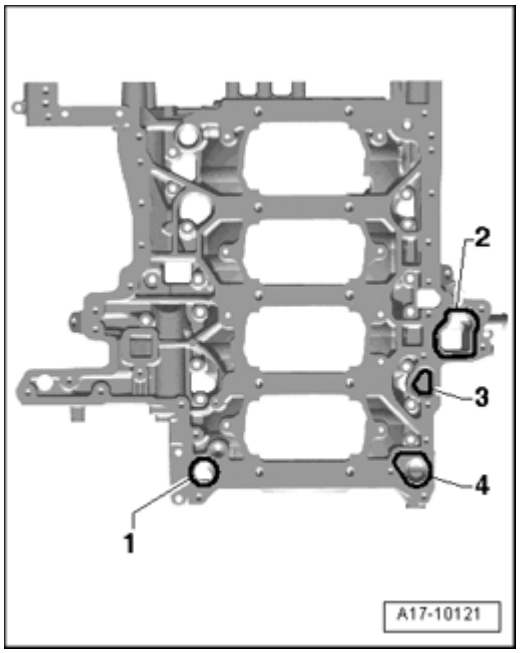

Fig. 252: Identifying Valve Stem Seals Using Valve Seal Removal Tool 3364
Courtesy of VOLKSWAGEN UNITED STATES, INC.

- Remove valve stem seals using Valve Seal Removal Tool 3364.

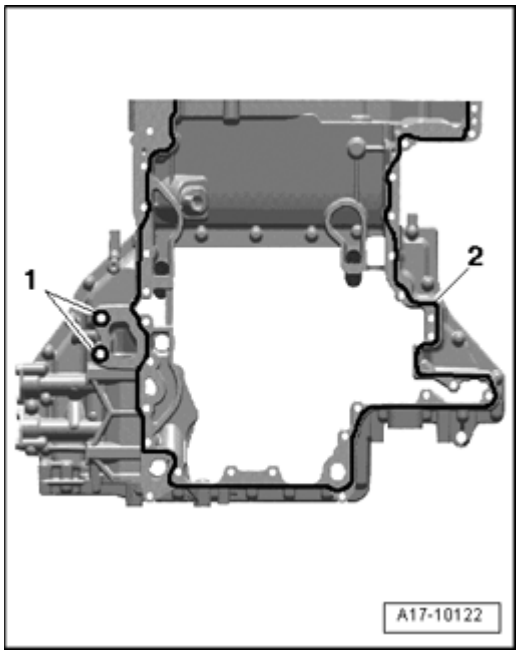

Fig. 253: Identifying Valve Seal Removal Tool 3364
Courtesy of VOLKSWAGEN UNITED STATES, INC.

- In the event valve stem seal driver 3364 cannot be used due to constrained spatial arrangements, drive out spring dowel sleeve - **arrow** - using a drift and remove impact device.

 © 2011 Mitchell Repair Information Company, LLC.

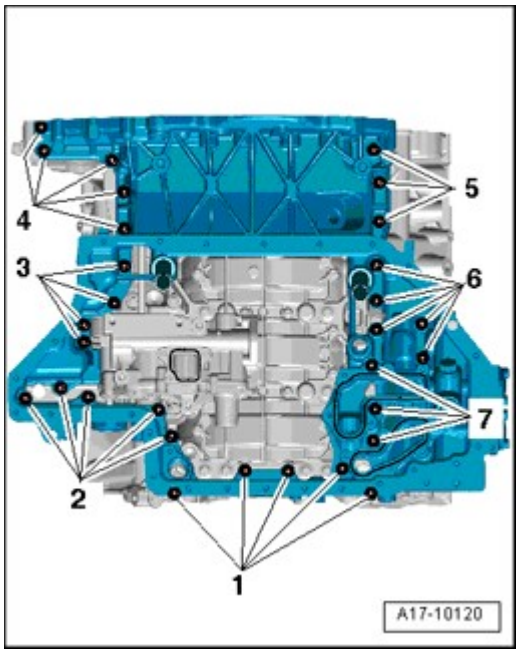

Fig. 254: Placing Lower Part Of Valve Seal Removal Tool 3364 On To Valve Stem Oil Seal
Courtesy of VOLKSWAGEN UNITED STATES, INC.

- Place lower part of valve seal removal tool 3364 onto valve stem seal.
- Insert a drift - **1** - into bore in lower part of extractor device.
- Place a lever at removal tool and pull out valve stem seal - **arrow** -.

Valve stem seals, installing

 © 2011 Mitchell Repair Information Company, LLC.

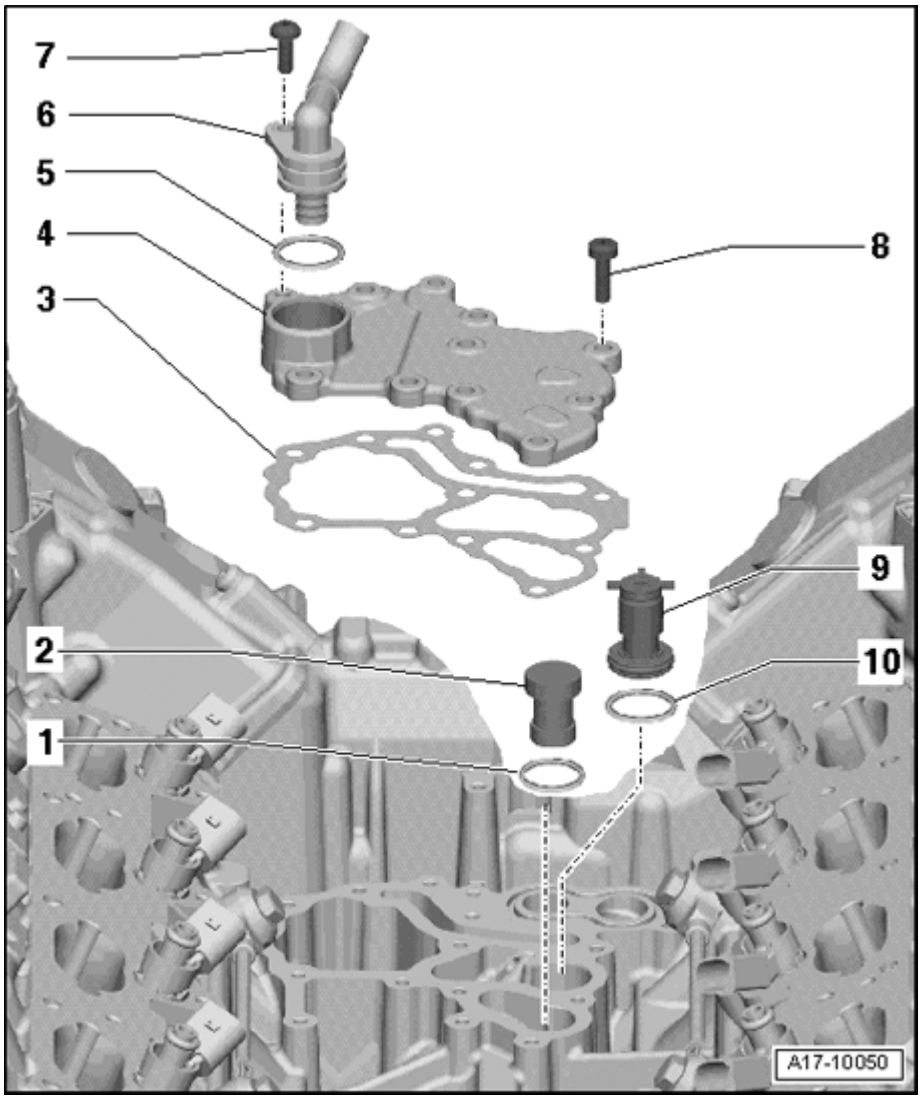

Fig. 255: Identifying Plastic Sleeve, Valve Stem Oil Seal & Valve Stem Seal Driver 3365
Courtesy of VOLKSWAGEN UNITED STATES, INC.

- Place plastic sleeve - **A** - on valve stem to prevent damage to new valve stem oil seals - **B** -.
- Oil sealing lip of valve stem oil seal - **B** - , insert into valve stem seal driver 3365 and carefully slide onto valve guide.
- Remove plastic sleeve - **A** -.
- Insert valve spring and valve spring retainer.

- Install valve cotter disassembly and assembly device VAS 5161 as shown.

 © 2011 Mitchell Repair Information Company, LLC.

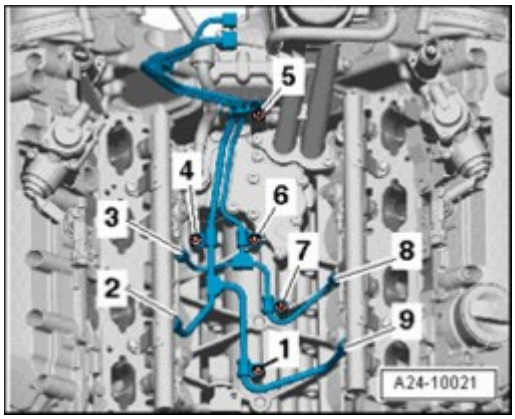

Fig. 256: Installing Valve Cotter Disassembly And Assembly Device VAS 5161 - Intake Side
Courtesy of VOLKSWAGEN UNITED STATES, INC.

Intake side

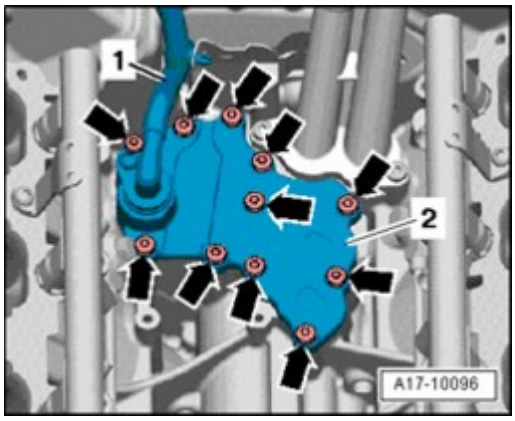

Fig. 257: Installing Valve Cotter Disassembly And Assembly Device VAS 5161 - Exhaust Side
Courtesy of VOLKSWAGEN UNITED STATES, INC.

Exhaust side

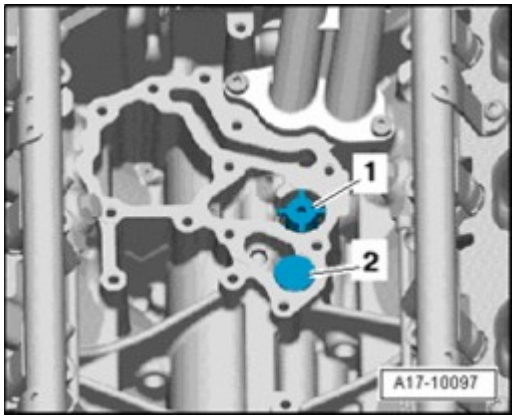

Fig. 258: Identifying Installation Cartridge VAS 5161/8
Courtesy of VOLKSWAGEN UNITED STATES, INC.

 © 2011 Mitchell Repair Information Company, LLC.

NOTE:

- **If the valve keepers were removed from the installation cartridge, they must then be inserted into the insertion device VAS 5161/18.**
- **Press installation cartridge VAS 5161/8 onto insertion device from above and capture the valve keepers.**

- Press down installation cartridge VAS 5161/8 with pressure fork VAS 5161/2 and turn knurled screw of installation cartridge back and forth while pulling it upward at the same time.
- Release pressure fork VAS 5161/2 with knurled bolt pulled.
- Remove valve cotter assembly/disassembly device VAS 5161.

The rest of assembly is basically a reverse of disassembling sequence.

- How to install camshafts --> **Camshafts, removing and installing**

Valve guides, checking

Special tools, testers and auxiliary items required

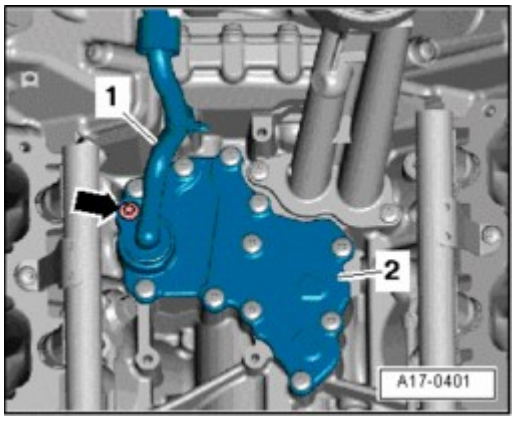

Fig. 259: Identifying Dial Gauge Holder VW 387
Courtesy of VOLKSWAGEN UNITED STATES, INC.

- Dial gauge holder VW 387

 © 2011 Mitchell Repair Information Company, LLC.

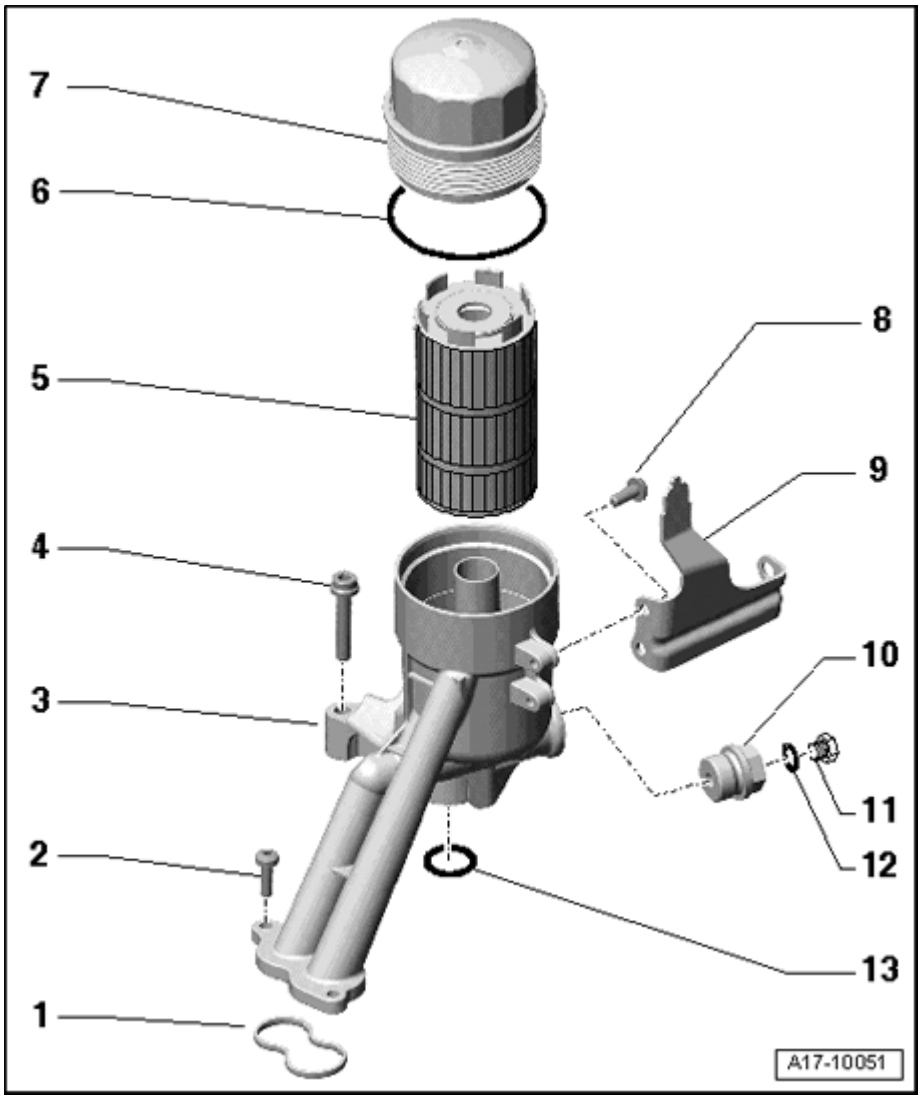

Fig. 260: Identifying Dial Gauge VAS 6079
Courtesy of VOLKSWAGEN UNITED STATES, INC.

- Dial gauge VAS 6079

Test sequence

 © 2011 Mitchell Repair Information Company, LLC.

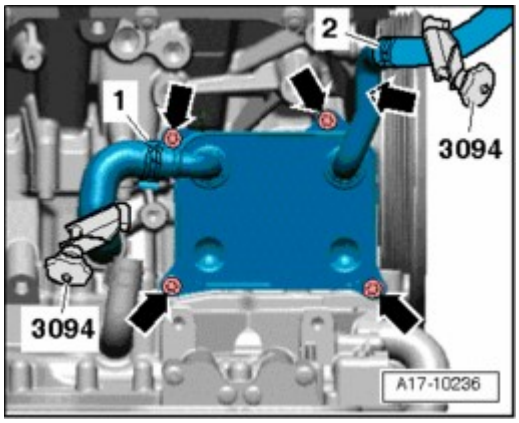

Fig. 261: Identifying Special Tool - VW 387 Installed
Courtesy of VOLKSWAGEN UNITED STATES, INC.

- Insert valve into guide. Valve stem end must be flush with the guide. Due to the slight difference in stem dimensions, ensure that only an intake valve is used in the intake guide and an exhaust valve in the exhaust guide.
- Determine tip clearance.

Wear limit

Intake valve guide	Exhaust valve guide
0.80 mm	0.80 mm

NOTE:

- **If wear limit is exceeded, re-measure using new valves. If wear limit is still exceeded, replace cylinder head.**
- **If the valve is to be replaced as part of a repair, use a new valve for the calculation.**

Sealing ring for exhaust camshaft, replacing

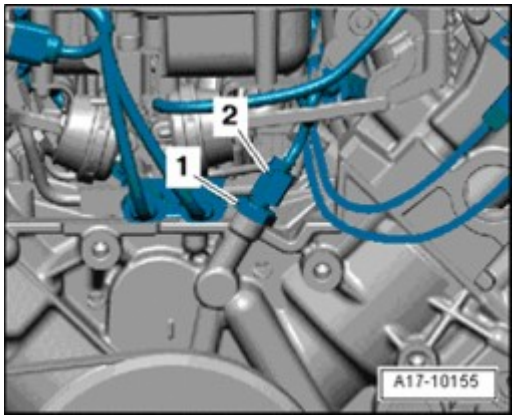

Fig. 262: Identifying Special Tools - Sealing Ring For Exhaust Camshaft, Replacing
Courtesy of VOLKSWAGEN UNITED STATES, INC.

 © 2011 Mitchell Repair Information Company, LLC.

Special tools, testers and auxiliary items required

- Seal remover 2085
- Assembly tool 3066
- Assembly tool T10071
- Puller T40001

Special tools, testers and auxiliary items required

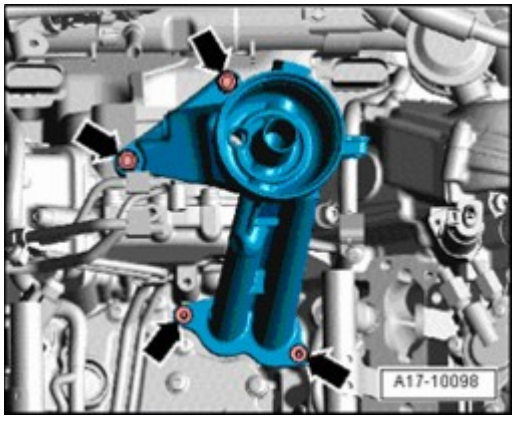

Fig. 263: Identifying Special Tool T10020 Two Hole Pin Wrench
Courtesy of VOLKSWAGEN UNITED STATES, INC.

- Toothed Belt Tensioner T10020

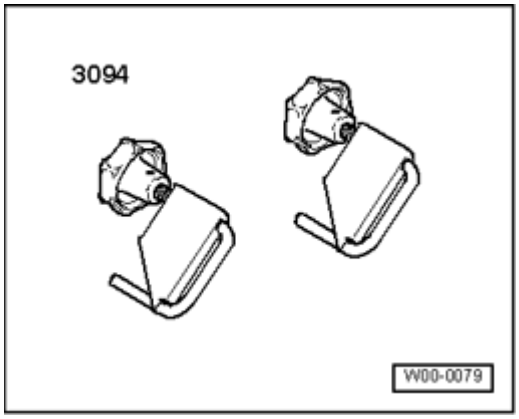

Fig. 264: Locking Tool T40098
Courtesy of VOLKSWAGEN UNITED STATES, INC.

- Locking Tool T40098

Removing

 © 2011 Mitchell Repair Information Company, LLC.

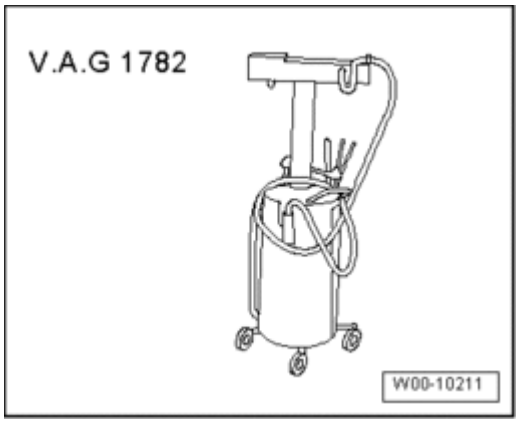

Fig. 265: Removing Engine Cover
Courtesy of VOLKSWAGEN UNITED STATES, INC.

- Remove engine cover - **arrows** -.

CAUTION: Cover cap of expansion tank with rag and open carefully, as hot steam or hot coolant may escape when opening.

- Open cap of coolant expansion tank.

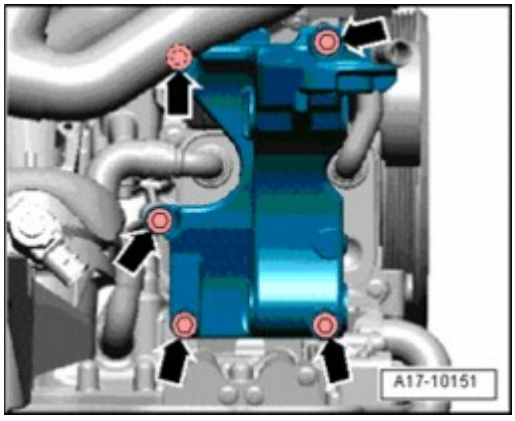

Fig. 266: Identifying Exhaust Pipe Fasteners
Courtesy of VOLKSWAGEN UNITED STATES, INC.

- For vehicles with auxiliary heater, remove bolts - **arrows** - for exhaust pipe of parking heater/auxiliary heater on noise insulation.

 © 2011 Mitchell Repair Information Company, LLC.

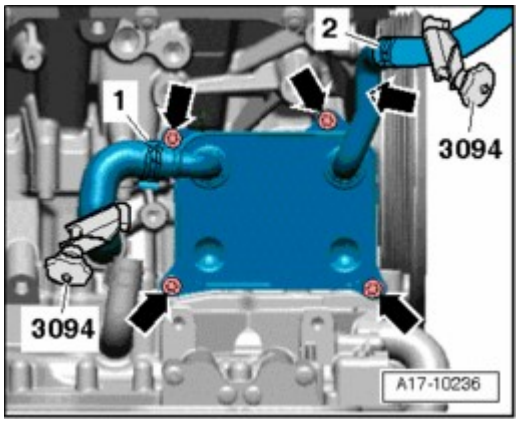

Fig. 267: Identifying Quick-Release Fasteners And Noise Insulation
Courtesy of VOLKSWAGEN UNITED STATES, INC.

- Loosen quick-release fasteners - **1** - and - **2** - and remove front noise insulation.
- Drain engine coolant --> **Cooling system, draining and filling**
- Remove toothed belt --> **Toothed belt, removing and installing**

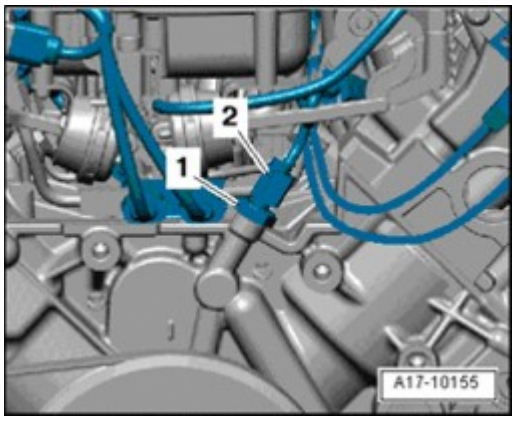

Fig. 268: Counterholding Camshaft Gear Using 3036 Retainer
Courtesy of VOLKSWAGEN UNITED STATES, INC.

- Loosen camshaft sprocket, using Retainer 3036.

 © 2011 Mitchell Repair Information Company, LLC.

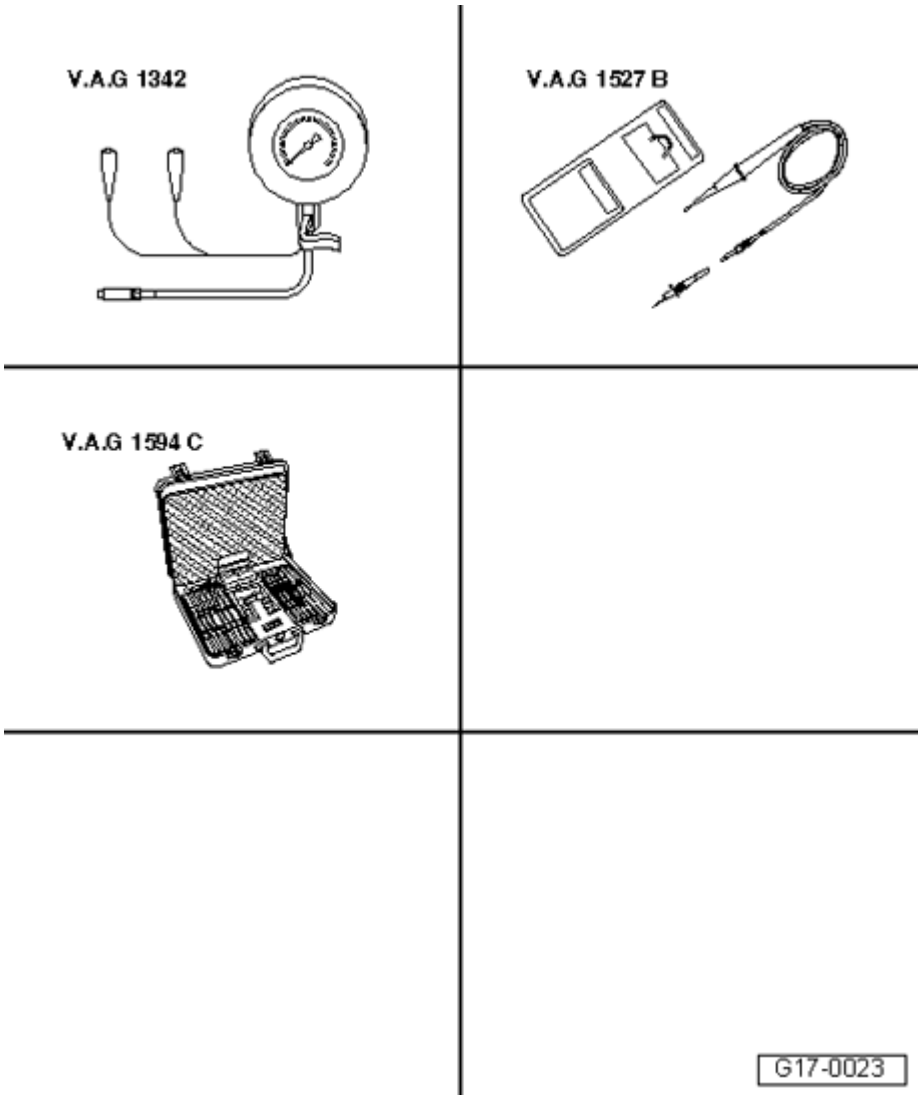

Fig. 269: Pulling Off Camshaft Gear Using Puller T40001, Claw T40001/6 And Claw T40001/7
Courtesy of VOLKSWAGEN UNITED STATES, INC.

- Remove camshaft sprocket using puller T40001 and claw T40001/6 and claw T40001/7.

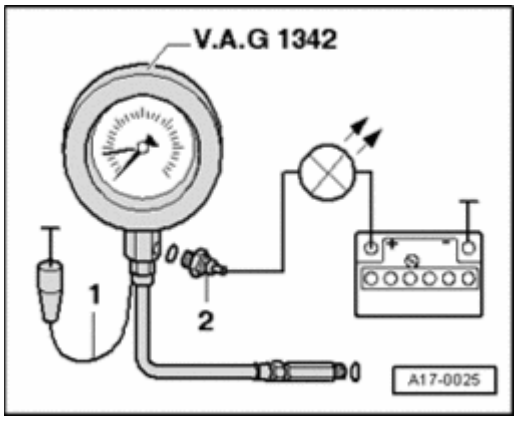

 © 2011 Mitchell Repair Information Company, LLC.

Fig. 270: Identifying Thread Adapter 2085/2
Courtesy of VOLKSWAGEN UNITED STATES, INC.

- To guide seal puller, thread Adapter 2085/2 of seal puller 2085 into camshaft by hand up to stop.
- Remove inner portion of seal puller 2085 two rotations (approx. 3 mm) from outer portion and secure with knurled-head screw.

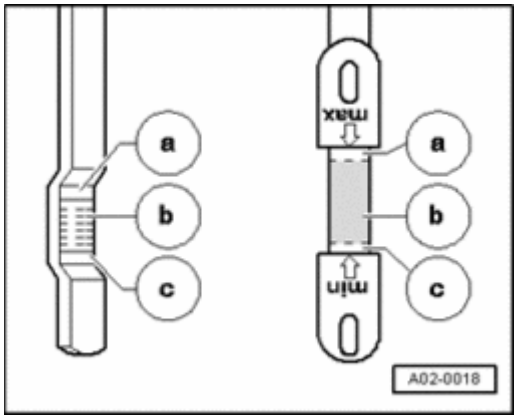

Fig. 271: Positioning And Screwing Bolt Into Oil Seal As Far As Possible With Forced Pressure
Courtesy of VOLKSWAGEN UNITED STATES, INC.

- Grease threaded head of seal puller 2085 , position and screw into oil seal as far as possible with forceful pressure.
- Loosen knurled bolt and turn inner part against camshaft until seal is removed.
- Secure seal remover in a vise at flat spots. Remove seal using pliers

Installing

- Do not oil sealing lip of sealing ring.

 © 2011 Mitchell Repair Information Company, LLC.

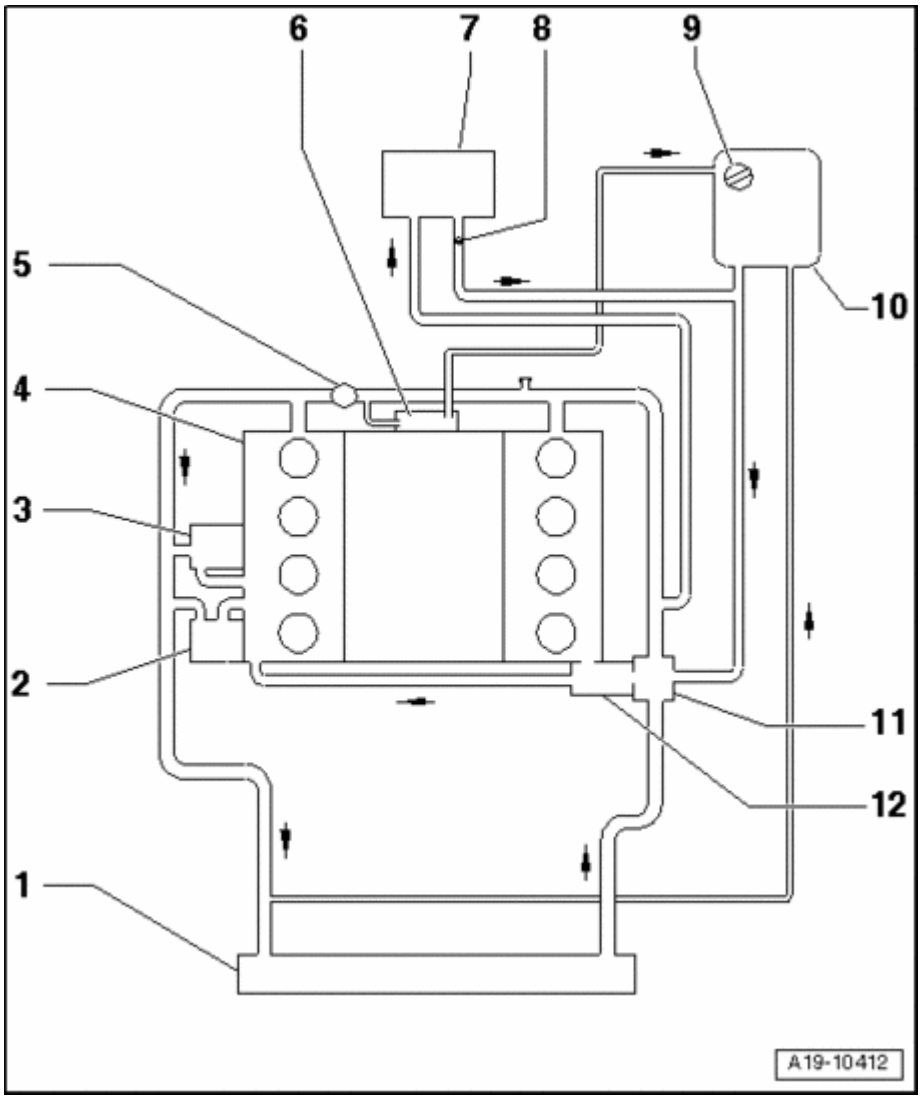

Fig. 272: Placing Guide Sleeve T10071/1 On Camshaft Pin
Courtesy of VOLKSWAGEN UNITED STATES, INC.

- Place Guide Sleeve T10071/1 from Assembly Tool T10071 on camshaft pin.
- Slide oil seal over guide sleeve onto shaft pin.
- Remove guide sleeve.

 © 2011 Mitchell Repair Information Company, LLC.

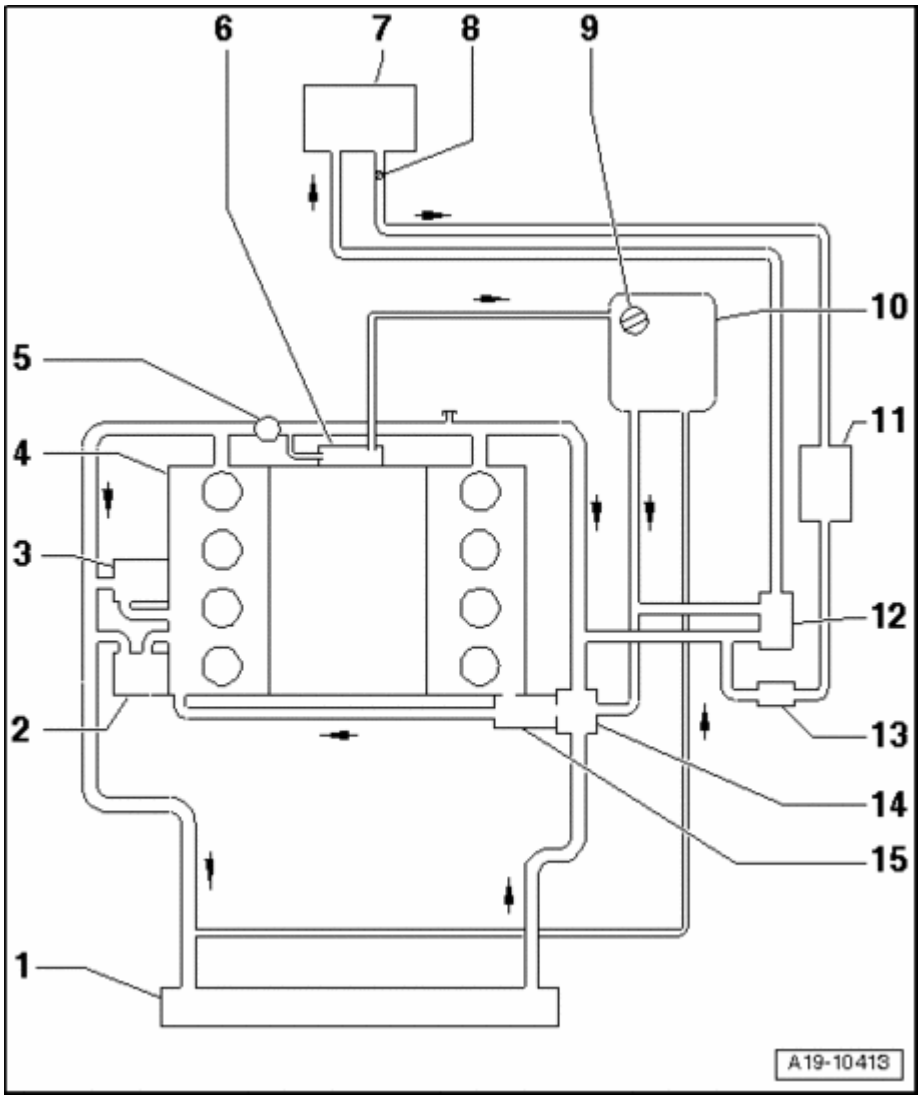

Fig. 273: Pressing In Gasket Up To Stop Using Thrust Sleeve T10071/3 And Bolt T10071/4
Courtesy of VOLKSWAGEN UNITED STATES, INC.

- Press sealing ring on as far as stop with Guide Sleeve T10071/3 and Screw T10071/4 from Assembly Tool T10071.
- Install camshaft sprocket.

 © 2011 Mitchell Repair Information Company, LLC.

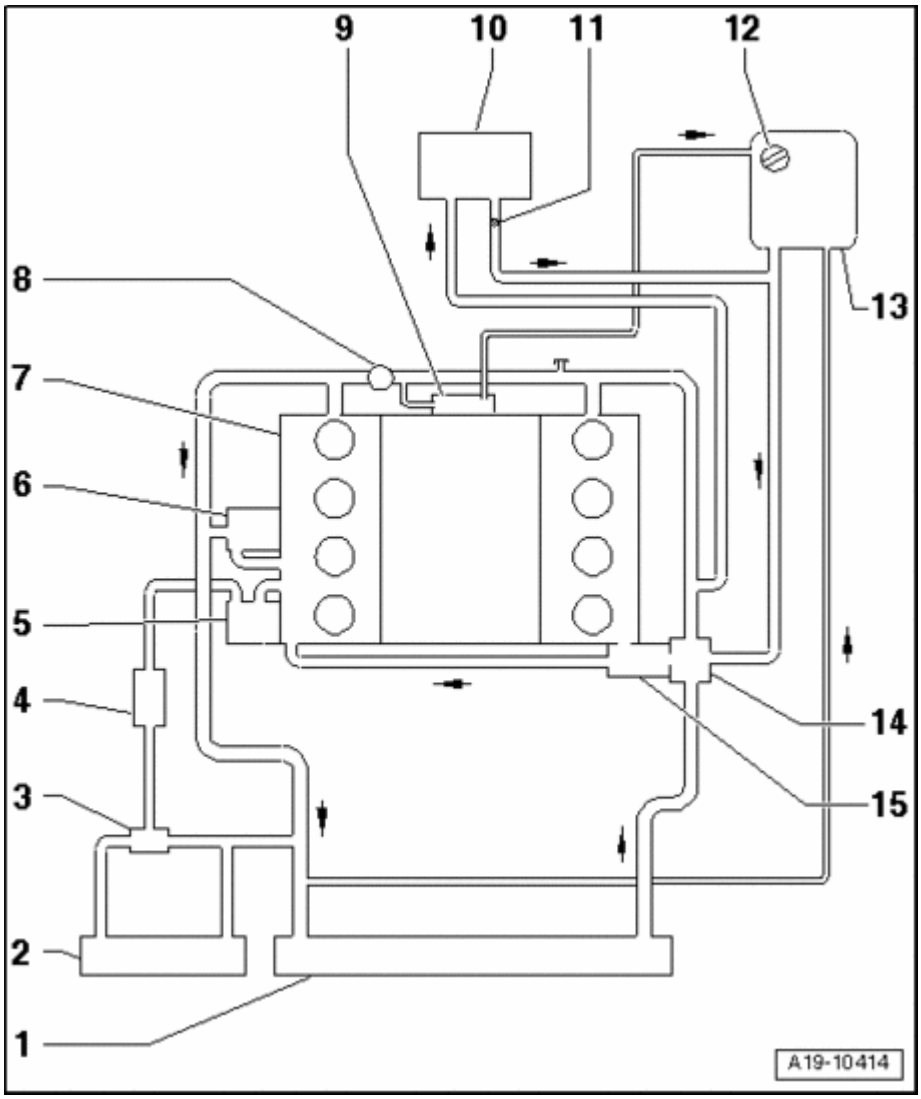

Fig. 274: Identifying Camshaft Gear Thin Rib Toward Outside And TDC Marking Visible
Courtesy of VOLKSWAGEN UNITED STATES, INC.

- Note installation position: Thin rib of camshaft gear points outward - **arrows** - and TDC marking cylinder 1 is visible.

 © 2011 Mitchell Repair Information Company, LLC.

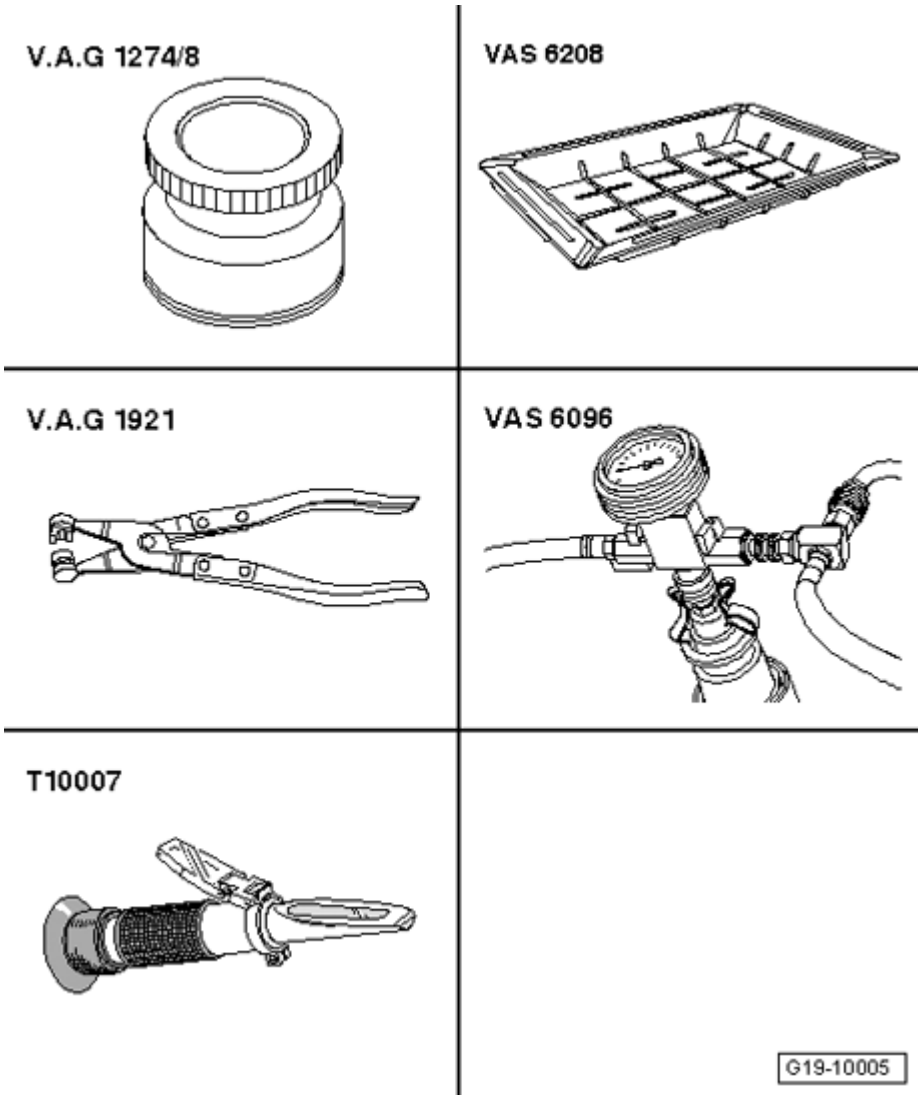

Fig. 275: Counterholding Camshaft Gear Using 3036 Retainer
Courtesy of VOLKSWAGEN UNITED STATES, INC.

- Install bolt for camshaft sprocket using Retainer 3036.

NOTE:

- **By turning the camshaft, the valves could contact the stationary pistons at TDC. Therefore, the pistons must not be at TDC. Valves/pistons may be damaged.**

- Install toothed belt --> **Toothed belt, removing and installing**.
- Install lock carrier with attachments -->
  - **50 BODY, FRONT**
  - **50 - BODY - FRONT** for BODY EXTERIOR - CABRIOLET

.

 © 2011 Mitchell Repair Information Company, LLC.

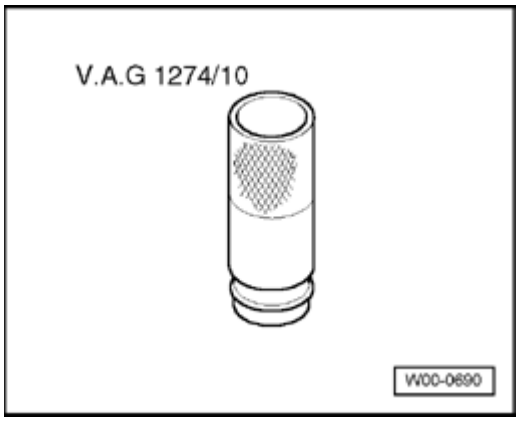

Fig. 276: Identifying Lock Carrier With Attachments
Courtesy of VOLKSWAGEN UNITED STATES, INC.

- Place torque support stop onto rubber buffer for torque support under its own weight and tighten nuts - **arrows** -.
- Install front bumper cover -->
  - **63 BUMPER**
  - **63 - BUMPERS** for BODY EXTERIOR - CABRIOLET

  .
- Check headlight adjustment -->
  - **01 - MAINTENANCE**
  - **01 - MAINTENANCE** for MAINTENANCE PROCEDURES - CABRIOLET

  .

Torque specifications

Component		Nm
Camshaft sprocket to camshaft		50 Nm + 180 ° 1)
Torque support stop		28
• 1) Replace		

17 - ENGINE - LUBRICATION

LUBRICATION SYSTEM COMPONENTS, REMOVING AND INSTALLING

Lubrication system components, removing and installing

NOTE:

- **If large quantities of metal particles or other deposits (caused, for example, by partial seizure of the crankshaft or connecting rod damage) are found in the engine oil, the oil passages must be cleaned thoroughly and the oil cooler replaced in order to prevent further damage from re-occurring.**

 © 2011 Mitchell Repair Information Company, LLC.

Oil pressure, checking --> **Oil pressure and oil pressure switch, checking**

Viscosity classes and oil specifications: -->

- **01 - MAINTENANCE**
- **01 - MAINTENANCE** for MAINTENANCE PROCEDURES - CABRIOLET

.

NOTE:

- **The engine is filled at the factory with engine oil complying to VW standard 502 00. This engine oil is designed for long maintenance intervals. The engine oils listed below may also be used.**
- **The oil must be changed every 12 months or every 15,000 km and the Service Reminder Indicator (SRI) must be programmed accordingly. Procedure: -->**
  - **01 - MAINTENANCE**
  - **01 - MAINTENANCE for MAINTENANCE PROCEDURES - CABRIOLET**

.

Part I oil pan, balance shaft module, component overview

Part II Balance shaft module, oil pump --> **Part II balance shaft assembly with oil pump, component overview**

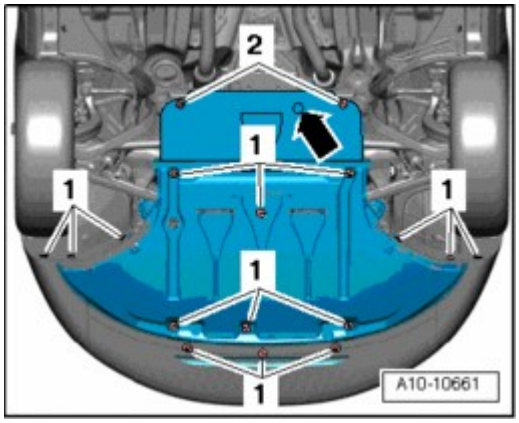

Fig. 277: Part I Oil Pan, Balance Shaft Module, Component Overview
Courtesy of VOLKSWAGEN UNITED STATES, INC.

1 - 15 Nm

2 - Oil dipstick

- Oil level must not be above max. mark!

3 - Inlet spout

 © 2011 Mitchell Repair Information Company, LLC.

4 - Guide tube

5 - Intermediate plate

6 - Balance shaft module with oil pump

- With pressure relief valve 12 bar
- Removing and installing --> **Balance shaft module with oil pump, removing and installing**

7 - 15 Nm plus an additional $^{1}/_{4}$ turn (90 °)

- Replace
- Note different length of bolts **Bolt allocation for balance shaft housing**

8 - 15 Nm

9 - Oil pan

- Clean sealing surface before installing
- Removing and installing --> **Oil pan, removing and installing**

10 - 15 Nm

11 - Seal

12 - Oil drain plug, 30 Nm

- With permanent sealing ring
- Replace

13 - Chain sprocket

14 - 10 Nm

15 - Protective cap

16 - Oil Level Thermal Sensor G266

17 - Seal

- Replace
- Oil before assembling

18 - 20 Nm plus an additional 90 °

 © 2011 Mitchell Repair Information Company, LLC.

- Replace

19 - Chain guard

20 - Chain

21 - Sealing flange

- Must be located on dowel sleeves
- Seal for crankshaft - belt pulley side, replacing --> **Crankshaft seal - ribbed belt side, replacing**

Part II balance shaft assembly with oil pump, component overview

Part I Oil pan, balance shaft assembly --> **Part I oil pan, balance shaft module, component overview**

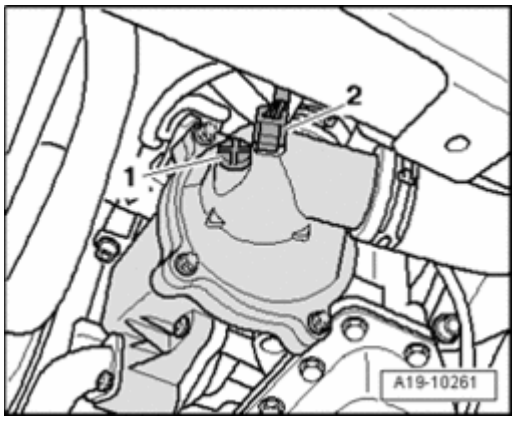

Fig. 278: Part II Balance Shaft Assembly With Oil Pump, Component Overview
Courtesy of VOLKSWAGEN UNITED STATES, INC.

1 - Chain guard

2 - Chain

- Mark direction of travel (installation position) using color marking before removing

3 - Alignment bushing

4 - Intermediate plate

5 - Balance shaft module with oil pump

- Before installing, check to be sure both alignment bushings are present (for centering oil pump/cylinder block)
- Removing and installing --> **Balance shaft module with oil pump, removing and installing**

6 - 9 Nm

 © 2011 Mitchell Repair Information Company, LLC.

7 - Cover

- Prevents engine oil from foaming up

8 - 40 Nm

9 - 8 Nm

10 - Oil intake pipe

- Clean strainer if dirty

11 - O-ring

- Replace

12 - 15 Nm plus an additional $^{1}/_{4}$ turn (90 °)

- Replace
- Note different length of bolts **Bolt allocation for balance shaft housing**

13 - 15 Nm plus an additional $^{1}/_{4}$ turn (90 °)

- Replace
- With seal
- Note different length of bolts **Bolt allocation for balance shaft housing**

14 - Outer rotor

- Check contact surfaces for groove build-up
- Marking must be visible

15 - Inner rotor

- Check contact surfaces for groove build-up

16 - Oil pump cover

17 - Chain sprocket

18 - 20 Nm plus an additional 90 °

- Replace

19 - Chain tensioner with tensioning rail

 © 2011 Mitchell Repair Information Company, LLC.

- Pre-load to install

20 - 15 Nm

Oil pan, removing and installing

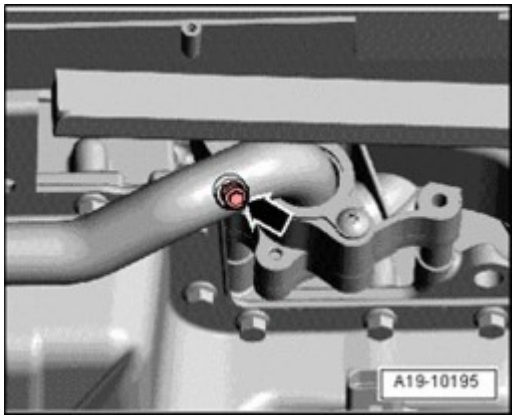

Fig. 279: Identifying Special Tools - Oil Pan, Removing And Installing
Courtesy of VOLKSWAGEN UNITED STATES, INC.

Special tools, testers and auxiliary items required

- Engine support bridge 10-222 A
- Multi-point socket T10058
- Old oil collecting and extracting device V.A.G 1782
- Shop crane VAS 6100
- Insert pad for front fender T40045
- Hand drill with plastic brush attachment
- Protective glasses
- Sealant

Removing

NOTE:

- **All cable ties opened or cut during engine removal must be reinstalled at the same locations during installation.**

 © 2011 Mitchell Repair Information Company, LLC.

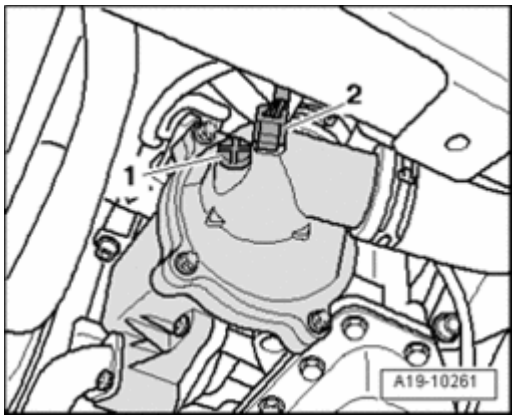

Fig. 280: Removing Engine Cover
Courtesy of VOLKSWAGEN UNITED STATES, INC.

- Remove engine cover - **arrows** -.
- Remove rubber seal on fender attachment edges.

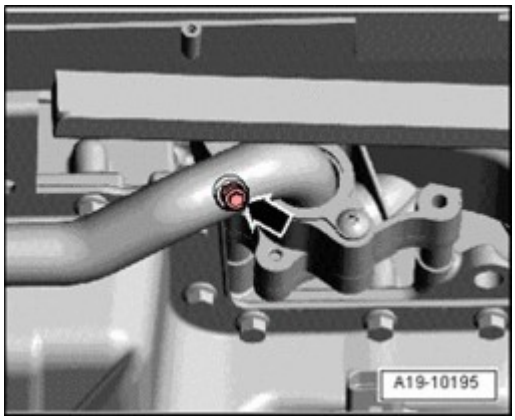

Fig. 281: Placing Insert Pad For Front Fender T40045 On Both Sides Between Fender Attachment Edge And Web Plate Lying Beneath
Courtesy of VOLKSWAGEN UNITED STATES, INC.

- To prevent damage to fender edges when using engine support bridge 10-222 A , place insert pad for front fender T40045 on both sides between fender attachment edge and web plate lying beneath.

 © 2011 Mitchell Repair Information Company, LLC.

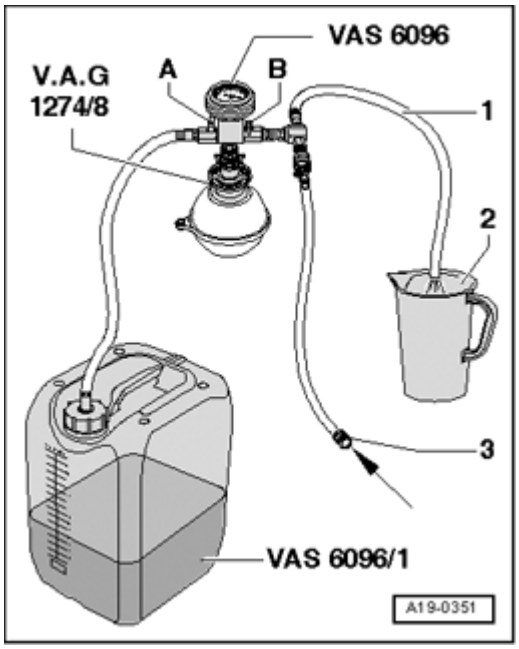

Fig. 282: Positioning Engine Support Bridge 10-222 A With Adapters 10-222/3 On Fender Attachment Edge
Courtesy of VOLKSWAGEN UNITED STATES, INC.

- Position engine support bridge 10-222 A with adapters 10-222/3 on fender attachment edge.
- Hook in spindles at engine lifting eyes, as shown.
- Pretension engine slightly with spindles.
- Remove ribbed belt --> **Ribbed belt, removing and installing**

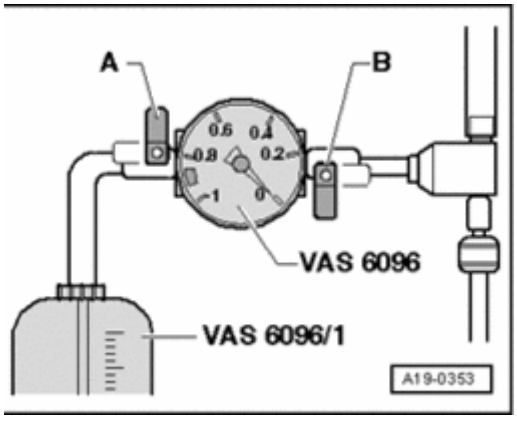

Fig. 283: Identifying Exhaust Pipe Fasteners
Courtesy of VOLKSWAGEN UNITED STATES, INC.

- For vehicles with auxiliary heater, remove bolts - **arrows** - for exhaust pipe of parking heater/auxiliary heater on noise insulation.

 © 2011 Mitchell Repair Information Company, LLC.

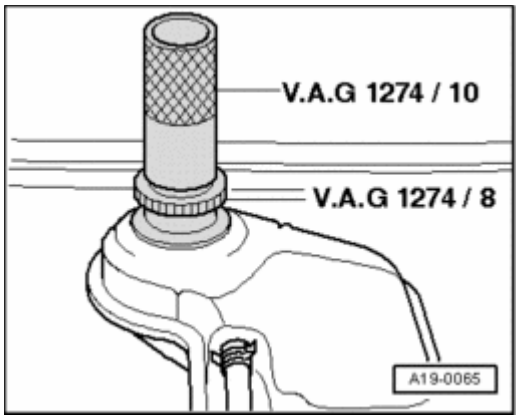

Fig. 284: Identifying Quick-Release Fasteners And Noise Insulation
Courtesy of VOLKSWAGEN UNITED STATES, INC.

- Loosen quick-release fasteners - **1** - and - **2** - and remove front noise insulation.
- Remove quick-release fasteners - **3** - and remove rear noise insulation, if installed.
- Place old oil collecting and extracting device V.A.G 1782 under engine and drain engine oil.

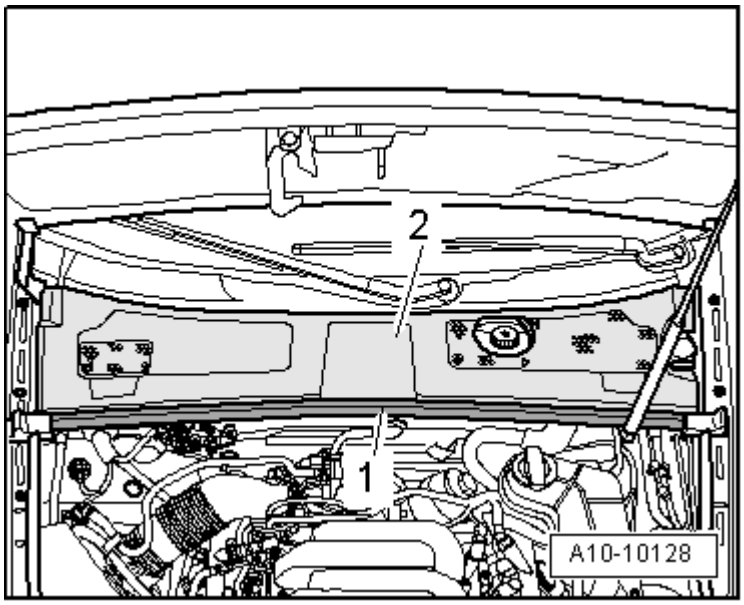

Fig. 285: Removing Bolts And Torque Supports From Oil Pan
Courtesy of VOLKSWAGEN UNITED STATES, INC.

- Remove bolts - **arrows** - and remove torque supports from oil pan.
- Remove turbocharger oil return line - **1** - from oil pan.

 © 2011 Mitchell Repair Information Company, LLC.

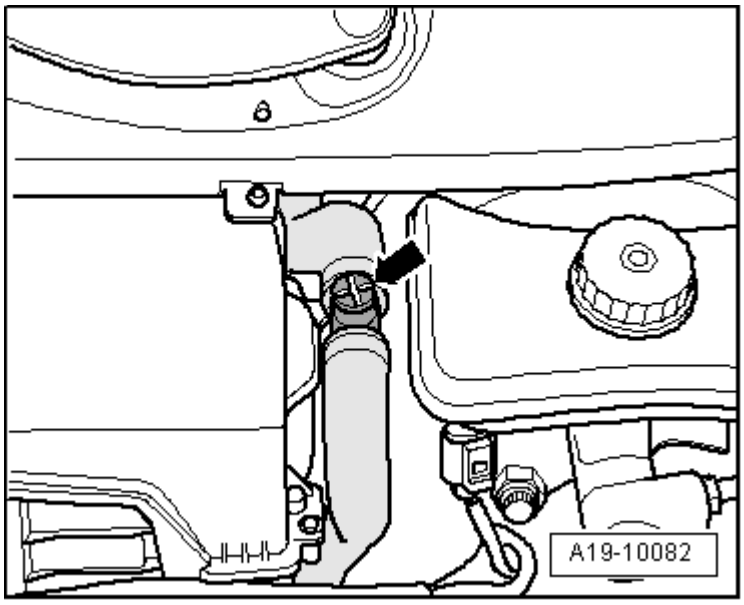

Fig. 286: Disconnecting Connector For Oil Level Thermal Sensor -G266-
Courtesy of VOLKSWAGEN UNITED STATES, INC.

- Disconnect electrical harness connector - **arrow** - at Oil Level Thermal Sensor G266.

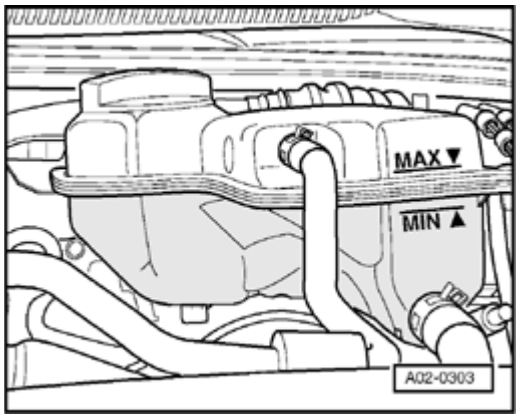

Fig. 287: Removing Bracket For Refrigerant Line On Oil Pan
Courtesy of VOLKSWAGEN UNITED STATES, INC.

- Remove bracket for refrigerant line on oil pan - **arrow** -.

 © 2011 Mitchell Repair Information Company, LLC.

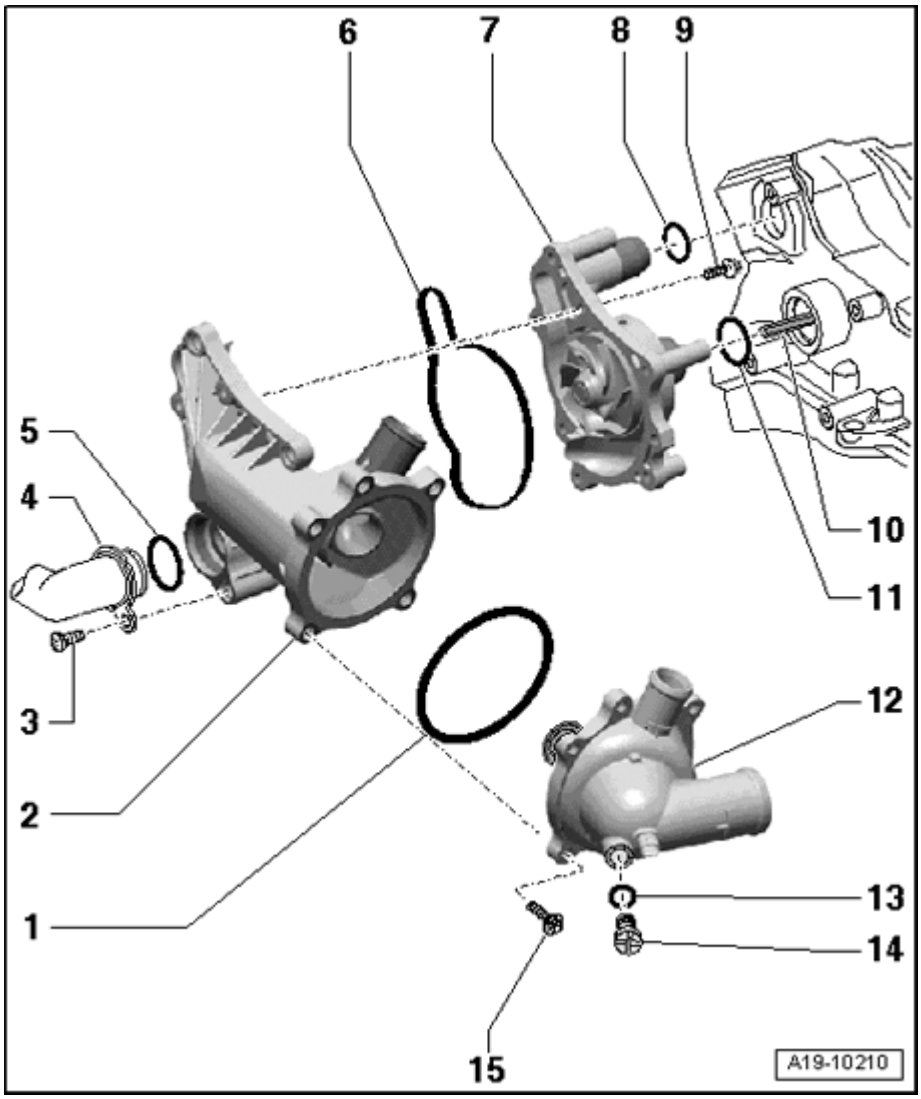

Fig. 288: Separating Connector For Wiring To Air Conditioning Compressor Clutch Solenoid
Courtesy of VOLKSWAGEN UNITED STATES, INC.

- Separate connector - **1** - for wiring to air conditioning compressor clutch solenoid.

CAUTION: The air conditioning refrigerant circuit must not be opened.

- Remove air conditioning compressor from bracket - **arrows** -.

NOTE:

- **To prevent damage to condenser and also to the refrigerant lines/hoses, ensure that the lines and hoses are not stretched, kinked or bent.**

- Hang up A/C compressor with attached lines at bottom of vehicle.

 © 2011 Mitchell Repair Information Company, LLC.

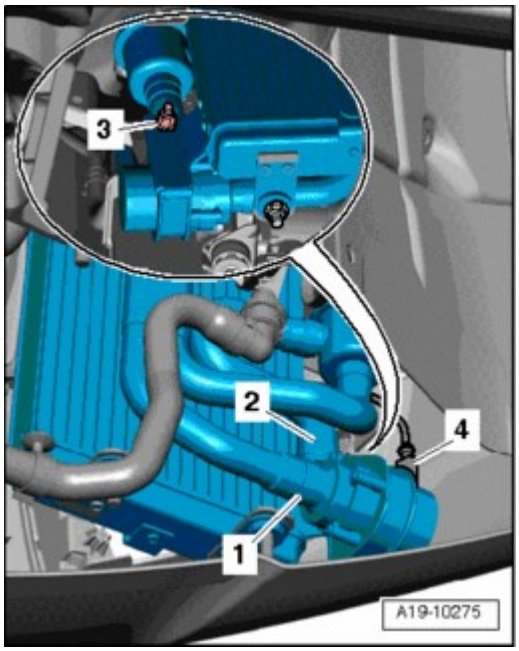

Fig. 289: Disconnecting Electrical Harness Connector At Left Front Level Control System Sensor G78
Courtesy of VOLKSWAGEN UNITED STATES, INC.

- Disconnect electrical harness connector - **arrow** - at Left Front Level Control System Sensor G78.

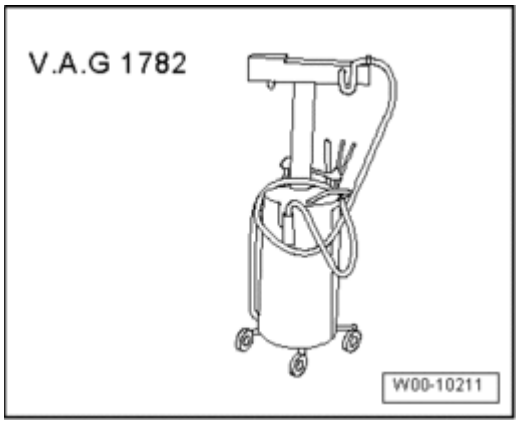

Fig. 290: Removing Stabilizer Bar Mountings
Courtesy of VOLKSWAGEN UNITED STATES, INC.

- Remove stabilizer bar mountings - **1** - and - **2** -.

 © 2011 Mitchell Repair Information Company, LLC.

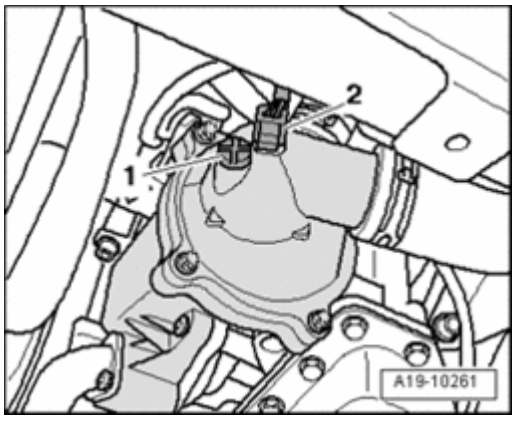

Fig. 291: Subframe Supported Using Workshop Crane V.A.G 1202 A
Courtesy of VOLKSWAGEN UNITED STATES, INC.

- Support subframe with workshop crane VAS 6100 or V.A.G 1202 A.

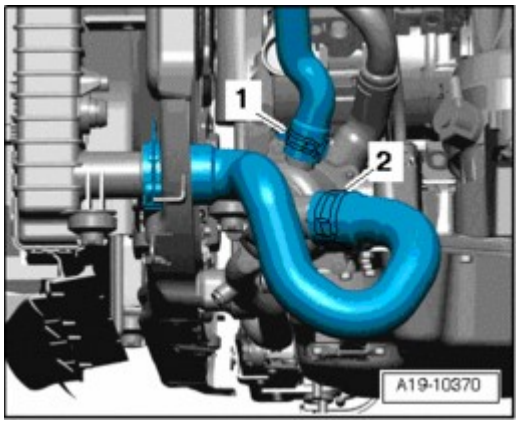

Fig. 292: Starter Wiring Bracket Cable Ties
Courtesy of VOLKSWAGEN UNITED STATES, INC.

- Cut through cable ties - **arrows** - , open starter harness retainer and take harness out.

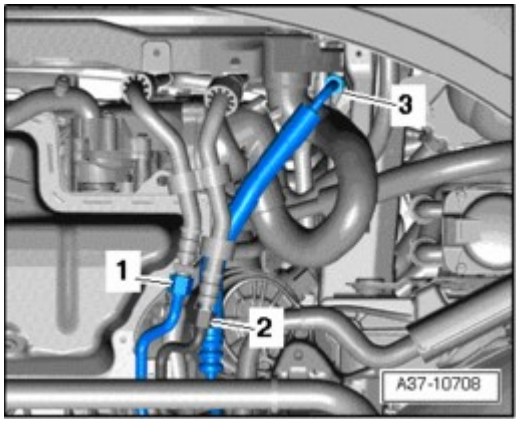

Fig. 293: Identifying Lower Nut, Bolts, Front Bolt & Engine Mount Plate
Courtesy of VOLKSWAGEN UNITED STATES, INC.

 © 2011 Mitchell Repair Information Company, LLC.

- Remove lower nut - **3** - on engine mount.
- Remove bolts - **4** - and - **5** - on engine mount plate.
- Remove front bolt - **1** - for subframe and remove engine mount plate - **2** -.
- Repeat work procedure on opposite side of vehicle.

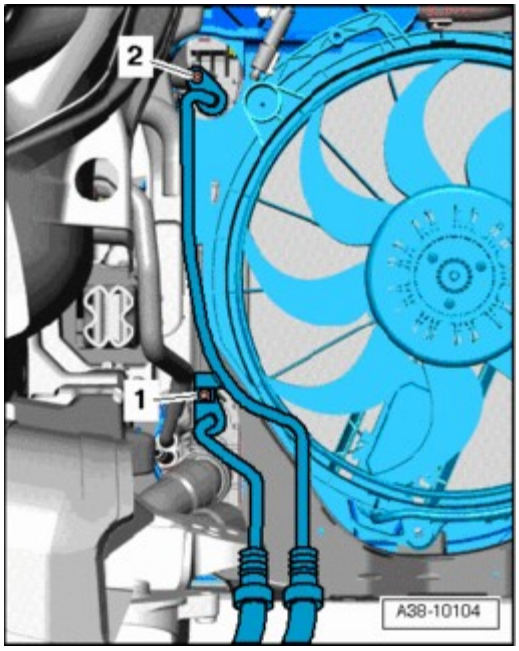

Fig. 294: Subframe Supported Using Workshop Crane V.A.G 1202 A
Courtesy of VOLKSWAGEN UNITED STATES, INC.

- Slowly lower subframe with workshop crane VAS 6100 or V.A.G 1202 A.
- Lift engine slightly upward using spindles of engine support bridge 10-222 A , paying attention to clearance of shift linkage and exhaust system.

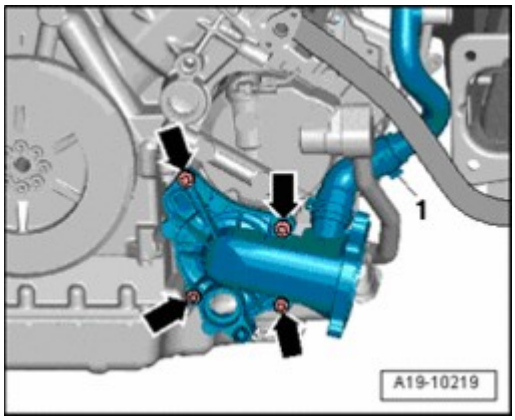

Fig. 295: Removing Bolts For Transmission/Oil Pan
Courtesy of VOLKSWAGEN UNITED STATES, INC.

- Remove bolts - **arrows** - for transmission/oil pan.

 © 2011 Mitchell Repair Information Company, LLC.

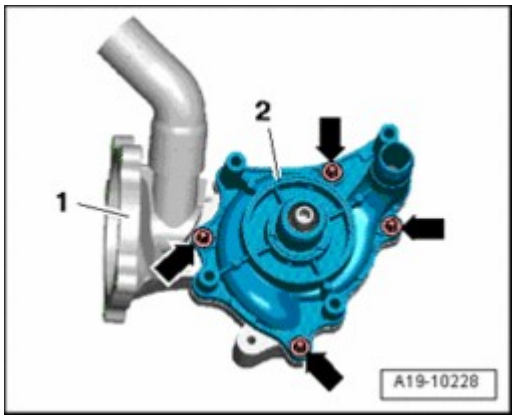

Fig. 296: M10 Bolts Removal Sequence
Courtesy of VOLKSWAGEN UNITED STATES, INC.

- Remove M10 bolts - **arrows** -.
- Loosen bolts - **1 to 18** - in a diagonal sequence.
- Remove oil pan, and if necessary loosen by applying light strikes with a rubber hammer.

Installing

Installation is in reverse order of removal, note the following:

NOTE:

- **Replace seal.**
- **Secure all hose connections using hose clamps appropriate for the model type .**
- **During installation, all cable ties must be re-installed at the same location.**

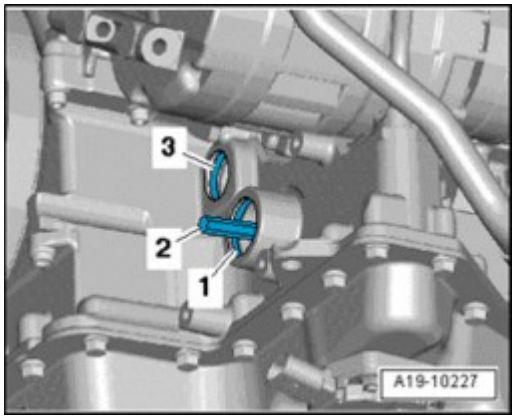

Fig. 297: Removing Sealant Residue From Oil Pan With Rotating Brush
Courtesy of VOLKSWAGEN UNITED STATES, INC.

- Remove residual sealant from oil pan and at cylinder block, e.g. using a rotating plastic brush.

CAUTION: Wear safety glasses.

 © 2011 Mitchell Repair Information Company, LLC.

- Clean sealing surfaces, they must be free of oil and grease.

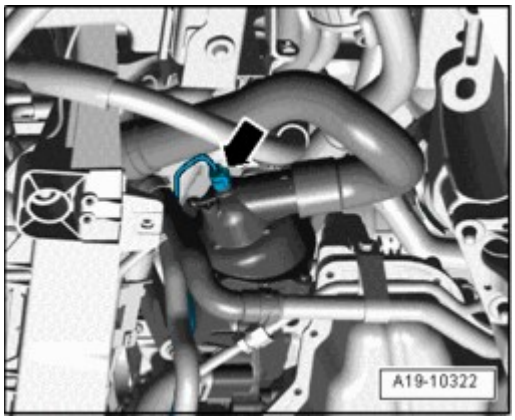

Fig. 298: Cutting Tube Nozzle At Front Marking
Courtesy of VOLKSWAGEN UNITED STATES, INC.

- Cut off nozzle on tube of sealant at front mark (dia. of nozzle approx. 2 mm).

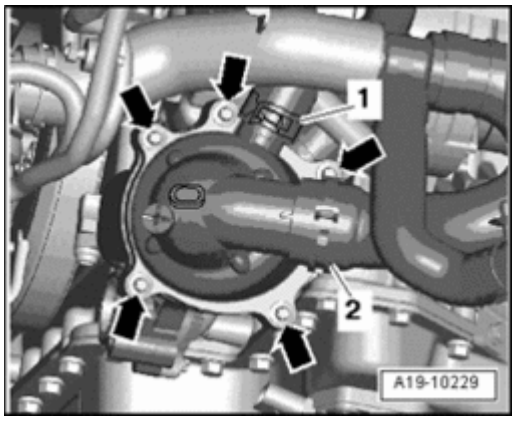

Fig. 299: Identifying Silicone Sealing Compound Application Area
Courtesy of VOLKSWAGEN UNITED STATES, INC.

- Apply sealant bead as illustrated to clean sealing surface of oil pan.

- Thickness of sealant bead: 2 to 3 mm.

NOTE:

- **The sealant bead may not be thicker than 3 mm, otherwise excess sealant could enter the oil pan and clog the oil intake tube.**
- **Apply a bead of sealant at the rear area of the sealing flange very carefully - arrows -.**
- **The oil pan must be installed within 5 minutes of being applied with sealant.**

 © 2011 Mitchell Repair Information Company, LLC.

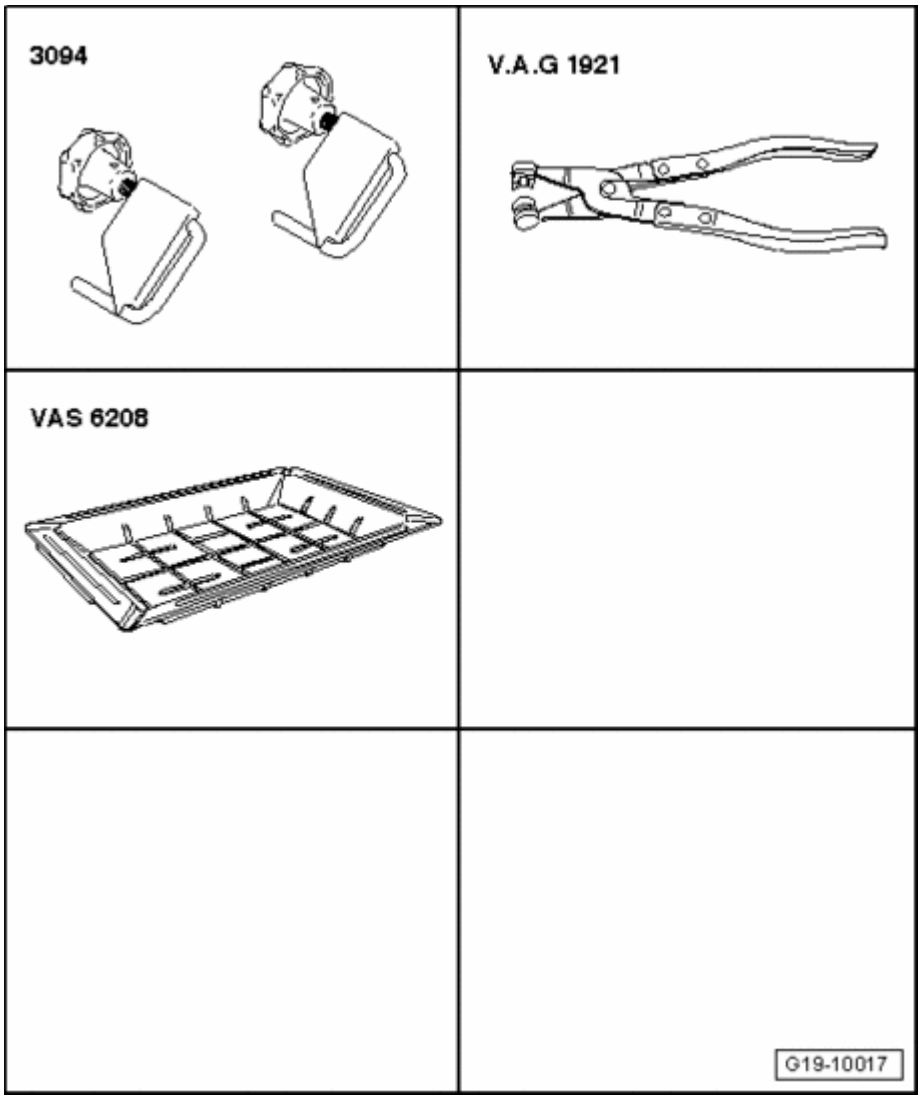

Fig. 300: M10 Bolts Removal Sequence
Courtesy of VOLKSWAGEN UNITED STATES, INC.

- Install oil pan immediately and tighten bolts in described sequence:
- Pre-tighten bolts - **1 to 18** - in diagonal sequence to 5 Nm.
- Tighten oil pan/transmission bolts to 45 Nm.
- Tighten bolts M10 - **arrows** - to 40 Nm.
- Tighten bolts - **1 to 18** - in diagonal sequence to 15 Nm.

 © 2011 Mitchell Repair Information Company, LLC.

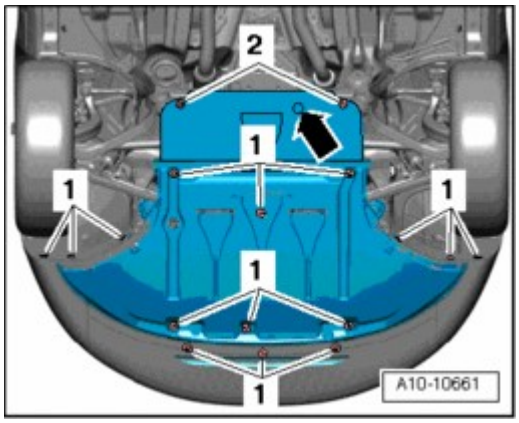

Fig. 301: Ensuring That Oil Pan Is Positioned Flush With Intermediate Plate At Flywheel End
Courtesy of VOLKSWAGEN UNITED STATES, INC.

NOTE:

- **When installing the oil pan - 3 - on a removed engine, make sure that the flywheel end of the oil pan is aligned flush with the intermediate plate - 1 - , therefore the oil pan must extend beyond the cylinder block - 2 - by dimension - a - 0.8 mm.**
- **After installing oil pan, allow sealant to dry for approx. 30 minutes. Only after then may the engine oil be replenished.**

- Install subframe --> **40 - FRONT SUSPENSION** .
- Install stabilizer bar --> **40 - FRONT SUSPENSION** .
- Install A/C compressor --> **87 AIR CONDITIONING**
- Install ribbed belt --> **Ribbed belt, removing and installing**.

- Add engine oil and check oil level.

The rest of assembly is basically a reverse of disassembling sequence.

Torque specifications

Part I Oil pan, balance shaft assembly --> **Part I oil pan, balance shaft module, component overview**

Balance shaft module with oil pump, removing and installing

Special tools, testers and auxiliary items required

 © 2011 Mitchell Repair Information Company, LLC.

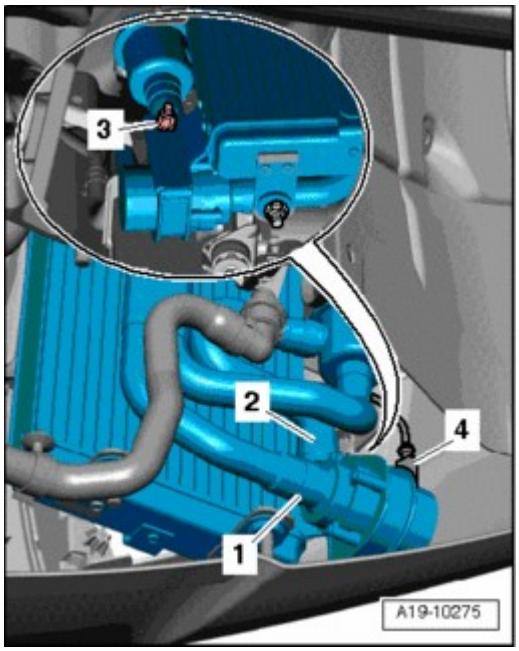

Fig. 302: Identifying Securing Pin T10027
Courtesy of VOLKSWAGEN UNITED STATES, INC.

- Connecting Pin T10027

Removing

- Remove oil pan --> **Oil pan, removing and installing**.

CAUTION: Only turn over the engine at the crankshaft in direction of engine rotation (clockwise).

NOTE:

- **Turning over the engine is performed at the center bolt of the crankshaft.**

 © 2011 Mitchell Repair Information Company, LLC.

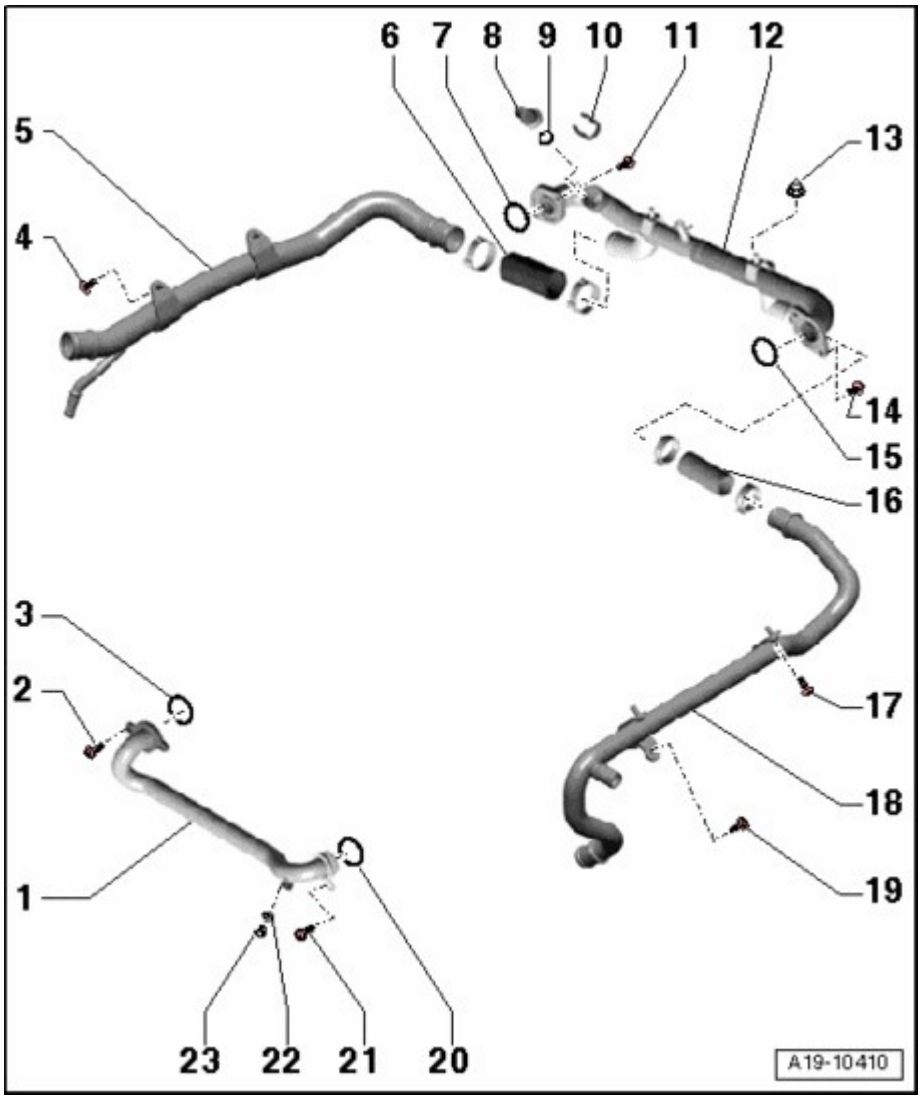

Fig. 303: Setting Crankshaft And Camshaft To TDC At Cylinder 1
Courtesy of VOLKSWAGEN UNITED STATES, INC.

- Bring camshaft gear to marking for TDC cylinder 1 by turning crankshaft. Marking on camshaft gear must align with arrow on toothed belt guard.

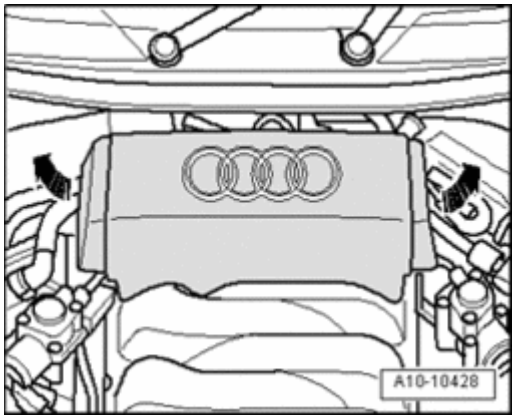

 © 2011 Mitchell Repair Information Company, LLC.

Fig. 304: Disengaging Locking Lugs Through Openings
Courtesy of VOLKSWAGEN UNITED STATES, INC.

- Remove chain guard. Disengage locking lugs through openings - **arrows** - if necessary using a small screwdriver.

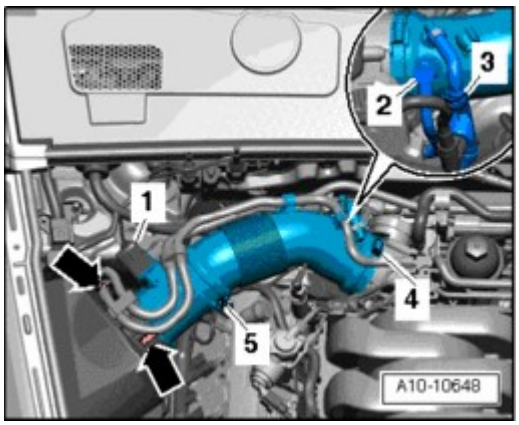

Fig. 305: Loosening Bolt From Chain Sprocket Of Oil Pump
Courtesy of VOLKSWAGEN UNITED STATES, INC.

- Loosen bolt from oil pump chain sprocket. Counter-hold at center bolt for vibration damper.

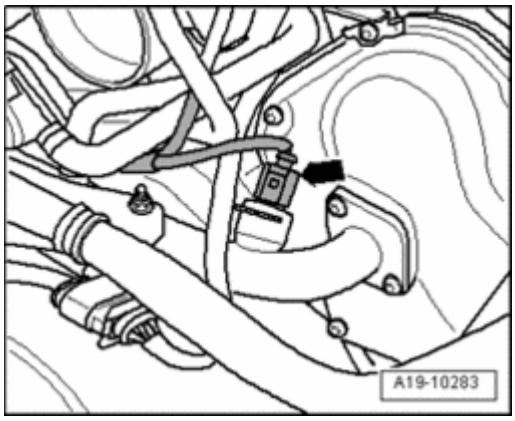

Fig. 306: Relieving Tension On Chain Rail With Screwdriver And Lock Rail With 3 mm Allen Key
Courtesy of VOLKSWAGEN UNITED STATES, INC.

- Release tension on chain rail using a screwdriver - **arrow** - and secure it using an Allen wrench - **1** - , across flats 3 mm.

 © 2011 Mitchell Repair Information Company, LLC.

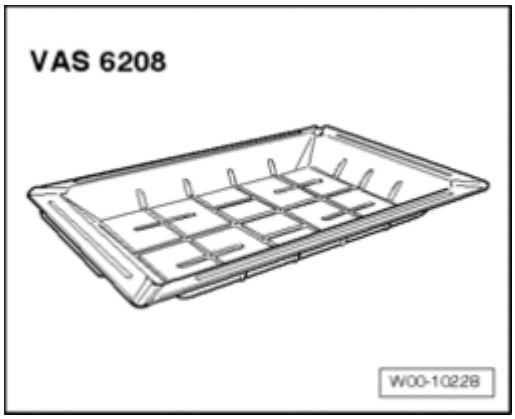

Fig. 307: Removing Chain Sprocket Of Oil Pump And Disengaging Chain On Differential Shaft Drive
Courtesy of VOLKSWAGEN UNITED STATES, INC.

- Remove chain sprocket of oil pump and disengage chain on differential shaft drive.

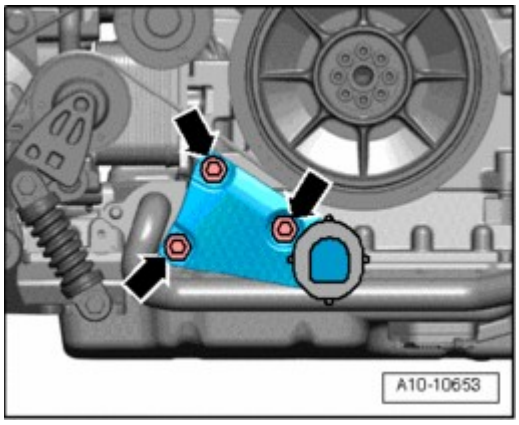

Fig. 308: Removing/Installing Oil Baffle & Bolts
Courtesy of VOLKSWAGEN UNITED STATES, INC.

- Remove oil baffle, removing bolts - **1 and 2** -.

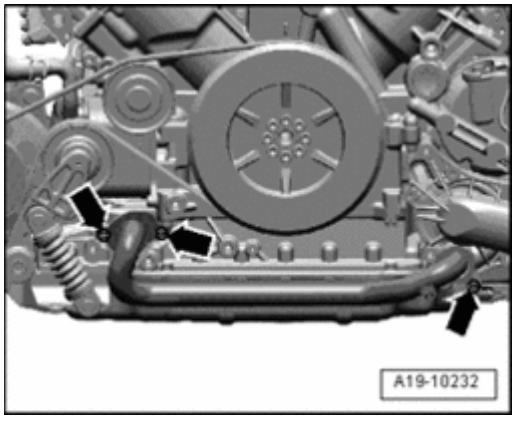

Fig. 309: Removing Bolts From Balance Shaft Assembly
Courtesy of VOLKSWAGEN UNITED STATES, INC.

 © 2011 Mitchell Repair Information Company, LLC.

- Remove bolts - **arrows** - from balance shaft assembly from outside to inside and remove it.

Installing

- Chain tensioner pre-tensioned

- Replace all balance shaft assembly bolts.
- Replace balance shaft assembly bolt gasket.

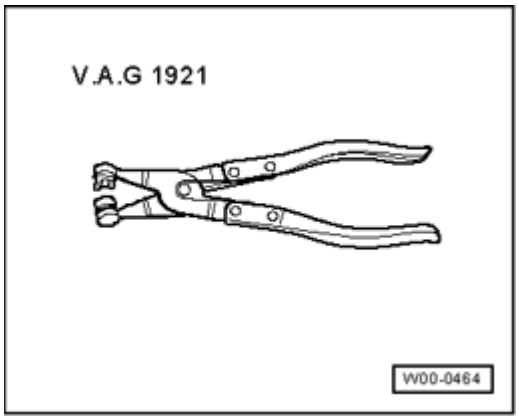

Fig. 310: Placing Intermediate Plate On To Alignment Bushings Of Differential Shaft Gear
Courtesy of VOLKSWAGEN UNITED STATES, INC.

- Place intermediate plate as shown on to alignment bushings of differential shaft gear - **arrows** -.

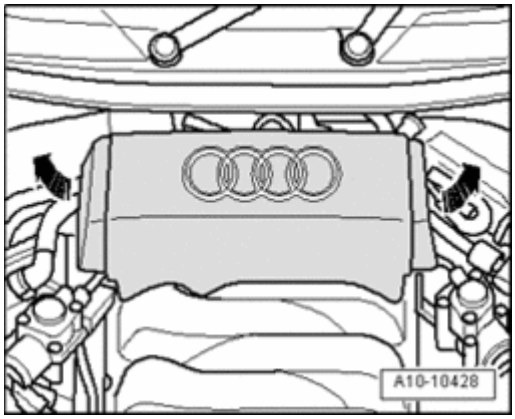

Fig. 311: Removing Bolts From Balance Shaft Assembly
Courtesy of VOLKSWAGEN UNITED STATES, INC.

- Install balance shaft assembly with oil pump and intermediate plate. Tighten bolts - **arrows** - from inside toward outside.

NOTE:

- **Observe the different lengths of bolts. Bolt allocation for balance shaft housing**

 © 2011 Mitchell Repair Information Company, LLC.

NOTE:

- **Pay attention to centering sleeves.**

Tightening sequence	
1st Step	Hand-tight
2nd Step	15 Nm [1)]
3rd Step	90 ° additional turn [2)]

- [1)] Replace bolt or nut
- [2)] 90° Corresponds to a 1/4 turn

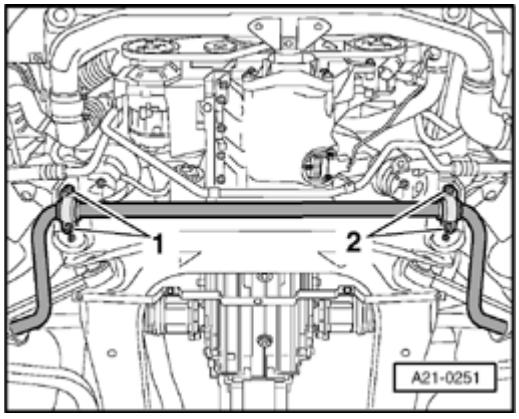

Fig. 312: Removing/Installing Oil Baffle & Bolts
Courtesy of VOLKSWAGEN UNITED STATES, INC.

- Install oil baffle, thereby inserting tabs into balance shaft assembly - **arrows** - and tightening bolt - **1** - to 21 Nm and bolts - **2** - to 9 Nm.

NOTE:

- **Turning over engine is performed at the center bolt of the crankshaft.**

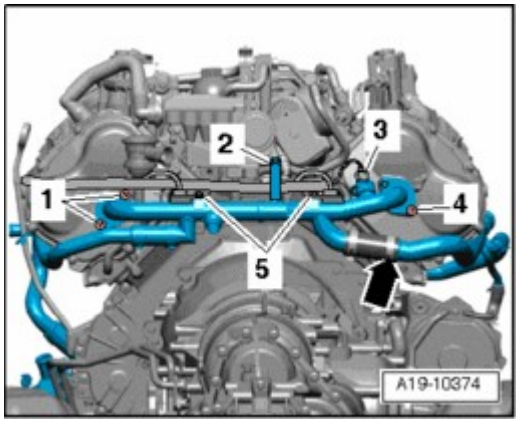

Fig. 313: Setting Crankshaft And Camshaft To TDC At Cylinder 1
Courtesy of VOLKSWAGEN UNITED STATES, INC.

- Set engine to TDC at cyl. 1, by turning crankshaft in engine running direction at the central bolt of the

 © 2011 Mitchell Repair Information Company, LLC.

crankshaft toothed belt sprocket. Marking on camshaft sprocket and marking on crankshaft must be positioned at TDC for cyl. 1 - **arrows** -.

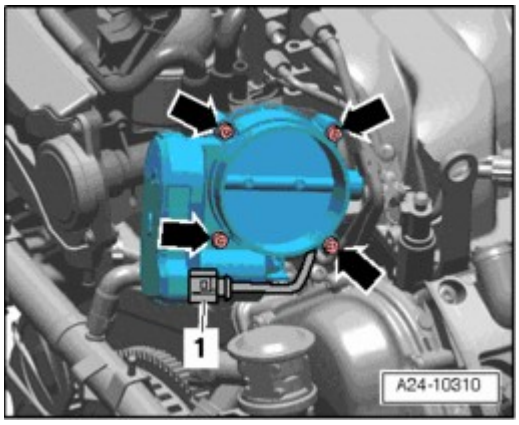

Fig. 314: Aligning Mark At Chain Sprocket Of Balancer Shaft With Fixture Hole
Courtesy of VOLKSWAGEN UNITED STATES, INC.

- Set marking on chain sprocket of differential shaft - **arrow** - opposite alignment bore. Secure chain sprocket in this position using connecting pin T10027. Place chain on to differential shaft chain sprocket.
- Install oil pump chain sprocket with new bolt and tighten bolt by hand.

NOTE:

- **Oil pump chain sprocket fits only in one position. To install, only the oil pump must be turned.**

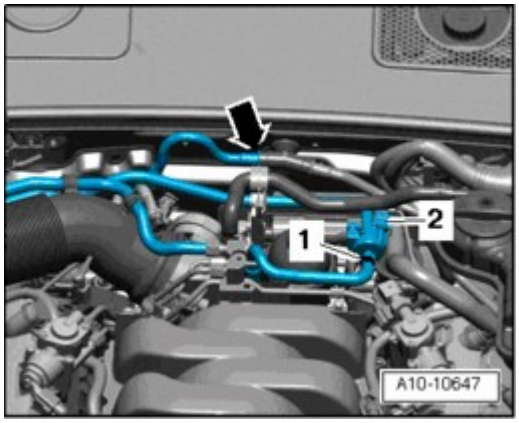

Fig. 315: Relieving Tension On Chain Rail With Screwdriver And Lock Rail With 3 mm Allen Key
Courtesy of VOLKSWAGEN UNITED STATES, INC.

- Remove connecting pin T10027 and Allen wrench - **1** -. Secure chain sprocket of oil pump. Counter-hold at center bolt for vibration damper.

The rest of assembly is basically a reverse of disassembling sequence.

- Install oil pan --> **Oil pan, removing and installing**.

 © 2011 Mitchell Repair Information Company, LLC.

Bolt allocation for balance shaft housing

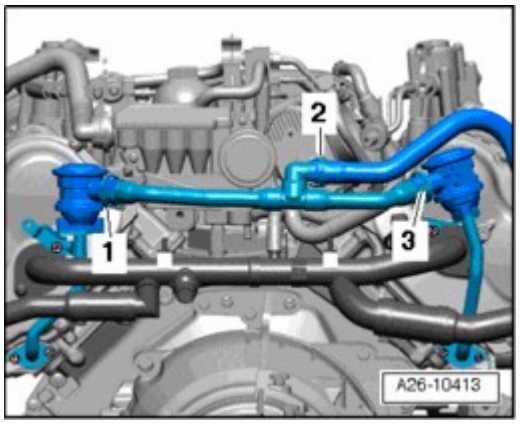

Fig. 316: Bolt Allocation For Balance Shaft Housing
Courtesy of VOLKSWAGEN UNITED STATES, INC.

A - Hex collar bolt M7x40

B - Hex collar bolt M7x70

C - Hex collar bolt M7x90

D - Hex collar bolt M7x55

E - Sealing plug with O-ring

Pre-loading chain tensioner

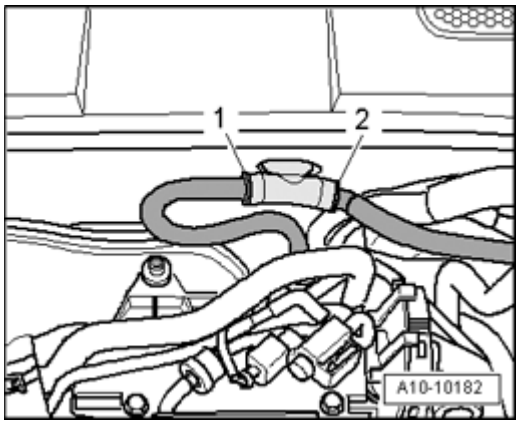

Fig. 317: Pre-Loading Chain Tensioner
Courtesy of VOLKSWAGEN UNITED STATES, INC.

- Pretension piston by hand - **arrow** -.

 © 2011 Mitchell Repair Information Company, LLC.

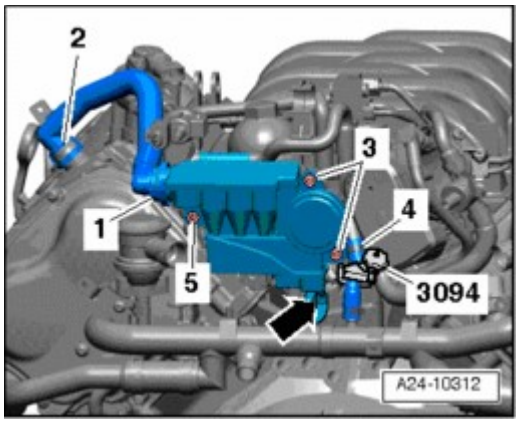

Fig. 318: Pushing Chain Rail And Securing It With An Allen Wrench
Courtesy of VOLKSWAGEN UNITED STATES, INC.

- Push chain rail in direction of - **arrow** - and secure it with an Allen wrench - **1** - , wrench diameter 3 mm.

OIL FILTER BRACKET, COMPONENT OVERVIEW

Oil filter bracket, component overview

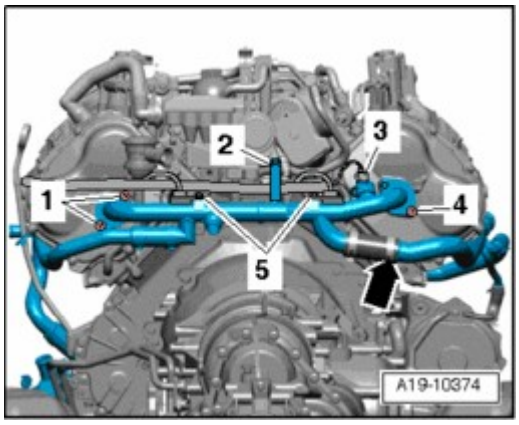

Fig. 319: Oil Filter Bracket, Component Overview
Courtesy of VOLKSWAGEN UNITED STATES, INC.

1 - Pipe

- For crankcase ventilation

2 - Oil pressure switch F1

- 1.4 bar - black
- Checking --> **Oil pressure and oil pressure switch, checking**
- Torque specification 21 Nm

3 - 15 Nm

 © 2011 Mitchell Repair Information Company, LLC.

- With Ground (GND) wire for oil pressure switch

4 - Bracket

5 - 15 Nm

6 - Oil cooler

- See note --> **Lubrication system components, removing and installing**
- Ensure sufficient clearance to surrounding components
- Coolant hose connection diagram --> **Coolant hose connection diagram**
- Removing and installing --> **Oil cooler, removing and installing**

7 - Gasket

- Replace

8 - 15 Nm

9 - Seal

- Replace
- Lightly lubricate
- Installed location **Sealing ring installation location**

10 - Locking bolt

11 - Oil filter housing

- Removing and installing with Oil Filter Wrench 3417 or with socket AF 36, e.g. Socket AF 36 T10125
- Draining --> **Oil filter housing, draining**

12 - Oil filter element

- Observe change intervals -->
  - **01 - MAINTENANCE**
  - **01 - MAINTENANCE** for MAINTENANCE PROCEDURES - CABRIOLET

13 - Oil baffle

- Installed location **Oil baffle installation location**

14 - Gasket

- Replace

 © 2011 Mitchell Repair Information Company, LLC.

15 - Oil filter bracket

- With pressure relief valve, approx. 4 bar
- Removing and installing --> **Oil filter bracket, removing and installing**

16 - Spring-type clip

Oil baffle installation location

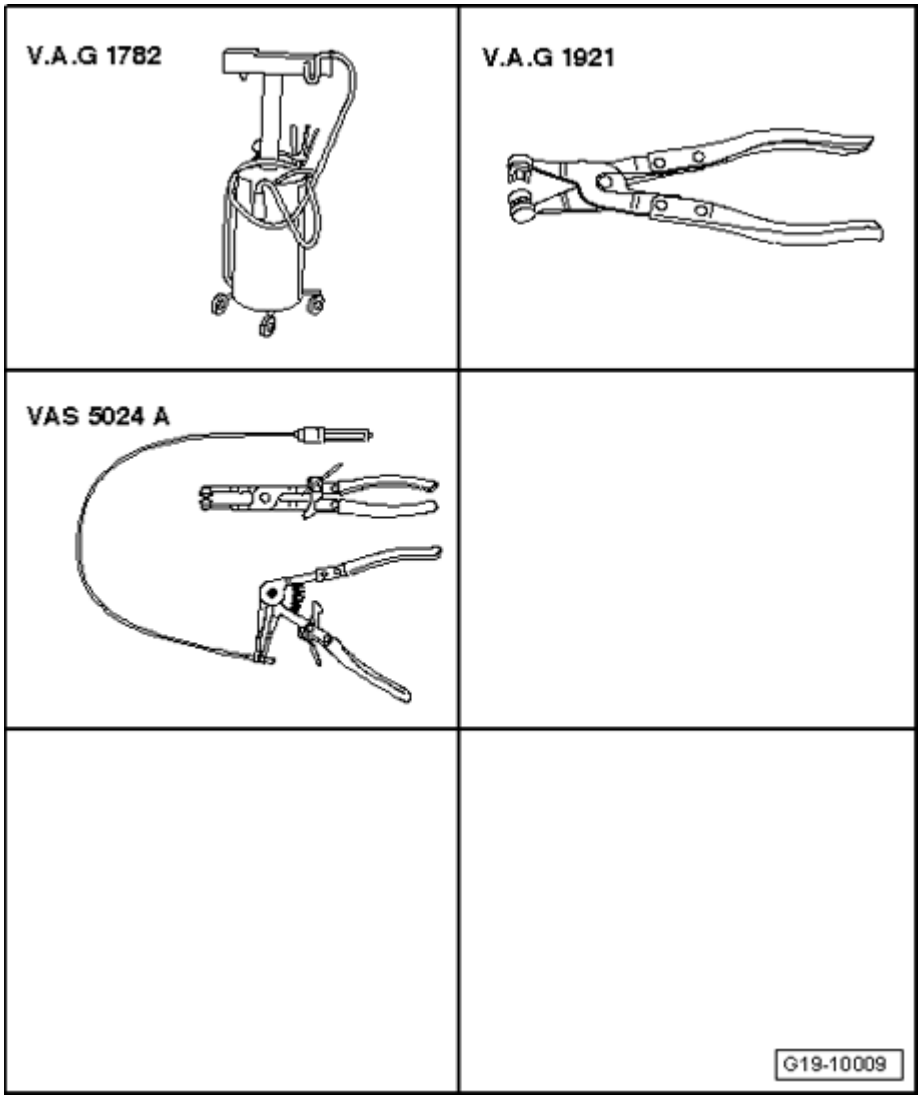

Fig. 320: Oil Baffle Installation Location
Courtesy of VOLKSWAGEN UNITED STATES, INC.

Sealing ring installation location

 © 2011 Mitchell Repair Information Company, LLC.

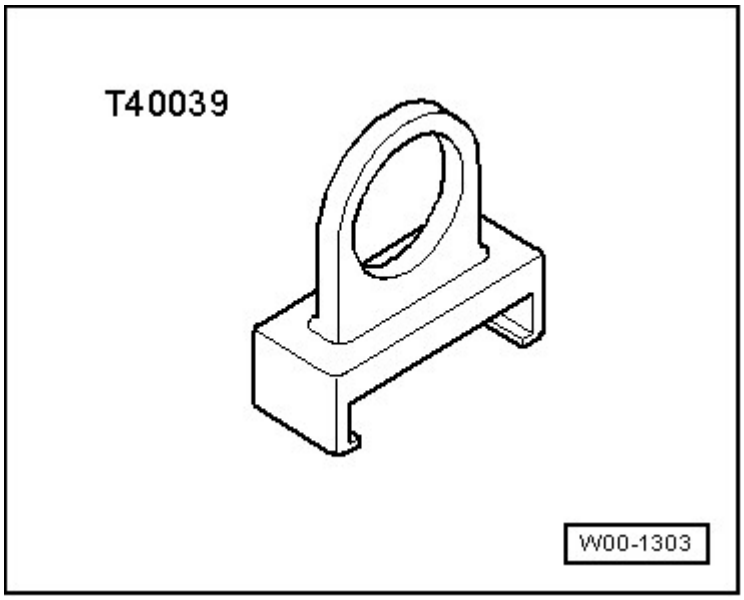

Fig. 321: Sealing Ring Installation Location
Courtesy of VOLKSWAGEN UNITED STATES, INC.

- Note position of service flag on sealing ring - **arrow** -
- Smooth side of sealing ring must face outward.

Oil filter housing, draining

NOTE:

- **When installing the oil draining adapter T40057 , a valve in the oil filter housing is opened. If the oil draining adapter T40057 is removed, the valve closes again.**

Special tools, testers and auxiliary items required

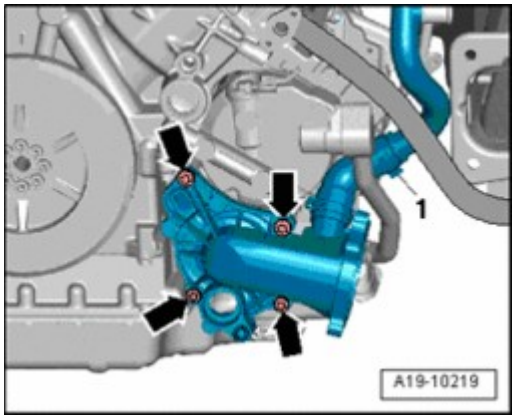

Fig. 322: Identifying Oil Drain Adapter T40057
Courtesy of VOLKSWAGEN UNITED STATES, INC.

- Oil drain adapter T40057

 © 2011 Mitchell Repair Information Company, LLC.

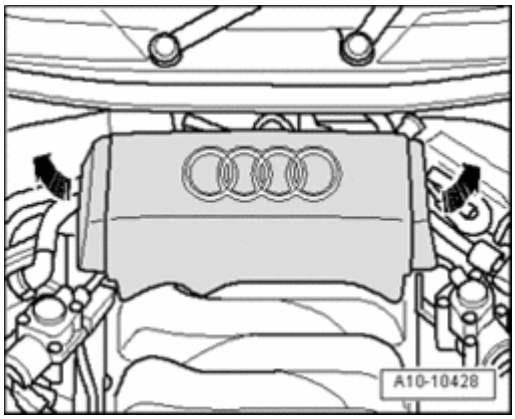

Fig. 323: Identifying Oil Filter Housing Dust Cap
Courtesy of VOLKSWAGEN UNITED STATES, INC.

- Remove dust cap from oil filter housing - **arrow** -.

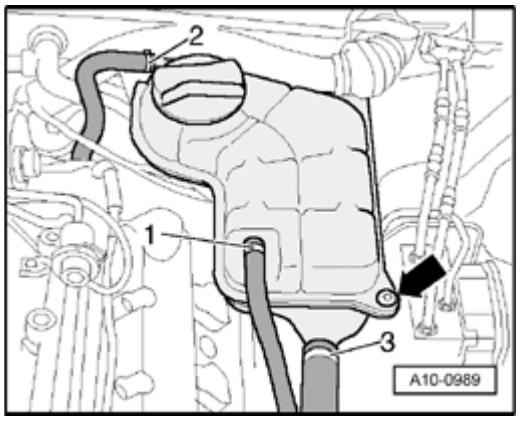

Fig. 324: Installing Oil Draining Adapter T40057 Into Oil Filter Housing
Courtesy of VOLKSWAGEN UNITED STATES, INC.

- Hold hose of oil draining adapter T40057 in a catch pan and install oil draining adapter T40057 into oil filter housing.
- Drain engine oil

Oil pressure and oil pressure switch, checking

 © 2011 Mitchell Repair Information Company, LLC.

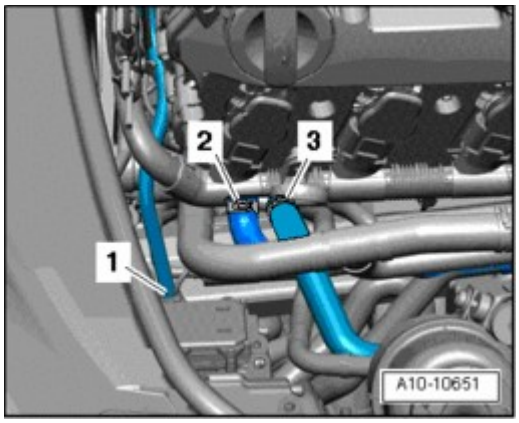

Fig. 325: Identifying Special Tools - Oil Pressure And Oil Pressure Switch, Checking
Courtesy of VOLKSWAGEN UNITED STATES, INC.

Special tools, testers and auxiliary items required

- Oil pressure gauge V.A.G 1342
- Voltage tester V.A.G 1527 B
- Connector test set V.A.G 1594 C

Test requirements

- Engine oil level OK, checking -->
  - **01 - MAINTENANCE**
  - **01 - MAINTENANCE** for MAINTENANCE PROCEDURES - CABRIOLET

  .
- Oil pressure warning lamp must light up for approx. 3 seconds when ignition is switched on
- On vehicles with Auto-Check-System, the indicator "O.K." must light up (check symbol).
- Engine oil temperature at least 80 °C (radiator fan must start up once)

NOTE:

- **Function test and servicing the optical and acoustic oil pressure indicator: wiring diagrams, "Function and Component Selection".**

Test sequence

 © 2011 Mitchell Repair Information Company, LLC.

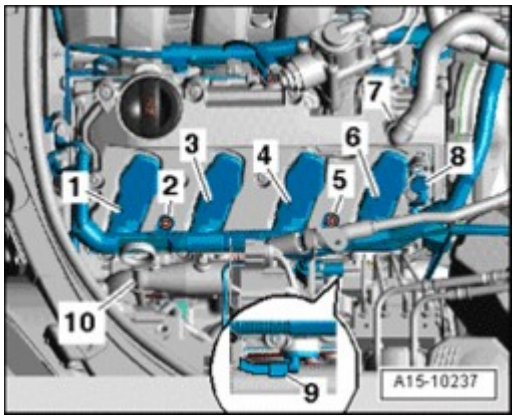

Fig. 326: Identifying Oil Pressure Tester V.A.G 1342
Courtesy of VOLKSWAGEN UNITED STATES, INC.

- Remove Oil Pressure Switch F1 - **A** - and install it into oil pressure gauge.
- Thread oil pressure gauge into oil filter bracket in place of oil pressure switch.
- Connect brown wire of tester to Ground (GND).
- Connect voltage tester V.A.G 1527 B using adapter cables from connector test set V.A.G 1594 C to battery B+ and oil pressure switch F1 - **B** -. LED must not light up.

- If LED lights up, replace 1.4 bar oil pressure switch.

If LED does not light up:

- Start engine and increase engine speed: LED must light up at 1.2 to 1.6 bar positive pressure, otherwise replace oil pressure switch F1.
- Increase engine speed further. At 2000 rpm and an oil temperature of 80 °C, the oil pressure should be between 2.7 to 4.5 bar.

Torque specifications

Component		Nm
Oil pressure switch to oil filter bracket		21

Oil cooler, removing and installing

Special tools, testers and auxiliary items required

 © 2011 Mitchell Repair Information Company, LLC.

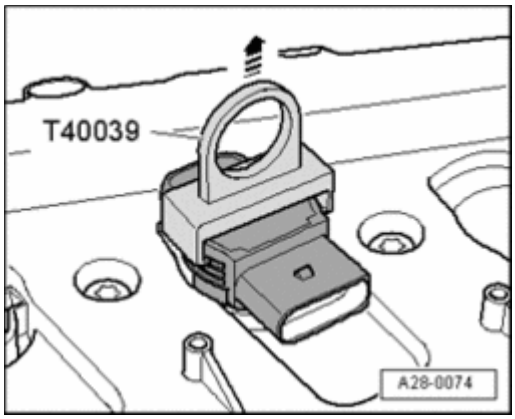

Fig. 327: Drip Tray For VAS 6100, VAS 6208
Courtesy of VOLKSWAGEN UNITED STATES, INC.

- Drip tray for workshop crane VAS 6208

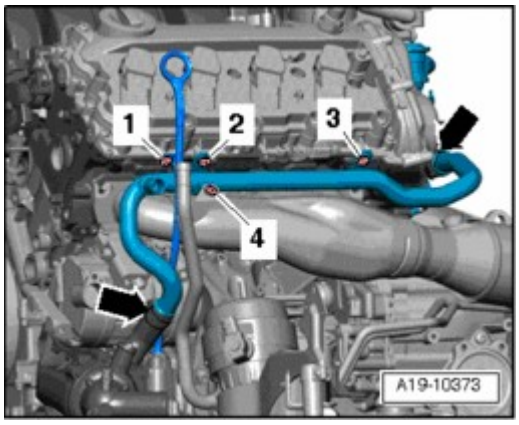

Fig. 328: Identifying Spring-Type Clip Pliers VAS 5024 A
Courtesy of VOLKSWAGEN UNITED STATES, INC.

- Spring-type clip pliers VAS 5024 A

Removing

CAUTION: Cover cap of expansion tank with rag and open carefully, as hot steam or hot coolant may escape when opening.

- Open cap of coolant expansion tank.

 © 2011 Mitchell Repair Information Company, LLC.

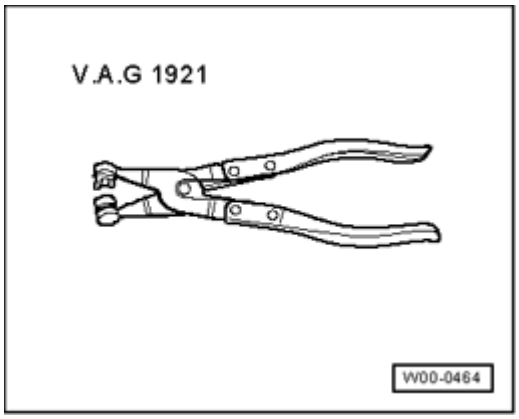

Fig. 329: Removing Engine Cover
Courtesy of VOLKSWAGEN UNITED STATES, INC.

- Remove engine cover - **arrows** -.

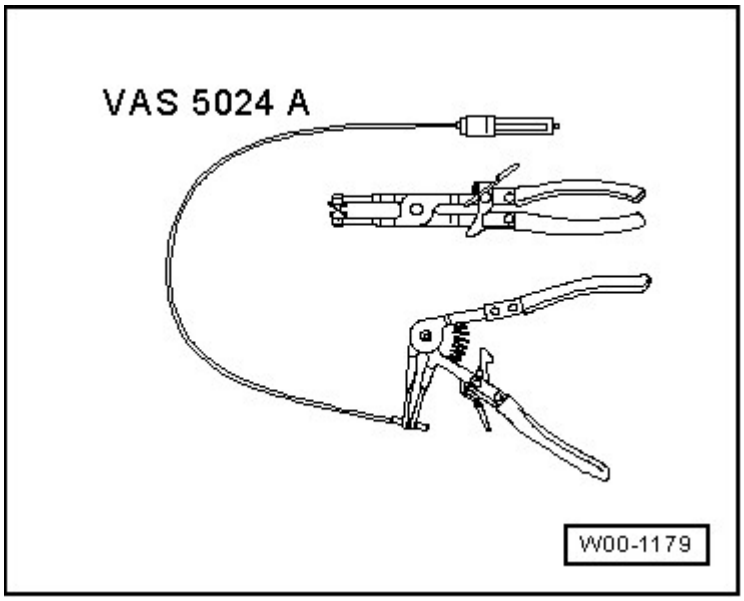

Fig. 330: Identifying Exhaust Pipe Fasteners
Courtesy of VOLKSWAGEN UNITED STATES, INC.

- For vehicles with auxiliary heater, remove bolts - **arrows** - for exhaust pipe of parking heater/auxiliary heater on noise insulation.

 © 2011 Mitchell Repair Information Company, LLC.

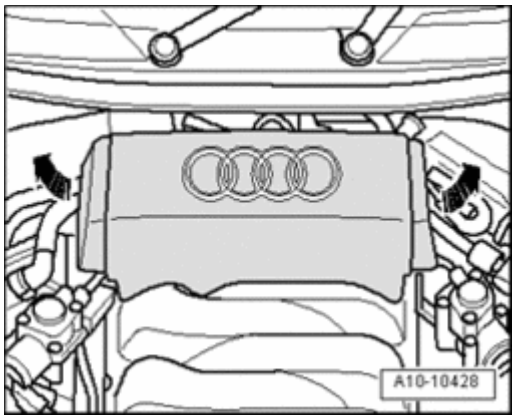

Fig. 331: Identifying Quick-Release Fasteners And Noise Insulation
Courtesy of VOLKSWAGEN UNITED STATES, INC.

- Loosen quick-release fasteners - **1** - and - **2** - and remove front noise insulation.
- Remove quick-release fasteners - **3** - and remove rear noise insulation, if installed.
- Drain engine coolant --> **Cooling system, draining and filling**
- Remove intake manifold and fuel rail --> - **24 - MULTIPORT FUEL INJECTION (MFI)**

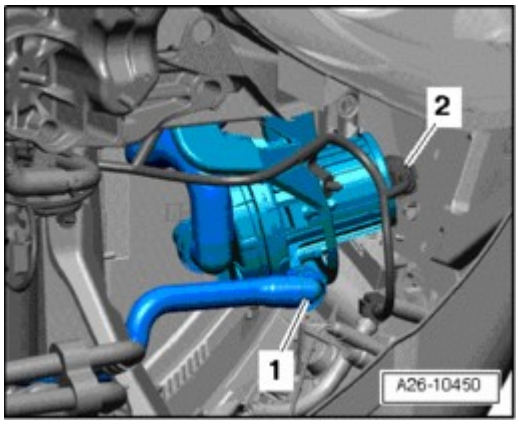

Fig. 332: Removing Bracket For Cable Connector From Coolant Pipe
Courtesy of VOLKSWAGEN UNITED STATES, INC.

- Remove bracket for cable connector - **arrows** - from coolant pipe.

 © 2011 Mitchell Repair Information Company, LLC.

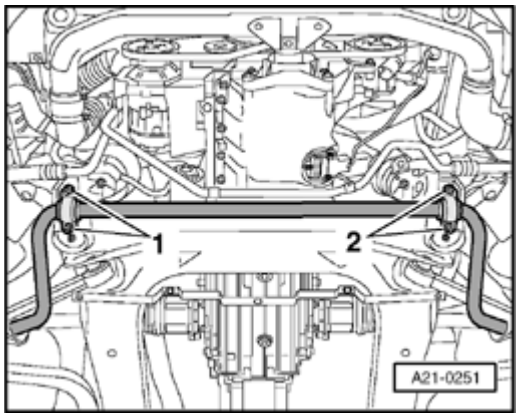

Fig. 333: Disconnecting Coolant Hose & Removing Bolts
Courtesy of VOLKSWAGEN UNITED STATES, INC.

- Disconnect coolant hose - **1** -.
- Remove bolts - **2** -.

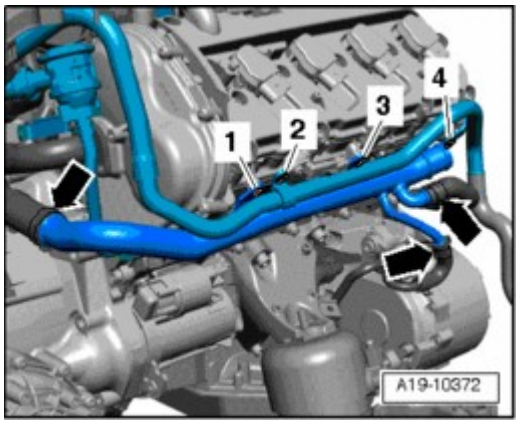

Fig. 334: Disconnecting Coolant Hoses From Coolant Pipe
Courtesy of VOLKSWAGEN UNITED STATES, INC.

- Disconnect coolant hoses - **arrows** - from coolant pipe.
- Remove bolt - **1** - and remove coolant pipe.

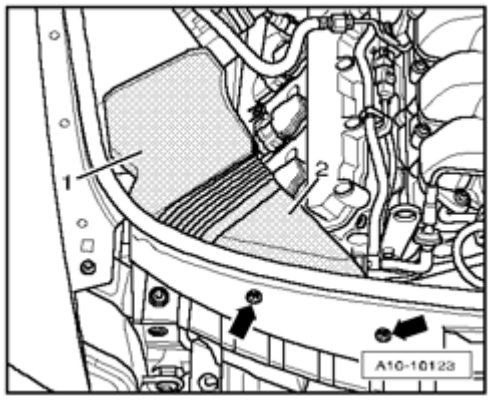

 © 2011 Mitchell Repair Information Company, LLC.

Fig. 335: Removing Oil Cooler
Courtesy of VOLKSWAGEN UNITED STATES, INC.

- Remove oil cooler - **arrows** -.

Installing

Installation is in reverse order of removal, note the following:

NOTE:

- **Always replace gaskets and seals.**
- **Secure all hose connections using hose clamps appropriate for the model type .**

- Fill with coolant --> **Cooling system, draining and filling**.

Torque specifications

Component	Nm
Coolant pipe to cylinder block	10
Coolant pipe to thermostat housing	10
Oil cooler to oil filter bracket	15

Oil filter bracket, removing and installing

Special tools, testers and auxiliary items required

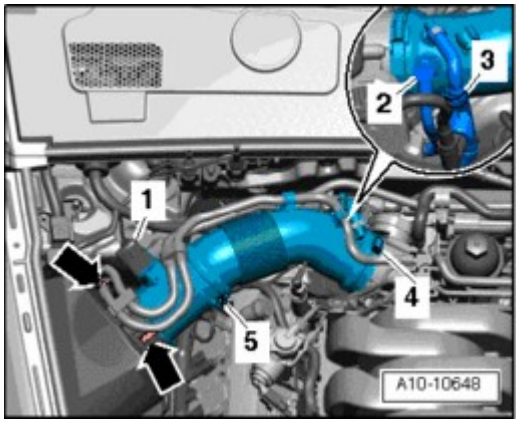

Fig. 336: Drip Tray For VAS 6100, VAS 6208
Courtesy of VOLKSWAGEN UNITED STATES, INC.

- Drip tray for workshop crane VAS 6208

 © 2011 Mitchell Repair Information Company, LLC.

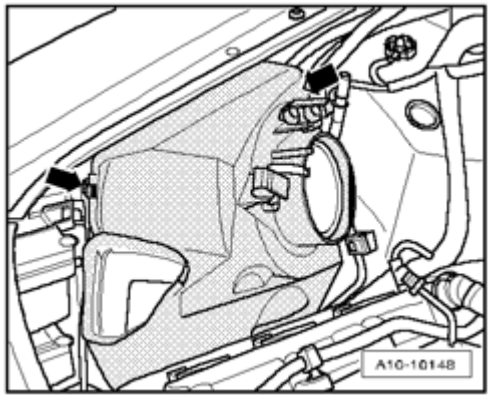

Fig. 337: Identifying Spring-Type Clip Pliers VAS 5024 A
Courtesy of VOLKSWAGEN UNITED STATES, INC.

- Spring-type clip pliers VAS 5024 A

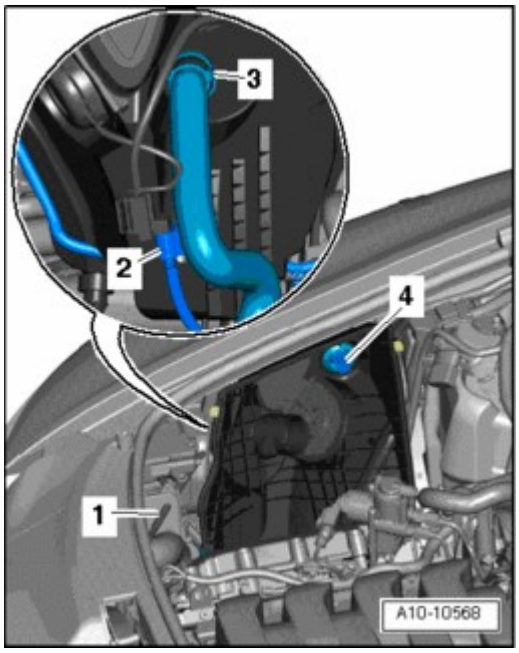

Fig. 338: Locking Tool T40098
Courtesy of VOLKSWAGEN UNITED STATES, INC.

- Locking Tool T40098

Removing

CAUTION: Cover cap of expansion tank with rag and open carefully, as hot steam or hot coolant may escape when opening.

- Open cap of coolant expansion tank.

 © 2011 Mitchell Repair Information Company, LLC.

Removing

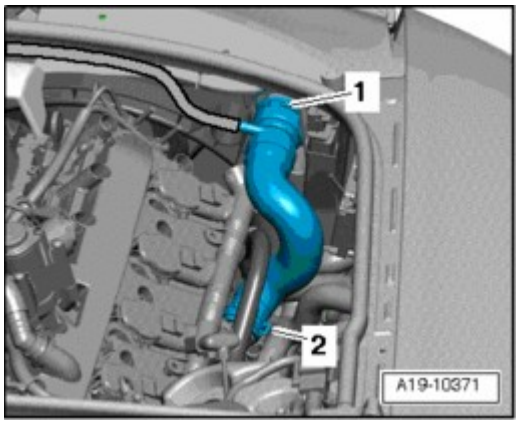

Fig. 339: Removing Engine Cover
Courtesy of VOLKSWAGEN UNITED STATES, INC.

- Remove engine cover - **arrows** -.

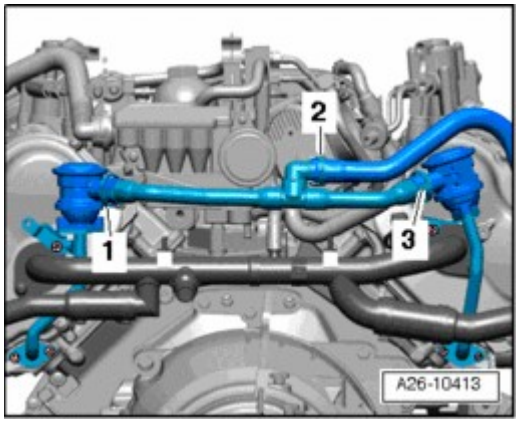

Fig. 340: Identifying Exhaust Pipe Fasteners
Courtesy of VOLKSWAGEN UNITED STATES, INC.

- For vehicles with auxiliary heater, remove bolts - **arrows** - for exhaust pipe of parking heater/auxiliary heater on noise insulation.

 © 2011 Mitchell Repair Information Company, LLC.

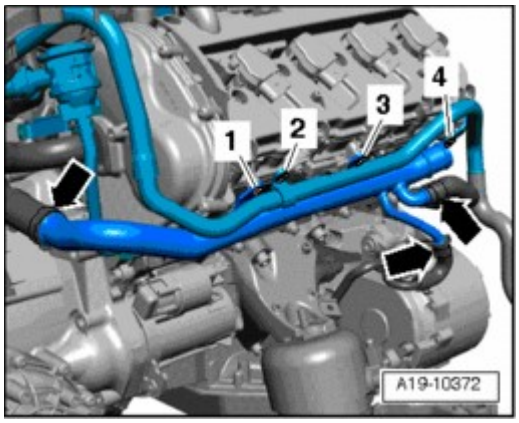

Fig. 341: Identifying Quick-Release Fasteners And Noise Insulation
Courtesy of VOLKSWAGEN UNITED STATES, INC.

- Loosen quick-release fasteners - **1** - and - **2** - and remove front noise insulation.
- Remove quick-release fasteners - **3** - and remove rear noise insulation, if installed.
- Drain engine coolant --> **Cooling system, draining and filling**

NOTE:

- **Before removing ribbed belt, mark the turning direction on it with chalk or a felt tip pen. A reversed turning direction can cause damage to the belt under operating conditions.**

- Mark direction of rotation of ribbed belt.

 © 2011 Mitchell Repair Information Company, LLC.

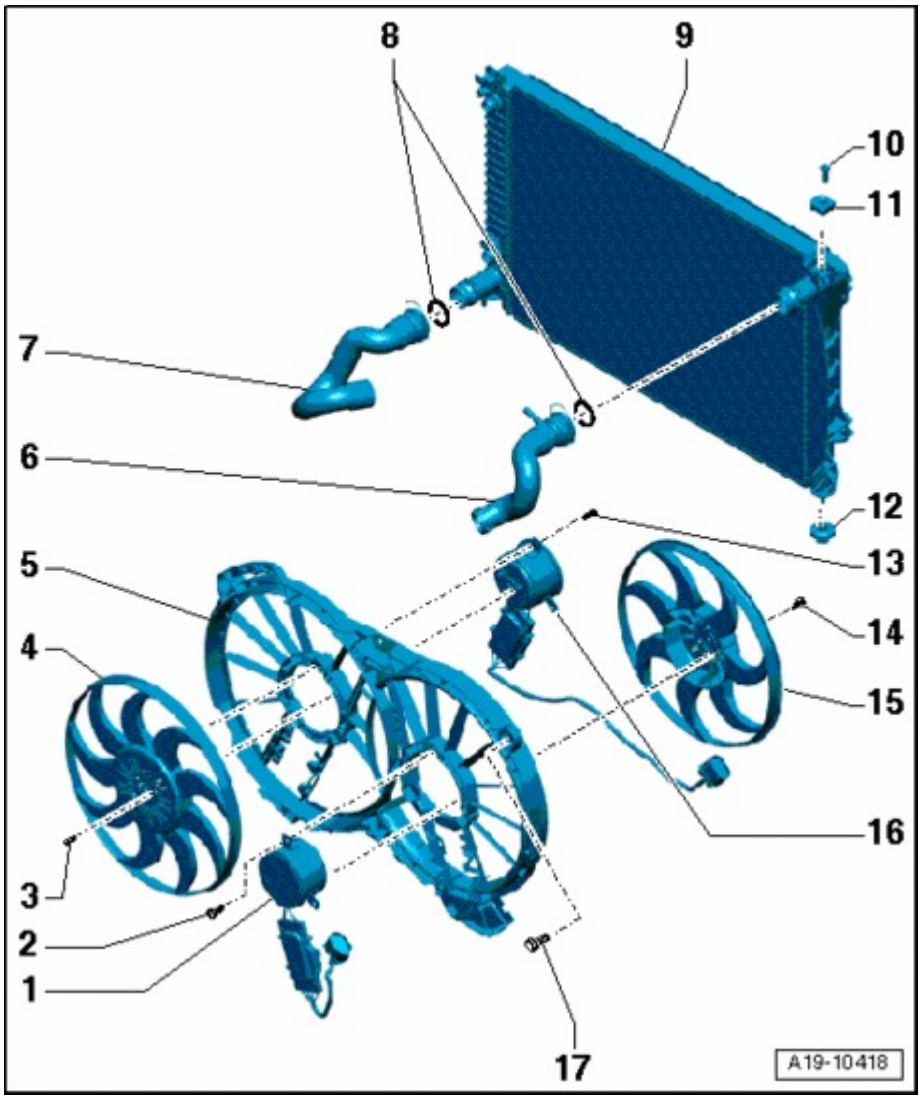

Fig. 342: Pivoting Belt Tensioner For Ribbed Belt To Relieve Tension On Ribbed Belt
Courtesy of VOLKSWAGEN UNITED STATES, INC.

- Pivot belt tensioner for ribbed belt in direction of - **arrow** - to relieve tension on ribbed belt.
- Secure tensioning element using Locking Tool T40098.
- Remove ribbed belt.

 © 2011 Mitchell Repair Information Company, LLC.

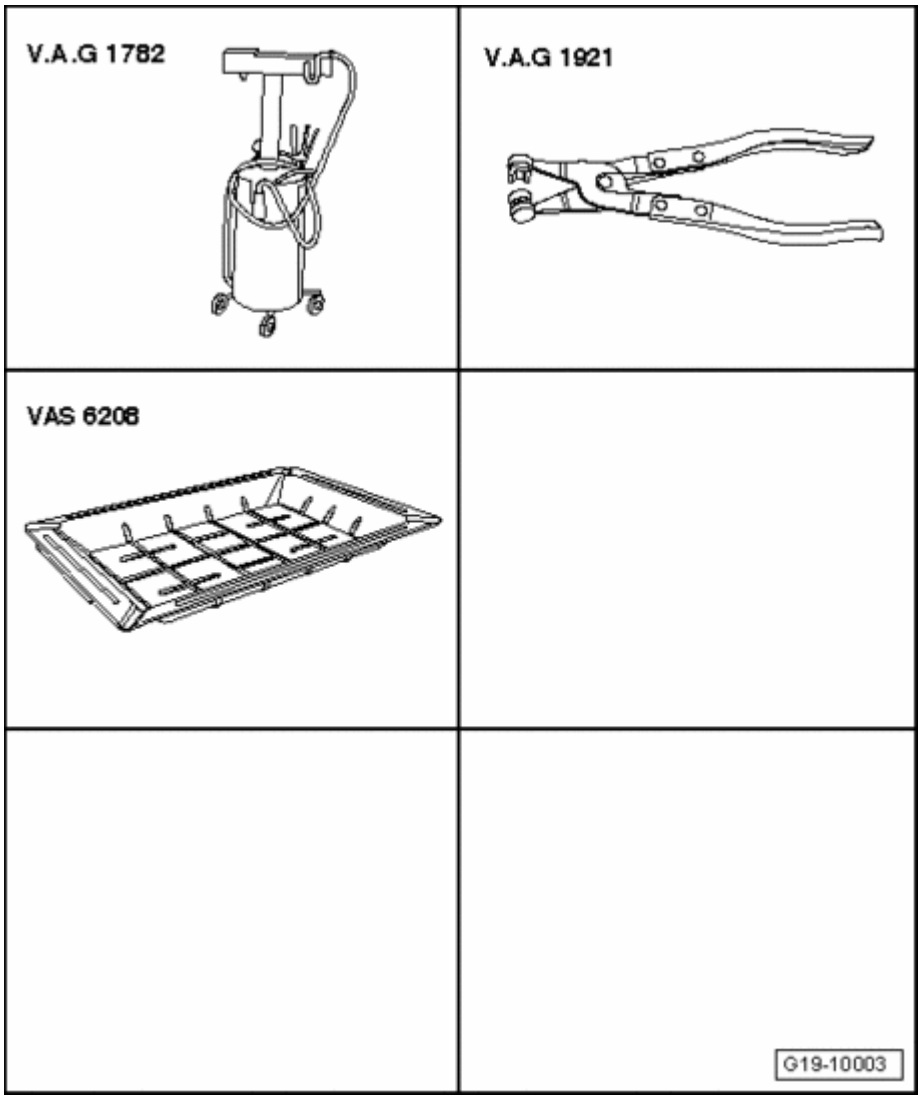

Fig. 343: Removing Ribbed Belt Tensioner With Engine Lifting Eye
Courtesy of VOLKSWAGEN UNITED STATES, INC.

- Remove ribbed belt tensioner with engine lifting eye - **arrows** -.
- Remove Generator --> **27 BATTERY, STARTER, GENERATOR, CRUISE CONTROL**
- Remove intake manifold and fuel rail --> - **24 - MULTIPORT FUEL INJECTION (MFI)**

 © 2011 Mitchell Repair Information Company, LLC.

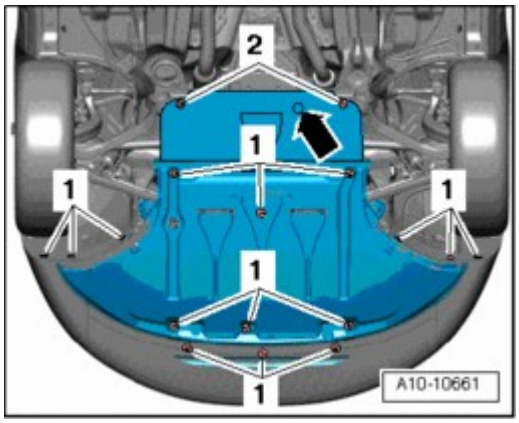

Fig. 344: Removing Bracket For Cable Connector From Coolant Pipe
Courtesy of VOLKSWAGEN UNITED STATES, INC.

- Remove bracket for cable connector - **arrows** - from coolant pipe.

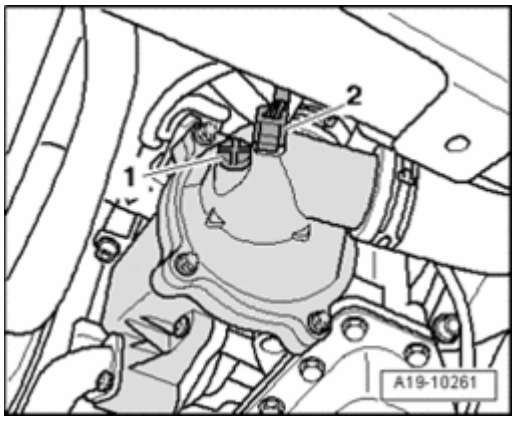

Fig. 345: Disconnecting Coolant Hose & Removing Bolts
Courtesy of VOLKSWAGEN UNITED STATES, INC.

- Disconnect coolant hose - **1** -.
- Remove bolts - **2** -.

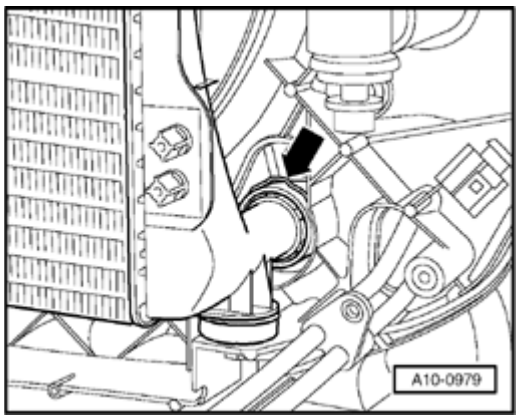

Fig. 346: Disconnecting Coolant Hoses From Coolant Pipe

 © 2011 Mitchell Repair Information Company, LLC.

Courtesy of VOLKSWAGEN UNITED STATES, INC.

- Disconnect coolant hoses - **arrows** - from coolant pipe.
- Remove bolt - **1** - and remove coolant pipe.

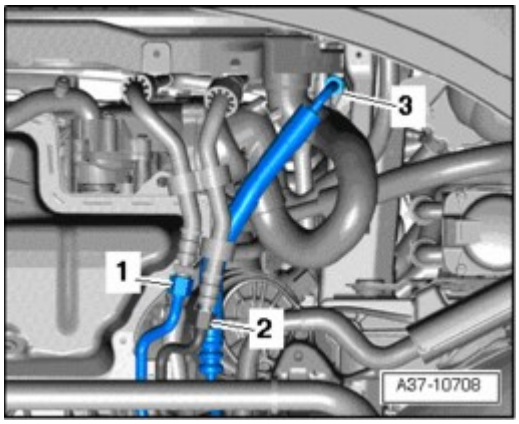

Fig. 347: Removing Oil Cooler
Courtesy of VOLKSWAGEN UNITED STATES, INC.

- Remove oil cooler - **arrows** -.

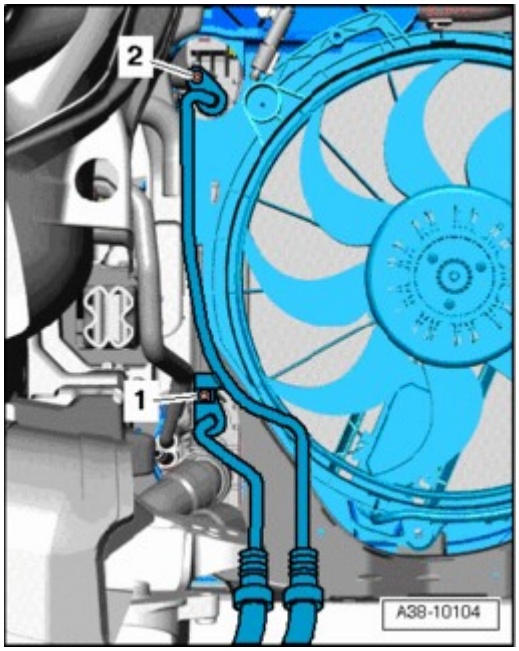

Fig. 348: Disconnecting Crankcase Ventilation Pipe & Ground (GND) Cable
Courtesy of VOLKSWAGEN UNITED STATES, INC.

- Disconnect crankcase ventilation pipe - **1** -.
- Remove Ground (GND) cable - **2** - for oil pressure switch.
- Remove bolts - **arrows** - and remove oil filter bracket.

 © 2011 Mitchell Repair Information Company, LLC.

Installing

Installation is in reverse order of removal, note the following:

NOTE:

- **Always replace gaskets and seals.**
- **Secure all hose connections using hose clamps appropriate for the model type .**

- Install oil baffle
- Install ribbed belt --> **Ribbed belt, removing and installing**.
- Fill with coolant --> **Cooling system, draining and filling**.

Torque specifications

Component	Nm
Coolant pipe to cylinder block	10
Coolant pipe to thermostat housing	10
Oil cooler to oil filter bracket	15
Oil filter bracket to engine block	15

19 - ENGINE - COOLING SYSTEM

COOLING SYSTEM COMPONENTS, REMOVING AND INSTALLING

Cooling system components, removing and installing

CAUTION: Cover cap of expansion tank with rag and open carefully, as hot steam or hot coolant may escape when opening.

NOTE:

- **When the engine is warm the cooling system is under pressure. If necessary release pressure before commencing repair work.**
- **Secure all hose connections using hose clamps appropriate for the model type .**
- **Hose clip pliers V.A.G 1921 or spring-type clip pliers VAS 5024 A are recommended for installing spring-type clamps.**
- **Always replace gaskets and seals.**
- **Arrows on coolant pipes and coolant hoses must line up across from each other.**

Coolant hose connection diagram

 © 2011 Mitchell Repair Information Company, LLC.

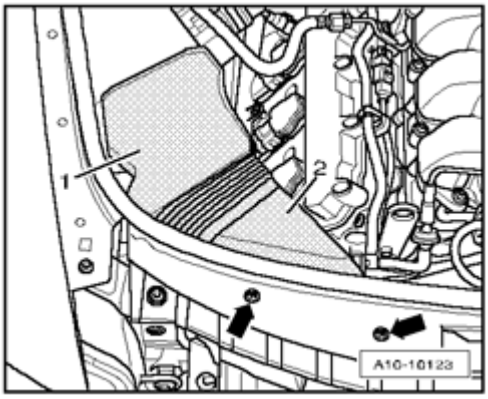

Fig. 349: Coolant Hose Connection Diagram
Courtesy of VOLKSWAGEN UNITED STATES, INC.

1 - Radiator

- Removing and installing --> **Radiator, removing and installing**
- Replace coolant after replacing

2 - Lower coolant hose

3 - Return hose from turbocharger

- With bypass thermostat in hose

4 - Coolant pump

- Removing and installing --> **Coolant pump, removing and installing**

5 - Turbocharger

- Removing and installing --> **Turbocharger, removing and installing**

6 - Map Controlled Engine Cooling Thermostat F265

- Removing and installing --> **Map Controlled Engine Cooling Thermostat F265 , removing and installing**
- Checking --> **Map Controlled Engine Cooling Thermostat F265 , checking**

7 - Engine oil cooler

8 - Cylinder head/cylinder block

- Replace coolant after replacing

9 - Water connection

 © 2011 Mitchell Repair Information Company, LLC.

10 - Bleeder hole

11 - Heater core of heater

- Replace coolant after replacing

12 - Bleeder screw

- Torque specification 20 Nm

13 - Expansion tank

- With cap
- Pressure relief valve in cap, checking --> **Cooling system, checking for leaks**

14 - Coolant line

15 - Upper coolant hose

Cooling system, draining and filling

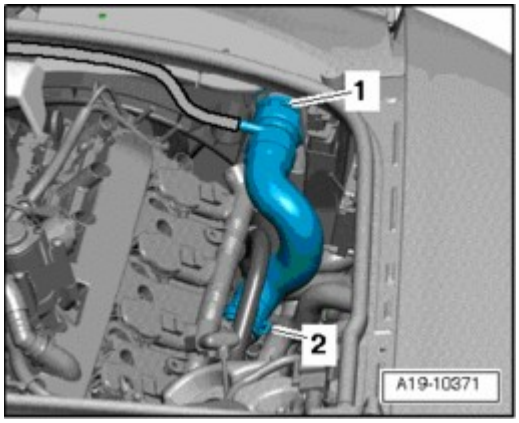

Fig. 350: Identifying Special Tools - Cooling System, Draining And Filling
Courtesy of VOLKSWAGEN UNITED STATES, INC.

Special tools, testers and auxiliary items required

- Adapter V.A.G 1274/8
- Pipe V.A.G 1274/10
- Drip tray for workshop crane VAS 6208
- Hose clamp pliers V.A.G 1921

- Cooling system charge unit VAS 6096
- Refractometer T10007

 © 2011 Mitchell Repair Information Company, LLC.

Draining

NOTE:

- **Drained coolant must be stored in a clean container for disposal or reuse.**

CAUTION: Cover cap of expansion tank with rag and open carefully, as hot steam or hot coolant may escape when opening.

- Open cap of coolant expansion tank.

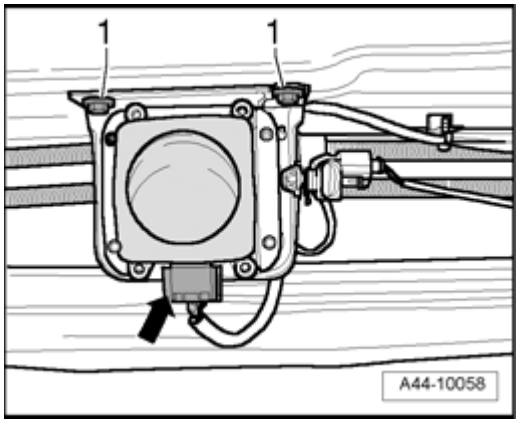

Fig. 351: Identifying Exhaust Pipe Fasteners
Courtesy of VOLKSWAGEN UNITED STATES, INC.

- For vehicles with auxiliary heater, remove bolts - **arrows** - for exhaust pipe of parking heater/auxiliary heater on noise insulation.

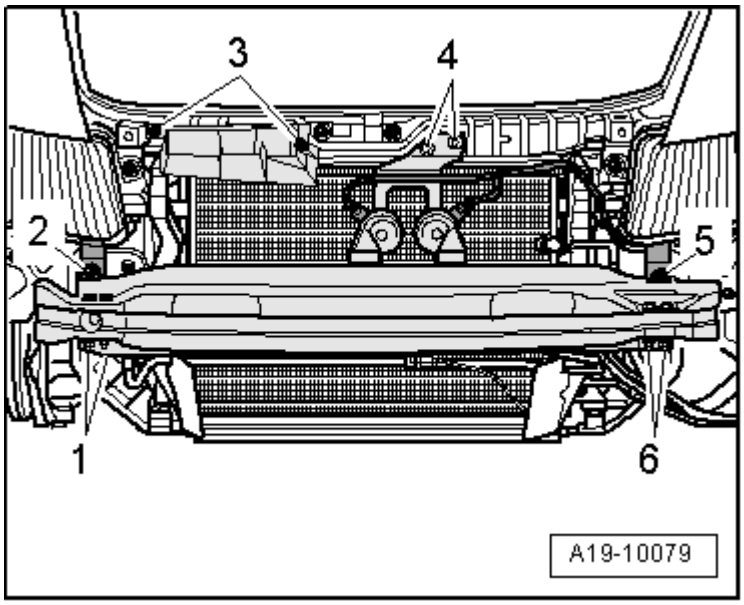

Fig. 352: Identifying Quick-Release Fasteners And Noise Insulation
Courtesy of VOLKSWAGEN UNITED STATES, INC.

 © 2011 Mitchell Repair Information Company, LLC.

- Loosen quick-release fasteners - **1** - and - **2** - and remove front noise insulation.
- Place drip tray for workshop crane VAS 6208 or drip tray V.A.G 1306 under engine.

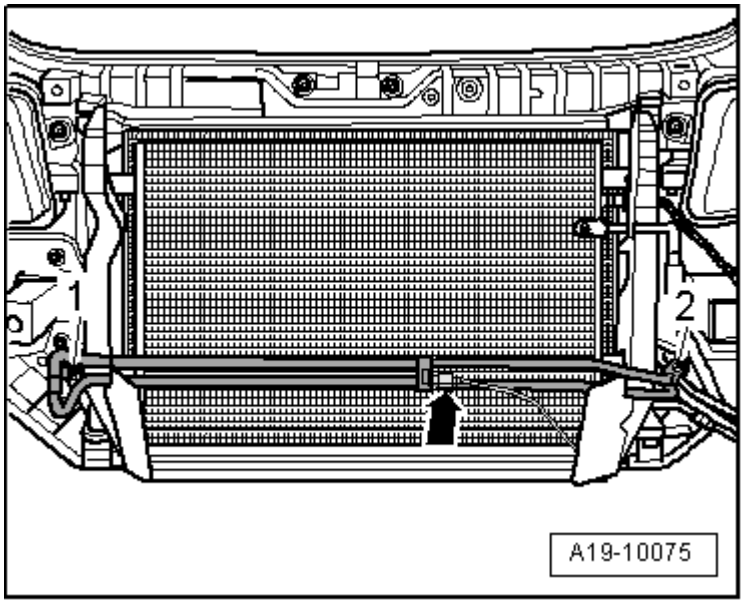

Fig. 353: Opening/Closing Drain Plug From Lower Left Coolant Hose
Courtesy of VOLKSWAGEN UNITED STATES, INC.

- Open drain plug - **arrow** - from lower left coolant hose and drain coolant.

Filling

NOTE:

- **The cooling system is filled all year round with a mixture of frost and corrosion protection additives and water.**
- **Only coolant additive G12+ can be used, in compliance with TL VW 774 F. Other coolant additives may above all reduce the corrosion protection effect significantly. The damage resulting from this may lead to loss of coolant and consequently to severe engine damage.**
- **Coolant additive G12+ can be combined with additives G11 and G12.**
- **G12+ and coolant additives with the designation "conforming to TL VW 774F " reduce frost and corrosion damage as well as lime deposits. They also raise the boiling point. For this reason the system must be filled all year round with frost and corrosion protection additives.**
- **Because of its high boiling point, the coolant improves engine reliability under heavy loads, particularly in countries with tropical climates.**
- **Protection against frost must be assured to about -25 °C (in arctic climatic countries to about -35 °C).**
- **The coolant concentration must not be reduced by adding water even in warmer seasons and in warmer countries. The coolant additive portion must be at least 40%.**

 © 2011 Mitchell Repair Information Company, LLC.

- **If for climatic reasons a greater frost protection is required, the amount of G12+ can be increased, but only up to 60% (frost protection to about -40 ° C), as otherwise frost protection is reduced again and cooling effectiveness is also reduced.**
- **Only clean drinking water may be used for mixing coolant.**
- **If the radiator, heater core, cylinder head and cylinder head gasket or cylinder block is replaced, completely replace the engine coolant.**
- **Dirty coolant must not be re-used.**
- **For coolant additive G12+, use refractometer T10007 to test frost protection in cooling system.**

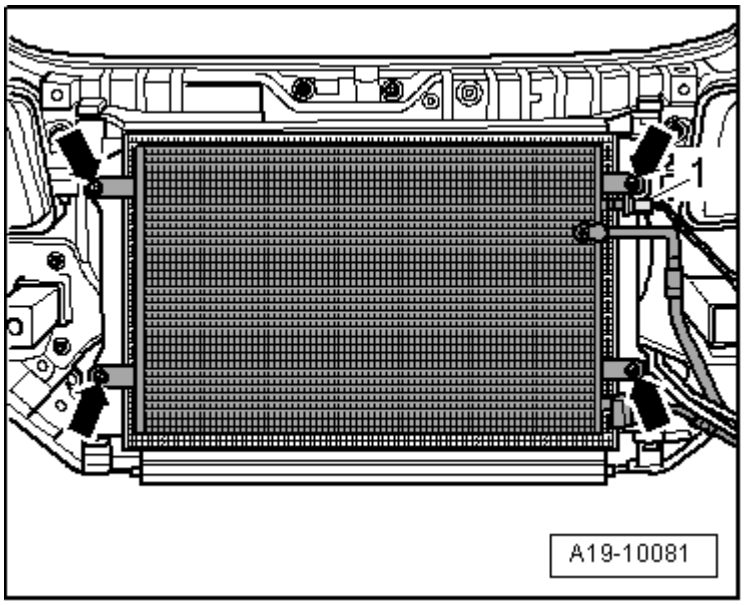

Fig. 354: Opening/Closing Drain Plug From Lower Left Coolant Hose
Courtesy of VOLKSWAGEN UNITED STATES, INC.

- Close drain plug - **arrow** -.

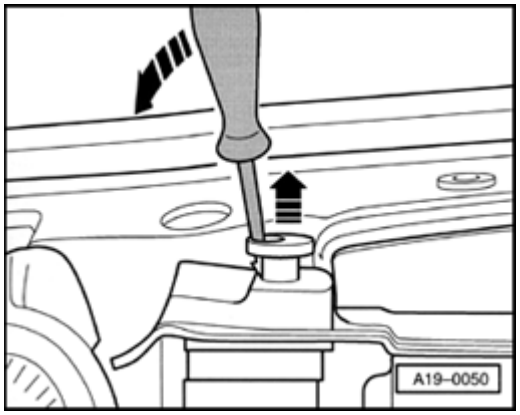

Fig. 355: Filling Reservoir VAS 6096/1 With At Least 8 Liters Of Premixed Coolant
Courtesy of VOLKSWAGEN UNITED STATES, INC.

 © 2011 Mitchell Repair Information Company, LLC.

- Fill coolant reservoir of cooling system filler unit VAS 6096 with at least 8 liters of pre-mixed coolant with correct mixture ratio:

- G12+ (40%) and water (60%) for frost protection to -25 °C
- G12+ (50%) and water (50%) for frost protection to -35 °C
- G12+ (60%) and water (40%) for frost protection to -40 °C

- Install adapter V.A.G 1274/8 on expansion tank.
- Assemble cooling system charge unit VAS 6096 on adapter V.A.G 1274/8.
- Place air outlet hose - **1** - into a small container - **2** -. (A small amount of coolant is drawn off which should be reserved with discharged air.)
- Close both valves - **A** - and - **B** - (lever perpendicular to direction of flow).

- Connect hose - **3** - to pressurized air.

- Pressure: 6 to 10 bar pressure

 © 2011 Mitchell Repair Information Company, LLC.

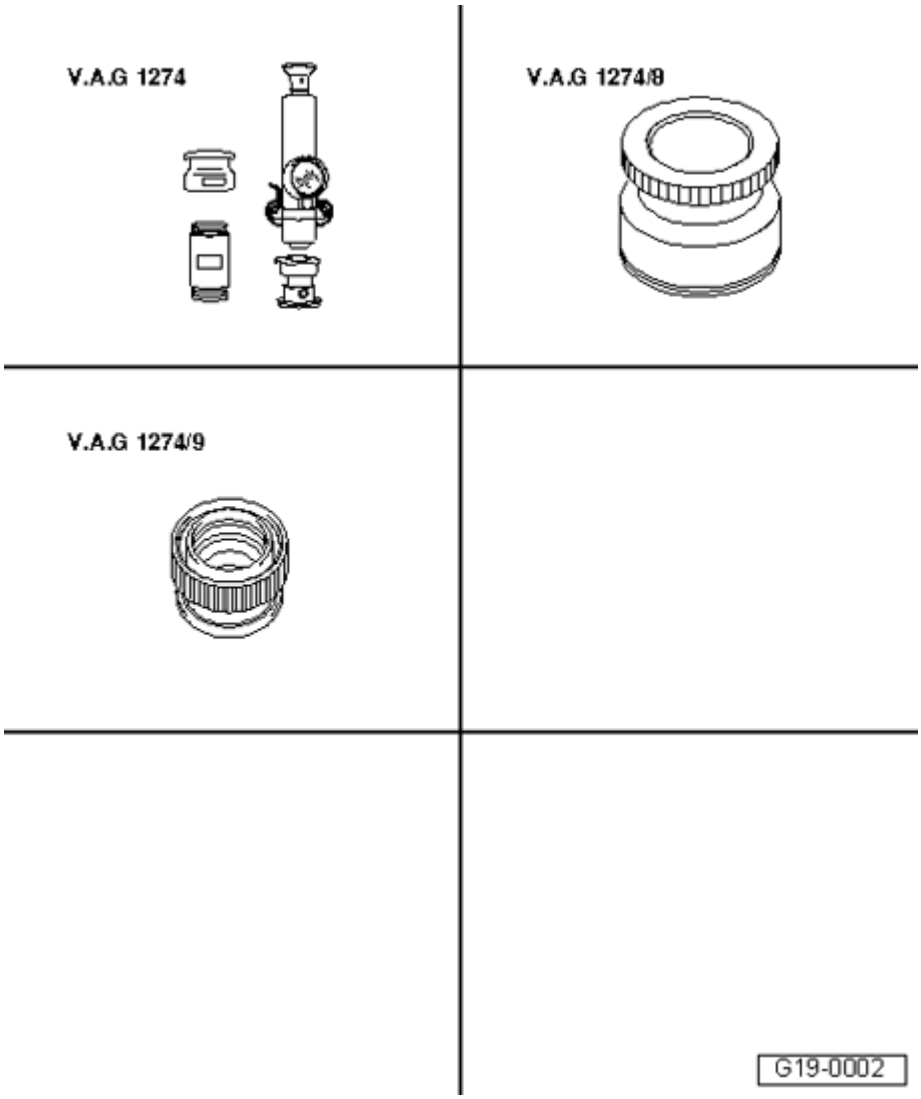

Fig. 356: Cooling System, Draining And Filling
Courtesy of VOLKSWAGEN UNITED STATES, INC.

- Open valve - **B** - (lever in direction of flow).

A vacuum is created in cooling system by suction jet pump.

- Needle on instrument display must travel into green region.

- Briefly open valve - **A** - (lever in direction of flow), so that the hose of cooling system filler unit VAS 6096 is filled with coolant.
- Close valve - **A** - again.
- Let valve - **B** - remain open another 2 minutes.

A further vacuum is created in cooling system by suction jet pump.

 © 2011 Mitchell Repair Information Company, LLC.

- Needle on instrument display must still remain in green region.

- Close valve - **B** -.

- Needle in display instrument must remain in green region, then sufficient vacuum in cooling system is obtained for upcoming filling.

If needle stands below green region, repeat procedure

If vacuum decreases, cooling system is leaking

- Disconnect pressurized air hose.
- Open valve - **A** -.

The vacuum in cooling system causes coolant to be extracted from cooling system filler unit VAS 6096 ; cooling system is filled.

- Detach cooling system filler unit VAS 6096 from coolant expansion tank.

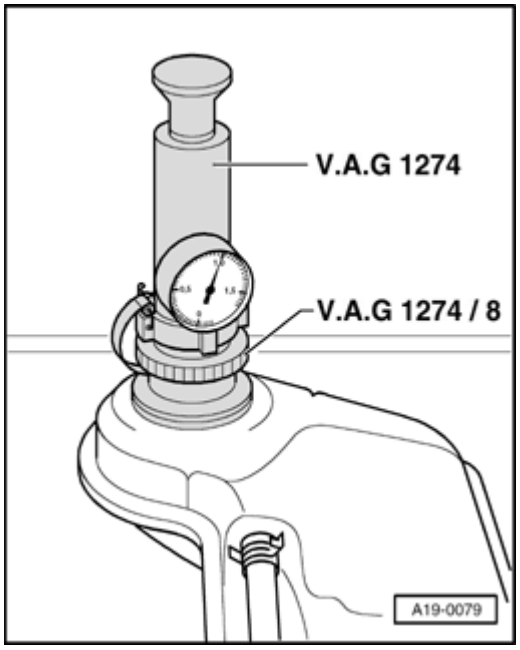

Fig. 357: Connecting Adapter For Cooling System Tester V.A.G 1274/10 To Adapter V.A.G 1274/8
Courtesy of VOLKSWAGEN UNITED STATES, INC.

- Connect adapter for cooling system tester V.A.G 1274/10 to adapter V.A.G 1274/8.

 © 2011 Mitchell Repair Information Company, LLC.

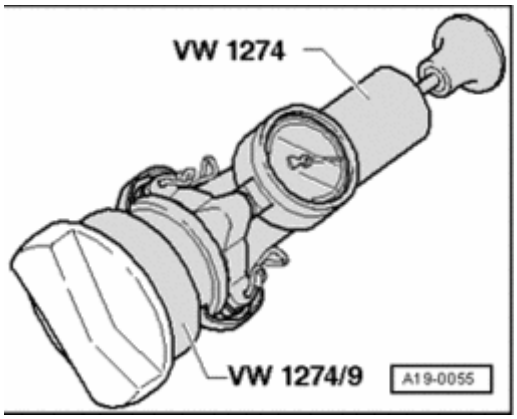

Fig. 358: Loosening Coolant Hose To Heater Core
Courtesy of VOLKSWAGEN UNITED STATES, INC.

- Loosen coolant hose to heater core and pull back hose sufficiently so that the bleeder hole - **arrow** - is no longer sealed by the connection.
- Fill up coolant until it escapes from coolant hose bleeder hole without bubbles.
- Push coolant hose onto connection and secure it with spring-type clamp.
- If present, switch on auxiliary heater for about 30 seconds.

- Twist cap for expansion tank closed.
- Start engine.
- Set heating air conditioning system to "HI" on both sides.
- Let engine run at 2000 RPM for 3 minutes.

- Let engine run at idle long enough until both large coolant hoses on main cooler are warm.
- Let engine run at 2000 RPM for 1 minute.
- Turn off engine and allow it to cool off.

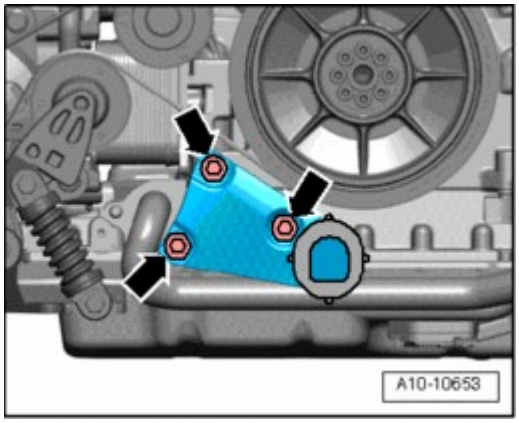

Fig. 359: Checking Coolant Level
Courtesy of VOLKSWAGEN UNITED STATES, INC.

- Check coolant level.

 © 2011 Mitchell Repair Information Company, LLC.

- With cold engine, coolant level must be at MAX marking.
- Coolant level may be above MAX marking with engine at operating temperature.

Coolant distribution housing with Map Controlled Engine Cooling Thermostat F265 , assembly overview

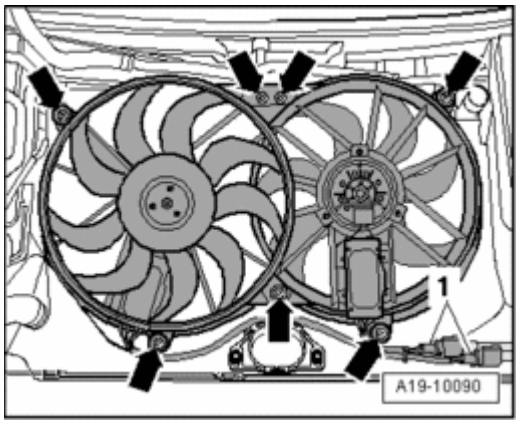

Fig. 360: Coolant Distribution Housing With Map Controlled Engine Cooling Thermostat F265 , Assembly Overview
Courtesy of VOLKSWAGEN UNITED STATES, INC.

1 - O-ring

- Replace

2 - Coolant distribution housing

3 - O-ring

- Replace

4 - Lower coolant line

5 - 10 Nm

6 - 15 Nm

7 - Seal

- Replace

8 - Heating element connection

9 - Connector

10 - Map Controlled Engine Cooling Thermostat F265

 © 2011 Mitchell Repair Information Company, LLC.

- Checking --> **Map Controlled Engine Cooling Thermostat F265 , checking**
- With connecting piece
- Opening begins approx. 105 °C
- Removing and installing --> **Map Controlled Engine Cooling Thermostat F265 , removing and installing**

Thermostat

Special tools and workshop equipment required

- Drip Tray for VAS 6100 -VAS 6208-
- Hose Clip Pliers -V.A.G 1921-
- Locking Tool -T40098-

Removing

WARNING: Observe procedures for disconnecting battery. Refer to Battery .

- With ignition switched off, disconnect battery Ground (GND) cable -arrow-.

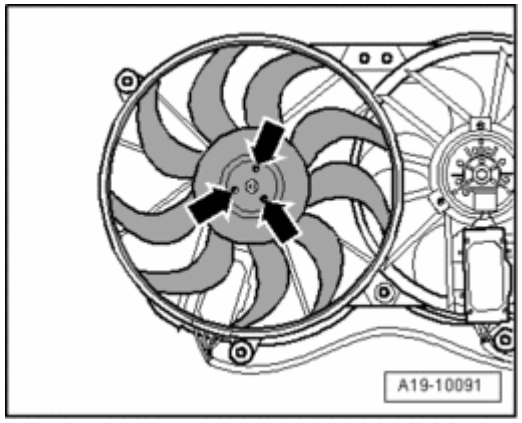

Fig. 361: Disconnecting Battery Ground (GND) Strap

- Remove engine cover -arrows-.

WARNING: Risk of scalding due to hot steam and hot coolant.

- **When the engine is warm the cooling system is under pressure.**
- **To reduce pressure, cover coolant reservoir cap with cloth and carefully open.**

 © 2011 Mitchell Repair Information Company, LLC.

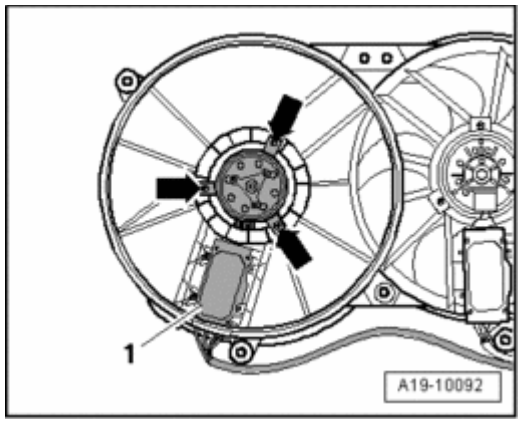

Fig. 362: Removing Engine Cover

- Open cap of coolant expansion tank.
- Loosen quick-release fasteners -1 and 2- and remove front noise insulation.

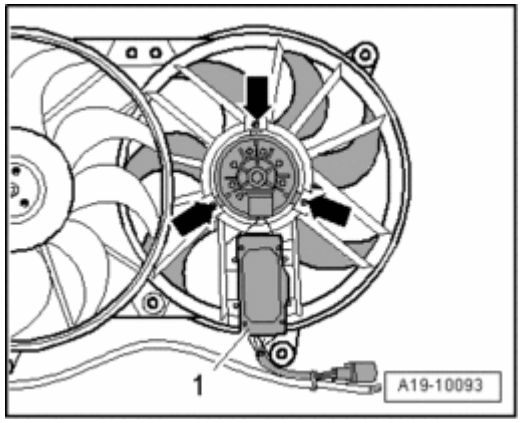

Fig. 363: Identifying Quick-Release Fasteners And Noise Insulation

- Drain the coolant. Refer to **Cooling system, draining and filling** .
- Remove oil pressure sensor electrical connector -1-.
- Also remove lower coolant hose on coolant pipe -2- and allow remaining coolant to drain.

 © 2011 Mitchell Repair Information Company, LLC.

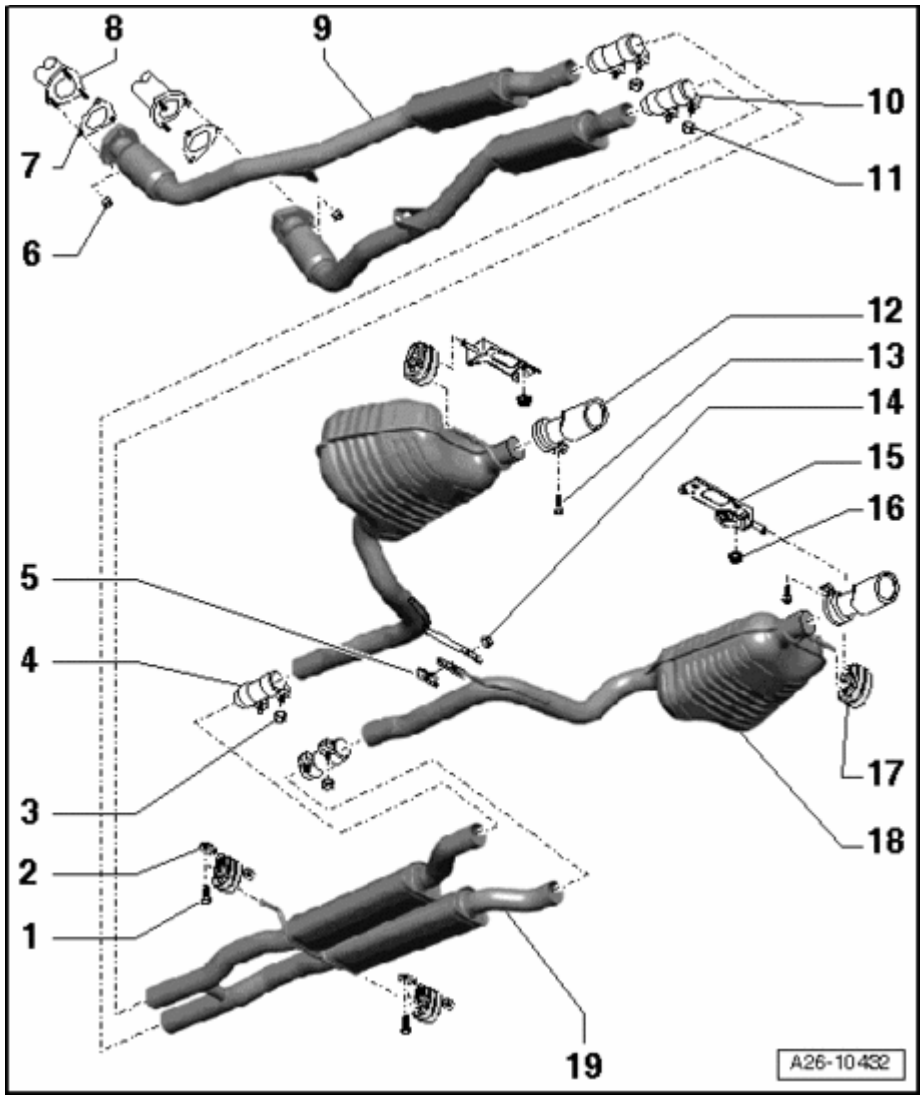

Fig. 364: Removing Oil Pressure Sensor Electrical Connector & Lower Coolant Hose On Coolant Pipe

NOTE: Before removing the ribbed belt, mark the turning direction on it with chalk or a felt tip pen. A reversed turning direction can cause damage to the belt under operating conditions.

- Mark direction of rotation of ribbed belt.
- Pivot the belt tensioner for ribbed belt in direction of -arrow- to relieve tension on ribbed belt.

 © 2011 Mitchell Repair Information Company, LLC.

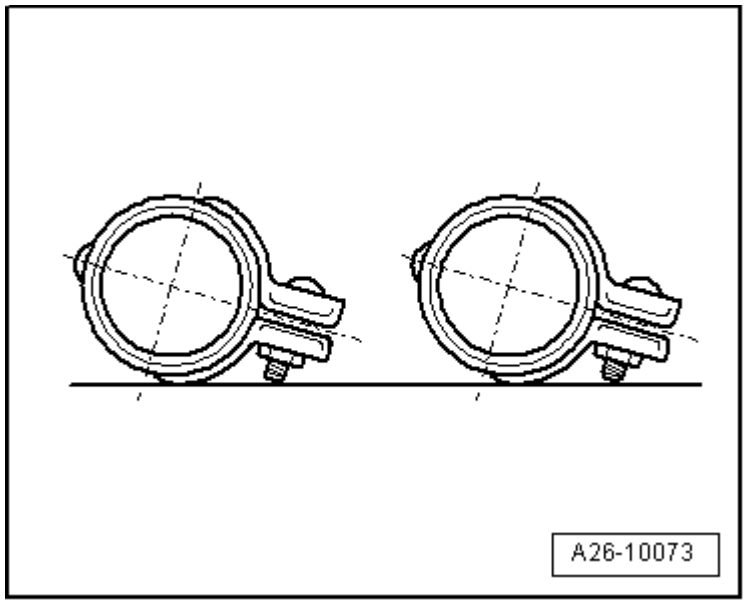

Fig. 365: Pivoting Belt Tensioner For Ribbed Belt To Relieve Tension On Ribbed Belt

- Secure tensioning element using -T40098- .
- Remove ribbed belt.
- Remove the generator. Refer to **Generator (GEN)** .
- Remove the coolant pipes. Refer to **Coolant pipe, removing and installing** .
- Remove the coolant pipe -arrow- from the intake manifold and move it to the side.

Fig. 366: Identifying Coolant Pipe

- Remove the coolant hose -1- by lifting the retaining clip.

 © 2011 Mitchell Repair Information Company, LLC.

- Remove the bolts -2 and 3- and remove the thermostat.

Fig. 367: Coolant Hose & Thermostat Bolts

Installing

- Tightening specifications.

Component		Nm
Thermostat to engine block		15
Accessory assembly bracket to cylinder block		45 1)
Ribbed belt tensioner to accessory assembly bracket		23
• 1) Insert using locking compound		

Installation is in reverse order of removal, note the following:

NOTE: Replace O-ring.

- Clean and/or smooth O-ring sealing surface.
- Coat new O-ring with coolant G12+.
- Install the coolant pipes. Refer to **Coolant pipe, removing and installing** .
- Fill with coolant. Refer to **Cooling system, draining and filling** .
- Install the generator. Refer to **Generator (GEN)** .
- Install the ribbed belt. Refer to **Ribbed belt, removing and installing** .
- Connect battery. Necessary measures. Refer to **Battery** .

 © 2011 Mitchell Repair Information Company, LLC.

Map Controlled Engine Cooling Thermostat F265 , removing and installing

Special tools, testers and auxiliary items required

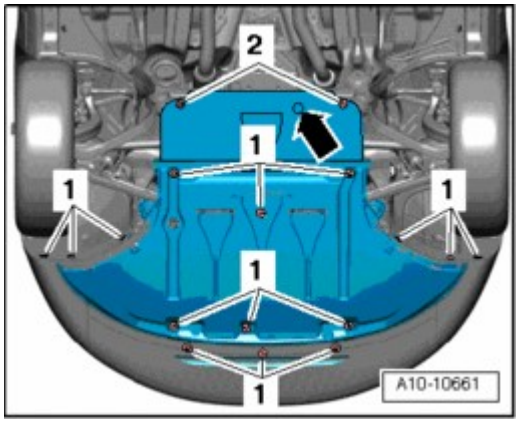

Fig. 368: Drip Tray For VAS 6100, VAS 6208
Courtesy of VOLKSWAGEN UNITED STATES, INC.

- Drip tray for workshop crane VAS 6208

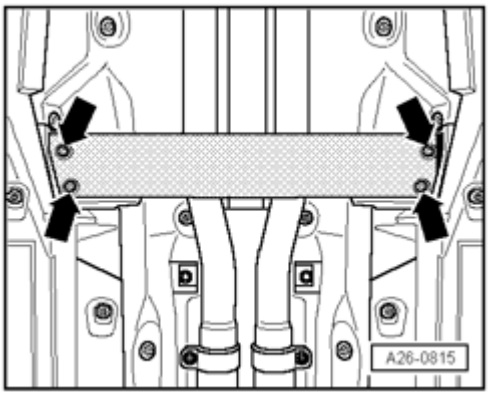

Fig. 369: Identifying Hose Clip Pliers Vag 1921
Courtesy of VOLKSWAGEN UNITED STATES, INC.

- Hose clamp pliers V.A.G 1921

 © 2011 Mitchell Repair Information Company, LLC.

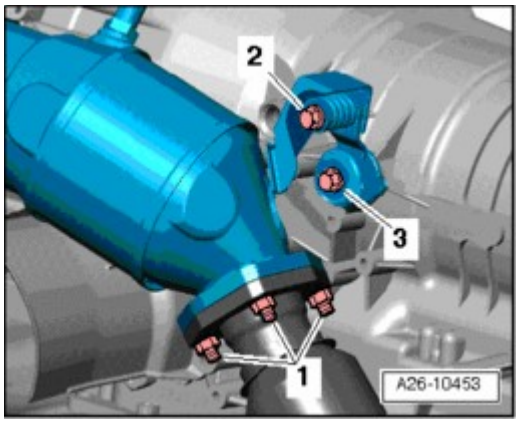

Fig. 370: Locking Tool T40098
Courtesy of VOLKSWAGEN UNITED STATES, INC.

- Locking Tool T40098

Removing

CAUTION: Observe measures when connecting battery. --> 27 BATTERY, STARTER, GENERATOR, CRUISE CONTROL

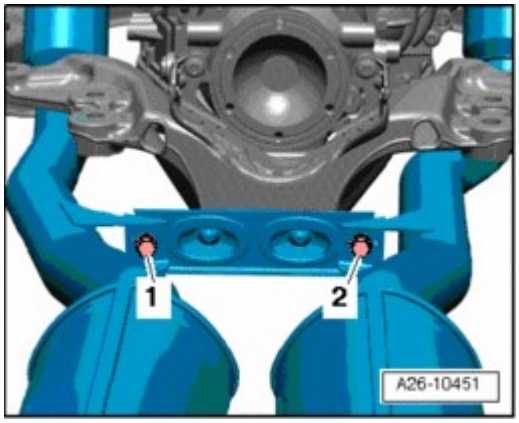

Fig. 371: Disconnecting Battery Ground (GND) Strap
Courtesy of VOLKSWAGEN UNITED STATES, INC.

- With ignition switched off, disconnect Battery Ground (GND) strap - **arrow** -.

 © 2011 Mitchell Repair Information Company, LLC.

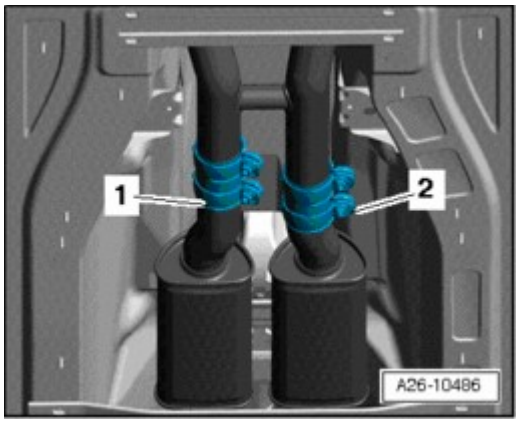

Fig. 372: Removing Engine Cover
Courtesy of VOLKSWAGEN UNITED STATES, INC.

- Remove engine cover - **arrows** -.

CAUTION: Cover cap of expansion tank with rag and open carefully, as hot steam or hot coolant may escape when opening.

- Open cap of coolant expansion tank.

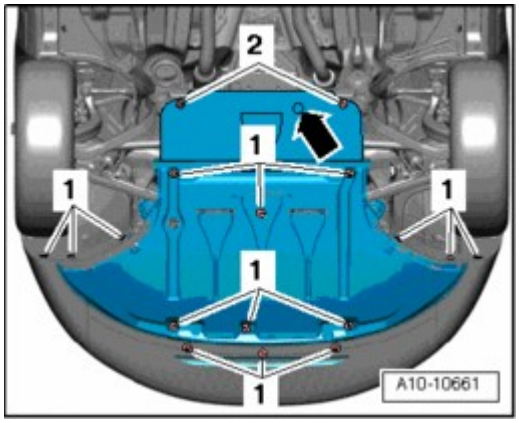

Fig. 373: Identifying Exhaust Pipe Fasteners
Courtesy of VOLKSWAGEN UNITED STATES, INC.

- For vehicles with auxiliary heater, remove bolts - **arrows** - for exhaust pipe of parking heater/auxiliary heater on noise insulation.

 © 2011 Mitchell Repair Information Company, LLC.

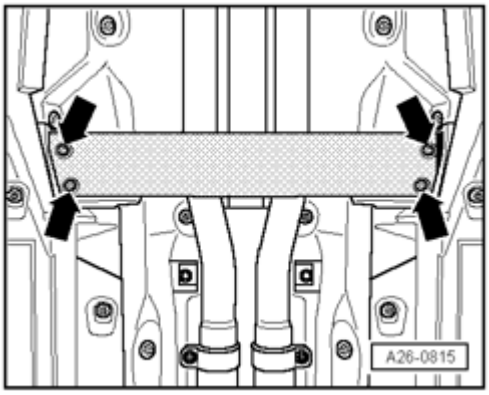

Fig. 374: Identifying Quick-Release Fasteners And Noise Insulation
Courtesy of VOLKSWAGEN UNITED STATES, INC.

- Loosen quick-release fasteners - **1** - and - **2** - and remove front noise insulation.
- Drain engine coolant --> **Cooling system, draining and filling**

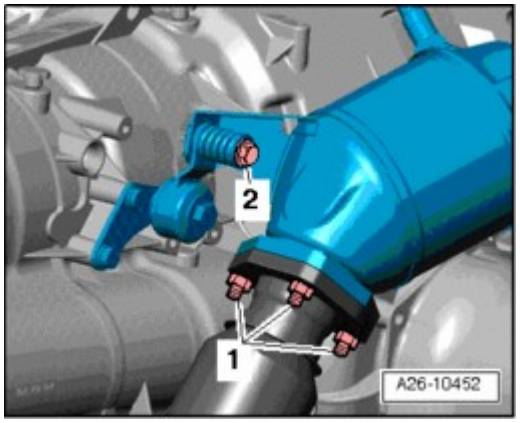

Fig. 375: Removing Oil Pressure Sensor Electrical Connector & Lower Coolant Hose On Coolant Pipe
Courtesy of VOLKSWAGEN UNITED STATES, INC.

- Remove oil pressure sensor electrical connector - **1** -.
- Also remove lower coolant hose on coolant pipe - **2** - and allow remaining coolant to drain.

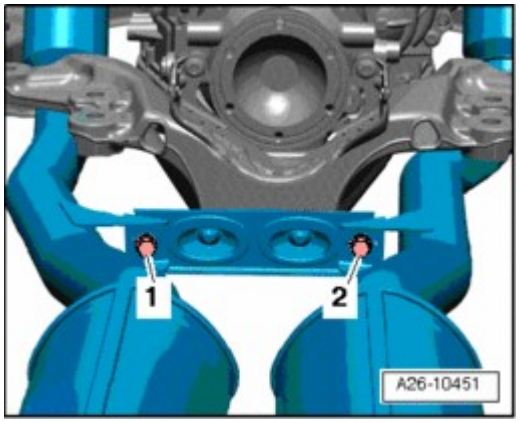

 © 2011 Mitchell Repair Information Company, LLC.

Fig. 376: Pulling EVAP Canister With Connected Lines Upward Out Of Retainer
Courtesy of VOLKSWAGEN UNITED STATES, INC.

- Pull EVAP canister with connected lines upward in direction of - **arrow** - out of retainer and lay it aside.

NOTE:

- **Before removing ribbed belt, mark the turning direction on it with chalk or a felt tip pen. A reversed turning direction can cause damage to the belt under operating conditions.**

- Mark direction of rotation of ribbed belt.

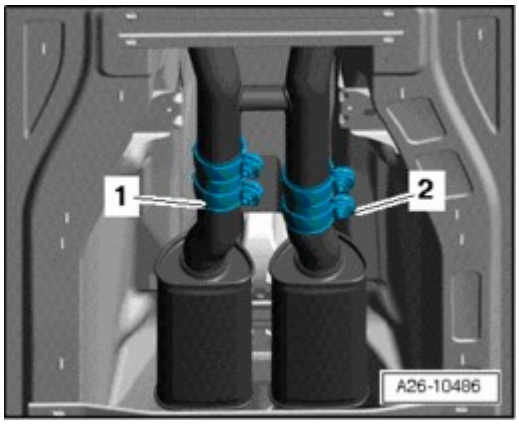

Fig. 377: Pivoting Belt Tensioner For Ribbed Belt To Relieve Tension On Ribbed Belt
Courtesy of VOLKSWAGEN UNITED STATES, INC.

- Pivot belt tensioner for ribbed belt in direction of - **arrow** - to relieve tension on ribbed belt.
- Secure tensioning element using Locking Tool T40098.
- Remove ribbed belt.

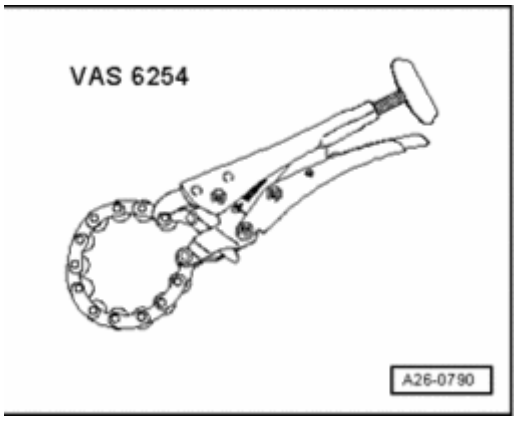

Fig. 378: Removing Ribbed Belt Tensioner With Engine Lifting Eye
Courtesy of VOLKSWAGEN UNITED STATES, INC.

- Remove ribbed belt tensioner with engine lifting eye - **arrows** -.
- Remove Generator --> **27 BATTERY, STARTER, GENERATOR, CRUISE CONTROL**

 © 2011 Mitchell Repair Information Company, LLC.

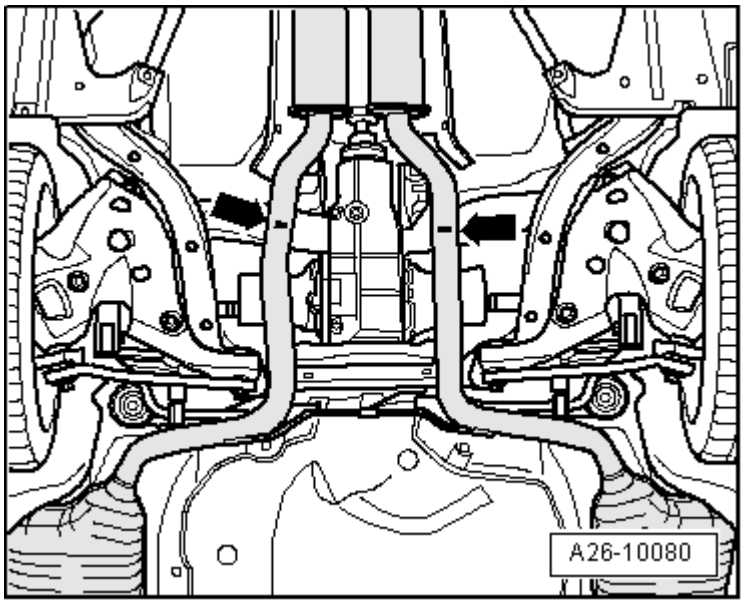

Fig. 379: Separating Connector For Wiring To Air Conditioning Compressor Clutch Solenoid
Courtesy of VOLKSWAGEN UNITED STATES, INC.

- Separate connector - **1** - for wiring to air conditioning compressor clutch solenoid.

CAUTION: The air conditioning refrigerant circuit must not be opened.

- Remove air conditioning compressor from bracket - **arrows** -.

NOTE:

- **To prevent damage to condenser and also to the refrigerant lines/hoses, ensure that the lines and hoses are not stretched, kinked or bent.**

- Hang up A/C compressor with attached lines at bottom of vehicle.

 © 2011 Mitchell Repair Information Company, LLC.

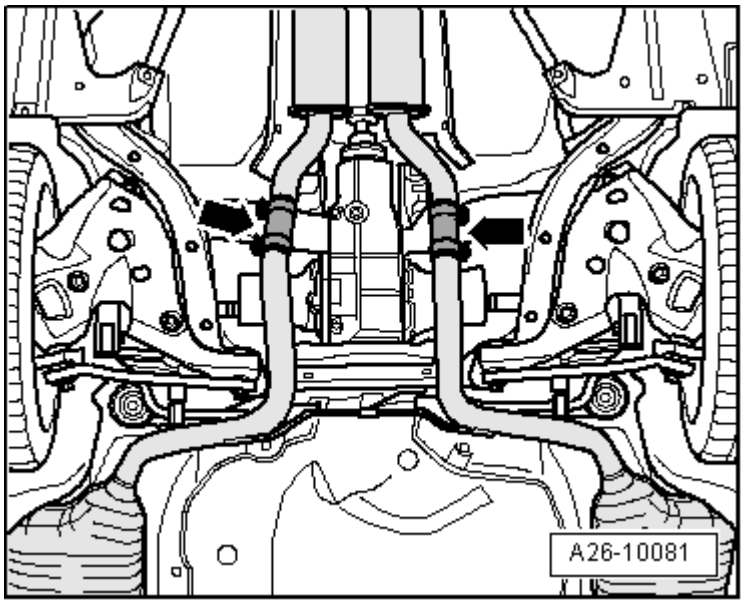

Fig. 380: Removing Coolant Hose, Pulling Out Retaining Clip
Courtesy of VOLKSWAGEN UNITED STATES, INC.

- Remove coolant hose - **2** - , thereby pull out retaining clip - **1** -.

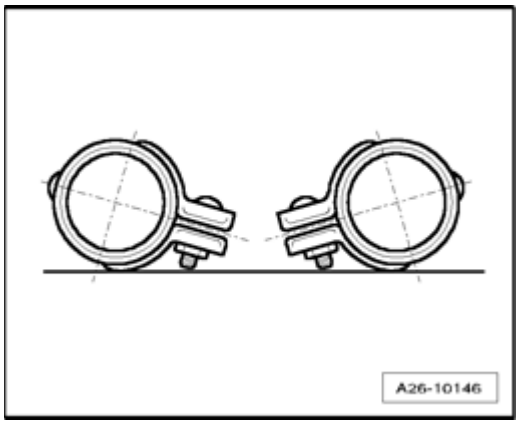

Fig. 381: Removing/Installing Accessory Assembly Bracket Bolts
Courtesy of VOLKSWAGEN UNITED STATES, INC.

- Remove accessory assembly bracket - bolts - **1 to 6** -.

 © 2011 Mitchell Repair Information Company, LLC.

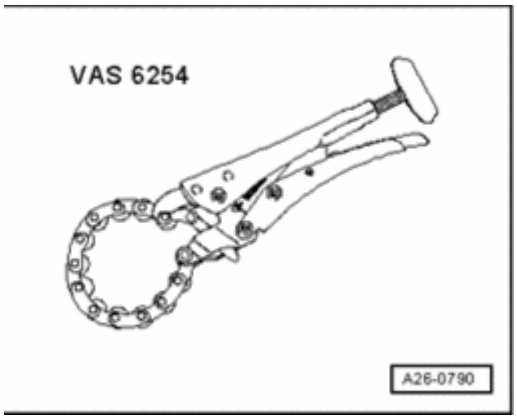

Fig. 382: Disconnect Electrical Connector & Removing Map Controlled Engine Cooling Thermostat F265
Courtesy of VOLKSWAGEN UNITED STATES, INC.

- Disconnect electrical connector - **1** -.
- Remove Map Controlled Engine Cooling Thermostat F265 - **arrows** -.

Installing

Installation is in reverse order of removal, note the following:

NOTE:

- **Replace O-ring.**

- Clean and/or smooth O-ring sealing surface.
- Moisten new O-ring with coolant G12+.
- Install accessory assembly bracket --> **Accessory assembly bracket, removing and installing**
- Fill with coolant --> **Cooling system, draining and filling**.

- Install generator. --> **27 BATTERY, STARTER, GENERATOR, CRUISE CONTROL**
- Install A/C compressor --> **87 AIR CONDITIONING**
- Install ribbed belt --> **Ribbed belt, removing and installing**
- Connect battery. Necessary measures --> **27 BATTERY, STARTER, GENERATOR, CRUISE CONTROL**

Component		Nm
Thermostat to engine block		15
Accessory assembly bracket to cylinder block		45 1)
Ribbed belt tensioner to accessory assembly bracket		23

- 1) Insert using locking compound

Map Controlled Engine Cooling Thermostat F265 , checking

Special tools, testers and auxiliary items required

 © 2011 Mitchell Repair Information Company, LLC.

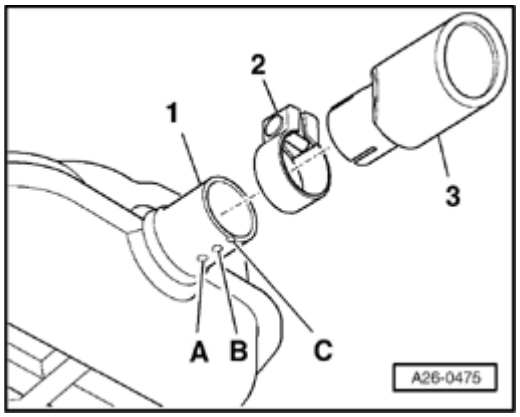

Fig. 383: Identifying Connector Test Set V.A.G 1594 C
Courtesy of VOLKSWAGEN UNITED STATES, INC.

- Connector test set V.A.G 1594C

- Remove Map Controlled Engine Cooling Thermostat F265 --> **Map Controlled Engine Cooling Thermostat F265 , removing and installing**.

NOTE:

- **How to drain coolant --> Cooling system, draining and filling.**
- **Always replace gaskets and seals.**
- **How to fill coolant --> Cooling system, draining and filling.**

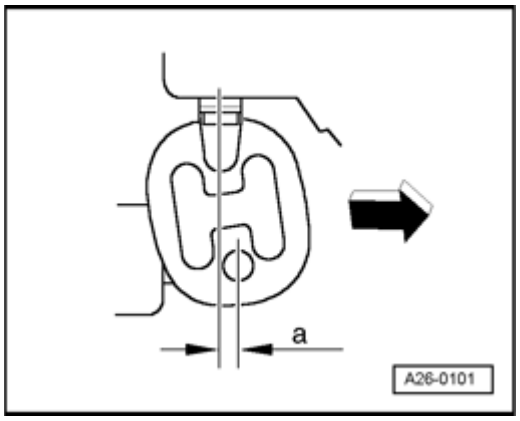

Fig. 384: Checking Thermostat When Cold
Courtesy of VOLKSWAGEN UNITED STATES, INC.

- Check thermostat when cold: Large valve plat must seal all around against connection flange.

If this is not the case:

- Replace Map Controlled Engine Cooling Thermostat F265.

 © 2011 Mitchell Repair Information Company, LLC.

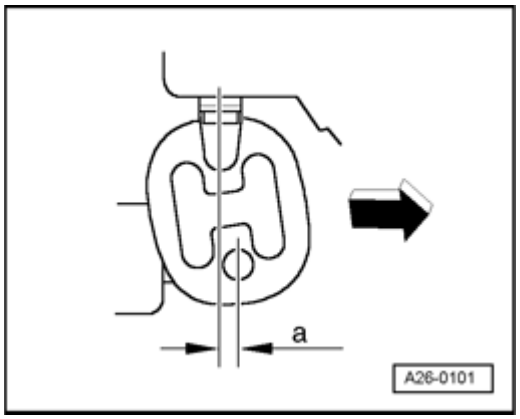

Fig. 385: Connecting Contacts On Map Controlled Engine Cooling Thermostat F265 To Battery With Adapter Leads From Connector Set V.A.G 1594C
Courtesy of VOLKSWAGEN UNITED STATES, INC.

- Connect contacts on Map Controlled Engine Cooling Thermostat F265 to battery with adapter leads from Connector Set V.A.G 1594C. Carefully insert it perpendicular to flange in a pot with hot coolant (mixture ratio: 50% G12+) using pliers.

CAUTION: Metal parts of thermostat must not be touched because they get hot. Risk of burning!

The heating element also warms the wax in thermostat.

- Observe whether minimum range of 7 mm - **arrows** - is reached after 10 minutes.

If range of 7 mm is reached:

- Disconnect voltage supply to battery.

NOTE:

- **This test should not be performed in air. Damage to the expanding material element cannot be prevented!**

If minimum range is not achieved:

- Replace Map Controlled Engine Cooling Thermostat F265.

Coolant pump, removing and installing

Special tools, testers and auxiliary items required

 © 2011 Mitchell Repair Information Company, LLC.

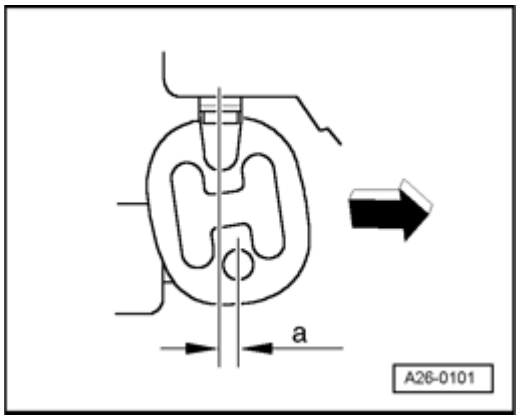

Fig. 386: Drip Tray For VAS 6100, VAS 6208
Courtesy of VOLKSWAGEN UNITED STATES, INC.

- Drip tray for workshop crane VAS 6208

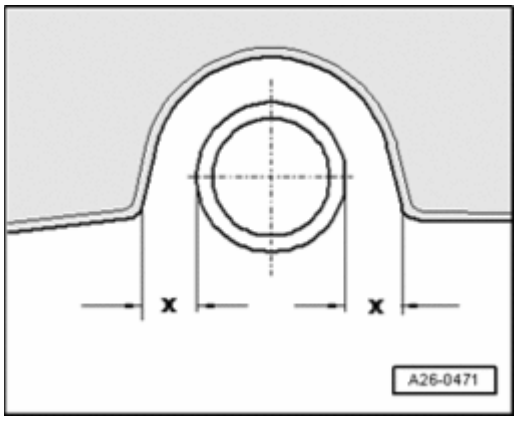

Fig. 387: Identifying Spring-Type Clip Pliers VAS 5024 A
Courtesy of VOLKSWAGEN UNITED STATES, INC.

- Spring-type clip pliers VAS 5024 A

Removing

CAUTION: Cover cap of expansion tank with rag and open carefully, as hot steam or hot coolant may escape when opening.

- Open cap of coolant expansion tank.

 © 2011 Mitchell Repair Information Company, LLC.

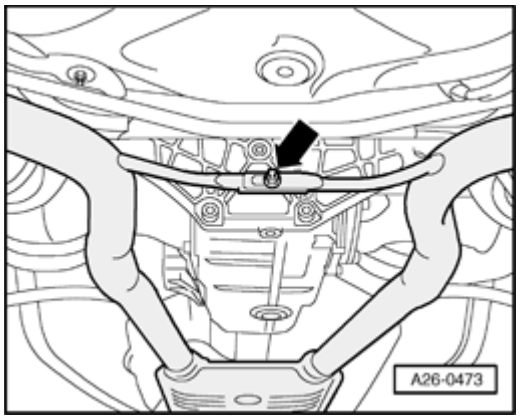

Fig. 388: Removing Engine Cover
Courtesy of VOLKSWAGEN UNITED STATES, INC.

- Remove engine cover - **arrows** -.

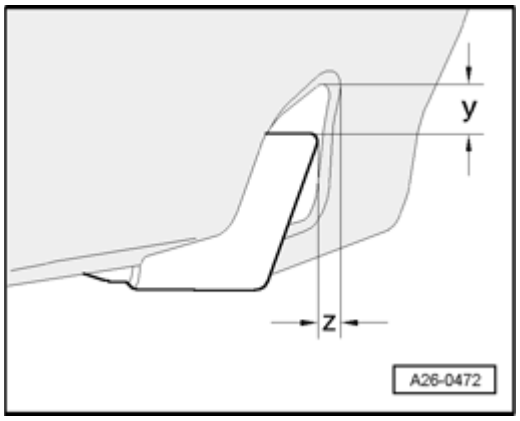

Fig. 389: Identifying Exhaust Pipe Fasteners
Courtesy of VOLKSWAGEN UNITED STATES, INC.

- For vehicles with auxiliary heater, remove bolts - **arrows** - for exhaust pipe of parking heater/auxiliary heater on noise insulation.

 © 2011 Mitchell Repair Information Company, LLC.

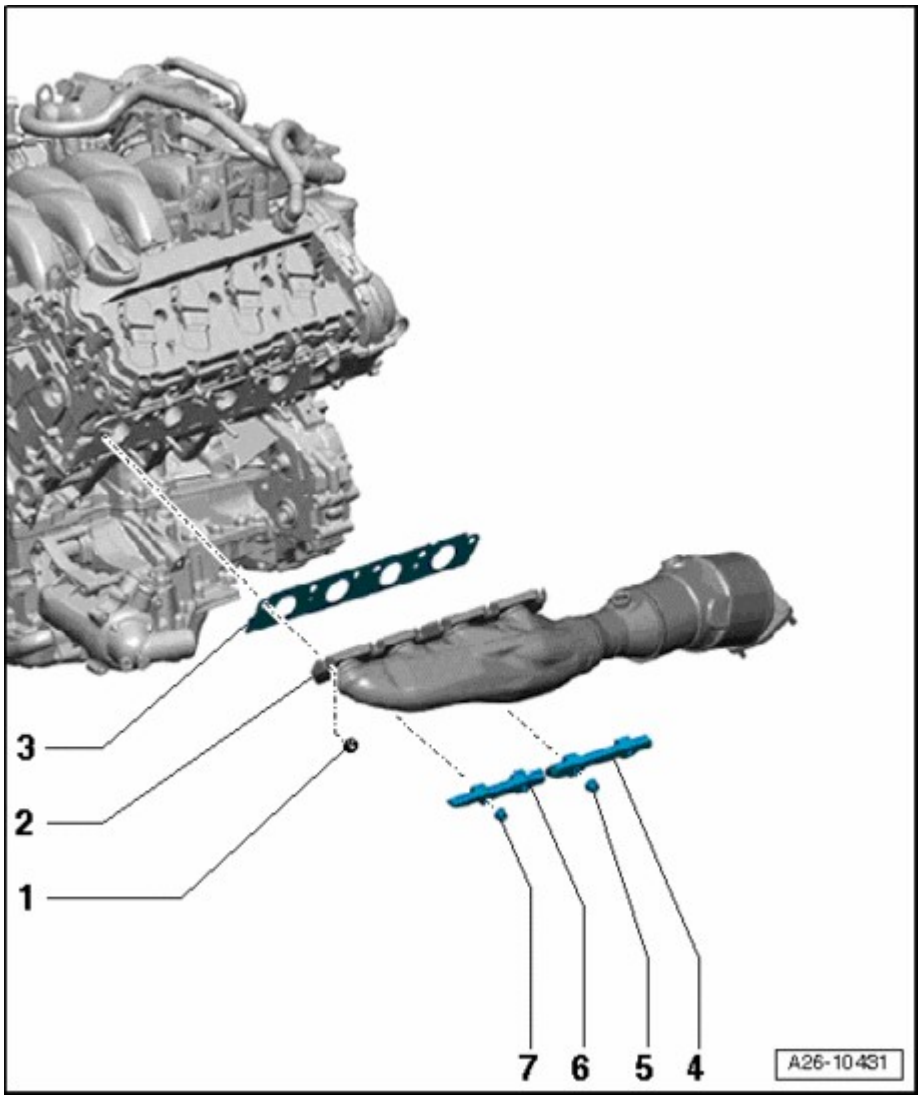

Fig. 390: Identifying Quick-Release Fasteners And Noise Insulation
Courtesy of VOLKSWAGEN UNITED STATES, INC.

- Loosen quick-release fasteners - **1** - and - **2** - and remove front noise insulation.
- Drain engine coolant --> **Cooling system, draining and filling**
- Remove toothed belt --> **Toothed belt, removing and installing**

 © 2011 Mitchell Repair Information Company, LLC.

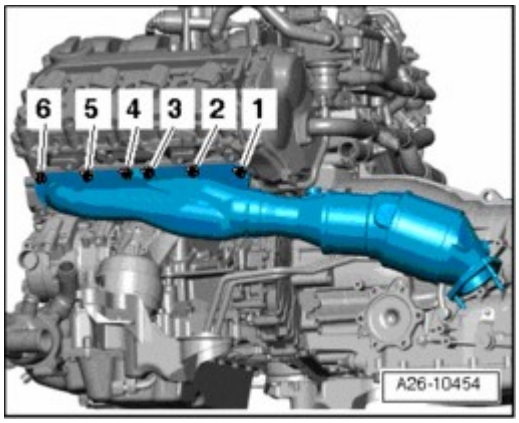

Fig. 391: Identifying New O-Ring, Coolant Pump & Securing Bolts
Courtesy of VOLKSWAGEN UNITED STATES, INC.

- Remove coolant pump securing bolts - **1** - and remove coolant pump - **2** -.
- Remove O-ring - **3** -.

Installing

Installation is in reverse order of removal, note the following:

- Clean and/or smooth O-ring sealing surface.

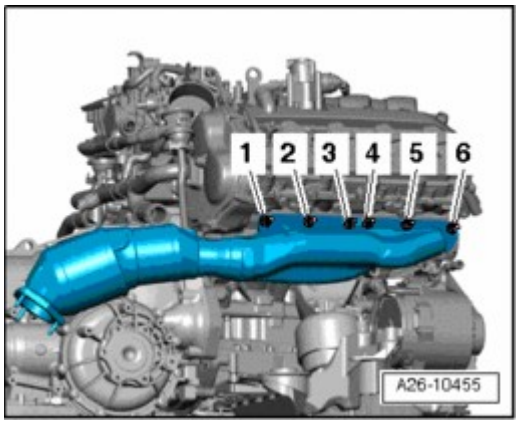

Fig. 392: Identifying New O-Ring, Coolant Pump & Securing Bolts
Courtesy of VOLKSWAGEN UNITED STATES, INC.

- Moisten new O-ring - **3** - with coolant G12+.
- Insert coolant pump - **2** -.

- Installed location: Sealing plug in housing points downward

- Tighten bolts - **1** - of coolant pump to 15 Nm.
- Install toothed belt --> **Toothed belt, removing and installing**.
- Install ribbed belt --> **Ribbed belt, removing and installing**.

 © 2011 Mitchell Repair Information Company, LLC.

- Fill with coolant --> **Cooling system, draining and filling**.
- Install lock carrier with attachments -->
  - **50 BODY, FRONT**
  - **50 - BODY - FRONT** for BODY EXTERIOR - CABRIOLET

.

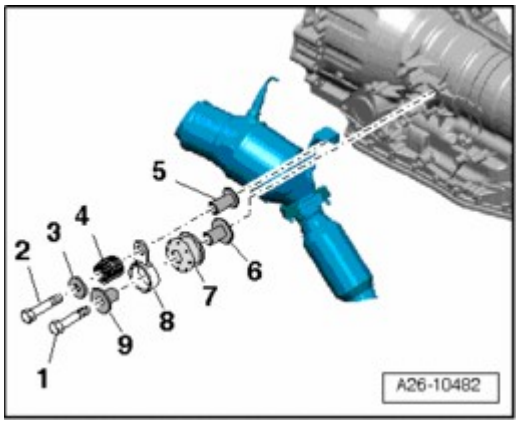

Fig. 393: Identifying Lock Carrier With Attachments
Courtesy of VOLKSWAGEN UNITED STATES, INC.

- Place torque support stop onto rubber buffer for torque support under its own weight and tighten nuts - **arrows** -.
- Install front bumper cover -->
  - **63 BUMPER**
  - **63 - BUMPERS** for BODY EXTERIOR - CABRIOLET

.

- Check headlight adjustment -->
  - **01 - MAINTENANCE**
  - **01 - MAINTENANCE** for MAINTENANCE PROCEDURES - CABRIOLET

.

Torque specifications

Component		Nm
Coolant pump to cylinder block		15
Toothed belt guard to cylinder block		10 1)
Torque support stop		28

- 1) Insert with locking fluid

Coolant pipe, removing and installing

 © 2011 Mitchell Repair Information Company, LLC.

Special tools, testers and auxiliary items required

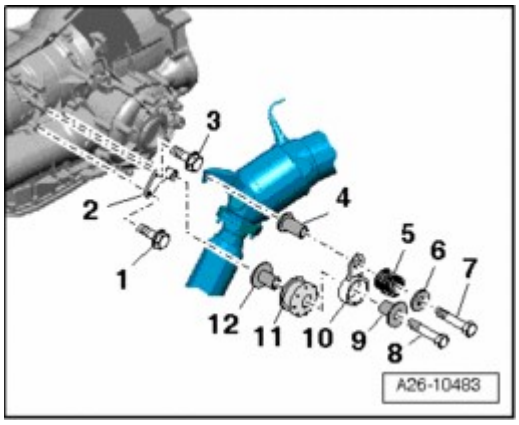

Fig. 394: Drip Tray For VAS 6100, VAS 6208
Courtesy of VOLKSWAGEN UNITED STATES, INC.

- Drip tray for workshop crane VAS 6208

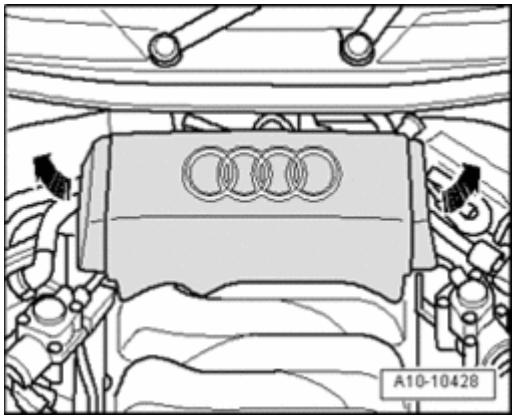

Fig. 395: Identifying Spring-Type Clip Pliers VAS 5024 A
Courtesy of VOLKSWAGEN UNITED STATES, INC.

- Spring-type clip pliers VAS 5024 A

Removing

CAUTION: Cover cap of expansion tank with rag and open carefully, as hot steam or hot coolant may escape when opening.

- Open cap of coolant expansion tank.

 © 2011 Mitchell Repair Information Company, LLC.

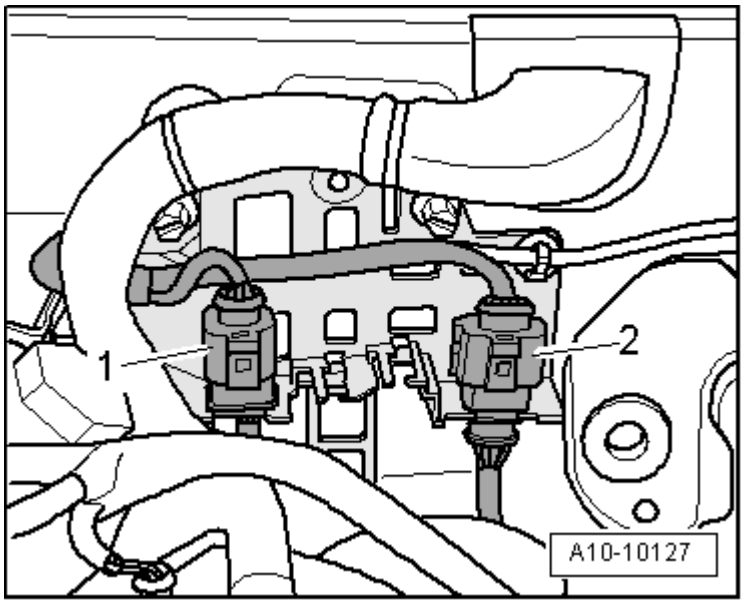

Fig. 396: Removing Engine Cover
Courtesy of VOLKSWAGEN UNITED STATES, INC.

- Remove engine cover - **arrows** -.

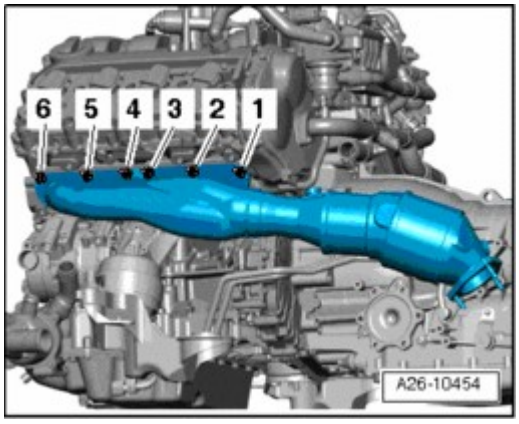

Fig. 397: Identifying Exhaust Pipe Fasteners
Courtesy of VOLKSWAGEN UNITED STATES, INC.

- For vehicles with auxiliary heater, remove bolts - **arrows** - for exhaust pipe of parking heater/auxiliary heater on noise insulation.

 © 2011 Mitchell Repair Information Company, LLC.

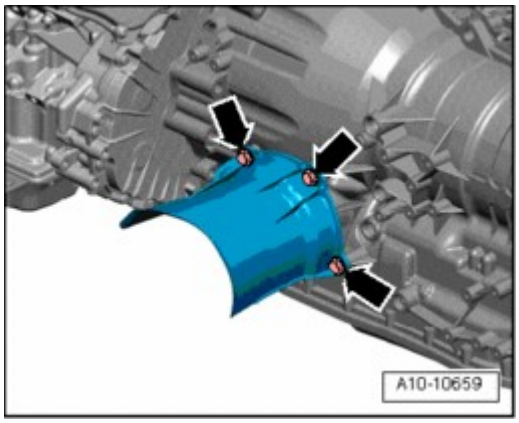

Fig. 398: Identifying Quick-Release Fasteners And Noise Insulation
Courtesy of VOLKSWAGEN UNITED STATES, INC.

- Loosen quick-release fasteners - **1** - and - **2** - and remove front noise insulation.
- Remove quick-release fasteners - **3** - and remove rear noise insulation, if installed.
- Drain engine coolant --> **Cooling system, draining and filling**
- Remove intake manifold --> - **24 - MULTIPORT FUEL INJECTION (MFI)**

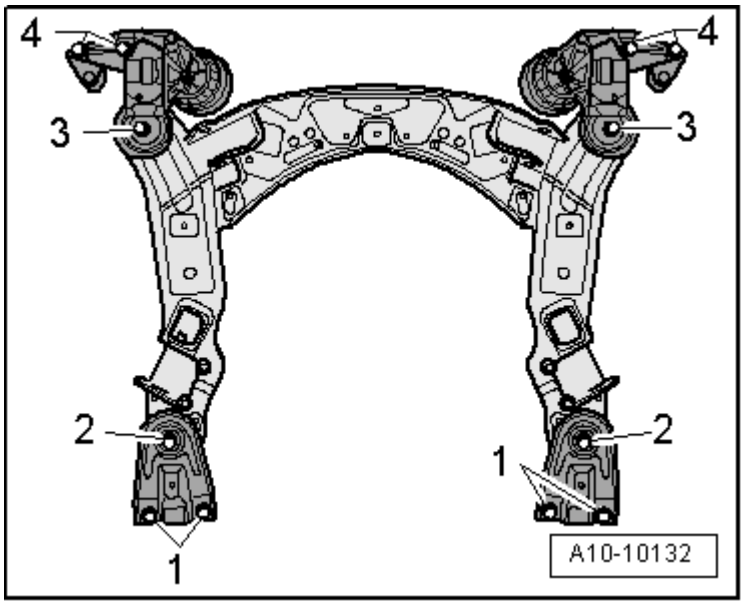

Fig. 399: Removing Bracket For Cable Connector From Coolant Pipe
Courtesy of VOLKSWAGEN UNITED STATES, INC.

- Remove bracket for cable connector - **arrows** - from coolant pipe.

 © 2011 Mitchell Repair Information Company, LLC.

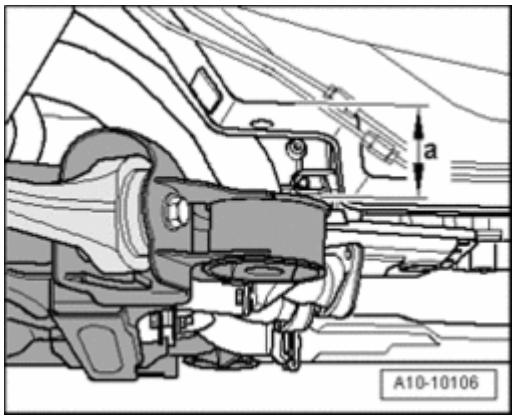

Fig. 400: Disconnecting Coolant Hose & Removing Bolts
Courtesy of VOLKSWAGEN UNITED STATES, INC.

- Disconnect coolant hose - **1** -.
- Remove bolts - **2** -.

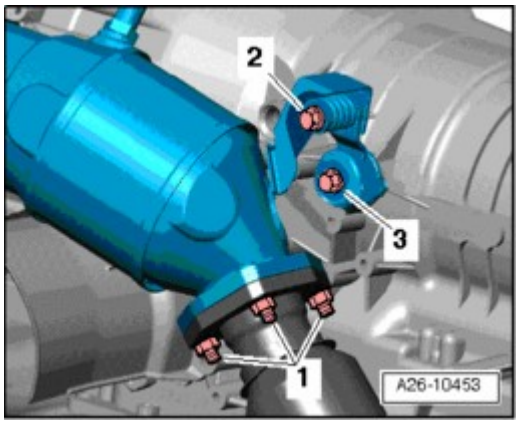

Fig. 401: Disconnecting Coolant Hoses From Coolant Pipe
Courtesy of VOLKSWAGEN UNITED STATES, INC.

- Disconnect coolant hoses - **arrows** - from coolant pipe.
- Remove bolt - **1** - and remove coolant pipe.

Installing

Installation is in reverse order of removal, note the following:

NOTE:

- **Always replace gaskets and seals.**
- **Secure all hose connections using hose clamps appropriate for the model type .**

- Clean and/or smooth O-ring sealing surface before installing.
- Moisten new O-ring with G12+ and push onto coolant pipe.

 © 2011 Mitchell Repair Information Company, LLC.

- Install intake manifold --> - **24 - MULTIPORT FUEL INJECTION (MFI)**
- Fill with coolant --> **Cooling system, draining and filling**.

Torque specifications

Component	Nm
Coolant pipe to cylinder block	10
Coolant pipe to thermostat housing	10

Radiator, removing and installing

Special tools, testers and auxiliary items required

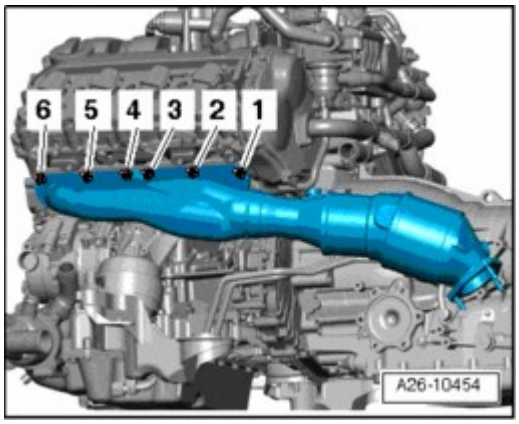

Fig. 402: Identifying Old Oil Collecting And Extracting Device V.A.G 1782
Courtesy of VOLKSWAGEN UNITED STATES, INC.

- Old oil collecting and extracting device V.A.G 1782 (only for vehicles with automatic transmission)

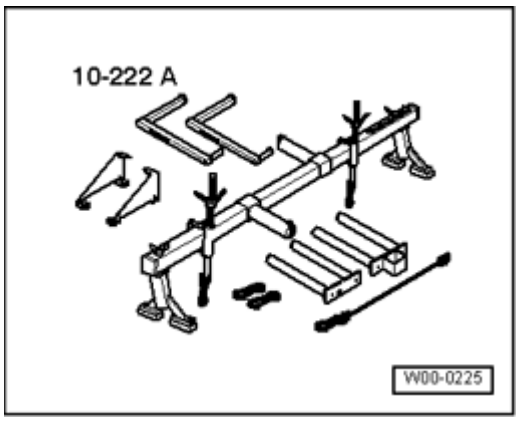

Fig. 403: Drip Tray For VAS 6100, VAS 6208
Courtesy of VOLKSWAGEN UNITED STATES, INC.

- Drip tray for workshop crane VAS 6208

 © 2011 Mitchell Repair Information Company, LLC.

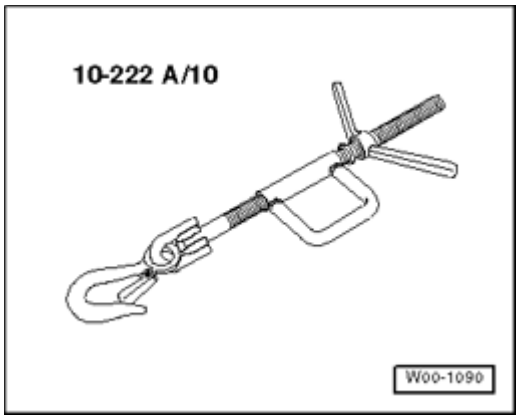

Fig. 404: Identifying Spring-Type Clip Pliers VAS 5024 A
Courtesy of VOLKSWAGEN UNITED STATES, INC.

- Spring-type clip pliers VAS 5024 A

Removing

NOTE:

- **Drained coolant must be stored in a clean container for disposal or reuse.**

CAUTION: Cover cap of expansion tank with rag and open carefully, as hot steam or hot coolant may escape when opening.

- Open cap of coolant expansion tank.

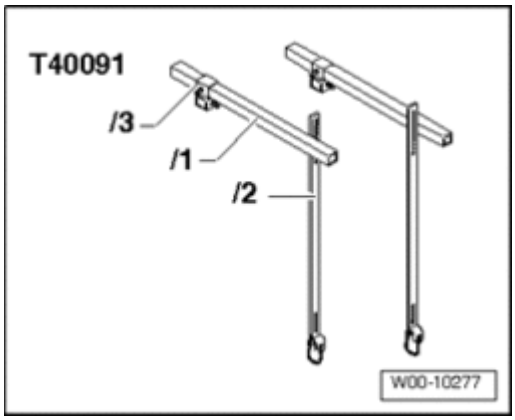

Fig. 405: Identifying Exhaust Pipe Fasteners
Courtesy of VOLKSWAGEN UNITED STATES, INC.

- For vehicles with auxiliary heater, remove bolts - **arrows** - for exhaust pipe of parking heater/auxiliary heater on noise insulation.

 © 2011 Mitchell Repair Information Company, LLC.

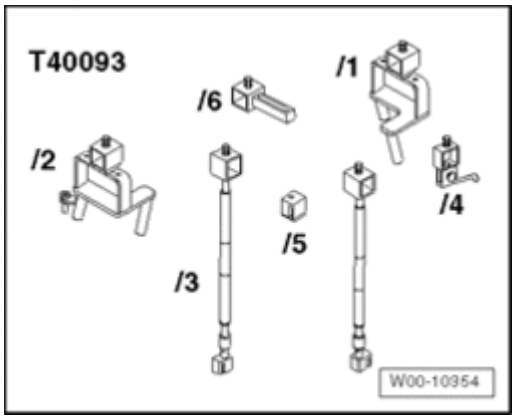

Fig. 406: Identifying Quick-Release Fasteners And Noise Insulation
Courtesy of VOLKSWAGEN UNITED STATES, INC.

- Loosen quick-release fasteners - **1** - and - **2** - and remove front noise insulation.
- Remove front bumper cover -->
  - **63 BUMPER**
  - **63 - BUMPERS** for BODY EXTERIOR - CABRIOLET

  .
- Bring lock carrier into service position --> **Lock carrier, moving into service position**.

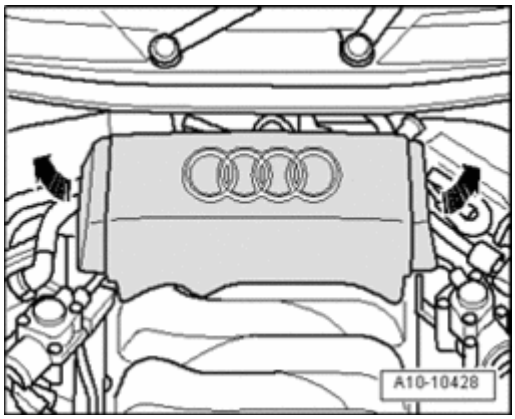

Fig. 407: Opening/Closing Drain Plug From Lower Left Coolant Hose
Courtesy of VOLKSWAGEN UNITED STATES, INC.

- Place drip tray for workshop crane VAS 6208 or drip tray V.A.G 1306 under engine.
- Open drain plug - **arrow** - from lower left coolant hose and drain coolant.

 © 2011 Mitchell Repair Information Company, LLC.

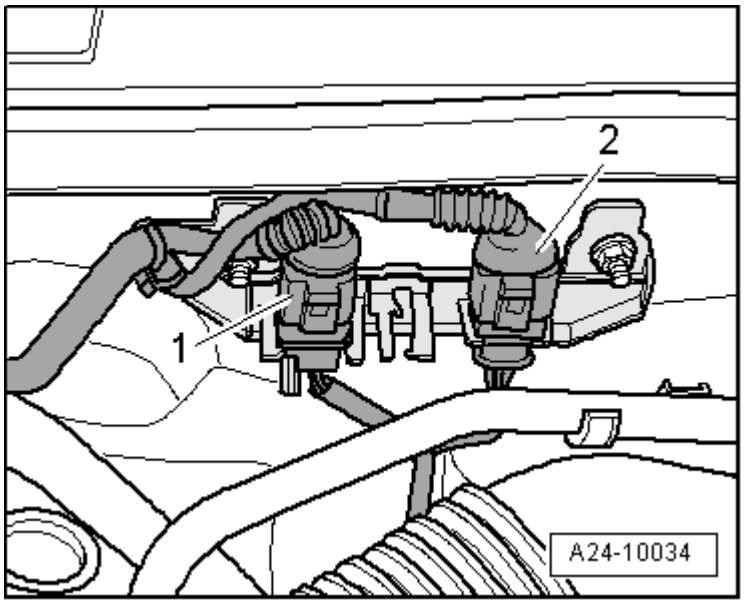

Fig. 408: Disconnecting Lower Coolant Hose From Radiator
Courtesy of VOLKSWAGEN UNITED STATES, INC.

- Disconnect lower coolant hose from radiator - **arrow** -.

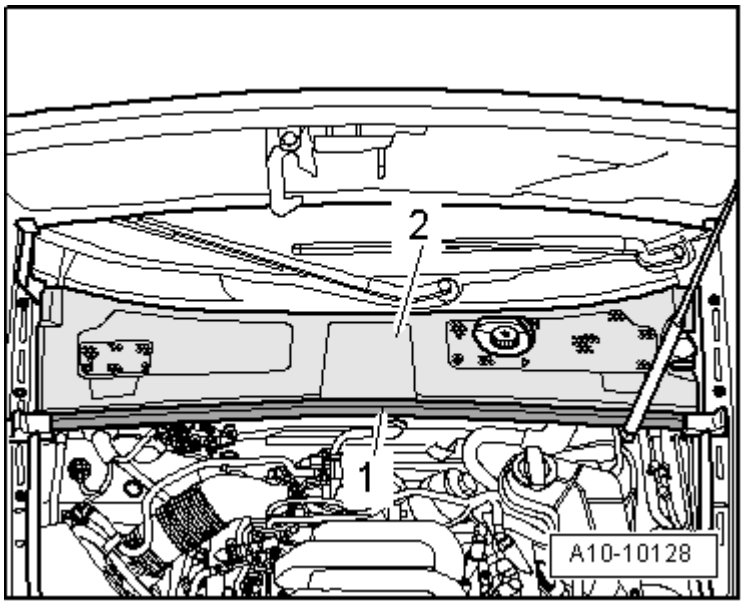

Fig. 409: Disconnecting Coolant Hose At Upper Left Of Radiator
Courtesy of VOLKSWAGEN UNITED STATES, INC.

- Disconnect coolant hose - **2** - at upper left of radiator.

NOTE:

- **Ignore - 1 -.**

 © 2011 Mitchell Repair Information Company, LLC.

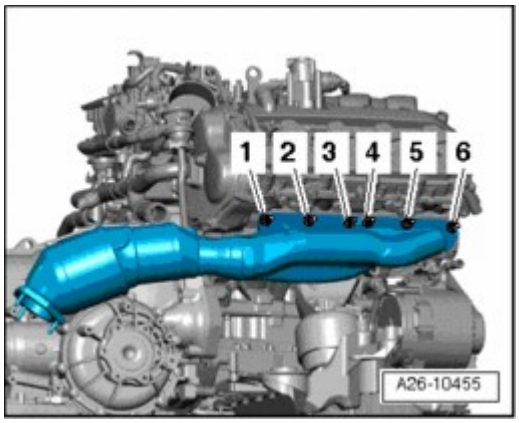

Fig. 410: Removing Bolts & Air Duct
Courtesy of VOLKSWAGEN UNITED STATES, INC.

- Remove bolts - **arrows** -.
- Remove air duct - **1** - and - **2** -.

Vehicles with automatic transmission:

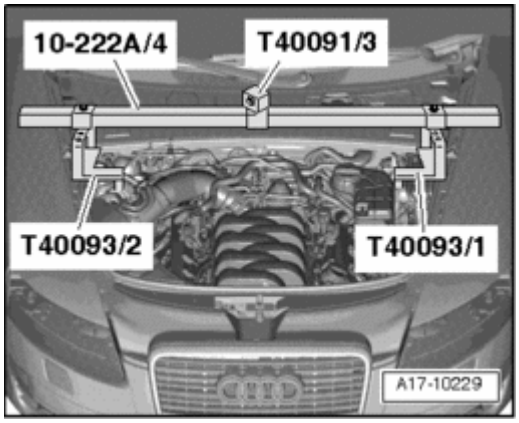

Fig. 411: Disconnecting ATF-Lines At Top And Bottom Of Radiator
Courtesy of VOLKSWAGEN UNITED STATES, INC.

NOTE:

- **Observe the rules of cleanliness for working on automatic transmissions --> **
  - **37 - AUTOMATIC TRANSMISSION - CONTROLS, HOUSING for 5 SPD. AUTOMATIC TRANSMISSION 01V**
  - **37 - AUTOMATIC TRANSMISSION - CONTROLS, HOUSING for 5 SPD. AUTOMATIC TRANSMISSION 01V FRONT AND ALL WHEEL DRIVE - INTERNAL COMPONENTS, SERVICING**
  - **37 CONTROLS, HOUSING for AUTOMATIC TRANSMISSION 09L, FOUR-WHEEL DRIVE**

.

 © 2011 Mitchell Repair Information Company, LLC.

- Place old oil collecting and extracting device V.A.G 1782 underneath.
- Disconnect ATF-lines at top - **arrow** - and bottom of radiator -->
  - **37 - AUTOMATIC TRANSMISSION - CONTROLS, HOUSING** for 5 SPD. AUTOMATIC TRANSMISSION 01V
  - **37 - AUTOMATIC TRANSMISSION - CONTROLS, HOUSING** for 5 SPD. AUTOMATIC TRANSMISSION 01V FRONT AND ALL WHEEL DRIVE - INTERNAL COMPONENTS, SERVICING
  - **37 CONTROLS, HOUSING** for AUTOMATIC TRANSMISSION 09L, FOUR-WHEEL DRIVE

  .
- Tie ATF lines up to longitudinal member to prevent fluid from escaping.

All:

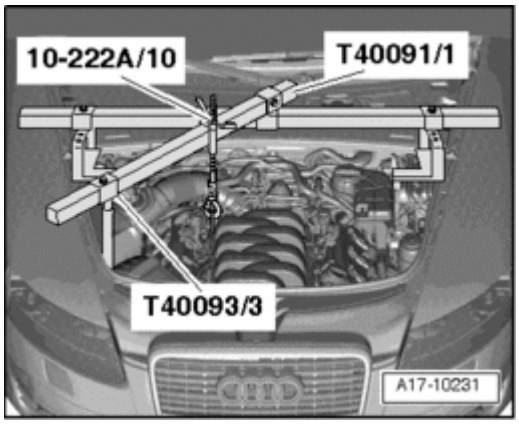

Fig. 412: Separating Left/Right Electrical Connectors Of Horns
Courtesy of VOLKSWAGEN UNITED STATES, INC.

- Disconnect left and right electrical connectors - **3** - of horns - **2** -

NOTE:

- **Ignore - 1 -.**

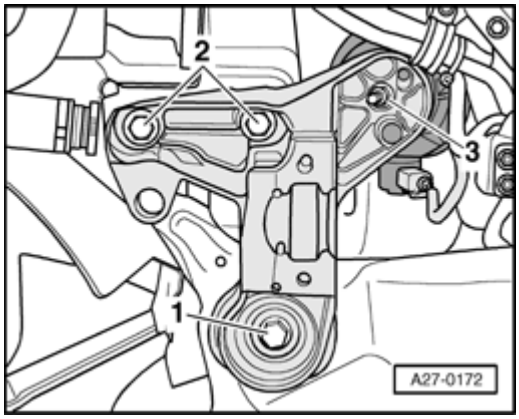

Fig. 413: Removing Bumper
Courtesy of VOLKSWAGEN UNITED STATES, INC.

 © 2011 Mitchell Repair Information Company, LLC.

- Remove bumper - **arrows** -.

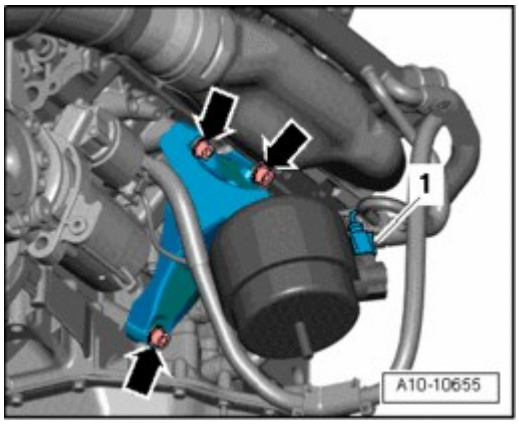

Fig. 414: Removing Left/Right Air Guides At Radiator
Courtesy of VOLKSWAGEN UNITED STATES, INC.

- Remove left and right air guides at radiator - **arrows** -.

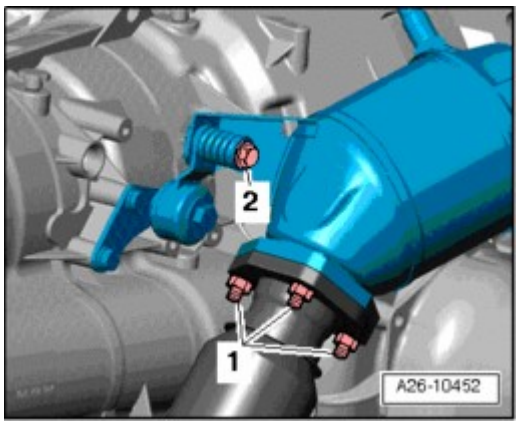

Fig. 415: Identifying Outside Air Temperature Sensor G17, Bolts & High Pressure Sensor G65 Electrical Harness Connector
Courtesy of VOLKSWAGEN UNITED STATES, INC.

- Unclip Outside Air Temperature Sensor G17 - **2** - from bracket.
- Remove power steering cooling coil bolts - **3** - and - **4** - hydraulic hoses remain connected.
- Pull off connector - **1** - from High Pressure Sensor G65.

CAUTION: The air conditioning refrigerant circuit must not be opened.

- Remove bolts - **arrows** - for condenser.

NOTE:

- **Do not bend or stretch lines or hoses as A/C compressor and/or refrigerant lines/hoses may be damaged.**

 © 2011 Mitchell Repair Information Company, LLC.

- Pivot condenser downward with lines connected.

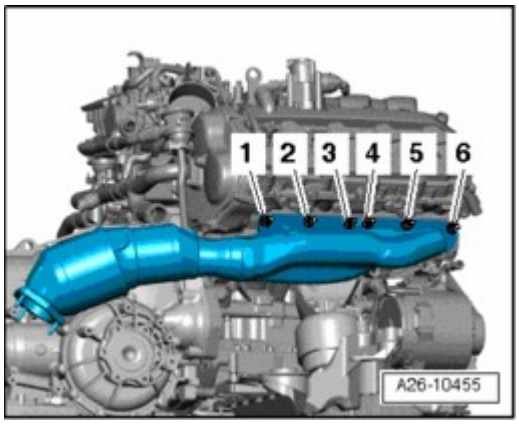

Fig. 416: Releasing Both Radiator Retaining Pins And Removing By Pulling Upward
Courtesy of VOLKSWAGEN UNITED STATES, INC.

- Release both radiator retaining pins and remove by pulling upward - **arrows** -.
- Pivot radiator forward, pull up and remove.

Installing

Installation is in reverse order of removal, note the following:

- Install front bumper cover -->
  - **63 BUMPER**
  - **63 - BUMPERS** for BODY EXTERIOR - CABRIOLET

  .
- Fill with coolant --> **Cooling system, draining and filling**.

NOTE:

- **Complete coolant must be replaced if the radiator was replaced.**

Vehicles with automatic transmission:

- Fasten ATF lines -->
  - **37 - AUTOMATIC TRANSMISSION - CONTROLS, HOUSING** for 5 SPD. AUTOMATIC TRANSMISSION 01V
  - **37 - AUTOMATIC TRANSMISSION - CONTROLS, HOUSING** for 5 SPD. AUTOMATIC TRANSMISSION 01V FRONT AND ALL WHEEL DRIVE - INTERNAL COMPONENTS, SERVICING
  - **37 CONTROLS, HOUSING** for AUTOMATIC TRANSMISSION 09L, FOUR-WHEEL DRIVE

  .
- Check ATF level -->
  - **37 - AUTOMATIC TRANSMISSION - CONTROLS, HOUSING** for 5 SPD. AUTOMATIC

 © 2011 Mitchell Repair Information Company, LLC.

TRANSMISSION 01V

- **37 - AUTOMATIC TRANSMISSION - CONTROLS, HOUSING** for 5 SPD. AUTOMATIC TRANSMISSION 01V FRONT AND ALL WHEEL DRIVE - INTERNAL COMPONENTS, SERVICING
- **37 CONTROLS, HOUSING** for AUTOMATIC TRANSMISSION 09L, FOUR-WHEEL DRIVE

.

Torque specifications

Component	Nm
Condenser to lock carrier	6
Cooling coil for power steering to lock carrier	9

Fan shroud, removing and installing

Removing

 © 2011 Mitchell Repair Information Company, LLC.

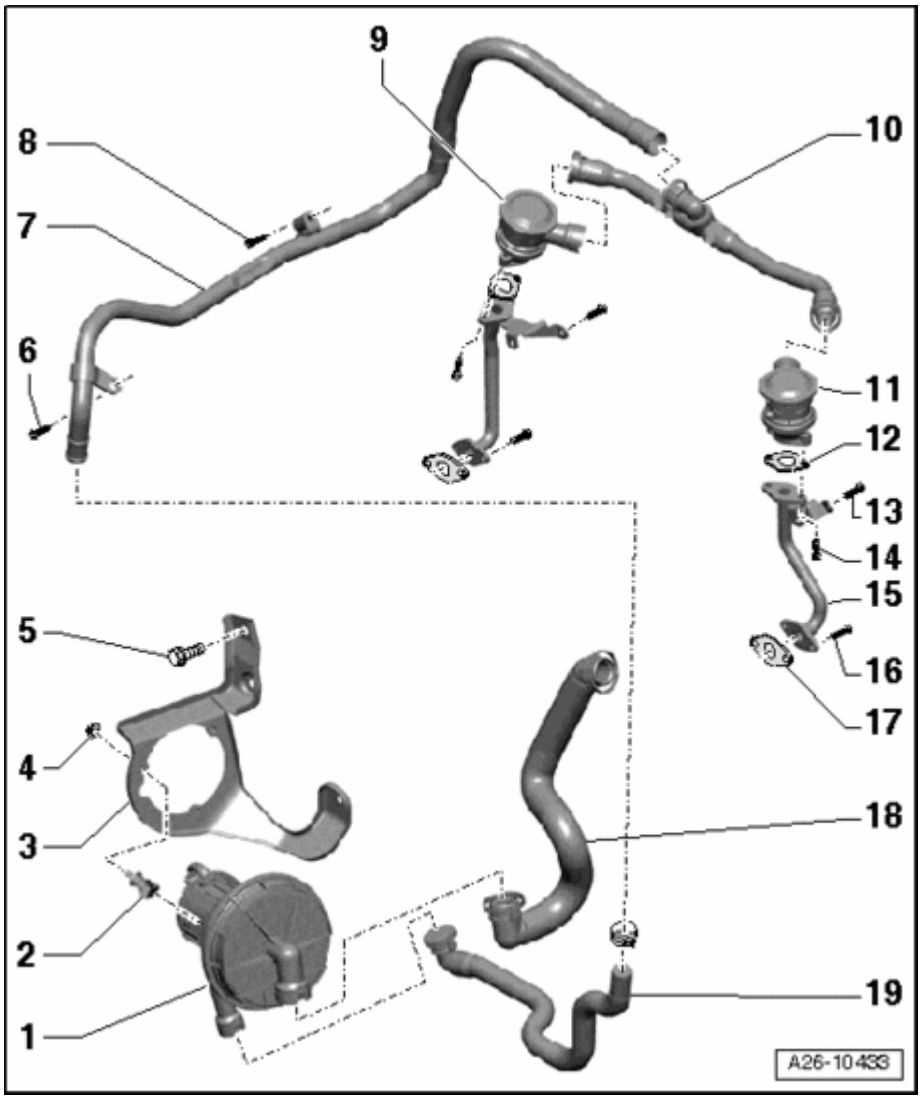

Fig. 417: Removing Engine Cover
Courtesy of VOLKSWAGEN UNITED STATES, INC.

- Remove engine cover - **arrows** -.
- Bring lock carrier into service position --> **Lock carrier, moving into service position**.
- Remove engine cover - **arrows** -.

 © 2011 Mitchell Repair Information Company, LLC.

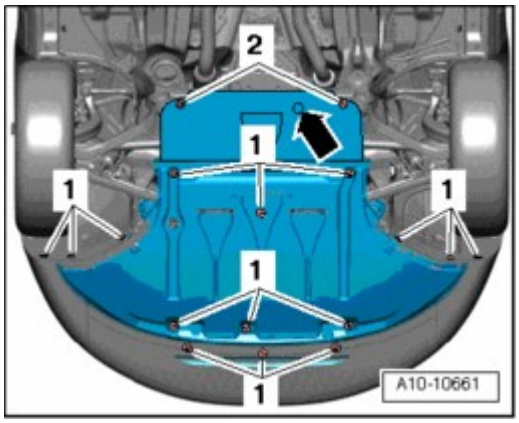

Fig. 418: Removing Electrical Harness Connectors From Bracket
Courtesy of VOLKSWAGEN UNITED STATES, INC.

- Remove electrical harness connectors - **1** - and - **2** - from bracket and disconnect them.
- Free up electrical wiring.

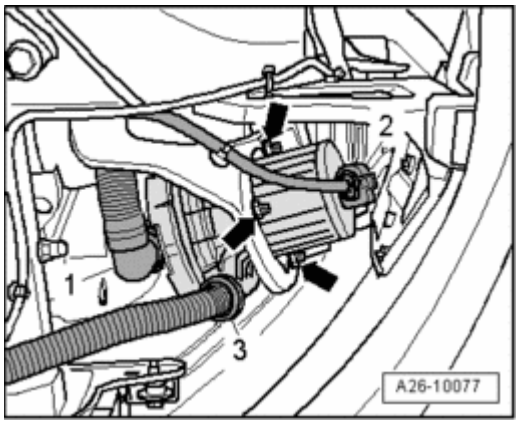

Fig. 419: Removing Bolts And Fan Shroud Upward And Out
Courtesy of VOLKSWAGEN UNITED STATES, INC.

- Remove bolts - **arrows** - and remove fan shroud upward and out.

Installing

Installation is in reverse order of removal, note the following:

- Install lock carrier with attachments -->
  - **50 BODY, FRONT**
  - **50 - BODY - FRONT** for BODY EXTERIOR - CABRIOLET

.

 © 2011 Mitchell Repair Information Company, LLC.

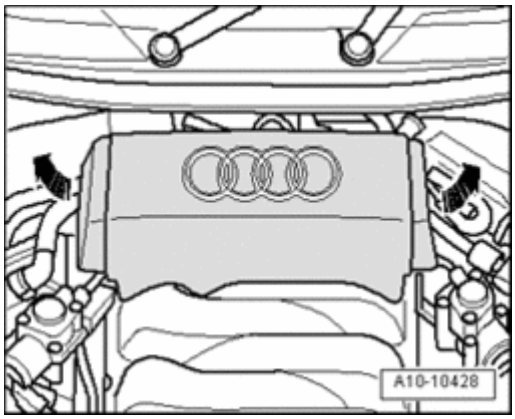

Fig. 420: Identifying Lock Carrier With Attachments
Courtesy of VOLKSWAGEN UNITED STATES, INC.

- Place torque support stop onto rubber buffer for torque support under its own weight and tighten nuts - **arrows** -.
- Install front bumper cover -->
  - **63 BUMPER**
  - **63 - BUMPERS** for BODY EXTERIOR - CABRIOLET

  .
- Check headlight adjustment -->
  - **01 - MAINTENANCE**
  - **01 - MAINTENANCE** for MAINTENANCE PROCEDURES - CABRIOLET

  .

Torque specifications

Component		Nm
Fan shroud to	M6	11
Lock carrier	Metal screw	2
Torque support stop		28
Hose clamps 9 mm wide		3
Hose clamps 13 mm wide		5.5
Torque support stop		28

Coolant fan, removing and installing

Removing

- Remove fan shroud --> **Fan shroud, removing and installing**.
- Free up electrical wiring.

 © 2011 Mitchell Repair Information Company, LLC.

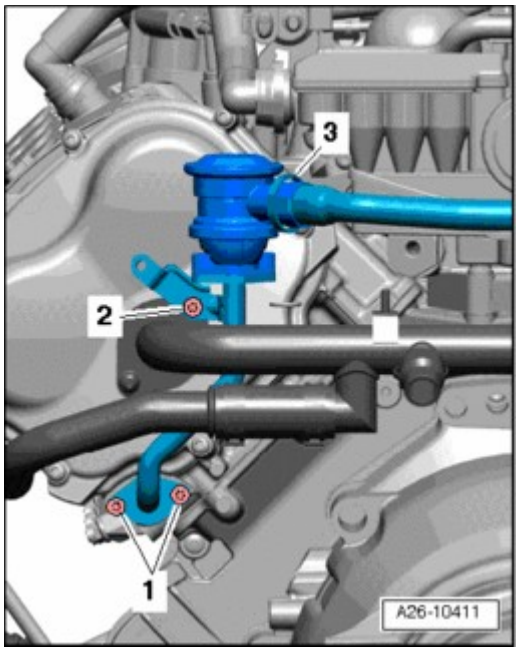

Fig. 421: Identifying Coolant Fan Screws
Courtesy of VOLKSWAGEN UNITED STATES, INC.

- Remove screws - **1 to 8** -.
- Remove coolant fan with control module.

Installing

Installation is in reverse order of removal, note the following:

- Install fan shroud --> **Fan shroud, removing and installing**.

Torque specifications

Component		Nm
Coolant fan	Single stage fan	3
to fan shroud	Double fan	4.5

Coolant fan motor, replacing

Special tools, testers and auxiliary items required

 © 2011 Mitchell Repair Information Company, LLC.

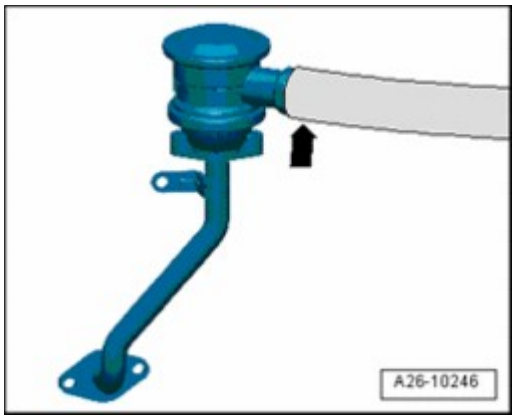

Fig. 422: Wiring Harness Repair Kit V.A.S 1978
Courtesy of VOLKSWAGEN UNITED STATES, INC.

- Wiring harness repair kit VAS 1978

Work procedure

NOTE:

- **The coolant fan control module and coolant fan motor are available as a replacement part without connector.**
- **Wiring harness and connector repairs must only be performed using wiring harness repair kit VAS 1978.**

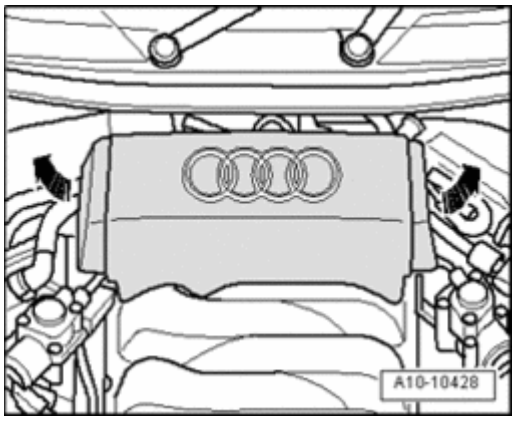

Fig. 423: Opened Wiring Harness Repair Kit VAS 1978
Courtesy of VOLKSWAGEN UNITED STATES, INC.

The description of wiring harness repair kit VAS 1978 is explained in detail in the included operating instructions.

For example, repairs of open circuits and faulty connectors are also explained.

Cooling system, checking for leaks

 © 2011 Mitchell Repair Information Company, LLC.

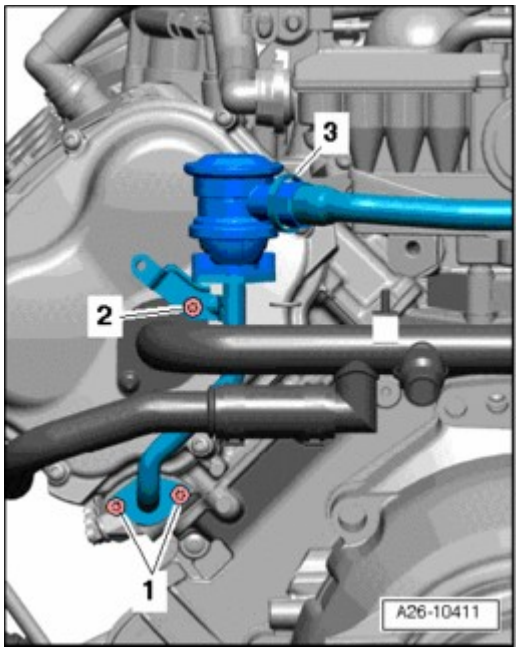

Fig. 424: Identifying Special Tools - Cooling System, Checking For Leaks
Courtesy of VOLKSWAGEN UNITED STATES, INC.

Special tools, testers and auxiliary items required

- Cooling system tester V.A.G 1274
- Adapter V.A.G 1274/8
- Adapter V.A.G 1274/9

Test conditions

- Engine at operating temperature.

Test sequence

CAUTION: Cover cap of expansion tank with rag and open carefully, as hot steam or hot coolant may escape when opening.

- Open cap of coolant expansion tank.

 © 2011 Mitchell Repair Information Company, LLC.

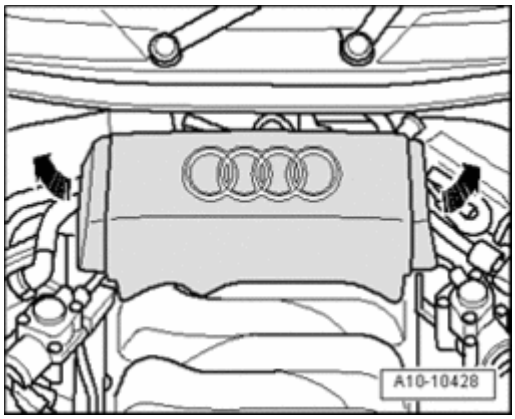

Fig. 425: Attaching Cooling System Tester V.A.G 1274 With Adapter V.A.G 1274/8 To Expansion Tank
Courtesy of VOLKSWAGEN UNITED STATES, INC.

- Attach cooling system tester V.A.G 1274 with adapter V.A.G 1274/8 to expansion tank.
- Generate a positive pressure of approx. 1.0 bar using hand pump of cooling system tester.
- If pressure decreases, search for leaking areas and repair malfunction.

Pressure relief valve in cap, checking

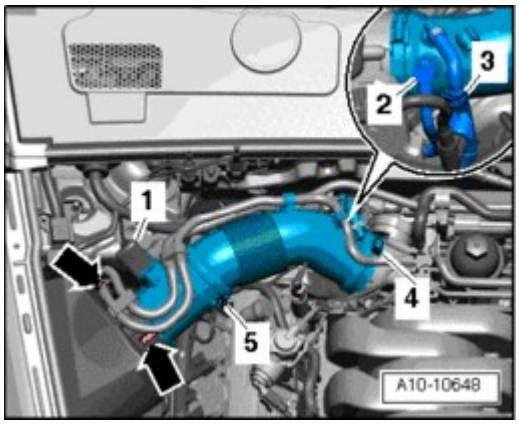

Fig. 426: Checking Pressure Relief Valve In Filler Cap
Courtesy of VOLKSWAGEN UNITED STATES, INC.

- Attach cooling system tester V.A.G 1274 with adapter V.A.G 1274/9 to expansion tank cap.
- Operate hand pump.

- Pressure release valve must open at a positive pressure of 1.4 to 1.6 bar

21 - TURBOCHARGER, G-CHARGER

TURBOCHARGER

Turbocharger

 © 2011 Mitchell Repair Information Company, LLC.

NOTE:

- **Observe cleanliness rules Turbocharger.**
- **Secure all hose connections using hose clamps appropriate for the model type.**
- **Hose connections and charge air system hoses must be free of oil and grease before installing. Sealing ring and sealing surfaces must only be lightly oiled with connector couplings --> Hose connections with connection couplings, assembly.**
- **Charge air system must be properly sealed.**
- **Replace self-locking nuts.**

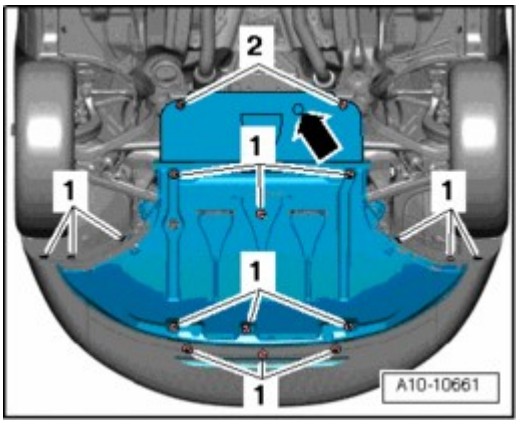

Fig. 427: Identifying Spring-Type Clip Pliers VAS 5024 A
Courtesy of VOLKSWAGEN UNITED STATES, INC.

- **Pliers for spring clamps VAS 5024A or Hose clamp pliers V.A.G 1921 are recommended for installing spring clamps.**
- **Add oil to turbocharger through oil feed line connecting piece.**
- **After installing turbocharger, let engine idle for approx. 1 minute without increasing engine speed. This ensures adequate oil supply to the turbocharger.**

Assembly of hose connections with connection couplings --> **Hose connections with connection couplings, assembly**

Hose connections with connection couplings, assembly

CAUTION: Connector coupling sealing ring can be damaged if securing clamp is in locked position when installing. This would result in a leak. Follow assembly instructions.

Removing:

 © 2011 Mitchell Repair Information Company, LLC.

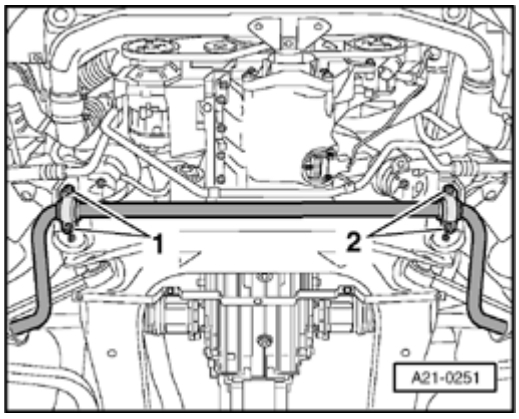

Fig. 428: Identifying Hose/Tube Retaining Tabs
Courtesy of VOLKSWAGEN UNITED STATES, INC.

- Release connector coupling by pulling locking clip - **arrow** -. Separate hose/tube without assistance from tools.

Installing

- When replacing sealing ring, lay ring in charge air hose groove. Ensure sealing ring sits completely in groove all the way around and is not turned.
- Oil sealing surfaces and sealing ring.

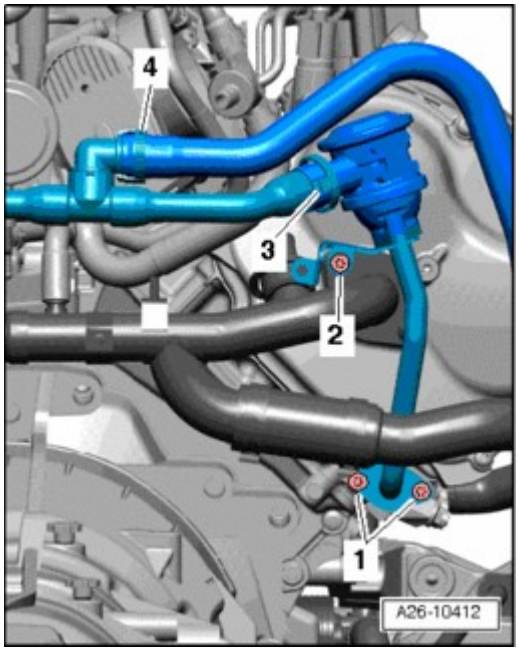

Fig. 429: Securing Clip Into Release & Lock Position
Courtesy of VOLKSWAGEN UNITED STATES, INC.

- Bring securing clip into release position - **1** -.
- Slide charge air hose into clutch as far as stop.

 © 2011 Mitchell Repair Information Company, LLC.

- Bring securing clip into lock position - **2** - and then press charge air hose back again.
- Check for correct seating and proper locking of connector by pulling on hose.

Turbocharger, component overview

Part I

Part II **Part II**

Part III **Part III**

Part IV **Part IV**

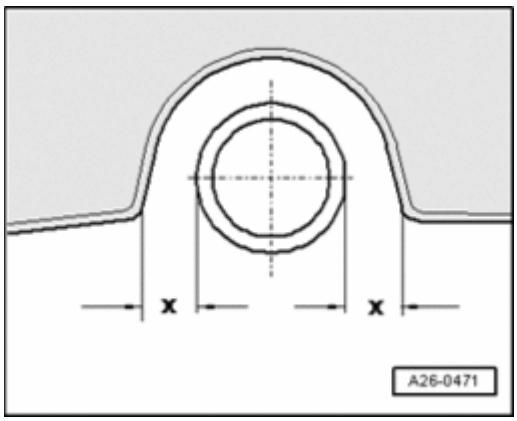

Fig. 430: Turbocharger, Component Overview - Part I
Courtesy of VOLKSWAGEN UNITED STATES, INC.

1 - Line for crankcase ventilation

2 - EVAP line

3 - Turbocharger and vacuum diaphragm

- Removing and installing --> **Vacuum diaphragm for turbocharger, removing and installing**
- Checking --> **Exhaust turbocharger vacuum diaphragm, checking**
- Adjusting --> **Vacuum diaphragm for turbocharger, adjusting**

4 - Seal

- Replace

5 - Nipple

6 - Hose

7 - 8 Nm

 © 2011 Mitchell Repair Information Company, LLC.

8 - Hose

9 - 3 Nm

10 - Wastegate Bypass Regulator Valve N75

11 - Hose

12 - 7 Nm

13 - Bracket

14 - 7 Nm

15 - Turbocharger Recirculating Valve N249

- Note installation position. Refer to --> **Installation position of Turbocharger Recirculating Valve N249**

16 - Seal

- Replace

17 - Turbocharger

- Can only be replaced with exhaust manifold and pressure unit.
- Removing and installing --> **Turbocharger, removing and installing**

18 - Gasket

- Replace

19 - 9 Nm

Installation position of Turbocharger Recirculating Valve N249

 © 2011 Mitchell Repair Information Company, LLC.

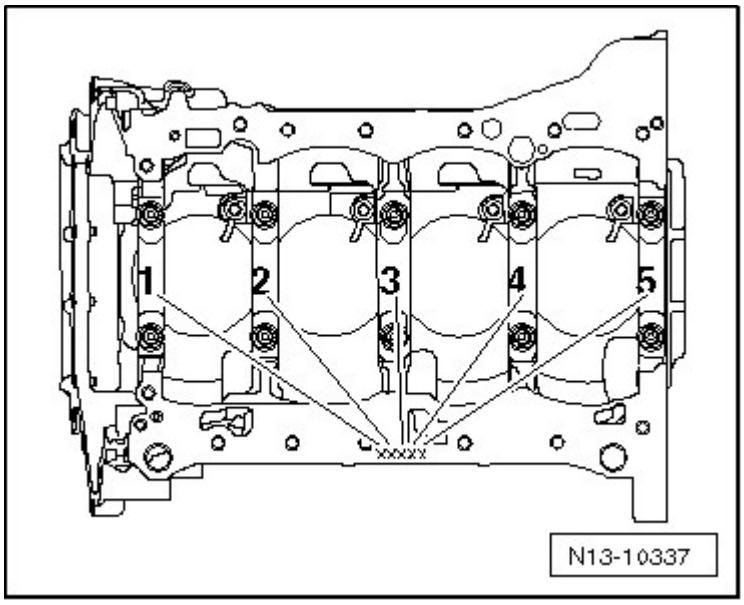

Fig. 431: Installation Position Of Turbocharger Recirculating Valve N249
Courtesy of VOLKSWAGEN UNITED STATES, INC.

- Note installation position - **arrows** -.

Part II

Part I **Part I**

Part III **Part III**

Part IV **Part IV**

 © 2011 Mitchell Repair Information Company, LLC.

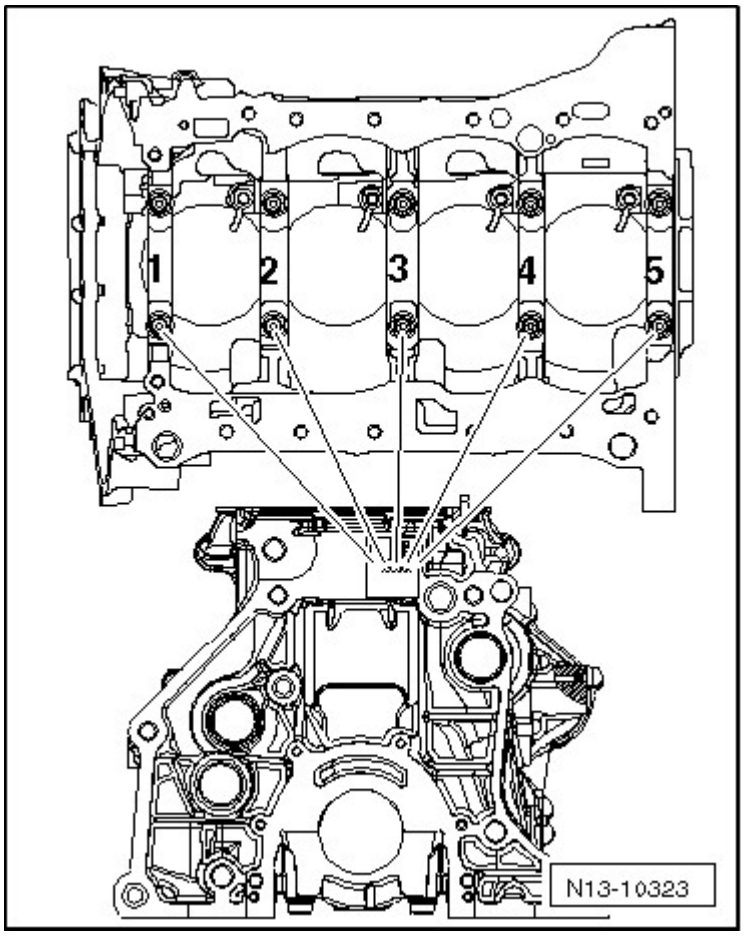

Fig. 432: Turbocharger, Component Overview - Part II
Courtesy of VOLKSWAGEN UNITED STATES, INC.

1 - Turbocharger

- Can only be replaced with exhaust manifold and pressure unit.
- Removing and installing --> **Turbocharger, removing and installing**

2 - Seal

- Replace

3 - 35 Nm

4 - 9 Nm

5 - Coolant supply line

6 - 35 Nm

7 - 23 Nm

 © 2011 Mitchell Repair Information Company, LLC.

8 - Seal

- Replace

9 - 9 Nm

10 - Gasket

- Replace

11 - Oil return line

12 - 9 Nm

13 - Gasket

- Replace

Part III

Part I **Part I**

Part II **Part II**

Part IV **Part IV**

 © 2011 Mitchell Repair Information Company, LLC.

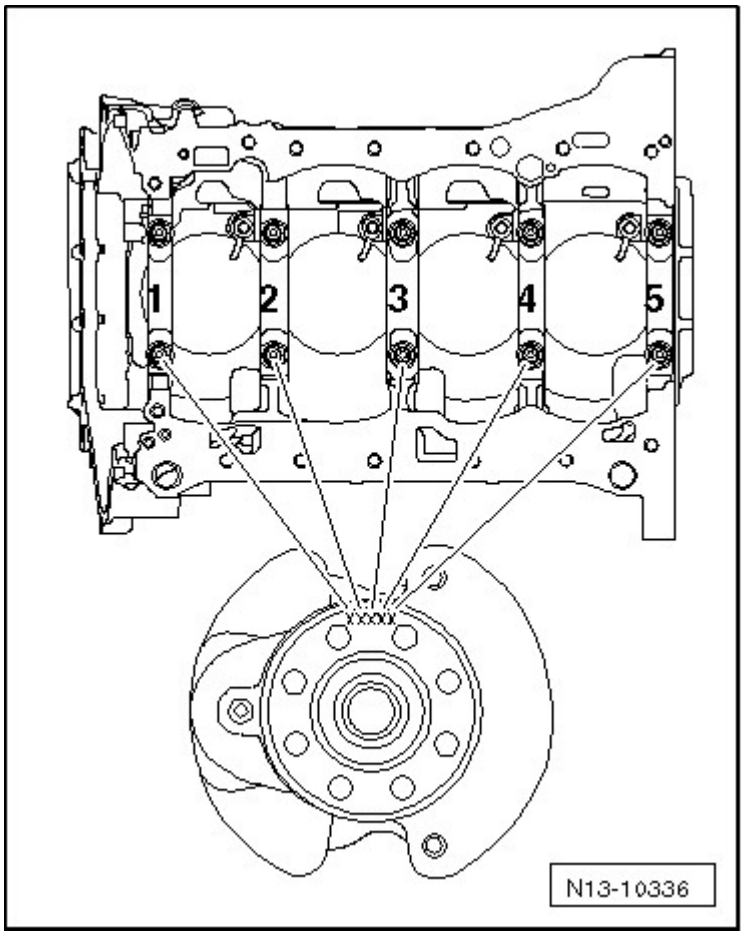

Fig. 433: Turbocharger, Component Overview - Part III
Courtesy of VOLKSWAGEN UNITED STATES, INC.

1 - Gasket

- Replace

2 - 21 Nm

- Replace
- Coat stud bolts on exhaust manifold with hot bolt paste.
- Hot bolt paste

3 - 35 Nm

4 - Seal

- Replace

5 - Coolant return line

 © 2011 Mitchell Repair Information Company, LLC.

6 - 9 Nm

7 - Turbocharger

- Removing and installing --> **Turbocharger, removing and installing**
- Removing and installing --> **Turbocharger, removing and installing**

8 - 30 Nm

9 - Seal

- Replace

10 - Oil supply line

11 - 9 Nm

12 - 30 Nm

13 - Seal

- Replace

14 - 23 Nm

15 - Bracket

16 - Brace

17 - 30 Nm

- Coat bolt with hot bolt paste
- Hot bolt paste

18 - 30 Nm

- Coat bolt with hot bolt paste
- Hot bolt paste

19 - 30 Nm

- Do not open when removing turbocharger
- Replace
- Coat stud bolts on exhaust manifold with hot bolt paste.
- Hot bolt paste

 © 2011 Mitchell Repair Information Company, LLC.

20 - Fastening strip

Part IV

Part I **Part I**

Part II **Part II**

Part III **Part III**

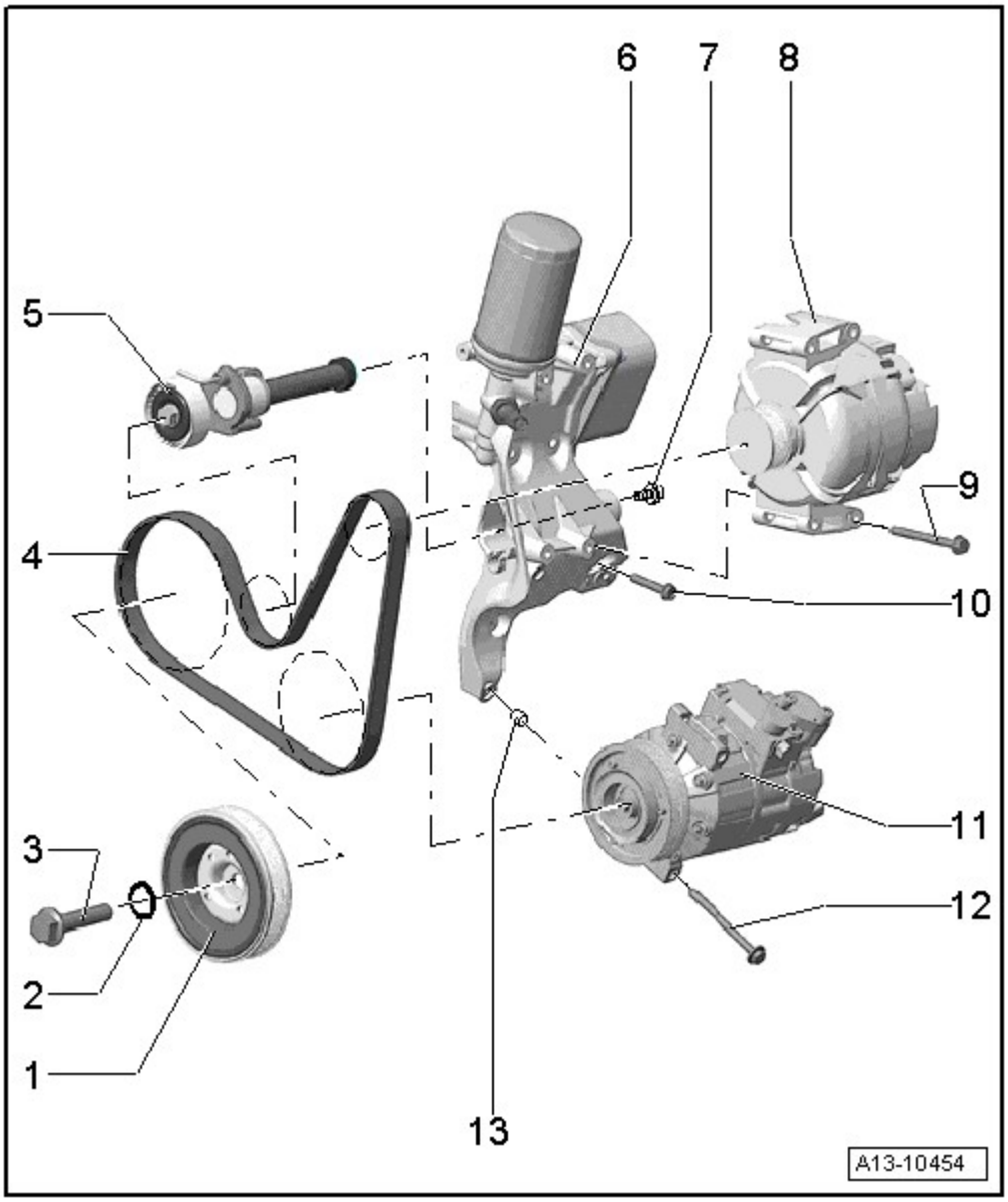

Fig. 434: Turbocharger, Component Overview - Part IV
Courtesy of VOLKSWAGEN UNITED STATES, INC.

1 - Turbocharger

 © 2011 Mitchell Repair Information Company, LLC.

- Can only be replaced with exhaust manifold and pressure unit.
- Checking --> **Exhaust turbocharger vacuum diaphragm, checking**
- Removing and installing --> **Turbocharger, removing and installing**

2 - Turbocharger and vacuum diaphragm

- Removing and installing --> **Vacuum diaphragm for turbocharger, removing and installing**
- Adjusting --> **Vacuum diaphragm for turbocharger, adjusting**

3 - 10 Nm

4 - Securing plate

5 - 9 Nm

- Secure with sealing wax
- Sealing wax

6 - Knurled nut

Turbocharger, removing and installing

Special tools, testers and auxiliary items required

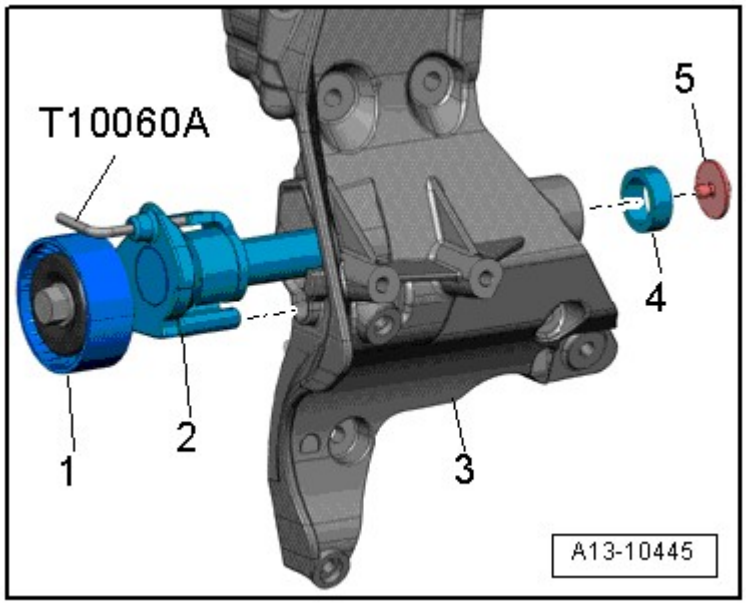

Fig. 435: Identifying Spring-Type Clip Pliers VAS 5024 A
Courtesy of VOLKSWAGEN UNITED STATES, INC.

- Spring-type clip pliers VAS 5024 A

 © 2011 Mitchell Repair Information Company, LLC.

Removing

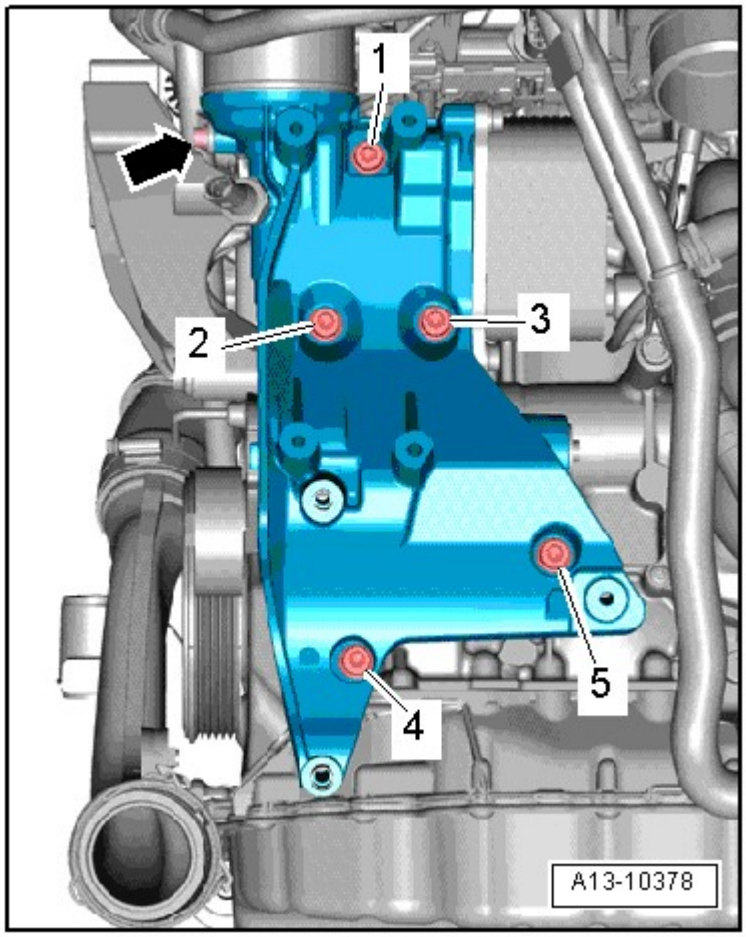

Fig. 436: Removing Engine Cover
Courtesy of VOLKSWAGEN UNITED STATES, INC.

- Remove engine cover - **arrows** -.

CAUTION: Cover cap of expansion tank with rag and open carefully, as hot steam or hot coolant may escape when opening.

- Open cap of coolant expansion tank.
- Drain engine coolant --> **Cooling system, draining and filling**

 © 2011 Mitchell Repair Information Company, LLC.

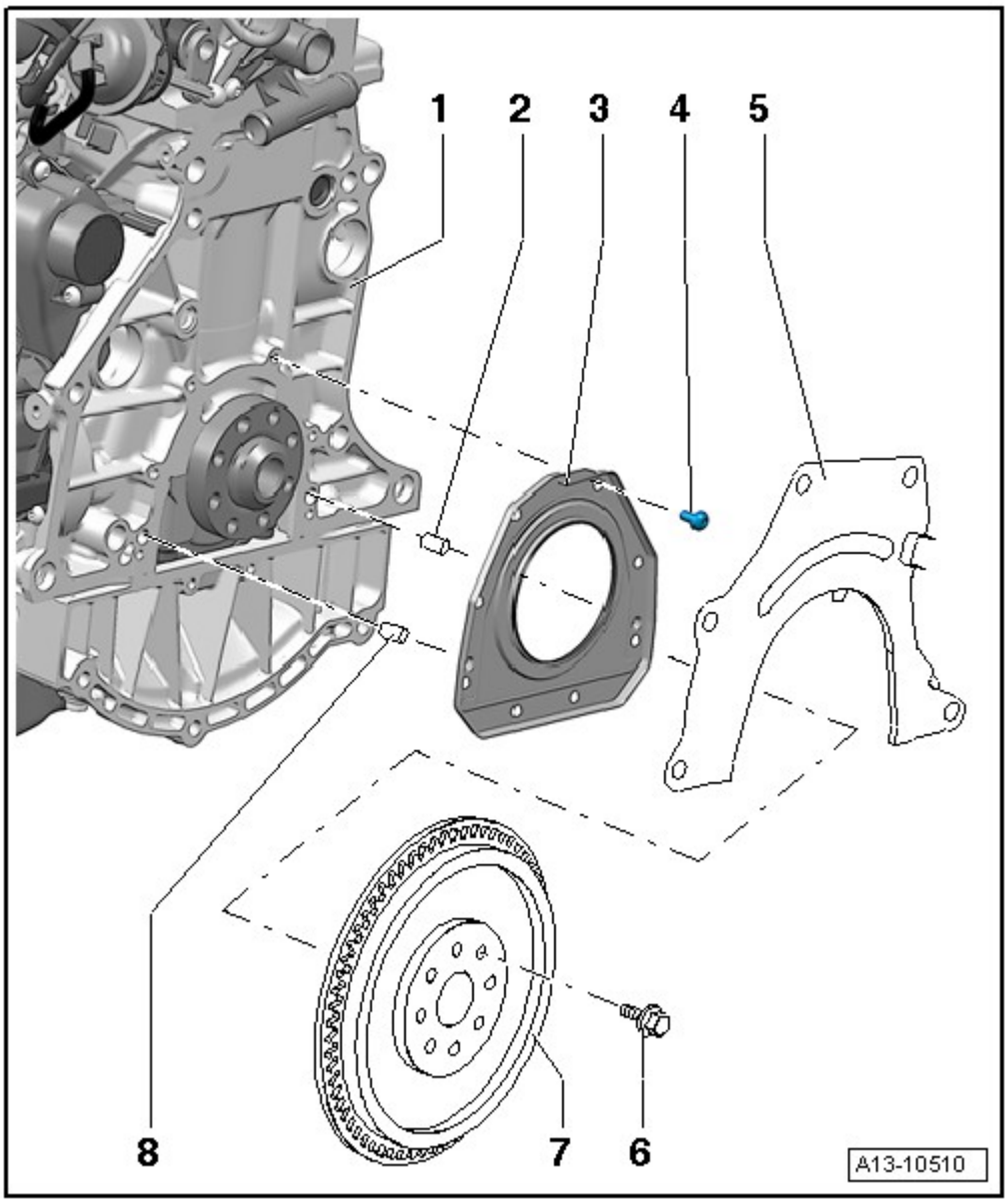

Fig. 437: Removing Heat Shield
Courtesy of VOLKSWAGEN UNITED STATES, INC.

- Remove heat shield - **arrows** -.

 © 2011 Mitchell Repair Information Company, LLC.

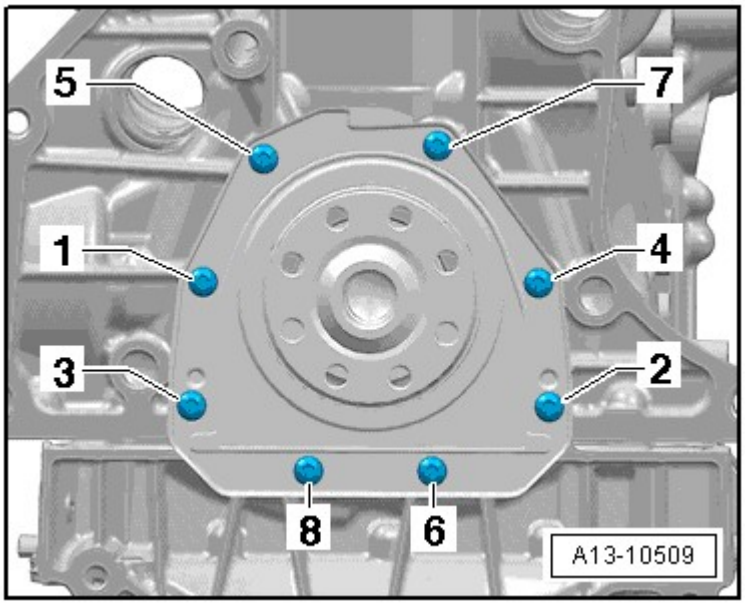

Fig. 438: Identifying Crankcase Ventilation With Heat Shield, Crankcase Ventilation From Cylinder Head Cover, Oil Supply Line & EVAP Canister Line
Courtesy of VOLKSWAGEN UNITED STATES, INC.

- Remove crankcase ventilation line from turbocharger - **1** -.
- Pull off crankcase ventilation line from the cylinder head cover - **2** - and remove it.
- Disconnect EVAP line to turbocharger from cylinder head cover - **3** -.
- Remove oil supply line from turbocharger - **4** -.

- Remove catalytic converter --> **Catalytic converter, removing and installing**

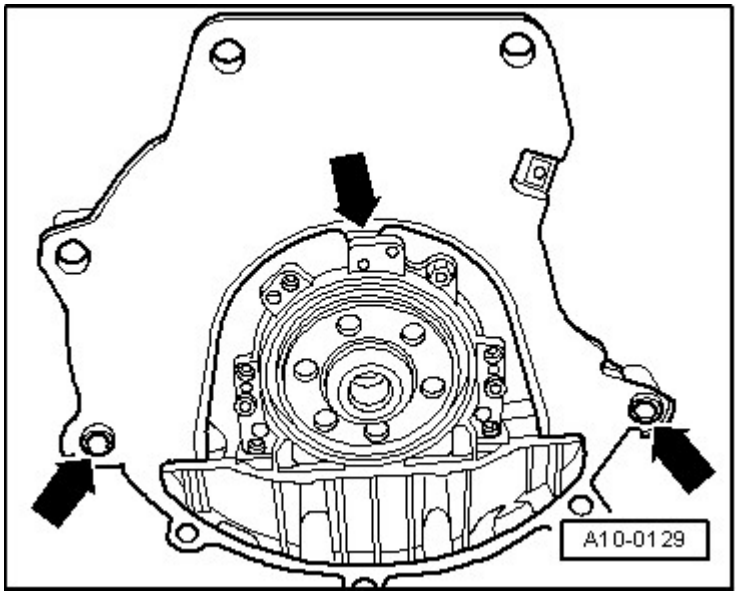

Fig. 439: Removing Coolant Supply Line To Turbocharger
Courtesy of VOLKSWAGEN UNITED STATES, INC.

 © 2011 Mitchell Repair Information Company, LLC.

- Remove coolant supply line to turbocharger - **arrow** -.

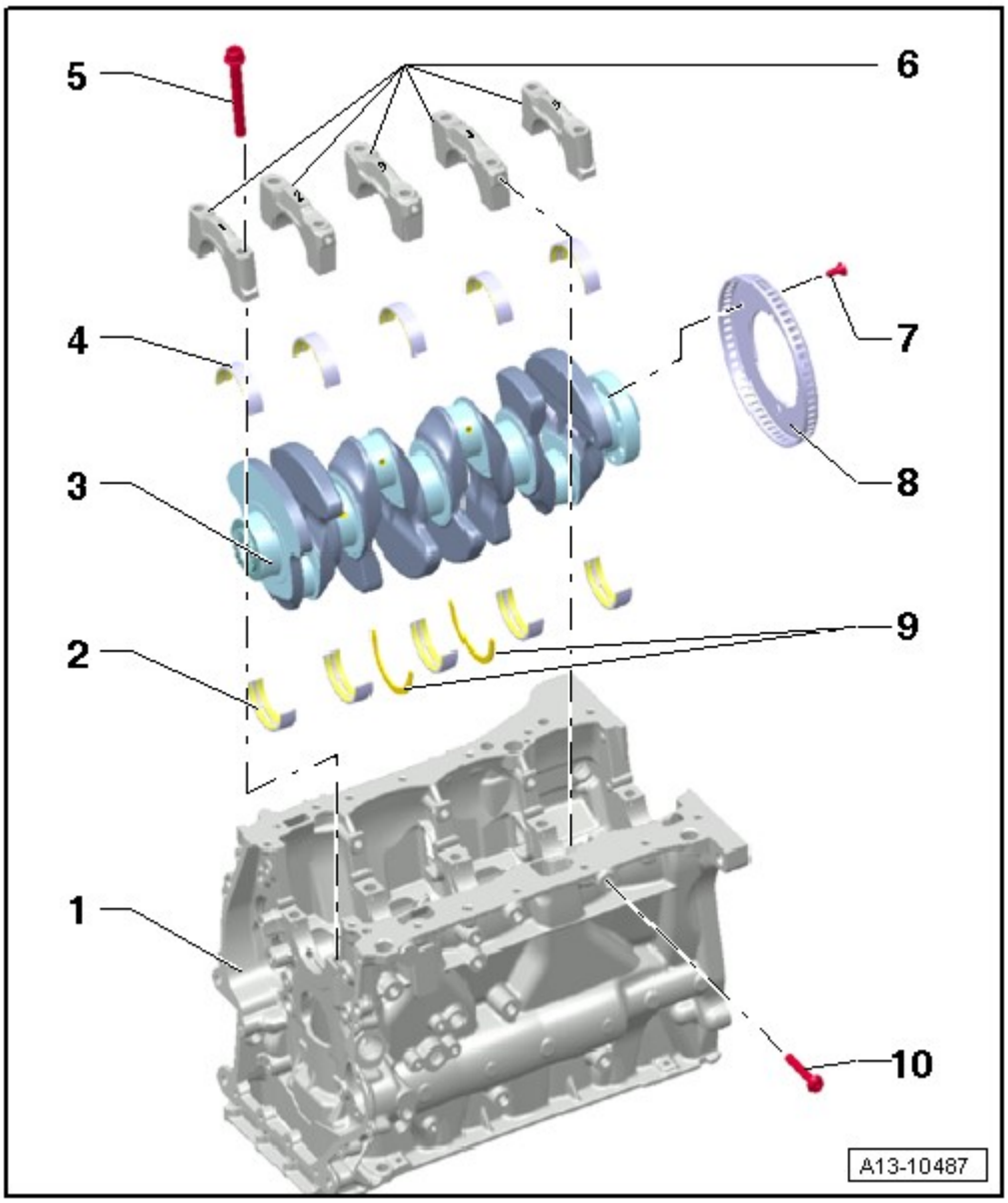

Fig. 440: Identifying Exhaust Pipe Fasteners
Courtesy of VOLKSWAGEN UNITED STATES, INC.

- For vehicles with auxiliary heater, remove bolts - **arrows** - for exhaust pipe of parking heater/auxiliary heater on noise insulation.

 © 2011 Mitchell Repair Information Company, LLC.

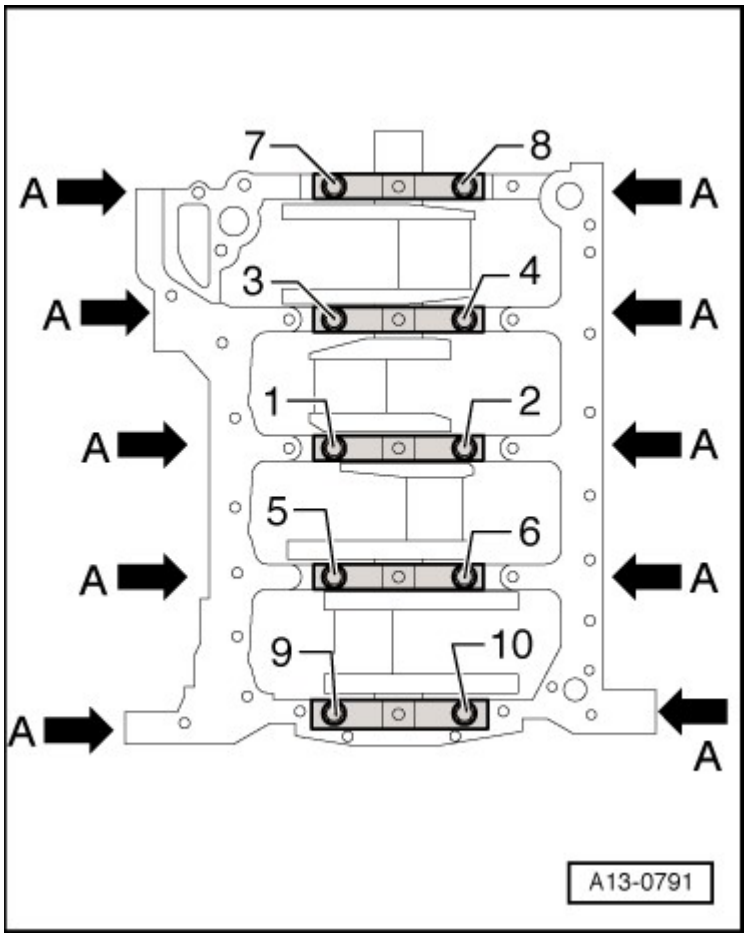

Fig. 441: Identifying Quick-Release Fasteners And Noise Insulation
Courtesy of VOLKSWAGEN UNITED STATES, INC.

- Loosen quick-release fasteners - **1** - and - **2** - and remove front noise insulation.
- Remove quick-release fasteners - **3** - and remove rear noise insulation, if installed.

 © 2011 Mitchell Repair Information Company, LLC.

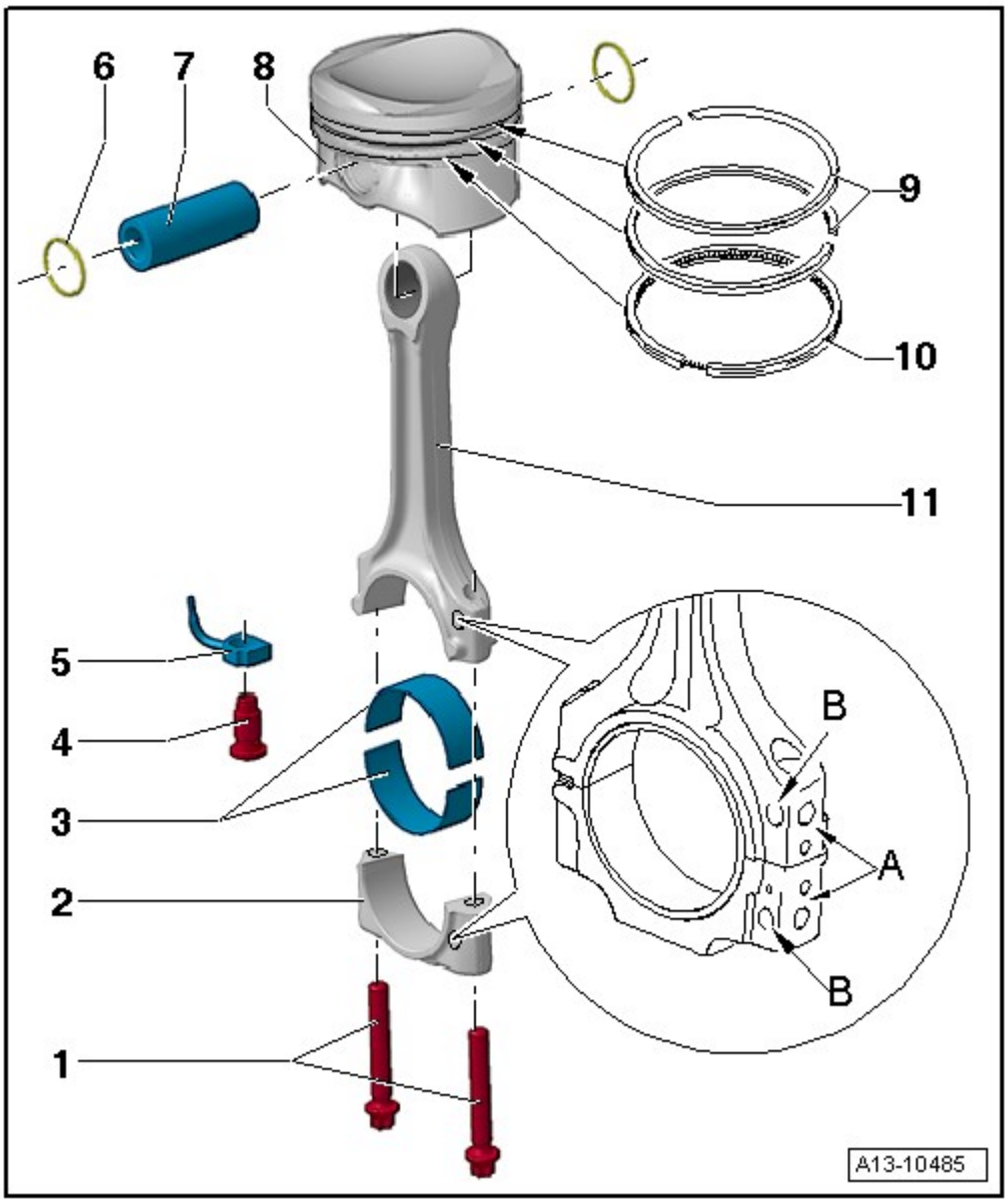

Fig. 442: Removing Air Duct Hoses
Courtesy of VOLKSWAGEN UNITED STATES, INC.

- Remove air duct hose - **1** - to turbocharger at bottom right.
- Remove air duct hose to charge air cooler at lock carrier - **2** -

 © 2011 Mitchell Repair Information Company, LLC.

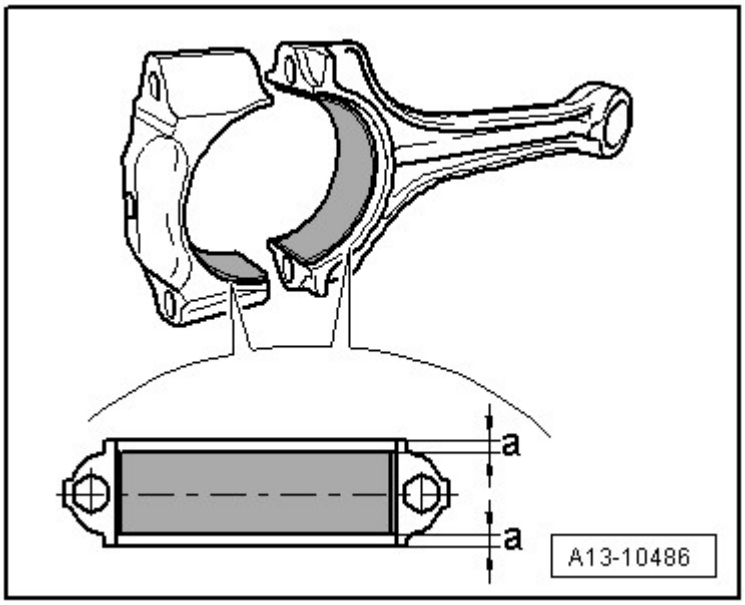

Fig. 443: Disconnecting Connector & Separating Intake Hose
Courtesy of VOLKSWAGEN UNITED STATES, INC.

- Disconnect connector - **1 and 2** - and free up cable.

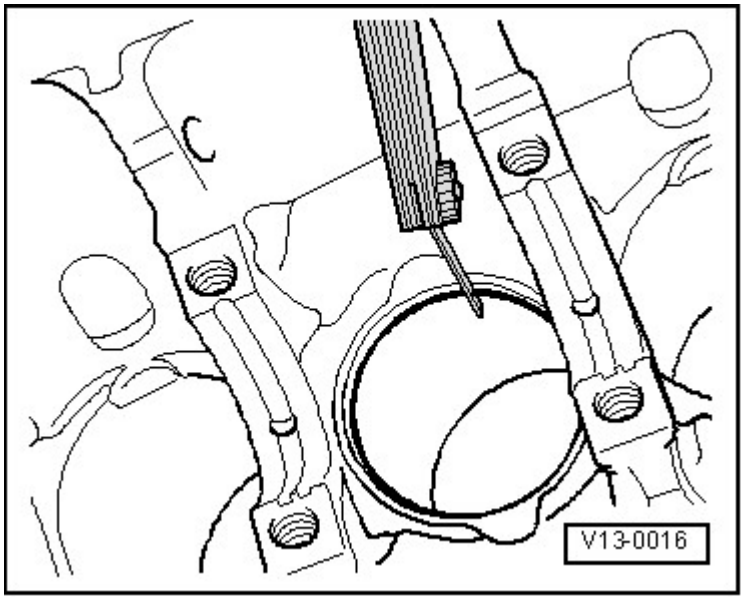

Fig. 444: Removing Oil Supply Line For Turbocharger At Cylinder Block & Bolting Of Support For Turbocharger
Courtesy of VOLKSWAGEN UNITED STATES, INC.

- Remove oil supply line for turbocharger at cylinder block - **1** -.
- Remove bolt - **2** - of support for turbocharger.

 © 2011 Mitchell Repair Information Company, LLC.

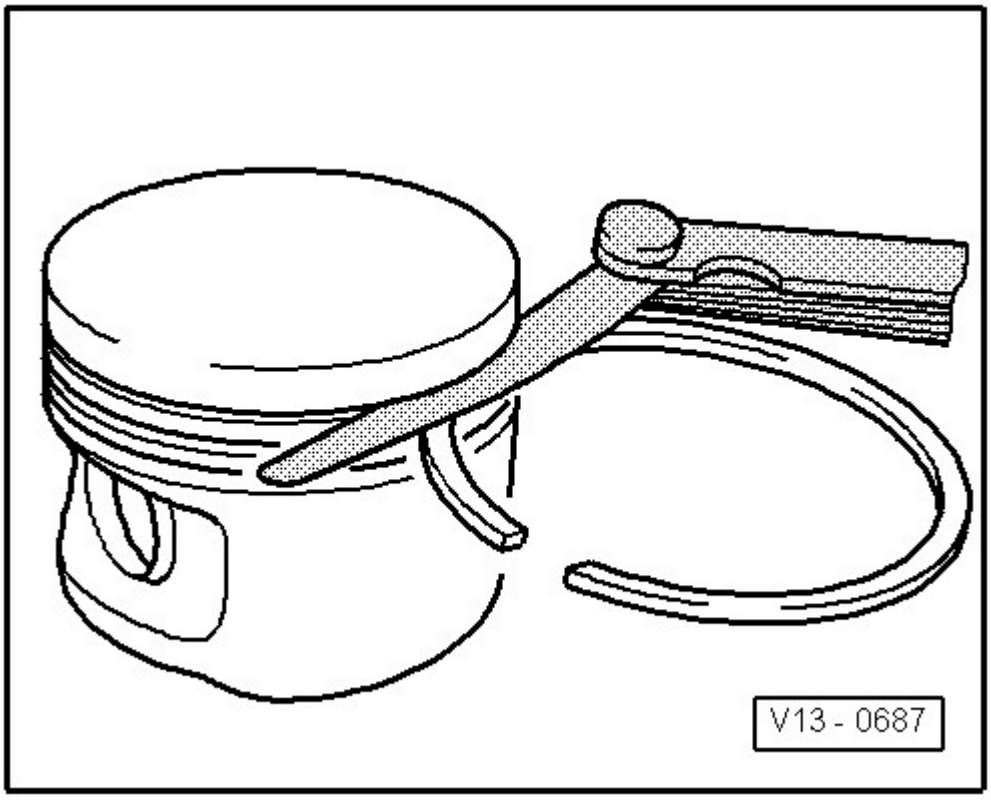

Fig. 445: Removing Oil Supply Line For Turbocharger
Courtesy of VOLKSWAGEN UNITED STATES, INC.

- Remove oil supply line for turbocharger - **arrows** -.

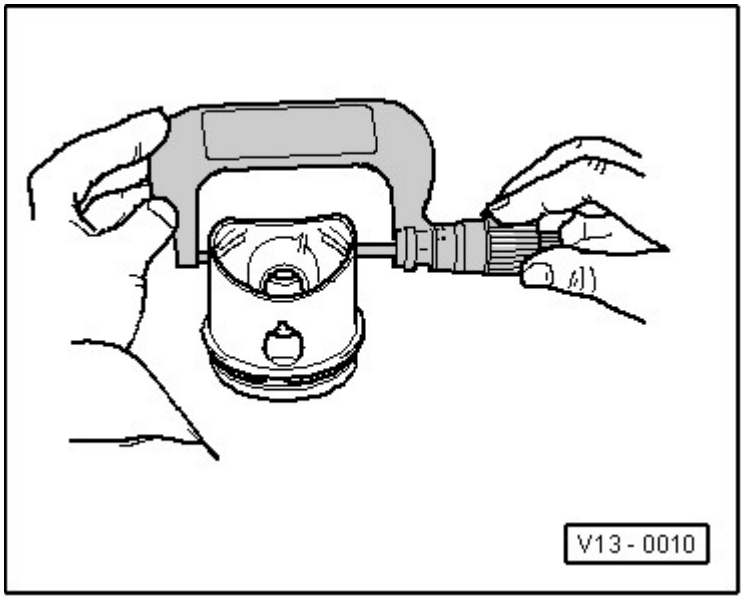

Fig. 446: Disconnecting Oil Return Line From Turbocharger
Courtesy of VOLKSWAGEN UNITED STATES, INC.

 © 2011 Mitchell Repair Information Company, LLC.

- Disconnect oil return line - **arrows** - from turbocharger.

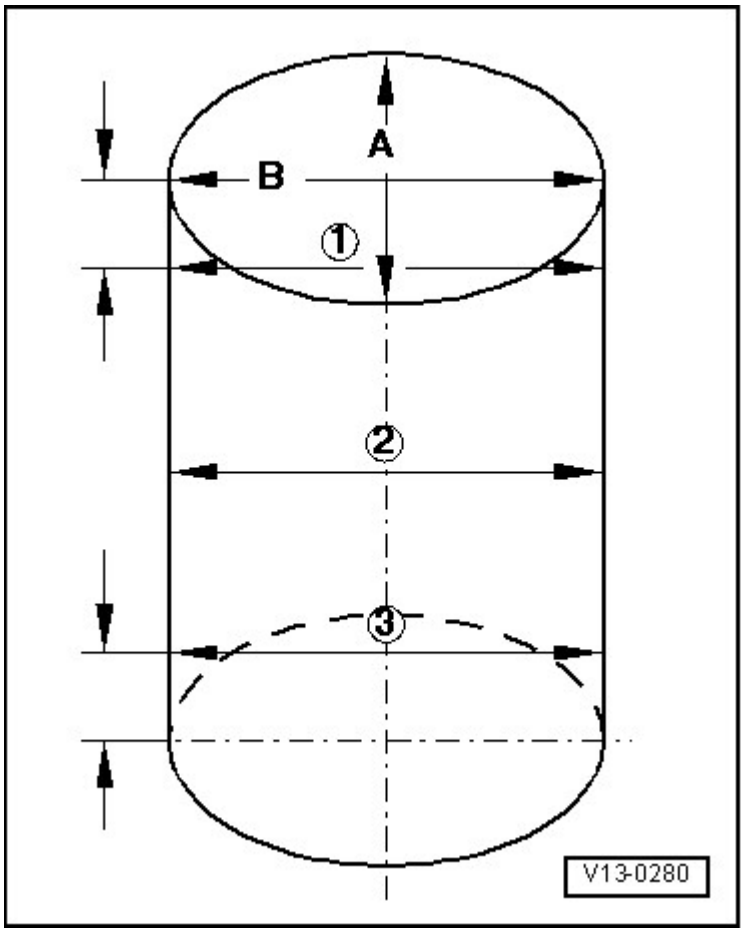

Fig. 447: Loosening Bolt Of Support For Turbocharger By 2 Turns
Courtesy of VOLKSWAGEN UNITED STATES, INC.

- Loosen bolt - **1** - of support for turbocharger by 2 turns.

 © 2011 Mitchell Repair Information Company, LLC.

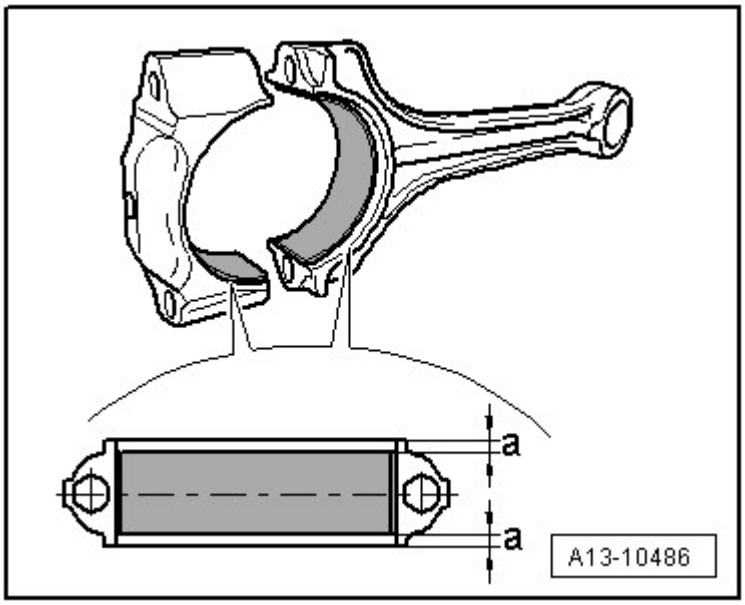

Fig. 448: Disconnecting Coolant Pipe
Courtesy of VOLKSWAGEN UNITED STATES, INC.

- Disconnect coolant pipe - **arrow** -.

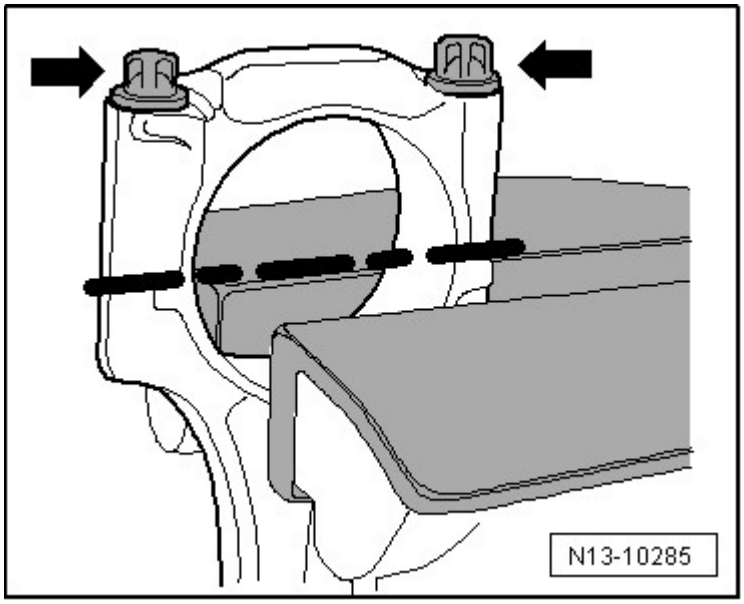

Fig. 449: Removing Coolant Pipe From Cylinder Head
Courtesy of VOLKSWAGEN UNITED STATES, INC.

- Remove coolant pipe - **1** - , if present, from cylinder head.

NOTE:

- **Nuts on bottom of fastening strip do not need to be opened**

- Remove upper nuts - **arrows** -.

 © 2011 Mitchell Repair Information Company, LLC.

- Remove turbocharger/exhaust manifold upward.

Installing

Installation is in reverse order of removal, note the following:

NOTE:

- **Always replace seals, gaskets and self-locking nuts.**
- **Add oil to turbocharger through oil feed line connecting piece.**
- **Hose connections and charge air system hoses must be free of oil and grease before installing.**
- **Secure all hose connections using hose clamps appropriate for the model type .**

- Install exhaust system and align it free of tension --> **Exhaust system, installing tension free**.
- Fill with coolant --> **Cooling system, draining and filling**.
- Check oil level -->
  - **01 - MAINTENANCE**
  - **01 - MAINTENANCE** for MAINTENANCE PROCEDURES - CABRIOLET

NOTE:

- **After installing turbocharger, let engine idle for approx. 1 minute without increasing engine speed. This ensures adequate oil supply to the turbocharger.**

Torque specifications

Component		Nm
Exhaust manifold/turbocharger to cylinder head		21 1)2)
Oil supply line to exhaust turbocharger		30
Bracket for oil supply line to exhaust manifold		20 2)
Bracket for turbocharger to cylinder block		30 2)
Turbocharger bracket to turbocharger		30 2)
Oil return line to turbocharger		9

- 1) Replace bolt or nut
- 2) Coat studs of exhaust manifold and threads of oxygen sensor with hot bolt paste; Hot bolt paste

Exhaust turbocharger vacuum diaphragm, checking

Special tools, testers and auxiliary items required

 © 2011 Mitchell Repair Information Company, LLC.

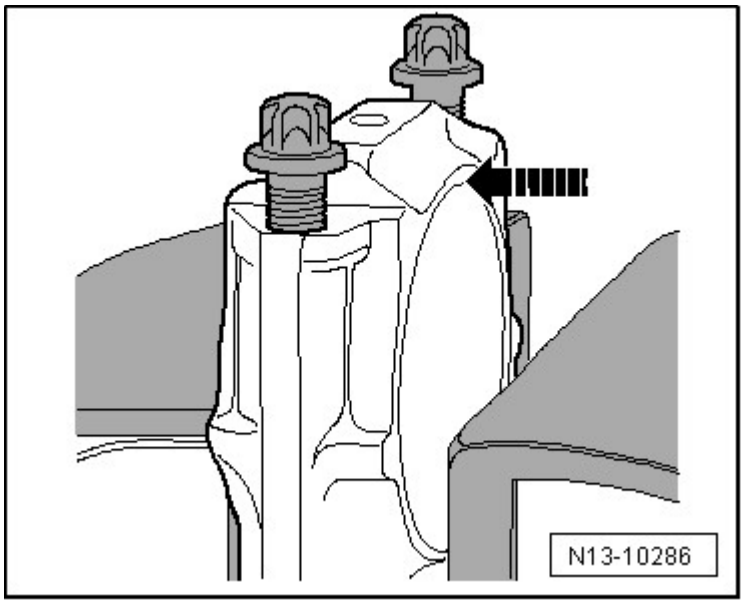

Fig. 450: Identifying Hand Vacuum Pump VAS 6213
Courtesy of VOLKSWAGEN UNITED STATES, INC.

- Hand vacuum pump VAS 6213

Test conditions:

- Hose from exhaust turbocharger over Wastegate Bypass Regulator Valve N75 must have continuity to vacuum diaphragm.
- Wastegate Bypass Regulator Valve N75 OK.

Work procedure:

 © 2011 Mitchell Repair Information Company, LLC.

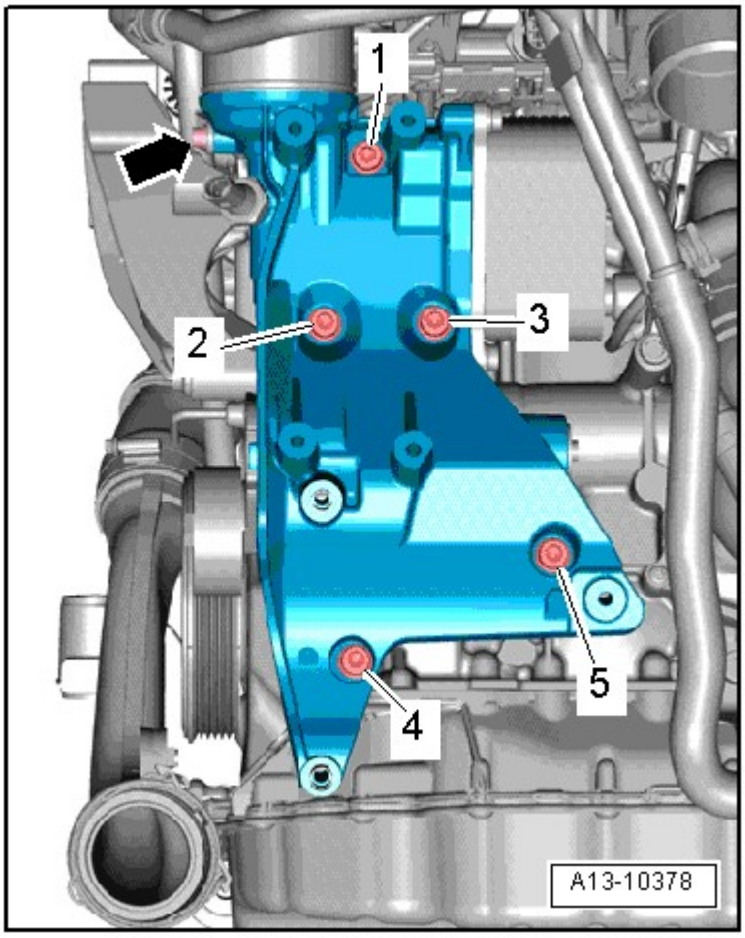

Fig. 451: Separating Electrical Connector
Courtesy of VOLKSWAGEN UNITED STATES, INC.

- Separate electrical connector - **1** -.
- Disconnect intake connection - **arrow** - using spring-type clip pliers VAS 5024A.
- Remove engine cover upward and out in direction of - **arrow** -.

 © 2011 Mitchell Repair Information Company, LLC.

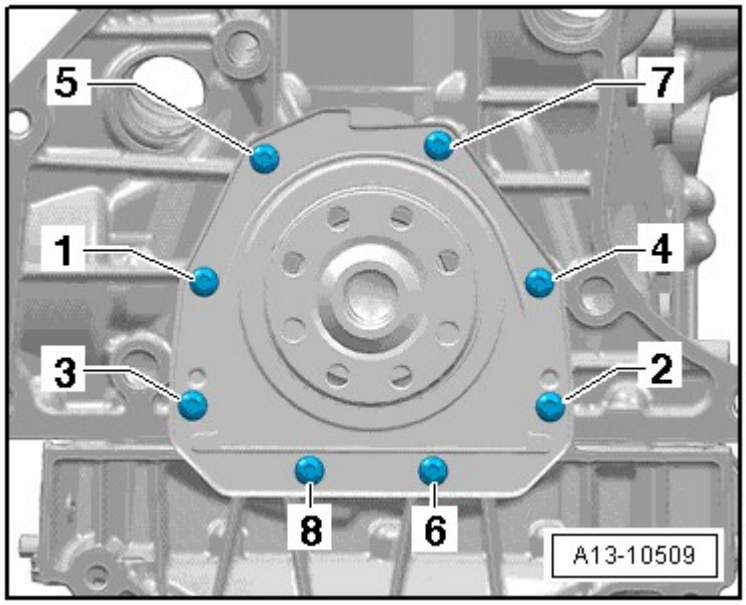

Fig. 452: Connecting Hand Vacuum Pump VAS 6213 To Vacuum Diaphragm
Courtesy of VOLKSWAGEN UNITED STATES, INC.

- Connect Hand Vacuum Pump VAS 6213 to vacuum diaphragm - **arrow** -.

 © 2011 Mitchell Repair Information Company, LLC.

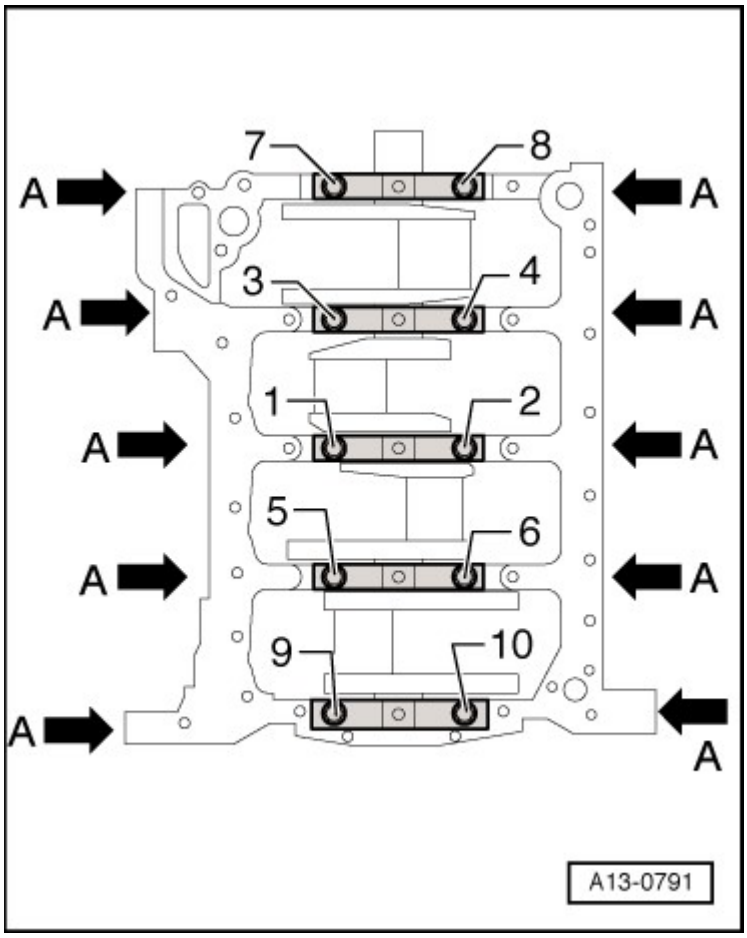

Fig. 453: Setting Slide Ring On Hand Vacuum Pump VAS 6213 To Position For "Pressure" or "Vacuum"
Courtesy of VOLKSWAGEN UNITED STATES, INC.

- Set slide ring - **1** - on hand vacuum pump VAS 6213 to position - **B** - for "pressure".

CAUTION: The pressure must not exceed 750 mbar. If the pressure is exceeded, the vacuum diaphragm can be damaged.

- Operate Hand Vacuum Pump VAS 6213 several times and observe rods.

The linkage - **A** - must move approx. 300 mbar and be at approx. 700 mbar at end position.

 © 2011 Mitchell Repair Information Company, LLC.

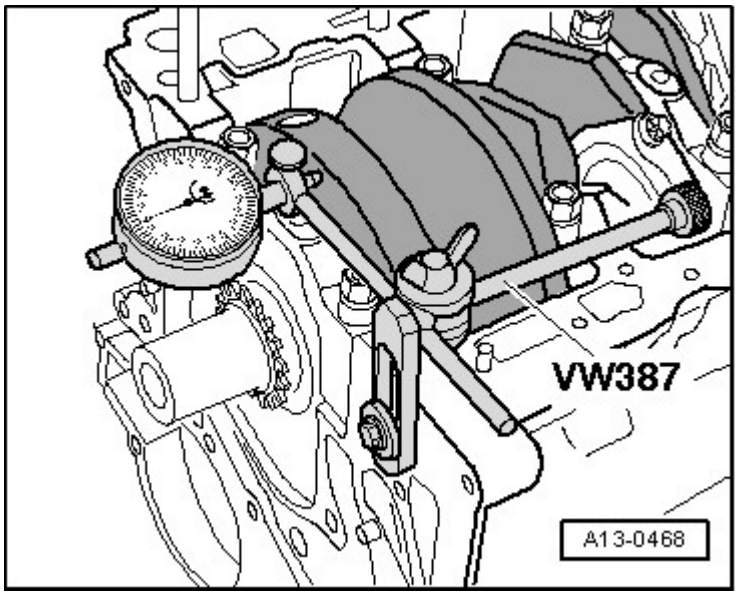

Fig. 454: Identifying Linkage Movement
Courtesy of VOLKSWAGEN UNITED STATES, INC.

Actuator lift is approx. 10 mm.

NOTE:

- **If pressure cannot be raised with Hand Vacuum Pump VAS 6213 or pressure drops immediately, check Hand Vacuum Pump VAS 6213 and connecting hoses for leaks. If no malfunction can be found: Replace vacuum diaphragm --> Vacuum diaphragm for turbocharger, removing and installing.**

Vacuum diaphragm for turbocharger, removing and installing

Removing

- Remove turbocharger --> **Turbocharger, removing and installing**

 © 2011 Mitchell Repair Information Company, LLC.

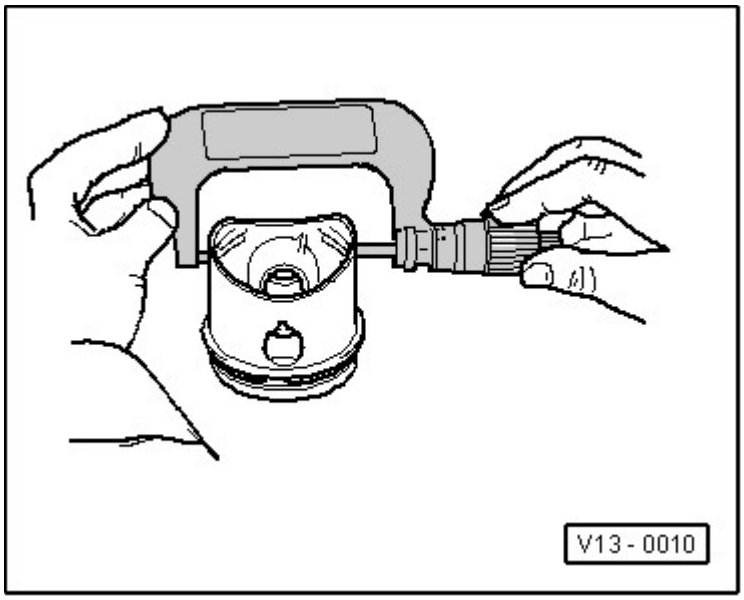

Fig. 455: Removing Securing Plate Over Linkage On Turbocharger
Courtesy of VOLKSWAGEN UNITED STATES, INC.

- Remove securing plate - **1** - over linkage on turbocharger.

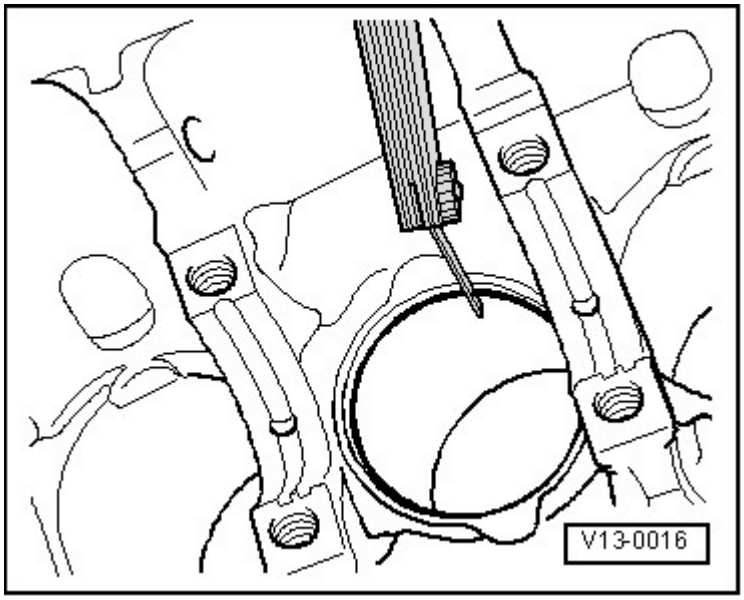

Fig. 456: Identifying Lock Nut, Linkage From Turbocharger, Vacuum Diaphragm & Turbocharger
Courtesy of VOLKSWAGEN UNITED STATES, INC.

- Loosen lock nut - **2** -.
- Disconnect linkage from turbocharger - **3** -.
- Remove vacuum diaphragm - **1** - from turbocharger - **4** -.

Installing

 © 2011 Mitchell Repair Information Company, LLC.

Installation is in reverse order of removal, note the following:

- Vacuum diaphragm for turbocharger, adjusting --> **Vacuum diaphragm for turbocharger, adjusting**
- Install turbocharger --> **Turbocharger, removing and installing**

Torque specifications

Component		Nm
Vacuum diaphragm to turbocharger		10
Lock nut to linkage		9 1)

- 1) Secure lock nut with sealing wax; Sealing wax

Vacuum diaphragm for turbocharger, adjusting

Turbocharger removed

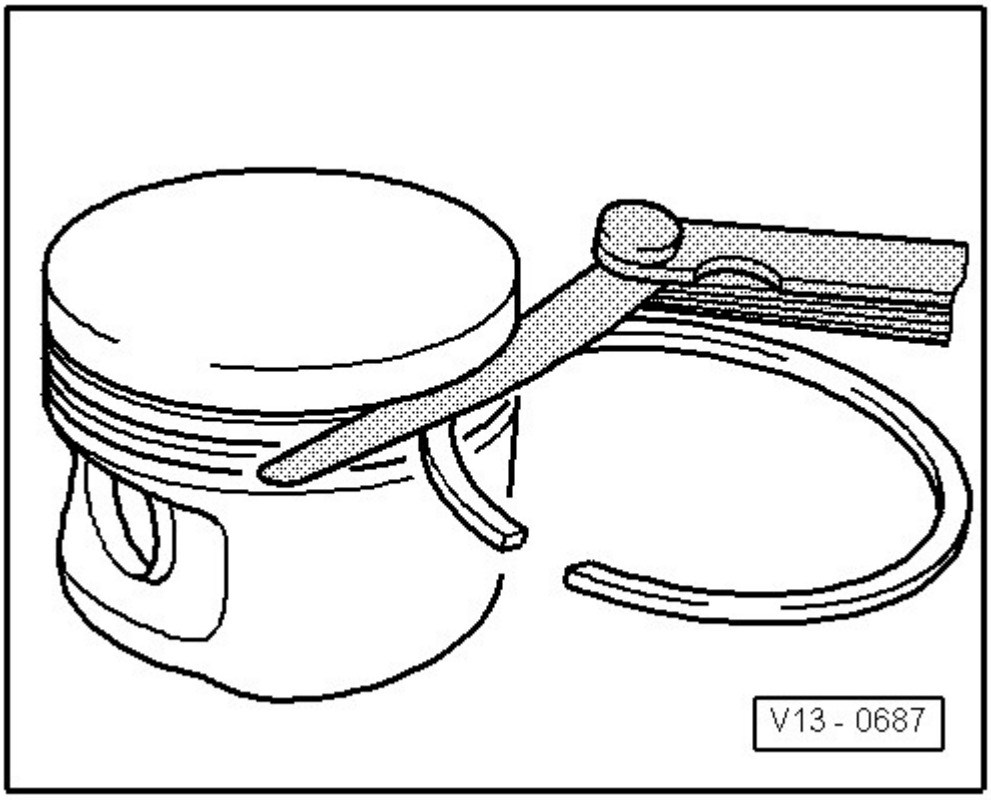

Fig. 457: Identifying Special Tools - Vacuum Diaphragm For Turbocharger, Adjusting
Courtesy of VOLKSWAGEN UNITED STATES, INC.

Special tools, testers and auxiliary items required

- Dial gauge holder VW 387

 © 2011 Mitchell Repair Information Company, LLC.

- Hand vacuum pump VAS 6213
- Pressure regulator valve VAS 6342
- Turbocharger tester V.A.G 1397A
- Dial Gauge Set, 4-part VAS 6341
- Torque wrench V.A.G 1783

Special tools, testers and auxiliary items required

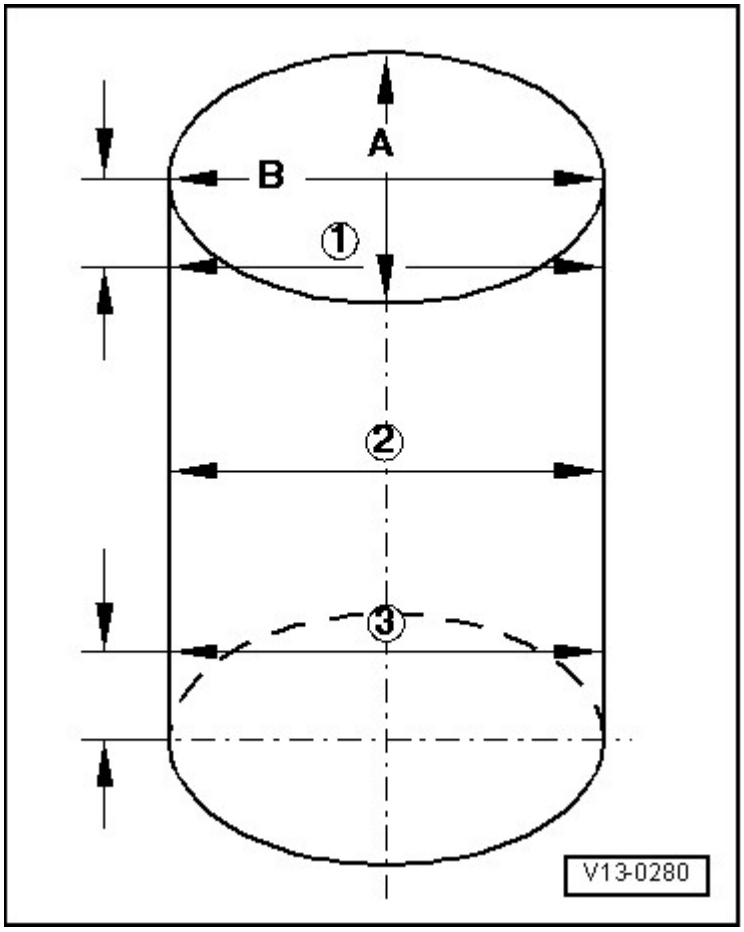

Fig. 458: Open End Spanner Insert AF 10 V.A.G 1783/1
Courtesy of VOLKSWAGEN UNITED STATES, INC.

- Open End Spanner Insert AF 10 V.A.G 1783/1

Adjusting

- Tightening torques **Part IV**

 © 2011 Mitchell Repair Information Company, LLC.

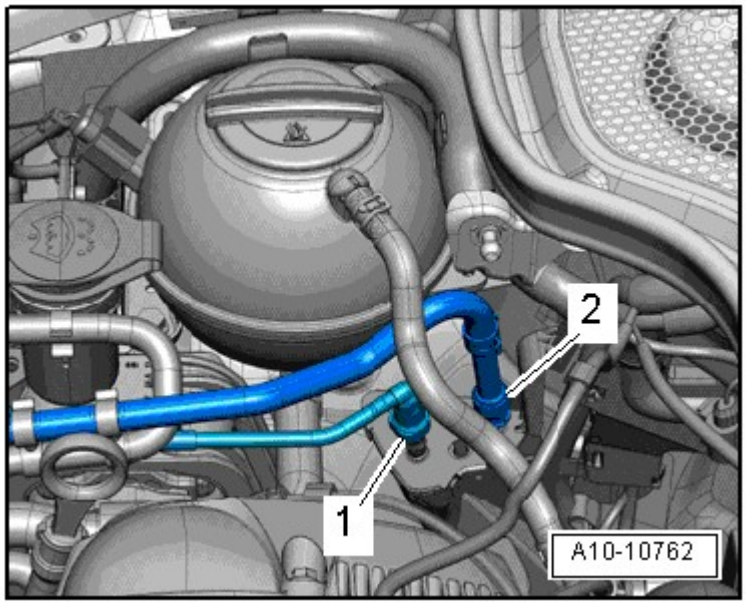

Fig. 459: Removing Hose From Vacuum Diaphragm On Turbocharger
Courtesy of VOLKSWAGEN UNITED STATES, INC.

- Remove hose - **arrow** - from vacuum diaphragm on turbocharger.

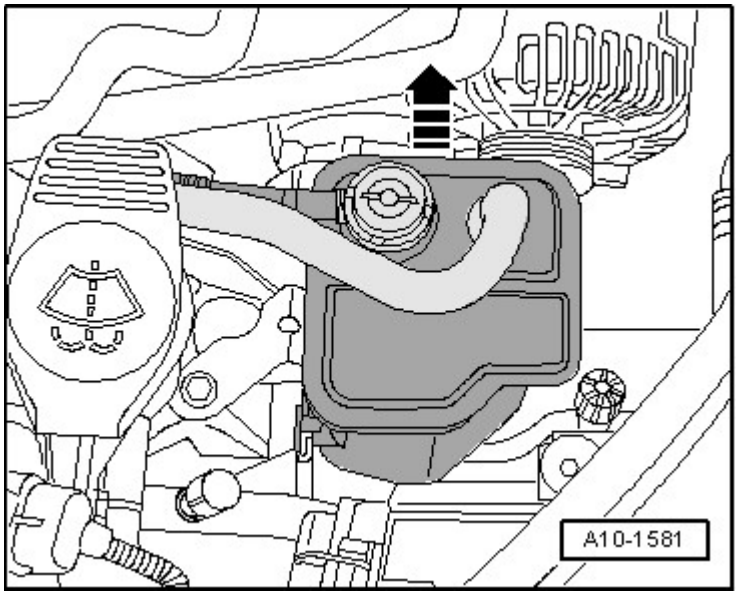

Fig. 460: Removing Securing Plate Over Linkage On Turbocharger
Courtesy of VOLKSWAGEN UNITED STATES, INC.

- Remove securing plate - **1** - over linkage on turbocharger.

 © 2011 Mitchell Repair Information Company, LLC.

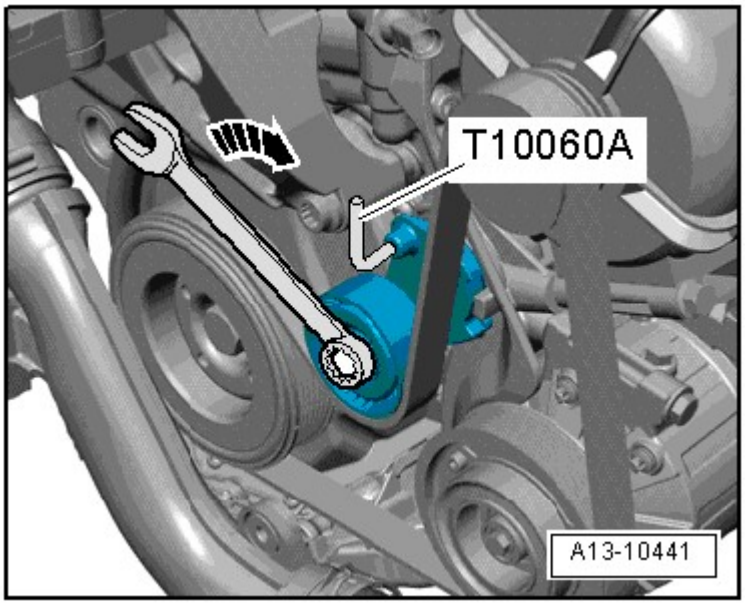

Fig. 461: Identifying Lock Nut, Linkage From Turbocharger, Vacuum Diaphragm & Turbocharger
Courtesy of VOLKSWAGEN UNITED STATES, INC.

- Loosen lock nut - **2** -.

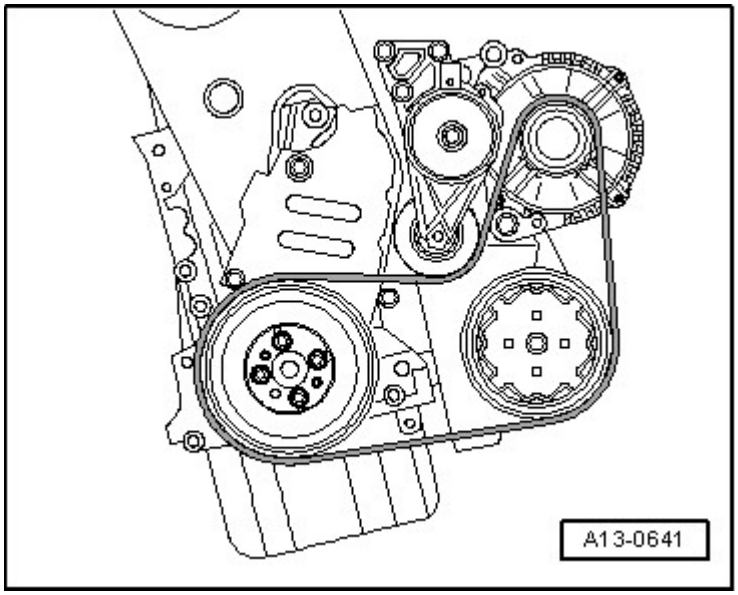

Fig. 462: Pre-Adjusting Bypass Flap Above Linkage Of Vacuum Diaphragm
Courtesy of VOLKSWAGEN UNITED STATES, INC.

- Pre-adjust bypass flap - **1** - via knurled nut - **arrow** - so flap can still just be turned by hand.
- Install lock nut hand tight.

 © 2011 Mitchell Repair Information Company, LLC.

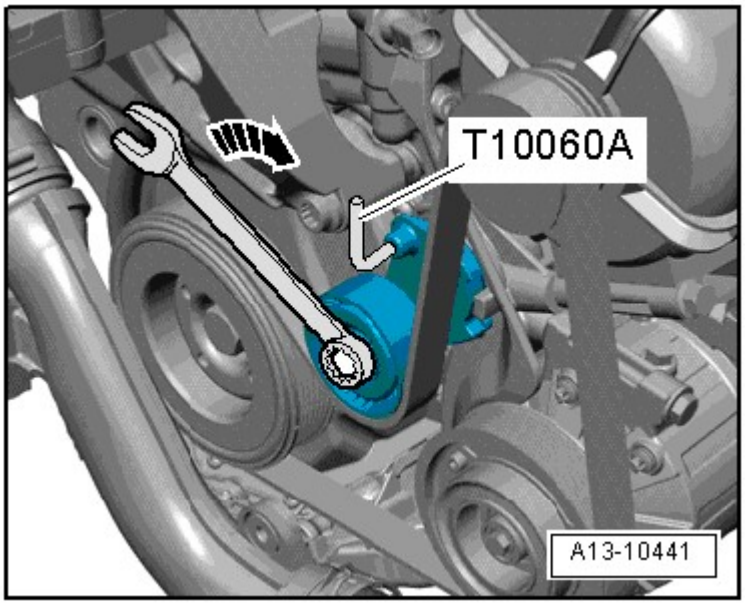

Fig. 463: Connecting Hand Vacuum Pump VAS 6213, Turbocharger Tester V.A.G 1397A To Connection II And Pressure Regulator Valve VAS 6342
Courtesy of VOLKSWAGEN UNITED STATES, INC.

- Connect hand vacuum pump VAS 6213 , turbocharger tester V.A.G 1397A to connection II and pressure regulator valve VAS 6342 as depicted in the illustration.
- Close Pressure Control Valve VAS 6342 on lever - **1** -.

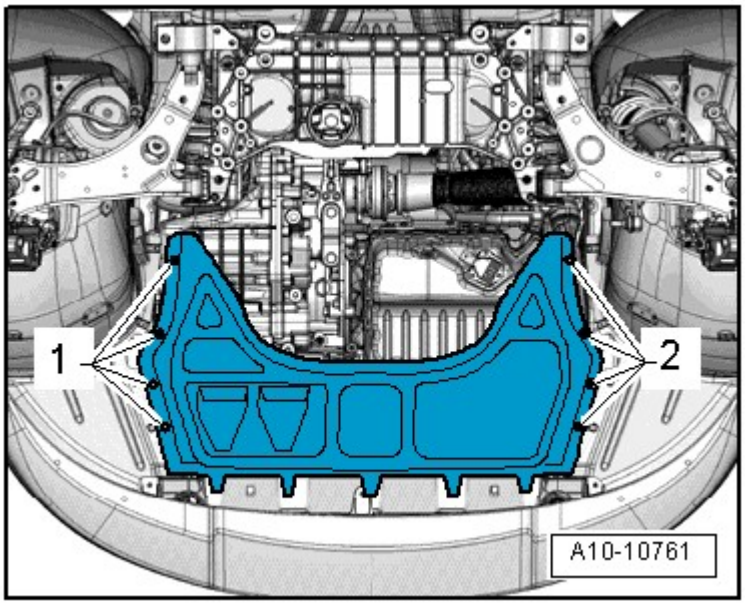

Fig. 464: Adjusting Slide Ring On Hand Vacuum Pump VAS 6213 To Position For "Pressure"
Courtesy of VOLKSWAGEN UNITED STATES, INC.

- Adjust slide ring - **1** - on Hand Vacuum Pump VAS 6213 to - **B** - position for "Pressure".

 © 2011 Mitchell Repair Information Company, LLC.

- Switch on Turbocharger Tester V.A.G 1397A and adjust slide switch to position II.

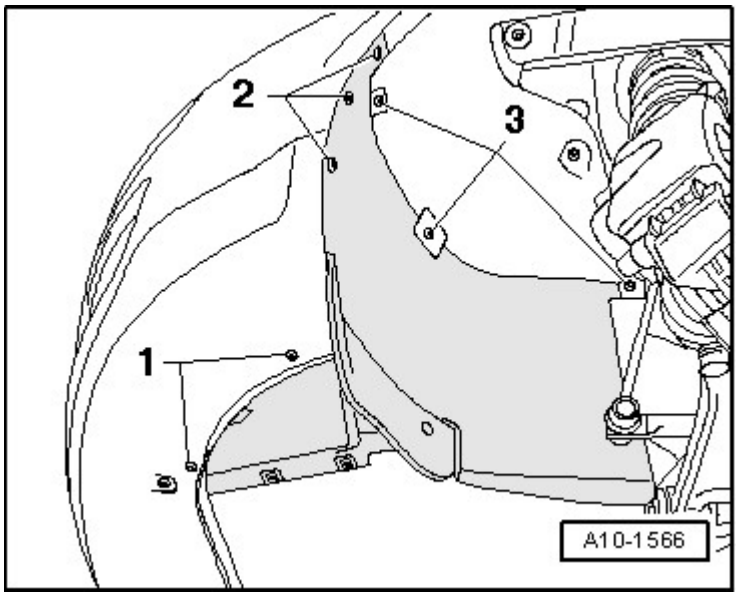

Fig. 465: Securing Dial Gauge VAS 6341/1 With 30 mm Extension VAS 6341/3 And Level Tester VAS 6341/4 On Universal Dial Gauge Holder VW 387
Courtesy of VOLKSWAGEN UNITED STATES, INC.

- Secure Dial Gauge Holder VW 387 on turbocharger - **arrow** -.

NOTE:

- **The mm specifications apply to the value read out (includes 1 mm pre-load).**

- Secure Dial Gauge 0-30 mm VAS 6341/1 with Dial Gauge Extension, 30 mm VAS 6341/3 and Flat Pickup VAS 6341/4 to Dial Gauge Holder VW 387.
- Set Dial Gauge 0-30 mm VAS 6341/1 to 1 mm pre-load with 0 bar on vacuum diaphragm.
- Rotate Dial Gauge 0-30 mm VAS 6341/1 display to 0.
- Check dial gauge for ease of movement.

- Operate Hand Vacuum Pump VAS 6213 until Turbocharger Tester V.A.G 1397A shows 350 +/- 5 mbar.
- Dial gauge must display between 4.1 mm and 4.33, otherwise, turn knurled nut until value is displayed.
- Hand tighten lock nut.
- Repeat measurement.

- Reduce pressure to 0 mbar via Pressure Control Valve VAS 6342.
- Set Dial Gauge 0-30 mm VAS 6341/1 to 0.

NOTE:

- **The following measurements must be performed in one sequence. In the meantime, pressure must not dissipate to 0.**

 © 2011 Mitchell Repair Information Company, LLC.

- Operate Hand Vacuum Pump VAS 6213 until Turbocharger Tester V.A.G 1397A shows 350 +/- 5 mbar.
- Read value on dial indicator VAS 6341/1 and note.
- Operate Hand Vacuum Pump VAS 6213 until Turbocharger Tester V.A.G 1397A displays 650 mbar to 700 mbar.
- Reduce pressure to 350 +/- 5 mbar via Pressure Control Valve VAS 6342.

- Read value on dial indicator VAS 6341/1 and note.
- Add value 1 and 2 and divide by 2.
- The result (mean value) must be 5 +/- 0.25 mm.
- If result (mean value) is not 5 +/- 0.25 mm, correct adjustment, tighten lock nut hand-tight and repeat measurement.

- If result (average) is 5 +/- 0.25 mm, tighten lock nut and secure with sealing wax. Sealing wax .

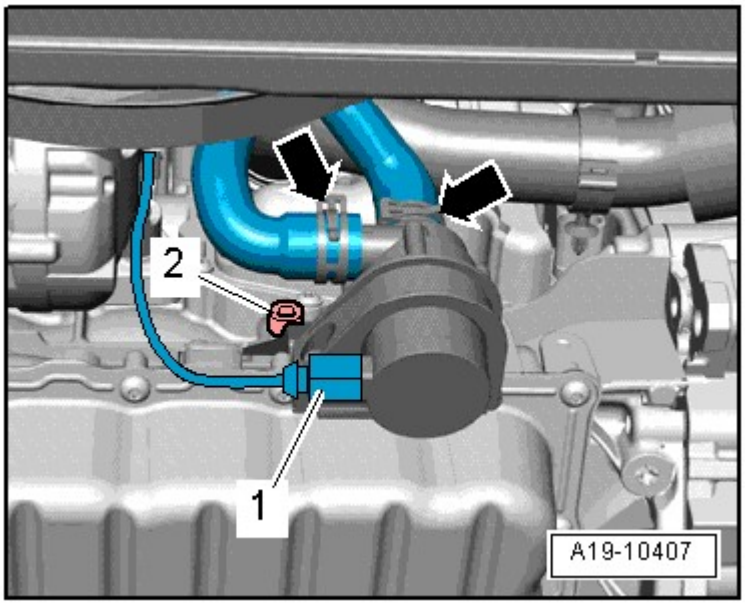

Fig. 466: Removing Securing Plate Over Linkage On Turbocharger
Courtesy of VOLKSWAGEN UNITED STATES, INC.

- Secure securing plate - **1** - over vacuum diaphragm linkage.

Charge air cooler, component overview

 © 2011 Mitchell Repair Information Company, LLC.

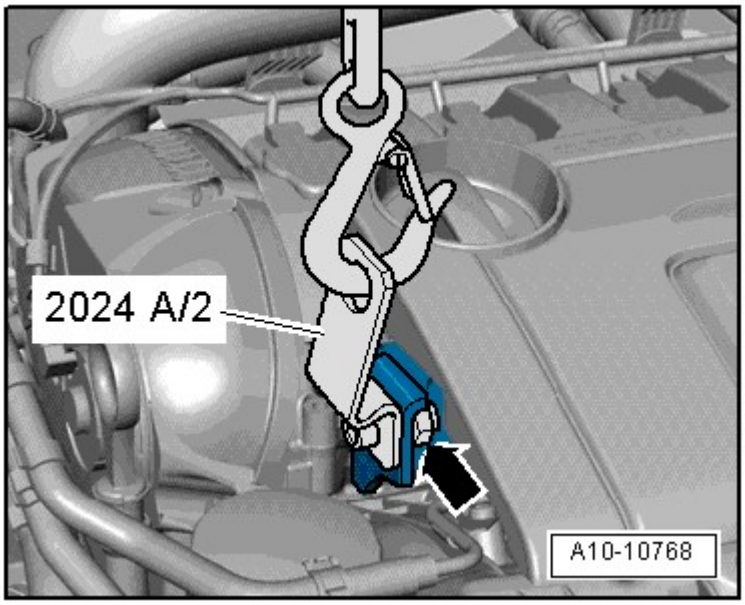

Fig. 467: Charge Air Cooler, Component Overview
Courtesy of VOLKSWAGEN UNITED STATES, INC.

1 - Air duct

- For charge air cooler

2 - Air guide hose

- To lock carrier and to turbocharger
- Must be free of oil and grease when installing

3 - Hose clamp (reinforced), 5.5 Nm

4 - Air guide hose

- To Intake manifold
- Must be free of oil and grease when installing

5 - Seal

- Replace if damaged or leaking

6 - O-ring

- Replace
- Only in left charge air cooler

7 - Charge Air Pressure Sensor G31

 © 2011 Mitchell Repair Information Company, LLC.

- Removing and installing --> **Charge Air Pressure Sensor G31 , removing and installing**
- Only in left charge air cooler

8 - 5 Nm

- Only in left charge air cooler

9 - Mountings

10 - Bracket for charge air cooler

11 - Rubber grommet

12 - 22 Nm

13 - Air charge cooler

- Removing and installing --> **Left and right charge air coolers, removing and installing**

14 - Bracket for refrigerant line

15 - 15 Nm

Left and right charge air coolers, removing and installing

NOTE:

- **The following removal and installation procedure is for the left charge air cooler. The procedure for the right charge air cooler is identical.**
- **Before a test or repair, verify that all hoses and lines are securely installed and not leaking.**

Removing

 © 2011 Mitchell Repair Information Company, LLC.

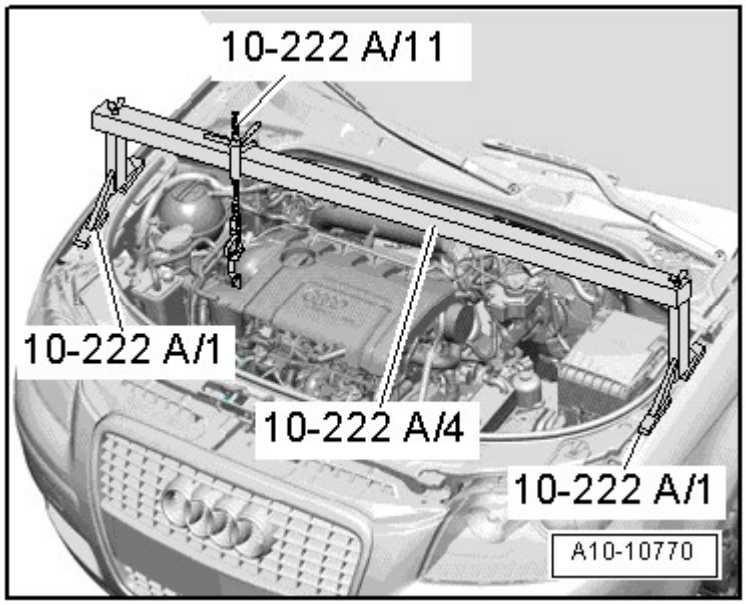

Fig. 468: Identifying Exhaust Pipe Fasteners
Courtesy of VOLKSWAGEN UNITED STATES, INC.

- For vehicles with auxiliary heater, remove bolts - **arrows** - for exhaust pipe of parking heater/auxiliary heater on noise insulation.

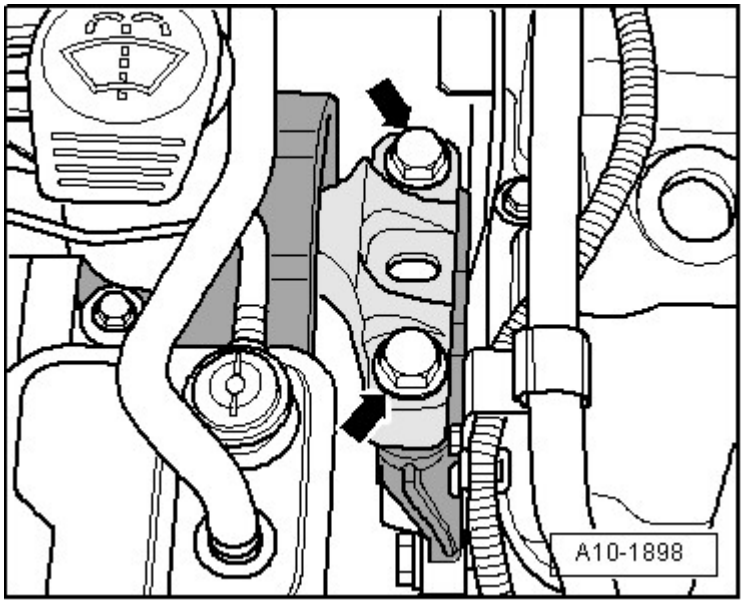

Fig. 469: Identifying Quick-Release Fasteners And Noise Insulation
Courtesy of VOLKSWAGEN UNITED STATES, INC.

- Loosen quick-release fasteners - **1** - and - **2** - and remove front noise insulation.
- Remove quick-release fasteners - **3** - and remove rear noise insulation, if installed.
- Remove front bumper cover -->

 © 2011 Mitchell Repair Information Company, LLC.

- **63 BUMPER**
- **63 - BUMPERS** for BODY EXTERIOR - CABRIOLET

.

- Remove left and right headlights --> **94 LIGHTS, SWITCHES - EXTERIOR** .

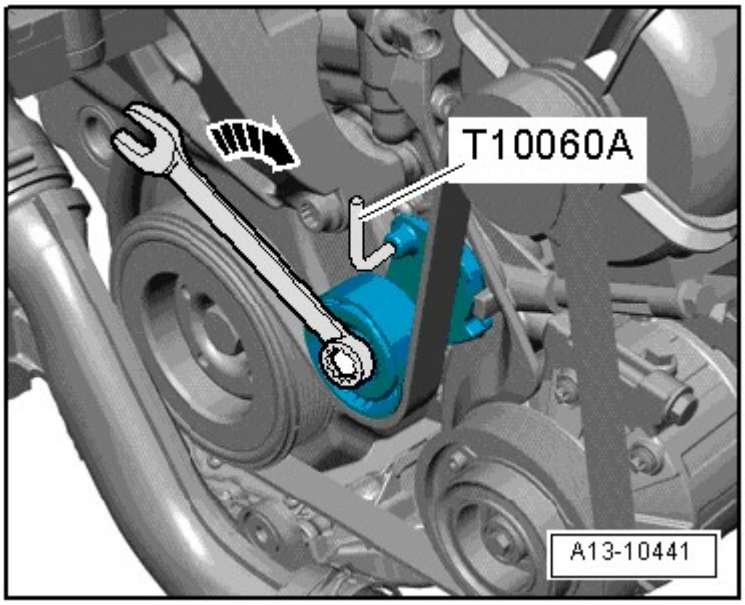

Fig. 470: Removing Air Guides From In Front Of Charge Air Coolers At Left/Right
Courtesy of VOLKSWAGEN UNITED STATES, INC.

- Remove air duct from in front of charge air cooler at left and right - **arrows** -.

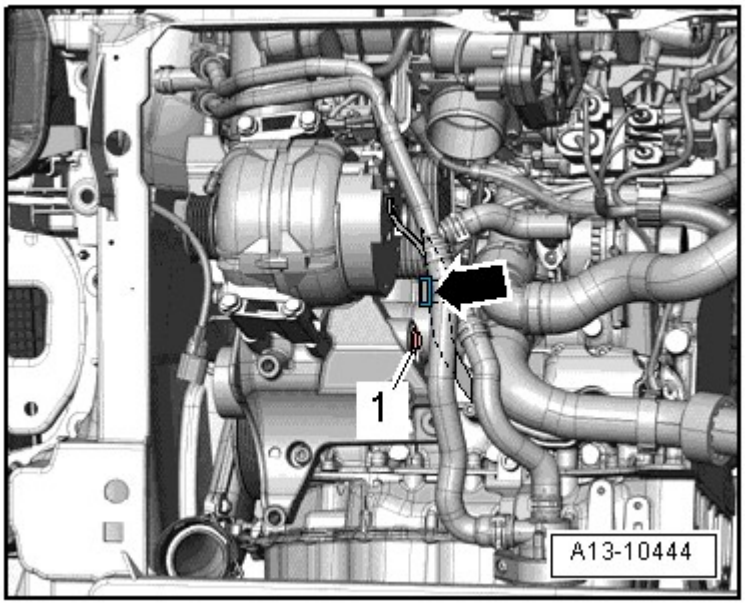

Fig. 471: Disconnecting Electrical Harness Connector To Charge Air Pressure Sensor G31
Courtesy of VOLKSWAGEN UNITED STATES, INC.

 © 2011 Mitchell Repair Information Company, LLC.

- Disconnect electrical harness connector - **3** - to Charge Air Pressure Sensor G31.

CAUTION: The air conditioning refrigerant circuit must not be opened.

- Remove refrigerant line - **4** - from bracket.
- Remove hose clamps - **1** - and - **2** - and disconnect air guide hoses.
- Remove charge air cooler upward and out.

Installing

Installation is in reverse order of removal, note the following:

NOTE:

- **Hose connections and charge air system hoses must be free of oil and grease before installing.**
- **Secure all hose connections using hose clamps appropriate for the model type .**

- Install headlights --> **94 LIGHTS, SWITCHES - EXTERIOR** .
- Install front bumper cover -->
  - **63 BUMPER**
  - **63 - BUMPERS** for BODY EXTERIOR - CABRIOLET

  .
- Check headlight adjustment -->
  - **01 - MAINTENANCE**
  - **01 - MAINTENANCE** for MAINTENANCE PROCEDURES - CABRIOLET

  .

Torque specifications

Component	Nm
Hose clamps 13 mm wide	5.5

Charge Air Pressure Sensor G31 , removing and installing

Removing

 © 2011 Mitchell Repair Information Company, LLC.

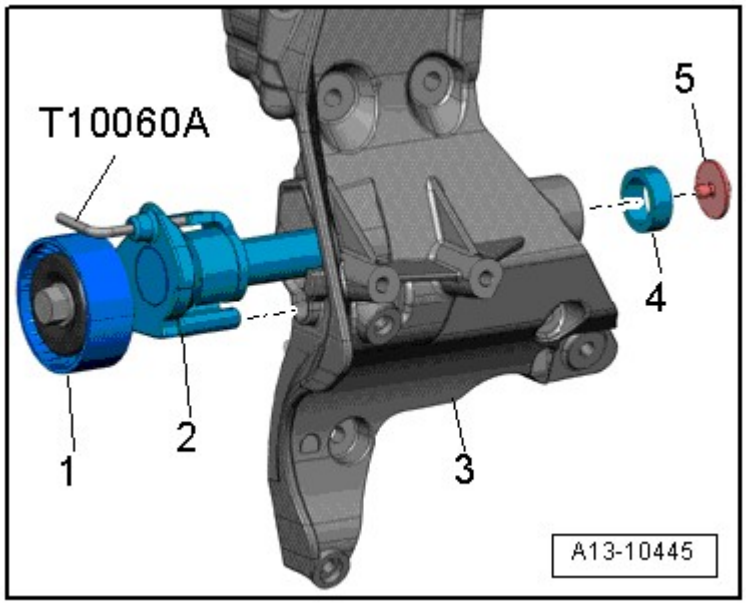

Fig. 472: Disconnecting Electrical Harness Connector At Charge Air Pressure Sensor G31
Courtesy of VOLKSWAGEN UNITED STATES, INC.

- Disconnect electrical harness connector - **2** - at Charge Air Pressure Sensor G31.
- Remove bolts and pull out Charge Air Pressure Sensor G31 from charge air cooler.

NOTE:

- **Ignore - 1 -.**

Installing

Installation is in reverse order of removal, note the following:

NOTE:

- **Replace O-ring.**

Torque specifications

Component	Nm
Charge Air Pressure Sensor G31 to charge air cooler	5

26 - EXHAUST SYSTEM, EMISSION CONTROLS

EXHAUST SYSTEM COMPONENTS, REMOVING AND INSTALLING

Exhaust system components, removing and installing

NOTE:

- **Decoupling element in front exhaust pipe must not be bent more than 10 ° , otherwise it may be damaged**

 © 2011 Mitchell Repair Information Company, LLC.

- **Replace gaskets and self-locking nuts.**
- **After exhaust system repairs, make sure exhaust system is not under stress and is far enough from the body. If necessary, loosen clamping sleeve and align muffler and exhaust pipe so that there is adequate distance to body and that weight is evenly distributed among the suspended mounts.**
- **The exhaust manifold and the turbocharger are one component, removing and installing --> Turbocharger, removing and installing**

Assembly overview

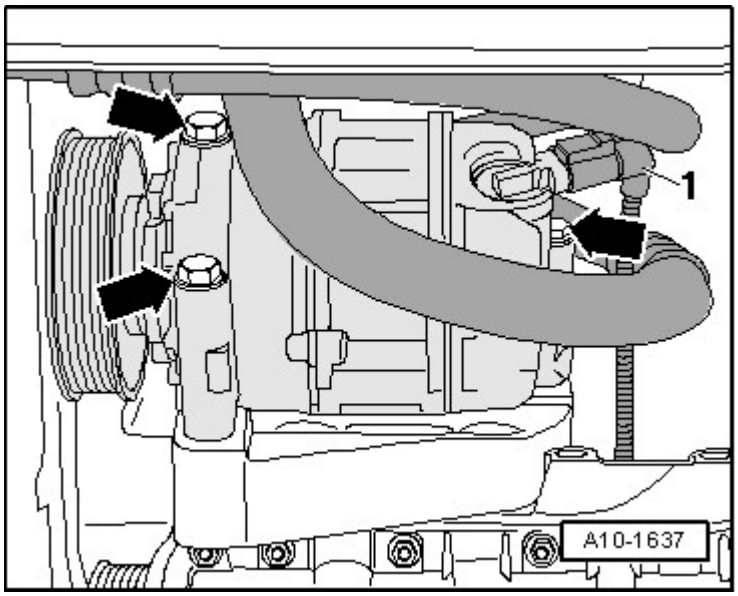

Fig. 473: Exhaust System Components Assembly Overview
Courtesy of VOLKSWAGEN UNITED STATES, INC.

1 - Turbocharger

2 - Gasket

- Replace

3 - Heated Oxygen Sensor (HO2S) G39 and Oxygen Sensor (O2S) Heater Z19 (black connector)

- Torque specification, 55 Nm
- Only use hot bolt paste to grease thread; do not let paste get onto slits of oxygen sensor body
- Hot bolt paste
- Removing and installing --> - **24 - MULTIPORT FUEL INJECTION (MFI)**

4 - Oxygen Sensor (O2S) Behind Three Way Catalytic Converter (TWC) G130 and Oxygen Sensor (O2S) Heater 1 (behind Three Way Catalytic Converter (TWC)) Z29 (brown connector)

 © 2011 Mitchell Repair Information Company, LLC.

- Torque specification, 55 Nm
- Only use hot bolt paste to grease thread; do not let paste get onto slits of oxygen sensor body
- Hot bolt paste
- Removing and installing: --> - **24 - MULTIPORT FUEL INJECTION (MFI)**

5 - Catalytic converter

- Protect from hit and impact stress
- Removing and installing --> **Catalytic converter, removing and installing**

6 - 25 Nm

- Replace

7 - Gasket

- Replace

8 - Bolt

9 - Front exhaust pipe

- With flex joint
- Decoupling element must not be bent more than 10 ° otherwise it may be damaged
- Removing and installing --> **Front exhaust pipe, removing and installing**

10 - Front clamping sleeve

- Installed location: Threaded connection faces toward left
- Installation position of bolt ends **Installed position of front clamping sleeve**
- Before tightening, align exhaust system tension-free --> **Exhaust system, installing tension free**
- Tighten threaded connections evenly.

11 - 23 Nm

- Replace

12 - Spacer sleeve

13 - Buffer

14 - Tab

15 - Spacer sleeve

 © 2011 Mitchell Repair Information Company, LLC.

16 - Bolt

17 - Rear muffler

- For left side of vehicle
- Original equipment as one unit with center muffler. For repairs, replace each separately.
- Separating point *Separate exhaust pipes at separating point* under **Center muffler and rear muffler, separating**
- Install exhaust system free of stress --> **Exhaust system, installing tension free**

18 - Suspended mountings

- Replace if damaged
- Check pretension --> **Exhaust system, installing tension free**

19 - 23 Nm

20 - Rear muffler

- For right side of vehicle
- Original equipment as one unit with center muffler. For repairs, replace each separately.
- Separating point *Separate exhaust pipes at separating point* under **Center muffler and rear muffler, separating**
- Install exhaust system free of stress --> **Exhaust system, installing tension free**

21 - 23 Nm

22 - 23 Nm

23 - Rear clamping sleeves

- For individual replacement of center and rear mufflers
- Before tightening, align exhaust system tension-free --> **Exhaust system, installing tension free**
- Installed location: Threaded connections face outward
- Installation position of bolt ends **Installed position of rear double clamps**

- Tighten threaded connections evenly.

24 - Center muffler

- Original equipment as one unit with rear mufflers. For repairs, replace each separately.
- Separating point *Separate exhaust pipes at separating point* under **Center muffler and rear muffler, separating**
- Install exhaust system free of stress --> **Exhaust system, installing tension free**

 © 2011 Mitchell Repair Information Company, LLC.

25 - 23 Nm

26 - Suspended mount

- Replace if damaged
- When installing, pay attention to direction of arrow (driving direction)
- Check pretension --> **Exhaust system, installing tension free**

27 - Bolt

28 - Washer

29 - Spring

30 - Spacing sleeve

31 - 25 Nm

- Replace

32 - 30 Nm

- Replace

Installed position of front clamping sleeve

 © 2011 Mitchell Repair Information Company, LLC.

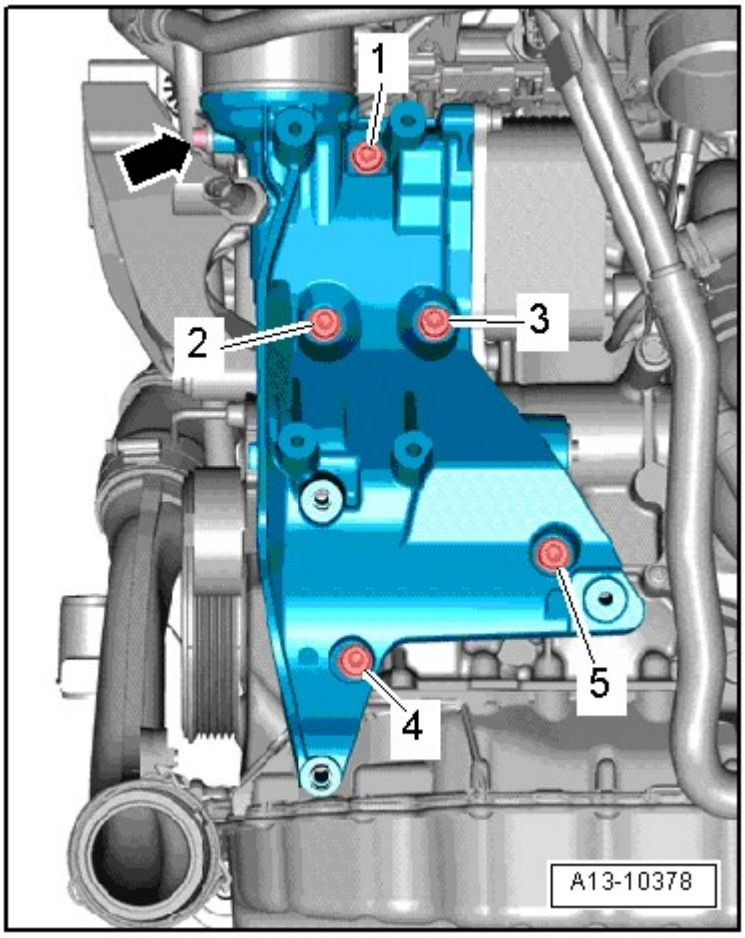

Fig. 474: Installed Position Of Front Clamping Sleeve
Courtesy of VOLKSWAGEN UNITED STATES, INC.

- When installing double clamp, ensure that the bolt end does not project over lower edge of double clamp.
- Threaded connection faces toward left.

Installed position of rear double clamps

 © 2011 Mitchell Repair Information Company, LLC.

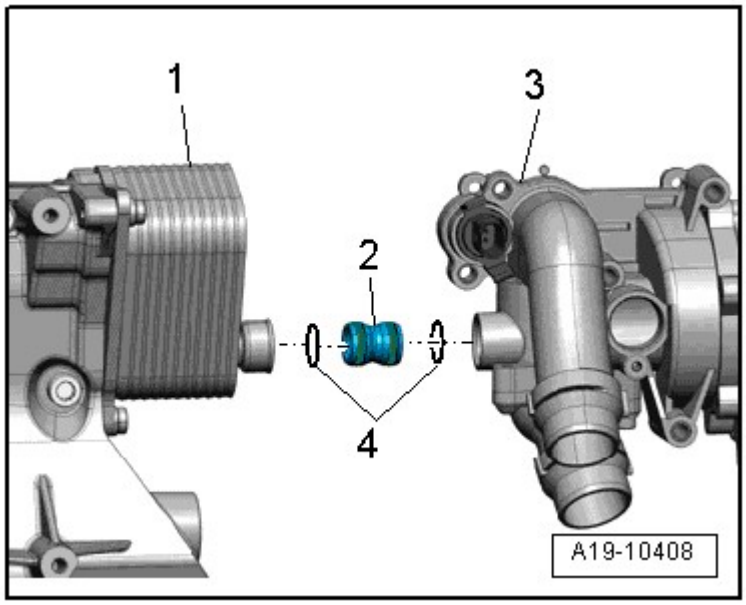

Fig. 475: Installed Position Of Rear Double Clamps
Courtesy of VOLKSWAGEN UNITED STATES, INC.

- When installing double clamps, ensure that the bolt ends do not project beyond lower edge of double clamp.

- Threaded connections point toward outside.

Center muffler and rear muffler, separating

- A separating point has been provided in connecting pipe for individual replacement of center or rear muffler.
- The separating point is marked by a depression around circumference of exhaust pipe.

Special tools, testers and auxiliary items required

 © 2011 Mitchell Repair Information Company, LLC.

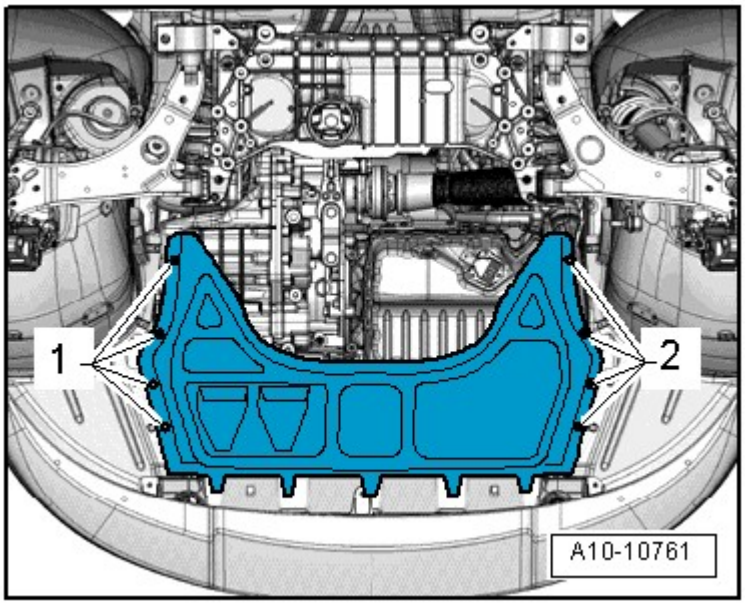

Fig. 476: Chain Pipe Cutter VAS 6254
Courtesy of VOLKSWAGEN UNITED STATES, INC.

- Chain pipe cutter VAS 6254

Work procedure

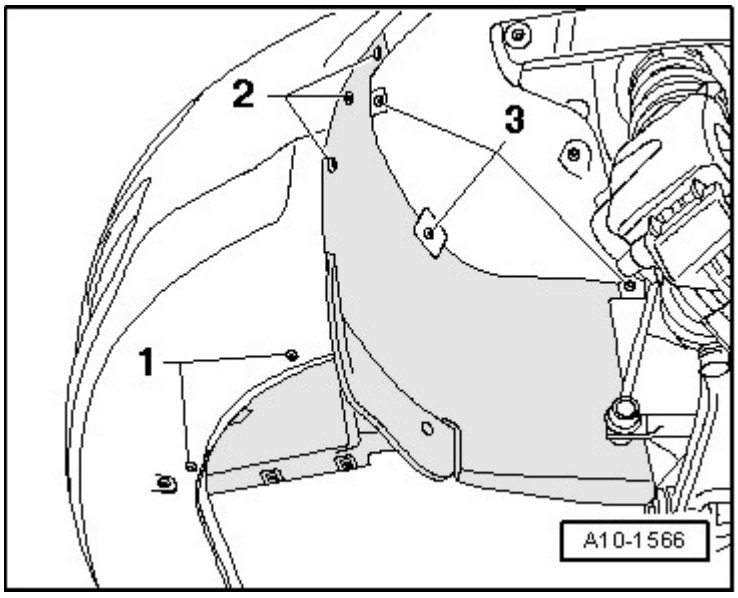

Fig. 477: Separating Exhaust Pipes At Separating Point Using Chain Pipe Cutter VAS 6254 At A Right Angle
Courtesy of VOLKSWAGEN UNITED STATES, INC.

- Separate exhaust pipes at separating point - **arrows** - using chain pipe cutter VAS 6254 at a right angle.

 © 2011 Mitchell Repair Information Company, LLC.

NOTE:

- **The middle of the 3 impressions on the exhaust pipe is the separating point.**

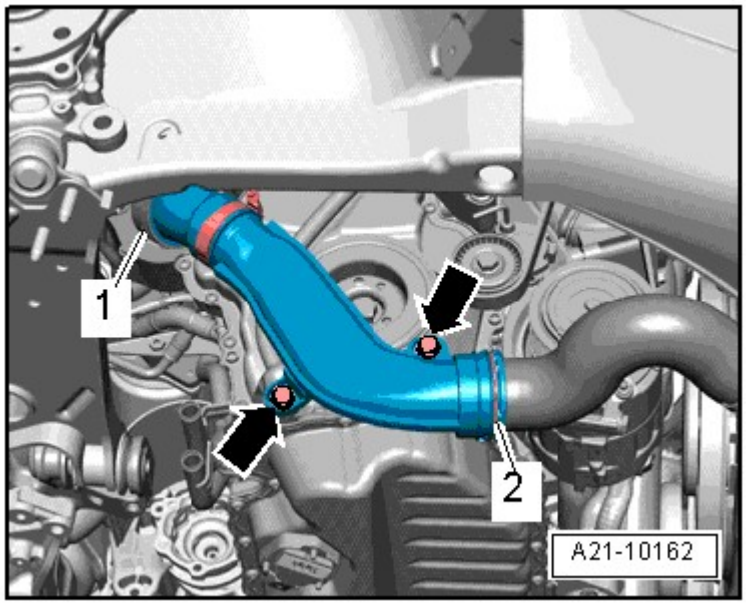

Fig. 478: Positioning Clamping Sleeves At Center On Separating Cut
Courtesy of VOLKSWAGEN UNITED STATES, INC.

- When installing, position clamping sleeves - **1** - and - **2** - at center on separating cut.

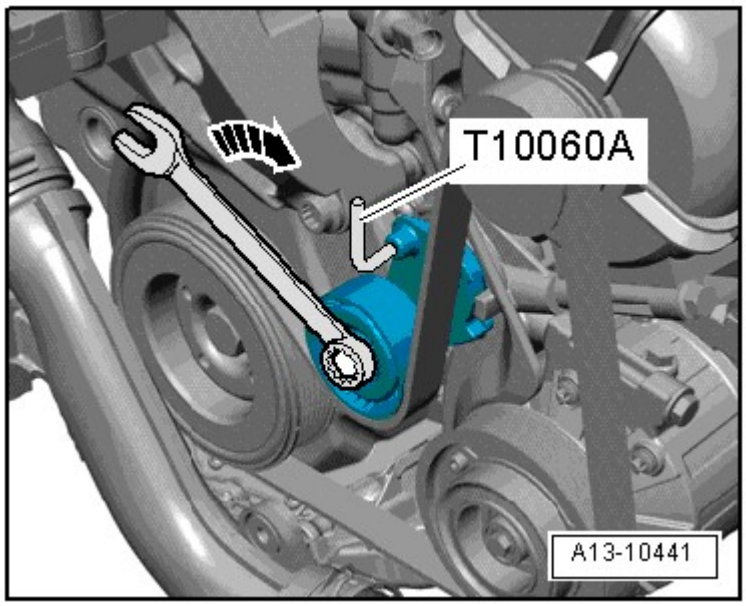

Fig. 479: Installation Position Of Double Clamps
Courtesy of VOLKSWAGEN UNITED STATES, INC.

- When installing double clamps, ensure that the bolt ends do not project beyond lower edge of double

 © 2011 Mitchell Repair Information Company, LLC.

clamp.

- Threaded connections point toward outside.

- Align exhaust system free of tension --> **Exhaust system, installing tension free**.
- Tighten clamping sleeves mounting bolts uniformly to 23 Nm.

Front exhaust pipe, removing and installing

NOTE:

- **Exhaust system decoupling element must not be bent more than 10 ° , otherwise it may be damaged.**

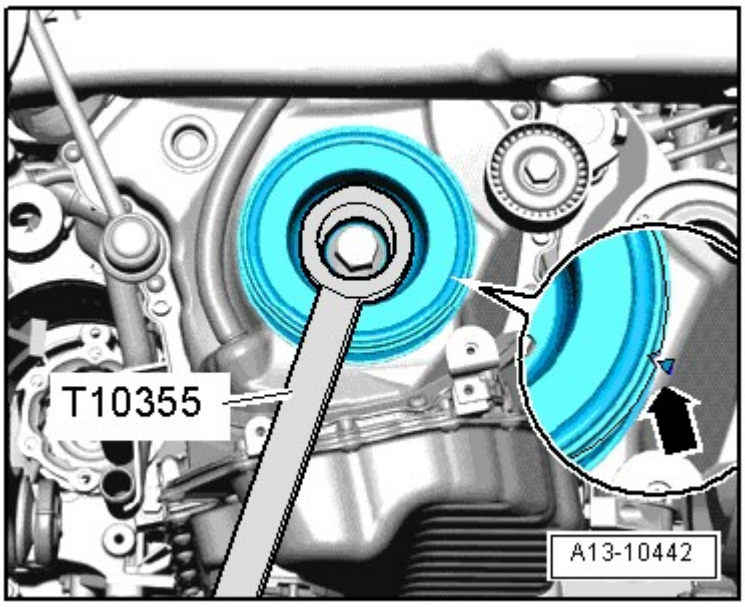

Fig. 480: Loosening Clamping Sleeve
Courtesy of VOLKSWAGEN UNITED STATES, INC.

- Loosen clamping sleeve - **arrow** - and push it rearward.

 © 2011 Mitchell Repair Information Company, LLC.

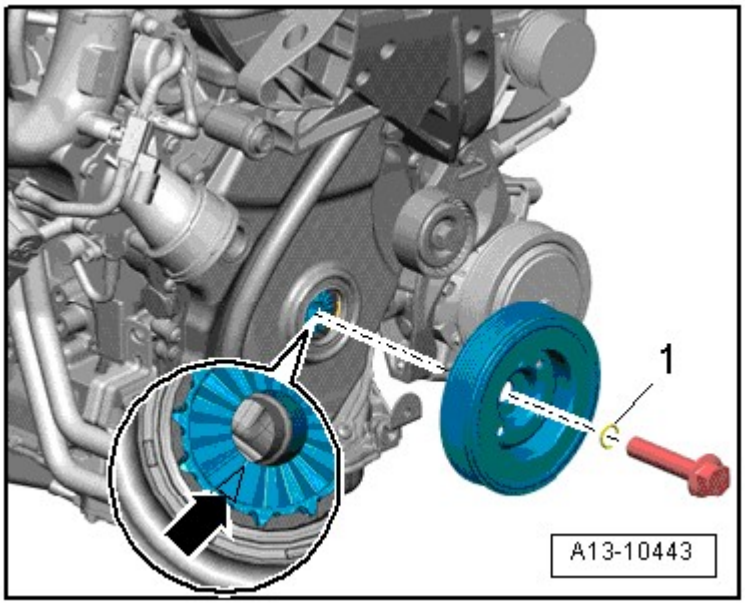

Fig. 481: Separating Front Exhaust Pipe/Catalytic Converter
Courtesy of VOLKSWAGEN UNITED STATES, INC.

- Separate front exhaust pipe/catalytic converter - **arrows** -.
- Remove bolt - **1** - at bracket for front exhaust pipe and remove front exhaust pipe.

Torque specifications

Component		Nm
Front exhaust pipe to catalytic converter		40 1)2)
Support to transmission/front exhaust pipe		40
Clamping sleeve		23

- 1) Replace bolt or nut
- 2) Coat studs of exhaust manifold and threads of oxygen sensor with hot bolt paste; Hot bolt paste

Catalytic converter, removing and installing

Removing

 © 2011 Mitchell Repair Information Company, LLC.

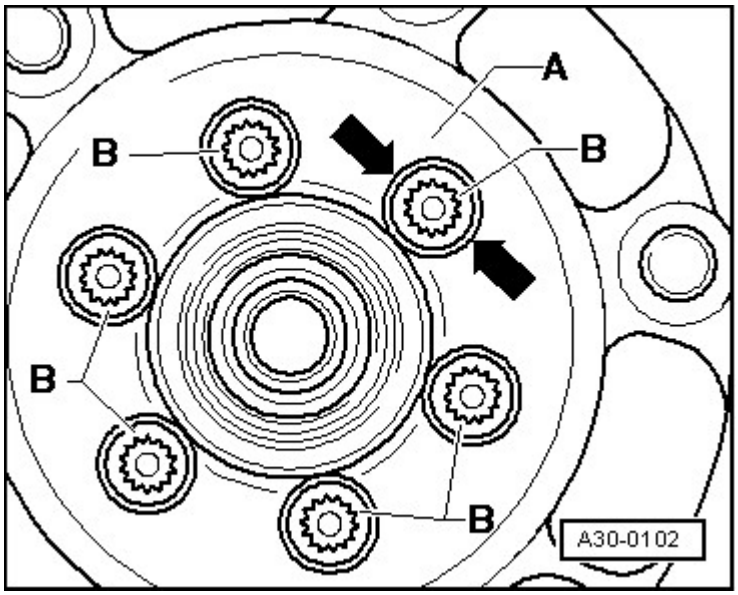

Fig. 482: Removing Engine Cover
Courtesy of VOLKSWAGEN UNITED STATES, INC.

- Remove engine cover - **arrows** -.

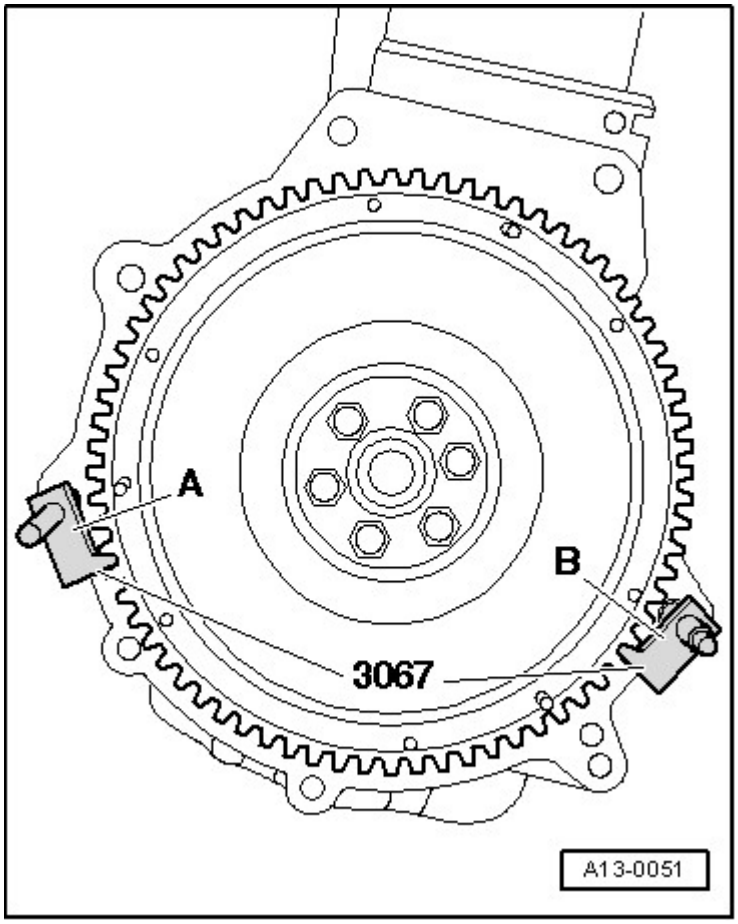

 © 2011 Mitchell Repair Information Company, LLC.

Fig. 483: Removing Coolant Hoses And Unfastening Coolant Expansion Tank
Courtesy of VOLKSWAGEN UNITED STATES, INC.

- Remove coolant expansion tank - **arrow** - and set it aside with coolant hoses attached.

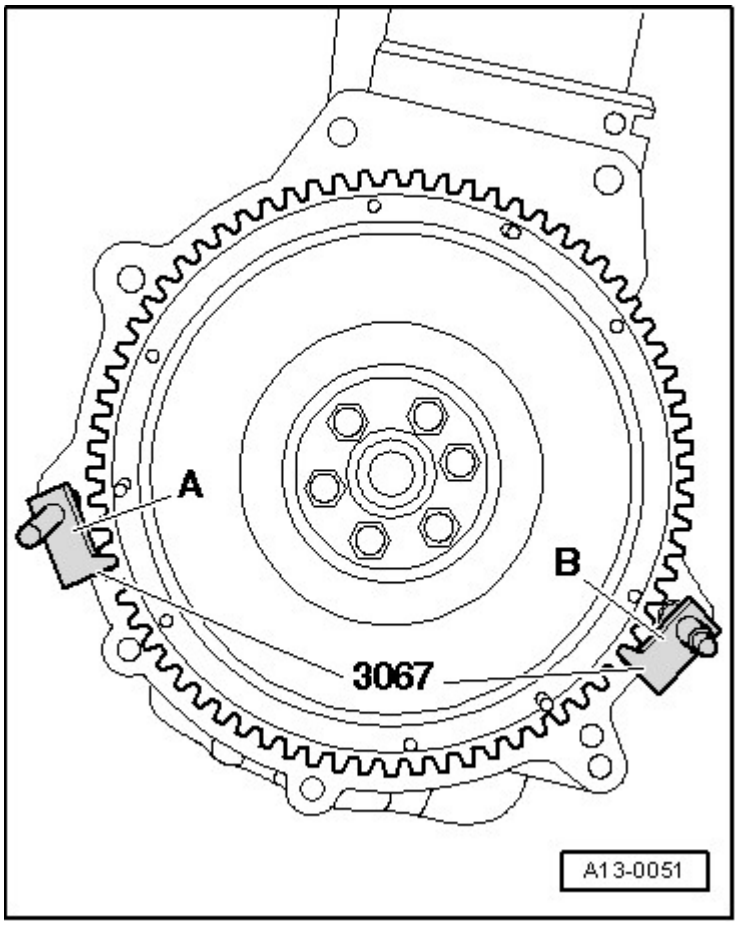

Fig. 484: Identifying Oxygen Sensor Electrical Connectors
Courtesy of VOLKSWAGEN UNITED STATES, INC.

- Disconnect electrical connector - **1** - for Oxygen Sensor (O2S) Behind Three Way Catalytic Converter (TWC) G130 and Oxygen Sensor (O2S) Heater 1 (behind Three Way Catalytic Converter (TWC)) Z29 (brown connector) and free up electrical wiring to catalytic converter.
- Disconnect electrical connector - **2** - for Heated Oxygen Sensor (HO2S) G39 and Oxygen Sensor (O2S) Heater Z19 (black connector) and free up electrical wiring to catalytic converter.

 © 2011 Mitchell Repair Information Company, LLC.

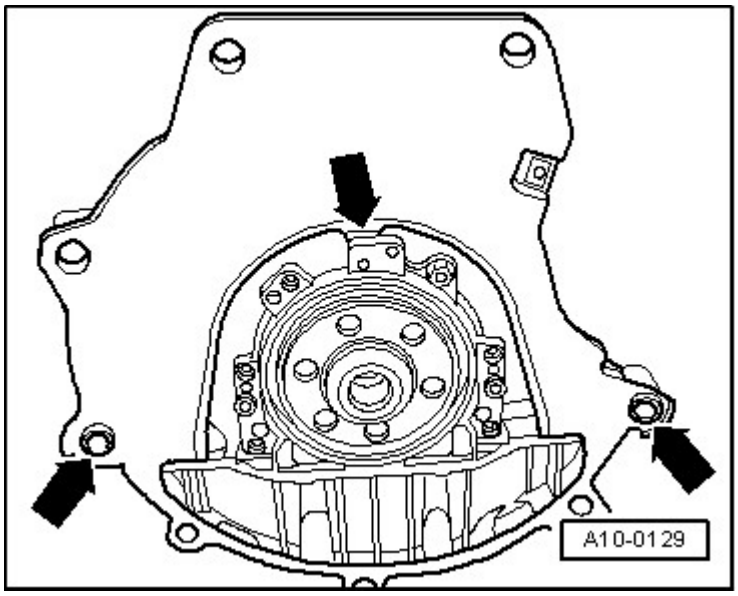

Fig. 485: Identifying Intake, Mass Air Flow (Maf) Sensor G70 Electrical Harness Connector & Air Filter Housing
Courtesy of VOLKSWAGEN UNITED STATES, INC.

- Disconnect intake hose - **1** - for air filter/turbocharger.
- Disconnect electrical harness connector - **2** - at Mass Air Flow (MAF) Sensor G70.
- Free up wiring harness on air filter housing and remove air filter housing - **3** -.

NOTE:

- **Exhaust system decoupling element must not be bent more than 10 ° , otherwise it may be damaged.**

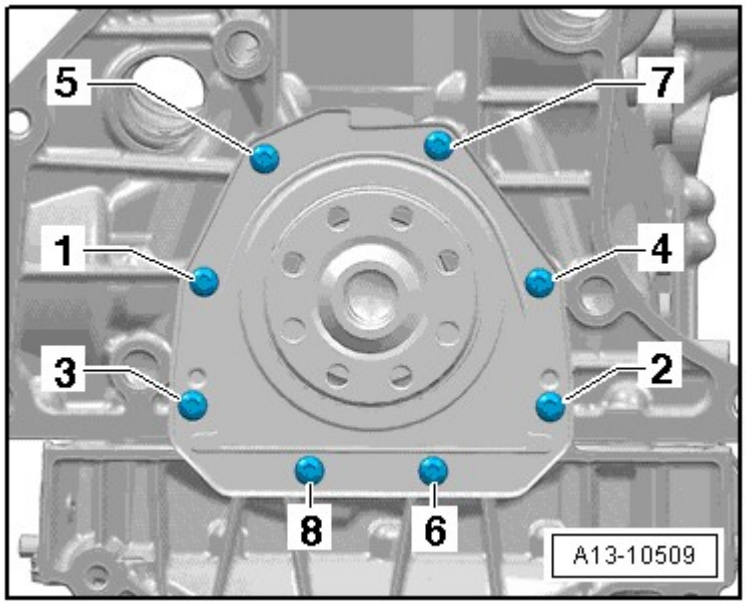

Fig. 486: Loosening Clamping Sleeve

 © 2011 Mitchell Repair Information Company, LLC.

Courtesy of VOLKSWAGEN UNITED STATES, INC.

- Loosen clamping sleeve - **arrow** - and push it rearward.

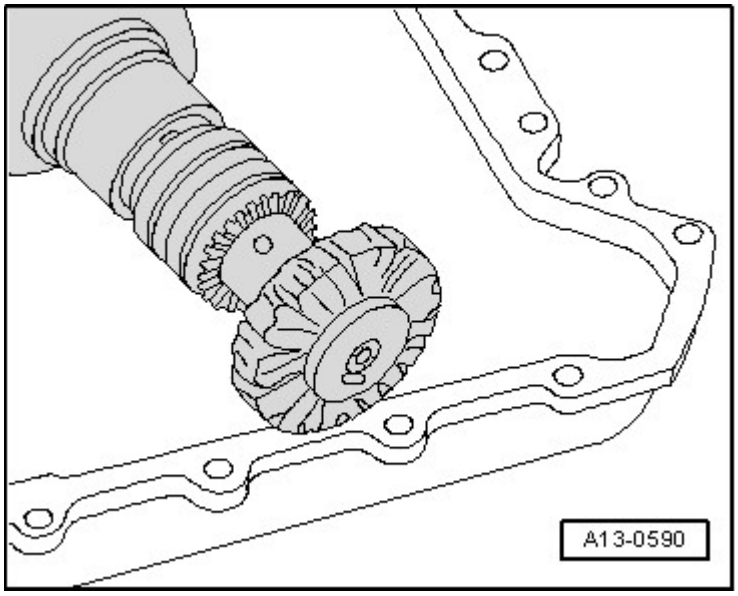

Fig. 487: Separating Front Exhaust Pipe/Catalytic Converter
Courtesy of VOLKSWAGEN UNITED STATES, INC.

- Separate front exhaust pipe/catalytic converter - **arrows** -.
- Remove bolt - **1** - at bracket for front exhaust pipe and remove front exhaust pipe.

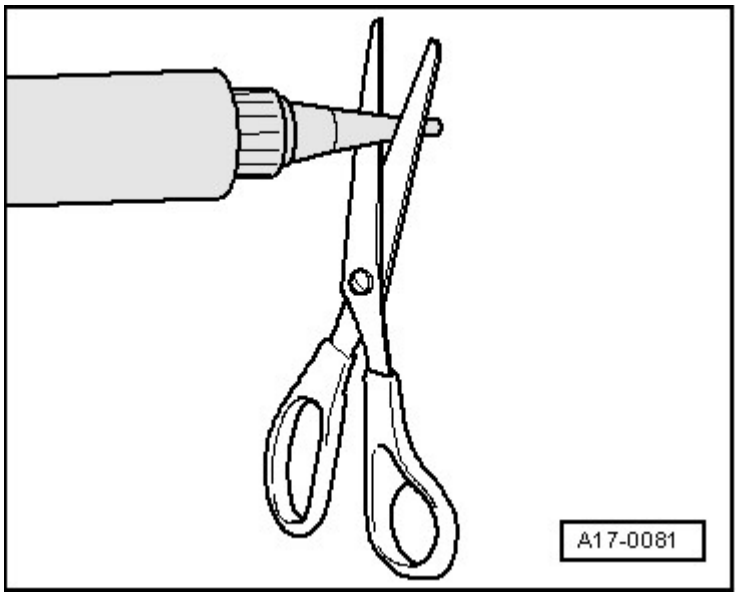

Fig. 488: Removing Nut At Catalytic Converter/Turbocharger From Below
Courtesy of VOLKSWAGEN UNITED STATES, INC.

- Remove nut - **arrow** - at catalytic converter/turbocharger from below.

 © 2011 Mitchell Repair Information Company, LLC.

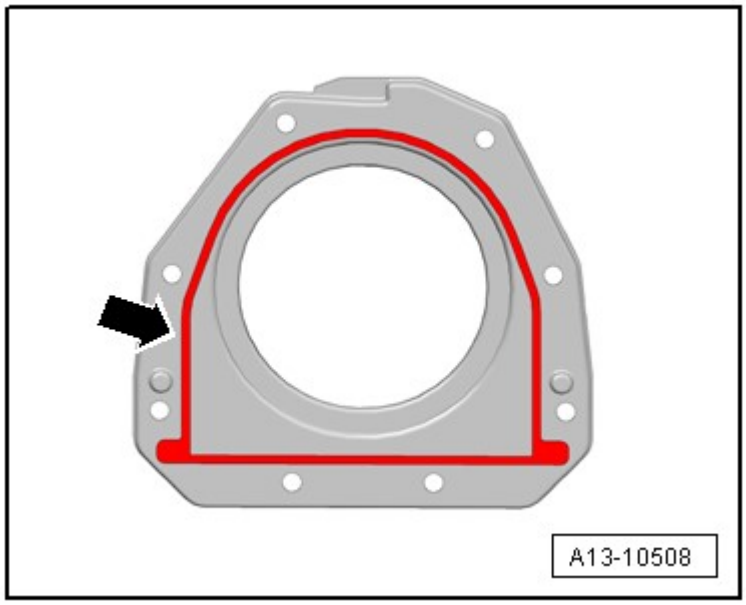

Fig. 489: Removing Nuts At Catalytic Converter/Turbocharger From Above
Courtesy of VOLKSWAGEN UNITED STATES, INC.

- Remove nuts - **arrows** - at catalytic converter/turbocharger from above.
- Take catalytic converter up and out.

Installing

Installation is in reverse order of removal, note the following:

NOTE:

- **Replace gaskets and self-locking nuts.**

- Install exhaust system free of stress --> **Exhaust system, installing tension free**.

Torque specifications

Component		Nm
Catalytic converter to turbocharger		40 1)2)
Mount to subframe		23
Clamping sleeve		23

- 1) Replace bolt or nut
- 2) Coat studs of exhaust manifold and threads of oxygen sensor with hot bolt paste; Hot bolt paste

Exhaust system, installing tension free

- Align exhaust system when cold.

 © 2011 Mitchell Repair Information Company, LLC.

Vehicles without double clamps between center and rear muffler

- Align exhaust system when cold.

  - Loosen front double clamp bolts.

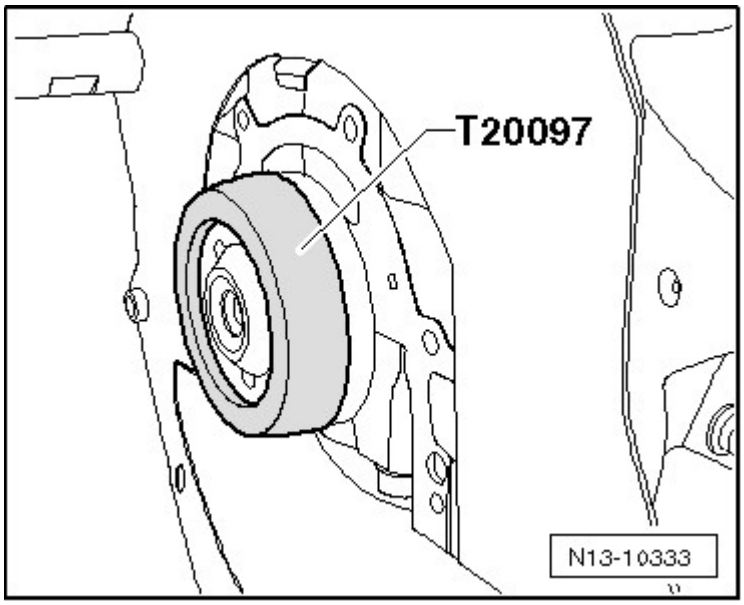

Fig. 490: Pushing Exhaust System Toward Front Of Vehicle
Courtesy of VOLKSWAGEN UNITED STATES, INC.

  - Push exhaust system far enough forward - **arrow** - until pre-load on right retaining loop at center muffler is - **a** - = 5 to 9 mm.
  - Tighten front clamping sleeve bolts evenly to 23 Nm.
  - Align end pipes **Tailpipes, aligning**.

Vehicles with double clamps between center and rear muffler

- The rear muffler must also be aligned only on vehicles with clamping sleeves between center and rear mufflers.

  - Loosen bolts of front clamping sleeve and rear clamping sleeves.

 © 2011 Mitchell Repair Information Company, LLC.

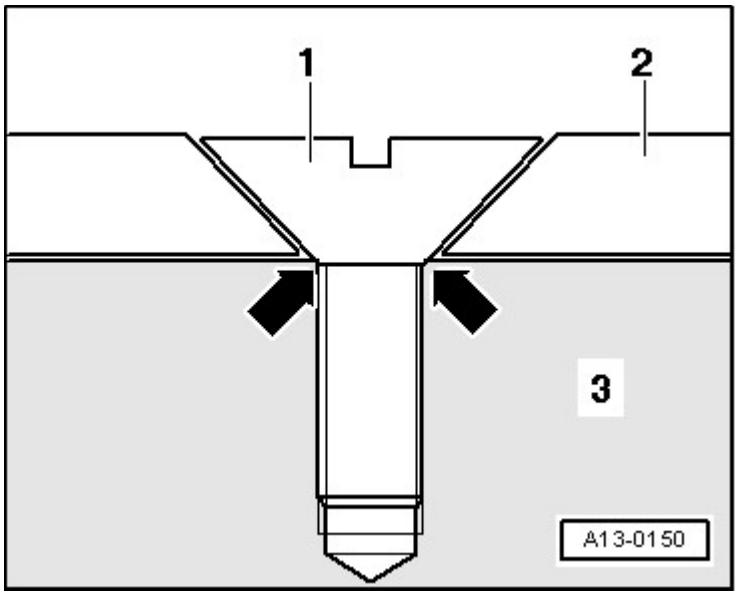

Fig. 491: Pushing Exhaust System Toward Front Of Vehicle
Courtesy of VOLKSWAGEN UNITED STATES, INC.

- Push front part of exhaust system far enough forward - **arrow** - until pre-load on right retaining loop at center muffler is - **a** - = 5 to 9 mm.
- Tighten front clamping sleeve bolts evenly to 23 Nm.

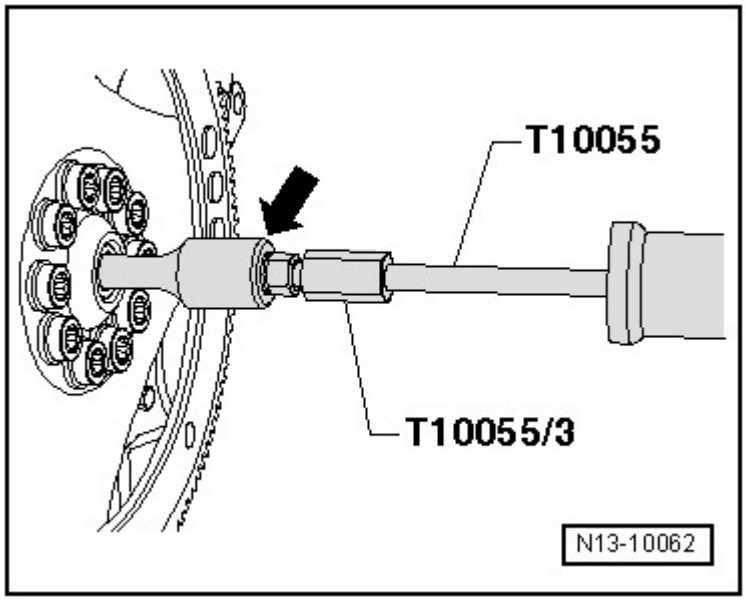

Fig. 492: Pushing Rear Section Of Exhaust System Toward Front Of Vehicle
Courtesy of VOLKSWAGEN UNITED STATES, INC.

- Push rear part of exhaust system far enough forward - **arrow** - until pre-load on rear retaining loops at rear muffler is - **a** - = 7 to 11 mm.
- Align rear muffler horizontally.

 © 2011 Mitchell Repair Information Company, LLC.

- Tighten rear clamping sleeve bolts evenly to 23 Nm.
- Align end pipes **Tailpipes, aligning**.

Tailpipes, aligning

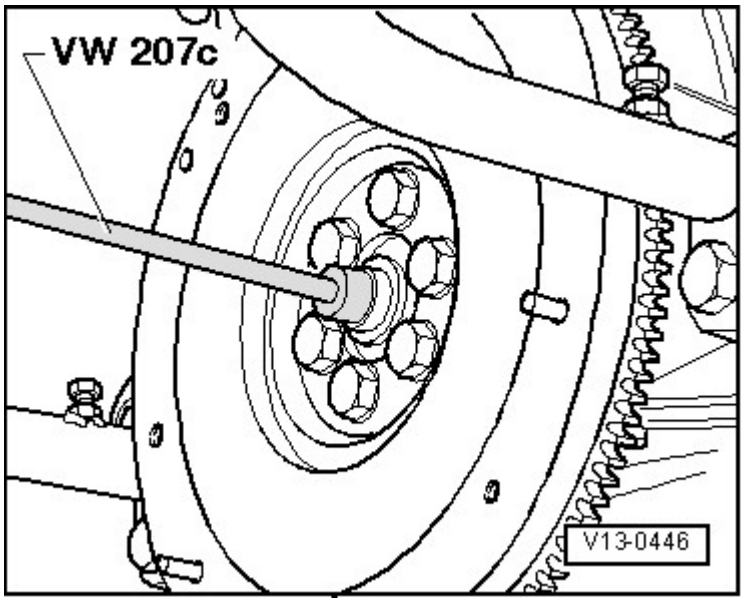

Fig. 493: Checking Distance Of End Pipes At Left/Right To Bumper
Courtesy of VOLKSWAGEN UNITED STATES, INC.

- Check distance of end pipes at left and right to bumper:

- Dimension - **x** - left = dimension - **x** - right.

If necessary, correct dimension x as follows:

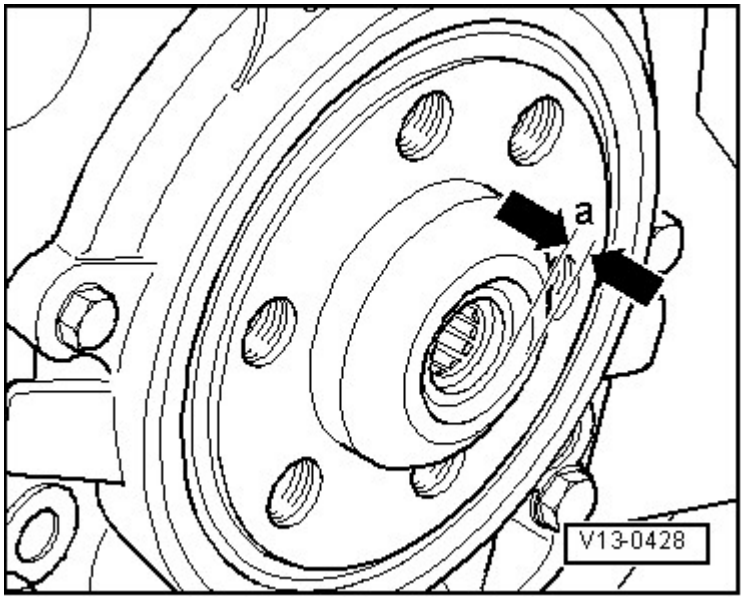

 © 2011 Mitchell Repair Information Company, LLC.

Fig. 494: Loosening Nut Of Brace Between Exhaust Pipes
Courtesy of VOLKSWAGEN UNITED STATES, INC.

- Loosen nut - **arrow** - of brace between exhaust pipes.
- Adjust distance between rear mufflers.
- Tighten nut to 23 Nm.

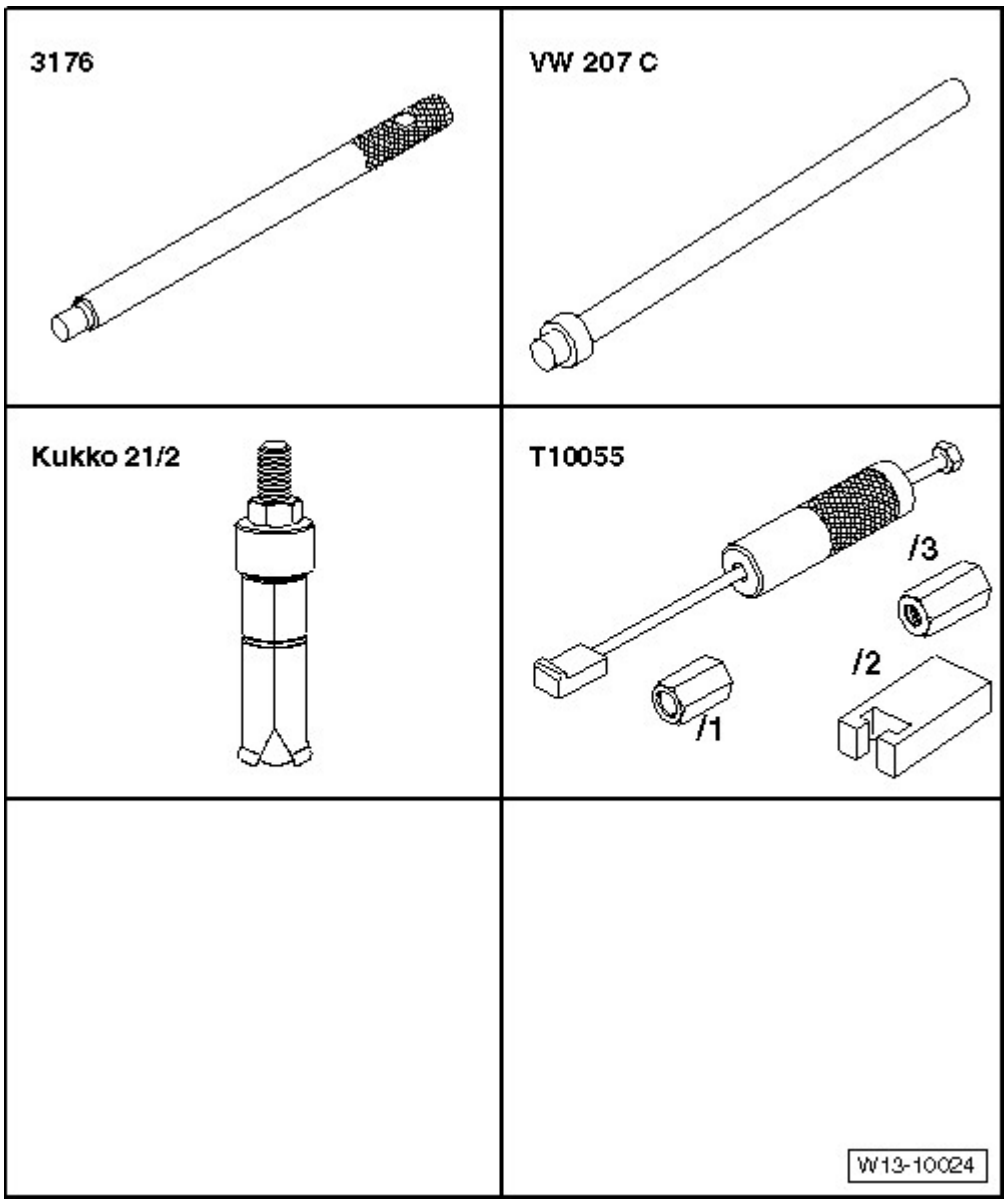

Fig. 495: Checking Distances Of End Pipes To Bumper
Courtesy of VOLKSWAGEN UNITED STATES, INC.

- Check distances - **y** - and - **z** - of end pipes to bumper:

- Dimension - **y** - = greater than 20 mm.

 © 2011 Mitchell Repair Information Company, LLC.

- Dimension - **z** - = 10 to 16 mm.

  - If necessary, check whether exhaust system is aligned tension-free --> **Exhaust system, installing tension free**.

Exhaust system, checking for leaks

- Start engine and run at idle speed.
- Seal tailpipe with cloths or plug for duration of leak test.
- Check for leaks by listening at connection areas of cylinder head/exhaust manifold, exhaust manifold/front exhaust pipe etc.
- Repair detected leaks.

 © 2011 Mitchell Repair Information Company, LLC.