2005 ENGINE

Engine Mechanical System (G6CU-GSL 3.5) - Santa Fe

GENERAL

SPECIFICATIONS

GENERAL SPECIFICATIONS TABLE

Description	Specification	Limit
General		
Type	V - type, DOHC	
Number of cylinders	6	
Bore	93.0 mm (3.661 in.)	
Stroke	85.8 mm (3.3779 in.)	
Total displacement	3497 cc	
Compression ratio	10.0	
Firing order	1 - 2 - 3 - 4 - 5 - 6	
Valve timing		
Intake valve		
Opens (BTDC)	16.5°	
Closes (ABDC)	55.5°	
Exhaust valve		
Opens (BBDC)	48.5°	
Closes (ATDC)	15.5°	
Valve overlap	32°	
Intake valve duration	252°	
Exhaust valve duration	244°	
Camshaft		
Drive mechanism	Cogged type belt	
Cam height intake	35.098 ~ 35.298 mm (1.3818 ~ 1.3897 in.)	
Cam height exhaust	34.81 ~ 35.01 mm (1.3705 ~ 1.3783 in.)	
Journal diameter	25.951 ~ 25.970 mm (1.0220 ~ 1.0224 in.)	
Bearing oil clearance	0.05 ~ 0.09 mm (0.0007 ~ 0.0024 in.)	
End play	0.1 ~ 0.15 mm (0.0039 ~ 0.0059 in.)	
Cylinder head		
Flatness of gasket surface	Max. 0.03 mm (0.0012 in.)	0.05 mm
Flatness of mounting surface		
Intake	Max. 0.10 mm (0.0039 in.)	

 © 2011 Mitchell Repair Information Company, LLC.

Exhaust	Max. 0.15 mm (0.0059 in.)	0.10 mm
Valve guide hole diameter		0.15 mm
0.05 mm (0.002 in.) O.S.	12.05 ~ 12.068 mm (0.474 ~ 0.475 in.)	
0.25 mm (0.01 0 in.) O.S.	12.25 ~ 12.268 mm (0.482 ~ 0.483 in.)	
0.50 mm (0.020 in.) O.S.	12.50 ~ 12.518 mm (0.492 ~ 0.493 in.)	
Intake valve seat ring hole diameter		
0.3 mm (0.012 in.) O.S.	36.30 ~ 36.325 mm (1.429 ~ 1.430 in.)	
0.6 mm (0.024 in.) O.S.	36.60 ~ 36.625 mm (1.441 ~ 1.442 in.)	
Exhaust valve seat ring hole diameter		
0.3 mm (0.012 in.) O.S.	33.30 ~ 33.325 mm (1.311 ~ 1.312 in.)	
0.6 mm (0.024 in.) O.S.	33.60 ~ 33.625 mm (1.323 ~ 1.324 in.)	
Valve		
Overall length		
Intake	106.28 mm (4.184 in.)	105.78 mm (4.164 in.)
Exhaust	105.4 mm (4.150 in.)	104.9 mm (4.130 in.)
Stem diameter		
Intake	6.565 ~ 6.580 mm (0.258 ~ 0.259 in.)	
Exhaust	6.530 ~ 6.550 mm (0.257 ~ 0.258 in.)	
Face angle	45° ~ 45.5°	
Margin		
Intake	1.0 mm (0.0394 in.)	0.5 mm (0.0197 in.)
Exhaust	1.5 mm (0.059 in.)	1.0 mm (0.039 in.)
Clearance (stem-to - guide)		
Intake	0.02 ~ 0.05 mm (0.0009 ~ 0.0020 in.)	0.1 mm (0.0039 in.)
Exhaust	0.05 ~ 0.085 mm (0.0020 ~ 0.0033 in.)	0.15 mm (0.0059 in.)
Valve spring		
Free height	46.4 mm (1.8268 in.)	45.4 mm (1.787 in.)
Load	24.0 kg / 37.9 mm (53 lb / 1.492 in.)	
Out of squareness	Max 2°	4°
Valve guide		

 © 2011 Mitchell Repair Information Company, LLC.

Length		
Intake	45.5 mm (1.7913 in.)	
Exhaust	50.5 mm (1.9882 in.)	
Service oversize	0.05, 0.25, 0.50	
Valve seat contact width		
Intake	0.9 ~ 1.3 mm (0.035 ~ 0.051 in.)	
Exhaust	0.9 ~ 1.3 mm (0.035 ~ 0.051 in.)	
Service oversize	0.30, 0.60	
Seat angle		
Intake	43.5° ~ 44°	
Exhaust	43.5° ~ 44°	
Piston		
Diameter (Standard)	92.96 ~ 92.99 mm (3.659 ~ 3.661 in.)	
Clearance (Piston-to-cylinder)	0.03 ~ 0.05 mm (0.0012 ~ 0.0020 in.)	
Ring groove width		
No. 1	1.503 ~ 1.505 mm (0.0592 ~ 0.05925 in.)	
No. 2	1.501 ~ 1.503 mm (0.0591 ~ 0.0592 in.)	
Oil	3.010 ~ 3.030 mm (0.1185 ~ 0.1193 in.)	
Piston for service	0.25 mm (0.010 in.), 0.50 mm (0.020 in.) Oversize	
Piston ring		
Number of rings per piston	3	
Compression ring type	2	
Oil ring	1	
Compression ring type		
No. 1	Barrel type, steel	
No. 2	Taper type, special cast iron	
Oil ring type	3 - piece type	
Ring end gap		
No. 1	0.20 ~ 0.30 mm (0.0078 ~ 0.0118 in.)	
No. 2	0.40 ~ 0.55 mm (0.00157 ~ 90.0216)	
Oil ring side rail	0.2 ~ 0.7 mm (0.0079 ~ 0.0276 in.)	
Ring side clearance		
No. 1	0.04 ~ 0.08 mm (0.0016 ~ 0.0031 in.)	

 © 2011 Mitchell Repair Information Company, LLC.

No. 2	0.02 ~ 0.06 mm (0.0008 ~ 0.0024 in.)	
Ring for service	0.25 mm (0.010 in.), 0.50 mm (0.020 in.)	
Connecting rod		
Side clearance (Big end)	0.10 ~ 0.25 mm (0.0039 ~ 0.0098 in.)	
Bend	0.05 mm or less / 100 mm (0.0020 in. or less / 3.937 in.)	
Twist	0.1 mm or less / 100 mm (0.0039 in. or less / 3.937 in.)	
Bearing		
Oil clearance	0.026 ~ 0.044 mm (0.001 ~ 0.0017 in.)	0.1 mm (0.004 in.)
Pin diameter	22.001 ~ 22.004 mm (0.8661 ~ 0.8663 in.)	
Crankshaft		
Journal O.D.	63.982 ~ 64.00 mm (2.519 ~ 2.5197 in.)	
Pin O.D.	54.982 ~ 55.00 mm (2.165 ~ 2.1653 in.)	
Out - of - roundness of journal and pin	Max. 0.03 mm (0.0012 in.)	
Taper of journal and pin	Max. 0.005 mm (0.0002 in.)	
End play	0.05 ~ 0.25 mm (0.002 ~ 0.0098 in.)	0.3 mm (0.012 in.)
Main bearing		
Oil clearance	0.022 ~ 0.040 mm (0.00086 ~ 0.00157 in.)	
Cylinder block		
Cylinder bore	93 mm (3.661 in.)	
Flatness of gasket surface	Max. 0.05 mm (0.002 in.)	
Out - of - roundness and taper	Max. 0.02 mm (0.0008 in.)	0.05 mm (0.002 in.)
Oil pump		
Body clearance	0.100 ~ 0.181 mm (0.0039 ~ 0.0071 in.)	
Side clearance	0.040 ~ 0.095 mm (0.0016 ~ 0.0037 in.)	
Tip clearance	0.06 ~ 0.018 mm (0.0024 ~ 0.0071 in.)	
Relief spring		
Free length	46.3 mm (1.823 in.)	
Load	6.9 kg / 39.1 mm (15.18 lb. / 1.54 in.)	
Oil filter		

 © 2011 Mitchell Repair Information Company, LLC.

Type	Cartridge, full flow	
Engine oil pressure	80 kPa (11.4 psi) or more @ 700 RPM [Conditions: Oil temperature is 85 to 95°C (185 to 203°F)]	
Cooling method	Engine coolant cooling, forced circulation with electric fan	
Cooling system Quantity	8.2 lit (8.61 U.S. qts., 7.2 Imp. qts)	
Thermostat Type Normal opening temperature Opening temperature range Wide open temperature	Wax pellet type with jiggle valve 82°C (179.6°F) 80°C ~ 84°C (176 ~ 183.2°F) 95°C (203°F)	
Radiator cap Main valve opening pressure Main valve closing pressure Vacuum valve opening pressure	86.1 ~ 124.5 kPa (0.98 ~ 1.27 kg/cm^2 , 13.94 ~ 18.06 psi) 83.4 kPa (0.85 kg/cm^2 , 12.1 psi) - 6.86 kPa (- 0.07 kg/cm^2 , - 1.00 psi)	
Air cleaner Type Element	Dry type Unwoven cloth type	
Exhaust pipe Muffler Suspension system	Expansion resonance type Rubber hangers	

SERVICE STANDARD

SERVICE STANDARD

Standard value
Coolant concentration Tropical area: 40% Other area: 50%

LUBRICANT

LUBRICANT SPECIFICATIONS

Engine coolant: Ethylene glycol base for aluminum radiator

SEALANT

SEALANT SPECIFICATIONS

Engine coolant temperature sensor	Three bond No. 2310 or equivalent LOCTITE 962T

 © 2011 Mitchell Repair Information Company, LLC.

	or equivalent

TIGHTENING TORQUE

TIGHTENING TORQUE

	N.m	Kg.cm	lb.ft
Crankshaft bolt	180 ~ 190	1,800 ~ 1,900	130 ~ 138
Timing belt tensioner	43 ~ 55	430 ~ 550	32 ~ 41
Camshaft sprocket bolt	80 ~ 100	800 ~ 1000	60 ~ 74
Cylinder head cover bolts	8 ~ 10	80 ~ 100	6 ~ 7.4
Main bearing cap bolts	70 ~ 80	700 ~ 800	52 ~ 59
Connecting rod nuts	34 + 90°	340 + 90°	26 + 90°
Cylinder head bolts			
Cold engine	105 ~ 115	1050 ~ 1150	75 ~ 82
Oil pan drain plug	35 ~ 45	350 ~ 450	26 ~ 32
Lower oil pan bolt	10 ~ 12	100 ~ 120	7.2 ~ 9
Upper oil pan bolt			
[10 x 38 mm (1.4961 in.)]	30 ~ 42	300 ~ 420	22 ~ 30
[6 x 18 mm (0.7087 in.)]	5 ~ 7	50 ~ 70	3.7 ~ 5
[6 x 161.5 mm (6.358 in.)]	5 ~ 7	50 ~ 70	3.7 ~ 5
[6 x 152.5 mm (6.004 in.)]	5 ~ 7	50 ~ 70	3.7 ~ 5
Oil screen bolt	15 ~ 22	150 ~ 220	11 ~ 15
Oil pump case bolts	15 ~ 20	150 ~ 200	11 ~ 14
Oil relief valve plug	40 ~ 50	400 ~ 500	29 ~ 36
Oil pump cover screw	8 ~ 12	80 ~ 120	5.8 ~ 8.7
Oil pressure switch	8 ~ 15	80 ~ 150	5.8 ~ 11
Oil filter	12 ~ 16	120 ~ 160	8.7 ~ 11.6
Drive plate and adaptor plate bolt	73 ~ 77	730 ~ 770	53 ~ 55
Air cleaner body installation bolt	8 ~ 12	80 ~ 120	6 ~ 9
Surge tank stay	15 ~ 20	150 ~ 200	11 ~ 14
Air intake surge tank to intake manifold (bolt)	15 ~ 20	150 ~ 200	11 ~ 14
Air intake surge tank to intake manifold (nut)	15 ~ 20	150 ~ 200	11 ~ 14
Intake manifold to engine	20 ~ 23	200 ~ 230	14 ~ 16
Heat protector to exhaust manifold	12 ~ 15	120 ~ 150	14
Exhaust manifold to engine	40 ~ 45	400 ~ 450	29 ~ 33
Oil level gauge guide to	12 ~ 15	120 ~ 150	9 ~ 11

 © 2011 Mitchell Repair Information Company, LLC.

engine			
Water outlet fitting bolt	17 ~ 20	170 ~ 200	12.3 ~ 14.5
Power steering oil pump bracket to front cylinder head assembly	17 ~ 26	170 ~ 260	12 ~ 19
Power steering oil pump to bracket	17 ~ 26	170 ~ 260	12 ~ 19
Crank position sensor wheel screw	11 ~ 12	110 ~ 120	8 ~ 8.7
Engine mounting insulator bolt [12 x 115 mm (0.4724 x 0.5906 in.)]	90 ~ 110	900 ~ 1,100	65 ~ 80
Engine mounting bracket nut	60 ~ 80	600 ~ 800	43 ~ 58
Engine mounting bracket bolt [12 x 60 mm (0.4724 x 2.3622 in.)]	60 ~ 80	600 ~ 800	43 ~ 58
Front roll stopper bracket to sub frame bolts	60 ~ 80	600 ~ 800	43 ~ 58
Front roll stopper insulator bolt and nut [10 x 85 mm (0.3937 x 3.3465 in.)]	50 ~ 65	500 ~ 650	36 ~ 47
Front roll stopper bracket to transaxle bolts	60 ~ 80	600 ~ 800	43 ~ 58
Rear roll stopper bracket to sub frame bolts	60 ~ 80	600 ~ 800	43 ~ 58
Rear roll stopper insulator bolt and nut	50 ~ 65	500 ~ 650	36 ~ 47
Rear roll stopper bracket to transaxle bolts	50 ~ 65	500 ~ 650	36 ~ 47
Transaxle mounting sub bracket nut	60 ~ 80	600 ~ 800	43 ~ 58
Transaxle mounting bracket bolts	60 ~ 80	600 ~ 800	43 ~ 58
Transaxle mounting insulator bolt [12 x 115 mm (0.4724 x 0.5906 in.)]	90 ~ 110	900 ~ 1100	65 ~ 80
Starter to engine bolt	27 ~ 34	270 ~ 340	20 ~ 25
Generator inlet pipe to front cylinder head assembly	12 ~ 15	120 ~ 150	9 ~ 11
Fuel hose clamp to rear cylinder head assembly	12 ~ 15	120 ~ 150	9 ~ 11

 © 2011 Mitchell Repair Information Company, LLC.

Transaxle mounting plate	10 ~ 12	100 ~ 120	7 ~ 9
Rear plate	10 ~ 12	100 ~ 120	7.3 ~ 8.6
Oil seal case	10 ~ 12	100 ~ 120	7.3 ~ 8.6
Crankshaft pulley bolt	180 ~ 190	1,800 ~ 1,900	130 ~ 138
Timing belt cover bolt (M6)	10 ~ 12	100 ~ 120	7 ~ 9
Timing belt cover bolt (M8)	20 ~ 27	200 ~ 270	14 ~ 20
Engine hanger bracket to engine	27 ~ 38	270 ~ 380	20 ~ 27
Generator mount bracket to engine	20 ~ 30	200 ~ 300	14 ~ 22
Generator mount nut (Engine front case side)	20 ~ 30	200 ~ 300	14 ~ 22
Generator mount bolt (Generator mount	20 ~ 30	200 ~ 300	14 ~ 22
Starter to engine (Nut)	20 ~ 30	200 ~ 300	14 ~ 22
Drive belt pulley bolt	35 ~ 55	350 ~ 550	26 ~ 40
Drive belt tensioner bolt	45 ~ 50	450 ~ 500	33 ~ 36
Engine coolant pump to cylinder block bolt head mark "7"			
(M8)	15 ~ 22	150 ~ 200	11 ~ 15
(M10)	33 ~ 50	330 ~ 500	24 ~ 36
Engine coolant temperature sensor	20 ~ 40	200 ~ 400	14 ~ 29
Engine coolant inlet fitting attaching bolt	17 ~ 20	170 ~ 200	12 ~ 14
Air cleaner mounting bolts	8 ~ 12	80 ~ 120	6 ~ 9
Intake manifold to cylinder head nuts	20 ~ 23	200 ~ 230	14 ~ 16
Throttle body to surge tank bolts	25 ~ 30	250 ~ 300	18 ~ 22
Exhaust manifold to cylinder head nuts	40 ~ 45	400 ~ 450	29 ~ 33
Exhaust manifold heat protector to exhaust manifold bolts	12 ~ 15	120 ~ 150	9 ~ 11
Oxygen sensor to exhaust manifold	40 ~ 50	400 ~ 500	29 ~ 36
Front exhaust pipe to exhaust manifold nuts	30 ~ 40	300 ~ 400	22 ~ 29
Front exhaust pipe to catalytic converter bolts	40 ~ 60	400 ~ 600	29 ~ 43

 © 2011 Mitchell Repair Information Company, LLC.

Catalytic converter to center exhaust pipe nuts	30 ~ 40	300 ~ 400	22 ~ 29
Center exhaust pipe to main muffler nuts	30 ~ 40	300 ~ 400	22 ~ 29
Main muffler hanger support bracket bolts	10 ~ 15	100 ~ 150	7 ~ 11
Delivery pipe installation bolts	10 ~ 15	100 ~ 150	7 ~ 11
Timing belt tensioner pulley bolt	43 ~ 55	430 ~ 550	31 ~ 40
Timing belt idler pulley bolt	50 ~ 60	500 ~ 600	36 ~ 43
Timing belt tensioner arm FIXED BOLT	35 ~ 55	350 ~ 550	26 ~ 40
Auto tensioner fixed bolt	20 ~ 27	200 ~ 270	14 ~ 20
Starter to engine (Bolt)	27 ~ 34	270 ~ 340	20 ~ 25
Camshaft bearing cap			
Outer	19 ~ 21	190 ~ 210	14 ~ 15
Inner	10 ~ 12	110 ~ 120	7 ~ 9

CHECKING ENGINE OIL

1. Position a vehicle on a level surface.
2. Turn off the engine.

NOTE: In the case of a vehicle that has not been used for a prolonged period, run the engine for several minutes. Turn off the engine and wait for 5 minutes at least, then check the oil level.

3. Check that the engine oil level is within the level range indicated on the oil dipstick. If the oil level is found to have fallen to the lower limit (the "L" mark), refill to the "F" mark.

NOTE: When refilling, use the proper grade of engine oil.

4. Check that the oil is not dirty or mixed with coolant or gasoline, and that it has the proper viscosity.

 © 2011 Mitchell Repair Information Company, LLC.

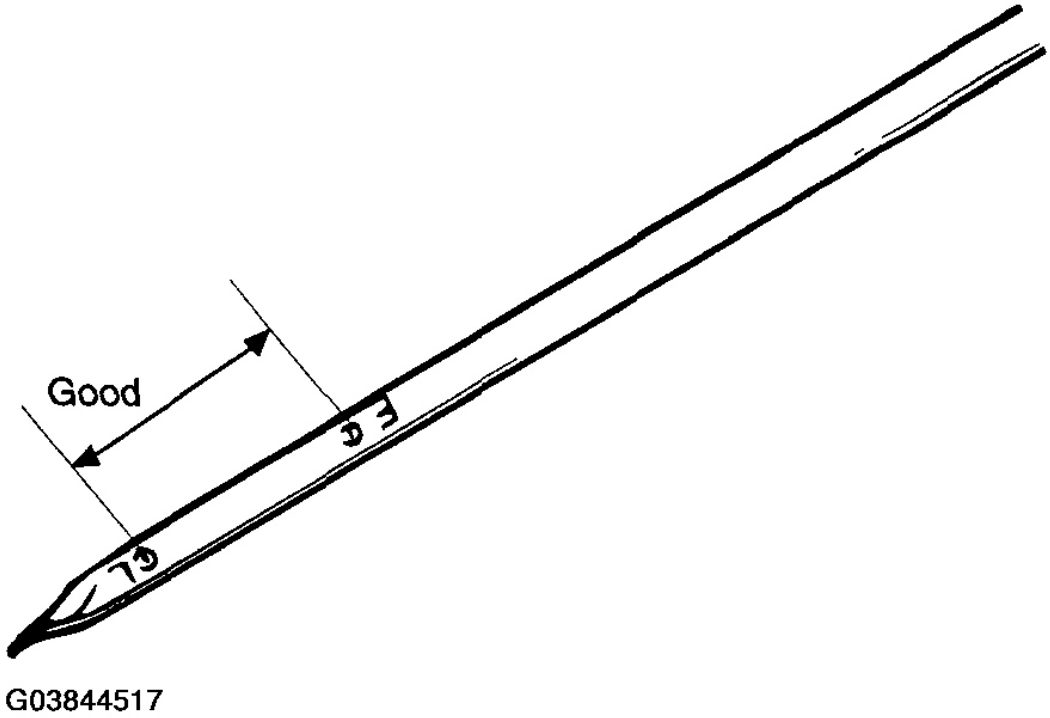

Fig. 1: Identifying Engine Oil Level Range
Courtesy of HYUNDAI MOTOR CO.

SELECTION OF ENGINE OIL

Recommended API classification: SH OR ABOVE

Recommended SAE viscosity grades:

 © 2011 Mitchell Repair Information Company, LLC.

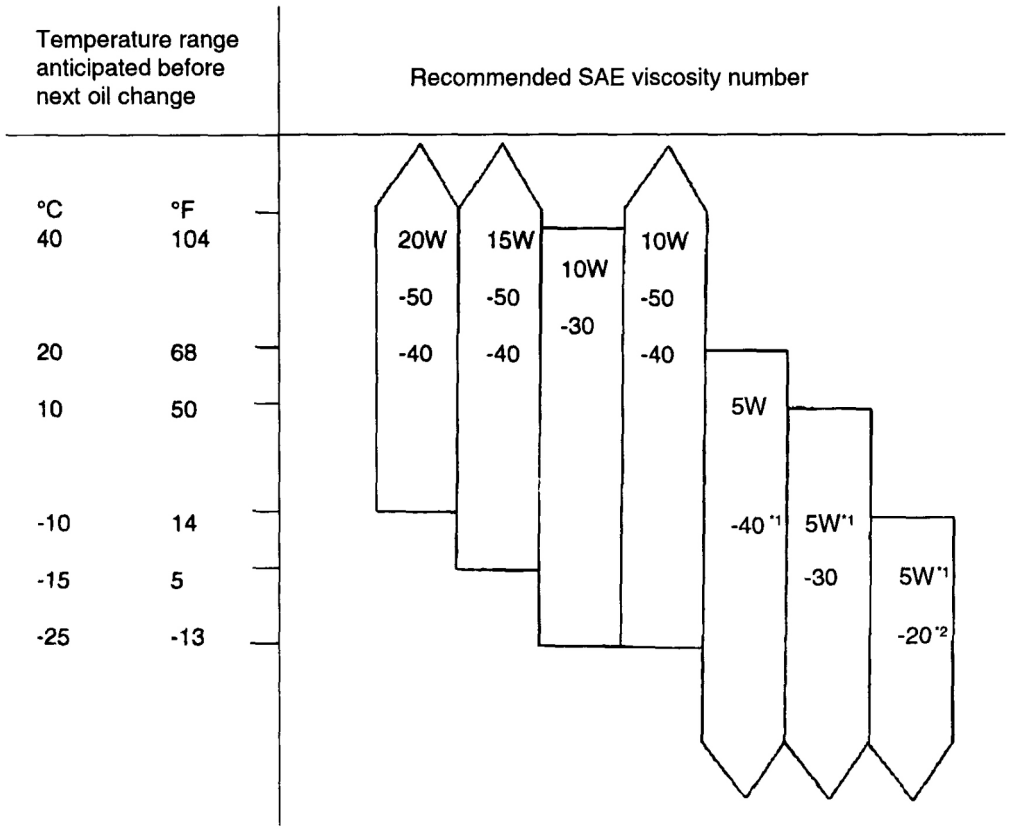

***1 Restricted by driving condition and environment.**
***2 Not recommended for sustained high speed vehicle operation**

G03844518

Fig. 2: Recommended SAE Viscosity Grades Chart
Courtesy of HYUNDAI MOTOR CO.

NOTE: **For best performance and maximum protection of all types of operation, select only those lubricants which:**

1. **Satisfy the requirements of the API classification.**
2. **Have the proper SAE grade number for expected ambient temperature range.**

Lubricants which do not have both an SAE grade number and an API service classification on the container should not be used.

CHANGE ENGINE OIL

1. Run the engine until if reaches normal operating temperature.
2. Turn off the engine.

 © 2011 Mitchell Repair Information Company, LLC.

3. Remove the oil filler cap and oil filter and then drain plug.

   Drain the engine oil.

4. Tighten the drain plug to the specified torque.

   Tightening torque

   Oil pan drain plug:

   35 ~ 45 Nm (350 ~ 450 kg.cm, 25 ~ 33 lb.ft)

   NOTE: Whenever tightening the oil drain plug, use a new drain plug gasket.

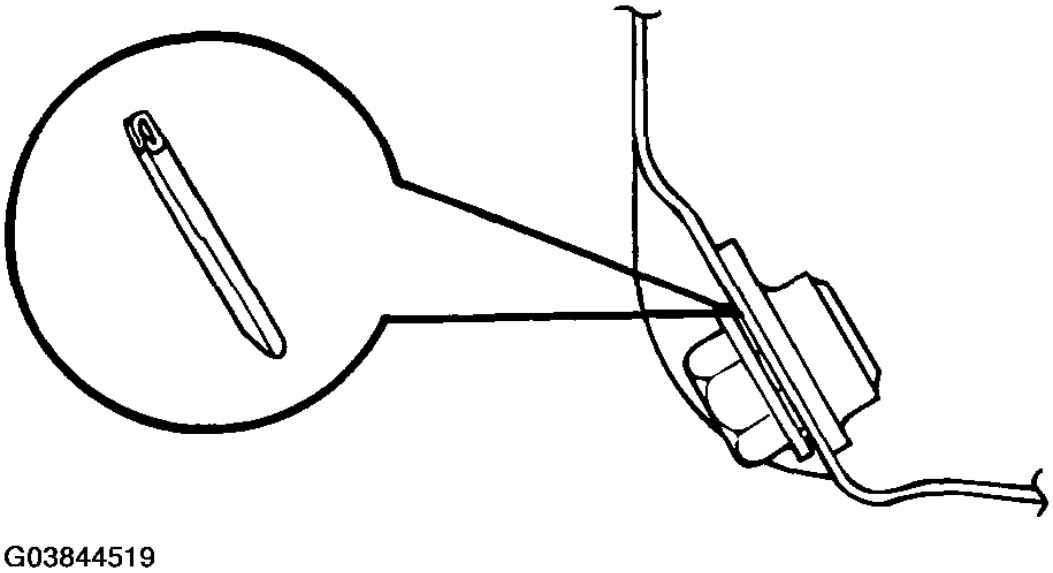

Fig. 3: Identifying Drain Plug Gasket
Courtesy of HYUNDAI MOTOR CO.

5. Fill the new engine oil through the oil filler cap.

   Drain and refill

   Oil quantity: 4.3 lit (4.5 U.S. qts., 3.8 Imp. qts.)

   NOTE: Do not over fill. This will cause oil aeration and loss of oil pressure.

6. Install the oil filler cap.

 © 2011 Mitchell Repair Information Company, LLC.

7. Start and run the engine.
8. Turn off the engine and then check the oil level. Add oil it necessary.

REPLACEMENT OIL FILTER

FILTER SELECTION

All Hyundai Motor Company engines are equipped with a high quality, disposable oil filter. This filter is recommended as a replacement filter for all vehicles. The quality of after market replacement filters is various considerably.

High quality of replacement filters should be used to assure the most efficient service. Make sure that the rubber gasket from the old oil filter is completely removed from the contact surface on the engine block before installing a new filter.

 © 2011 Mitchell Repair Information Company, LLC.

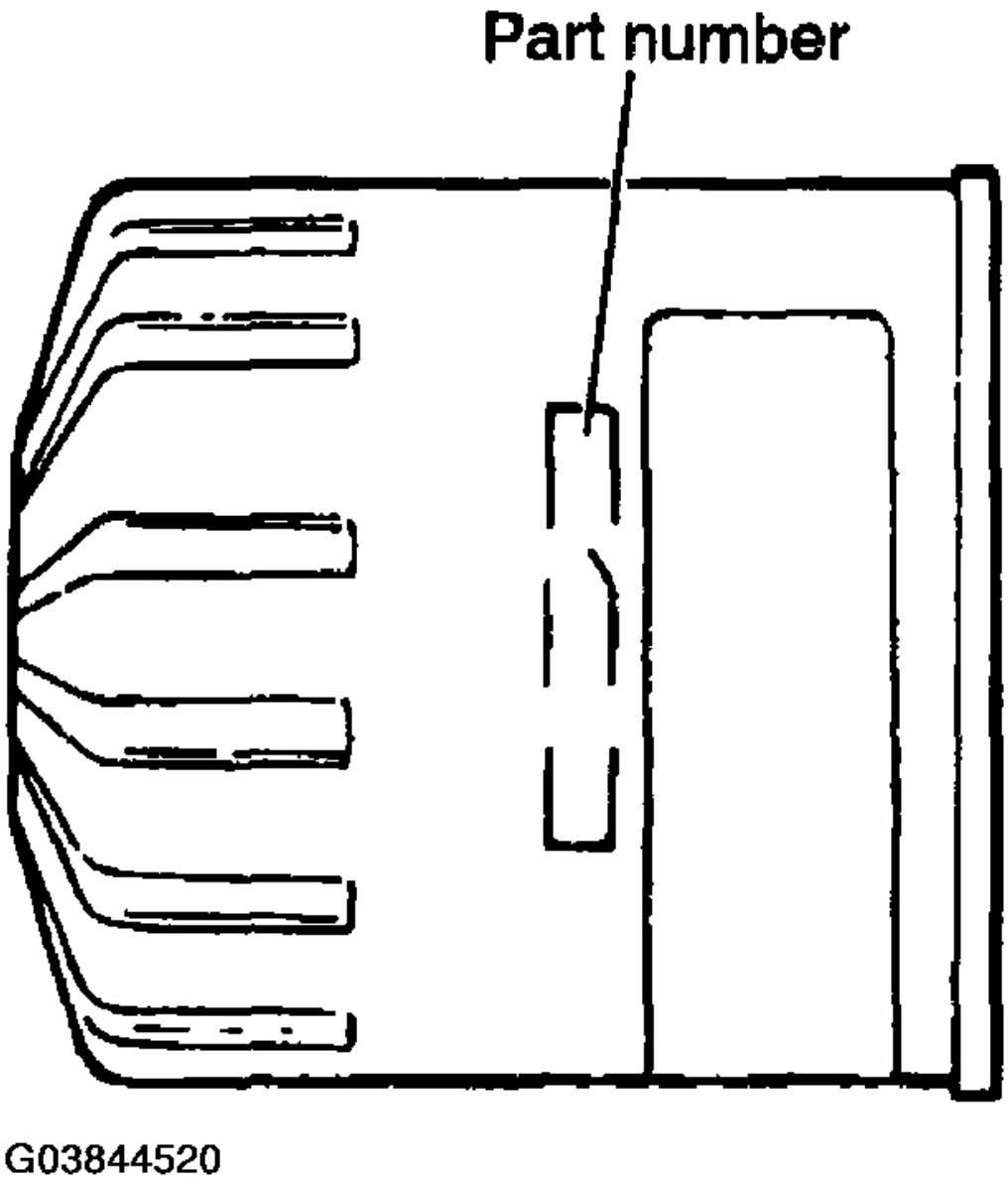

Fig. 4: Locating Oil Filter Part Number
Courtesy of HYUNDAI MOTOR CO.

PROCEDURE FOR REPLACING OIL FILTER

1. Use a filter wrench to remove the oil filter.

 © 2011 Mitchell Repair Information Company, LLC.

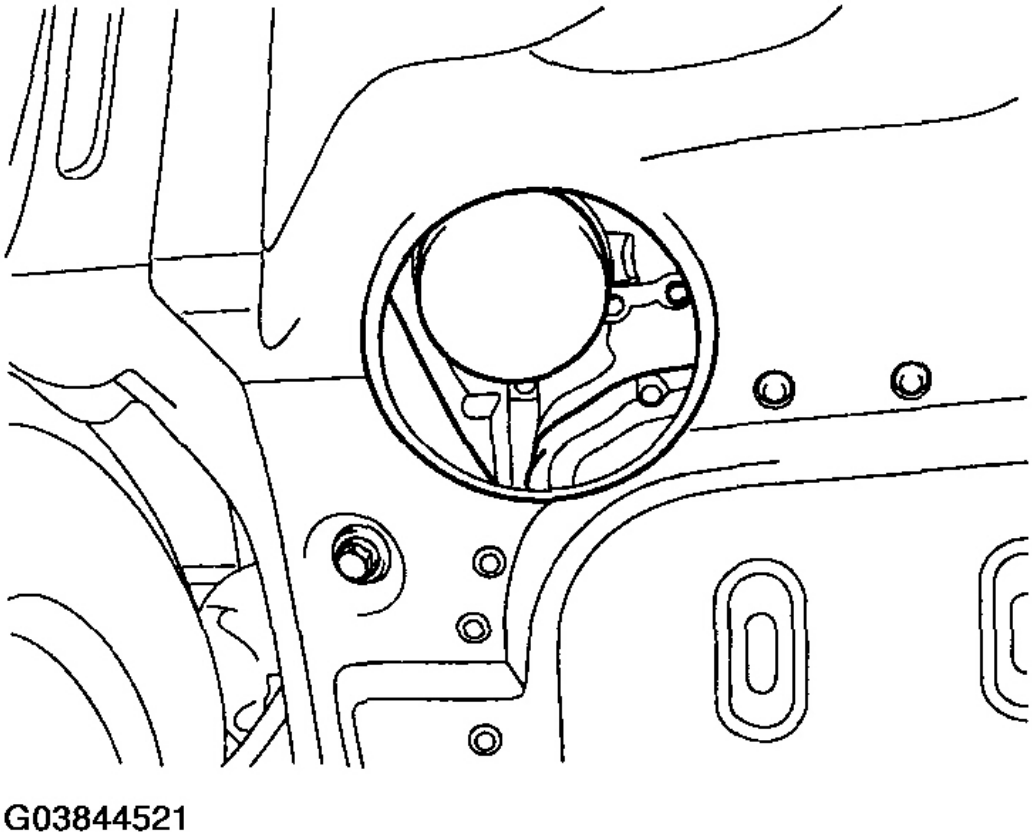

Fig. 5: Removing Oil Filter
Courtesy of HYUNDAI MOTOR CO.

2. Before installing a new oil filter on the engine, apply clean engine oil to the surface of the rubber gasket.

 © 2011 Mitchell Repair Information Company, LLC.

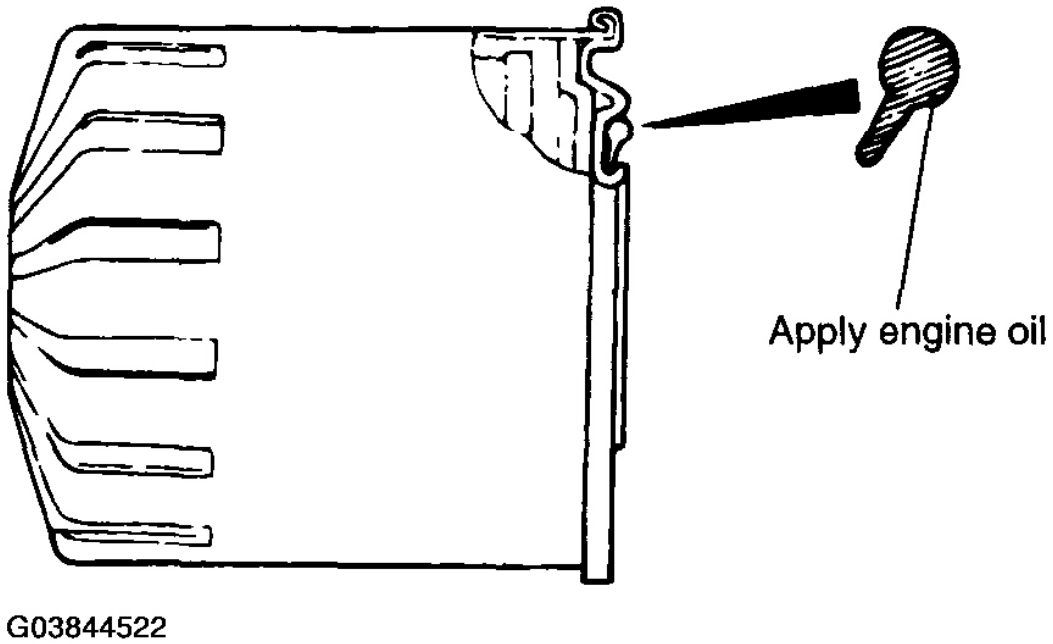

Fig. 6: Applying Engine Oil
Courtesy of HYUNDAI MOTOR CO.

3. Tighten the oil filter of the specified torque.

   Tightening torque

   Oil filter: 12 ~ 16 Nm (120 ~ 160 kg.cm, 8.7 ~ 11.6 lb.ft)

4. Start and run the engine and check engine oil leaks.
5. After stopping the engine, check the oil level and add oil as necessary.

CHECKING COOLANT LEAK CHECK

1. Loosen the radiator cap.
2. Confirm that the coolant level is up to the filler neck.
3. Install a radiator cap tester to the radiator filler neck and apply 150 KPa (21 psi, 1.53 kg/cm^2) pressure. Hold for two minutes, then check for leakage from the radiator, hoses or connections.

CAUTION:

1. **Radiator coolant may be extremely hot. Do not open the system while hot, or scalding engine coolant could gush out, causing personal injury. Allow the vehicle to cool before servicing this system.**

 © 2011 Mitchell Repair Information Company, LLC.

2. **When the tester is removed, be careful not to spill any coolant from it.**
3. **Be sure to clean away completely any coolant from the area.**
4. **Be careful, when installing and removing the tester and when testing, not to deform the filler neck of the radiator.**

4. If there is leakage, repair or replace with the appropriate part.

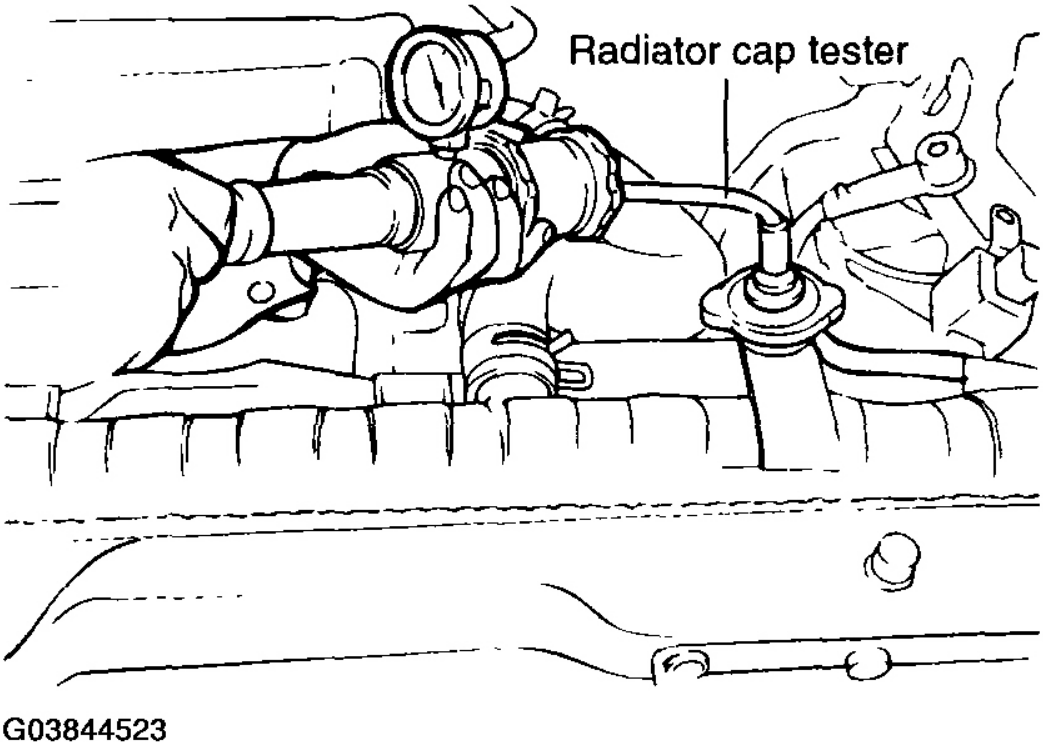

Fig. 7: Pressure Testing Radiator
Courtesy of HYUNDAI MOTOR CO.

RADIATOR CAP PRESSURE TEST

1. Use an adapter to attach the cap to the tester.
2. Increase the pressure until the indicator of the gauge stops moving.

   Main valve opening pressure:

   107.9 +/- 14.7 kPa (1.1 +/-0.15 kg/cm^2 , 15.64 +/- 2.13 psi)

 © 2011 Mitchell Repair Information Company, LLC.

Main valve closing pressure:

83.4 kPa (0.85 kg/cm^2 , 12.1 psi)

3. Check that the pressure level is maintained at or above the limit.
4. Replace the radiator cap if the reading does not remain at or above the limit.

NOTE: **Be sure that the cap is clean before testing, since rust or other foreign material on the cap seal will cause an incorrect reading.**

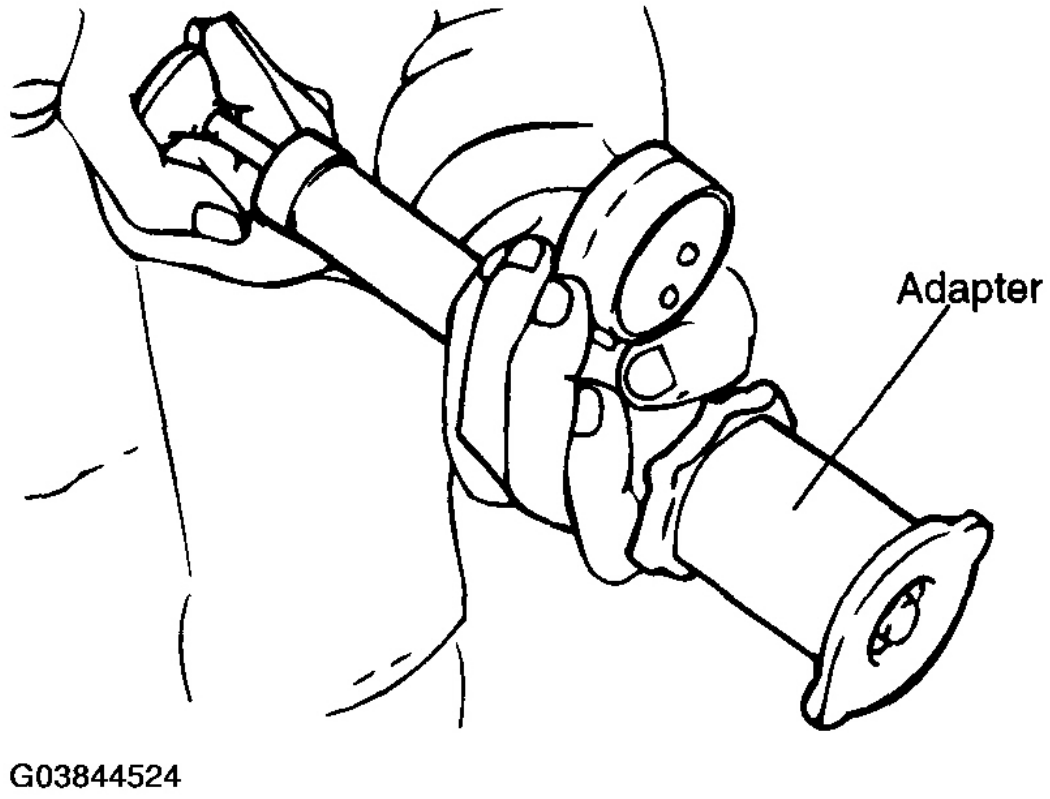

Fig. 8: Pressure Testing Radiator Cap
Courtesy of HYUNDAI MOTOR CO.

SPECIFIC GRAVITY TEST

1. Measure the specific gravity of the coolant with a hydrometer.
2. Measure the coolant temperature and calculate the concentration from the relation between the specific gravity and temperature. Use the following table for reference.

 © 2011 Mitchell Repair Information Company, LLC.

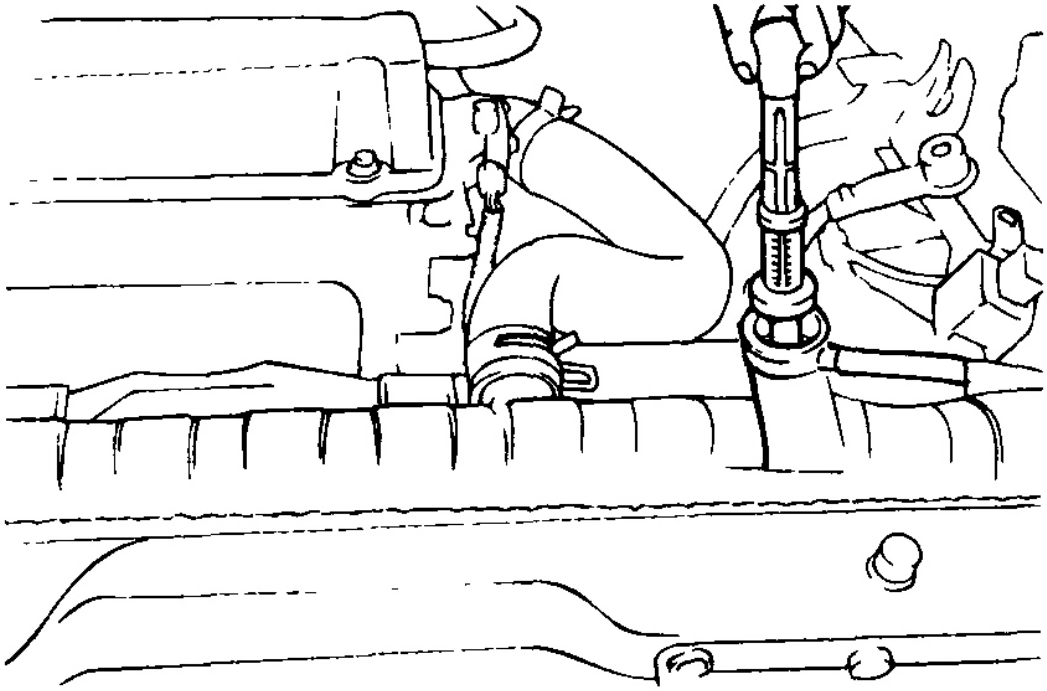

Fig. 9: Measuring Specific Gravity Of Coolant
Courtesy of HYUNDAI MOTOR CO.

RELATION BETWEEN COOLANT CONCENTRATION AND SPECIFIC GRAVITY

RELATION BETWEEN COOLANT CONCENTRATION AND SPECIFIC GRAVITY

Coolant temperature °C (°F) and specific gravity					Freezing temperature ° C (°F)	Safe operating temperature ° C (°F)	Coolant concentration (Specific volume)
10 (50)	20 (68)	30 (86)	40 (104)	50 (122)			
1.054	1.050	1.046	1.042	1.036	-16 (3.2)	-11 (12.2)	30%
1.063	1.058	1.0544	1.049	1.044	-20(-4)	-15 (5)	35%
1.071	1.067	1.062	1.057	1.052	-25 (-13)	-20 (-4)	40%
1.079	1.074	1.069	1.064	1.058	-30 (-22)	-25 (-13)	45%
1.087	1.082	1.076	1.070	1.064	-36 (-32.8)	-31 (-23.8)	50%
1.095	1.090	1.084	1.077	1.070	-42 (-44)	-37 (-35)	55%
1.103	1.098	1.092	1.0841.	1.076	-50 (-58)	-45 (-49)	60%

EXAMPLE

The safe operating temperature is -15°C (5°F) when the measured specific gravity is 1.058 at coolant

 © 2011 Mitchell Repair Information Company, LLC.

temperature of 20°C (68°F)

CAUTION:

- **If the concentration of the coolant is below 30%, its anti-corrosion property will be adversely affected.**
- **If the concentration is above 60%, the engine cooling property will decrease, affecting the engine adversely. For these reasons, be sure to maintain the concentration level within the specified range.**
- **Do not mix types of anti - freeze.**

RECOMMENDED COOLANT

RECOMMENDED COOLANT

Antifreeze	Mixture ratio of antifreeze in coolant
ETHYLENE GLYCOL BASE FOR ALUMINUM	50% [Except tropical areas]
	40% [Tropical areas]

CHECKING COMPRESSION PRESSURE

1. Before checking the engine compression, check the engine oil level. Also check that the starter motor and battery are all in normal operating condition.
2. Start the engine and wait until the engine coolant temperature reaches 80-95°C (176~205°F).
3. Stop the engine and disconnect the spark plug cables.
4. Remove the spark plugs.
5. Crank the engine to remove any foreign material in the cylinders.
6. Insert the compression gauge into the spark plug hole.
7. Depress the accelerator pedal to open the throttle fully.
8. Crank the engine and read the gauge.

   Standard value: 1,200 kPa (12.2 kg/cm^2 , 170 psi)

   Limit: 1,050 kpa (10.7 kg/cm^2 , 149 psi)

 © 2011 Mitchell Repair Information Company, LLC.

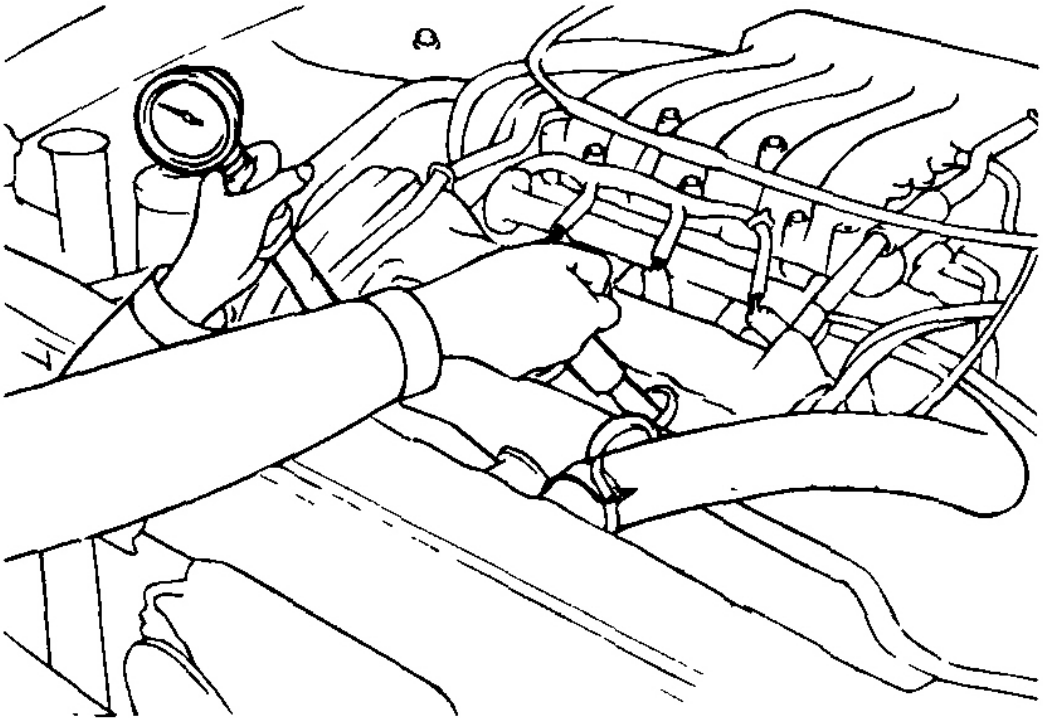

Fig. 10: Checking Compression Pressure
Courtesy of HYUNDAI MOTOR CO.

9. Repeat steps 6 to 8 for all cylinders, making sure that the pressure difference for each of the cylinders is within the specified limit.

   Limit:

   Max. 100 kPa (1.0 kg/cm^2 , 14 psi) between cylinders

10. If a cylinder's compression or pressure differential is outside the specification, add a small amount of oil through the spark plug hole, and repeat steps 6 to 9 .
    1. If the addition of oil causes the compression to rise, it is possible that the piston ring is worn.
    2. If the compression remains the same, valve seizure, poor valve seating or a compression leak in the cylinder head gasket are all possible causes.

    Tightening torque

    Spark plug: 20 ~ 30 Nm (200 ~ 300 kg.cm, 14 ~ 22 lb.ft)

 © 2011 Mitchell Repair Information Company, LLC.

TIGHTENING CYLINDER HEAD BOLTS

1. First loosen slightly and then tighten to the specified torque.

   Tightening torque

   Cylinder head bolts cold [Engine temperature approximately 20°C (68°F)]:

   105 ~ 115 Nm (1050 ~ 1150 kg.cm, 75 ~ 82 lb ft.)

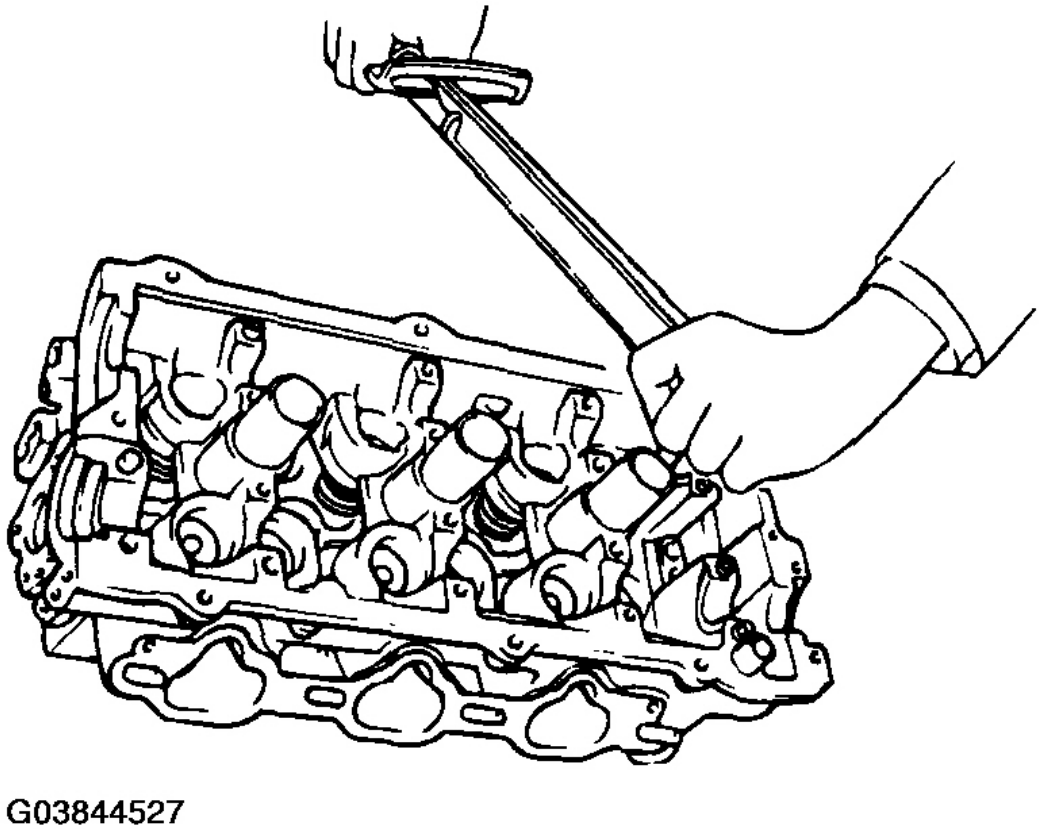

Fig. 11: Tightening Cylinder Head Bolts
Courtesy of HYUNDAI MOTOR CO.

2. Be sure to follow the specific torque sequence as shown in **Fig. 12** .

   NOTE: Run the engine to normal operating temperature and let it cool, then re-torque the bolts to specifications.

 © 2011 Mitchell Repair Information Company, LLC.

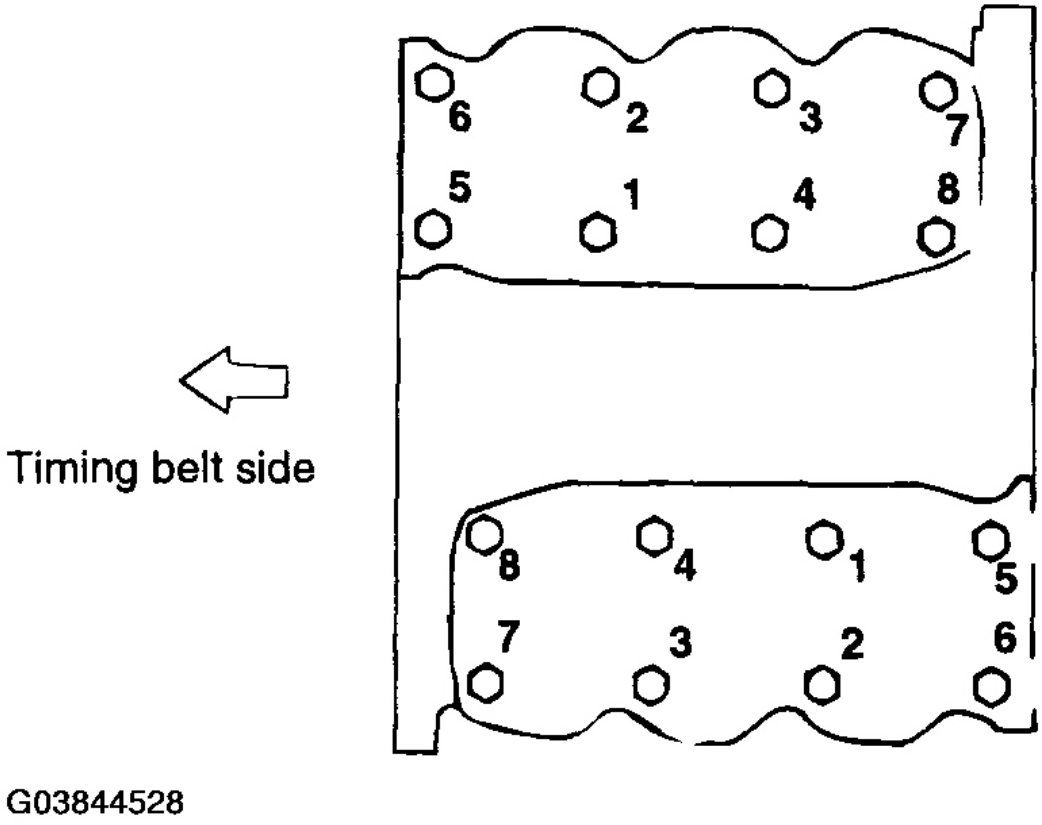

Fig. 12: Identifying Torque Sequence
Courtesy of HYUNDAI MOTOR CO.

ADJUSTING VALVE CLEARANCE

As the intake and exhaust valves are equipped with hydraulic lash adjusters, there is no need to adjust the valve clearance. The proper function of the hydraulic lash mechanism may be determined by checking for tappet noise. When there is a tappet noise or any unusual noise, check the hydraulic lash adjuster by removing and bleeding or replacing it.

ADJUSTING DRIVE BELT AND TENSIONER

1. Hang the belt on the pulley of the tensioner and install the tensioner.

   (If the tensioner is already installed, loosen its mounting bolt to allow belt installation.)

   Tightening torque

   Tensioner assembly bolt:

 © 2011 Mitchell Repair Information Company, LLC.

45 ~ 50 Nm (450 ~ 550 kg.cm, 33 ~ 36 lb.ft)

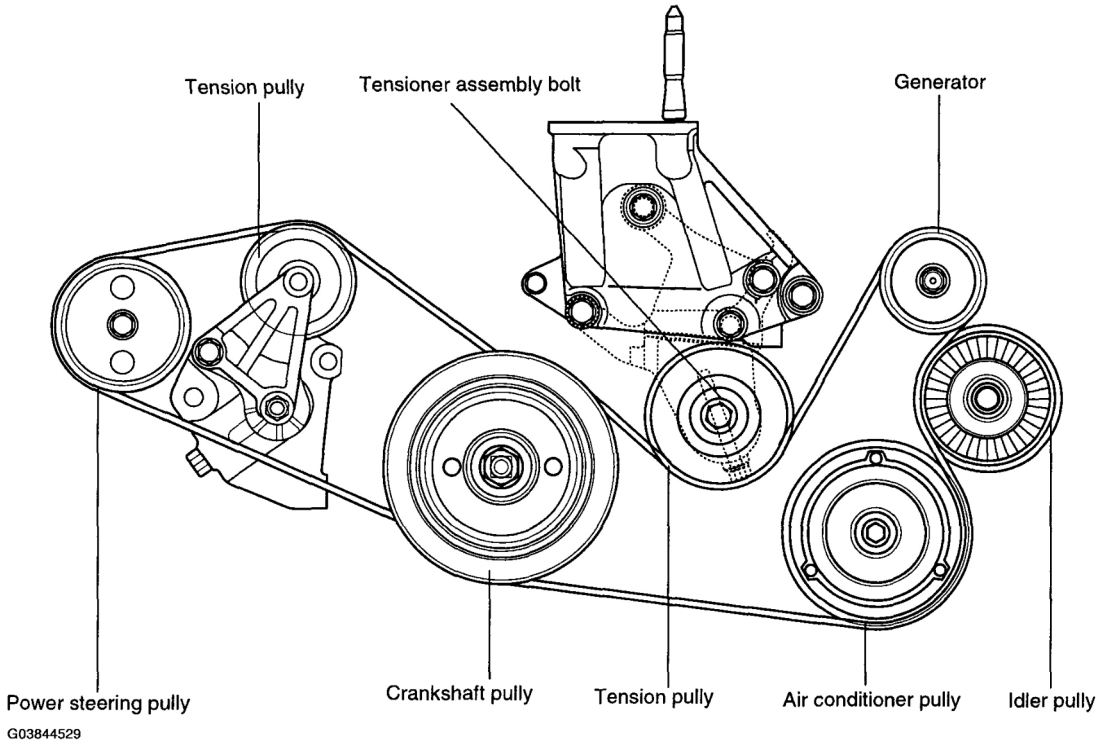

Fig. 13: Adjusting Drive Belt And Tensioner
Courtesy of HYUNDAI MOTOR CO.

2. Install power steering belt.

 © 2011 Mitchell Repair Information Company, LLC.

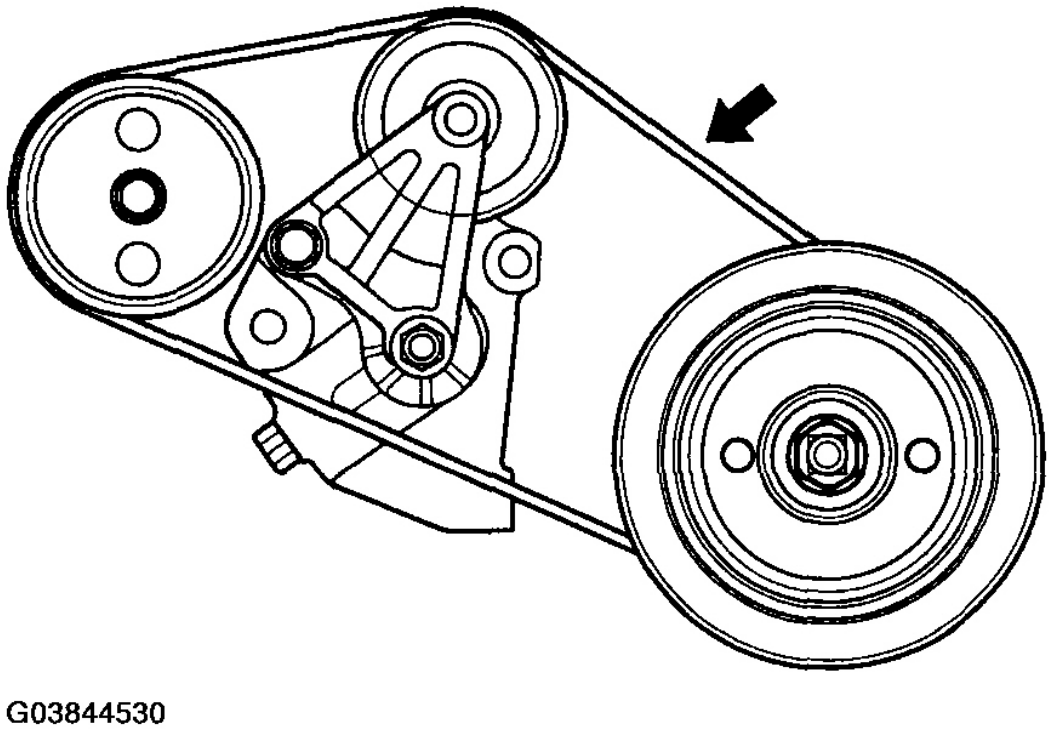

Fig. 14: Installing Power Steering Belt
Courtesy of HYUNDAI MOTOR CO.

3. Install drive belt.

 © 2011 Mitchell Repair Information Company, LLC.

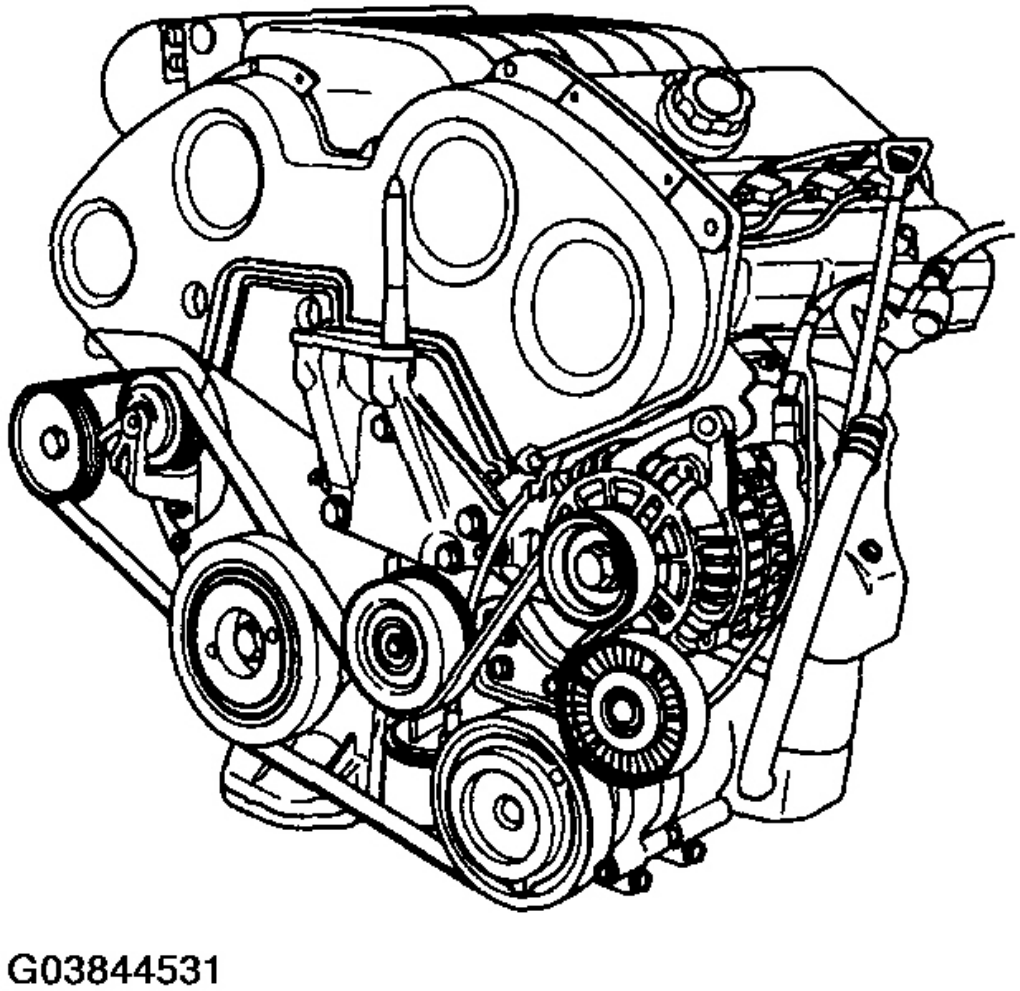

Fig. 15: Installing Drive Belt
Courtesy of HYUNDAI MOTOR CO.

4. Adjust the power steering belt tension to specification by turning the adjusting bolt (Q) clockwise or counter clockwise.

 © 2011 Mitchell Repair Information Company, LLC.

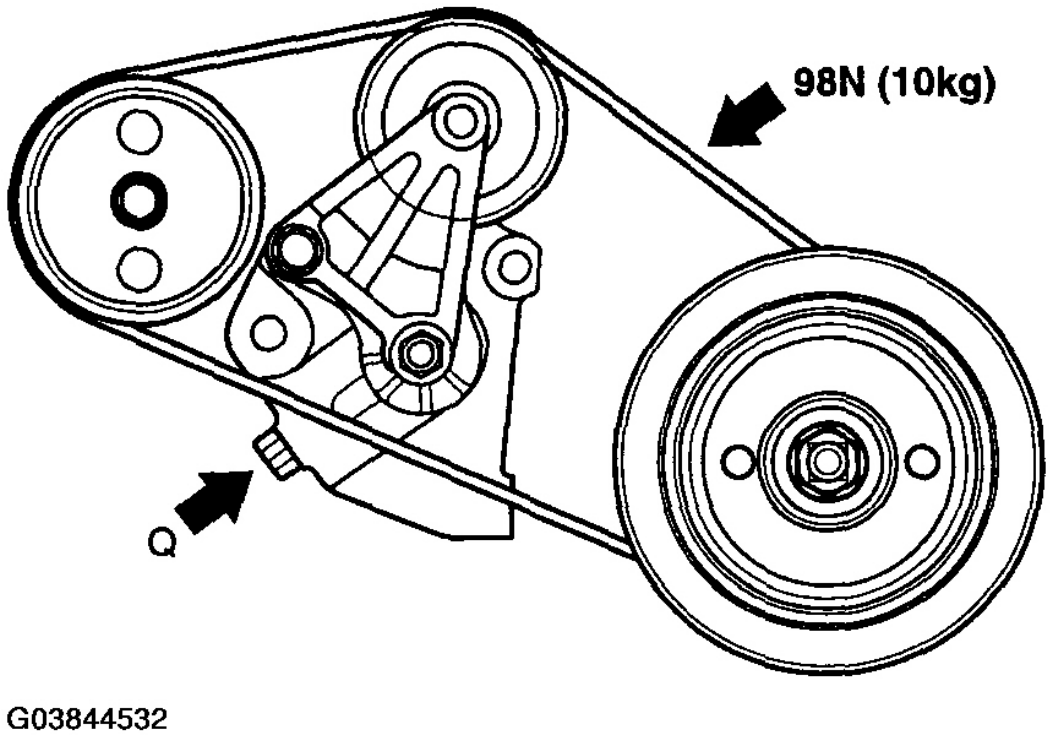

Fig. 16: Adjusting Power Steering Belt Tension
Courtesy of HYUNDAI MOTOR CO.

5. Adjust the drive belt tension to specification by turning the adjusting bolt (Q) clockwise or counter clockwise.

 © 2011 Mitchell Repair Information Company, LLC.

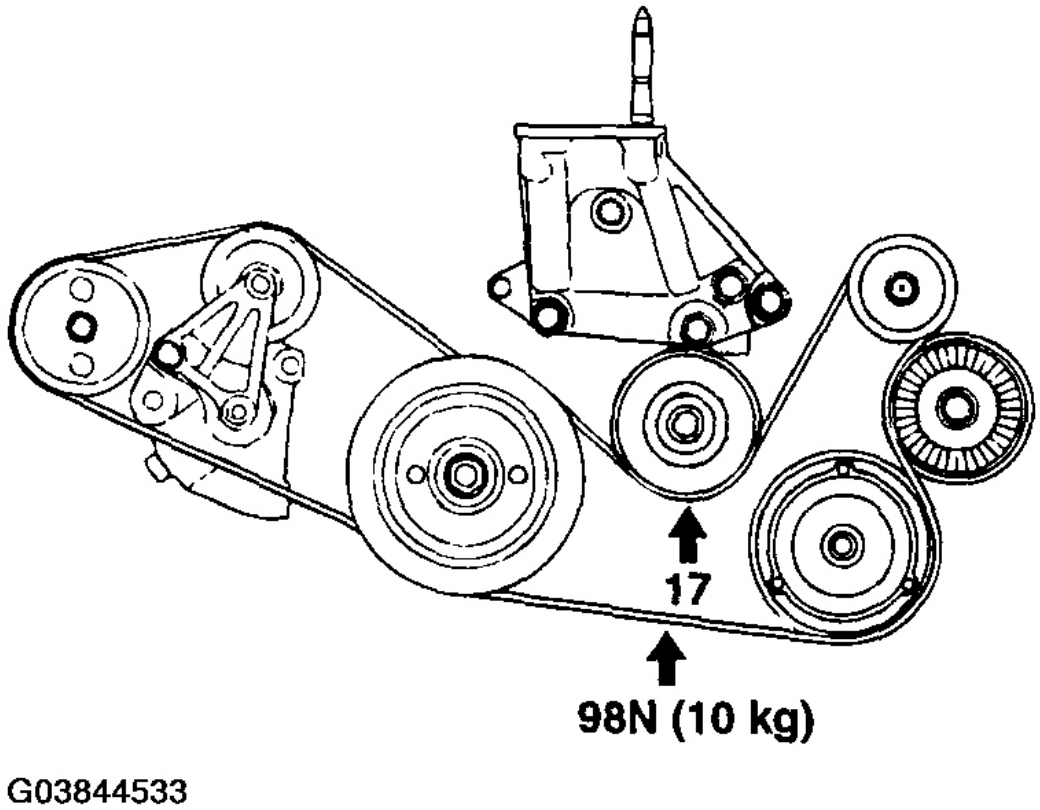

Fig. 17: Adjusting Drive Belt Tension
Courtesy of HYUNDAI MOTOR CO.

6. When installing the belt on the pulley, make sure it is centered on the pulley.

 © 2011 Mitchell Repair Information Company, LLC.

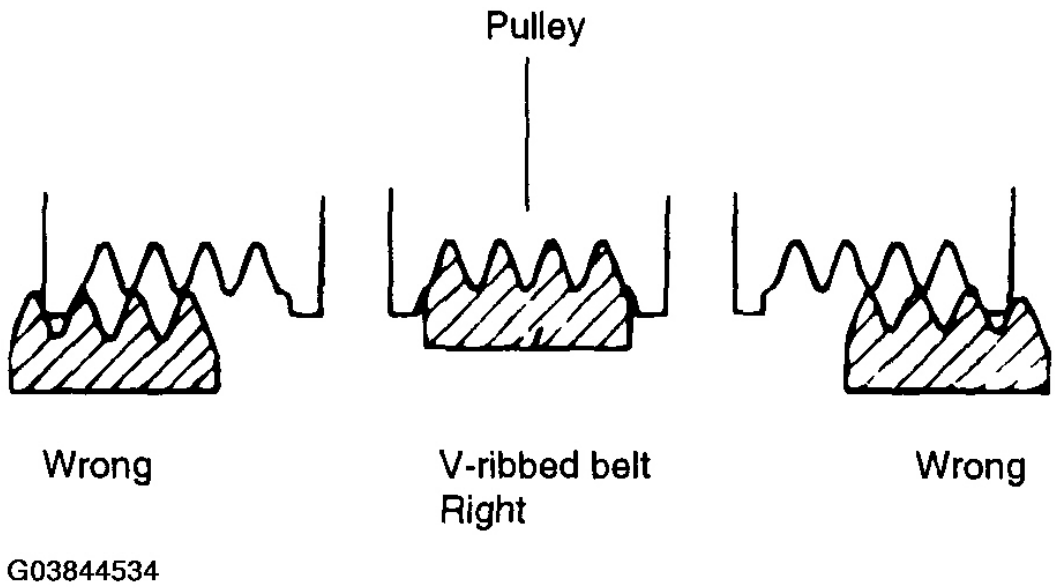

Fig. 18: Identifying Correct Way Of Installing Belt To Pulley
Courtesy of HYUNDAI MOTOR CO.

ENGINE AND TRANSAXLE ASSEMBLY

REMOVAL

1. Remove the battery and engine cover.
2. Remove the battery stay.
3. Detach the air cleaner.

 © 2011 Mitchell Repair Information Company, LLC.

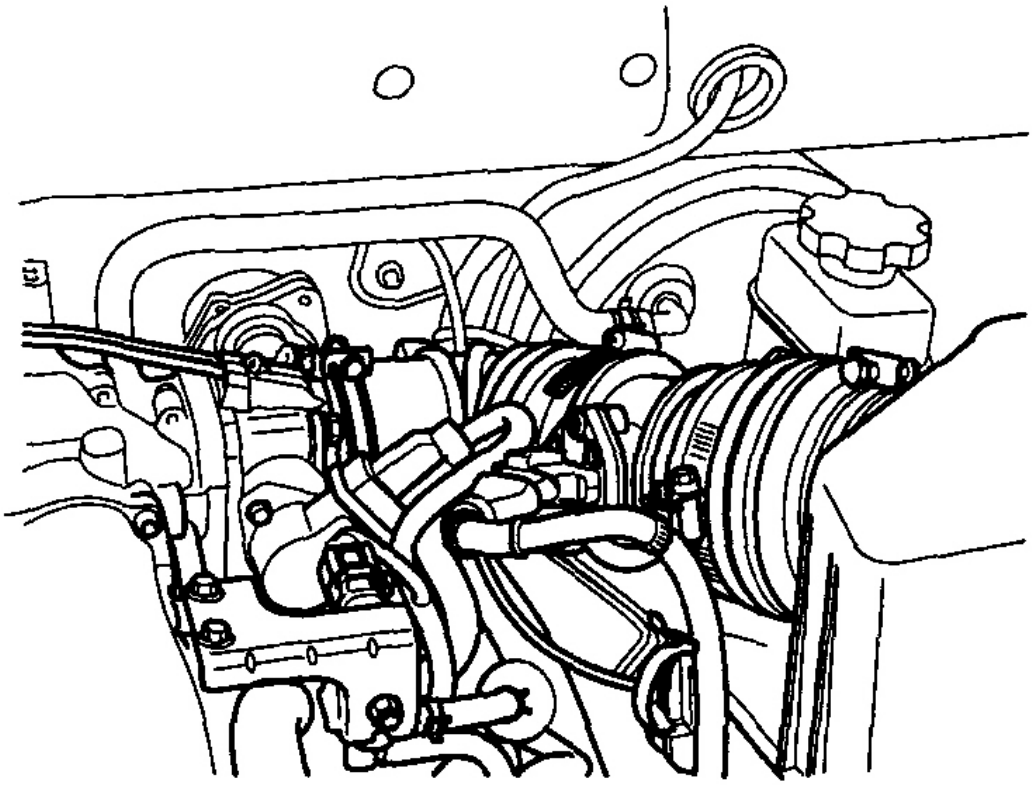

Fig. 19: Detaching Air Cleaner
Courtesy of HYUNDAI MOTOR CO.

4. Disconnect the connectors from the engine harness.
    1. Alternator, starter
    2. Power steering switch connector, oil pressure gauge connector, air conditioner switch
    3. Injector connectors
    4. Back up lamp switch connector
    5. A/T solenoid, inhibitor switch connector
    6. Coolant temperature

 © 2011 Mitchell Repair Information Company, LLC.

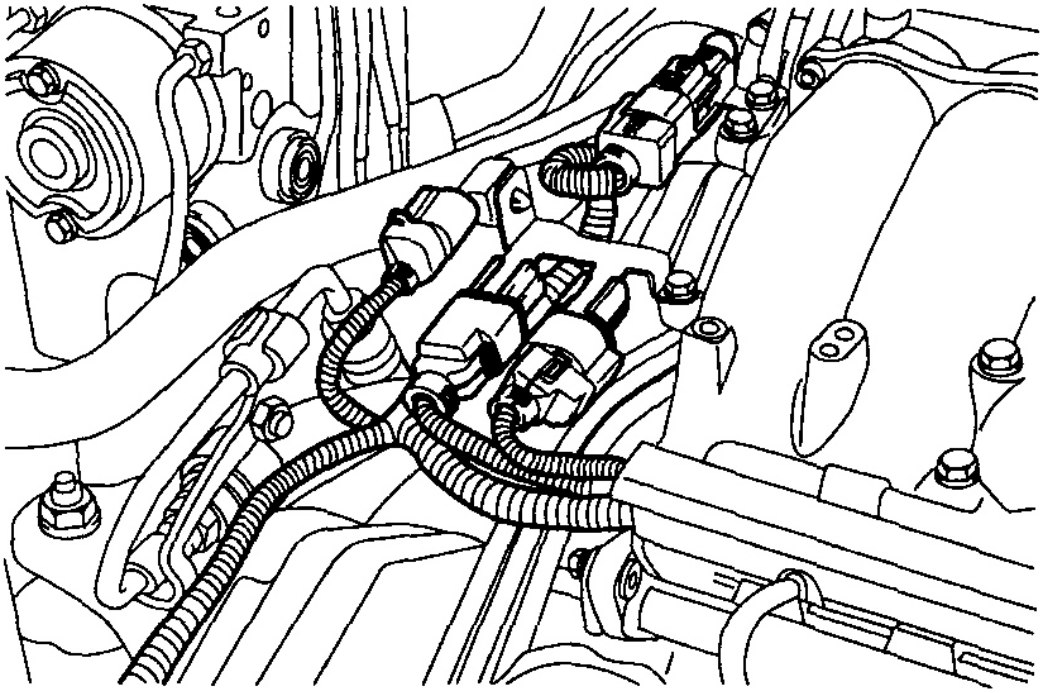

G03844536

Fig. 20: Disconnecting Connectors From Engine Harness (1 Of 2)
Courtesy of HYUNDAI MOTOR CO.

 © 2011 Mitchell Repair Information Company, LLC.

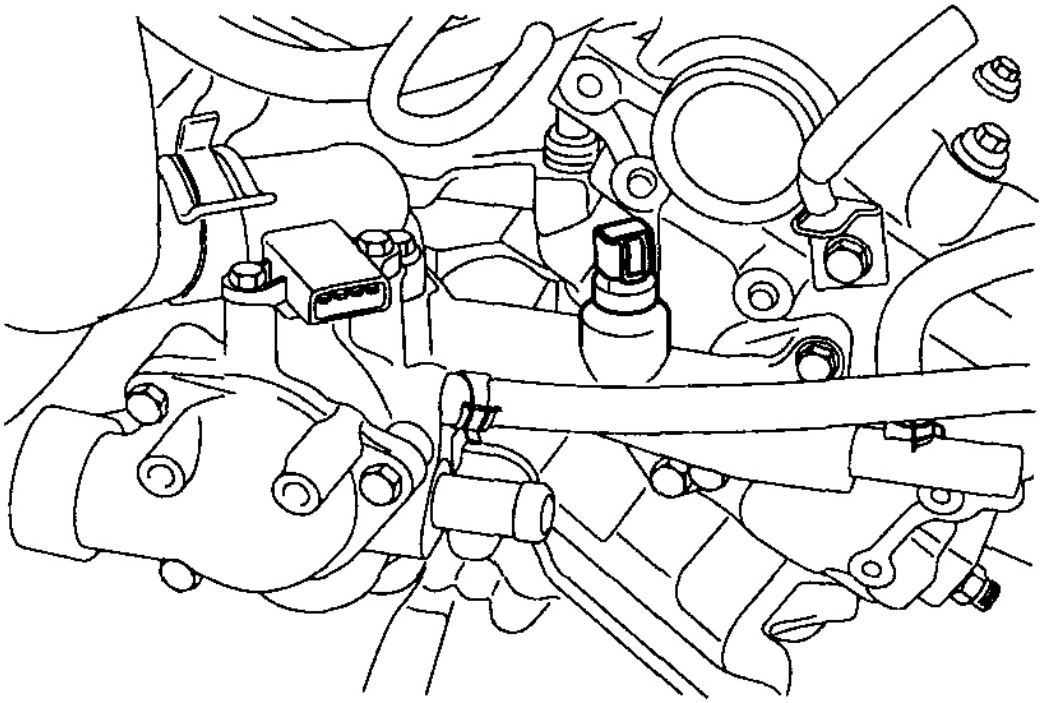

Fig. 21: Disconnecting Connectors From Engine Harness (2 Of 2)
Courtesy of HYUNDAI MOTOR CO.

7. Ignition coils, power TR connector
8. Idle speed control valve (ISC) connector
9. AFS and ATS connectors
10. Oxygen sensor connector etc.

5. Disconnect the transaxle oil cooler hoses (A/T).

NOTE: When disconnecting hoses, make identification marks to avoid making any mistake when installing them again.

CAUTION: Be careful not to spill any of the oil or fluid from the hoses. Plug the openings to prevent the entry of foreign material.

6. Disconnect the radiator upper and lower hoses on the engine side.

 © 2011 Mitchell Repair Information Company, LLC.

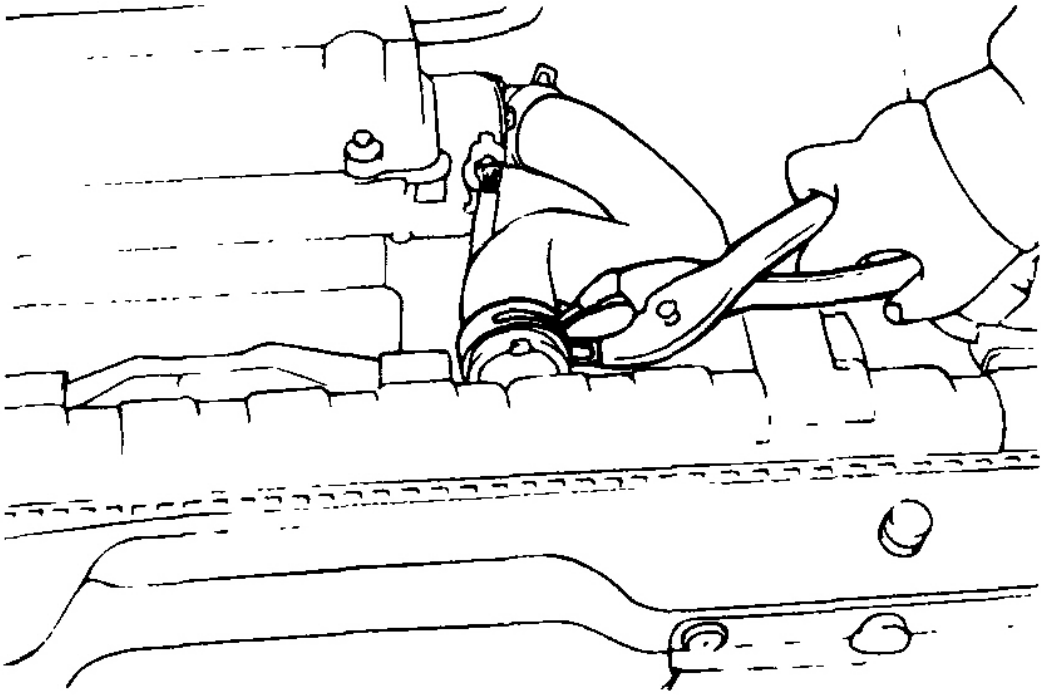

G03844538

Fig. 22: Disconnecting Radiator Upper Hose
Courtesy of HYUNDAI MOTOR CO.

7. Disconnect the engine ground and transaxle ground.
8. Disconnect the brake booster vacuum hose.

 © 2011 Mitchell Repair Information Company, LLC.

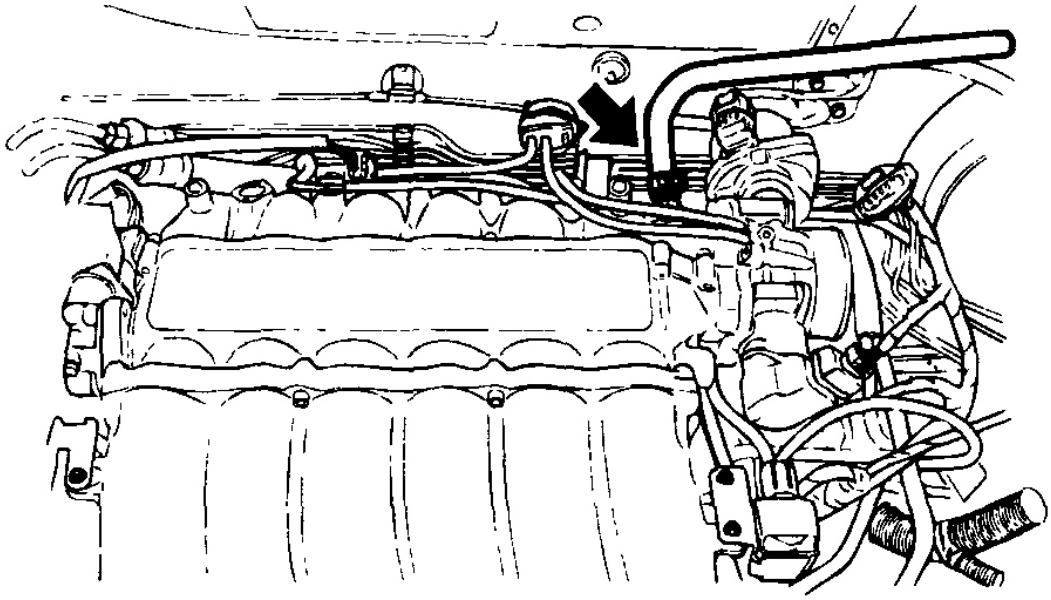

G03844539

Fig. 23: Disconnecting Brake Booster Vacuum Hose
Courtesy of HYUNDAI MOTOR CO.

9. Disconnect the heater hoses (inlet and outlet) on the engine side.

 © 2011 Mitchell Repair Information Company, LLC.

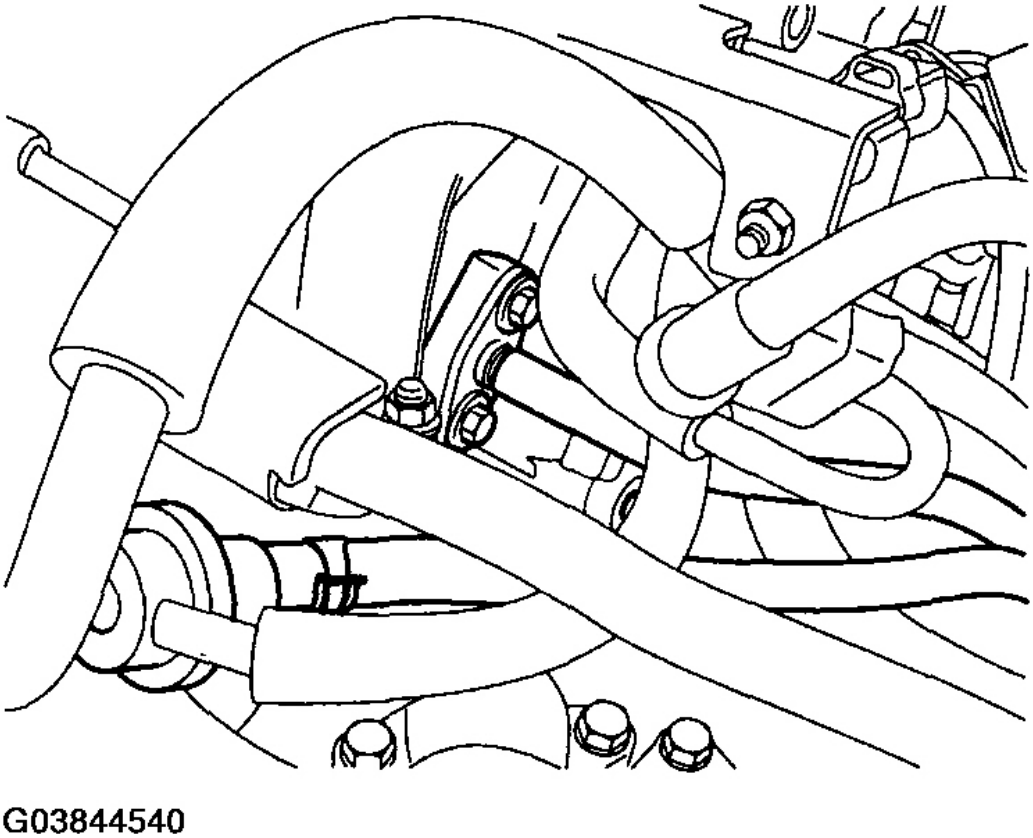

Fig. 24: Disconnecting Heater Hoses (Inlet And Outlet) On Engine Side
Courtesy of HYUNDAI MOTOR CO.

10. Remove the main fuel line (supply and return) at the delivery pipe.
11. Disconnect the speedometer cable from the transaxle.
12. Disconnect the control cable from the transaxle.

 © 2011 Mitchell Repair Information Company, LLC.

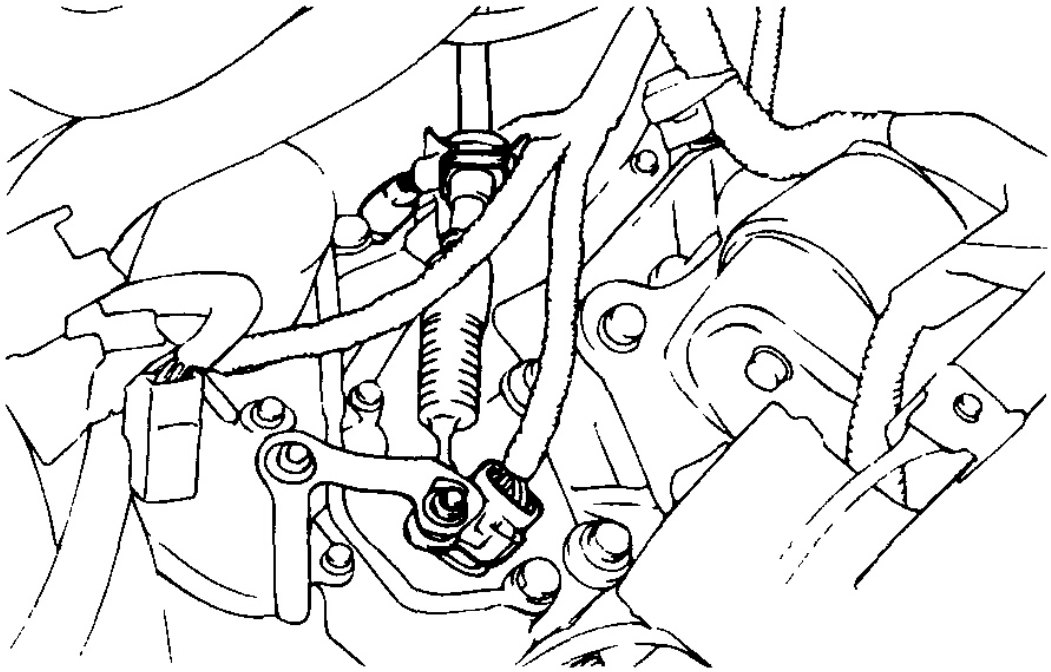

Fig. 25: Disconnecting Control Cable From Transaxle
Courtesy of HYUNDAI MOTOR CO.

13. Remove the power steering hose from the engine mount bracket.

 © 2011 Mitchell Repair Information Company, LLC.

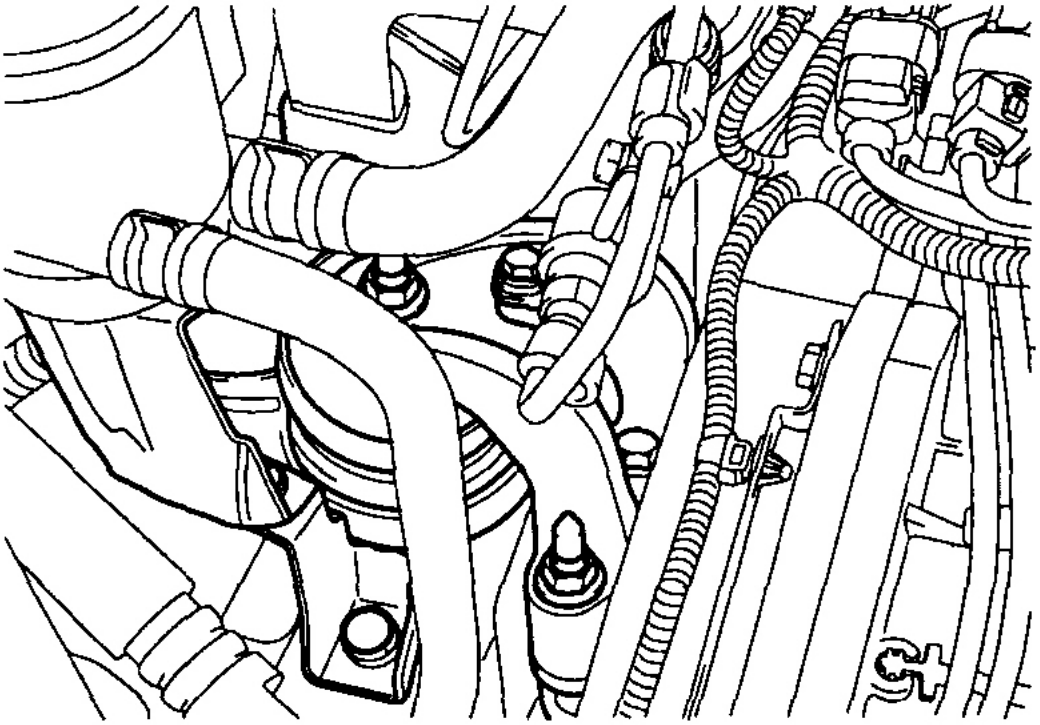

Fig. 26: Removing Power Steering Hose From Engine Mount Bracket
Courtesy of HYUNDAI MOTOR CO.

14. Detach the steering dust cover in the engine compartment and then disconnect the gear box universal joint bolt.

NOTE: **Make sure to make identification marks between the universal joint and the gear box for reassembly.**

 © 2011 Mitchell Repair Information Company, LLC.

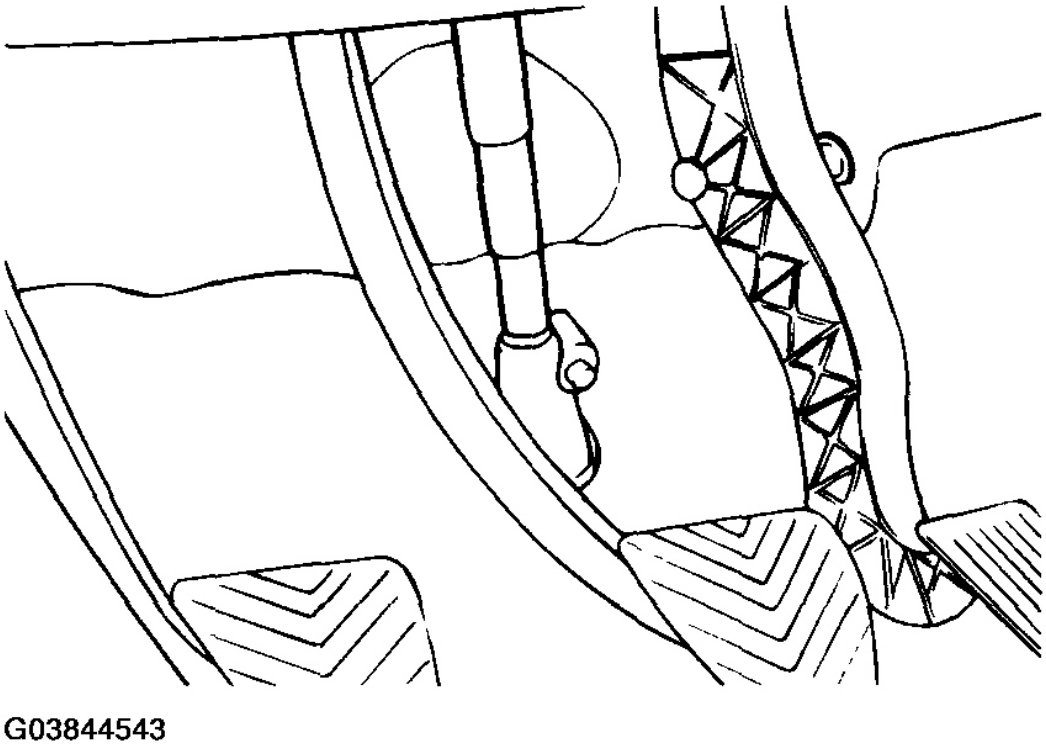

Fig. 27: Disconnecting Gear Box Universal Joint Bolt
Courtesy of HYUNDAI MOTOR CO.

15. Raise the vehicle and then remove the front tire.
16. Remove the caliper assembly from knuckle and hold the upper side.

 © 2011 Mitchell Repair Information Company, LLC.

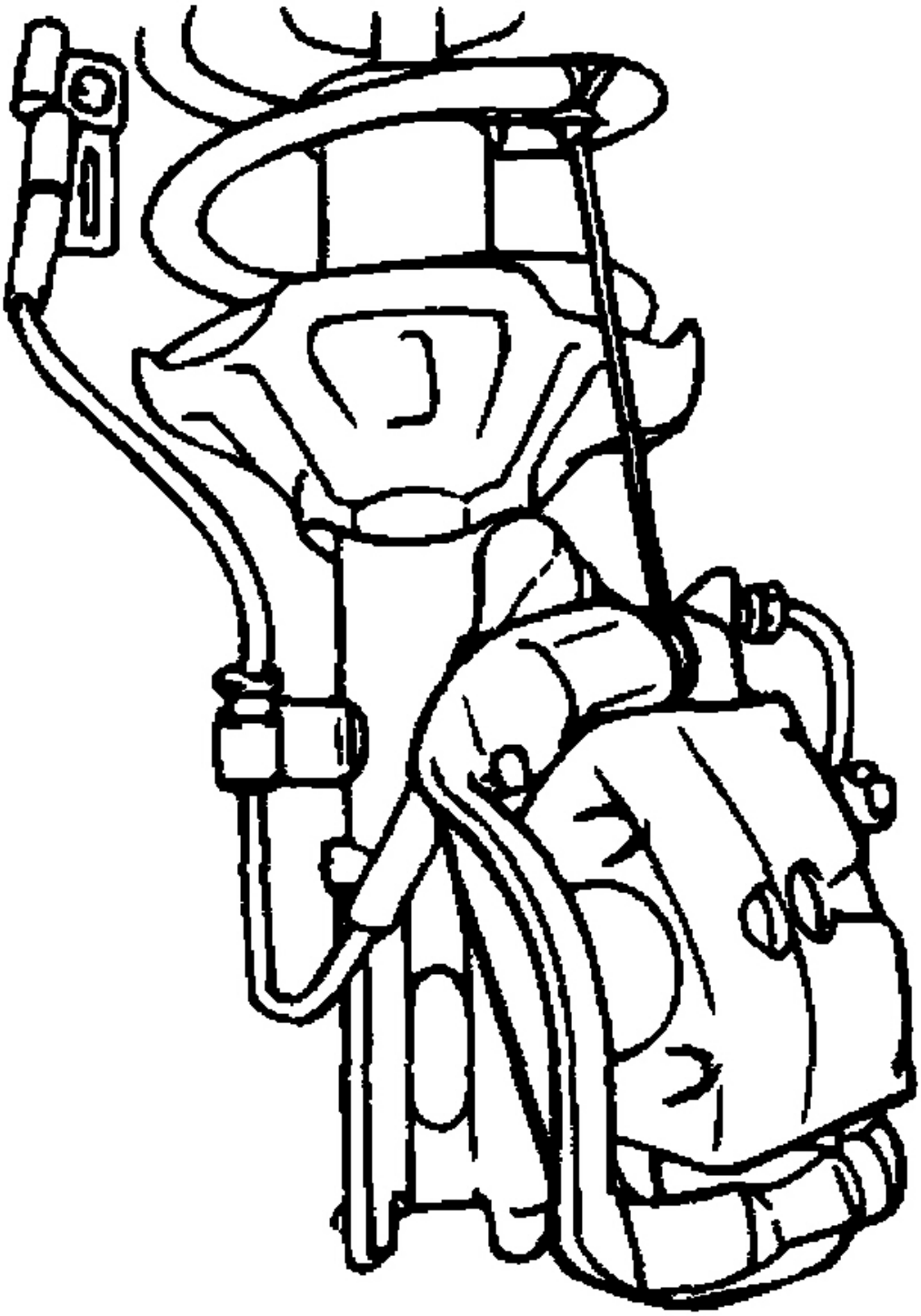

G03844544

 © 2011 Mitchell Repair Information Company, LLC.

Fig. 28: Removing Caliper Assembly From Knuckle And Holding Upper Side
Courtesy of HYUNDAI MOTOR CO.

17. Loosen the strut lower bolt and separate from the knuckle.

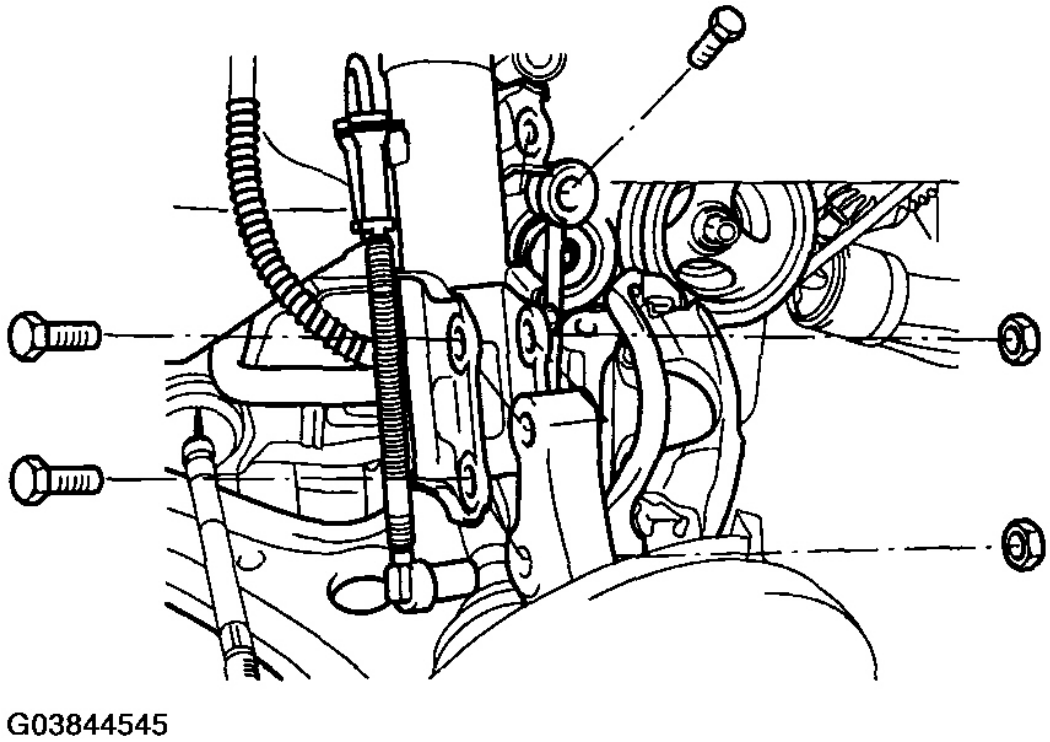

Fig. 29: Loosening Strut Lower Bolt And Separating From Knuckle
Courtesy of HYUNDAI MOTOR CO.

18. Remove the wheel speed sensor from the knuckle.

 © 2011 Mitchell Repair Information Company, LLC.

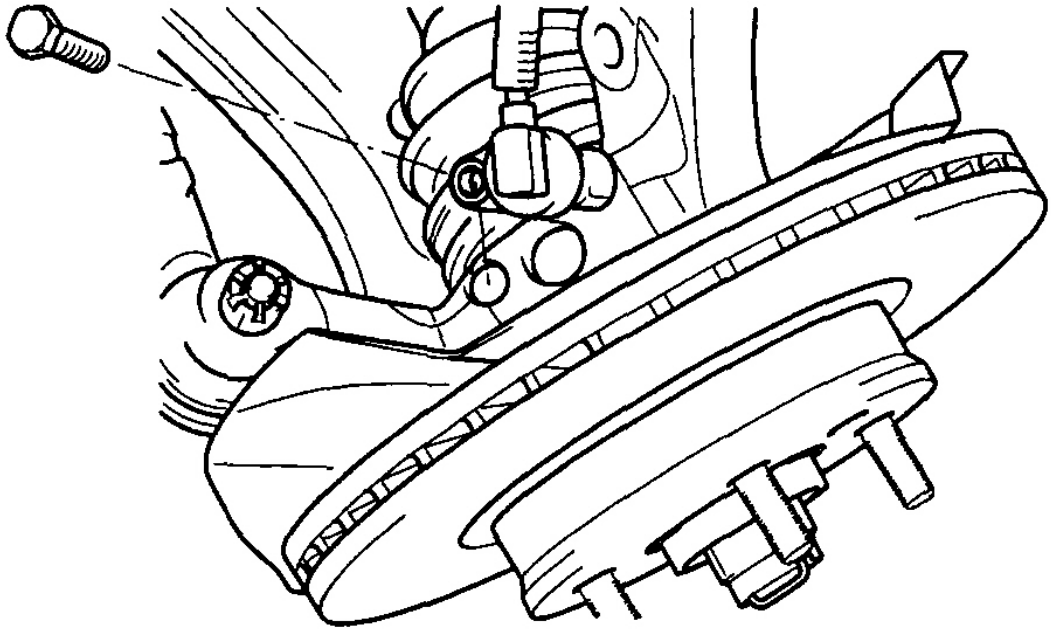

Fig. 30: Removing Wheel Speed Sensor From Knuckle
Courtesy of HYUNDAI MOTOR CO.

19. Remove the front muffler bolts.

 © 2011 Mitchell Repair Information Company, LLC.

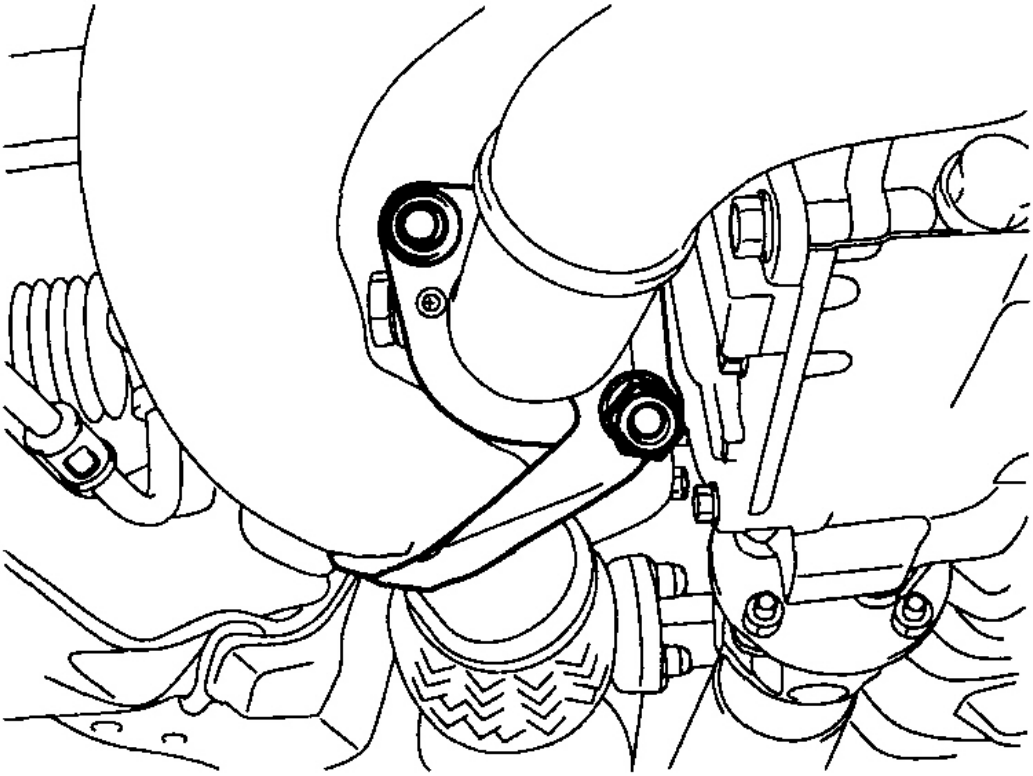

G03844547

Fig. 31: Removing Front Muffler Bolts
Courtesy of HYUNDAI MOTOR CO.

 © 2011 Mitchell Repair Information Company, LLC.

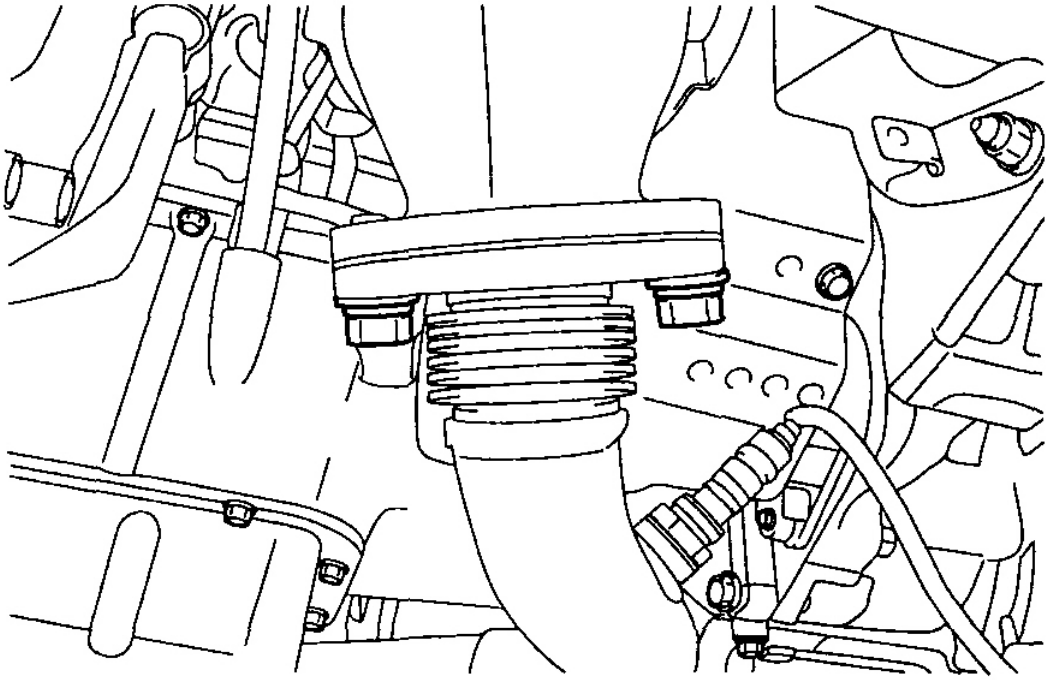

G03844548

Fig. 32: Removing Front Muffler
Courtesy of HYUNDAI MOTOR CO.

20. Put the special fixture on the T/M jack and then adjust it to the sub ~ frame.

NOTE: **Check that all the cables, harness connector and hoses are disconnected from the engine and transaxle assembly.**

 © 2011 Mitchell Repair Information Company, LLC.

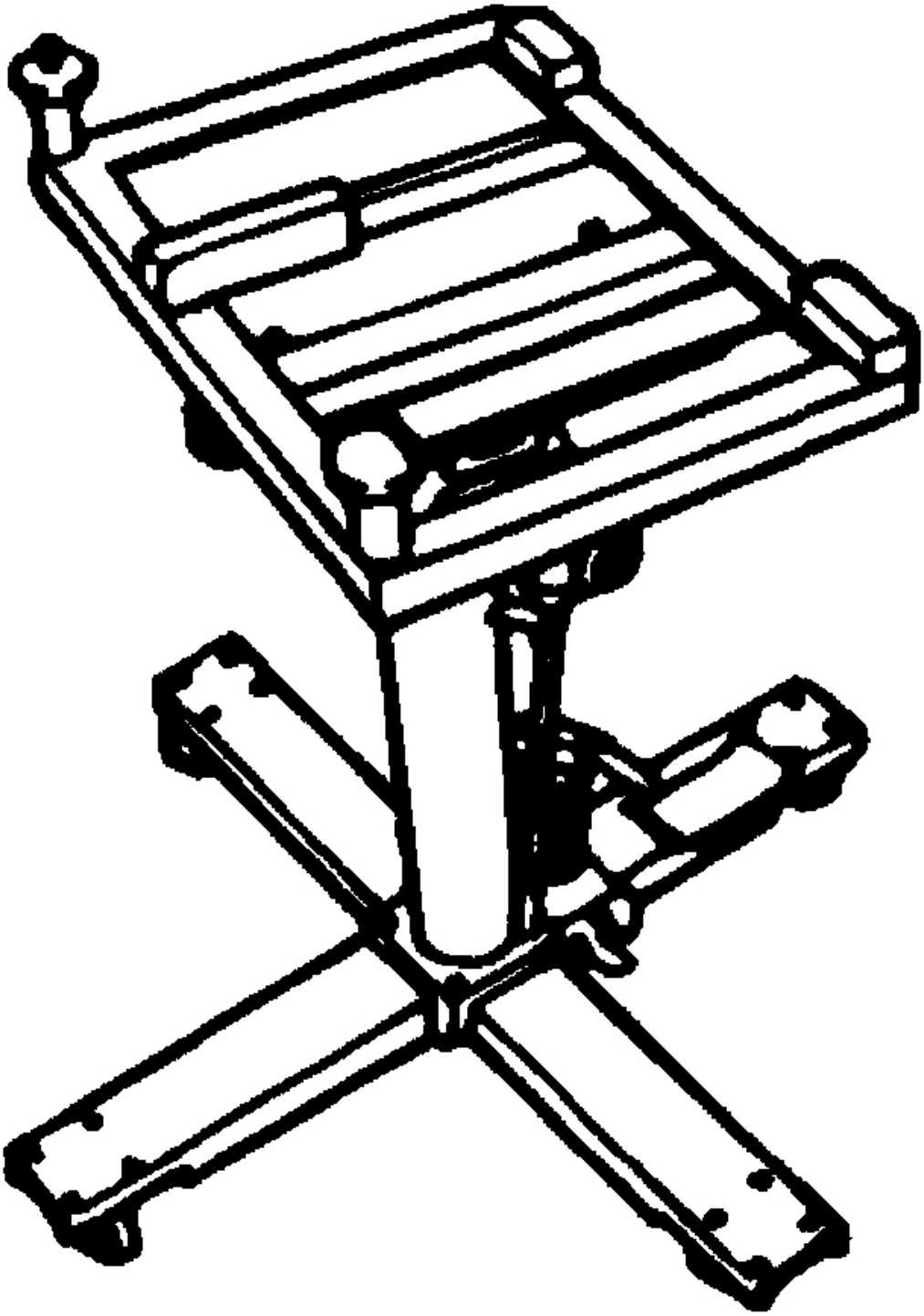

G03844549

 © 2011 Mitchell Repair Information Company, LLC.

Fig. 33: Putting Special Fixture On T/M Jack
Courtesy of HYUNDAI MOTOR CO.

21. Remove the engine mount bolts.
22. Remove the bolts and nuts that fasten the engine mount bracket to the body.

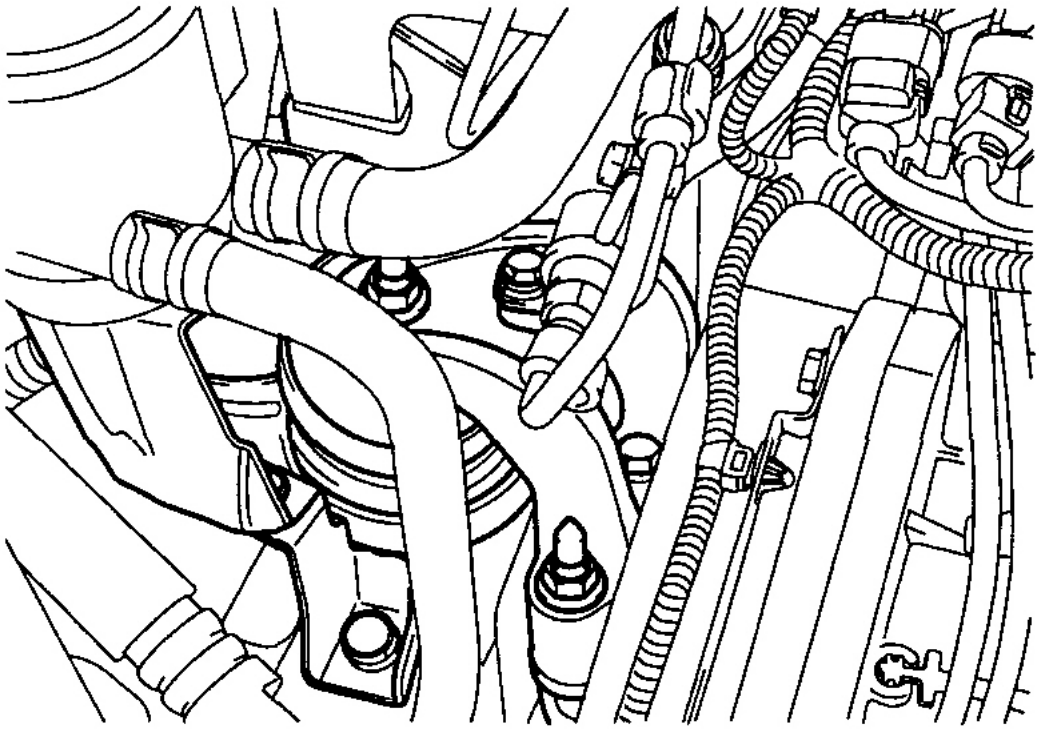

G03844550

Fig. 34: Removing Bolts And Nuts That Fasten Engine Mount Bracket To Body
Courtesy of HYUNDAI MOTOR CO.

23. Remove the transaxle mounting bracket bolts.

 © 2011 Mitchell Repair Information Company, LLC.

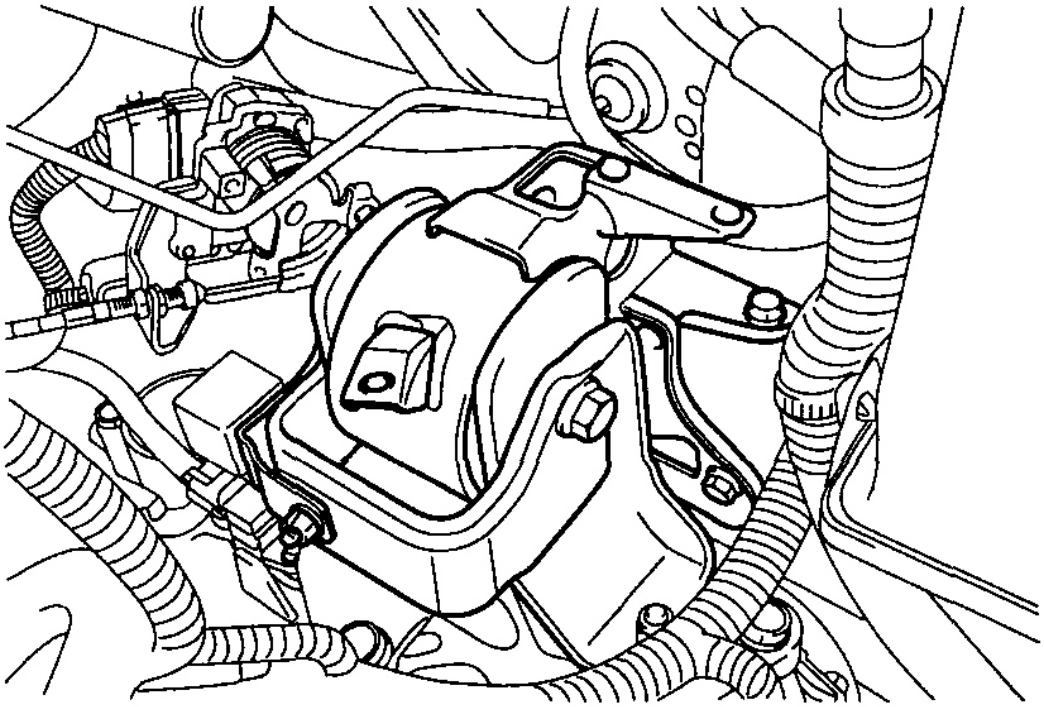

Fig. 35: Removing Transaxle Mounting Bracket Bolts
Courtesy of HYUNDAI MOTOR CO.

24. Remove the left mount insulator bolt.
25. Remove the cross member fixing bolts.
26. While directing the transaxle side downward, lift the engine and transaxle assembly up and out of the vehicle.

INSTALLATION

Installation is the reverse order of removal.

SPECIAL TOOLS

SPECIAL TOOLS IDENTIFICATION TABLE

Tool (Number and name)	Illustration	Use
Crankshaft front oil seal installer (09214-33000)		Installation of the crankshaft front oil seal

 © 2011 Mitchell Repair Information Company, LLC.

	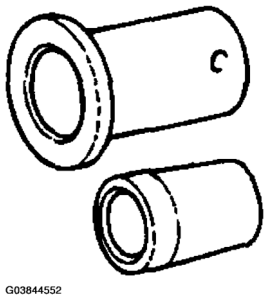	
Camshaft oil seal installer (09221-21000)	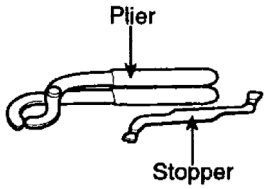	Installation of the camshaft oil seal
Valve guide installer (09221-3F000 A/B)	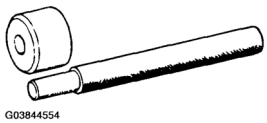	Removal and installation of the valve guide
Valve stem oil seal installer (09222-28200)	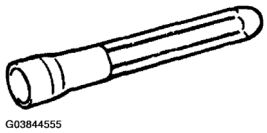	Installation of the valve stem oil seal
Valve spring compressor (09222-28000)	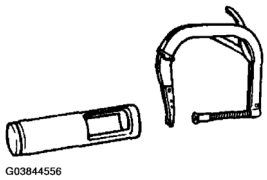	Removal and installation of the intake or exhaust valve
Valve stem oil seal remover (09222-29000)	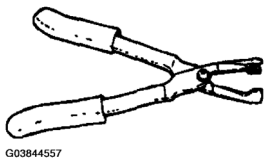	Removal of the valve stem oil seal
Crankshaft rear oil seal installer (09231 ~ 33000)	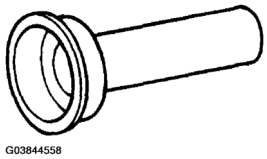	Installation of the crankshaft rear oil seal
Crankshaft wrench (09231-33100)		Used if the crankshaft needs to be

 © 2011 Mitchell Repair Information Company, LLC.

	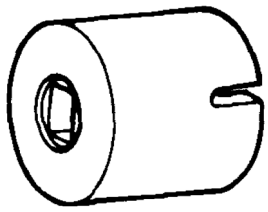 G03844559	rotated to attach the timing belt, etc.
Socket wrench 09244-28100)	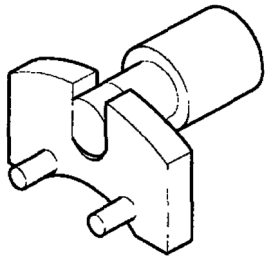 G03844560	Timing belt tension adjustment

TROUBLESHOOTING

TROUBLESHOOTING TABLE

Symptom	Probable cause	Remedy
Knocking of crankshaft and bearing	Worn main bearing	Replace
	Seized bearing	Replace
	Bent crankshaft	Replace
	Excessive crankshaft end play	Replace thrust bearing
Piston and connecting rod knock	Worn bearing	Replace
	Seized bearing	Replace
	Worn piston pin	Replace piston and pin or connecting rod
	Worn piston in cylinder	Recondition cylinder
	Broken piston ring	Repair or replace
	Improper connecting rod alignment	Replace
Noisy valves	Faulty auto-lash adjuster	Replace
	Thin or diluted engine oil (low oil pressure)	Change
	Worn or damaged valve stem or valve guide	Replace
Excessively worn cylinder and piston	Shortage of engine oil	Add or replace
		Check oil level on daily basis
	Dirty engine oil	Replace
	Poor quality of engine oil	Use proper oil

 © 2011 Mitchell Repair Information Company, LLC.

	Improperly assembled piston and connecting rod	Repair or replace
	Improper piston ring end clearance	Replace
	Dirty air cleaner	Clean air cleaner assembly and replace the air filter
Connecting rod and main bearing noise	Insufficient oil supply	Check engine oil level
	Thin or diluted engine oil	Change and determine cause
	Excessive bearing clearance	Replace
Damaged crankshaft bearing	Shortage of engine oil	Add or replace Check oil level on daily basis
	Low oil pressure	Adjust or repair
	Poor quality of engine oil	Use proper engine oil
	Worn or out-of-round of crankshaft journal	Replace
	Restricted oil passage in crankshaft	Clean
	Worn bearing	Replace bearing and check engine oil and lubrication system
	Bearing improperly installed	Replace
	Non-concentric crankshaft or bearing	Replace
Timing belt noise	Incorrect belt tension	Replace
Low compression	Blown cylinder head gasket	Replace gasket
	Worn or damaged piston rings	Replace rings
	Worn piston or cylinder	Repair or replace piston and/or cylinder block
	Worn or damaged valve seat	Repair or replace valve and/or seat ring
Oil pressure drop	Low engine oil level	Check engine oil level
	Faulty oil pressure switch	Replace
	Clogged oil filter	Replace
	Worn oil pump gears or cover	Replace
	Thin or diluted engine oil	Change and determine cause
	Oil relief valve stuck (open)	Repair
	Excessive bearing clearance	Replace
High oil pressure	Oil relief valve stuck (closed)	Repair
Excessive engine rolling and vibration	Loose engine roll stopper (front, rear)	Re-tighten
	Loose transaxle mount bracket	Re-tighten
	Loose engine mount bracket	Re-tighten
	Loose center member	Re-tighten

 © 2011 Mitchell Repair Information Company, LLC.

	Broken transaxle mount insulator Broken engine mount insulator Broken engine roll stopper insulator	Replace Replace Replace
Low coolant level	Leakage of coolant Damaged radiator core joint Corroded or cracked hoses (Radiator hose, heater hose, etc.) Faulty radiator cap valve or setting of spring Faulty thermostat Faulty engine coolant pump	 Replace Replace Replace Replace Replace
Clogged radiator	Foreign material in coolant	Replace
Abnormally high coolant temperature	Faulty thermostat Faulty radiator cap Restriction of flow in cooling system Loose or missing drive belt Faulty engine coolant pump Faulty temperature gauge or wiring Faulty electric fan Faulty thermo-sensor on radiator Insufficient coolant	Replace parts Replace Replace Adjust or replace Replace Repair or replace Repair or replace Replace Refill coolant
Abnormally low coolant temperature	Faulty thermostat Faulty temperature gauge or wiring	Replace Repair or replace
Leakage from oil cooling system	Loose hose and pipe connection Blocked or collapsed hose and pipe	Replace Repair or replace
Inoperative electrical cooling fan	Damaged	Replace or repair
Exhaust gas leakage	Loose connections Broken pipe or muffler	Re-tighten Repair or replace
Abnormal noise	Detached baffle plate in muffler Broken rubber hanger Pipe or muffler contacting vehicle body Broken pipe or muffler	Replace Replace Correct Repair or replace

TIMING SYSTEM

TIMING BELT

 © 2011 Mitchell Repair Information Company, LLC.

COMPONENTS

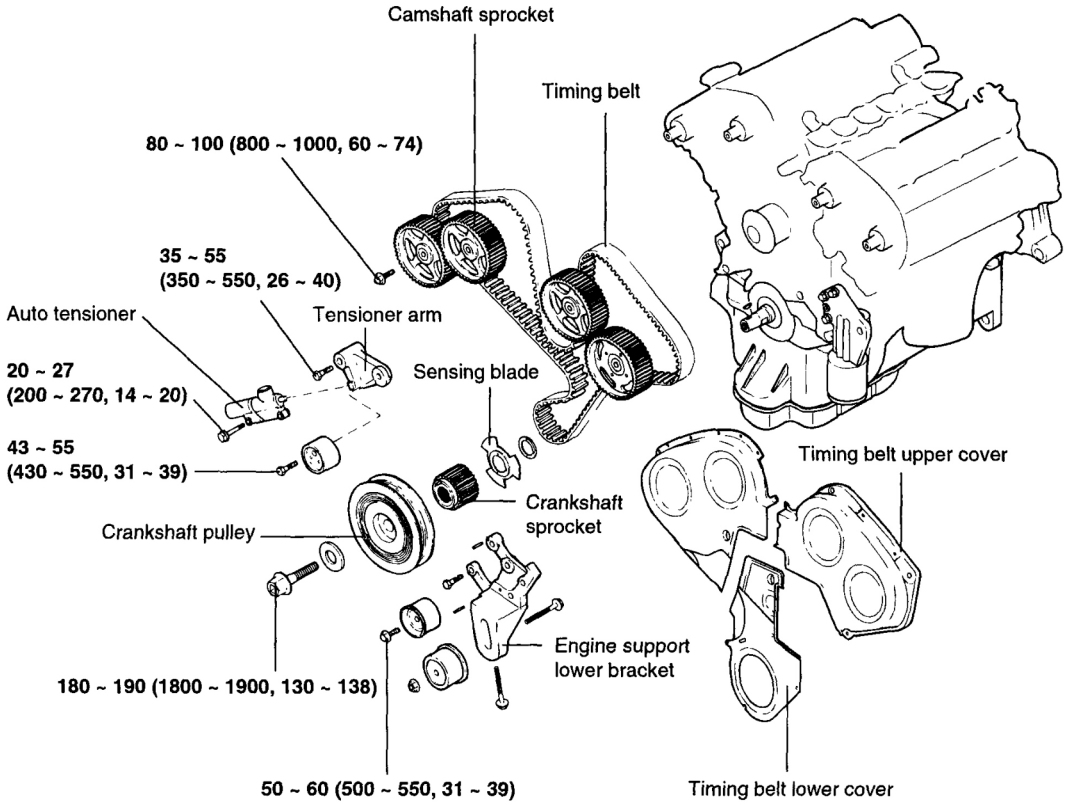

TORQUE : Nm (kg.cm, lb.ft)

G03844561

Fig. 36: Identifying Timing System Components (1 Of 2)
Courtesy of HYUNDAI MOTOR CO.

 © 2011 Mitchell Repair Information Company, LLC.

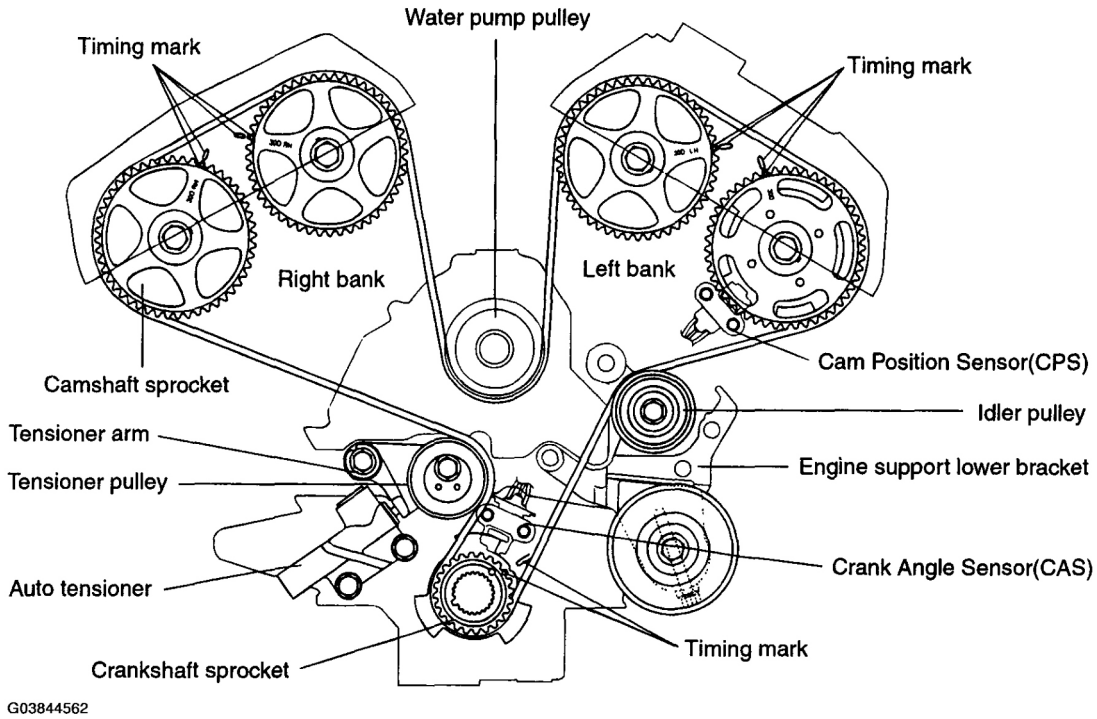

Fig. 37: Identifying Timing System Components (2 Of 2)
Courtesy of HYUNDAI MOTOR CO.

REMOVAL

1. Remove the wheel of passenger side.
2. Remove the side cover.
3. Remove the engine cover.

 © 2011 Mitchell Repair Information Company, LLC.

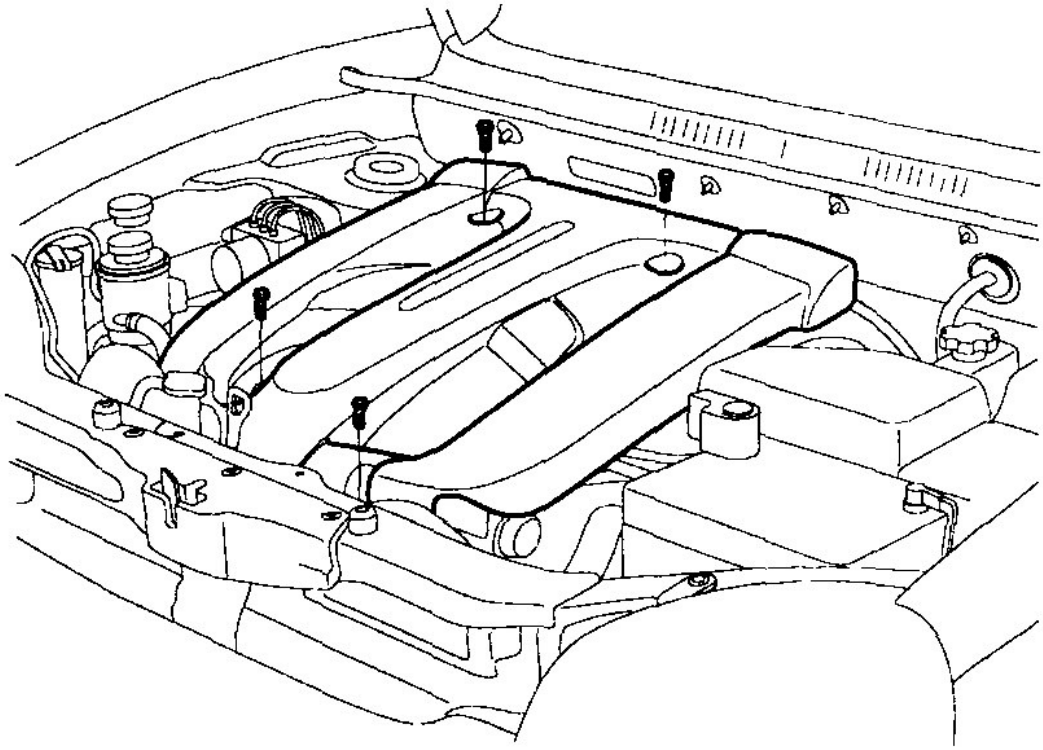

Fig. 38: Removing Engine Cover
Courtesy of HYUNDAI MOTOR CO.

4. Disconnect the power steering hose fixing on the engine mounting bracket.

 © 2011 Mitchell Repair Information Company, LLC.

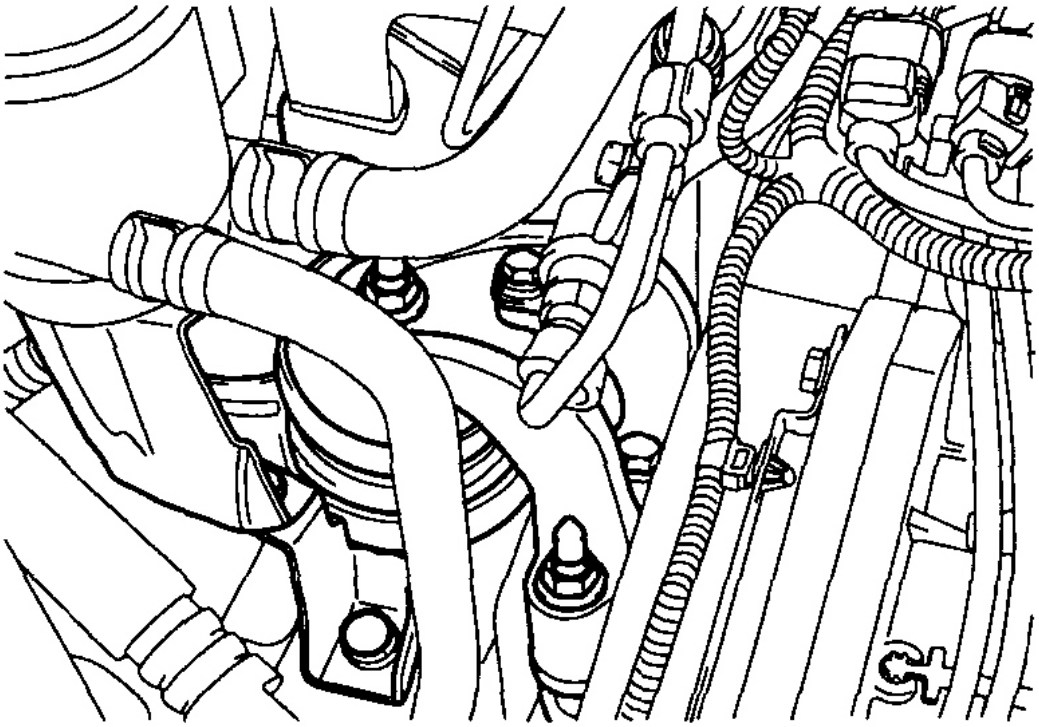

Fig. 39: Disconnecting Power steering Hose Fixing On Engine Mounting Bracket
Courtesy of HYUNDAI MOTOR CO.

5. Remove the engine mounting bracket.

CAUTION: Before removing the engine mounting bracket support the engine oil pan with a jack or equivalent so as not to do down the engine.

6. Disconnect the connectors from the timing belt upper cover and remove the upper cover.
7. Remove the drive belt and loosen the 2 alternator mounting nuts (14 mm) and 2 bolts (12 mm) connecting the engine support bracket.

 © 2011 Mitchell Repair Information Company, LLC.

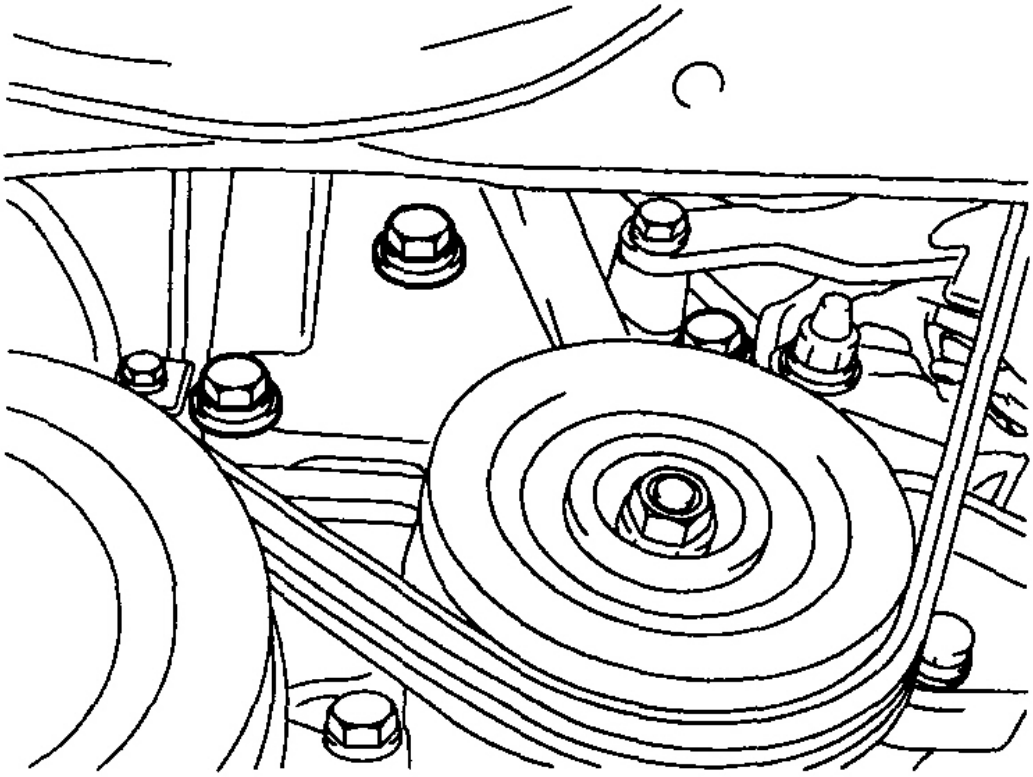

Fig. 40: Removing Drive Belt
Courtesy of HYUNDAI MOTOR CO.

8. Loosen the 5 engine support bracket bolts.

 © 2011 Mitchell Repair Information Company, LLC.

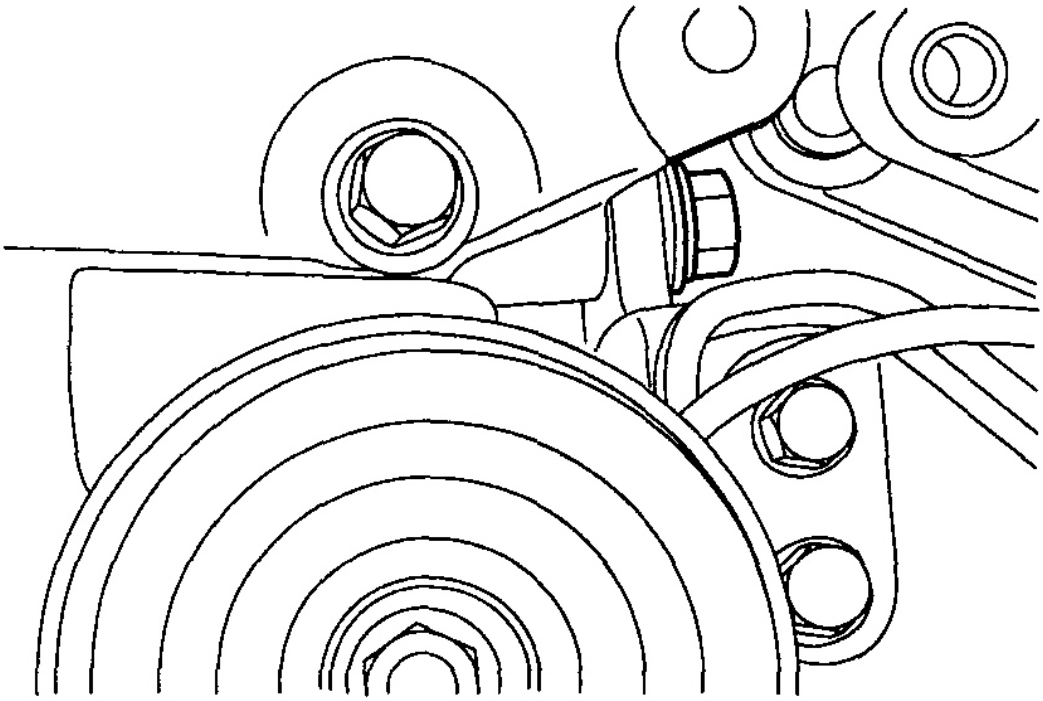

Fig. 41: Removing Engine Support Bracket Bolt
Courtesy of HYUNDAI MOTOR CO.

CAUTION: To loosen the bolt shown In the forward of engine, first disconnect the alternator.

9. Remove the engine support bracket bolt by moving the engine up and down slightly and remove the bracket upward.
10. Remove the auto tensioner.

 © 2011 Mitchell Repair Information Company, LLC.

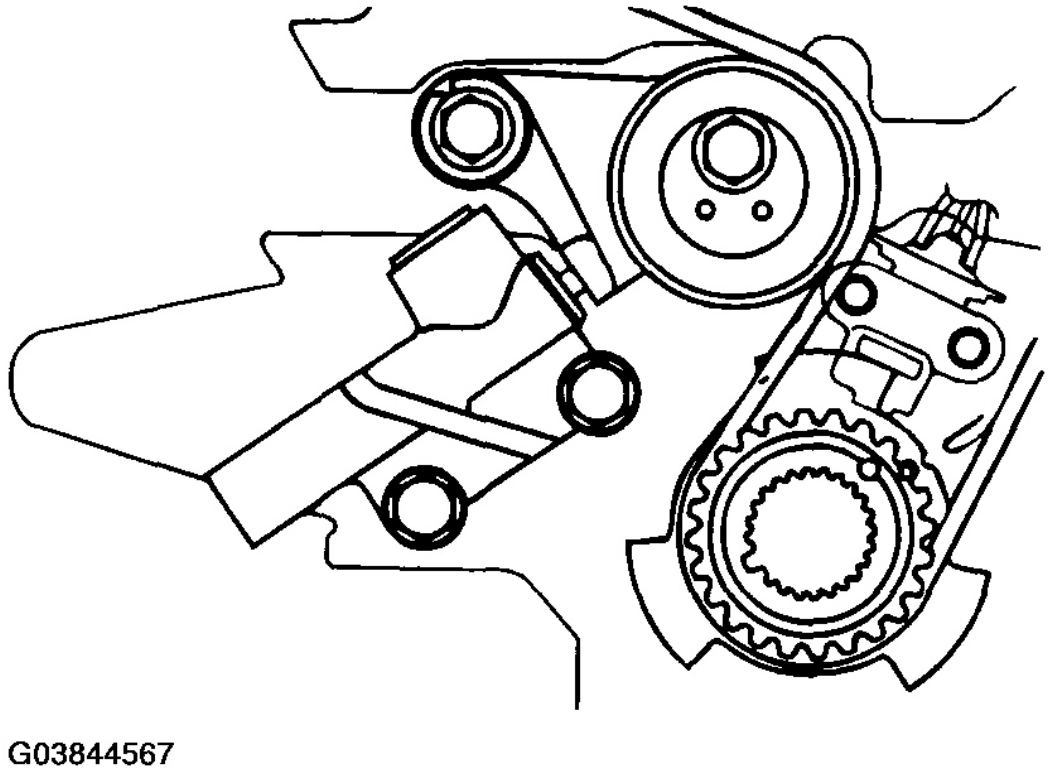

Fig. 42: Removing Auto Tensioner
Courtesy of HYUNDAI MOTOR CO.

NOTE: **Rotate the crankshaft clockwise and align the timing mark to set the No. 1 cylinder's piston to TDC (compression stroke).**
At this time, the timing marks of the camshaft sprocket and cylinder head cover should coincide with each other.

11. Unbolt the tensioner to remove the timing belt.

NOTE: **If you plan to use the timing belt again, mark the rotation direction on the belt so you reinstall it correctly.**

 © 2011 Mitchell Repair Information Company, LLC.

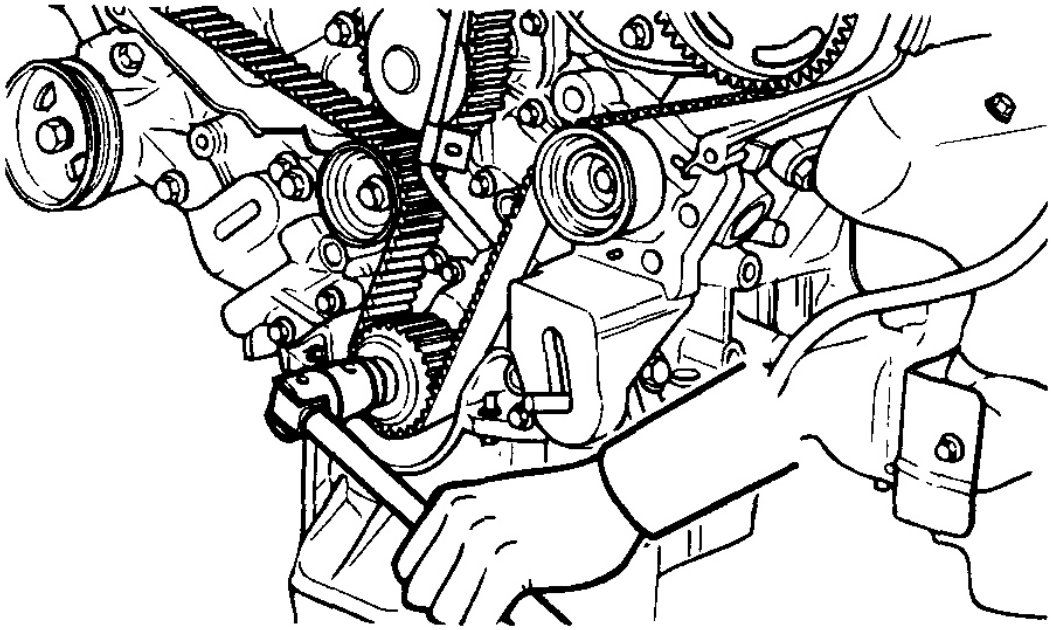

G03844568

Fig. 43: Removing Timing Belt
Courtesy of HYUNDAI MOTOR CO.

INSPECTION

1. Inspect the belt closely. If the following problems are evident, replace the belt with a new one.
    1. Hardened back surface of rubber

       Back surface is glossy, non-elastic and so hard that when the nail of your finger is pressed into it, no mark is produced.

 © 2011 Mitchell Repair Information Company, LLC.

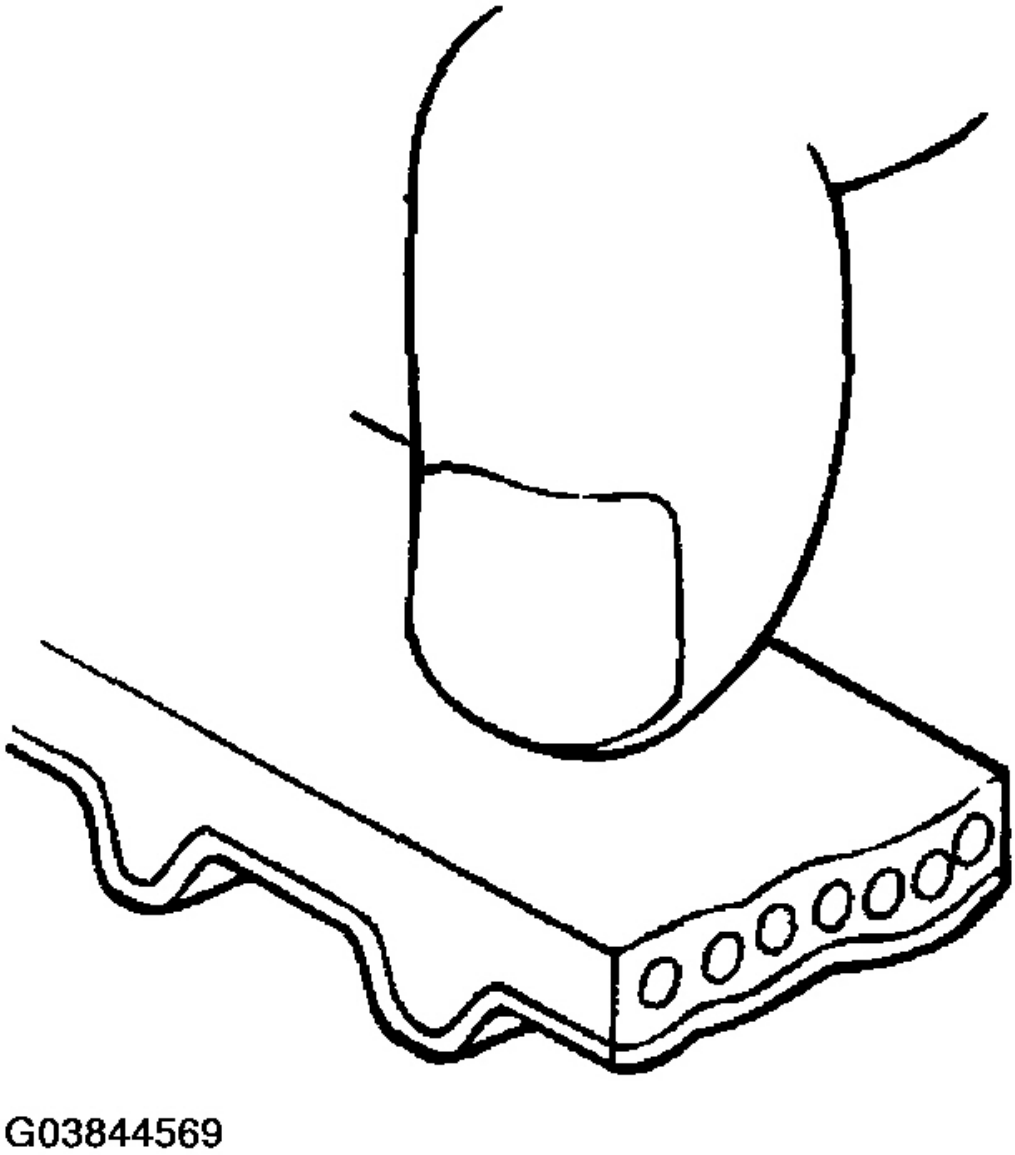

Fig. 44: Inspecting Timing Belt (1 Of 4)
Courtesy of HYUNDAI MOTOR CO.

2. Cracked back surface of rubber.

 © 2011 Mitchell Repair Information Company, LLC.

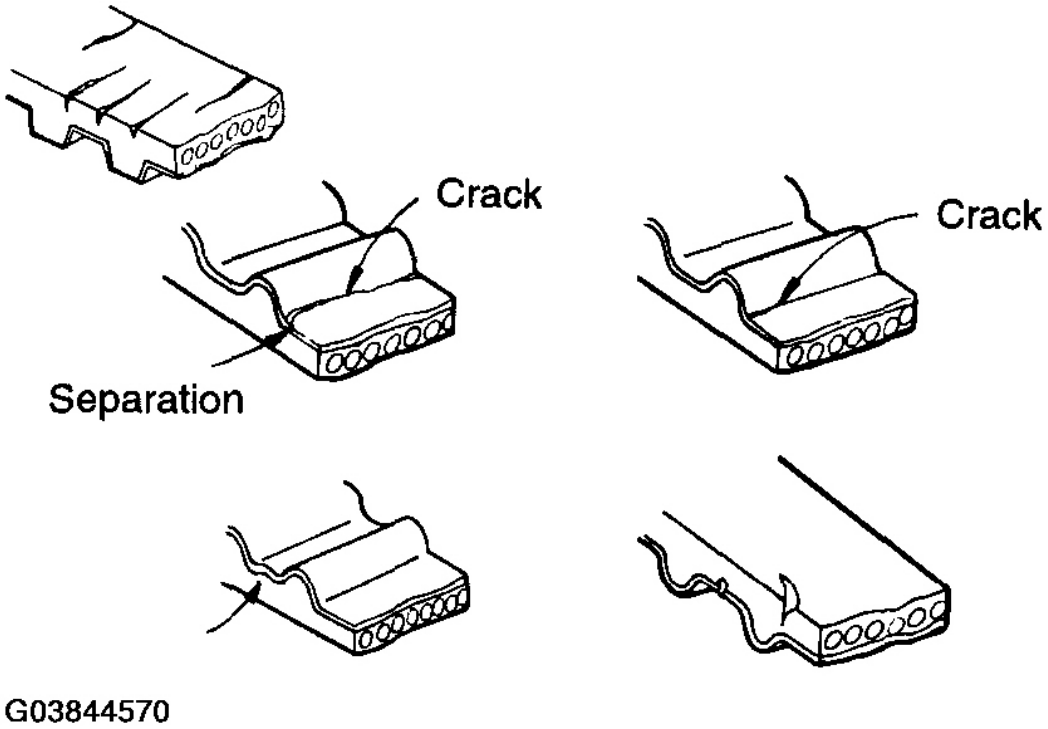

Fig. 45: Inspecting Timing Belt (2 Of 4)
Courtesy of HYUNDAI MOTOR CO.

3. Side of belt is badly worn.

NOTE: **A belt in good condition should have clear-cut sides as if it were cut with a sharp knife.**

 © 2011 Mitchell Repair Information Company, LLC.

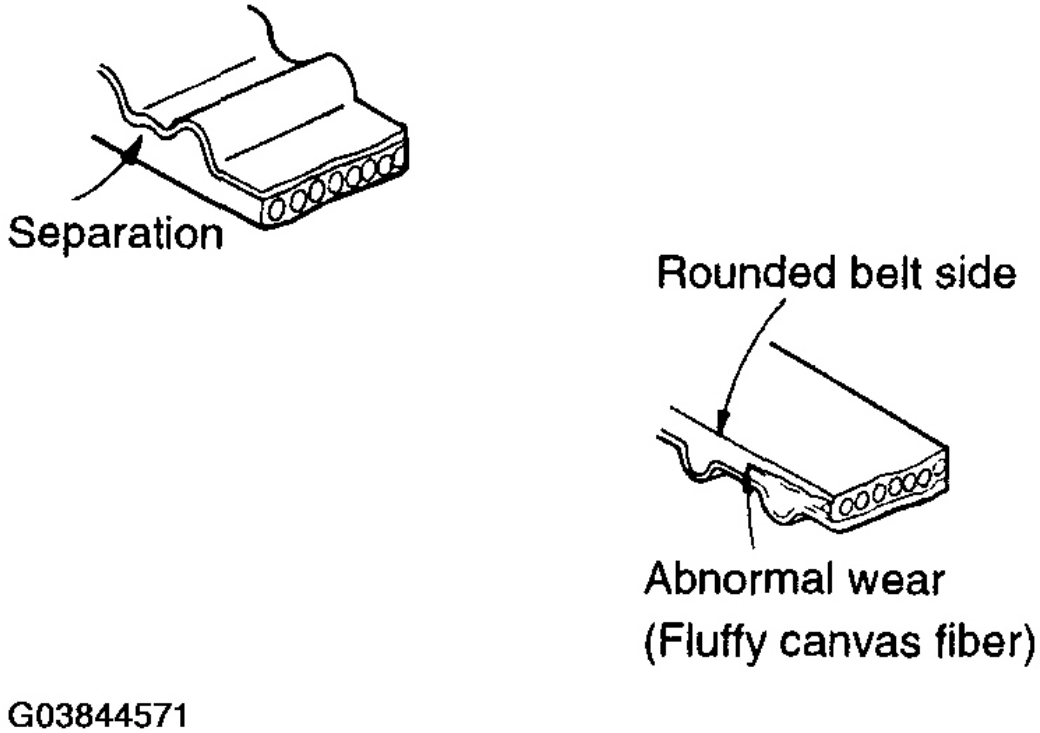

Fig. 46: Inspecting Timing Belt (3 Of 4)
Courtesy of HYUNDAI MOTOR CO.

4. Teeth are badly worn out.

   Initial stage: Canvas on load side of the tooth flank worn (fluffy canvas fibers, rubber gone, color changed to white, and unclear canvas texture)

   Last stage: Canvas on the load side of the tooth flank worn down and rubber exposed (tooth width reduced).

5. Missing toot

 © 2011 Mitchell Repair Information Company, LLC.

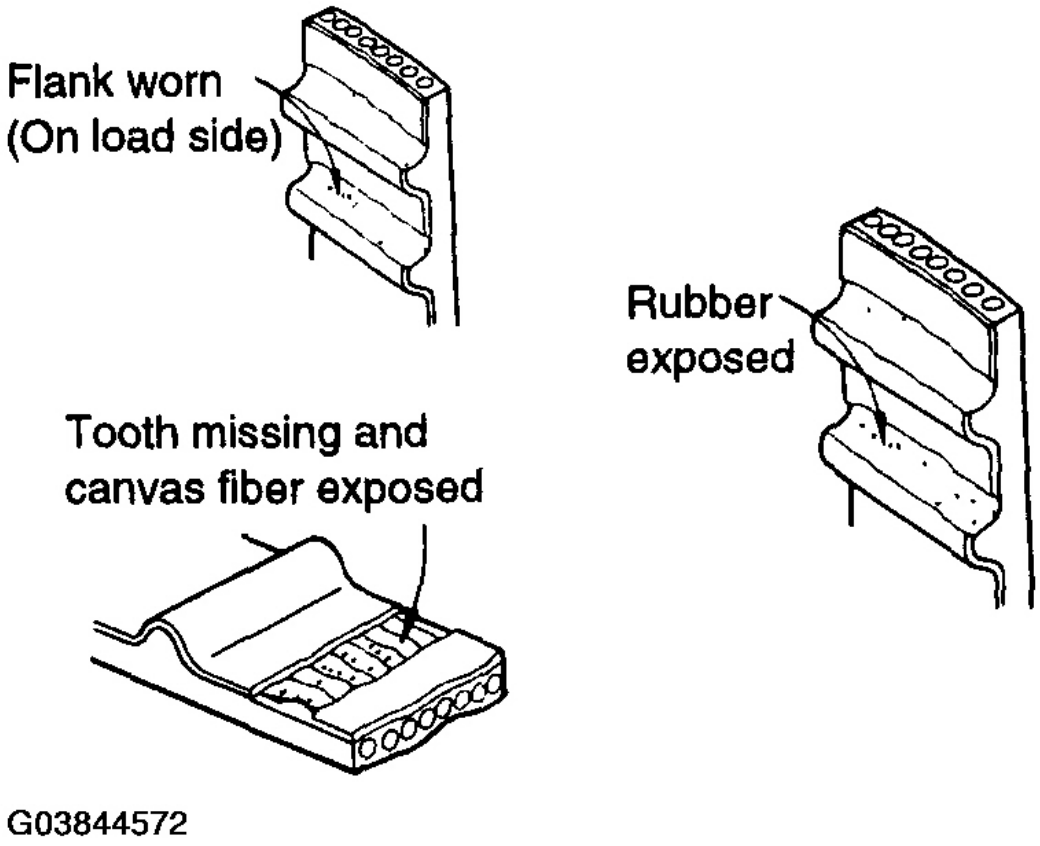

Fig. 47: Inspecting Timing Belt (4 Of 4)
Courtesy of HYUNDAI MOTOR CO.

2. If backlash or an irregular noise is observed when rotating the pulley, replace the timing belt tensioner and idler pulley.

 © 2011 Mitchell Repair Information Company, LLC.

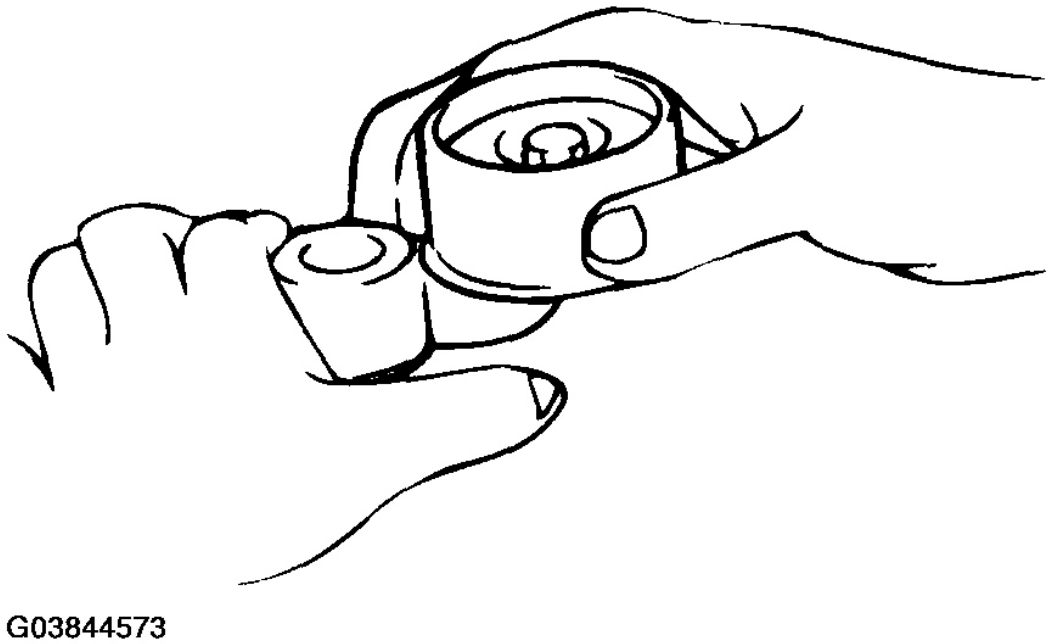

Fig. 48: Inspecting Pulley
Courtesy of HYUNDAI MOTOR CO.

INSTALLATION

The method of installing timing belt and auto tensioner.

1. Install idler pulley to engine support lower bracket.

 © 2011 Mitchell Repair Information Company, LLC.

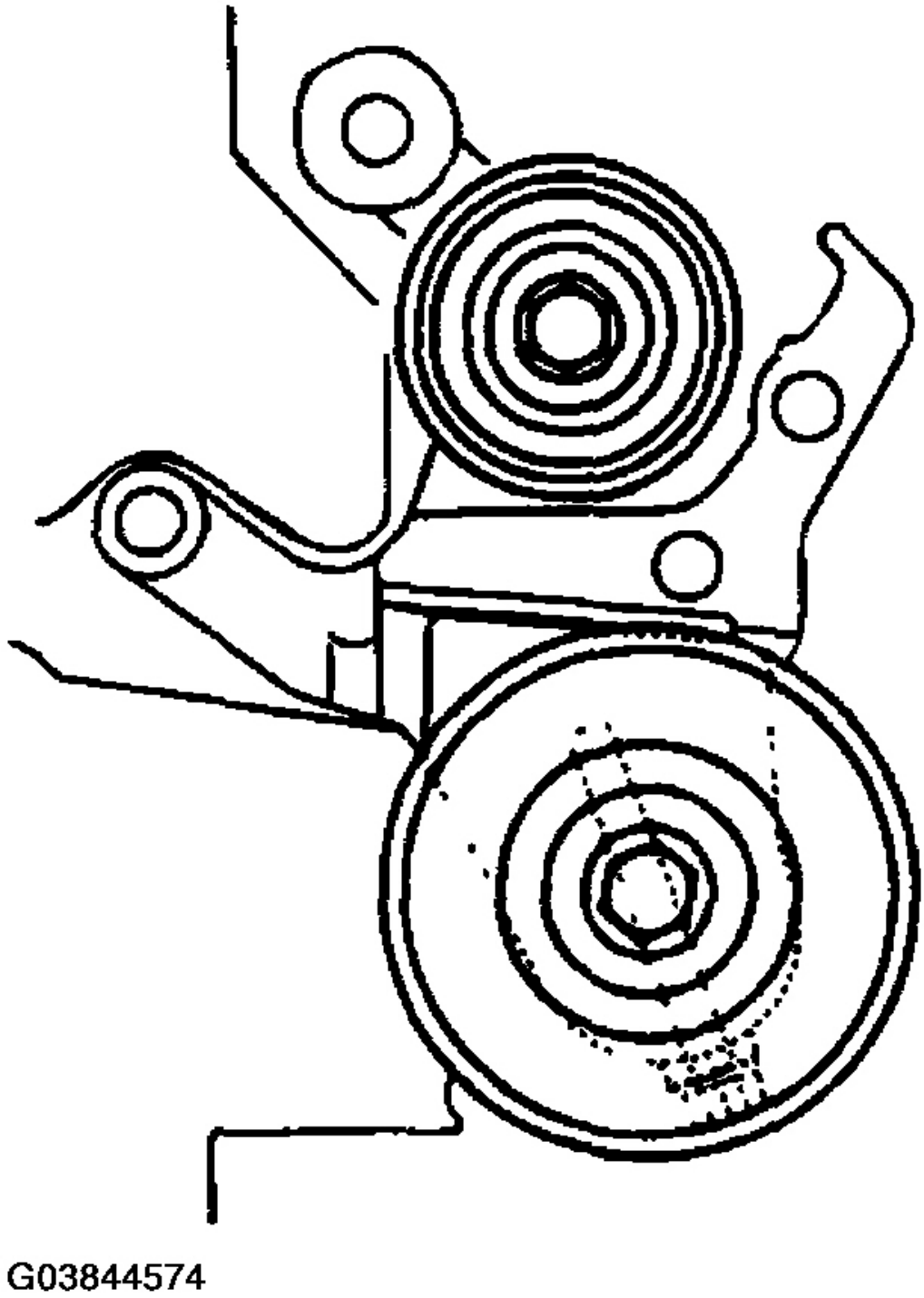

Fig. 49: Installing Idler Pulley To Engine Support Lower Bracket

 © 2011 Mitchell Repair Information Company, LLC.

Courtesy of HYUNDAI MOTOR CO.

2. Install tensioner arm, shaft and plane washer to cylinder block.

   Tightening torque : 35 ~55 Nm (350 ~ 550 kg.cm)

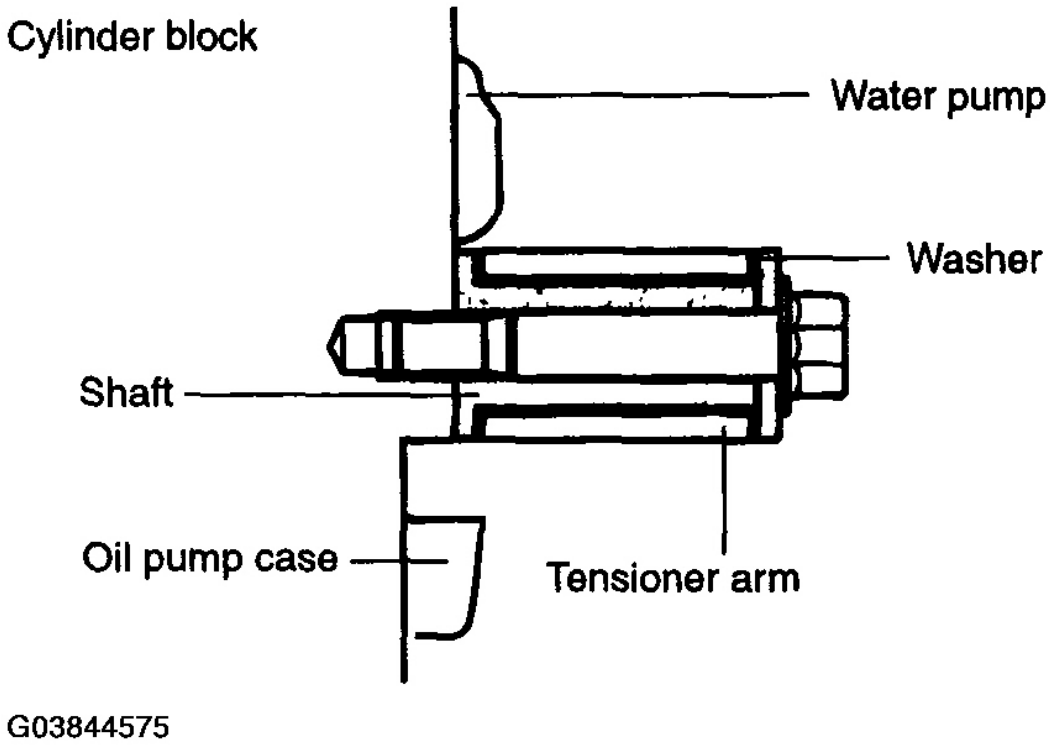

Fig. 50: Installing Tensioner Arm, Shaft And Plane Washer To Cylinder Block
Courtesy of HYUNDAI MOTOR CO.

3. Install crankshaft sprocket and align the timing mark.

 © 2011 Mitchell Repair Information Company, LLC.

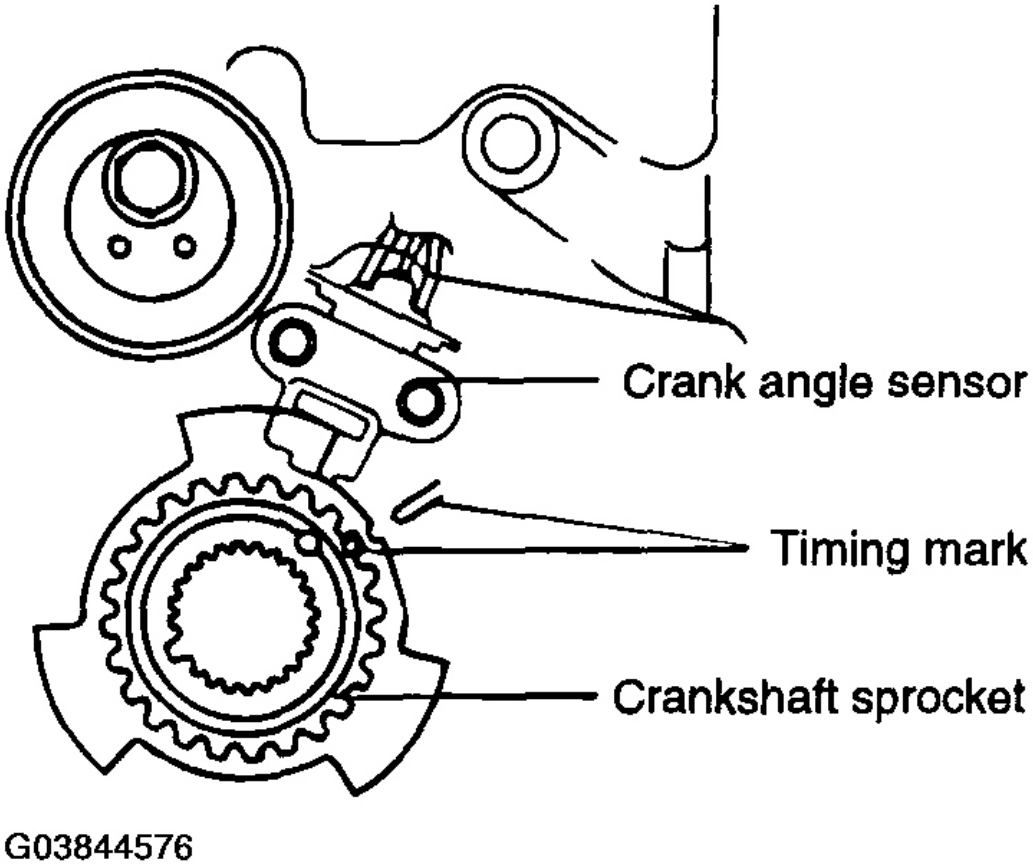

Fig. 51: Aligning Timing Mark
Courtesy of HYUNDAI MOTOR CO.

CAUTION: Be careful not to bend crankshaft sensing blade.

 © 2011 Mitchell Repair Information Company, LLC.

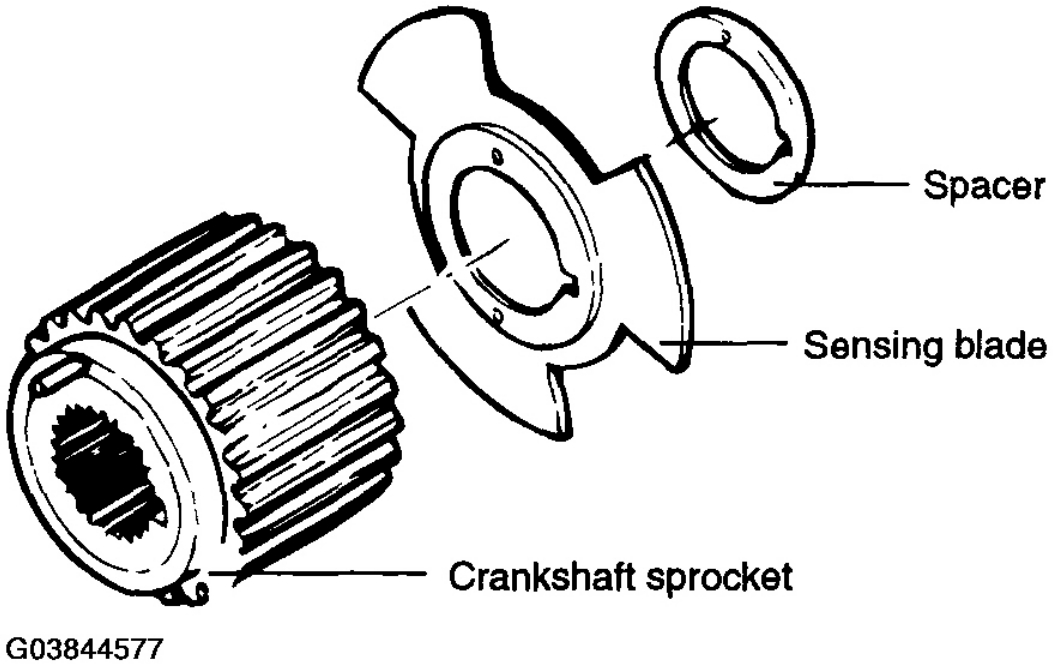

Fig. 52: Identifying Crankshaft Sprocket Sensing Blade
Courtesy of HYUNDAI MOTOR CO.

4. Install camshaft sprocket and adjust initial installation state as in **Fig. 53** .

 © 2011 Mitchell Repair Information Company, LLC.

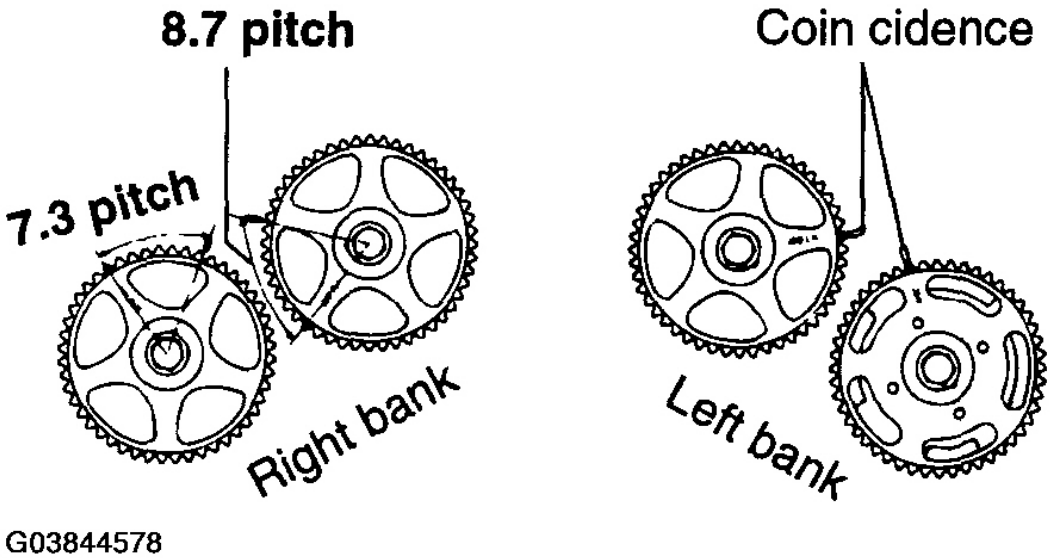

Fig. 53: Installing Camshaft Sprocket
Courtesy of HYUNDAI MOTOR CO.

5. Install auto tensioner to oil pump case.

NOTE: If the auto tensioner rod is in its fully extended position, reset it as follows.

 © 2011 Mitchell Repair Information Company, LLC.

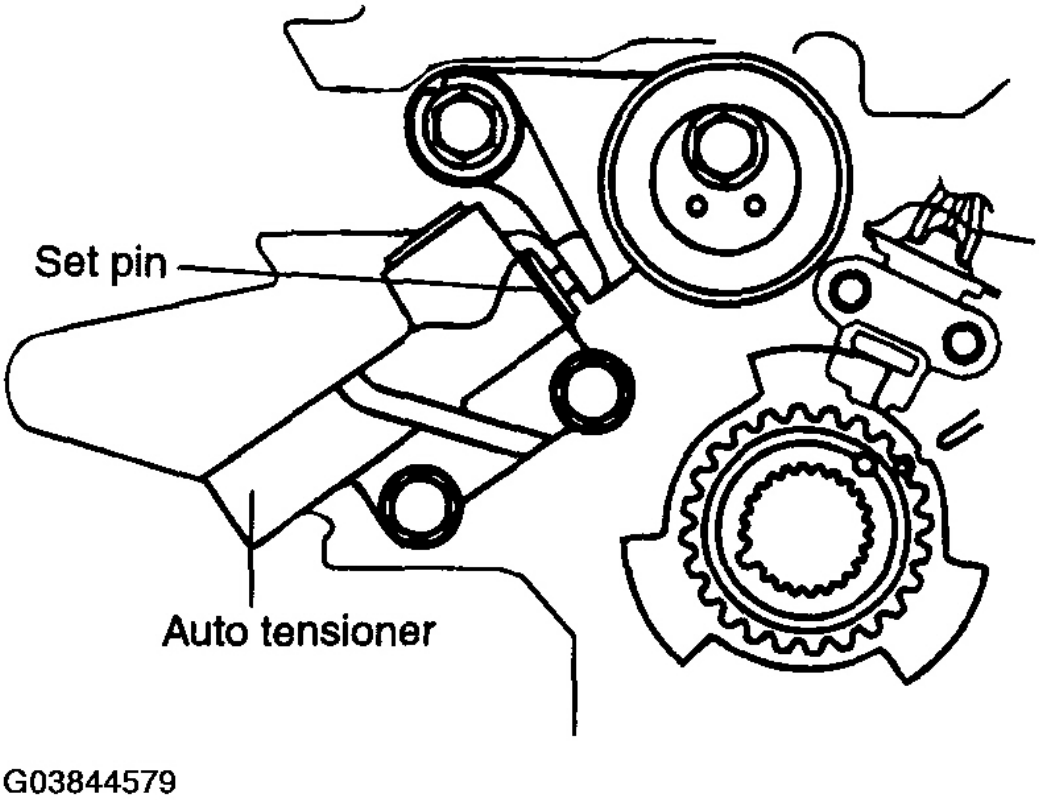

Fig. 54: Installing Auto Tensioner To Oil Pump Case
Courtesy of HYUNDAI MOTOR CO.

1. **Clamp it in a vise equipped with soft jaws, in a level position. Use a plain washer if there is a plug at the bottom of the auto tensioner.**
2. **Compress the rod slowly until the set hole in the rod is aligned with set hole in the cylinder.**

 © 2011 Mitchell Repair Information Company, LLC.

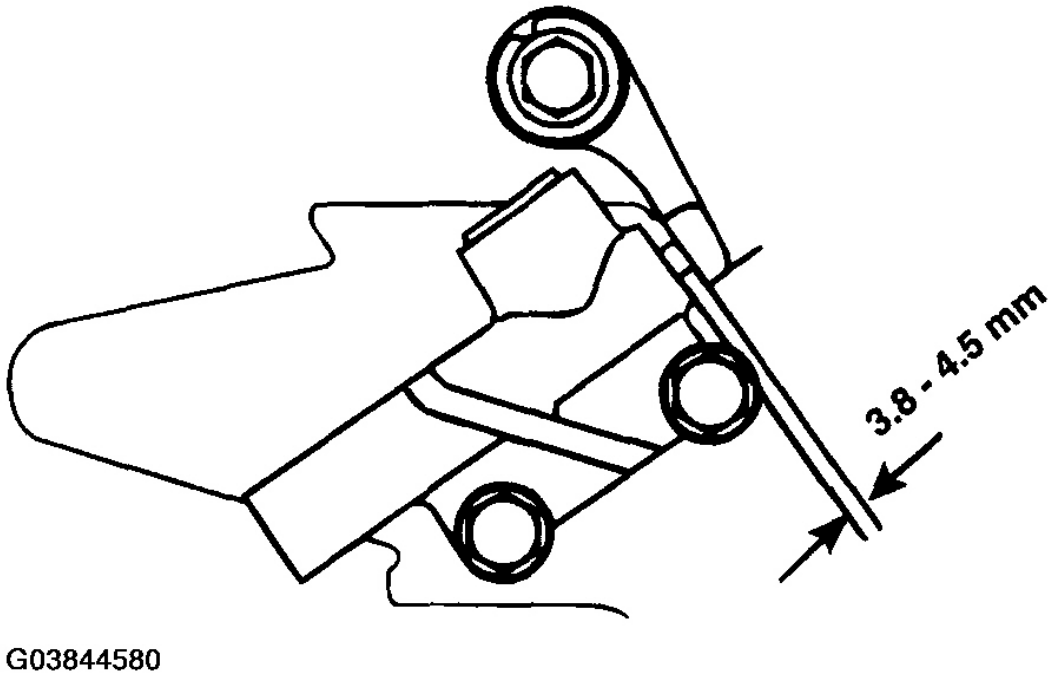

Fig. 55: Compressing Rod
Courtesy of HYUNDAI MOTOR CO.

3. **Insert a set pin through the auto tensioner body and rod.**

CAUTION: Leave the set pin installed in the auto tensioner.

6. Align the timing marks of each sprocket and install the timing belt in this order.

   Crankshaft sprocket --> Idler pulley --> Exhaust camshaft sprocket (LH) --> Intake camshaft sprocket (RH) --> Exhaust camshaft sprocket (RH) --> Tensioner pulley

 © 2011 Mitchell Repair Information Company, LLC.

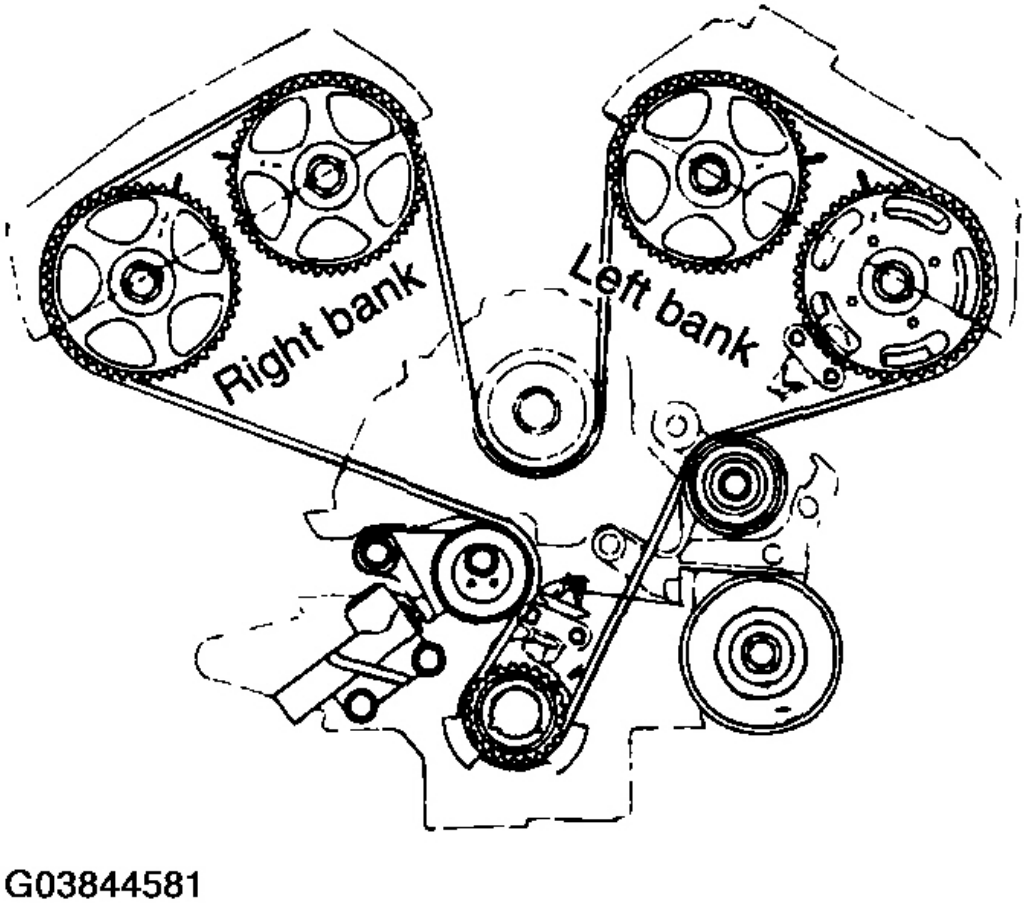

Fig. 56: Installing Timing Belt
Courtesy of HYUNDAI MOTOR CO.

NOTE:

- **In this step, No. 1 is in TDC (Compression stroke)**
- **Do not insert fingers.**

7. After installing the timing belt, reconfirm the timing mark.
8. Timing belt tension adjustment
    1. Setting tension (under Non-operation of auto tensioner: set pin installed)
        1. After turning the crankshaft 1/4 revolution counter clockwise, turn it clockwise to fit it in the position counter clockwise, turn it clockwise to fit it in the position of No. 1 TDC.

           Release the center bolt, and apply the tension to the belt using tensioner pulley socket and torque wrench as shown in **Fig. 57** and then tighten the center bolt by specified torque.

 © 2011 Mitchell Repair Information Company, LLC.

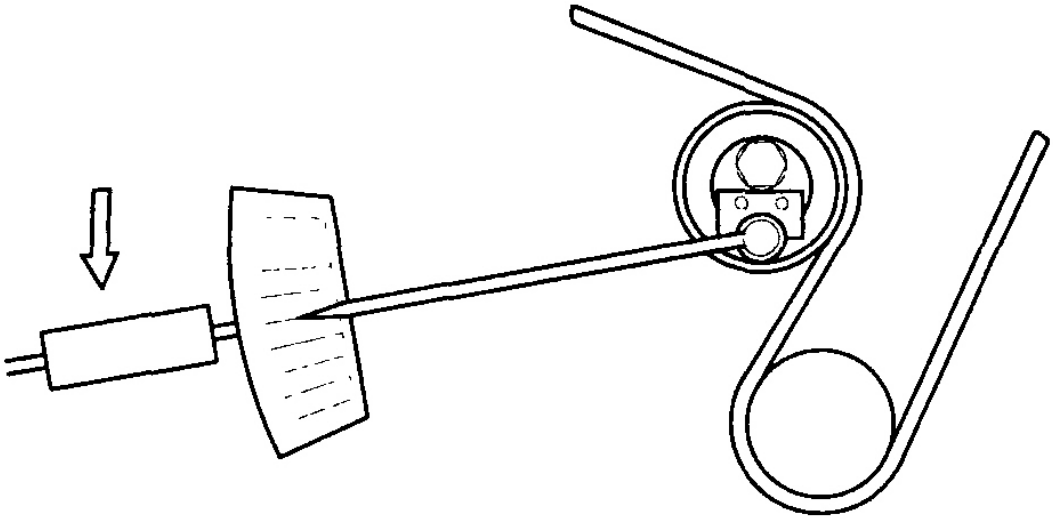

G03844582

Fig. 57: Adjusting Timing Belt Tension
Courtesy of HYUNDAI MOTOR CO.

Tension torque: 5 Nm (50 kg.cm, 3.71 lb.ft)

NOTE: Be careful not to turn the tensioner pulley with the center bolt when tightening the center bolt.

Tightening torque

Tensioner bolt:

43 ~ 55 Nm (430 ~ 550 kg.cm, 31 ~ 39 lb.ft)

2. Pull out the set pin of auto tensioner

2. Tension checking (under operation of auto tensioner: set pin removed)
    1. Rotate the crankshaft 2 rotation clockwise and measure the projected load of auto tensioner in the TDC (#1 compression stroke) after 5 minutes.
    2. Check the projected length is 3.8 ~ 4.5 mm.
    3. Check again if the timing marks of each sprocket is with in specified position.

9. Install the engine support bracket.
10. Install the timing belt cover.
11. Install the alternator and drive belt.
12. Install the engine mounting bracket.

 © 2011 Mitchell Repair Information Company, LLC.

13. Install the side cover.
14. Install the wheel of passenger side.

CYLINDER HEAD ASSEMBLY

CYLINDER HEAD

COMPONENTS

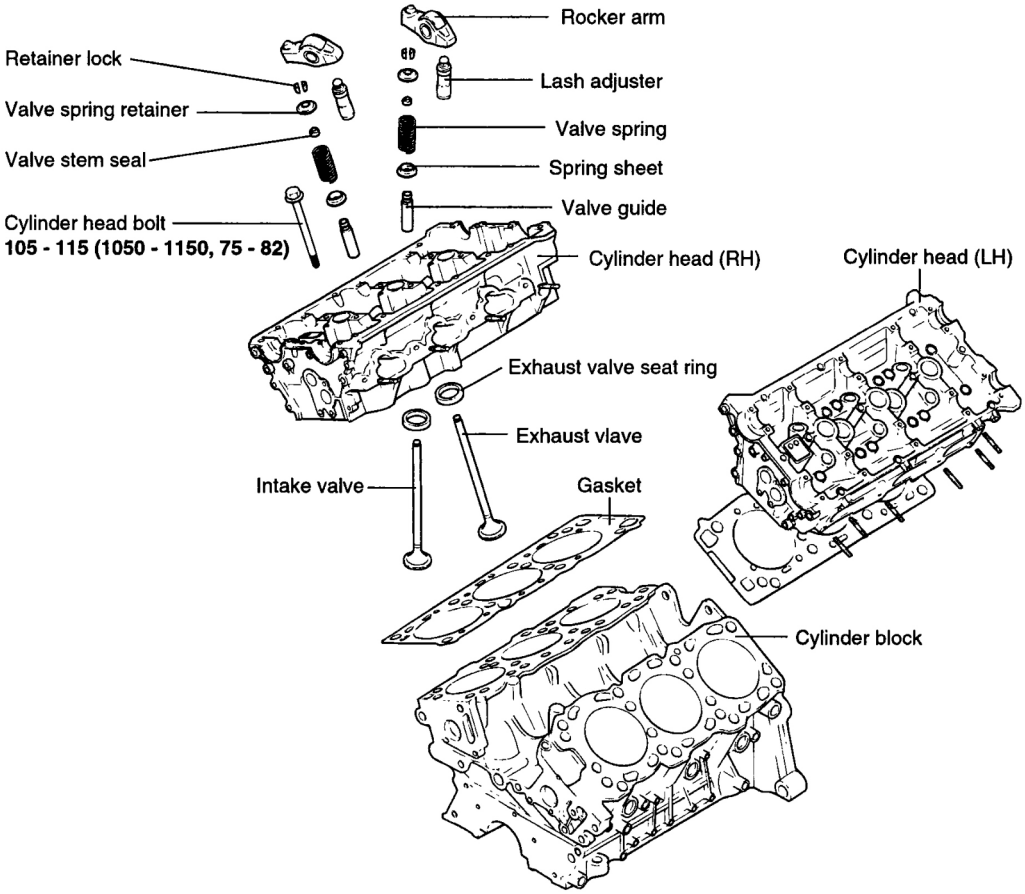

TORQUE : Nm (kg.cm, lb.ft)

G03844583

Fig. 58: Identifying Cylinder Head Components
Courtesy of HYUNDAI MOTOR CO.

DISASSEMBLY

1. Remove the engine. For additional information, refer to **ENGINE AND TRANSAXLE ASSEMBLY** .

 © 2011 Mitchell Repair Information Company, LLC.

2. For additional information, refer to **INTAKE MANIFOLD** .
3. Remove the cables from the spark plugs. The cables should be removed by holding the boot portion.
4. Remove the ignition coil.
5. Remove the upper and lower timing belt cover.

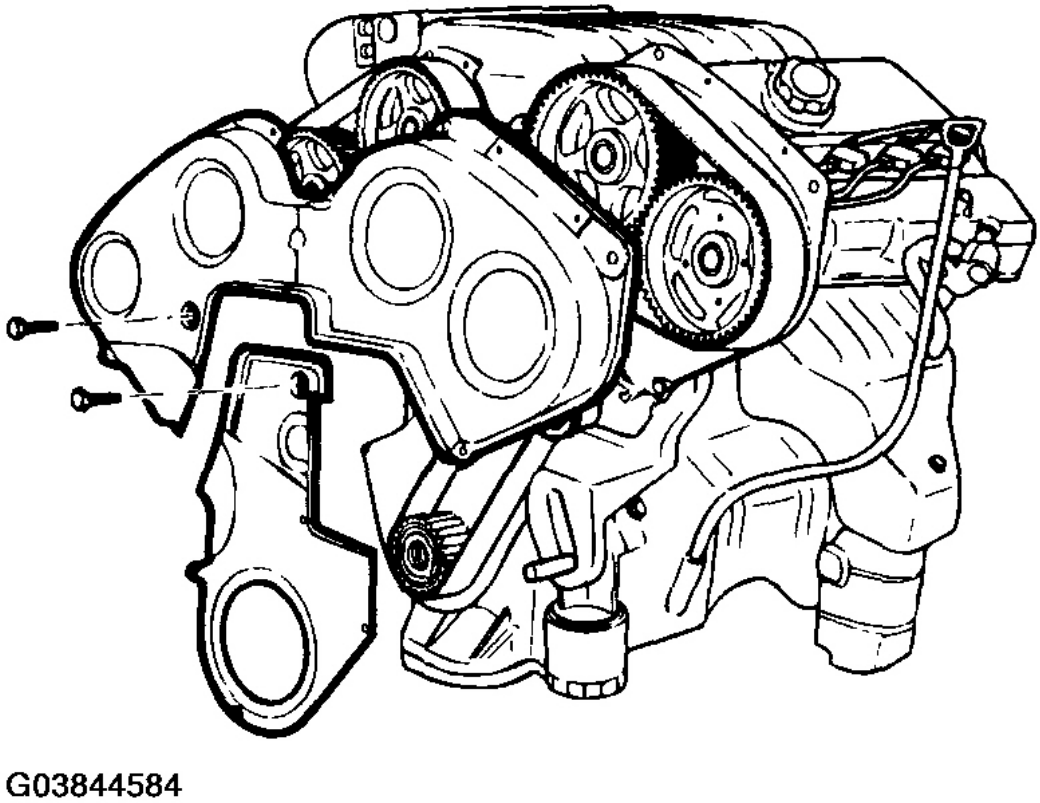

Fig. 59: Removing Upper And Lower Timing Belt Cover
Courtesy of HYUNDAI MOTOR CO.

6. Remove the timing belt and camshaft sprockets.

   For additional information, refer to **TIMING BELT** .

 © 2011 Mitchell Repair Information Company, LLC.

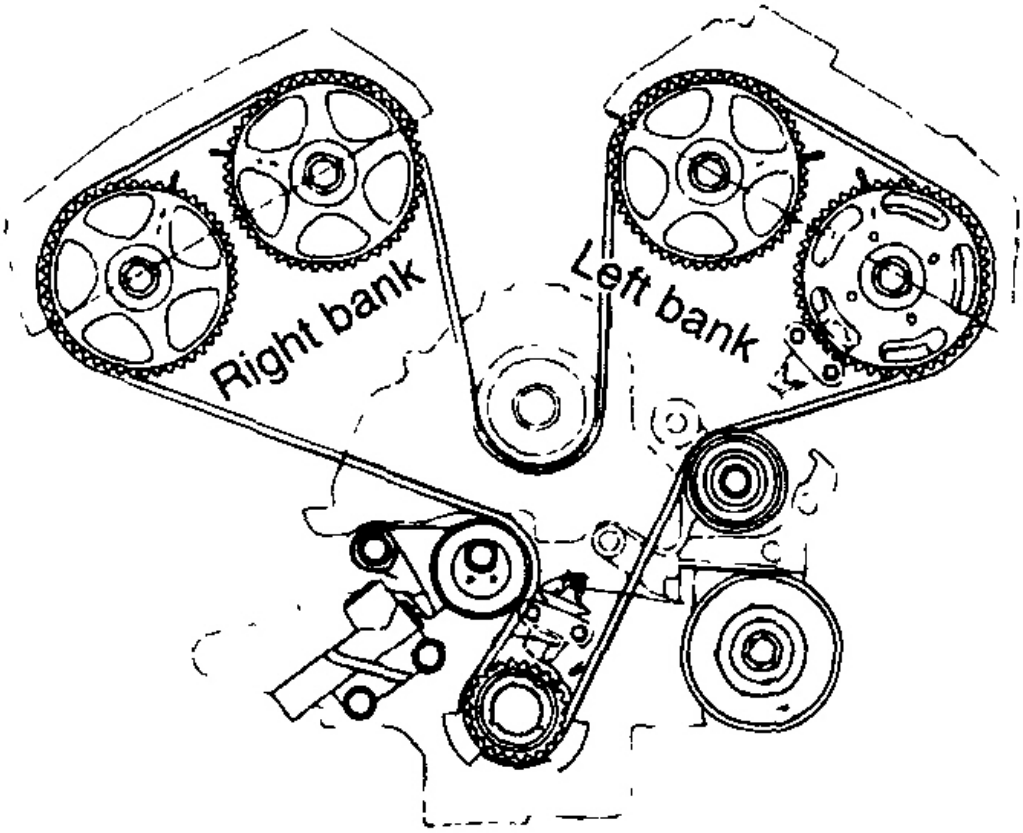

G03844585

Fig. 60: Identifying Timing Belt And Camshaft Sprockets
Courtesy of HYUNDAI MOTOR CO.

7. Remove the heat protector and exhaust manifold assembly.
8. Remove the coolant pump pulley and head cover.
9. Remove the intake and exhaust camshaft.

   For additional information, refer to **CAMSHAFT** .

10. Remove the cylinder head assembly. The cylinder head bolts should be removed using the 12 mm socket, in two or three steps.

 © 2011 Mitchell Repair Information Company, LLC.

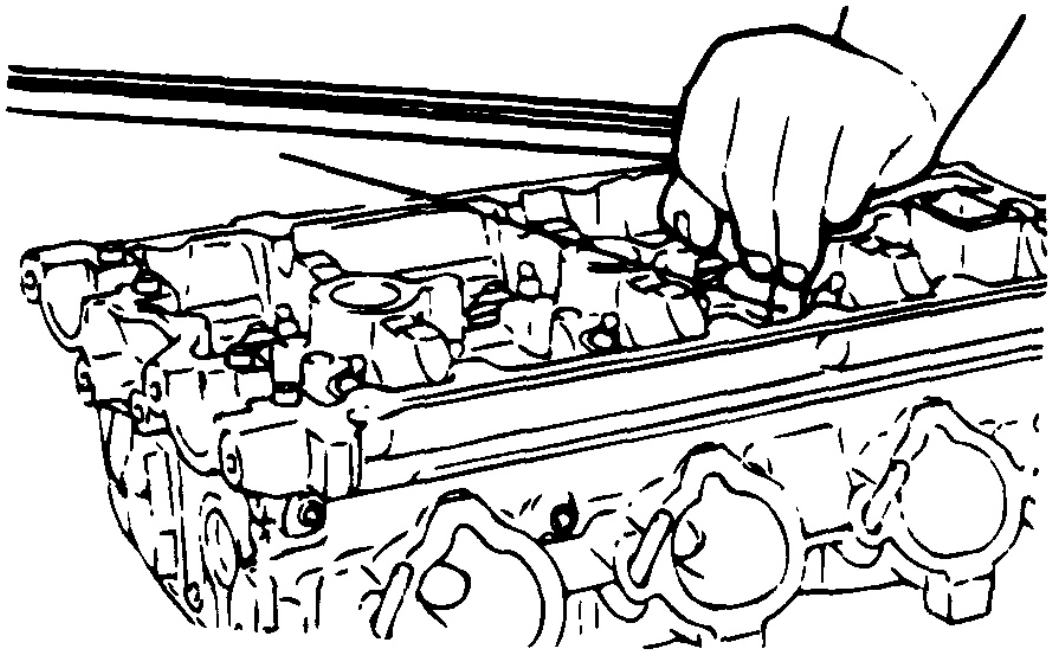

G03844586

Fig. 61: Removing Cylinder Head Bolts
Courtesy of HYUNDAI MOTOR CO.

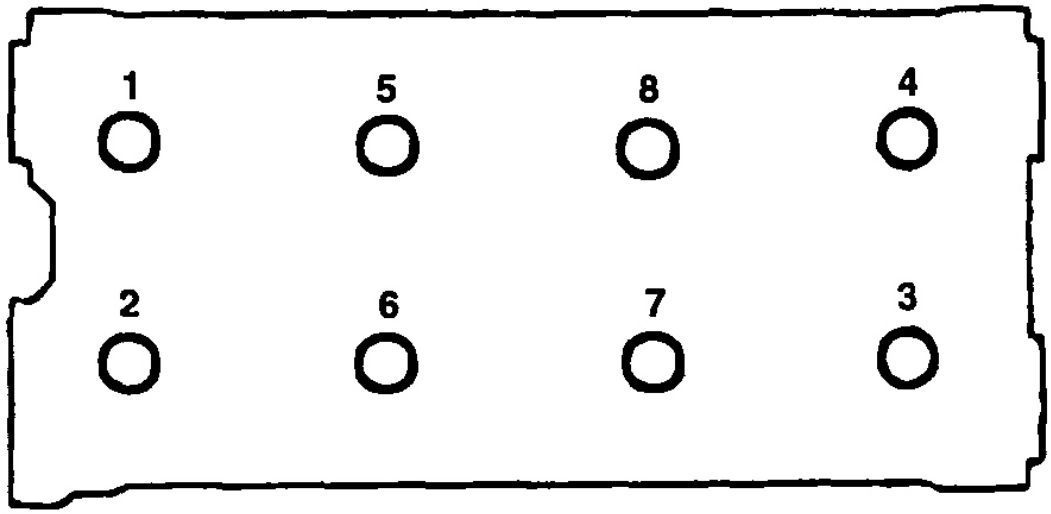

G03844587

 © 2011 Mitchell Repair Information Company, LLC.

Fig. 62: Identifying Removal Order Of Cylinder Head Bolts
Courtesy of HYUNDAI MOTOR CO.

11. Clean the gasket pieces from the cylinder block top surface and cylinder head bottom surface.

NOTE: Make sure that fragments from the gasket do not fall in the engine.

RETAINER LOCK

1. Compress the valve spring using special tool. (09222 - 28000, 09222 - 28100)
2. Remove the retainer lock.

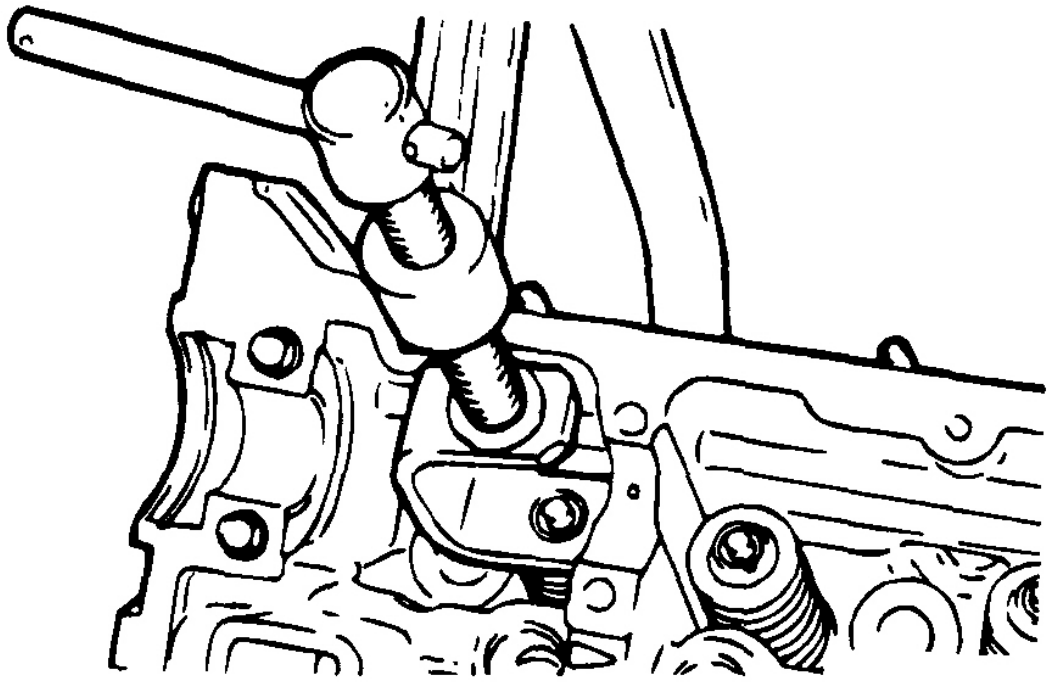

G03844588

Fig. 63: Removing Retainer Lock
Courtesy of HYUNDAI MOTOR CO.

3. Remove the valve spring, valve spring retainer valve spring sheet and valve.

INSPECTION

CYLINDER HEAD

1. Remove scale, sealing compound and carbon deposits. After cleaning oil passages, apply compressed air

 © 2011 Mitchell Repair Information Company, LLC.

to make certain that the passages are not clogged.

2. Visually check the cylinder head for cracks, damage or water leakage.
3. Check the cylinder head surface for flatness with a straight edge and feeler gauge as shown in **Fig. 64** .

   Cylinder head flatness

   Standard dimensions: Max. 0.03 mm (0.0059 in.)

   Service limit: 0.05 mm (0.0020 in.)

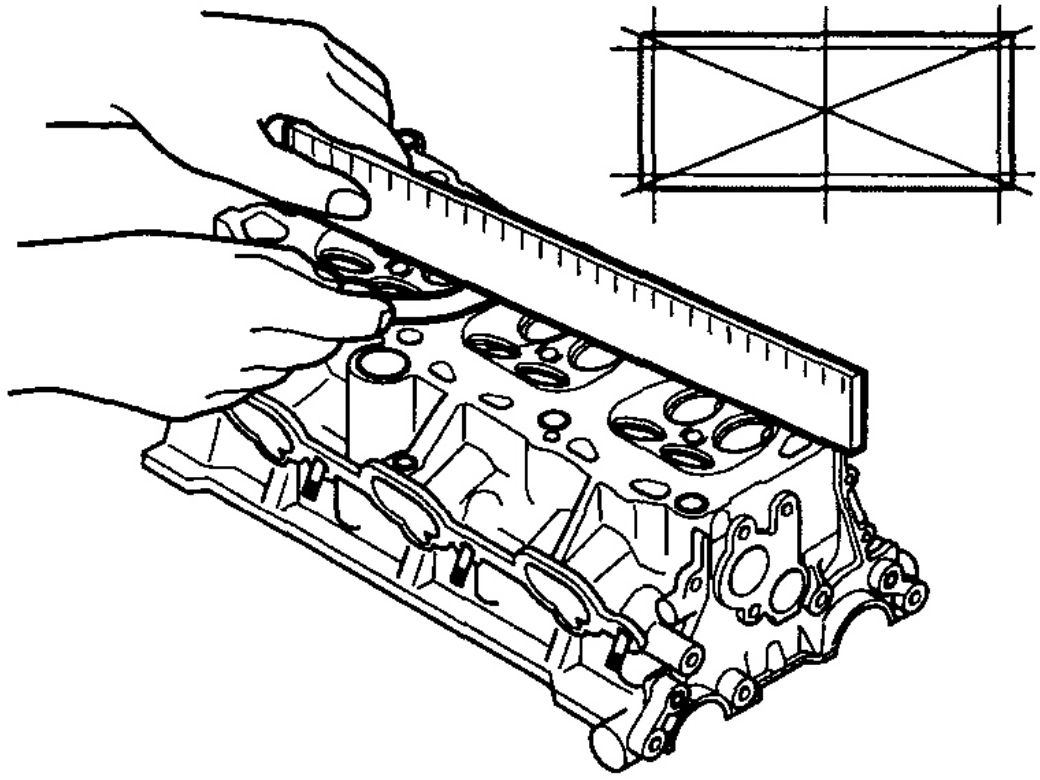

Fig. 64: Inspecting Cylinder Head
Courtesy of HYUNDAI MOTOR CO.

VALVE GUIDES

Check the valve stem-to-guide clearance. If the clearance exceeds the service limit, replace the valve guide with a new oversize guide.

 © 2011 Mitchell Repair Information Company, LLC.

Valve stem-to-guide clearance

Standard value

Intake: 0.02 ~ 0.05 mm (0.0009 ~ 0.0020 in.)

Exhaust: 0.050 ~ 0.085 mm (0.0020 ~ 0.0033 in.)

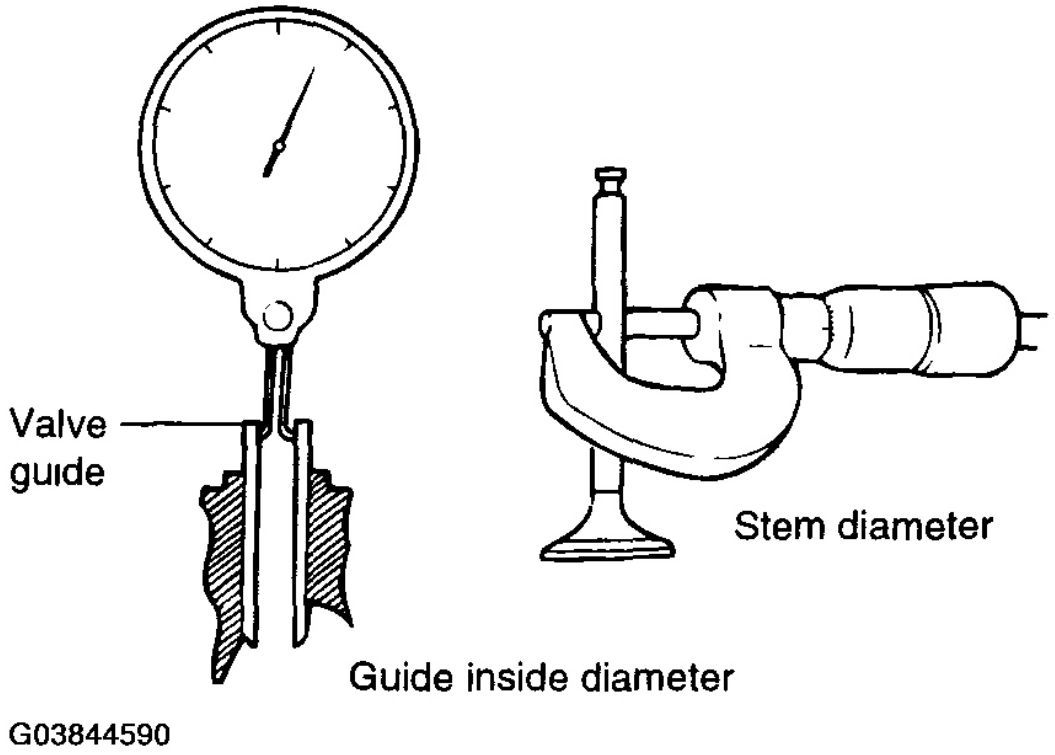

Fig. 65: Inspecting Valve Stem-To-Guide Clearance
Courtesy of HYUNDAI MOTOR CO.

VALVE

1. Replace the valve if its stem is bent, worn or damaged. Also replace it if the stem end (the surface contacting the hydraulic-lash adjuster) is hollowed out.
2. Check the valve face contact area, and recondition or replace as necessary.

 © 2011 Mitchell Repair Information Company, LLC.

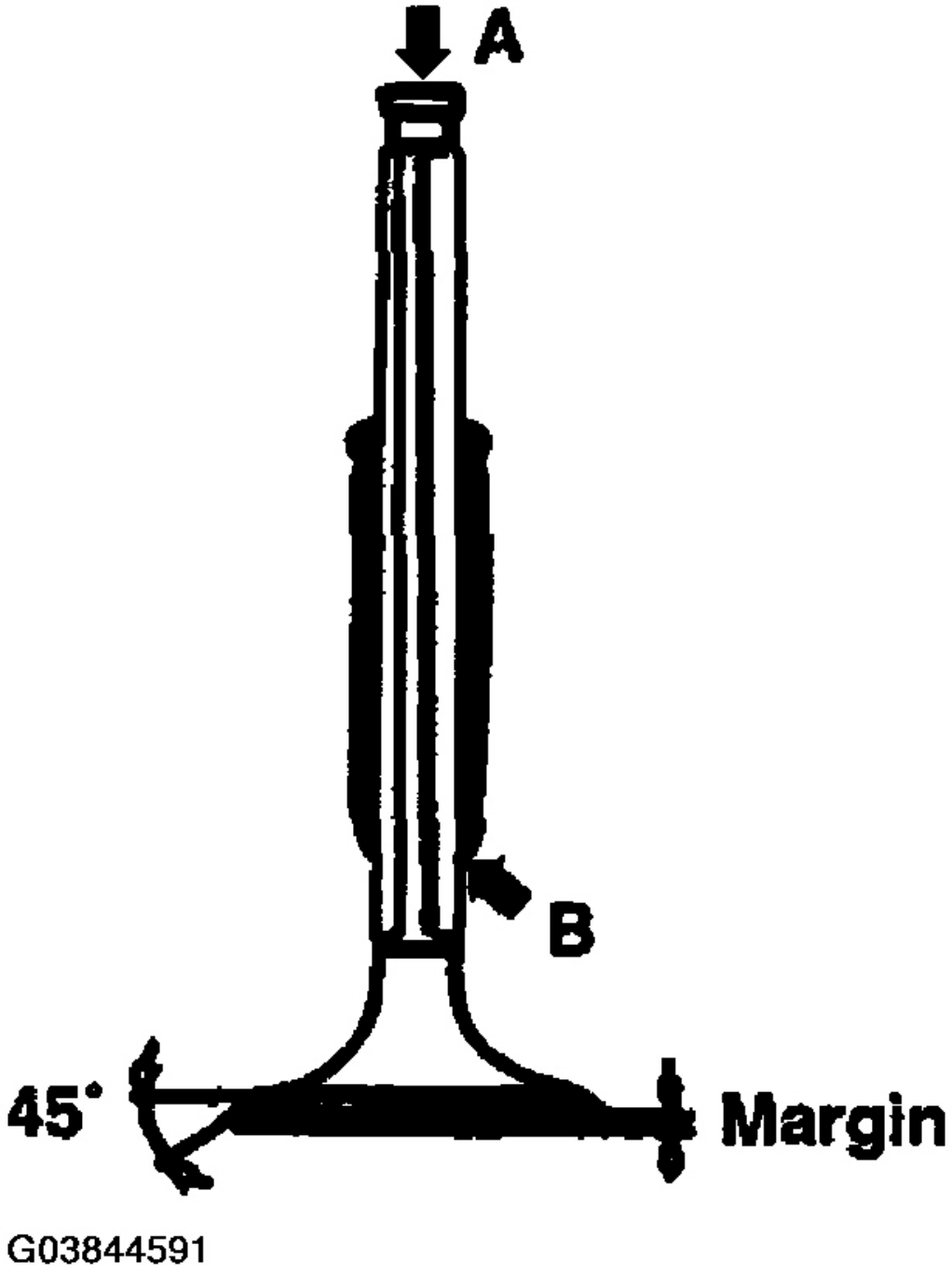

Fig. 66: Inspecting Valve
Courtesy of HYUNDAI MOTOR CO.

 © 2011 Mitchell Repair Information Company, LLC.

3. Replace the valve if the width of the margin (thickness of the valve head) is less than the minimum specified.

   Valve margin

   Standard value

   Intake: 1.0 mm (0.0394 in.)

   Exhaust: 1.3 mm (0.0512 in.)

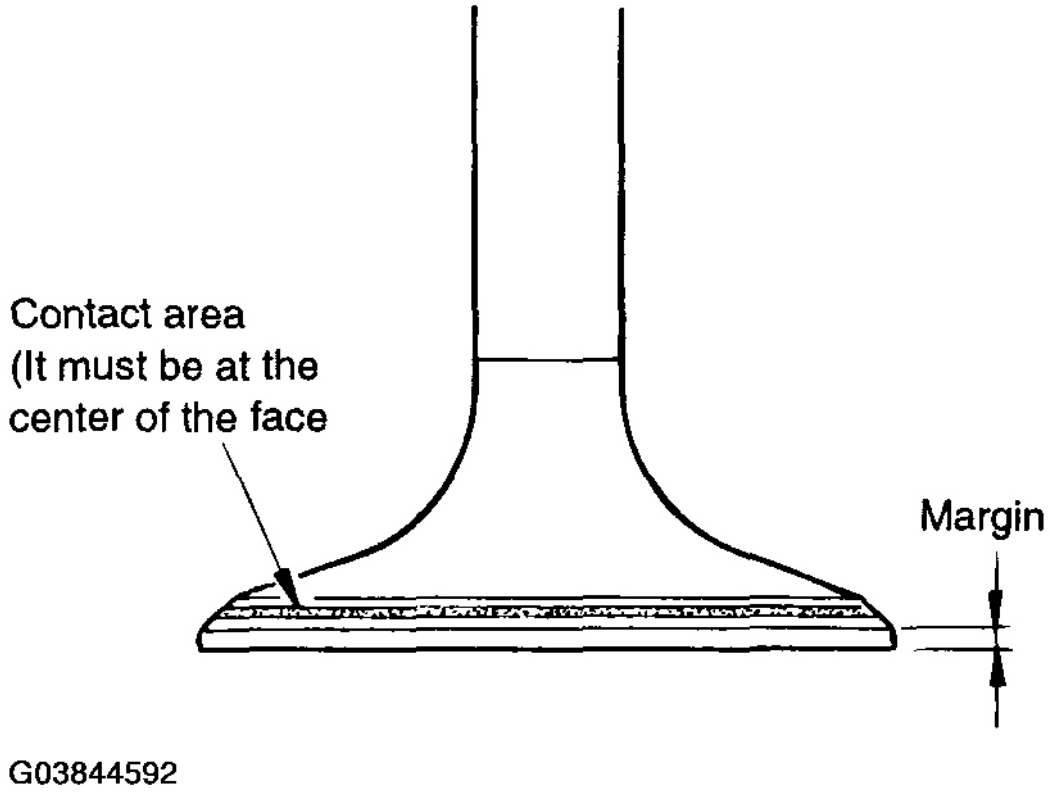

Fig. 67: Identifying Valve Margin
Courtesy of HYUNDAI MOTOR CO.

VALVE SPRING

1. Check the free height of each valve spring and replace if necessary.
2. Using a square, test the squareness of each valve spring. If the spring is excessively out-of-square, replace it.

 © 2011 Mitchell Repair Information Company, LLC.

Valve spring

Standard value

Free height: 46.4 mm (1.8268 in.)

Load: 24 kg / 37.9 mm (53 lb / 1.492 in.)

Out - of - square: Max. 2°

Service limit

Free height: 45.4 mm (1.787 in.)

Out - of - square: Max. 4°

 © 2011 Mitchell Repair Information Company, LLC.

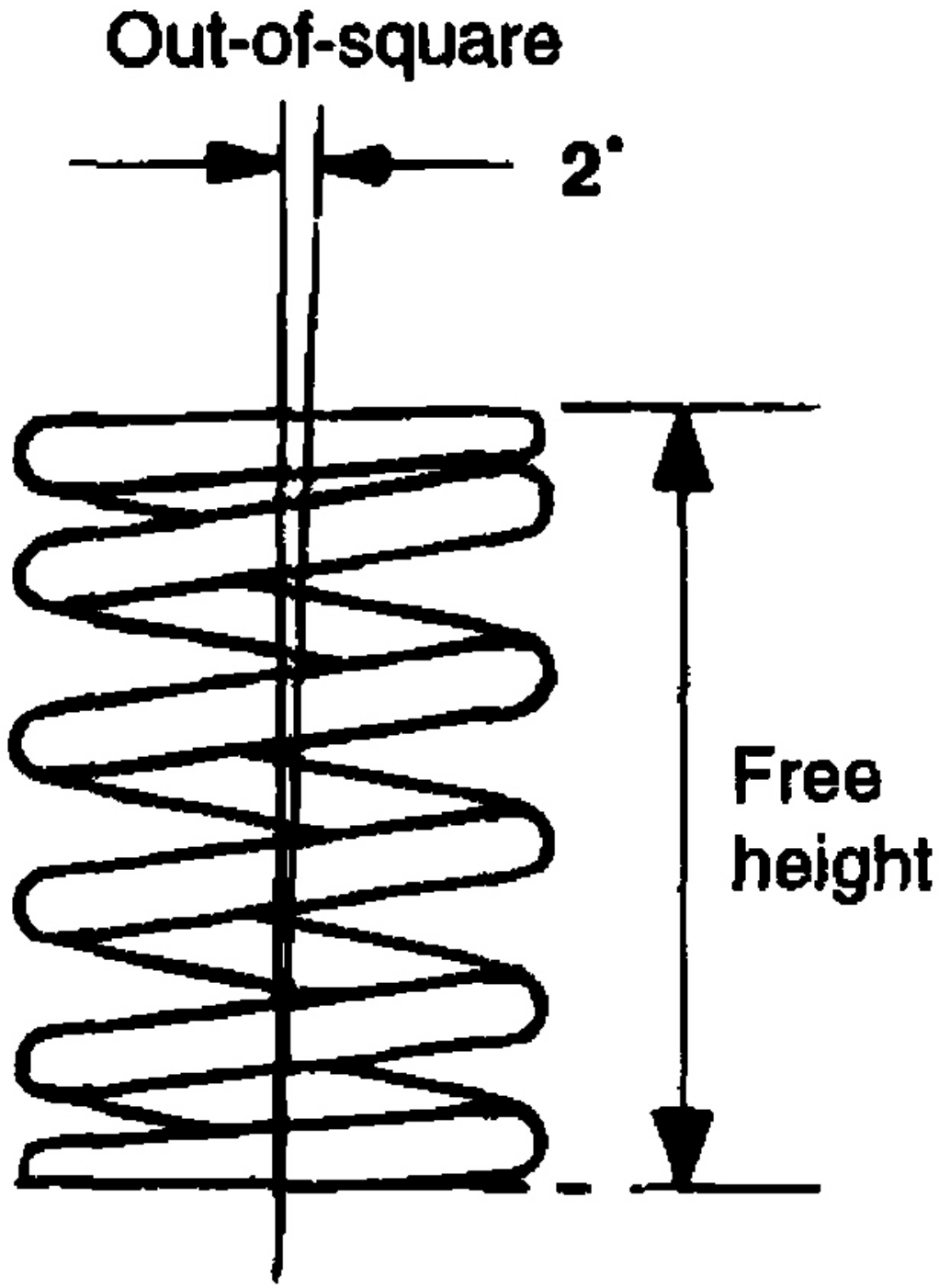

G03844593

 © 2011 Mitchell Repair Information Company, LLC.

Fig. 68: Identifying Free Height And Out-Of- Square Of Valve Spring
Courtesy of HYUNDAI MOTOR CO.

REPLACING VALVE GUIDE

1. Using the special tool (09221-3F000 A/B), withdraw the old valve guide out the bottom of the cylinder head.
2. Recondition the valve guide hole so that it can receive the newly press-fitted oversize valve guide.

VALVE GUIDE OVERSIZE

VALVE GUIDE OVERSIZE TABLE

Size mm (in.)	Size Mark	Oversize valve guide hole size mm (in.)
0.05 (0.002) O.S.	5	12.05 ~ 12.068 (0.474 ~ 0.475)
0.25 (0.010) O.S.	25	12.25 ~ 12.268 (0.482 ~ 0.483)
0.50 (0.020) O.S.	50	12.50 ~ 12.518 (0.492 ~ 0.493)

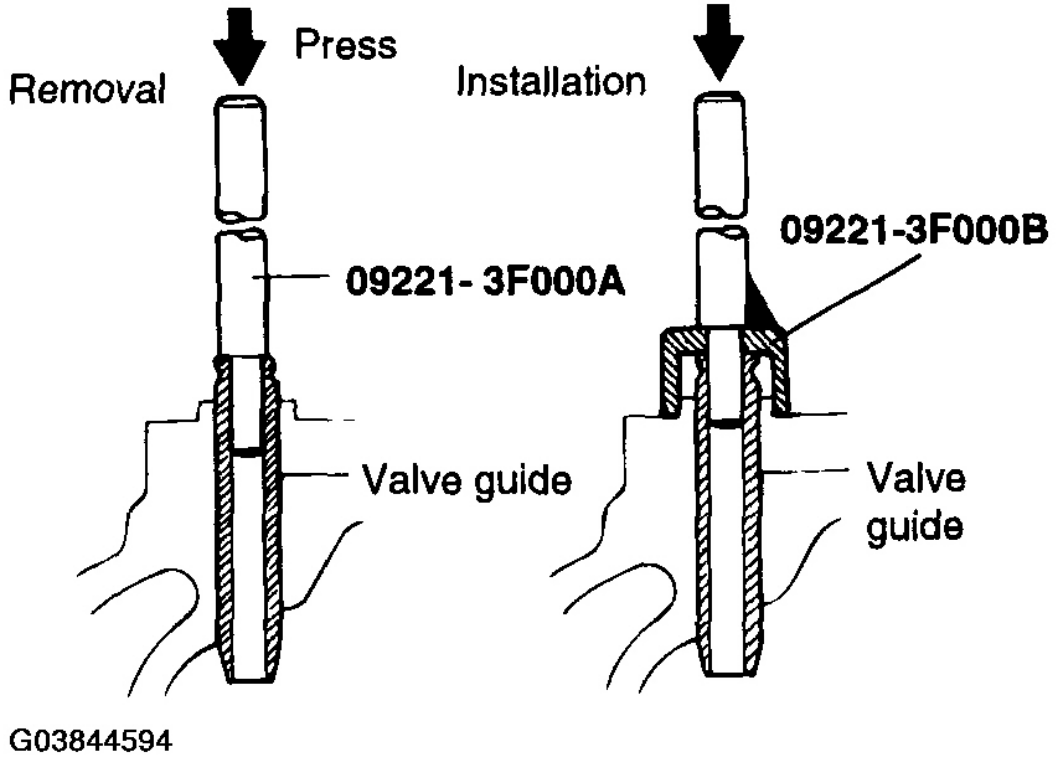

Fig. 69: Removing/Installing Valve Guide
Courtesy of HYUNDAI MOTOR CO.

 © 2011 Mitchell Repair Information Company, LLC.

3. Using the special tool (09221-3F000 A/B) press-fit the valve guide. The valve guide must be press-fitted from the upper side of the cylinder head. Keep in mind that the intake and exhaust valve guides are different in length.

4. After the valve guide is press-fitted, insert a new valve and check for proper clearance.

5. After the valve guide is replaced, check that the valve is fully seated. Recondition the valve seats as necessary.

NOTE: Do not install a valve guide unless it is oversize.

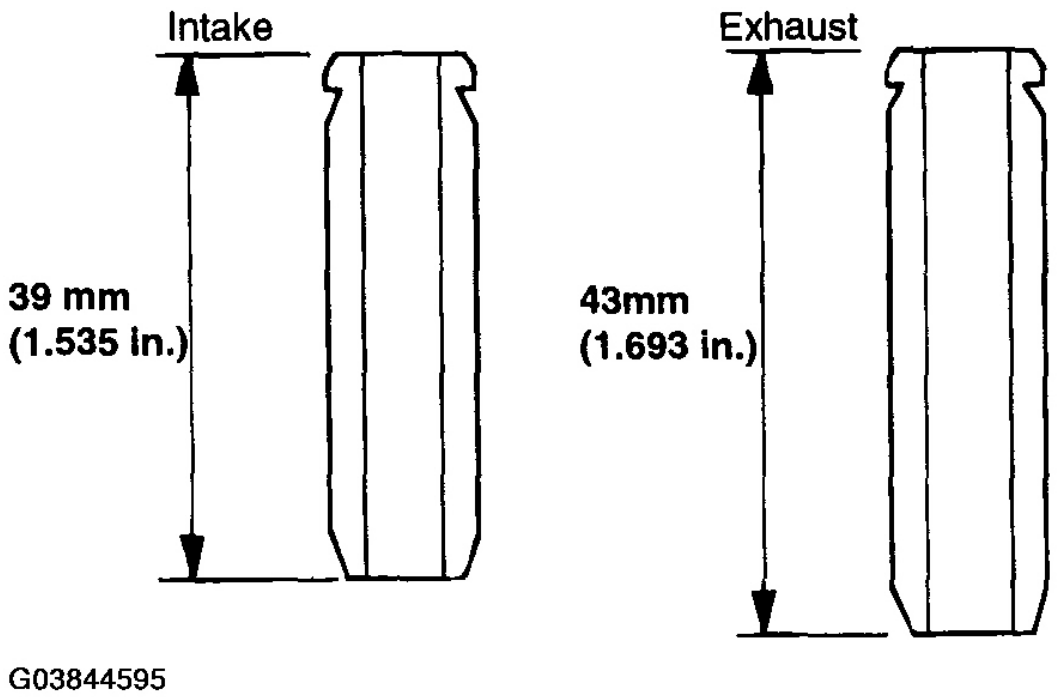

Fig. 70: Identifying Valve Guide Lengths
Courtesy of HYUNDAI MOTOR CO.

REPLACING VALVE SEAT RING

1. Cut away the inner face of the valve seat to reduce the wall thickness.

 © 2011 Mitchell Repair Information Company, LLC.

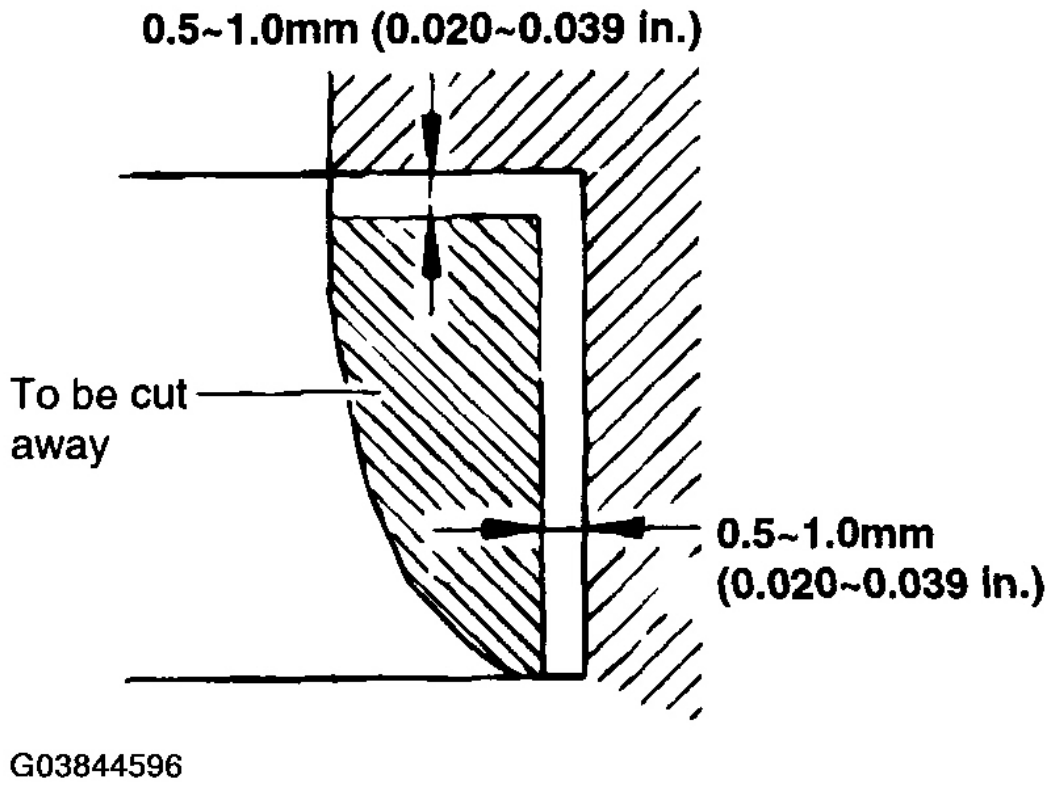

Fig. 71: Identifying Cut-Away Area Of Inner Valve Seat
Courtesy of HYUNDAI MOTOR CO.

2. Enlarge the diameter of the valve seat so that it matches the specified hole diameter of the new valve seat ring.

 © 2011 Mitchell Repair Information Company, LLC.

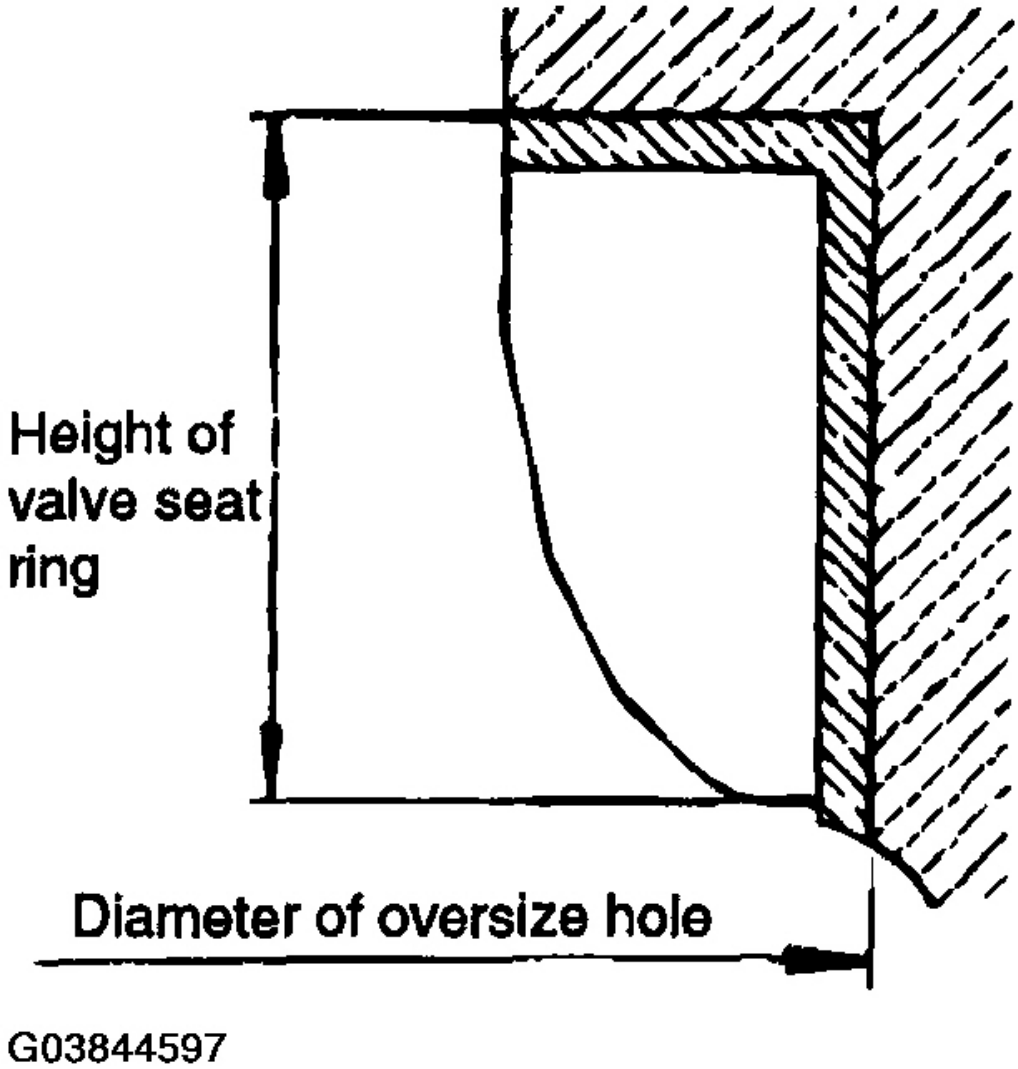

Fig. 72: Identifying Height Of Valve Seat Ring And Diameter Of Oversize Hole
Courtesy of HYUNDAI MOTOR CO.

VALVE SEAT RING OVERSIZES

VALVE SEAT RING OVERSIZES TABLE

Description	Size mm (in.)	Size Mark	Seat ring height H mm (in.)	Oversize hole diameter I.D. mm (in.)
Intake valve seat ring	0.3 (0.012) O.S. 0.6 (0.024) O.S.	30 60	7.9 ~ 8.1 (0.311 ~ 0.319)	36.300 ~ 36.325 (1.429 ~ 1.430)

 © 2011 Mitchell Repair Information Company, LLC.

			8.2 ~ 8.4 (0.323 ~ 0.331)	36.600 ~ 36.625 (1.441 ~ 1.442)
Exhaust valve seat ring	0.3 (0.012) O.S. 0.6 (0.024) O.S.	30 60	7.9 ~ 8.1 (0.311 ~ 0.319) 8.2 ~ 8.4 (0.323 ~ 0.331)	33.300 ~ 33.325 (1.311 ~ 1.312) 33.600 ~ 33.625 (1.323 ~ 1.324)

3. Heat the cylinder head to about 250°C (480°F) and press-fit an oversize seat ring for the bore in the cylinder head.
4. Using lapping compound, lap the valve to the new seat.

Valve seat contact width

Intake: 0.9 ~ 1.3 mm (0.035 ~ 0.051 in.)

Exhaust: 0.9 ~ 1.3 mm (0.035 ~ 0.051 in.)

REASSEMBLY

1. Install the spring seats.
2. Using special tool (09222-28200), lightly tap the seal in position.

NOTE:

- **Do not reuse old valve stem seals.**
- **Incorrect installation of the seal could result in oil leakage from the valve guides.**

 © 2011 Mitchell Repair Information Company, LLC.

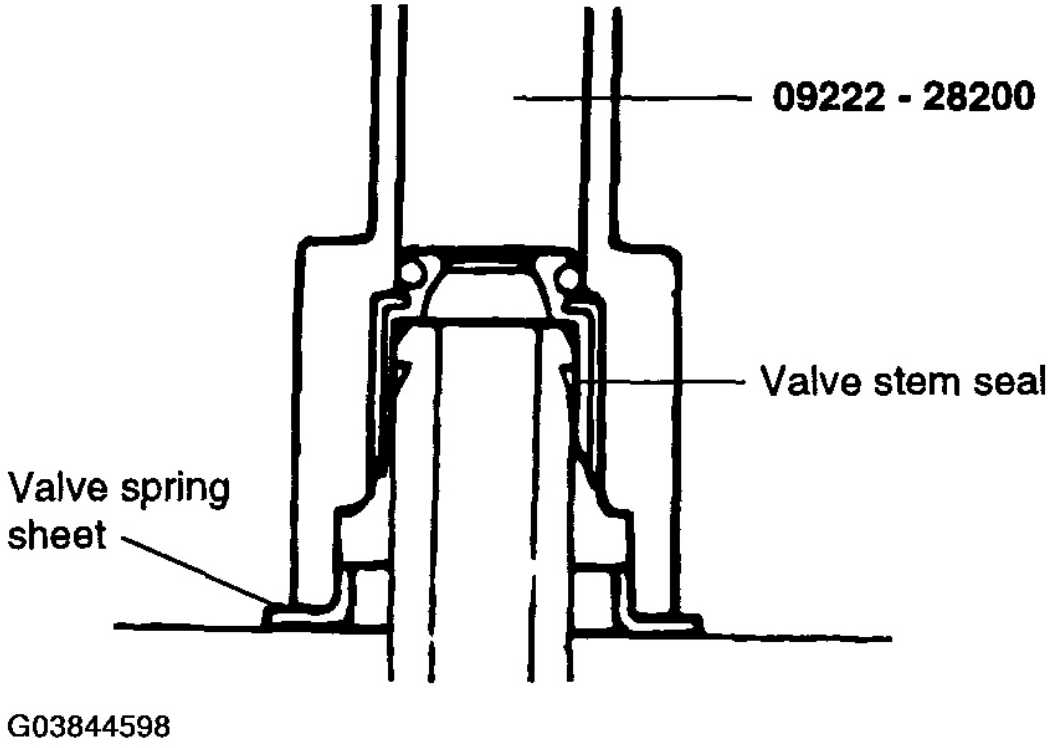

Fig. 73: Installing Spring Seats
Courtesy of HYUNDAI MOTOR CO.

 © 2011 Mitchell Repair Information Company, LLC.

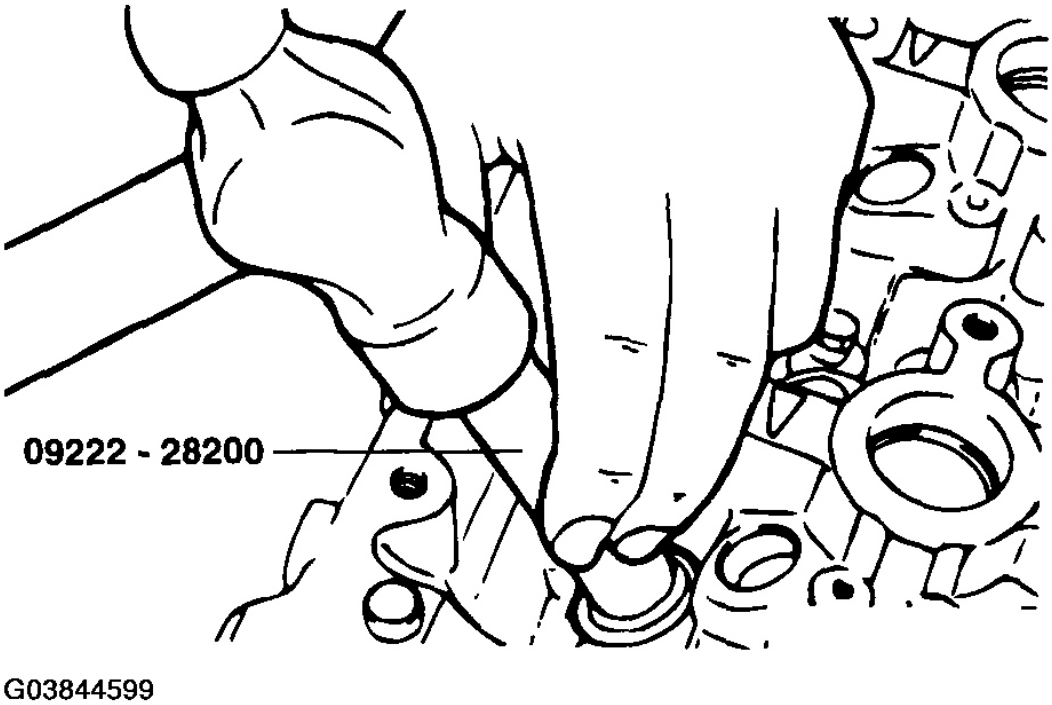

Fig. 74: Tapping Seal In Position
Courtesy of HYUNDAI MOTOR CO.

3. Apply engine oil to each valve. Insert the valve into their guides. Avoid pushing the valve into the seal by force. After installing the valve, check that it moves smoothly
4. Place valve springs so that the side coated with enamel faces toward the valve spring retainer.

 © 2011 Mitchell Repair Information Company, LLC.

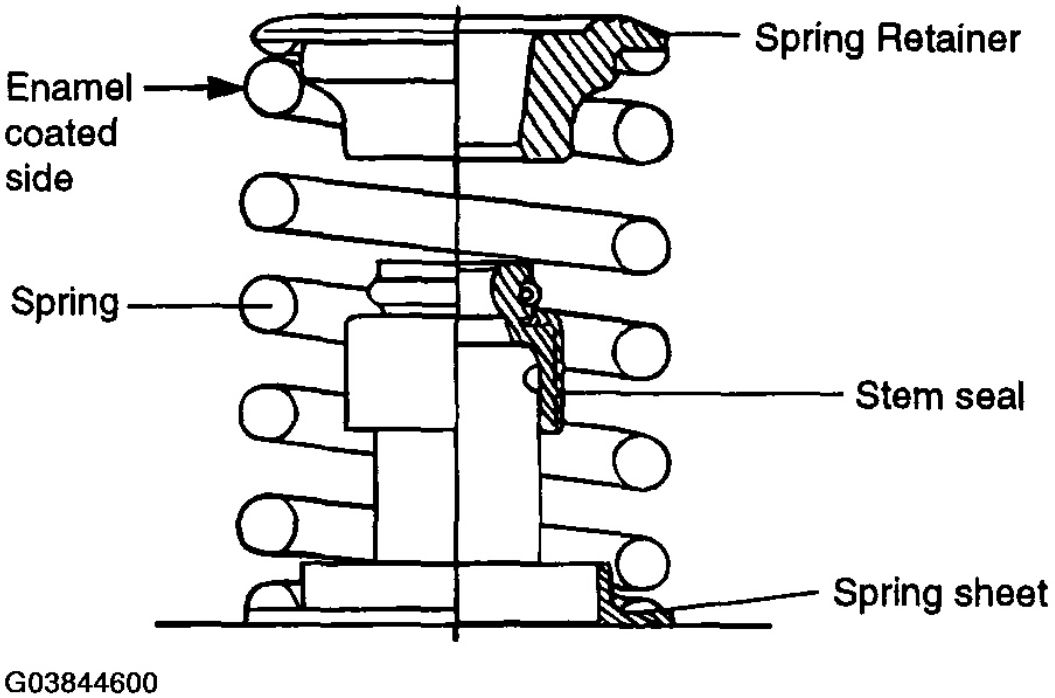

Fig. 75: Identifying Placement Of Valve Springs
Courtesy of HYUNDAI MOTOR CO.

5. Using the special tool (09222 - 28000, 09222 - 28100), compress the spring and install the retainer locks. After installing the valves, ensure that the retainer locks are correctly in place before releasing the valve spring compressor.

NOTE: **When the spring is compressed, check that the valve stem seal is not pressed against the bottom of the retainer.**

 © 2011 Mitchell Repair Information Company, LLC.

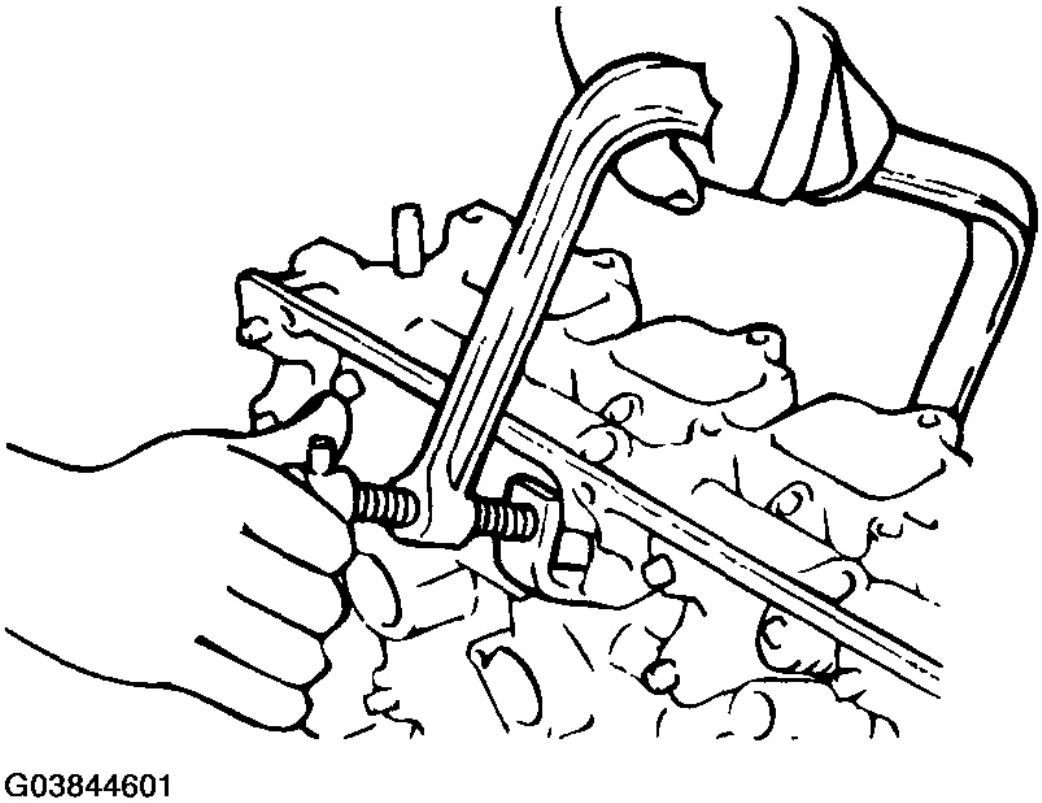

Fig. 76: Compressing Spring
Courtesy of HYUNDAI MOTOR CO.

6. Clean both gasket surfaces of the cylinder head and cylinder block.
7. Verify the identification marks on the cylinder head gasket.
8. Install the gasket so that the surface with the identification mark faces toward the cylinder head.

NOTE: Do not apply sealant to these surfaces.

 © 2011 Mitchell Repair Information Company, LLC.

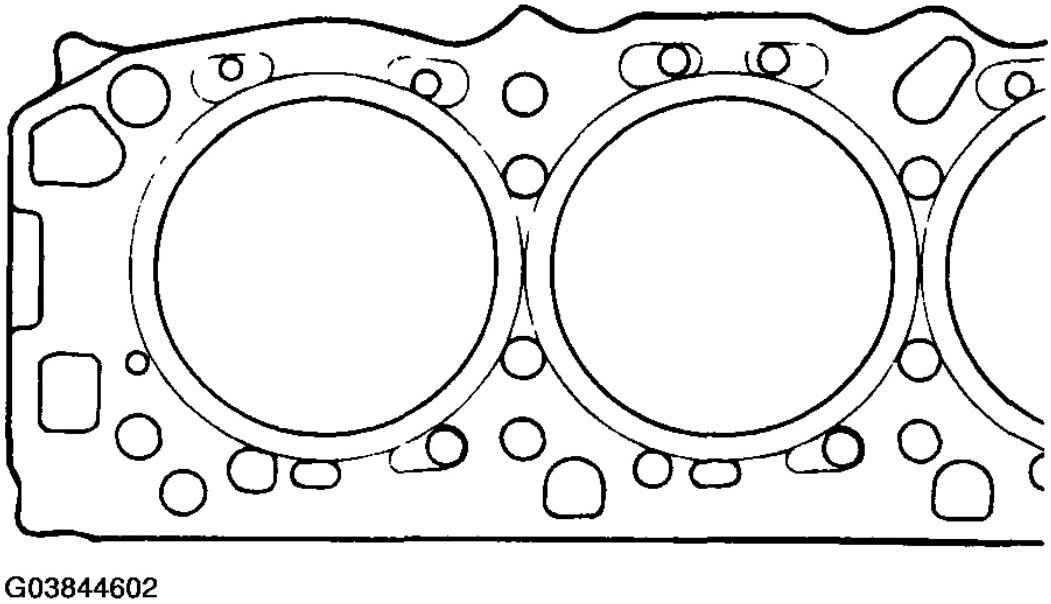

Fig. 77: Installing Gasket
Courtesy of HYUNDAI MOTOR CO.

9. Tighten the cylinder head bolts in the sequence shown in **Fig. 79** with a torque wrench.

 © 2011 Mitchell Repair Information Company, LLC.

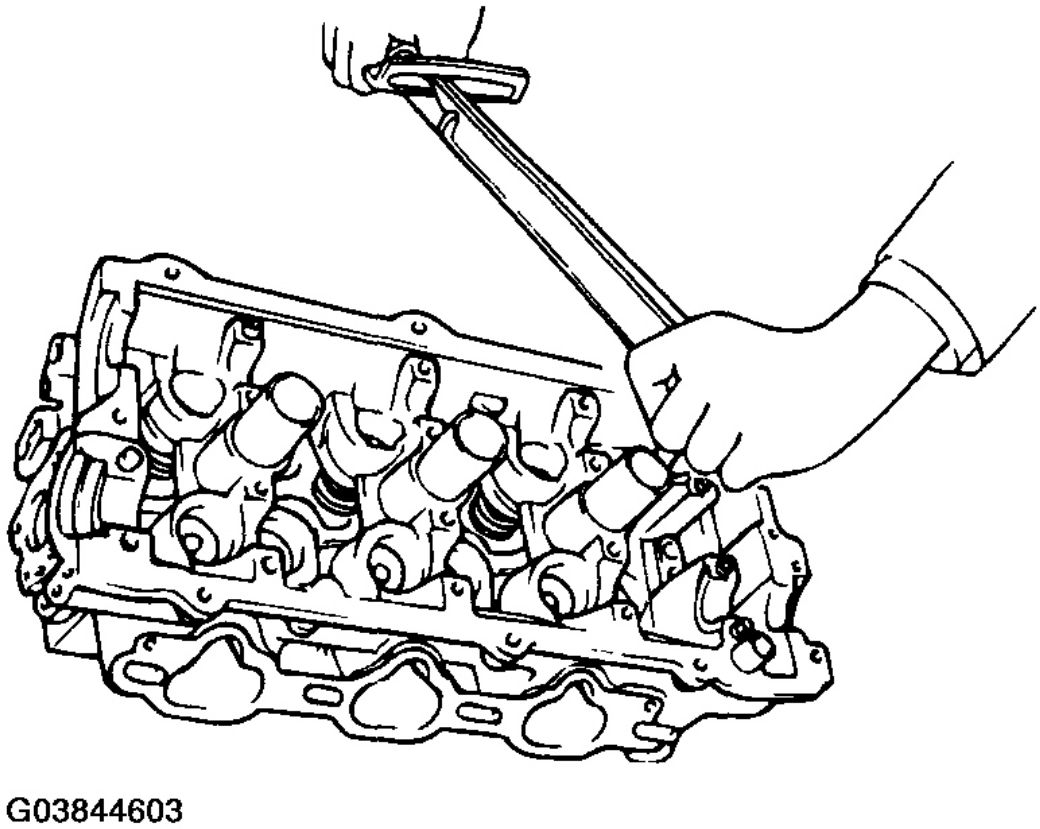

Fig. 78: Tightening Cylinder Head Bolts
Courtesy of HYUNDAI MOTOR CO.

 © 2011 Mitchell Repair Information Company, LLC.

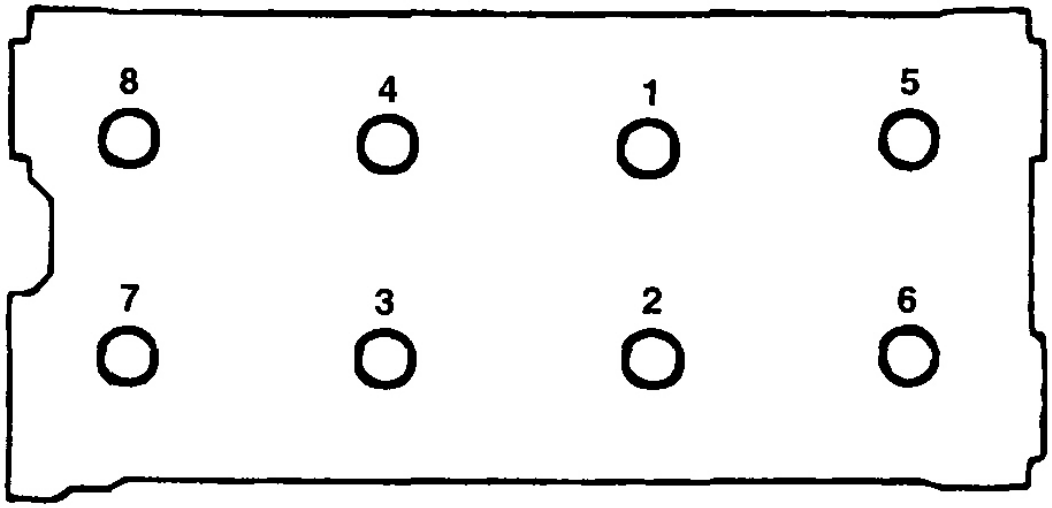

Fig. 79: Identifying Tightening Sequence Of Cylinder Head Bolts
Courtesy of HYUNDAI MOTOR CO.

10. Tighten the cylinder head bolts. Starting at top center, tighten all cylinder head bolts in sequence as shown in **Fig. 79** , using the 12 mm socket.

    Tightening procedure

    Cylinder head bolt:

    105 ~ 115 Nm (1050 ~ 1150 kg.cm, 75 ~ 82 lb.ft)

MAIN MOVING SYSTEM

CAMSHAFT

COMPONENTS

 © 2011 Mitchell Repair Information Company, LLC.

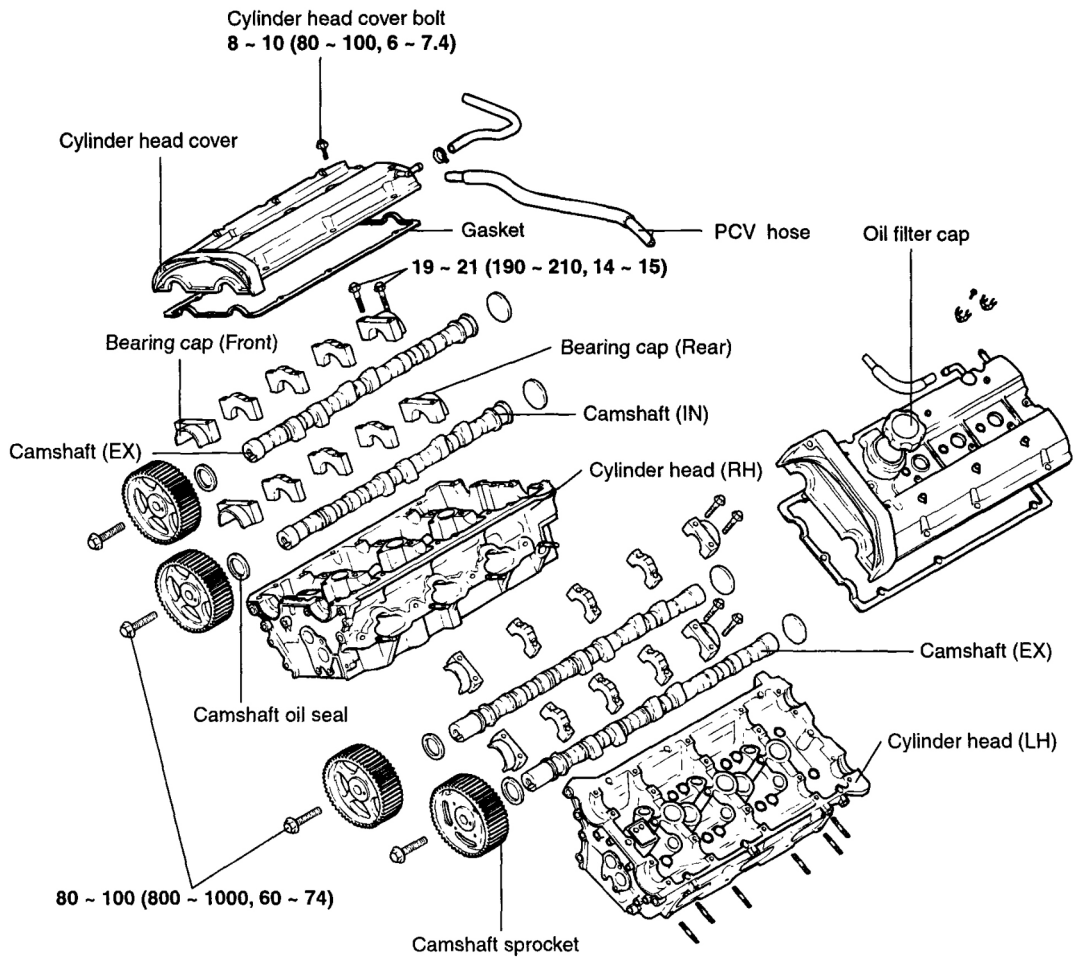

TORQUE : Nm (kg.cm, lb.ft)

G03844605

Fig. 80: Identifying Main Moving System Components (Camshaft)
Courtesy of HYUNDAI MOTOR CO.

DISASSEMBLY

1. Remove the engine cover and intake manifold.

   For additional information, refer to **INTAKE MANIFOLD** .

 © 2011 Mitchell Repair Information Company, LLC.

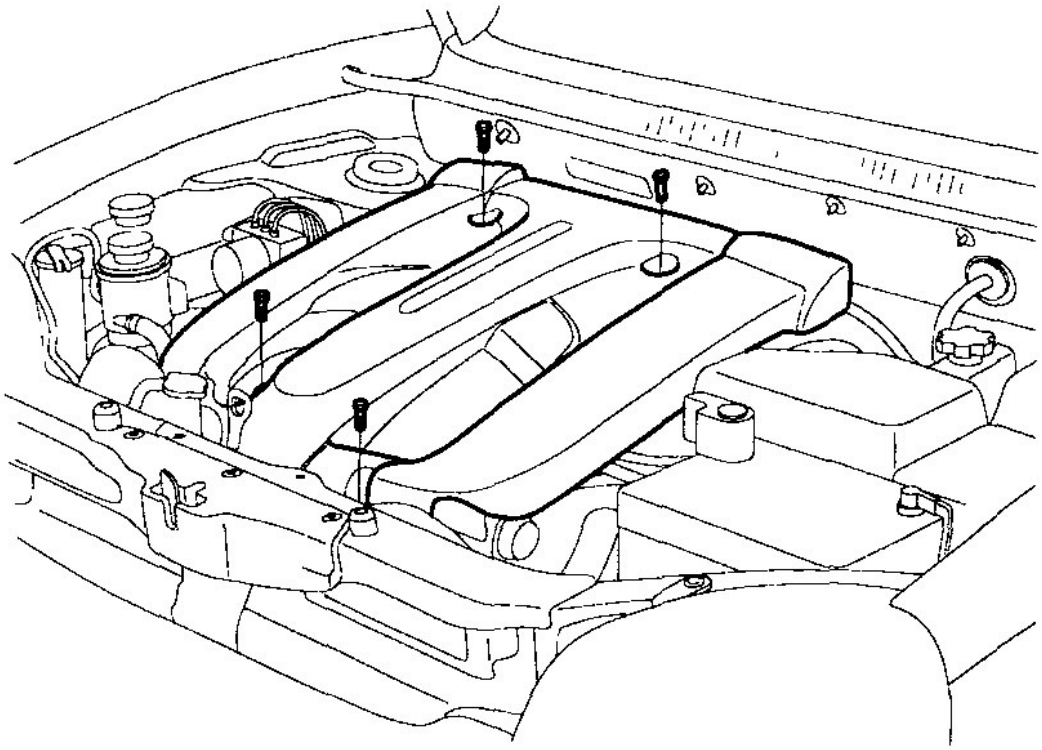

Fig. 81: Removing Engine Cover
Courtesy of HYUNDAI MOTOR CO.

2. Disconnect the breather hose and the engine harness.

   For additional information, refer to **ENGINE AND TRANSAXLE ASSEMBLY** .

3. Remove the timing belt.

   For additional information, refer to **TIMING BELT** .

4. Remove the spark plug cables.
5. Loosen the cylinder head cover bolts and then remove it.

 © 2011 Mitchell Repair Information Company, LLC.

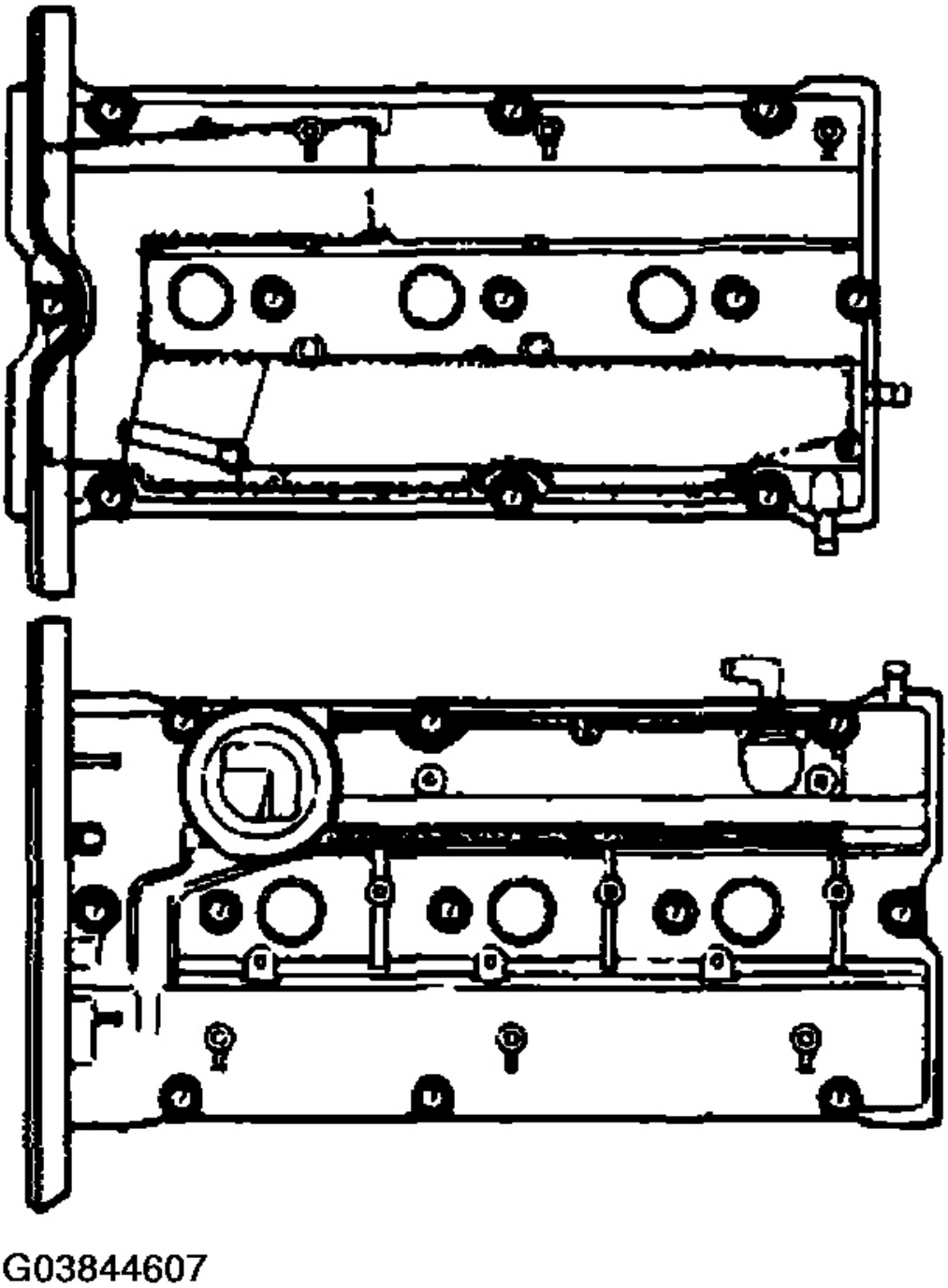

Fig. 82: Loosening Cylinder Head Cover Bolts
Courtesy of HYUNDAI MOTOR CO.

 © 2011 Mitchell Repair Information Company, LLC.

6. Remove the camshaft sprockets.
7. Remove the camshaft bearing caps.

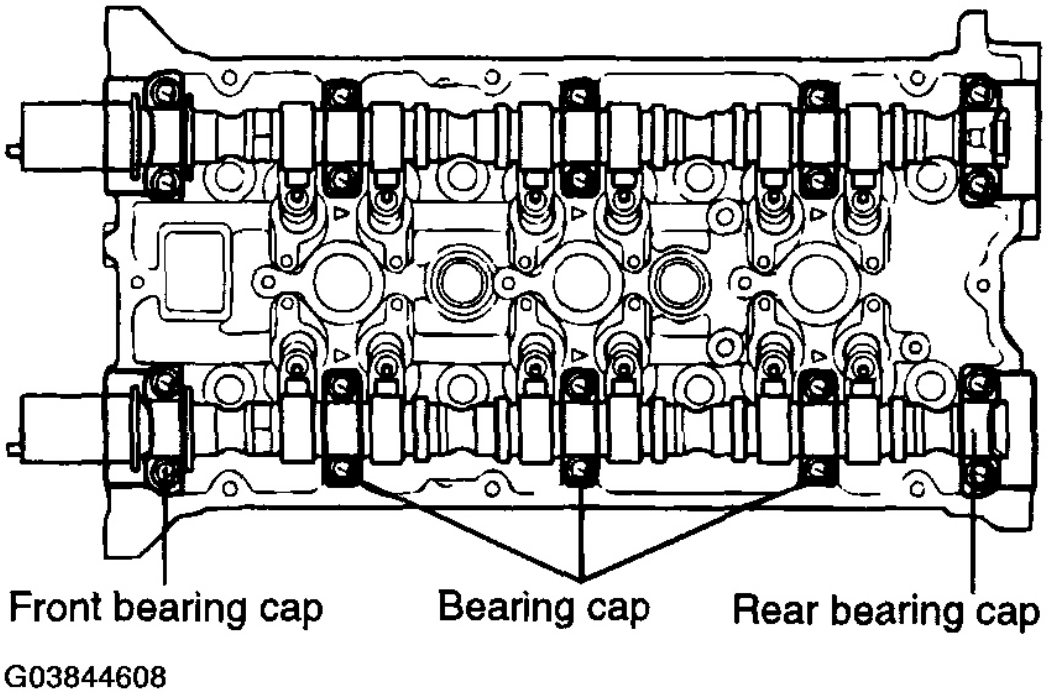

Fig. 83: Removing Camshaft Bearing Caps
Courtesy of HYUNDAI MOTOR CO.

8. Remove the camshafts.

 © 2011 Mitchell Repair Information Company, LLC.

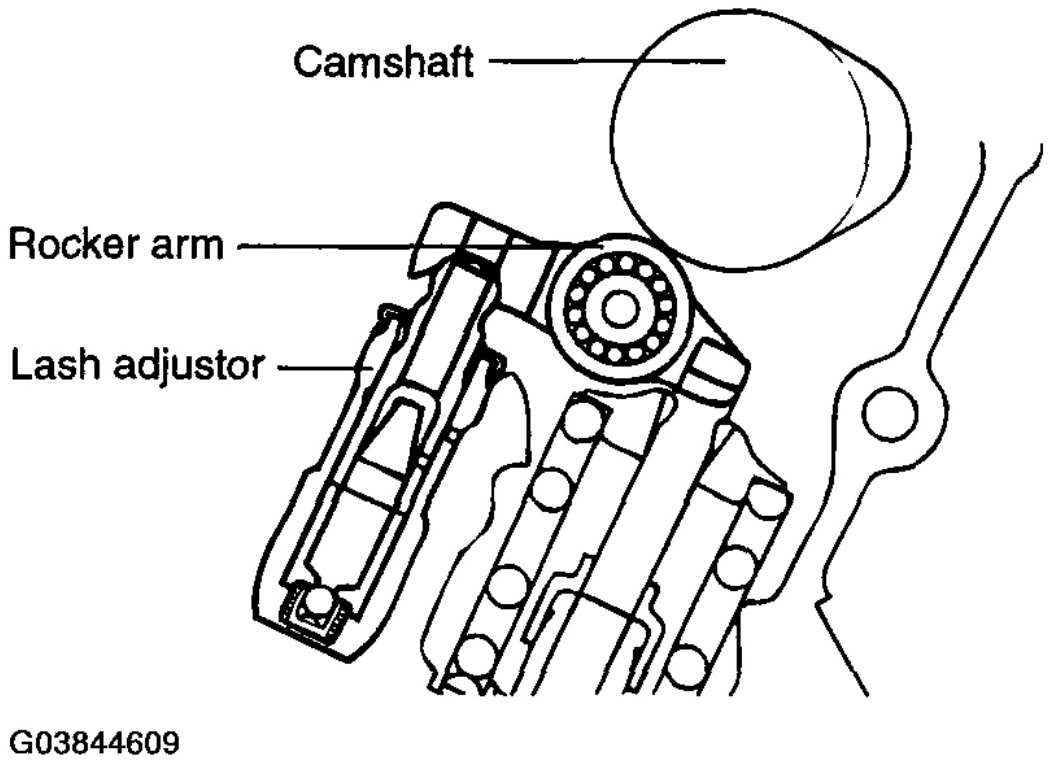

Fig. 84: Removing Camshafts
Courtesy of HYUNDAI MOTOR CO.

INSPECTION

CAMSHAFTS

1. Check the camshaft journals for wear. If the journals are badly worn out, replace the camshaft.
2. Check the cam lobes for damage. If the lobe is damaged or excessively worn out, replace the camshaft.

Cam height

Standard

Intake: 35.098 ~ 35.298 mm (1.3818 ~ 1.3897 in.)

Exhaust: 34.81 ~ 35.01 mm (1.3705 ~ 1.3783 in.)

 © 2011 Mitchell Repair Information Company, LLC.

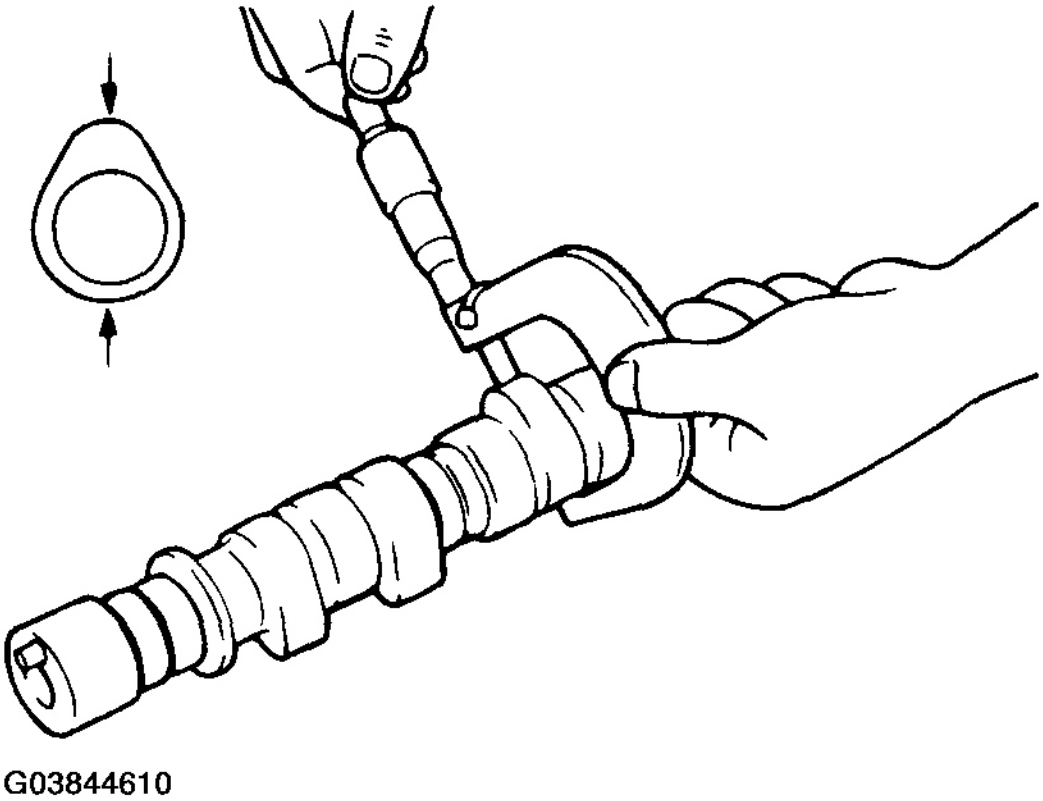

Fig. 85: Checking Cam Height
Courtesy of HYUNDAI MOTOR CO.

3. Check the cam surface for abnormal wear or damage, and replace if necessary.
4. Check each bearing for damage. If the bearing surface is excessively damaged, replace the cylinder head assembly or camshaft bearing cap, as necessary.

Camshaft end play

0.1 ~ 0.15 mm (0.0039 ~ 0.0059 in.)

OIL SEAL (CAMSHAFT FRONT)

1. Check the lips for wear. If lip threads are worn out, replace the oil seal with new one.
2. Check a contact surface of oil seal lip on camshaft. If there stratified wear, replace the camshaft.

HLA (HYDRAULIC LASH ADJUSTER)

With the HLA filled with engine oil, hold A and press B by hand. If B moves, replace the HLA.

 © 2011 Mitchell Repair Information Company, LLC.

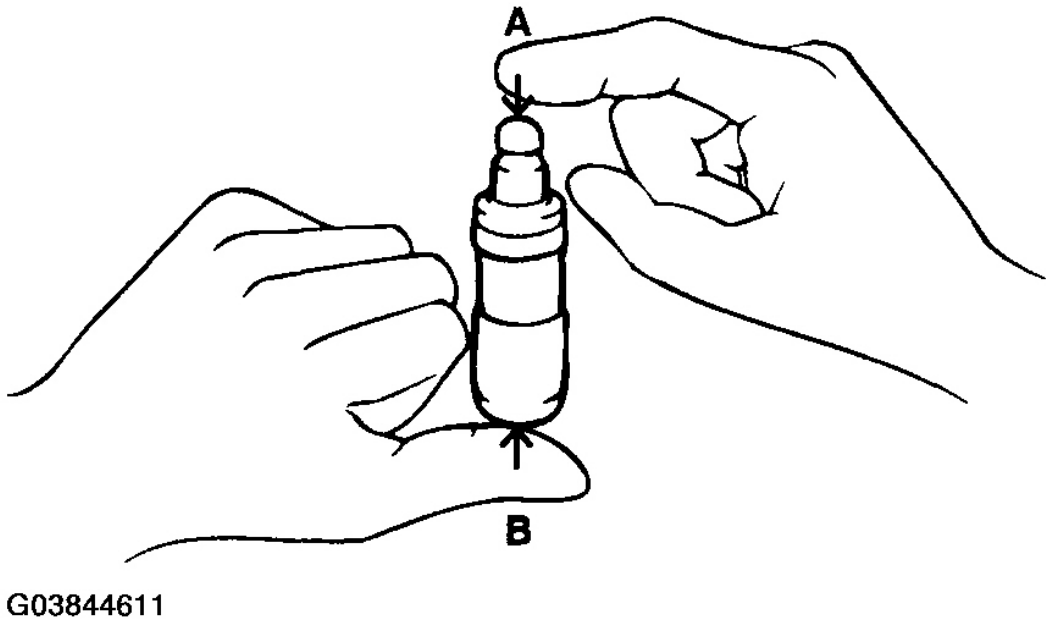

Fig. 86: Inspecting Hydraulic Lash Adjuster
Courtesy of HYUNDAI MOTOR CO.

PROBLEM POSSIBLE CAUSE

Problem	Possible cause	Action
1. Temporary noise when starting a cold engine	Normal	This noise will disappear after the oil in the engine reaches the normal pressure.
2. Continuous noise when the engine is started after parking more than 48 hours.	Oil leakage of the high pressure chamber on the HLA, allowing air to get in.	Noise will disappear within 15 minutes when engine runs at 2000 - 3000 RPM. If it doesn't disappear, refer to step 7 in this table.
3. Continuous noise when the engine is first started after rebuilding cylinder head.	Insufficient oil in cylinder head oil gallery.	
4. Continuous noise when the engine is started after excessively cranking the engine by the starter motor or band.	Oil leakage of the high - pressure chamber in the HLA, allowing air to get in. Insufficient oil in the HLA.	
5. Continuous noise when the engine is running after changing the HLA.		**CAUTION:** **Do not run engine at a speed higher than 3000 RPM, as this may damage the HLA.**
6. Continuous noise during idle after high engine speed.	Engine oil level too high or too low.	Check oil level. Drain or add oil as necessary.

 © 2011 Mitchell Repair Information Company, LLC.

	Excessive amount of air in the oil at high engine speed.	Check oil supply system.
	Deteriorated oil.	Check oil quality. If deteriorated, replace with specified type.
7. Noise continues for more than 15 minutes.	Low oil pressure.	Check oil pressure and oil supply system of each part of engine.
	Faulty HLA.	Remove the cylinder head cover and press HLA down by hand. If it moves, replace the HLA.

AUTOLASH ADJUSTER

1. Check autolash adjusters for free play by inserting a small wire through the air bleed hole in the rocker arm and push the autolash adjuster check ball down very lightly.
2. While lightly holding the check ball down move the rocker arm up and down to check for free play. If there is no play replace the autolash adjuster.

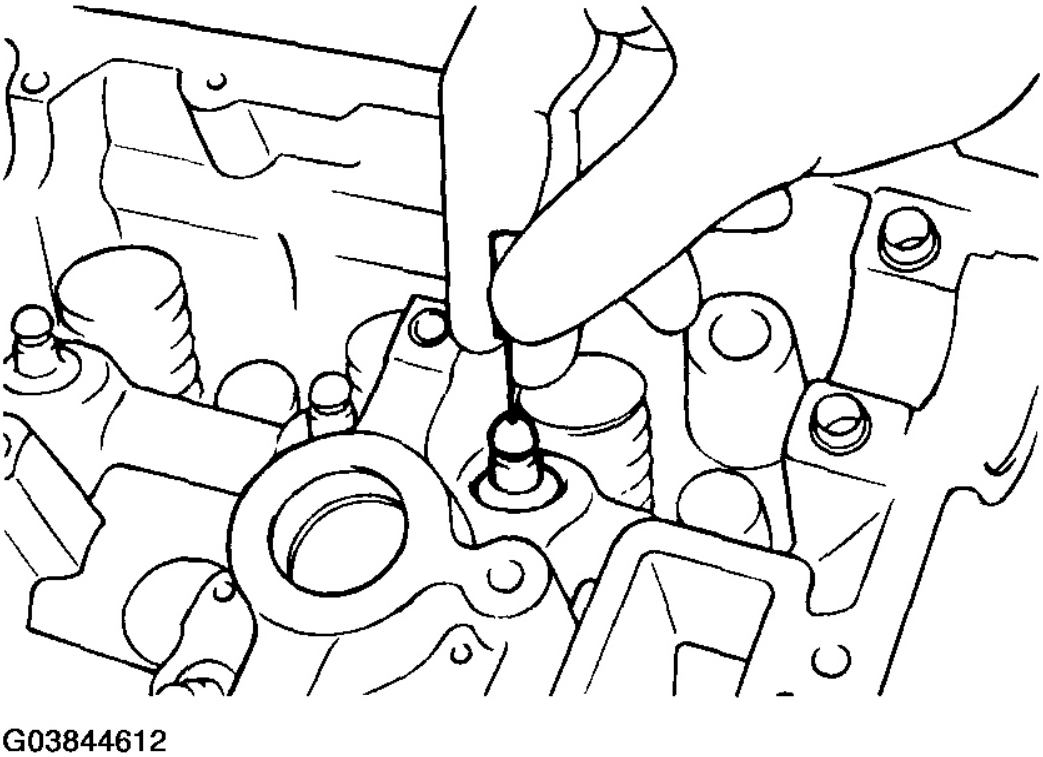

Fig. 87: Inspecting Autolash Adjuster
Courtesy of HYUNDAI MOTOR CO.

 © 2011 Mitchell Repair Information Company, LLC.

REASSEMBLY

CAMSHAFT AND BEARING CAP

1. Rotate the crankshaft and No. 1 cylinder so it is in TDC (Compression stroke)
2. Check the position of the rocker arm whether it is exactly installed on the lash adjuster and valve or not.
3. Install the camshaft dowel pin as illustrated.

 © 2011 Mitchell Repair Information Company, LLC.

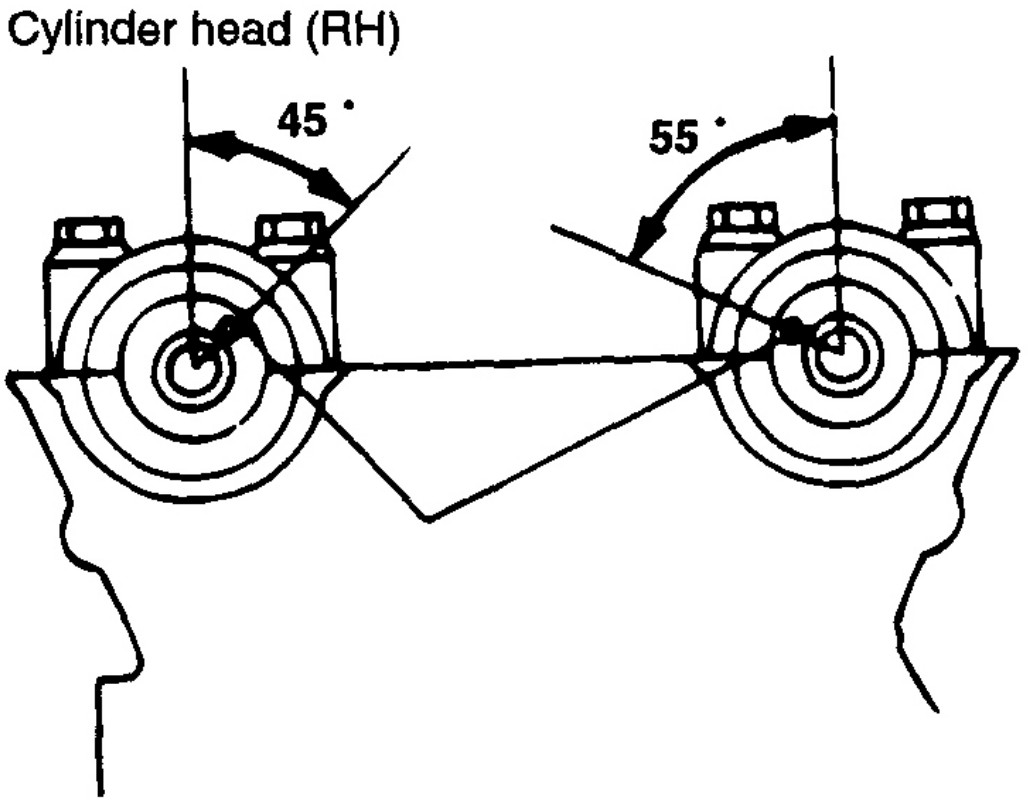

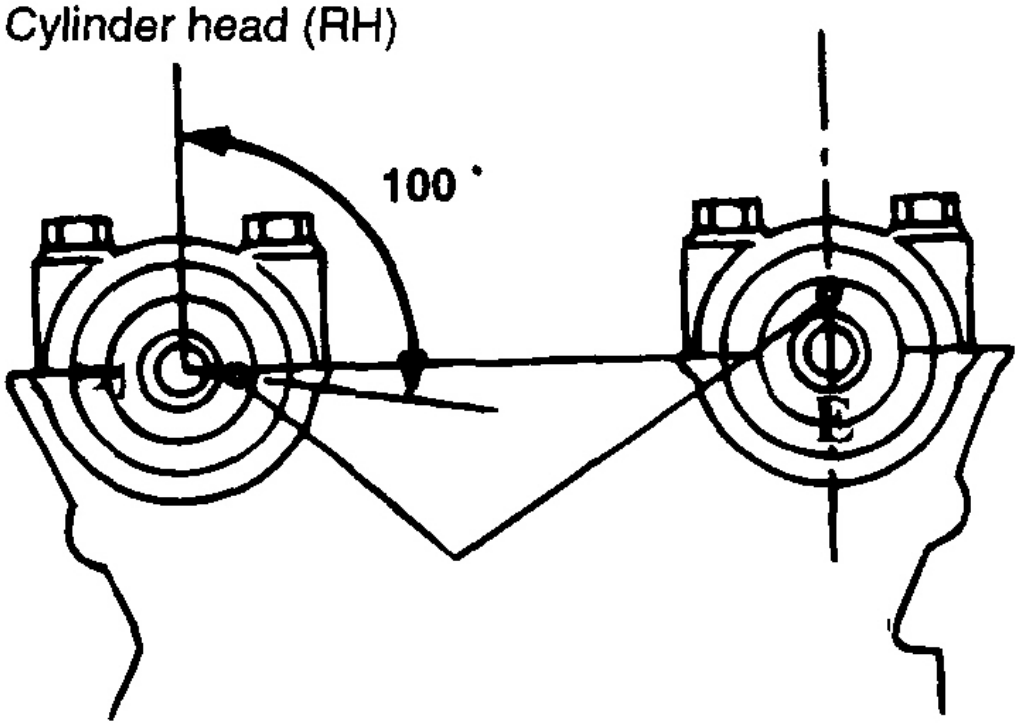

G03844613

 © 2011 Mitchell Repair Information Company, LLC.

Fig. 88: Installing Camshaft Dowel Pin
Courtesy of HYUNDAI MOTOR CO.

4. The left and right banks of the camshafts are different and you should be careful not to confuse them.

   Identification signal

   Left bank

   Intake (IN): I

   Exhaust (Ex): E

   Right bank

   Intake (IN): J

   Exhaust (Ex): H

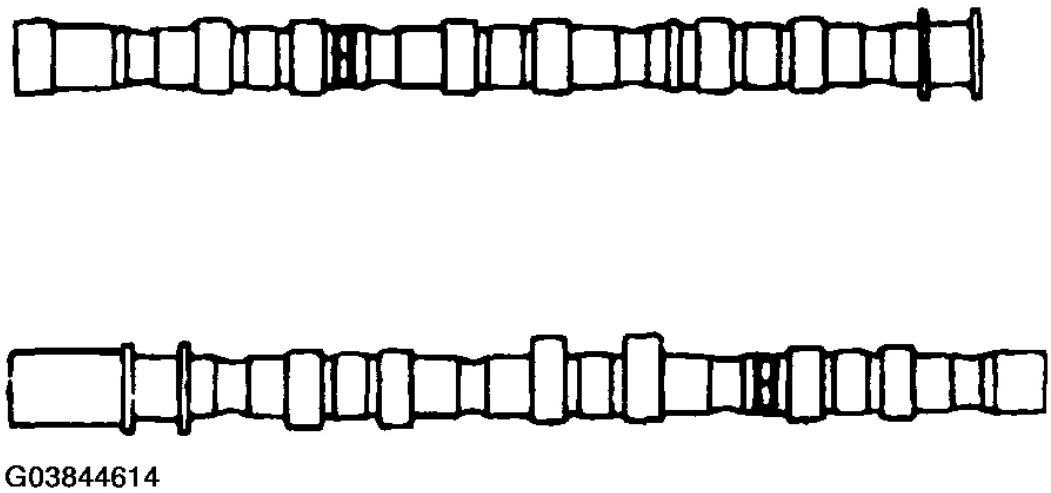

Fig. 89: Identifying Camshafts
Courtesy of HYUNDAI MOTOR CO.

5. Confirm the identification mark and the number.

   Bearing caps of No. 3, No. 4, and No. 5 have the front mark and arrange the front mark upon the cylinder head while installing the bearing caps.

   Identification mark

 © 2011 Mitchell Repair Information Company, LLC.

Intake: I

Exhaust: E

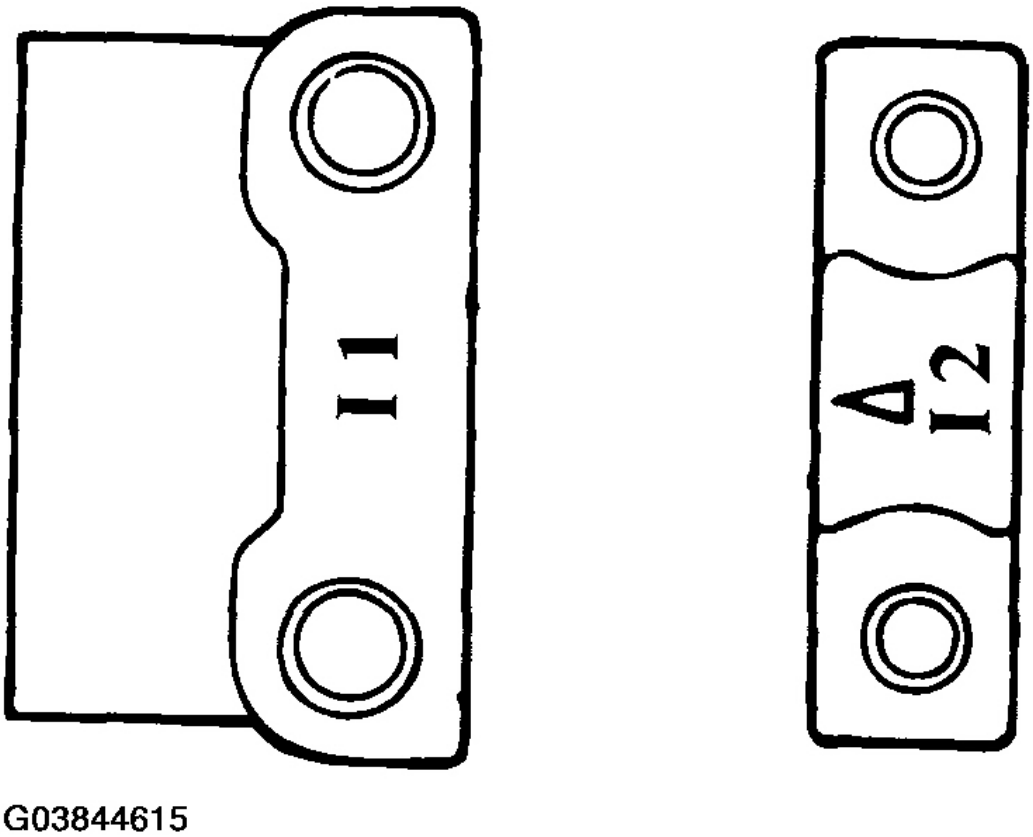

Fig. 90: Identifying Identification Mark
Courtesy of HYUNDAI MOTOR CO.

6. Tighten the bearing cap by 2 or 3 steps

Tightening Torque

Outer (*) 16 EA:

19 ~ 20 Nm (190 ~ 210 kg.cm, 14 ~ 15 lb.ft)

Inner 24 EA:

10 ~ 12 Nm (100 ~ 120 kg.cm, 7.4 ~ 8.8 lb.ft)

 © 2011 Mitchell Repair Information Company, LLC.

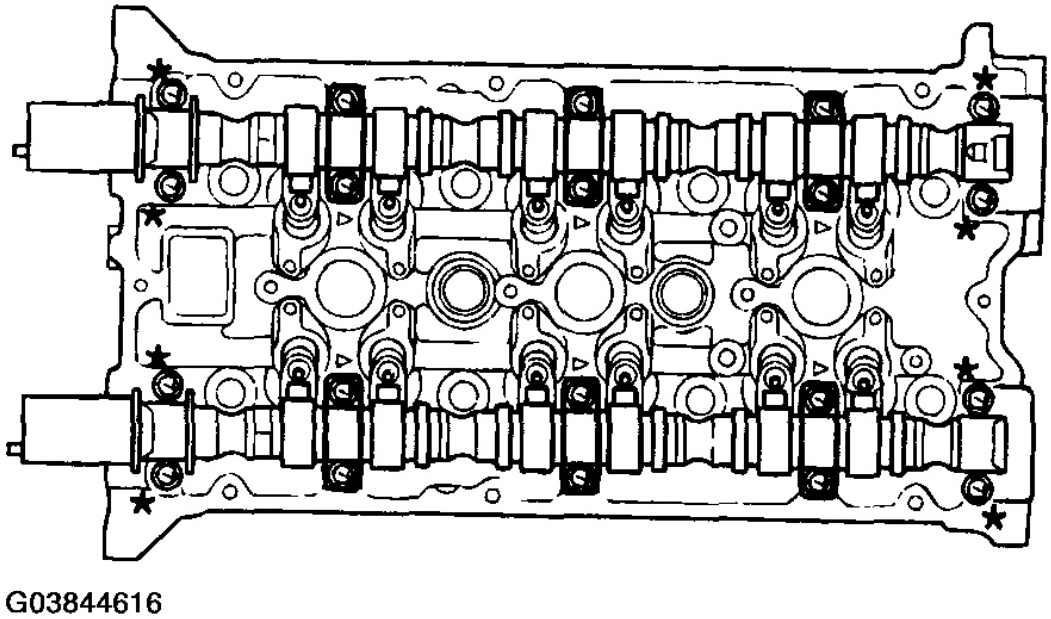

Fig. 91: Tightening Bearing Cap
Courtesy of HYUNDAI MOTOR CO.

7. Install the cylinder head cover.
    1. Install the gasket to the cylinder head cover correctly.
    2. Clean sealing surface on camshaft cap.

    NOTE: Clean sealing surface with use plastic scraper, to prevent oil leak.

    3. Apply sealant to the sealing surface on cylinder head cover and camshaft cap.

    Sealant type: LT 5900

 © 2011 Mitchell Repair Information Company, LLC.

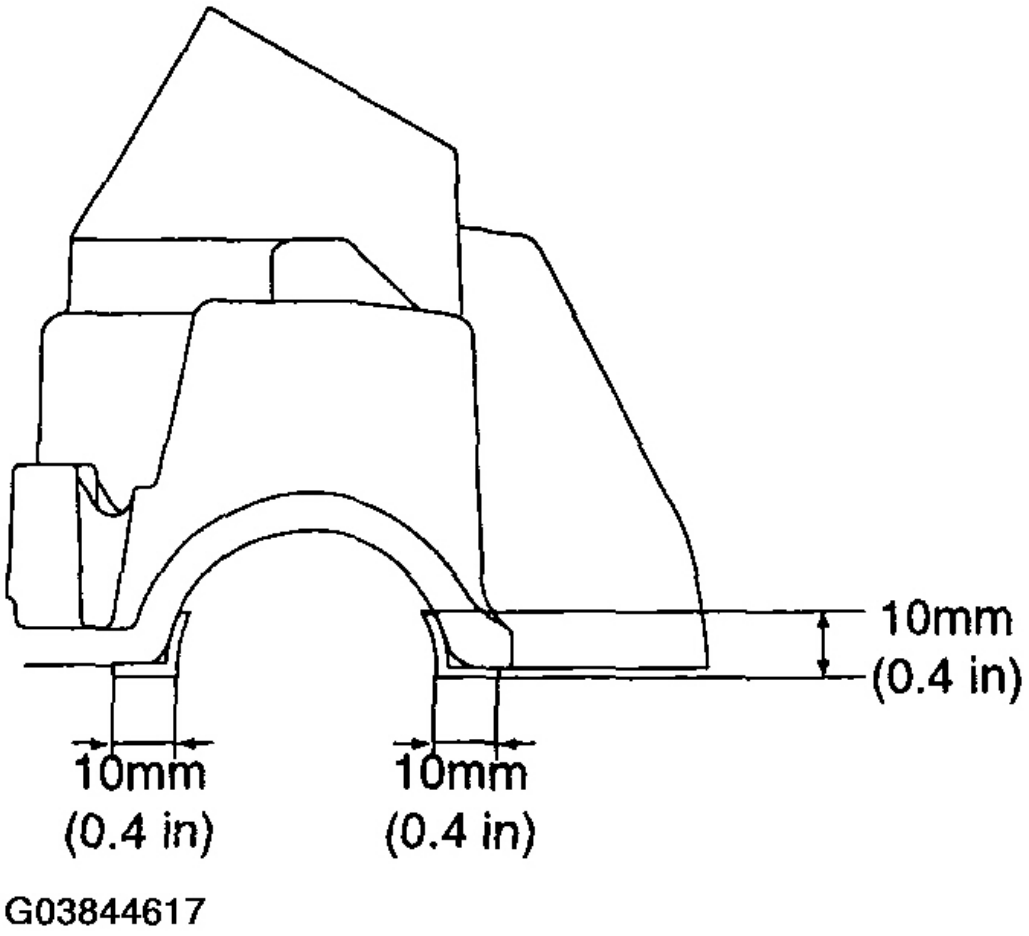

Fig. 92: Identifying Dimensions For Applying Sealant To Cylinder Head Cover And Camshaft Cap
Courtesy of HYUNDAI MOTOR CO.

NOTE: **Be careful of gasket escapement when installing the cylinder head cover. You must use the washer when installing the cylinder head cover bolts.**

 © 2011 Mitchell Repair Information Company, LLC.

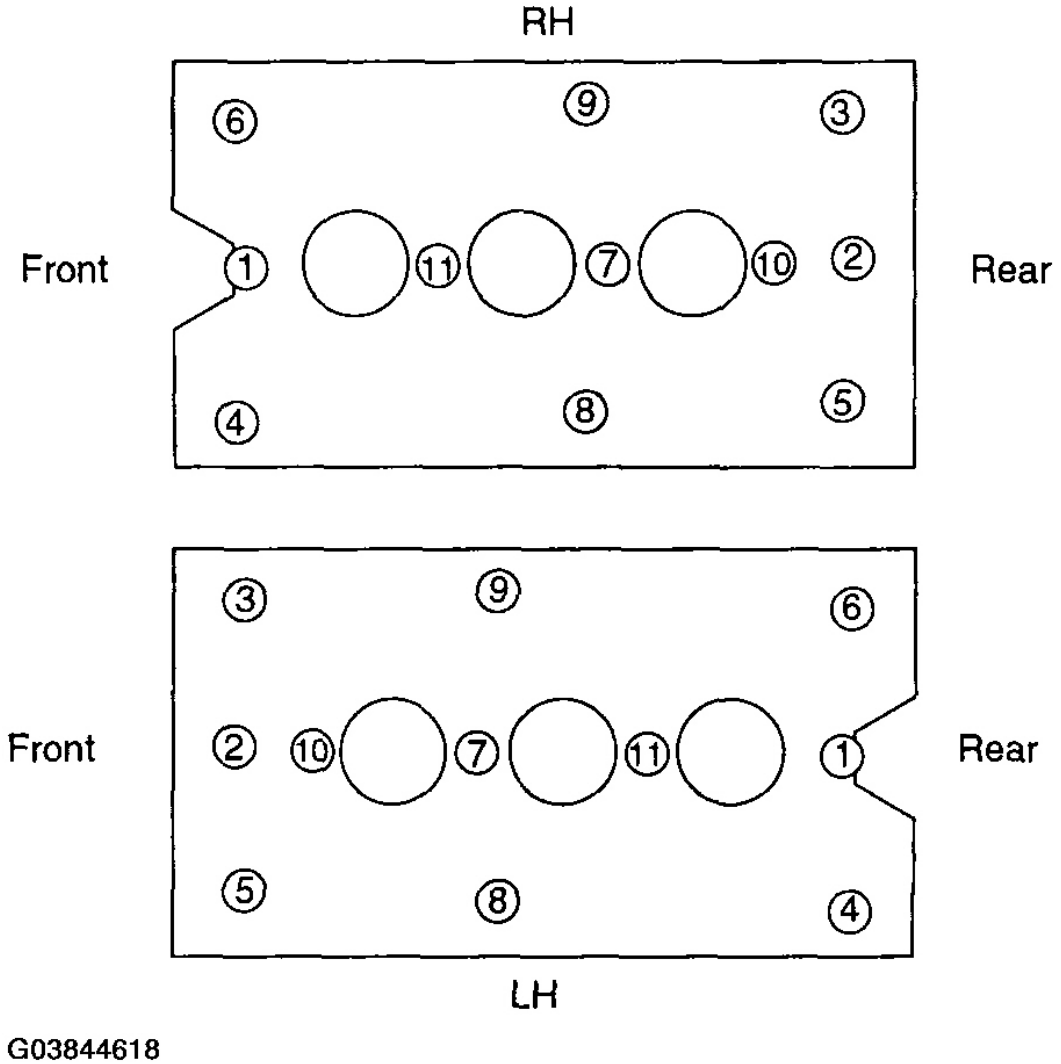

Fig. 93: Identifying Tightening Sequence Of Cylinder Head Cover Bolts
Courtesy of HYUNDAI MOTOR CO.

CONNECTING ROD

COMPONENTS

 © 2011 Mitchell Repair Information Company, LLC.

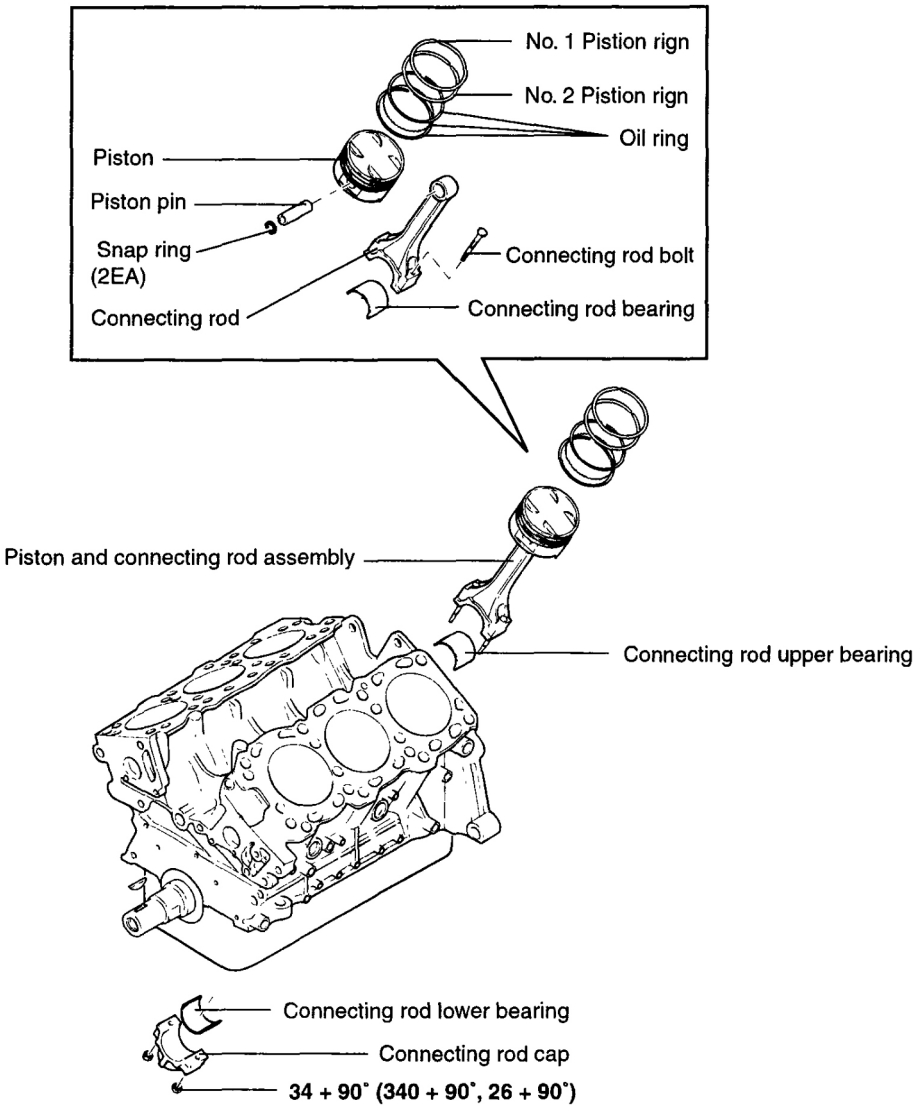

TORQUE : Nm (kg.cm, lb.ft)

G03844619

Fig. 94: Identifying Connecting Rod Components
Courtesy of HYUNDAI MOTOR CO.

REMOVAL

1. Remove the timing belt.

   For additional information, refer to **TIMING BELT** .

 © 2011 Mitchell Repair Information Company, LLC.

2. Remove the cylinder head.

   For additional information, refer to **CYLINDER HEAD** .

3. Remove the oil pan.
4. Remove the oil screen.

DISASSEMBLY

CONNECTING ROD CAP

CAUTION: Keep the bearings in order with their corresponding connecting rods (according to cylinder numbers) for proper reassembly.

1. Remove the connecting rod cap bolts, then remove the caps and the big end lower bearing mark for reassembly.
2. Push each piston connecting rod assembly toward the top of the cylinder.

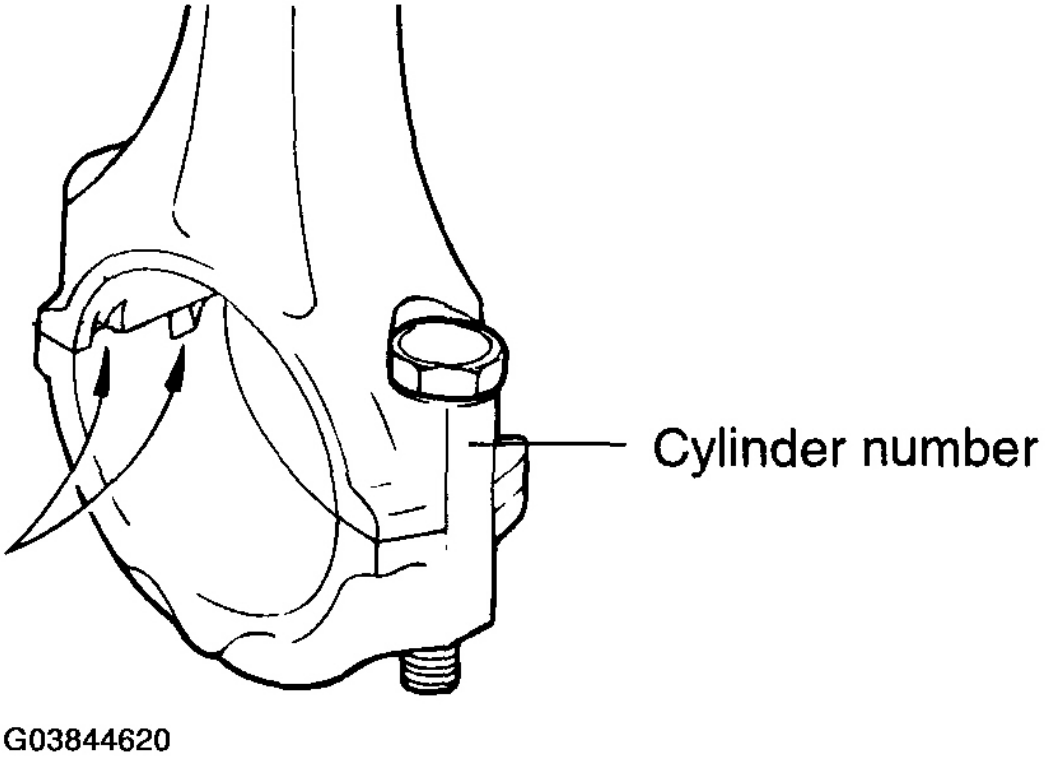

Fig. 95: Identifying Location Of Cylinder Number
Courtesy of HYUNDAI MOTOR CO.

 © 2011 Mitchell Repair Information Company, LLC.

INSPECTION

PISTONS AND PISTON PINS

1. Check each piston for scuffing, scoring, wear and other defects. Replace any piston that is defective.
2. Check each piston ring for breakage, damage and abnormal wear. Replace the defective rings. When the piston requires replacement, its rings should also be replaced.
3. Check that the piston pin fits in the piston pin hole. Replace any piston and pin assembly that is defective. The piston pin must be pressed smoothly by hand into the pin hole (at room temperature)

PISTON RINGS

1. Measure the piston ring side clearance. If the measured value exceeds the service limit, insert a new ring in the ring groove to measure the side clearance. If the clearance still exceeds the service limit, replace the piston and rings together. If it is less than the service limit, replace only the piston rings.

   Piston ring side clearance

   No. 1: 0.04 ~ 0.08 mm (0.0016 ~ 0.0031 in.)

   No. 2: 0.02 ~ 0.06 mm (0.0008 ~ 0.0024 in.)

   Oil ring side rail: 0.2 ~ 0.7 mm (0.0079 ~ 0.0276 in.)

2. To measure the piston ring end gap, insert a piston ring into the cylinder bore. Position the ring at right angles to the cylinder wall by gently pressing it down with a piston. Measure the gap with a feeler gauge. If the gap exceeds the service limit, replace the piston ring.

PISTON RING END GAP

Standard dimensions

No. 1: 0.2 ~ 0.3 mm (0.0078 ~ 0.0118 in.)

No. 2: 0.40~ 0.55 mm (0.0157 ~ 0.0216 in.)

Oil ring side rail: 0.2 ~ 0.7 mm (0.0079 ~ 0.0276 in.)

When replacing the ring without correcting the cylinder bore, check the gap with the ring situated at the lower part of cylinder that is less worn out.

PISTON RING SERVICE SIZE AND MARK

PISTON RING SERVICE SIZE AND MARK TABLE

Standard	None
0.25 mm (0.010 in.) O.S	25
0.50 mm (0.020 in.) O.S	50

 © 2011 Mitchell Repair Information Company, LLC.

NOTE: **The mark can be found on the upper side of the ring next to the end.**

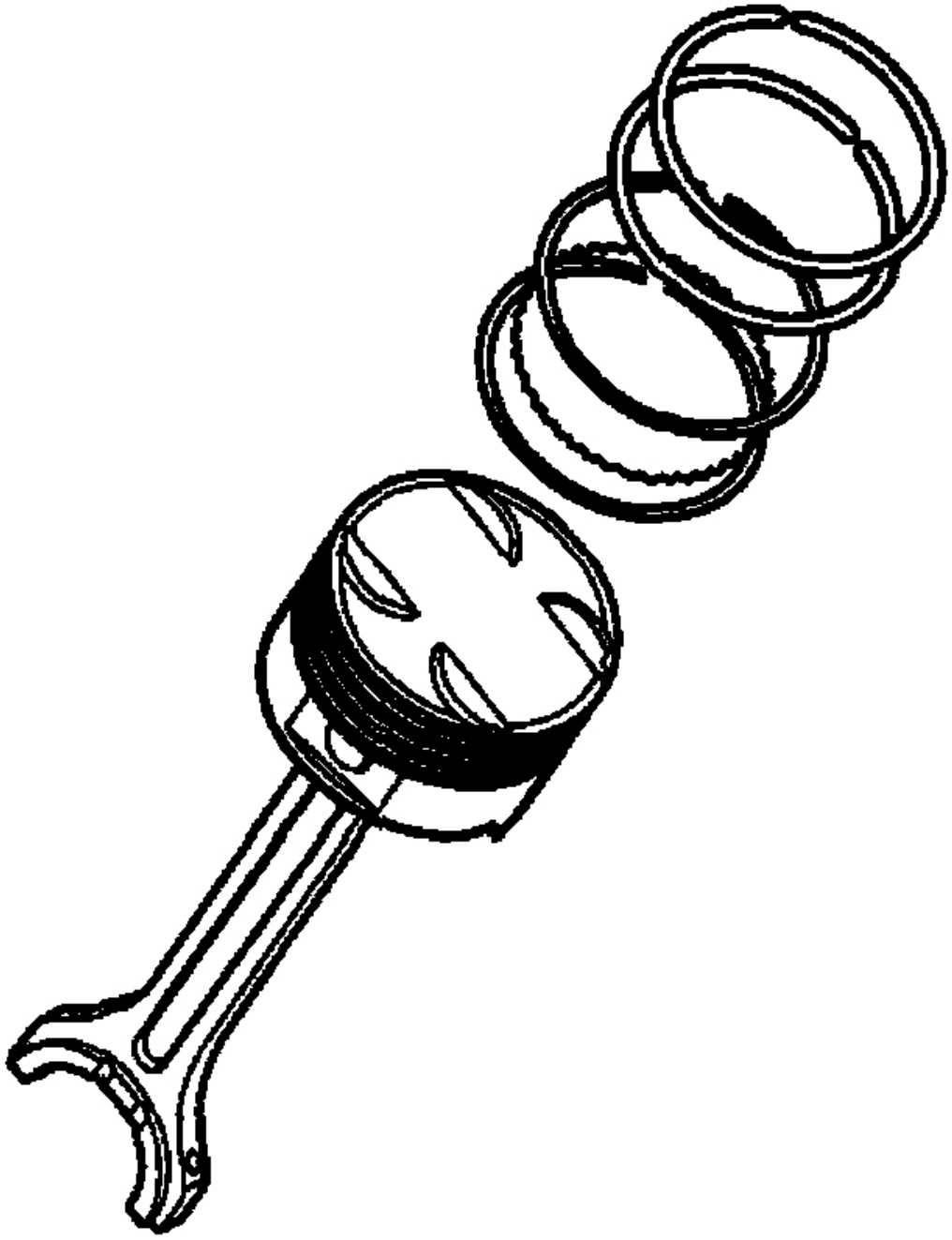

G03844621

 © 2011 Mitchell Repair Information Company, LLC.

Fig. 96: Identifying Piston Rings
Courtesy of HYUNDAI MOTOR CO.

CONNECTING RODS

1. When the connecting rod cap is installed, make sure that the cylinder numbers, marked on rod end cap at disassembly, match. When a new connecting rod is installed, make sure that the notches holding the bearing in place are on the same side.

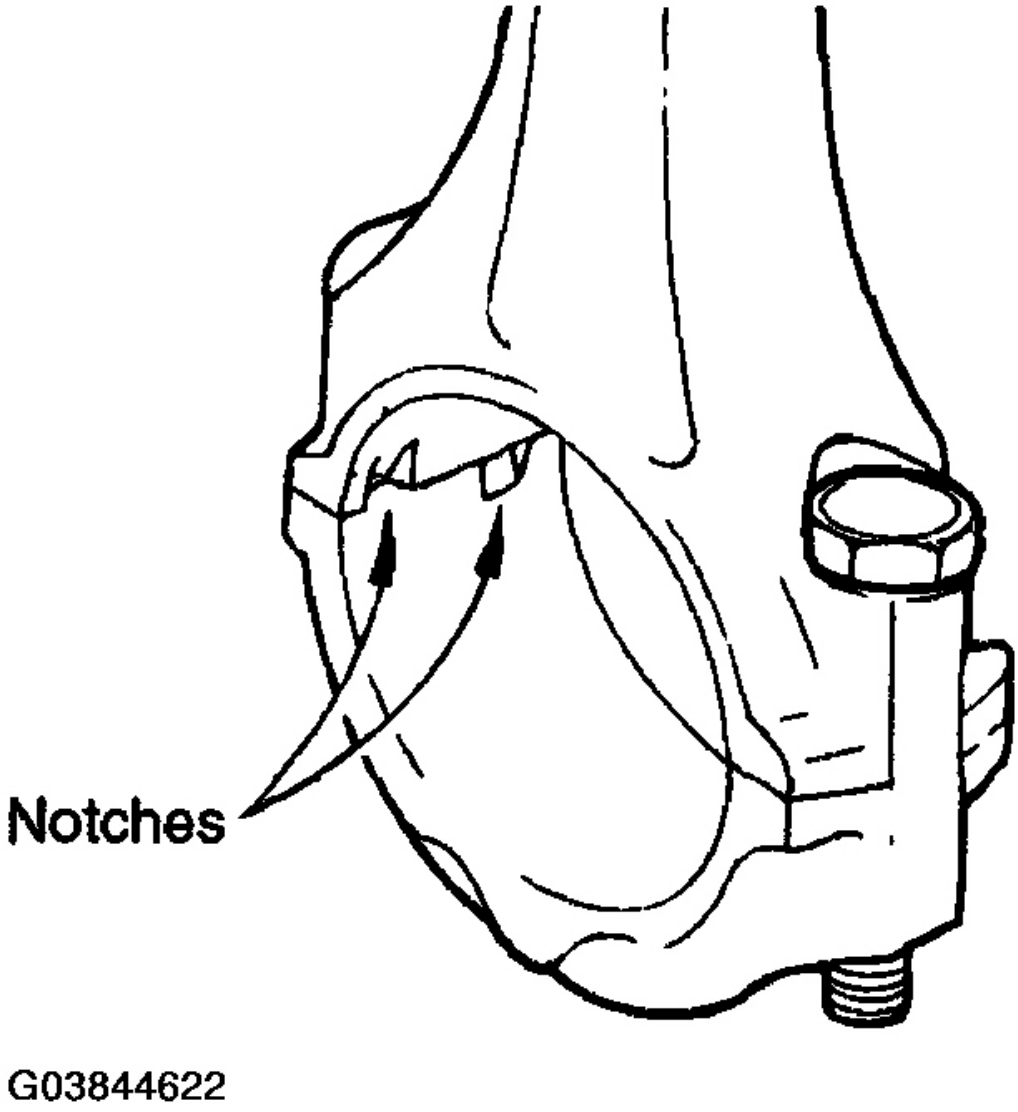

Fig. 97: Identifying Connecting Rod Notches

 © 2011 Mitchell Repair Information Company, LLC.

Courtesy of HYUNDAI MOTOR CO.

2. Replace the connecting rod if it is damaged at either end of the thrust faces. If it has a stratified wear, or if the surface of the inside diameter of the small end is severely rough, replace the rod.

REASSEMBLY

1. Install the spacer.

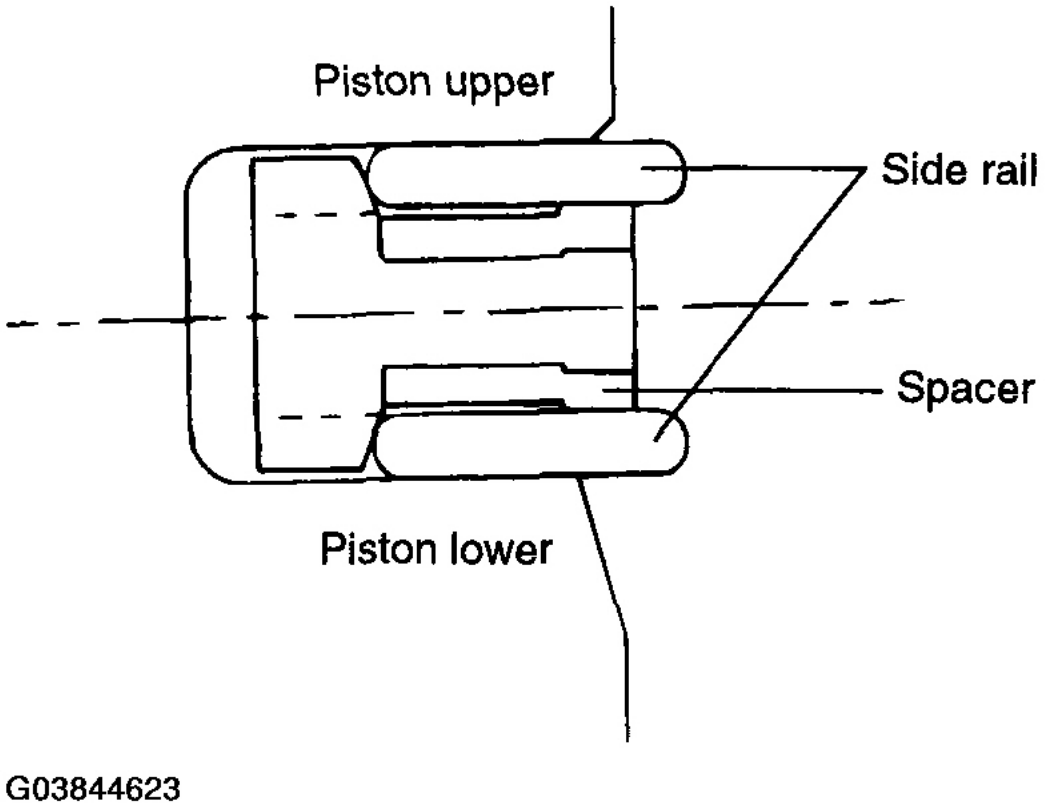

Fig. 98: Installing Spacer
Courtesy of HYUNDAI MOTOR CO.

 © 2011 Mitchell Repair Information Company, LLC.

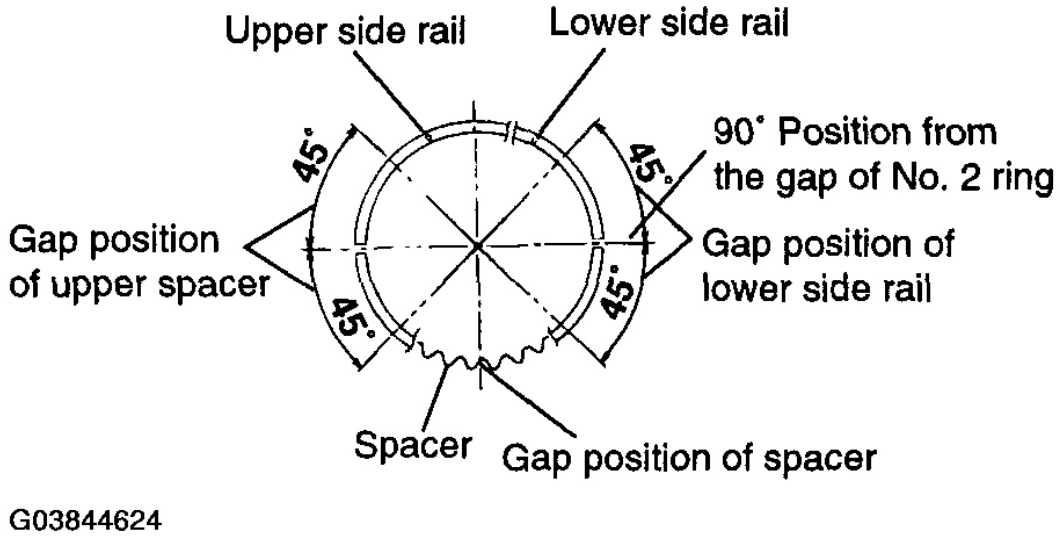

Fig. 99: Identifying Spacer Gap Positions
Courtesy of HYUNDAI MOTOR CO.

2. Install the upper side rail. To install the side rail, first put one end of the side rail between the piston ring groove and spacer, hold it firmly, and press down with finger on the portion to be inserted into the groove (as illustrated).

CAUTION: Do not use a piston ring expander when installing the side rail.

3. Install the lower side rail by the same procedure described in Step 2 .

 © 2011 Mitchell Repair Information Company, LLC.

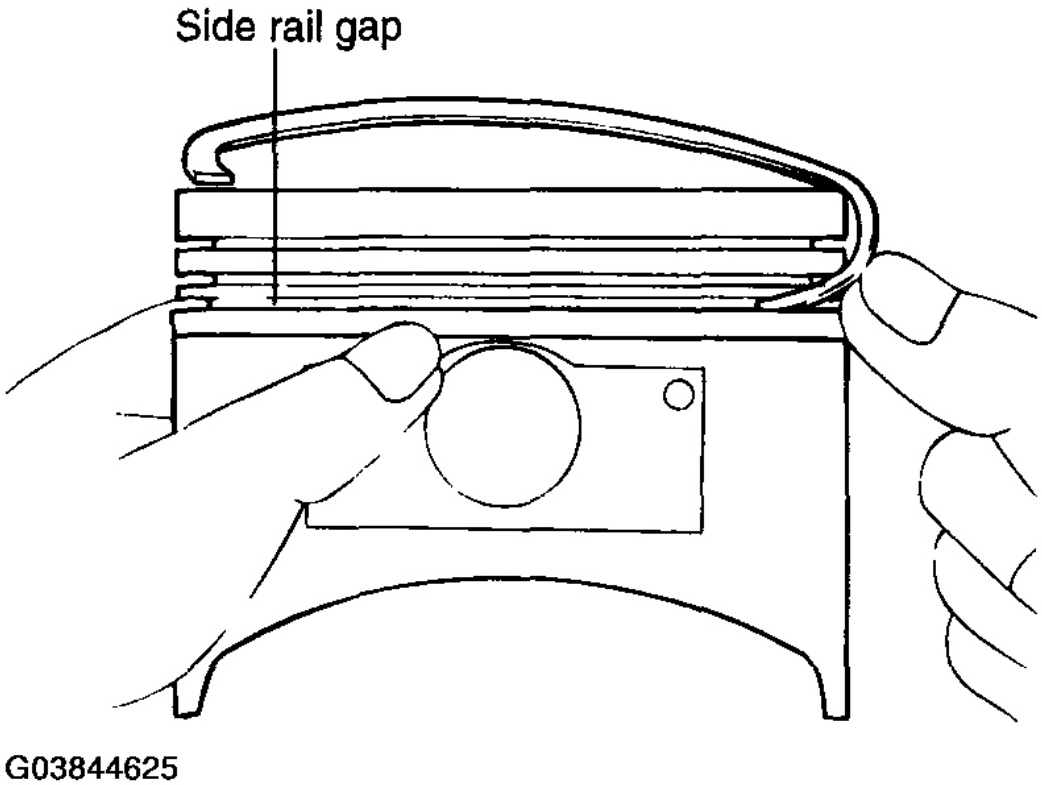

Fig. 100: Installing Lower Side Rail
Courtesy of HYUNDAI MOTOR CO.

4. Apply engine oil around the piston and piston grooves.
5. Using a piston ring expander, install the No. 2 piston ring.
6. Install the No. 1 piston ring.

 © 2011 Mitchell Repair Information Company, LLC.

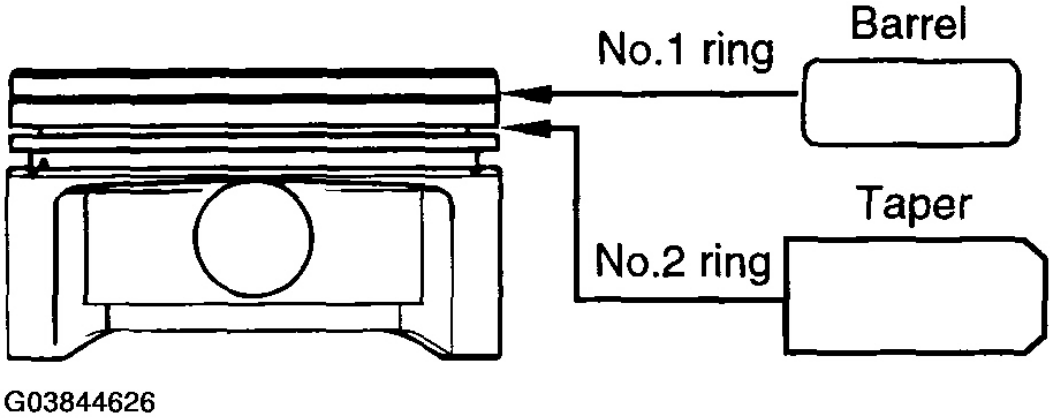

Fig. 101: Installing No. 1 Piston Ring
Courtesy of HYUNDAI MOTOR CO.

7. Position each piston ring end gap as far away from its neighboring gaps as possible. Make sure that the gaps are not positioned in the thrust and pin directions.
8. Hold the piston rings firmly with a piston ring compressor as they are inserted into cylinder.

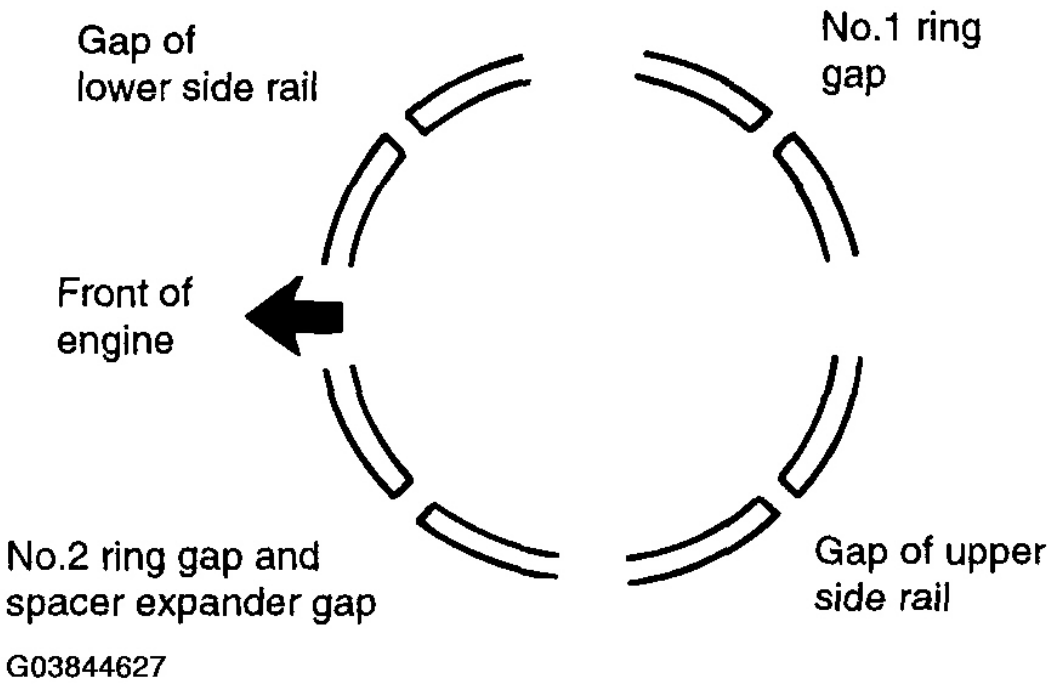

 © 2011 Mitchell Repair Information Company, LLC.

Fig. 102: Identifying Gaps
Courtesy of HYUNDAI MOTOR CO.

9. Install the upper main bearings in the cylinder block.
10. Install the lower main bearings in the main bearing caps.

CAUTION: Install the bearing so it matches the oil hole in the block.

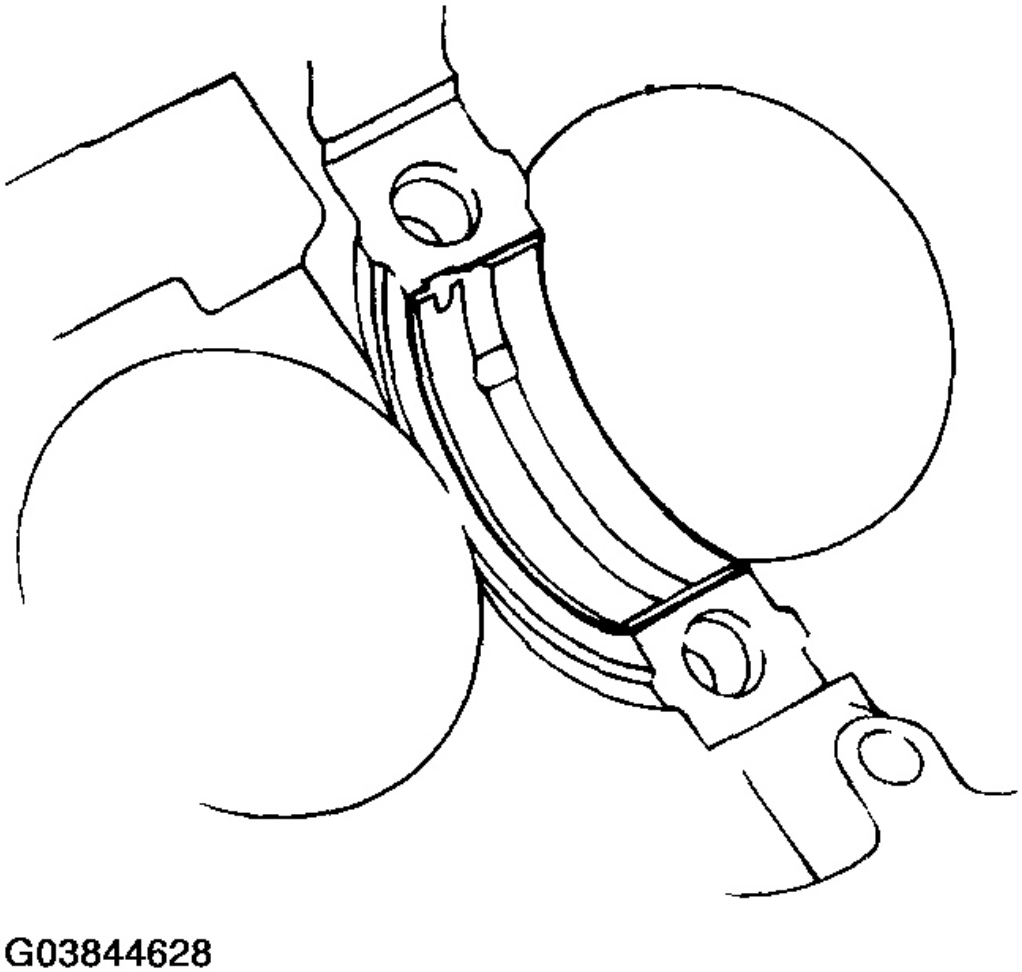

Fig. 103: Installing Lower Main Bearings In Main Bearing Caps
Courtesy of HYUNDAI MOTOR CO.

11. Install the thrust washers in the No. 3 main bearing cap with the oil grooves facing outward.

 © 2011 Mitchell Repair Information Company, LLC.

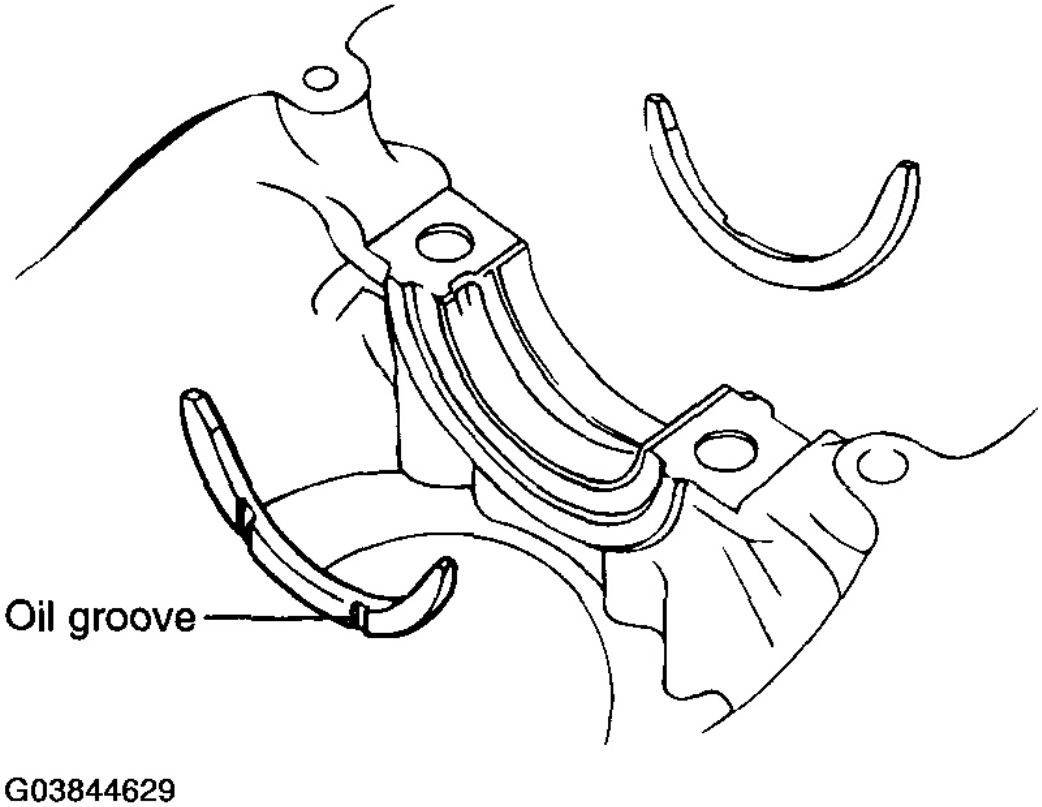

Fig. 104: Installing Thrust Washers In No. 3 Main Bearing Cap
Courtesy of HYUNDAI MOTOR CO.

12. Make sure that the front mark of the piston and the front mark (identification mark) of the connecting rod are directed toward the front of the engine.
13. When the connecting rod cap is installed, make sure that any cylinder numbers placed on the rod and cap at disassembly match.
14. When a new connecting rod is installed, make sure that the notches for holding the bearing in place are on the same side.

 © 2011 Mitchell Repair Information Company, LLC.

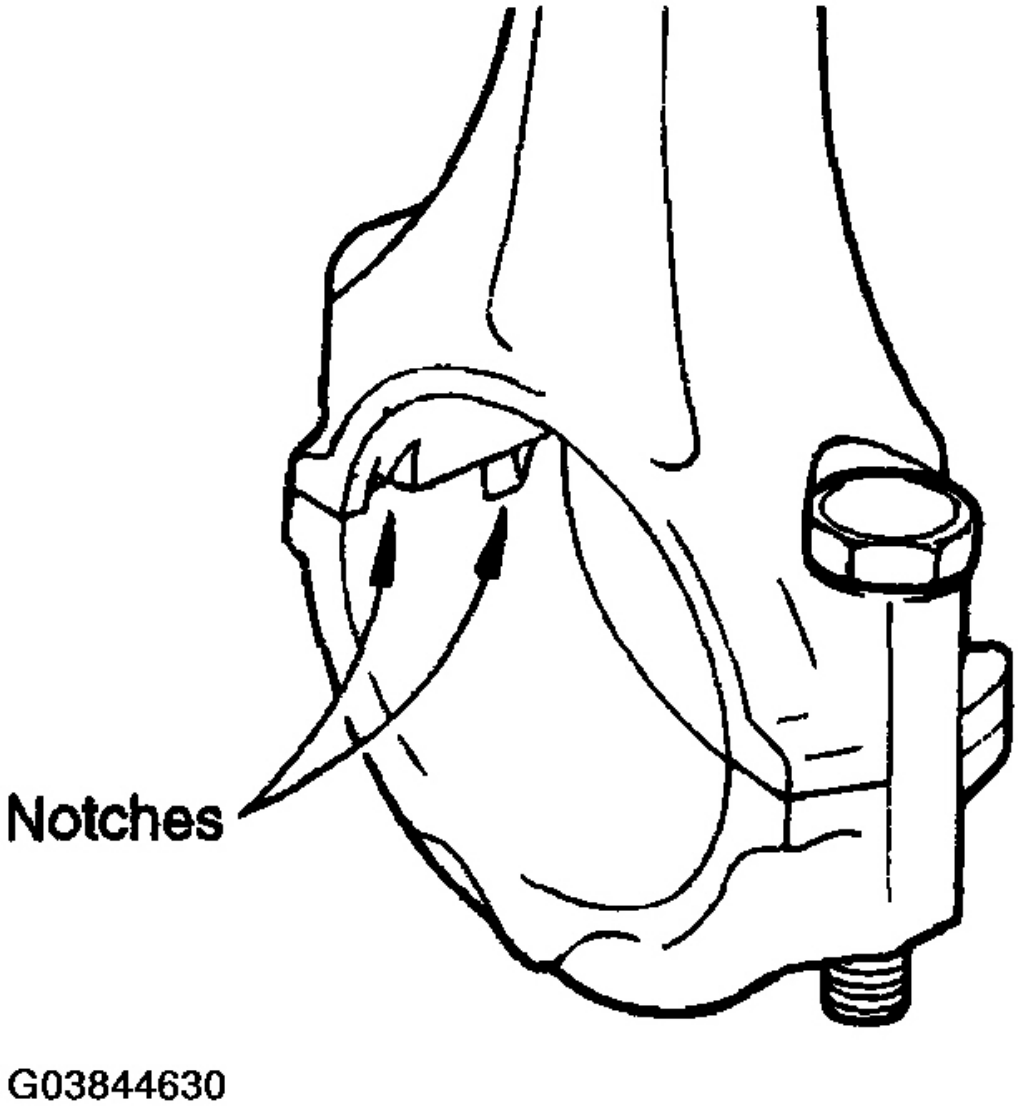

Fig. 105: Identifying Connecting Rod Notches
Courtesy of HYUNDAI MOTOR CO.

15. When assembling, bolts should be fastened using the plastic angle technique as follows.
    1. Apply oil to the threads and matching areas.
    2. Tighten the connecting rod bolt.

    Tightening torque

 © 2011 Mitchell Repair Information Company, LLC.

Connecting rod bolt:

34 Nm (340 kg.cm, 26 lb.ft) + 90°

CAUTION: After removing the connecting rod bolt, do not use it again. When using a new bolt, do not tighten the bolt more than 3 times.

16. Check the connecting rod side clearance.

Connecting rod side clearance

Standard: 0.10 ~ 0.25 mm (0.0039 ~ 0.0098 in.)

Limit: 0.4 mm (0.0157 in.)

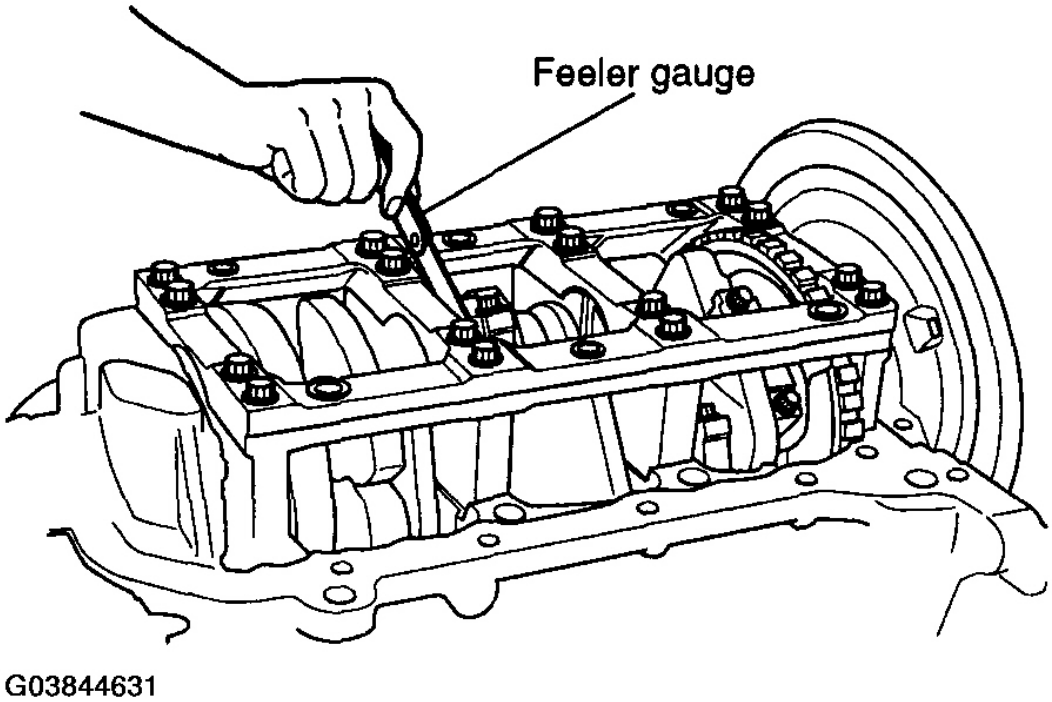

Fig. 106: Checking Connecting Rod Side Clearance
Courtesy of HYUNDAI MOTOR CO.

INSTALLATION

1. Install the upper baffle plate.
2. Install the oil screen.

 © 2011 Mitchell Repair Information Company, LLC.

3. Install the oil pan.

   For additional information, refer to **LUBRICATION SYSTEM** .

4. Install the cylinder head.

   For additional information refer to **CYLINDER HEAD** .

5. Install the timing belt.

   For additional information, refer to **TIMING BELT** .

CRANKSHAFT

COMPONENTS

 © 2011 Mitchell Repair Information Company, LLC.

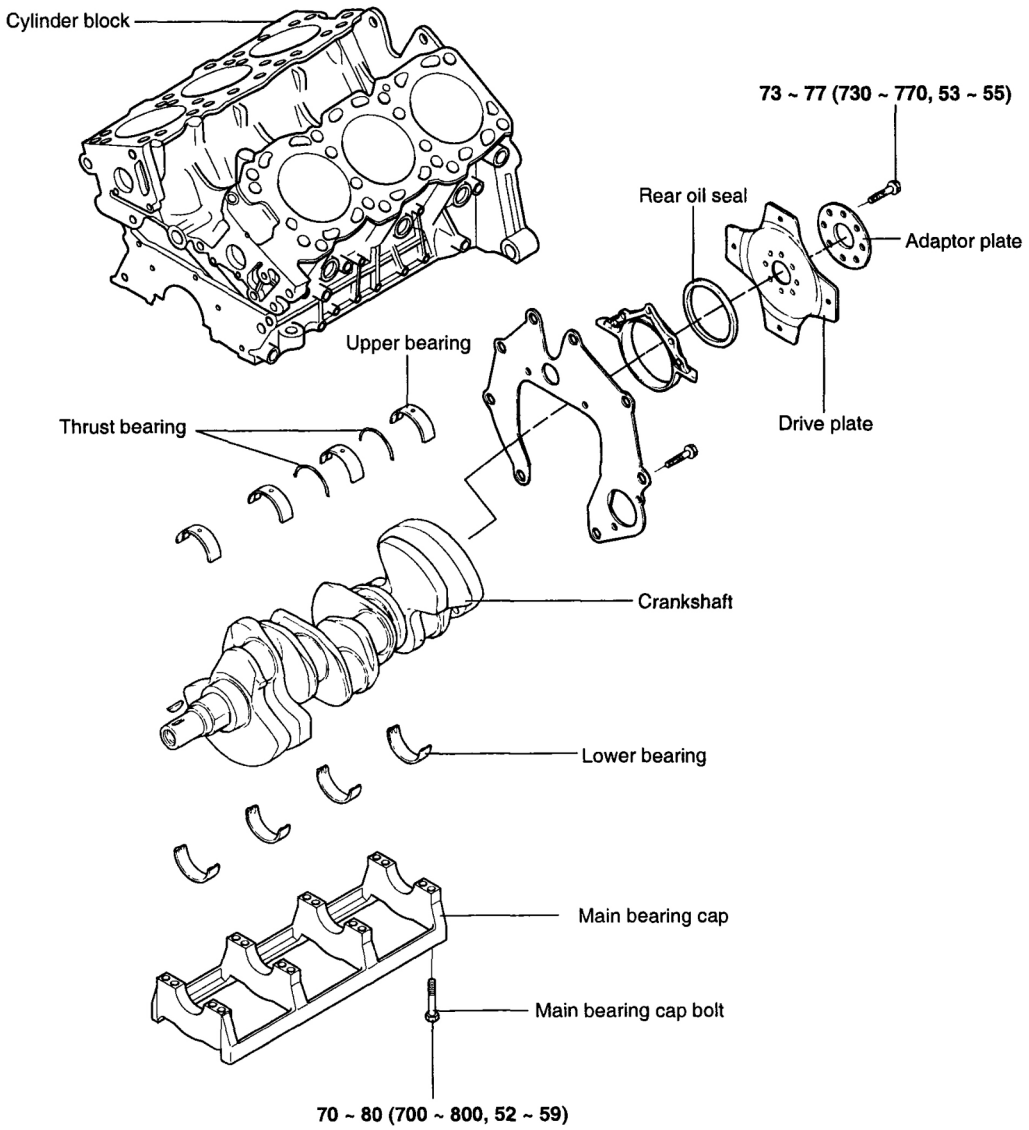

Fig. 107: Identifying Crankshaft Components
Courtesy of HYUNDAI MOTOR CO.

DISASSEMBLY

1. Remove the timing belt train, front case, cylinder head assembly and oil pan. .
2. Remove the rear plate and the rear oil seal.
3. Remove the connecting rod caps.

NOTE: Mark the main bearing caps to be able to reassemble in the original

 © 2011 Mitchell Repair Information Company, LLC.

position and direction.

4. Remove the main bearing caps and remove the crankshaft. Keep the bearings in order according to the cap number.

INSPECTION

CRANKSHAFT

1. Check the crankshaft journals and pins for damage, uneven wear and cracks. Also check the oil holes for restrictions. Repair or replace any defective parts.
2. Inspect the crankshaft journal and pin for out-of-round and taper.

   Standard value

   Crankshaft journal O.D:

   63.982 ~ 64.00 mm (2.519 ~ 2.5197 in.)

   Crankshaft pin O.D:

   54.982 ~ 55.00 mm (2.165 ~ 2.1653 in.)

 © 2011 Mitchell Repair Information Company, LLC.

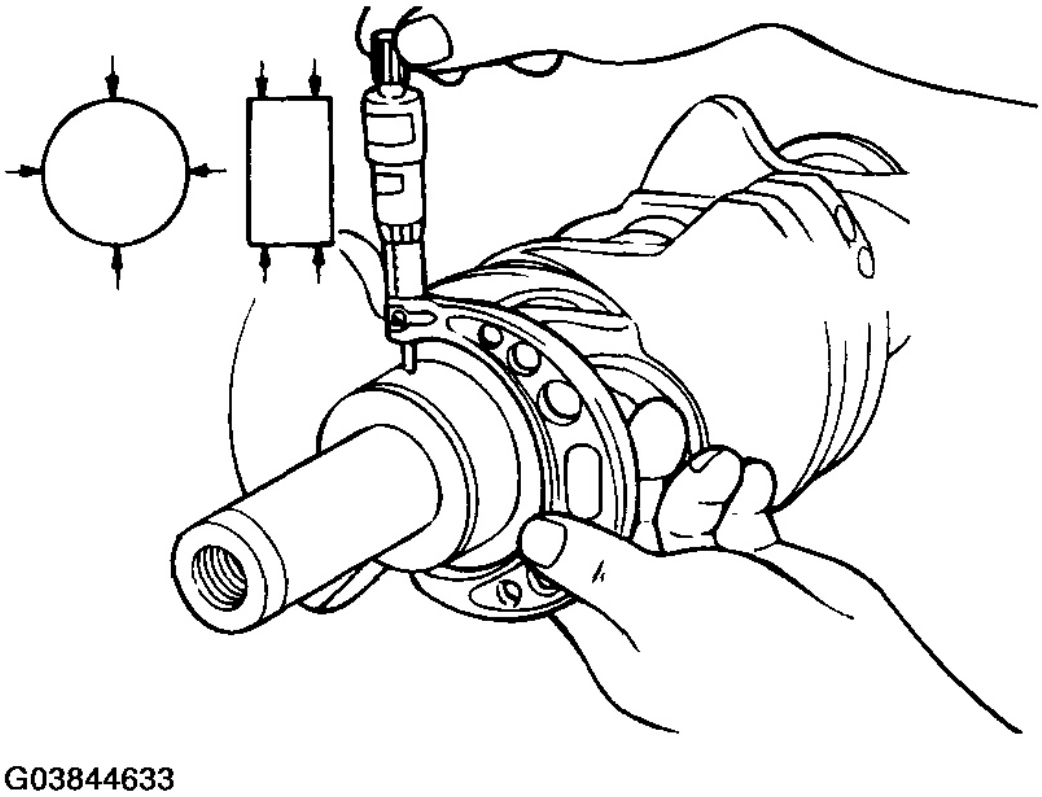

Fig. 108: Checking Crankshaft
Courtesy of HYUNDAI MOTOR CO.

MAIN BEARINGS AND CONNECTING ROD BEARINGS

Visually inspect each bearing for peeling, melting, seizure and improper contact. Replace any defective bearings.

MEASURING OIL CLEARANCE

Check for oil clearance by measuring the outside diameter of the crankshaft journal and the inside diameter of the bearing. The clearance can be obtained by calculating the difference between the measured outside diameters.

Standard value

Oil clearance

Crankshaft main bearing:

 © 2011 Mitchell Repair Information Company, LLC.

0.022 ~ 0.040 mm (0.0009 ~ 0.0016 in.)

Connecting ~ rod bearing:

0.026 ~ 0.044 mm (0.001 ~ 0.0017 in.)

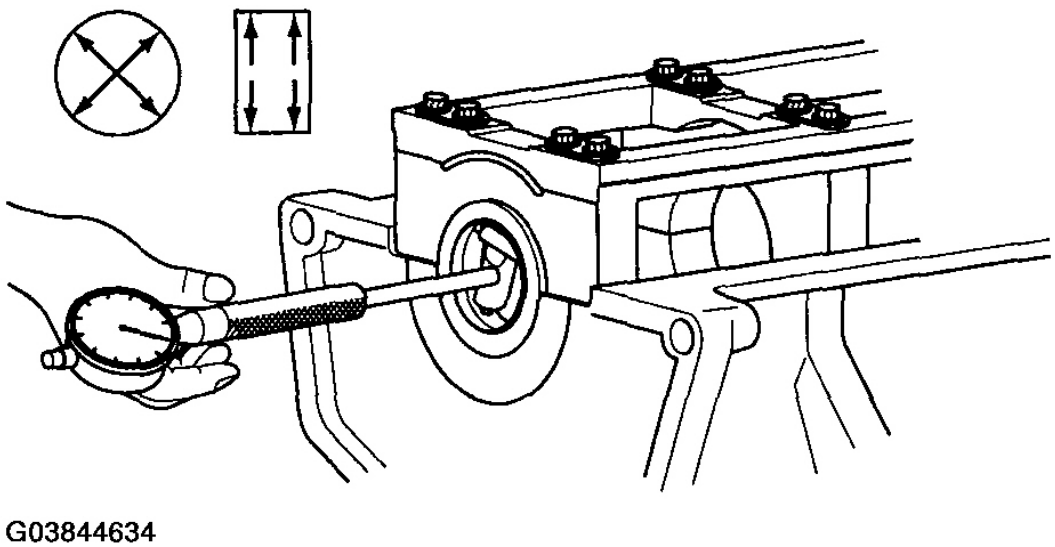

Fig. 109: Measuring Oil Clearance
Courtesy of HYUNDAI MOTOR CO.

PLASTIGAUGE METHOD

Plastigauge may be used to measure the clearance.

1. Remove oil, grease and any other dirt from the bearings and journals.
2. Cut the plastigauge the same length as the width of the bearing and place it in parallel with the journal, avoiding the oil holes.
3. Install the crankshaft, bearings and caps and tighten them to the specified torques. During this operation, do not turn the crankshaft. Remove the caps. Measure the width of the plastigauge at the widest part by using the scale printed on the gauge package.

   If the clearance exceeds the service limit, the bearing should be replaced or an undersize bearing should be used. When installing a new crankshaft, be sure to use standard size bearings.

   If the standard clearance can not be obtained even after replacing the bearing, the journal and pin should be ground to the undersize and a bearing of the corresponding size should be installed.

 © 2011 Mitchell Repair Information Company, LLC.

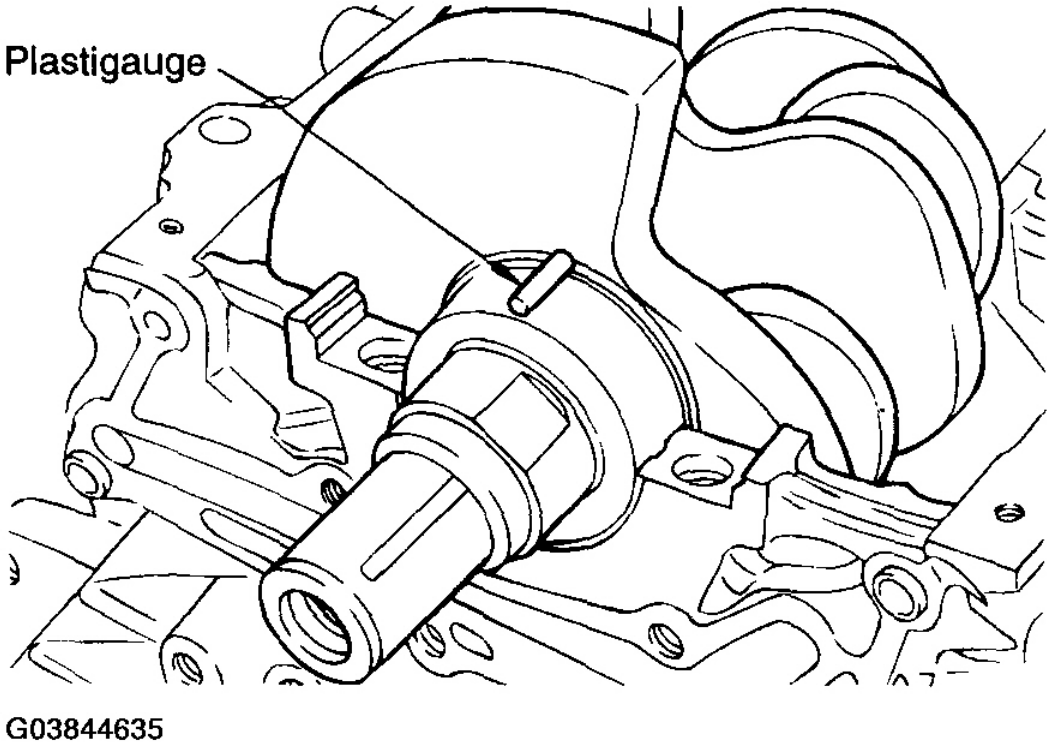

Fig. 110: Measuring Oil Clearance (Plastigauge Method)
Courtesy of HYUNDAI MOTOR CO.

OIL SEAL

Check the front and rear oil seals for damage or worn surfaces. Replace any seat that is defective.

DRIVE PLATE (A/T)

Replace distorted, damaged, or cracked drive plates.

REASSEMBLY

MAIN BEARING

1. Install a grooved main bearing (upper bearing) on the cylinder block side.

 © 2011 Mitchell Repair Information Company, LLC.

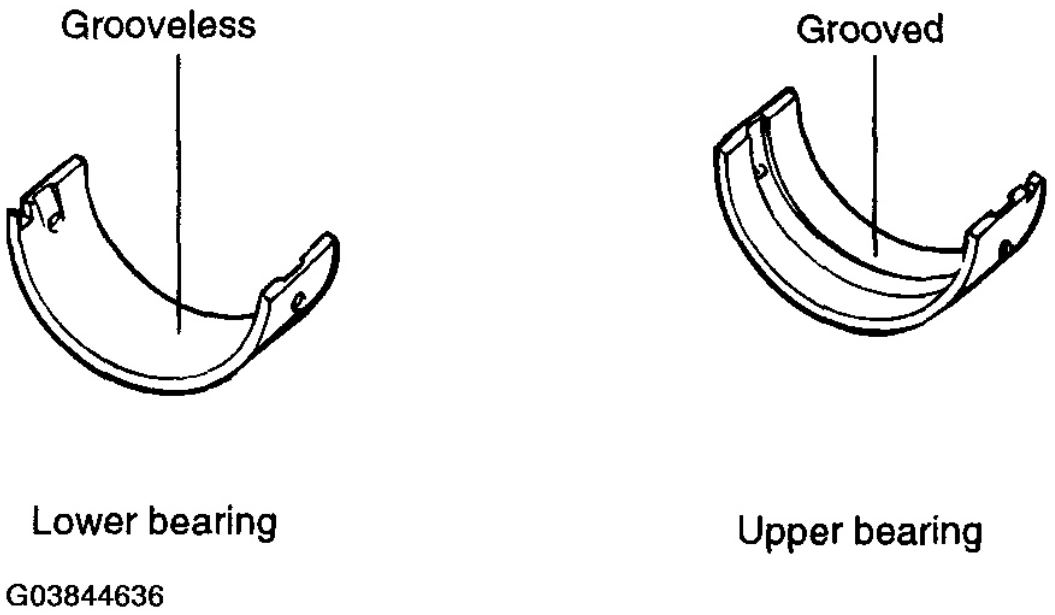

Fig. 111: Identifying Lower And Upper Bearings
Courtesy of HYUNDAI MOTOR CO.

2. Install a grooveless main bearing (lower bearing) on the main bearing cap side.
3. Install the crankshaft. Apply engine oil to journal and pin.
4. Install the bearing caps with the arrow mark directed toward the front of the engine. Cap number must be correct.
5. Tighten the cap bolts to the specified torque.

Tightening torque

Main bearing cap bolts:

70 ~ 80 Nm (700 ~ 800 kg.cm, 52 ~ 59 lb.ft)

 © 2011 Mitchell Repair Information Company, LLC.

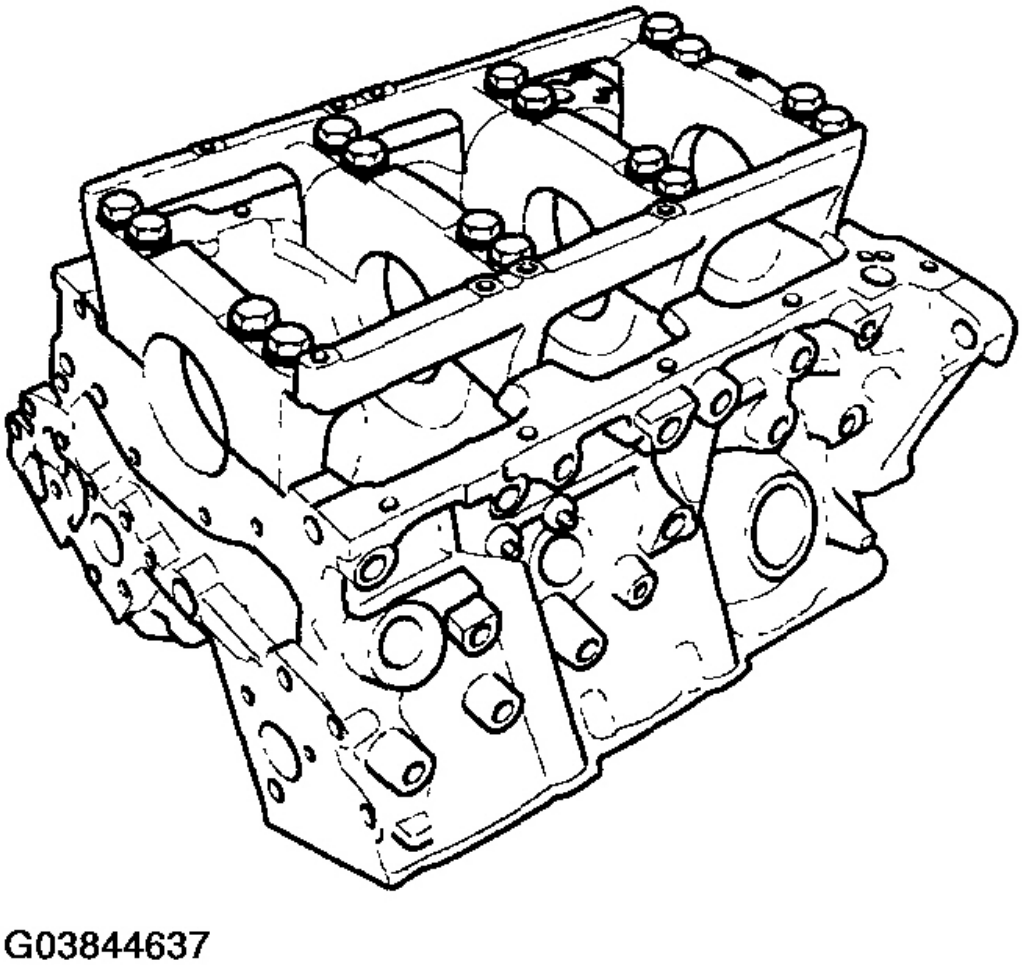

Fig. 112: Identifying Bearing Cap Bolts
Courtesy of HYUNDAI MOTOR CO.

6. Cap bolts should be tightened evenly in stages 4 to 5 increments before they are tightened to the specified torque.
7. Make certain that crankshaft turns freely and check the end play of the crankshaft.

Crankshaft end play

Standard: 0.050 ~ 0.250 mm (0.002 ~ 0.0098 in.)

Limit: 0.35 mm (0.014 in.)

 © 2011 Mitchell Repair Information Company, LLC.

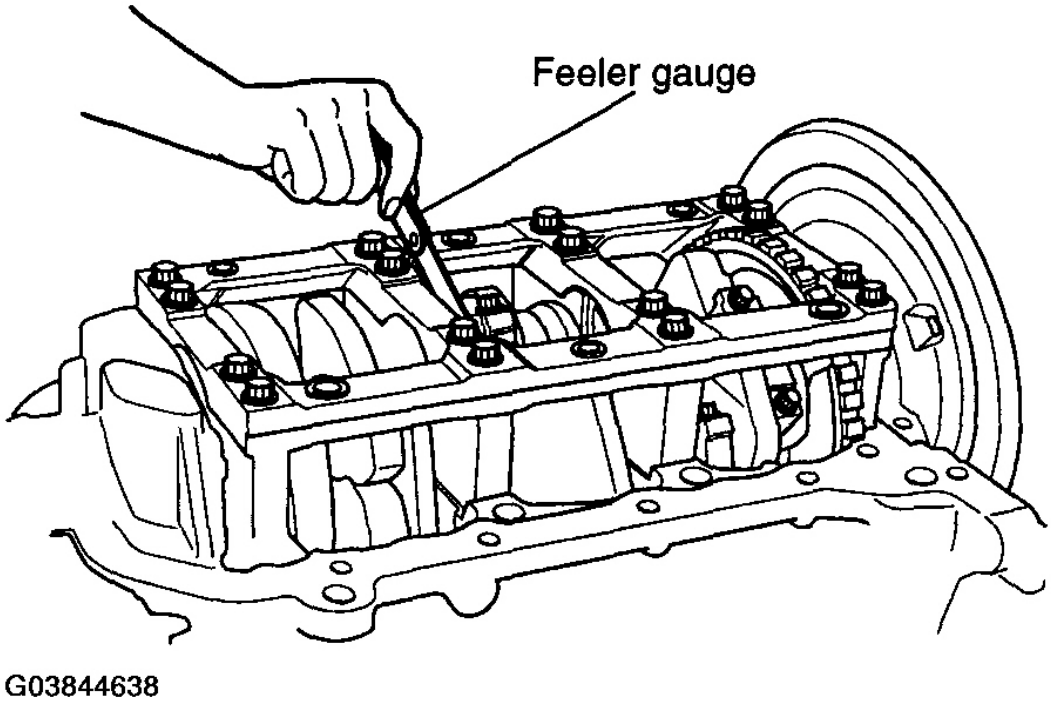

Fig. 113: Checking Crankshaft End Play
Courtesy of HYUNDAI MOTOR CO.

8. Using special tool (09231-33000), install the rear oil seal in oil seal case.

 © 2011 Mitchell Repair Information Company, LLC.

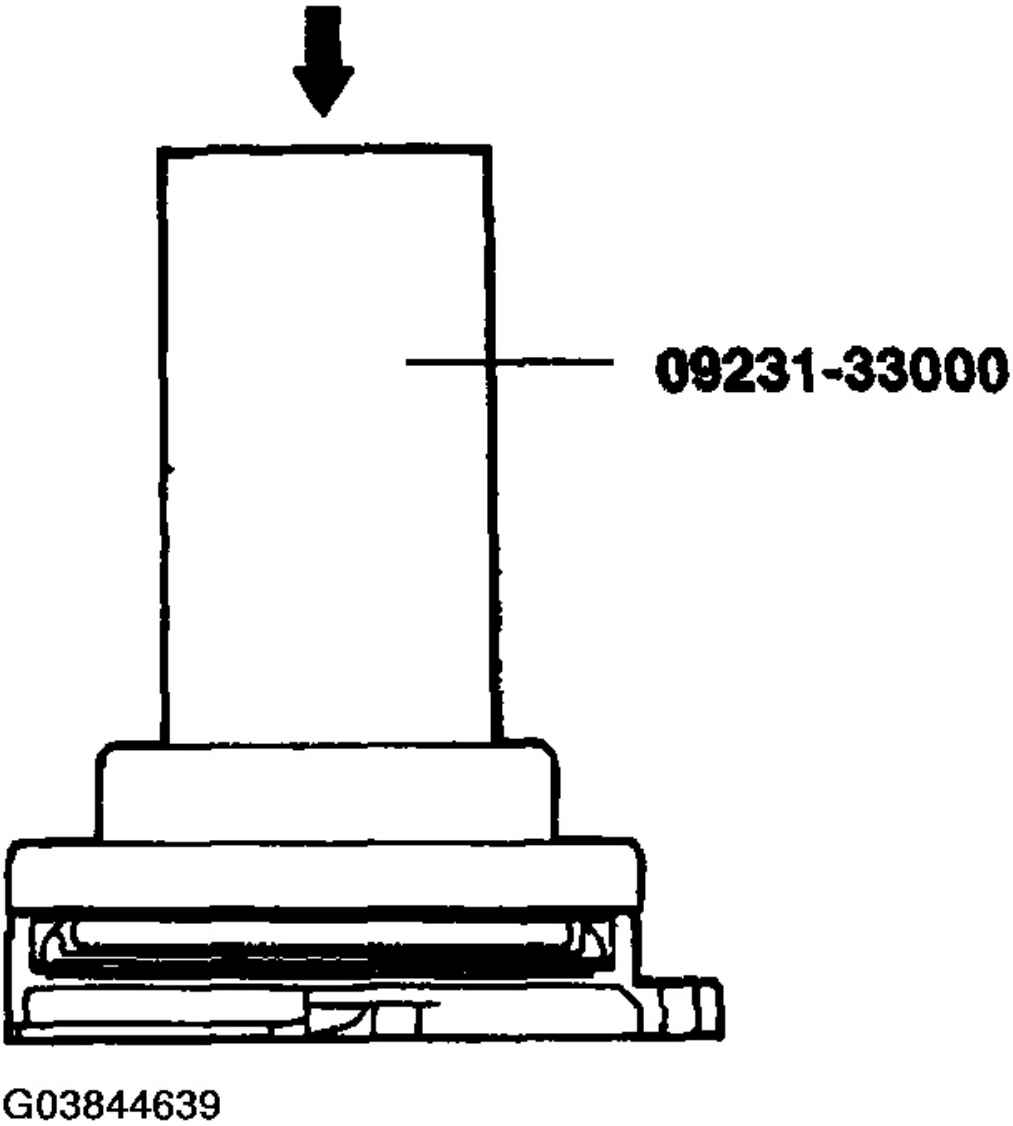

Fig. 114: Installing Rear Oil Seal In Oil Seal Case
Courtesy of HYUNDAI MOTOR CO.

9. Apply sealant to the area shown in **Fig. 115** . Install the oil seal case in the cylinder block.

Tightening torque

Oil seal case bolt:

 © 2011 Mitchell Repair Information Company, LLC.

10 ~ 12 Nm (100 ~ 120 kg.cm, 7 ~ 9 lb.ft)

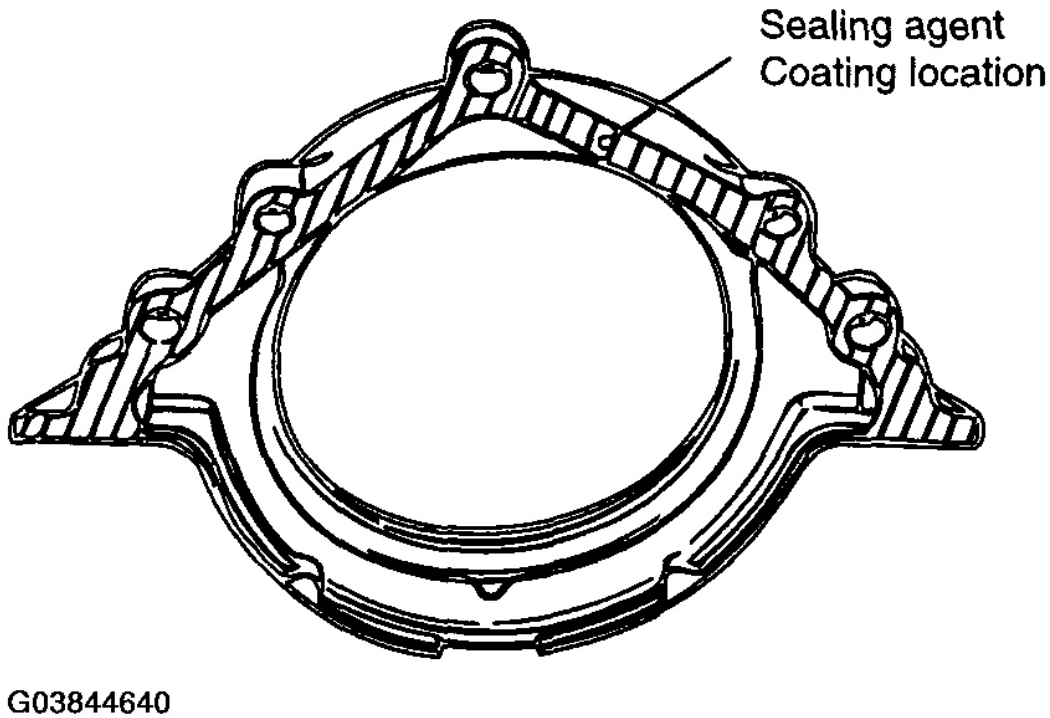

Fig. 115: Identifying Sealing Agent Coating Location
Courtesy of HYUNDAI MOTOR CO.

10. Tighten the rear plate to the specified torque.

    Tightening torque

    Rear plate: 10 ~ 12 Nm (100 ~ 120 kg.cm, 7 ~ 9 lb.ft)

11. Tighten the drive plate and the adapter plate (A/T).

    Tightening torque

    Drive plate and adapter plate bolt:

    73 ~ 77 Nm (730 ~ 770 kg.cm, 53 ~ 56 lb.ft)

 © 2011 Mitchell Repair Information Company, LLC.

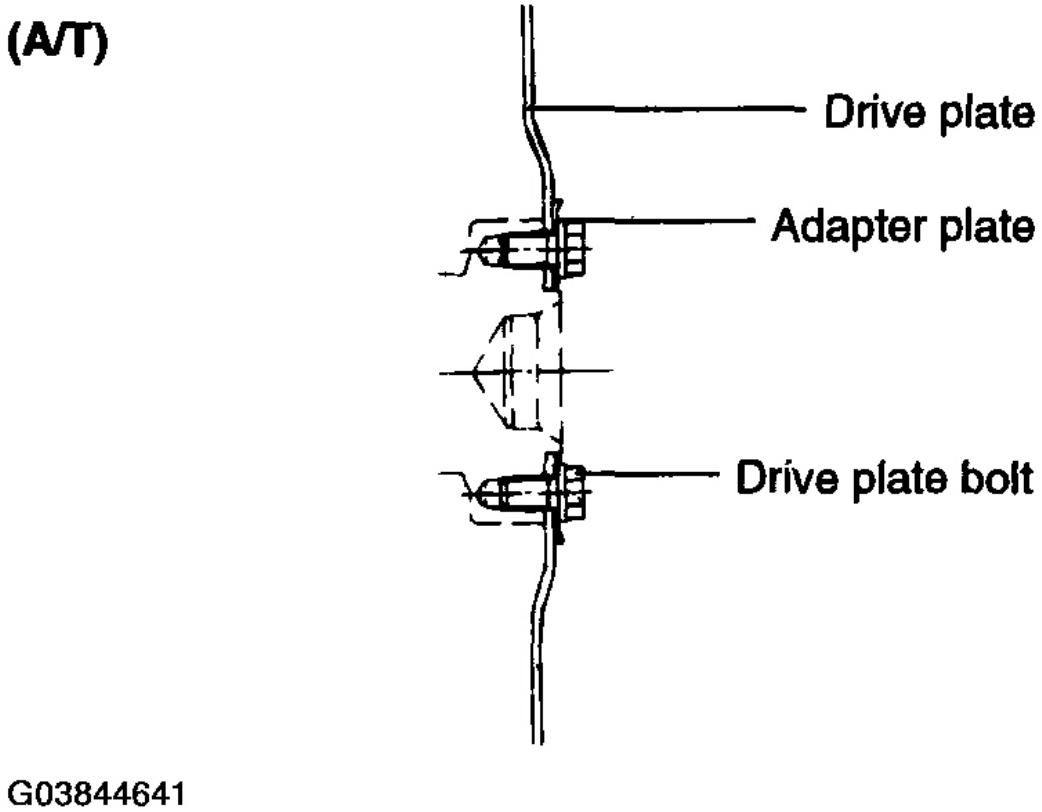

Fig. 116: Tightening Drive Plate And Adapter Plate
Courtesy of HYUNDAI MOTOR CO.

COOLING SYSTEM

SCHEMATIC DIAGRAM

INLET CONTROL

 © 2011 Mitchell Repair Information Company, LLC.

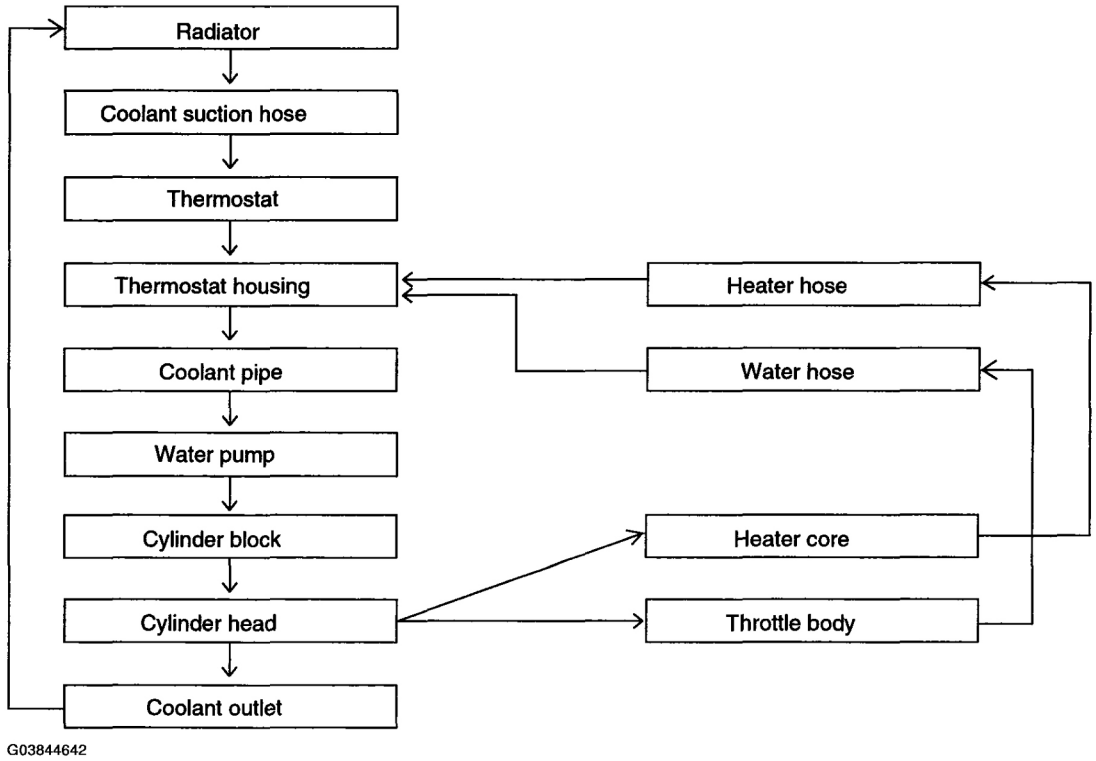

Fig. 117: Cooling System Schematic Diagram (Inlet Control)
Courtesy of HYUNDAI MOTOR CO.

FLOW CHART

 © 2011 Mitchell Repair Information Company, LLC.

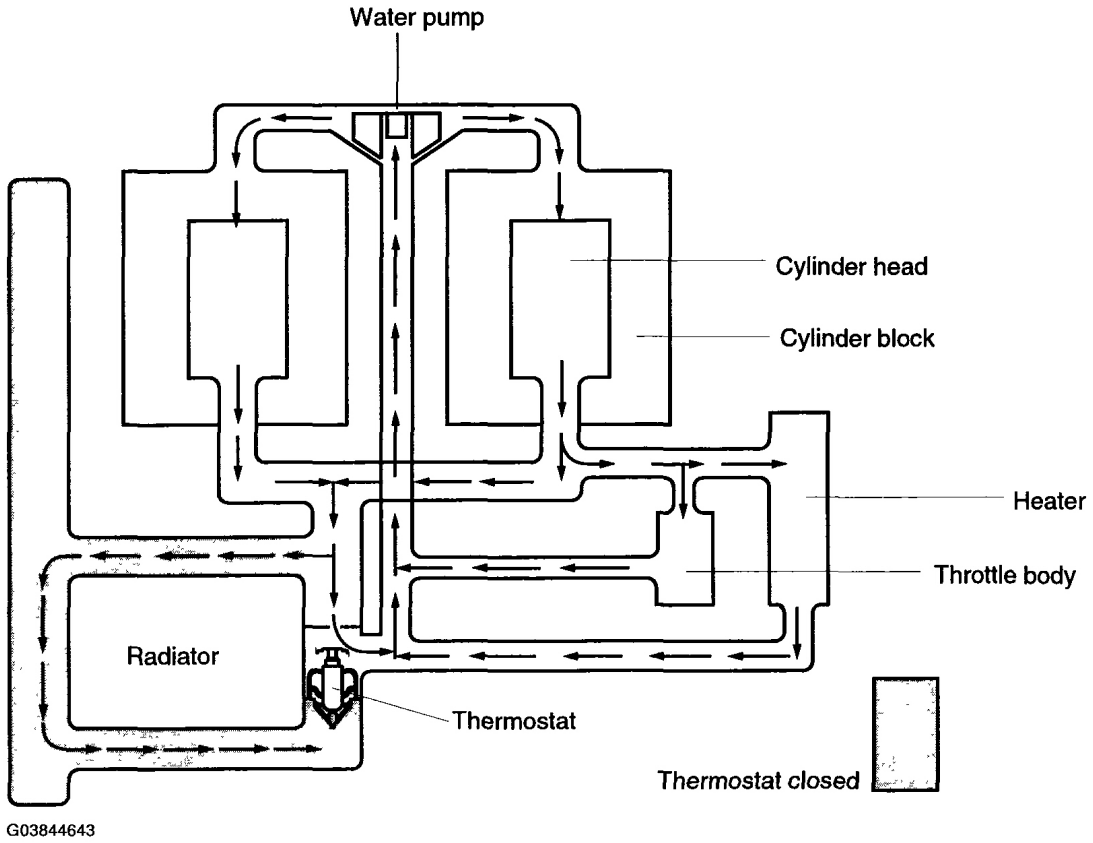

Fig. 118: Cooling System Flow Chart
Courtesy of HYUNDAI MOTOR CO.

ENGINE COOLANT HOSE / PIPES

COMPONENTS

 © 2011 Mitchell Repair Information Company, LLC.

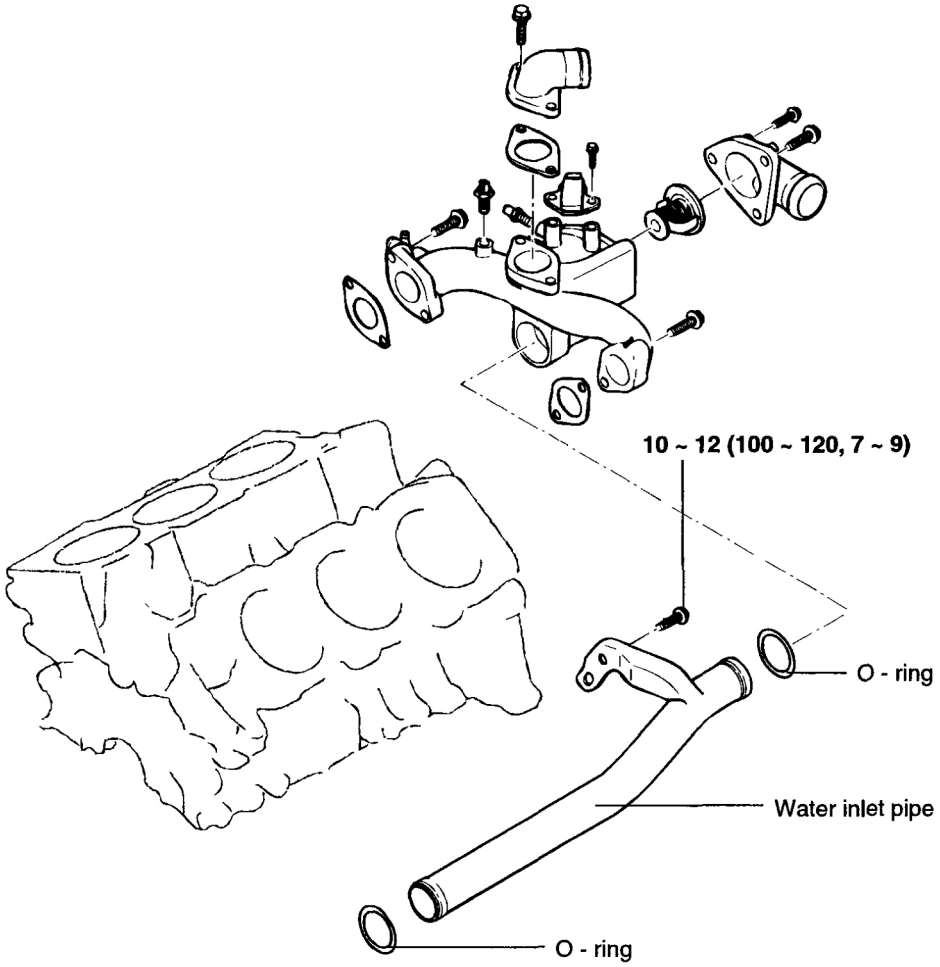

TORQUE : Nm (kg.cm, lb.ft)

G03844644

Fig. 119: Identifying Engine Coolant Hose / Pipes Components
Courtesy of HYUNDAI MOTOR CO.

INSPECTION

Check the engine coolant pipe and hose for cracks, damage and restrictions. Replace if necessary.

REASSEMBLY

Fit the O-ring in the groove of the engine coolant inlet pipe end. Wet the periphery of the O-ring with water and insert the engine coolant inlet pipe.

NOTE:

1. **Do not apply oil or grease to the engine coolant pipe O-ring.**
2. **Keep the engine coolant pipe connections free of sand, dust, etc.**

 © 2011 Mitchell Repair Information Company, LLC.

3. **Insert the engine coolant pipe into the end of the engine coolant pump inlet.**
4. **Whenever installing the engine coolant inlet pipe, always replace the O-ring with a new one.**

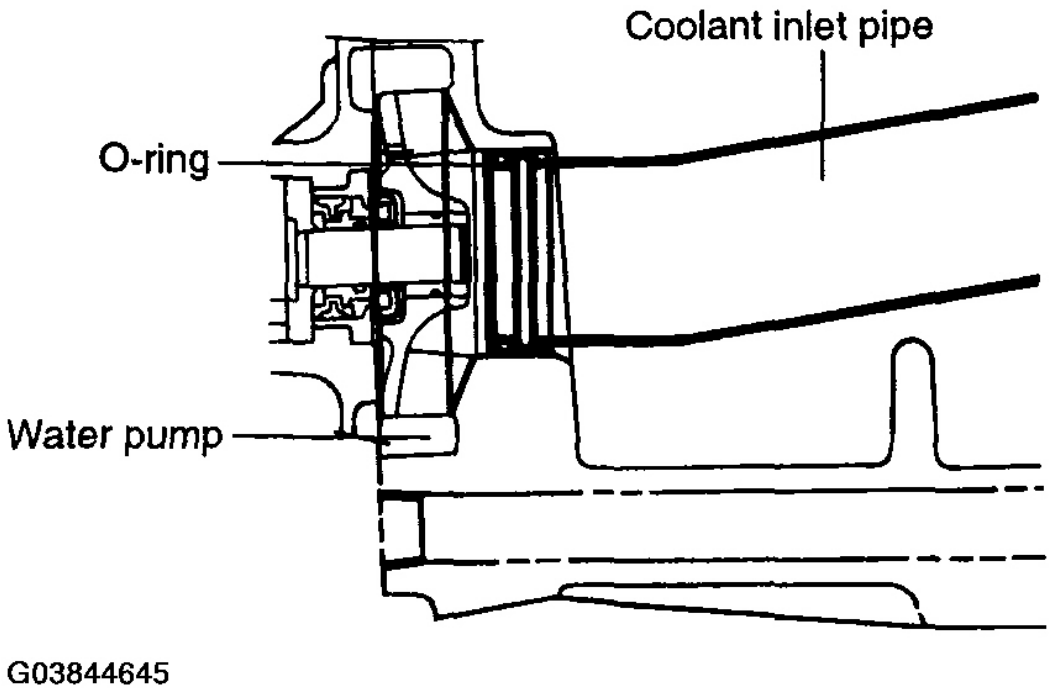

Fig. 120: Fitting O-Ring In Groove Of Engine Coolant Inlet Pipe End
Courtesy of HYUNDAI MOTOR CO.

COOLANT TEMPERATURE SENSOR

REMOVAL

1. Drain the engine coolant.
2. Remove the engine harness after disconnecting the ground cable of the battery.
3. Remove the engine coolant sensor.

 © 2011 Mitchell Repair Information Company, LLC.

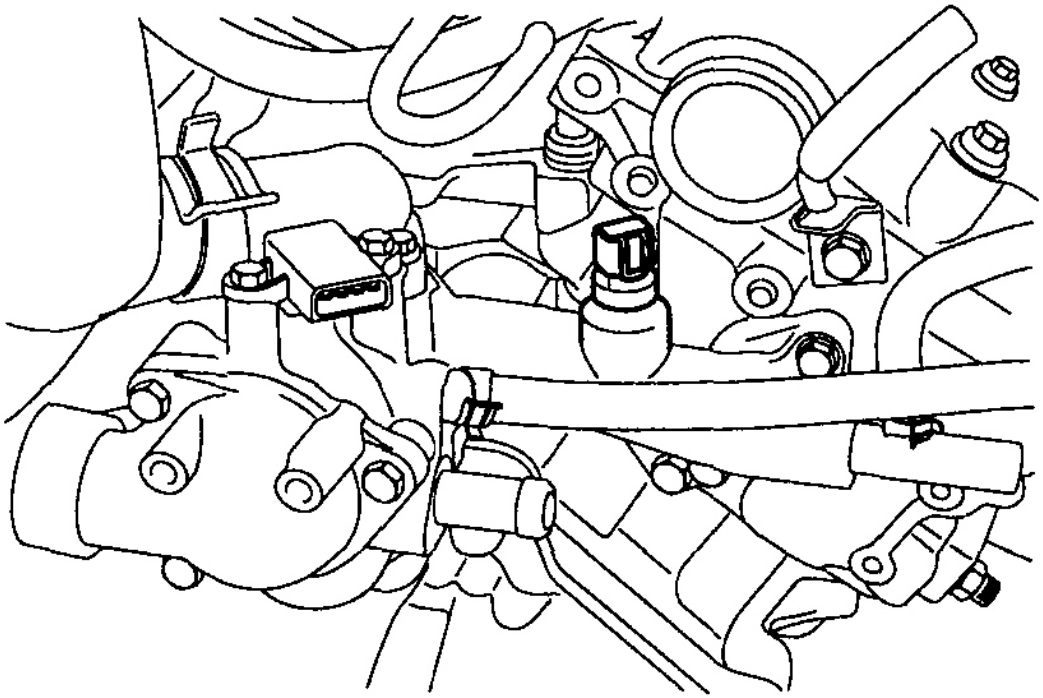

Fig. 121: Removing Coolant Temperature Sensor
Courtesy of HYUNDAI MOTOR CO.

INSTALLATION

1. Apply sealant to the sensor's threads. Tighten it to the specified torque.

   Recommended sealant

   Three bond NO. 2310 or LOCTITE 962T

   Tightening torque

   The coolant sensor:

   20 ~ 40 Nm (200 ~ 400 kg.cm, 14 ~ 29 lb.ft)

2. Connect the coolant sensor to the harness.
3. Connect the ground cable of battery.
4. Refill the coolant.

 © 2011 Mitchell Repair Information Company, LLC.

ENGINE COOLANT PUMP

COMPONENTS

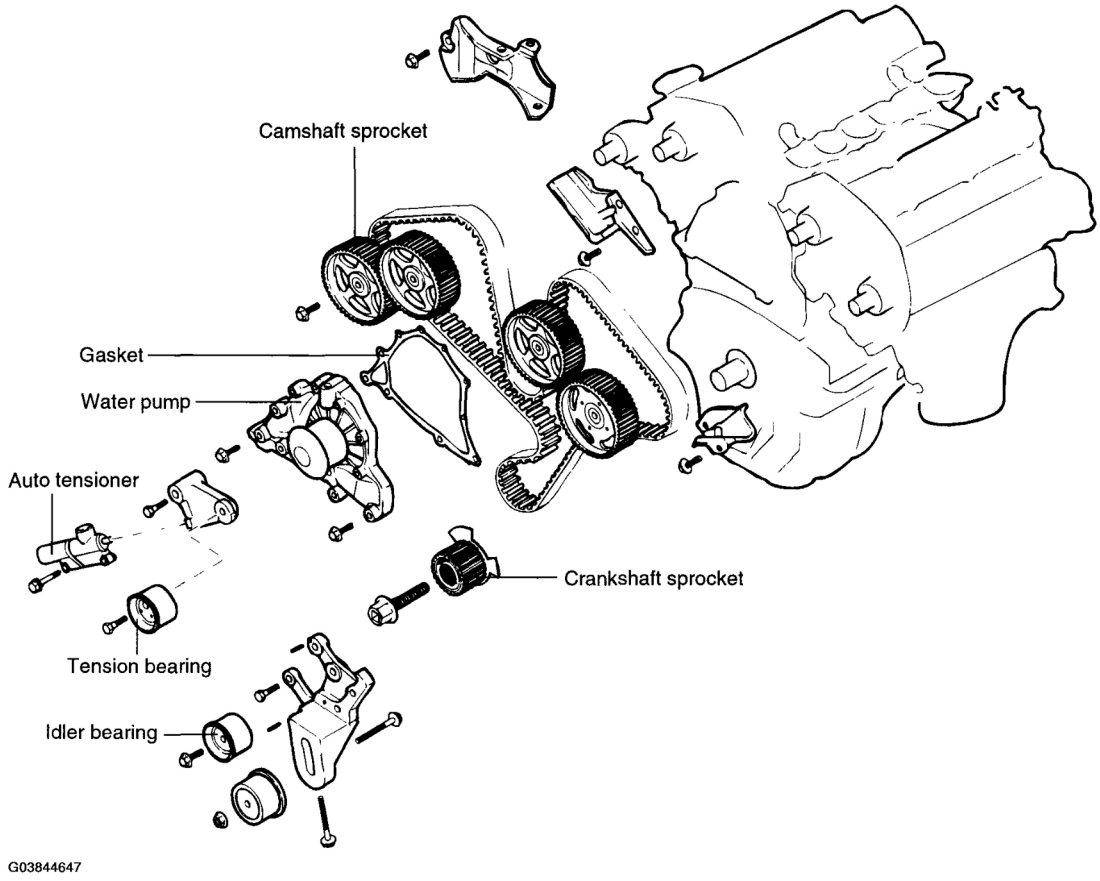

Fig. 122: Identifying Engine Coolant Pump Components
Courtesy of HYUNDAI MOTOR CO.

REMOVAL

1. Using the drain plug, drain the coolant.
2. Remove the drive belt.
3. Remove the timing belt cover, the auto tensioner and idler pulley.

   For additional information, refer to **TIMING BELT** .

4. Remove the engine coolant pump mounting bolts.
5. Remove the engine coolant pump assembly from the cylinder block.

 © 2011 Mitchell Repair Information Company, LLC.

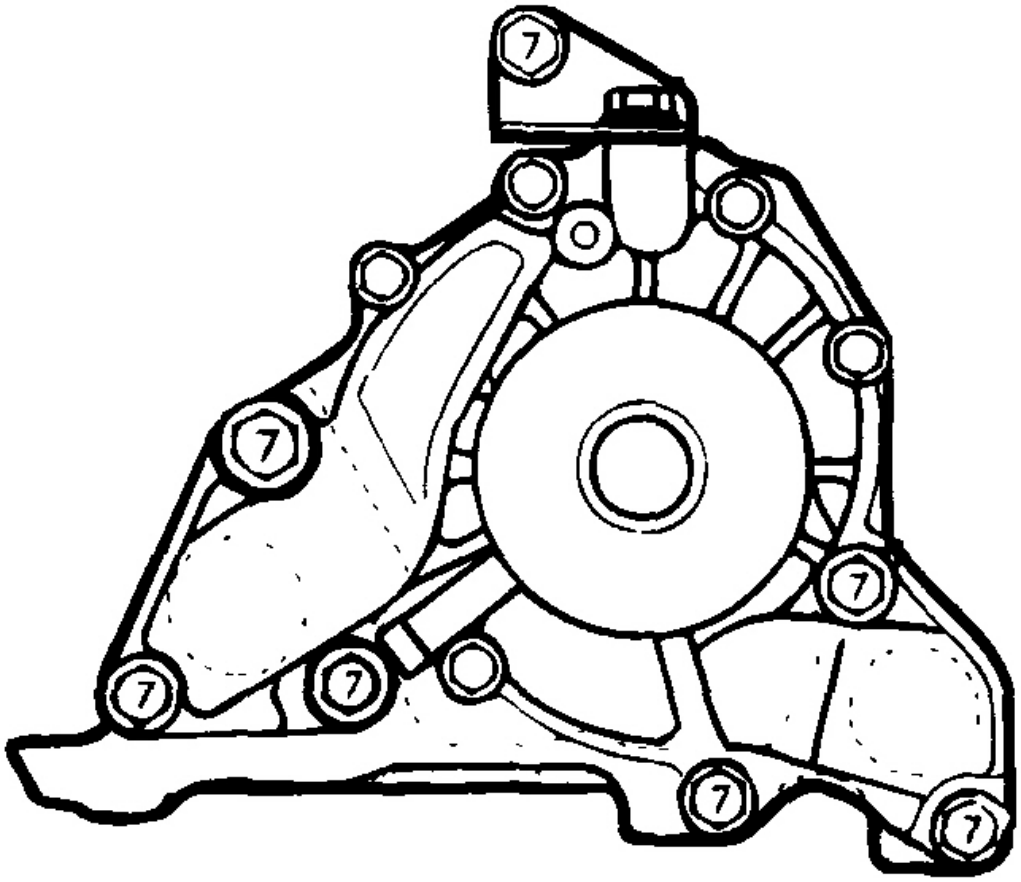

Fig. 123: Removing Engine Coolant Pump
Courtesy of HYUNDAI MOTOR CO.

INSPECTION

1. Check the engine coolant pump for cracks, damage or wear, and replace the pump assembly if necessary.
2. Check the bearing for damage, abnormal noise and sluggish rotation and replace the pump assembly if necessary.
3. Check the seal for leaks and replace the pump assembly if necessary.

INSTALLATION

1. Clean the gasket surfaces of the engine coolant pump body and the cylinder block.
2. Install the new engine coolant pump gasket and pump assembly. Tighten the bolts to the specified torque.

 © 2011 Mitchell Repair Information Company, LLC.

Tightening torque

Engine coolant pump bolt

Head mark

(M8): 15 ~ 22 Nm (150 ~ 220 kg.cm, 11 ~ 16 lb.ft)

(M10): 33 ~ 50 Nm (330~ 500 kg.cm, 24 ~ 36 lb.ft)

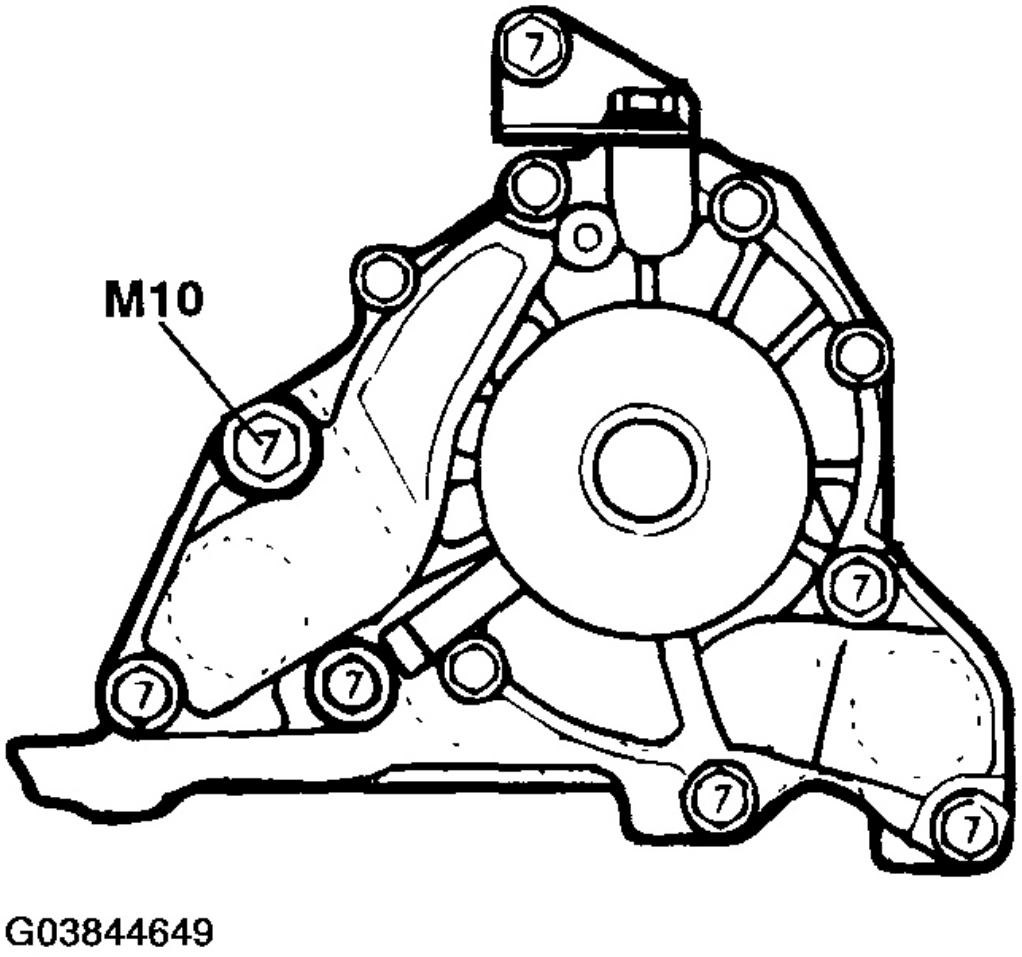

Fig. 124: Installing Engine Coolant Pump
Courtesy of HYUNDAI MOTOR CO.

3. Install the auto tensioner and timing belt. Adjust the timing belt tension, then install the timing belt cover.

 © 2011 Mitchell Repair Information Company, LLC.

4. Install the drive belt and then adjust the auto tensioner.
5. Refill the coolant.
6. Run the engine and check for leaks.

RADIATOR

COMPONENTS

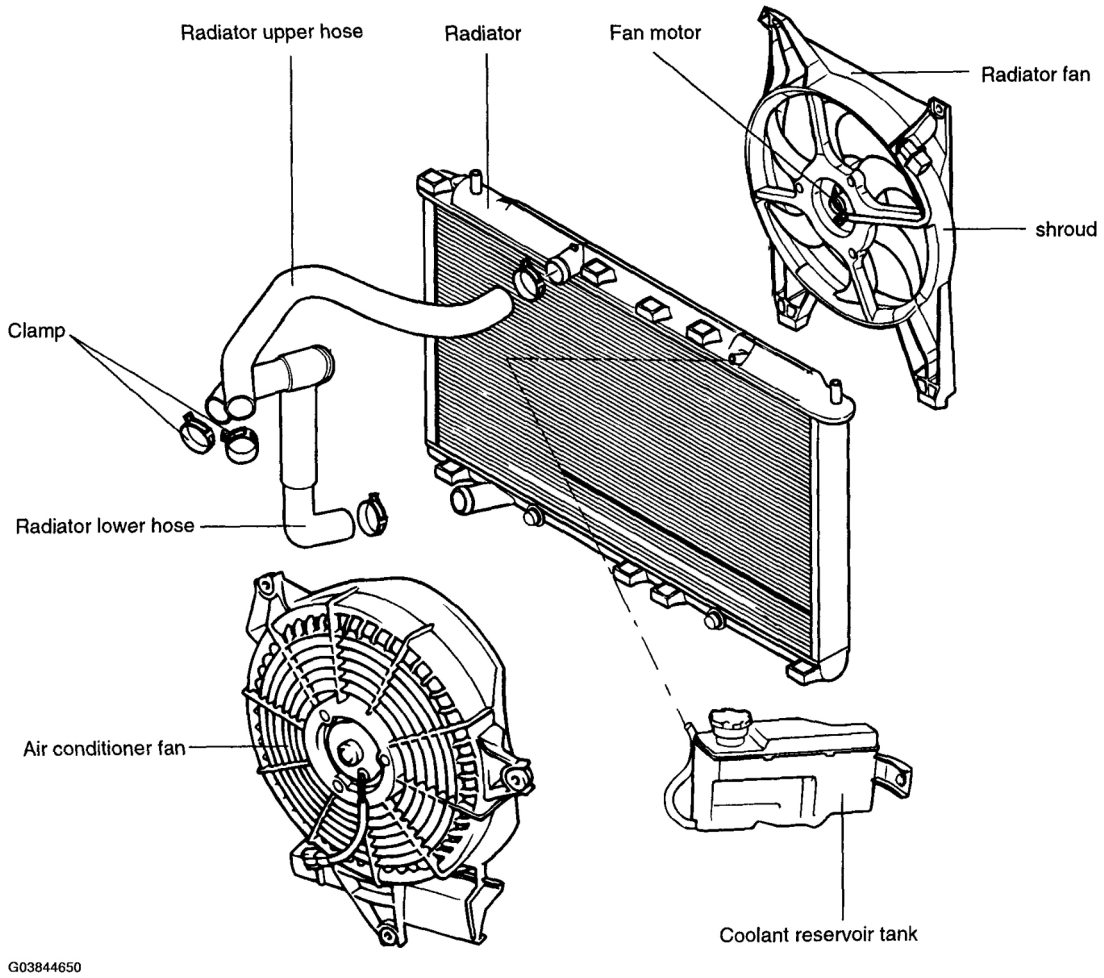

Fig. 125: Identifying Radiator Components
Courtesy of HYUNDAI MOTOR CO.

REMOVAL

1. Disconnect the ground cable from the battery terminal.
2. Disconnect the fan motor connector.
3. Loosen the radiator lower hose to drain the coolant.
4. Disconnect the upper and lower hoses and overflow tube after marking the radiator hose and the hose

 © 2011 Mitchell Repair Information Company, LLC.

clamp the ease reassembly.

5. For vehicles with automatic transaxles, disconnect the oil cooler hoses from the automatic transaxle.

CAUTION: Cover or plug the hose and inlets of the radiator so that dust and other foreign material etc. can not enter after the hose is disconnected from the radiator.

6. Remove the head lamp.

   For additional information refer to **LIGHTING SYSTEM** .

7. Remove the front bumper.

   For additional information refer to **BUMPER** .

8. Remove the radiator fan motor from the radiator.

INSPECTION

1. Check for foreign material between the radiator fins.
2. Check the radiator fins for damage and straighten if necessary.
3. Check the radiator for corrosion, damage, rust or scale.
4. Check the radiator hoses for cracks, damage or deterioration.
5. Check the reservoir tank for damage.
6. Check the automatic transaxle oil cooler hoses for cracking, damage or deterioration (only A/T).

INSTALLATION

1. Fill the radiator and reservoir tank with a clean coolant mixture.
2. Run the engine until the coolant warms up enough so that the thermostat valve opens and then turn off the engine.
3. Remove the radiator cap and pour the coolant up to the filler neck of the radiator. Fill the reservoir tank to the upper level.
4. Check that there are no leaks from the radiator, hoses or connections.

RADIATOR CAP

COMPONENTS

 © 2011 Mitchell Repair Information Company, LLC.

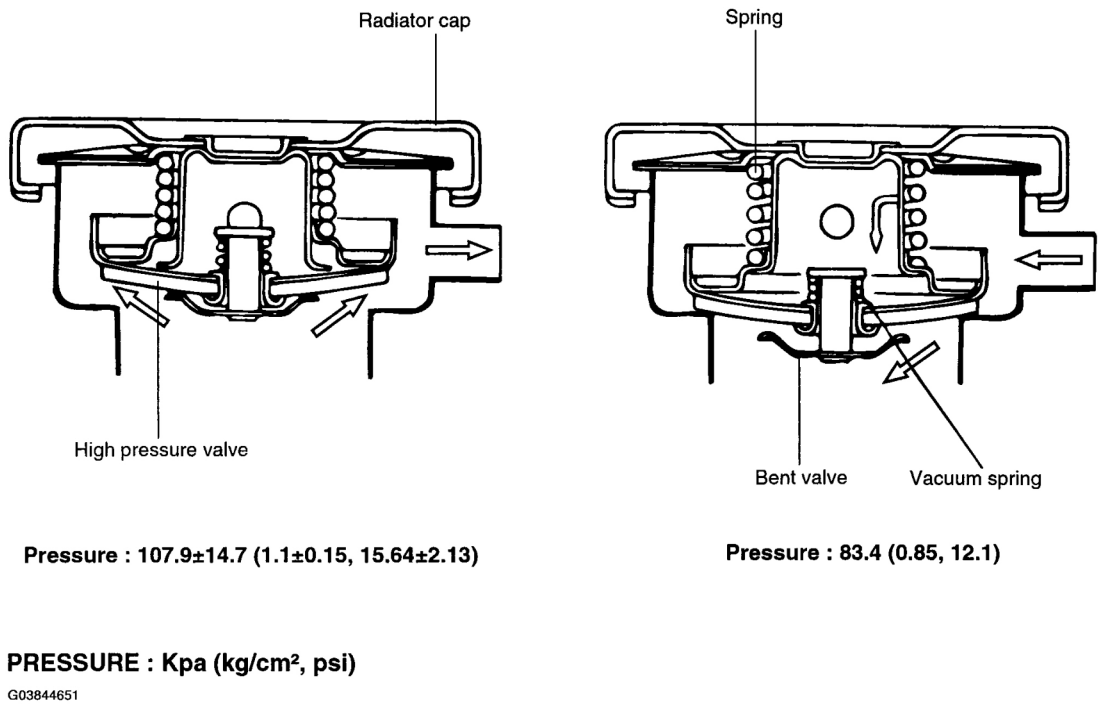

Fig. 126: Identifying Radiator Cap Components
Courtesy of HYUNDAI MOTOR CO.

INSPECTION

1. Check the radiator cap for damage, cracks or weakening.

 © 2011 Mitchell Repair Information Company, LLC.

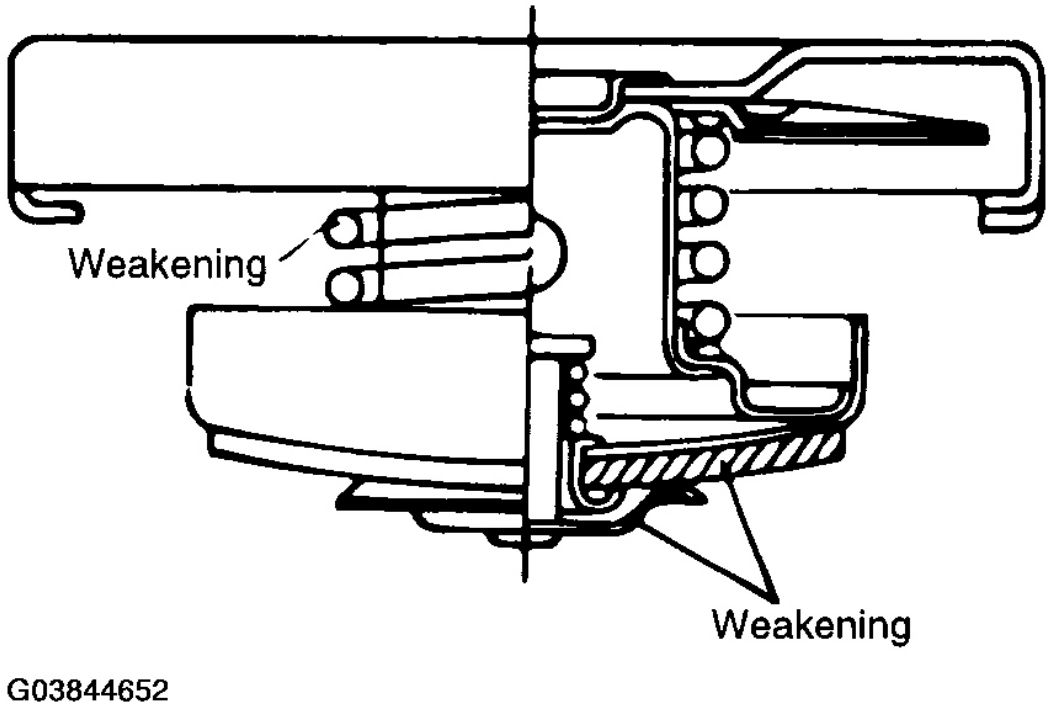

Fig. 127: Checking Radiator Cap For Weakening
Courtesy of HYUNDAI MOTOR CO.

2. Connect the tester to the radiator cap.
3. Increase the pressure until the indicator of the gauge stops moving.
4. Replace the radiator cap if the reading does not hold steady for about 10 seconds.

 © 2011 Mitchell Repair Information Company, LLC.

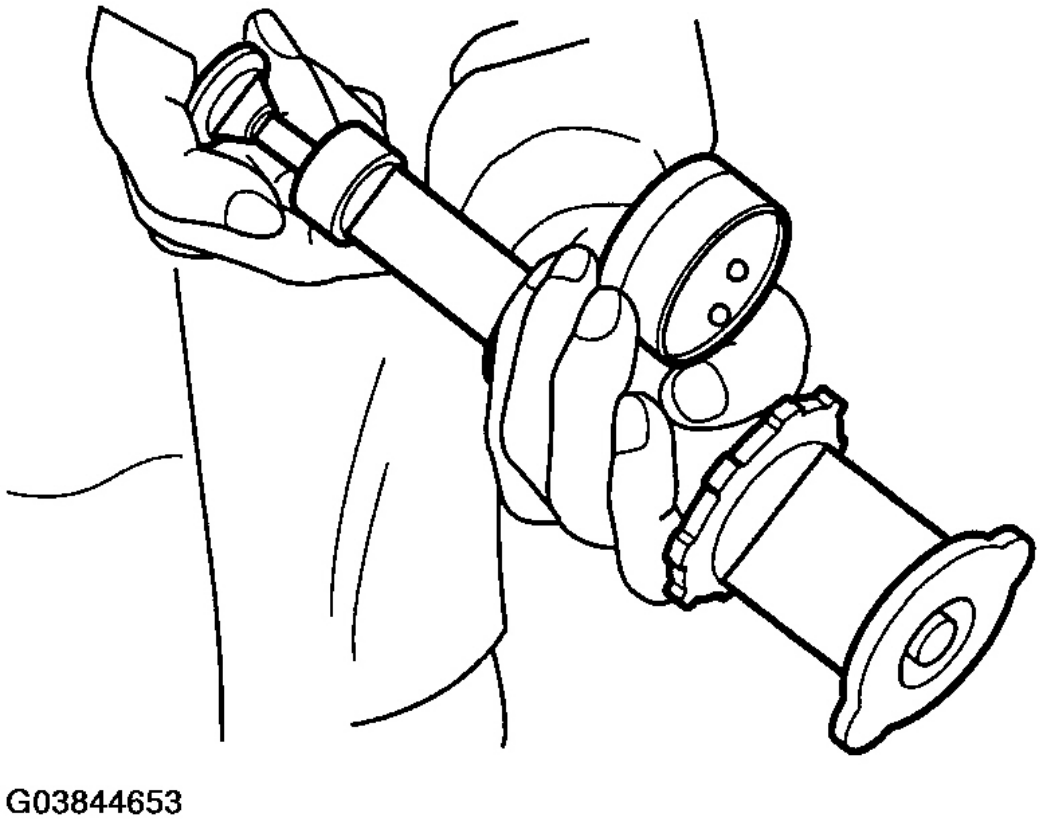

Fig. 128: Pressure Testing Radiator Cap
Courtesy of HYUNDAI MOTOR CO.

THERMOSTAT

COMPONENTS

 © 2011 Mitchell Repair Information Company, LLC.

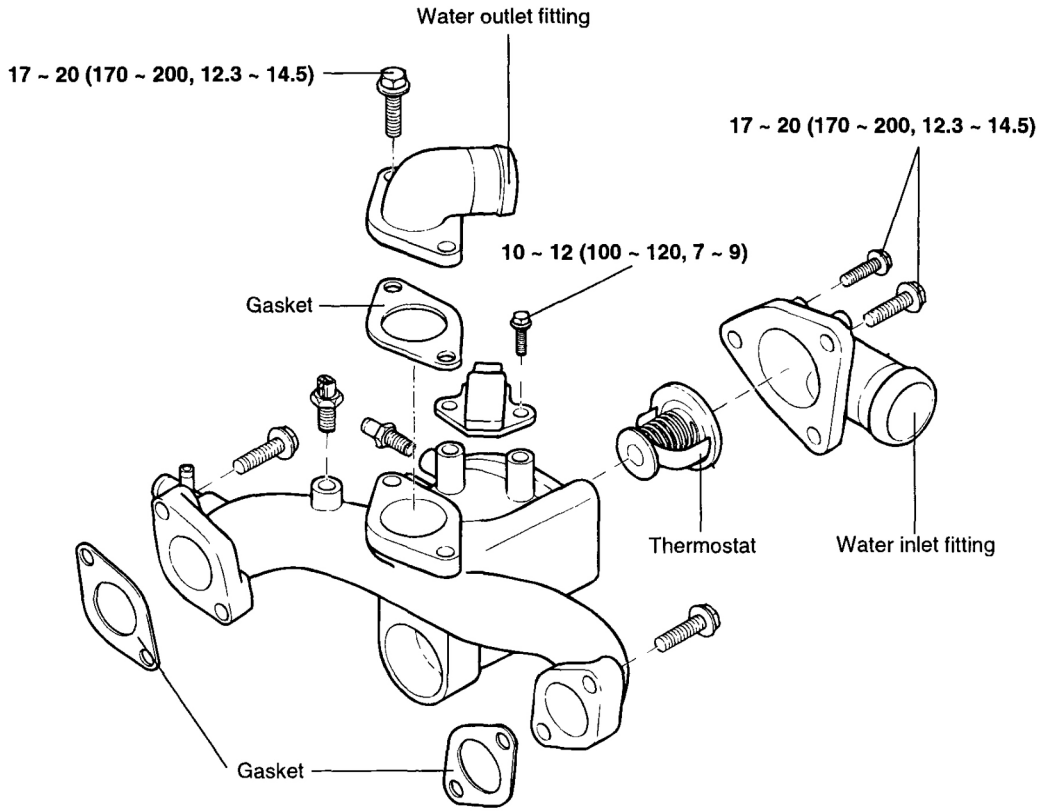

TORQUE : Nm (kg.cm, lb.ft)

G03844654

Fig. 129: Identifying Thermostat Components
Courtesy of HYUNDAI MOTOR CO.

REMOVAL

1. Drain the coolant to thermostat level or below.
2. Remove the inlet fitting and gasket.
3. Remove the thermostat.

INSPECTION

1. Heat the thermostat as shown in **Fig. 130** .

 © 2011 Mitchell Repair Information Company, LLC.

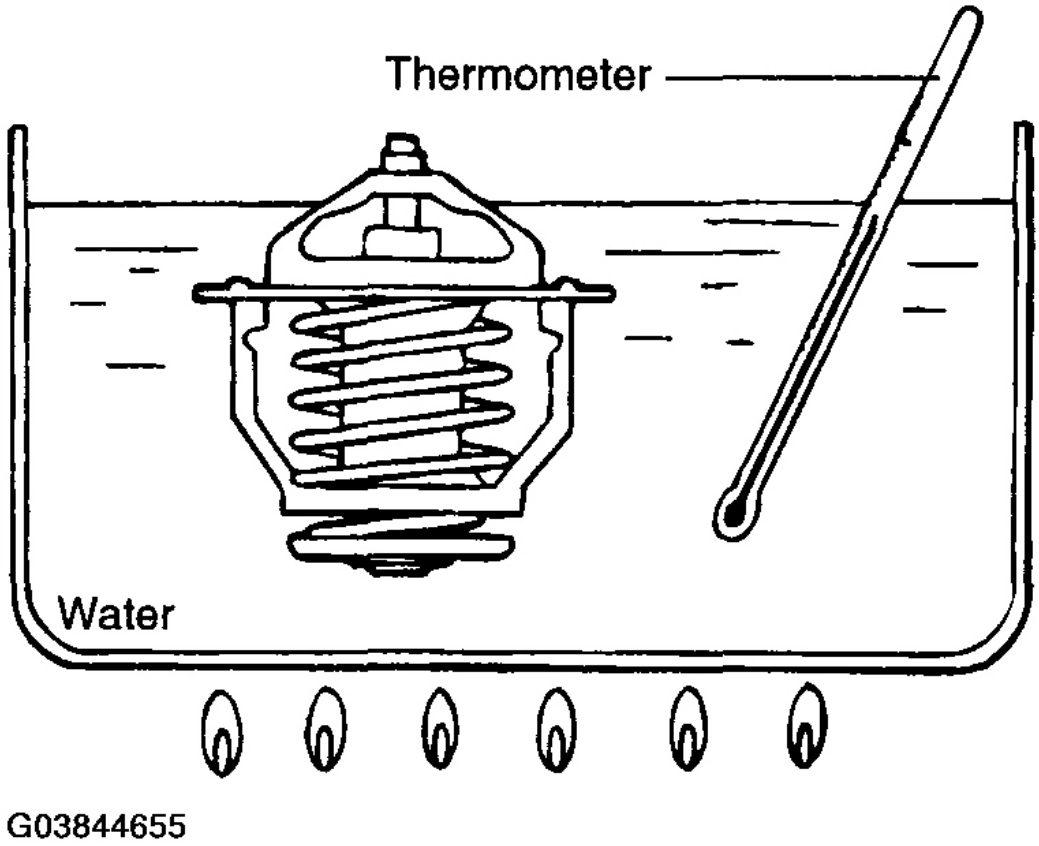

Fig. 130: Inspecting Thermostat Valve
Courtesy of HYUNDAI MOTOR CO.

2. Check that the valve operates properly.
3. Verify the temperature at which the valve begins to open.

   Valve opening temperature: 80 ~ 84°C (176 ~ 183.2°F)

   Full opening temperature: 95°C (203°F)

INSTALLATION

1. Check that the flange of the thermostat is correctly placed in the socket of the thermostat housing.

 © 2011 Mitchell Repair Information Company, LLC.

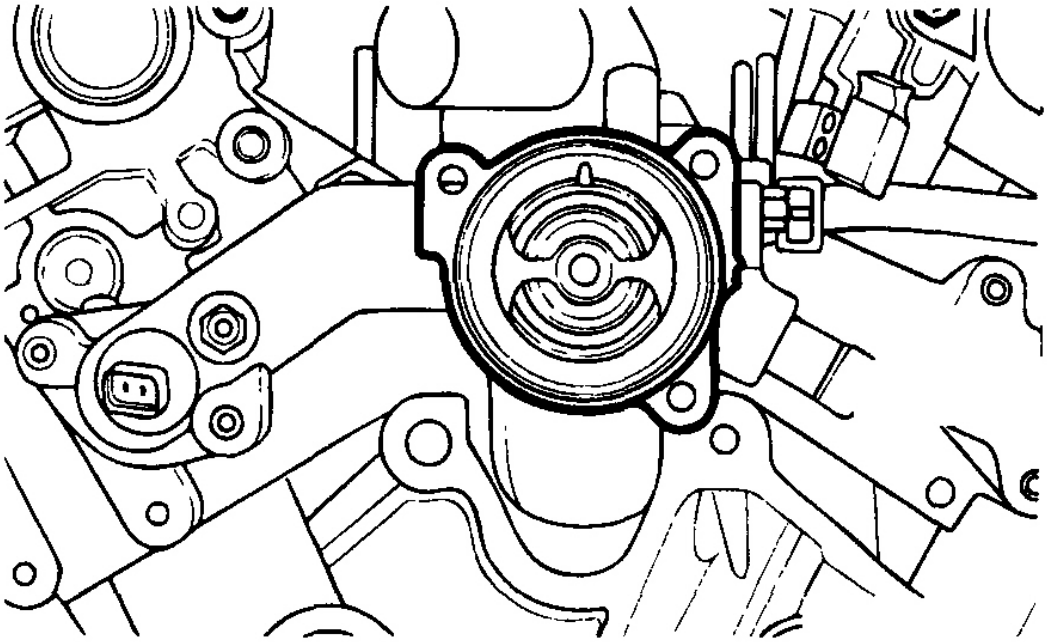

Fig. 131: Installing Thermostat
Courtesy of HYUNDAI MOTOR CO.

2. Install the inlet fitting.

   Tightening torque

   Engine coolant inlet fitting bolt:

   17 ~ 20 Nm (170 ~ 200 kg.cm, 12 ~ 14 lb.ft)

3. Refill the coolant.

LUBRICATION SYSTEM

OIL PUMP

COMPONENTS

 © 2011 Mitchell Repair Information Company, LLC.

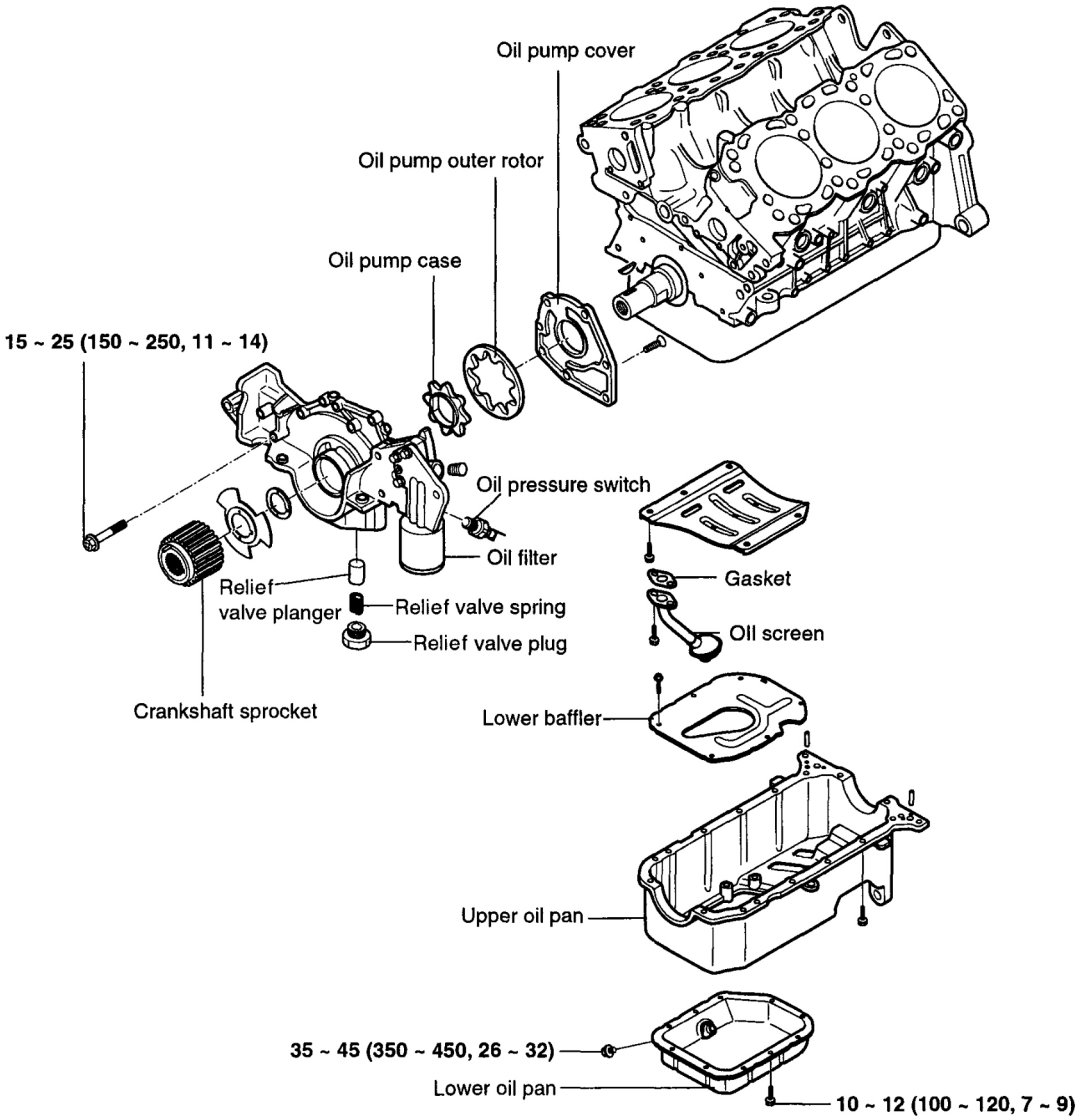

Fig. 132: Identifying Oil Pump Components
Courtesy of HYUNDAI MOTOR CO.

DISASSEMBLY

1. Remove the oil pressure switch, using 24 mm deep socket.

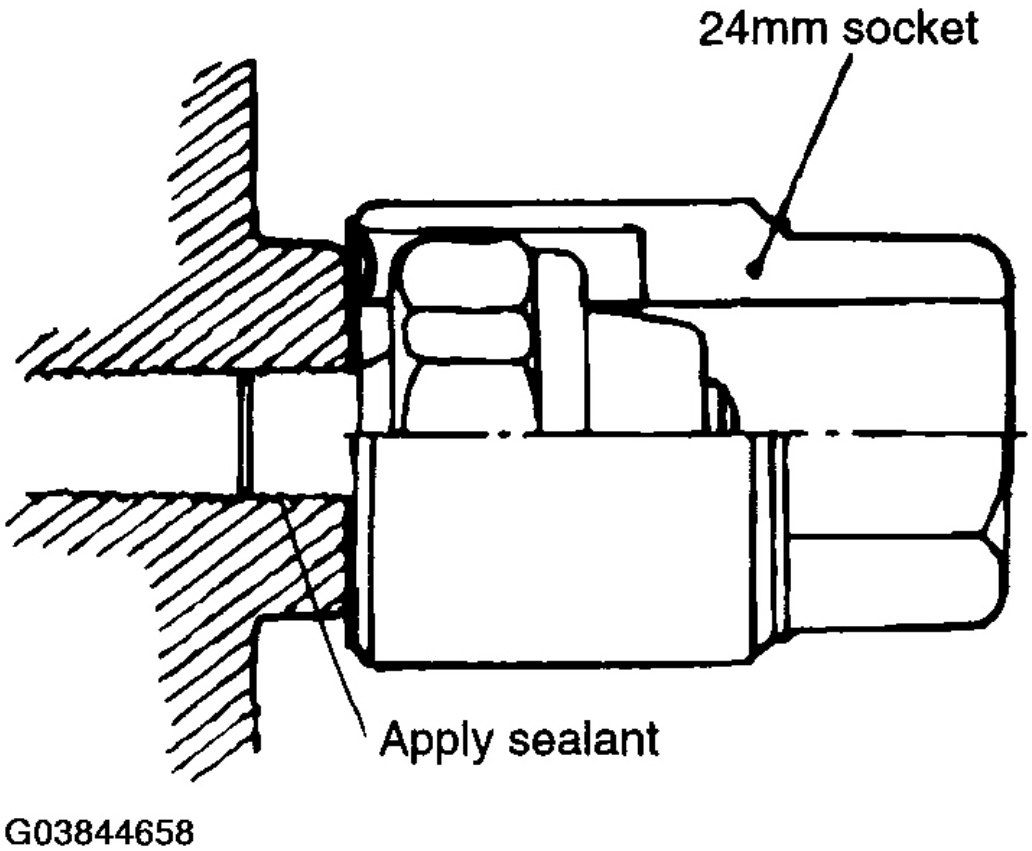

Fig. 133: Removing Oil Pressure Switch
Courtesy of HYUNDAI MOTOR CO.

NOTE: Since a sealant is used on the threaded area, be careful not to damage the oil pressure switch.

2. Remove the oil filter and the oil pan.
3. Remove the oil screen and gasket.
4. Remove the three bracket securing bolts and remove the oil filter bracket and gasket.
5. Remove the oil relief valve plug from the oil pump case.
6. Remove the oil pump case.

INSPECTION

OIL PUMP

1. Visually check the parts of the oil pump case for cracks and damage.

 © 2011 Mitchell Repair Information Company, LLC.

2. Assemble the rotor on the oil pump and then check the clearance with a thickness gauge.

   Oil pump side clearance

   Standard value

   Body clearance:

   0.100 ~ 0.181 mm (0.0039 ~ 0.0071 in.)

   Side clearance:

   0.040 ~ 0.095 mm (0.0016 ~ 0.0037 in.)

 © 2011 Mitchell Repair Information Company, LLC.

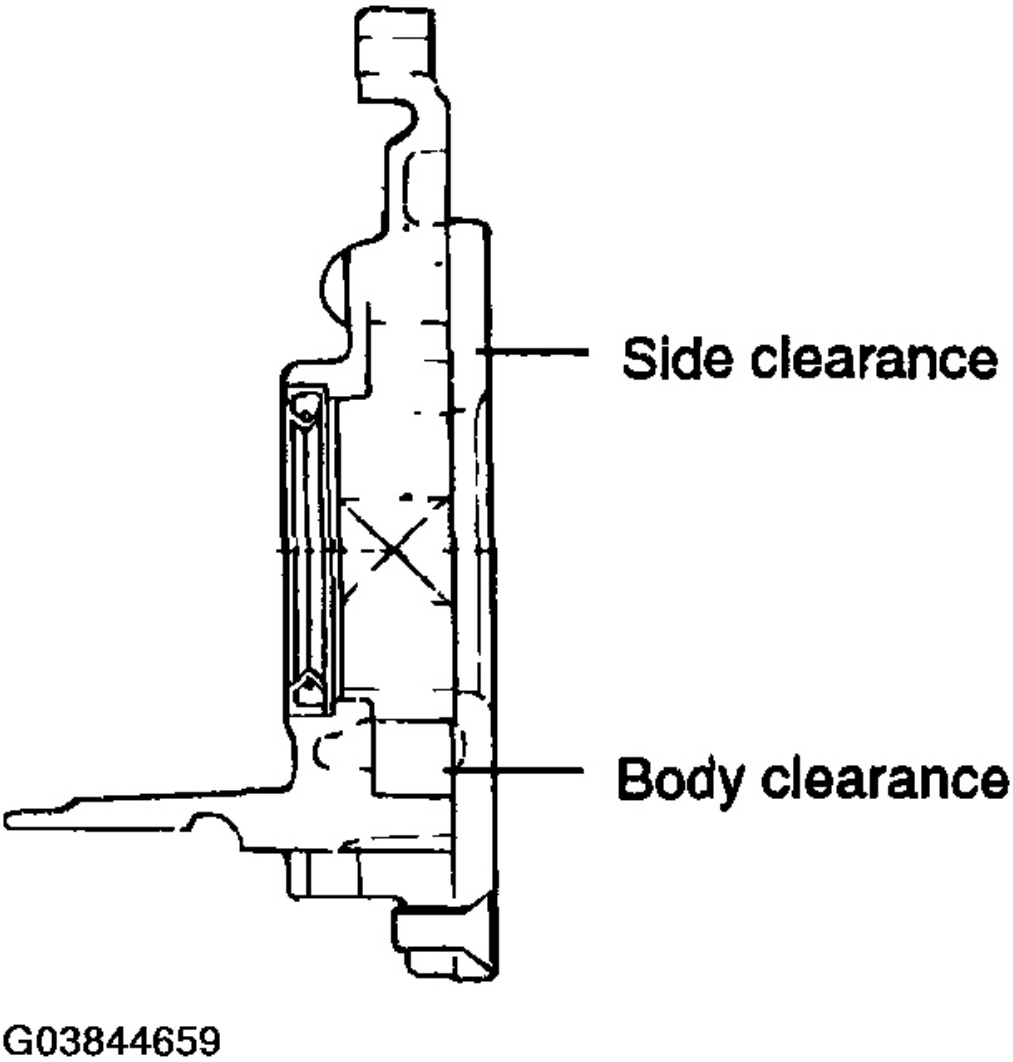

Fig. 134: Checking Oil Pump Side And Body Clearance
Courtesy of HYUNDAI MOTOR CO.

Oil pump Tip clearance:

0.06 ~ 0.18 mm (0.0024 ~ 0.0071 in.)

 © 2011 Mitchell Repair Information Company, LLC.

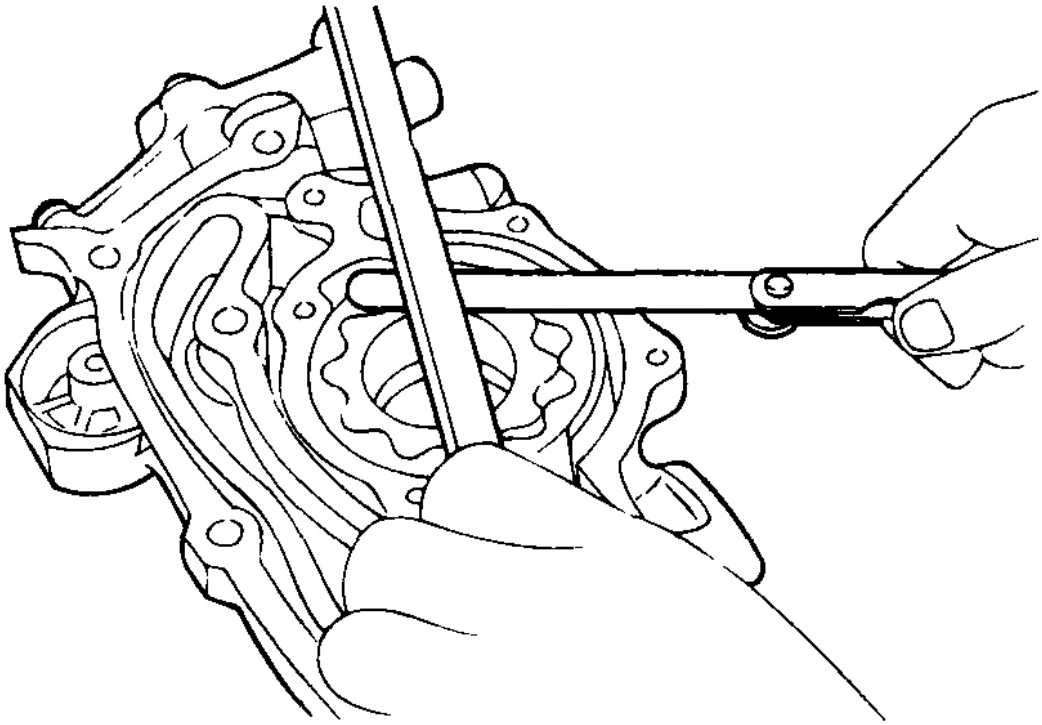

Fig. 135: Checking Oil Pump Tip Clearance
Courtesy of HYUNDAI MOTOR CO.

RELIEF PLUNGER AND SPRING

1. Check the relief plunger for smooth operation.
2. Check the relief spring for deformation or breaks.

OIL FILTER BRACKET

1. Make sure that there is no damage on the surface that mates with the oil filter.
2. Check the oil filter bracket for oil leaks or cracks.

OIL PRESSURE SWITCH

1. Check the continuity between the terminal and the body with an ohmmeter.

   If there is no continuity, replace the oil pressure switch.

 © 2011 Mitchell Repair Information Company, LLC.

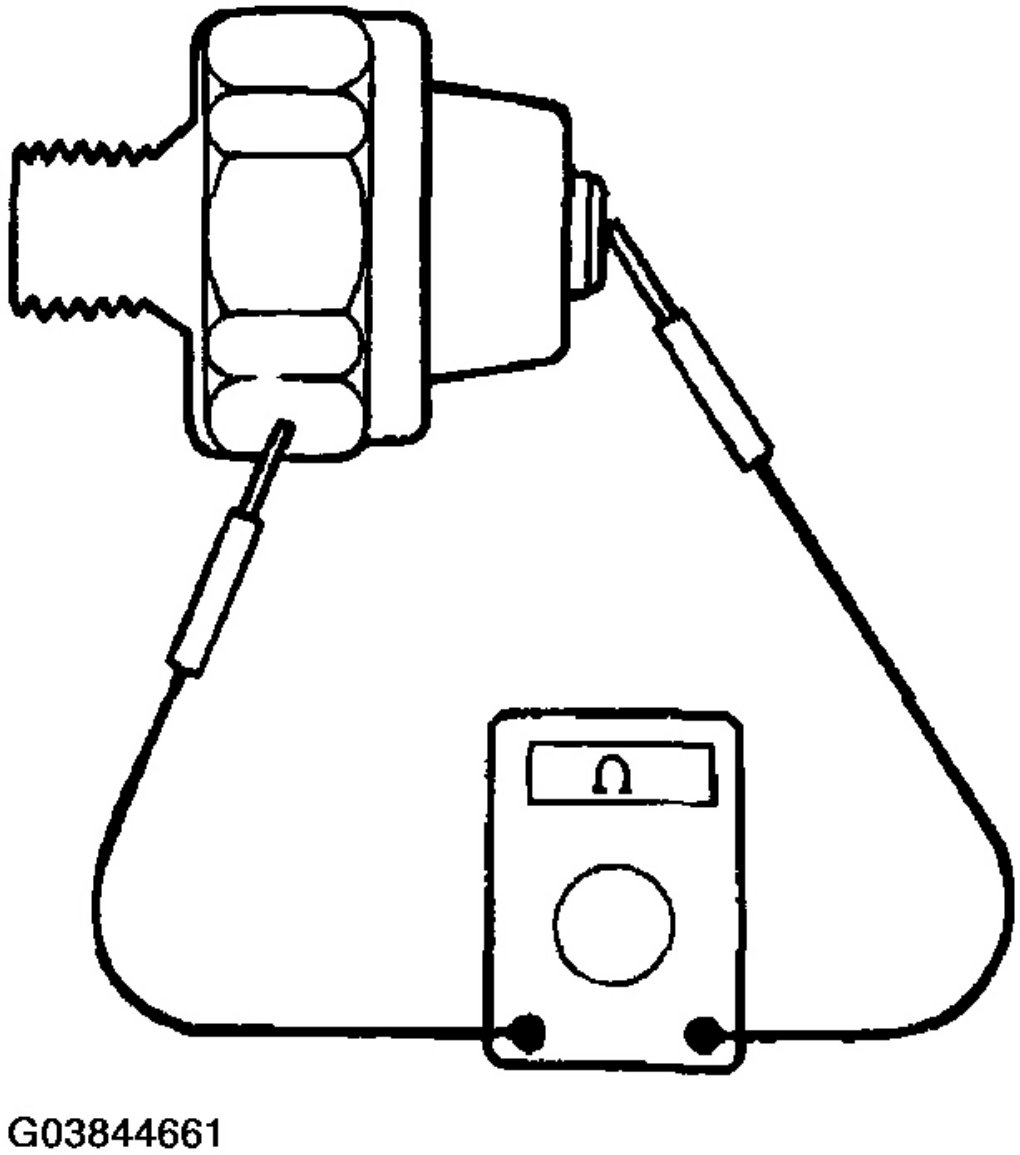

Fig. 136: Checking Oil Pressure Switch Continuity
Courtesy of HYUNDAI MOTOR CO.

2. Check the continuity between the terminal and the body when the fine wire is pushed. If there is continuity even when the fine wire is pushed, replace the switch.
3. If there is no continuity when a 50 kPa (7 psi) vacuum is applied through the oil hole, the switch is operating properly.

 © 2011 Mitchell Repair Information Company, LLC.

Check for air leakage. If air leaks, the diaphragm is broken Replace it.

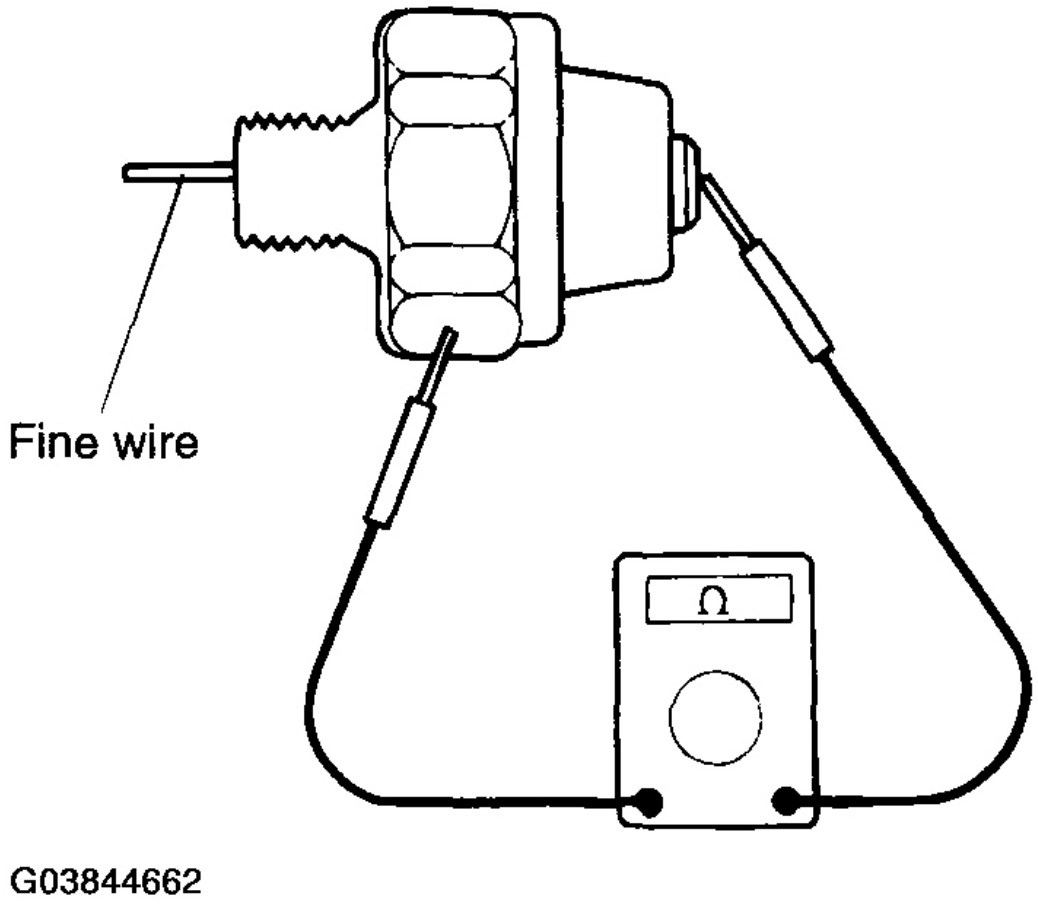

Fig. 137: Checking Oil Pressure Switch Continuity When Fine Wire Is Pushed
Courtesy of HYUNDAI MOTOR CO.

Operation Pressure

Oil pressure switch:

80 kPa (0.8 kg/cm^2 , 11.4 psi) or more @ 700 RPM

REASSEMBLY

1. Install the oil pump case with the gasket.

   Tightening torque

 © 2011 Mitchell Repair Information Company, LLC.

Oil pump case bolt:

15 ~ 20 Nm (150 ~ 200 kg.cm, 11 ~ 14 lb.ft)

Oil pump cover screw:

8 ~ 12 Nm (80 ~ 120 kg.cm, 6 ~ 9 lb.ft)

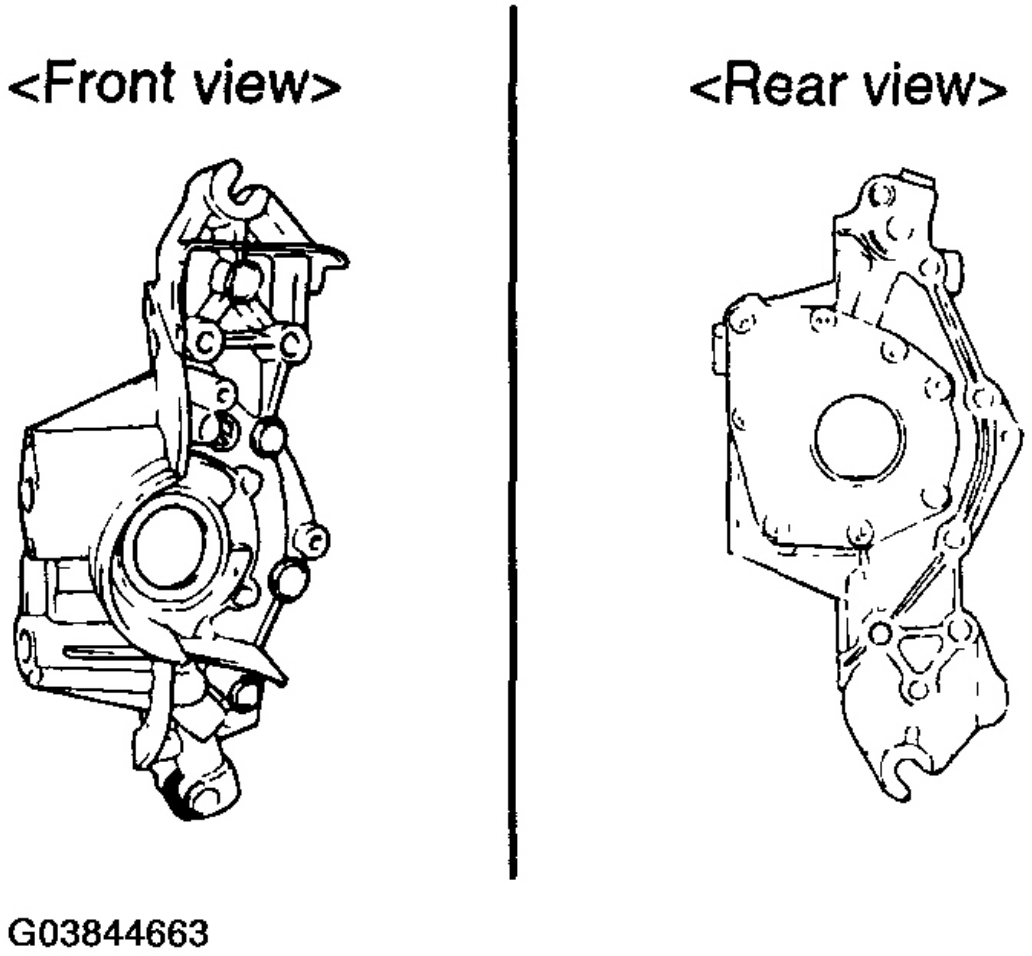

Fig. 138: Identifying Front And Rear View Of Oil Pump Case
Courtesy of HYUNDAI MOTOR CO.

2. Install the oil seal into the oil pump case as tightly as possible, using the special tool (09214-33000).

 © 2011 Mitchell Repair Information Company, LLC.

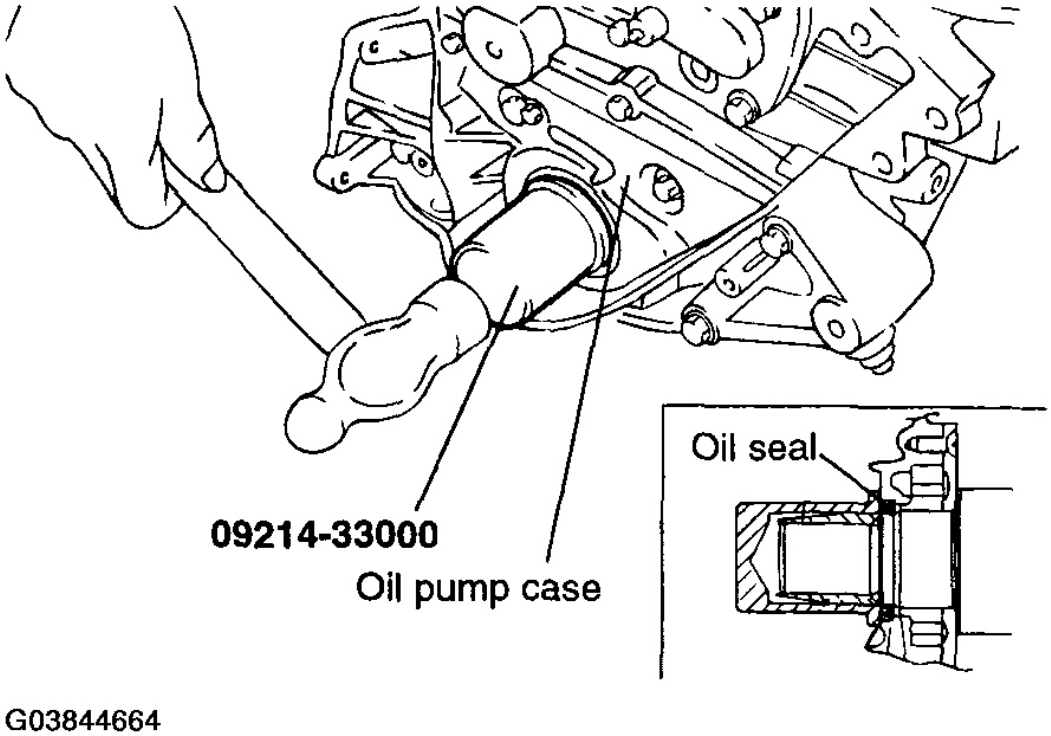

Fig. 139: Installing Oil Seal Into Oil Pump Case
Courtesy of HYUNDAI MOTOR CO.

3. Install the relief plunger and spring, and tighten the oil relief valve plug to the specified torque.

Tightening torque

Oil relief valve plug:

40 ~ 50 Nm (400 ~ 500 kg.cm, 29 ~ 36 lb.ft)

 © 2011 Mitchell Repair Information Company, LLC.

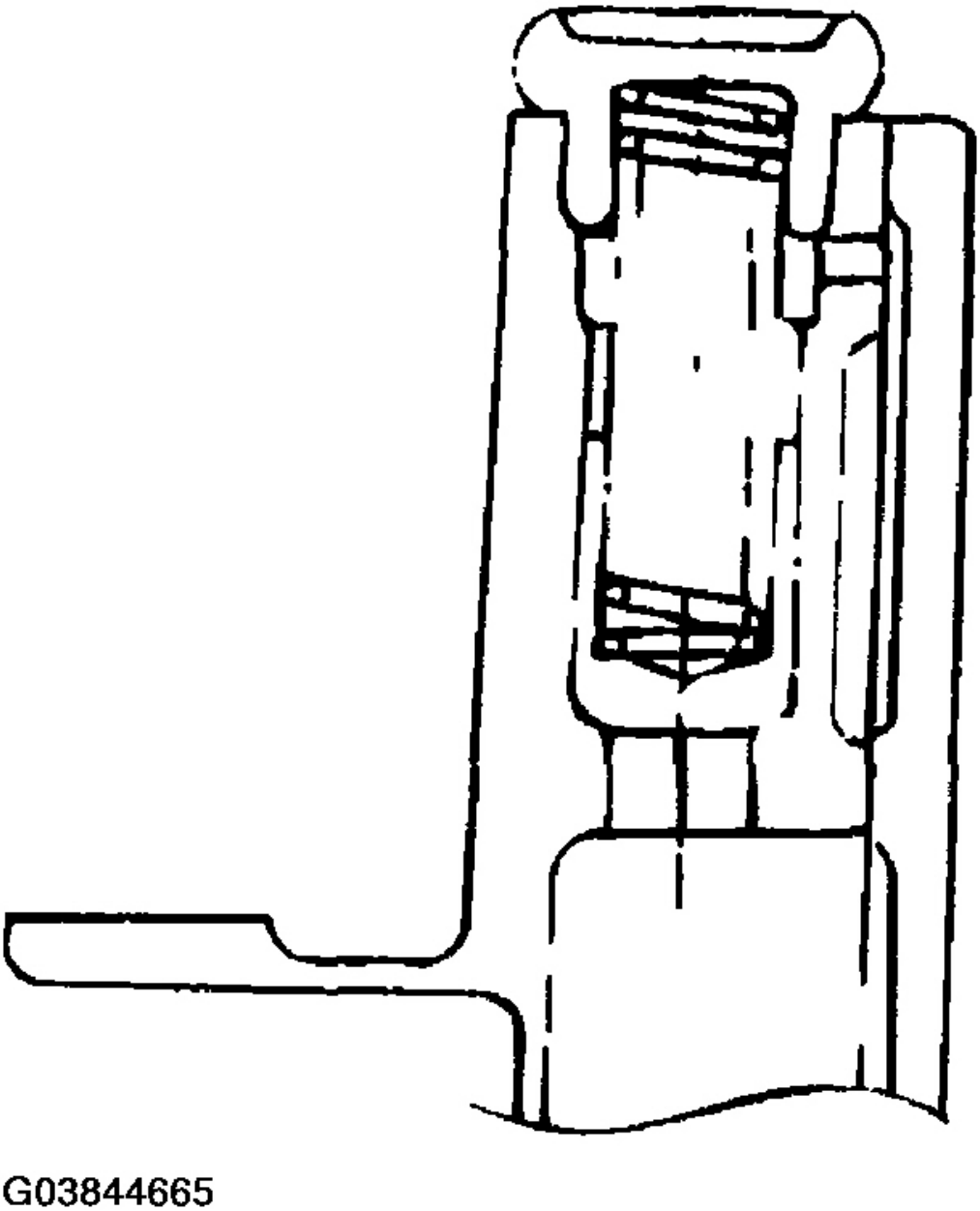

Fig. 140: Installing Relief Plunger And Spring
Courtesy of HYUNDAI MOTOR CO.

4. Install the oil screen and a new gasket.

Tightening torque

 © 2011 Mitchell Repair Information Company, LLC.

Oil screen bolt:

15 ~ 22 Nm (150 ~ 220 kg.cm, 11 ~ 15 lb.ft)

5. Clean the gasket surfaces of the cylinder block and the oil pan.
6. Apply sealant to the groove of the oil pan flange.

NOTE:

1. **Make the first cut approx. 4 mm from the end of the nozzle furnished with the sealant. After application of the sealant, do not exceed 15 minutes-before installing the oil pan.**
2. **Make sure that the sealant doesn't enter the inside of the oil pan.**

7. Install the oil pan and tighten the bolts to the specified torque. See **Fig. 141** .

Tightening torque

Oil pan bolt

*: 5 ~ 7 Nm (50 ~ 70 kg.cm, 4 ~ 5 lb.ft)

**: 5 ~ 7 Nm (50 ~ 70 kg.cm, 4 ~ 5 lb.ft)

***: 30 ~ 42 Nm (300 ~ 420 kg.cm, 22 ~ 30 lb.ft)

T/M tightening bolt (4EA):

10 ~ 12 Nm (100 ~ 120 kg.cm, 7.2 ~ 9 lb.ft)

 © 2011 Mitchell Repair Information Company, LLC.

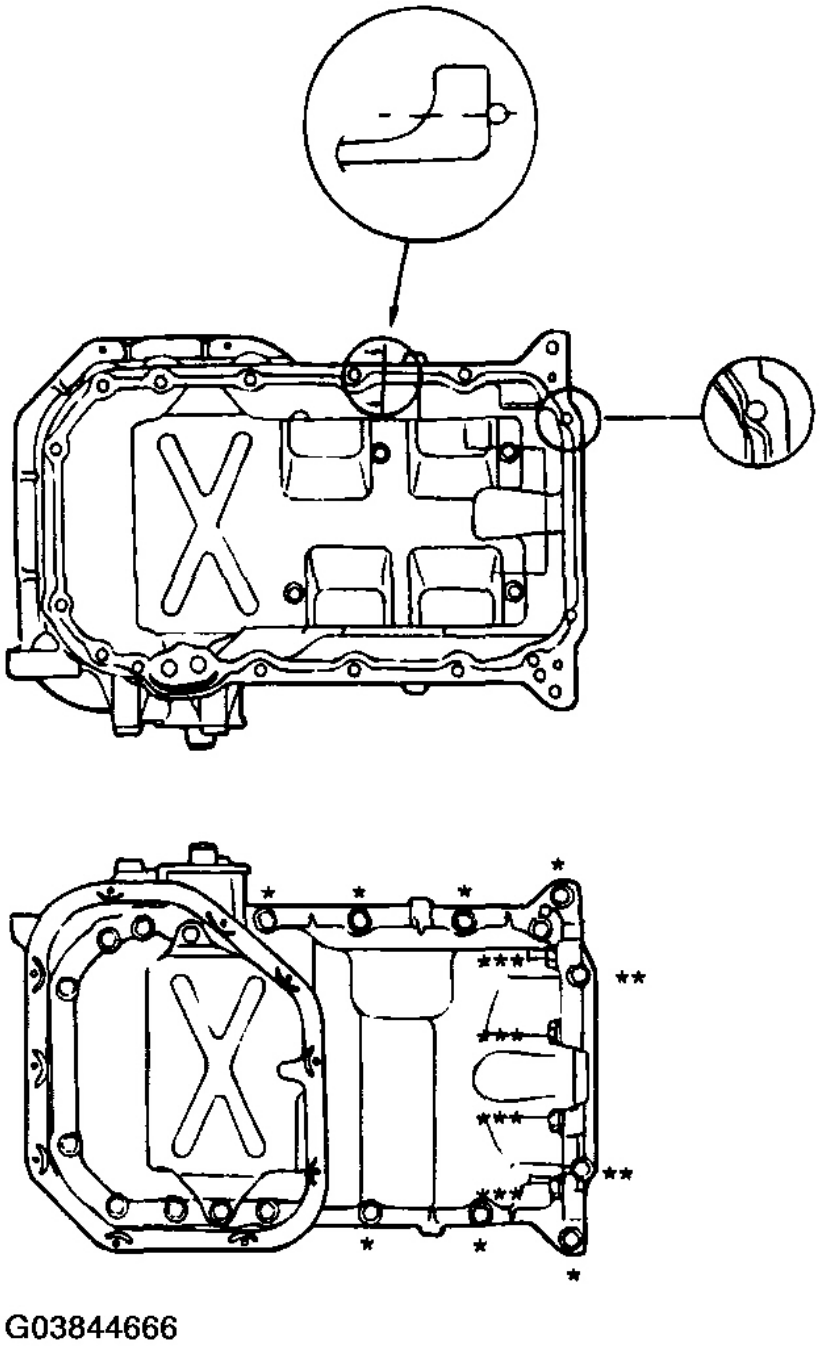

Fig. 141: Installing Oil Pump Bolts
Courtesy of HYUNDAI MOTOR CO.

8. Tighten the oil pan bolts as shown in **Fig. 142** .

 © 2011 Mitchell Repair Information Company, LLC.

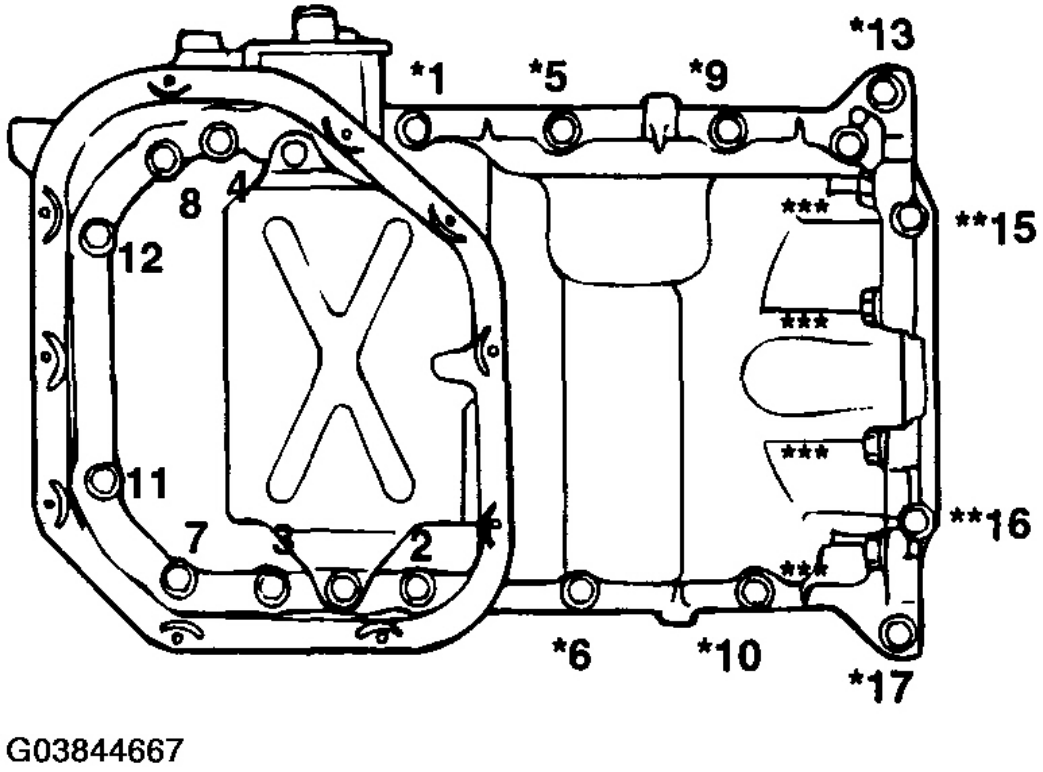

Fig. 142: Identifying Tightening Sequence Of Oil Pan Bolts
Courtesy of HYUNDAI MOTOR CO.

9. Using a 24 mm deep socket, install the oil pressure switch after applying sealant to the threaded area.

   Sealant: Three bond No. 1104E or equivalent

   NOTE: Do not torque the oil pressure switch too much.

   Tightening torque

   Oil pressure switch:

   8 ~ 12 Nm (80 ~ 120 kg.cm, 6 ~ 9 lb.ft)

 © 2011 Mitchell Repair Information Company, LLC.

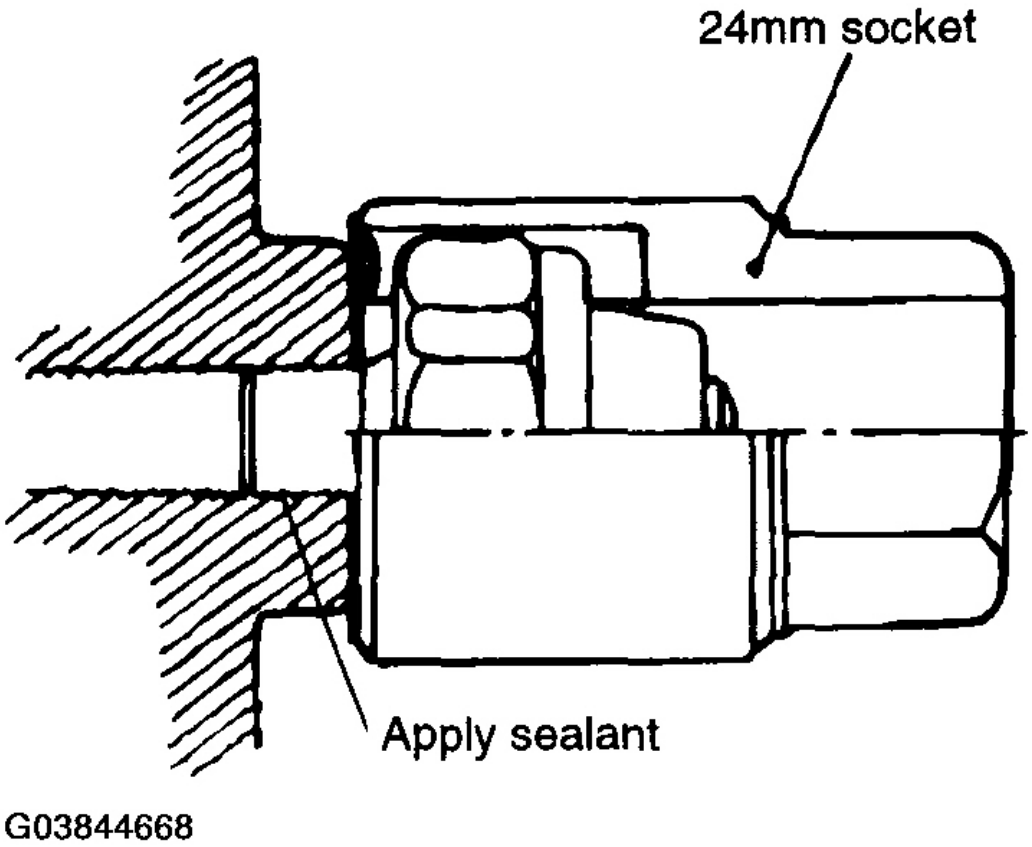

Fig. 143: Installing Oil Pressure Switch
Courtesy of HYUNDAI MOTOR CO.

10. Tighten the lower oil pan bolts as shown in **Fig. 144** .

 © 2011 Mitchell Repair Information Company, LLC.

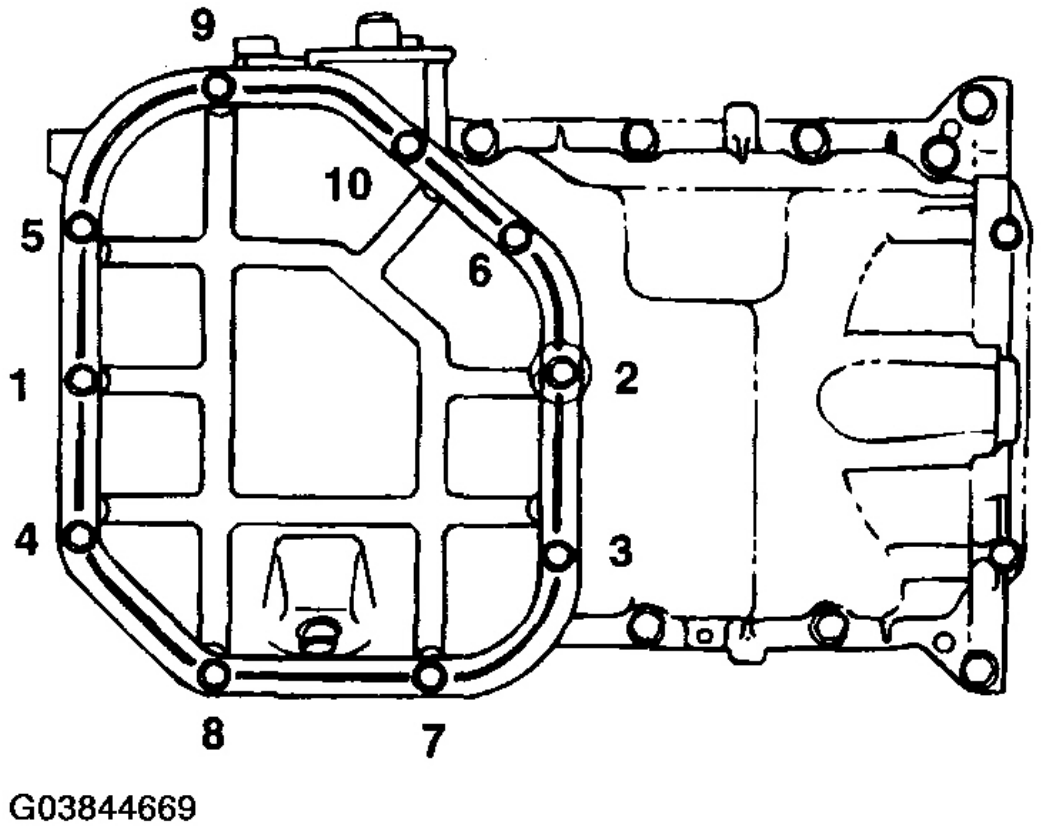

Fig. 144: Identifying Tightening Sequence Of Oil Pan Bolts
Courtesy of HYUNDAI MOTOR CO.

INTAKE AND EXHAUST SYSTEM

EXHAUST MANIFOLD

COMPONENTS

 © 2011 Mitchell Repair Information Company, LLC.

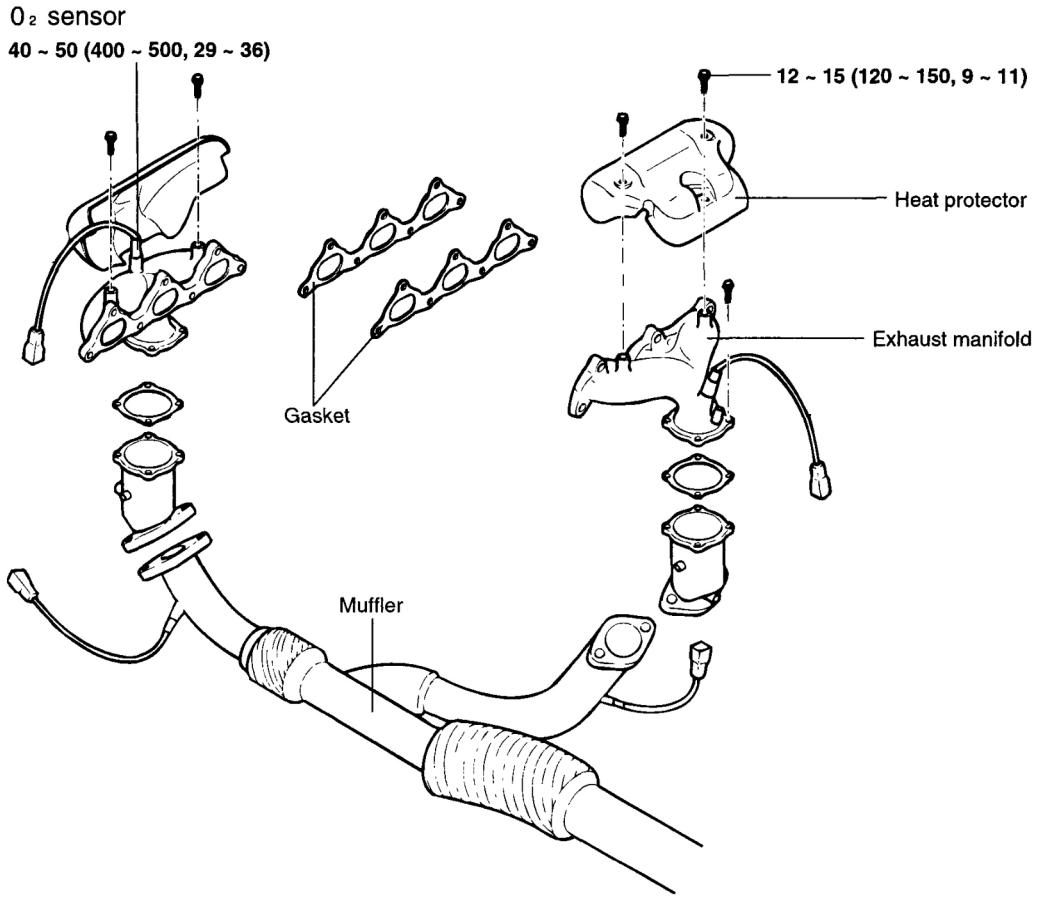

TORQUE : Nm (kg.cm, lb.ft)

G03844670

Fig. 145: Identifying Exhaust Manifold Components
Courtesy of HYUNDAI MOTOR CO.

REMOVAL

1. Remove the front muffler.

 © 2011 Mitchell Repair Information Company, LLC.

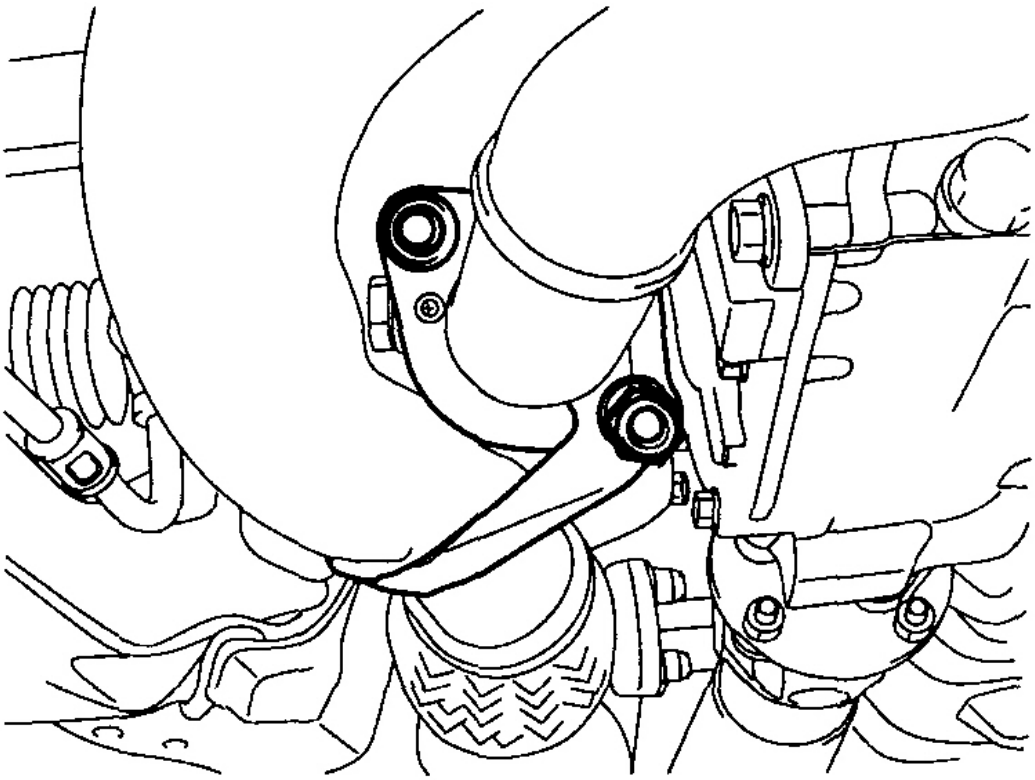

Fig. 146: Removing Front Muffler Bolts
Courtesy of HYUNDAI MOTOR CO.

 © 2011 Mitchell Repair Information Company, LLC.

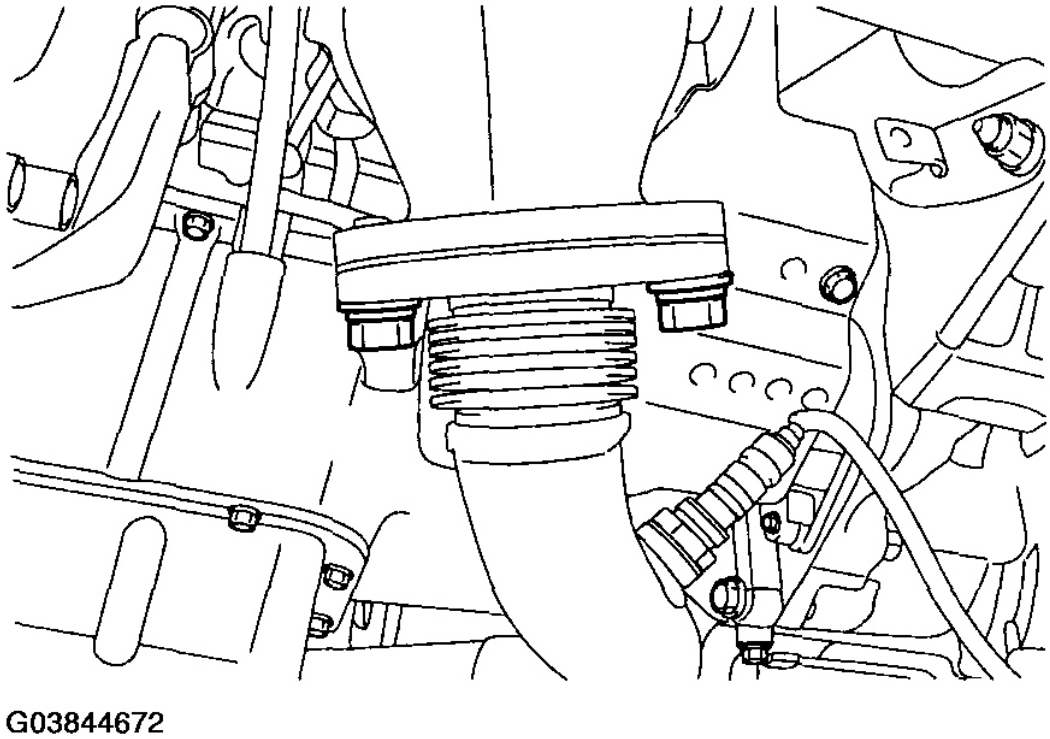

Fig. 147: Removing Front Muffler
Courtesy of HYUNDAI MOTOR CO.

2. Remove the heat protector.

 © 2011 Mitchell Repair Information Company, LLC.

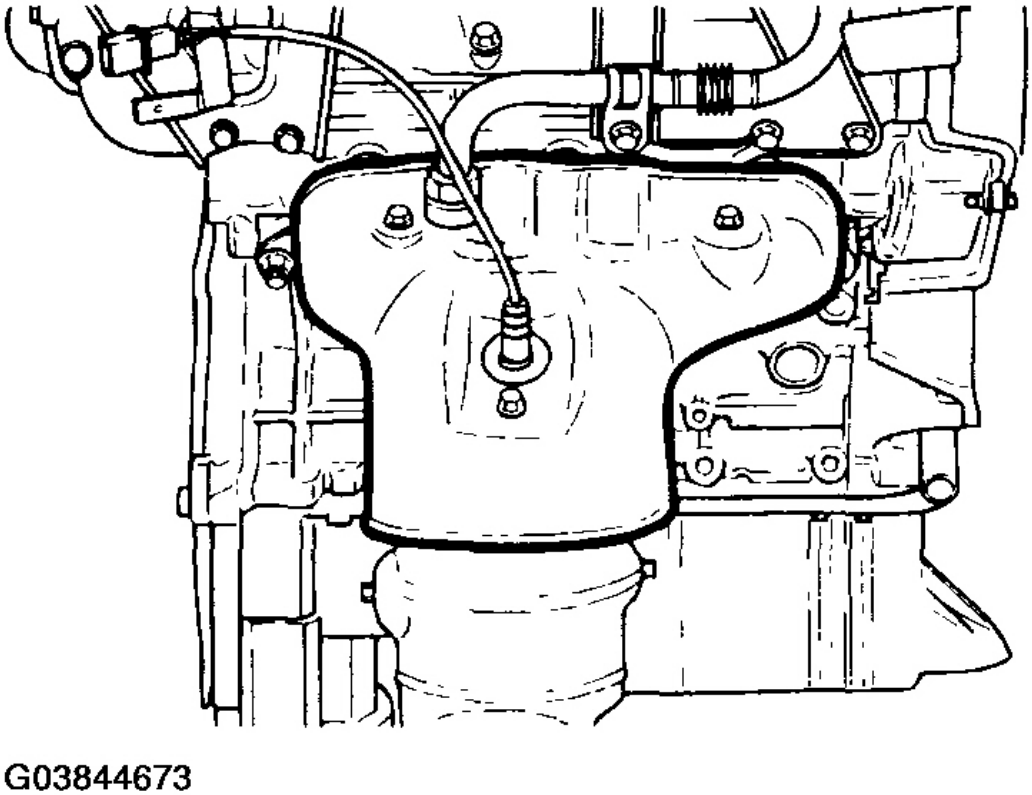

Fig. 148: Removing Heat Protector
Courtesy of HYUNDAI MOTOR CO.

3. Remove the exhaust manifold.

 © 2011 Mitchell Repair Information Company, LLC.

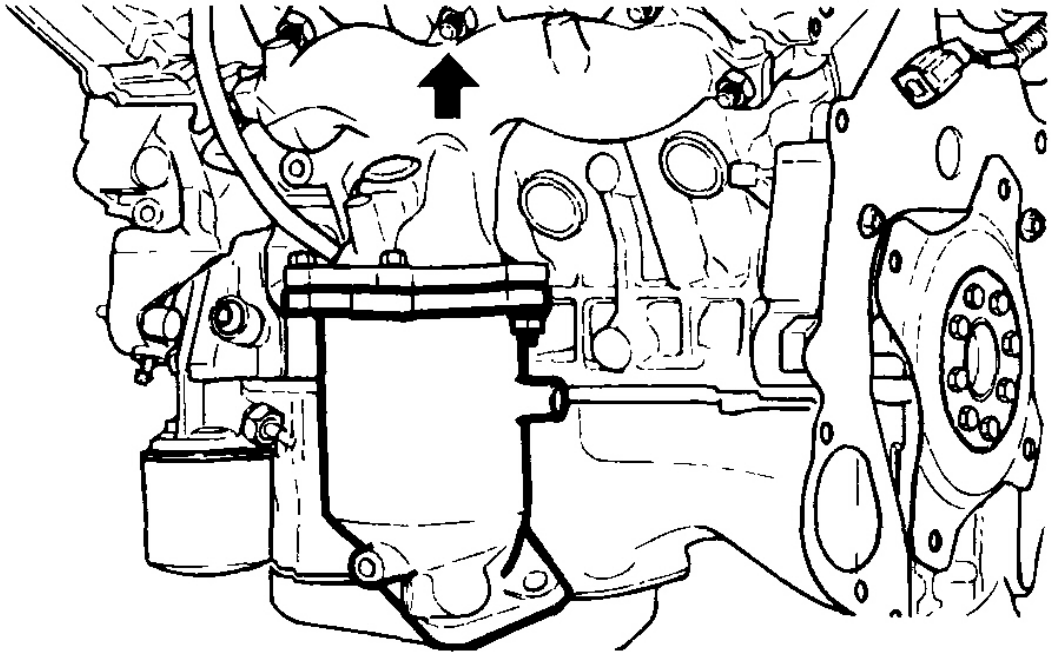

Fig. 149: Removing Exhaust Manifold
Courtesy of HYUNDAI MOTOR CO.

4. Remove the exhaust manifold gasket.

INSPECTION

1. Check for damage or cracks.
2. Using a straight edge and feeler gauge, check for distortion on the cylinder head matching surface.

   Standard value: 0.15 mm (0.006 in.) or less

   Service limit: 0.3 mm (0.012 in.) or less

 © 2011 Mitchell Repair Information Company, LLC.

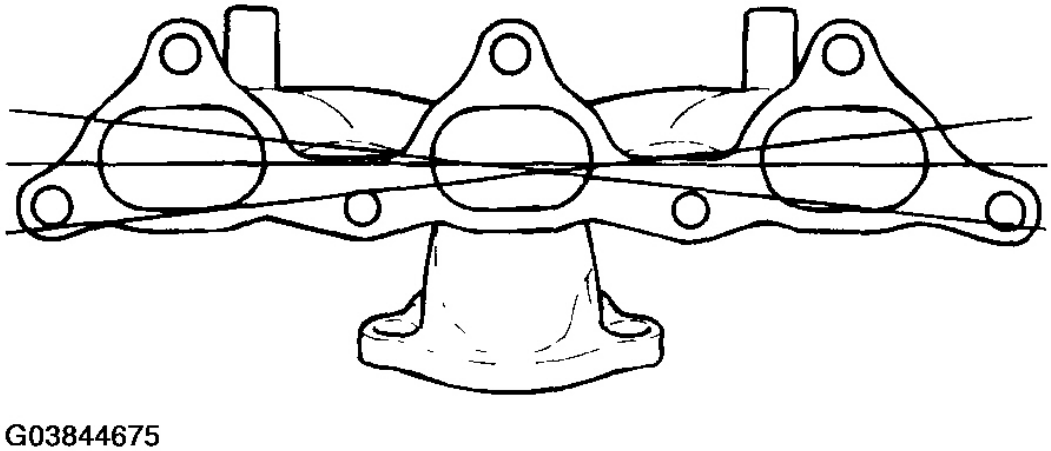

Fig. 150: Checking For Distortion On Cylinder Head Matching Surface
Courtesy of HYUNDAI MOTOR CO.

3. Check the exhaust manifold for damage and cracks.

INSTALLATION

1. Install the exhaust manifold with gasket.

   Tightening torque

   Exhaust manifold:

   40 ~ 45 Nm (400 ~ 450 kg.cm, 29 ~ 33 lb.ft)

   NOTE: Do not re - use an exhaust manifold gasket.

 © 2011 Mitchell Repair Information Company, LLC.

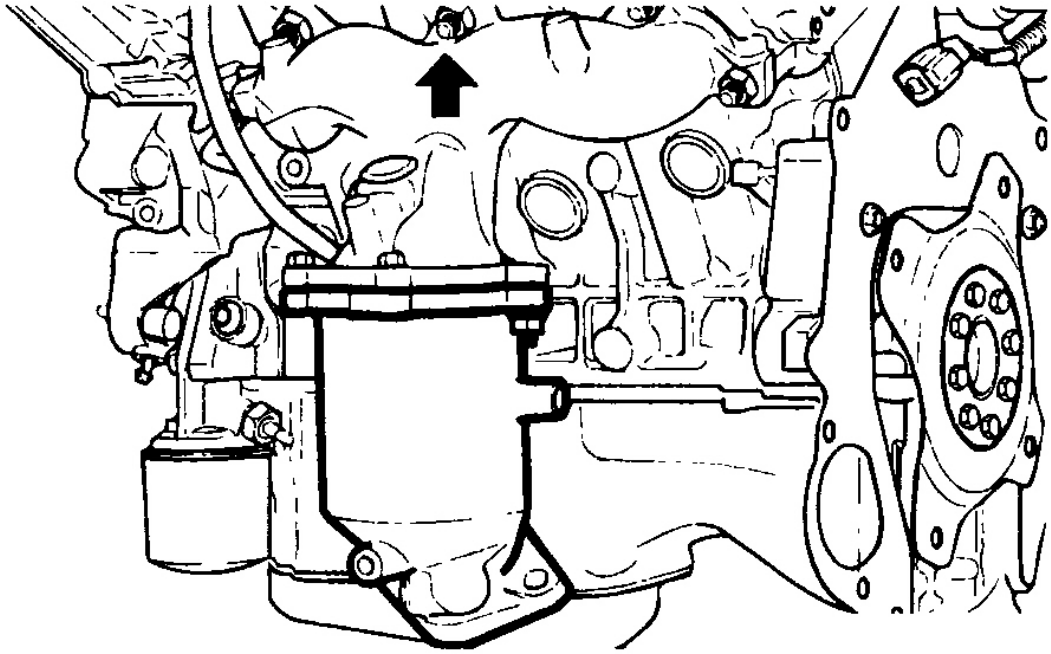

Fig. 151: Installing Exhaust Manifold With Gasket
Courtesy of HYUNDAI MOTOR CO.

2. Install the heat protector.

 © 2011 Mitchell Repair Information Company, LLC.

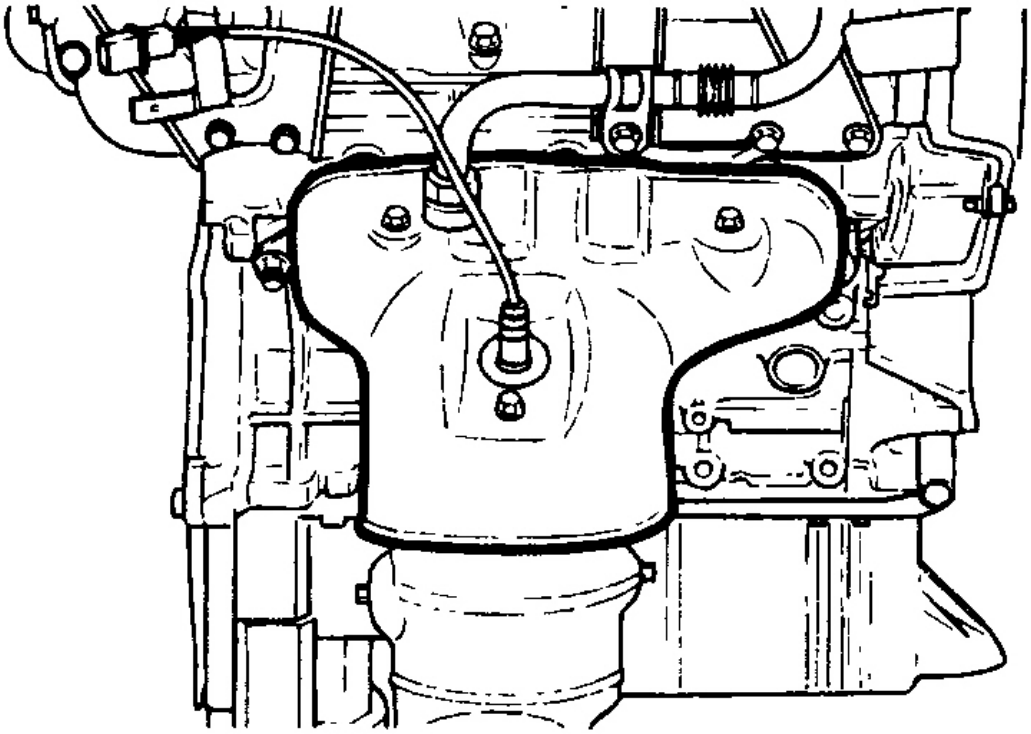

Fig. 152: Installing Heat Protector
Courtesy of HYUNDAI MOTOR CO.

3. Install the front muffler.

 © 2011 Mitchell Repair Information Company, LLC.

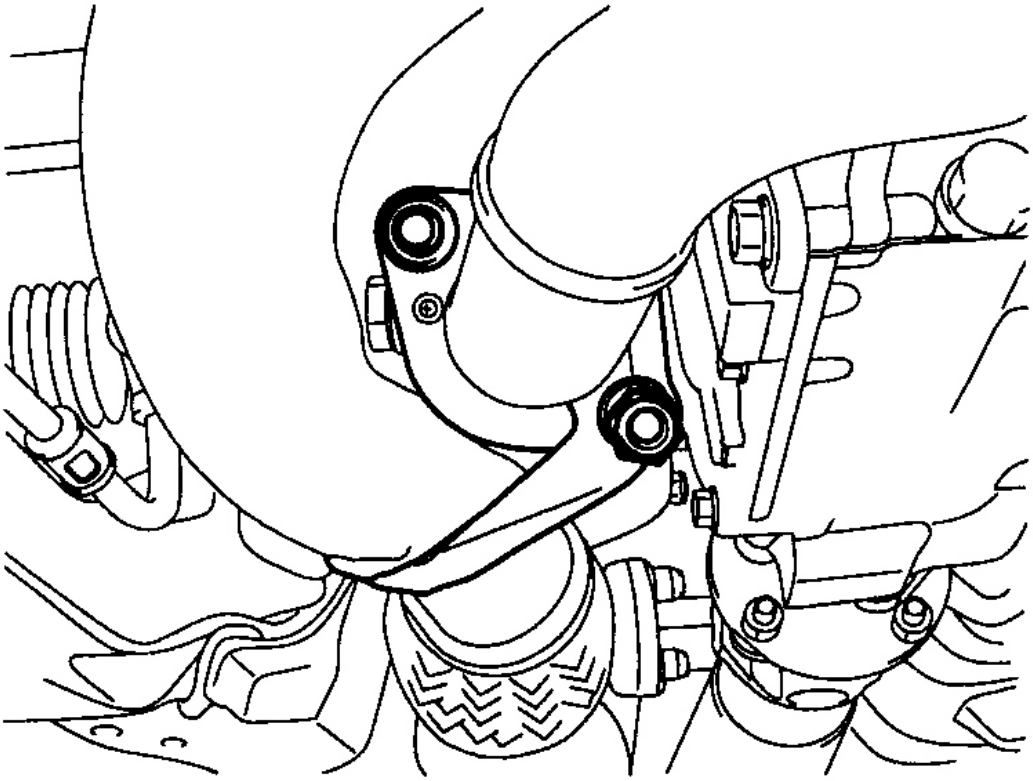

Fig. 153: Installing Front Muffler Bolts
Courtesy of HYUNDAI MOTOR CO.

 © 2011 Mitchell Repair Information Company, LLC.

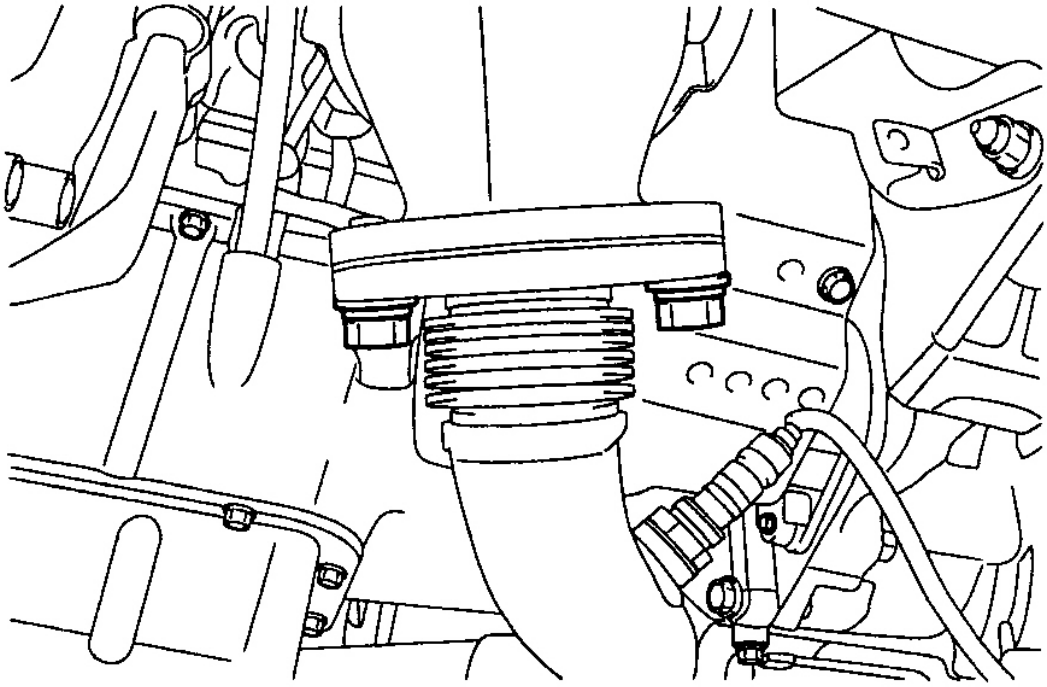

Fig. 154: Installing Front Muffler
Courtesy of HYUNDAI MOTOR CO.

INTAKE MANIFOLD

COMPONENTS

 © 2011 Mitchell Repair Information Company, LLC.

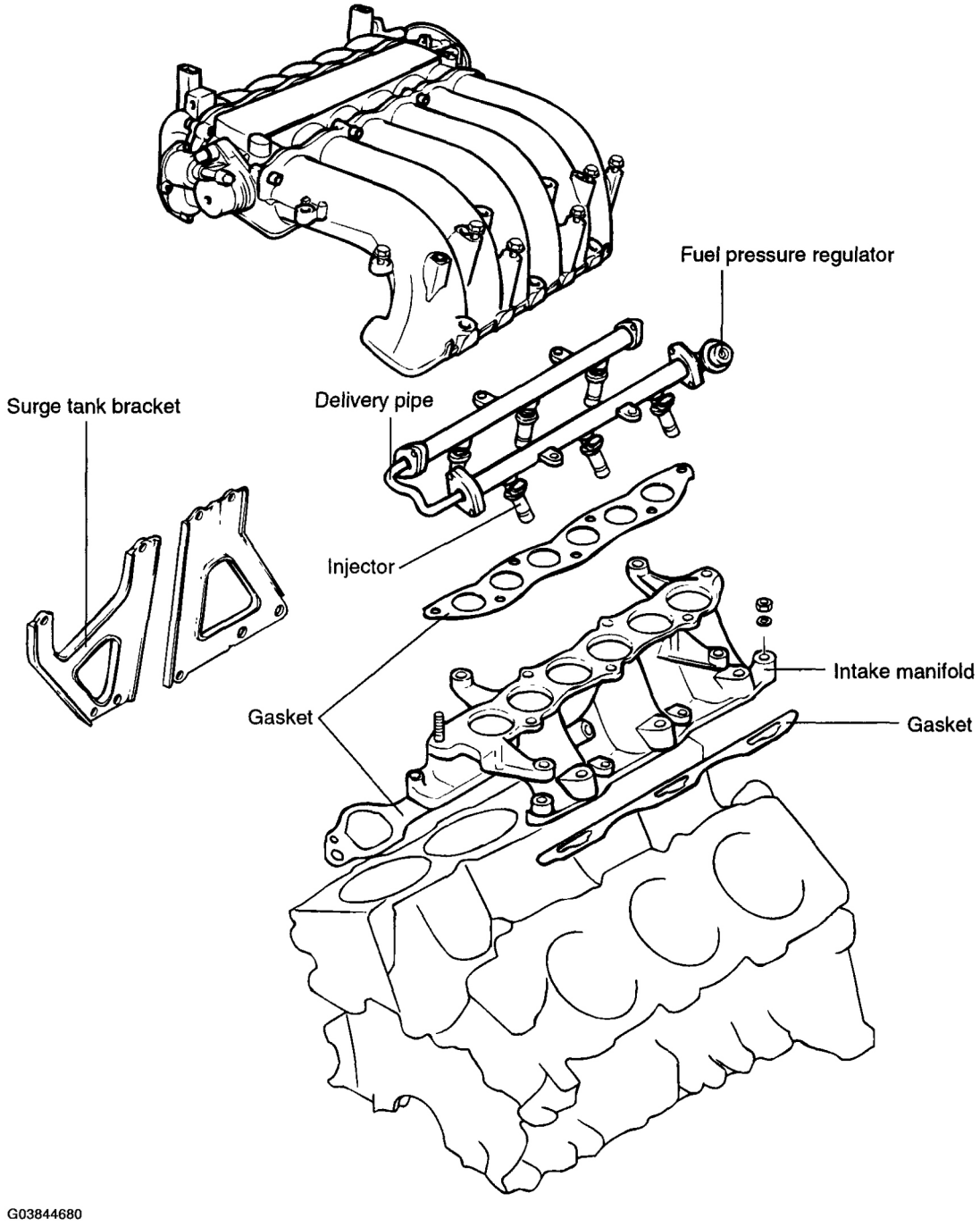

Fig. 155: Identifying Intake Manifold Components
Courtesy of HYUNDAI MOTOR CO.

REMOVAL

1. Remove the air intake hose connected to the throttle body.

 © 2011 Mitchell Repair Information Company, LLC.

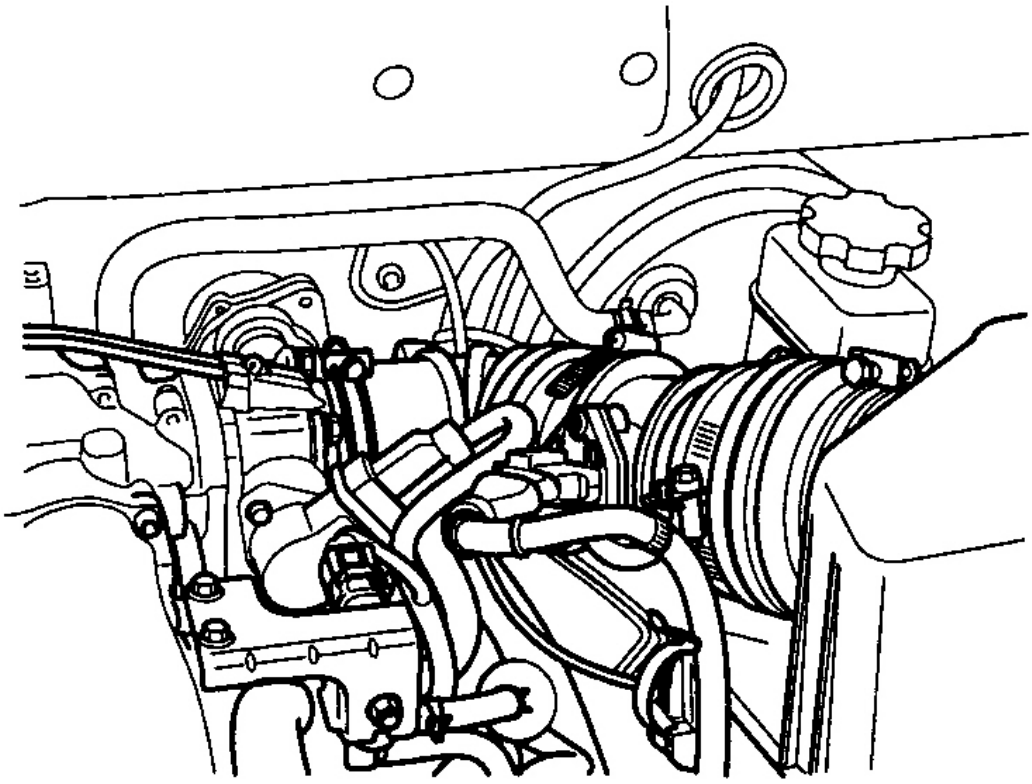

G03844681

Fig. 156: Removing Air Intake Hose Connected To Throttle Body
Courtesy of HYUNDAI MOTOR CO.

2. Remove the engine coolant hose and throttle body.
3. Remove the PCV hose and brake booster vacuum hoses.

 © 2011 Mitchell Repair Information Company, LLC.

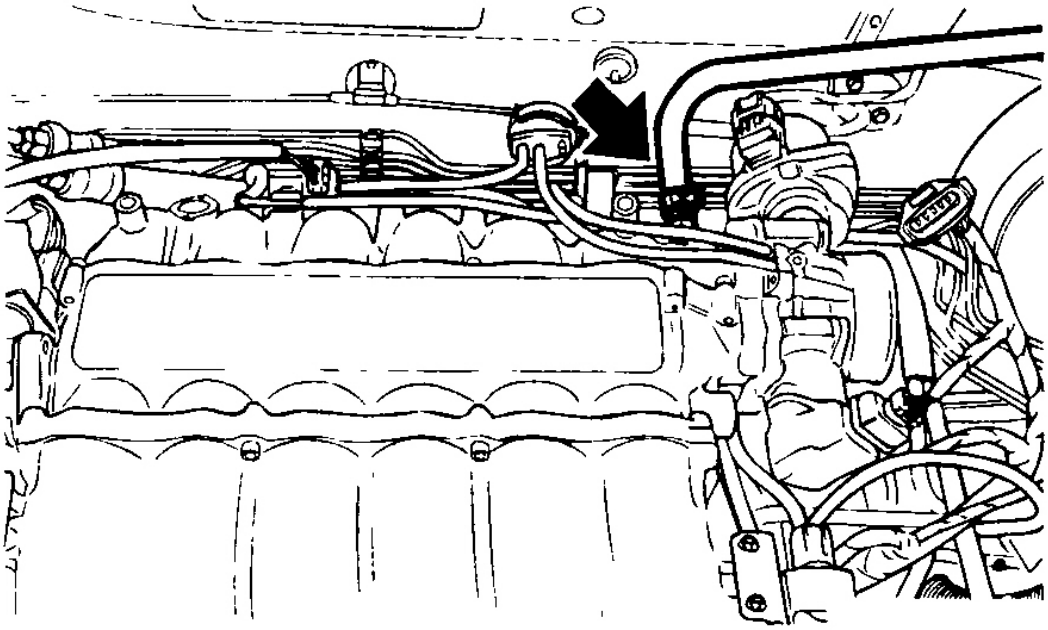

G03844682

Fig. 157: Removing PCV Hose
Courtesy of HYUNDAI MOTOR CO.

4. Disconnect the vacuum hose connections.
5. Remove the surge tank stay.

 © 2011 Mitchell Repair Information Company, LLC.

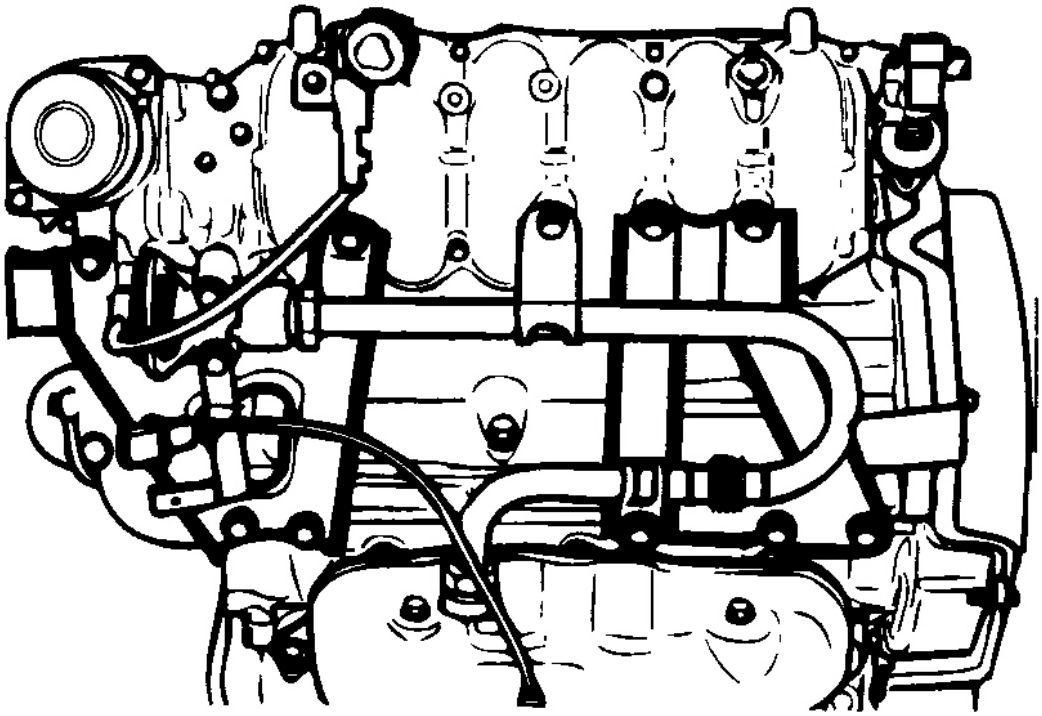

Fig. 158: Removing Surge Tank Stay
Courtesy of HYUNDAI MOTOR CO.

6. Remove the surge tank.
7. Remove the surge tank and gasket.

 © 2011 Mitchell Repair Information Company, LLC.

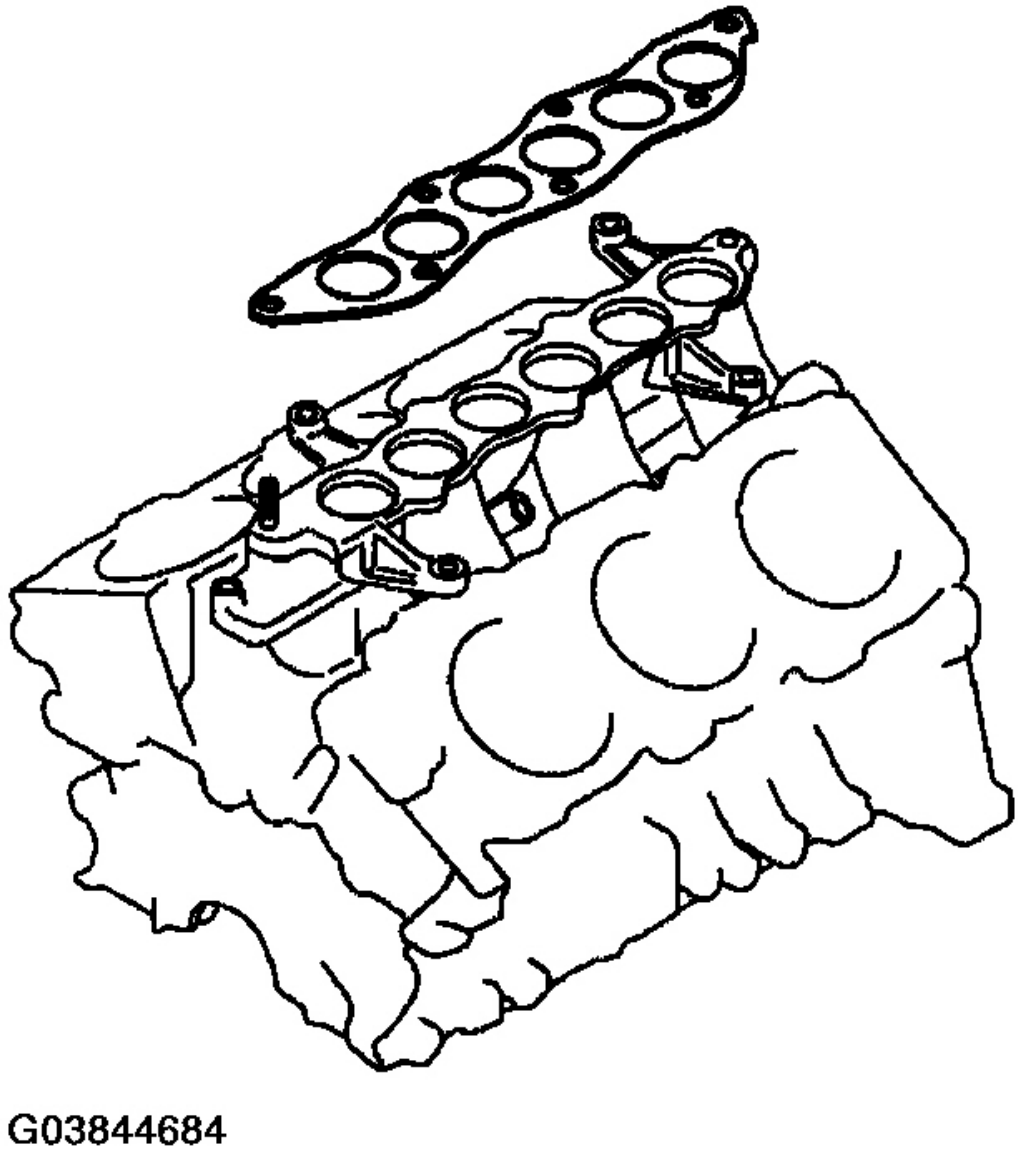

Fig. 159: Removing Surge Tank Gasket
Courtesy of HYUNDAI MOTOR CO.

8. Disconnect the fuel injector harness connector.

 © 2011 Mitchell Repair Information Company, LLC.

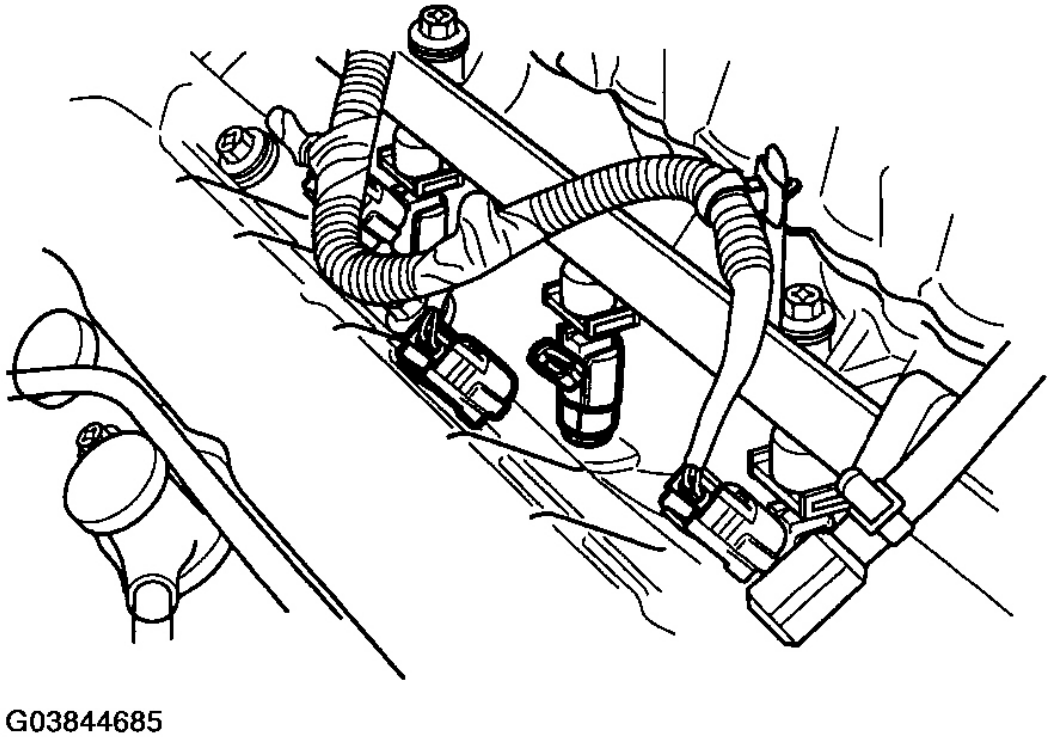

Fig. 160: Disconnecting Fuel Injector Harness Connector
Courtesy of HYUNDAI MOTOR CO.

9. Remove the delivery pipe with the fuel injector and the pressure regulator.

NOTE: When the delivery pipe is removed, be careful not to drop an injector.

 © 2011 Mitchell Repair Information Company, LLC.

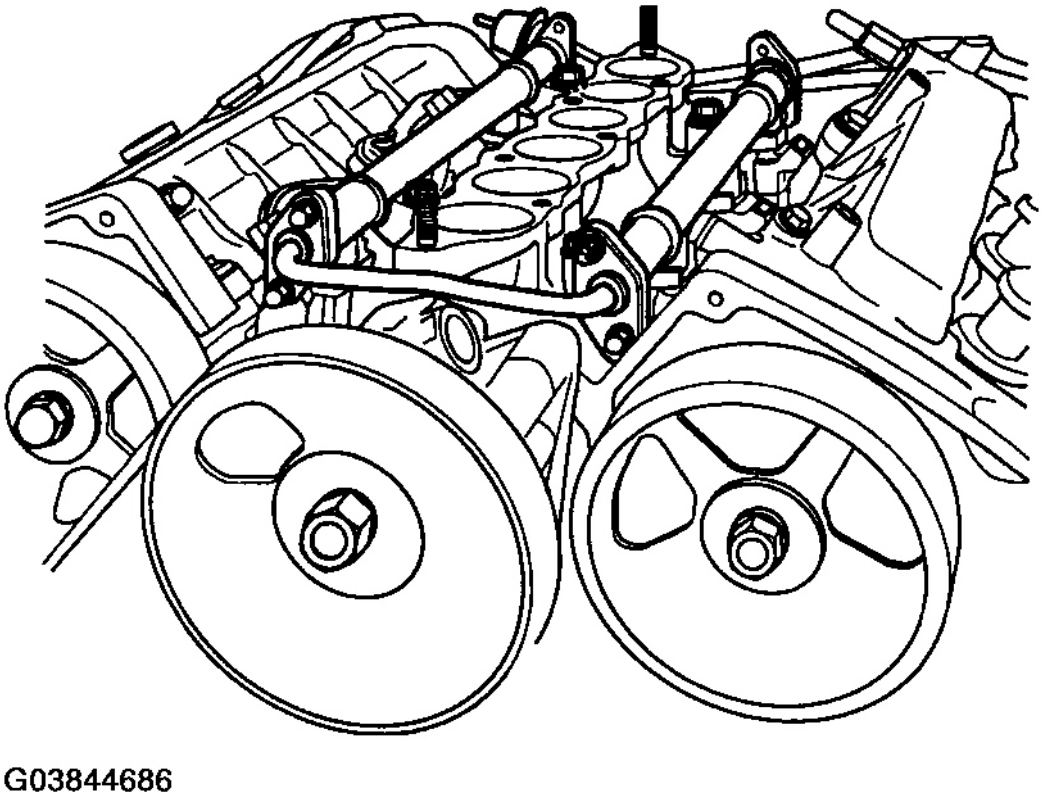

Fig. 161: Removing Delivery Pipe With Fuel Injector And Pressure Regulator
Courtesy of HYUNDAI MOTOR CO.

10. Disconnect the wiring harness of the coolant sensor assembly.

INSPECTION

SURGE TANK AND INTAKE MANIFOLD

1. Check the surge tank and intake manifold for damage, cracking or restriction of the vacuum outlet port, water or gas passages.
2. Check for distortion on the surface using a straight edge and feeler gauge.

   Standard value: 0.15 mm (0.006 in.) or less

   Service limit: 0.2 mm (0.0078 in.)

INSTALLATION

Install the intake manifold and delivery pipe reversing the order of the removal procedure.

 © 2011 Mitchell Repair Information Company, LLC.

Tightening torque

Intake manifold:

12 ~ 15 Nm (120 ~ 150 kg.cm, 9 ~ 11 lb.ft)

Surge tank stay:

15 ~ 20 Nm (150 ~ 200 kg.cm, 11 ~ 14 lb.ft)

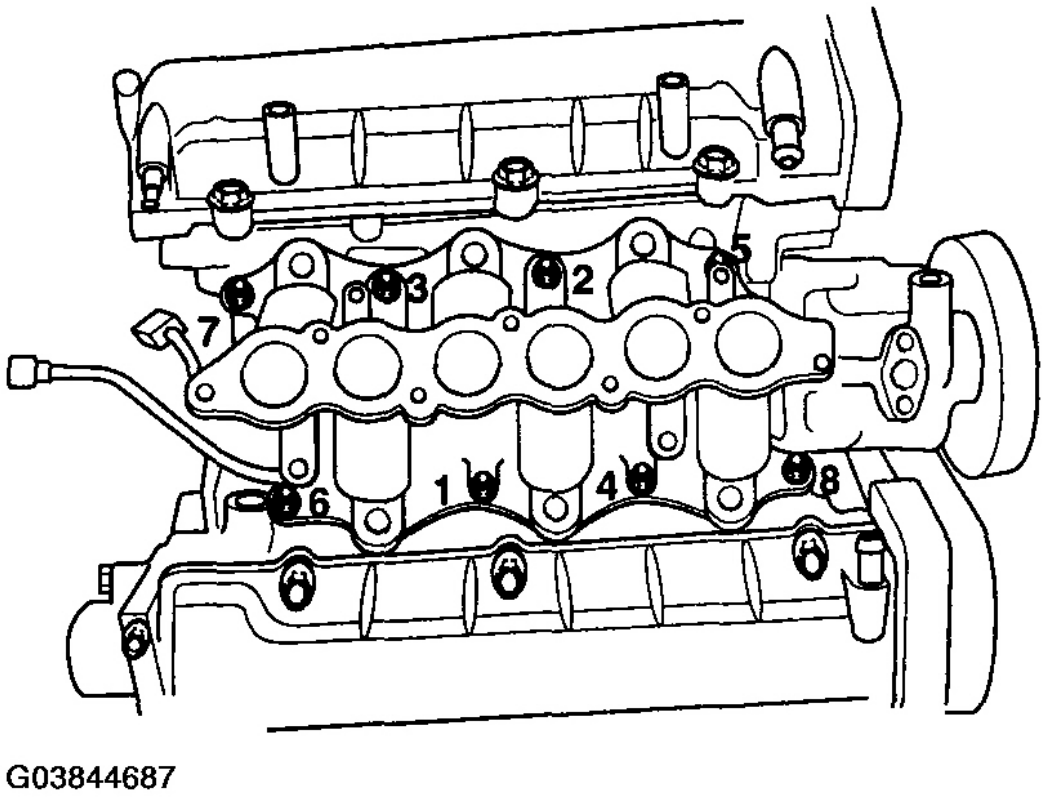

Fig. 162: Identifying Tightening Sequence Of Intake Manifold Bolts
Courtesy of HYUNDAI MOTOR CO.

 © 2011 Mitchell Repair Information Company, LLC.

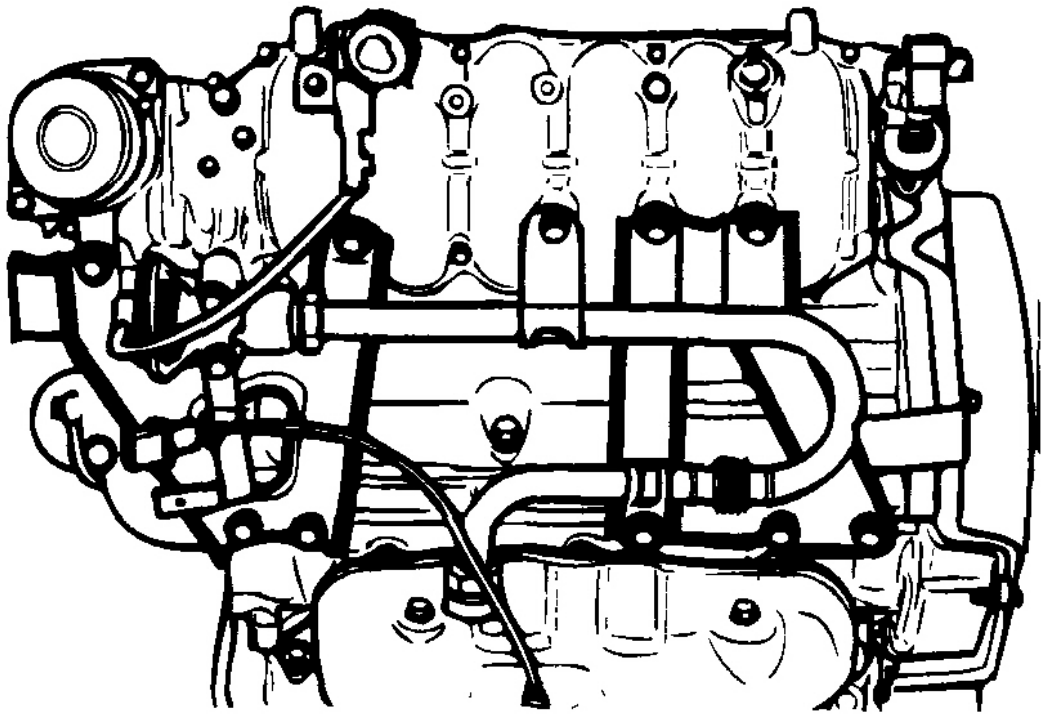

Fig. 163: Installing Surge Tank Stay
Courtesy of HYUNDAI MOTOR CO.

MUFFLER

COMPONENTS

 © 2011 Mitchell Repair Information Company, LLC.

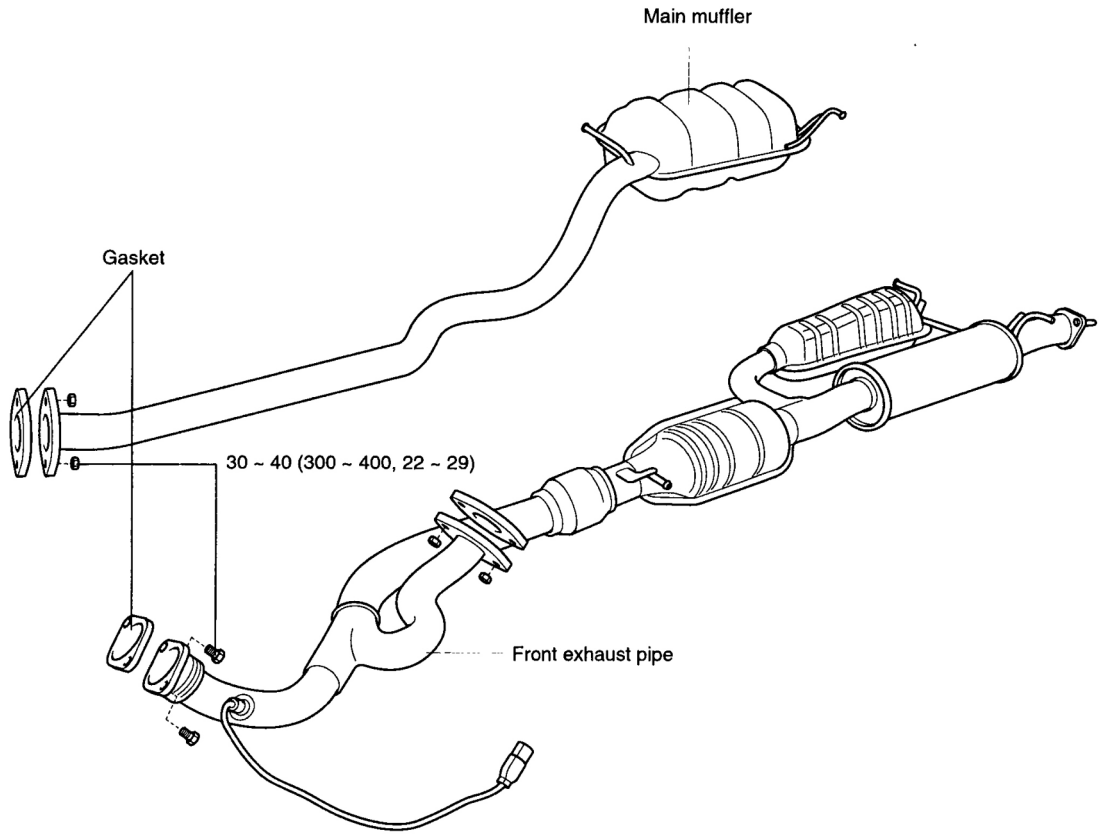

TORQUE : Nm (kg.cm, lb.ft)

G03844689

Fig. 164: Identifying Muffler Components
Courtesy of HYUNDAI MOTOR CO.

REMOVAL

REAR MUFFLER

CAUTION: Before removing or inspecting the exhaust system, ensure that the exhaust system is cool.

1. Disconnect the rear muffler from the front muffler.

 © 2011 Mitchell Repair Information Company, LLC.

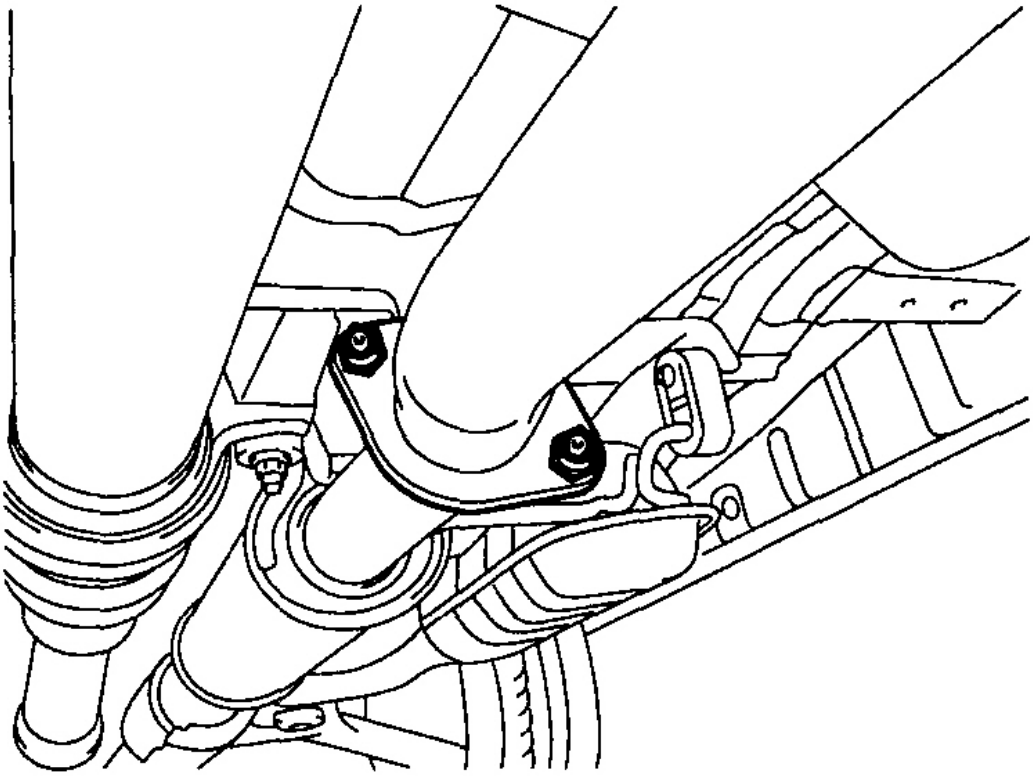

Fig. 165: Disconnecting Rear Muffler From Front Muffler
Courtesy of HYUNDAI MOTOR CO.

2. Remove the rubber hangers and the rear muffler.

 © 2011 Mitchell Repair Information Company, LLC.

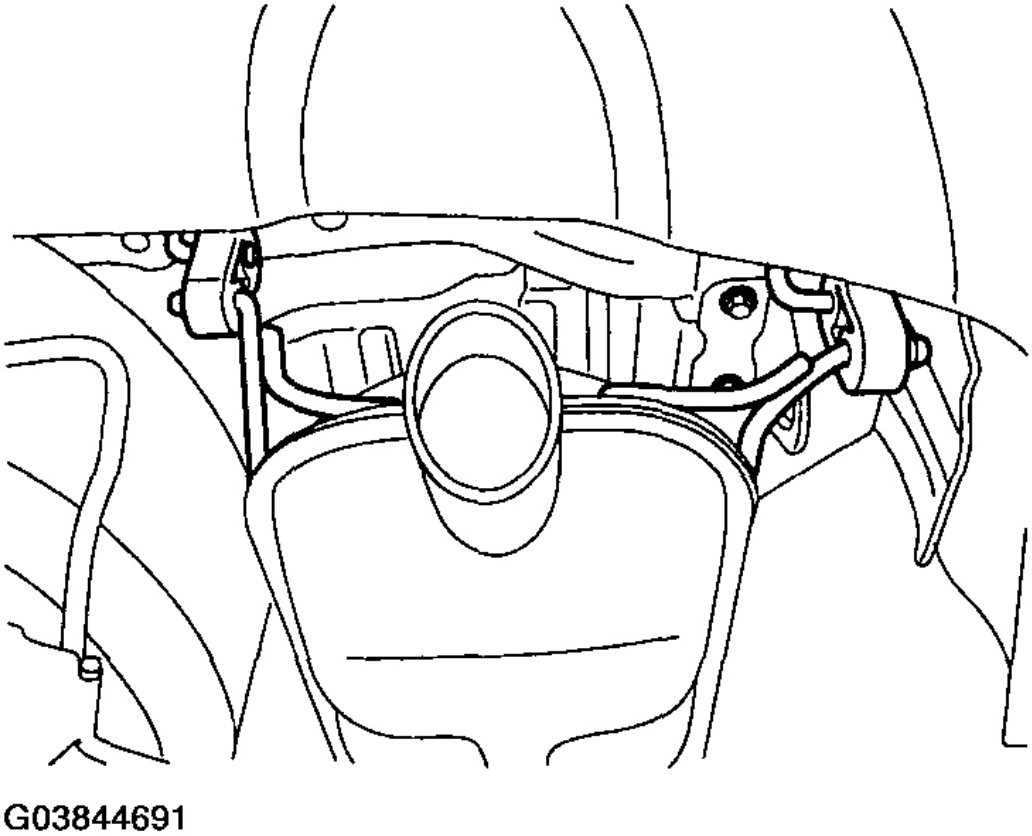

Fig. 166: Removing Rubber Hangers
Courtesy of HYUNDAI MOTOR CO.

 © 2011 Mitchell Repair Information Company, LLC.

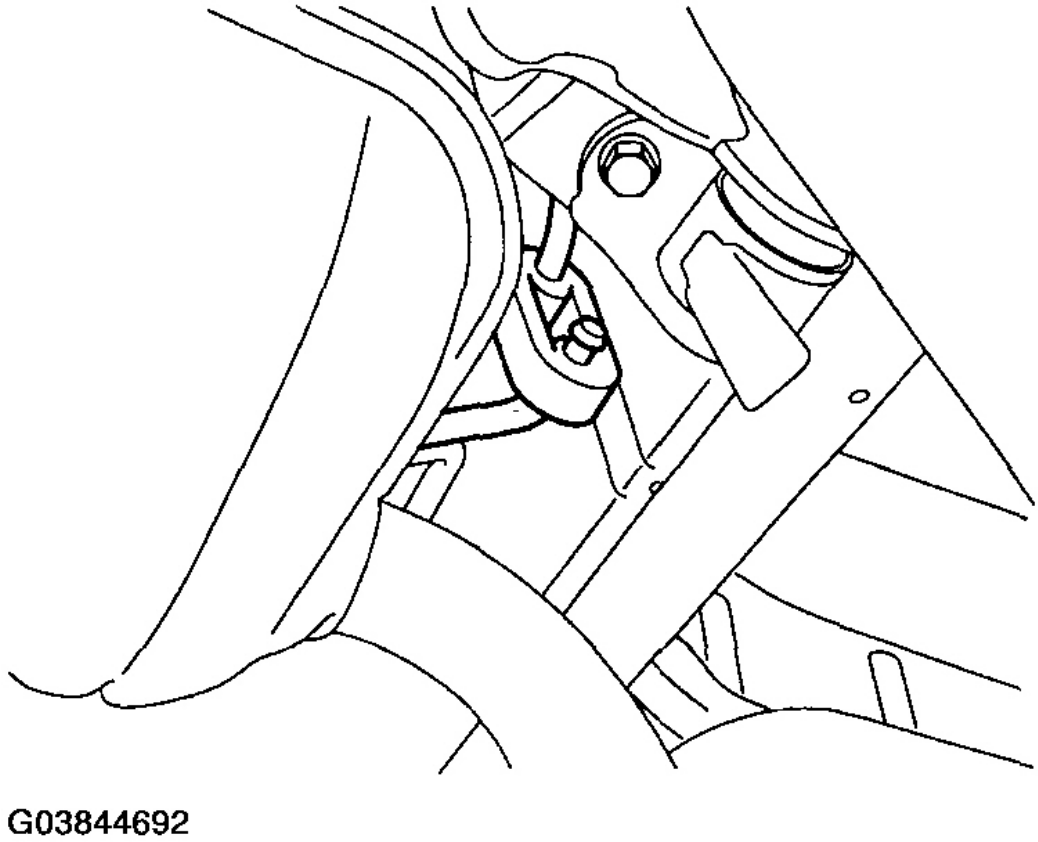

Fig. 167: Removing Rear Muffler
Courtesy of HYUNDAI MOTOR CO.

FRONT MUFFLER (INCLUDING CATALYTIC CONVERTER)

1. Disconnect the L/H near oxygen sensor.

 © 2011 Mitchell Repair Information Company, LLC.

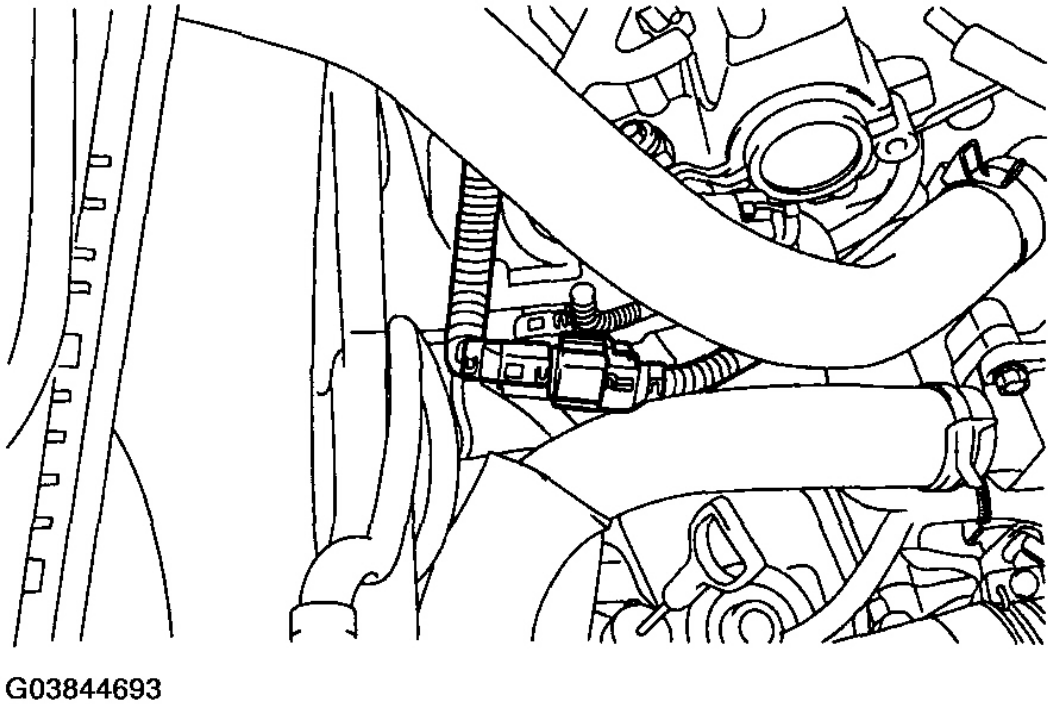

Fig. 168: Disconnecting L/H Near Oxygen Sensor
Courtesy of HYUNDAI MOTOR CO.

2. Remove the under cover.

 © 2011 Mitchell Repair Information Company, LLC.

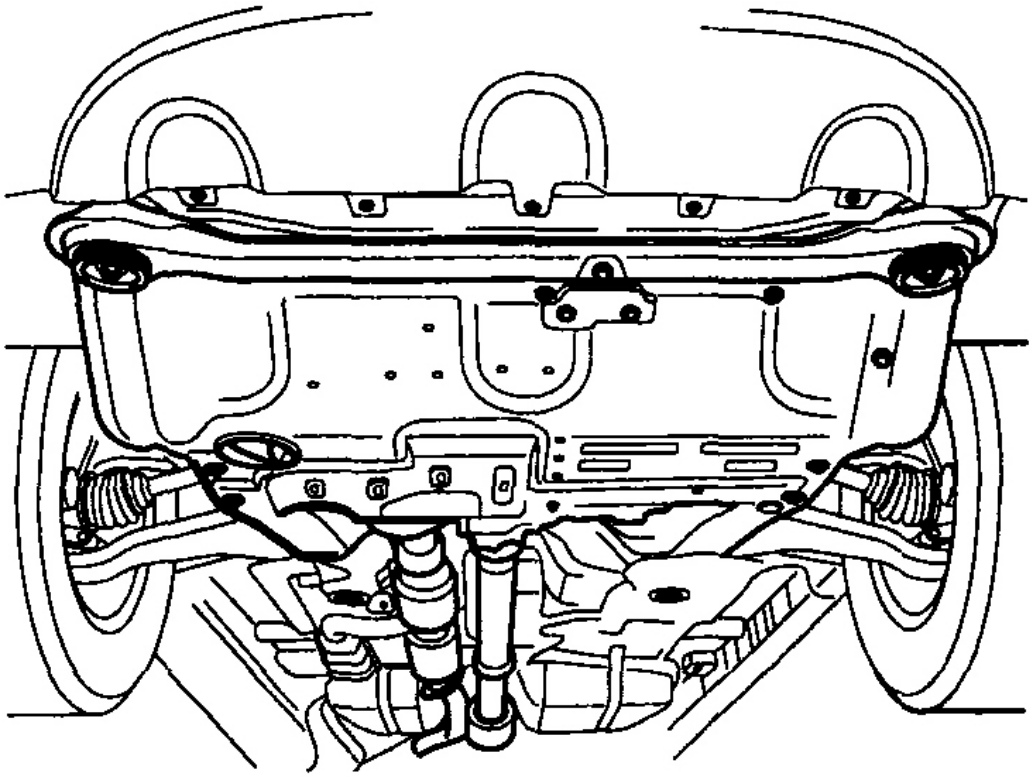

Fig. 169: Removing Under Cover
Courtesy of HYUNDAI MOTOR CO.

3. Remove the front muffler bolts and nuts.

 © 2011 Mitchell Repair Information Company, LLC.

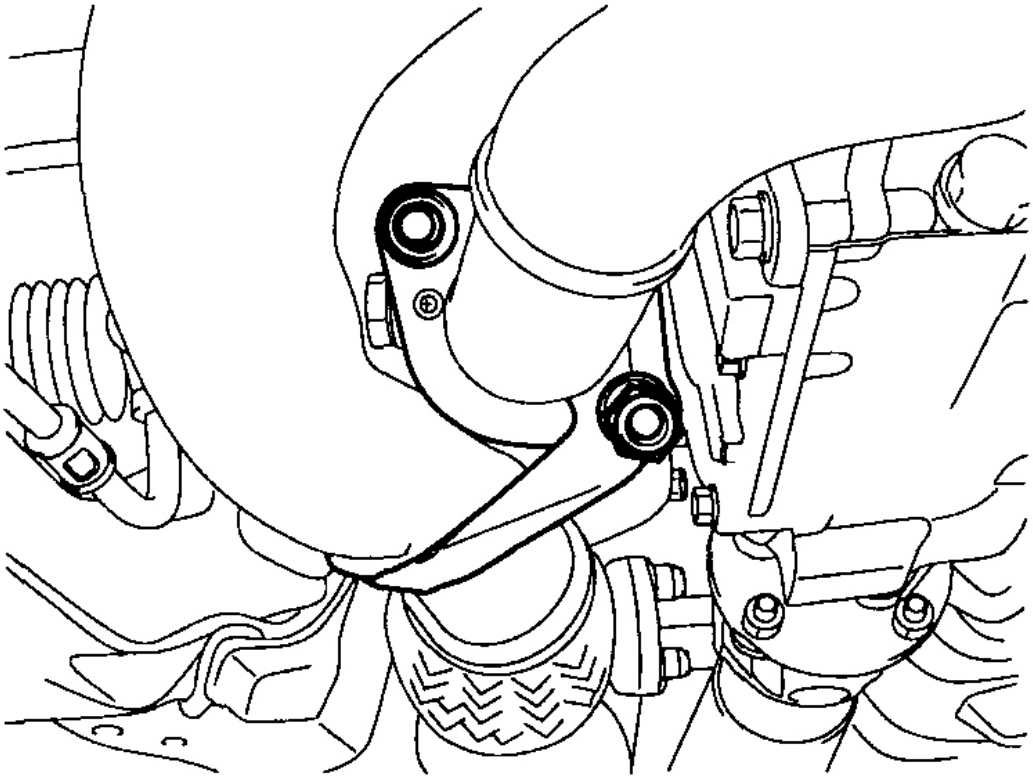

Fig. 170: Removing Front Muffler Bolts And Nuts
Courtesy of HYUNDAI MOTOR CO.

 © 2011 Mitchell Repair Information Company, LLC.

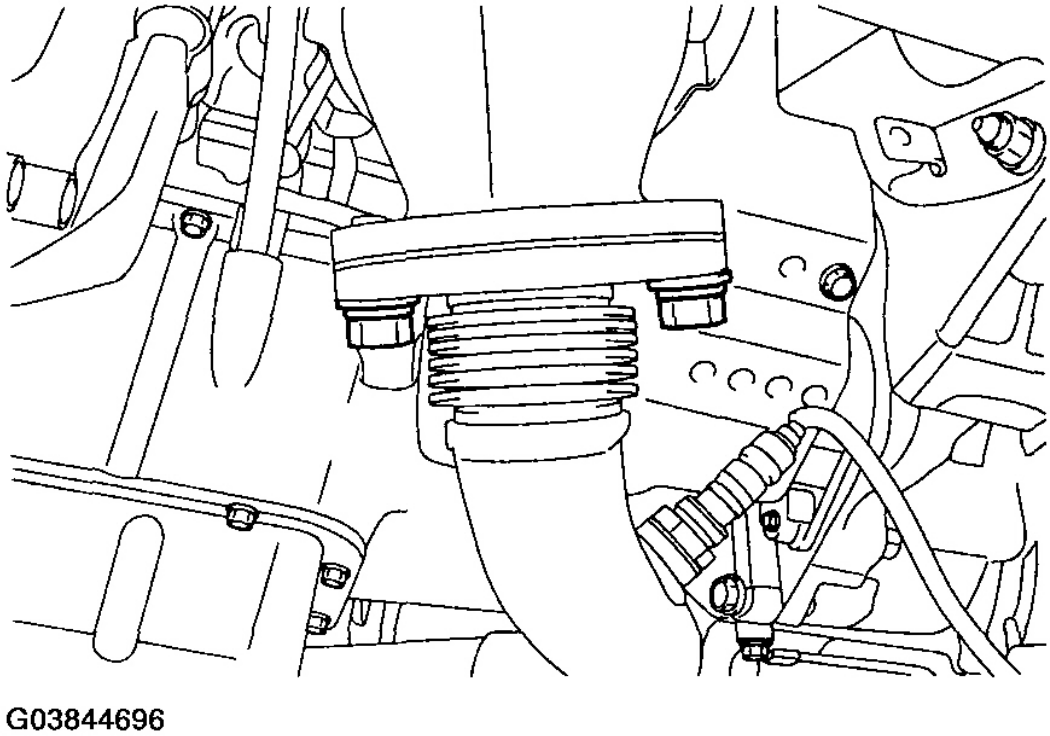

Fig. 171: Removing Front Muffler
Courtesy of HYUNDAI MOTOR CO.

4. Disconnect from the hanger.

 © 2011 Mitchell Repair Information Company, LLC.

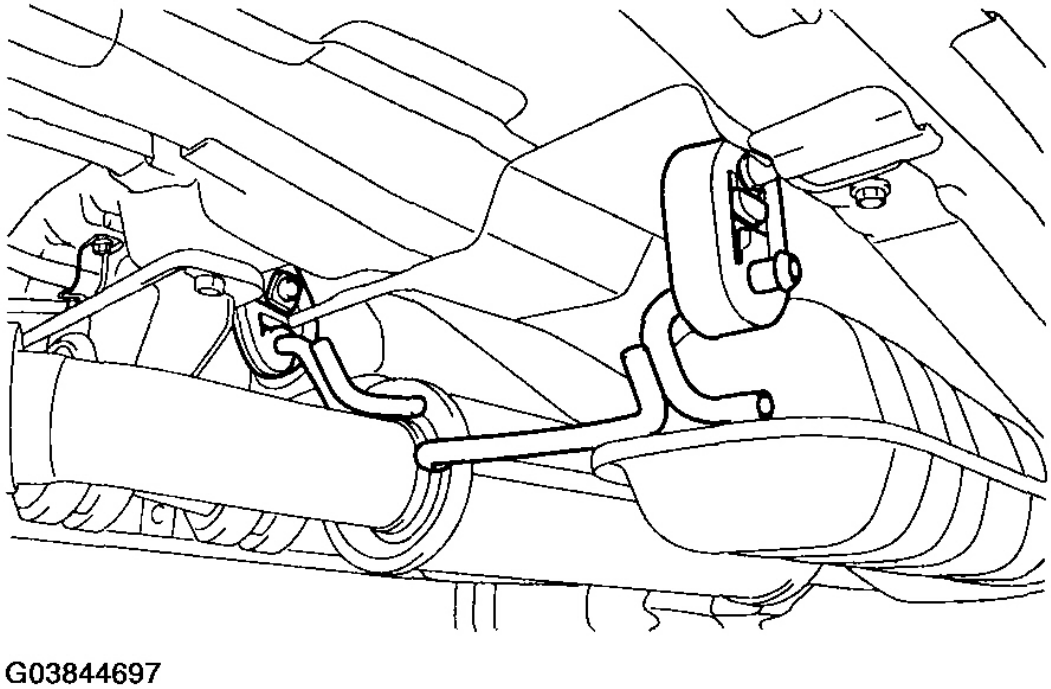

Fig. 172: Disconnecting Rubber Hanger
Courtesy of HYUNDAI MOTOR CO.

 © 2011 Mitchell Repair Information Company, LLC.

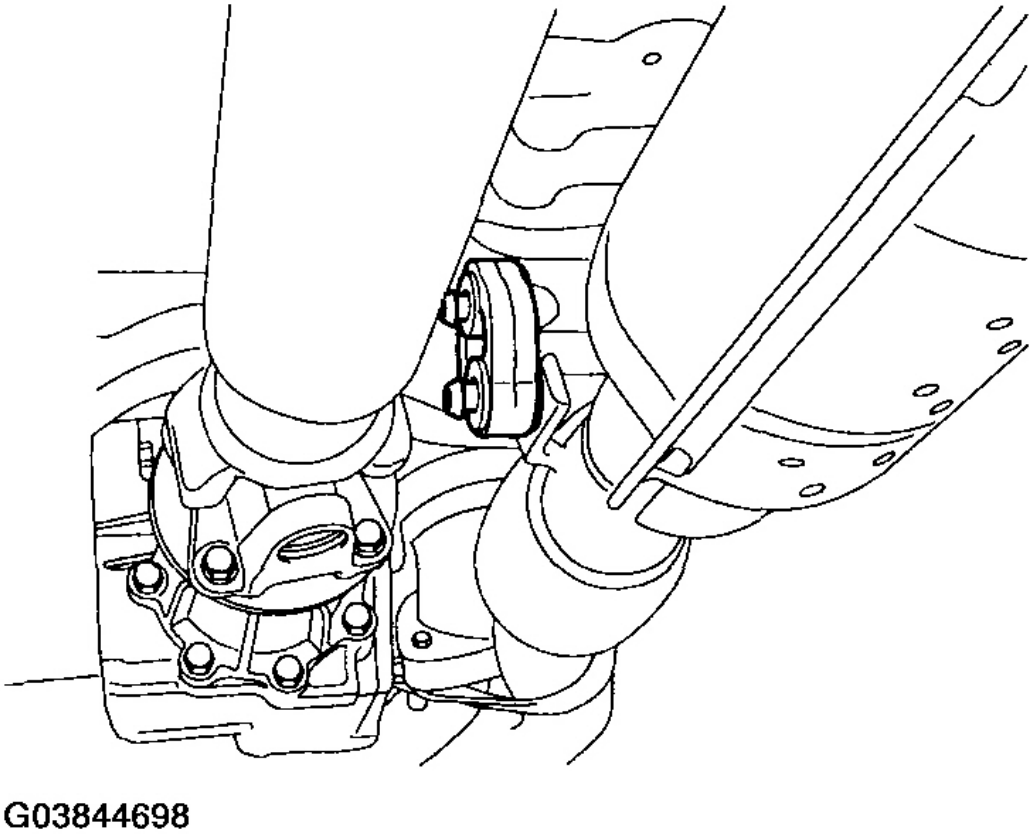

Fig. 173: Disconnecting Rear Muffler
Courtesy of HYUNDAI MOTOR CO.

INSPECTION

1. Check the mufflers and pipes for leaks, corrosion and damage.
2. Check the rubber hangers for deterioration and cracks.

INSTALLATION

1. Temporarily install the front muffler, the catalytic converter assembly and the rear muffler in this order.
2. Install the rubber hangers so that they hang equally left and right.
3. Tighten the parts securely and then confirm that there is no interference with any components.

Tightening torque

30 ~ 40 Nm (300 ~ 400 kg.cm, 22 ~ 29.5 lb.ft)

 © 2011 Mitchell Repair Information Company, LLC.

AIR CLEANER (ACL)

COMPONENTS

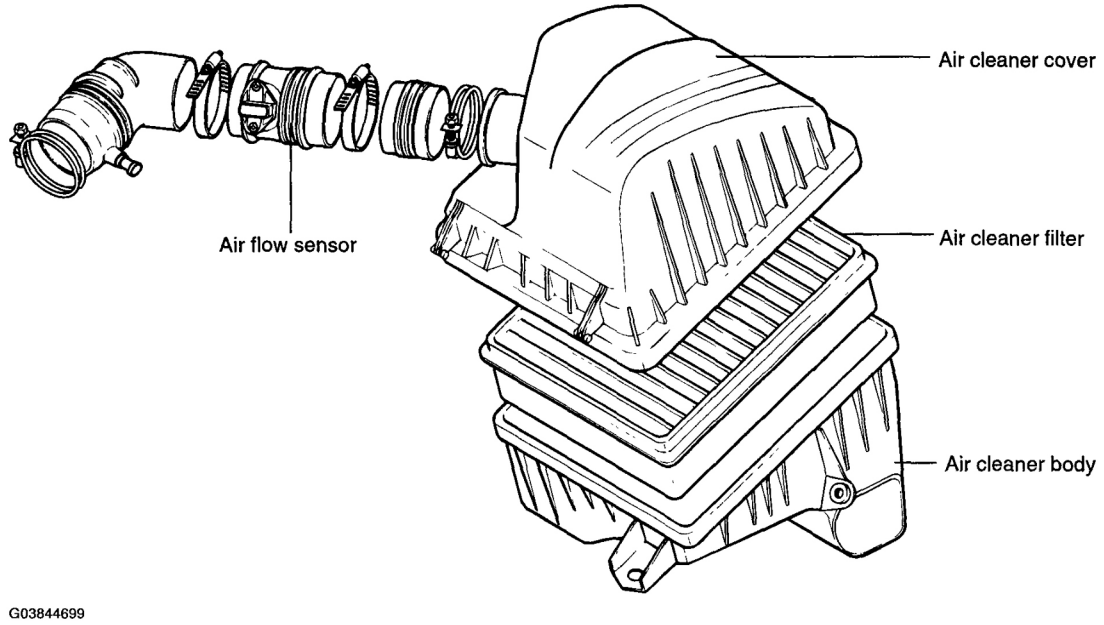

Fig. 174: Identifying Air Cleaner (ACL) Components
Courtesy of HYUNDAI MOTOR CO.

REMOVAL

1. Disconnect the air flow sensor connector.

 © 2011 Mitchell Repair Information Company, LLC.

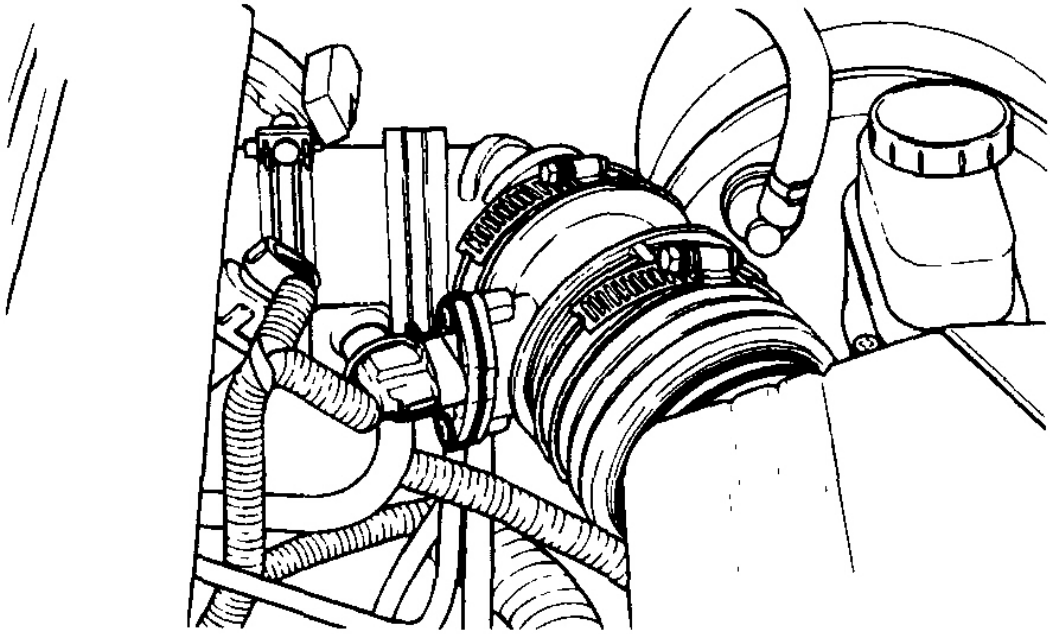

G03844700

Fig. 175: Disconnecting Air Flow Sensor Connector
Courtesy of HYUNDAI MOTOR CO.

2. Remove the air intake hose and air duct connected to the air cleaner.
3. Remove the three bolts attaching the air cleaner mounting brackets.
4. Detach the air cleaner.
5. Remove the air flow sensor from the air intake hose.

CAUTION: Do not pull on the air flow sensor wires.

INSPECTION

1. Check the air intake hose, air cleaner cover for damage.
2. Check the air duct for damage.

 © 2011 Mitchell Repair Information Company, LLC.

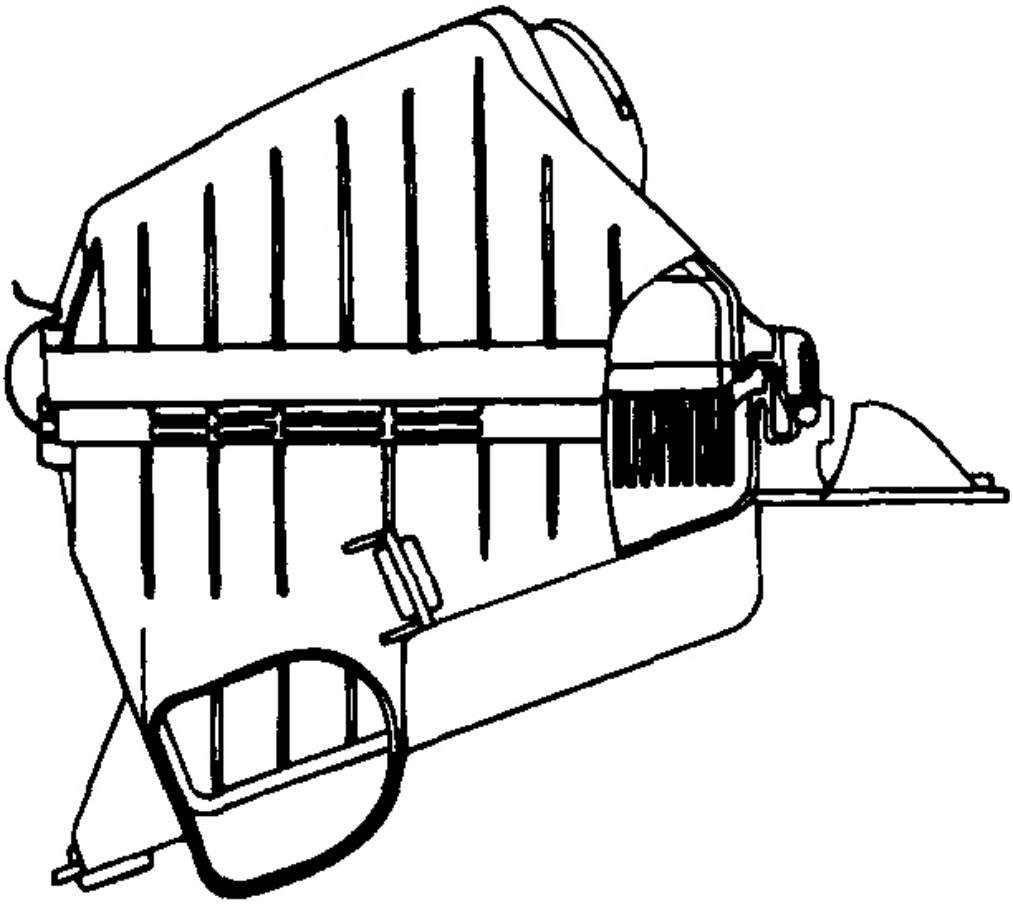

Fig. 176: Checking Air Duct For Damage
Courtesy of HYUNDAI MOTOR CO.

3. Check the air cleaner element for restriction, contamination or damage.

   If the element is slightly restricted, remove dust and debris by blowing compressed air from the inside of the element. Replace the element if it cannot be cleaned.

 © 2011 Mitchell Repair Information Company, LLC.

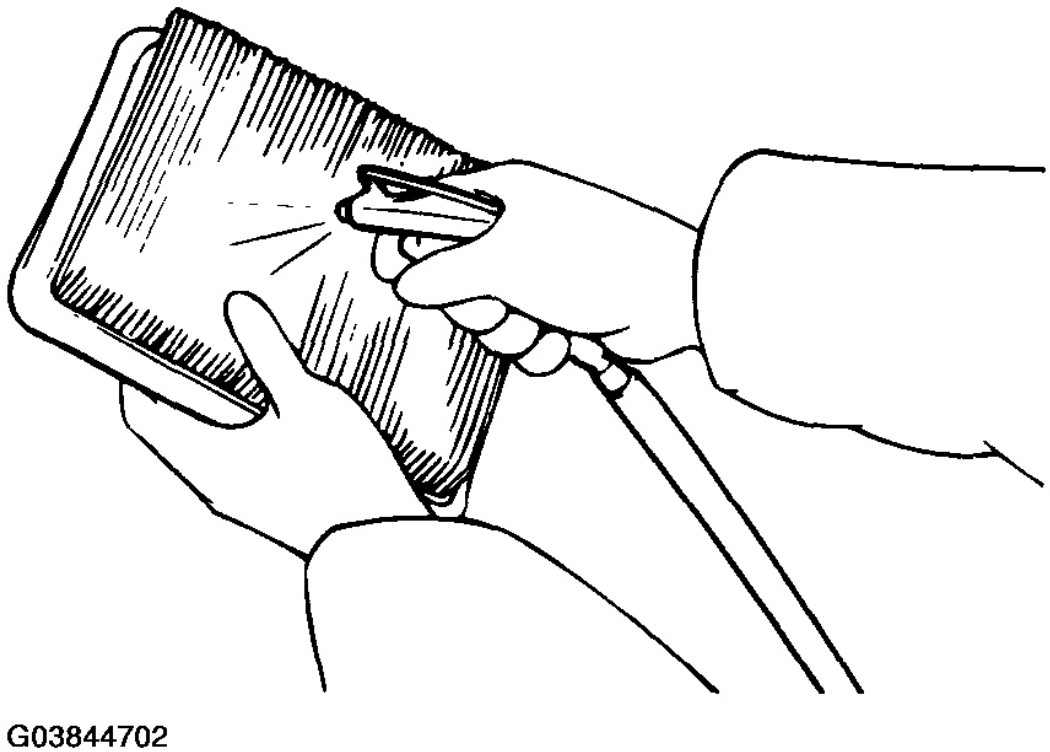

Fig. 177: Cleaning Air Cleaner
Courtesy of HYUNDAI MOTOR CO.

INSTALLATION

Install the air cleaner assembly following the reverse order of removal.

ENGINE BLOCK

ENGINE BLOCK

CYLINDER BLOCK

REMOVAL

Remove the timing belt, cylinder head assembly, drive plate, transaxle mounting plate, oil pan and oil pump case.

INSPECTION

CYLINDER BLOCK

 © 2011 Mitchell Repair Information Company, LLC.

1. Check the cylinder block for scores, rust and corrosion. Also check for cracks or any other defects. Replace the block if defective.
2. Measure the cylinder bore with a cylinder gauge at the three levels indicated, in the directions A and B.

   Level 1: No. 1 piston ring position at TDC

   Level 2: Center of cylinder

   Level 3: Bottom of cylinder

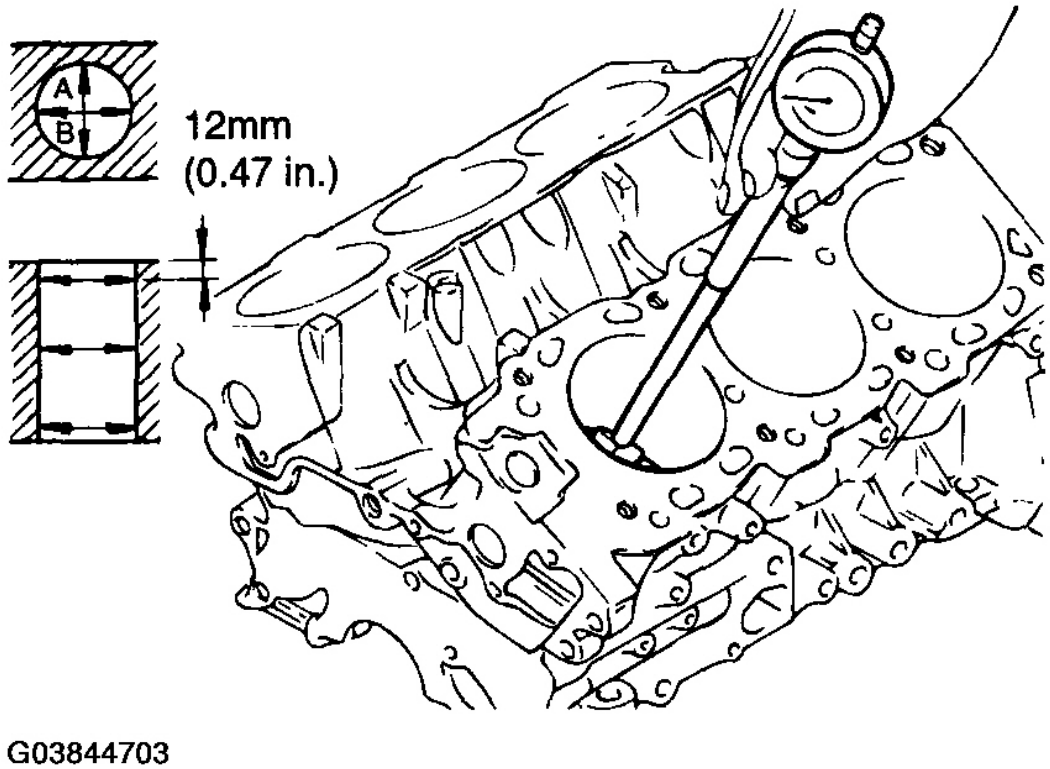

Fig. 178: Measuring Cylinder Bore
Courtesy of HYUNDAI MOTOR CO.

3. If the cylinder bores show more than the specified out-of-round or taper, or if the cylinder walls are badly scuffed or scored, the cylinder block should be rebored and honed. New oversize pistons and rings should be installed.

   Standard value

   Cylinder bore: 93 ~ 93.03 mm (3.661 ~ 3.6625 in.)

 © 2011 Mitchell Repair Information Company, LLC.

Out-of-round and taper of cylinder bore:

Max. 0.02 mm (0.0008 in.)

4. If a ridge exists at the top of the cylinder, cut it off with a ridge reamer.
5. Oversize pistons are available in four sizes.

Piston service size and mark mm (in.)

0.25 (0.010) O.S.: 0.25

0.50 (0.020) O.S.: 0.50

6. To rebore the cylinder bore to the oversize, maintain the specified clearance between the oversize piston and the bore and make sure that all used pistons are the same oversize. The standard measurement of the piston outside diameter is taken at a level of 10 mm (0.39 in.) above the bottom of the piston skirt and across the thrust faces.

Piston-to-cylinder clearance

0.03 ~ 0.05 mm (0.0012 ~ 0.0020 in.)

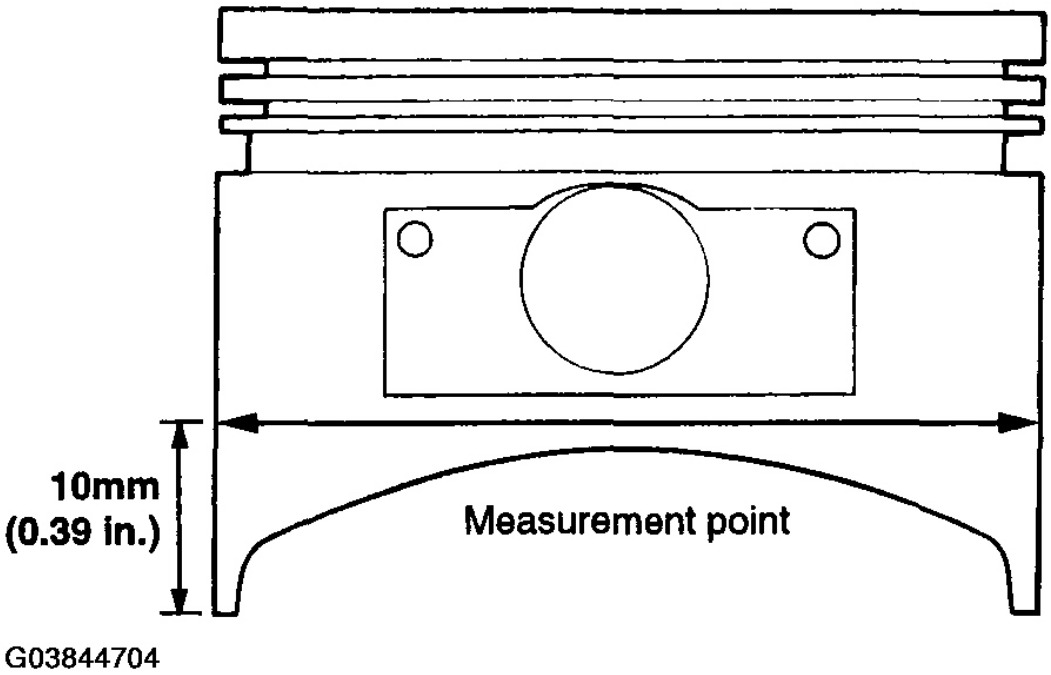

Fig. 179: Measuring Piston-To-Cylinder Clearance
Courtesy of HYUNDAI MOTOR CO.

 © 2011 Mitchell Repair Information Company, LLC.

7. Check for damage or cracks in the cylinders.
8. Check the top surface of the cylinder block for flatness. If the top surface exceeds the limit, grind to the minimum limit or replace.

Standard value

Flatness of gasket surface:

Max. 0.03 mm (0.0012 in.)

Service limit

Flatness of gasket surface: 0.05 mm (0.0020 in.)

CAUTION: When the cylinder head is assembled, grinding less than 0.2 mm (0.008 in.) is permissible.

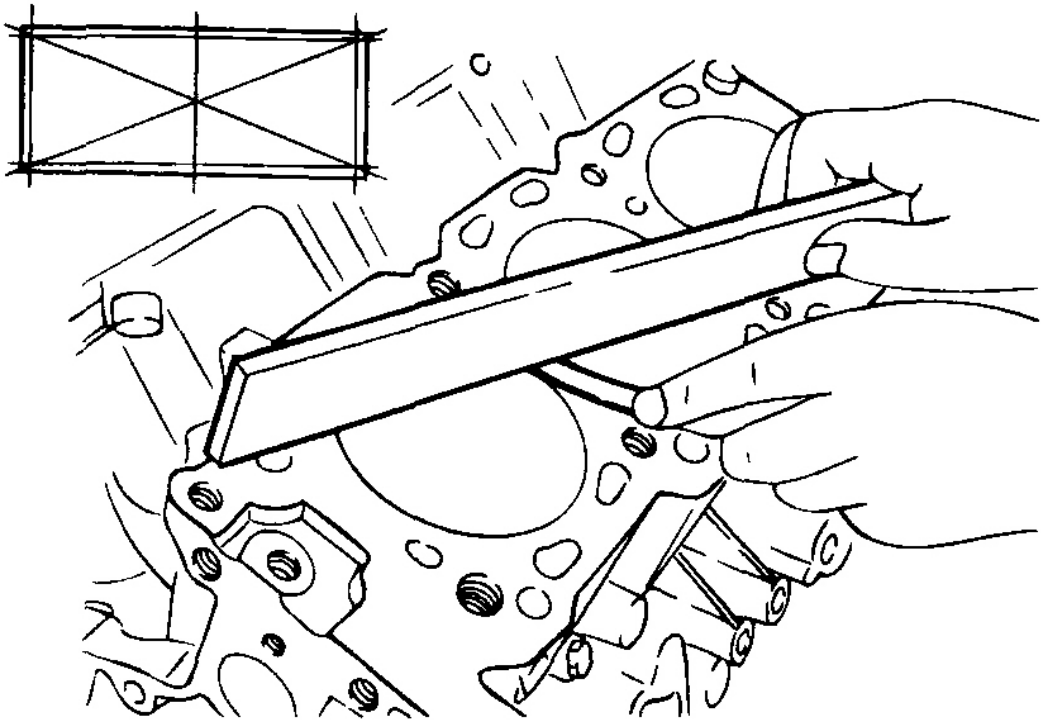

Fig. 180: Checking Top Surface Of Cylinder Block For Flatness
Courtesy of HYUNDAI MOTOR CO.

 © 2011 Mitchell Repair Information Company, LLC.

BORING CYLINDER

1. Oversize pistons should be selected according to the largest bore cylinder.

OVERSIZE PISTON TABLE

Identification Mark	Size
0.25	0.25 mm (0.010 in.)
0.50	0.50 mm (0.020 in.)

NOTE: The size of piston is stamped on top of the piston.

2. Measure the outside diameter of the piston to be used.
3. According to the measured O.D., calculate the new bore size.

   New bore size = Piston O.D. + 0.03 to 0.05 mm (0.0012 to 0.0020 in.) (clearance between piston and cylinder) - 0.01 mm (0.0004 in.) (honing margin.)

4. Bore each of the cylinders to the calculated size.

CAUTION: To prevent distortion that may result from temperature rise during honing, bore the cylinder holes in the firing order.

5. Hone the cylinders, finishing them to the proper dimension (piston outside diameter + gap with cylinder).
6. Check the clearance between the piston and cylinder.

   Standard: 0.03 ~ 0.05 mm (0.0012 ~ 0.0020 in.)

NOTE: When boring the cylinders, finish all of the cylinders to the same oversize. Do not bore only one cylinder to the oversize.

INSTALLATION

Install the following parts .

1. Crankshaft
2. Drive plate
3. Piston
4. Cylinder head
5. Oil pump case
6. Timing belt

ENGINE MOUNTS

COMPONENTS

 © 2011 Mitchell Repair Information Company, LLC.

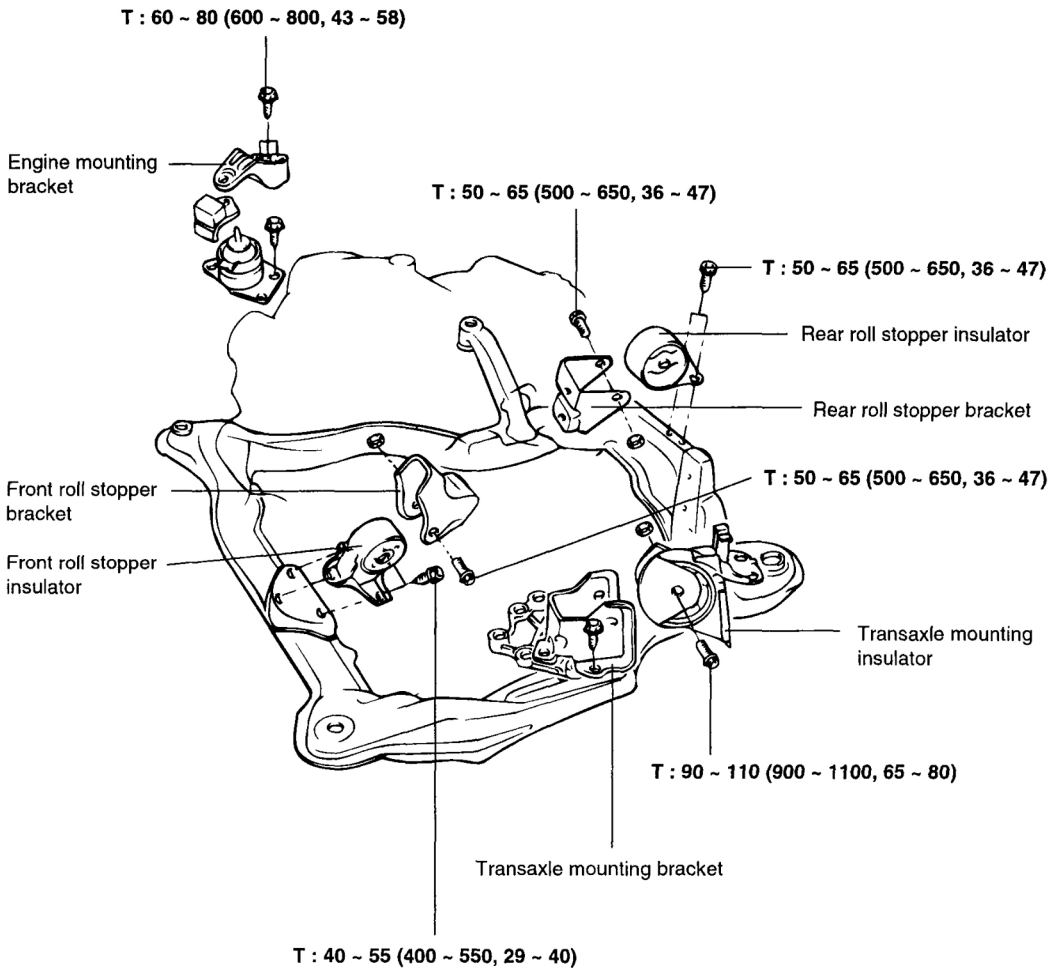

TORQUE : Nm (kg·cm, lb·ft)

G03844706

Fig. 181: Identifying Engine Mounts Components
Courtesy of HYUNDAI MOTOR CO.

REMOVAL

Attach a cable or chain to the engine hooks, and then lift enough so that there is no pressure on the insulators.

ENGINE MOUNTING

1. Remove the power steering hose from the engine mount bracket.

 © 2011 Mitchell Repair Information Company, LLC.

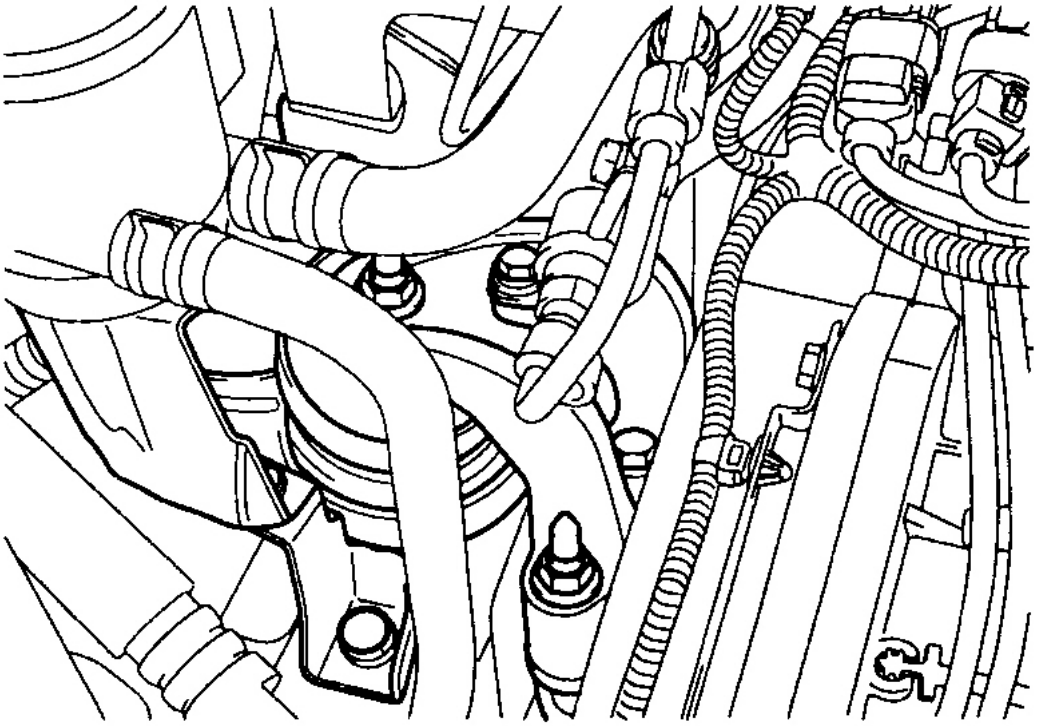

Fig. 182: Removing Power Steering Hose From Engine Mount Bracket
Courtesy of HYUNDAI MOTOR CO.

2. Remove the engine mount bracket bolts and nut.
3. Remove the engine mount bracket from the engine.

TRANSAXLE MOUNTING

1. Remove the air cleaner. For additional information refer to the **AIR CLEANER** in this section.
2. Remove the transaxle mounting bolt.
3. Remove the transaxle bracket.

 © 2011 Mitchell Repair Information Company, LLC.

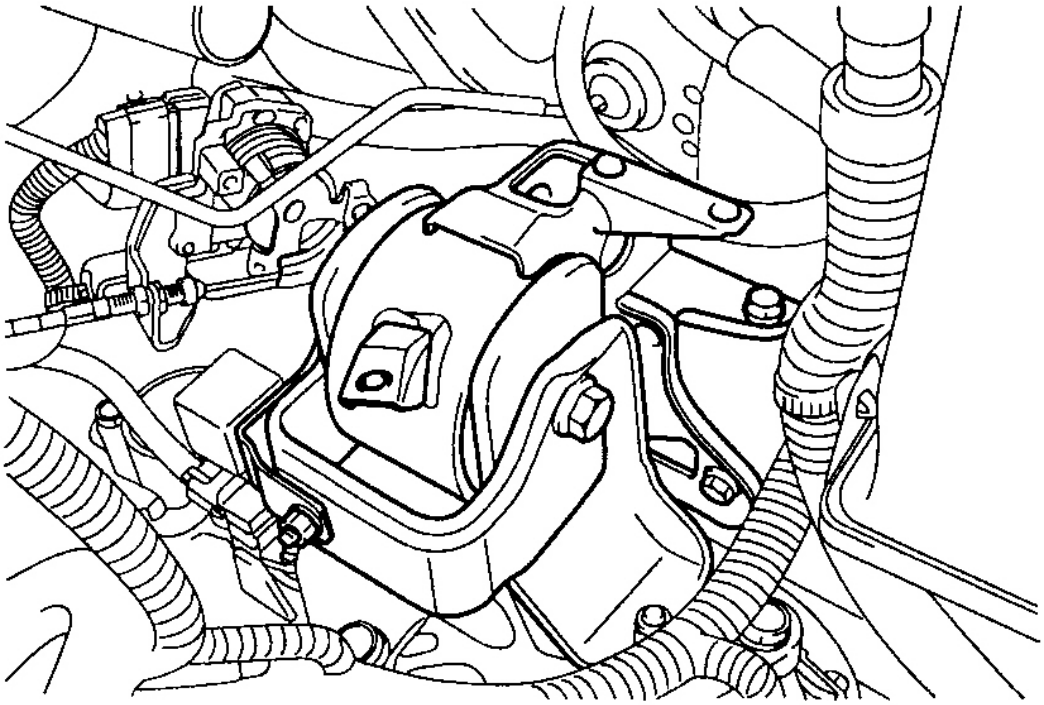

G03844708

Fig. 183: Removing Transaxle Bracket
Courtesy of HYUNDAI MOTOR CO.

FRONT ROLL STOPPER

1. Remove the transaxle mounting bolt.
2. Remove the transaxle bracket.

 © 2011 Mitchell Repair Information Company, LLC.

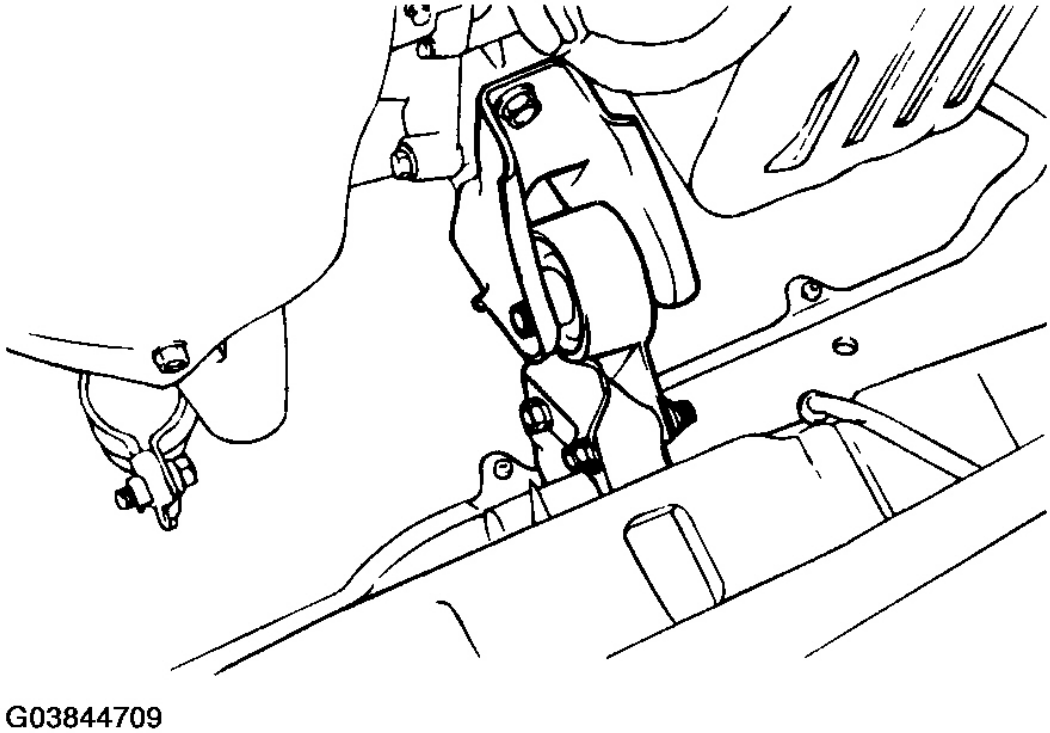

Fig. 184: Removing Front Roll Stopper
Courtesy of HYUNDAI MOTOR CO.

REAR ROLL STOPPER

1. Remove the bolt from the rear roll stopper.
2. Remove the rear roll stopper from the sub - frame.

 © 2011 Mitchell Repair Information Company, LLC.

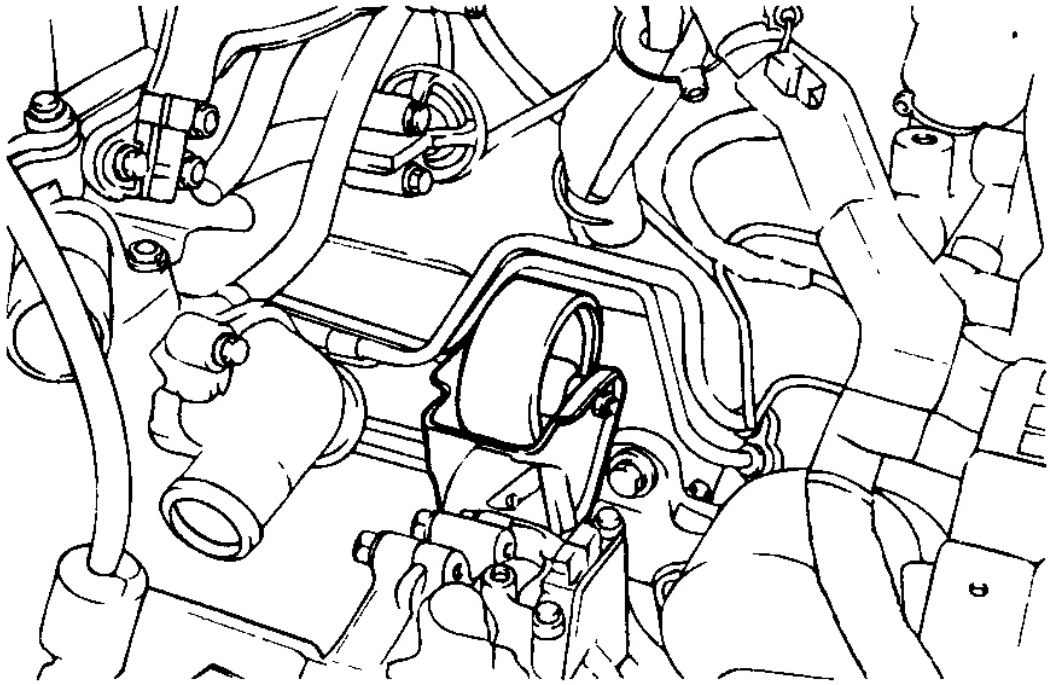

Fig. 185: Removing Rear Roll Stopper
Courtesy of HYUNDAI MOTOR CO.

 © 2011 Mitchell Repair Information Company, LLC.