2008 ENGINE

Engine - 4.6L (3V) - Mustang

SPECIFICATIONS

MATERIAL

Material

Item	Specification	Fill Capacity
Gasket Maker TA-16	WSK-M2G348-A5	-
Motorcraft Metal Surface Prep ZC-31	-	-
Motorcraft Premium Gold Engine Coolant with Bittering Agent (US only) VC-7-B (US); CVC-7-A (Canada); or equivalent (yellow color)	WSS-M97B51-A1	-
Motorcraft SAE 5W-20 Premium Synthetic Blend Motor Oil XO-5W20-QSP (US); Motorcraft SAE 5W-20 Super Premium Motor Oil CXO-5W20-LSP12 (Canada); or equivalent	WSS-M2C930-A	5.7L (6 qt) with filter
Silicone Gasket Remover ZC-30	-	-
Silicone Gasket and Sealant TA-30	WSE-M4G323-A4	-

GENERAL SPECIFICATIONS

GENERAL SPECIFICATIONS

Item	Specification
Engine	
Displacement	4.6L (281 CID)
Number of cylinders	8
Bore	90.2 mm (3.55 in)
Stroke	90.0 mm (3.54 in)
Firing order	1-3-7-2-6-5-4-8
Spark plug (early build - black coil boot)	PZT-1F
Spark plug (late build - brown coil boot)	HJFS-24FP
Oil pressure minimum at 2,000 RPM (engine at normal operating temperature)	517 kPa (75 psi)
Compression ratio	9.8:1
Engine weight (manual transmission)	202 kg (446 lb)

Engine weight (automatic transmission)	195 kg (431 lb)
Cylinder Head and Valve Train	
Combustion chamber volume	48.1-51.1 cc (2.94-3.12 cu in)
Valve arrangement (front to rear) - LH	I-E-I-I-E-I-I-E-I-I-E-I
Valve arrangement (front to rear) - RH	I-E-I-I-E-I-I-E-I-I-E-I
Valve guide bore diameter	6.015-6.044 mm (0.237-0.238 in)
Valve stem diameter - intake	5.975-5.995 mm (0.235-0.236 in)
Valve stem diameter - exhaust	5.95-5.97 mm (0.234-0.235 in)
Valve stem-to-guide clearance - intake	0.020-0.069 mm (0.001-0.003 in)
Valve stem-to-guide clearance - exhaust	0.045-0.094 mm (0.002-0.004 in)
Valve head diameter - intake	33.62-33.98 mm (1.324-1.338 in)
Valve head diameter - exhaust	37.32-37.68 mm (1.469-1.483 in)
Valve face runout	0.05 mm (0.002 in)
Valve face angle	45.5 degrees
Valve seat width - intake	1.2-1.4 mm (0.047-0.055 in)
Valve seat width - exhaust	1.4-1.6 mm (0.055-0.063 in)
Valve seat angle	44.5-45.0 degrees
Valve spring free length	56.5 mm (2.22 in)
Valve spring compression pressure (maximum lift)	760 N (79 lbs) ± 39.0 N (4 lbs) @ 31.04 mm (1.22 in)
Valve spring installed height	42.04 mm (1.66 in)
Valve spring installed pressure	350 N (79 lbs) ± 17.5 N (4 lbs) @ 42.04 mm (1.66 in)
Hydraulic Lash Adjuster	
Diameter	15.988-16.000 mm (0.6294-0.6299 in)
Clearance-to-bore	0.018-0.069 (0.0007-0.0027 in)
Service limit	-
Collapsed lash adjuster gap	0.45-0.85 (0.018-0.033)
Camshaft	
Theoretical valve lift @ 0 lash - intake	11.166 mm (0.439 in)
Theoretical valve lift @ 0 lash - exhaust	11.066 mm (0.436 in)
Lobe lift - intake	5.520 mm (0.217 in)
Lobe lift - exhaust	5.506 mm (0.217 in)
Allowable lobe lift loss	0.00127 mm (0.005 in)
Journal diameter	28.607-28.633 mm (1.126-1.127 in)
Camshaft journal bore inside diameter	28.657-28.682 mm (1.128-1.129 in)
Camshaft journal-to-bearing clearance	0.024-0.075 mm (0.001-0.003 in)
Runout	0.03 mm (0.001 in)
End play	0.0050-0.250 mm (0.0002-0.009 in)

Cylinder Block	
Cylinder bore diameter - grade 1	90.200-90.210 mm (3.5512-3.5516 in)
Cylinder bore diameter - grade 2	90.210-90.220 mm (3.5516-3.5520 in)
Cylinder bore diameter - grade 3	90.220-90.230 mm (3.5520-3.5524 in)
Cylinder bore maximum taper	0.006 mm (0.0002 in)
Cylinder bore maximum out-of-round	0.020 mm (0.0008 in)
Main bearing bore inside diameter	72.400-72.424 mm (2.850-2.851 in)
Crankshaft	
Main bearing journal diameter	67.481-67.505 mm (2.6567-2.6576 in)
Main bearing journal maximum taper	0.004 mm (0.0002 in)
Main bearing journal maximum out-of-round	0.0075 mm (0.0003 in) between cross sections
Main bearing journal-to-cylinder block clearance	0.048-0.024 mm (0.0019-0.0009 in)
Connecting rod journal diameter	53.003-52.983 mm (2.0867-2.0859 in)
Connecting rod journal maximum taper	0.004 mm (0.0002 in)
Connecting rod journal maximum out-of-round	0.0075 mm (0.0003 in) between cross sections
Crankshaft maximum end play	0.075-0.377 mm (0.0030-0.0148 in)
Piston and Connecting Rod	
Piston diameter - grade 1 (at right angle to pin bore) (uncoated)	90.182-90.167 mm (3.5504-3.5499 in)
Piston diameter - grade 2 (at right angle to pin bore) (uncoated)	90.196-90.179 mm (3.551-3.5503 in)
Piston diameter - grade 3 (at right angle to pin bore) (uncoated)	90.208-90.193 mm (3.5515-3.551 in)
Piston-to-cylinder bore clearance (at grade size)	0.017-0.047 mm (0.0007-0.0019 in)
Piston ring end gap - top	0.15-0.30 mm (0.006-0.012 in)
Piston ring end gap - intermediate	0.25-0.50 mm (0.0098-0.0197 in)
Piston ring end gap - oil control	0.15-0.65 mm (0.0059-0.0256 in)
Piston ring groove width - top	1.52-1.54 mm (0.0598-0.0606 in)
Piston ring groove width - intermediate	1.52-1.54 mm (0.0598-0.0606 in)
Piston ring groove width - oil control	3.030-3.056 mm (0.1193-0.1203 in)
Piston ring width - top and intermediate	1.50-1.48 mm (0.0590-0.0582 in)
Piston ring-to-groove clearance - top	0.020-0.060 mm (0.0008-0.0020 in)
Piston ring-to-groove clearance - intermediate	0.020-0.060 mm (0.0008-0.0020 in)
Piston pin bore diameter	22.0125-22.0175 mm (0.8666-0.8668 in)
Piston pin diameter	22.0010-22.0030 mm (0.8662-0.8663 in)
Piston pin length	61.8 mm (2.433 in)
Piston pin-to-piston fit	0.0095-0.023 mm (0.0004-0.0009 in)
Connecting rod-to-pin clearance	0.009-0.023 mm (0.0004-0.0009 in)
Connecting rod pin bore diameter	22.012-22.024 mm (0.8666-0.8671 in)
Connecting rod length (center-to-center)	150.7 mm (5.933 in)
Connecting rod maximum allowed bend	± 0.038 mm (0.0015 in)
	± 0.05 mm (0.0020 in)

Connecting rod maximum allowed twist[a]	
Connecting rod bearing bore diameter (with assembled liners)	53.049-53.027 mm (2.0885-2.0877 in)
Connecting rod bearing-to-crankshaft clearance	0.024-0.066 mm (0.0009-0.0026 in)
Connecting rod side clearance	0.5-0.15 mm (0.02-0.006 in)

[a] The pin bore and crank bearing bore must be parallel and in the same vertical plane within the specified total difference when measured at the ends of a 203 mm bar, 105.5 mm on each side of rod centerline.

TORQUE SPECIFICATIONS

TORQUE SPECIFICATIONS

Description	Nm	lb-ft	lb-in
A/C compressor bolts	25	18	-
Accessory drive belt idler pulley bolts	25	18	-
Accessory drive belt tensioner bolts	25	18	-
Camshaft bearing cap bolts[a]	-	-	-
Camshaft phaser sprocket assembly bolts[a]	-	-	-
Camshaft position (CMP) sensor bolt	10	-	89
Catalytic converter-to-exhaust manifold nuts	40	30	-
Connecting rod bolts[a]	-	-	-
Coolant pump bolts	25	18	-
Coolant pump pulley bolts	25	18	-
Coolant tube stud bolt	10	-	89
Crankshaft main bearing bolts[a]	-	-	-
Crankshaft main bearing bolts (cross-mounted)[a]	-	-	-
Crankshaft main bearing stud bolts[a]	-	-	-
Crankshaft position (CKP) sensor bolt	10	-	89
Crankshaft pulley bolt[a]	-	-	-
Crankshaft rear seal retainer plate bolts[a]	-	-	-
Cylinder heads bolts[a]	-	-	-
Engine front cover bolts[a]	-	-	-
Engine support bracket bolts	55	41	-
Engine support insulator nuts	63	46	-
Exhaust manifold nuts[a]	-	-	-
Exhaust manifold studs	12	9	-
Flexplate bolts	80	59	-
Flywheel bolts	80	59	-
Generator B+ terminal nut	8	-	71

Generator lower mounting bolts	25	18	-
Generator lower mounting nuts	25	18	-
Generator mounting bracket bolts	10	-	89
Ground strap-to-cowl bolt	6	-	53
Ground strap-to-cylinder head stud bolt	10	-	89
Ground strap-to-engine support bracket nut	25	18	-
Ignition coil bolts	6	-	53
Intake manifold bolts[a]	-	-	-
Knock sensor (KS)	20	15	-
Oil filter adapter bolts	25	18	-
Oil level indicator tube bolt	10	-	89
Oil pan drain plug	26	19	-
Oil pan bolts[a]	-	-	-
Oil pump bolts	10	-	89
Oil pump screen and pickup tube spacer	25	18	-
Oil pump screen and pickup tube-to-oil pump bolts	10	-	89
Oil pump screen and pickup tube-to-spacer bolt	25	18	-
Power distribution box connector bolt	6	-	53
Power steering pressure (PSP) tube bracket-to-crossmember bolt	9	-	80
Power steering pump stud bolts	25	18	-
Power steering tube retaining clip nut	10	-	89
Radio interference capacitor nuts	25	18	-
Spark plugs (early build - black coil boot)	34	25	-
Spark plug (late build - brown coil boot)	12	9	-
Steering column coupling pinch bolt	25	18	-
Steering gear bolts	115	85	-
Strut tower cross brace (Bullitt only)	35	26	-
Subframe bolts	115	85	-
Subframe nuts	115	85	-
Transmission cooler line bracket nut	25	18	-
Throttle body (TB) bolts	10	-	89
TB nuts	10	-	89
Timing chain guide bolts	10	-	89
Timing chain hydraulic tensioner bolts	25	18	-
Timing chain tensioner arm bolts	10	-	89
Valve cover bolts[a]	-	-	-
Variable camshaft timing (VCT) housing bolts	10	-	89
Windage tray nuts	25	18	-

[a] Refer to the procedure.

DESCRIPTION AND OPERATION

ENGINE

NOTE: For information, refer to the exploded view under the ASSEMBLY.

The 4.6L (3V) is a V-8 engine with the following features:

- Single overhead camshafts
- Three valves per cylinder
- Sequential multiport fuel injection (SFI)
- Aluminum cylinder heads
- Aluminum cylinder block
- Variable camshaft timing (VCT)
- Individually chain-driven camshafts with a hydraulic timing chain tensioner on each timing chain
- Distributorless ignition system
- Electronic returnless fuel system

Identification

Always refer to these labels when installation of new parts is necessary or when checking engine calibrations. The engine parts often differ within a CID family. Verification of the identification codes will make sure that the correct parts are obtained. These codes contain all of the pertinent information relating to the dates, optional equipment and revisions. The Ford Master Parts Catalog contains a complete listing of the codes and their applications.

Code Information

The engine code information label, located on the side of the valve cover and the front side of the valve cover, contains the following:

- Engine build date
- Engine plant code
- Engine code

Induction System

The sequential multiport fuel injection (SFI) provides the fuel/air mixture needed for combustion in the cylinders. The 8 solenoid-operated fuel injectors:

- are mounted in the intake manifold.
- meter fuel into the air intake stream in accordance with engine demand.
- are positioned so that their tips direct fuel just ahead of the engine intake valves.
- are connected in series with the fuel rail pressure and temperature sensor.

- supply fuel from the fuel tank with a fuel pump mounted in the fuel tank.

A constant fuel pressure is maintained across the fuel injectors by the fuel rail pressure and temperature sensor. The fuel rail pressure and temperature sensor is positioned upstream from the fuel injectors on the fuel rail.

Valve Train

The valve train operates as follows:

- Ball-tip hydraulic lash adjusters provide automatic lash adjustment.
- Roller followers ride on the camshaft lobe, transferring the up-and-down motion of the camshafts to the valves in the cylinder heads.

Positive Crankcase Ventilation System

All engines are equipped with a closed-type positive crankcase ventilation system recycling the crankcase vapors to the upper intake manifold.

Lubrication System

The engine lubrication system operates as follows:

- Oil is drawn into the oil pump through the oil pump screen cover and tube in the sump of the oil pan.
- Oil is pumped through the oil filter on the left front side of the cylinder block.
- Oil enters the main gallery where it is distributed to the crankshaft main journals and to both cylinder heads.
- From the main journals, the oil is routed through cross-drilled passages in the crankshaft to lubricate the connecting rod bearings. Controlled leakage through the crankshaft main bearings and connecting rod bearings is slung radially outward to cool and lubricate the cylinder walls as well as the entire connecting rod, piston and piston ring assembly.
- The left cylinder head is fed from a drilling into the supply passage feeding the main gallery at the front of the cylinder block. The right cylinder head is fed from a drilling into the rear of the main gallery. Main gallery pressure is reduced as it enters the cylinder head galleries through fixed non-serviceable orifices, located at the upper part of the feed passages. It is this reduced pressure in the cylinder head galleries which feeds the camshaft journals, the hydraulic lash adjusters and the primary and secondary timing chain tensioners.
- The camshaft lobe and roller followers are lubricated by splash created through valve train operation.

Oil Pump

The lubrication system of the 4.6L (3V) engine is designed to provide optimum oil flow to critical components of the engine through its entire operating range. The heart of the system is a positive displacement internal gear oil pump using top seal rotors. Generically this design is known as a gerotor pump, which operates as follows:

- The oil pump is mounted on the front face of the cylinder block
- The inner rotor is piloted on the crankshaft post and is driven through flats on the crankshaft

- System pressure is limited by an integral, internally-vented relief valve which directs the bypassed oil back to the inlet side of the oil pump
- Oil pump displacement has been selected to provide adequate volume to make sure of correct oil pressure, both at hot idle and maximum speed
- The relief valve calibration protects the system from excessive pressure during high viscosity conditions
- The relief valve is designed to provide adequate connecting rod bearing lubrication under high-temperature and high-speed conditions

Engine Cylinder Identification

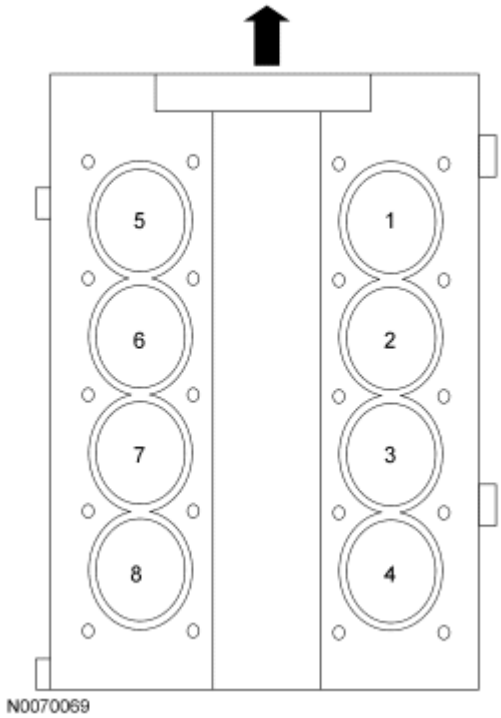

Fig. 1: Engine Cylinder Identification
Courtesy of FORD MOTOR CO.

DIAGNOSTIC TESTS

ENGINE

For basic engine mechanical concerns, refer to **ENGINE SYSTEM - GENERAL INFORMATION** article.
For driveability concerns, refer to the **Introduction - Gasoline Engines** article.

IN-VEHICLE SERVICING

INTAKE MANIFOLD

Material

Item	Specification
Motorcraft Metal Surface Prep ZC-31	-

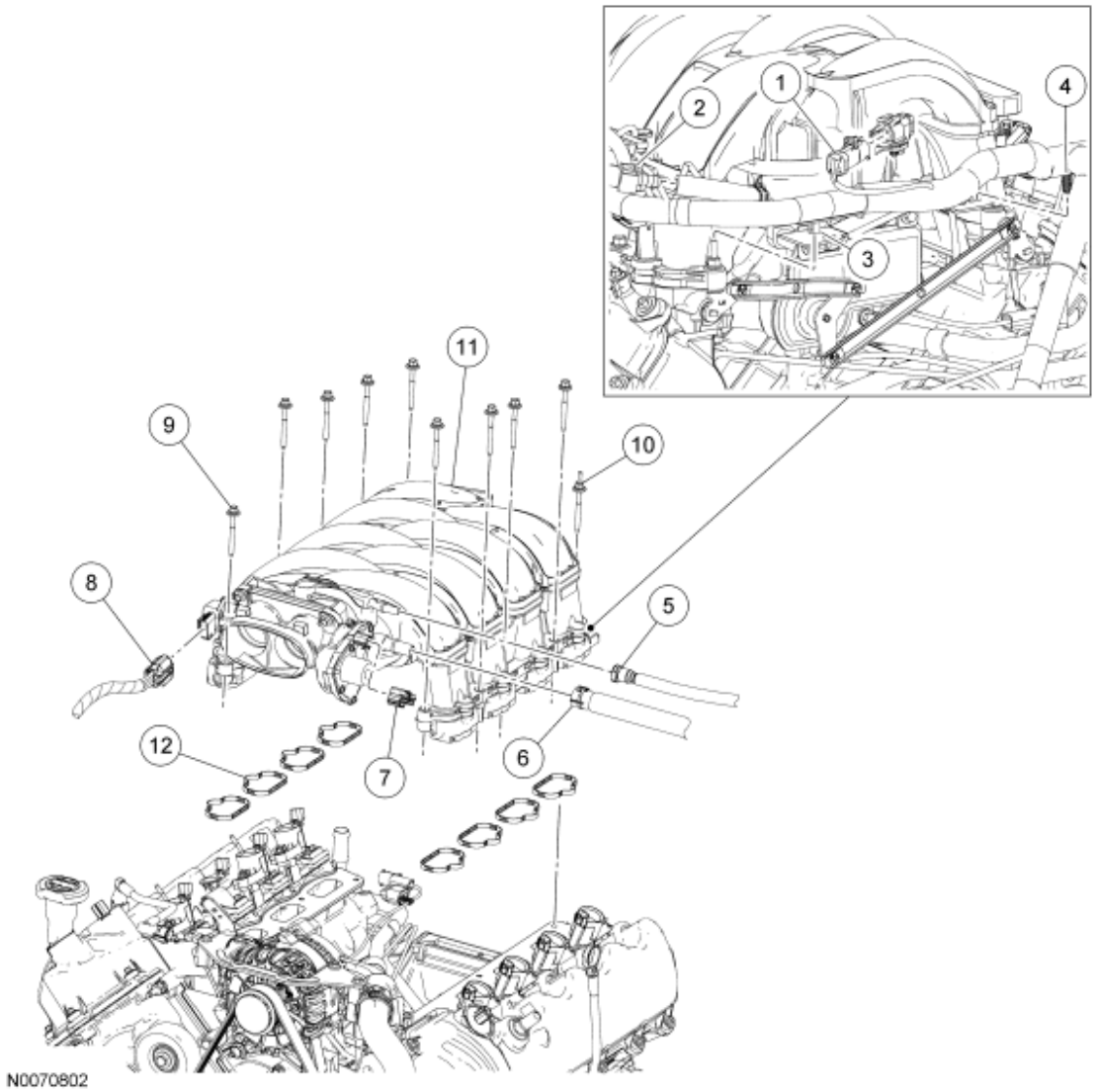

Fig. 2: Exploded View Of Intake Manifold
Courtesy of FORD MOTOR CO.

Item	Part Number	Description
1	14A464	Charge motion control valve (CMCV) electrical connector (part of 12B637)
2	9F792	Vacuum hose T-fitting
3	-	Wiring harness retainer (part of 12B637)
4	-	Wiring harness pin-type retainer (part of 12B637)
5	9G271	Evaporative emissions (EVAP) tube

6	6K817	PCV tube
7	14A464	Electronic throttle body (TB) electrical connector (part of 12B637)
8	14A464	Throttle position (TP) sensor electrical connector (part of 12B637)
9	W709552	Intake manifold bolt (9 required)
10	W710464	Intake manifold stud bolt
11	9425	Intake manifold
12	9439	Intake manifold gasket (8 required)

REMOVAL

WARNING: Do not smoke, carry lighted tobacco or have an open flame of any type when working on or near any fuel-related component. Highly flammable mixtures are always present and may be ignited. Failure to follow these instructions may result in serious personal injury.

WARNING: Before working on or disconnecting any of the fuel tubes or fuel system components, relieve the fuel system pressure to prevent accidental spraying of fuel. Fuel in the fuel system remains under high pressure, even when the engine is not running. Failure to follow this instruction may result in serious personal injury.

1. Release the fuel system pressure. For additional information, refer to **FUEL SYSTEM - GENERAL INFORMATION** article.
2. Remove the air cleaner outlet pipe. For additional information, refer to **INTAKE AIR DISTRIBUTION AND FILTERING** article.
3. Remove the fuel rail and injectors. For additional information, refer to **FUEL CHARGING AND CONTROLS - 4.6L (3V)** article.
4. Disconnect the evaporative emissions (EVAP) tube from the intake manifold and position the tube aside.
5. Disconnect the PCV tube from the intake manifold, LH valve cover and remove.
6. Disconnect the throttle position (TP) sensor and electronic throttle body (TB) electrical connectors.
7. Disconnect the charge motion control valve (CMCV) electrical connector.
8. Detach the wiring retainers from the intake manifold stud bolt and the CMCV bracket and then position the wiring harness aside.
9. Disconnect the vacuum hose from the T-fitting.

CAUTION: Do not use metal scrapers, wire brushes, power abrasive discs or other abrasive means to clean the sealing surfaces. These tools cause scratches and gouges which make leak paths. Use a plastic scraping tool to remove all traces of old sealant.

NOTE: Clean and inspect the sealing surfaces with metal surface prep. Follow the

directions on the packaging.

10. Remove the 9 bolts, the stud bolt and the intake manifold.
    - Discard the gaskets.

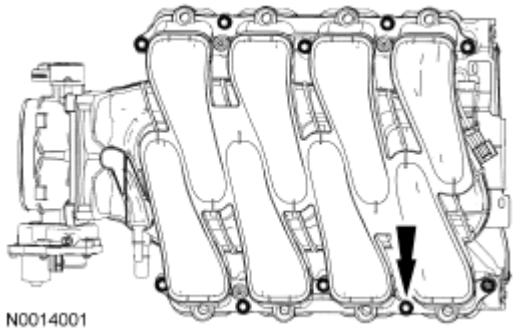

Fig. 3: Locating Intake Manifold Bolts
Courtesy of FORD MOTOR CO.

INSTALLATION

NOTE: Electrical and vacuum harnesses must not restrict movement of the CMCV control rods at rear of the intake manifold. Use extreme care on installation of the intake manifold to prevent any pinching of electrical and vacuum harnesses.

1. Using new intake manifold gaskets, position the intake manifold.
2. Install the intake manifold bolts and stud bolt.
    - Tighten in the sequence shown to 10 Nm (89 lb-in).

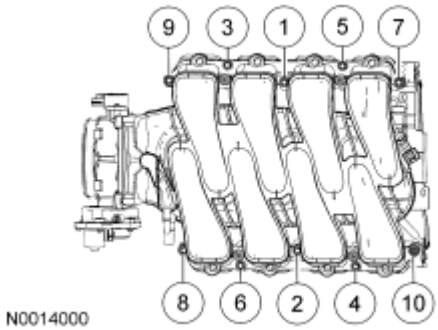

Fig. 4: Identifying Intake Manifold Bolts Tightening Sequence
Courtesy of FORD MOTOR CO.

3. Connect the vacuum hose to the T-fitting.
4. Position the wiring harness and attach the wiring retainers to the intake manifold stud bolt and the CMCV bracket.
5. Connect the CMCV electrical connector.

6. Connect the TP sensor and electronic TB electrical connectors.
7. Connect the PCV tube to the intake manifold.
8. Connect the EVAP tube to the intake manifold.
9. Install the fuel rail and injectors. For additional information, refer to **FUEL CHARGING AND CONTROLS - 4.6L (3V)** article.
10. Install the air cleaner outlet pipe. For additional information, refer to **INTAKE AIR DISTRIBUTION AND FILTERING** article.

VALVE COVER - LH

Material

Item	Specification
Motorcraft Metal Surface Prep ZC-31	-
Silicone Gasket and Sealant TA-30	WSE-M4G323-A4
Silicone Gasket Remover ZC-30	-

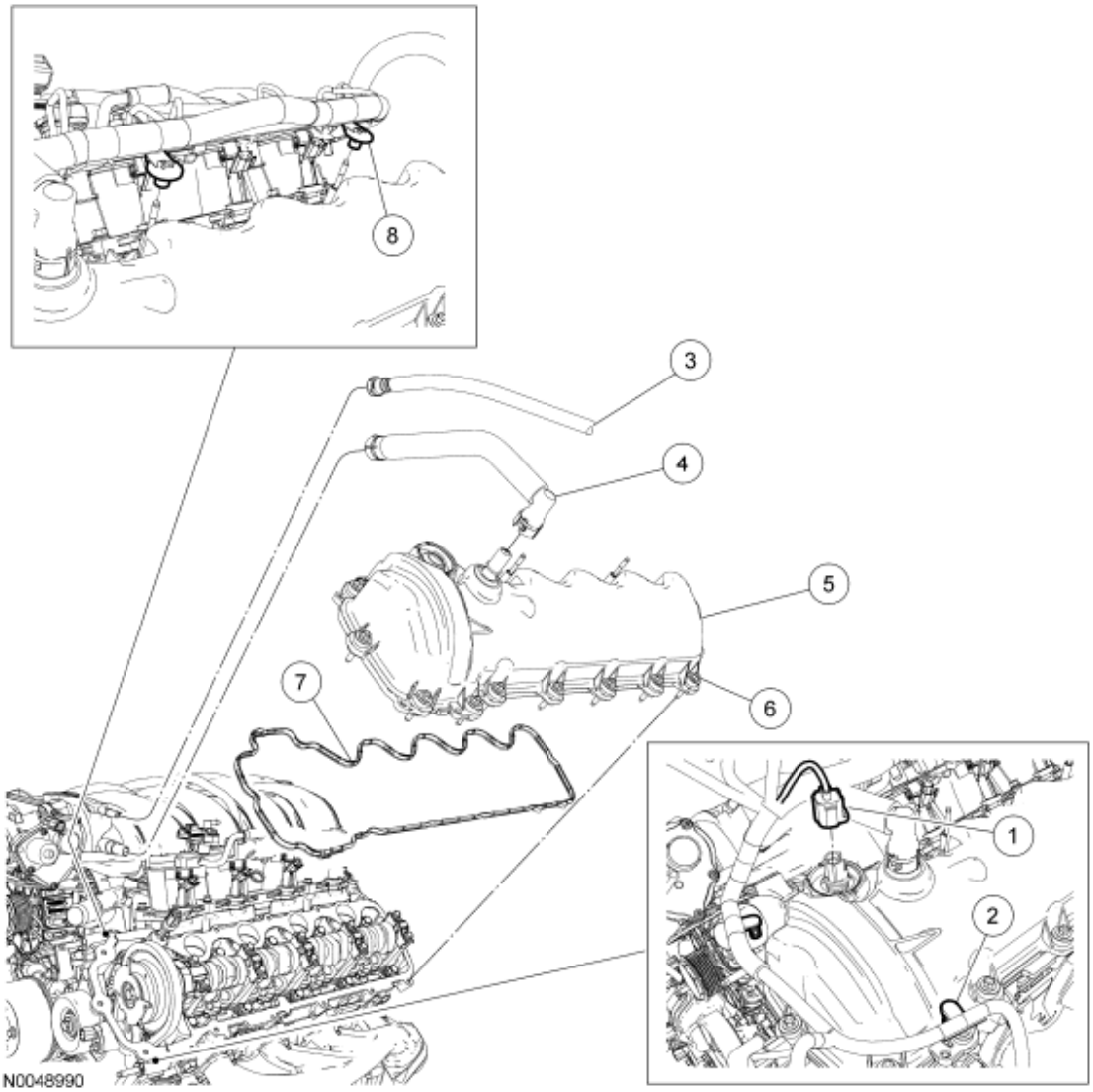

Fig. 5: Exploded View Of LH Valve Cover
Courtesy of FORD MOTOR CO.

Item	Part Number	Description
1	14A464	LH variable camshaft timing (VCT) solenoid electrical connector (part of 12B637)
2	-	Engine wiring harness retainer (2 required) (part of 12B637)
3	9J274	Evaporative emissions (EVAP) tube
4	6K817	PCV tube
5	6A505	LH valve cover
6	6C519	LH valve cover bolt (15 required) (part of 6A505)
7	6584	LH valve cover gasket
8	-	Engine wiring harness retainer (2 required) (part of 12B637)

REMOVAL

1. Remove the air cleaner assembly and outlet pipe. For additional information, refer to **INTAKE AIR DISTRIBUTION AND FILTERING** article.
2. Remove the LH ignition coils. For additional information, refer to **ENGINE IGNITION - 4.6L (3V)** article.
3. Remove the oil level indicator and tube. For additional information, refer to **Oil Level Indicator and Tube**.
4. Disconnect the evaporative emissions (EVAP) tube from the intake manifold.
5. Remove the PCV tube.
6. Disconnect the LH variable camshaft timing (VCT) solenoid electrical connector and detach the 2 wiring harness pin-type retainers.
7. Detach the 2 wiring harness retainers from the valve cover stud bolts.

CAUTION: Do not use metal scrapers, wire brushes, power abrasive discs or other abrasive means to clean the sealing surfaces. These tools cause scratches and gouges which make leak paths. Use a plastic scraping tool to remove all traces of old sealant.

8. Loosen the 15 fasteners and remove the LH valve cover and gasket.
   - Clean the valve cover mating surface of the cylinder head with silicone gasket remover and metal surface prep. Follow the directions on the packaging.
   - Discard the valve cover gasket. Clean the valve cover gasket groove with soap and water or a suitable solvent.

INSTALLATION

NOTE: If the valve cover is not secured within 4 minutes, the sealant must be removed and the sealing area cleaned with metal surface prep. Failure to follow this procedure can cause future oil leakage.

1. Apply a bead of silicone gasket and sealant in 2 places where the engine front cover meets the cylinder head.

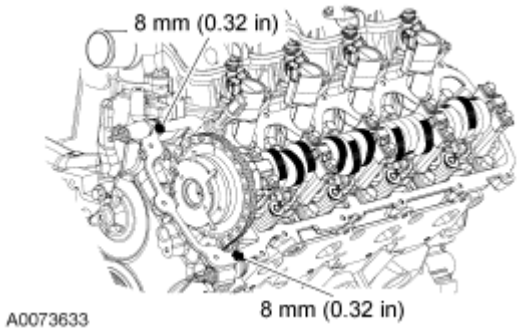

Fig. 6: Applying Bead Of Silicone Gasket And Sealant In 2 Places Where Engine Front Cover Meets Cylinder Head
Courtesy of FORD MOTOR CO.

2. Position the LH valve cover and new gasket on the cylinder head and tighten the bolts in the sequence shown.
   - Tighten to 10 N.m (89 lb-in).

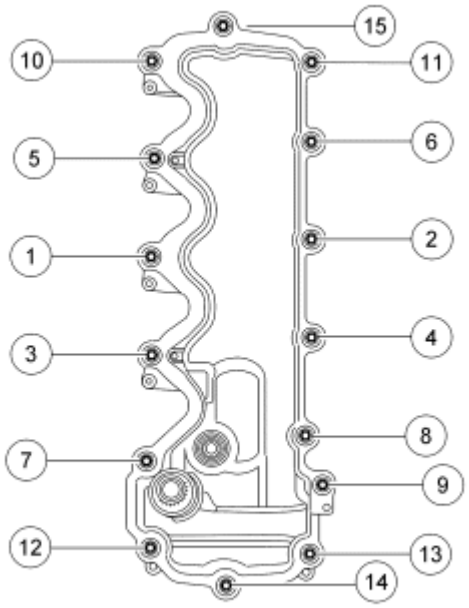

N0006318

Fig. 7: Identifying Tighten Sequence Of Valve Cover Bolts
Courtesy of FORD MOTOR CO.

3. Attach the 2 wiring harness retainers to the valve cover stud bolts.
4. Connect the LH VCT solenoid electrical connector and attach the 2 wiring harness pin-type retainers.
5. Install the PCV tube.
6. Connect the EVAP tube to the intake manifold.
7. Install the oil level indicator and tube. For additional information, refer to **Oil Level Indicator and Tube**.
8. Install the LH ignition coils. For additional information, refer to **ENGINE IGNITION - 4.6L (3V)** article.
9. Install the air cleaner assembly and outlet pipe. For additional information, refer to **INTAKE AIR DISTRIBUTION AND FILTERING** article.

VALVE COVER - RH

Material

Item	Specification
Motorcraft Metal Surface Prep ZC-31	-
Silicone Gasket and Sealant	WSE-M4G323-A4

TA-30	
Silicone Gasket Remover ZC-30	-

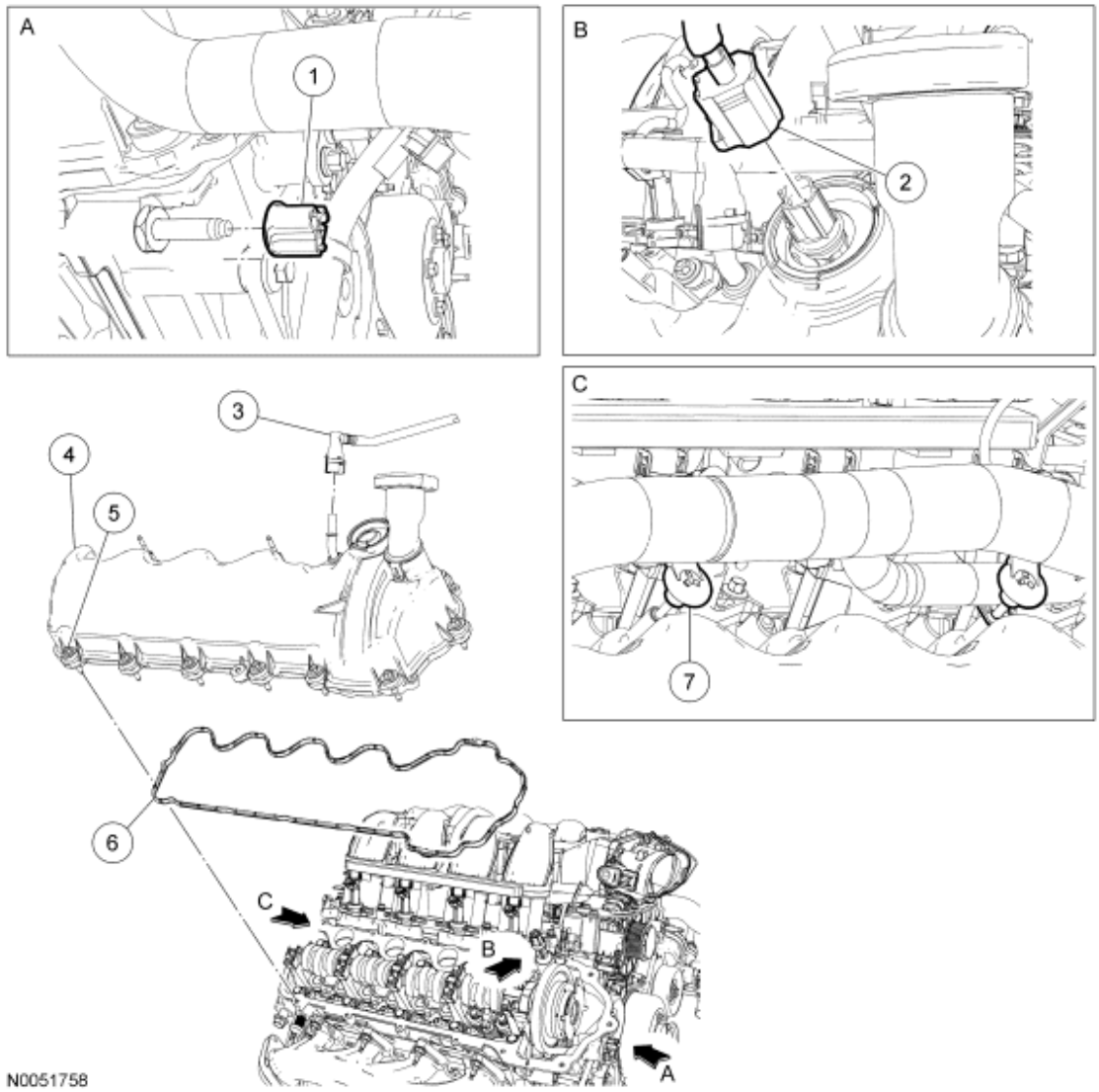

Fig. 8: Exploded View Of RH Valve Cover
Courtesy of FORD MOTOR CO.

Item	Part Number	Description
1	-	Engine wiring harness (part of 12B637)
2	14A464	RH variable camshaft timing (VCT) solenoid electrical connector (part of 12B637)
3	6758	PCV tube
4	6582	RH valve cover
5	6C519	RH valve cover bolt (14 required) (part of 6582)

6	6584	RH valve cover gasket
7	-	Engine wiring harness retainer (3 required) (part of 12B637)

REMOVAL

1. Remove the RH ignition coils. For additional information, refer to **ENGINE IGNITION - 4.6L (3V)** article.
2. Detach the wiring harness retainer from the engine front cover stud bolt.
3. Disconnect the RH variable camshaft timing (VCT) solenoid electrical connector.
4. Disconnect the PCV tube from the RH valve cover.
5. Detach the 3 wiring harness retainers from the valve cover stud bolts.

CAUTION: Do not use metal scrapers, wire brushes, power abrasive discs or other abrasive means to clean the sealing surfaces. These tools cause scratches and gouges which make leak paths. Use a plastic scraping tool to remove all traces of old sealant.

6. Loosen the 14 fasteners and remove the RH valve cover and gasket.
   - Clean the valve cover mating surface of the cylinder head with silicone gasket remover and metal surface prep. Follow the directions on the packaging.
   - Discard the valve cover gasket. Clean the valve cover gasket groove with soap and water or a suitable solvent.

INSTALLATION

NOTE: If the valve cover is not secured within 4 minutes, the sealant must be removed and the sealing area cleaned with metal surface prep. Failure to follow this procedure can cause future oil leakage.

1. Apply a bead of silicone gasket and sealant in 2 places where the engine front cover meets the cylinder head.

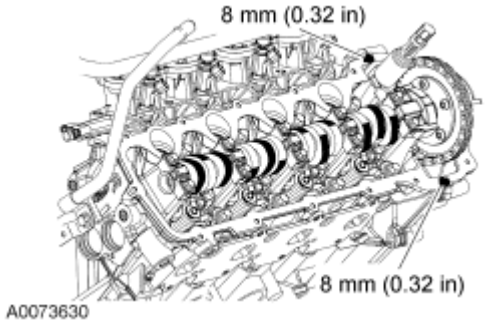

Fig. 9: Applying Bead Of Silicone Gasket And Sealant In 2 Places Where Engine Front Cover Meets Cylinder Head
Courtesy of FORD MOTOR CO.

2. Position the RH valve cover and new gasket on the cylinder head and tighten the bolts in the sequence shown.
   - Tighten to 10 N.m (89 lb-in).

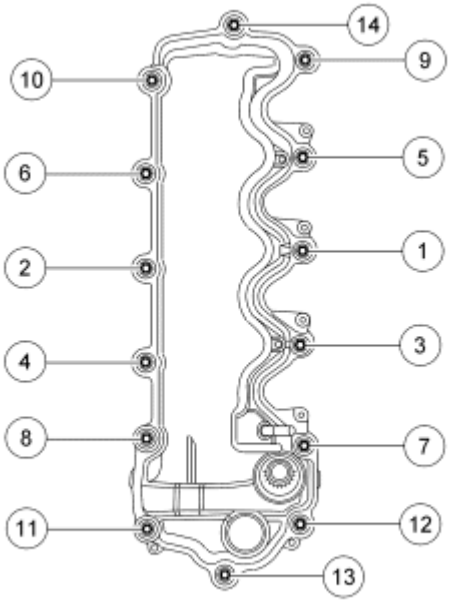

N0006317

Fig. 10: Identifying Tightening Sequence Of Valve Cover Bolts
Courtesy of FORD MOTOR CO.

3. Attach the 4 wiring harness retainers to the valve cover stud bolts.
4. Connect the PCV tube to the RH valve cover.
5. Connect the RH VCT solenoid electrical connector.
6. Attach the wiring harness retainer to the engine front cover stud bolt.
7. Install the RH ignition coils. For additional information, refer to **ENGINE IGNITION - 4.6L (3V)** article.

LOWER END COMPONENTS - EXPLODED VIEW, CRANKSHAFT PULLEY AND CRANKSHAFT FRONT SEAL

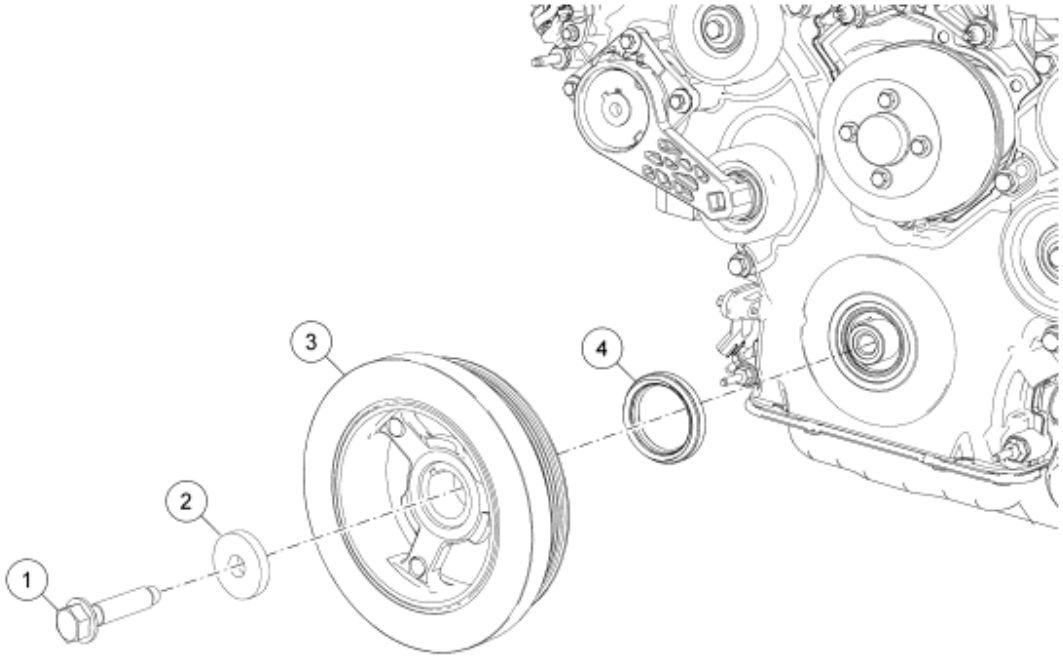

N0010525

Fig. 11: Exploded View Of Crankshaft Pulley & Crankshaft Front Seal
Courtesy of FORD MOTOR CO.

Item	Part Number	Description
1	W701512	Crankshaft pulley bolt
2	N806165	Crankshaft pulley bolt washer
3	6316	Crankshaft pulley
4	6700	Crankshaft front oil seal

1. For additional information, refer to the procedures.

CRANKSHAFT PULLEY

Special Tools

Illustration	Tool Name	Tool Number
	3-Jaw Puller	303-D121

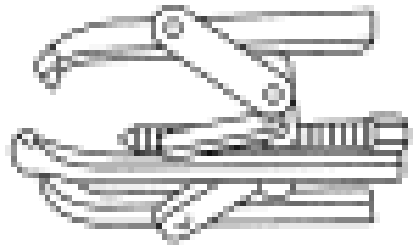 ST1184-A		
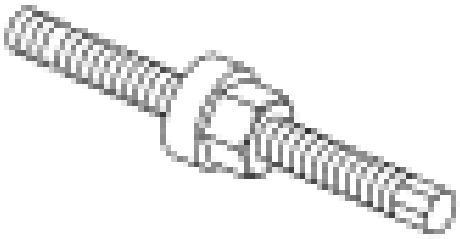 ST1287-A	Installer, Crankshaft Vibration Damper	303-102 (T74P-6316-B)

Material

Item	Specification
Motorcraft Metal Surface Prep ZC-31	-
Silicone Gasket and Sealant TA-30	WSE-M4G323-A4
Silicone Gasket Remover ZC-30	-

REMOVAL

1. With the vehicle in NEUTRAL, position it on a hoist. For additional information, refer to **JACKING AND LIFTING** article.
2. Remove the air cleaner outlet pipe. For additional information, refer to **INTAKE AIR DISTRIBUTION**

AND FILTERING article.

3. Remove the accessory drive belt. For additional information, refer to **ACCESSORY DRIVE** article.
4. Remove the crankshaft pulley bolt and washer.
   - Discard the crankshaft pulley bolt.
5. Using the special tool, remove the crankshaft pulley.

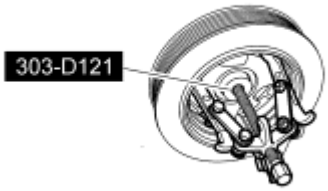

N0010528

Fig. 12: Removing Crankshaft Pulley Using Special Tool (303-D121)
Courtesy of FORD MOTOR CO.

INSTALLATION

NOTE: If not secured within 4 minutes, the sealant must be removed and the sealing area cleaned. To clean the sealing area, use silicone gasket remover and metal surface prep. Follow the directions on the packaging. Failure to follow this procedure can cause future oil leakage.

1. Apply silicone gasket and sealant to the Woodruff key slot in the crankshaft pulley.

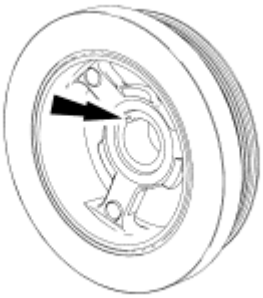

N0010530

Fig. 13: Applying Silicone Gasket And Sealant To Woodruff Key Slot In Crankshaft Pulley
Courtesy of FORD MOTOR CO.

2. Using the special tool, install the crankshaft pulley.

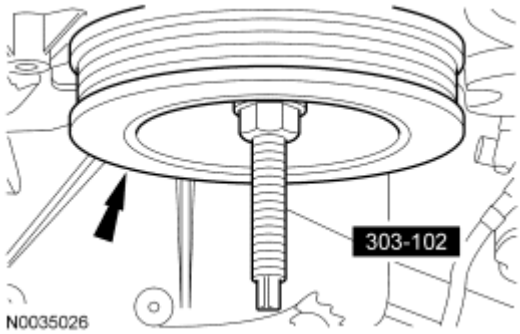

Fig. 14: Installing Crankshaft Pulley Using Special Tool (303-102)
Courtesy of FORD MOTOR CO.

3. Using a new crankshaft pulley bolt, install the bolt and washer and tighten the bolt in 4 stages.
   - Stage 1: Tighten to 90 N.m (66 lb-ft).
   - Stage 2: Loosen 360 degrees.
   - Stage 3: Tighten to 50 N.m (37 lb-ft).
   - Stage 4: Tighten an additional 90 degrees.
4. Install the accessory drive belt. For additional information, refer to **ACCESSORY DRIVE** article.
5. Install the air cleaner outlet pipe. For additional information, refer to **INTAKE AIR DISTRIBUTION AND FILTERING** article.

CRANKSHAFT FRONT SEAL

Special Tools

Illustration	Tool Name	Tool Number
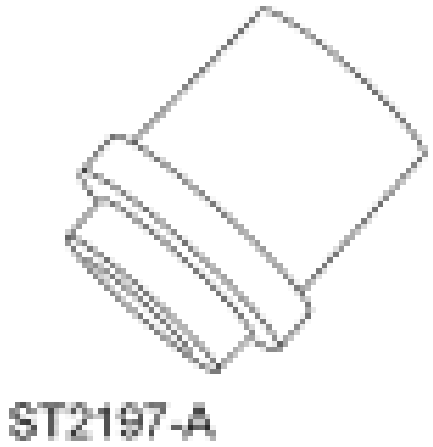	Installer, Crankshaft Front Seal	303-635
	Installer, Crankshaft Vibration Damper	303-102 (T74P-6316-B)

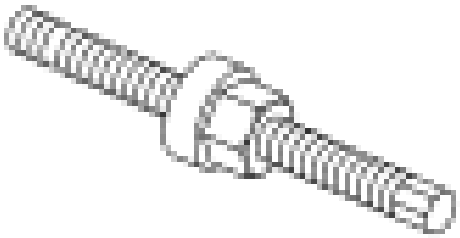 ST1287-A		
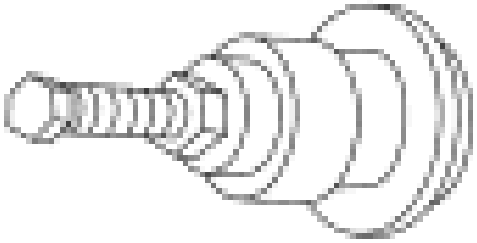 ST1326-A	Installer, Front Cover Seal	303-335 (T88T-6701-A)
 ST1286-A	Remover, Crankshaft Front Seal	303-107 (T74P-6700-A)

Material

Item	Specification
Motorcraft SAE 5W-20 Premium Synthetic Blend Motor Oil XO-5W20-QSP (US); Motorcraft SAE 5W-20 Super Premium Motor Oil CXO-5W20-LSP12 (Canada); or equivalent	WSS-M2C930-A

REMOVAL

1. Remove the crankshaft pulley. For additional information, refer to **Crankshaft Pulley**.
2. Using the special tool, remove the crankshaft front seal.

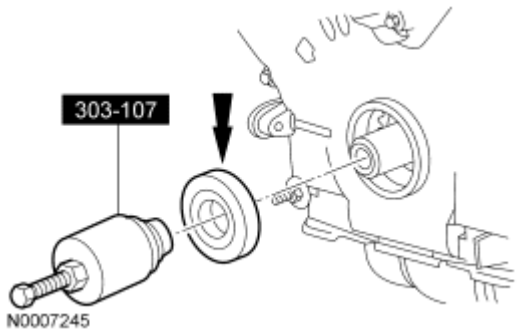

Fig. 15: Removing Crankshaft Front Seal Using Special Tool (303-107)
Courtesy of FORD MOTOR CO.

INSTALLATION

1. Lubricate the engine front cover and the crankshaft front seal inner lip with clean engine oil.

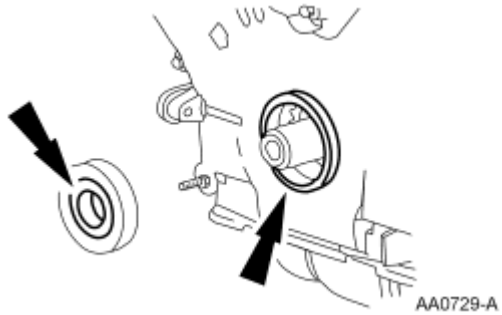

Fig. 16: Lubricating Engine Front Cover And Crankshaft Front Seal Inner Lip
Courtesy of FORD MOTOR CO.

2. Using the special tools, install the crankshaft front seal.

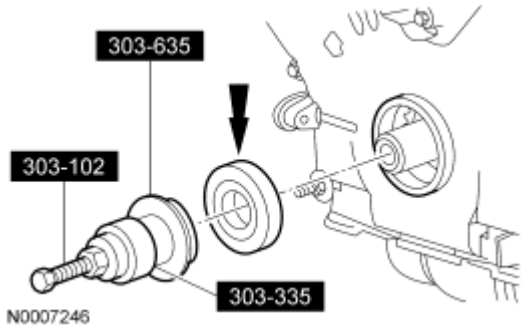

Fig. 17: Installing Crankshaft Front Seal Using Special Tools (303-102, 303-335, 303-635)
Courtesy of FORD MOTOR CO.

3. Install the crankshaft pulley. For additional information, refer to **Crankshaft Pulley**.

LOWER END COMPONENTS - EXPLODED VIEW, FLEXPLATE, FLYWHEEL AND CRANKSHAFT REAR SEAL

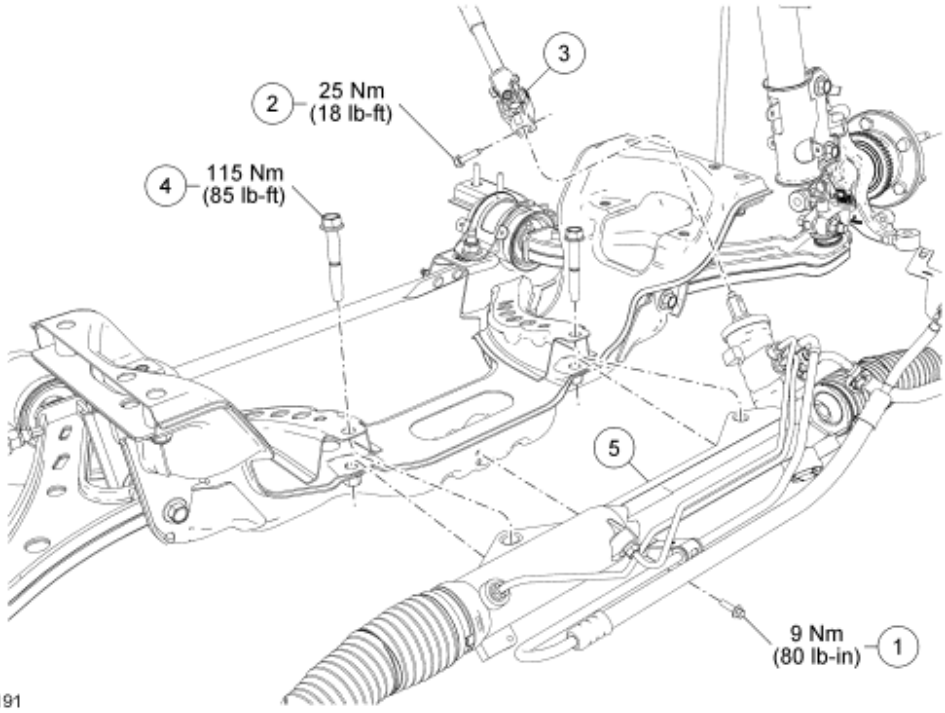

Fig. 18: Exploded View Of Flexplate, Flywheel & Crankshaft Rear Seal With Torque Specifications (1 Of 2)
Courtesy of FORD MOTOR CO.

Item	Part Number	Description
1	W505255	Power steering pressure (PSP) tube bracket-to-crossmember bolt
2	W704980	Steering column coupling-to-steering gear pinch bolt

3	3N725	Steering column coupling
4	W710909	Steering gear bolt (2 required)
5	3200	Steering gear

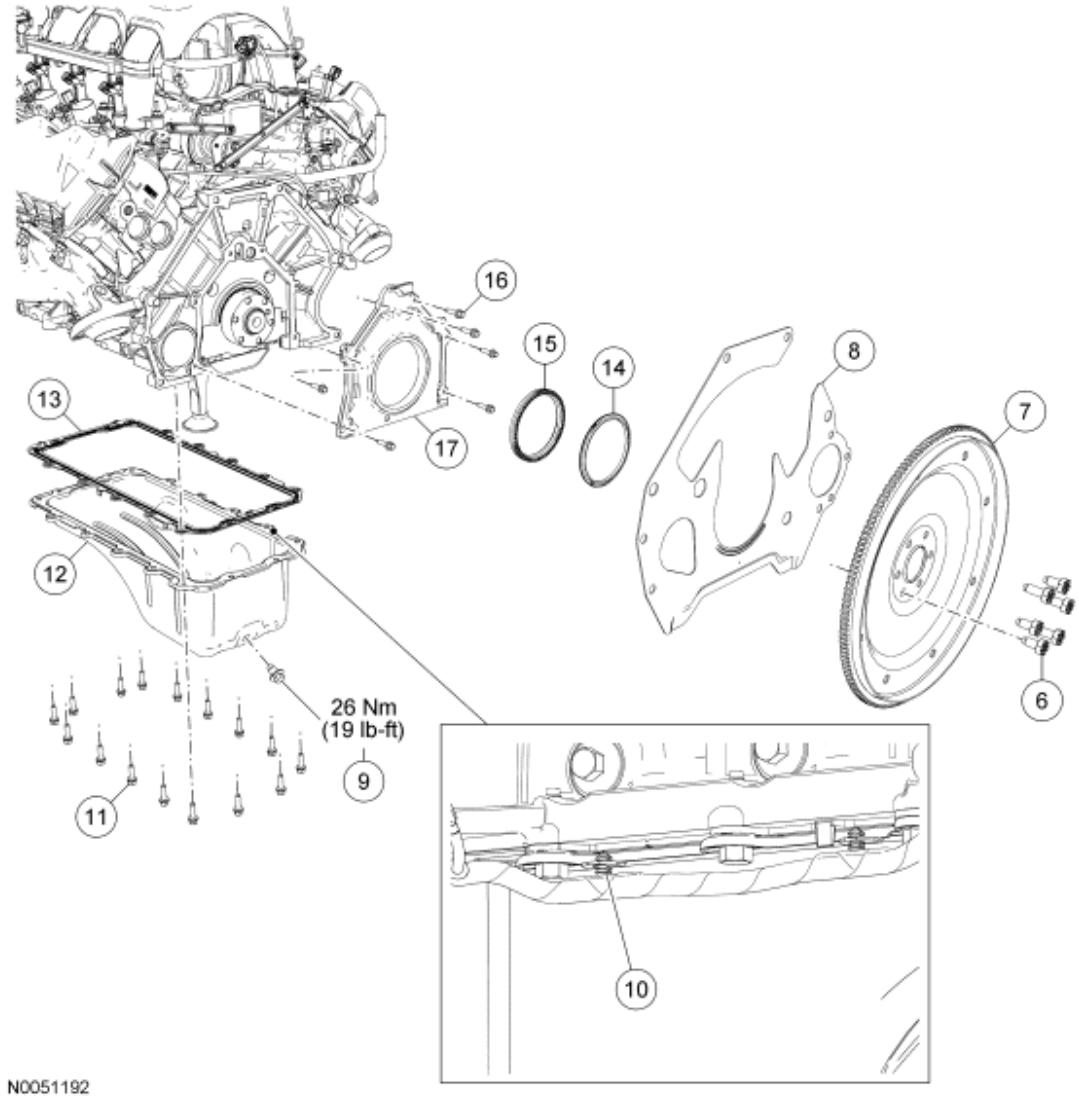

Fig. 19: Exploded View Of Flexplate, Flywheel & Crankshaft Rear Seal (2 Of 2)
Courtesy of FORD MOTOR CO.

Item	Part Number	Description
6	N808139/ N806168	Flywheel/flexplate bolt (6 required)
7	6375	Flywheel/flexplate
8	6A373	Engine-to-transmission spacer plate
9	6730	Oil pan drain plug
10	-	Pin-type retainer (2 required) (part of 12B637)

11	W701605	Oil pan bolt (16 required)
12	6675	Oil pan
13	6710	Oil pan gasket
14	6310	Crankshaft oil slinger
15	6701	Crankshaft rear seal
16	N806155	Crankshaft rear seal retainer plate bolt (6 required)
17	6K318	Crankshaft rear seal retainer plate

1. For additional information, refer to the procedures.

FLEXPLATE

REMOVAL AND INSTALLATION

1. Remove the transmission. For additional information, refer to **AUTOMATIC TRANSAXLE/TRANSMISSION - 5R55S** article.
2. Remove the 6 bolts and the flexplate.
   - To install, tighten to 80 N.m (59 lb-ft) in the sequence shown.

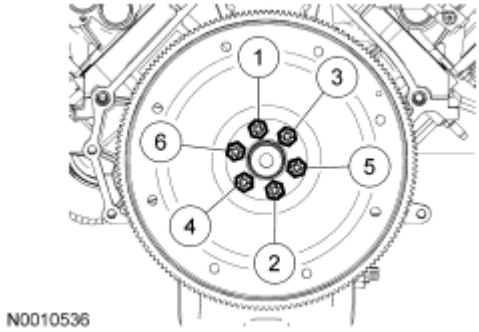

Fig. 20: Identifying Flexplate Bolts Tightening Sequence
Courtesy of FORD MOTOR CO.

3. To install, reverse the removal procedure.

FLYWHEEL

REMOVAL

1. Remove the clutch. For additional information, refer to **CLUTCH** article.
2. Remove the 6 flywheel bolts.

CAUTION: The flywheel has a pressed fit on the crankshaft pilot. Do not use screwdrivers or prybars to remove the flywheel or damage to the flywheel or engine may occur.

3. Remove the flywheel.
   - Install 2 of the removed flywheel bolts in the 2 holes shown on the flywheel flange.
   - Tighten the 2 bolts evenly to push the flywheel off the crankshaft pilot.

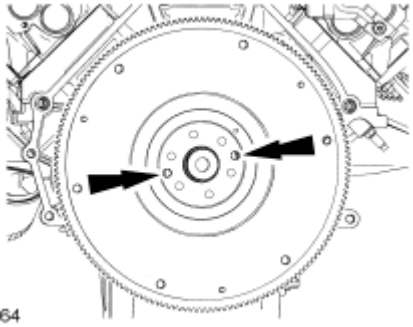

Fig. 21: Identifying Flywheel Bolts
Courtesy of FORD MOTOR CO.

INSTALLATION

1. Position the flywheel on the crankshaft pilot and start the 6 flywheel bolts.
2. Tighten the flywheel bolts evenly in the sequence shown to fully seat the flywheel on the crankshaft pilot.
   - Tighten to 80 Nm (59 lb-ft).

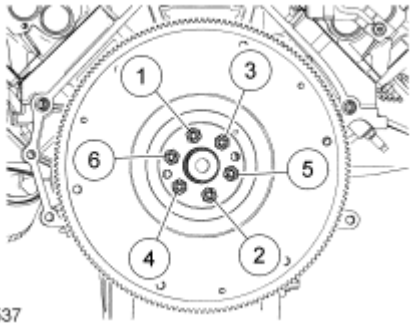

Fig. 22: Removing Bolts & Flywheel In Sequence
Courtesy of FORD MOTOR CO.

CRANKSHAFT REAR SEAL

Special Tools

Illustration	Tool Name	Tool Number
	Impact Slide Hammer	100-001 (T50T-100-A)

 ST1185-A		
 ST1482-A	Installer, Crankshaft Rear Oil Slinger	303-517 (T95P-6701-CH)
 ST1479-A	Installer, Crankshaft Rear Seal	303-516 (T95P-6701-BH)
	Installer, Crankshaft Rear Seal	303-518 (T95P-6701-DH)

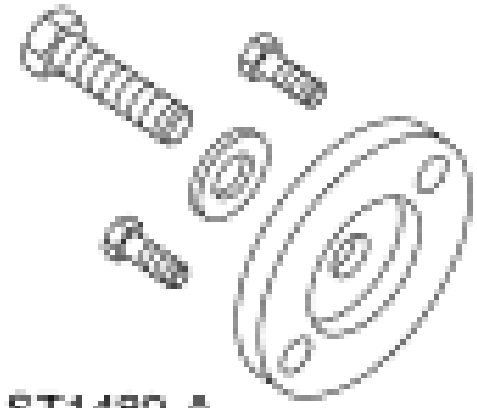 ST1480-A		
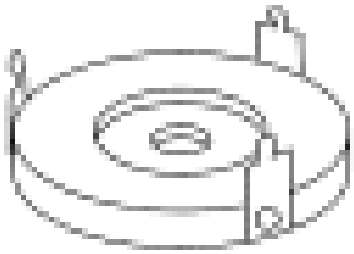 ST1481-A	Remover, Crankshaft Rear Oil Slinger	303-514 (T95P-6701-AH)
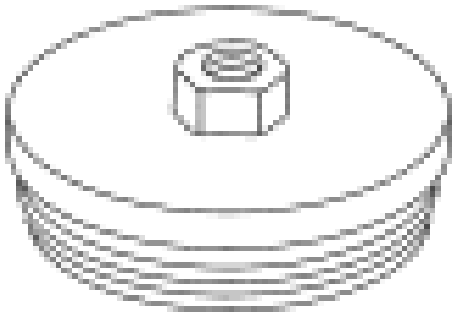 ST1382-A	Remover, Crankshaft Rear Seal	303-519 (T95P-6701-EH)

Material

Item	Specification
Motorcraft SAE 5W-20 Premium Synthetic Blend Motor Oil XO-5W20-QSP (US); Motorcraft SAE 5W-20 Super Premium Motor Oil CXO-5W20-LSP12 (Canada); or equivalent	WSS-M2C930-A

REMOVAL

1. With the vehicle in NEUTRAL, position it on a hoist. For additional information, refer to **JACKING AND LIFTING** article.
2. Remove the flywheel or flexplate. For additional information, refer to **Lower End Components - Exploded View, Flexplate, Flywheel and Crankshaft Rear Seal** and **Flexplate** or **Flywheel**.
3. Using the special tools, remove the crankshaft oil slinger.
   - Discard the crankshaft oil slinger.

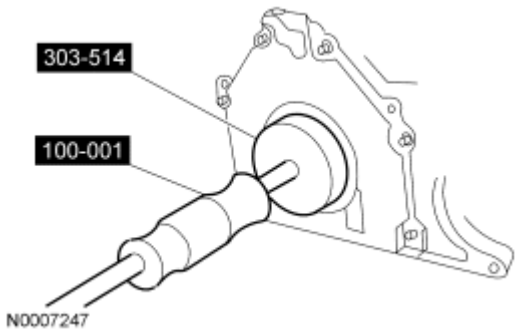

Fig. 23: Removing Crankshaft Rear Oil Seal Slinger
Courtesy of FORD MOTOR CO.

4. Using the special tools, remove the crankshaft rear seal.
   - Discard the crankshaft rear seal.

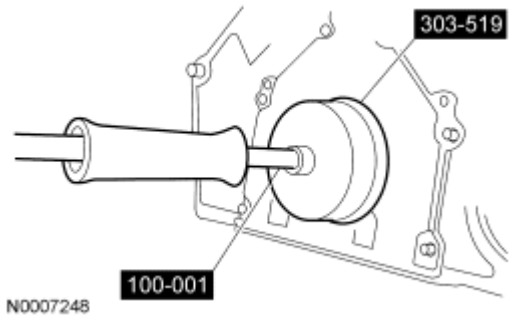

Fig. 24: Removing Crankshaft Rear Seal
Courtesy of FORD MOTOR CO.

INSTALLATION

NOTE: Lubricate the inner lip of the crankshaft rear seal with clean engine oil.

1. Using the special tools, install the crankshaft rear seal.

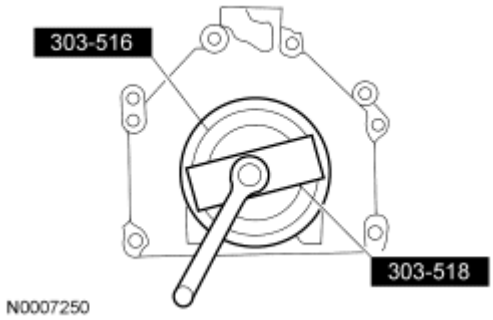

Fig. 25: Using Special Tools To Install New Crankshaft Rear Seal
Courtesy of FORD MOTOR CO.

2. Using the special tools, install the crankshaft rear oil slinger.

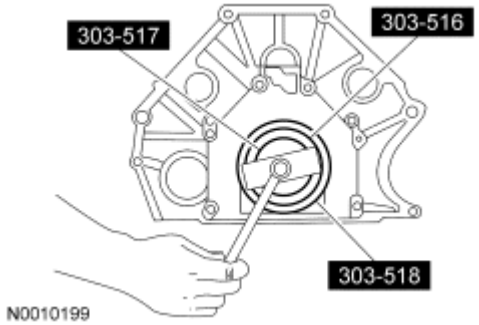

Fig. 26: Installing Crankshaft Rear Oil Slinger Using Special Tools (303-516, 303-517, 303-518)
Courtesy of FORD MOTOR CO.

3. Install the flywheel or flexplate. For additional information, refer to **Lower End Components - Exploded View, Flexplate, Flywheel and Crankshaft Rear Seal** and **Flexplate** or **Flywheel**.

CRANKSHAFT REAR SEAL WITH RETAINER PLATE

Special Tools

Illustration	Tool Name	Tool Number
	Impact Slide Hammer	100-001 (T50T-100-A)

 ST1185-A		
 ST1482-A	Installer, Crankshaft Rear Oil Slinger	303-517 (T95P-6701-CH)
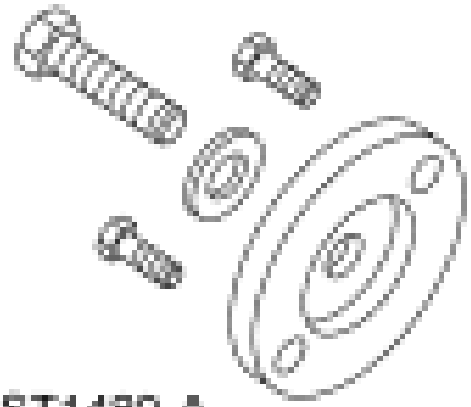 ST1480-A	Installer, Crankshaft Rear Seal	303-518 (T95P-6701-DH)
	Installer, Crankshaft Rear Seal	303-516 (T95P-6701-BH)

 ST1479-A		
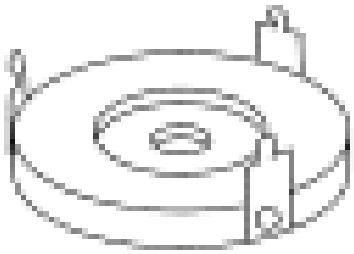 ST1481-A	Remover, Crankshaft Rear Oil Slinger	303-514 (T95P-6701-AH)
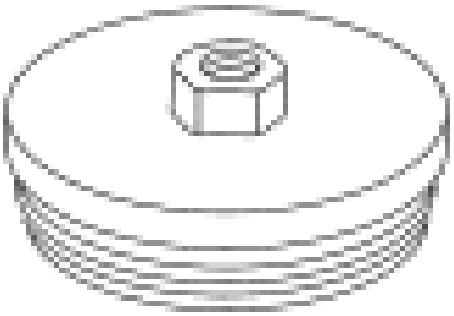 ST1382-A	Remover, Crankshaft Rear Seal	303-519 (T95P-6701-EH)

Material

Item	Specification
Gasket Maker TA-16	WSK-M2G348-A5
Motorcraft Metal Surface Prep ZC-31	-
Motorcraft SAE 5W-20 Premium Synthetic Blend Motor Oil XO-5W20-QSP (US); Motorcraft SAE 5W-20 Super Premium Motor Oil CXO-5W20-LSP12 (Canada); or equivalent	WSS-M2C930-A
Silicone Gasket and Sealant TA-30	WSE-M4G323-A4
Silicone Gasket Remover ZC-30	-

REMOVAL

1. With the vehicle in NEUTRAL, position it on a hoist. For additional information, refer to **JACKING AND LIFTING** article.
2. Remove the flywheel or flexplate. For additional information, refer to **Lower End Components - Exploded View, Flexplate, Flywheel and Crankshaft Rear Seal** and **Flexplate** or **Flywheel**.
3. Remove the engine-to-transmission spacer plate.
4. Remove the power steering pressure (PSP) tube bracket-to-crossmember bolt and position the bracket aside.

CAUTION: Do not allow the intermediate shaft to rotate while it is disconnected from the steering gear or damage to the clockspring can result. If there is evidence that the intermediate shaft has rotated, the clockspring must be removed and re-centered. For additional information, refer to SUPPLEMENTAL RESTRAINT SYSTEM article.

5. Remove the steering column coupling-to-steering gear pinch bolt.
   - Discard the pinch bolt.
6. Remove the 2 steering gear bolts and disconnect the coupling from the steering gear while positioning the steering gear forward.
7. Drain the engine oil.
   - Install the drain plug when finished.
   - Tighten to 26 Nm (19 lb-ft).
8. Detach the 2 pin-type wire harness retainers.
9. Remove the 16 oil pan bolts and remove the oil pan.
   - Discard the oil pan gasket.

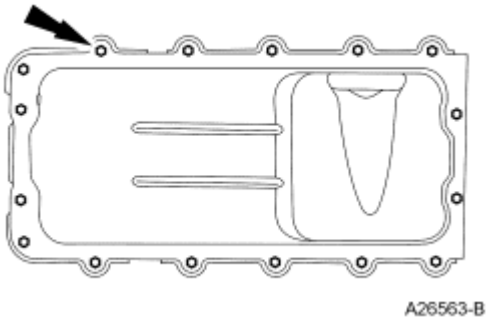

Fig. 27: Locating Oil Pan And Oil Pan Gasket Bolts
Courtesy of FORD MOTOR CO.

10. Using the special tools, remove the crankshaft oil slinger.
    - Discard the crankshaft oil slinger.

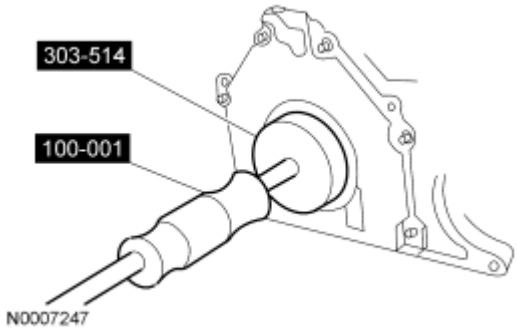

Fig. 28: Removing Crankshaft Rear Oil Seal Slinger
Courtesy of FORD MOTOR CO.

11. Using the special tools, remove the crankshaft rear seal.
    - Discard the crankshaft rear seal.

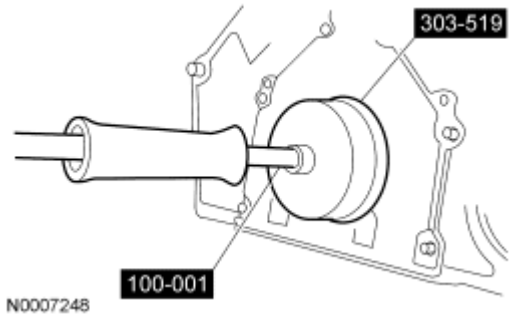

Fig. 29: Removing Crankshaft Rear Seal
Courtesy of FORD MOTOR CO.

12. Remove the 6 bolts and the crankshaft rear seal retainer plate.

INSTALLATION

CAUTION: Do not use metal scrapers, wire brushes, power abrasive discs or other abrasive means to clean the sealing surfaces. These tools cause scratches and gouges which make leak paths. Use a plastic scraping tool to remove all traces of old sealant.

NOTE: Clean the sealing surfaces with silicone gasket remover and metal surface prep. Follow the directions on the packaging. Failure to follow this procedure can cause future oil leakage.

1. Clean and inspect the mating surfaces.

NOTE: The rear crankshaft seal retainer plate does not have a sealant groove. Gasket maker must be applied to the rear crankshaft seal retainer mating surface on the engine block.

2. Apply a bead of gasket maker to the rear crankshaft seal retainer mating surface on the engine block.

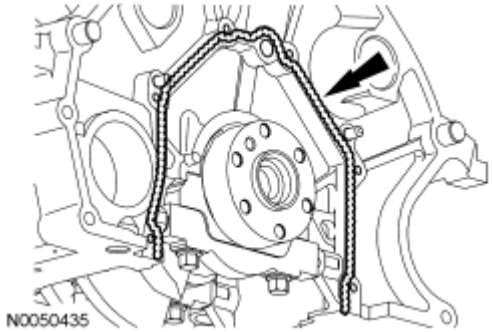

Fig. 30: Applying Bead Of Gasket Maker To Rear Crankshaft Seal Retainer
Courtesy of FORD MOTOR CO.

3. Install the crankshaft rear seal retainer plate and the 6 bolts in the sequence shown.
   - Tighten to 10 N.m (89 lb-in).

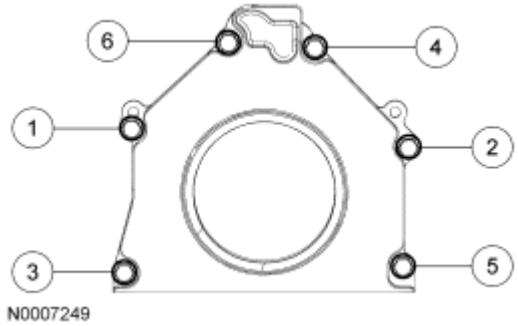

Fig. 31: Tightening Sequence Of Crankshaft Rear Seal Retainer Plate Bolts

Courtesy of FORD MOTOR CO.

NOTE: Lubricate the inner lip of the crankshaft rear seal with clean engine oil.

4. Using the special tools, install the crankshaft rear seal.

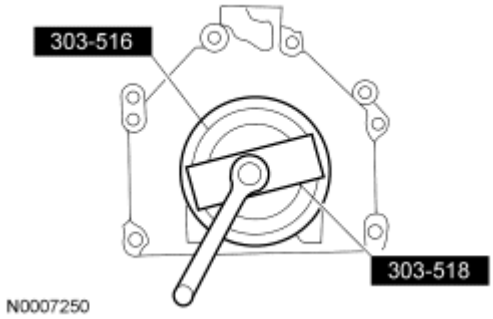

Fig. 32: Using Special Tools To Install New Crankshaft Rear Seal
Courtesy of FORD MOTOR CO.

5. Using the special tools, install the crankshaft rear oil slinger.

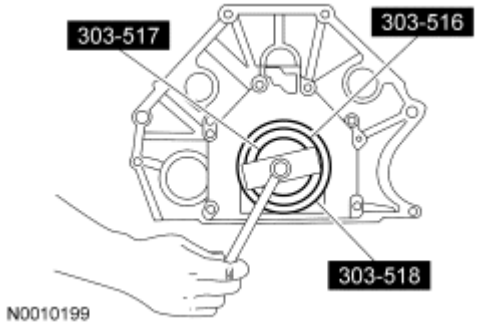

Fig. 33: Installing Crankshaft Rear Oil Slinger Using Special Tools (303-516, 303-517, 303-518)
Courtesy of FORD MOTOR CO.

CAUTION: Do not use metal scrapers, wire brushes, power abrasive discs or other abrasive means to clean the sealing surfaces. These tools cause scratches and gouges, which make leak paths. Use a plastic scraping tool to remove all traces of old sealant.

6. Inspect the oil pan. Clean the mating surface for the oil pan with silicone gasket remover and metal surface prep. Follow the directions on the packaging.

NOTE: If not secured within 4 minutes, the sealant must be removed and the sealing area cleaned. To clean the sealing area, use silicone gasket remover and metal surface prep. Follow the directions on the packaging. Failure to follow this procedure can cause future oil leakage.

7. Apply silicone gasket and sealant at the crankshaft rear seal retainer plate-to-cylinder block sealing surface.

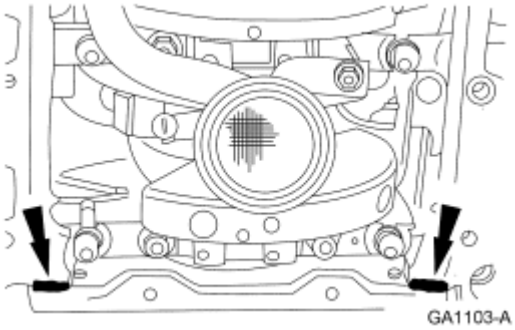

Fig. 34: Applying Silicone Gasket And Sealant
Courtesy of FORD MOTOR CO.

NOTE: **If not secured within 4 minutes, the sealant must be removed and the sealing area cleaned. To clean the sealing area, use silicone gasket remover and metal surface prep. Follow the directions on the packaging. Failure to follow this procedure can cause future oil leakage.**

8. Apply silicone gasket and sealant at the engine front cover-to-cylinder block sealing surface.

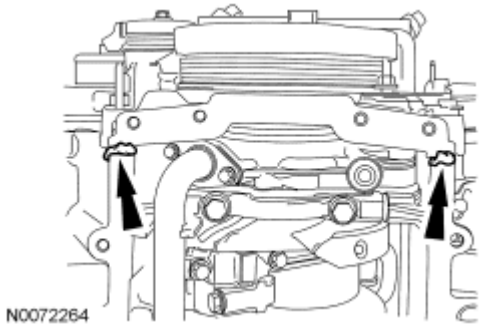

Fig. 35: Applying Silicone Gasket & Sealant At Engine Front Cover-To-Cylinder Block Sealing Surface
Courtesy of FORD MOTOR CO.

9. Install the new oil pan gasket and the oil pan and loosely install the 16 bolts.

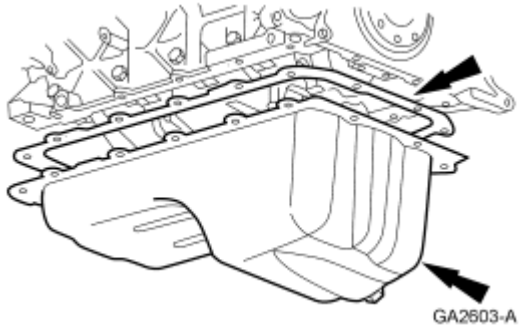

Fig. 36: Positioning New Oil Pan Gasket And Oil Pan
Courtesy of FORD MOTOR CO.

10. Tighten the bolts in 3 stages, in the sequence shown.
    - Stage 1: Tighten to 2 Nm (18 lb-in).
    - Stage 2: Tighten to 20 Nm (15 lb-ft).
    - Stage 3: Tighten an additional 60 degrees.

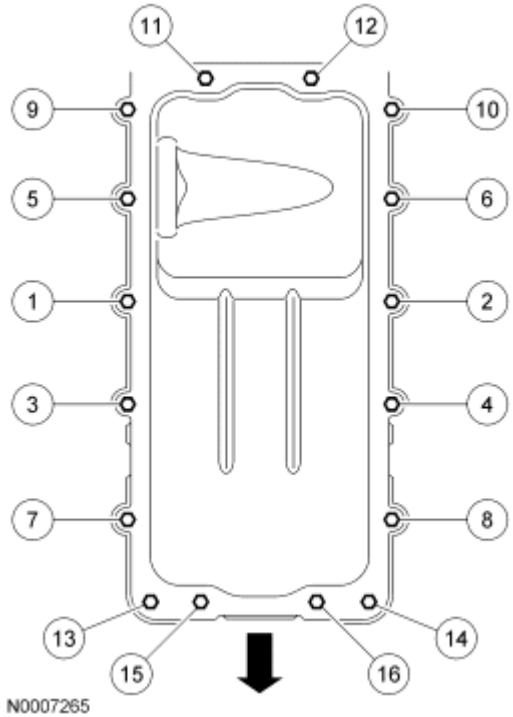

Fig. 37: Identifying Oil Pan Bolt Tightening Sequence
Courtesy of FORD MOTOR CO.

11. Attach the 2 pin-type wire harness retainers.

CAUTION: Do not allow the intermediate shaft to rotate while it is disconnected from the steering gear or damage to the clockspring can result. If there is evidence that the intermediate shaft has rotated, the

clockspring must be removed and re-centered. For additional information, refer to SUPPLEMENTAL RESTRAINT SYSTEM article.

12. Position the steering gear while connecting the steering column coupling to the steering gear and install the 2 steering gear bolts.
    - Tighten to 115 Nm (85 lb-ft).
13. Install the new steering column coupling-to-steering gear pinch bolt.
    - Tighten to 25 Nm (18 lb-ft).
14. Position the power steering pressure (PSP) tube bracket and install the pressure tube bracket-to-crossmember bolt.
    - Tighten to 9 Nm (80 lb-in).
15. Install the engine-to-transmission spacer plate.
16. Install the flywheel or flexplate. For additional information, refer to **Lower End Components - Exploded View, Flexplate, Flywheel and Crankshaft Rear Seal** and **Flexplate** or **Flywheel**.
17. Fill the engine with clean engine oil.
18. Start the engine and check for leaks.

ENGINE FRONT COVER

Special Tools

Illustration	Tool Name	Tool Number
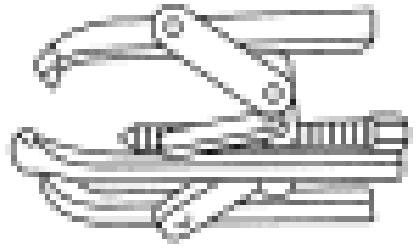 ST1184-A	3-Jaw Puller	303-D121
	Installer, Crankshaft Front Seal	303-335 (T88T-6701-A)

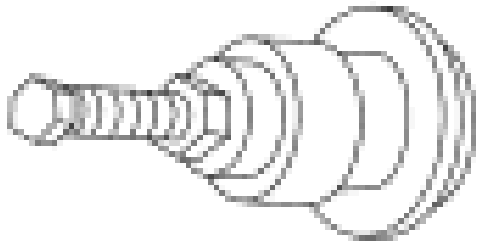 ST1328-A		
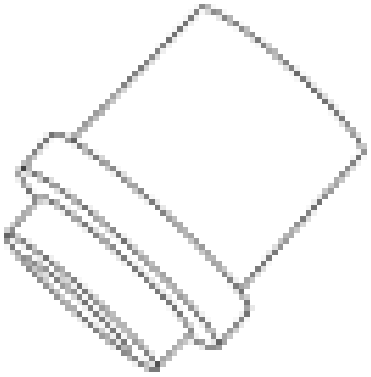 ST2197-A	Installer, Crankshaft Front Seal	303-635
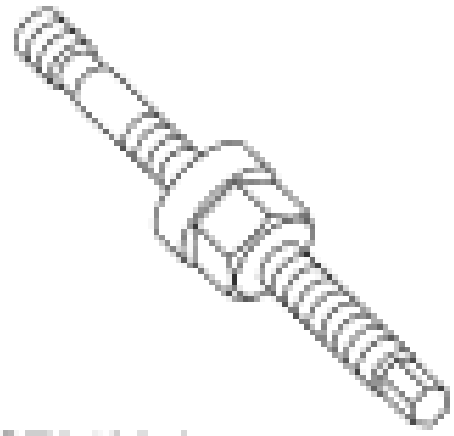 ST2428-A	Installer, Crankshaft Vibration Damper	303-102 (T74P-6316-B)
	Remover, Crankshaft Front	303-107 (T74P-6700-A)

 ST1286-A	Seal	

Material

Item	Specification
Motorcraft Metal Surface Prep ZC-31	-
Motorcraft SAE 5W-20 Premium Synthetic Blend Motor Oil XO-5W20-QSP (US); Motorcraft SAE 5W-20 Super Premium Motor Oil CXO-5W20-LSP12 (Canada); or equivalent	WSS-M2C930-A
Silicone Gasket and Sealant TA-30	WSE-M4G323-A4
Silicone Gasket Remover ZC-30	-

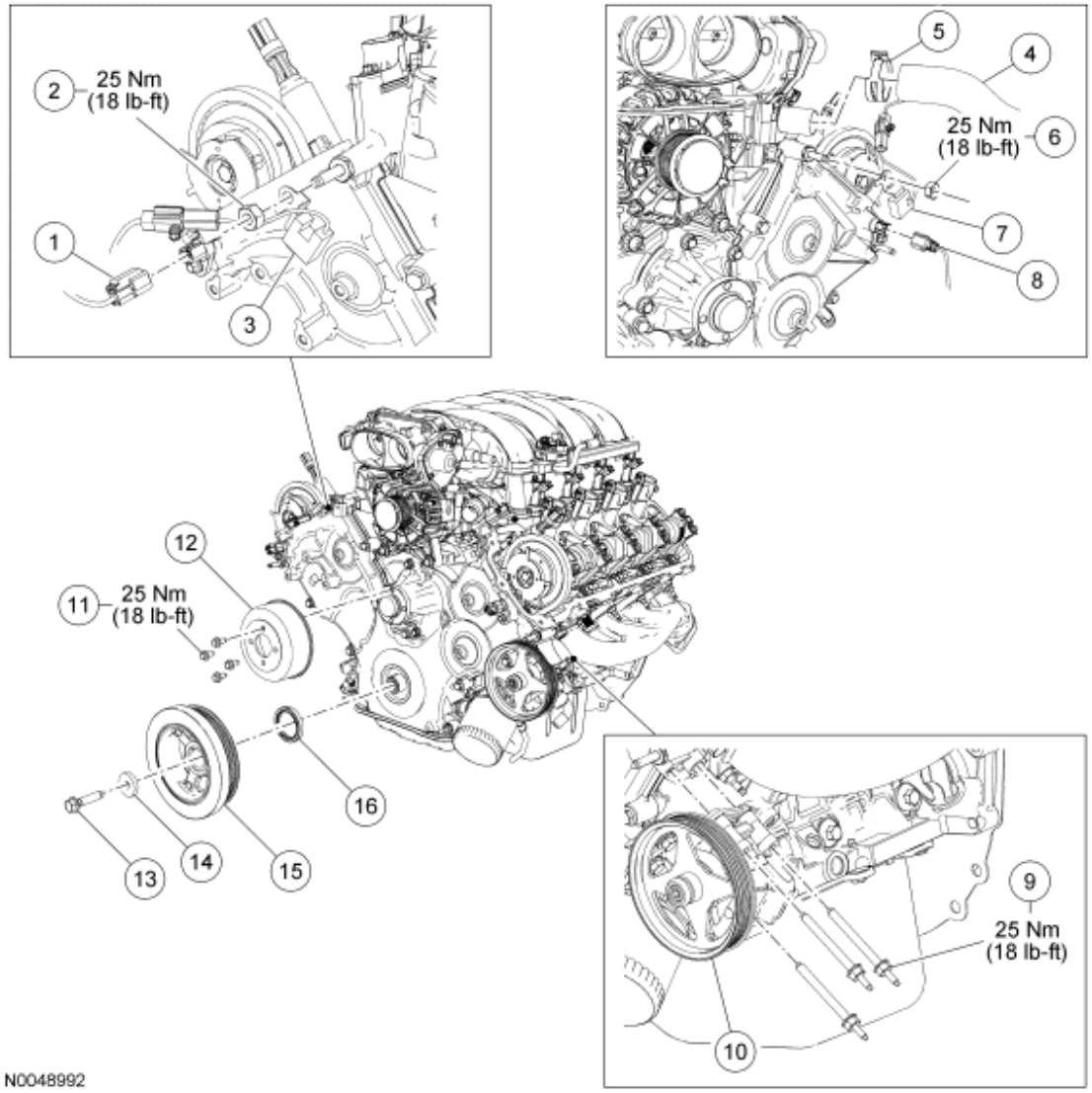

Fig. 38: Identifying Engine Front Cover With Torque Specifications (1 Of 2)
Courtesy of FORD MOTOR CO.

Item	Part Number	Description
1	-	RH camshaft position (CMP) sensor electrical connector (part of 12B637)
2	N804758	RH radio ignition interference capacitor nut
3	18801	RH radio ignition interference capacitor
4	8620	Upper coolant hose
5	15161	Hose clamp
6	N804758	LH radio ignition interference capacitor nut
7	18801	LH radio ignition interference capacitor
8	-	LH CMP sensor electrical connector (part of 12B637)
9	W705023	Power steering pump stud bolt (3 required)

10	3A696	Power steering pump
11	N806282	Coolant pump pulley bolts (4 required)
12	8A528	Coolant pump pulley
13	W701512	Crankshaft pulley bolt
14	N806165	Crankshaft pulley bolt washer
15	6316	Crankshaft pulley
16	6700	Crankshaft front oil seal

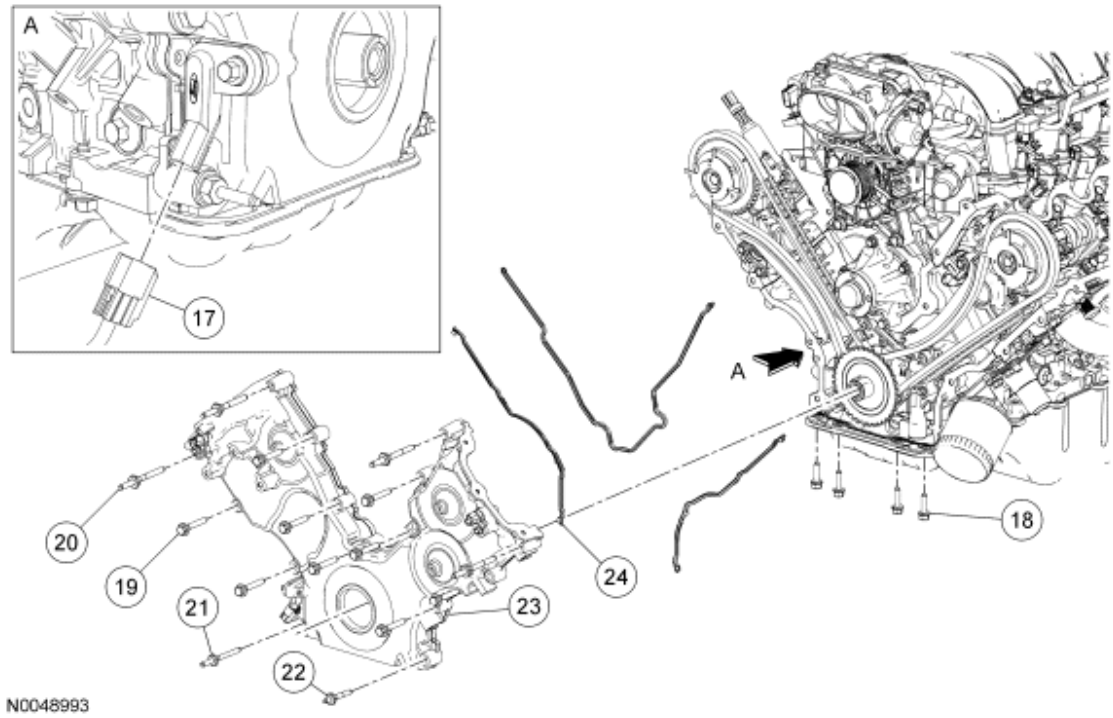

Fig. 39: Identifying Engine Front Cover (2 Of 2)
Courtesy of FORD MOTOR CO.

Item	Part Number	Description
17	-	Crankshaft position (CKP) sensor electrical connector (part of 12B637)
18	W701605	Oil pan bolt (4 required)
19	N806177	Engine front cover bolt (9 required)
20	N806300	Engine front cover stud (4 required)
21	N808586	Engine front cover stud bolt
22	W706508	Engine front cover stud bolt
23	6C086	Engine front cover
24	6D081	Engine front cover gasket (3 required)

REMOVAL

1. With the vehicle in NEUTRAL, position it on a hoist. For additional information, refer to **JACKING AND LIFTING** article.
2. Drain the engine oil.
   - Install the drain plug and tighten to 26 Nm (19 lb-ft).
3. Remove the engine coolant degas bottle. For additional information, refer to **ENGINE COOLING** article.
4. Remove the RH side idler pulley. For additional information, refer to **ACCESSORY DRIVE** article.
5. Remove the RH valve cover. For additional information, refer to **Valve Cover - RH**.
6. Remove the LH valve cover. For additional information, refer to **Valve Cover - LH**.
7. Disconnect the upper coolant hose from the engine.
8. Remove the nut and position aside the RH radio ignition interference capacitor.
9. Disconnect the RH camshaft position (CMP) sensor electrical connector.
10. Remove the nut and position aside the LH radio ignition interference capacitor.
11. Disconnect the LH CMP sensor electrical connector.
12. Remove the 4 bolts and the coolant pump pulley.
13. Remove the wiring harness retainer from the power steering stud bolt.

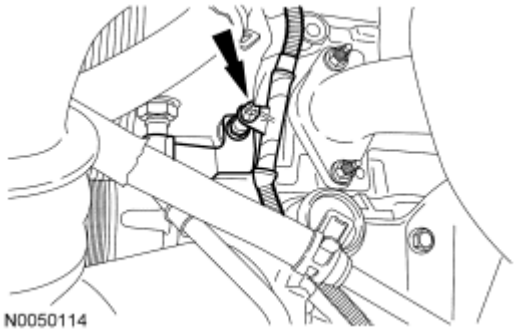

Fig. 40: Locating Power Steering Stud Bolt
Courtesy of FORD MOTOR CO.

14. Remove the 3 stud bolts and position the power steering pump aside.
    - Support the power steering pump with a length of mechanic's wire.
15. Disconnect the crankshaft position (CKP) sensor electrical connector.
16. Remove the crankshaft pulley bolt and washer.
    - Discard the crankshaft pulley bolt.
17. Using the special tool, remove the crankshaft pulley.

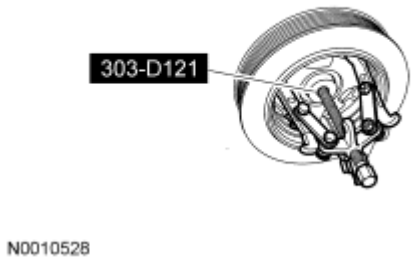

Fig. 41: Removing Crankshaft Pulley Using Special Tool (303-D121)
Courtesy of FORD MOTOR CO.

18. Using the special tool, remove the crankshaft front oil seal.

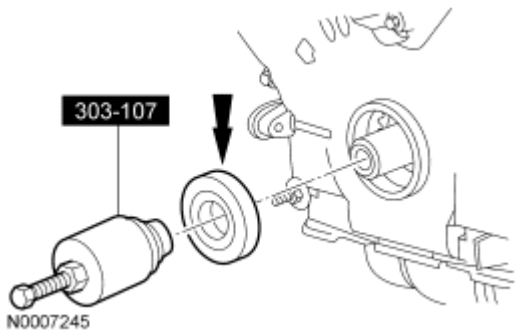

Fig. 42: Removing Crankshaft Front Seal Using Special Tool (303-107)
Courtesy of FORD MOTOR CO.

19. Remove the 4 front oil pan bolts.
20. Remove the bolts and the stud bolts.

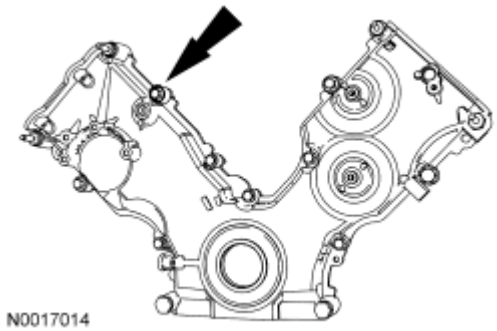

Fig. 43: Locating Engine Front Cover Fasteners
Courtesy of FORD MOTOR CO.

CAUTION: Do not use metal scrapers, wire brushes, power abrasive discs or other abrasive means to clean the sealing surfaces. These tools cause scratches and gouges which make leak paths. Use a plastic

scraping tool to remove all traces of old sealant.

21. Remove the engine front cover from the front cover to cylinder block dowel.
    - Remove the engine front cover gaskets.
    - Clean the mating surfaces with silicone gasket remover and metal surface prep. Follow the directions on the packaging.
    - Inspect the mating surfaces.

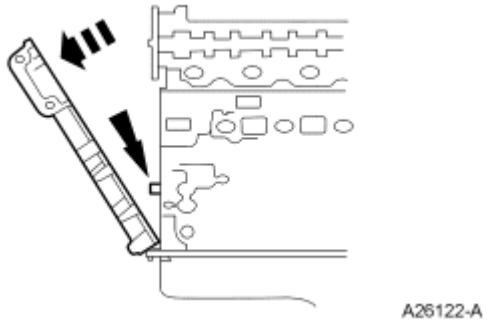

Fig. 44: Removing Engine Front Cover From Front Cover-To-Cylinder Block Dowel
Courtesy of FORD MOTOR CO.

INSTALLATION

CAUTION: Do not use metal scrapers, wire brushes, power abrasive discs or other abrasive means to clean the sealing surfaces. These tools cause scratches and gouges which make leak paths. Use a plastic scraping tool to remove all traces of old sealant.

NOTE: If the engine front cover is not secured within 4 minutes, the sealant must be removed and the sealing area cleaned. To clean the sealing area, use silicone gasket remover and metal surface prep. Follow the directions on the packaging. Failure to follow this procedure can cause future oil leakage.

NOTE: Make sure that the engine front cover gasket is in place on the engine front cover before installation.

1. Apply a bead of silicone gasket and sealant along the cylinder head-to-cylinder block surface and the oil pan-to-cylinder block surface, at the locations shown.

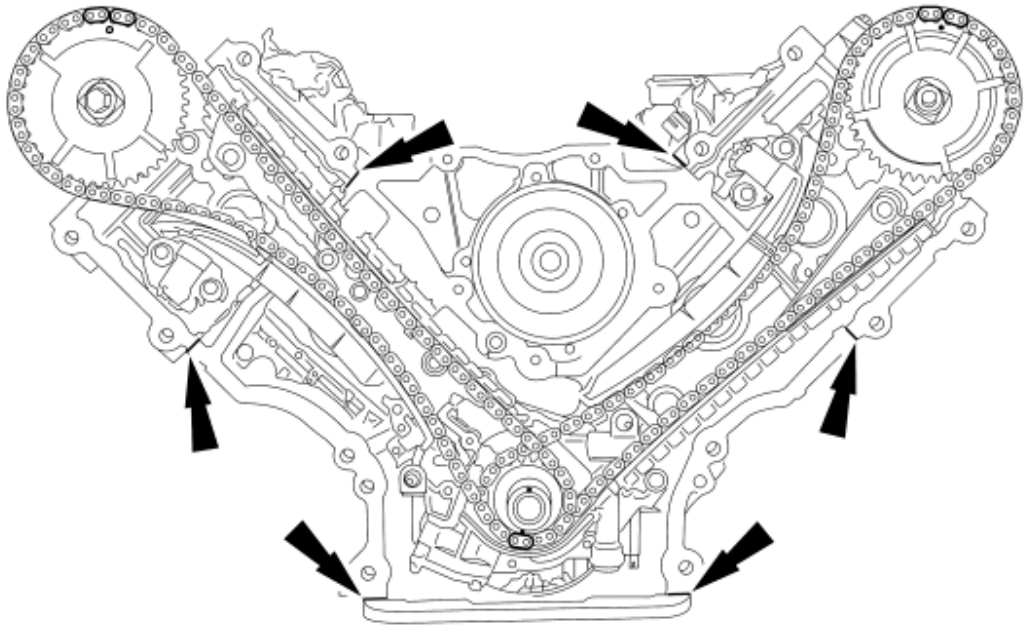

Fig. 45: Applying A Bead Of Silicone Gasket And Sealant
Courtesy of FORD MOTOR CO.

2. Install a new engine front cover gasket on the engine front cover. Position the engine front cover onto the dowels. Install the fasteners finger tight.

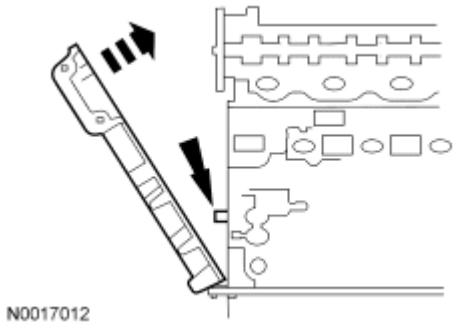

Fig. 46: Installing Engine Front Cover Gasket On Engine Front Cover
Courtesy of FORD MOTOR CO.

3. Tighten the engine front cover fasteners in the sequence shown to 25 Nm (18 lb-ft).

Item	Part Number	Description
1	N806177	Bolt, Hex Flange Head Pilot, M8 x 1.25 x 53
2	N806177	Bolt, Hex Flange Head Pilot, M8 x 1.25 x 53
3	N806177	Bolt, Hex Flange Head Pilot, M8 x 1.25 x 53
4	N806177	Bolt, Hex Flange Head Pilot, M8 x 1.25 x 53

5	N806177	Bolt, Hex Flange Head Pilot, M8 x 1.25 x 53
6	W706508	Stud, Hex Shoulder Pilot, M8 x 1.25 x 50 - M6 x 1 x 10
7	N808586	Stud and Washer, Hex Head Pilot, M8 x 1.25 - M6 x 1 x 86.35
8	N806177	Bolt, Hex Flange Head Pilot, M8 x 1.25 x 53
9	N806177	Bolt, Hex Flange Head Pilot, M8 x 1.25 x 53
10	N806177	Bolt, Hex Flange Head Pilot, M8 x 1.25 x 53
11	N806177	Bolt, Hex Flange Head Pilot, M8 x 1.25 x 53
12	N806300	Stud, Hex Shoulder Pilot, M8 x 1.25 x 1.25 x 91.1
13	N806300	Stud, Hex Shoulder Pilot, M8 x 1.25 x 1.25 x 91.1
14	N806300	Stud, Hex Shoulder Pilot, M8 x 1.25 x 1.25 x 91.1
15	N806300	Stud, Hex Shoulder Pilot, M8 x 1.25 x 1.25 x 91.1

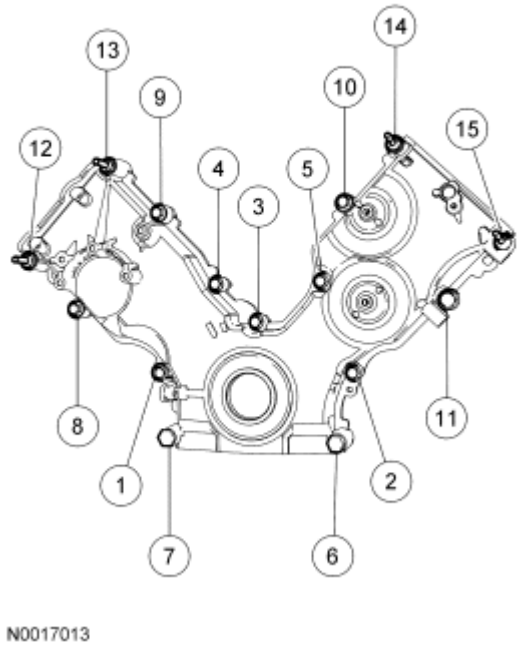

Fig. 47: Identifying Tightening Sequence Of Engine Front Cover Fasteners
Courtesy of FORD MOTOR CO.

4. Loosely install the bolts, then tighten the bolts in 2 stages, in the sequence shown.
   - Stage 1: Tighten to 20 N.m (15 lb-ft).
   - Stage 2: Tighten an additional 60 degrees.

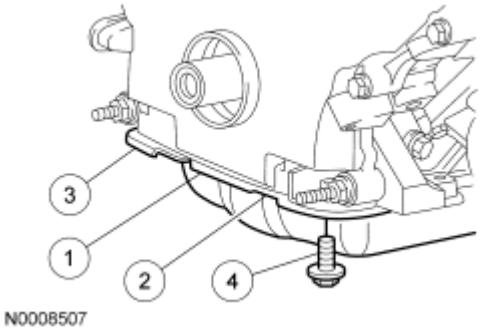

Fig. 48: Identifying Tightening Sequence Of Front Oil Pan Bolts
Courtesy of FORD MOTOR CO.

5. Lubricate the engine front cover and the crankshaft front oil seal inner lip with clean engine oil.

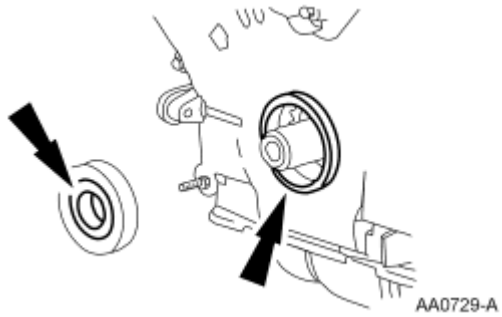

Fig. 49: Lubricating Engine Front Cover And Crankshaft Front Seal Inner Lip
Courtesy of FORD MOTOR CO.

6. Using the special tools, install the crankshaft front oil seal.

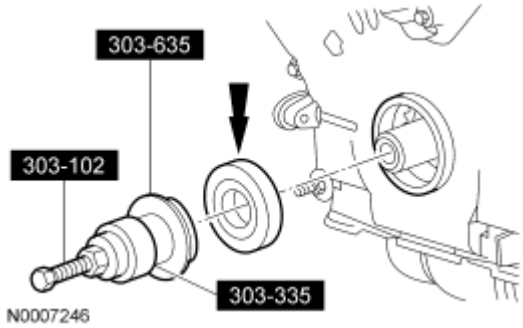

Fig. 50: Installing Crankshaft Front Seal Using Special Tools (303-102, 303-335, 303-635)
Courtesy of FORD MOTOR CO.

NOTE: **If not secured within 4 minutes, the sealant must be removed and the sealing area cleaned with silicone gasket remover and metal surface prep. Allow to dry until there is no sign of wetness, or 4 minutes, whichever is longer. Failure to follow this procedure can cause future oil leakage.**

7. Apply silicone gasket and sealant to the Woodruff key slot in the crankshaft pulley.

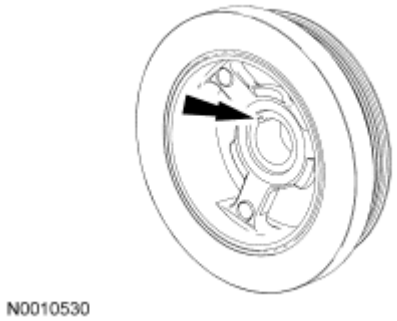

Fig. 51: Applying Silicone Gasket And Sealant To Woodruff Key Slot In Crankshaft Pulley
Courtesy of FORD MOTOR CO.

8. Using the special tool, install the crankshaft pulley.

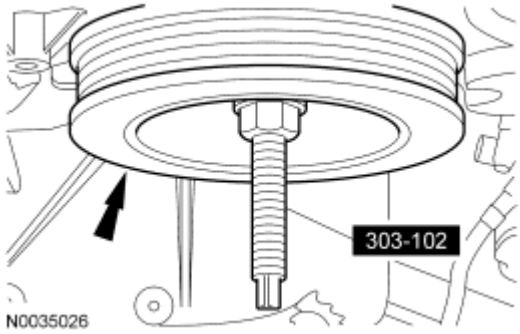

Fig. 52: Installing Crankshaft Pulley Using Special Tool (303-102)
Courtesy of FORD MOTOR CO.

9. Using a new crankshaft pulley bolt, install the bolt and washer and tighten the bolt in 4 stages.
   - Stage 1: Tighten to 90 N.m (66 lb-ft).
   - Stage 2: Loosen 360 degrees.
   - Stage 3: Tighten to 50 N.m (37 lb-ft).
   - Stage 4: Tighten an additional 90 degrees.
10. Connect the CKP sensor electrical connector.
11. Position the power steering pump assembly and install the stud bolts.
    - Tighten to 25 N.m (18 lb-ft).
12. Install the wiring retainer on the power steering stud bolt.

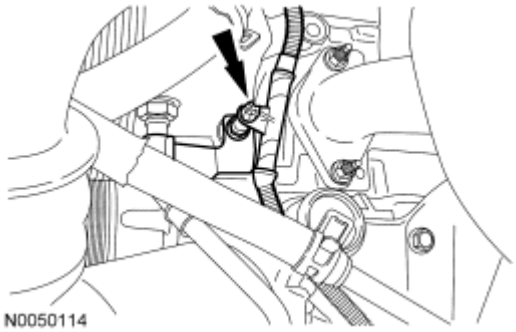

Fig. 53: Locating Power Steering Stud Bolt
Courtesy of FORD MOTOR CO.

13. Install the coolant pump pulley and the 4 bolts.
    - Tighten to 25 N.m (18 lb-ft).
14. Connect the LH CMP sensor electrical connector.
15. Install the LH radio ignition interference capacitor and nut onto the engine front cover stud bolt.
    - Tighten to 25 Nm (18 lb-ft).
16. Connect the RH CMP sensor electrical connector.
17. Install the RH radio ignition interference capacitor and the nut.
    - Tighten to 25 Nm (18 lb-ft).
18. Connect the upper coolant hose to the engine.
19. Install the RH valve cover. For additional information, refer to **Valve Cover - RH**.
20. Install the LH valve cover. For additional information, refer to **Valve Cover - LH**.
21. Install the accessory drive belt tensioner and 3 idler pulleys. For additional information, refer to **ACCESSORY DRIVE** article.
22. Fill the crankcase with clean engine oil.
23. Install the engine coolant degas bottle. For additional information, refer to **ENGINE COOLING** article.

TIMING DRIVE COMPONENTS

Special Tools

Illustration	Tool Name	Tool Number
	Compressor, Valve Spring	303-1039

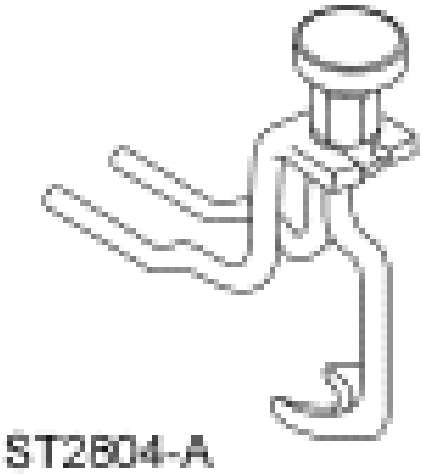 ST2604-A		
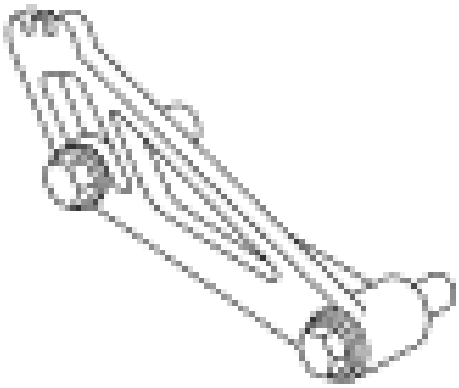 ST2607-A	Locking Tool, Camshaft Phaser Sprocket	303-1046

Material

Item	Specification
Hydraulic Chain Tensioner Retaining Clip 1L3Z-6P250-AA	-
Motorcraft SAE 5W-20 Premium Synthetic Blend Motor Oil XO-5W20-QSP (US); Motorcraft SAE 5W-20 Super Premium Motor Oil CXO-5W20-LSP12 (Canada); or equivalent	WSS-M2C930-A

REMOVAL

1. Remove the engine front cover. For additional information, refer to **Engine Front Cover**.
2. Remove the crankshaft sensor ring from the crankshaft.

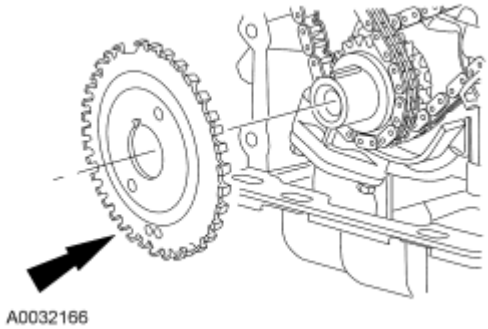

Fig. 54: View Of Crankshaft Sensor Ring At Crankshaft
Courtesy of FORD MOTOR CO.

3. Position the crankshaft keyway at the 12 o'clock position.

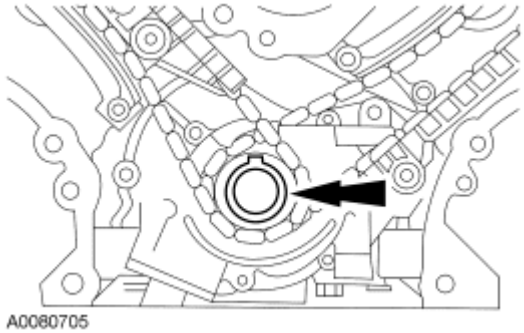

Fig. 55: Positioning Crankshaft Keyway At 12 O'Clock Position
Courtesy of FORD MOTOR CO.

NOTE: If the camshaft lobes are not exactly positioned as shown, the crankshaft will require one full additional rotation to 12 o'clock.

4. The No. 1 cylinder must be coming up on the exhaust stroke with the crankshaft keyway at the 12 o'clock position. Verify by noting the position of the 2 intake lobes and the exhaust lobe on the No. 1 cylinder.

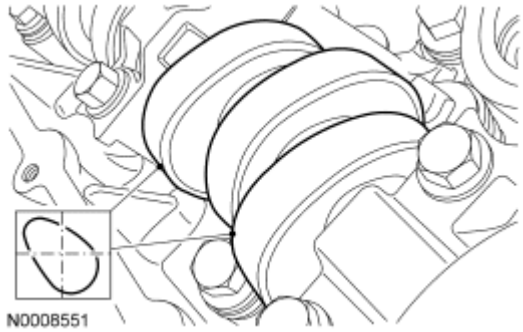

Fig. 56: Identifying Camshaft Lobe Position
Courtesy of FORD MOTOR CO.

CAUTION: If the components are to be reinstalled, they must be installed in their original positions. Mark the components for installation into their original locations. Failure to follow these instructions may result in engine damage.

5. Remove only the 3 roller followers shown in the illustration from the RH cylinder head.

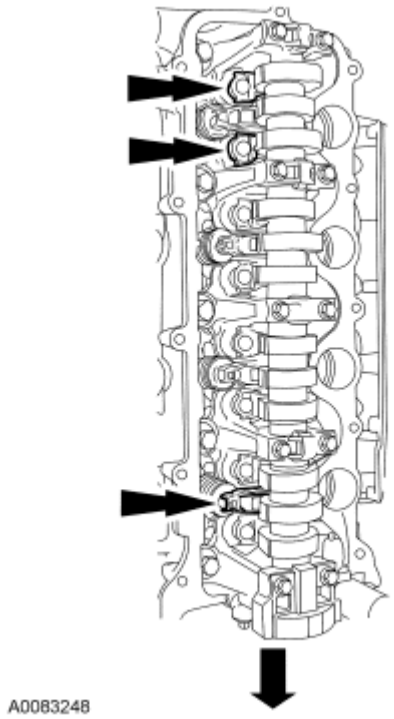

Fig. 57: Identifying RH Cylinder Head Camshaft Roller Followers And Bolts
Courtesy of FORD MOTOR CO.

NOTE: Do not allow the valve keepers to fall off the valve or the valve may drop into the cylinder. If a valve drops into the cylinder, the cylinder head must be removed. For additional information, refer to Cylinder Head.

NOTE: It may be necessary to push the valve down while compressing the spring.

6. Using the special tool, remove the 3 roller followers designated in the previous step from the RH cylinder head.

Fig. 58: Identifying Special Tool (303-1039) For Removing/Installing Camshaft Roller Followers
Courtesy of FORD MOTOR CO.

CAUTION: If the components are to be reinstalled, they must be installed in their original positions. Mark the components for installation into their original locations. Failure to follow these instructions may result in engine damage.

7. Remove only the 3 roller followers shown in the illustration from the LH cylinder head.

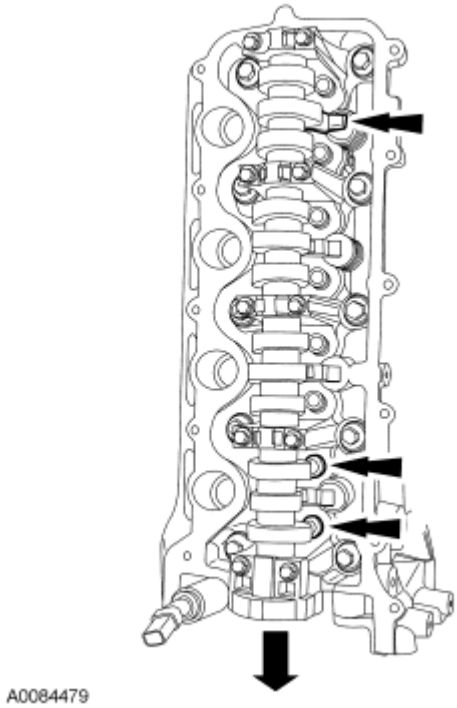

Fig. 59: Locating LH Cylinder Head Camshaft Roller Followers And Bolts
Courtesy of FORD MOTOR CO.

NOTE: Do not allow the valve keepers to fall off the valve or the valve may drop into the cylinder. If a valve drops into the cylinder, the cylinder head must be removed. For additional information, refer to Cylinder Head.

NOTE: It may be necessary to push the valve down while compressing the spring.

8. Using the special tool, remove the 3 roller followers designated in the previous step from the LH cylinder head.

Fig. 60: Compressing Spring Using Special Tool (303-1039)
Courtesy of FORD MOTOR CO.

CAUTION: The crankshaft cannot be moved past the 6 o'clock position once set or engine damage may occur.

9. Rotate the crankshaft clockwise and position the crankshaft keyway at the 6 o'clock position.

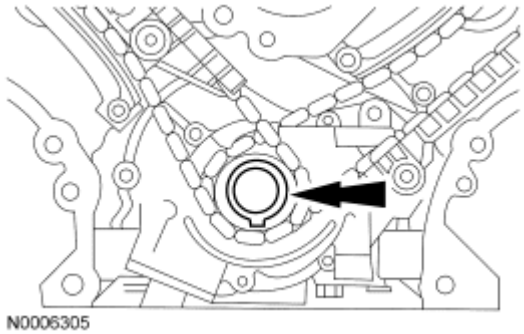

Fig. 61: Crankshaft Positioned With Keyway At 6 O'clock Position
Courtesy of FORD MOTOR CO.

10. Remove the bolts, the LH timing chain tensioner and tensioner arm.

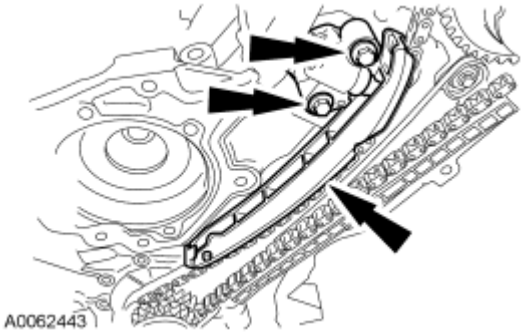

Fig. 62: Identifying LH Timing Chain Tensioner & Tensioner Arm
Courtesy of FORD MOTOR CO.

11. Remove the bolts, the RH timing chain tensioner and tensioner arm.

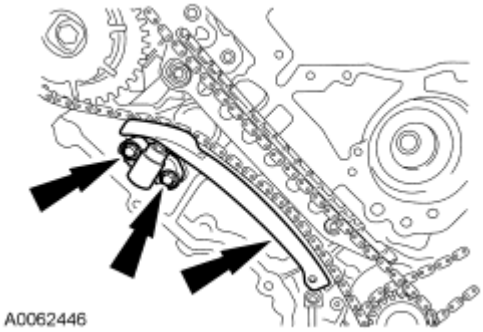

Fig. 63: Identifying RH Timing Chain Tensioner, Tensioner Arm And Bolts
Courtesy of FORD MOTOR CO.

12. Remove the RH and LH timing chains and the crankshaft sprocket.
    - Remove the RH timing chain from the camshaft sprocket.
    - Remove the RH timing chain from the crankshaft sprocket.
    - Remove the LH timing chain from the camshaft sprocket.
    - Remove the LH timing chain and crankshaft sprocket.

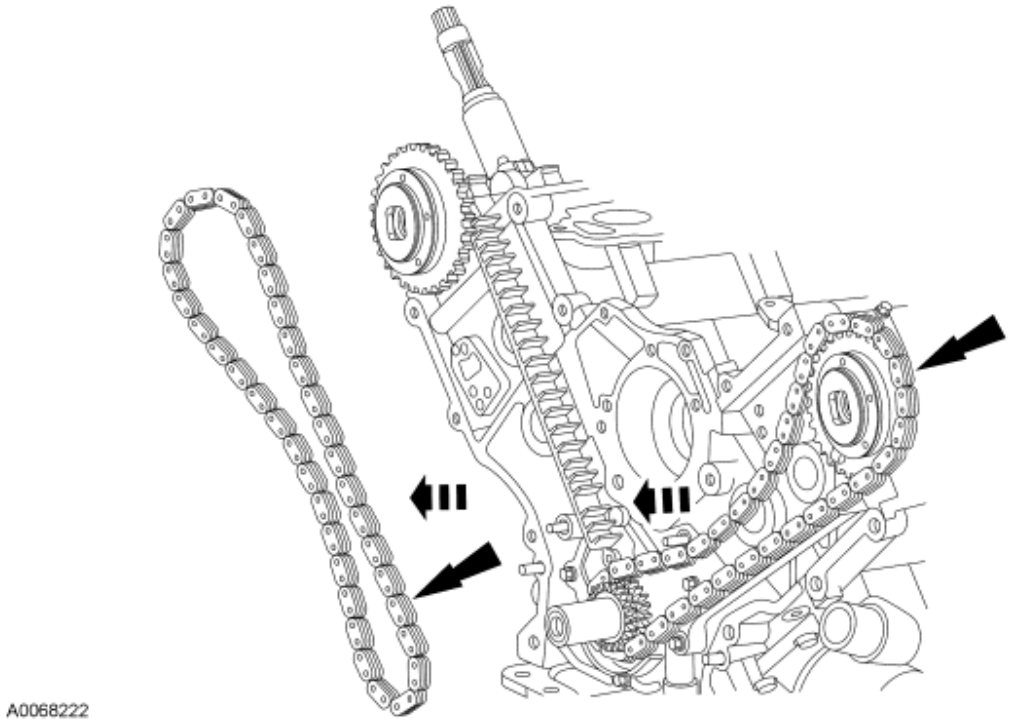

Fig. 64: Identifying RH/LH Timing Chains
Courtesy of FORD MOTOR CO.

NOTE: RH shown, LH similar.

13. Remove the LH and RH timing chain guides.
    - Remove the bolts.
    - Remove both timing chain guides.

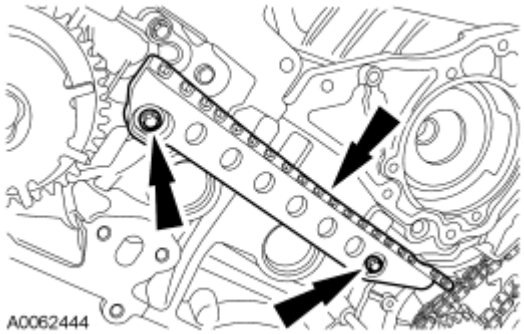

Fig. 65: Identifying Timing Chain Guide And Mounting Bolts
Courtesy of FORD MOTOR CO.

CAUTION: Damage to the camshaft phaser sprocket assembly will occur if mishandled or used as a lifting or leveraging device.

CAUTION: Only use hand tools to remove the camshaft phaser sprocket assembly or damage may occur to the camshaft or camshaft phaser unit.

14. Using the special tool, remove the bolt and the RH camshaft phaser sprocket assembly.
    - Discard the camshaft phaser sprocket bolt.

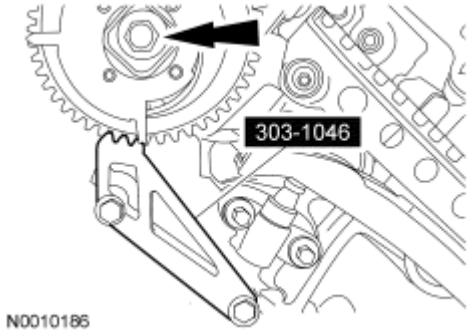

Fig. 66: Identifying VCT Phaser Sprocket Bolt And Holder Tool
Courtesy of FORD MOTOR CO.

CAUTION: Damage to the camshaft phaser sprocket assembly will occur if mishandled or used as a lifting or leveraging device.

CAUTION: Only use hand tools to remove the camshaft phaser sprocket assembly or damage may occur to the camshaft or camshaft phaser unit.

15. Using the special tool, remove the bolt and the LH camshaft phaser sprocket assembly.
    - Discard the camshaft phaser sprocket bolt.

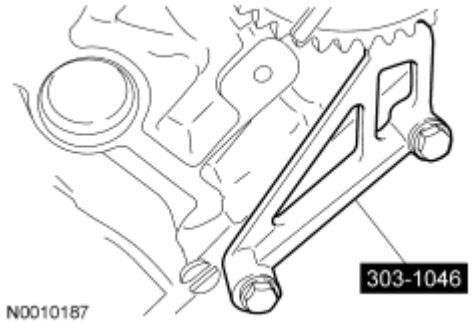

Fig. 67: Identifying Special Sprocket Phaser Tool
Courtesy of FORD MOTOR CO.

CAUTION: Remove the front thrust camshaft bearing cap straight upward from the bearing towers or the bearing cap may be damaged from side

loading.

16. Remove the 2 bolts and the RH cylinder head camshaft front bearing cap.

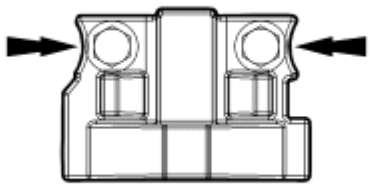

N0070049

Fig. 68: Removing Camshaft Front Bearing Cap Bolts
Courtesy of FORD MOTOR CO.

CAUTION: The camshaft bearing caps must be installed in their original locations. Record camshaft bearing cap locations. Failure to follow these instructions may result in engine damage.

17. Remove the remaining bolts in the sequence shown and remove the RH cylinder head camshaft bearing caps.

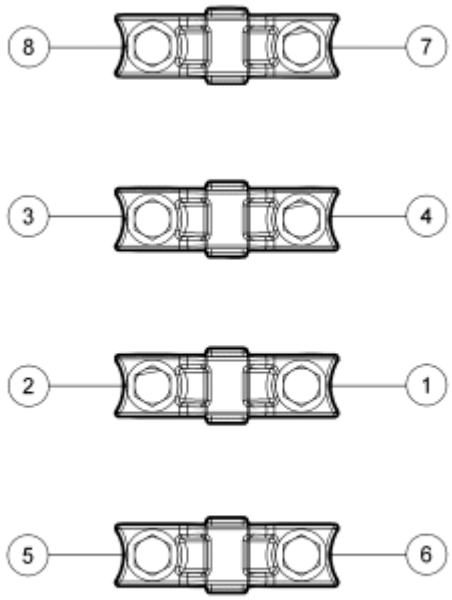

N0070050

Fig. 69: Removing Camshaft Bearing Caps Bolts In Sequence
Courtesy of FORD MOTOR CO.

18. Clean and inspect the RH camshaft bearing caps.
    - The camshaft front thrust bearing cap contains an oil metering groove. Make sure the groove is free of foreign material.

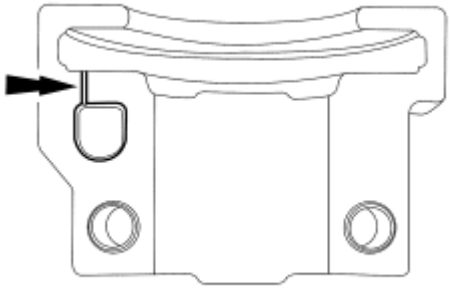

N0010448

Fig. 70: Identifying Camshaft Front Thrust Bearing Cap Oil Metering Groove
Courtesy of FORD MOTOR CO.

19. Remove the RH camshaft.

CAUTION: Remove the front thrust camshaft bearing cap straight upward from the bearing towers or the bearing cap may be damaged from side loading.

20. Remove the 2 bolts and the LH cylinder head camshaft front bearing cap.

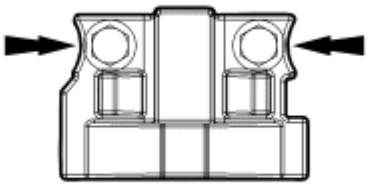

N0070049

Fig. 71: Removing Camshaft Front Bearing Cap Bolts
Courtesy of FORD MOTOR CO.

CAUTION: The camshaft bearing caps must be installed in their original locations. Record camshaft bearing cap locations. Failure to follow these instructions may result in engine damage.

21. Remove the remaining bolts in the sequence shown and remove the LH cylinder head camshaft bearing caps.

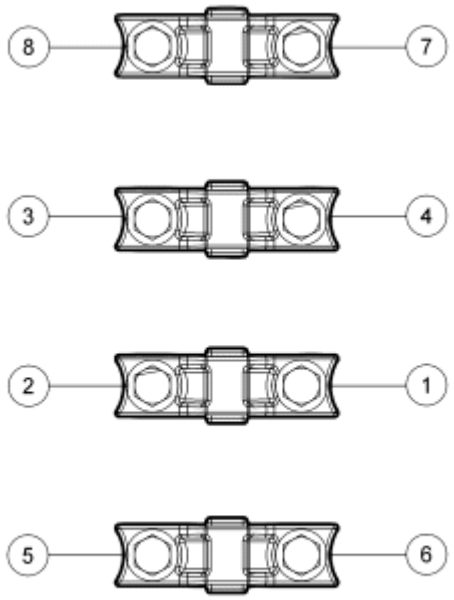

N0070050

Fig. 72: Removing Camshaft Bearing Caps Bolts In Sequence
Courtesy of FORD MOTOR CO.

22. Clean and inspect the LH camshaft bearing caps.
    - The camshaft front thrust bearing cap contains an oil metering groove. Make sure the groove is free of foreign material.

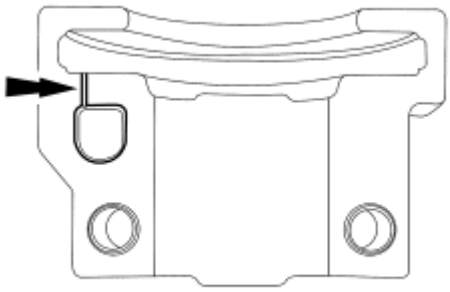

N0010448

Fig. 73: Identifying Camshaft Front Thrust Bearing Cap Oil Metering Groove
Courtesy of FORD MOTOR CO.

23. Remove the LH camshaft.

CAUTION: If the components are to be reinstalled, they must be installed in their original positions. Mark the components for installation into their original locations. Failure to follow these instructions may result in engine damage.

24. Remove all of the remaining roller followers from the cylinder heads.

INSTALLATION

1. Install the LH and RH camshafts.
   - Lubricate the camshaft and camshaft journals with clean engine oil prior to installation.

NOTE: LH shown, RH similar.

2. Install the LH and RH camshaft bearing caps in their original locations.
   - Lubricate the camshaft bearing caps with clean engine oil.
   - Position the front camshaft bearing cap.
   - Position the remaining camshaft bearing caps.
   - Install the bolts loosely.
   - Tighten to 10 N.m (89 lb-in) in the sequence shown.

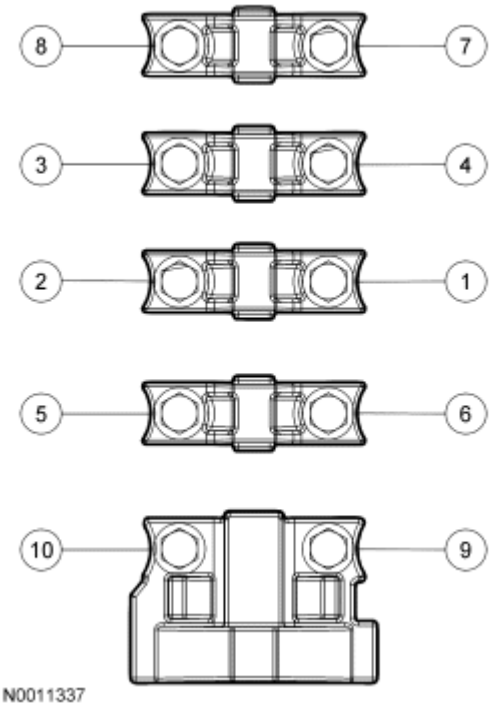

Fig. 74: Identifying Camshaft Bearing Cap Bolt Loosening/Tightening Sequence
Courtesy of FORD MOTOR CO.

CAUTION: Damage to the camshaft phaser sprocket assembly will occur if mishandled or used as a lifting or leveraging device.

NOTE: LH shown, RH similar.

3. Install the camshaft phaser sprockets and new camshaft phaser bolts finger-tight.

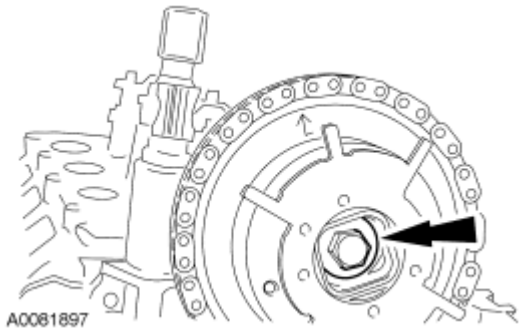

Fig. 75: Identifying Camshaft Phaser And Sprocket Assembly Bolt
Courtesy of FORD MOTOR CO.

CAUTION: Damage to the camshaft phaser sprocket assembly will occur if mishandled or used as a lifting or leveraging device.

CAUTION: Only use hand tools to remove the camshaft phaser sprocket assembly or damage may occur to the camshaft or camshaft phaser unit.

NOTE: LH shown, RH similar.

4. Using the special tool, tighten the LH and RH camshaft phaser sprocket bolts in 2 stages.
   - Stage 1: Tighten to 40 N.m (30 lb-ft).
   - Stage 2: Tighten an additional 90 degrees.

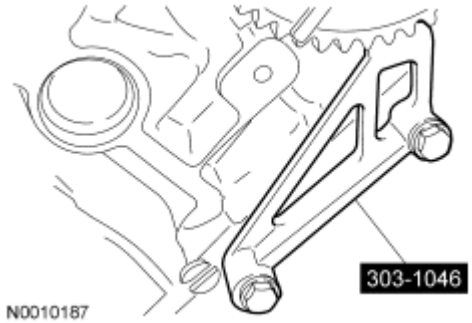

Fig. 76: Identifying Special Sprocket Phaser Tool
Courtesy of FORD MOTOR CO.

5. Install the crankshaft sprocket, making sure the flange faces forward.

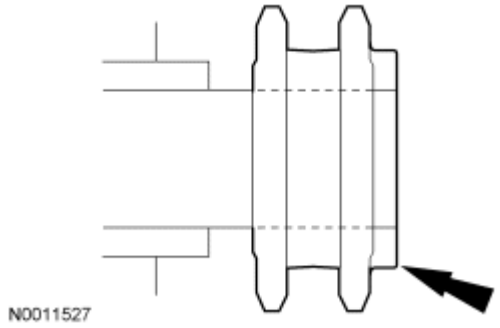

Fig. 77: Identifying Crankshaft Sprocket
Courtesy of FORD MOTOR CO.

6. Rotate the crankshaft to position the crankshaft sprocket timing mark in the 6 o'clock position.

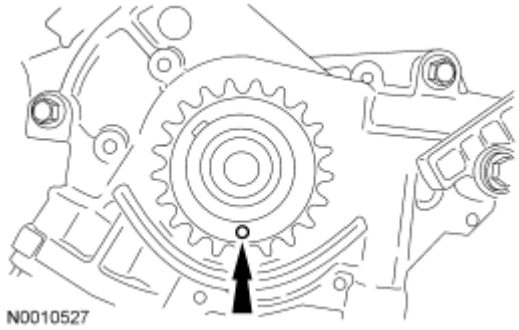

Fig. 78: Locating Crankshaft Sprocket Timing Mark
Courtesy of FORD MOTOR CO.

CAUTION: If one or both tensioner mounting bolts are loosened or removed, the tensioner-sealing bead must be inspected for seal integrity. Any cracks, tears, cuts or separation from the tensioner body, or permanent compression of the seal bead, will require replacement of the tensioner.

7. Inspect the RH and LH timing chain tensioners.
   - Install new tensioners as necessary.

CAUTION: Timing chain procedures must be followed exactly or damage to valves and pistons will result.

8. Compress the tensioner plunger, using a vise.

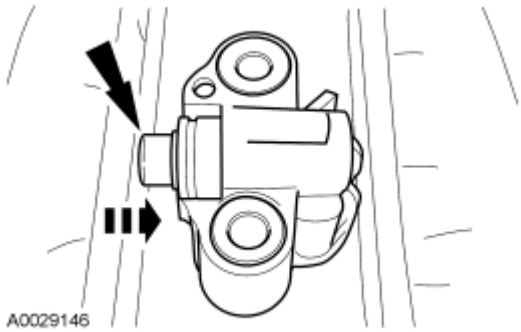

Fig. 79: Compressing Tensioner Plunger
Courtesy of FORD MOTOR CO.

9. Install a retaining clip on the tensioner to hold the plunger in during installation.

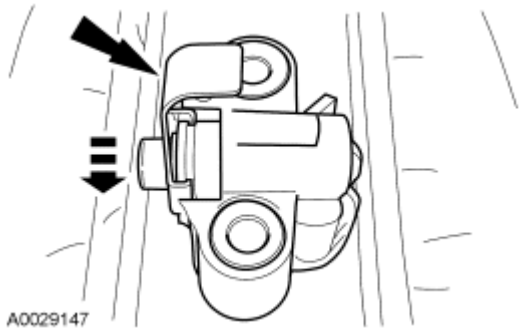

Fig. 80: Identifying Retaining Clip on Tensioner
Courtesy of FORD MOTOR CO.

10. Remove the tensioner from the vise.
11. If the colored links are not visible, mark one link on one end and one link on the other end and use as timing marks.

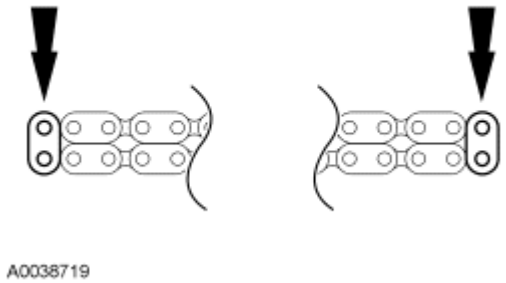

Fig. 81: Identifying Timing Chain Copper Links
Courtesy of FORD MOTOR CO.

12. Install the 4 bolts and the LH and RH timing chain guides.
    - Tighten to 10 N.m (89 lb-in).

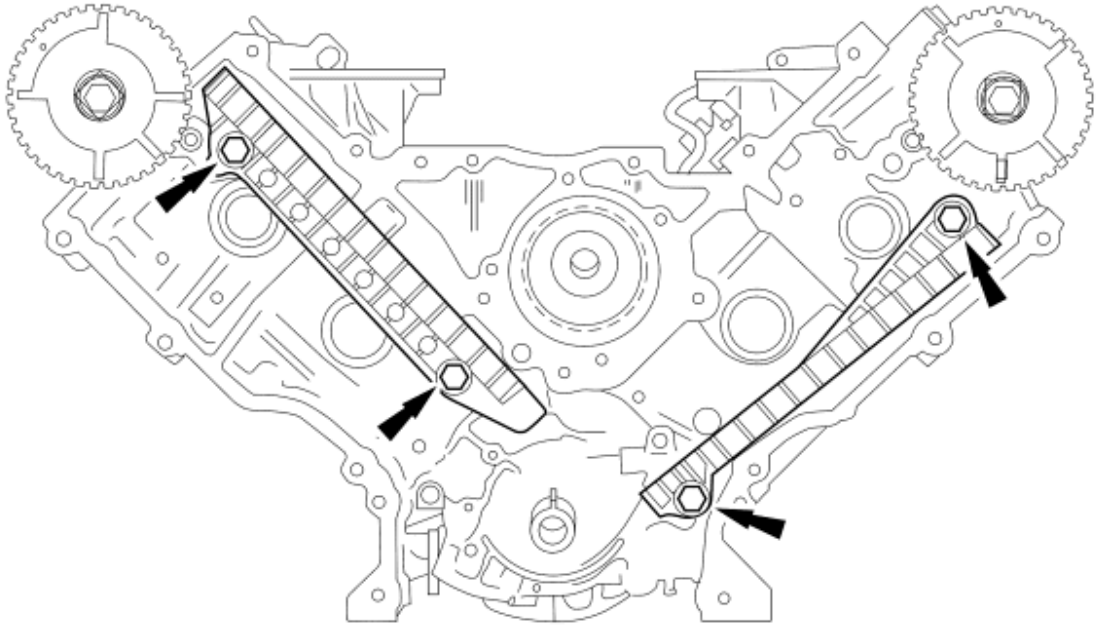

Fig. 82: Identifying Timing Chain Guides
Courtesy of FORD MOTOR CO.

13. Position the lower end of the LH (inner) timing chain on the crankshaft sprocket, aligning the timing mark on the outer flange of the crankshaft sprocket with the single colored (marked) link on the chain.

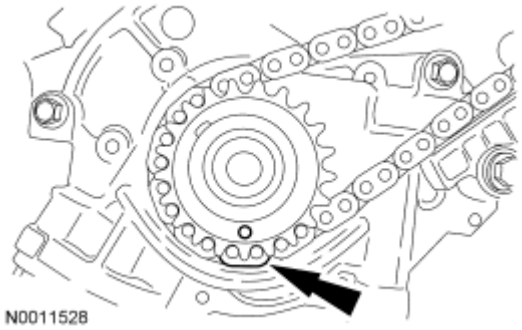

Fig. 83: Aligning Crankshaft Sprocket Timing Mark And LH Timing Chain Link
Courtesy of FORD MOTOR CO.

NOTE: Make sure the upper half of the timing chain is below the tensioner arm dowel.

14. Position the LH timing chain on the camshaft sprocket. Make sure the camshaft sprocket timing mark is aligned with the colored (marked) chain link.

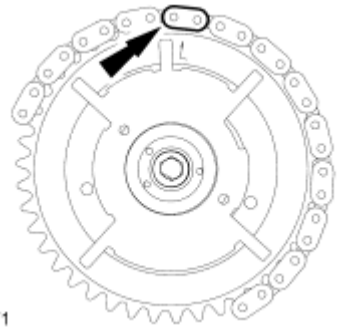

Fig. 84: Locating Camshaft Sprocket Timing Copper Mark
Courtesy of FORD MOTOR CO.

NOTE: The LH timing chain tensioner arm has a bump near the dowel hole for identification.

15. Position the LH timing chain tensioner arm on the dowel pin and install the LH timing chain tensioner and bolts.
    - Tighten to 25 N.m (18 lb-ft).

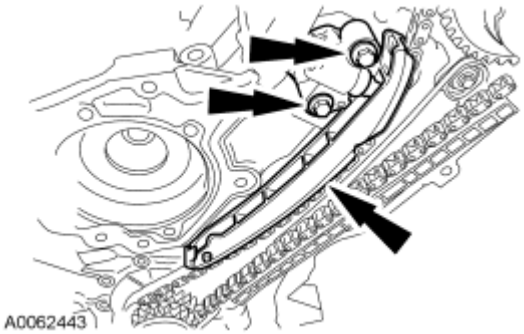

Fig. 85: Identifying LH Timing Chain Tensioner & Tensioner Arm
Courtesy of FORD MOTOR CO.

16. Remove the retaining clip from the LH timing chain tensioner.

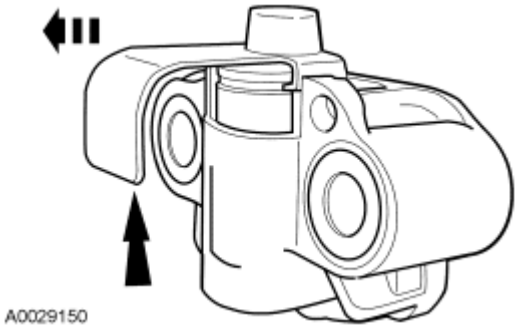

Fig. 86: Identifying Retaining Clip And Timing Chain Tensioner
Courtesy of FORD MOTOR CO.

17. Position the lower end of the RH (outer) timing chain on the crankshaft sprocket, aligning the timing mark on the sprocket with the single colored (marked) chain link.

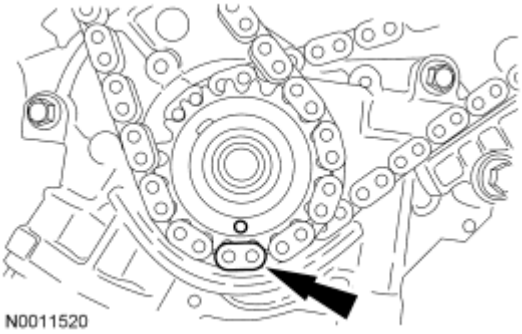

Fig. 87: Aligning Crankshaft Sprocket Timing Mark And RH Timing Chain Link
Courtesy of FORD MOTOR CO.

NOTE: The camshaft phaser and sprocket will be stamped with one of the illustrated timing marks for the RH camshaft.

NOTE: The lower half of the timing chain must be positioned above the tensioner arm dowel.

18. Position the RH timing chain on the camshaft sprocket. Make sure the camshaft sprocket timing mark is aligned with the colored (marked) chain link.

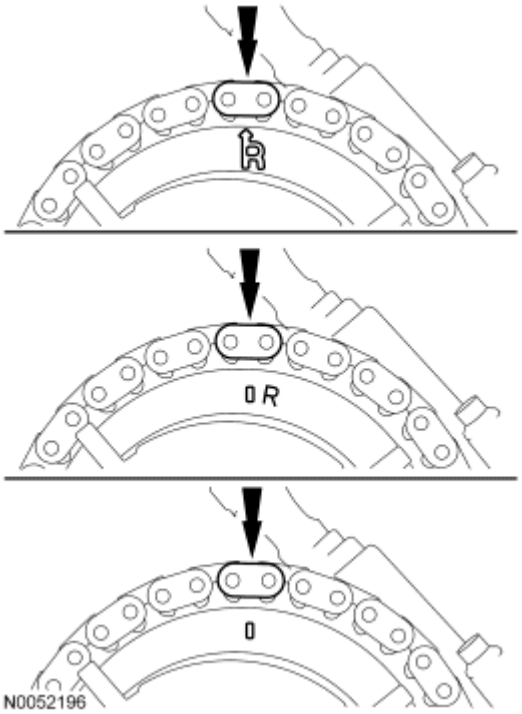

Fig. 88: Locating Camshaft Sprocket Timing Mark Aligned With Copper Chain Link

Courtesy of FORD MOTOR CO.

19. Position the RH timing chain tensioner arm on the dowel pin and install the RH timing chain tensioner and bolts.
    - Tighten to 25 N.m (18 lb-ft).

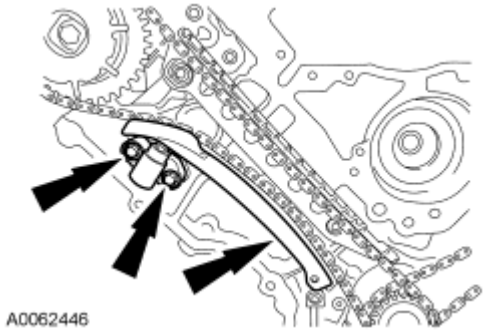

Fig. 89: Identifying RH Timing Chain Tensioner, Tensioner Arm And Bolts
Courtesy of FORD MOTOR CO.

20. Remove the retaining clip from the RH timing chain tensioner.

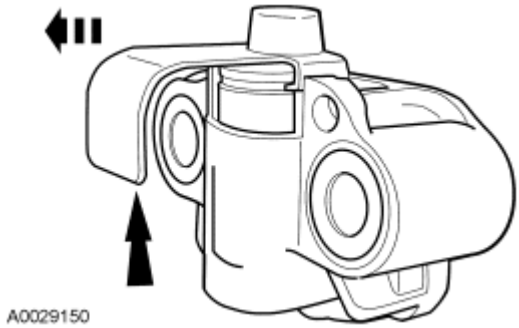

Fig. 90: Identifying Retaining Clip And Timing Chain Tensioner
Courtesy of FORD MOTOR CO.

NOTE: The RH and LH camshaft phaser sprockets are similar. Refer to the single timing mark to identify the RH camshaft phaser sprocket and the L timing mark to identify the LH camshaft phaser sprocket.

21. As a post-check, verify correct alignment of all timing marks. Make sure the timing marks on the sprockets correspond to the above note.

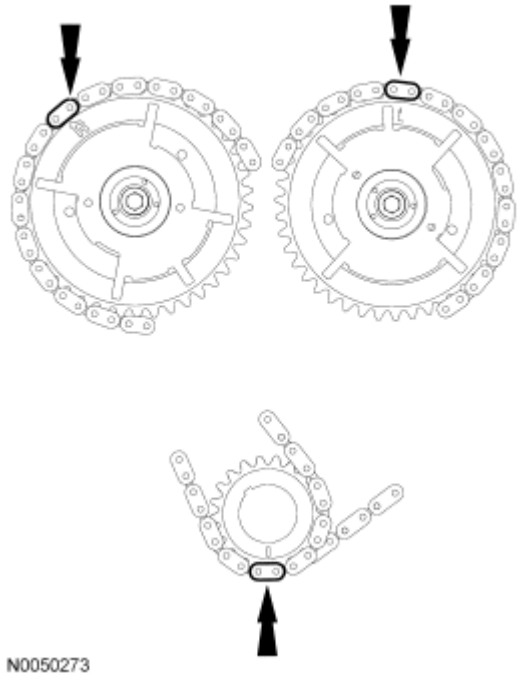

Fig. 91: Verify Correct Alignment Of All Timing Marks
Courtesy of FORD MOTOR CO.

22. Install the crankshaft sensor ring on the crankshaft.

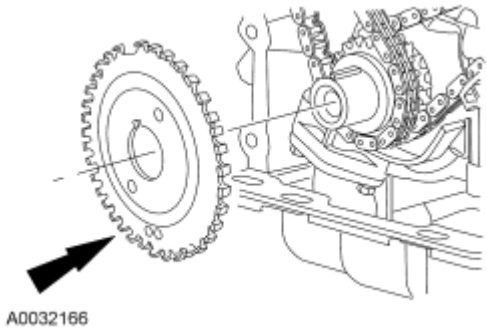

Fig. 92: View Of Crankshaft Sensor Ring At Crankshaft
Courtesy of FORD MOTOR CO.

NOTE: It is necessary to rotate the engine to position the camshaft lobes at base circle to install the roller followers.

23. Using the special tool, install all of the camshaft roller followers.
    - Lubricate the roller followers with clean engine oil prior to installation.

Fig. 93: Compressing Spring Using Special Tool (303-1039)
Courtesy of FORD MOTOR CO.

24. Install the engine front cover. For additional information, refer to **Engine Front Cover**.

VALVE TRAIN COMPONENTS - EXPLODED VIEW

NOTE: LH side.

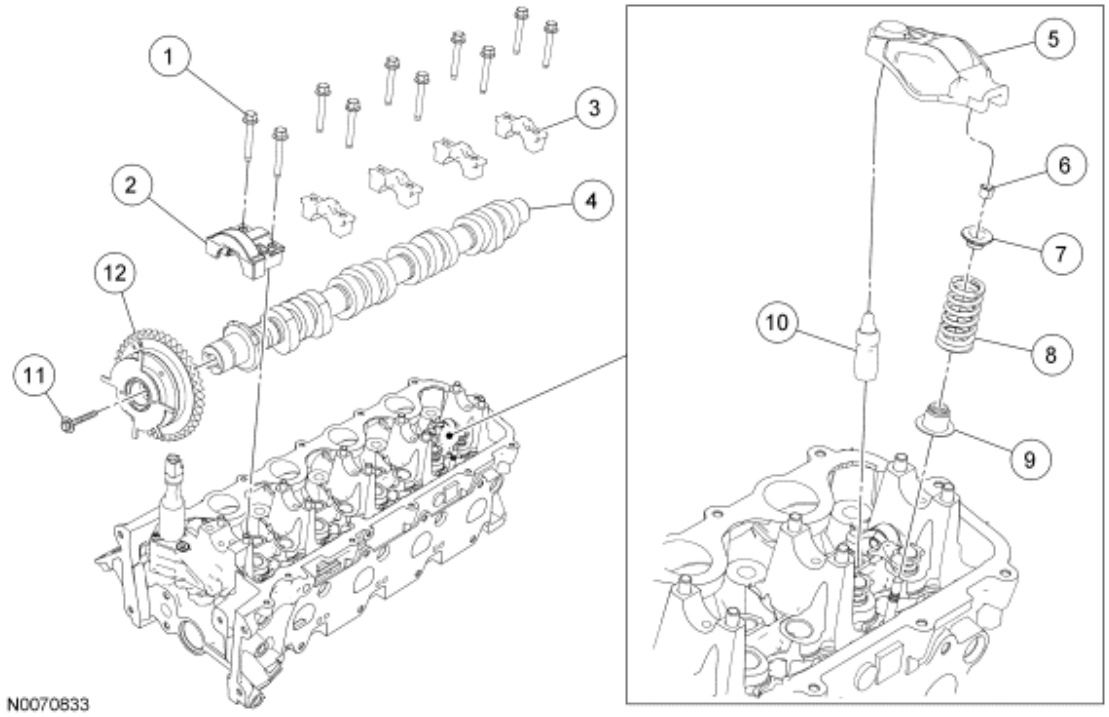

Fig. 94: Exploded View Of Valve Train Components (1 Of 2)
Courtesy of FORD MOTOR CO.

Item	Part Number	Description
1	N807834	Camshaft bearing cap bolt (10 required)
2	6B284	Camshaft front bearing cap
3	6B280	Camshaft bearing cap (4 required)
4	6C255	Camshaft
5	6529	Camshaft roller follower (12 required)
6	6518	Valve spring retainer key (24 required)
7	6514	Valve spring retainer (12 required)
8	6513	Valve spring (12 required)
9	6A517	Valve seal (12 required)
10	6C501	Hydraulic lash adjuster (12 required)
11	6279	Camshaft phaser and sprocket bolt
12	6C524	Camshaft phaser and sprocket

NOTE: **RH side.**

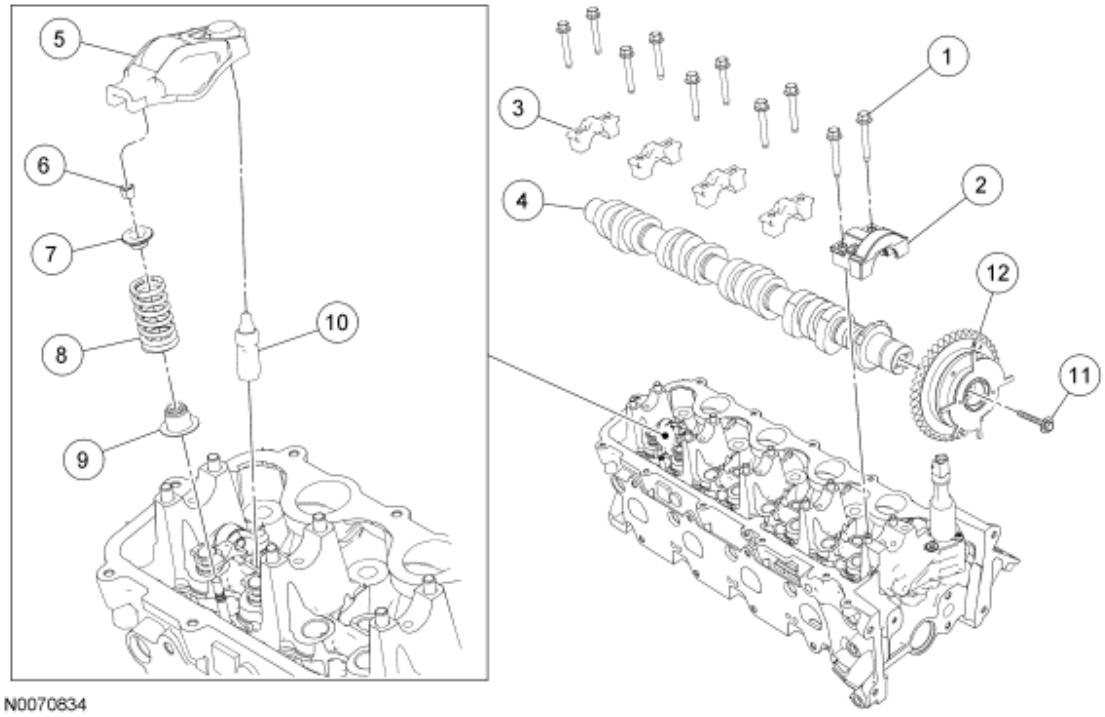

Fig. 95: Exploded View Of Valve Train Components (2 Of 2)
Courtesy of FORD MOTOR CO.

Item	Part Number	Description
1	N807834	Camshaft bearing cap bolt (10 required)
2	6B284	Camshaft front bearing cap
3	6B280	Camshaft bearing cap (4 required)
4	6251	Camshaft
5	6529	Camshaft roller follower (12 required)
6	6518	Valve spring retainer key (24 required)
7	6514	Valve spring retainer (12 required)
8	6513	Valve spring (12 required)
9	6A517	Valve seal (12 required)
10	6C501	Hydraulic lash adjuster (12 required)
11	6279	Camshaft phaser and sprocket bolt
12	6C524	Camshaft phaser and sprocket

1. For additional information, refer to the procedures.

CAMSHAFT - LH

Special Tools

Illustration	Tool Name	Tool Number
	Compressor, Valve Spring	303-1039

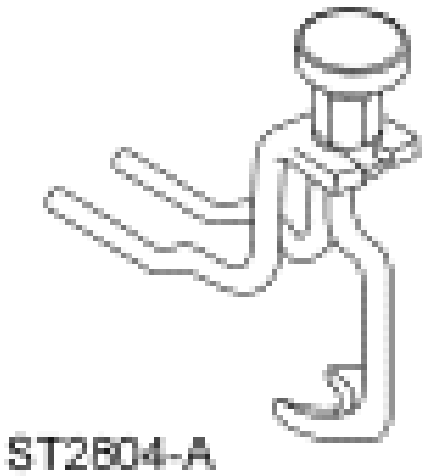		
	Wedge, Timing Chain	303-1175

Material

Item	Specification
Motorcraft SAE 5W-20 Premium Synthetic Blend Motor Oil XO-5W20-QSP (US); Motorcraft SAE 5W-20 Super Premium Motor Oil CXO-5W20-LSP12 (Canada); or equivalent	WSS-M2C930-A

REMOVAL

NOTE: The camshaft procedure must be followed exactly or damage to the valves and pistons will result.

1. Position the crankshaft damper spoke at the 12 o'clock position and the timing mark indentation at the 1 o'clock position.

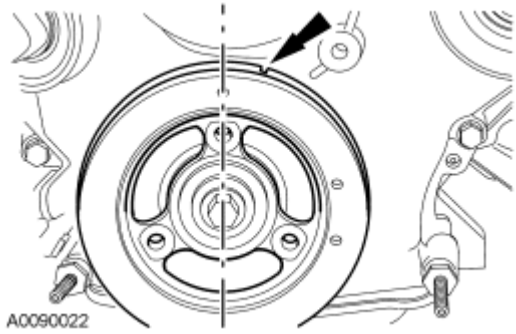

Fig. 96: Locating Crankshaft Damper Spoke Timing Mark
Courtesy of FORD MOTOR CO.

2. Remove the LH valve cover. For additional information, refer to **Valve Cover - LH**.

NOTE: Damage to the camshaft phaser and sprocket assembly will occur if mishandled or used as a lifting or leveraging device.

3. Loosen and back off the LH camshaft phaser and sprocket bolt one full turn.
4. Disconnect the LH camshaft position (CMP) sensor electrical connector.

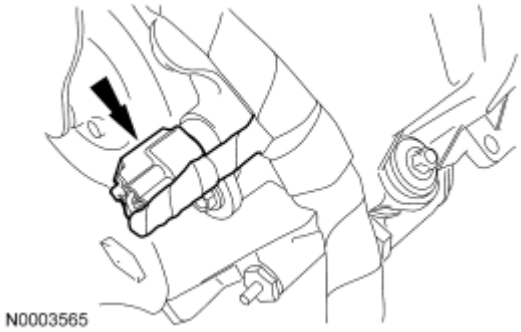

Fig. 97: Identifying LH CMP Sensor Electrical Connector
Courtesy of FORD MOTOR CO.

5. Remove the LH CMP sensor and the bolt.

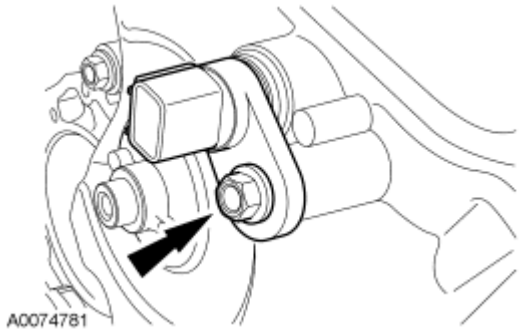

Fig. 98: Locating LH CMP Sensor Bolt

Courtesy of FORD MOTOR CO.

NOTE: If the camshaft lobes are not exactly positioned as shown, the crankshaft keyway will require one full additional rotation to 12 o'clock.

6. The No. 5 cylinder camshaft lobe must be coming up on the exhaust stroke. Verify by noting the position of the 2 intake camshaft lobes and the exhaust lobe on the No. 5 cylinder.

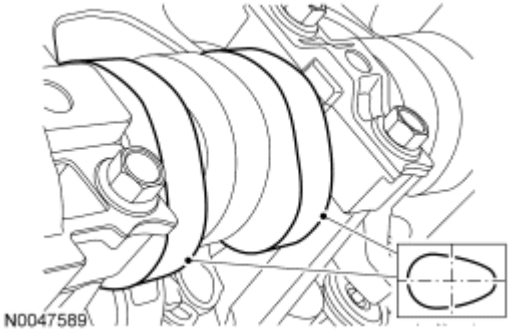

Fig. 99: Checking Position Of No. 5 Cylinder Intake And Exhaust Camshaft Lobes
Courtesy of FORD MOTOR CO.

7. Remove only the 3 camshaft roller followers shown in the illustration.

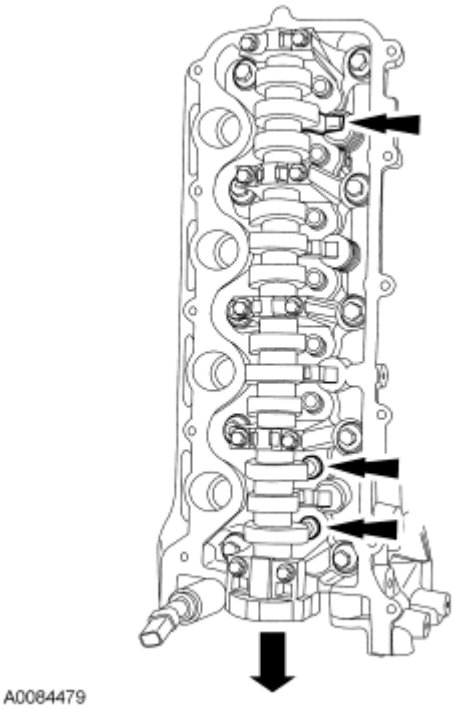

Fig. 100: Locating LH Cylinder Head Camshaft Roller Followers And Bolts
Courtesy of FORD MOTOR CO.

NOTE: **The camshaft roller followers must be installed in their original locations. Record camshaft roller follower locations. Failure to follow these instructions may result in engine damage.**

NOTE: **Do not allow the valve keepers to fall off the valve or the valve may drop into the cylinder. If a valve drops into the cylinder, the cylinder head must be removed. For additional information, refer to Cylinder Head.**

NOTE: **It may be necessary to push the valve down while compressing the spring.**

8. Using the special tool, remove only the 3 designated camshaft roller followers from the previous step.

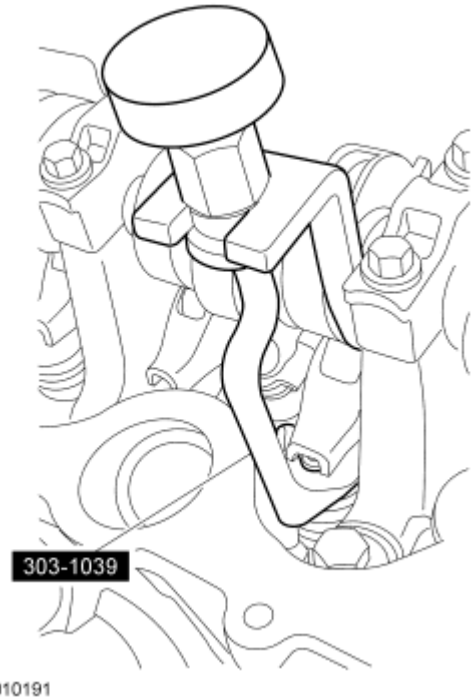

Fig. 101: Compressing Spring Using Special Tool (303-1039)
Courtesy of FORD MOTOR CO.

NOTE: **The crankshaft cannot be moved past the 6 o'clock position once set or engine damage may occur.**

9. Rotate the crankshaft clockwise, as viewed from the front, positioning the crankshaft damper spoke at the 6 o'clock position and the timing mark indentation at the 7 o'clock position.

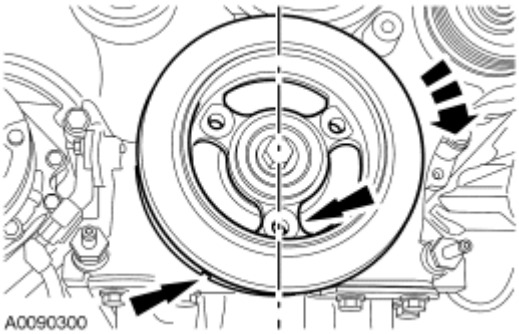

Fig. 102: Positioning Crankshaft Damper Spoke At 6 O'clock Position And Timing Mark Indentation At 7 O'clock Position
Courtesy of FORD MOTOR CO.

NOTE: **Engine is not freewheeling. Camshaft procedure must be followed exactly or damage to valves and pistons will result.**

NOTE: **The Timing Chain Wedge tool must be installed square to the timing chain and the engine block.**

NOTE: **Engine front cover removed for clarity.**

10. Install the special tool in the LH timing chain as shown.

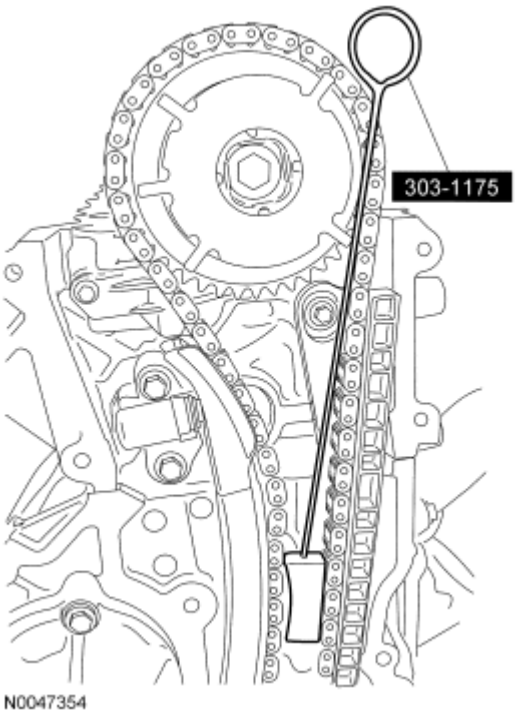

Fig. 103: Identifying Special Tool (303-1175)
Courtesy of FORD MOTOR CO.

NOTE: **Do not remove the Timing Chain Wedge tool at any time during assembly. If the special tool is removed or out of placement, the engine front cover must be removed and the engine must be retimed. For additional information, refer to Timing Drive Components.**

NOTE: **The timing chain must be installed in its original position onto the camshaft phaser and sprocket using the scribed marks, or damage to valves and pistons will result.**

NOTE: **RH shown, LH similar.**

11. Scribe a location mark on the timing chain and the camshaft phaser and sprocket assembly.

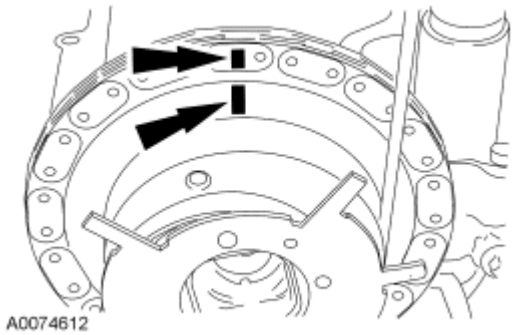

Fig. 104: Identifying Scribe Marks Of Camshaft Phaser And Chain
Courtesy of FORD MOTOR CO.

NOTE: **Remove the front thrust camshaft bearing cap straight upward from the bearing towers or the bearing cap may be damaged from side loading.**

12. Remove the 2 bolts and the LH cylinder head camshaft front bearing cap.

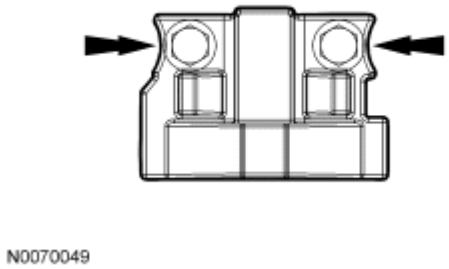

Fig. 105: Removing Camshaft Front Bearing Cap Bolts
Courtesy of FORD MOTOR CO.

NOTE: **The camshaft bearing caps must be installed in their original locations. Record camshaft bearing cap locations. Failure to follow these**

instructions may result in engine damage.

13. Remove the remaining bolts in the sequence shown and remove the LH cylinder head camshaft bearing caps.

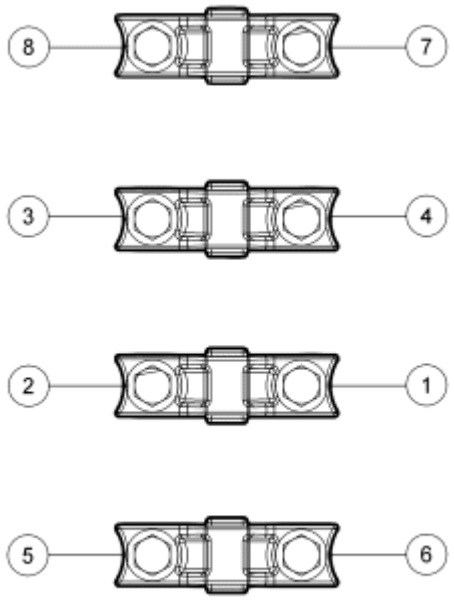

N0070050

Fig. 106: Removing Camshaft Bearing Caps Bolts In Sequence
Courtesy of FORD MOTOR CO.

14. Clean and inspect the LH camshaft bearing caps.
    - The camshaft front thrust bearing cap contains an oil metering groove. Make sure the groove is free of foreign material.

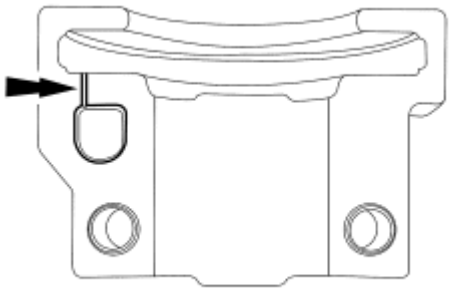

N0010448

Fig. 107: Identifying Camshaft Front Thrust Bearing Cap Oil Metering Groove
Courtesy of FORD MOTOR CO.

NOTE: Damage to the camshaft phaser and sprocket assembly will occur if

mishandled or used as a lifting or leveraging device.

NOTE: Only use hand tools to remove the camshaft phaser and sprocket bolt or damage may occur to the camshaft or camshaft phaser and sprocket.

NOTE: Do not remove the Timing Chain Wedge tool at any time during assembly. If the special tool is removed or out of placement, the engine front cover must be removed and the engine must be retimed. For additional information, refer to Timing Drive Components.

15. Remove the bolt and withdraw the camshaft from the camshaft phaser and sprocket assembly, leaving the camshaft phaser and sprocket assembly in place.
    - Discard the bolt and washer.

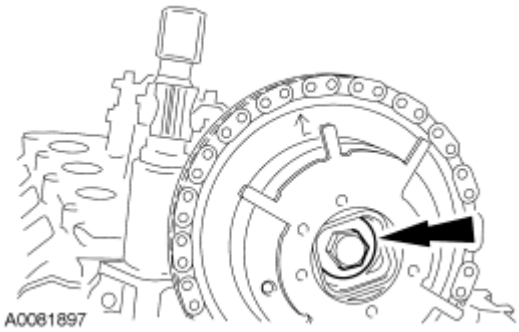

Fig. 108: Identifying Camshaft Phaser And Sprocket Assembly Bolt
Courtesy of FORD MOTOR CO.

16. Inspect the camshaft phaser and sprocket for damage. For additional information, refer to **Camshaft Phaser and Sprocket**.

INSTALLATION

1. Lubricate the camshaft and camshaft journals with clean engine oil.

NOTE: Do not remove the Timing Chain Wedge tool at any time during assembly. If the special tool is removed or out of placement, the engine front cover must be removed and the engine must be retimed. For additional information, refer to Timing Drive Components.

NOTE: Damage to the camshaft phaser and sprocket assembly will occur if mishandled or used as a lifting or leveraging device.

NOTE: Do not allow the camshaft roller followers to move out of position when installing the camshaft.

2. Install the camshaft into the camshaft phaser and sprocket assembly and onto the head. Install a new camshaft phaser and sprocket bolt finger-tight.

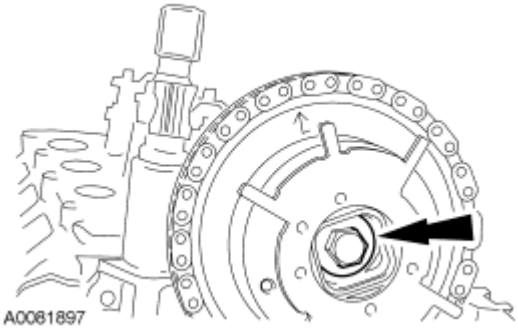

Fig. 109: Identifying Camshaft Phaser And Sprocket Assembly Bolt
Courtesy of FORD MOTOR CO.

NOTE: **Do not remove the Timing Chain Wedge tool at any time during assembly. If the special tool is removed or out of placement, the engine front cover must be removed and the engine must be retimed. For additional information, refer to Timing Drive Components.**

NOTE: **The timing chain must be installed in its original position onto the camshaft phaser and sprocket using the scribed marks, or damage to valves and pistons will result.**

NOTE: **RH shown, LH similar.**

3. Verify the camshaft phaser and sprocket and timing chain scribe marks are still in alignment.

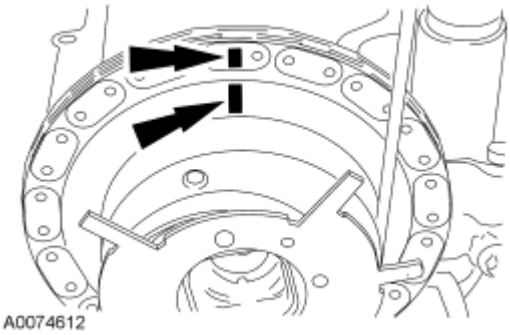

Fig. 110: Identifying Scribe Marks Of Camshaft Phaser And Chain
Courtesy of FORD MOTOR CO.

NOTE: **Do not allow the camshaft roller followers to move out of position when installing the camshaft.**

4. Install the camshaft bearing caps in their original locations.

- Lubricate the camshaft bearing caps with clean engine oil.
- Position the front camshaft bearing cap.
- Position the remaining camshaft bearing caps.
- Install the bolts loosely.

5. Tighten the bolts in the sequence shown.
   - Tighten to 10 Nm (89 lb-in).

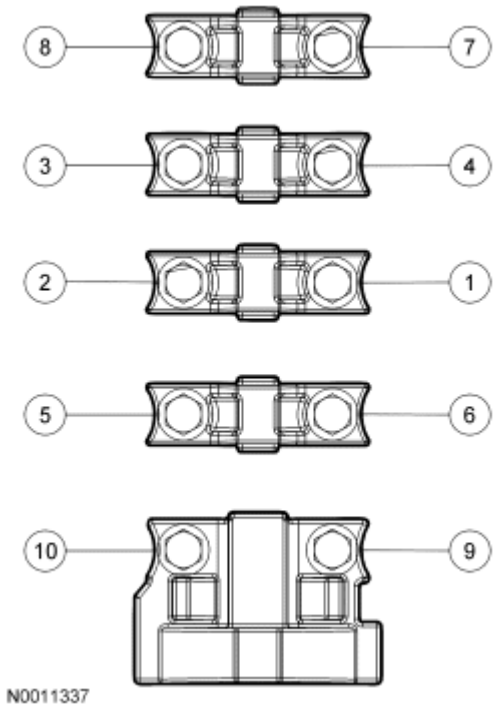

Fig. 111: Identifying Camshaft Bearing Cap Bolt Loosening/Tightening Sequence
Courtesy of FORD MOTOR CO.

NOTE: Engine front cover removed for clarity.

6. Remove the special tools.

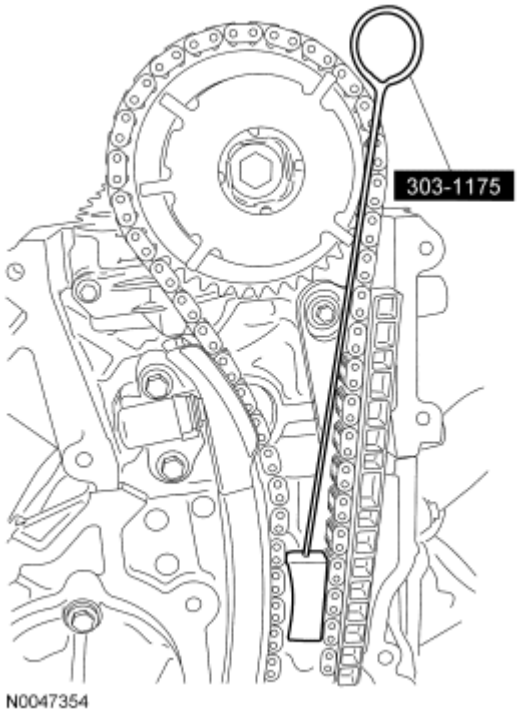

Fig. 112: Identifying Special Tool (303-1175)
Courtesy of FORD MOTOR CO.

7. Rotate the crankshaft a half turn counterclockwise and position the crankshaft damper spoke at the 12 o'clock position and the timing mark indentation at the 1 o'clock position.

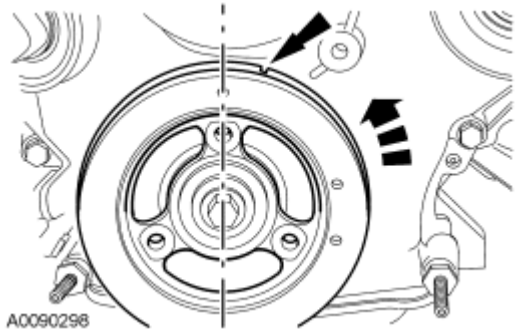

Fig. 113: Positioning Crankshaft Damper Spoke At 12 O'clock Position And Timing Mark Indentation At 1 O'clock Position
Courtesy of FORD MOTOR CO.

8. Verify correct camshaft position by noting the position of the No. 5 cylinder intake and exhaust camshaft lobes.

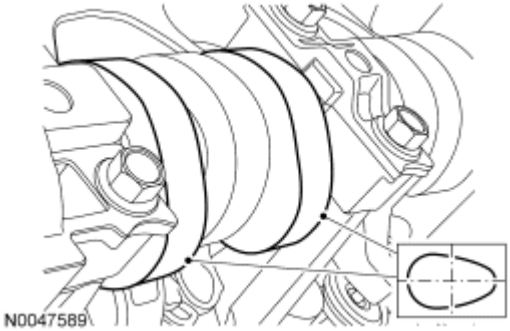

Fig. 114: Checking Position Of No. 5 Cylinder Intake And Exhaust Camshaft Lobes
Courtesy of FORD MOTOR CO.

NOTE: **Do not allow the valve keepers to fall off of the valve or the valve may drop into the cylinder. If a valve drops into the cylinder, the cylinder head must be removed. For additional information, refer to Cylinder Head.**

NOTE: **It may be necessary to push the valve down while compressing the spring.**

9. Using the special tool, install the 3 originally removed camshaft roller followers.

Fig. 115: Compressing Spring Using Special Tool (303-1039)
Courtesy of FORD MOTOR CO.

10. Install the CMP sensor and the bolt.

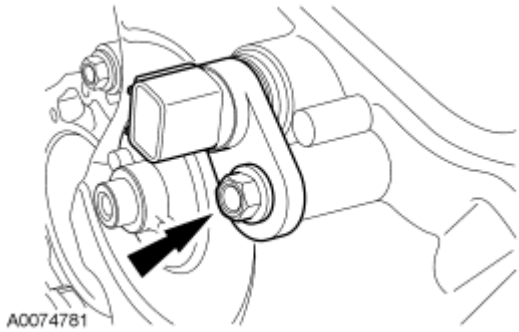

Fig. 116: Locating LH CMP Sensor Bolt
Courtesy of FORD MOTOR CO.

11. Connect the CMP electrical connector.

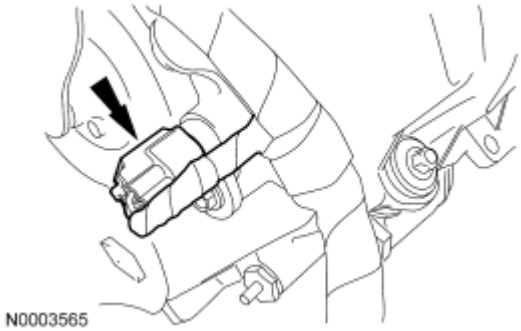

Fig. 117: Identifying LH CMP Sensor Electrical Connector
Courtesy of FORD MOTOR CO.

NOTE: Only use hand tools to install the camshaft phaser and sprocket assembly or damage may occur to the camshaft or camshaft phaser and sprocket.

NOTE: Damage to the camshaft phaser and sprocket assembly will occur if mishandled or used as a lifting or leveraging device.

12. Tighten the camshaft phaser and sprocket bolt in 2 stages:
    - Stage 1: Tighten to 40 Nm (30 lb-ft).
    - Stage 2: Tighten an additional 90 degrees.

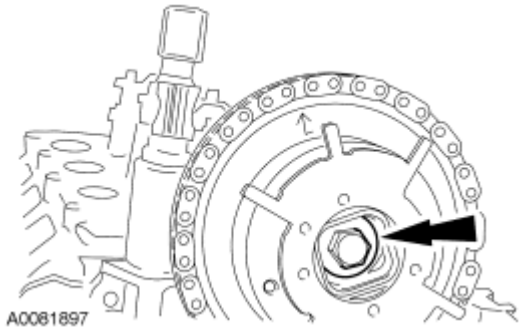

Fig. 118: Identifying Camshaft Phaser And Sprocket Assembly Bolt
Courtesy of FORD MOTOR CO.

13. Install the LH valve cover. For additional information, refer to **Valve Cover - LH**.

CAMSHAFT - RH

Special Tools

Illustration	Tool Name	Tool Number
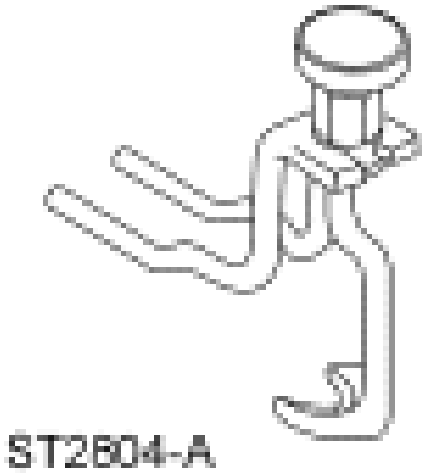	Compressor, Valve Spring	303-1039
	Wedge, Timing Chain	303-1175

		

Material

Item	Specification
Motorcraft SAE 5W-20 Premium Synthetic Blend Motor Oil XO-5W20-QSP (US); Motorcraft SAE 5W-20 Super Premium Motor Oil CXO-5W20-LSP12 (Canada); or equivalent	WSS-M2C930-A

REMOVAL

NOTE: The camshaft procedure must be followed exactly or damage to the valves and pistons will result.

1. Position the crankshaft damper spoke at the 12 o'clock position and the timing mark indentation at the 1 o'clock position.

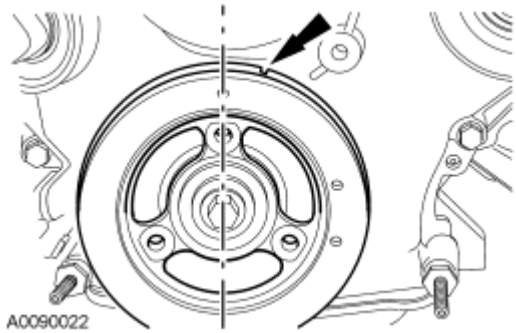

Fig. 119: Locating Crankshaft Damper Spoke Timing Mark
Courtesy of FORD MOTOR CO.

2. Remove the RH valve cover. For additional information, refer to **Valve Cover - RH**.

NOTE: Damage to the camshaft phaser and sprocket assembly will occur if mishandled or used as a lifting or leveraging device.

3. Loosen and backoff the RH camshaft phaser and sprocket bolt one full turn.
4. Disconnect the RH camshaft position (CMP) sensor electrical connector.

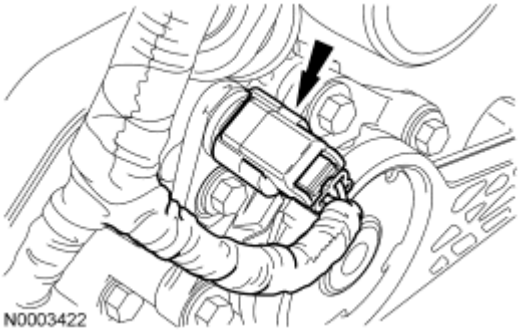

Fig. 120: Identifying RH CMP Sensor Electrical Connector
Courtesy of FORD MOTOR CO.

5. Remove the bolt and the RH CMP sensor.

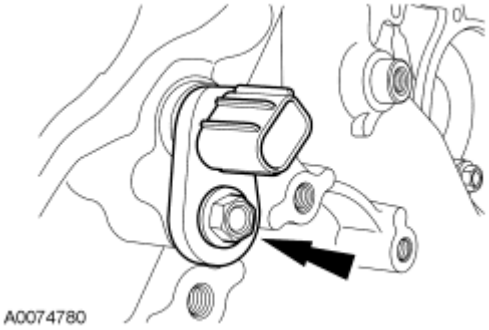

Fig. 121: Locating Camshaft (CMP) Sensor Bolt
Courtesy of FORD MOTOR CO.

NOTE: If the camshaft lobes are not exactly positioned as shown, the crankshaft will require one full additional rotation to 12 o'clock.

6. The No. 1 cylinder camshaft exhaust lobe must be coming up on the exhaust stroke. Verify by noting the position of the 2 intake camshaft lobes and the exhaust lobe on the No. 1 cylinder.

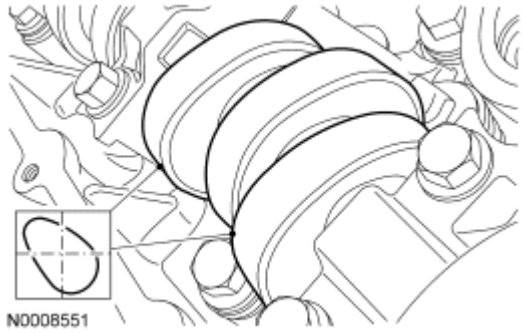

Fig. 122: Identifying Camshaft Lobe Position
Courtesy of FORD MOTOR CO.

7. Remove only the 3 camshaft roller followers shown in the illustration.

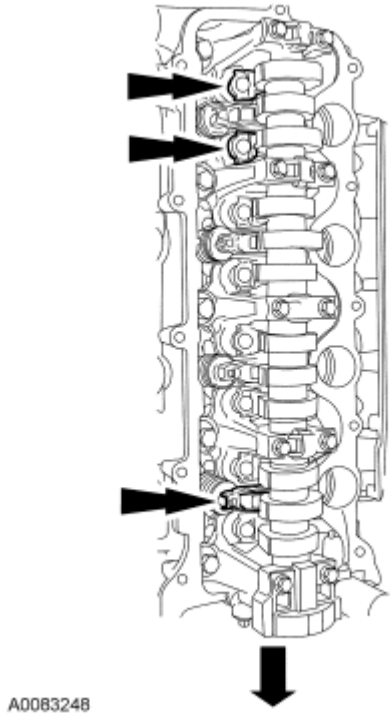

Fig. 123: Identifying RH Cylinder Head Camshaft Roller Followers And Bolts
Courtesy of FORD MOTOR CO.

NOTE: **The camshaft roller followers must be installed in their original locations. Record camshaft roller follower locations. Failure to follow these instructions may result in engine damage.**

NOTE: **Do not allow the valve keepers to fall off the valve or the valve may drop into the cylinder. If a valve drops into the cylinder, the cylinder head must be removed. For additional information refer to Cylinder Head.**

NOTE: It may be necessary to push the valve down while compressing the spring.

8. Using the special tool, remove only the 3 designated camshaft roller followers from the previous step.

Fig. 124: Identifying Special Tool (303-1039) For Removing/Installing Camshaft Roller Followers
Courtesy of FORD MOTOR CO.

NOTE: The crankshaft cannot be moved past the 6 o'clock position once set or engine damage may occur.

9. Rotate the crankshaft clockwise, as viewed from the front, positioning the crankshaft damper spoke at the 6 o'clock position and the timing mark indentation at the 7 o'clock position.

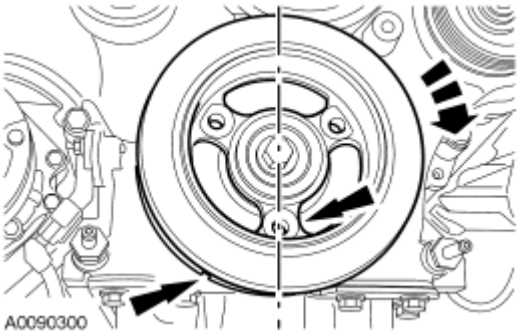

Fig. 125: Positioning Crankshaft Damper Spoke At 6 O'clock Position And Timing Mark Indentation At 7 O'clock Position
Courtesy of FORD MOTOR CO.

NOTE: Engine is not freewheeling. Camshaft procedure must be followed exactly or damage to valves and pistons will result.

NOTE: The Timing Chain Wedge tool must be installed square to the timing chain and the engine block.

NOTE: Engine front cover removed for clarity.

10. Install the special tool in the RH timing chain as shown.

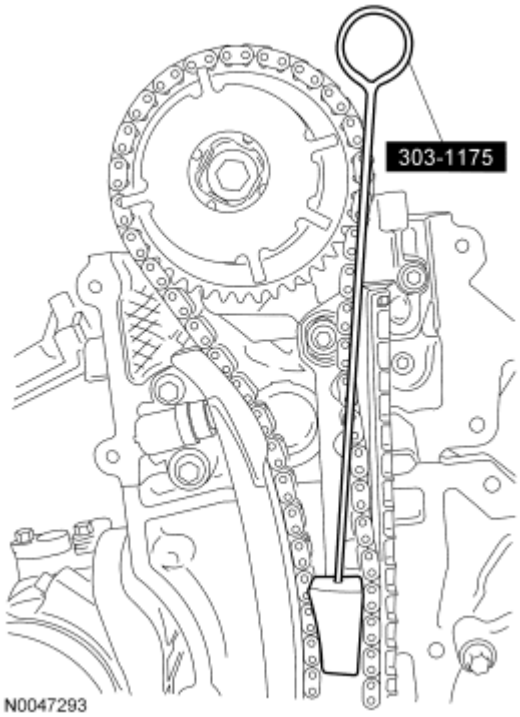

Fig. 126: Identifying Special Tool (303-1175)
Courtesy of FORD MOTOR CO.

NOTE: **Do not remove the Timing Chain Wedge tool at any time during assembly. If the special tool is removed or out of placement, the engine front cover must be removed and the engine must be retimed. For additional information, refer to Timing Drive Components.**

NOTE: **The timing chain must be installed in its original position onto the camshaft phaser and sprocket using the scribed marks, or damage to valves and pistons will result.**

11. Scribe a location mark on the timing chain and the camshaft phaser and sprocket assembly.

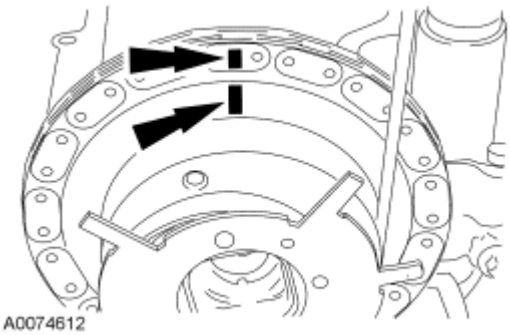

Fig. 127: Identifying Scribe Marks Of Camshaft Phaser And Chain
Courtesy of FORD MOTOR CO.

NOTE: **Remove the front thrust camshaft bearing cap straight upward from the bearing towers or the bearing cap may be damaged from side loading.**

12. Remove the 2 bolts and the RH cylinder head camshaft front bearing cap.

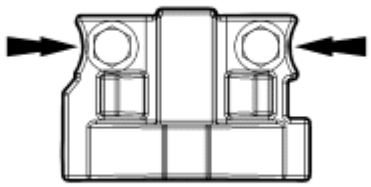

N0070049

Fig. 128: Removing Camshaft Front Bearing Cap Bolts
Courtesy of FORD MOTOR CO.

NOTE: **The camshaft bearing caps must be installed in their original locations. Record camshaft bearing cap locations. Failure to follow these instructions may result in engine damage.**

13. Remove the remaining bolts in the sequence shown and remove the RH cylinder head camshaft bearing caps.

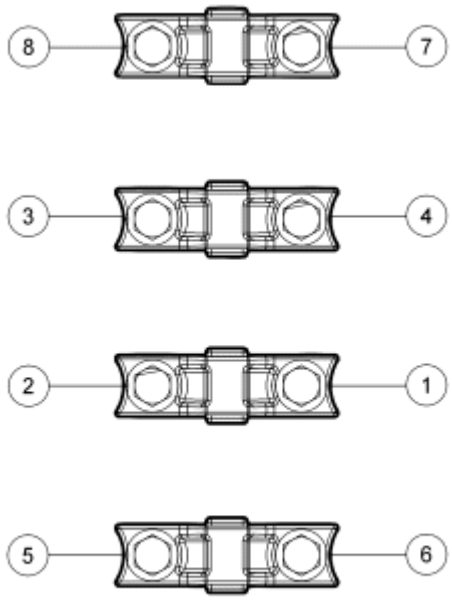

N0070050

Fig. 129: Removing Camshaft Bearing Caps Bolts In Sequence

Courtesy of FORD MOTOR CO.

14. Clean and inspect the RH camshaft bearing caps.
    - The camshaft front thrust bearing cap contains an oil metering groove. Make sure the groove is free of foreign material.

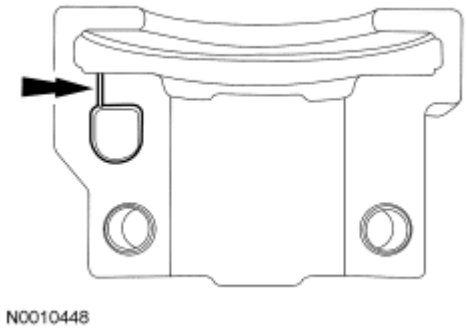

Fig. 130: Identifying Camshaft Front Thrust Bearing Cap Oil Metering Groove
Courtesy of FORD MOTOR CO.

NOTE: **Damage to the camshaft phaser and sprocket assembly will occur if mishandled or used as a lifting or leveraging device.**

NOTE: **Only use hand tools to remove the camshaft phaser and sprocket bolt or damage may occur to the camshaft or camshaft phaser and sprocket.**

NOTE: **Do not remove the Timing Chain Wedge tool at any time during assembly. If the special tool is removed or out of placement, the engine front cover must be removed and the engine must be retimed. For additional information, refer to Timing Drive Components.**

15. Remove the bolt and withdraw the camshaft from the camshaft phaser and sprocket assembly, leaving the camshaft phaser and sprocket assembly in place.
    - Discard the bolt and washer.

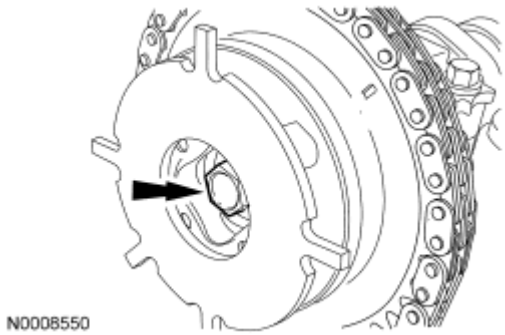

Fig. 131: Identifying Camshaft Phaser And Sprocket Assembly Bolt
Courtesy of FORD MOTOR CO.

16. Inspect the camshaft phaser and sprocket for damage. For additional information, refer to **Camshaft Phaser and Sprocket**.

INSTALLATION

1. Lubricate the camshaft and camshaft journals with clean engine oil.

NOTE: **Do not remove the Timing Chain Wedge tool at any time during assembly. If the special tool is removed or out of placement, the engine front cover must be removed and the engine must be retimed. For additional information, refer to Timing Drive Components.**

NOTE: **Damage to the camshaft phaser and sprocket assembly will occur if mishandled or used as a lifting or leveraging device.**

NOTE: **Do not allow the camshaft roller followers to move out of position when installing the camshaft.**

2. Install the camshaft into the camshaft phaser and sprocket assembly and onto the head. Install a new camshaft phaser and sprocket bolt finger-tight.

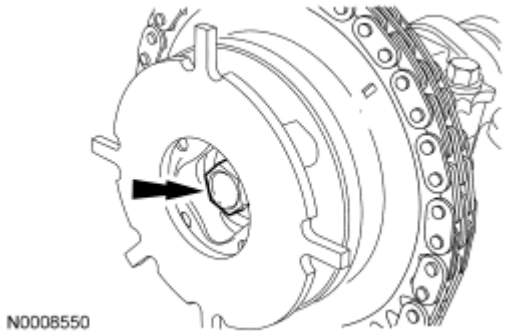

Fig. 132: Identifying Camshaft Phaser And Sprocket Assembly Bolt
Courtesy of FORD MOTOR CO.

NOTE: **Do not remove the Timing Chain Wedge tool at any time during assembly. If the special tool is removed or out of placement, the engine front cover must be removed and the engine must be retimed. For additional information, refer to Timing Drive Components.**

NOTE: **The timing chain must be installed in its original position onto the camshaft phaser and sprocket using the scribed marks, or damage to valves and pistons will result.**

3. Verify the camshaft phaser and sprocket and timing chain scribe marks are still in alignment.

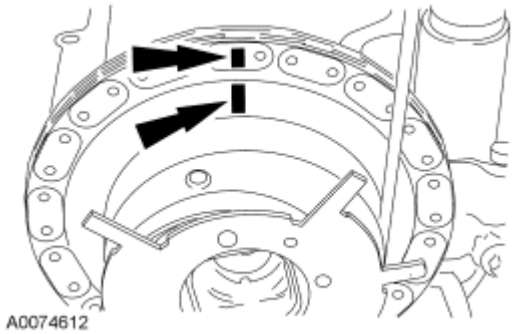

Fig. 133: Identifying Scribe Marks Of Camshaft Phaser And Chain
Courtesy of FORD MOTOR CO.

NOTE: Do not allow the camshaft roller followers to move out of position when installing the camshaft.

4. Install the camshaft bearing caps in their original locations.
   - Lubricate the camshaft bearing caps with clean engine oil.
   - Position the front camshaft bearing cap.
   - Position the remaining camshaft bearing caps.
   - Install the bolts loosely.
5. Tighten the bolts in the sequence shown.
   - Tighten to 10 Nm (89 lb-in).

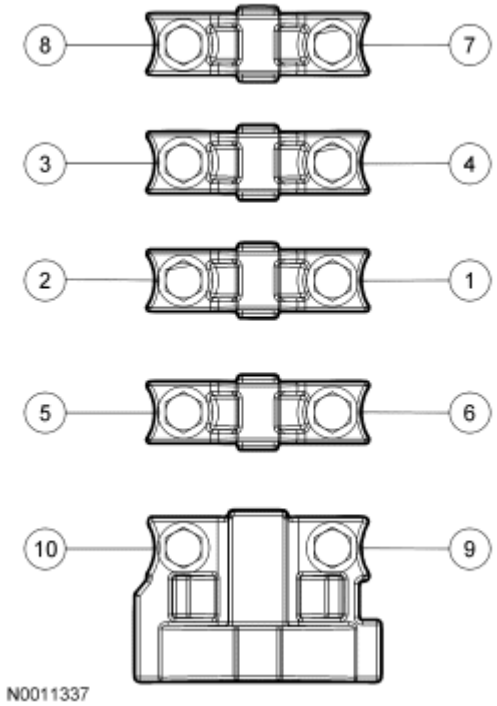

Fig. 134: Identifying Camshaft Bearing Cap Bolt Loosening/Tightening Sequence

Courtesy of FORD MOTOR CO.

NOTE: Engine front cover removed for clarity.

6. Remove the special tool.

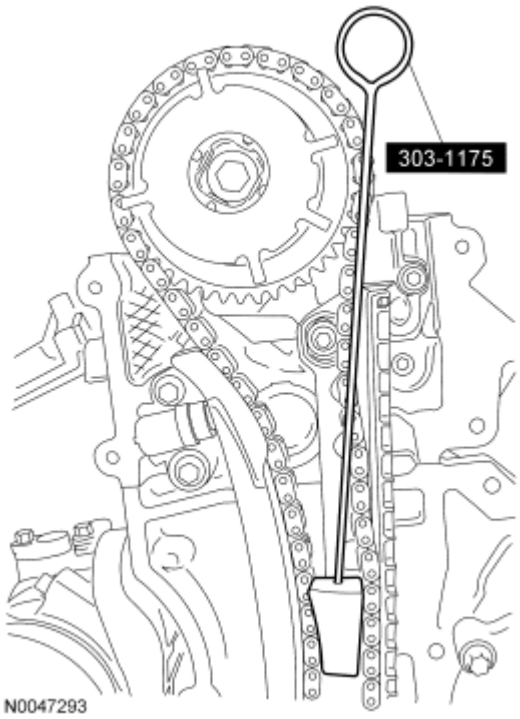

Fig. 135: Identifying Special Tool (303-1175)
Courtesy of FORD MOTOR CO.

7. Rotate the crankshaft a half turn counterclockwise and position the crankshaft damper spoke at the 12 o'clock position and the timing mark indentation at the 1 o'clock position.

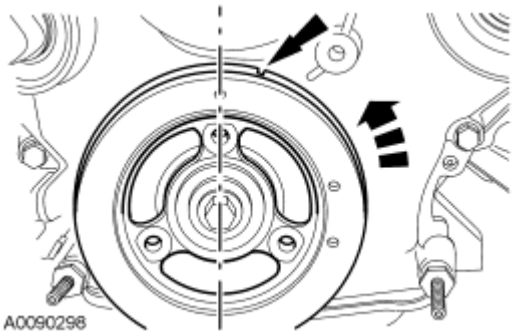

Fig. 136: Positioning Crankshaft Damper Spoke At 12 O'clock Position And Timing Mark Indentation At 1 O'clock Position
Courtesy of FORD MOTOR CO.

8. Verify correct camshaft position by noting the position of the No. 1 cylinder intake and exhaust camshaft

lobes.

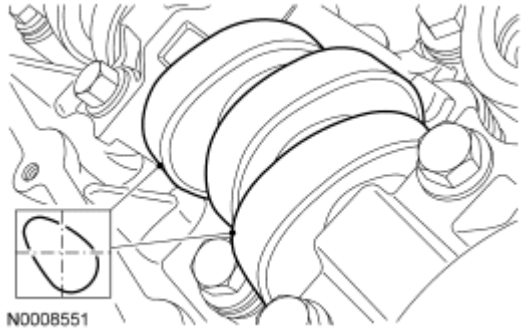

Fig. 137: Identifying Camshaft Lobe Position
Courtesy of FORD MOTOR CO.

NOTE: **Do not allow the valve keepers to fall off of the valve or the valve may drop into the cylinder. If a valve drops into the cylinder, the cylinder head must be removed. For additional information, refer to Cylinder Head.**

NOTE: **It may be necessary to push the valve down while compressing the spring.**

9. Using the special tool, install the 3 originally removed camshaft roller followers.

Fig. 138: Identifying Special Tool (303-1039) For Removing/Installing Camshaft Roller Followers
Courtesy of FORD MOTOR CO.

10. Install the CMP sensor and the bolt.
    - Tighten to 10 Nm (89 lb-in).

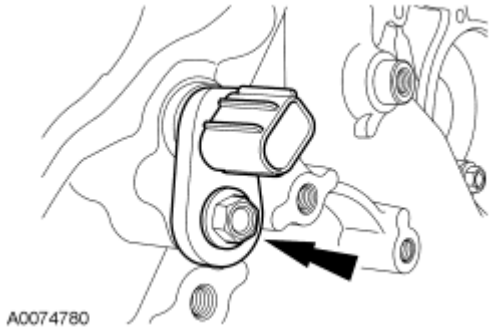

Fig. 139: Locating Camshaft (CMP) Sensor Bolt
Courtesy of FORD MOTOR CO.

11. Connect the CMP electrical connector.

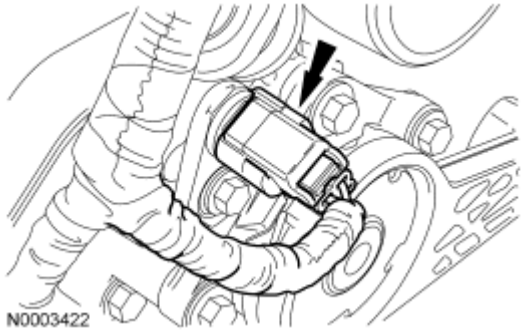

Fig. 140: Identifying RH CMP Sensor Electrical Connector
Courtesy of FORD MOTOR CO.

NOTE: Only use hand tools to install the camshaft phaser and sprocket assembly or damage may occur to the camshaft or camshaft phaser and sprocket.

NOTE: Damage to the camshaft phaser and sprocket assembly will occur if mishandled or used as a lifting or leveraging device.

12. Tighten the new camshaft phaser and sprocket bolt in 2 stages:
    - Stage 1: Tighten to 40 Nm (30 lb-ft).
    - Stage 2: Tighten an additional 90 degrees.

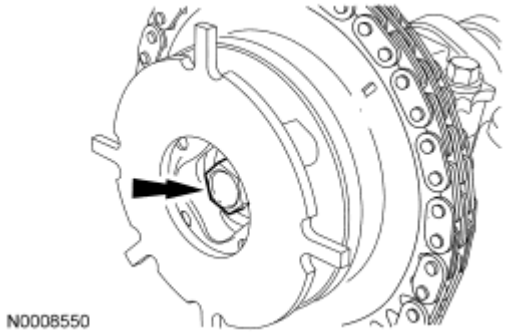

Fig. 141: Identifying Camshaft Phaser And Sprocket Assembly Bolt
Courtesy of FORD MOTOR CO.

13. Install the RH valve cover. For additional information, refer to **Valve Cover - RH**.

CAMSHAFT PHASER AND SPROCKET

Special Tools

Illustration	Tool Name	Tool Number
	Locking Tool, Timing Chain	303-1175

REMOVAL

1. If servicing the RH camshaft phaser and sprocket, remove the RH camshaft. For additional information, refer to **Camshaft - RH**.
2. If servicing the LH camshaft phaser and sprocket, remove the LH camshaft. For additional information, refer to **Camshaft - LH**.

NOTE: Damage to the camshaft phaser and sprocket assembly will occur if mishandled or used as a lifting or leveraging device.

NOTE: Do not remove the Timing Chain Locking Tool at any time during

assembly. If the special tool is removed or out of placement, the engine front cover must be removed and the engine must be retimed. For additional information, refer to Timing Drive Components.

3. Remove the camshaft phaser and sprocket from the timing chain.
4. Inspect the front of the camshaft phaser and sprocket for missing or damaged roll pins.
   - If the roll pins are missing or damaged, a new camshaft phaser and sprocket must be installed.

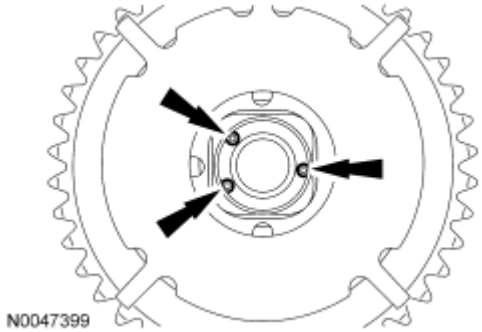

Fig. 142: Inspecting Front Of Camshaft Phase And Sprocket For Missing Or Damaged Roll Pins
Courtesy of FORD MOTOR CO.

5. Inspect the rear of the camshaft phaser and sprocket for a deformed or damaged location pin.
   - If the location pin is deformed or damaged, a new camshaft phaser and sprocket must be installed.

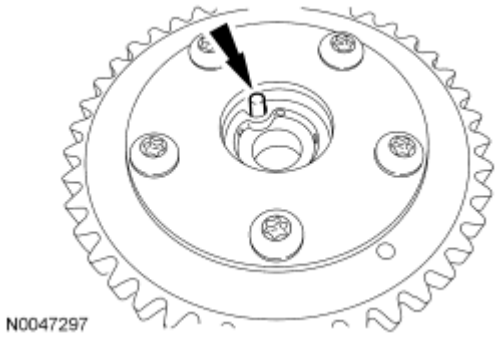

Fig. 143: Inspecting Rear Of Camshaft Phase And Sprocket
Courtesy of FORD MOTOR CO.

6. Visually inspect the camshaft phaser and sprocket for squareness (A). If the trigger wheel or spring is deformed or damaged (B), install a new camshaft phaser and sprocket.

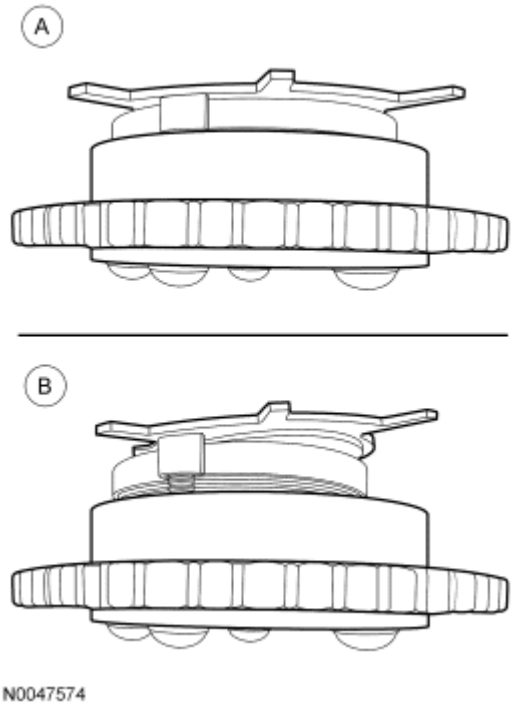

Fig. 144: Inspecting Camshaft Phase And Sprocket For Squareness
Courtesy of FORD MOTOR CO.

INSTALLATION

NOTE: Damage to the camshaft phaser and sprocket assembly will occur if mishandled or used as a lifting or leveraging device.

1. If installing a new camshaft phaser and sprocket, transfer the original scribe mark to the new camshaft phaser and sprocket.

NOTE: The timing chain must be installed in its original position onto the camshaft phaser and sprocket using the scribed marks, or damage to valves and pistons will result.

NOTE: Damage to the camshaft phaser and sprocket assembly will occur if mishandled or used as a lifting or leveraging device.

2. Align the scribe marks and position the camshaft phaser and sprocket into the timing chain.

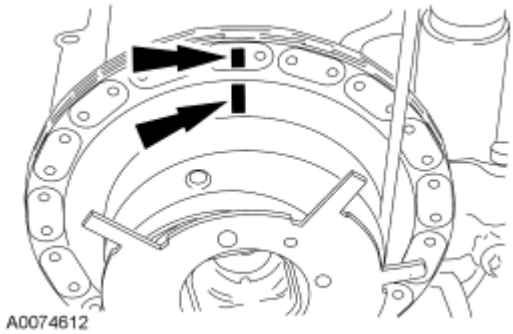

Fig. 145: Identifying Scribe Marks Of Camshaft Phaser And Chain
Courtesy of FORD MOTOR CO.

3. If servicing the RH camshaft phaser and sprocket, install the RH camshaft. For additional information, refer to **Camshaft - RH**.
4. If servicing the LH camshaft phaser and sprocket, install the LH camshaft. For additional information, refer to **Camshaft - LH**.

CAMSHAFT ROLLER FOLLOWER

Special Tools

Illustration	Tool Name	Tool Number
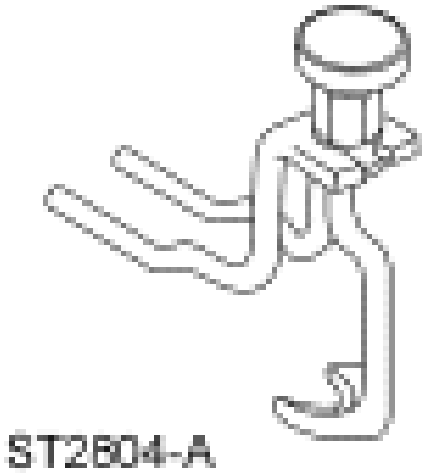	Compressor, Valve Spring	303-1039

Material

Item	Specification
Motorcraft SAE 5W-20 Premium Synthetic Blend Motor Oil XO-5W20-QSP (US); Motorcraft SAE 5W-20 Super Premium Motor Oil CXO-5W20-LSP12 (Canada); or equivalent	WSS-M2C930-A

REMOVAL

1. Depending on the roller follower being serviced, remove the LH or RH valve cover. For additional information, refer to **Valve Cover - LH** or **Valve Cover - RH**.
2. Rotate the crankshaft until the piston for the valve being serviced is at the top of its stroke with the intake valve and the exhaust valves closed.

CAUTION: If the components are to be reinstalled, they must be installed in their original positions. Mark the components for installation into their original locations. Failure to follow these instructions may result in engine damage.

NOTE: Do not allow the valve keepers to fall off of the valve or the valve may drop into the cylinder. If a valve drops into the cylinder, the cylinder head must be removed. For additional information, refer to Cylinder Head.

NOTE: It may be necessary to push the valve down while compressing the spring.

3. Using the special tool, compress the valve spring and remove the camshaft roller follower.

Fig. 146: Identifying Special Tool (303-1039) For Removing/Installing Camshaft Roller Followers
Courtesy of FORD MOTOR CO.

4. Repeat the previous 2 steps for each roller follower being serviced.
5. Inspect the roller follower. For additional information, refer to **ENGINE SYSTEM - GENERAL INFORMATION** article.

INSTALLATION

CAUTION: If the components are to be reinstalled, they must be installed in their original positions. Mark the components for installation into their original locations. Failure to follow these instructions may result in engine damage.

NOTE: Lubricate the roller follower with clean engine oil.

1. Using the special tool, compress the valve spring and install the camshaft roller follower.

Fig. 147: Identifying Special Tool (303-1039) For Removing/Installing Camshaft Roller Followers
Courtesy of FORD MOTOR CO.

2. Repeat the previous step for each roller follower being serviced.
3. Depending on the valve being serviced, install the LH or RH valve cover. For additional information, refer to **Valve Cover - LH** or **Valve Cover - RH** .

VALVE SPRINGS

Special Tools

Illustration	Tool Name	Tool Number
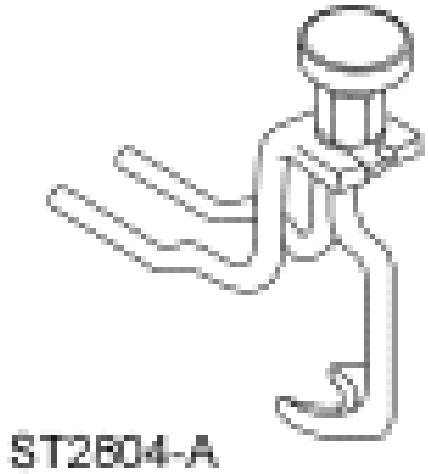	Compressor, Valve Spring	303-1039

Material

Item	Specification
Motorcraft SAE 5W-20 Premium Synthetic Blend Motor Oil XO-5W20-QSP (US); Motorcraft SAE 5W-20 Super Premium Motor Oil CXO-5W20-LSP12 (Canada); or equivalent	WSS-M2C930-A

REMOVAL

1. Depending on the valve spring being serviced, remove the LH or RH valve cover. For additional information, refer to **Valve Cover - LH** or **Valve Cover - RH**.
2. Remove the spark plug. For additional information, refer to **ENGINE IGNITION - 4.6L (3V)** article.
3. Rotate the crankshaft until the piston for the valve spring being serviced is at the top of its stroke with the intake valve and the exhaust valves closed.

CAUTION: If the components are to be reinstalled, they must be installed in their original positions. Mark the components for installation into their original locations. Failure to follow these instructions may result in engine damage.

NOTE: Do not allow the valve keepers to fall off of the valve or the valve may drop into the cylinder. If a valve drops into the cylinder, the cylinder head must be removed. For additional information, refer to Cylinder Head.

NOTE: It may be necessary to push the valve down while compressing the spring.

4. Using the special tool, compress the valve spring and remove the camshaft roller follower.

Fig. 148: Identifying Special Tool (303-1039) For Removing/Installing Camshaft Roller Followers
Courtesy of FORD MOTOR CO.

5. Use compressed air in the cylinder to hold both valves in position.
   - Apply a minimum of 965 kPa (140 psi) of compressed air into the cylinder.

CAUTION: If the components are to be reinstalled, they must be installed in their original positions. Mark the components for installation into their original locations. Failure to follow these instructions may result in engine damage.

NOTE: If air pressure has forced the piston to the bottom of the cylinder, any loss of air pressure will allow the valve to fall into the cylinder. If air pressure must be removed, support the valve prior to removal. If a valve drops into

the cylinder, remove the cylinder head. For additional information, refer to Cylinder Head.

6. Using the special tool, compress the valve spring and remove the valve spring retainer keys.

Fig. 149: Compressing Valve Spring With Special Tool (303-1039)
Courtesy of FORD MOTOR CO.

7. Remove the valve spring retainer and the valve spring.
8. Inspect the valve spring. For additional information, refer to **ENGINE SYSTEM - GENERAL INFORMATION** article.

INSTALLATION

CAUTION: If the components are to be reinstalled, they must be installed in their original positions. Mark the components for installation into their original locations. Failure to follow these instructions may result in engine damage.

1. Using the special tool, install the valve spring, the valve spring retainer and the valve spring retainer keys.

Fig. 150: Compressing Valve Spring With Special Tool (303-1039)
Courtesy of FORD MOTOR CO.

2. Relieve the air pressure from the cylinder.

CAUTION: If the components are to be reinstalled, they must be installed in their original positions. Mark the components for installation into their original locations. Failure to follow these instructions may result in engine damage.

NOTE: Do not allow the valve keepers to fall off of the valve or the valve may drop into the cylinder. If a valve drops into the cylinder, the cylinder head must be removed. For additional information, refer to Cylinder Head.

NOTE: It may be necessary to push the valve down while compressing the spring.

NOTE: Lubricate the camshaft roller followers with clean engine oil prior to installation.

3. Using the special tool, compress the valve spring and install the camshaft roller follower.

Fig. 151: Identifying Special Tool (303-1039) For Removing/Installing Camshaft Roller Followers
Courtesy of FORD MOTOR CO.

4. Install the spark plug. For additional information, refer to **ENGINE IGNITION - 4.6L (3V)** article.
5. Depending on the valve spring being serviced, install the LH or RH valve cover. For additional information, refer to **Valve Cover - LH** or **Valve Cover - RH**.

VALVE SEALS

Special Tools

Illustration	Tool Name	Tool Number
	Compressor, Valve Spring	303-1039

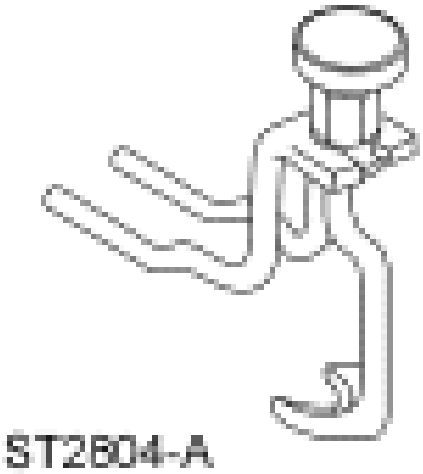 ST2604-A		
 ST1332-A	Installer, Valve Stem Oil Seal	303-383 (T91P-6571-A)

Material

Item	Specification
Motorcraft SAE 5W-20 Premium Synthetic Blend Motor Oil XO-5W20-QSP (US); Motorcraft SAE 5W-20 Super Premium Motor Oil CXO-5W20-LSP12 (Canada); or equivalent	WSS-M2C930-A

REMOVAL

1. Depending on the valve seal being serviced, remove the LH or RH valve cover. For additional information, refer to **Valve Cover - LH** or **Valve Cover - RH**.
2. Remove the spark plug. For additional information, refer to **ENGINE IGNITION - 4.6L (3V)** article.
3. Rotate the crankshaft until the piston for the valve seal being serviced is at the top of its stroke with the intake valve and the exhaust valves closed.

CAUTION: If the components are to be reinstalled, they must be installed in their original positions. Mark the components for installation into their original locations. Failure to follow these instructions may result in engine damage.

NOTE: Do not allow the valve keepers to fall off of the valve or the valve may drop into the cylinder. If a valve drops into the cylinder, the cylinder head must be removed. For additional information, refer to Cylinder Head.

NOTE: It may be necessary to push the valve down while compressing the spring.

4. Using the special tool, compress the valve spring and remove the camshaft roller follower.

Fig. 152: Identifying Special Tool (303-1039) For Removing/Installing Camshaft Roller Followers
Courtesy of FORD MOTOR CO.

5. Use compressed air in the cylinder to hold both valves in position.
   - Apply a minimum of 965 kPa (140 psi) of compressed air into the cylinder.

CAUTION: If the components are to be reinstalled, they must be installed in their original positions. Mark the components for installation into their original locations. Failure to follow these instructions may result in engine damage.

NOTE: If air pressure has forced the piston to the bottom of the cylinder, any loss of air pressure will allow the valve to fall into the cylinder. If air pressure must be removed, support the valve prior to removal. If a valve drops into the cylinder, remove the cylinder head. For additional information, refer to Cylinder Head.

6. Using the special tool, compress the valve spring and remove the valve spring retainer keys.

Fig. 153: Compressing Valve Spring With Special Tool (303-1039)
Courtesy of FORD MOTOR CO.

7. Remove the valve spring retainer, the valve spring and the valve seal.
   - Discard the valve seal.
8. Inspect the components. For additional information, refer to **ENGINE SYSTEM - GENERAL INFORMATION** article.

INSTALLATION

NOTE: Lubricate the valve seal and valve stem with clean engine oil prior to installation.

1. Position a new valve seal onto the valve stem.
2. Using the special tool, install the new valve seal.

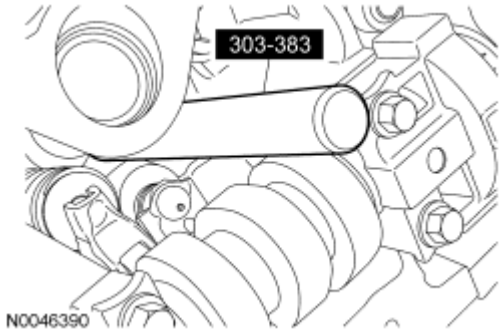

Fig. 154: Installing Valve Seal Using Special Tool (303-383)
Courtesy of FORD MOTOR CO.

CAUTION: If the components are to be reinstalled, they must be installed in their original positions. Mark the components for installation into their original locations. Failure to follow these instructions may result in engine damage.

3. Using the special tool, install the valve spring, the valve spring retainer and the valve spring retainer keys.

Fig. 155: Compressing Valve Spring With Special Tool (303-1039)
Courtesy of FORD MOTOR CO.

4. Relieve the air pressure from the cylinder.

CAUTION: If the components are to be reinstalled, they must be installed in their original positions. Mark the components for installation into their original locations. Failure to follow these instructions may result in engine damage.

NOTE: Do not allow the valve keepers to fall off of the valve or the valve may drop into the cylinder. If a valve drops into the cylinder, the cylinder head must be removed. For additional information, refer to Cylinder Head.

NOTE: It may be necessary to push the valve down while compressing the spring.

NOTE: Lubricate the camshaft roller followers with clean engine oil prior to installation.

5. Using the special tool, compress the valve spring and install the camshaft roller follower.

Fig. 156: Identifying Special Tool (303-1039) For Removing/Installing Camshaft Roller Followers
Courtesy of FORD MOTOR CO.

6. Install the spark plug. For additional information, refer to **ENGINE IGNITION - 4.6L (3V)** article.
7. Depending on the valve seal being serviced, install the LH or RH valve cover. For additional information,

refer to **Valve Cover - LH** or **Valve Cover - RH**.

HYDRAULIC LASH ADJUSTER

Material

Item	Specification
Motorcraft SAE 5W-20 Premium Synthetic Blend Motor Oil XO-5W20-QSP (US); Motorcraft SAE 5W-20 Super Premium Motor Oil CXO-5W20-LSP12 (Canada); or equivalent	WSS-M2C930-A

REMOVAL AND INSTALLATION

1. Remove the camshafts. For additional information, refer to **Valve Train Components - Exploded View** and **Camshaft - LH** and **Camshaft - RH**.
2. Remove the remaining roller followers from the cylinder head being serviced.

CAUTION: If the components are to be reinstalled, they must be installed in their original positions. Mark the components for installation into their original locations. Failure to follow these instructions may result in engine damage.

3. Remove the hydraulic lash adjusters that are being serviced.
4. Inspect the hydraulic lash adjusters. For additional information, refer to **ENGINE SYSTEM - GENERAL INFORMATION** article.

NOTE: Lubricate each of the hydraulic lash adjusters with clean engine oil prior to installation.

5. To install, reverse the removal procedure.

EXHAUST MANIFOLD - LH

Special Tools

Illustration	Tool Name	Tool Number
	3-Bar Engine Support Kit	303-F072

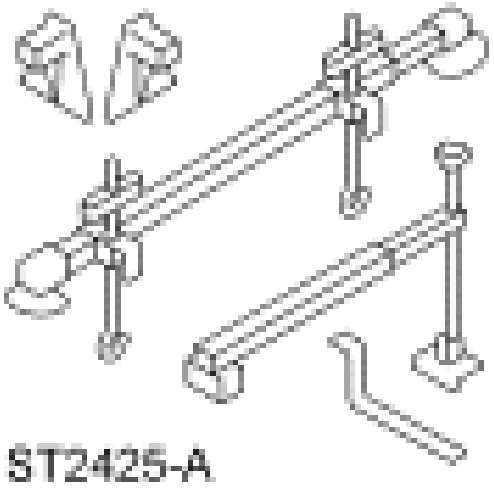		
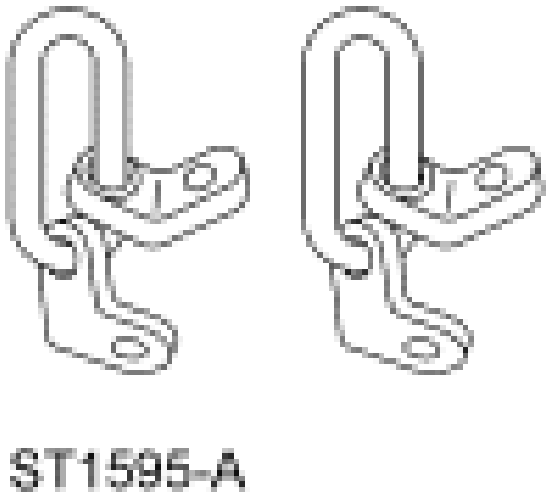	Lifting Brackets, Engine	303-050 (T70P-6000)

Material

Item	Specification
Motorcraft Metal Surface Prep ZC-31	-

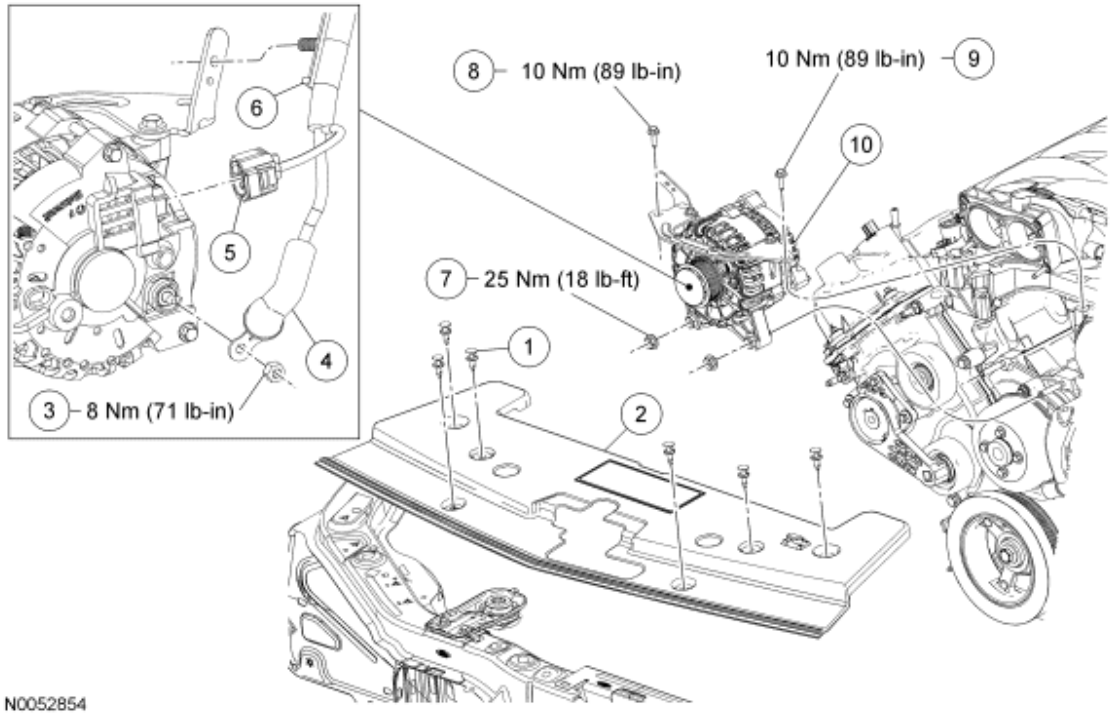

Fig. 157: Identifying Engine Support Insulators With Torque Specifications (1 Of 3)
Courtesy of FORD MOTOR CO.

Item	Part Number	Description
1	-	Pin-type retainer
2	8C291	Radiator sight shield
3	W705790	B+ terminal nut
4	-	B+ terminal cover (part of 14305)
5	14A4644	Generator electrical connector (part of 14305)
6	-	Wiring harness pin-type retainer (part of 14305)
7	N804758	Generator nut (2 required)
8	N807309	Generator bracket bolt
9	W704682	Generator bracket bolt
10	10300	Generator

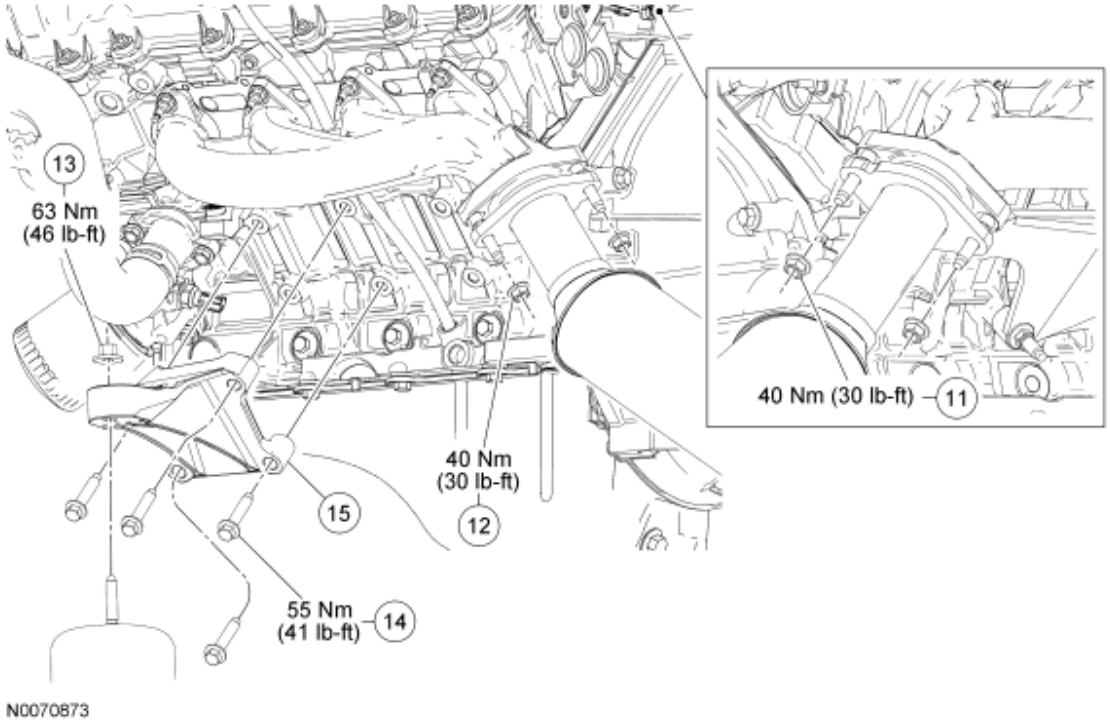

Fig. 158: Identifying Engine Support Insulators With Torque Specifications (2 Of 3)
Courtesy of FORD MOTOR CO.

Item	Part Number	Description
11	W701706	RH catalytic converter-to-exhaust manifold nut (2 required)
12	W701706	LH catalytic converter-to-exhaust manifold nut (2 required)
13	N621943	LH engine support insulator nut
14	W500721	LH engine support insulator bracket bolt (4 required)
15	6B033	LH engine support insulator bracket

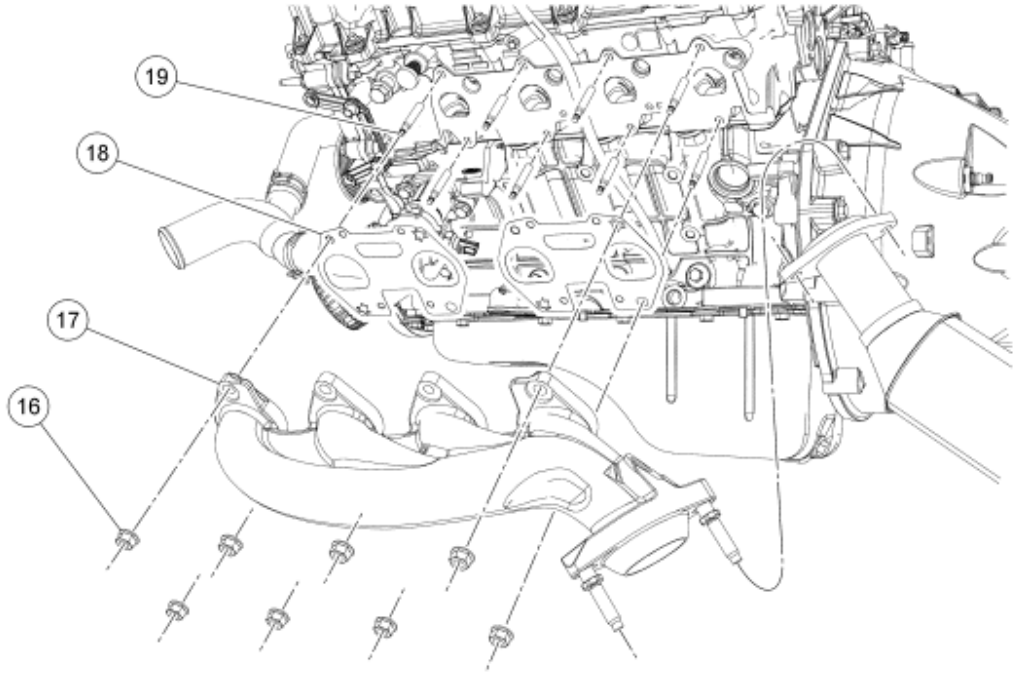

Fig. 159: Identifying Engine Support Insulators (3 Of 3)
Courtesy of FORD MOTOR CO.

Item	Part Number	Description
16	W701706	LH exhaust manifold nut (8 required)
17	9431	LH exhaust manifold
18	9Y431	LH exhaust manifold gasket (2 required)
19	W707747	LH exhaust manifold studs (8 required)

REMOVAL

All vehicles

1. With the vehicle in NEUTRAL, position it on a hoist. For additional information, refer to **JACKING AND LIFTING** article.
2. Disconnect the battery ground cable. For additional information, refer to **BATTERY, MOUNTING AND CABLES** article.
3. Remove the air cleaner assembly. For additional information, refer to **INTAKE AIR DISTRIBUTION AND FILTERING** article.
4. Remove the throttle body (TB). For additional information, refer to **FUEL CHARGING AND CONTROLS - 4.6L (3V)** article.
5. Disconnect the LH heated oxygen sensor (HO2S) electrical connector and wiring retainer.

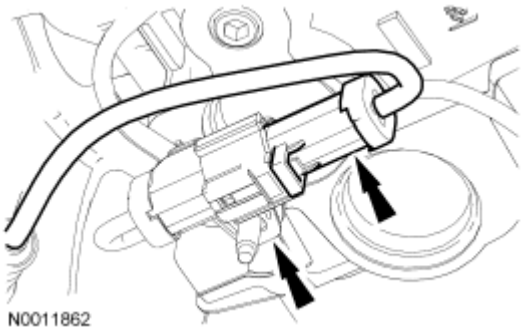

Fig. 160: Locating Heated Oxygen Sensor (HO2S) Electrical Connector
Courtesy of FORD MOTOR CO.

6. Remove the 2 RH catalytic converter-to-exhaust manifold nuts.
7. Remove the 2 LH catalytic converter-to-exhaust manifold nuts.
8. Remove the 6 pin-type retainers and the radiator sight shield.
9. Using a suitable belt tensioner release tool, rotate the accessory drive belt tensioner clockwise and position the accessory drive belt aside from the generator pulley.

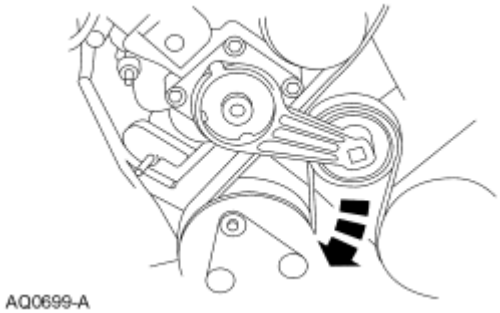

Fig. 161: Rotating Tensioner Clockwise
Courtesy of FORD MOTOR CO.

10. Remove the 2 outer generator bracket bolts.
11. Remove the 2 lower generator nuts.
12. Disconnect the generator electrical connector and pin-type retainer.
13. Position the B+ terminal cover aside and remove the B+ terminal nut.
    - Remove the generator.
14. Install the special tools.

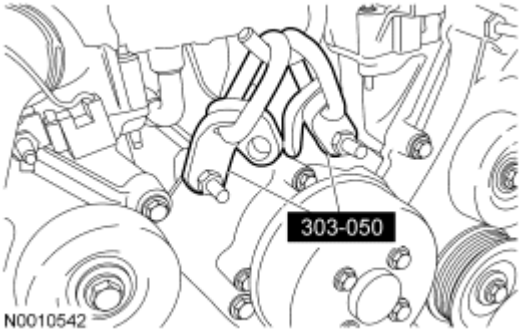

Fig. 162: Installing Special Tool (303-050)
Courtesy of FORD MOTOR CO.

Bullitt vehicles

15. Remove the 4 nuts and the strut tower cross brace.

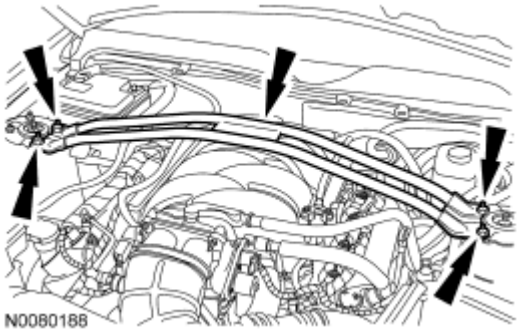

Fig. 163: Locating Strut Tower Cross Brace & Nuts
Courtesy of FORD MOTOR CO.

All vehicles

16. Install the special tool.

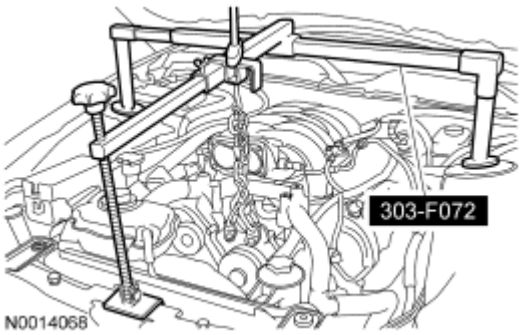

Fig. 164: Installing Special Tool (303-F072)
Courtesy of FORD MOTOR CO.

NOTE: **Both the RH and LH engine support insulator nuts must be removed to allow the engine to be raised.**

NOTE: **RH shown, LH similar.**

17. Remove the RH and LH engine support insulator nuts.

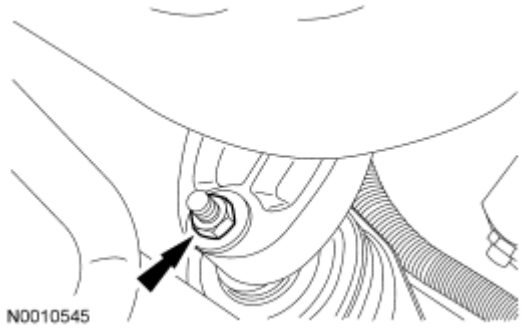

Fig. 165: Locating Engine Support Insulator Nuts
Courtesy of FORD MOTOR CO.

18. Using the special tool, raise the engine 40 mm (1.57 in).

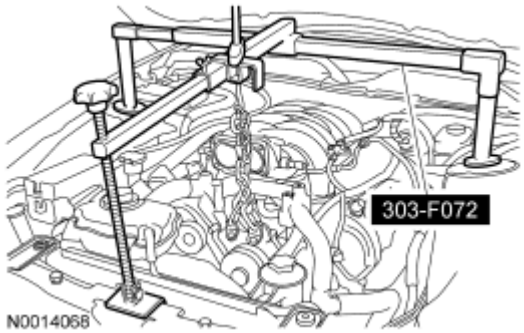

Fig. 166: Installing Special Tool (303-F072)
Courtesy of FORD MOTOR CO.

CAUTION: **Do not allow the steering wheel to rotate while the steering column intermediate shaft is disconnected or damage to the clockspring can result. If there is evidence that the wheel has rotated, the clockspring must be removed and recentered. For additional information, refer to SUPPLEMENTAL RESTRAINT SYSTEM article.**

19. Remove the bolt and disconnect the steering coupling.
    - Discard the bolt.

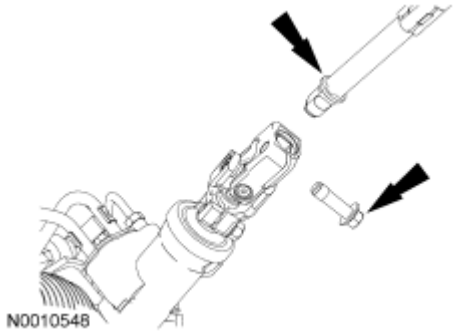

Fig. 167: Locating Steering Coupling
Courtesy of FORD MOTOR CO.

20. Remove the 4 bolts and the LH engine support insulator bracket.
21. Remove the 8 nuts and the exhaust manifold.
    - Discard the nuts and gaskets.
22. Clean and inspect the LH exhaust manifold. For additional information, refer to **ENGINE SYSTEM - GENERAL INFORMATION** article.
23. Remove and discard the 8 LH exhaust manifold studs.

CAUTION: Do not use metal scrapers, wire brushes, power abrasive discs or other abrasive means to clean the sealing surfaces. These may cause scratches and gouges resulting in leak paths. Use a plastic scraper to clean the sealing surfaces.

24. Clean the sealing surfaces with metal surface prep. Follow the directions on the packaging.

INSTALLATION

All vehicles

1. Install 8 new LH exhaust manifold studs.
    - Tighten to 12 Nm (9 lb-ft).
2. Install new exhaust manifold gaskets.
3. Install the exhaust manifold and 8 new nuts.
    - Tighten the nuts in the sequence shown to 25 Nm (18 lb-ft).

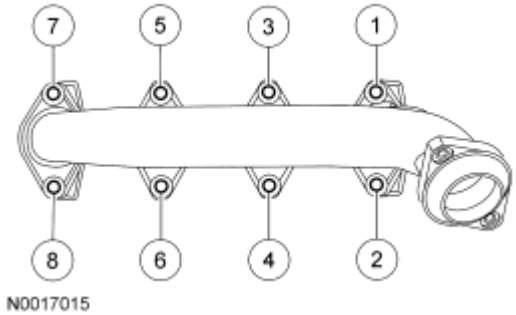

Fig. 168: Tightening LH Exhaust Manifold Nuts In Sequence
Courtesy of FORD MOTOR CO.

4. Install the LH engine support insulator bracket and the 4 bolts.
   - Tighten to 55 Nm (41 lb-ft).

CAUTION: Do not allow the steering wheel to rotate while the steering column intermediate shaft is disconnected or damage to the clockspring can result. If there is evidence that the wheel has rotated, the clockspring must be removed and recentered. For additional information, refer to SUPPLEMENTAL RESTRAINT SYSTEM article.

5. Connect the steering coupling and install the new bolt.
   - Tighten to 25 Nm (18 lb-ft).

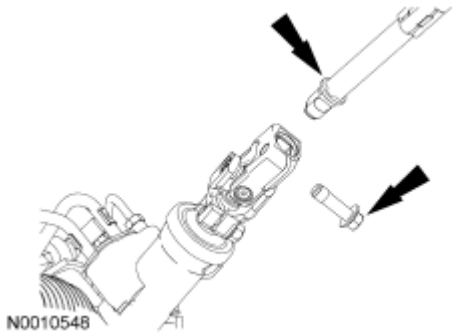

Fig. 169: Locating Steering Coupling
Courtesy of FORD MOTOR CO.

6. Using the special tool, lower the engine.

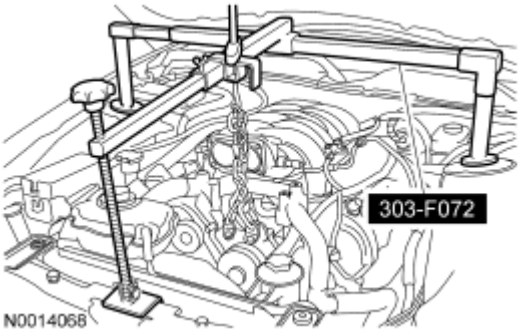

Fig. 170: Installing Special Tool (303-F072)
Courtesy of FORD MOTOR CO.

Bullitt vehicles

7. Install the strut tower cross brace and the 4 nuts.
   - Tighten to 35 Nm (26 lb-ft).

All vehicles

NOTE: RH shown, LH similar.

8. Install the RH and LH engine support insulator nuts.
   - Tighten to 63 Nm (46 lb-ft).

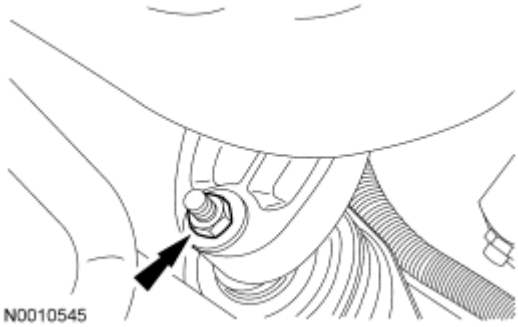

Fig. 171: Locating Engine Support Insulator Nuts
Courtesy of FORD MOTOR CO.

9. Install the 2 LH catalytic converter-to-exhaust manifold nuts.
   - Tighten to 40 Nm (30 lb-ft).
10. Install the 2 RH catalytic converter-to-exhaust manifold nuts.
   - Tighten to 40 Nm (30 lb-ft).
11. Connect the LH HO2S electrical connector and wiring retainer.

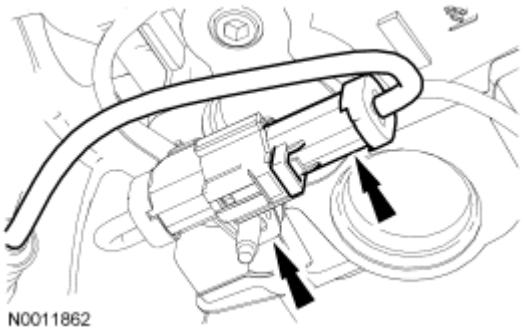

Fig. 172: Locating Heated Oxygen Sensor (HO2S) Electrical Connector
Courtesy of FORD MOTOR CO.

NOTE: Make sure the B+ cable is positioned close to the generator when the nut is being tightened.

12. Position the generator and install the B+ terminal and nut.
    - Tighten to 8 Nm (71 lb-in).
13. Connect the generator electrical connector and pin-type retainer.
14. Install the 2 lower generator nuts.
    - Tighten to 25 Nm (18 lb-ft).
15. Install the 2 outer generator bracket bolts.
    - Tighten to 10 Nm (89 lb-in).
16. Using a suitable belt tensioner release tool, rotate the accessory drive belt tensioner clockwise and position the accessory drive belt onto the generator pulley.

Fig. 173: Rotating Tensioner Clockwise
Courtesy of FORD MOTOR CO.

17. Install the radiator sight shield and 6 pin-type retainers.
18. Install the TB. For additional information, refer to **FUEL CHARGING AND CONTROLS - 4.6L (3V)** article.
19. Install the air cleaner assembly. For additional information, refer to **INTAKE AIR DISTRIBUTION AND FILTERING** article.
20. Connect the battery ground cable. For additional information, refer to **BATTERY, MOUNTING AND**

CABLES article.

EXHAUST MANIFOLD - RH

Special Tools

Illustration	Tool Name	Tool Number
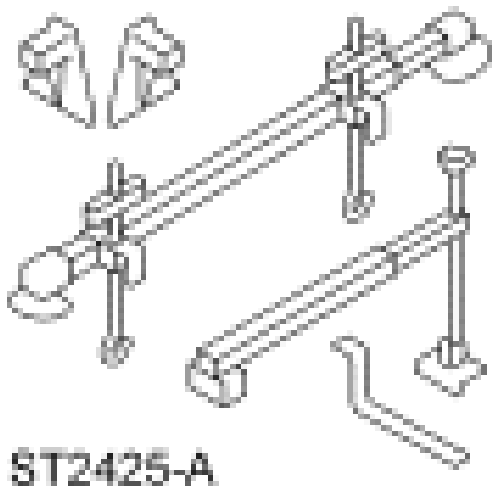	3-Bar Engine Support Kit	303-F072
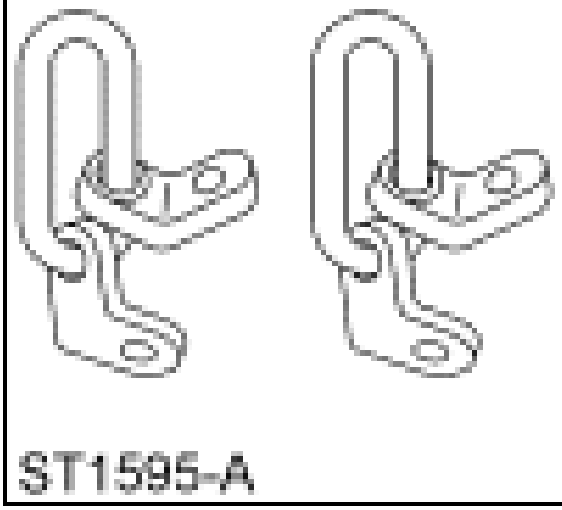	Lifting Brackets, Engine	303-050 (T70P-6000)

Material

Item	Specification
Motorcraft Metal Surface Prep ZC-31	-

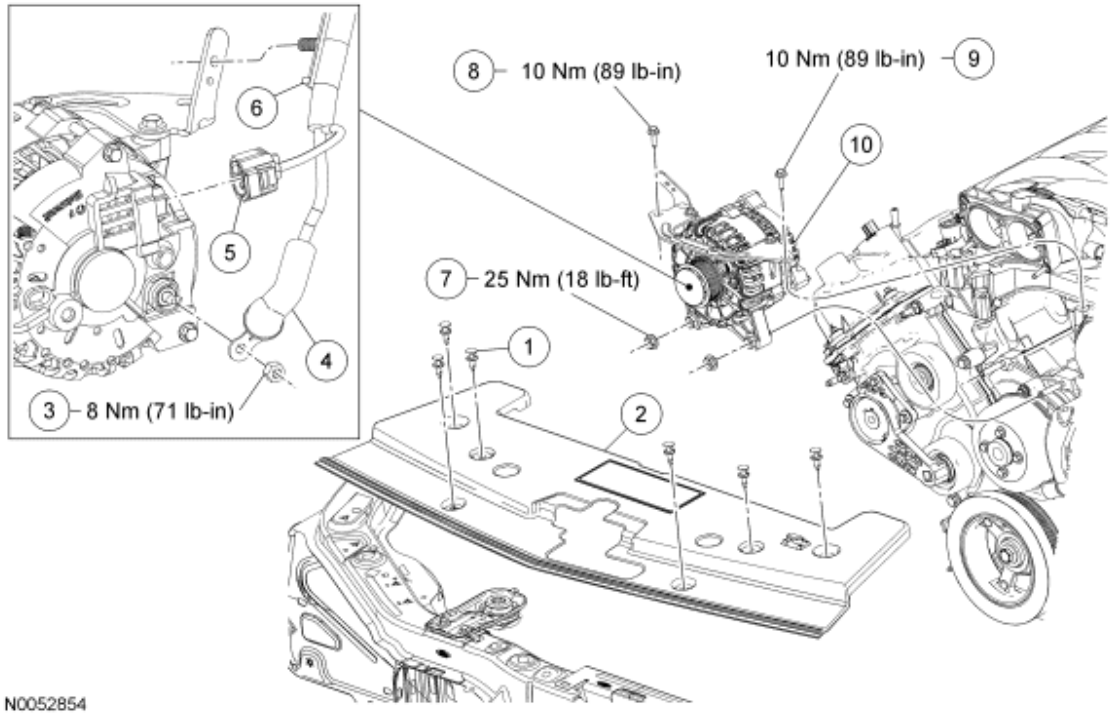

Fig. 174: Identifying Engine Support Insulators With Torque Specifications (1 Of 3)
Courtesy of FORD MOTOR CO.

Item	Part Number	Description
1	-	Pin-type retainer
2	8C291	Radiator sight shield
3	W705790	B+ terminal nut
4	-	B+ terminal cover (part of 14305)
5	14A4644	Generator electrical connector (part of 14305)
6	-	Wiring harness pin-type retainer (part of 14305)
7	N804758	Generator nut (2 required)
8	N807309	Generator bracket bolt
9	W704682	Generator bracket bolt
10	10300	Generator

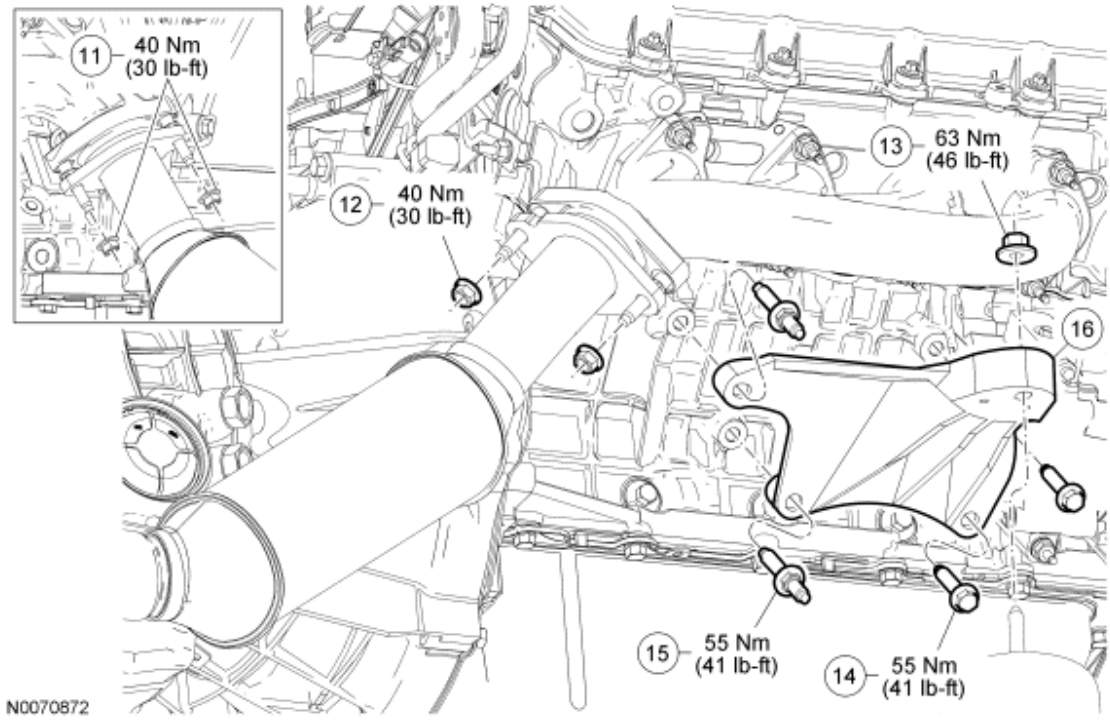

Fig. 175: Identifying Engine Support Insulators With Torque Specifications (2 Of 3)
Courtesy of FORD MOTOR CO.

Item	Part Number	Description
11	W701706	LH catalytic converter-to-exhaust manifold nuts (2 required)
12	W701706	RH catalytic converter-to-exhaust manifold nut (2 required)
13	N621943	RH engine support insulator nut
14	W500721	RH engine support bracket bolt (2 required)
15	W710342	RH engine support insulator bracket stud bolt (2 required)
16	6037	RH engine support insulator bracket

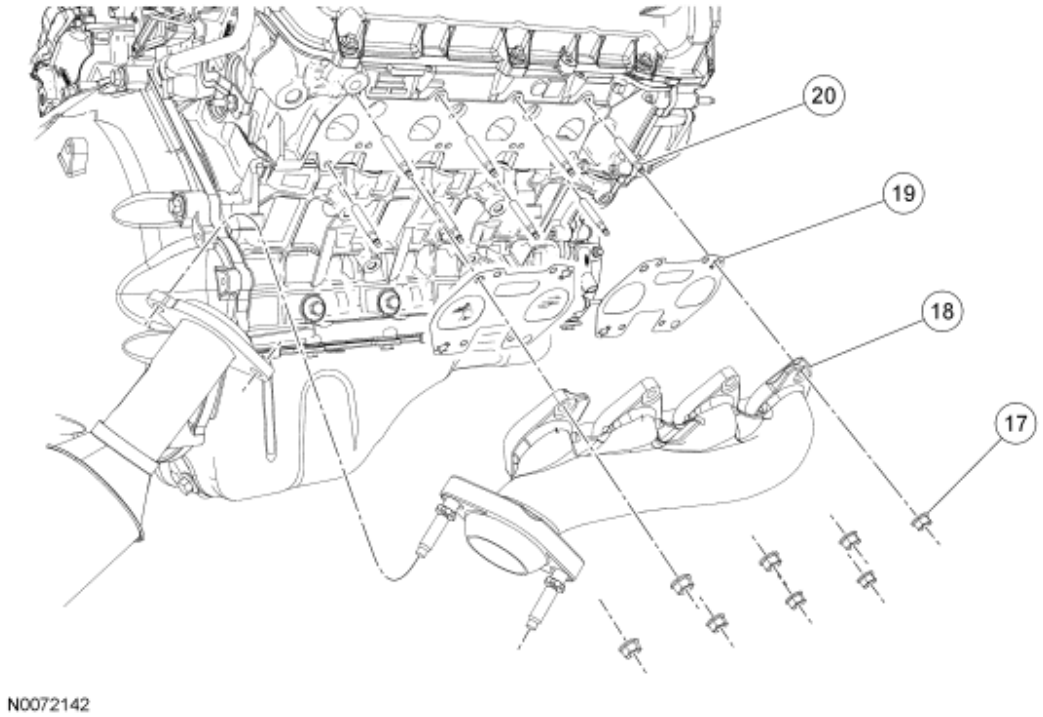

Fig. 176: Identifying Engine Support Insulators (3 Of 3)
Courtesy of FORD MOTOR CO.

Item	Part Number	Description
17	W701706	RH exhaust manifold nut (8 required)
18	9430	RH exhaust manifold
19	9Y431	RH exhaust manifold gasket (2 required)
20	W707747	RH exhaust manifold studs (8 required)

REMOVAL

All vehicles

1. With the vehicle in NEUTRAL, position it on a hoist. For additional information, refer to **JACKING AND LIFTING** article.
2. Disconnect the battery ground cable. For additional information, refer to **BATTERY, MOUNTING AND CABLES** article.
3. Remove the air cleaner assembly. For additional information, refer to **INTAKE AIR DISTRIBUTION AND FILTERING** article.
4. Remove the throttle body (TB). For additional information, refer to **FUEL CHARGING AND CONTROLS - 4.6L (3V)** article.
5. Remove the starter. For additional information, refer to **STARTING SYSTEM** article.
6. Remove the 2 RH catalytic converter-to-exhaust manifold nuts.
7. Remove the 2 LH catalytic converter-to-exhaust manifold nuts.

8. Remove the 6 pin-type retainers and the radiator sight shield.
9. Using a suitable belt tensioner release tool, rotate the accessory drive belt tensioner clockwise and position the accessory drive belt aside from the generator pulley.

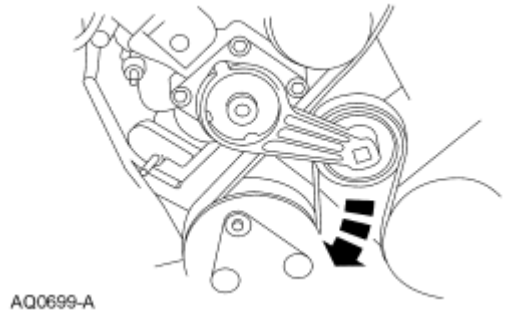

Fig. 177: Rotating Tensioner Clockwise
Courtesy of FORD MOTOR CO.

10. Remove the 2 outer generator bracket bolts.
11. Remove the 2 lower generator nuts.
12. Disconnect the generator electrical connector and pin-type retainer.
13. Position the B+ terminal cover aside and remove the B+ terminal nut.
    - Remove the generator.
14. Install the special tools.

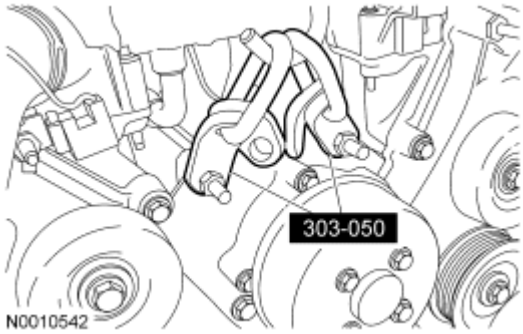

Fig. 178: Installing Special Tool (303-050)
Courtesy of FORD MOTOR CO.

Bullitt vehicles

15. Remove the 4 nuts and the strut tower cross brace.

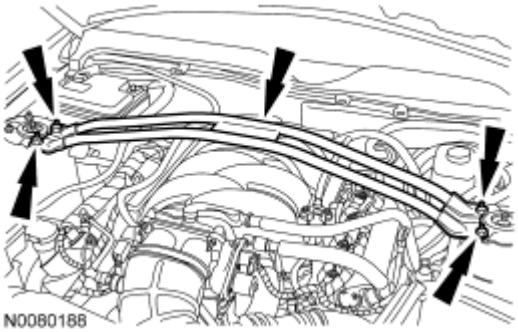

Fig. 179: Locating Strut Tower Cross Brace & Nuts
Courtesy of FORD MOTOR CO.

All vehicles

16. Install the special tool.

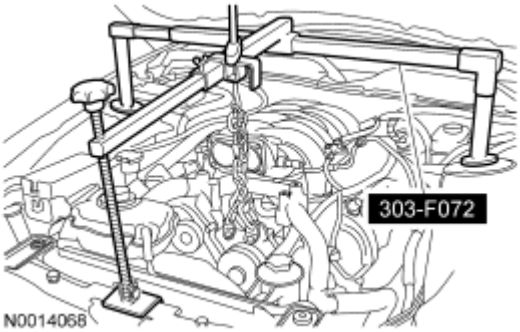

Fig. 180: Installing Special Tool (303-F072)
Courtesy of FORD MOTOR CO.

NOTE: Both the RH and LH engine support insulator nuts must be removed to allow the engine to be raised.

NOTE: RH shown, LH similar.

17. Remove the RH and LH engine support insulator nuts.

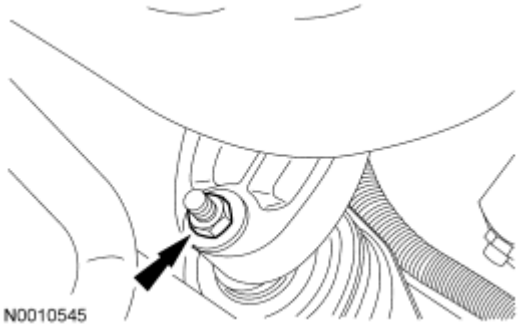

Fig. 181: Locating Engine Support Insulator Nuts
Courtesy of FORD MOTOR CO.

18. Using the special tool, raise the engine 40 mm (1.57 in).

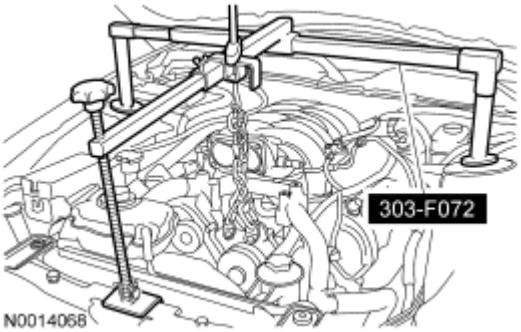

Fig. 182: Installing Special Tool (303-F072)
Courtesy of FORD MOTOR CO.

19. Remove the nut and the ground wire from the stud bolt.

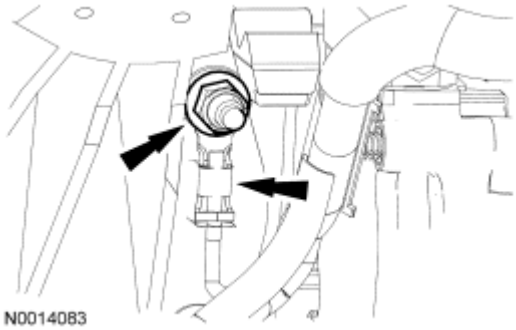

Fig. 183: Identifying Ground Wire And Nut
Courtesy of FORD MOTOR CO.

Vehicles with automatic transmission

20. Remove the nut and position aside the transmission cooler tube bracket.

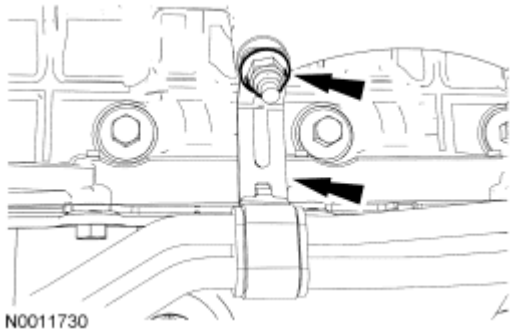

Fig. 184: Locating Transmission Cooler Tube Bracket And Nut

Courtesy of FORD MOTOR CO.

All vehicles

21. Remove the 2 bolts, 2 stud bolts and the RH engine support bracket.
22. Remove the 8 nuts and the exhaust manifold.
    - Discard the nuts and gaskets.
23. Clean and inspect the RH exhaust manifold. For additional information, refer to **ENGINE SYSTEM - GENERAL INFORMATION** article.
24. Remove and discard the 8 RH exhaust manifold studs.

CAUTION: Do not use metal scrapers, wire brushes, power abrasive discs or other abrasive means to clean the sealing surfaces. These may cause scratches and gouges resulting in leak paths. Use a plastic scraper to clean the sealing surfaces.

25. Clean the sealing surfaces with metal surface prep. Follow the directions on the packaging.

INSTALLATION

All vehicles

1. Install 8 new RH exhaust manifold studs.
    - Tighten to 12 Nm (9 lb-ft).
2. Install new exhaust manifold gaskets.
3. Install the exhaust manifold and 8 new nuts.
    - Tighten the nuts in the sequence shown to 25 Nm (18 lb-ft).

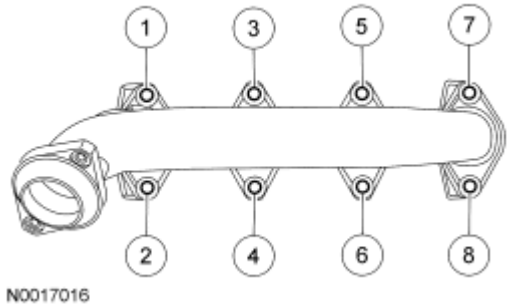

Fig. 185: Tightening RH Exhaust Manifold Bolts In Sequence
Courtesy of FORD MOTOR CO.

4. Install the RH engine support insulator bracket, the 2 bolts and 2 stud bolts.
    - Tighten to 55 Nm (41 lb-ft).

Vehicles with automatic transmission

5. Install the transmission cooler tube bracket and nut.
   - Tighten to 25 Nm (18 lb-ft).

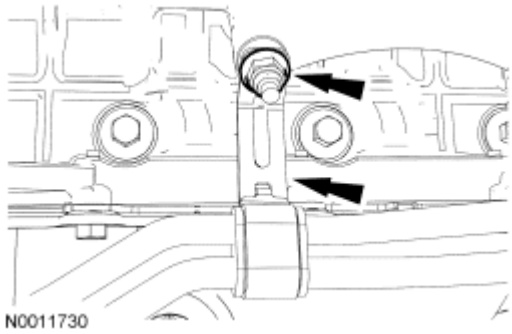

Fig. 186: Locating Transmission Cooler Tube Bracket And Nut
Courtesy of FORD MOTOR CO.

All vehicles

6. Install the ground wire and nut onto the stud bolt.
   - Tighten to 25 Nm (18 lb-ft).

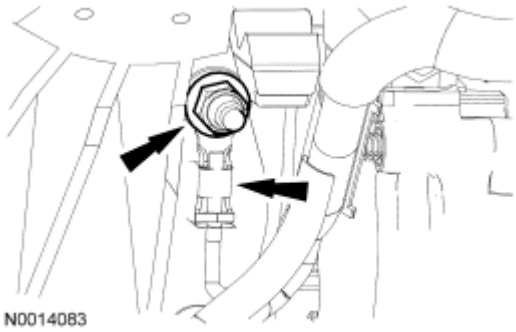

Fig. 187: Identifying Ground Wire And Nut
Courtesy of FORD MOTOR CO.

7. Using the special tool, lower the engine.

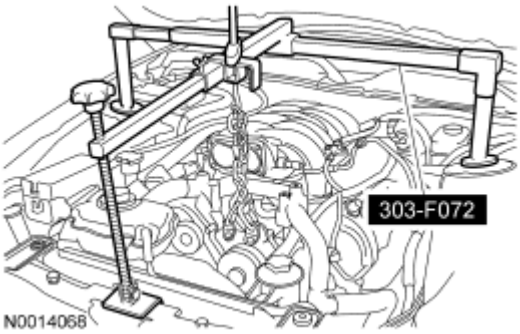

Fig. 188: Installing Special Tool (303-F072)

Courtesy of FORD MOTOR CO.

Bullitt vehicles

8. Install the strut tower cross brace and the 4 nuts.
   - Tighten to 35 Nm (26 lb-ft).

All vehicles

NOTE: RH shown, LH similar.

9. Install the RH and LH engine support insulator nuts.
   - Tighten to 63 Nm (46 lb-ft).

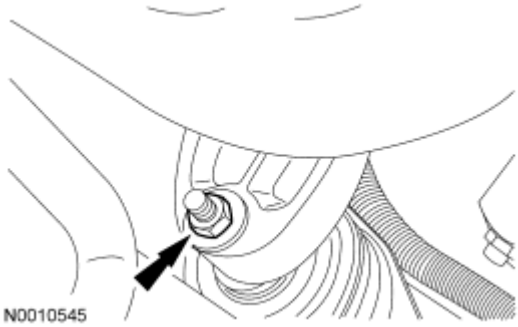

Fig. 189: Locating Engine Support Insulator Nuts
Courtesy of FORD MOTOR CO.

10. Install the 2 LH catalytic converter-to-exhaust manifold nuts.
    - Tighten to 40 Nm (30 lb-ft).
11. Install the 2 RH catalytic converter-to-exhaust manifold nuts.
    - Tighten to 40 Nm (30 lb-ft).

NOTE: Make sure the B+ cable is positioned close to the generator when the nut is being tightened.

12. Position the generator and install the B+ terminal and nut.
    - Tighten to 8 Nm (71 lb-in).
13. Connect the generator electrical connector and pin-type retainer.
14. Install the 2 lower generator nuts.
    - Tighten to 25 Nm (18 lb-ft).
15. Install the 2 outer generator bracket bolts.
    - Tighten to 10 Nm (89 lb-in).
16. Using a suitable belt tensioner release tool, rotate the accessory drive belt tensioner clockwise and position the accessory drive belt onto the generator pulley.

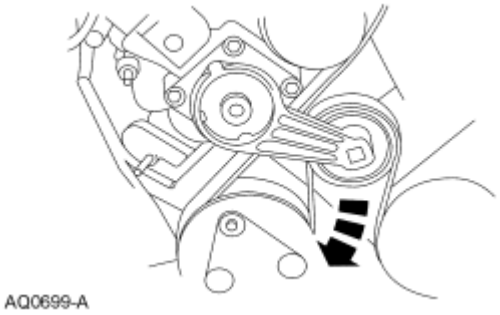

Fig. 190: Rotating Tensioner Clockwise
Courtesy of FORD MOTOR CO.

17. Install the radiator sight shield and 6 pin-type retainers.
18. Install the starter. For additional information, refer to **STARTING SYSTEM** article.
19. Install the TB. For additional information, refer to **FUEL CHARGING AND CONTROLS - 4.6L (3V)** article.
20. Install the air cleaner assembly. For additional information, refer to **INTAKE AIR DISTRIBUTION AND FILTERING** article.
21. Connect the battery ground cable. For additional information, refer to **BATTERY, MOUNTING AND CABLES** article.

ENGINE LUBRICATION COMPONENTS - EXPLODED VIEW

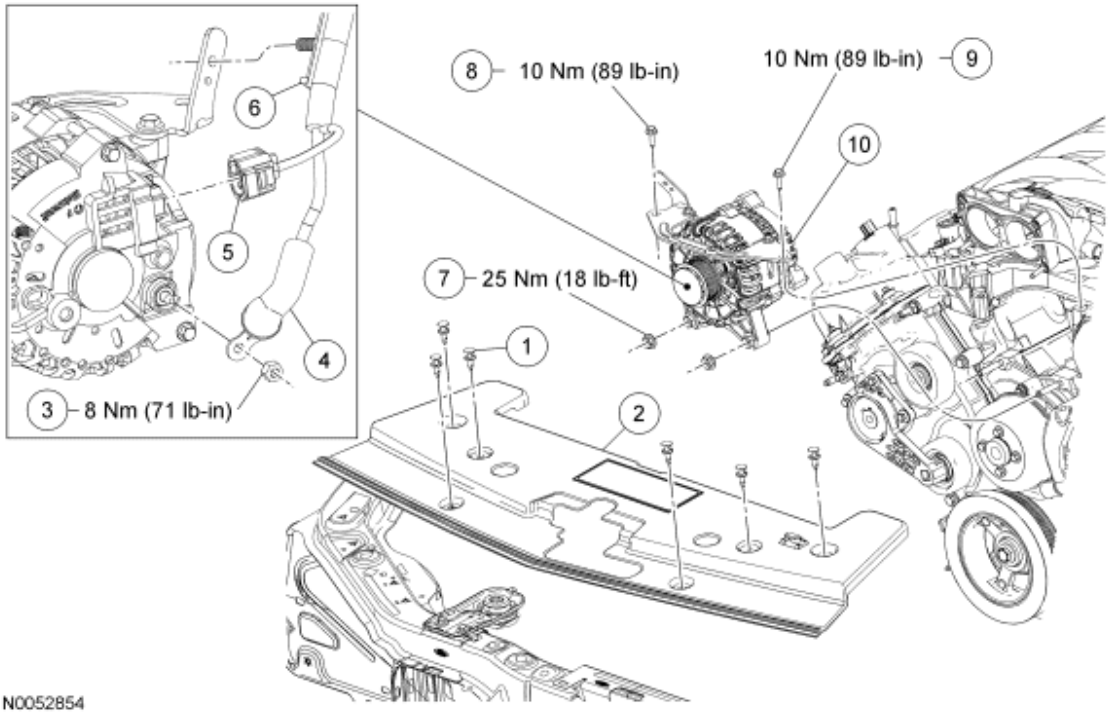

Fig. 191: Identifying Engine Support Insulators With Torque Specifications (1 Of 3)
Courtesy of FORD MOTOR CO.

Item	Part Number	Description
1	-	Pin-type retainer
2	8C291	Radiator sight shield
3	W705790	B+ terminal nut
4	-	B+ terminal cover (part of 14305)
5	14A4644	Generator electrical connector (part of 14305)
6	-	Wiring harness pin-type retainer (part of 14305)
7	N804758	Generator nut (2 required)
8	N807309	Generator bracket bolt
9	W704682	Generator bracket bolt
10	10300	Generator

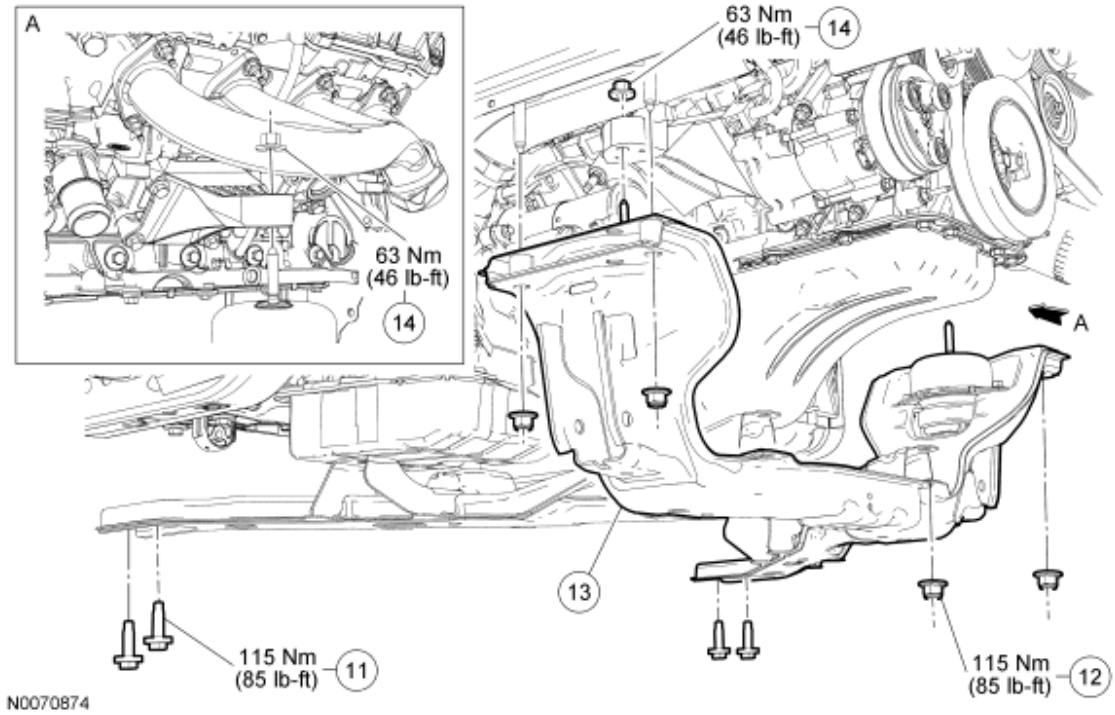

Fig. 192: Identifying Engine Support Insulators With Torque Specifications (2 Of 3)
Courtesy of FORD MOTOR CO.

Item	Part Number	Description
11	W711075	Subframe bolt (4 required)
12	W707246	Subframe nut (4 required)
13	5025	Subframe
14	N621943	Engine support insulator nut (2 required)

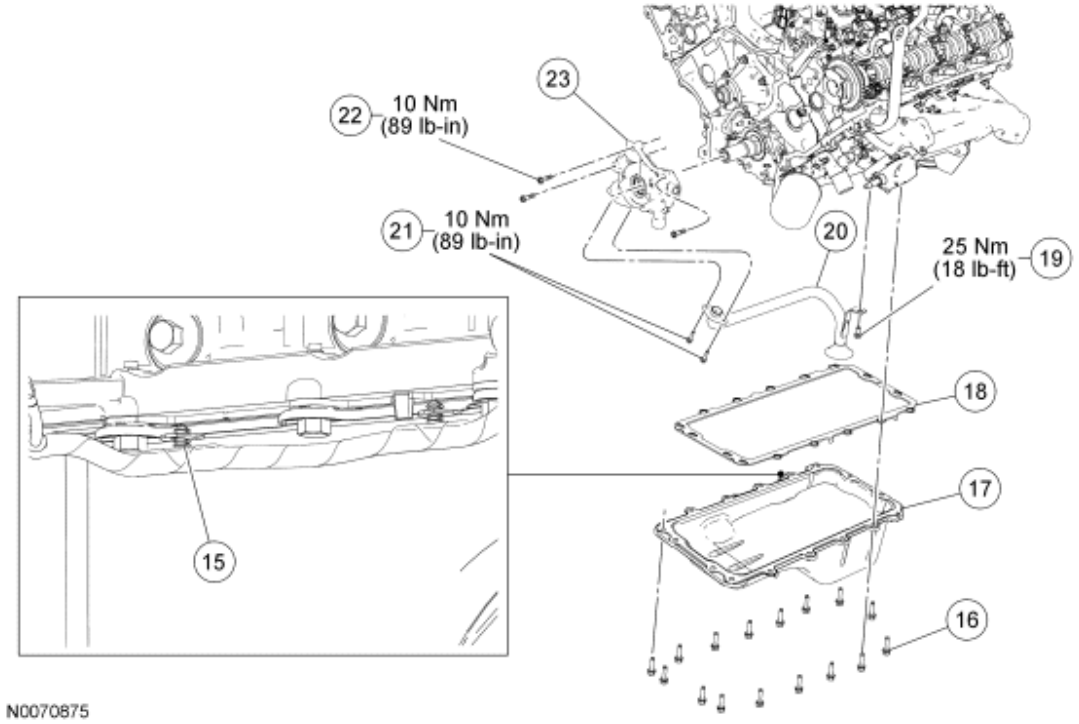

Fig. 193: Identifying Engine Support Insulators With Torque Specifications (3 Of 3)
Courtesy of FORD MOTOR CO.

Item	Part Number	Description
15	-	Pin-type retainer (2 required) (part of 12B637)
16	W701605	Oil pan bolt (16 required)
17	6675	Oil pan
18	6710	Oil pan gasket
19	N605904	Oil pump screen and pickup tube-to-spacer bolt
20	6622	Oil pump screen and pickup tube
21	N806155	Oil pump screen and pickup tube-to-oil pump bolts (2 required)
22	N806183	Oil pump bolt (3 required)
23	6621	Oil pump

1. For additional information, refer to the procedures.

OIL PAN

Special Tools

Illustration	Tool Name	Tool Number
	3-Bar Engine Support Kit	303-F072

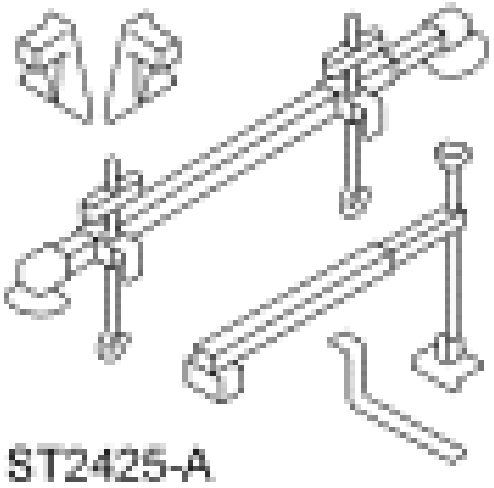 ST2425-A		
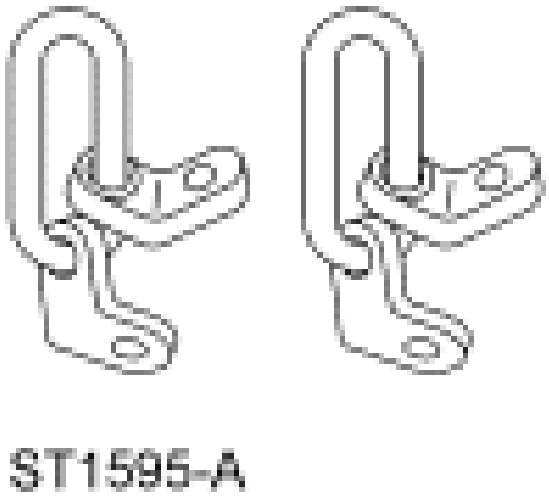 ST1595-A	Lifting Brackets, Engine	303-050 (T70P-6000)

Material

Item	Specification
Motorcraft Metal Surface Prep ZC-31	-
Motorcraft SAE 5W-20 Premium Synthetic Blend Motor Oil XO-5W20-QSP (US); Motorcraft SAE 5W-20 Super Premium Motor Oil CXO-5W20-LSP12 (Canada); or equivalent	WSS-M2C930-A
Silicone Gasket and Sealant TA-30	WSE-M4G323-A4
Silicone Gasket Remover ZC-30	-

REMOVAL

All vehicles

1. With the vehicle in NEUTRAL, position it on a hoist. For additional information, refer to **JACKING AND LIFTING** article.
2. Disconnect the battery ground cable. For additional information, refer to **BATTERY, MOUNTING AND CABLES** article.
3. Drain the engine oil.
   - Install the drain plug and tighten to 26 Nm (19 lb-ft).
4. Remove the air cleaner assembly. For additional information, refer to **INTAKE AIR DISTRIBUTION AND FILTERING** article.
5. Remove the throttle body (TB). For additional information, refer to **FUEL CHARGING AND CONTROLS - 4.6L (3V)** article.
6. Remove the 6 pin-type retainers and the radiator sight shield.
7. Using a suitable belt tensioner release tool, rotate the accessory drive belt tensioner clockwise and remove the accessory drive belt from the generator pulley.

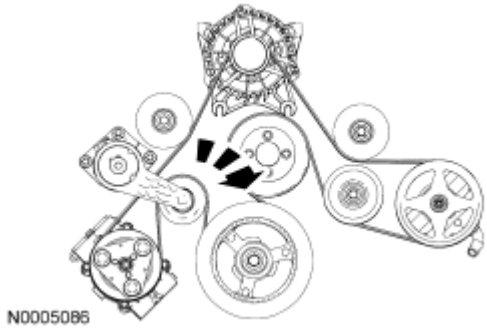

Fig. 194: Rotating Accessory Drive Belt Tensioner Clockwise
Courtesy of FORD MOTOR CO.

8. Remove the 2 outer generator bracket bolts.
9. Remove the 2 lower generator nuts.
10. Disconnect the generator electrical connector and pin-type retainer.
11. Position the B+ terminal cover aside and remove the B+ terminal nut.
    - Remove the generator.
12. Install the special tools.

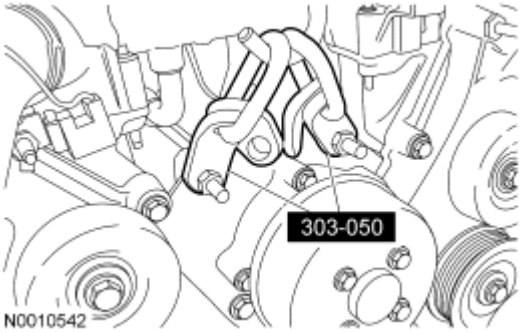

Fig. 195: Installing Special Tool (303-050)
Courtesy of FORD MOTOR CO.

Bullitt vehicles

13. Remove the 4 nuts and the strut tower cross brace.

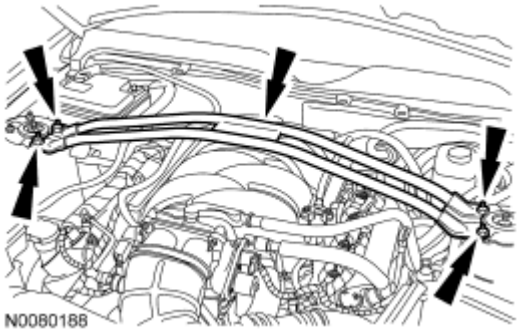

Fig. 196: Locating Strut Tower Cross Brace & Nuts
Courtesy of FORD MOTOR CO.

All vehicles

14. Install the special tool.

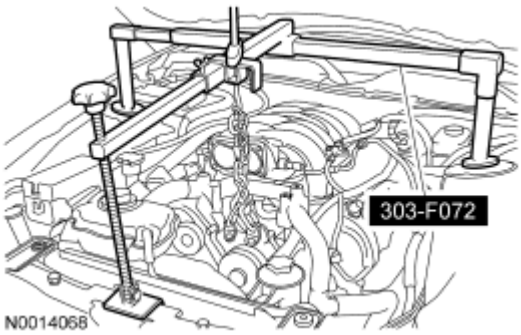

Fig. 197: Installing Special Tool (303-F072)
Courtesy of FORD MOTOR CO.

NOTE: Both the RH and LH engine support insulator nuts must be removed to allow the engine to be raised.

NOTE: RH shown, LH similar.

15. Remove the RH and LH engine support insulator nuts.

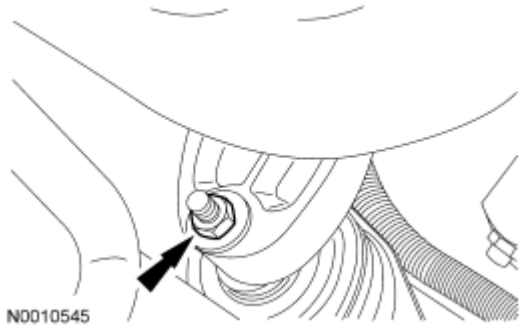

Fig. 198: Locating Engine Support Insulator Nuts
Courtesy of FORD MOTOR CO.

16. Using the special tool, raise the engine 40 mm (1.57 in).

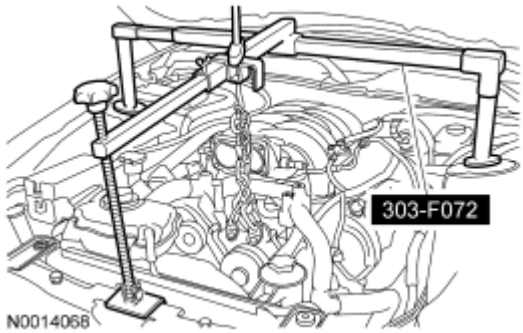

Fig. 199: Installing Special Tool (303-F072)
Courtesy of FORD MOTOR CO.

17. Position a suitable adjustable jackstand under the subframe.
18. Mark the position of the 4 subframe nuts and 4 subframe bolts for referencing during assembly.

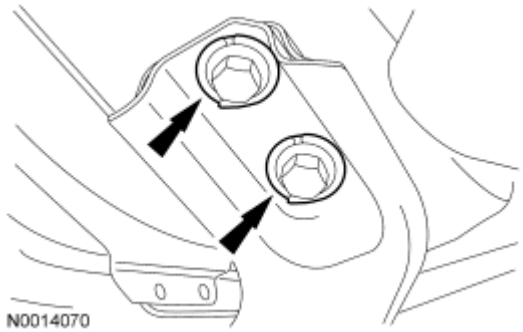

Fig. 200: Aligning Subframe Nuts And Bolts
Courtesy of FORD MOTOR CO.

19. Remove the 4 subframe nuts and 4 subframe bolts.
20. Using the adjustable jackstand, lower the subframe 50 mm (1.96 in).
21. Detach the 2 pin-type retainers.

NOTE: Be careful when removing the oil pan gasket. It is reusable.

22. Remove the 16 bolts, the oil pan and the gasket.
    - Discard the oil pan gasket.

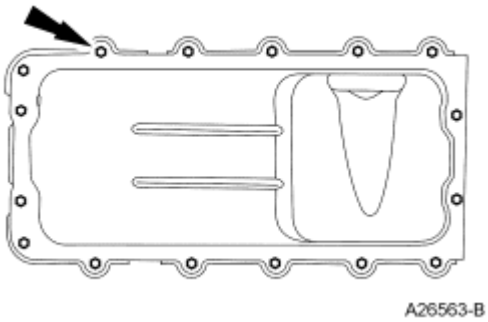

Fig. 201: Locating Oil Pan And Oil Pan Gasket Bolts
Courtesy of FORD MOTOR CO.

INSTALLATION

All vehicles

CAUTION: Do not use metal scrapers, wire brushes, power abrasive discs or other abrasive means to clean the sealing surfaces. These tools cause scratches and gouges, which make leak paths. Use a plastic scraping tool to remove all traces of old sealant.

1. Inspect the oil pan. Clean the mating surface of the oil pan with silicone gasket remover and metal surface prep. Follow the directions on the packaging.

NOTE: **If not secured within 4 minutes, the sealant must be removed and the sealing area cleaned. To clean the sealing area, use silicone gasket remover and metal surface prep. Follow the directions on the packaging. Failure to follow this procedure can cause future oil leakage.**

2. Apply silicone gasket and sealant at the crankshaft rear seal retainer plate-to-cylinder block sealing surface.

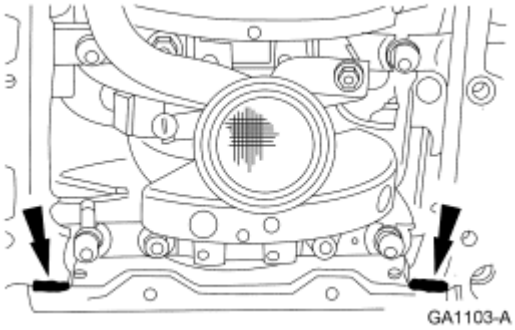

Fig. 202: Applying Silicone Gasket And Sealant
Courtesy of FORD MOTOR CO.

NOTE: **If not secured within 4 minutes, the sealant must be removed and the sealing area cleaned. To clean the sealing area, use silicone gasket remover and metal surface prep. Follow the directions on the packaging. Failure to follow this procedure can cause future oil leakage.**

3. Apply silicone gasket and sealant at the engine front cover-to-cylinder block sealing surface.

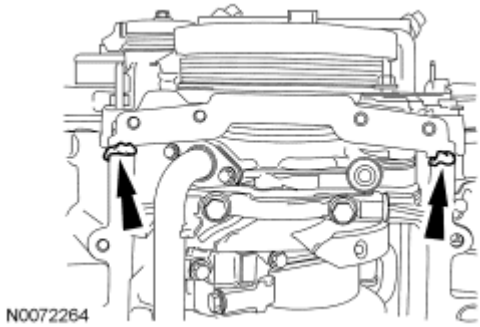

Fig. 203: Applying Silicone Gasket & Sealant At Engine Front Cover-To-Cylinder Block Sealing Surface
Courtesy of FORD MOTOR CO.

4. Install the new oil pan gasket and the oil pan and loosely install the 16 bolts.

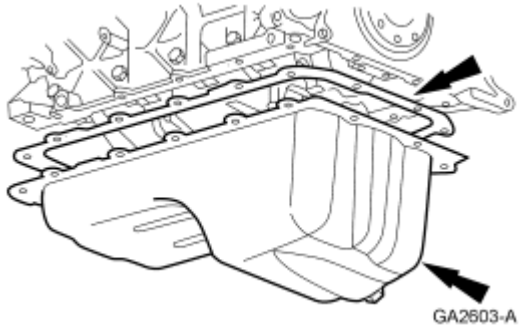

Fig. 204: Positioning New Oil Pan Gasket And Oil Pan
Courtesy of FORD MOTOR CO.

5. Tighten the bolts in 3 stages, in the sequence shown.
   - Stage 1: Tighten to 2 N.m (18 lb-in).
   - Stage 2: Tighten to 20 N.m (15 lb-ft).
   - Stage 3: Tighten an additional 60 degrees.

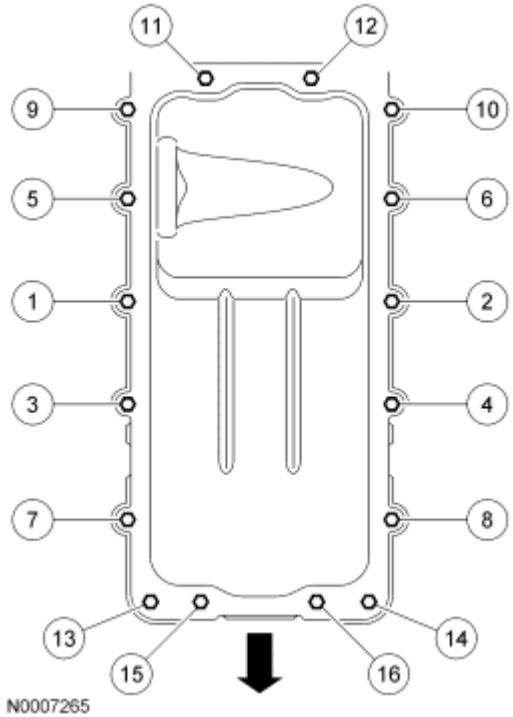

Fig. 205: Identifying Oil Pan Bolt Tightening Sequence
Courtesy of FORD MOTOR CO.

6. Attach the 2 pin-type retainers.
7. Using the adjustable jackstand, raise the subframe.

NOTE: Do not tighten the subframe nuts and bolts at this time.

8. Install the 4 subframe nuts and 4 subframe bolts.
9. Align the subframe nuts and bolts with the reference marks made during removal.
   - Tighten nuts to 115 Nm (85 lb-ft).
   - Tighten bolts to 115 Nm (85 lb-ft).

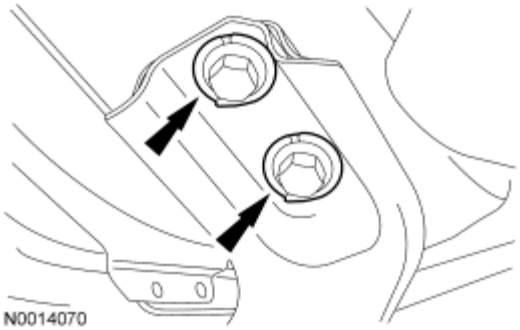

Fig. 206: Aligning Subframe Nuts And Bolts
Courtesy of FORD MOTOR CO.

Bullitt vehicles

10. Install the 4 nuts and the strut tower cross brace.
    - Tighten to 35 Nm (26 lb-ft).

All vehicles

11. Using the special tool, lower the engine.

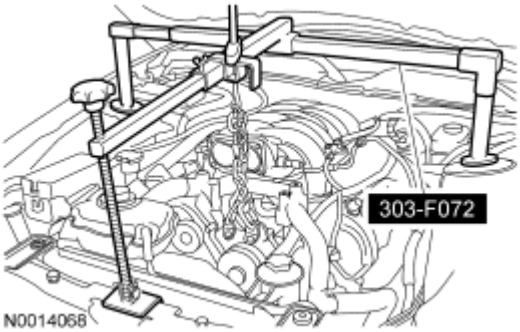

Fig. 207: Installing Special Tool (303-F072)
Courtesy of FORD MOTOR CO.

NOTE: RH shown, LH similar.

12. Install the RH and LH engine support insulator nuts.
    - Tighten to 63 Nm (46 lb-ft).

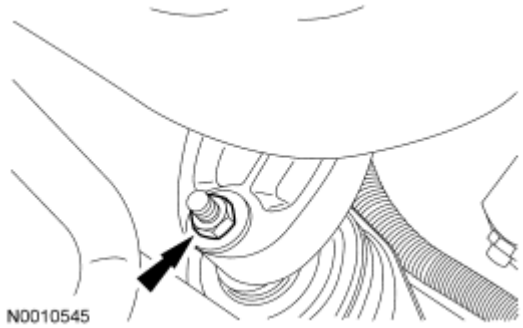

Fig. 208: Locating Engine Support Insulator Nuts
Courtesy of FORD MOTOR CO.

NOTE: Make sure the B+ cable is positioned close to the generator when the nut is being tightened.

13. Position the generator and install the B+ terminal and nut.
    - Tighten to 8 Nm (71 lb-in).
14. Connect the generator electrical connector and pin-type retainer.
15. Install the 2 lower generator nuts.
    - Tighten to 25 Nm (18 lb-ft).
16. Install the 2 outer generator bracket bolts.
    - Tighten to 10 Nm (89 lb-in).
17. Using a suitable belt tensioner release tool, rotate the accessory drive belt tensioner clockwise and install the accessory drive belt on the generator pulley.

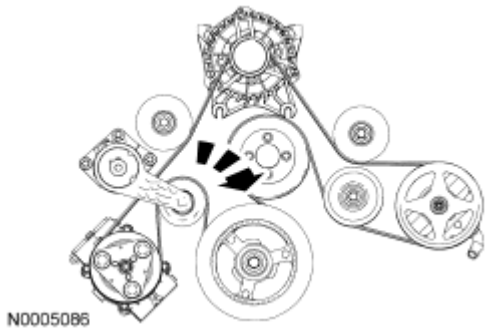

Fig. 209: Rotating Accessory Drive Belt Tensioner Clockwise
Courtesy of FORD MOTOR CO.

18. Install the radiator sight shield and 6 pin-type retainers.
19. Install the TB. For additional information, refer to **FUEL CHARGING AND CONTROLS - 4.6L (3V)** article.
20. Install the air cleaner assembly. For additional information, refer to **INTAKE AIR DISTRIBUTION AND FILTERING** article.
21. Fill the crankcase with clean engine oil.

22. Connect the battery ground cable. For additional information, refer to **BATTERY, MOUNTING AND CABLES** article.

OIL PUMP SCREEN AND PICKUP TUBE

Material

Item	Specification
Motorcraft SAE 5W-20 Premium Synthetic Blend Motor Oil XO-5W20-QSP (US); Motorcraft SAE 5W-20 Super Premium Motor Oil CXO-5W20-LSP12 (Canada); or equivalent	WSS-M2C930-A

REMOVAL

1. Remove the oil pan. For additional information, refer to **Engine Lubrication Components - Exploded View** and **Oil Pan**.
2. Remove the bolts and the oil pump screen and pickup tube.

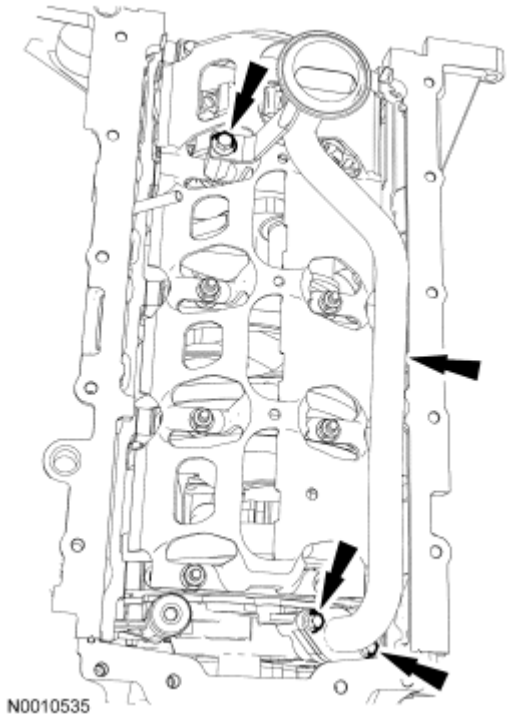

Fig. 210: Locating Oil Pump Screen And Pickup Tube And Bolt
Courtesy of FORD MOTOR CO.

INSTALLATION

CAUTION: Make sure the O-ring seal is in place and not damaged. A missing or damaged O-ring seal can cause foam in the lubrication system, low

oil pressure and severe engine damage.

NOTE: Clean and inspect the mating surfaces and install a new O-ring seal. Lubricate the O-ring seal with clean engine oil prior to installation.

1. Position the oil pump screen and pickup tube and install the bolts.
   - Tighten the oil pump screen and pickup tube-to-oil pump bolts to 10 N.m (89 lb-in).
   - Tighten the oil pump screen and pickup tube-to-spacer bolt to 25 N.m (18 lb-ft).

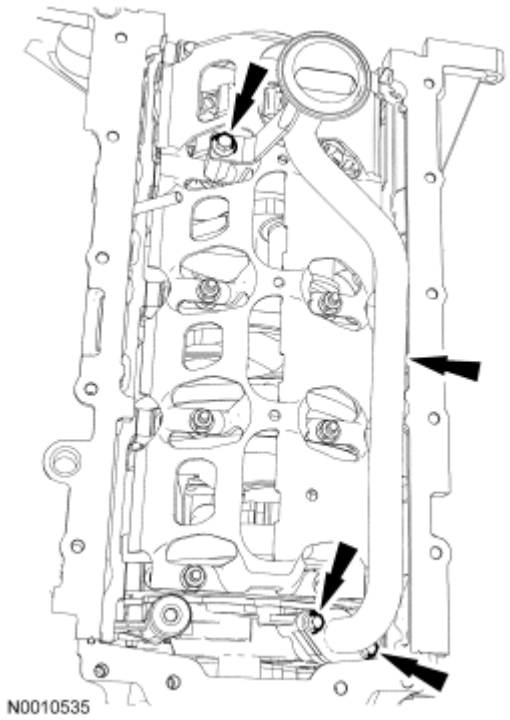

Fig. 211: Locating Oil Pump Screen And Pickup Tube And Bolt
Courtesy of FORD MOTOR CO.

2. Install the oil pan. For additional information, refer to **Engine Lubrication Components - Exploded View** and **Oil Pan**.

OIL PUMP

Material

Item	Specification
Motorcraft Metal Surface Prep ZC-31	-
Motorcraft SAE 5W-20 Premium Synthetic Blend Motor Oil XO-5W20-QSP (US); Motorcraft SAE 5W-20 Super Premium Motor Oil CXO-5W20-LSP12	WSS-M2C930-A

(Canada); or equivalent	

REMOVAL

1. Remove the oil pan. For additional information, refer to **Engine Lubrication Components - Exploded View** and **Oil Pan**.
2. Remove the timing drive components. For additional information, refer to **Timing Drive Components**.
3. Remove the bolts and the oil pump screen and pickup tube.

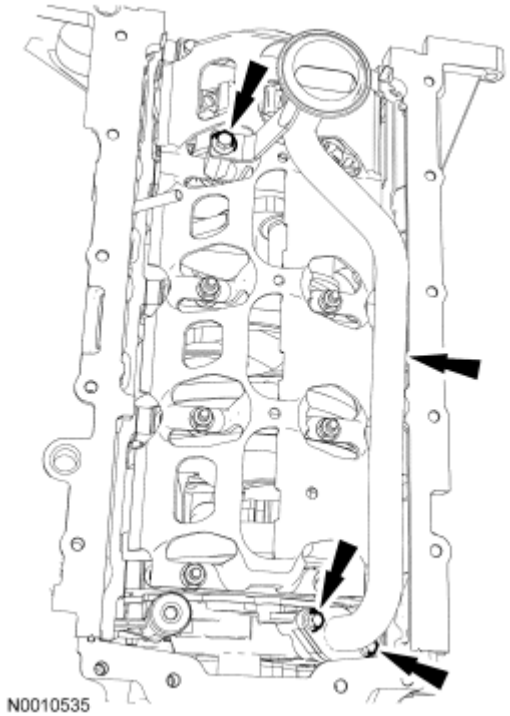

Fig. 212: Locating Oil Pump Screen And Pickup Tube And Bolt
Courtesy of FORD MOTOR CO.

4. Remove the 3 bolts and the oil pump.

Fig. 213: Locating Oil Pump Bolts
Courtesy of FORD MOTOR CO.

INSTALLATION

CAUTION: Do not use metal scrapers, wire brushes, power abrasive discs or other abrasive means to clean the sealing surfaces. These tools cause scratches and gouges which make leak paths. Use a plastic scraping tool to remove all traces of old sealant.

1. Clean the sealing surfaces with metal surface prep. Follow the directions on the packaging. Inspect the mating surfaces.
2. Position the oil pump and install the bolts.
   - Tighten to 10 N.m (89 lb-in).

Fig. 214: Locating Oil Pump Bolts
Courtesy of FORD MOTOR CO.

CAUTION: Make sure the O-ring seal is in place and not damaged. A missing or damaged O-ring seal can cause foam in the lubrication system, low oil pressure and severe engine damage.

NOTE: Clean and inspect the mating surfaces and install a new O-ring seal. Lubricate the O-ring seal with clean engine oil prior to installation.

3. Position the oil pump screen and pickup tube and install the bolts.
   - Tighten the oil pump screen and pickup tube-to-oil pump bolts to 10 N.m (89 lb-in).
   - Tighten the oil pump screen and pickup tube-to-spacer bolt to 25 N.m (18 lb-ft).

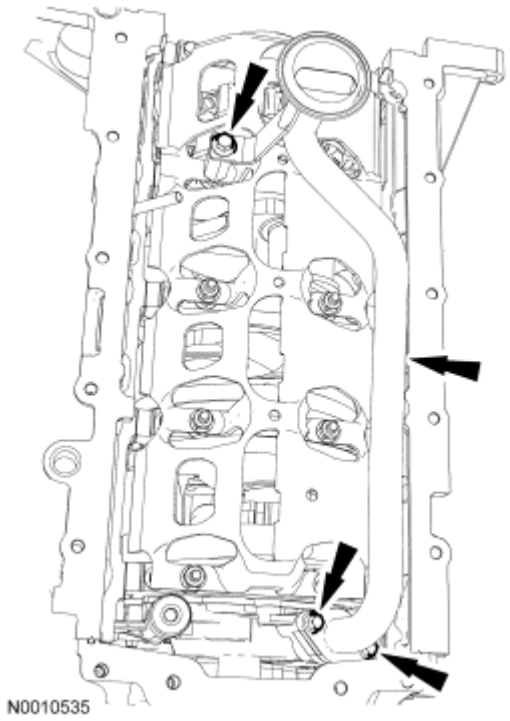

Fig. 215: Locating Oil Pump Screen And Pickup Tube And Bolt
Courtesy of FORD MOTOR CO.

4. Install the timing drive components. For additional information, refer to **Timing Drive Components**.
5. Install the oil pan. For additional information, refer to **Engine Lubrication Components - Exploded View** and **Oil Pan**.

OIL FILTER ADAPTER

Material

Item	Specification
Motorcraft Metal Surface Prep ZC-31	-
Motorcraft SAE 5W-20 Premium Synthetic Blend Motor Oil XO-5W20-QSP (US); Motorcraft SAE 5W-20 Super Premium Motor Oil CXO-5W20-LSP12 (Canada); or equivalent	WSS-M2C930-A
Silicone Gasket Remover ZC-30	-

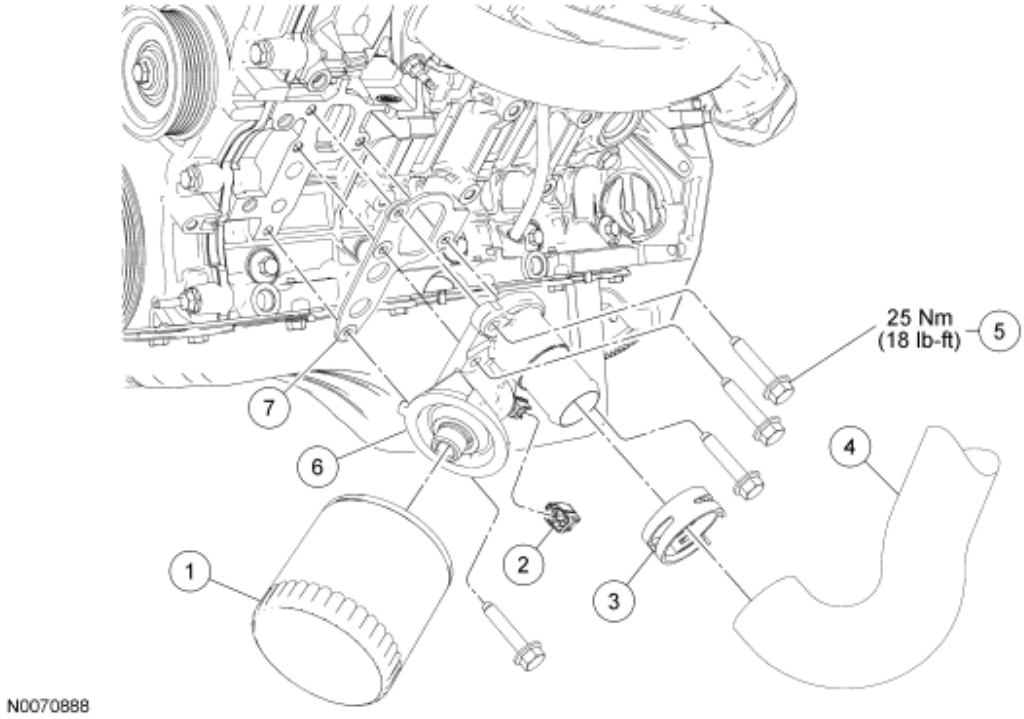

Fig. 216: Exploded View Of Oil Filter Adapter With Torque Specification
Courtesy of FORD MOTOR CO.

Item	Part Number	Description
1	6714	Oil filter
2	14A464	Engine oil pressure (EOP) switch electrical connector (part of 12B637)
3	15161	Hose clamp
4	8B273	Thermostat housing-to-oil filter adapter hose
5	N806156	Oil filter adapter bolt (4 required)
6	6881	Oil filter adapter
7	6A636	Oil filter adapter gasket

REMOVAL AND INSTALLATION

1. With the vehicle in NEUTRAL, position it on a hoist. For additional information, refer to **JACKING AND LIFTING** article.
2. Drain the engine cooling system. For additional information, refer to **ENGINE COOLING** article.
3. Drain the engine oil.
    - Install the drain plug and tighten to 26 Nm (19 lb-ft).
4. Disconnect the engine oil pressure (EOP) switch electrical connector.
5. Disconnect the lower radiator-to-oil filter adapter hose and position it aside.
6. Remove and discard the engine oil filter.
    - To install, lubricate the oil filter gasket with clean engine oil and tighten until the seal makes

contact.
    - Using an oil filter strap wrench, tighten the filter an additional 270 degrees.
7. Remove the 4 bolts and the oil filter adapter.
    - To install, tighten to 25 N.m (18 lb-ft).

CAUTION: Do not use metal scrapers, wire brushes, power abrasive discs or other abrasive means to clean the sealing surfaces. These may cause scratches and gouges resulting in leak paths. Use a plastic scraper to clean the sealing surfaces.

8. Remove and discard the oil filter adapter gasket.
    - Clean the sealing surfaces with silicone gasket remover and metal surface prep. Follow the directions on the packaging.
    - Inspect the mating surfaces.
9. To install, reverse the removal procedure.
    - Fill the engine with clean engine oil.
10. Fill and bleed the engine cooling system. For additional information, refer to **ENGINE COOLING** article.

OIL LEVEL INDICATOR AND TUBE

Material

Item	Specification
Motorcraft SAE 5W-20 Premium Synthetic Blend Motor Oil XO-5W20-QSP (US); Motorcraft SAE 5W-20 Super Premium Motor Oil CXO-5W20-LSP12 (Canada); or equivalent	WSS-M2C930-A

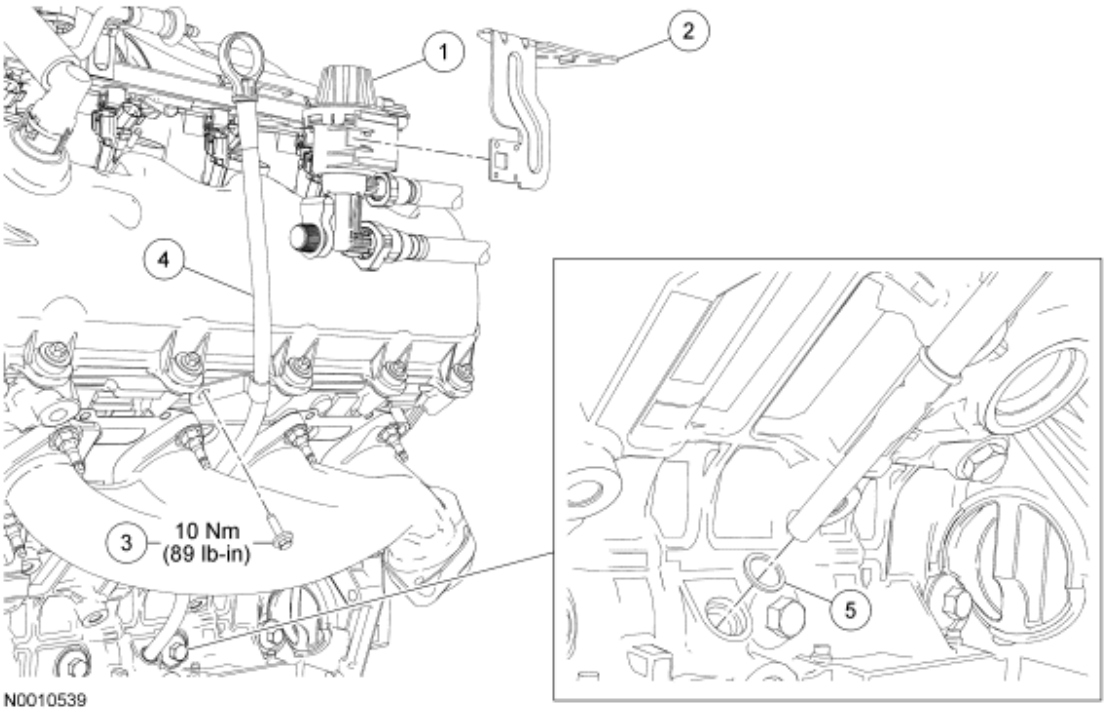

Fig. 217: Identifying Oil Level Indicator & Tube With Torque Specification
Courtesy of FORD MOTOR CO.

Item	Part Number	Description
1	9G641	Evaporative emissions (EVAP) canister purge valve
2	-	EVAP canister purge valve bracket (part of 9G641)
3	N605891	Oil level indicator and tube bolt
4	6754	Oil level indicator and tube
5	-	O-ring seal

REMOVAL AND INSTALLATION

1. With the vehicle in NEUTRAL, position it on a hoist. For additional information, refer to **JACKING AND LIFTING** article.
2. Detach the evaporative emissions (EVAP) canister purge valve from the bracket and position aside.
3. Remove the oil level indicator and tube bolt.
   - To install, tighten to 10 N.m (89 lb-in).
4. Remove the oil level indicator and tube from the cylinder block.
   - Discard the O-ring seal.

NOTE: Lubricate the new oil level indicator tube O-ring seal with clean engine oil prior to installation.

5. To install, reverse the removal procedure.

ENGINE SUPPORT INSULATORS

Special Tools

Illustration	Tool Name	Tool Number
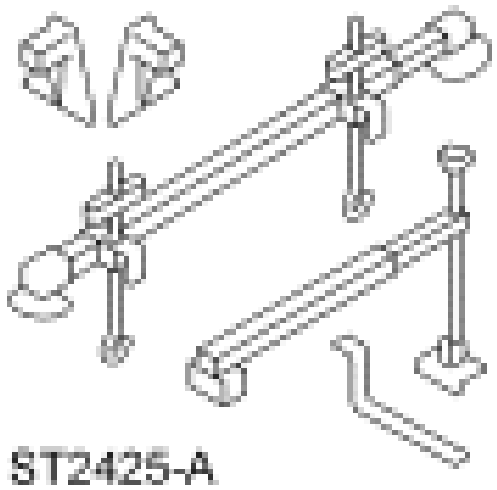	3-Bar Engine Support Kit	303-F072
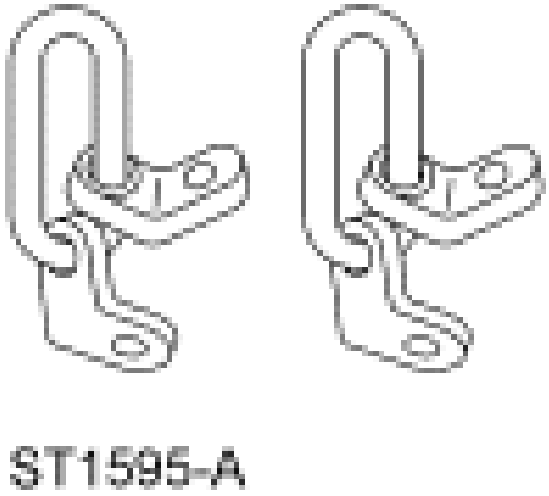	Lifting Brackets, Engine	303-050 (T70P-6000)

Material

Item	Specification
Motorcraft Metal Surface Prep ZC-31	-

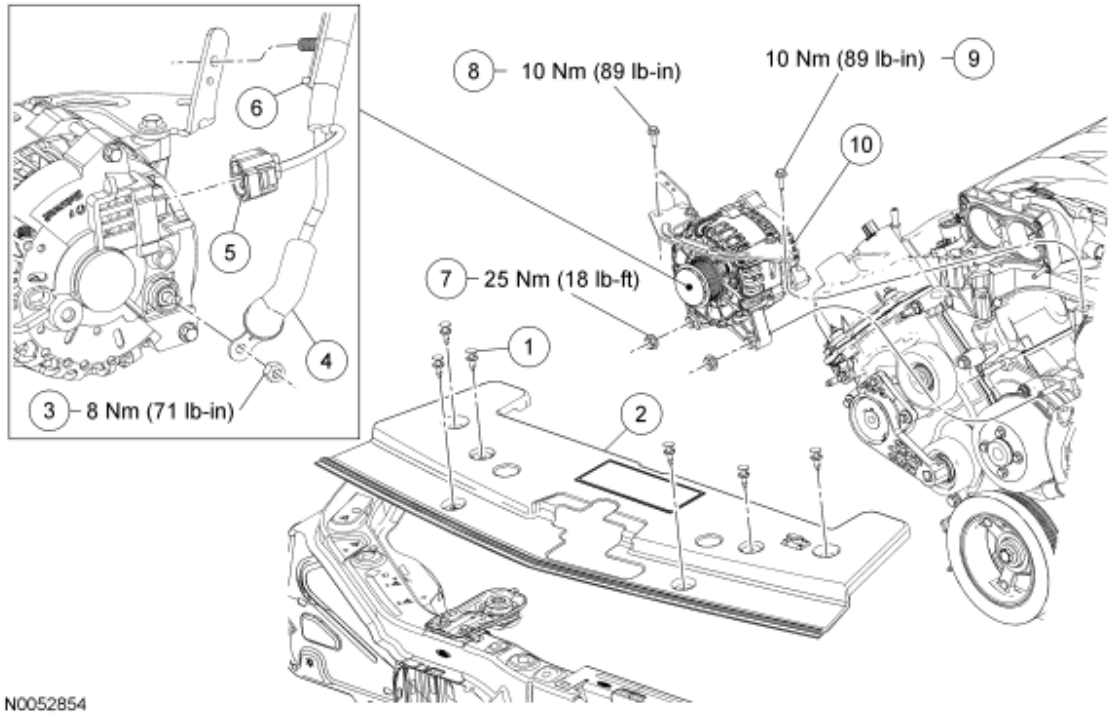

Fig. 218: Identifying Engine Support Insulators With Torque Specifications (1 Of 3)
Courtesy of FORD MOTOR CO.

Item	Part Number	Description
1	-	Pin-type retainer
2	8C291	Radiator sight shield
3	W705790	B+ terminal nut
4	-	B+ terminal cover (part of 14305)
5	14A4644	Generator electrical connector (part of 14305)
6	-	Wiring harness pin-type retainer (part of 14305)
7	N804758	Generator nut (2 required)
8	N807309	Generator bracket bolt
9	W704682	Generator bracket bolt
10	10300	Generator

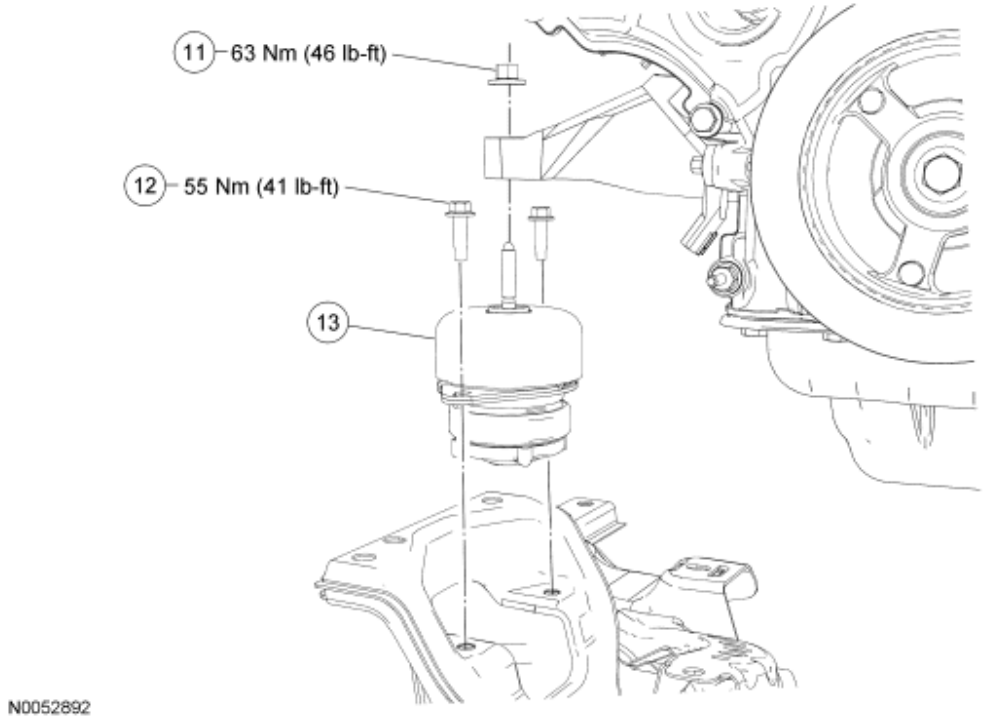

Fig. 219: Identifying Engine Support Insulators With Torque Specifications (2 Of 3)
Courtesy of FORD MOTOR CO.

Item	Part Number	Description
11	N621943	RH engine support insulator nut
12	W707641	RH engine support insulator bolt (2 required)
13	6038	RH engine support insulator

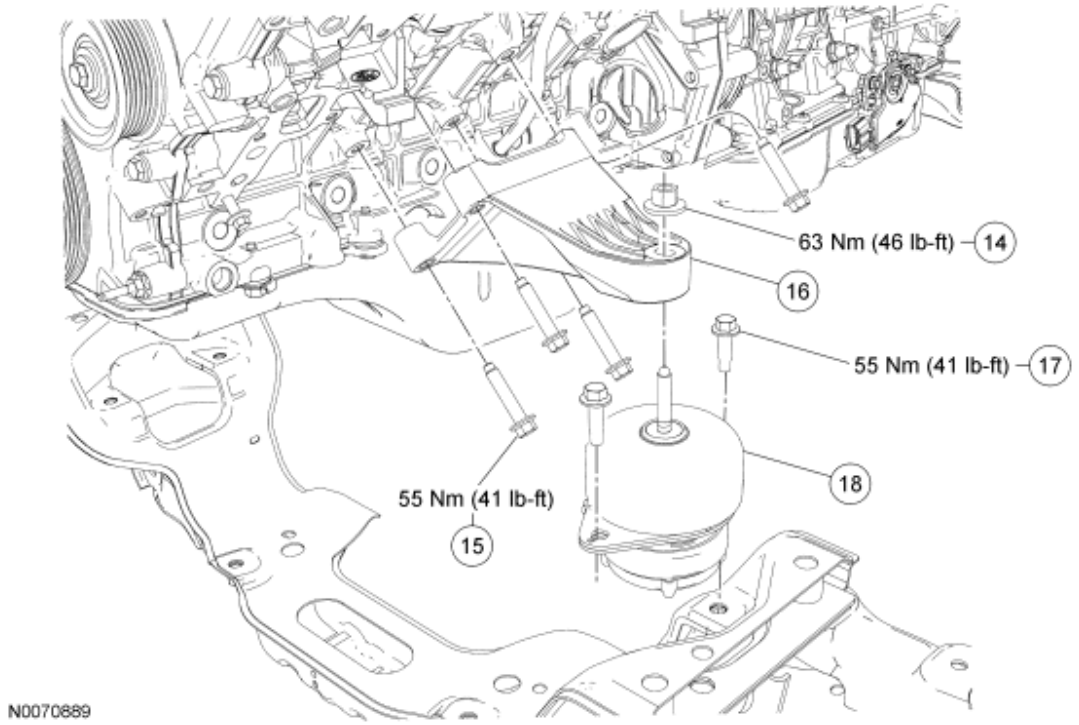

Fig. 220: Identifying Engine Support Insulators With Torque Specifications (3 Of 3)
Courtesy of FORD MOTOR CO.

Item	Part Number	Description
14	N621943	LH engine support insulator nut
15	W500721	LH engine support bracket bolt (4 required)
16	6B033	LH engine support bracket
17	W707641	LH engine support insulator bolt (2 required)
18	6038	LH engine support insulator

REMOVAL

All engine support insulators

1. With the vehicle in NEUTRAL, position it on a hoist. For additional information, refer to **JACKING AND LIFTING** article.
2. Disconnect the battery ground cable. For additional information, refer to **BATTERY, MOUNTING AND CABLES** article.
3. Remove the air cleaner assembly. For additional information, refer to **INTAKE AIR DISTRIBUTION AND FILTERING** article.
4. Remove the throttle body (TB). For additional information, refer to **FUEL CHARGING AND CONTROLS - 4.6L (3V)** article.
5. Disconnect the evaporative emissions (EVAP) canister purge valve vapor tube quick connect coupling

from the intake manifold and position aside. For additional information, refer to **FUEL SYSTEM - GENERAL INFORMATION** article.

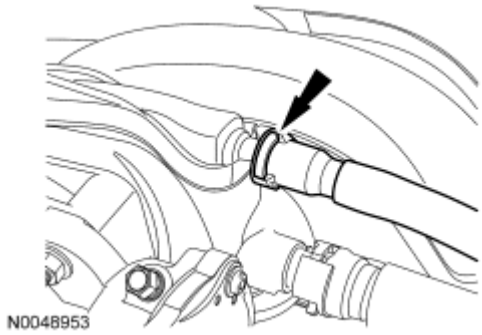

Fig. 221: Locating EVAP Canister Purge Valve Vapor Tube
Courtesy of FORD MOTOR CO.

6. Remove the 6 pin-type retainers and the radiator sight shield.
7. Remove the 2 outer generator bracket bolts.
8. Remove the 2 lower generator nuts.
9. Disconnect the generator electrical connector and pin-type retainer.
10. Position the B+ terminal cover aside and remove the B+ terminal nut.
    - Remove the generator.
11. Install the special tools.

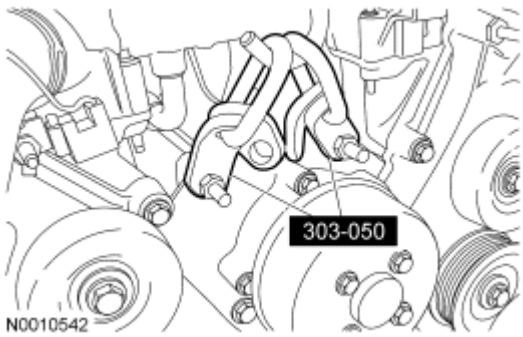

Fig. 222: Installing Special Tool (303-050)
Courtesy of FORD MOTOR CO.

Bullitt vehicles

12. Remove the 4 nuts and the strut tower cross brace.

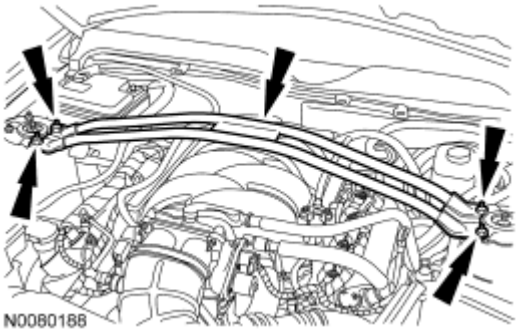

Fig. 223: Locating Strut Tower Cross Brace & Nuts
Courtesy of FORD MOTOR CO.

All engine support insulators

13. Install the special tool.

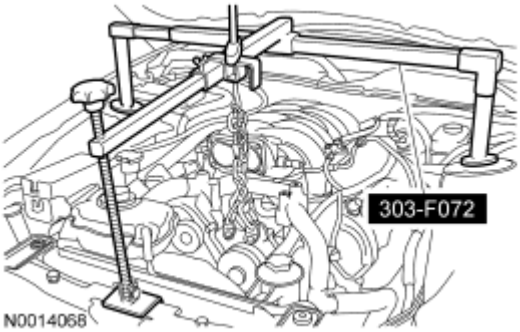

Fig. 224: Installing Special Tool (303-F072)
Courtesy of FORD MOTOR CO.

NOTE: Both the RH and LH engine support insulator nuts must be removed to allow the engine to be raised.

NOTE: RH shown, LH similar.

14. Remove the RH and LH engine support insulator nuts.

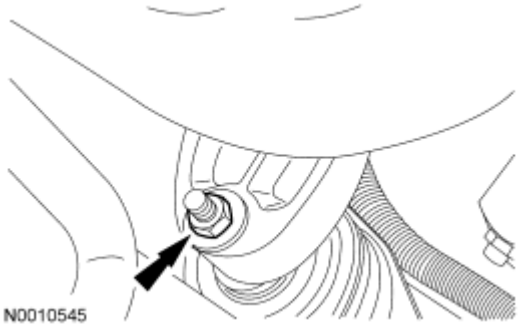

Fig. 225: Locating Engine Support Insulator Nuts
Courtesy of FORD MOTOR CO.

15. Using the special tool, raise the engine 40 mm (1.57 in).

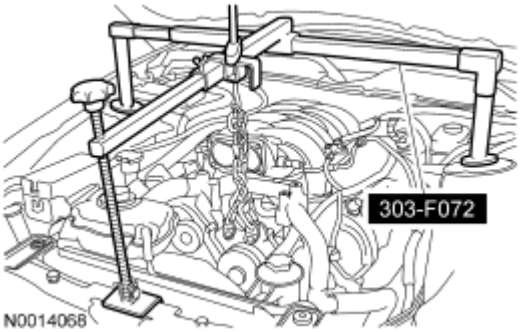

Fig. 226: Installing Special Tool (303-F072)
Courtesy of FORD MOTOR CO.

RH engine support insulator

16. Remove the 2 engine support insulator-to-subframe bolts.
    - Remove the RH engine support insulator.

LH engine support insulator

17. Remove the 4 bolts and the LH engine support bracket.
18. Remove the 2 engine support insulator-to-subframe bolts.
    - Remove the LH engine support insulator.

INSTALLATION

LH engine support insulator

1. Install the LH engine support insulator and 2 engine support insulator-to-subframe bolts.
    - Tighten to 55 Nm (41 lb-ft).
2. Install the LH engine support bracket and 4 bolts.
    - Tighten to 55 Nm (41 lb-ft).

RH engine support insulator

3. Install the RH engine support insulator and 2 engine support insulator-to-subframe bolts.
    - Tighten to 55 Nm (41 lb-ft).

All engine support insulators

4. Using the special tool, lower the engine.

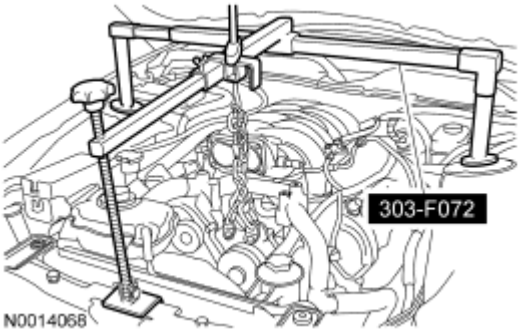

Fig. 227: Installing Special Tool (303-F072)
Courtesy of FORD MOTOR CO.

Bullitt vehicles

5. Install the 4 nuts and the strut tower cross brace.
   - Tighten to 35 Nm (26 lb-ft).

All engine support insulators

NOTE: RH shown, LH similar.

6. Install the RH and LH engine support insulator nuts.
   - Tighten to 63 Nm (46 lb-ft).

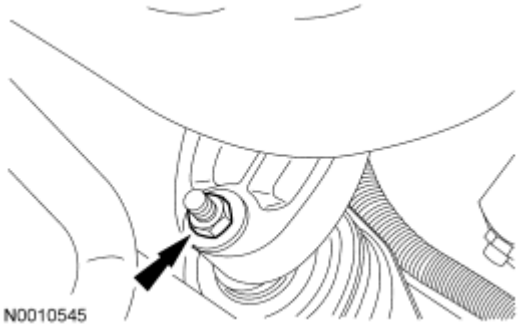

Fig. 228: Locating Engine Support Insulator Nuts
Courtesy of FORD MOTOR CO.

NOTE: Make sure the B+ cable is positioned close to the generator when the nut is being tightened.

7. Position the generator and install the B+ terminal and nut.
   - Tighten to 8 Nm (71 lb-in).
8. Connect the generator electrical connector and pin-type retainer.
9. Install the 2 lower generator nuts.

- Tighten to 25 Nm (18 lb-ft).

10. Install the 2 outer generator bracket bolts.
    - Tighten to 10 Nm (89 lb-in).
11. Install the radiator sight shield and 6 pin-type retainers.
12. Connect the EVAP canister purge valve vapor tube to the intake manifold. For additional information, refer to **FUEL SYSTEM - GENERAL INFORMATION** article.

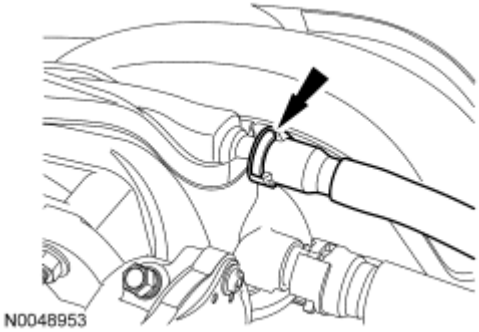

Fig. 229: Locating EVAP Canister Purge Valve Vapor Tube
Courtesy of FORD MOTOR CO.

13. Install the TB. For additional information, refer to **FUEL CHARGING AND CONTROLS - 4.6L (3V)** article.
14. Install the air cleaner assembly. For additional information, refer to **INTAKE AIR DISTRIBUTION AND FILTERING** article.
15. Connect the battery ground cable. For additional information, refer to **BATTERY, MOUNTING AND CABLES** article.

REMOVAL

ENGINE

Special Tools

Illustration	Tool Name	Tool Number
	3-Bar Engine Support Kit	303-F072

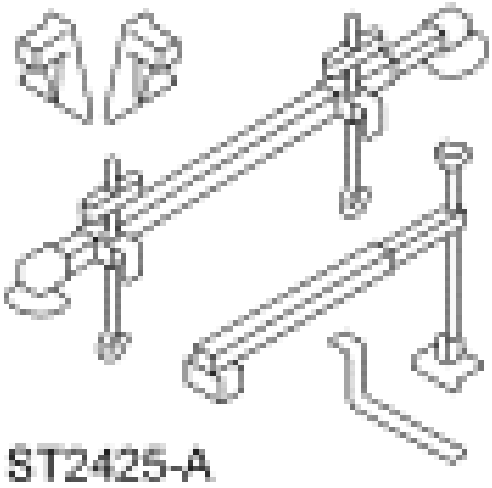 ST2425-A		
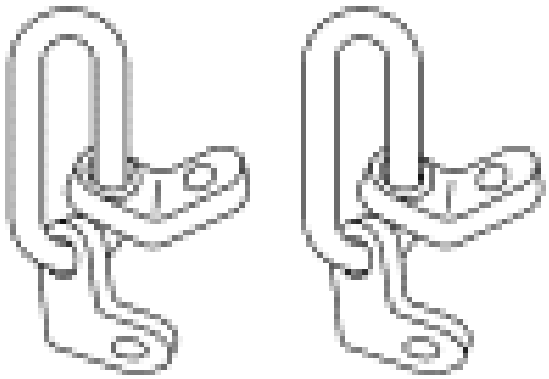 ST1595-A	Lifting Bracket, Engine	303-050 (D70P-6000) or equivalent
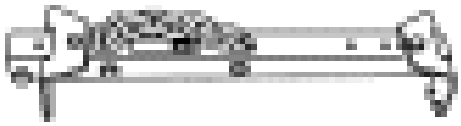 ST1377-A	Modular Engine Lift Bracket	303-F047 (014-00073) or equivalent

WARNING: Do not smoke, carry lighted tobacco or have an open flame of any type when working on or near any fuel-related component. Highly flammable mixtures are always present and may be ignited. Failure to follow these instructions may result in serious personal injury.

WARNING: Before working on or disconnecting any of the fuel tubes or fuel system components, relieve the fuel system pressure to prevent accidental spraying of fuel. Fuel in the fuel system remains under high pressure, even when the engine is not running. Failure to follow this instruction may result in serious personal injury.

All vehicles

1. With the vehicle in NEUTRAL, position it on a hoist. For additional information, refer to **JACKING AND LIFTING** article.
2. Release the fuel system pressure. For additional information, refer to **FUEL SYSTEM - GENERAL INFORMATION** article.
3. Disconnect the battery ground cable. For additional information, refer to **BATTERY, MOUNTING AND CABLES** article.
4. Release the 2 windshield washer hose retainers and the one hood insulation pin-type retainer.

Fig. 230: Locating Windshield Washer Hose Retainers
Courtesy of FORD MOTOR CO.

5. Position the hood insulation aside and disconnect the windshield washer hose.

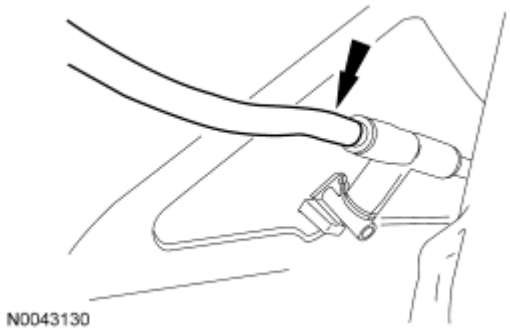

Fig. 231: Locating Windshield Washer Hose
Courtesy of FORD MOTOR CO.

NOTE: Index-mark the hood hinge location to aid in hood installation.

6. Remove the 4 bolts and the hood.
7. Remove the cowl vent screen. For additional information, refer to **FRONT END BODY PANELS** article.
8. Remove the air cleaner and outlet pipe. For additional information, refer to **INTAKE AIR DISTRIBUTION AND FILTERING** article.
9. Remove the engine coolant crossover manifold assembly. For additional information, refer to **ENGINE COOLING** article.
10. Remove the degas bottle. For additional information, refer to **ENGINE COOLING** article.
11. Remove the 6 pin-type retainers and the radiator sight shield.

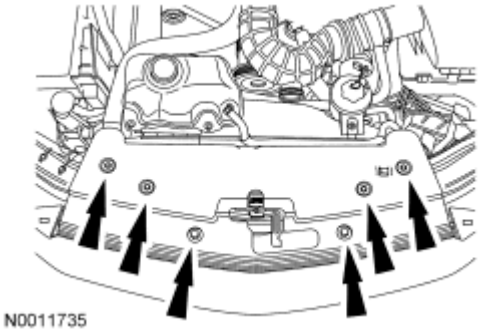

Fig. 232: Locating Pin-Type Retainers And Radiator Sight Shield
Courtesy of FORD MOTOR CO.

12. Rotate the accessory drive belt tensioner clockwise and remove the accessory drive belt.

Fig. 233: Rotating Tensioner Clockwise
Courtesy of FORD MOTOR CO.

13. Disconnect the A/C pressure transducer electrical connector.

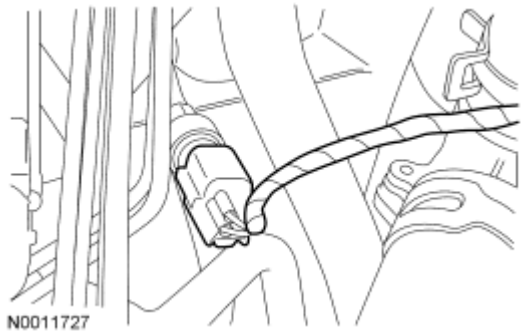

Fig. 234: Locating A/C Pressure Transducer Electrical Connector
Courtesy of FORD MOTOR CO.

14. Disconnect the coolant hose from the oil filter adapter.

Fig. 235: Identifying Coolant Hose On Oil Filter Adapter
Courtesy of FORD MOTOR CO.

15. Remove the oil pan drain plug and drain the engine oil.
    - Install the drain plug and tighten to 26 Nm (19 lb-ft).
16. Detach the 2 pin-type retainers.

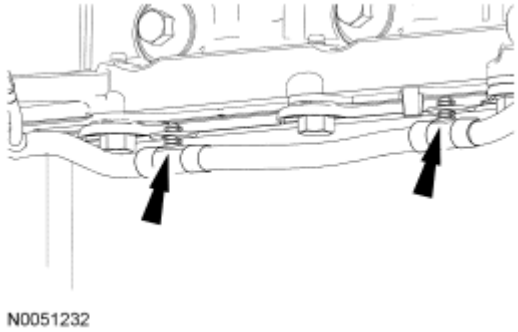

Fig. 236: Identifying Pin-Type Retainers
Courtesy of FORD MOTOR CO.

17. Remove the nut and the ground wire from the stud bolt.
    - Detach the pin-type retainer from the A/C compressor.

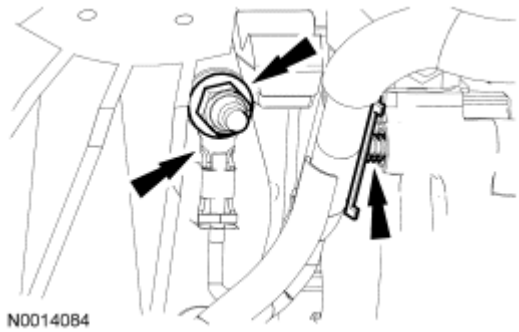

Fig. 237: Detaching Nut And Ground Wire From Stud Bolt
Courtesy of FORD MOTOR CO.

18. Disconnect the A/C clutch and crankshaft position (CKP) sensor electrical connectors.
    - Detach the wiring harness retainers and position the harness aside.

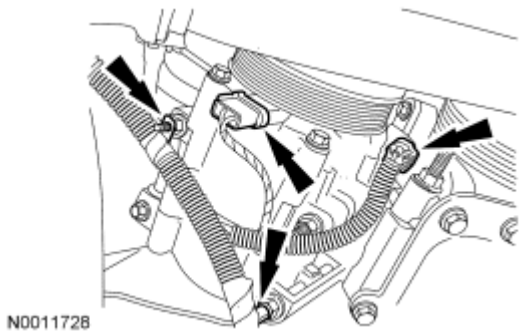

Fig. 238: Locating Wiring Harness Retainers
Courtesy of FORD MOTOR CO.

19. Remove the bolt, 3 nuts and position the A/C compressor aside.
    - Support the A/C compressor with a length of mechanic's wire.

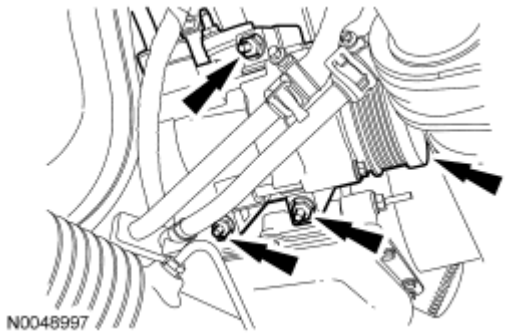

Fig. 239: Identifying A/C Compressor, Bolt & Nuts
Courtesy of FORD MOTOR CO.

20. Remove the wiring harness retainer from the power steering stud bolt.

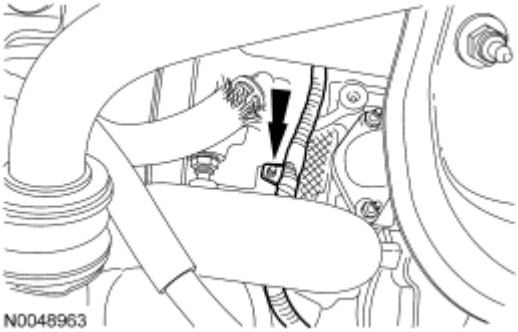

Fig. 240: Locating Power Steering Stud Bolt
Courtesy of FORD MOTOR CO.

21. Remove the 3 stud bolts and position the power steering pump aside.
    - Support the power steering pump with a length of mechanic's wire.

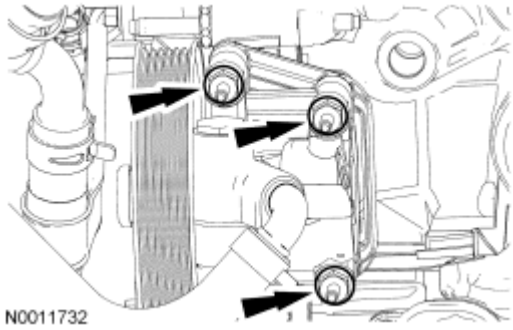

Fig. 241: Locating Power Steering Pump And Stud Bolts
Courtesy of FORD MOTOR CO.

22. Install the special tool (lifting bracket) to the threaded hole located at the LH side of the engine block.

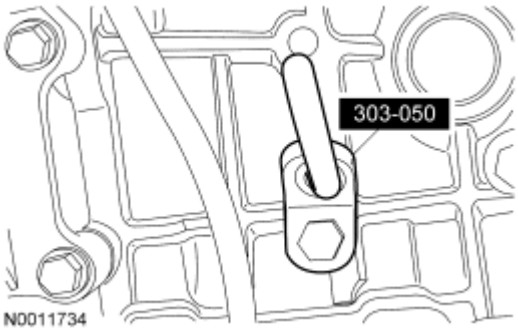

Fig. 242: Installing Special Tool (303-050) To Threaded Hole Located At LH Side Of Engine Block
Courtesy of FORD MOTOR CO.

CAUTION: The rear of the engine must be supported before removing the transmission to prevent damage to the engine or cowl.

CAUTION: Do not position the legs of the special tool (3-bar engine support) on the fenders. Instead, the legs should be positioned on the body structure near the suspension strut tower. Failure to follow these instructions may result in body damage.

23. Install the 3-bar engine support and a suitable length of chain to the engine lifting bracket installed in the previous step.

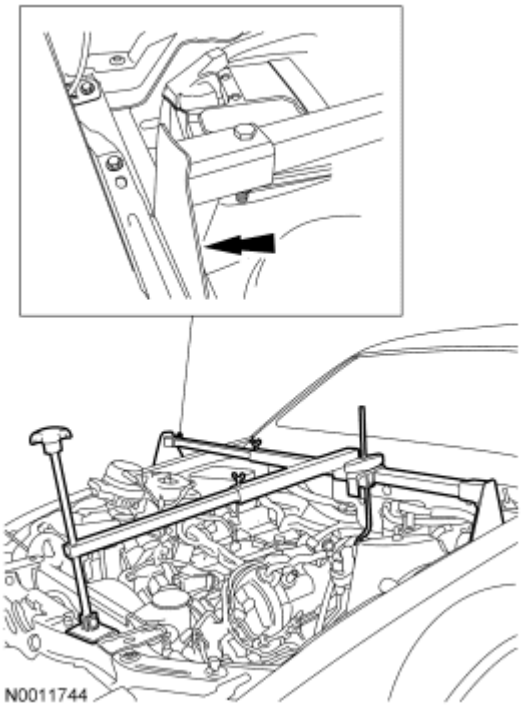

Fig. 243: Locating 3-Bar Engine Support
Courtesy of FORD MOTOR CO.

Vehicles with automatic transmission

24. Remove the nut and position aside the transmission cooler tube bracket.

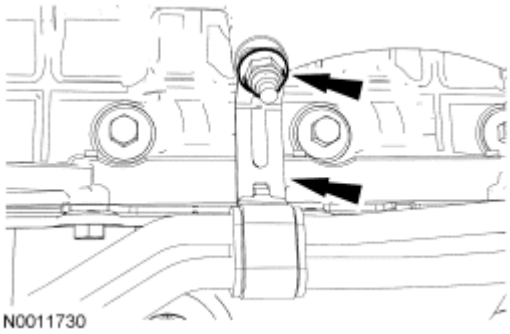

Fig. 244: Locating Transmission Cooler Tube Bracket And Nut
Courtesy of FORD MOTOR CO.

25. Remove the transmission. For additional information, refer to **AUTOMATIC TRANSAXLE/TRANSMISSION - 5R55S** article.

Vehicles with manual transmission

26. Remove the clutch. For additional information, refer to **CLUTCH** article.

All vehicles

27. Disconnect the RH heated oxygen sensor (HO2S) electrical connector.

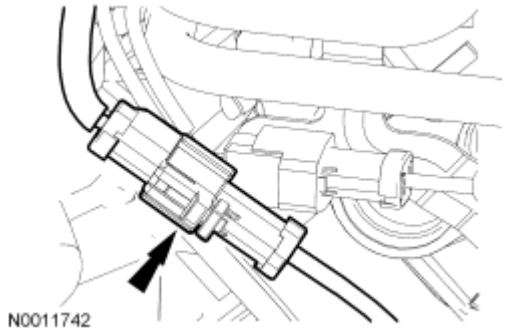

Fig. 245: Locating Heated Oxygen Sensor (HO2S) Electrical Connector
Courtesy of FORD MOTOR CO.

NOTE: RH shown, LH similar.

28. Disconnect the RH and LH catalyst monitor sensor.

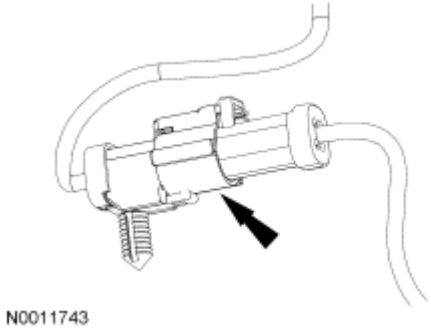

Fig. 246: Locating Catalyst Monitor Sensor
Courtesy of FORD MOTOR CO.

29. Remove the engine-to-transmission spacer plate.

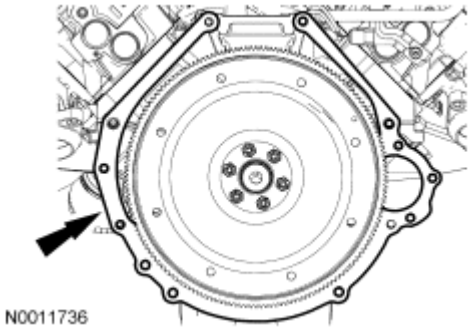

Fig. 247: Locating Engine-To-Transmission Spacer Plate
Courtesy of FORD MOTOR CO.

30. Disconnect the heater hoses.

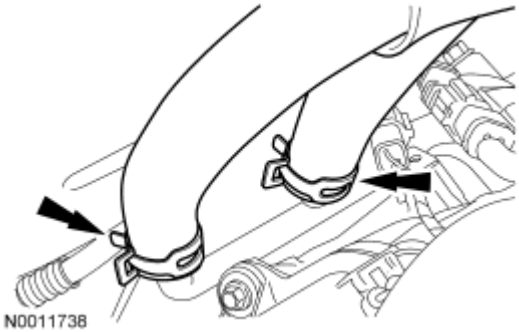

Fig. 248: Locating Heater Hoses
Courtesy of FORD MOTOR CO.

31. Remove the bolt and the ground strap from the cowl.
    - Detach the pin-type retainer.

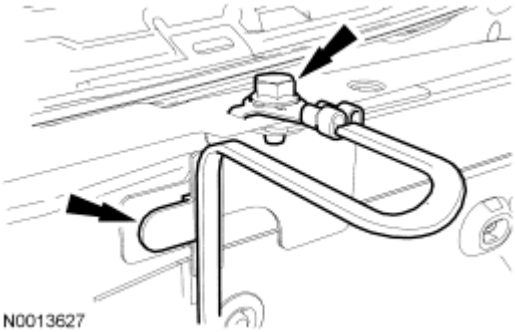

Fig. 249: Identifying Bolt And Ground Strap
Courtesy of FORD MOTOR CO.

32. Disconnect the generator jumper harness electrical connector.

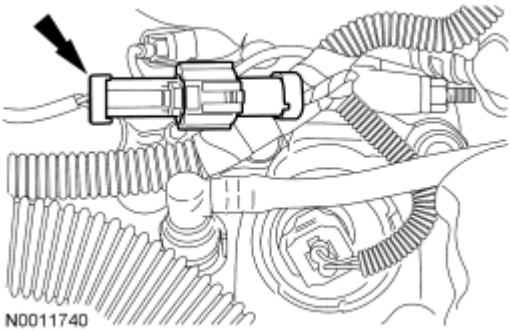

Fig. 250: Locating Generator Jumper Harness Electrical Connector
Courtesy of FORD MOTOR CO.

33. Disconnect the upper and lower PCM electrical connectors.

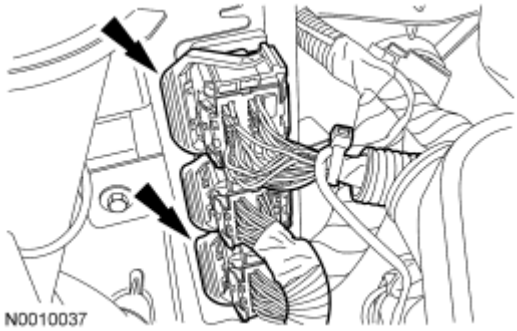

Fig. 251: Identifying Upper & Lower Powertrain Control Module (PCM) Electrical Connectors
Courtesy of FORD MOTOR CO.

34. Disconnect the 16-pin electrical connector and detach the 2 wiring retainers.

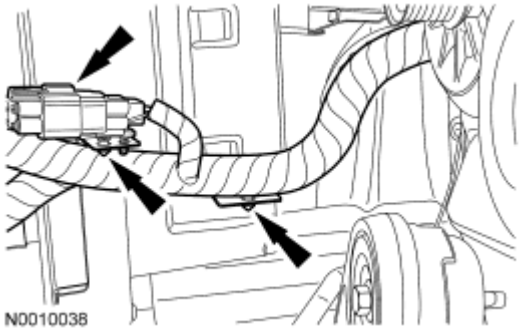

Fig. 252: Locating 16-Pin Electrical Connector
Courtesy of FORD MOTOR CO.

35. Remove the power distribution box cover.
36. Detach the power distribution box upper housing from the lower housing, loosen the bolt, then disconnect the 68-pin connector from the power distribution box.

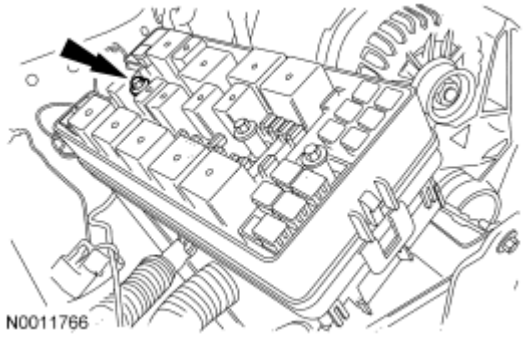

Fig. 253: Locating Power Distribution Box Upper Housing Bolt
Courtesy of FORD MOTOR CO.

37. Remove the nut and LH radio interference capacitor from the engine front cover stud bolt.

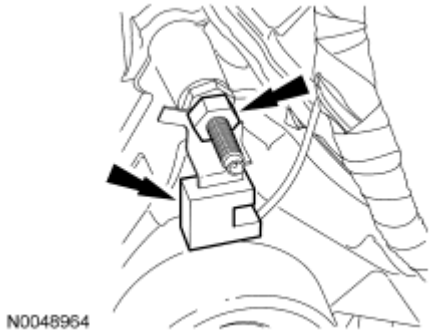

Fig. 254: Identifying Nut & LH Radio Interference Capacitor
Courtesy of FORD MOTOR CO.

NOTE: RH shown, LH similar.

38. Remove the RH and LH engine support insulator nuts.

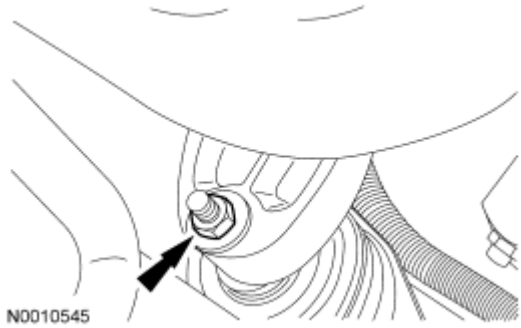

Fig. 255: Locating Engine Support Insulator Nuts
Courtesy of FORD MOTOR CO.

39. Install the special tool.

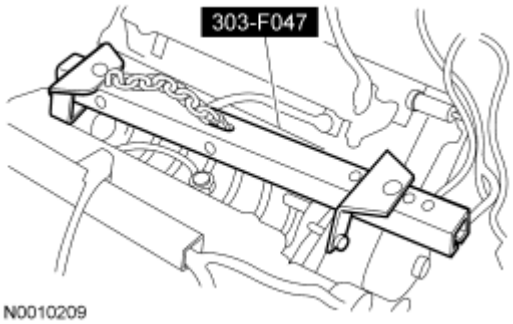

Fig. 256: Identifying Special Tool (303-F047)
Courtesy of FORD MOTOR CO.

40. Attach a suitable floor crane to the engine lifting bracket installed in the previous step.
    - Remove the 3-bar support from the vehicle.
    - Remove the engine from the vehicle.

CYLINDER HEAD

Special Tools

Illustration	Tool Name	Tool Number
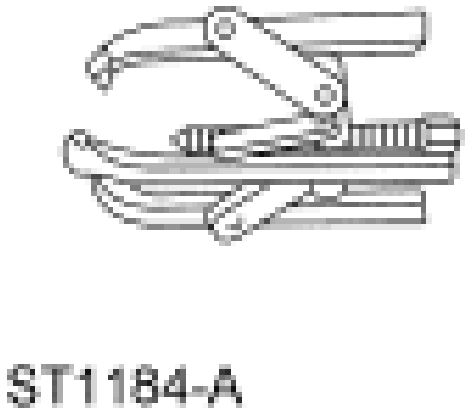	3-Jaw Puller	303-D121
	Compressor, Valve Spring	303-1039

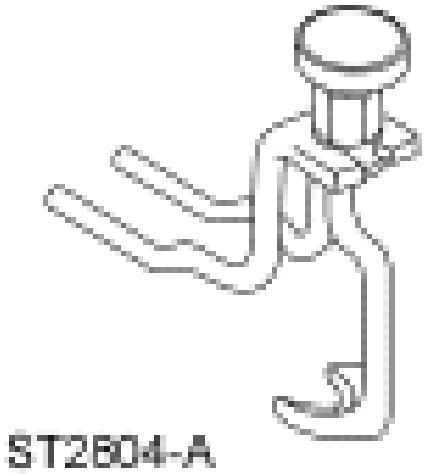 ST2604-A		
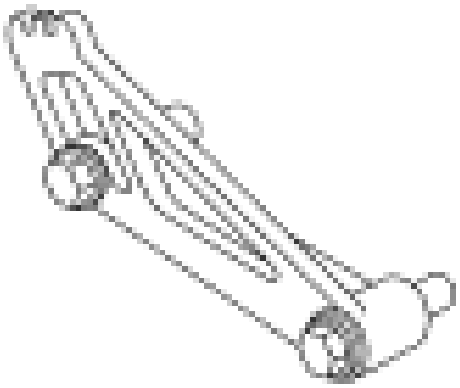 ST2607-A	Locking Tool, Camshaft Phaser Sprocket	303-1046
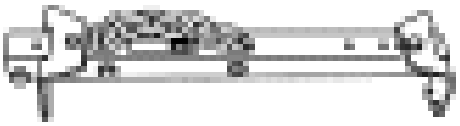 ST1377-A	Modular Engine Lift Bracket	303-F047 (014-00073) or equivalent
	Remover, Crankshaft Front Seal	303-107 (T74P-6700-A)

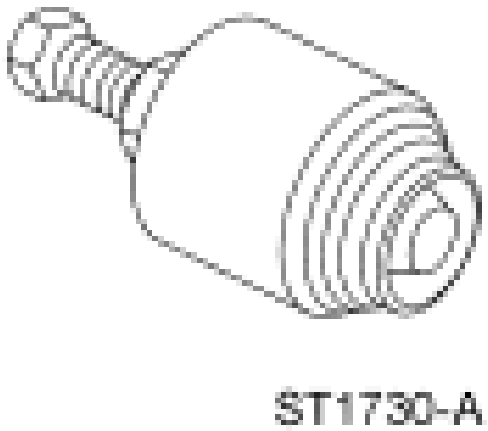		
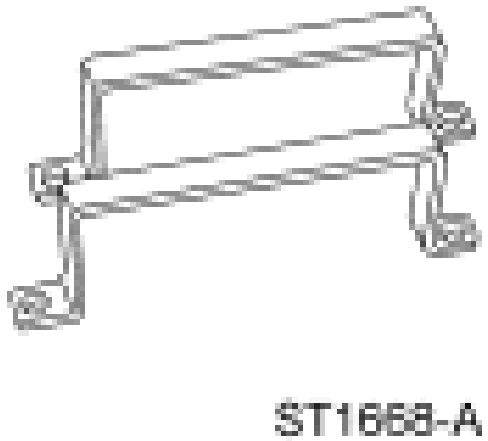	Remover/Installer, Cylinder Head	303-572 (T97T-6000-A)

Material

Item	Specification
Motorcraft Metal Surface Prep ZC-31	-
Silicone Gasket Remover ZC-30	-

All cylinder heads

1. Remove the engine. For additional information, refer to **Engine**.
2. Mount the engine on a suitable work stand.
3. Remove the special tool.

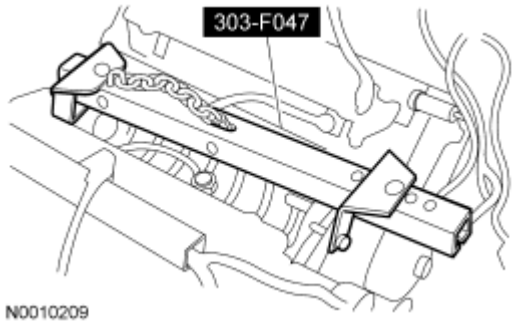

Fig. 257: Identifying Special Tool (303-F047)
Courtesy of FORD MOTOR CO.

NOTE: RH shown, LH similar.

4. Disconnect the RH and LH camshaft position (CMP) sensor electrical connectors.

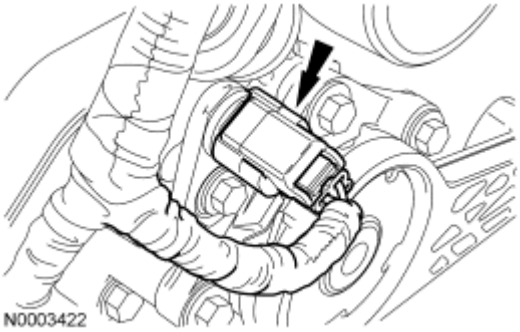

Fig. 258: Identifying RH CMP Sensor Electrical Connector
Courtesy of FORD MOTOR CO.

NOTE: RH shown, LH similar.

5. Disconnect the RH and LH variable camshaft timing (VCT) solenoid electrical connectors.

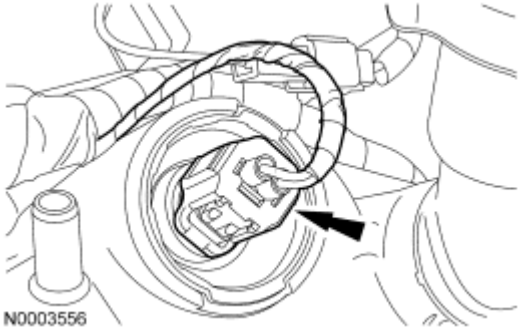

Fig. 259: Locating Camshaft Timing (VCT) Solenoid Electrical Connectors
Courtesy of FORD MOTOR CO.

6. Detach the engine wiring harness pin-type retainers.

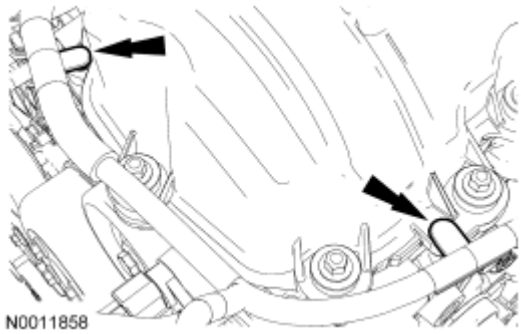

Fig. 260: Locating Engine Wiring Harness Pin-Type Retainers
Courtesy of FORD MOTOR CO.

7. Remove the nut and the RH radio ignition interference capacitor.

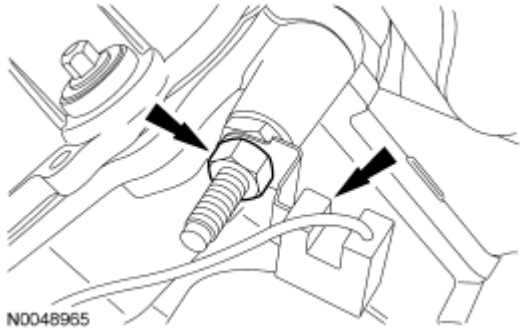

Fig. 261: Identifying Nut & RH Radio Ignition Interference Capacitor
Courtesy of FORD MOTOR CO.

NOTE: When reusing liquid or vapor tube connectors, make sure to use compressed air to remove any foreign material from the connector retaining clip area before separating it from the tube.

8. Remove the PCV tubes from the RH and LH valve covers.
   - Disconnect the quick connect fittings.
     - Push the connector toward the valve cover to release pressure.
     - Push the release tab clockwise.
     - Disconnect the quick connect fitting.

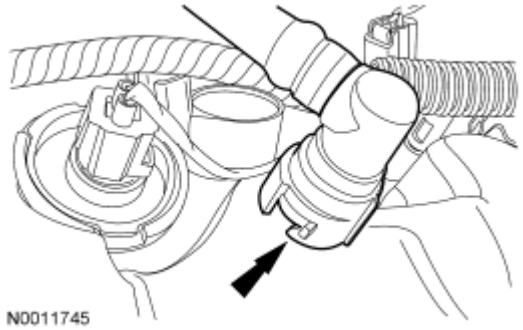

Fig. 262: Locating Positive Crankcase Ventilation Tubes
Courtesy of FORD MOTOR CO.

NOTE: RH shown, LH similar.

9. Disconnect the 4 RH and 4 LH ignition coil electrical connectors.

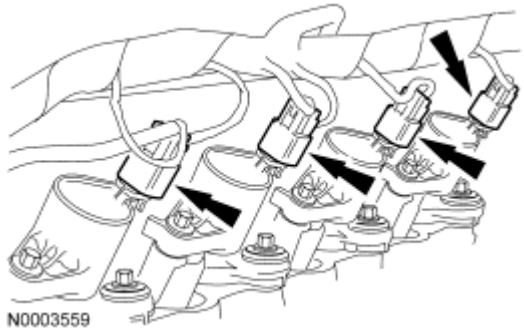

Fig. 263: Locating Ignition Coil Electrical Connectors
Courtesy of FORD MOTOR CO.

10. Disconnect the 3 engine wiring harness retainers from the RH valve cover studs.

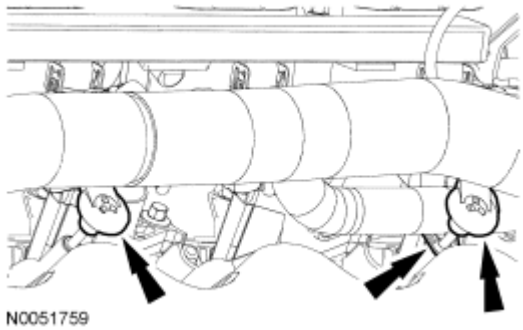

Fig. 264: Disconnecting Engine Wiring Harness Retainers From RH Valve Cover Studs
Courtesy of FORD MOTOR CO.

11. Disconnect the 2 engine wiring harness retainers from the LH valve cover studs.

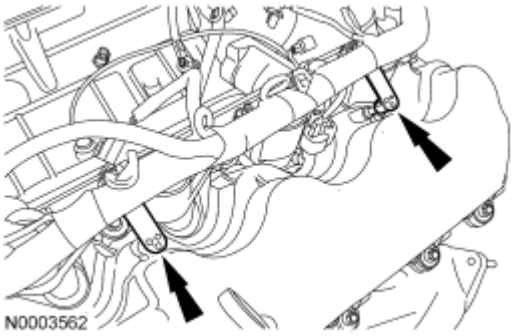

Fig. 265: Locating Engine Wiring Harness Retainers
Courtesy of FORD MOTOR CO.

12. Detach the engine wiring harness pin-type retainers.

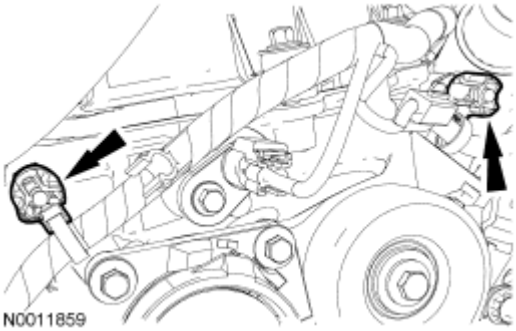

Fig. 266: Locating Engine Wiring Harness Pin-Type Retainers
Courtesy of FORD MOTOR CO.

13. Disconnect the cylinder head temperature (CHT) sensor electrical connector.

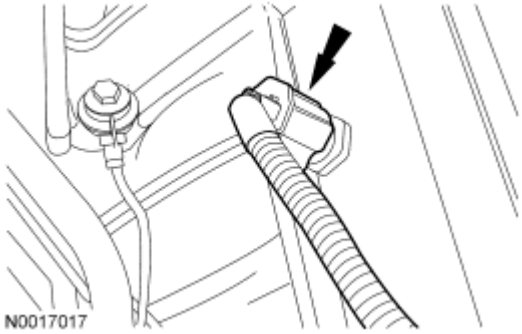

Fig. 267: Locating CHT Sensor Electrical Connector
Courtesy of FORD MOTOR CO.

14. Detach the CHT sensor jumper harness electrical connector pin-type retainer.

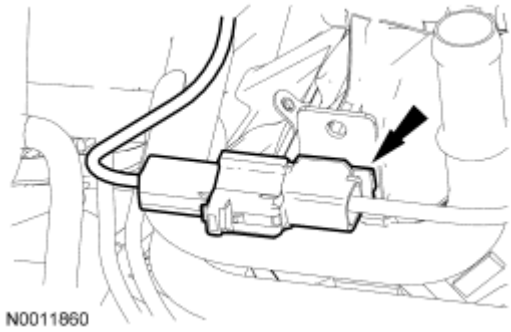

Fig. 268: Identifying Cylinder Head Temperature (CHT) Sensor Jumper Harness Electrical Connector
Courtesy of FORD MOTOR CO.

15. Disconnect the knock sensor (KS) electrical connector and pin-type retainer.

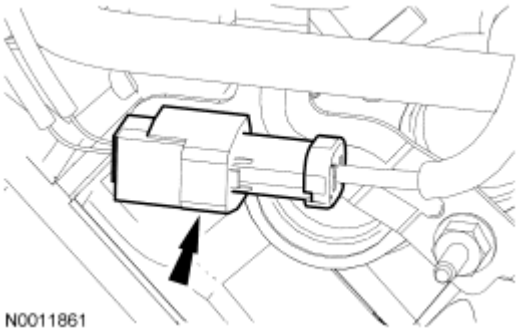

Fig. 269: Locating Knock Sensor (KS) Electrical Connector And Pin-Type Retainer
Courtesy of FORD MOTOR CO.

16. Disconnect the LH heated oxygen sensor (HO2S) electrical connector.
    - Detach the engine wiring harness retainer from the stud bolt.

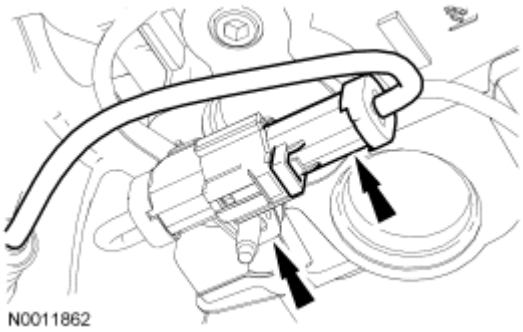

Fig. 270: Locating Heated Oxygen Sensor (HO2S) Electrical Connector
Courtesy of FORD MOTOR CO.

17. Disconnect the engine oil pressure (EOP) switch electrical connector.

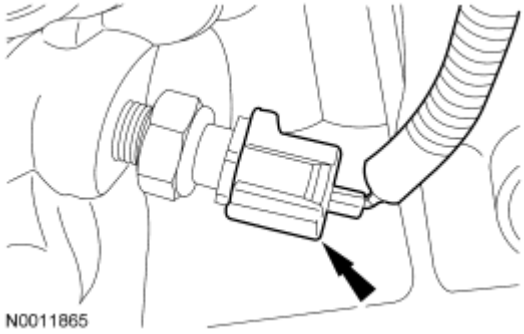

Fig. 271: Locating Engine Oil Pressure Sensor Electrical Connector
Courtesy of FORD MOTOR CO.

18. Remove the engine wiring harness from the engine.
19. Remove and discard the oil filter.
20. Remove the bolt and the oil level indicator tube.
    - Discard the O-ring seal.

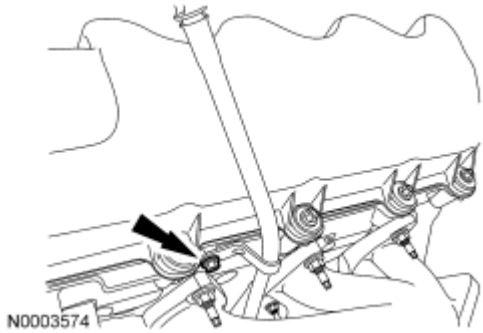

Fig. 272: Locating Oil Level Indicator Tube Bolt
Courtesy of FORD MOTOR CO.

21. Remove the bolt and the RH CMP sensor.

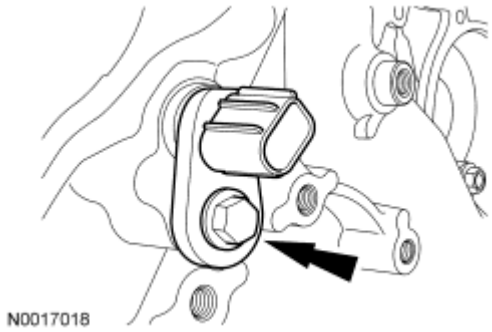

Fig. 273: Locating RH CMP Sensor And Bolt
Courtesy of FORD MOTOR CO.

22. Remove the bolt and the LH CMP sensor.

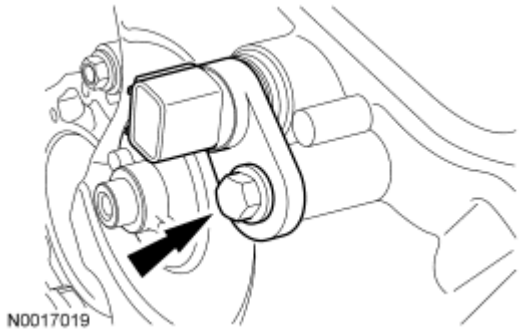

Fig. 274: Locating Camshaft Position (CMP) Sensor And Bolt
Courtesy of FORD MOTOR CO.

23. Remove the bolt and the CKP sensor.

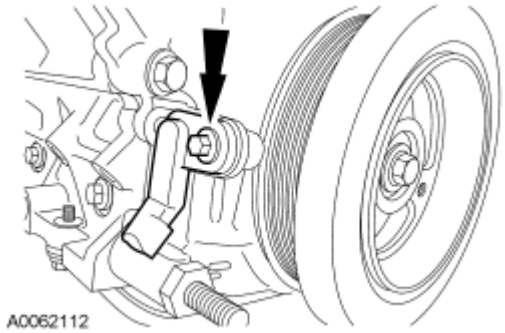

Fig. 275: Locating Crankshaft Position (CKP) Sensor Bolt
Courtesy of FORD MOTOR CO.

NOTE: LH shown, RH similar.

24. Remove the 8 bolts and the 8 ignition coils.

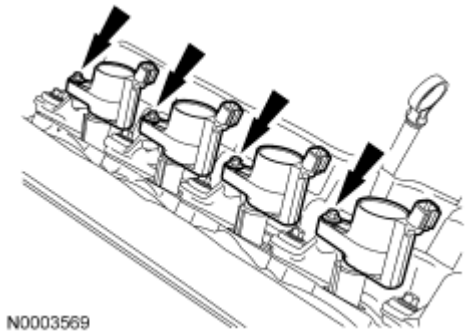

Fig. 276: Identifying Ignition Coils And Bolts
Courtesy of FORD MOTOR CO.

CAUTION: Do not use metal scrapers, wire brushes, power abrasive discs or other abrasive means to clean the sealing surfaces. These tools

cause scratches and gouges which make leak paths. Use a plastic scraping tool to remove all traces of old sealant.

CAUTION: When removing the valve cover, make sure to avoid damaging the variable camshaft timing (VCT) solenoid.

NOTE: The bolts are part of the valve cover and should not be removed.

NOTE: LH shown, RH similar.

25. Loosen the 29 bolts and remove the valve covers.
    - Clean the valve cover mating surface of the cylinder head with silicone gasket remover and metal surface prep. Follow the directions on the packaging.
    - Inspect the valve cover gasket. If the gasket is damaged, remove and discard the gasket. Clean the valve cover gasket groove with soap and water or a suitable solvent.

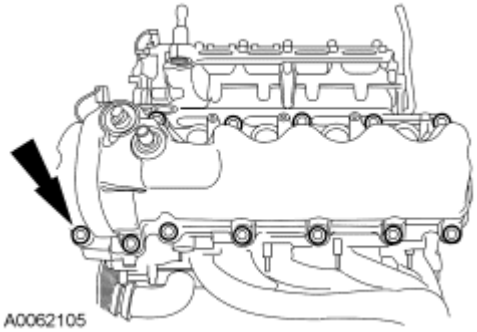

Fig. 277: Locating Valve Cover Bolts
Courtesy of FORD MOTOR CO.

26. Remove the 5 bolts, the coolant pump pulley and the RH side accessory drive belt idler pulley.

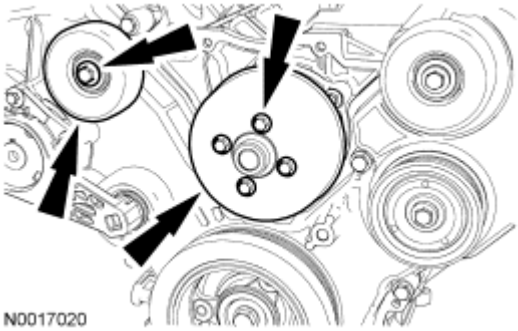

Fig. 278: Locating Accessory Drive Belt Idler Pulley And Bolts
Courtesy of FORD MOTOR CO.

27. Remove and discard the crankshaft pulley bolt. Using the special tool, remove the crankshaft pulley.

N0010528

Fig. 279: Removing Crankshaft Pulley Using Special Tool (303-D121)
Courtesy of FORD MOTOR CO.

28. Using the special tool, remove the crankshaft seal.

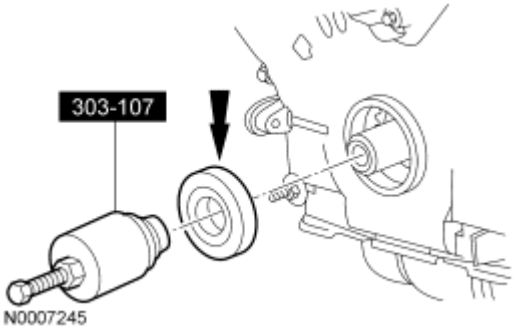

N0007245

Fig. 280: Removing Crankshaft Front Seal Using Special Tool (303-107)
Courtesy of FORD MOTOR CO.

29. Remove the 4 oil pan-to-engine front cover bolts.

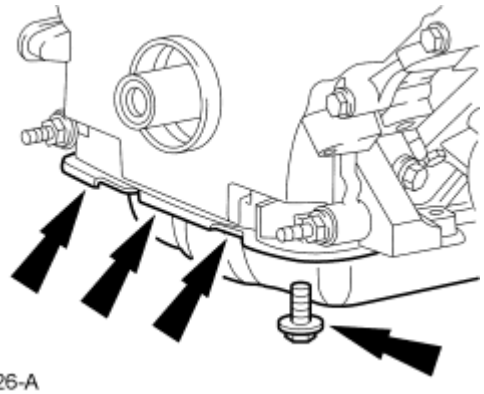

AA4226-A

Fig. 281: Front Oil Pan Bolts
Courtesy of FORD MOTOR CO.

NOTE: Correct fastener location is essential for the assembly procedure. Record fastener location.

30. Remove the engine front cover fasteners.

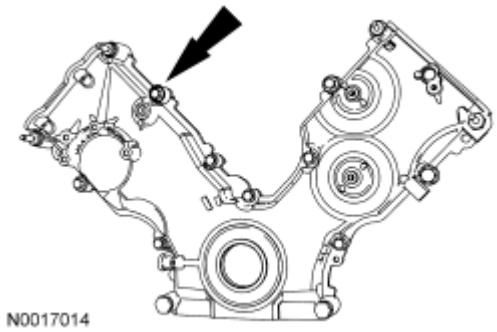

Fig. 282: Locating Engine Front Cover Fasteners
Courtesy of FORD MOTOR CO.

31. Remove the engine front cover from the cylinder block.

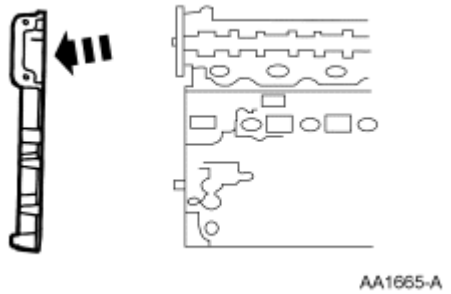

Fig. 283: Removing Engine Front Cover From Cylinder Block
Courtesy of FORD MOTOR CO.

32. Remove the crankshaft sensor ring from the crankshaft.

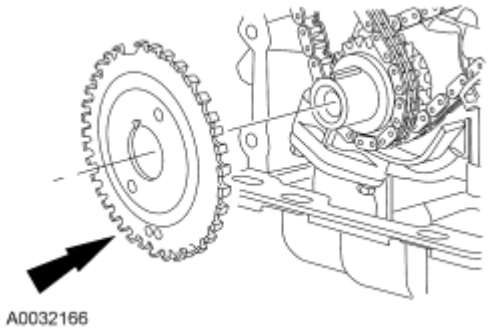

Fig. 284: View Of Crankshaft Sensor Ring At Crankshaft
Courtesy of FORD MOTOR CO.

33. Position the crankshaft keyway at the 12 o'clock position.

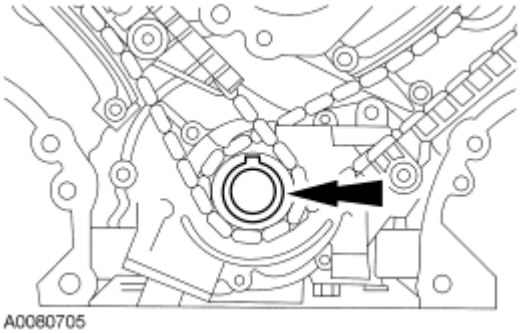

Fig. 285: Positioning Crankshaft Keyway At 12 O'Clock Position
Courtesy of FORD MOTOR CO.

NOTE: If the camshaft lobes are not exactly positioned as shown, the crankshaft will require one full additional rotation to the 12 o'clock position.

34. The No. 1 cylinder camshaft exhaust lobe must be coming up on the exhaust stroke. Verify by noting the position of the 2 intake lobes and the exhaust lobe on the No. 1 cylinder.

Fig. 286: Identifying Camshaft Lobe Position
Courtesy of FORD MOTOR CO.

CAUTION: If the components are to be reinstalled, they must be installed in their original positions. Mark the components for installation into their original locations. Failure to follow these instructions may result in engine damage.

35. Remove only the 3 roller followers shown in the illustration from the RH cylinder head.

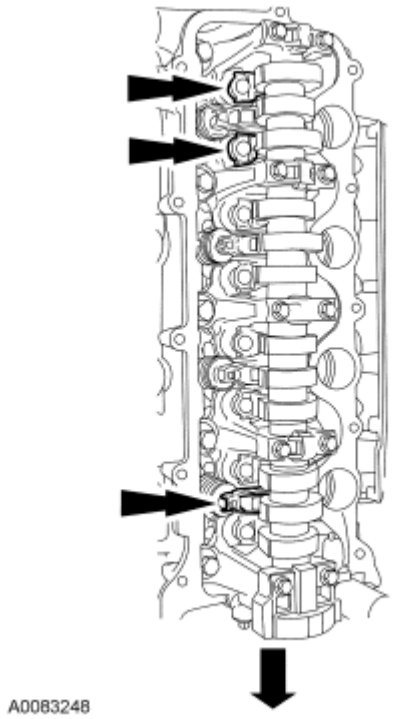

Fig. 287: Identifying RH Cylinder Head Camshaft Roller Followers And Bolts
Courtesy of FORD MOTOR CO.

NOTE: Do not allow the valve keepers to fall off the valve or the valve may drop into the cylinder. If a valve drops into the cylinder, the cylinder head must be removed.

NOTE: It may be necessary to push the valve down while compressing the spring.

36. Using the special tool, remove the 3 roller followers designated in the previous step from the RH cylinder head.

Fig. 288: Identifying Special Tool (303-1039) For Removing/Installing Camshaft Roller Followers
Courtesy of FORD MOTOR CO.

CAUTION: If the components are to be reinstalled, they must be installed in their

original positions. Mark the components for installation into their original locations. Failure to follow these instructions may result in engine damage.

37. Remove only the 3 roller followers shown in the illustration from the LH cylinder head.

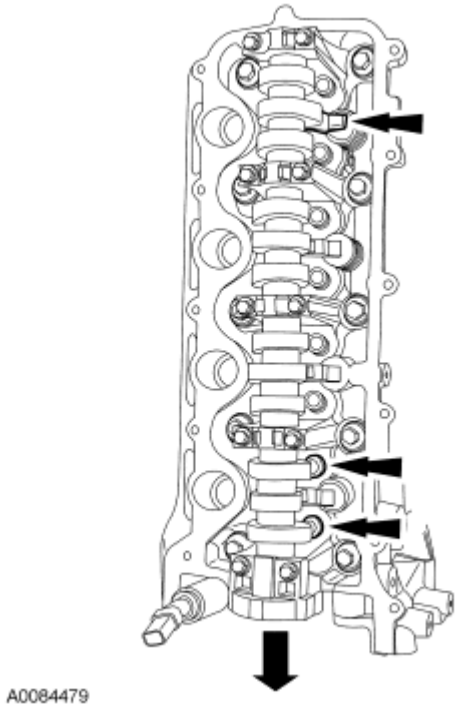

Fig. 289: Locating LH Cylinder Head Camshaft Roller Followers And Bolts
Courtesy of FORD MOTOR CO.

NOTE: **Do not allow the valve keepers to fall off the valve or the valve may drop into the cylinder. If a valve drops into the cylinder, the cylinder head must be removed.**

NOTE: **It may be necessary to push the valve down while compressing the spring.**

38. Using the special tool, remove the 3 roller followers designated in the previous step from the LH cylinder head.

Fig. 290: Compressing Spring Using Special Tool (303-1039)
Courtesy of FORD MOTOR CO.

CAUTION: The crankshaft cannot be moved past the 6 o'clock position once set or engine damage may occur.

39. Rotate the crankshaft clockwise and position the crankshaft keyway at the 6 o'clock position.

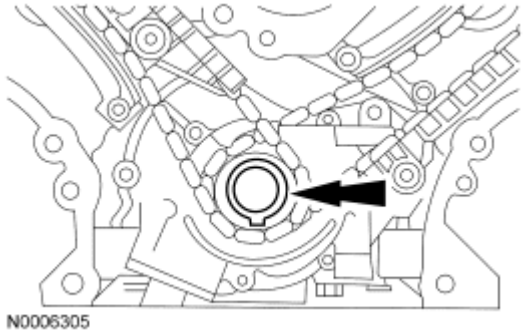

Fig. 291: Crankshaft Positioned With Keyway At 6 O'clock Position
Courtesy of FORD MOTOR CO.

40. Remove the 2 bolts, the LH timing chain tensioner and tensioner arm.

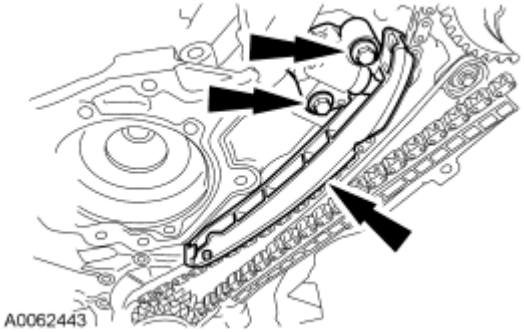

Fig. 292: Identifying LH Timing Chain Tensioner & Tensioner Arm
Courtesy of FORD MOTOR CO.

41. Remove the 2 bolts, the RH timing chain tensioner and tensioner arm.

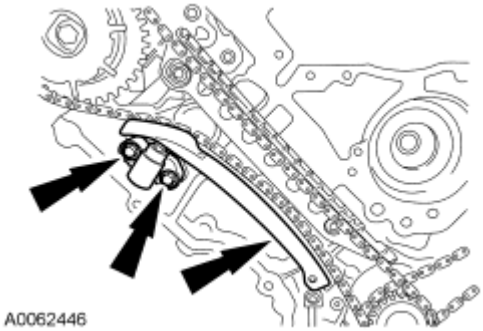

Fig. 293: Identifying RH Timing Chain Tensioner, Tensioner Arm And Bolts
Courtesy of FORD MOTOR CO.

42. Remove the RH and LH timing chains and the crankshaft sprocket.
    - Remove the RH timing chain from the camshaft sprocket.
    - Remove the RH timing chain from the crankshaft sprocket.
    - Remove the LH timing chain from the camshaft sprocket.
    - Remove the LH timing chain and crankshaft sprocket.

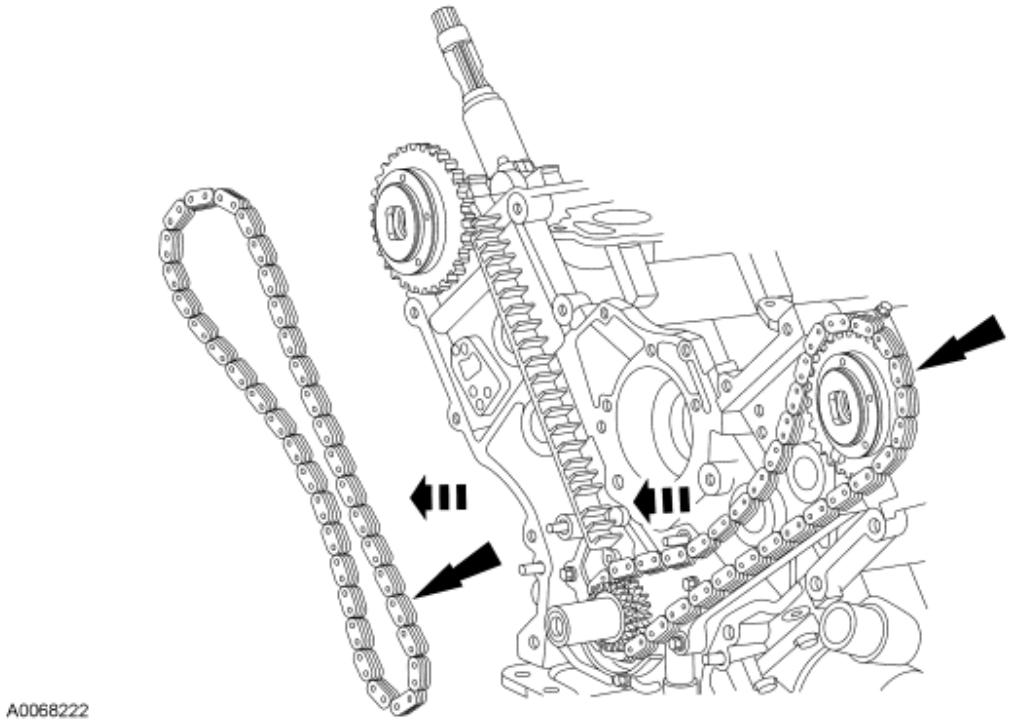

Fig. 294: Identifying RH/LH Timing Chains
Courtesy of FORD MOTOR CO.

NOTE: RH shown, LH similar.

43. Remove the LH and RH timing chain guides.
    - Remove the 2 bolts.
    - Remove both timing chain guides.

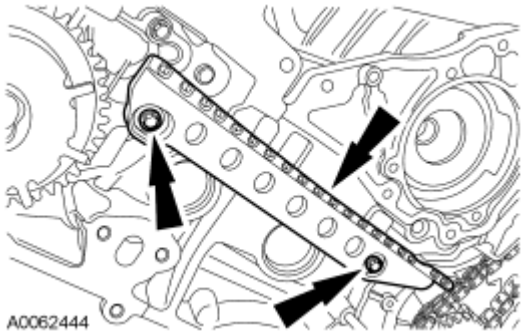

Fig. 295: Identifying Timing Chain Guide And Mounting Bolts
Courtesy of FORD MOTOR CO.

CAUTION: Damage to the camshaft phaser sprocket assembly will occur if mishandled or used as a lifting or leveraging device.

CAUTION: Only use hand tools to remove the camshaft phaser sprocket assembly or damage may occur to the camshaft or camshaft phaser unit.

44. Using the special tool, remove the bolt and the RH camshaft phaser sprocket assembly.
    - Discard the camshaft phaser sprocket bolt.

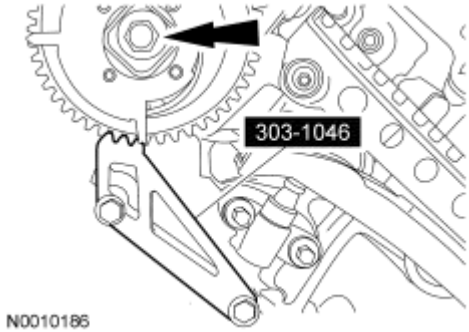

Fig. 296: Identifying VCT Phaser Sprocket Bolt And Holder Tool
Courtesy of FORD MOTOR CO.

CAUTION: Damage to the camshaft phaser sprocket assembly will occur if mishandled or used as a lifting or leveraging device.

CAUTION: Only use hand tools to remove the camshaft phaser sprocket assembly or damage may occur to the camshaft or camshaft phaser unit.

45. Using the special tool, remove the bolt and the LH camshaft phaser sprocket assembly.
    - Discard the camshaft phaser sprocket bolt.

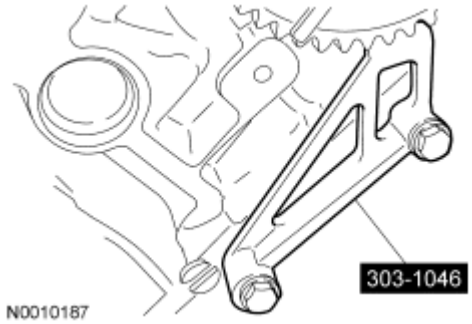

Fig. 297: Identifying Special Sprocket Phaser Tool
Courtesy of FORD MOTOR CO.

CAUTION: Remove the front thrust camshaft bearing cap straight upward from the bearing towers or the bearing cap may be damaged from side

loading.

46. Remove the 2 bolts and the RH cylinder head camshaft front bearing cap.

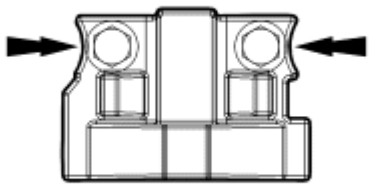

N0070049

Fig. 298: Removing Camshaft Front Bearing Cap Bolts
Courtesy of FORD MOTOR CO.

CAUTION: The camshaft bearing caps must be installed in their original locations. Record camshaft bearing cap locations. Record camshaft bearing cap locations. Failure to follow these instructions may result in engine damage.

47. Remove the remaining bolts in the sequence shown and remove the RH cylinder head camshaft bearing caps.

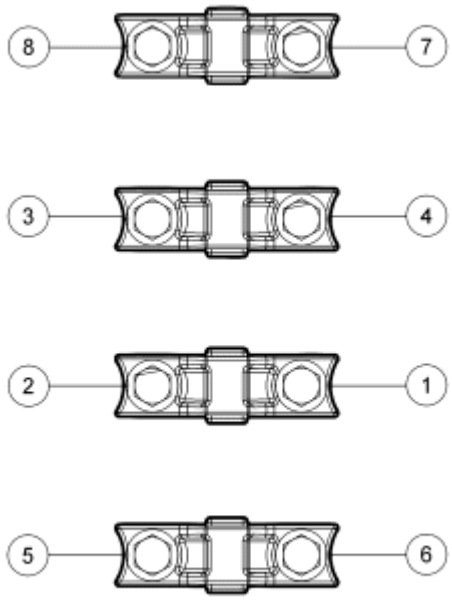

N0070050

Fig. 299: Removing Camshaft Bearing Caps Bolts In Sequence

Courtesy of FORD MOTOR CO.

48. Clean and inspect the RH camshaft bearing caps.
    - The camshaft front thrust bearing cap contains an oil metering groove. Make sure the groove is free of foreign material.

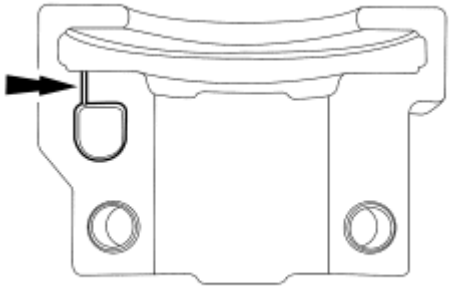

N0010448

Fig. 300: Identifying Camshaft Front Thrust Bearing Cap Oil Metering Groove
Courtesy of FORD MOTOR CO.

49. Remove the RH camshaft.

CAUTION: Remove the front thrust camshaft bearing cap straight upward from the bearing towers or the bearing cap may be damaged from side loading.

50. Remove the 2 bolts and the LH cylinder head camshaft front bearing cap.

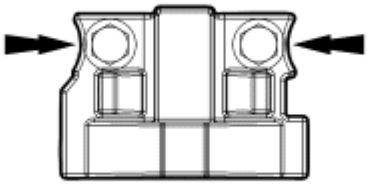

N0070049

Fig. 301: Removing Camshaft Front Bearing Cap Bolts
Courtesy of FORD MOTOR CO.

CAUTION: The camshaft bearing caps must be installed in their original locations. Record camshaft bearing cap locations. Failure to follow these instructions may result in engine damage.

51. Remove the remaining bolts in the sequence shown and remove the LH cylinder head camshaft bearing caps.

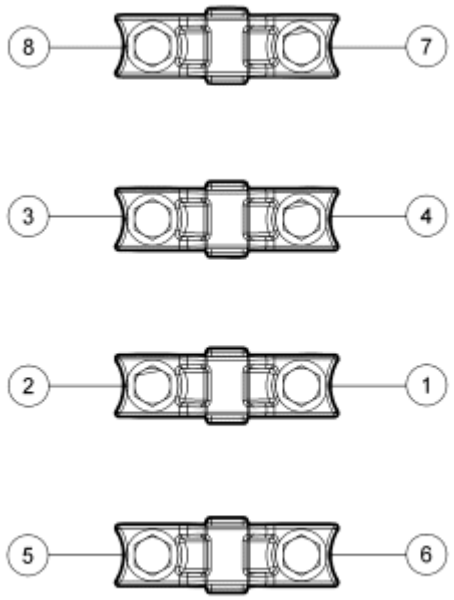

N0070050

Fig. 302: Removing Camshaft Bearing Caps Bolts In Sequence
Courtesy of FORD MOTOR CO.

52. Clean and inspect the LH camshaft bearing caps.
    - The camshaft front thrust bearing cap contains an oil metering groove. Make sure the groove is free of foreign material.

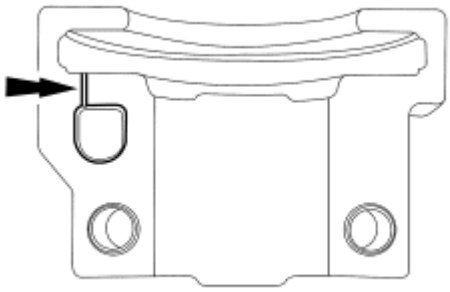

N0010448

Fig. 303: Identifying Camshaft Front Thrust Bearing Cap Oil Metering Groove
Courtesy of FORD MOTOR CO.

53. Remove the LH camshaft.

CAUTION: If the components are to be reinstalled, they must be installed in their original positions. Mark the components for installation into their original locations. Failure to follow these instructions may result in engine damage.

54. Remove all of the remaining roller followers from the cylinder heads.

LH cylinder head

CAUTION: If the components are to be reinstalled, they must be installed in their original positions. Mark the components for installation into their original locations. Failure to follow these instructions may result in engine damage.

55. Remove the hydraulic lash adjusters from the LH cylinder head.
56. Install the special tool onto the LH cylinder head.

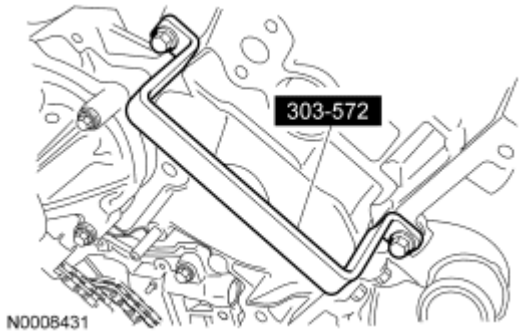

Fig. 304: Identifying Special Tool (303-572) LH Cylinder Head
Courtesy of FORD MOTOR CO.

57. Remove the 8 nuts and the LH exhaust manifold.
    - Discard the nuts and gasket.

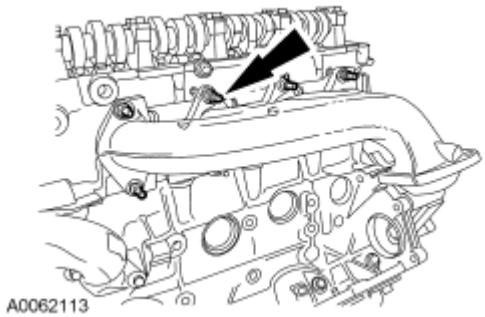

Fig. 305: Locating LH Exhaust Manifold Nuts And Studs
Courtesy of FORD MOTOR CO.

58. Clean and inspect the LH exhaust manifold. For additional information, refer to **ENGINE SYSTEM - GENERAL INFORMATION** article.
59. Remove and discard the 8 LH exhaust manifold studs.
60. Remove the nut and ground strap from the stud bolt.

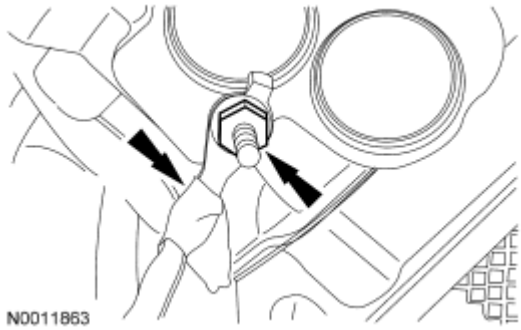

Fig. 306: Locating Ground Strap And Nut On Stud Bolt
Courtesy of FORD MOTOR CO.

RH cylinder head

CAUTION: If the components are to be reinstalled, they must be installed in their original positions. Mark the components for installation into their original locations. Failure to follow these instructions may result in engine damage.

61. Remove the hydraulic lash adjusters from the RH cylinder heads.
62. Install the special tool onto the RH cylinder head.

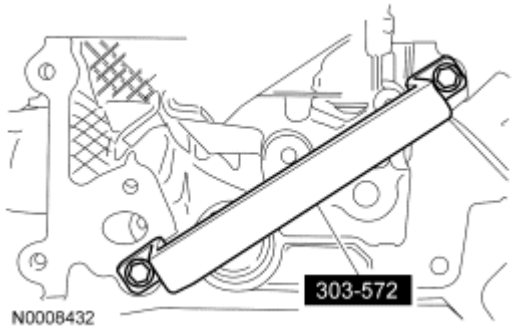

Fig. 307: Identifying Special Tool (303-572) RH Cylinder Head
Courtesy of FORD MOTOR CO.

63. Remove the 8 nuts and the RH exhaust manifold.
    - Discard the nuts and gasket.

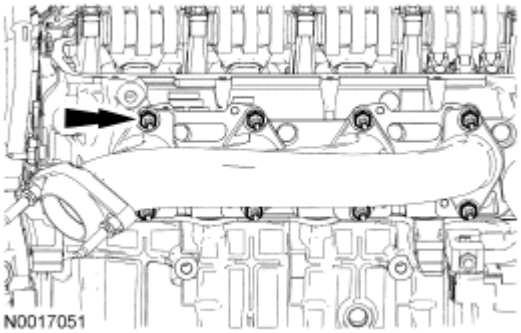

Fig. 308: Removing Nuts And RH Exhaust Manifold
Courtesy of FORD MOTOR CO.

64. Clean and inspect the RH exhaust manifold. For additional information, refer to **ENGINE SYSTEM - GENERAL INFORMATION** article.
65. Remove and discard the 8 RH exhaust manifold studs.
66. Remove the stud bolt and the coolant tube.
    - Discard the O-ring seals.

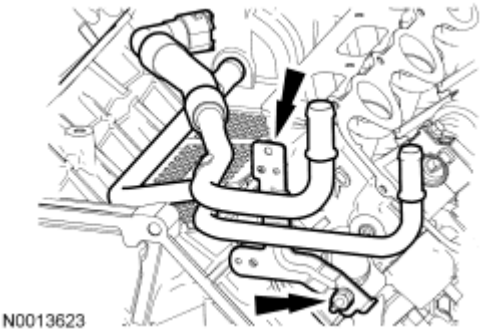

Fig. 309: Locating Coolant Tube Stud Bolt
Courtesy of FORD MOTOR CO.

All cylinder heads

CAUTION: The cylinder head must be cool before removing it from the engine. Cylinder head warpage can result if a warm or hot cylinder head is removed.

CAUTION: Place clean shop towels over exposed engine cavities. Carefully remove the towels so foreign material is not dropped into the engine.

CAUTION: The cylinder head bolts must be discarded and new bolts must be installed. They are tighten-to-yield designed and cannot be reused.

CAUTION: Do not use metal scrapers, wire brushes, power abrasive discs or

other abrasive means to clean the sealing surfaces. These tools cause scratches and gouges that make leak paths. Use a plastic scraping tool to remove all traces of the head gasket.

CAUTION: Aluminum surfaces are soft and can be scratched easily. Never place the cylinder head gasket surface, unprotected, on a bench surface.

NOTE: RH shown, LH similar.

67. Remove the 20 bolts and the cylinder heads.
    - Discard the cylinder head gaskets.
    - Discard the cylinder head bolts.

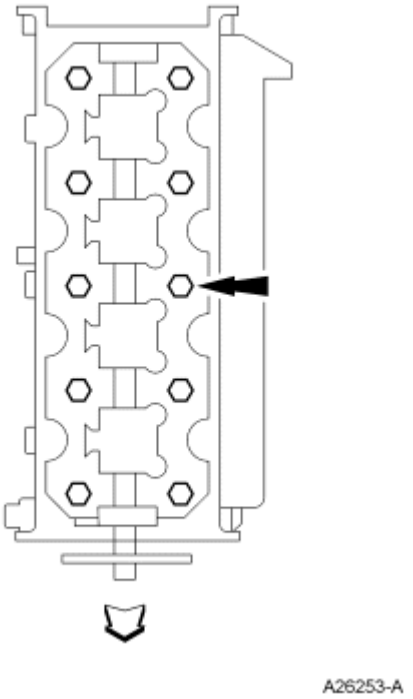

Fig. 310: Identifying Cylinder Head Gasket And Bolts
Courtesy of FORD MOTOR CO.

CAUTION: Do not use metal scrapers, wire brushes, power abrasive discs or other abrasive means to clean the sealing surfaces. These tools cause scratches and gouges that make leak paths. Use a plastic scraping tool to remove all traces of the head gasket.

NOTE: Observe all warnings or cautions and follow all application directions contained on the packaging of the silicone gasket remover and the metal surface prep.

NOTE: If there is no residual gasket material present, metal surface prep can be used to clean and prepare the surfaces.

68. Clean the cylinder head-to-cylinder block mating surfaces of both the cylinder head and the cylinder block.
    1. Remove any large deposits of silicone or gasket material with a plastic scraper.
    2. Apply silicone gasket remover, following package directions and allow to set for several minutes.
    3. Remove the silicone gasket remover with a plastic scraper. A second application of silicone gasket remover may be required if residual traces of silicone or gasket material remain.
    4. Apply metal surface prep, following package directions, to remove any remaining traces of oil or coolant and to prepare the surfaces to bond with the new gasket. Do not attempt to make the metal shiny. Some staining of the metal surfaces is normal.

NOTE: Make sure all cylinder head surfaces are clear of any gasket material, RTV, oil and coolant. The cylinder head surface must be clean and dry before running a flatness check.

NOTE: Use a straightedge that is calibrated by the manufacturer to be flat within 0.005 mm (0.0002 in) per running foot length. For example, if the straightedge is 61 cm (24 in) long, the machined edge must be flat within 0.010 mm (0.0004 in) from end to end.

NOTE: LH shown, RH similar.

69. Support the cylinder heads on a bench with the head gasket side up. Inspect all areas of the deck face with a straightedge, paying particular attention to the oil pressure feed area. The cylinder heads must not have depressions deeper than 0.0254 mm (0.001 in) across a 38.1 mm (1.5 in) square area, or scratches longer than 0.0254 mm (0.001 in).

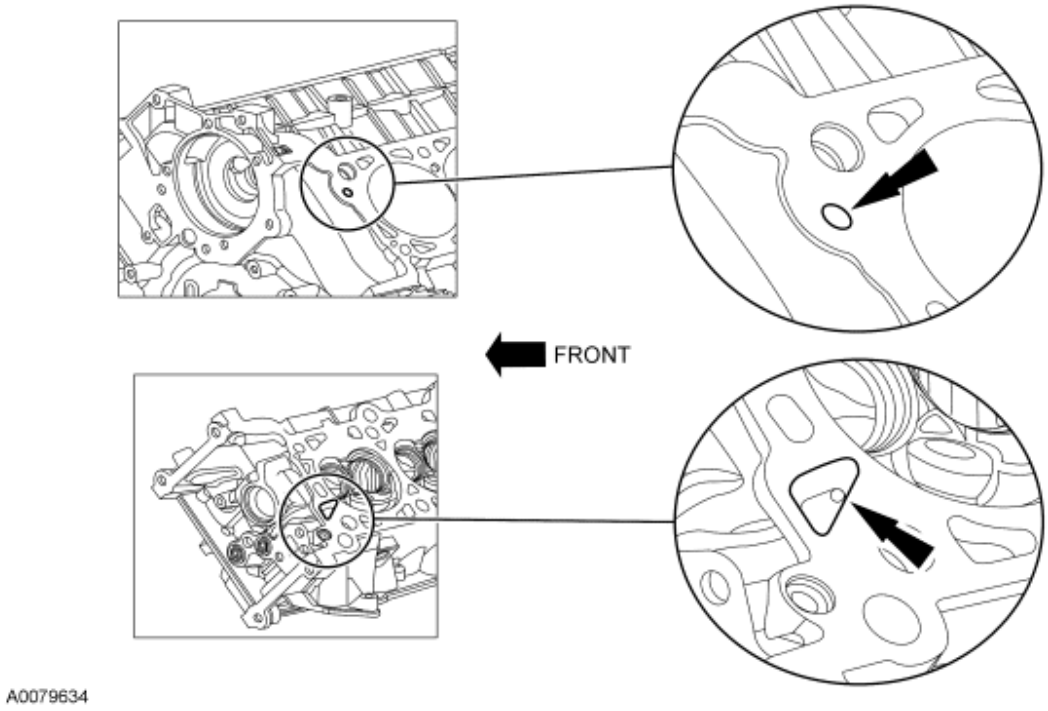

Fig. 311: Identifying Cylinder Head/Cylinder Block Oil Pressure Feed Areas
Courtesy of FORD MOTOR CO.

DISASSEMBLY

ENGINE

Special Tools

Illustration	Tool Name	Tool Number
	3-Jaw Puller	303-D121
	Compressor, Valve Spring	303-1039

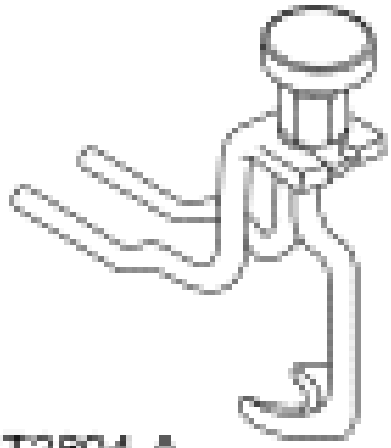 ST2804-A		
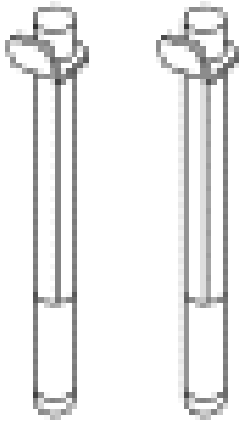 ST1337-A	Installer, Connecting Rod	303-442 (T93P-6136-A)
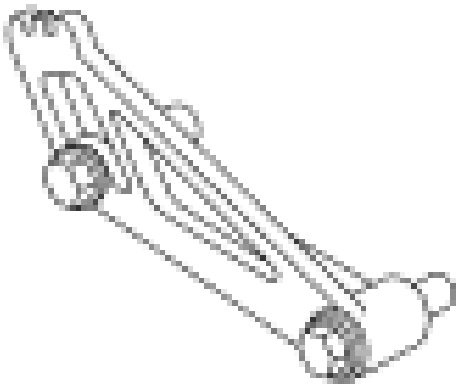 ST2807-A	Locking Tool, Camshaft Phaser Sprocket	303-1046
	Modular Engine Lift Bracket	303-F047 (014-00073)

 ST1377-A		
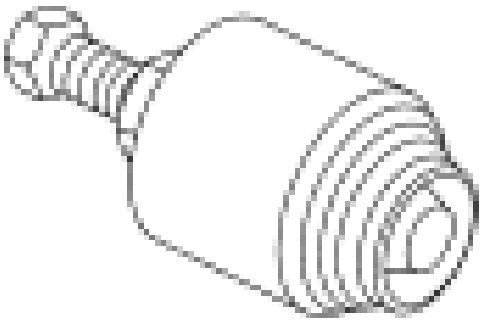 ST1730-A	Remover, Crankshaft Front Seal	303-107 (T74P-6700-A)
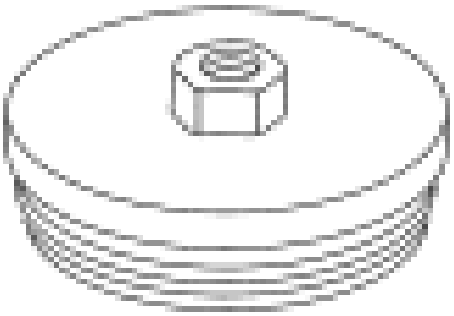 ST1382-A	Remover, Crankshaft Rear Seal	303-519 (T95P-6701-EH)
	Remover, Crankshaft Rear	303-514 (T95P-6701-AH)

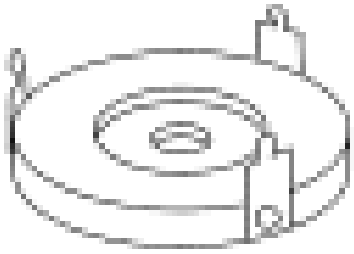 ST1481-A	Slinger	
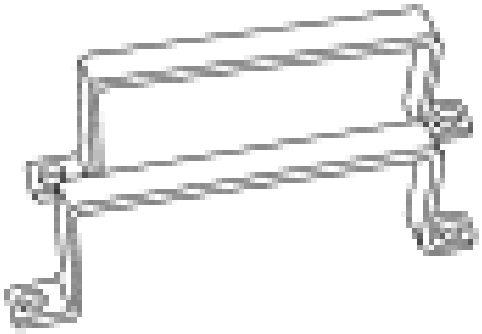 ST1668-A	Remover/Installer, Cylinder Head	303-572 (T97T-6000-A)
 ST1185-A	Slide Hammer	100-001 (T50T-100-A)

Material

Item	Specification
Motorcraft Metal Surface Prep ZC-31	-
Silicone Gasket Remover ZC-30	-

CAUTION: Remove the cylinder heads before removing the crankshaft. Failure to do so can result in engine damage.

CAUTION: During engine repair procedures, cleanliness is extremely important. Any foreign material, including any material created while cleaning gasket surfaces that enters the oil passages, coolant passages or the oil pan, can cause engine failure.

NOTE: The flexplate or flywheel, crankshaft rear seal and the crankshaft rear oil slinger must be removed before mounting the engine on the engine stand.

NOTE: For additional information, refer to the exploded view under the ASSEMBLY.

Vehicles with automatic transmission

1. Remove the 6 bolts and the flexplate.

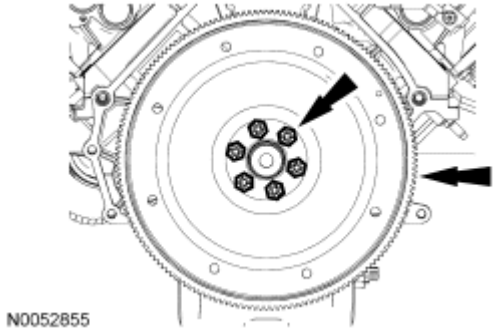

Fig. 312: Removing Bolts And Flexplate Or Flywheel
Courtesy of FORD MOTOR CO.

Vehicles with manual transmission

2. Remove the 6 flywheel bolts.

CAUTION: The flywheel is a press fit on the crankshaft pilot. Do not use screwdrivers or prybars to remove the flywheel or damage to the flywheel or engine may occur.

3. Remove the flywheel.
   - Install 2 of the removed flywheel bolts in the 2 holes shown on the flywheel flange.
   - Tighten the 2 bolts evenly to push the flywheel off the crankshaft pilot.

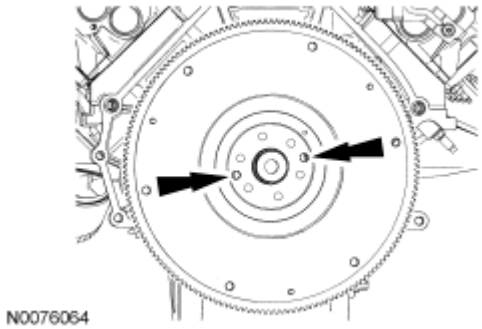

Fig. 313: Identifying Flywheel Bolts
Courtesy of FORD MOTOR CO.

All vehicles

4. Using the special tools, remove the crankshaft rear oil slinger.
   - Discard the crankshaft rear oil slinger.

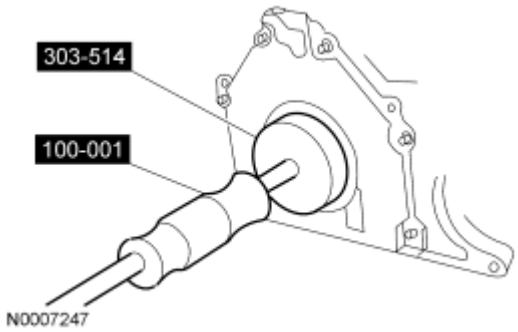

Fig. 314: Removing Crankshaft Rear Oil Seal Slinger
Courtesy of FORD MOTOR CO.

5. Using the special tools, remove the crankshaft rear seal.
   - Discard the crankshaft rear seal.

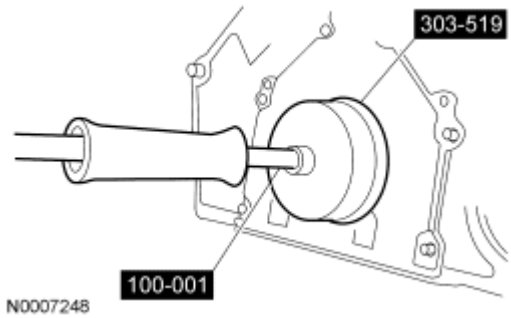

Fig. 315: Removing Crankshaft Rear Seal
Courtesy of FORD MOTOR CO.

6. Remove the 8 bolts and the crankshaft rear seal retainer plate.

CAUTION: Do not use metal scrapers, wire brushes, power abrasive discs or other abrasive means to clean the sealing surfaces. These tools cause scratches and gouges which make leak paths. Use a plastic scraping tool to remove all traces of old sealant.

- Clean and inspect the sealing surfaces.

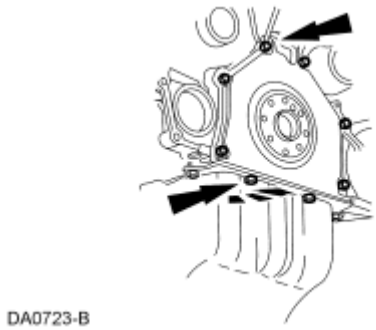

Fig. 316: Identifying Crankshaft Rear Seal Retainer Plate Bolts
Courtesy of FORD MOTOR CO.

7. Mount the engine on a suitable work stand.
8. Remove the special tool.

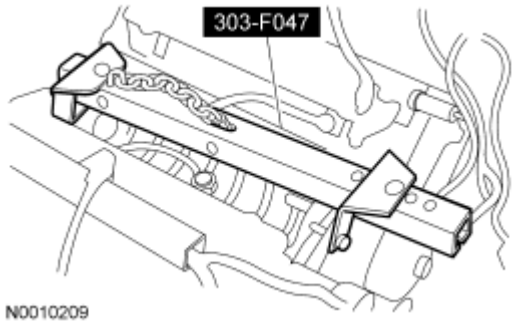

Fig. 317: Identifying Special Tool (303-F047)
Courtesy of FORD MOTOR CO.

NOTE: RH shown, LH similar.

9. Disconnect the RH and LH camshaft position (CMP) sensor electrical connectors.

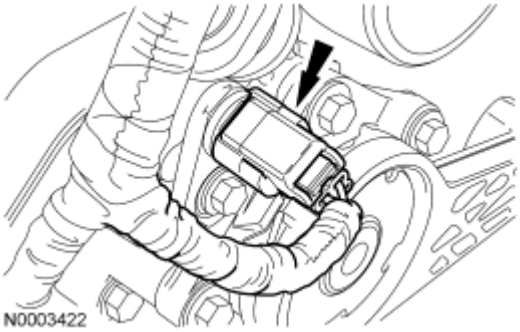

Fig. 318: Identifying RH CMP Sensor Electrical Connector
Courtesy of FORD MOTOR CO.

NOTE: RH shown, LH similar.

10. Disconnect the RH and LH variable camshaft timing (VCT) solenoid electrical connectors.

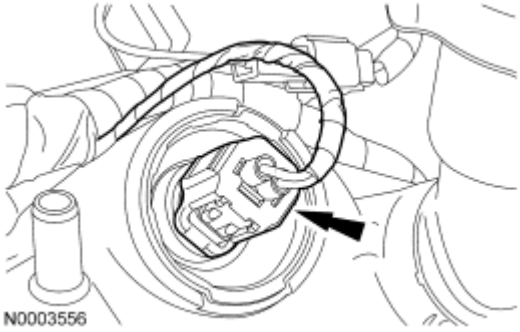

Fig. 319: Locating Camshaft Timing (VCT) Solenoid Electrical Connectors
Courtesy of FORD MOTOR CO.

11. Detach the engine wiring harness pin-type retainers.

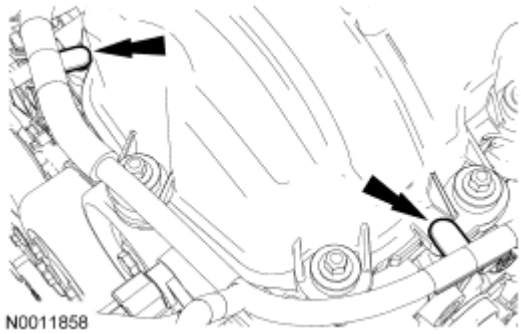

Fig. 320: Locating Engine Wiring Harness Pin-Type Retainers
Courtesy of FORD MOTOR CO.

12. Remove the nut and the RH radio ignition interference capacitor.

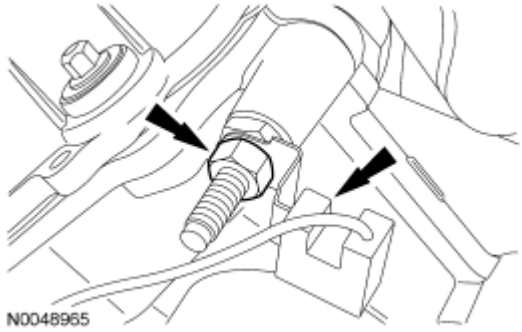

Fig. 321: Identifying Nut & RH Radio Ignition Interference Capacitor
Courtesy of FORD MOTOR CO.

NOTE: When reusing liquid or vapor tube connectors, make sure to use compressed air to remove any foreign material from the connector retaining clip area before separating from the tube.

NOTE: LH shown, RH similar.

13. Remove the PCV tubes from the LH and RH valve covers.
    - Disconnect the quick connect fittings.
        - Push the connector toward the valve cover to release pressure.
        - Push the release tab clockwise.
        - Disconnect the quick connect fitting.

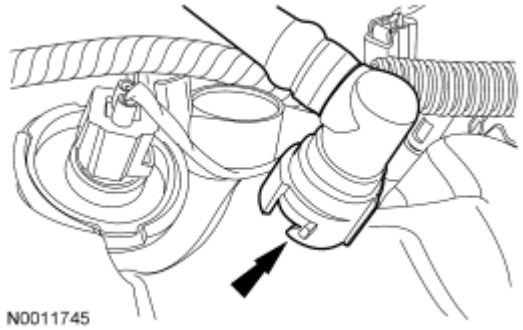

Fig. 322: Locating Positive Crankcase Ventilation Tubes
Courtesy of FORD MOTOR CO.

NOTE: RH shown, LH similar.

14. Disconnect the 4 RH and 4 LH ignition coil electrical connectors.

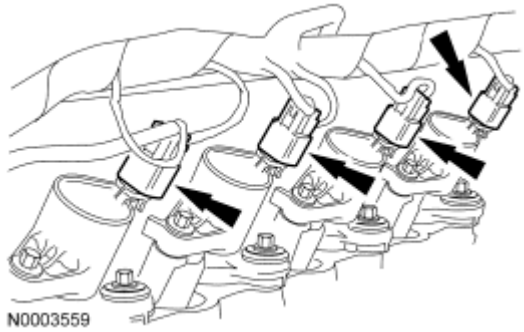

Fig. 323: Locating Ignition Coil Electrical Connectors
Courtesy of FORD MOTOR CO.

15. Disconnect the 3 engine wiring harness retainers from the RH valve cover studs.

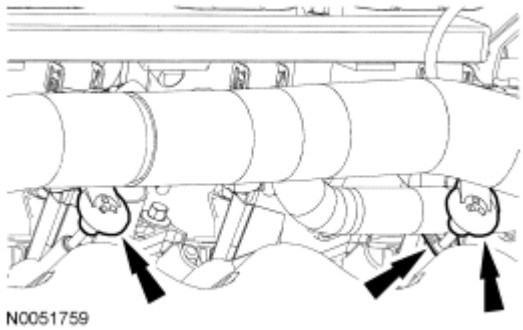

Fig. 324: Disconnecting Engine Wiring Harness Retainers From RH Valve Cover Studs
Courtesy of FORD MOTOR CO.

16. Disconnect the 2 engine wiring harness retainers from the LH valve cover studs.

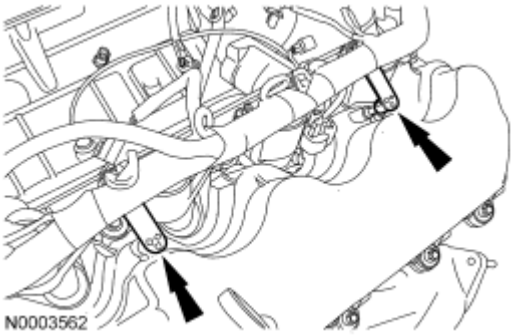

Fig. 325: Locating Engine Wiring Harness Retainers
Courtesy of FORD MOTOR CO.

17. Detach the engine wiring harness pin-type retainers.

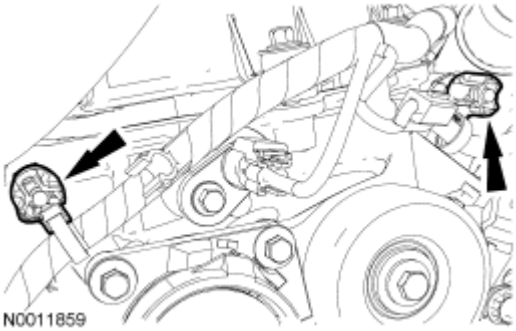

Fig. 326: Locating Engine Wiring Harness Pin-Type Retainers
Courtesy of FORD MOTOR CO.

18. Disconnect the cylinder head temperature (CHT) sensor electrical connector.

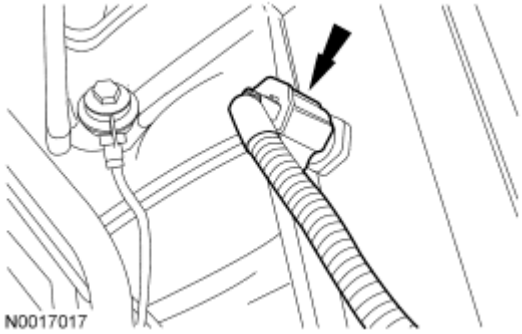

Fig. 327: Locating CHT Sensor Electrical Connector
Courtesy of FORD MOTOR CO.

19. Detach the CHT sensor jumper harness electrical connector pin-type retainer.

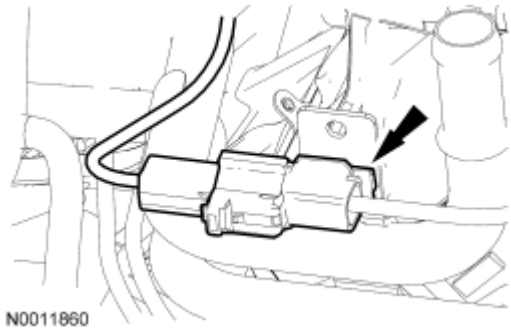

Fig. 328: Identifying Cylinder Head Temperature (CHT) Sensor Jumper Harness Electrical Connector
Courtesy of FORD MOTOR CO.

20. Disconnect the knock sensor (KS) electrical connector and pin-type retainer.

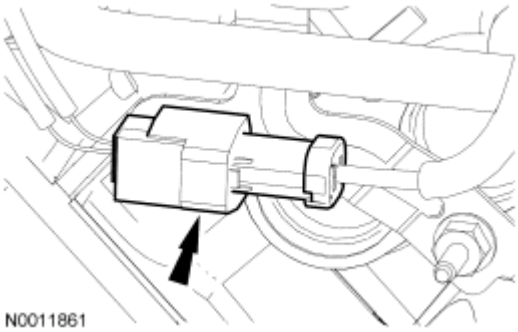

Fig. 329: Locating Knock Sensor (KS) Electrical Connector And Pin-Type Retainer
Courtesy of FORD MOTOR CO.

21. Disconnect the LH heated oxygen sensor (HO2S) electrical connector.
    - Detach the engine wiring harness retainer from the stud bolt.

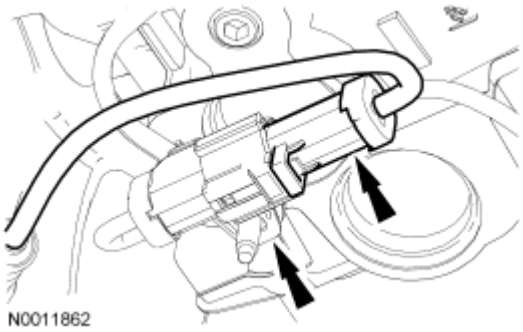

Fig. 330: Locating Heated Oxygen Sensor (HO2S) Electrical Connector
Courtesy of FORD MOTOR CO.

22. Disconnect the engine oil pressure (EOP) switch electrical connector.

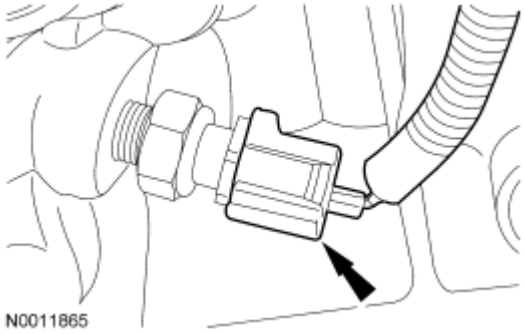

Fig. 331: Locating Engine Oil Pressure Sensor Electrical Connector
Courtesy of FORD MOTOR CO.

23. Remove the engine wiring harness from the engine.
24. Remove the nut and ground strap from the stud bolt.

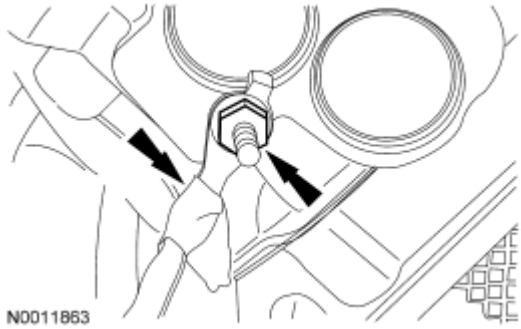

Fig. 332: Locating Ground Strap And Nut On Stud Bolt
Courtesy of FORD MOTOR CO.

NOTE: LH shown, RH similar.

25. Remove the 8 bolts and the 8 ignition coils.

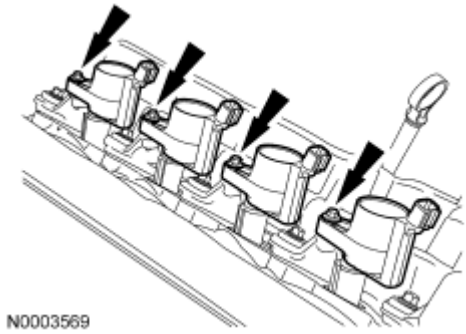

Fig. 333: Identifying Ignition Coils And Bolts
Courtesy of FORD MOTOR CO.

26. Remove the bolt and the oil level indicator tube.

Fig. 334: Locating Oil Level Indicator Tube
Courtesy of FORD MOTOR CO.

CAUTION: Do not use metal scrapers, wire brushes, power abrasive discs or other abrasive means to clean the sealing surfaces. These tools cause scratches and gouges which make leak paths. Use a plastic scraping tool to remove all traces of old sealant.

NOTE: When removing the valve cover, make sure to avoid damaging the variable camshaft timing (VCT) solenoid.

NOTE: The bolts are part of the valve cover and should not be removed.

NOTE: LH shown, RH similar.

27. Loosen the 29 bolts and remove the valve covers.
    - Clean the valve cover mating surface of the cylinder head with silicone gasket remover and metal surface prep. Follow the directions on the packaging.
    - Inspect the valve cover gasket. If the gasket is damaged, remove and discard the gasket. Clean the valve cover gasket groove with soap and water or a suitable solvent.

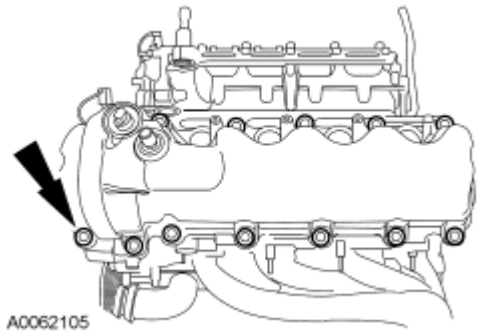

Fig. 335: Locating Valve Cover Bolts
Courtesy of FORD MOTOR CO.

28. Remove and discard the oil filter.
29. Remove the 4 bolts and the oil filter adapter.

- Discard the gasket.

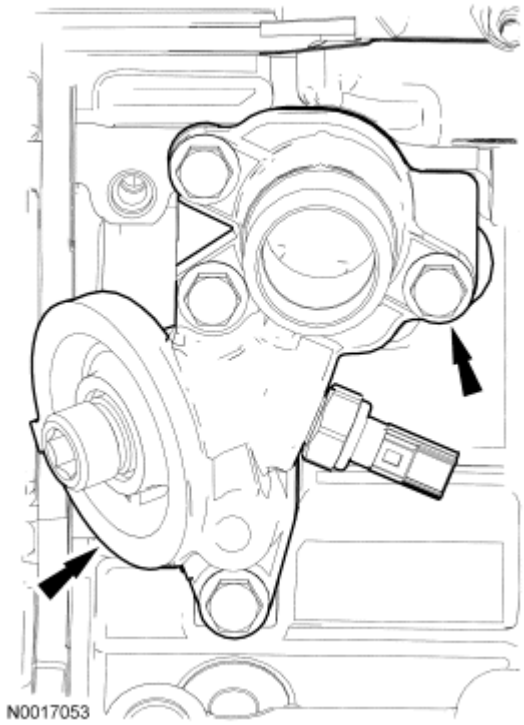

Fig. 336: Locating Oil Filter Adapter And Bolts
Courtesy of FORD MOTOR CO.

30. Remove the 4 bolts and the LH motor mount bracket.

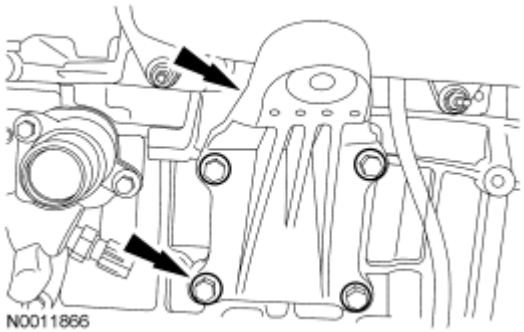

Fig. 337: Locating Motor Mount Bracket And Bolts
Courtesy of FORD MOTOR CO.

31. Remove the 8 nuts and the LH exhaust manifold.
    - Discard the nuts and gasket.

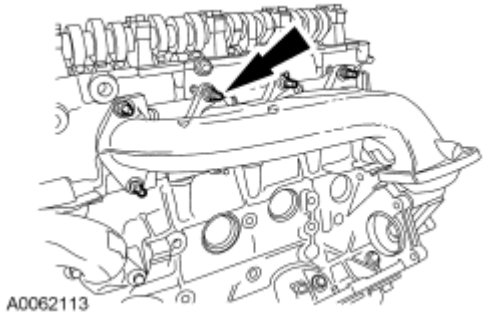

Fig. 338: Locating LH Exhaust Manifold Nuts And Studs
Courtesy of FORD MOTOR CO.

32. Clean and inspect the LH exhaust manifold. For additional information, refer to **ENGINE SYSTEM - GENERAL INFORMATION** article.
33. Remove and discard the 8 LH exhaust manifold studs.
34. Remove the 2 bolts, 2 stud bolts and the RH motor mount bracket.

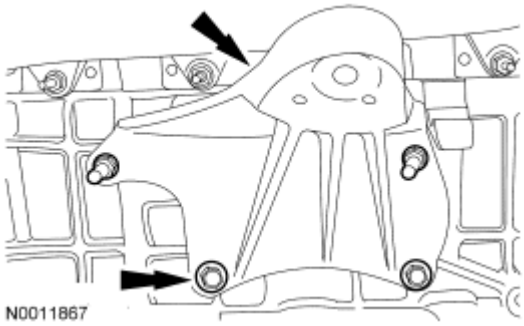

Fig. 339: Locating Motor Mount Bracket Bolts
Courtesy of FORD MOTOR CO.

35. Remove the 8 nuts and the RH exhaust manifold.
    - Discard the nuts and gasket.

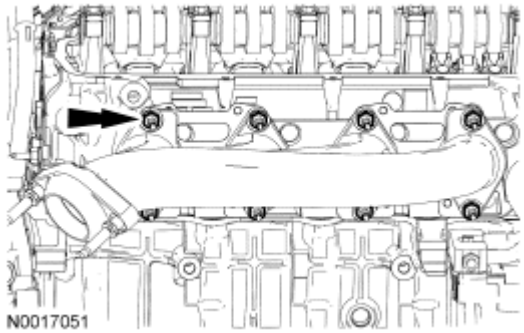

Fig. 340: Removing Nuts And RH Exhaust Manifold
Courtesy of FORD MOTOR CO.

36. Clean and inspect the RH exhaust manifold. For additional information, refer to **ENGINE SYSTEM - GENERAL INFORMATION** article.
37. Remove and discard the 8 RH exhaust manifold studs.
38. Remove the 2 bolts and the KS.

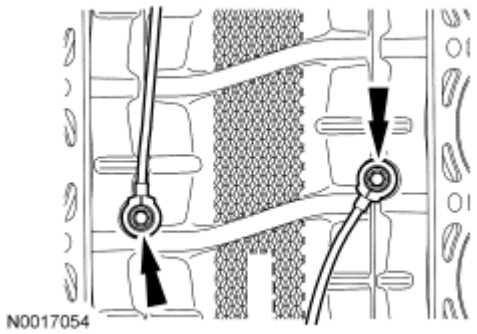

Fig. 341: Locating Knock Sensor (KS) And Bolts
Courtesy of FORD MOTOR CO.

39. Remove the bolt and the RH CMP sensor.

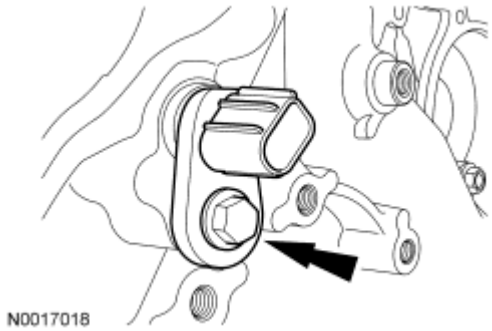

Fig. 342: Locating RH CMP Sensor And Bolt
Courtesy of FORD MOTOR CO.

40. Remove the bolt and the LH CMP sensor.

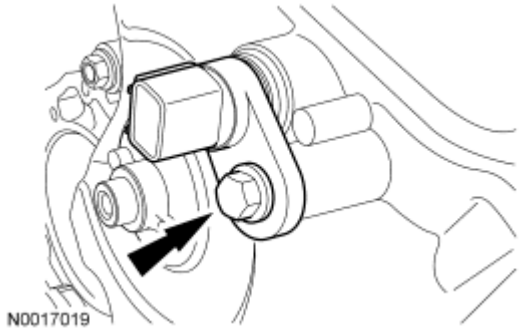

Fig. 343: Locating Camshaft Position (CMP) Sensor And Bolt
Courtesy of FORD MOTOR CO.

41. Remove the bolt and the CKP sensor.

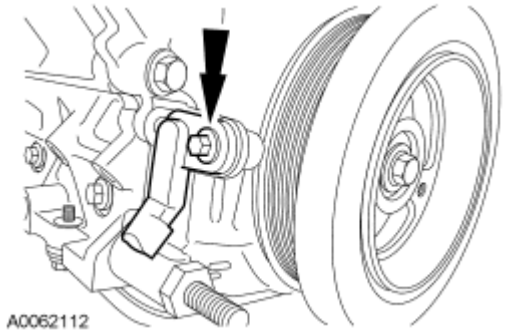

Fig. 344: Locating Crankshaft Position (CKP) Sensor Bolt
Courtesy of FORD MOTOR CO.

42. Remove the 7 bolts, the coolant pump pulley and the 3 accessory drive belt idler pulleys.

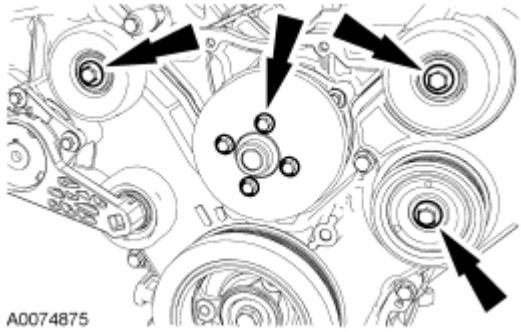

Fig. 345: Locating Coolant Pump Pulley And Accessory Drive Belt Idler Pulley Bolts
Courtesy of FORD MOTOR CO.

43. Remove the 3 bolts and the accessory drive belt tensioner.

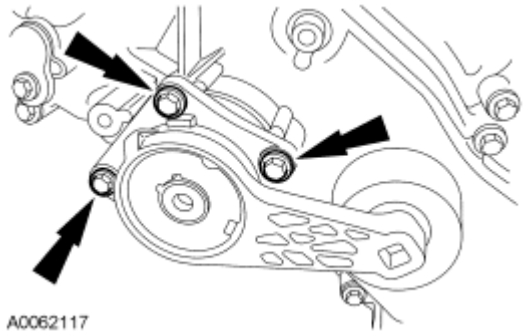

Fig. 346: Identifying Accessory Drive Belt Tensioner Bolts
Courtesy of FORD MOTOR CO.

44. Remove the 4 coolant pump housing bolts.

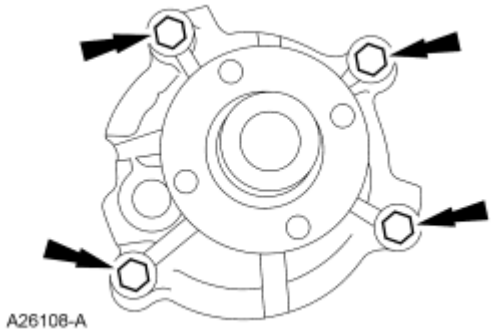

Fig. 347: Coolant Pump Bolts
Courtesy of FORD MOTOR CO.

45. Remove the coolant pump housing from the cylinder block.
    - Discard the O-ring seal.

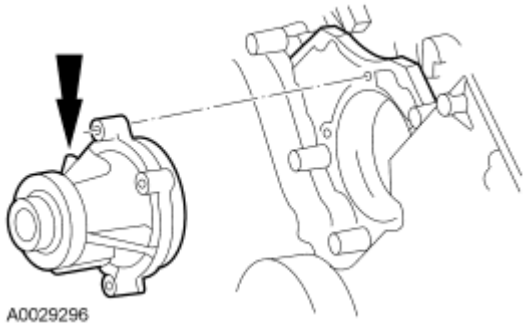

Fig. 348: Identifying Coolant Pump
Courtesy of FORD MOTOR CO.

46. Remove the stud bolt and the coolant tube assembly.
    - Discard the O-ring seal.

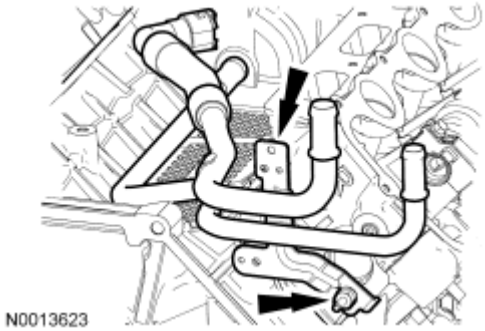

Fig. 349: Locating Coolant Tube Stud Bolt
Courtesy of FORD MOTOR CO.

47. Remove and discard the crankshaft pulley bolt. Using the special tool, remove the crankshaft pulley.

N0010528

Fig. 350: Removing Crankshaft Pulley Using Special Tool (303-D121)
Courtesy of FORD MOTOR CO.

48. Using the special tool, remove the crankshaft front oil seal.

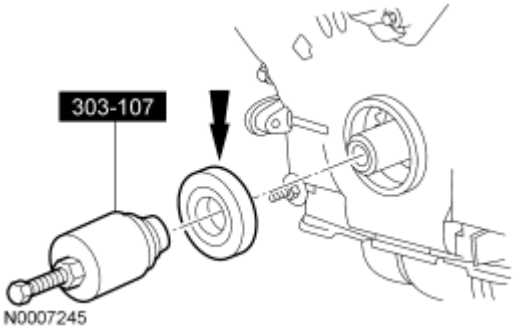

N0007245

Fig. 351: Removing Crankshaft Front Seal Using Special Tool (303-107)
Courtesy of FORD MOTOR CO.

49. Remove the bolts, oil pan and oil pan gasket.
    - Discard the oil pan gasket.

CAUTION: Do not use metal scrapers, wire brushes, power abrasive discs or other abrasive means to clean the sealing surfaces. These tools cause scratches and gouges which make leak paths. Use a plastic scraping tool to remove all traces of old sealant.

    - Clean and inspect the sealing surfaces.

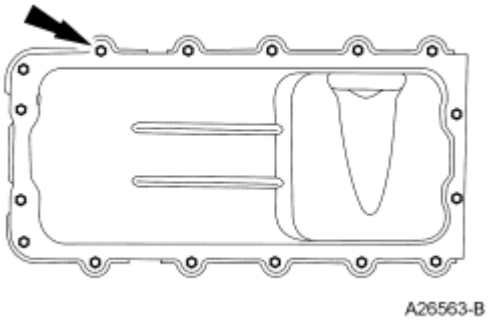

Fig. 352: Locating Oil Pan And Oil Pan Gasket Bolts
Courtesy of FORD MOTOR CO.

NOTE: Correct fastener location is essential for the assembly procedure. Record fastener location.

50. Remove the engine front cover fasteners.

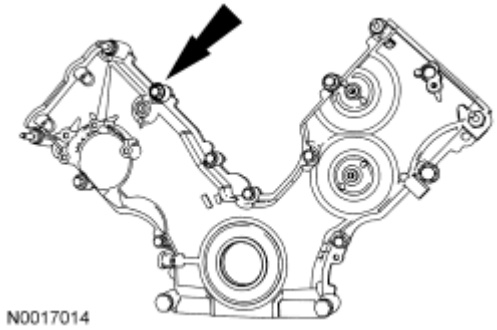

Fig. 353: Locating Engine Front Cover Fasteners
Courtesy of FORD MOTOR CO.

51. Remove the engine front cover from the cylinder block.

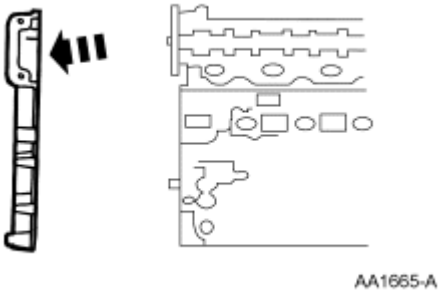

Fig. 354: Removing Engine Front Cover From Cylinder Block
Courtesy of FORD MOTOR CO.

52. Remove the crankshaft sensor ring from the crankshaft.

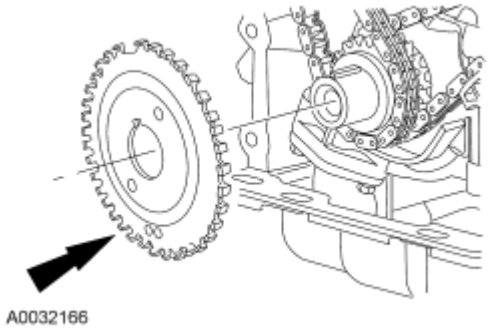

Fig. 355: View Of Crankshaft Sensor Ring At Crankshaft
Courtesy of FORD MOTOR CO.

53. Position the crankshaft keyway at the 12 o'clock position.

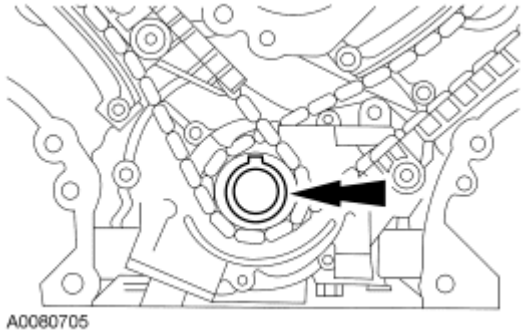

Fig. 356: Positioning Crankshaft Keyway At 12 O'Clock Position
Courtesy of FORD MOTOR CO.

NOTE: If the camshaft lobes are not exactly positioned as shown, the crankshaft will require one full additional rotation to the 12 o'clock position.

54. The No. 1 cylinder camshaft exhaust lobe must be coming up on the exhaust stroke. Verify by noting the position of the 2 intake lobes and the exhaust lobe on the No. 1 cylinder.

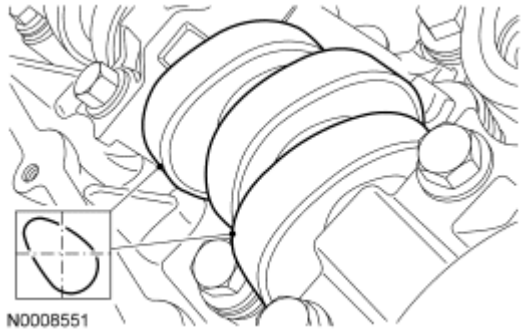

Fig. 357: Identifying Camshaft Lobe Position
Courtesy of FORD MOTOR CO.

CAUTION: If the components are to be reinstalled, they must be installed in their original positions. Mark the components for installation into their original locations. Failure to follow these instructions may result in engine damage.

55. Remove only the 3 roller followers shown in the illustration from the RH cylinder head.

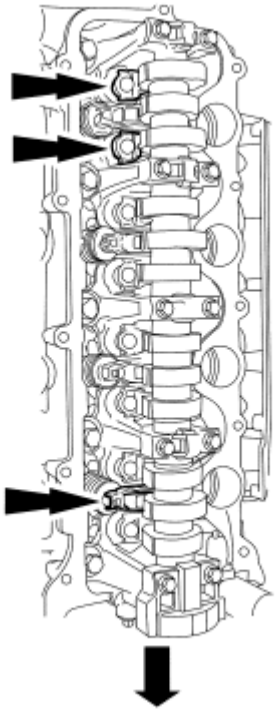

Fig. 358: Identifying RH Cylinder Head Camshaft Roller Followers And Bolts
Courtesy of FORD MOTOR CO.

NOTE: Do not allow the valve keepers to fall off the valve or the valve may drop into the cylinder. If a valve drops into the cylinder, the cylinder head must be removed.

NOTE: It may be necessary to push the valve down while compressing the spring.

56. Using the special tool, remove the 3 roller followers designated in the previous step from the RH cylinder head.

Fig. 359: Identifying Special Tool (303-1039) For Removing/Installing Camshaft Roller Followers
Courtesy of FORD MOTOR CO.

CAUTION: If the components are to be reinstalled, they must be installed in their original positions. Mark the components for installation into their original locations. Failure to follow these instructions may result in engine damage.

57. Remove only the 3 roller followers shown in the illustration from the LH cylinder head.

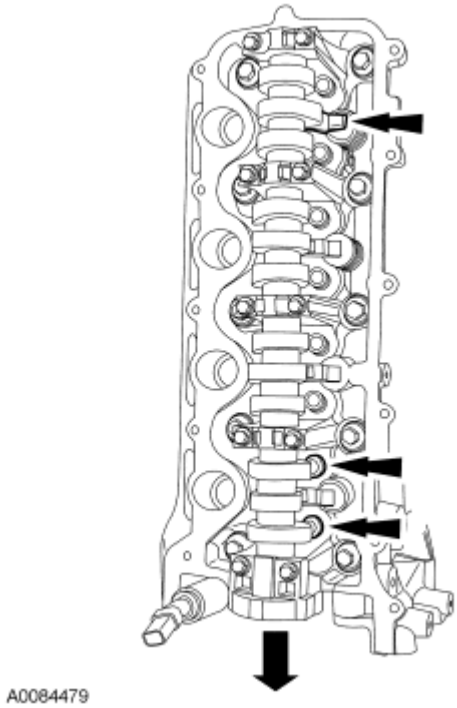

Fig. 360: Locating LH Cylinder Head Camshaft Roller Followers And Bolts
Courtesy of FORD MOTOR CO.

NOTE: Do not allow the valve keepers to fall off the valve or the valve may drop into the cylinder. If a valve drops into the cylinder, the cylinder head must be removed.

NOTE: It may be necessary to push the valve down while compressing the spring.

58. Using the special tool, remove the 3 roller followers designated in the previous step from the LH cylinder head.

Fig. 361: Compressing Spring Using Special Tool (303-1039)
Courtesy of FORD MOTOR CO.

CAUTION: The crankshaft cannot be moved past the 6 o'clock position once set or engine damage may occur.

59. Rotate the crankshaft clockwise and position the crankshaft keyway at the 6 o'clock position.

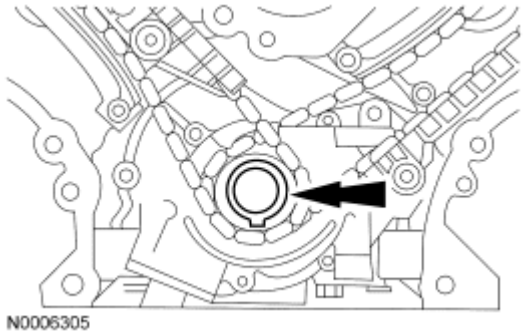

Fig. 362: Crankshaft Positioned With Keyway At 6 O'clock Position
Courtesy of FORD MOTOR CO.

60. Remove the 2 bolts, the LH timing chain tensioner and tensioner arm.

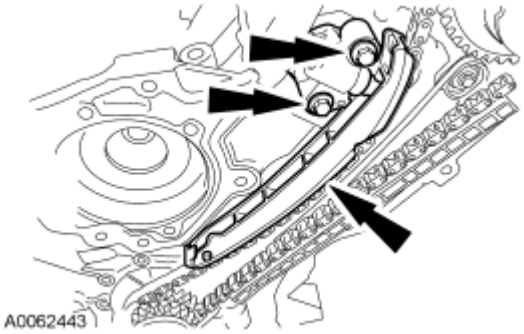

Fig. 363: Identifying LH Timing Chain Tensioner & Tensioner Arm
Courtesy of FORD MOTOR CO.

61. Remove the 2 bolts, the RH timing chain tensioner and tensioner arm.

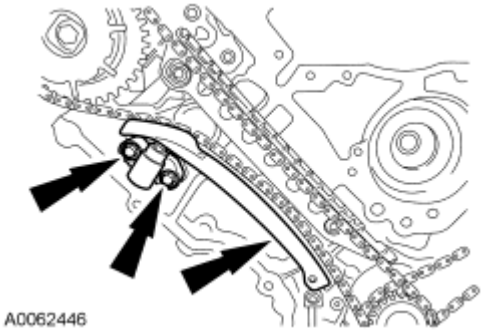

Fig. 364: Identifying RH Timing Chain Tensioner, Tensioner Arm And Bolts
Courtesy of FORD MOTOR CO.

62. Remove the RH and LH timing chains and the crankshaft sprocket.
    - Remove the RH timing chain from the camshaft sprocket.
    - Remove the RH timing chain from the crankshaft sprocket.
    - Remove the LH timing chain from the camshaft sprocket.
    - Remove the LH timing chain and crankshaft sprocket.

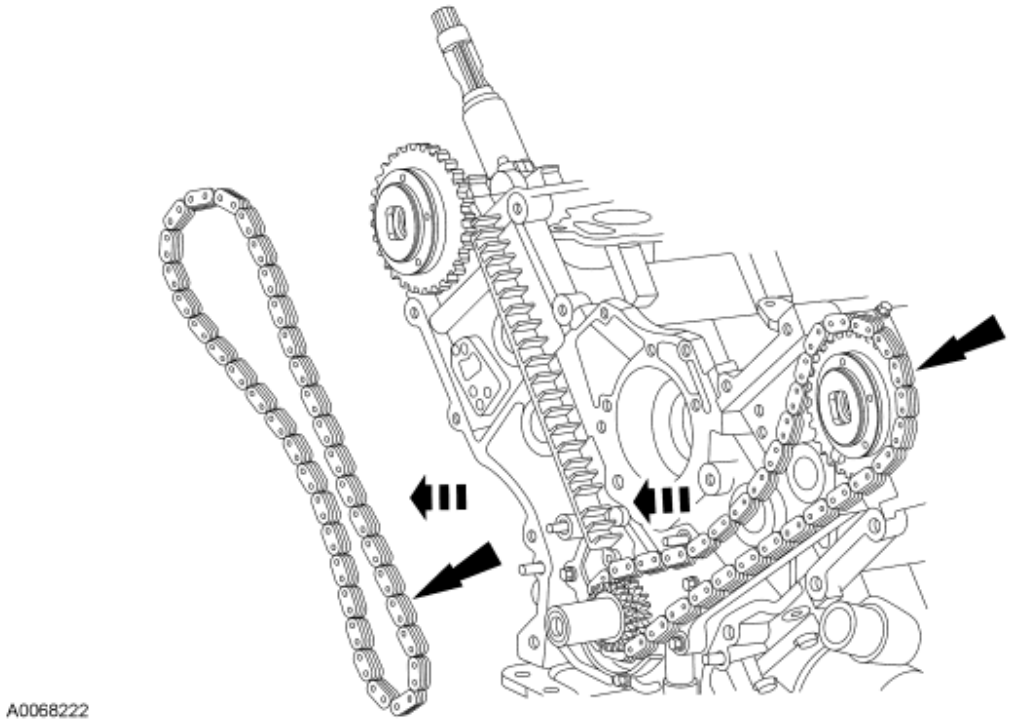

Fig. 365: Identifying RH/LH Timing Chains
Courtesy of FORD MOTOR CO.

NOTE: RH shown, LH similar.

63. Remove the LH and RH timing chain guides.
    - Remove the 2 bolts.
    - Remove both timing chain guides.

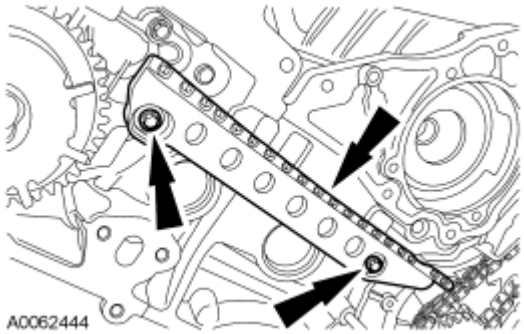

Fig. 366: Identifying Timing Chain Guide And Mounting Bolts
Courtesy of FORD MOTOR CO.

CAUTION: Damage to the camshaft phaser sprocket assembly will occur if mishandled or used as a lifting or leveraging device.

CAUTION: Only use hand tools to remove the camshaft phaser sprocket assembly or damage may occur to the camshaft or camshaft phaser unit.

64. Using the special tool, remove the bolt and the RH camshaft phaser sprocket assembly.
    - Discard the camshaft phaser sprocket bolt.

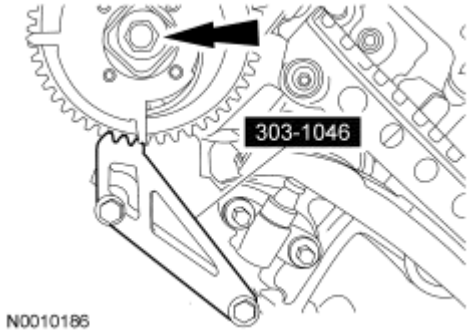

Fig. 367: Identifying VCT Phaser Sprocket Bolt And Holder Tool
Courtesy of FORD MOTOR CO.

CAUTION: Damage to the camshaft phaser sprocket assembly will occur if mishandled or used as a lifting or leveraging device.

CAUTION: Only use hand tools to remove the camshaft phaser sprocket assembly or damage may occur to the camshaft or camshaft phaser unit.

65. Using the special tool, remove the bolt and the LH camshaft phaser sprocket assembly.
    - Discard the camshaft phaser sprocket bolt.

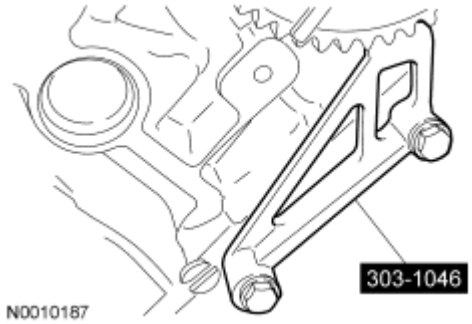

Fig. 368: Identifying Special Sprocket Phaser Tool
Courtesy of FORD MOTOR CO.

66. Install the special tool onto the LH cylinder head.

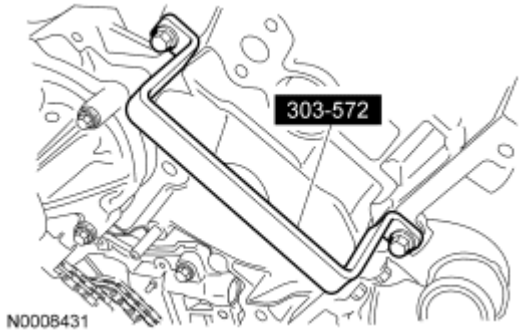

Fig. 369: Identifying Special Tool (303-572) LH Cylinder Head
Courtesy of FORD MOTOR CO.

67. Install the special tool onto the RH cylinder head.

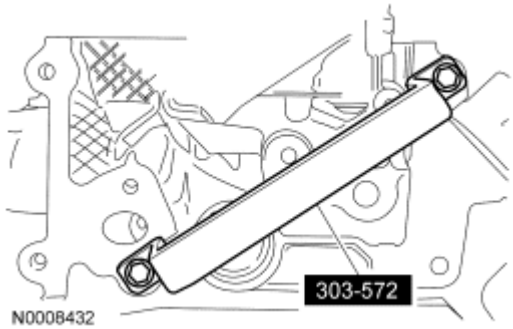

Fig. 370: Identifying Special Tool (303-572) RH Cylinder Head
Courtesy of FORD MOTOR CO.

CAUTION: Remove the front thrust camshaft bearing cap straight upward from the bearing towers or the bearing cap may be damaged from side loading.

68. Remove the 2 bolts and the RH cylinder head camshaft front bearing cap.

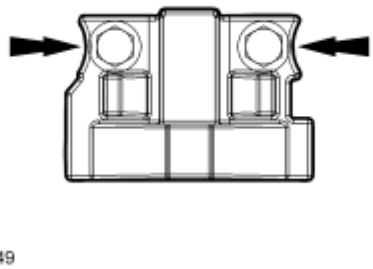

Fig. 371: Removing Camshaft Front Bearing Cap Bolts
Courtesy of FORD MOTOR CO.

CAUTION: The camshaft bearing caps must be installed in their original locations. Record camshaft bearing cap locations. Failure to follow these instructions may result in engine damage.

69. Remove the remaining bolts in the sequence shown and remove the RH cylinder head camshaft bearing caps.

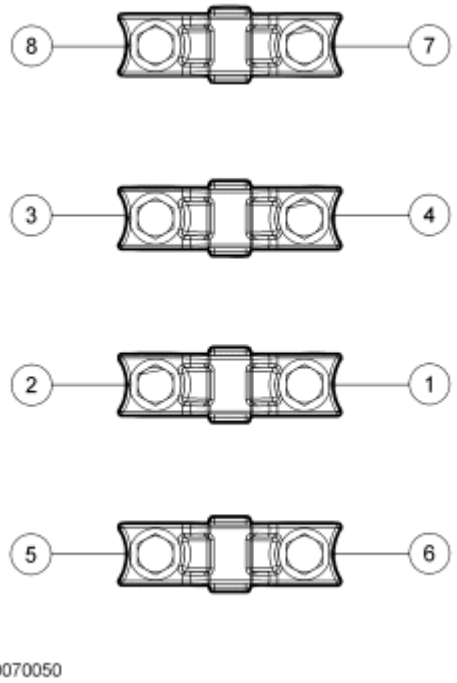

Fig. 372: Removing Camshaft Bearing Caps Bolts In Sequence
Courtesy of FORD MOTOR CO.

70. Clean and inspect the RH camshaft bearing caps.
    - The camshaft front thrust bearing cap contains an oil metering groove. Make sure the groove is free of foreign material.

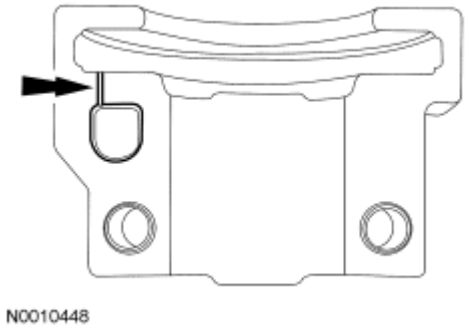

Fig. 373: Identifying Camshaft Front Thrust Bearing Cap Oil Metering Groove
Courtesy of FORD MOTOR CO.

71. Remove the RH camshaft.

CAUTION: If the components are to be reinstalled, they must be installed in their original positions. Mark the components for installation into their original locations. Failure to follow these instructions may result in engine damage.

72. Remove the remaining roller followers from the RH cylinder head.

CAUTION: If the components are to be reinstalled, they must be installed in their original positions. Mark the components for installation into their original locations. Failure to follow these instructions may result in engine damage.

73. Remove the hydraulic lash adjusters from the RH cylinder head.

CAUTION: Remove the front thrust camshaft bearing cap straight upward from the bearing towers or the bearing cap may be damaged from side loading.

74. Remove the 2 bolts and the LH cylinder head camshaft front bearing cap.

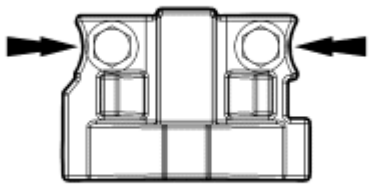

N0070049

Fig. 374: Removing Camshaft Front Bearing Cap Bolts
Courtesy of FORD MOTOR CO.

CAUTION: The camshaft bearing caps must be installed in their original locations. Record camshaft bearing cap locations. Failure to follow these instructions may result in engine damage.

75. Remove the remaining bolts in the sequence shown and remove the LH cylinder head camshaft bearing caps.

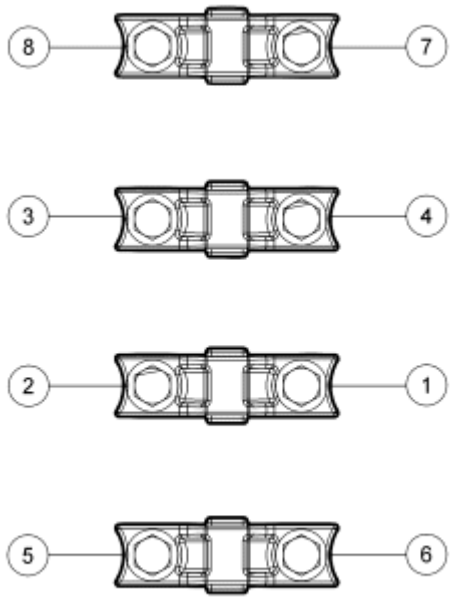

N0070050

Fig. 375: Removing Camshaft Bearing Caps Bolts In Sequence
Courtesy of FORD MOTOR CO.

76. Clean and inspect the LH camshaft bearing caps.
    - The camshaft front thrust bearing cap contains an oil metering groove. Make sure the groove is free of foreign material.

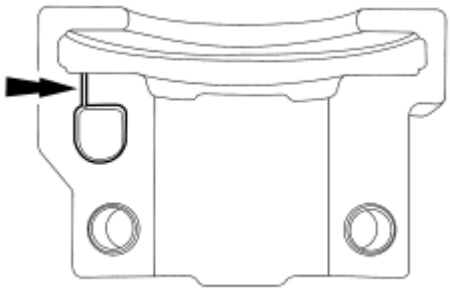

N0010448

Fig. 376: Identifying Camshaft Front Thrust Bearing Cap Oil Metering Groove
Courtesy of FORD MOTOR CO.

77. Remove the LH camshaft.

CAUTION: If the components are to be reinstalled, they must be installed in their original positions. Mark the components for installation into their original locations. Failure to follow these instructions may result in engine damage.

78. Remove the remaining roller followers from the LH cylinder head.

CAUTION: If the components are to be reinstalled, they must be installed in their original positions. Mark the components for installation into their original locations. Failure to follow these instructions may result in engine damage.

79. Remove the hydraulic lash adjusters from the LH cylinder head.

CAUTION: The cylinder head must be cool before removing it from the engine. Cylinder head warpage can result if a warm or hot cylinder head is removed.

CAUTION: Place clean shop towels over exposed engine cavities. Carefully remove the towels so foreign material is not dropped into the engine.

CAUTION: The cylinder head bolts must be discarded and new bolts must be installed. They are tighten-to-yield designed and cannot be reused.

CAUTION: Do not use metal scrapers, wire brushes, power abrasive discs or other abrasive means to clean the sealing surfaces. These tools cause scratches and gouges that make leak paths. Use a plastic scraping tool to remove all traces of the head gasket.

CAUTION: Aluminum surfaces are soft and can be scratched easily. Never place the cylinder head gasket surface, unprotected, on a bench surface.

NOTE: RH shown, LH similar.

80. Remove the 20 bolts and the cylinder heads.
    - Discard the cylinder head gaskets.
    - Discard the cylinder head bolts.

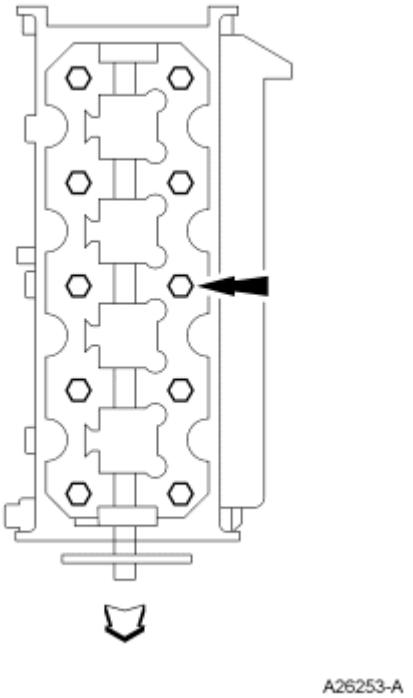

Fig. 377: Identifying Cylinder Head Gasket And Bolts
Courtesy of FORD MOTOR CO.

CAUTION: Do not use metal scrapers, wire brushes, power abrasive discs or other abrasive means to clean the sealing surfaces. These tools cause scratches and gouges that make leak paths. Use a plastic scraping tool to remove all traces of the head gasket.

NOTE: Observe all warnings or cautions and follow all application directions contained on the packaging of the silicone gasket remover and the metal surface prep.

NOTE: If there is no residual gasket material present, metal surface prep can be used to clean and prepare the surfaces.

81. Clean the cylinder head-to-cylinder block mating surfaces of both the cylinder head and the cylinder block in the following sequence.
    1. Remove any large deposits of silicone or gasket material with a plastic scraper.
    2. Apply silicone gasket remover, following package directions and allow to set for several minutes.
    3. Remove the silicone gasket remover with a plastic scraper. A second application of silicone gasket remover may be required if residual traces of silicone or gasket material remain.
    4. Apply metal surface prep, following package directions, to remove any remaining traces of oil or coolant and to prepare the surfaces to bond with the new gasket. Do not attempt to make the metal shiny. Some staining of the metal surfaces is normal.

NOTE: **Make sure all cylinder head surfaces are clear of any gasket material, RTV, oil and coolant. The cylinder head surface must be clean and dry before running a flatness check.**

NOTE: **Use a straightedge that is calibrated by the manufacturer to be flat within 0.005 mm (0.0002 in) per running foot length. For example, if the straightedge is 61 cm (24 in) long, the machined edge must be flat within 0.010 mm (0.0004 in) from end to end.**

NOTE: **LH shown, RH similar.**

82. Support the cylinder heads on a bench with the head gasket side up. Inspect all areas of the deck face with a straightedge, paying particular attention to the oil pressure feed area. The cylinder heads must not have depressions deeper than 0.0254 mm (0.001 in) across a 38.1 mm (1.5 in) square area, or scratches longer than 0.0254 mm (0.001 in).

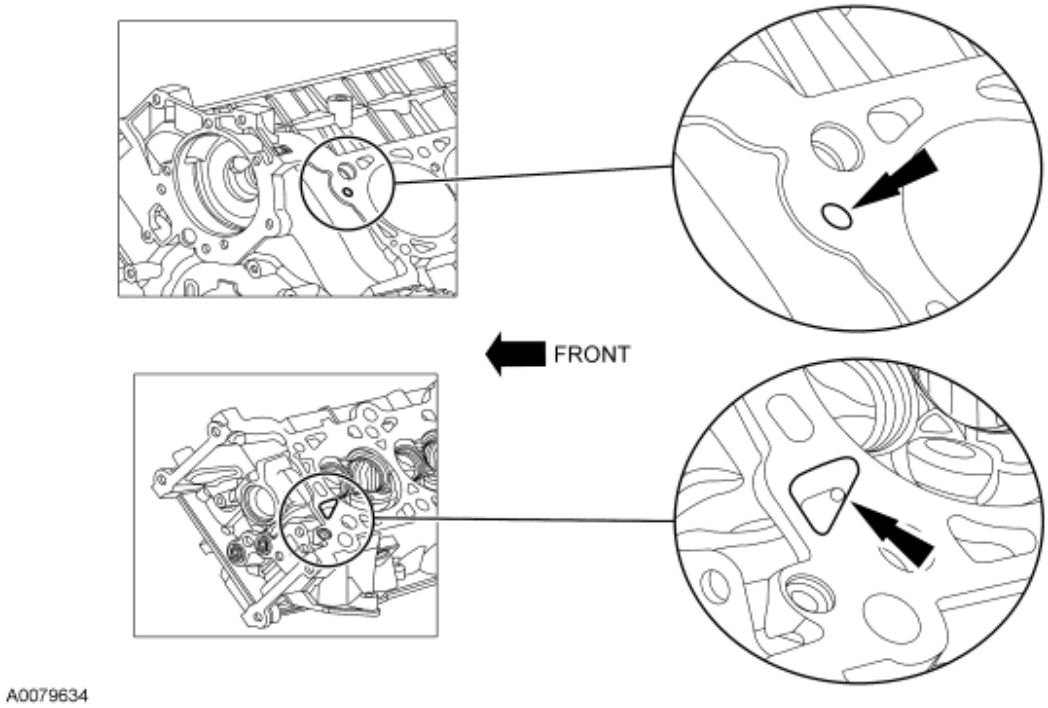

Fig. 378: Identifying Cylinder Head/Cylinder Block Oil Pressure Feed Areas
Courtesy of FORD MOTOR CO.

83. Remove the bolts, the oil pump screen and pickup tube and the spacer.

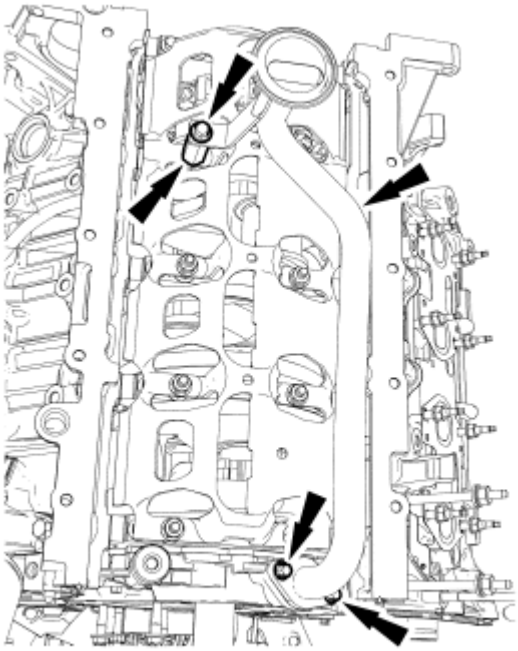

N0011868

Fig. 379: Identifying Spacer, Oil Pump Screen And Pickup Tube And Bolts
Courtesy of FORD MOTOR CO.

84. Remove the 7 nuts and the windage tray.

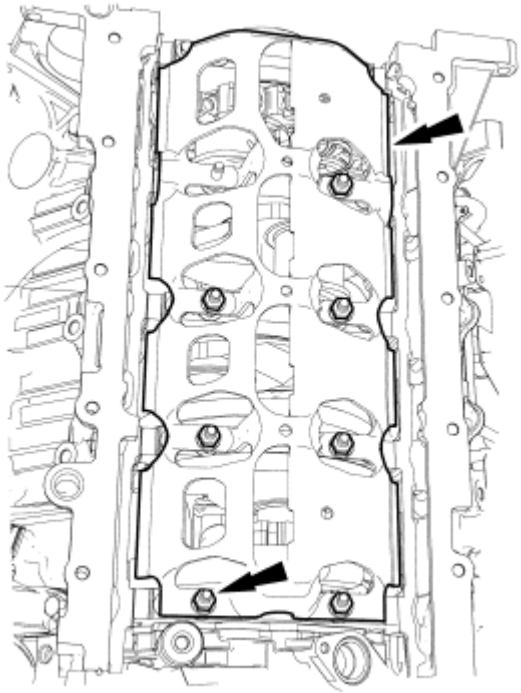

N0011869

Fig. 380: Locating Windage Tray And Nuts

Courtesy of FORD MOTOR CO.

85. Remove the 3 bolts and the oil pump.

Fig. 381: Locating Oil Pump Bolts
Courtesy of FORD MOTOR CO.

86. Before removing the pistons, inspect the top of the cylinder bores. If necessary, remove the ridge or carbon deposits from each cylinder using an abrasive pad or equivalent, following the manufacturer's instructions.

CAUTION: Verify that the connecting rods and rod caps have orientation numbers cast into them. If not, number the connecting rods and rod caps for correct orientation. Failure to do so can result in engine damage.

87. Remove the bolts and the connecting rod caps. Discard the bolts.

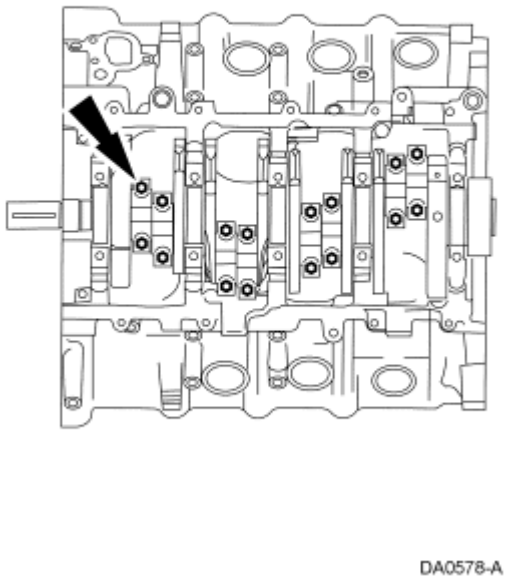

Fig. 382: Locating Connecting Rod Caps
Courtesy of FORD MOTOR CO.

CAUTION: Do not scratch the cylinder walls or crankshaft journals with the connecting rod or engine damage may occur.

88. Use the special tool to push the piston through the top of the cylinder block.

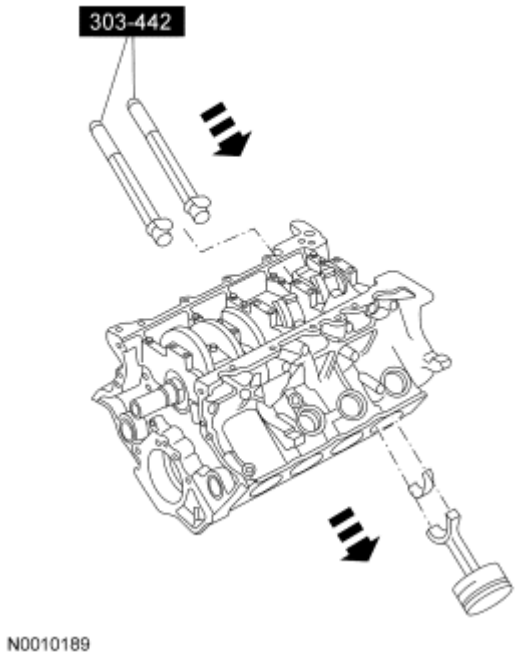

Fig. 383: Pushing Piston Through Top Of Cylinder Block
Courtesy of FORD MOTOR CO.

89. Disassemble the 8 pistons. For additional information, refer to **Piston**.
90. Remove the fasteners.
    1. Remove and discard the cross-mounted main cap bolts.
    2. Remove and discard the main bearing cap bolts and stud bolts.

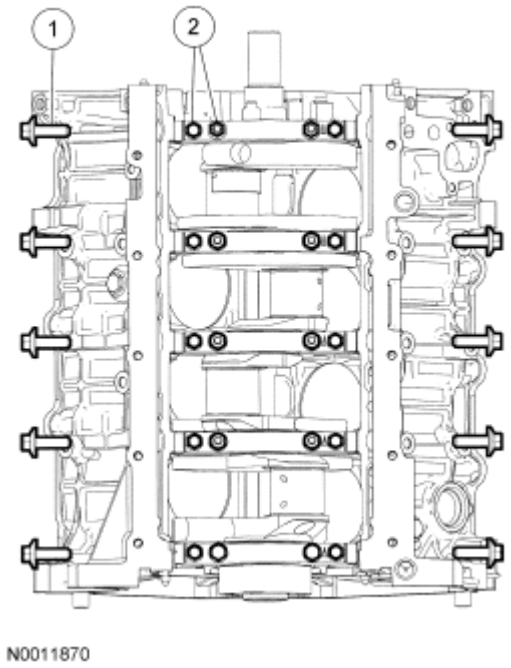

Fig. 384: Discarding Main Bearing Cap Bolts And Stud Bolts
Courtesy of FORD MOTOR CO.

91. Remove the 5 main bearing caps, the lower crankshaft main bearings and the lower thrust washer.

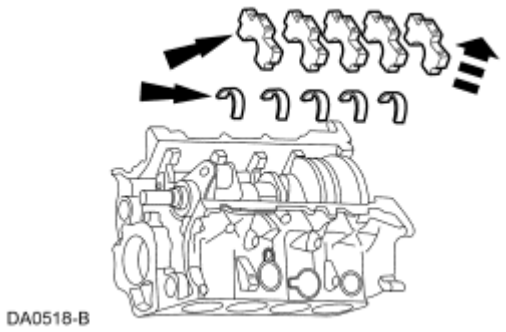

Fig. 385: Locating Main Bearing Caps, Lower Crankshaft Main Bearings And Lower Thrust Washer
Courtesy of FORD MOTOR CO.

92. Remove the crankshaft, the upper crankshaft main bearings and the upper thrust washers from the cylinder block.

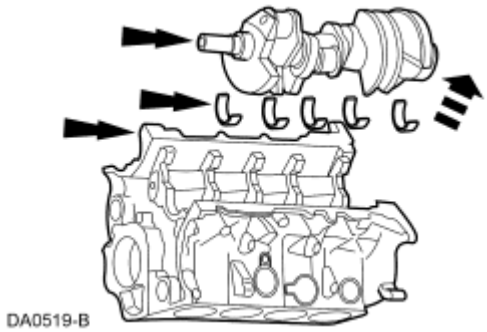

Fig. 386: Removing Crankshaft, Upper Crankshaft Main Bearings And Upper Thrust Washers From Cylinder Block
Courtesy of FORD MOTOR CO.

DISASSEMBLY AND ASSEMBLY OF SUBASSEMBLIES

CYLINDER HEAD

Special Tools

Illustration	Tool Name	Tool Number
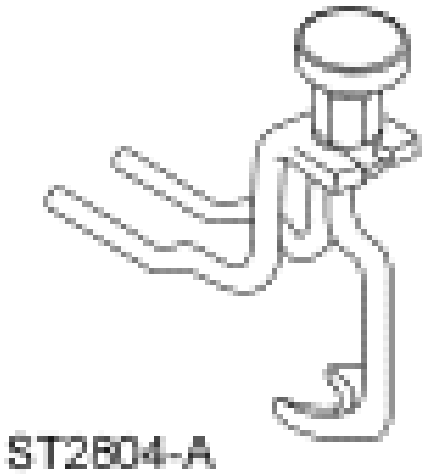	Compressor, Valve Spring	303-1039
	Installer, Valve Stem Oil Seal	303-383 (T91T-6571-A)

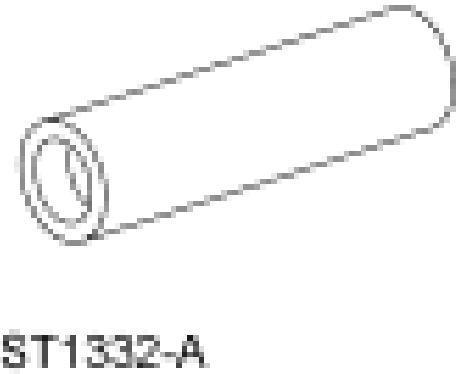 ST1332-A		

Material

Item	Specification
Motorcraft SAE 5W-20 Premium Synthetic Blend Motor Oil XO-5W20-QSP (US); Motorcraft SAE 5W-20 Super Premium Motor Oil CXO-5W20-LSP12 (Canada); or equivalent	WSS-M2C930-A

NOTE: LH side shown, RH side similar.

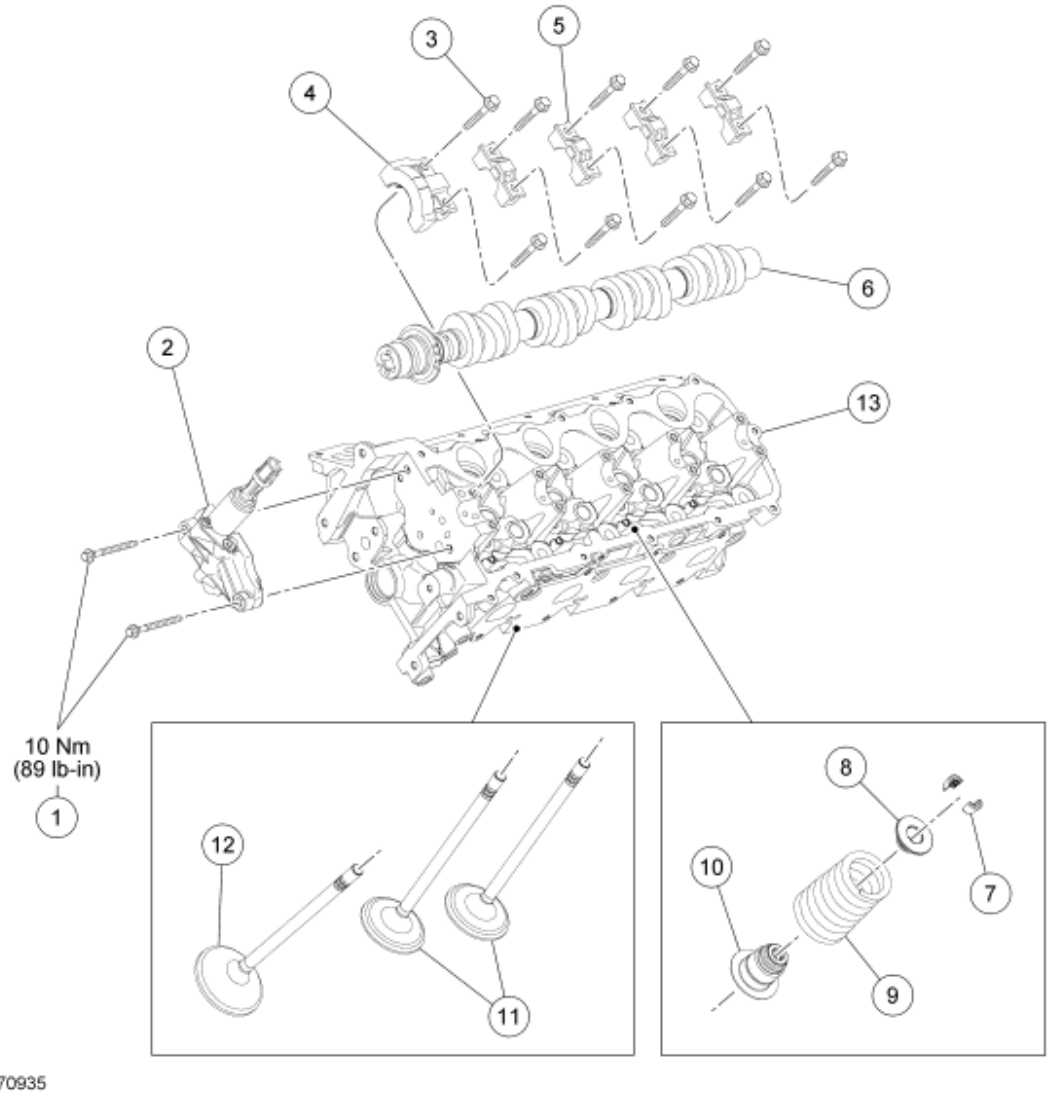

Fig. 387: Exploded View Of Cylinder Head With Torque Specification
Courtesy of FORD MOTOR CO.

Item	Part Number	Description
1	W701520	Variable camshaft timing (VCT) housing assembly bolts (2 required)
2	6C261 LH/ 6C260 RH	VCT housing assembly
3	N807834	Camshaft bearing cap bolt (10 required)
4	6B284	Camshaft front bearing cap
5	6B280	Camshaft bearing cap (4 required)
6	6C255 LH/ 6251 RH	Camshaft
7	6518	Valve spring retainer key (24 required)
8	6514	Valve spring retainer (12 required)
9	6513	Valve spring (12 required)

10	6A517	Valve seal (12 required)
11	6507	Intake valves (8 required)
12	6505	Exhaust valve (4 required)
13	6050 LH/ 6049 RH	Cylinder head

DISASSEMBLY

1. Remove the bolts and the variable camshaft timing (VCT) housing.
   - Discard the gasket.
2. Lubricate the camshaft and camshaft journals with clean engine oil and install the camshaft.

NOTE: The camshaft must be installed in the head to use the special tool necessary to compress the valve springs.

NOTE: Lubricate the camshaft bearing caps with clean engine oil.

3. Install the camshaft bearing caps in their original locations.
   - Position the front camshaft bearing cap.
   - Position the remaining camshaft bearing caps.
   - Install the bolts finger-tight.
4. Using the special tool, compress the valve spring and remove the valve spring retainer keys.

Fig. 388: Compressing Valve Spring With Special Tool (303-1039)
Courtesy of FORD MOTOR CO.

5. Remove the valve spring retainer, the valve spring and the valve seal.
   - Discard the valve seal.
6. Remove the valve from the cylinder head.
7. Repeat the previous 3 steps for each valve.
8. Inspect the components. For additional information, refer to **ENGINE SYSTEM - GENERAL INFORMATION** article.

CAUTION: Remove the front thrust camshaft bearing cap straight upward from

the bearing towers or the bearing cap may be damaged from side loading.

9. Remove the 2 bolts and the cylinder head camshaft front bearing cap.

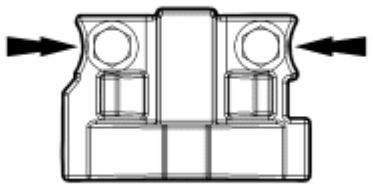

N0070049

Fig. 389: Removing Camshaft Front Bearing Cap Bolts
Courtesy of FORD MOTOR CO.

CAUTION: The camshaft bearing caps must be installed in their original locations. Record camshaft bearing cap locations. Failure to follow these instructions may result in engine damage.

10. Remove the remaining bolts in the sequence shown and remove the cylinder head camshaft bearing caps.

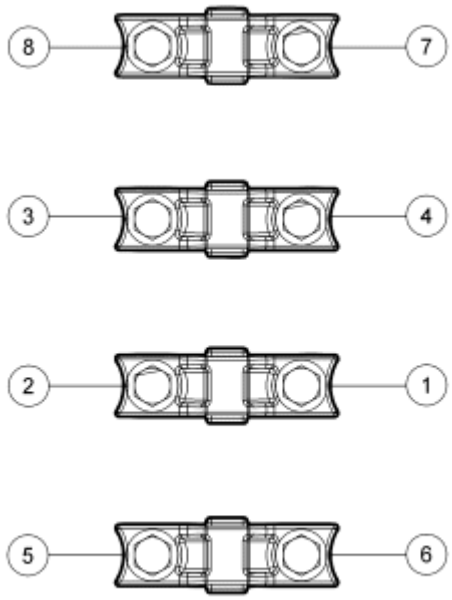

N0070050

Fig. 390: Removing Camshaft Bearing Caps Bolts In Sequence
Courtesy of FORD MOTOR CO.

11. Remove the camshaft.
12. Check the cylinder head for distortion. For additional information, refer to **ENGINE SYSTEM - GENERAL INFORMATION** article.

ASSEMBLY

1. Lubricate the camshaft and camshaft journals with clean engine oil and install the camshaft.

NOTE: Lubricate the camshaft bearing caps with clean engine oil.

2. Install the camshaft bearing caps in their original locations.
   - Position the front camshaft bearing cap.
   - Position the remaining camshaft bearing caps.
   - Install the bolts finger-tight.

NOTE: Lubricate the valve stem with clean engine oil prior to installation.

3. Install the valve into the cylinder head.

NOTE: Lubricate the valve seal and valve stem with clean engine oil prior to installation.

4. Position a new valve seal onto the valve stem.
5. Using the special tool, install the new valve seal.

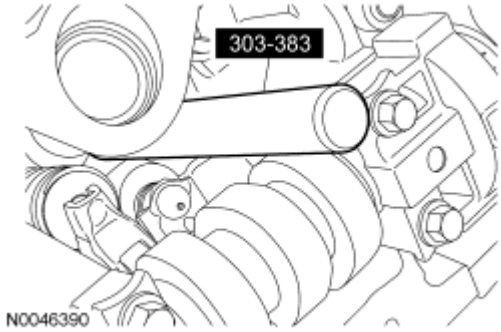

Fig. 391: Installing Valve Seal Using Special Tool (303-383)
Courtesy of FORD MOTOR CO.

6. Using the special tool, install the valve spring, the valve spring retainer and the valve spring retainer keys.

Fig. 392: Compressing Valve Spring With Special Tool (303-1039)
Courtesy of FORD MOTOR CO.

7. Repeat the previous 2 steps for each valve.

CAUTION: Remove the front thrust camshaft bearing cap straight upward from the bearing towers or the bearing cap may be damaged from side loading.

8. Remove the 2 bolts and the cylinder head camshaft front bearing cap.

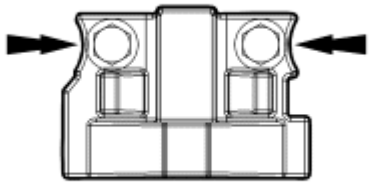

Fig. 393: Removing Camshaft Front Bearing Cap Bolts
Courtesy of FORD MOTOR CO.

CAUTION: The camshaft bearing caps must be installed in their original locations. Record camshaft bearing cap locations. Failure to follow these instructions may result in engine damage.

9. Remove the remaining bolts in the sequence shown and remove the cylinder head camshaft bearing caps.

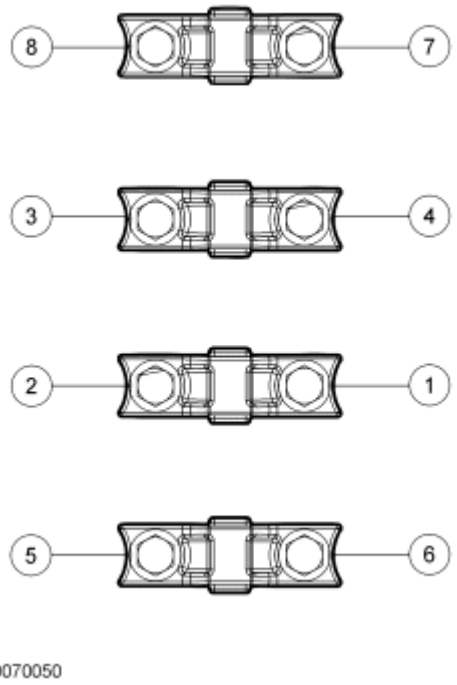

Fig. 394: Removing Camshaft Bearing Caps Bolts In Sequence
Courtesy of FORD MOTOR CO.

10. Remove the camshaft.
11. Install a new gasket, the VCT housing and the bolts.
    - Tighten to 10 N.m (89 lb-in).

PISTON

Material

Item	Specification
Motorcraft SAE 5W-20 Premium Synthetic Blend Motor Oil XO-5W20-QSP (US); Motorcraft SAE 5W-20 Super Premium Motor Oil CXO-5W20-LSP12 (Canada); or equivalent	WSS-M2C930-A

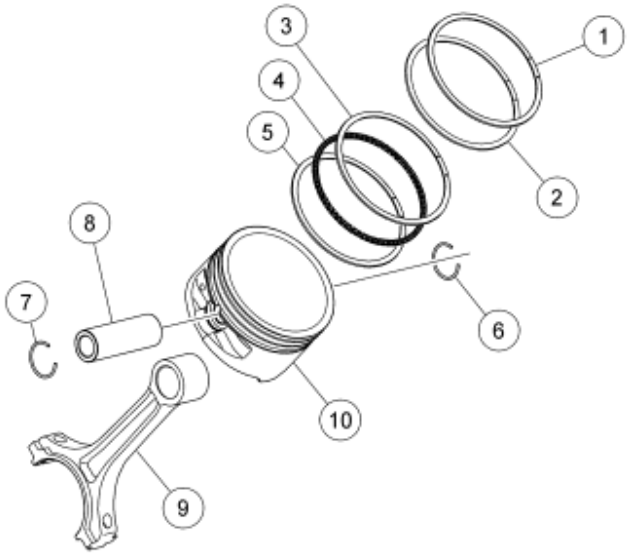

N0010114

Fig. 395: Exploded View Of Piston Components
Courtesy of FORD MOTOR CO.

Item	Part Number	Description
1	6150	Piston compression ring, upper
2	6152	Piston compression ring, lower
3	6159	Piston oil control segment ring, upper
4	6161	Piston oil control spacer
5	6159	Piston oil control segment ring, lower
6	6140	Piston pin retainer
7	6140	Piston pin retainer
8	6135	Piston pin
9	6200	Connecting rod
10	6110	Piston

DISASSEMBLY

1. Remove the piston rings from the piston.
    - Discard the piston rings.
2. Remove the piston pin retainers and the piston pin.
3. Separate the piston from the connecting rod.
4. Clean and inspect the piston and connecting rod. For additional information, refer to **ENGINE SYSTEM - GENERAL INFORMATION** article.

ASSEMBLY

NOTE: The connecting rod must be installed into the piston with identification markings toward the front.

1. Position the connecting rod in the piston.

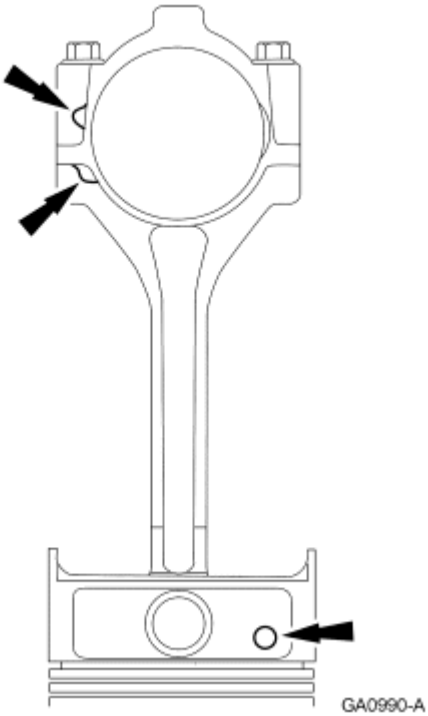

Fig. 396: Positioning Connecting Rod In Piston
Courtesy of FORD MOTOR CO.

2. Lubricate the piston pin and pin bore with clean engine oil.
3. Install the piston pin in the piston and connecting rod assembly.
4. Install the piston pin retaining clips in the piston.
5. Lubricate the piston and the new piston rings with clean engine oil.
6. Install the piston rings onto the piston.

ASSEMBLY

ENGINE

Special Tools

Illustration	Tool Name	Tool Number
	Alignment Pins, Cylinder Head	303-1040 (SR-015486)

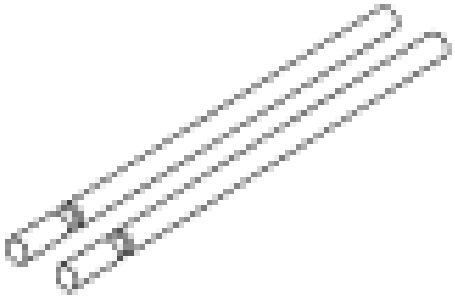 ST2806-A		
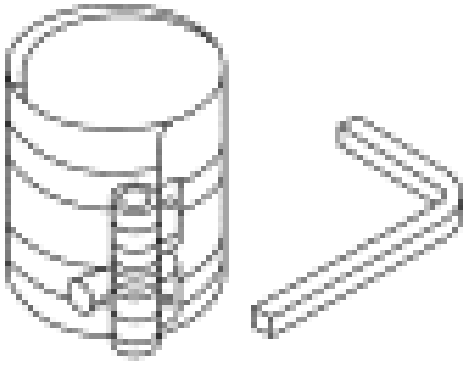 ST1376-A	Compressor, Piston Ring	303-D032 (D81L-6002-C) or equivalent
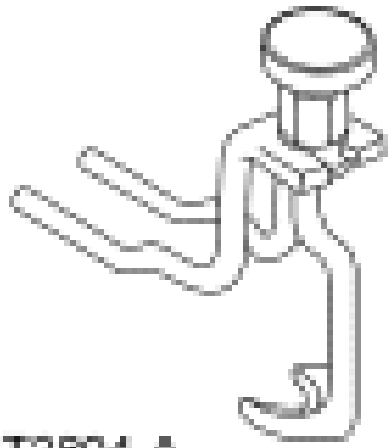 ST2804-A	Compressor, Valve Spring	303-1039
	Installer, Connecting Rod	303-442 (T93P-6136-A)

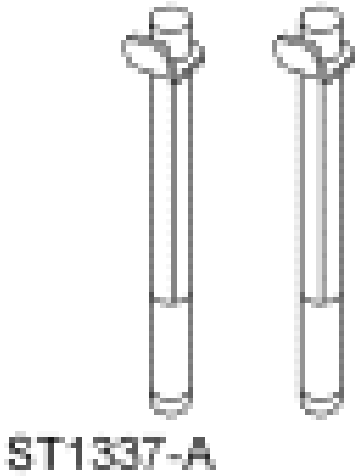 ST1337-A		
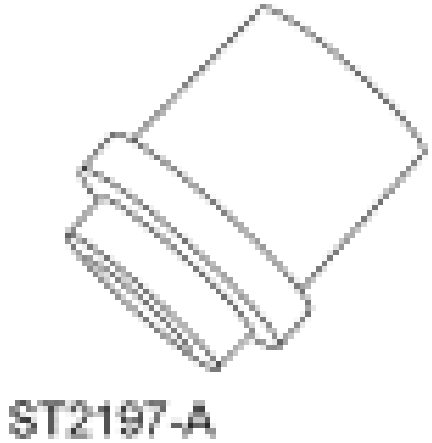 ST2197-A	Installer, Crankshaft Front Seal	303-635
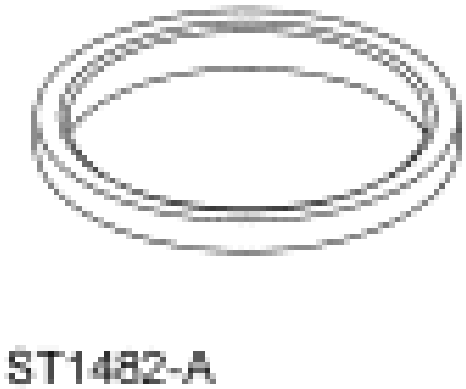 ST1482-A	Installer, Crankshaft Oil Slinger	303-517 (T95P-6701-CH)
	Installer, Crankshaft Rear Seal	303-518 (T95P-6701-DH)

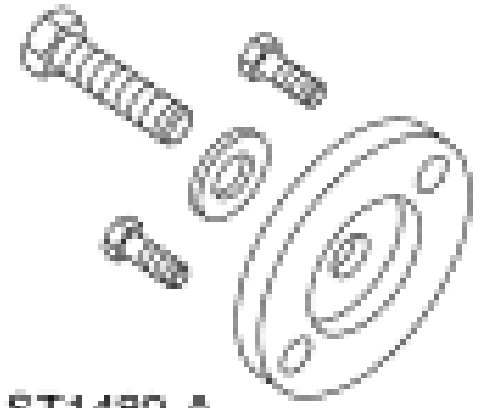 ST1480-A		
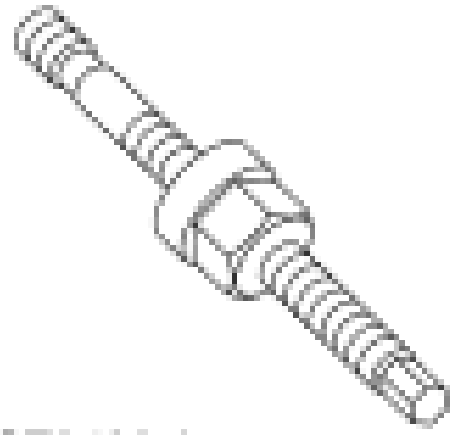 ST2428-A	Installer, Crankshaft Vibration Damper	303-102 (T74P-6316-B)
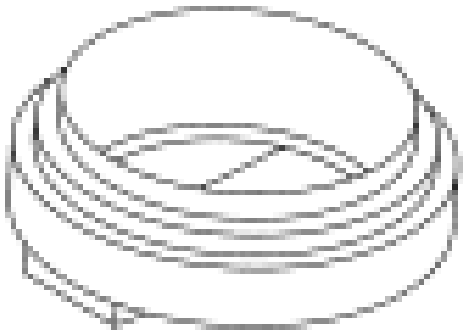 ST1479-A	Installer, Crankshaft Rear Seal	303-516 (T95P-6701-EH)
	Installer, Front Cover Seal	303-335 (T88T-6701-A)

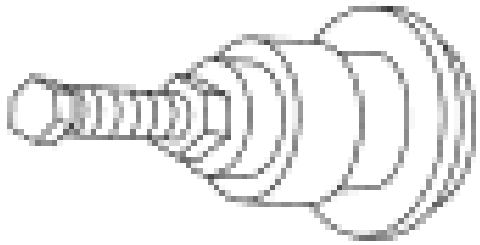 ST1326-A		
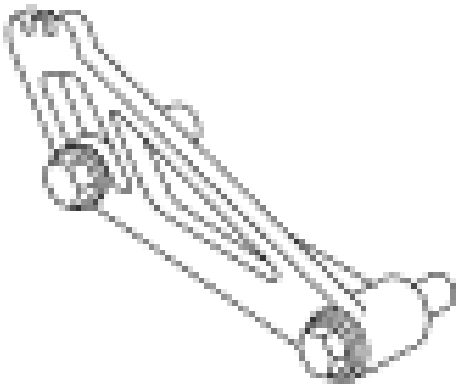 ST2607-A	Locking Tool, Camshaft Phaser Sprocket	303-1046
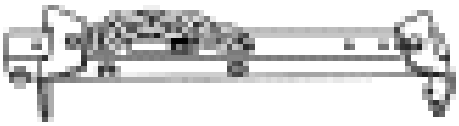 ST1377-A	Modular Engine Lift Bracket	303-F047 (014-00073) or equivalent
	Remover/Installer, Cylinder	303-572 (T97T-6000-A)

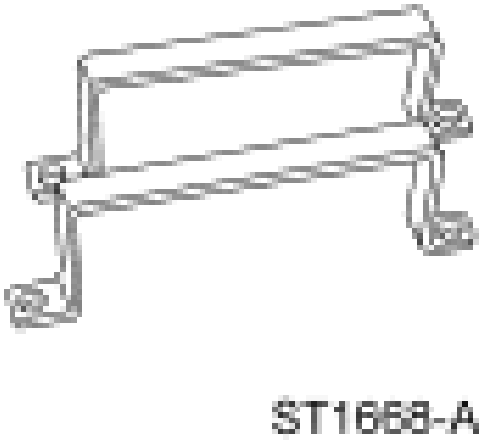	Head	

Material

Item	Specification
Gasket Maker TA-16	WSK-M2G348-A5
Hydraulic Chain Tensioner Retaining Clip 1L3Z-6P250-AA	-
Motorcraft Metal Surface Prep ZC-31	-
Motorcraft Premium Gold Engine Coolant with Bittering Agent (US only) VC-7-B (US); CVC-7-A (Canada); or equivalent (yellow color)	WSS-M97B51-A1
Motorcraft SAE 5W-20 Premium Synthetic Blend Motor Oil XO-5W20-QSP (US); Motorcraft SAE 5W-20 Super Premium Motor Oil CXO-5W20-LSP12 (Canada); or equivalent	WSS-M2C930-A
Silicone Gasket and Sealant TA-30	WSE-M4G323-A4
Silicone Gasket Remover ZC-30	-

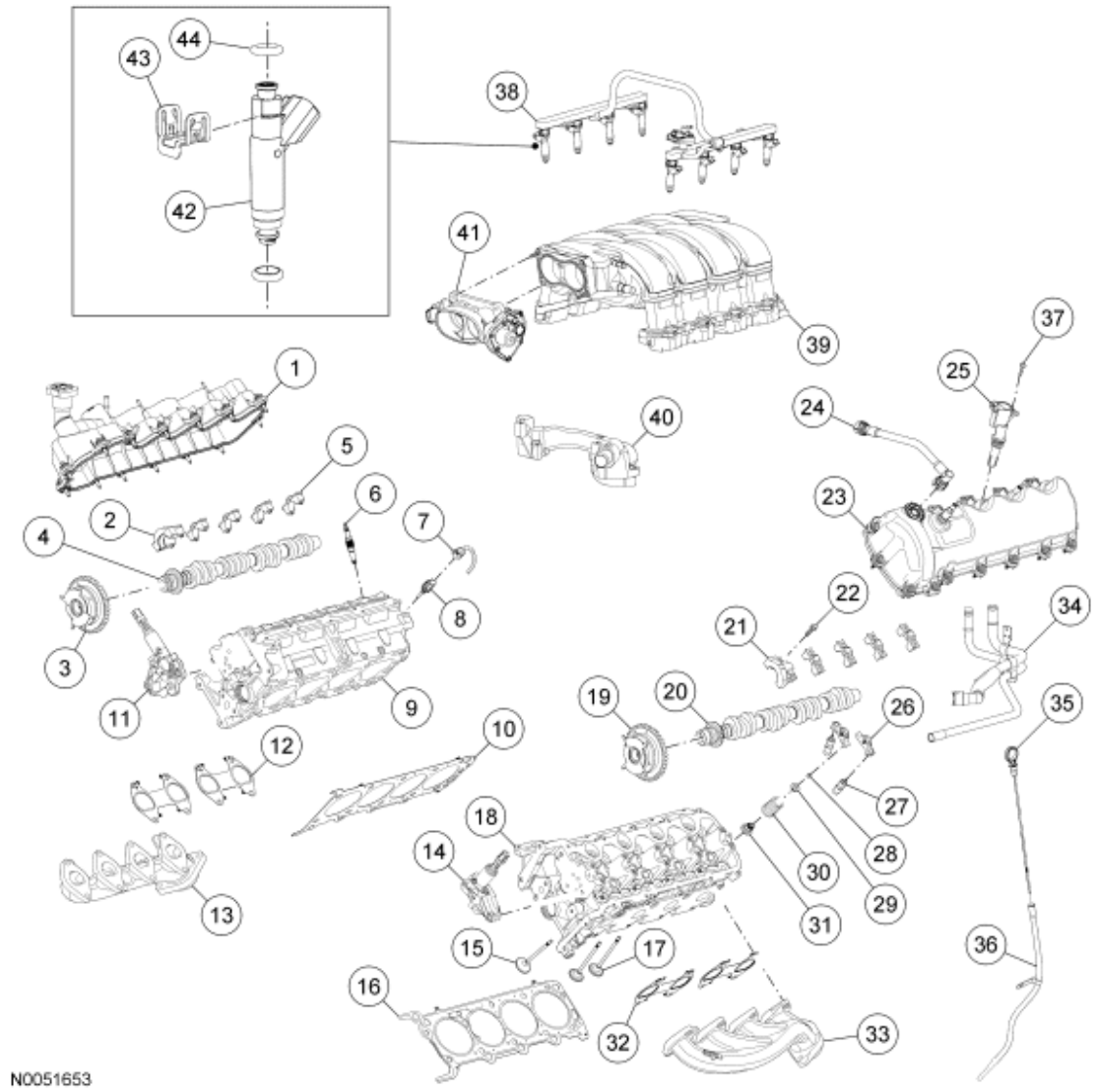

Fig. 397: Exploded View Of Engine - Upper End
Courtesy of FORD MOTOR CO.

Item	Part Number	Description
1	6582	RH valve cover
2	6B284	RH camshaft thrust bearing cap
3	6C524	RH camshaft phaser sprocket
4	6250	RH camshaft
5	6B280	Camshaft bearing cap (8 required)
6	12405	Spark plug (8 required)
7	14B102	Cylinder head temperature (CHT) sensor jumper harness
8	6G004	CHT sensor
9	6049	RH cylinder head
10	6051	RH cylinder head gasket

11	6C260	RH variable camshaft timing (VCT) oil control solenoid assembly
12	9Y431	Exhaust manifold gasket (2 required)
13	9430	Exhaust manifold - RH
14	6C261	LH VCT oil control solenoid assembly
15	6505	Exhaust valve (8 required)
16	6083	LH cylinder head gasket
17	6507	Intake valve (16 required)
18	6050	LH cylinder head
19	6C524	LH camshaft phaser sprocket
20	6C255	LH camshaft
21	6B284	LH camshaft thrust bearing cap
22	N807834	Camshaft bearing cap bolt (20 required)
23	6A505	LH valve cover
24	6K817	PCV tube
25	12A366	Ignition coil (8 required)
26	6529	Roller follower (24 required)
27	6C501	Hydraulic lash adjuster (24 required)
28	6518	Valve spring retainer key (48 required)
29	6514	Valve spring retainer (24 required)
30	6513	Valve spring (24 required)
31	6A517	Valve stem seal (24 required)
32	9Y431	Exhaust manifold gasket (2 required)
33	9431	LH exhaust manifold
34	18B402	Coolant tube
35	6750	Oil level indicator
36	6K873	Oil level indicator tube
37	W706175	Ignition coil bolt (8 required)
38	9F792	Fuel rail assembly
39	9424	Intake manifold assembly
40	8C369	Engine coolant crossover
41	9F991	Electronic throttle body
42	9F860	Fuel injector (8 required)
43	9C995	Fuel injector clip (8 required)
44	9F798	O-ring seal (16 required)

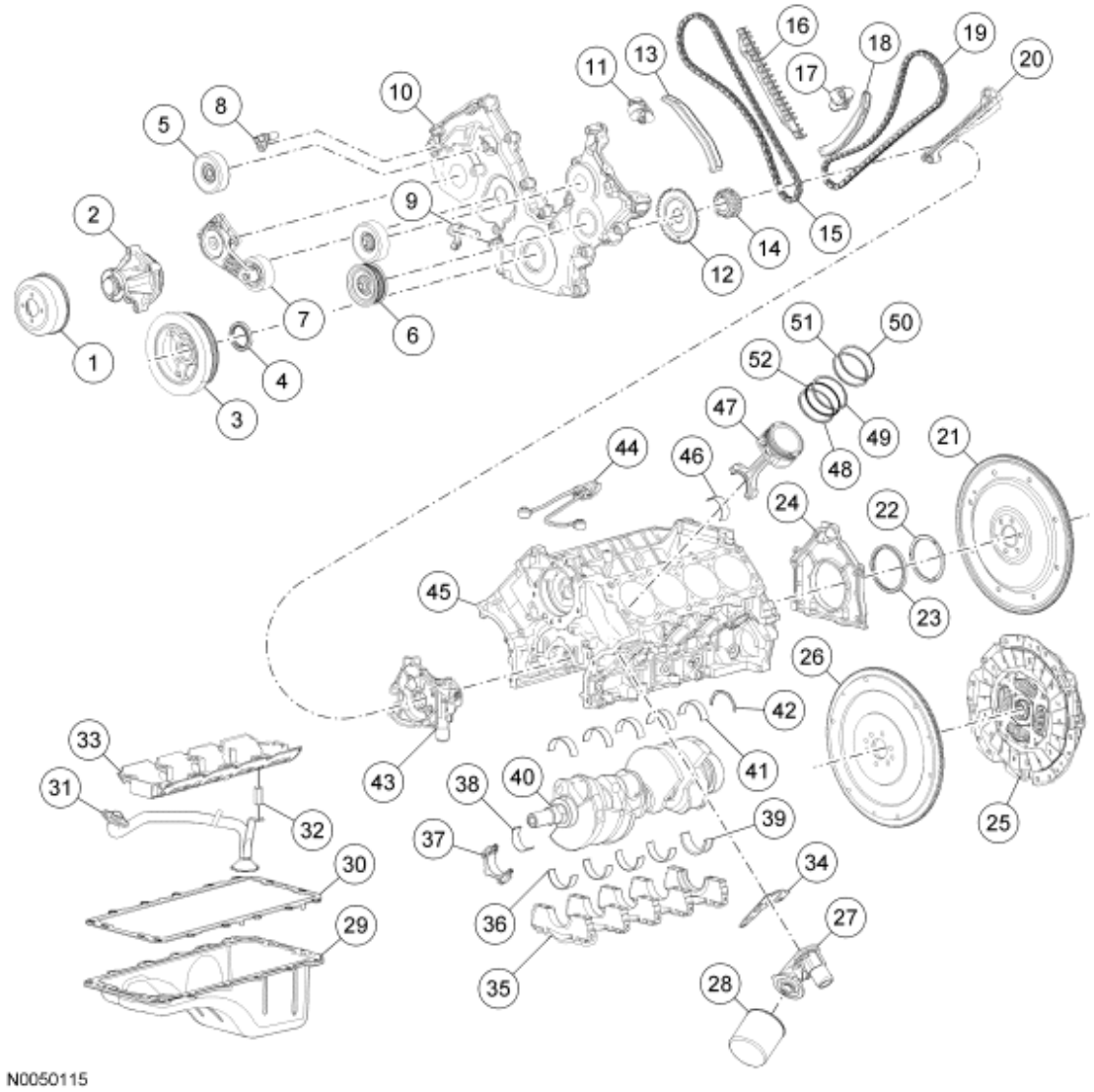

Fig. 398: Exploded View Of Engine - Lower End
Courtesy of FORD MOTOR CO.

Item	Part Number	Description
1	8A528	Coolant pump pulley
2	8501	Coolant pump
3	6316	Crankshaft pulley
4	6700	Crankshaft front oil seal
5	12A216	Accessory drive belt idler pulley (2 required)
6	6C348	Accessory drive belt idler pulley
7	6B209	Accessory drive belt tensioner
8	6B288	Camshaft position (CMP) sensor (2 required)
9	6C315	Crankshaft position (CKP) sensor
10	6C086	Engine front cover

11	6L266	RH timing chain tensioner
12	12A227	Ignition pulse wheel
13	6K255	RH tensioner arm
14	6306	Crankshaft sprocket
15	6268	RH timing chain
16	6M256	RH timing chain guide
17	6M269	LH timing chain tensioner
18	6M274	LH tensioner arm
19	6268	LH timing chain
20	6B274	LH timing chain guide
21	6375	Flexplate
22	6701	Crankshaft oil slinger
23	6310	Crankshaft rear seal
24	6K318	Crankshaft rear seal retainer plate
25	7B546	Pressure plate
26	6375	Flywheel
27	6881	Oil filter adapter
28	6714	Oil filter
29	6675	Oil pan
30	6710	Oil pan gasket
31	6622	Oil pump screen and pickup tube
32	N806180	Oil pump screen and pickup tube spacer
33	6687	Windage tray
34	6A636	Oil filter adapter gasket
35	6325	Crankshaft main bearing cap (5 required)
36	6A338	Lower crankshaft bearing (4 required)
37	6210	Connecting rod cap (8 required)
38	6211	Connecting rod lower bearing (8 required)
39	6K302	Lower crankshaft thrust washer
40	6303	Crankshaft
41	6333	Upper crankshaft bearing (5 required)
42	6A341	Upper crankshaft thrust washer
43	6621	Oil pump
44	12A699	Knock sensor (KS)
45	6010	Cylinder block
46	6211	Connecting rod upper bearing (8 required)
47	6110	Piston (8 required)
48	6159	Outer oil control ring (8 required)
49	6159	Outer oil control ring (8 required)
50	6150	Upper compression ring (8 required)
51	6152	Lower compression ring (8 required)
52		

	6161	Inner oil control ring (8 required)

All vehicles

1. Record the main bearing code found on the front of the engine block.

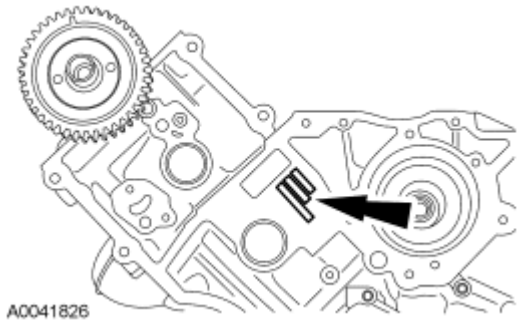

Fig. 399: Identifying Main Bearing Code Found On Front Of Engine Block
Courtesy of FORD MOTOR CO.

2. Record the main bearing code found on the back of the crankshaft.

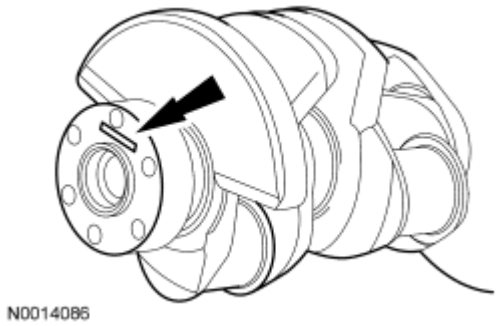

Fig. 400: Identifying Main Bearing Code Found On Back Of Crankshaft
Courtesy of FORD MOTOR CO.

3. Using the data recorded earlier and the Bearing Select Fit Chart, Standard Bearings, determine the required bearing grade for each main bearing.
   - Read the first letter of the engine block main bearing code and the first letter of the crankshaft main bearing code.
   - Read down the column below the engine block main bearing code letter and across the row next to the crankshaft main bearing code letter, until the 2 intersect. This is the required bearing grade for the No. 1 crankshaft main bearing.
   - As an example, if the engine block code letter is "F" and the crankshaft code letter is "D", the correct bearing grade for this main bearing is a "2".
   - Repeat this process for the remaining 4 main bearings.

MINIMUM BLOCK DIA

MAXIMUM CRANKSHAFT DIA		72.400	A .401	B .402	C .403	D .404	E .405	F .406	G .407	H .408	I .409	J .410	K .411	L .412	M .413	N .414	O .415	P .416	Q .417	R .418	S .419	T .420	U .421	V .422	W .423	X .424
X	67.504		1	1	1	1	1	1	1	1	1	1	1	1	1	1	1	1	1	2	2	2	2	2	2	2
W	67.503		1	1	1	1	1	1	1	1	1	1	1	1	1	1	1	1	2	2	2	2	2	2	2	2
V	67.502		1	1	1	1	1	1	1	1	1	1	1	1	1	1	1	2	2	2	2	2	2	2	2	2
U	67.501		1	1	1	1	1	1	1	1	1	1	1	1	1	1	2	2	2	2	2	2	2	2	2	2
T	67.500		1	1	1	1	1	1	1	1	1	1	1	1	1	2	2	2	2	2	2	2	2	2	2	2
S	67.499		1	1	1	1	1	1	1	1	1	1	1	1	2	2	2	2	2	2	2	2	2	2	2	2
R	67.498		1	1	1	1	1	1	1	1	1	1	1	2	2	2	2	2	2	2	2	2	2	2	2	2
Q	67.497		1	1	1	1	1	1	1	1	1	1	2	2	2	2	2	2	2	2	2	2	2	2	2	3
P	67.496		1	1	1	1	1	1	1	1	1	2	2	2	2	2	2	2	2	2	2	2	2	2	3	3
O	67.495		1	1	1	1	1	1	1	1	2	2	2	2	2	2	2	2	2	2	2	2	2	3	3	3
N	67.494		1	1	1	1	1	1	1	2	2	2	2	2	2	2	2	2	2	2	2	2	3	3	3	3
M	67.493		1	1	1	1	1	1	2	2	2	2	2	2	2	2	2	2	2	2	2	3	3	3	3	3
L	67.492		1	1	1	1	1	2	2	2	2	2	2	2	2	2	2	2	2	2	3	3	3	3	3	3
K	67.491		1	1	1	1	2	2	2	2	2	2	2	2	2	2	2	2	2	3	3	3	3	3	3	3
J	67.490		1	1	1	2	2	2	2	2	2	2	2	2	2	2	2	2	3	3	3	3	3	3	3	3
I	67.489		1	1	2	2	2	2	2	2	2	2	2	2	2	2	2	3	3	3	3	3	3	3	3	3
H	67.488		1	2	2	2	2	2	2	2	2	2	2	2	2	2	3	3	3	3	3	3	3	3	3	3
G	67.487		2	2	2	2	2	2	2	2	2	2	2	2	2	3	3	3	3	3	3	3	3	3	3	3
F	67.486		2	2	2	2	2	2	2	2	2	2	2	2	3	3	3	3	3	3	3	3	3	3	3	3
E	67.485		2	2	2	2	2	2	2	2	2	2	2	3	3	3	3	3	3	3	3	3	3	3	3	3
D	67.484		2	2	2	2	2	2	2	2	2	2	3	3	3	3	3	3	3	3	3	3	3	3	3	3
C	67.483		2	2	2	2	2	2	2	2	2	3	3	3	3	3	3	3	3	3	3	3	3	3	3	3
B	67.482		2	2	2	2	2	2	2	2	3	3	3	3	3	3	3	3	3	3	3	3	3	3	3	3
A	67.481		2	2	2	2	2	2	2	3	3	3	3	3	3	3	3	3	3	3	3	3	3	3	3	3

A0031544

Fig. 401: Bearing Select Fit Chart (Standard Bearings)
Courtesy of FORD MOTOR CO.

4. If oversize bearings are being used, use the procedure in the previous step and the Bearing Select Fit Chart, Oversize Bearings to determine the required bearing grade for each main bearing.

MINIMUM BLOCK DIA

MAXIMUM CRANKSHAFT DIA		72.400	A .401	B .402	C .403	D .404	E .405	F .406	G .407	H .408	I .409	J .410	K .411	L .412	M .413	N .414	O .415	P .416	Q .417	R .418	S .419	T .420	U .421	V .422	W .423	X .424
X	67.254		1	1	1	1	1	1	1	1	1	1	1	1	1	1	1	1	1	2	2	2	2	2	2	2
W	67.253		1	1	1	1	1	1	1	1	1	1	1	1	1	1	1	1	2	2	2	2	2	2	2	2
V	67.252		1	1	1	1	1	1	1	1	1	1	1	1	1	1	1	2	2	2	2	2	2	2	2	2
U	67.251		1	1	1	1	1	1	1	1	1	1	1	1	1	1	2	2	2	2	2	2	2	2	2	2
T	67.250		1	1	1	1	1	1	1	1	1	1	1	1	1	2	2	2	2	2	2	2	2	2	2	2
S	67.249		1	1	1	1	1	1	1	1	1	1	1	1	2	2	2	2	2	2	2	2	2	2	2	2
R	67.248		1	1	1	1	1	1	1	1	1	1	1	2	2	2	2	2	2	2	2	2	2	2	2	2
Q	67.247		1	1	1	1	1	1	1	1	1	1	2	2	2	2	2	2	2	2	2	2	2	2	2	3
P	67.246		1	1	1	1	1	1	1	1	1	2	2	2	2	2	2	2	2	2	2	2	2	2	3	3
O	67.245		1	1	1	1	1	1	1	1	2	2	2	2	2	2	2	2	2	2	2	2	2	3	3	3
N	67.244		1	1	1	1	1	1	1	2	2	2	2	2	2	2	2	2	2	2	2	2	3	3	3	3
M	67.243		1	1	1	1	1	1	2	2	2	2	2	2	2	2	2	2	2	2	2	3	3	3	3	3
L	67.242		1	1	1	1	1	2	2	2	2	2	2	2	2	2	2	2	2	2	3	3	3	3	3	3
K	67.241		1	1	1	1	2	2	2	2	2	2	2	2	2	2	2	2	2	3	3	3	3	3	3	3
J	67.240		1	1	1	2	2	2	2	2	2	2	2	2	2	2	2	2	3	3	3	3	3	3	3	3
I	67.239		1	1	2	2	2	2	2	2	2	2	2	2	2	2	2	3	3	3	3	3	3	3	3	3
H	67.238		1	2	2	2	2	2	2	2	2	2	2	2	2	2	3	3	3	3	3	3	3	3	3	3
G	67.237		2	2	2	2	2	2	2	2	2	2	2	2	2	3	3	3	3	3	3	3	3	3	3	3
F	67.236		2	2	2	2	2	2	2	2	2	2	2	2	3	3	3	3	3	3	3	3	3	3	3	3
E	67.235		2	2	2	2	2	2	2	2	2	2	2	3	3	3	3	3	3	3	3	3	3	3	3	3
D	67.234		2	2	2	2	2	2	2	2	2	2	3	3	3	3	3	3	3	3	3	3	3	3	3	3
C	67.233		2	2	2	2	2	2	2	2	2	3	3	3	3	3	3	3	3	3	3	3	3	3	3	3
B	67.232		2	2	2	2	2	2	2	2	3	3	3	3	3	3	3	3	3	3	3	3	3	3	3	3
A	67.231		2	2	2	2	2	2	2	3	3	3	3	3	3	3	3	3	3	3	3	3	3	3	3	3

A0041840

Fig. 402: Bearing Select Fit Chart (Oversize Bearings)
Courtesy of FORD MOTOR CO.

NOTE: Before assembling the cylinder block, all sealing surfaces must be free of chips, dirt, paint and foreign material. Also, make sure the coolant and oil passages are clear.

5. Install the crankshaft main bearings.
   - Install the crankshaft upper main bearings into the cylinder block.
   - Install the crankshaft lower main bearings into the bearing caps.
   - Make sure all oil passages are aligned.
   - Lubricate all main bearings with clean engine oil.
6. Lubricate the crankshaft bearing journals with clean engine oil. Install the crankshaft onto the upper crankshaft main bearings.

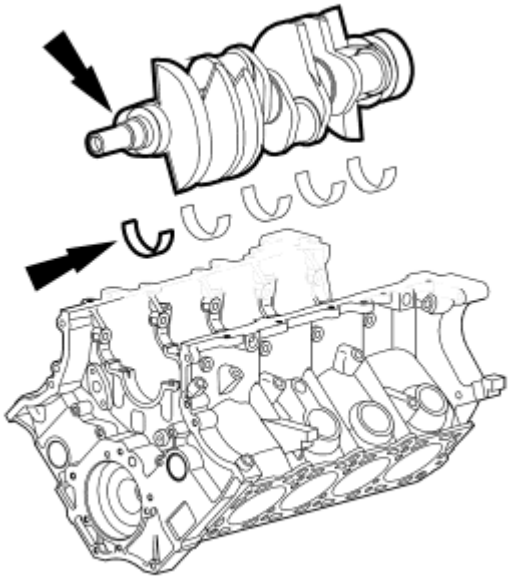

A0054093

Fig. 403: Locating Crankshaft Onto Upper Crankshaft Main Bearings
Courtesy of FORD MOTOR CO.

NOTE: The oil groove on the thrust washer must face toward the rear of the engine (against the crankshaft thrust surface).

7. Push the crankshaft rearward and install the rear crankshaft upper thrust washer at the back of the No. 5 main boss.

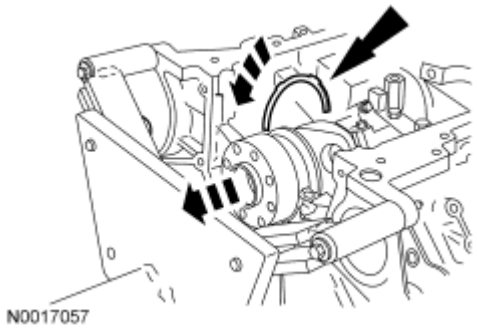

Fig. 404: Pushing Crankshaft Rearward
Courtesy of FORD MOTOR CO.

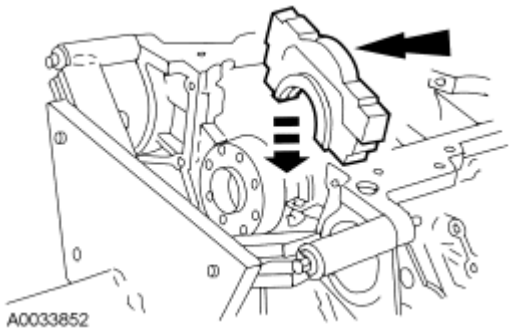

Fig. 405: Installing Rear Crankshaft Upper Thrust Washer
Courtesy of FORD MOTOR CO.

8. Install the rear (No. 5) main bearing cap.
9. Install the crankshaft lower main bearings into the main bearing caps and lubricate them with clean engine oil. Locate the main bearing cap on the cylinder block and, keeping the cap as square as possible, alternately draw the cap down evenly using the cap fasteners.
10. Push the crankshaft forward to seat the crankshaft thrust washer. Hold the crankshaft in the forward position.

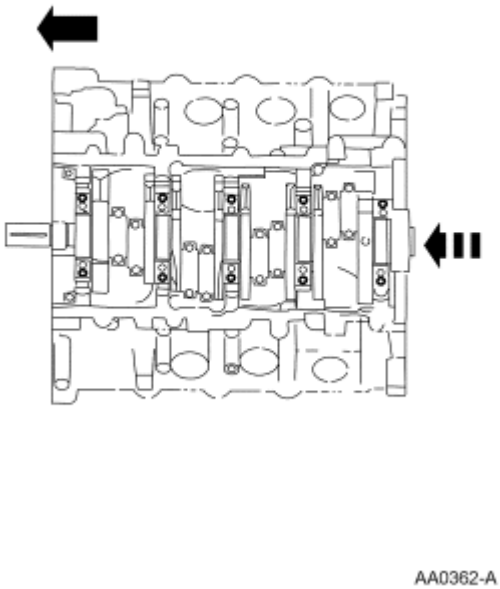

Fig. 406: Pushing Crankshaft Forward To Seat Crankshaft Thrust Washer
Courtesy of FORD MOTOR CO.

11. Install the vertical main bearing cap fasteners and tighten in the sequence shown, in 4 stages.
    - Stage 1: Tighten fasteners 1 through 20 to 10 Nm (89 lb-in).
    - Stage 2: Tighten fasteners 1 through 10 to 25 Nm (18 lb-ft).
    - Stage 3: Tighten fasteners 11 through 20 to 40 Nm (30 lb-ft).
    - Stage 4: Tighten fasteners 1 through 20 an additional 90 degrees.

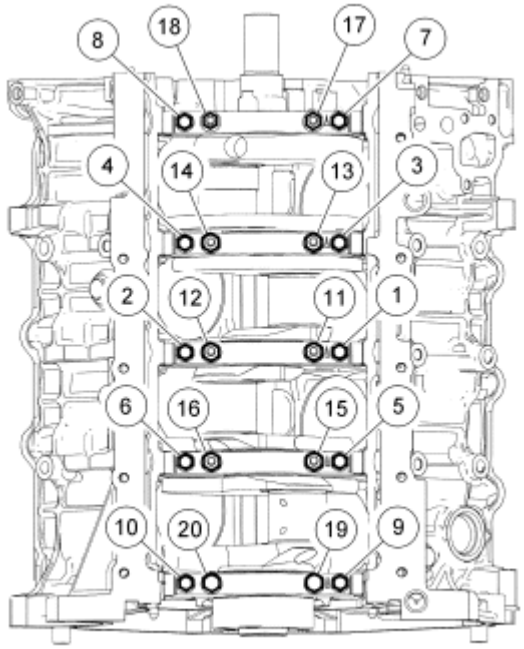

N0014088

Fig. 407: Installing Vertical Main Bearing Cap Fasteners
Courtesy of FORD MOTOR CO.

12. Install the cross-mounted main bearing cap fasteners and tighten in the sequence shown, in 2 stages.
    - Stage 1: Tighten to 40 Nm (30 lb-ft).
    - Stage 2: Tighten an additional 90 degrees.

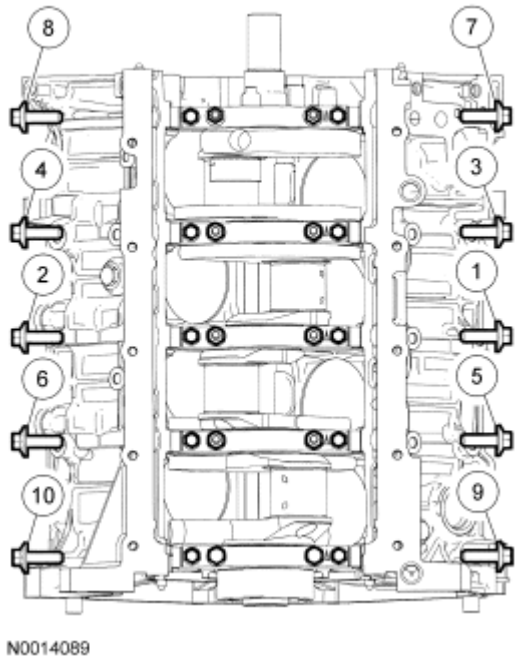

Fig. 408: Installing Cross-Mounted Main Bearing Cap Fasteners
Courtesy of FORD MOTOR CO.

13. Check the crankshaft end play. For additional information, refer to **ENGINE SYSTEM - GENERAL INFORMATION** article.
14. Check that crankshaft torque-to-turn does not exceed 6 Nm (53 lb-in).
15. Check the piston-to-cylinder block and piston ring clearances. For additional information, refer to **ENGINE SYSTEM - GENERAL INFORMATION** article.
16. Assemble the pistons. For additional information, refer to **Piston**.
17. Make sure the ring gaps (oil spacer-A, oil ring-B, compression ring-C) are correctly spaced around the circumference of the piston.

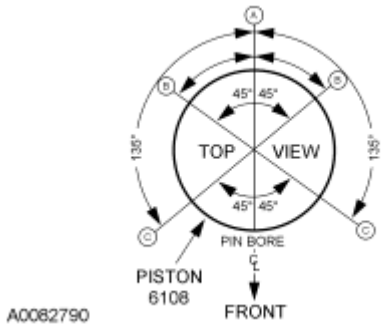

Fig. 409: Identifying Piston Ring Gaps Positioning
Courtesy of FORD MOTOR CO.

CAUTION: Do not scratch the cylinder walls or crankshaft journals with the

connecting rod or engine damage may occur.

NOTE: The following piston installation steps are for all 8 connecting rods, rod bearings and pistons. Only 1 connecting rod, rod bearing and piston is shown.

18. Use the special tools to install the connecting rod with the upper connecting rod bearing in place.
    - Lubricate the piston and ring with clean engine oil
    - Lubricate the rod bearings with clean engine oil.

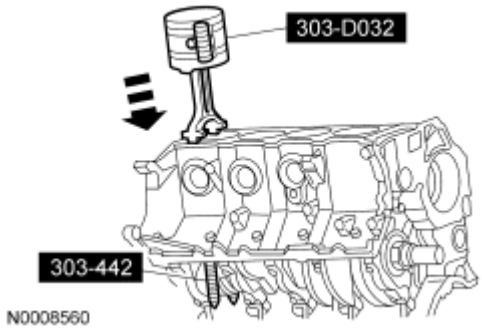

Fig. 410: Using Special Tools To Install Piston And Connecting Rod Assembly
Courtesy of FORD MOTOR CO.

CAUTION: Do not scratch the cylinder walls or crankshaft journals with the connecting rod or engine damage may occur.

19. Once the connecting rod is seated on the crankshaft journal, remove the special tools.

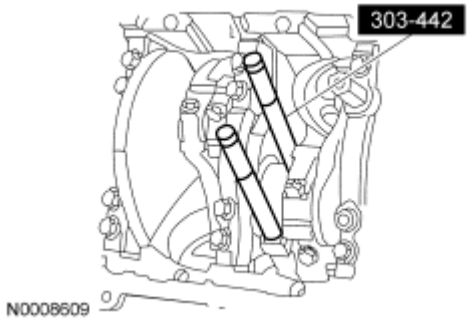

Fig. 411: Identifying Special Tool (303-442)
Courtesy of FORD MOTOR CO.

CAUTION: The rod cap installation must keep the same orientation as marked during disassembly or engine damage may occur.

NOTE: The connecting rod caps are of the "cracked" design and must mate with the connecting rod ends. Excessive bearing clearance will result if not mated correctly.

20. Position the lower bearing and connecting rod and install the new bolts loosely.

NOTE: Main bearing caps are removed for clarity.

21. Tighten the bolts in 2 stages, in the sequence shown.
    - Stage 1: Tighten to 43 N.m (32 lb-ft).
    - Stage 2: Tighten an additional 105 degrees.

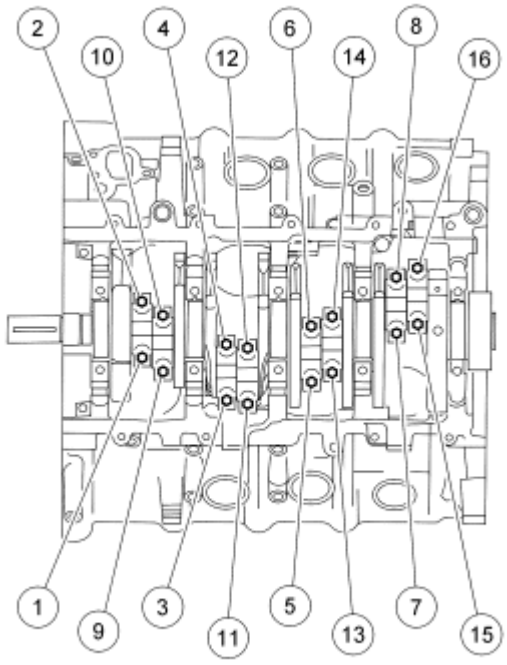

N0008562

Fig. 412: Identifying Connecting Rod Bearing Caps Tightening Sequence
Courtesy of FORD MOTOR CO.

22. Position the oil pump and install the 3 bolts.
    - Tighten to 10 N.m (89 lb-in).

Fig. 413: Locating Oil Pump Bolts
Courtesy of FORD MOTOR CO.

23. Install the windage tray and the 7 nuts.
    - Tighten to 25 N.m (18 lb-ft).

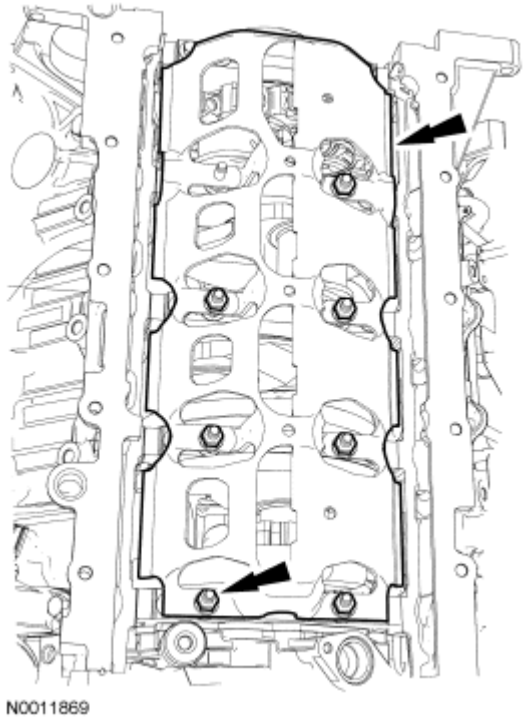

Fig. 414: Locating Windage Tray And Nuts
Courtesy of FORD MOTOR CO.

CAUTION: Make sure the O-ring seal is in place and not damaged. A missing or damaged O-ring seal can cause foam in the lubrication system, low oil pressure and severe engine damage.

NOTE: Clean and inspect the mating surfaces and install a new O-ring seal. Lubricate the O-ring seal with clean engine oil prior to installation.

24. Install the spacer, oil pump screen and pickup tube and the 3 bolts.
    - Tighten the spacer and the oil pump screen and pickup tube-to-spacer bolt to 25 N.m (18 lb-ft).
    - Tighten the oil pump screen and pickup tube-to-oil pump bolts to 10 N.m (89 lb-in).

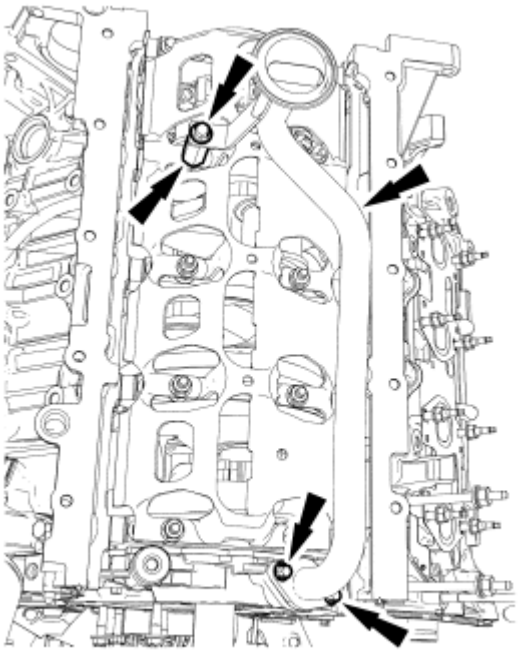

N0011868

Fig. 415: Identifying Spacer, Oil Pump Screen And Pickup Tube And Bolts
Courtesy of FORD MOTOR CO.

CAUTION: Make sure all coolant residue and foreign material are cleaned from the block surface and cylinder bore. Failure to follow these instructions may result in engine damage.

CAUTION: The use of sealing aids (aviation cement, copper spray and glue) is not permitted. The gasket must be installed dry. Failure to follow these instructions may result in future oil leakage.

CAUTION: The cylinder head bolts must be discarded and new bolts installed. They are tighten-to-yield designed and cannot be reused.

NOTE: Do not turn the crankshaft until instructed to do so.

NOTE: LH shown, RH similar.

25. Using the special tools, position the cylinder head gaskets and cylinder heads over the dowels and install the 20 cylinder head bolts loosely.

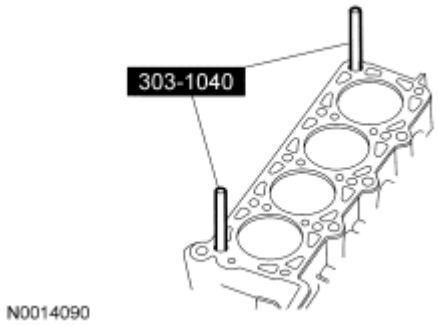

Fig. 416: Positioning Cylinder Head Gaskets And Cylinder Heads Over Dowels
Courtesy of FORD MOTOR CO.

NOTE: LH shown, RH similar.

26. Tighten the bolts in 3 stages, in the sequence shown.
    - Stage 1: Tighten to 40 N.m (30 lb-ft).
    - Stage 2: Tighten an additional 90 degrees.
    - Stage 3: Tighten an additional 90 degrees.

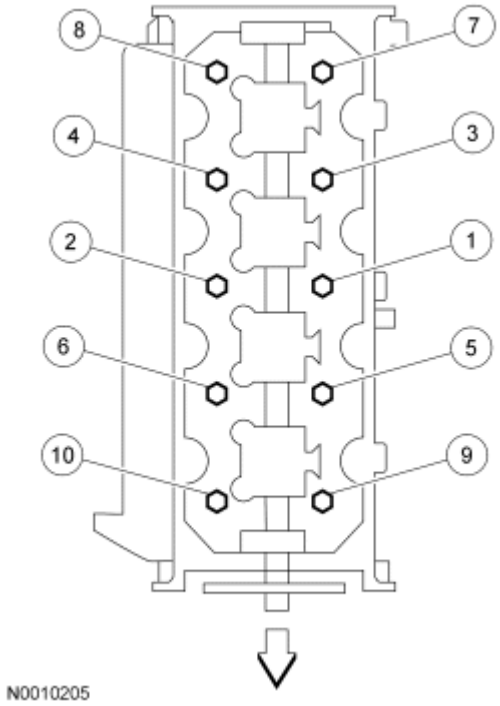

Fig. 417: Tightening Bolts In Sequence
Courtesy of FORD MOTOR CO.

27. Remove the special tool from the LH cylinder head.

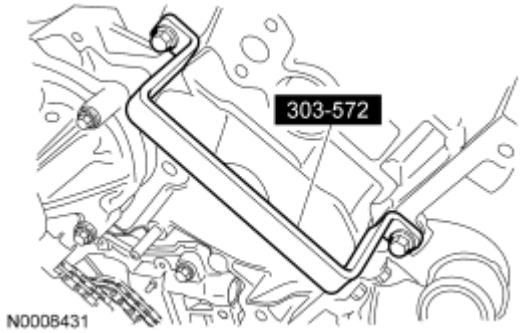

Fig. 418: Identifying Special Tool (303-572) LH Cylinder Head
Courtesy of FORD MOTOR CO.

28. Remove the special tool from the RH cylinder head.

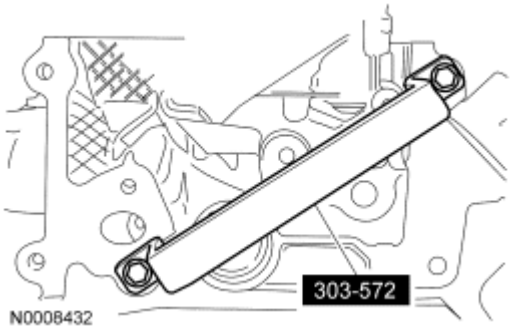

Fig. 419: Identifying Special Tool (303-572) RH Cylinder Head
Courtesy of FORD MOTOR CO.

NOTE: Lubricate the hydraulic lash adjusters with clean engine oil prior to installation.

29. Install the hydraulic lash adjusters into the RH and LH cylinder heads.

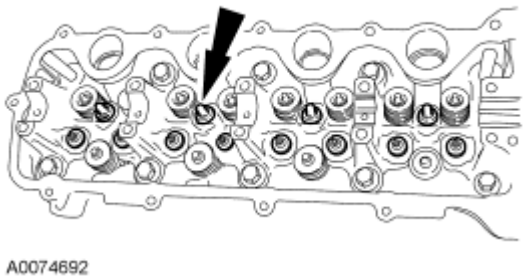

Fig. 420: Identifying Hydraulic Lash Adjusters
Courtesy of FORD MOTOR CO.

NOTE: Lubricate the camshaft and camshaft journals with clean engine oil prior

to installation.

30. Install the LH and RH camshafts.

NOTE: LH shown, RH similar.

NOTE: Lubricate the camshaft bearing caps with clean engine oil.

31. Install the LH and RH camshaft bearing caps in their original locations.
    - Position the front camshaft bearing cap.
    - Position the remaining camshaft bearing caps.
    - Install the bolts loosely.
    - Tighten to 10 N.m (89 lb-in) in the sequence shown.

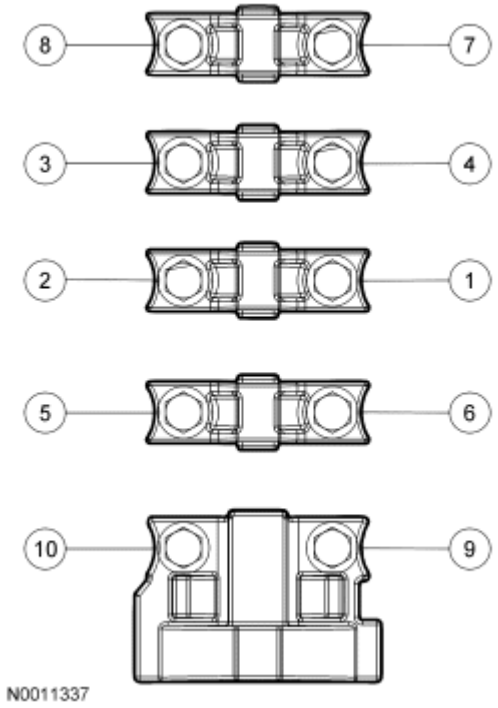

Fig. 421: Identifying Camshaft Bearing Cap Bolt Loosening/Tightening Sequence
Courtesy of FORD MOTOR CO.

CAUTION: Damage to the camshaft phaser sprocket assembly will occur if mishandled or used as a lifting or leveraging device.

NOTE: LH shown, RH similar.

32. Position the camshaft phaser sprockets and install new camshaft phaser bolts finger tight.

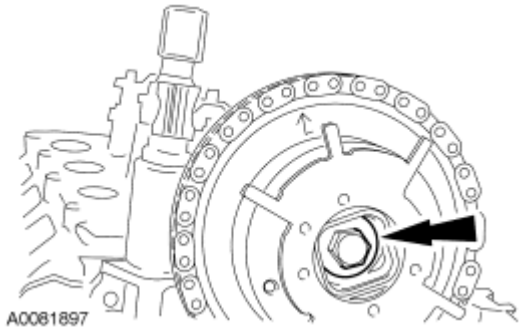

Fig. 422: Identifying Camshaft Phaser And Sprocket Assembly Bolt
Courtesy of FORD MOTOR CO.

CAUTION: Damage to the camshaft phaser sprocket assembly will occur if mishandled or used as a lifting or leveraging device.

CAUTION: Only use hand tools to remove the camshaft phaser sprocket assembly or damage may occur to the camshaft or camshaft phaser unit.

NOTE: LH shown, RH similar.

33. Using the special tool, tighten the LH and RH camshaft phaser sprocket bolts in 2 stages.
    - Stage 1: Tighten to 40 N.m (30 lb-ft).
    - Stage 2: Tighten an additional 90 degrees.

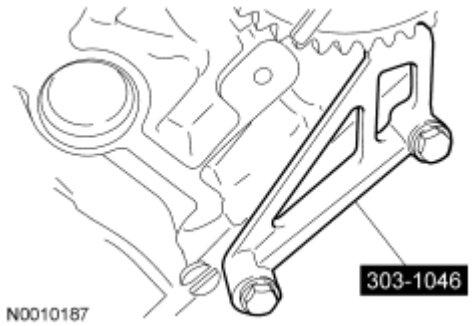

Fig. 423: Identifying Special Sprocket Phaser Tool
Courtesy of FORD MOTOR CO.

34. Install the crankshaft sprocket, making sure the flange faces forward.

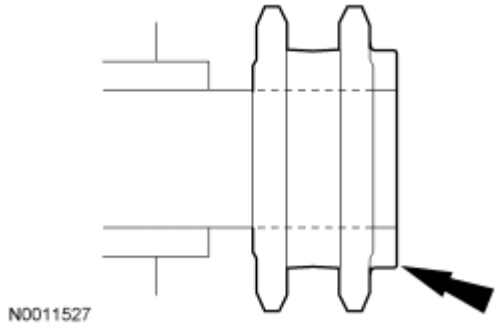

Fig. 424: Identifying Crankshaft Sprocket
Courtesy of FORD MOTOR CO.

35. Rotate the crankshaft to position the crankshaft sprocket timing mark in the 6 o'clock position.

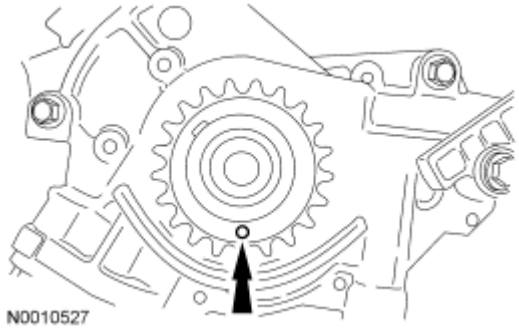

Fig. 425: Locating Crankshaft Sprocket Timing Mark
Courtesy of FORD MOTOR CO.

36. Rotate the camshaft sprockets to position the RH camshaft sprocket timing mark in the 11 o'clock position and the LH camshaft sprocket timing mark in the 12 o'clock position.

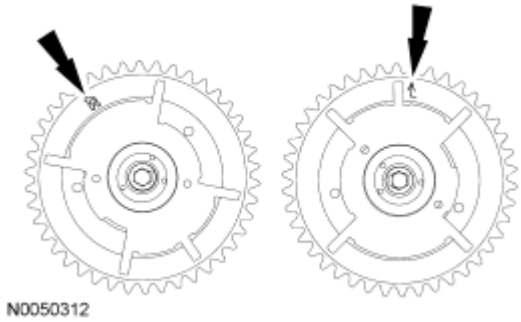

Fig. 426: Rotating Camshaft Sprockets To Position RH Camshaft Sprocket Timing Mark
Courtesy of FORD MOTOR CO.

CAUTION: If one or both tensioner mounting bolts are loosened or removed, the tensioner-sealing bead must be inspected for seal integrity. Any cracks, tears, cuts or separation from the tensioner body, or

permanent compression of the seal bead, will require replacement of the tensioner.

37. Inspect the RH and LH timing chain tensioners.
    - Install new tensioners as necessary.

CAUTION: Timing chain procedures must be followed exactly or damage to valves and pistons will result.

38. Compress the tensioner plunger, using a vise.

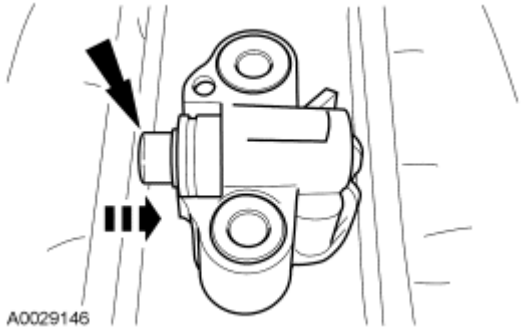

Fig. 427: Compressing Tensioner Plunger
Courtesy of FORD MOTOR CO.

39. Install a retaining clip on the tensioner to hold the plunger in during installation.

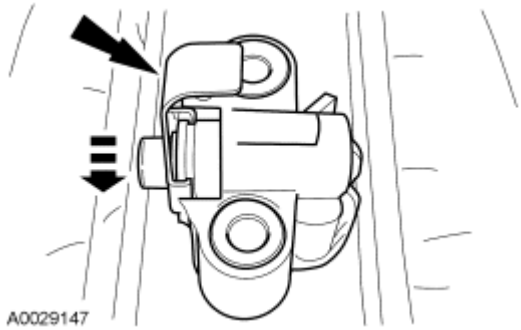

Fig. 428: Identifying Retaining Clip on Tensioner
Courtesy of FORD MOTOR CO.

40. Remove the tensioner from the vise.
41. If the colored links are not visible, mark one link on one end and one link on the other end and use as timing marks.

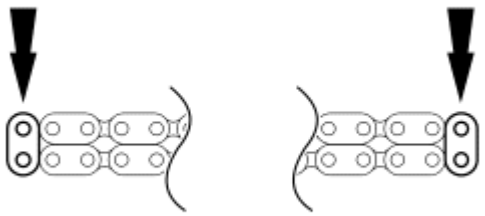

A0038719

Fig. 429: Identifying Timing Chain Copper Links
Courtesy of FORD MOTOR CO.

42. Install the 4 bolts and the LH and RH timing chain guides.
    - Tighten to 10 N.m (89 lb-in).

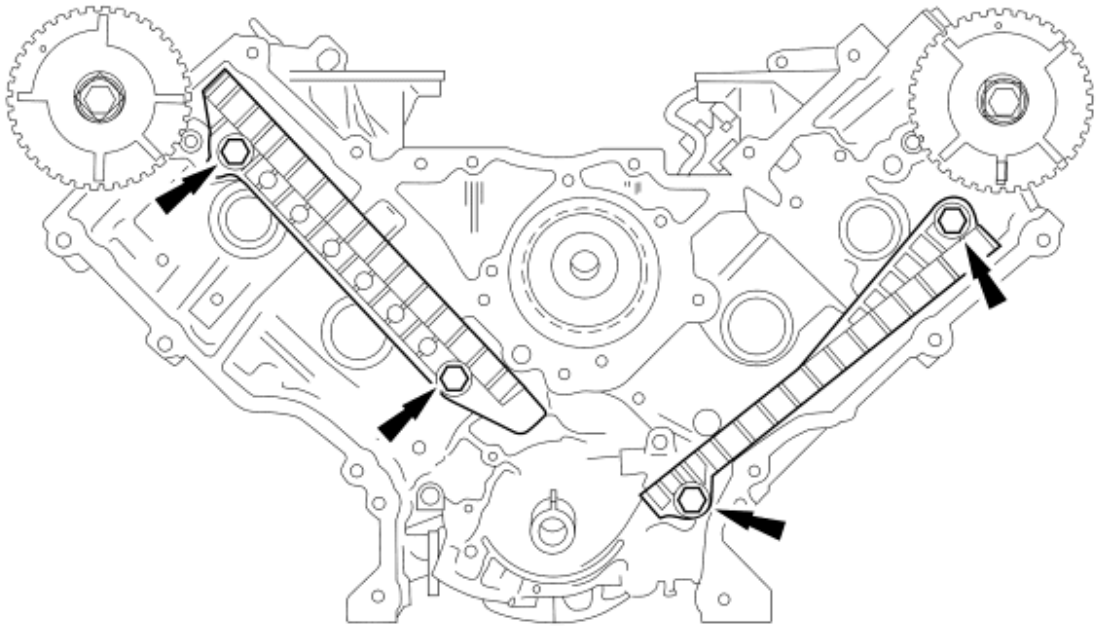

N0006303

Fig. 430: Identifying Timing Chain Guides
Courtesy of FORD MOTOR CO.

43. Position the lower end of the LH (inner) timing chain on the crankshaft sprocket, aligning the timing mark on the outer flange of the crankshaft sprocket with the single colored (marked) link on the chain.

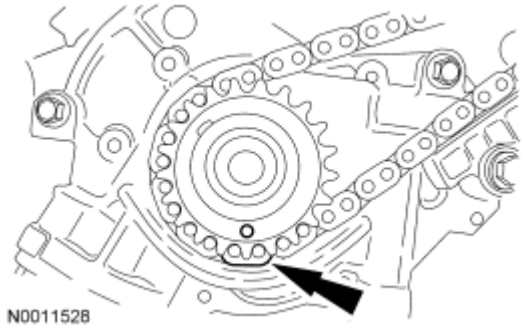

Fig. 431: Aligning Crankshaft Sprocket Timing Mark And LH Timing Chain Link
Courtesy of FORD MOTOR CO.

NOTE: Make sure the upper half of the timing chain is below the tensioner arm dowel.

44. Position the LH timing chain on the camshaft sprocket. Make sure the camshaft sprocket timing mark is aligned with the colored (marked) chain link.

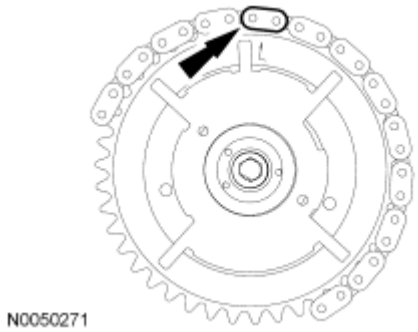

Fig. 432: Locating Camshaft Sprocket Timing Copper Mark
Courtesy of FORD MOTOR CO.

NOTE: The LH timing chain tensioner arm has a bump near the dowel hole for identification.

45. Position the LH timing chain tensioner arm on the dowel pin and install the LH timing chain tensioner and 2 bolts.
    - Tighten to 25 N.m (18 lb-ft).

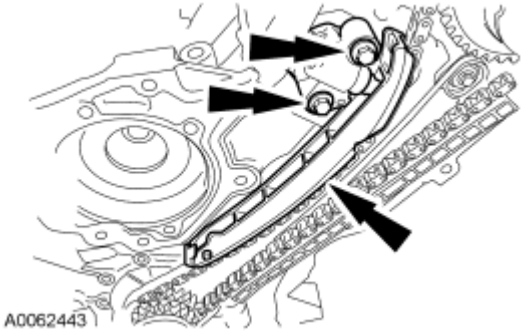

Fig. 433: Identifying LH Timing Chain Tensioner & Tensioner Arm
Courtesy of FORD MOTOR CO.

46. Remove the retaining clip from the LH timing chain tensioner.

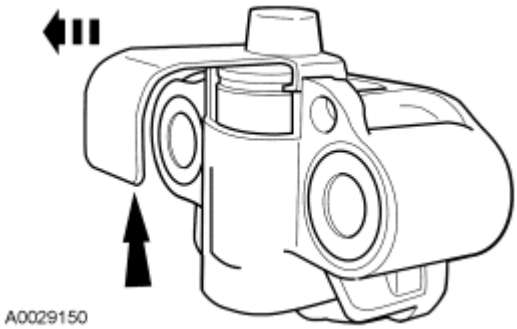

Fig. 434: Identifying Retaining Clip And Timing Chain Tensioner
Courtesy of FORD MOTOR CO.

47. Position the lower end of the RH (outer) timing chain on the crankshaft sprocket, aligning the timing mark on the sprocket with the single colored (marked) chain link.

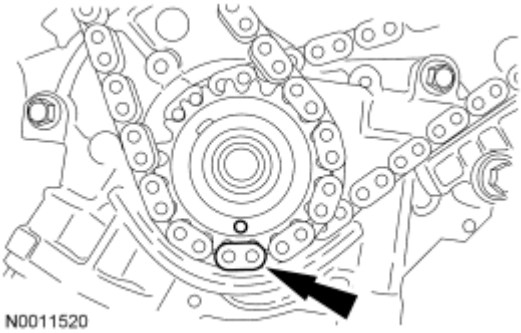

Fig. 435: Aligning Crankshaft Sprocket Timing Mark And RH Timing Chain Link
Courtesy of FORD MOTOR CO.

NOTE: The camshaft phaser and sprocket will be stamped with one of the illustrated timing marks for the RH camshaft.

NOTE: The lower half of the timing chain must be positioned above the tensioner arm dowel.

48. Position the RH timing chain on the camshaft sprocket. Make sure the camshaft sprocket timing mark is aligned with the colored (marked) chain link.

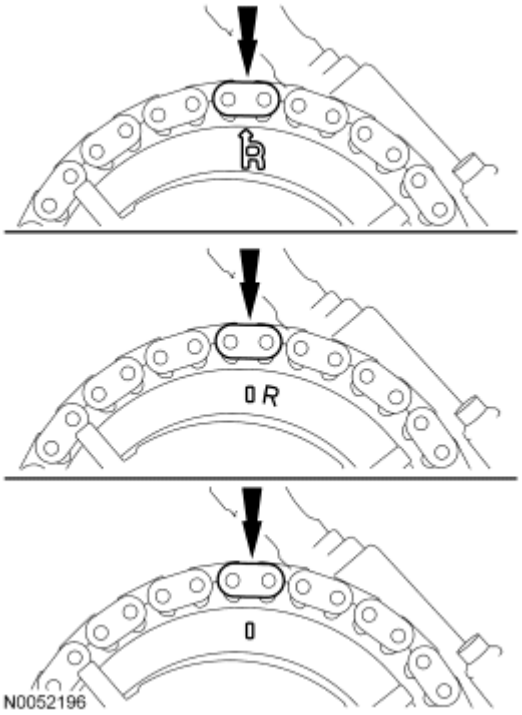

Fig. 436: Locating Camshaft Sprocket Timing Mark Aligned With Copper Chain Link
Courtesy of FORD MOTOR CO.

49. Position the RH timing chain tensioner arm on the dowel pin and install the RH timing chain tensioner and 2 bolts.
    - Tighten to 25 N.m (18 lb-ft).

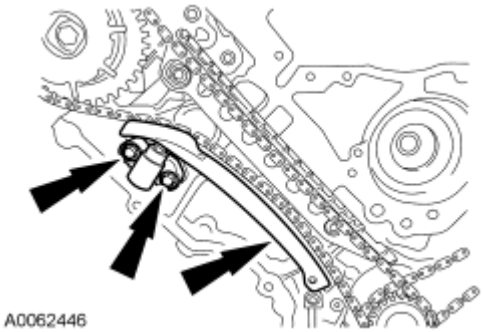

Fig. 437: Identifying RH Timing Chain Tensioner, Tensioner Arm And Bolts
Courtesy of FORD MOTOR CO.

50. Remove the retaining clip from the RH timing chain tensioner.

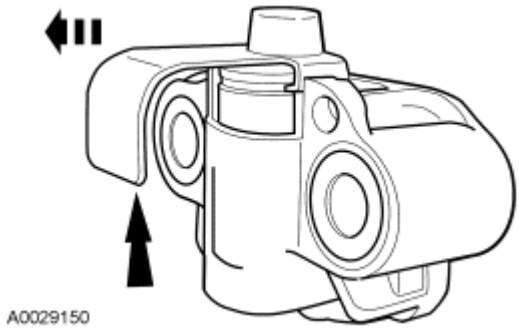

Fig. 438: Identifying Retaining Clip And Timing Chain Tensioner
Courtesy of FORD MOTOR CO.

NOTE: The RH and LH camshaft phaser sprockets are similar. Refer to the single timing mark to identify the RH camshaft phaser sprocket and the L timing mark to identify the LH camshaft phaser sprocket.

51. As a post-check, verify correct alignment of all timing marks. Make sure the timing marks on the sprockets correspond to the above note.

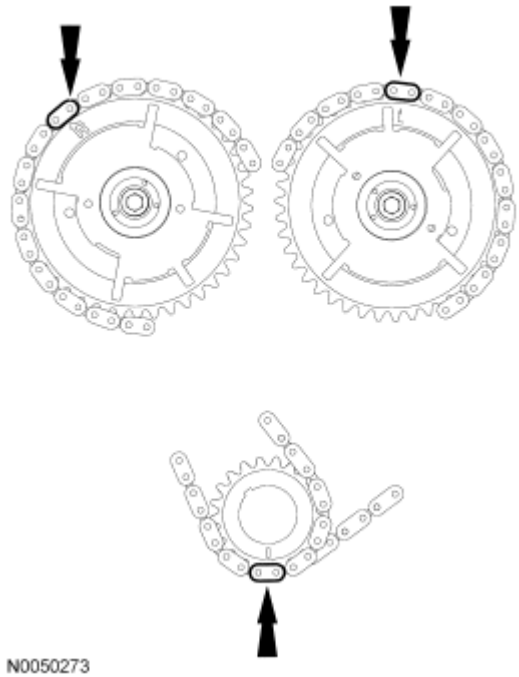

Fig. 439: Verify Correct Alignment Of All Timing Marks
Courtesy of FORD MOTOR CO.

52. Install the crankshaft sensor ring on the crankshaft.

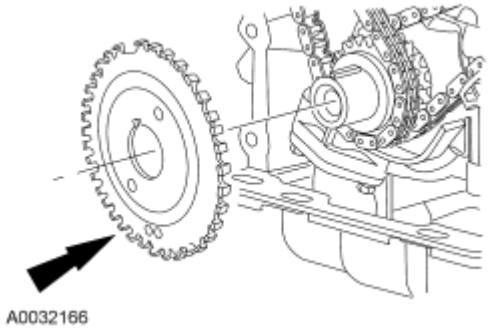

Fig. 440: View Of Crankshaft Sensor Ring At Crankshaft
Courtesy of FORD MOTOR CO.

NOTE: Lubricate the roller followers with clean engine oil prior to installation.

53. Using the special tool, install all of the camshaft roller followers.

Fig. 441: Compressing Spring Using Special Tool (303-1039)
Courtesy of FORD MOTOR CO.

CAUTION: Do not use metal scrapers, wire brushes, power abrasive discs or other abrasive means to clean the sealing surfaces. These tools cause scratches and gouges which make leak paths. Use a plastic scraping tool to remove all traces of old sealant.

NOTE: If the engine front cover is not secured within 4 minutes, the sealant must

be removed and the sealing area cleaned. To clean the sealing area, use silicone gasket remover and metal surface prep. Follow the directions on the packaging. Failure to follow this procedure can cause future oil leakage.

NOTE: Make sure that the engine front cover gasket is in place on the engine front cover before installation.

54. Apply a bead of silicone gasket and sealant along the cylinder head-to-cylinder block surface at the locations shown.

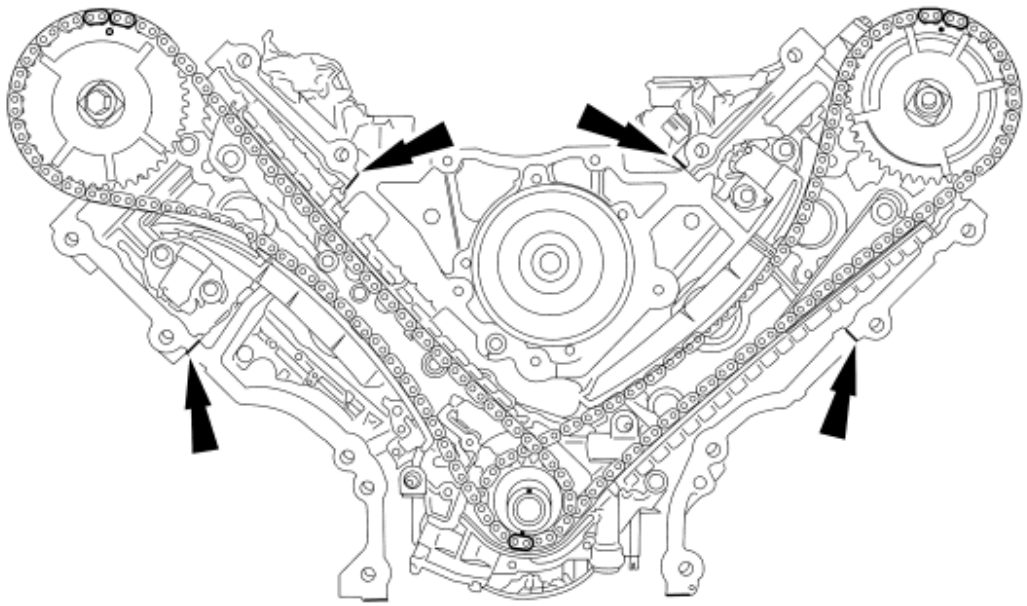

Fig. 442: Applying Bead Of Silicone Gasket And Sealant
Courtesy of FORD MOTOR CO.

55. Install a new engine front cover gasket on the engine front cover. Position the engine front cover onto the dowels. Install the 15 fasteners finger-tight.

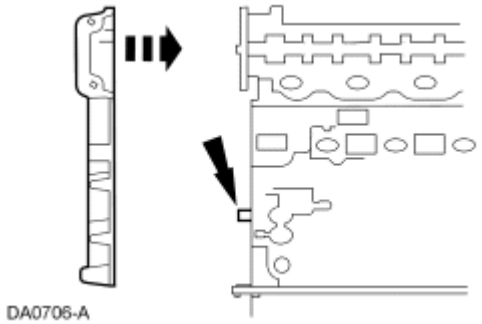

Fig. 443: Installing Engine Front Cover Gasket
Courtesy of FORD MOTOR CO.

56. Tighten the 15 engine front cover fasteners in the sequence shown to 25 Nm (18 lb-ft).

Item	Part Number	Description
1	N806177	Bolt, Hex Flange Head Pilot, M8 x 1.25 x 53
2	N806177	Bolt, Hex Flange Head Pilot, M8 x 1.25 x 53
3	N806177	Bolt, Hex Flange Head Pilot, M8 x 1.25 x 53
4	N806177	Bolt, Hex Flange Head Pilot, M8 x 1.25 x 53
5	N806177	Bolt, Hex Flange Head Pilot, M8 x 1.25 x 53
6	W706508	Stud, Hex Shoulder Pilot, M8 x 1.25 x 50 - M6 x 1 x 10
7	N808586	Stud and Washer, Hex Head Pilot, M8 x 1.25 - M6 x 1 x 86.35
8	N806177	Bolt, Hex Flange Head Pilot, M8 x 1.25 x 53
9	N806177	Bolt, Hex Flange Head Pilot, M8 x 1.25 x 53
10	N806177	Bolt, Hex Flange Head Pilot, M8 x 1.25 x 53
11	N806177	Bolt, Hex Flange Head Pilot, M8 x 1.25 x 53
12	N806300	Stud, Hex Shoulder Pilot, M8 x 1.25 x 1.25 x 91.1
13	N806300	Stud, Hex Shoulder Pilot, M8 x 1.25 x 1.25 x 91.1
14	N806300	Stud, Hex Shoulder Pilot, M8 x 1.25 x 1.25 x 91.1
15	N806300	Stud, Hex Shoulder Pilot, M8 x 1.25 x 1.25 x 91.1

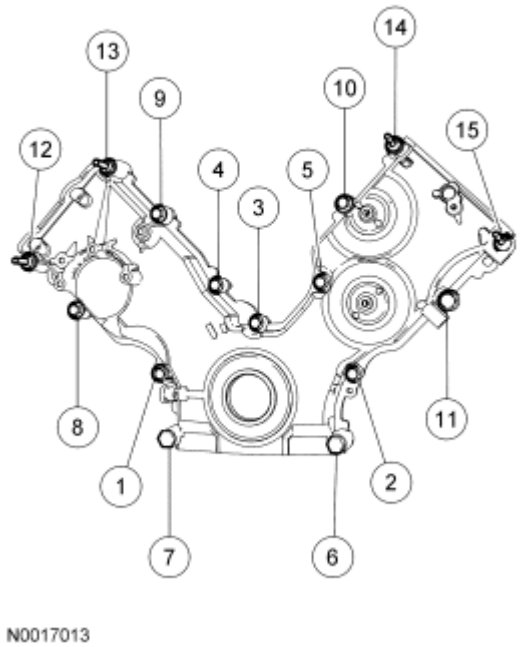

Fig. 444: Identifying Tightening Sequence Of Engine Front Cover Fasteners
Courtesy of FORD MOTOR CO.

57. Lubricate the engine front cover and the crankshaft front oil seal inner lip with clean engine oil.

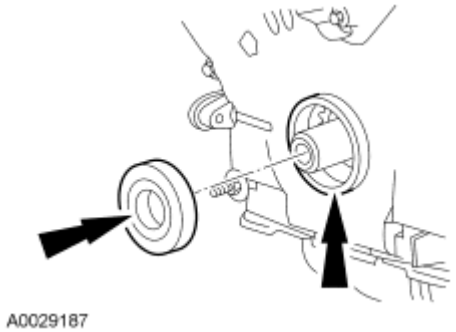

Fig. 445: Locating Crankshaft Front Seal
Courtesy of FORD MOTOR CO.

58. Using the special tools, install the crankshaft front oil seal into the engine front cover.

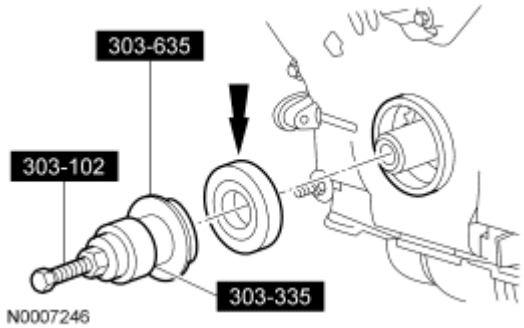

Fig. 446: Installing Crankshaft Front Seal Using Special Tools (303-102, 303-335, 303-635)
Courtesy of FORD MOTOR CO.

NOTE: **If not secured within 4 minutes, the sealant must be removed and the sealing area cleaned with silicone gasket remover and metal surface prep. Allow to dry until there is no sign of wetness, or 4 minutes, whichever is longer. Failure to follow this procedure can cause future oil leakage.**

59. Apply silicone gasket and sealant to the Woodruff key slot in the crankshaft pulley.

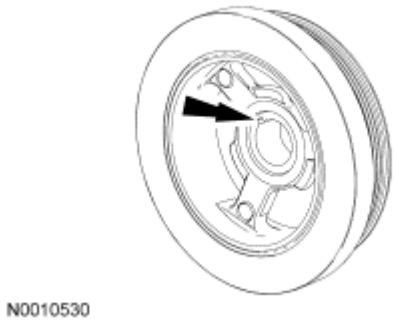

Fig. 447: Applying Silicone Gasket And Sealant To Woodruff Key Slot In Crankshaft Pulley
Courtesy of FORD MOTOR CO.

60. Using the special tool, install the crankshaft pulley.

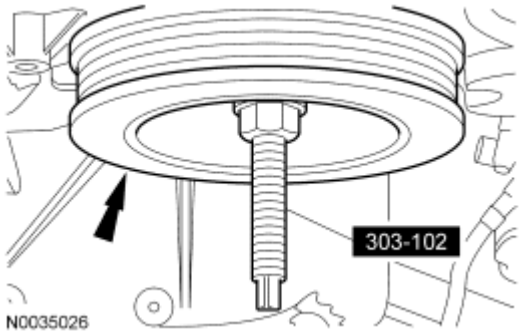

Fig. 448: Installing Crankshaft Pulley Using Special Tool (303-102)
Courtesy of FORD MOTOR CO.

61. Using a new crankshaft pulley bolt, install the bolt and washer and tighten the bolt in 4 stages.
    - Stage 1: Tighten to 90 N.m (66 lb-ft).
    - Stage 2: Loosen 360 degrees.
    - Stage 3: Tighten to 50 N.m (37 lb-ft).
    - Stage 4: Tighten an additional 90 degrees.

NOTE: Do not reuse the O-ring seals.

NOTE: Lubricate the O-ring seals with clean engine coolant prior to installation.

62. Slide the coolant tube forward with the new O-ring seals into the cylinder block.

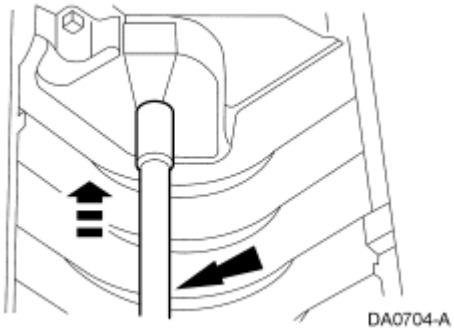

Fig. 449: Sliding Coolant Tube Forward With O-Ring Seals Into Cylinder Block
Courtesy of FORD MOTOR CO.

63. Install the coolant tube stud bolt.
    - Tighten to 10 N.m (89 lb-in).

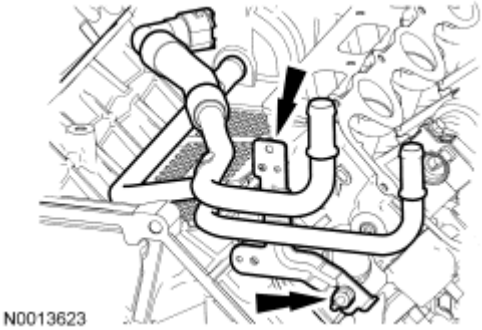

Fig. 450: Locating Coolant Tube Stud Bolt
Courtesy of FORD MOTOR CO.

CAUTION: Do not rotate the coolant pump housing once the coolant pump housing has been positioned in the cylinder block. Damage to the O-ring seal will occur.

NOTE: Lubricate the new O-ring seal using clean engine coolant and install the O-ring seal onto the coolant pump.

64. Position the coolant pump and install the 4 bolts loosely.

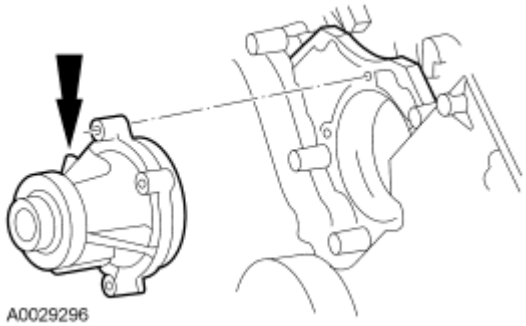

Fig. 451: Identifying Coolant Pump
Courtesy of FORD MOTOR CO.

65. Tighten the 4 coolant pump bolts.
    - Tighten to 25 N.m (18 lb-ft).

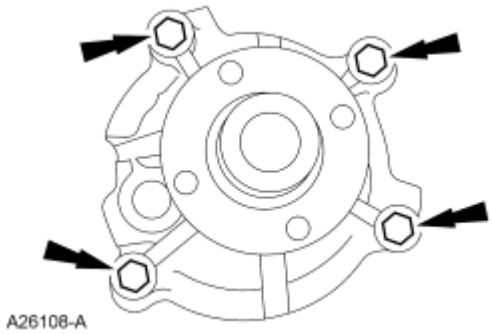

Fig. 452: Coolant Pump Bolts
Courtesy of FORD MOTOR CO.

66. Position the accessory drive belt tensioner and install the 3 bolts.
    - Tighten to 25 N.m (18 lb-ft).

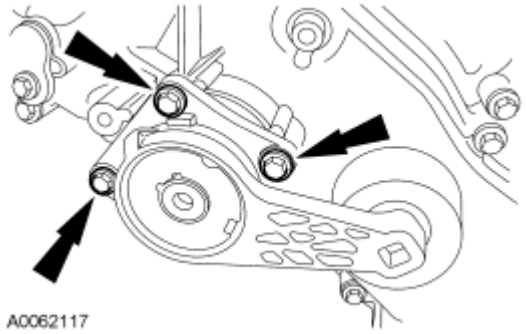

Fig. 453: Identifying Accessory Drive Belt Tensioner Bolts
Courtesy of FORD MOTOR CO.

67. Install the 3 accessory drive belt idler pulleys, the coolant pump pulley and the 7 bolts.
    - Tighten to 25 N.m (18 lb-ft).

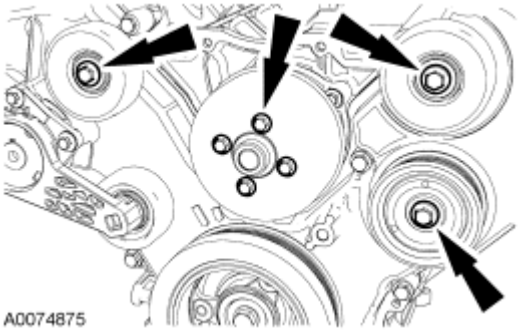

Fig. 454: Locating Coolant Pump Pulley And Accessory Drive Belt Idler Pulley Bolts
Courtesy of FORD MOTOR CO.

68. Install the crankshaft position (CKP) sensor and the bolt.
    - Tighten to 10 N.m (89 lb-in).

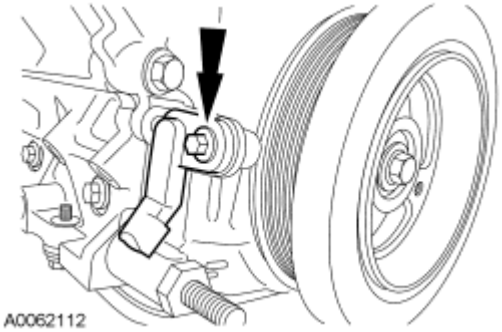

Fig. 455: Locating Crankshaft Position (CKP) Sensor Bolt
Courtesy of FORD MOTOR CO.

NOTE: Lubricate the new O-ring seal with clean engine oil prior to installation.

69. Install the LH camshaft position (CMP) sensor and the bolt.
    - Tighten to 10 N.m (89 lb-in).

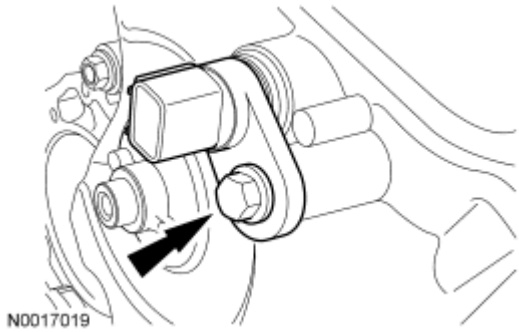

Fig. 456: Locating Camshaft Position (CMP) Sensor And Bolt
Courtesy of FORD MOTOR CO.

NOTE: Lubricate the new O-ring seal with clean engine oil prior to installation.

70. Install the RH CMP sensor and the bolt.
    - Tighten to 10 N.m (89 lb-in).

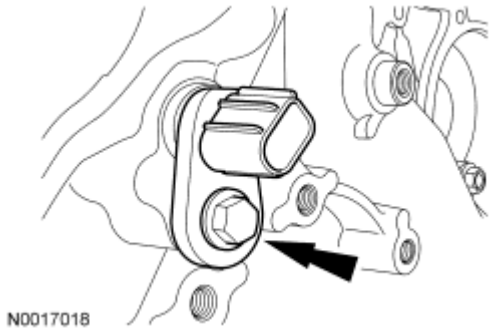

Fig. 457: Locating RH CMP Sensor And Bolt
Courtesy of FORD MOTOR CO.

71. Install the knock sensor (KS) and the bolts.
    - Tighten to 20 N.m (15 lb-ft).

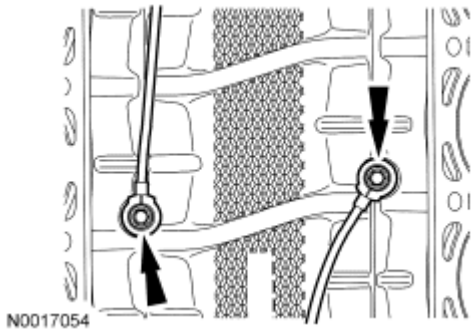

Fig. 458: Locating Knock Sensor (KS) And Bolts
Courtesy of FORD MOTOR CO.

CAUTION: Do not use metal scrapers, wire brushes, power abrasive discs or other abrasive means to clean sealing surfaces. These tools cause scratches and gouges which make leak paths. Use a plastic scraping tool to remove all traces of old sealant.

72. Clean the valve cover mating surface with silicone gasket remover and metal surface prep. Follow the directions on the packaging.

NOTE: If not secured within 4 minutes, the sealant must be removed and the sealing area cleaned. To clean the sealing area, use silicone gasket remover and metal surface prep. Follow the directions on the packaging. Failure to follow this procedure can cause future oil leakage.

73. Apply silicone gasket and sealant in 2 places where the engine front cover meets the cylinder head.

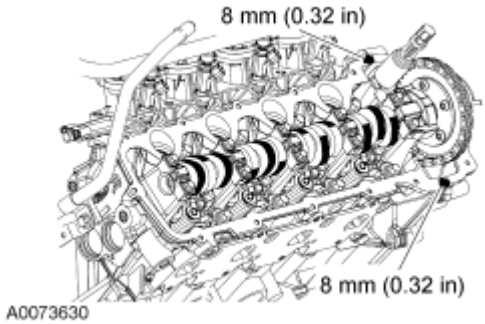

Fig. 459: Applying Bead Of Silicone Gasket And Sealant In 2 Places Where Engine Front Cover Meets Cylinder Head
Courtesy of FORD MOTOR CO.

CAUTION: When installing the valve cover, make sure to avoid damaging the variable camshaft timing (VCT) solenoid.

74. Position the RH valve cover and gasket on the cylinder head and tighten the 14 bolts in the sequence shown.
    - Tighten to 10 N.m (89 lb-in).

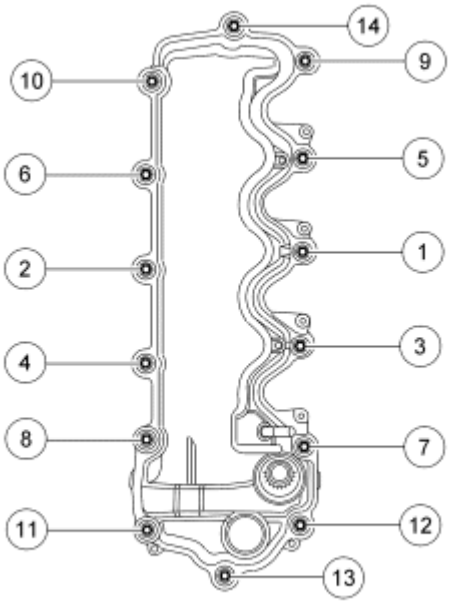

N0006317

Fig. 460: Identifying Tightening Sequence Of Valve Cover Bolts
Courtesy of FORD MOTOR CO.

CAUTION: Do not use metal scrapers, wire brushes, power abrasive discs or other abrasive means to clean sealing surfaces. These tools cause scratches and gouges which make leak paths. Use a plastic scraping tool to remove all traces of old sealant.

75. Clean the valve cover mating surface with silicone gasket remover and metal surface prep. Follow the directions on the packaging.

NOTE: If not secured within 4 minutes, the sealant must be removed and the sealing area cleaned. To clean the sealing area, use silicone gasket remover and metal surface prep. Follow the directions on the packaging. Failure to follow this procedure can cause future oil leakage.

76. Apply silicone gasket and sealant in 2 places where the engine front cover meets the cylinder head.

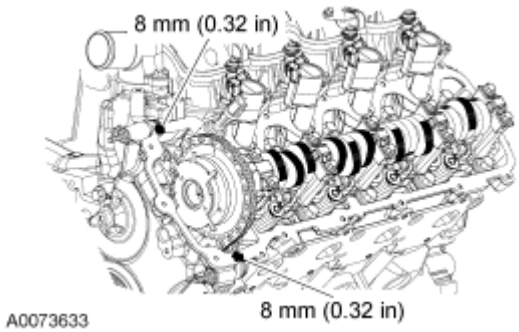

Fig. 461: Applying Bead Of Silicone Gasket And Sealant In 2 Places Where Engine Front Cover Meets Cylinder Head
Courtesy of FORD MOTOR CO.

CAUTION: When installing the valve cover, make sure to avoid damaging the variable camshaft timing (VCT) solenoid.

77. Position the LH valve cover and gasket on the cylinder head and tighten the 15 bolts in the sequence shown.
    - Tighten to 10 N.m (89 lb-in).

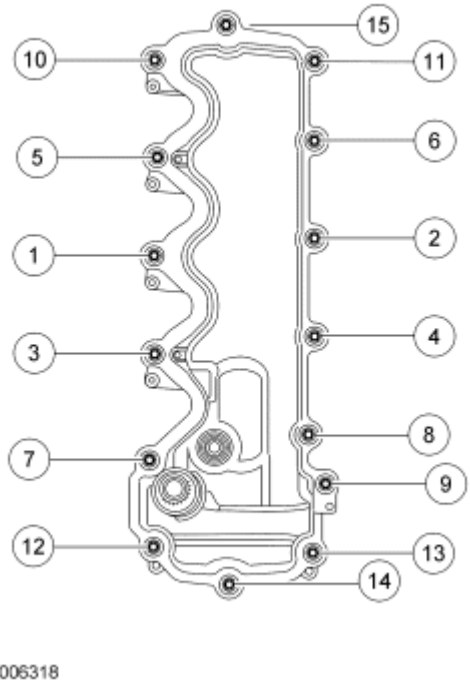

Fig. 462: Identifying Tighten Sequence Of Valve Cover Bolts
Courtesy of FORD MOTOR CO.

78. Install 8 new RH exhaust manifold studs.
    - Tighten to 12 Nm (9 lb-ft).

79. Position a new gasket, the RH exhaust manifold and tighten the 8 new nuts in the sequence shown.
    - Tighten to 25 N.m (18 lb-ft).

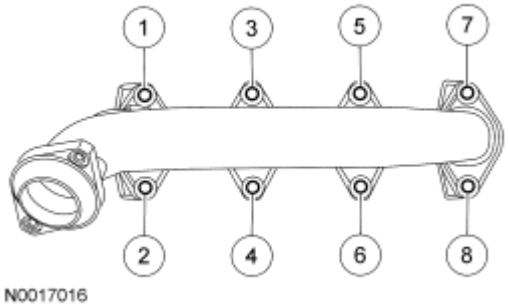

Fig. 463: Tightening RH Exhaust Manifold Bolts In Sequence
Courtesy of FORD MOTOR CO.

80. Install the RH motor mount bracket, 2 bolts and 2 stud bolts.
    - Tighten to 55 Nm (41 lb-ft).

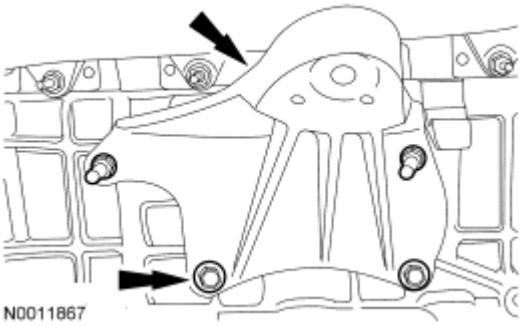

Fig. 464: Locating Motor Mount Bracket Bolts
Courtesy of FORD MOTOR CO.

81. Install the oil level indicator tube and the bolt.
    - Install a new O-ring seal and lubricate the O-ring seal with clean engine oil prior to installation.
    - Tighten to 10 N.m (89 lb-in).

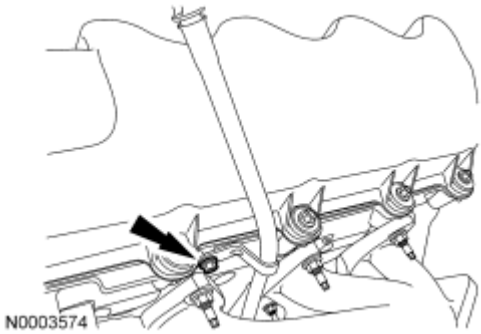

Fig. 465: Locating Oil Level Indicator Tube Bolt
Courtesy of FORD MOTOR CO.

82. Install 8 new LH exhaust manifold studs.
    - Tighten to 12 Nm (9 lb-ft).
83. Position a new gasket, the LH exhaust manifold and tighten the 8 new nuts in the sequence shown.
    - Tighten to 25 N.m (18 lb-ft).

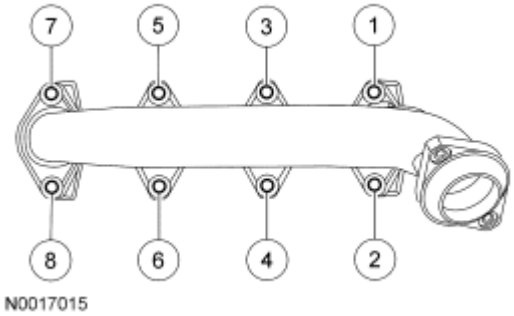

Fig. 466: Tightening LH Exhaust Manifold Nuts In Sequence
Courtesy of FORD MOTOR CO.

84. Install the LH motor mount bracket and 4 bolts.
    - Tighten to 55 Nm (41 lb-ft).

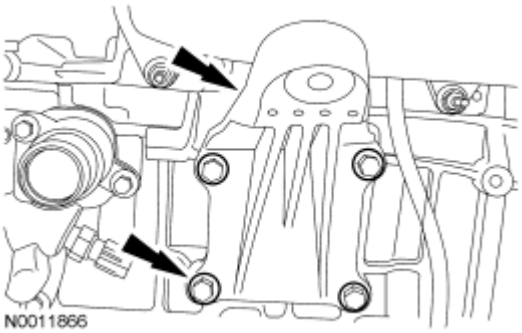

Fig. 467: Locating Motor Mount Bracket And Bolts
Courtesy of FORD MOTOR CO.

CAUTION: Do not use metal scrapers, wire brushes, power abrasive discs or other abrasive means to clean the sealing surfaces. These tools cause scratches and gouges which make leak paths. Use a plastic scraping tool to remove all traces of old sealant.

NOTE: Clean and inspect the mating surfaces and install new gaskets.

85. Position the oil filter adapter and install the 4 bolts.
    - Tighten to 25 N.m (18 lb-ft).

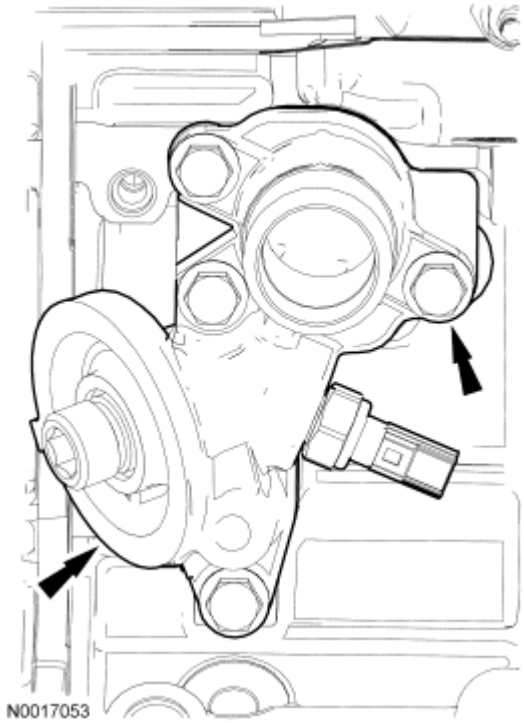

Fig. 468: Locating Oil Filter Adapter And Bolts
Courtesy of FORD MOTOR CO.

86. Install a new oil filter.

NOTE: LH shown, RH similar.

87. Install the 8 ignition coils and the 8 bolts.
    - Tighten to 6 N.m (53 lb-in).

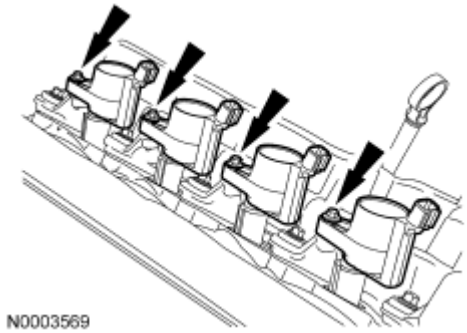

Fig. 469: Identifying Ignition Coils And Bolts
Courtesy of FORD MOTOR CO.

88. Install the ground strap and nut to the stud bolt.
    - Tighten to 10 Nm (89 lb-in).

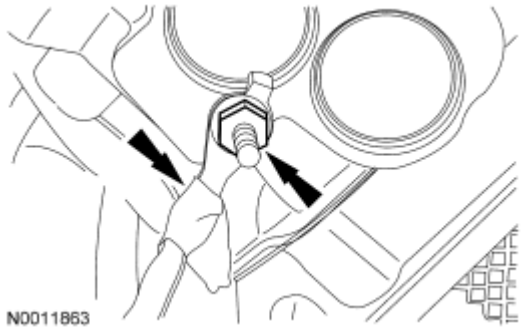

Fig. 470: Locating Ground Strap And Nut On Stud Bolt
Courtesy of FORD MOTOR CO.

89. Position the engine wiring harness on the engine.
90. Connect the engine oil pressure (EOP) switch electrical connector.

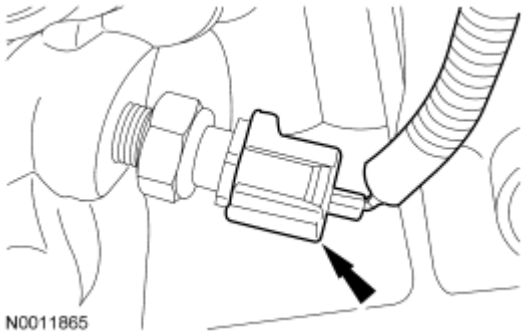

Fig. 471: Locating Engine Oil Pressure Sensor Electrical Connector
Courtesy of FORD MOTOR CO.

91. Attach the engine wiring harness retainer to the stud bolt.
    - Connect the LH heated oxygen sensor (HO2S) electrical connector.

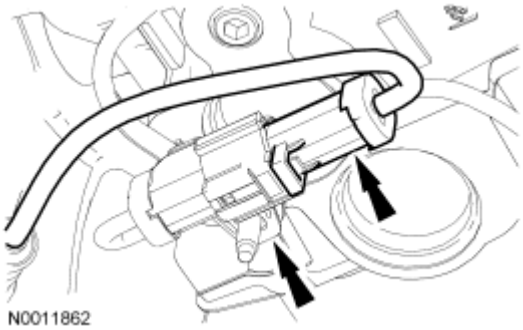

Fig. 472: Locating Heated Oxygen Sensor (HO2S) Electrical Connector
Courtesy of FORD MOTOR CO.

92. Connect the KS electrical connector and pin-type retainer.

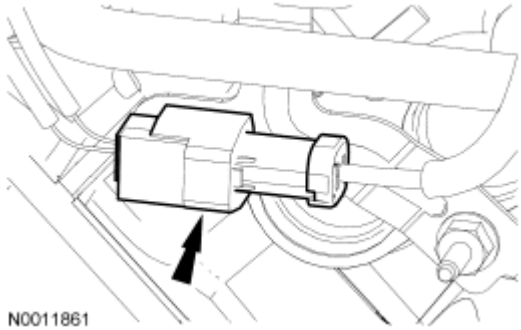

Fig. 473: Locating Knock Sensor (KS) Electrical Connector And Pin-Type Retainer
Courtesy of FORD MOTOR CO.

93. Attach the CHT sensor jumper harness electrical connector pin-type retainer.

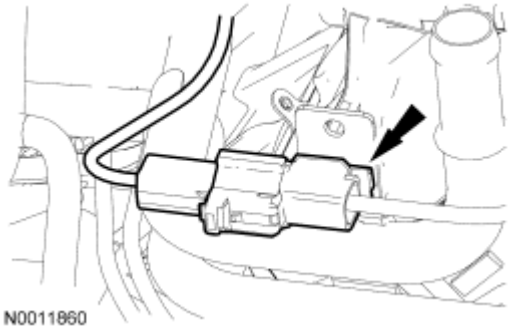

Fig. 474: Identifying Cylinder Head Temperature (CHT) Sensor Jumper Harness Electrical Connector
Courtesy of FORD MOTOR CO.

94. Connect the CHT sensor electrical connector.

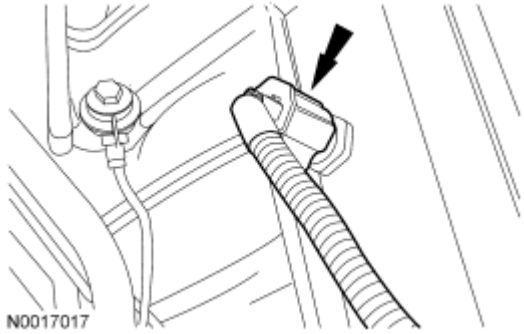

Fig. 475: Locating CHT Sensor Electrical Connector
Courtesy of FORD MOTOR CO.

95. Detach the engine wiring harness pin-type retainers.

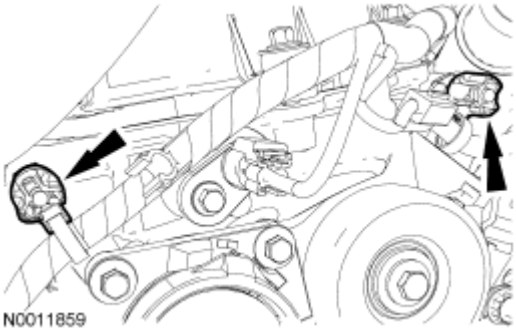

Fig. 476: Locating Engine Wiring Harness Pin-Type Retainers
Courtesy of FORD MOTOR CO.

96. Connect the 2 engine wiring harness retainers to the LH valve cover studs.

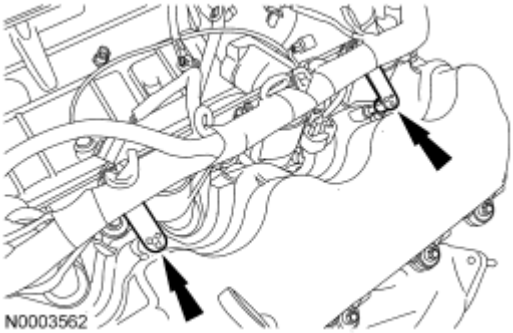

Fig. 477: Locating Engine Wiring Harness Retainers
Courtesy of FORD MOTOR CO.

97. Connect the 2 engine wiring harness retainers to the RH valve cover studs.

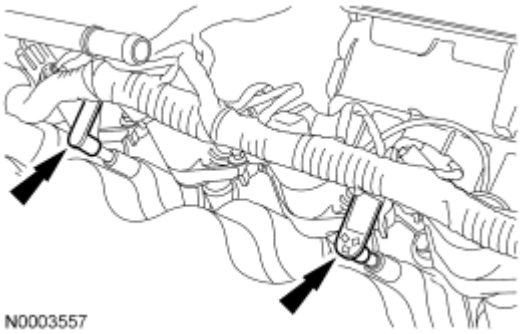

Fig. 478: Locating Engine Wiring Harness Retainers At RH Valve Cover
Courtesy of FORD MOTOR CO.

NOTE: RH shown, LH similar.

98. Connect the 4 RH and 4 LH ignition coil electrical connectors.

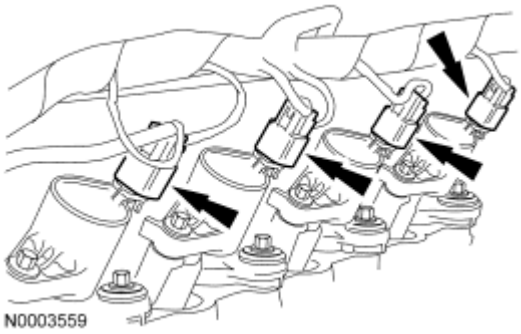

Fig. 479: Locating Ignition Coil Electrical Connectors
Courtesy of FORD MOTOR CO.

99. Connect the PCV tubes from the RH and LH valve covers.

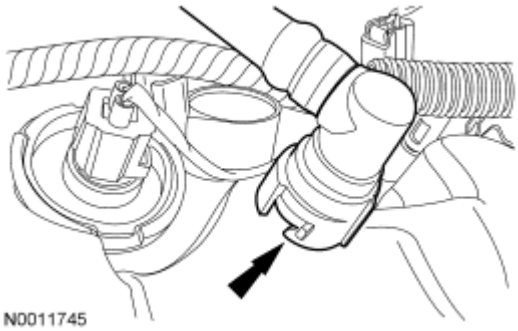

Fig. 480: Locating Positive Crankcase Ventilation Tubes
Courtesy of FORD MOTOR CO.

100. Install the RH radio ignition interference capacitor and nut.
    - Tighten to 25 Nm (18 lb-ft).

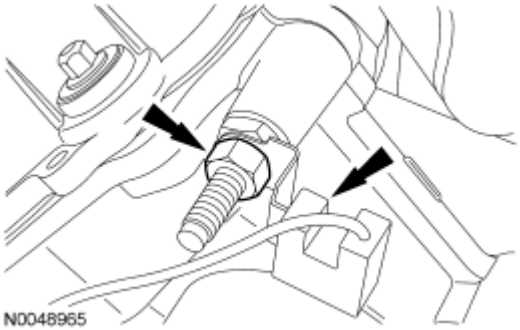

Fig. 481: Identifying Nut & RH Radio Ignition Interference Capacitor
Courtesy of FORD MOTOR CO.

101. Attach the engine wiring harness pin-type retainers.

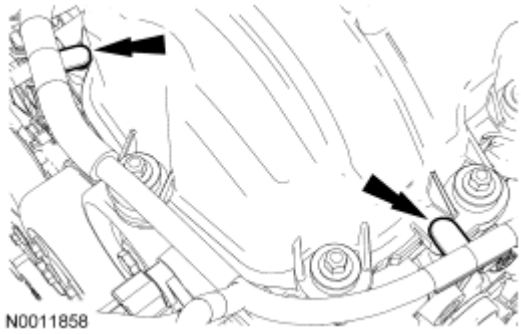

Fig. 482: Locating Engine Wiring Harness Pin-Type Retainers
Courtesy of FORD MOTOR CO.

NOTE: RH shown, LH similar.

102. Connect the RH and LH variable camshaft timing (VCT) solenoid electrical connectors.

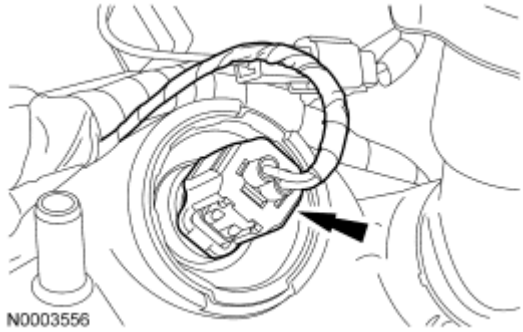

Fig. 483: Locating Camshaft Timing (VCT) Solenoid Electrical Connectors
Courtesy of FORD MOTOR CO.

NOTE: RH shown, LH similar.

103. Connect the RH and LH camshaft position (CMP) sensor electrical connectors.

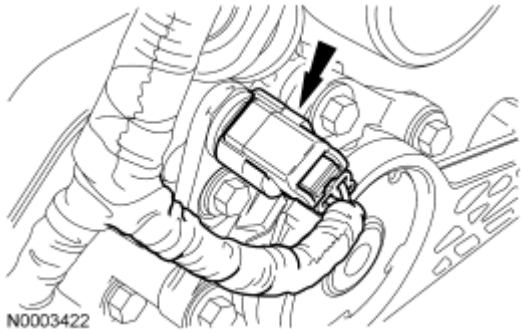

Fig. 484: Identifying RH CMP Sensor Electrical Connector
Courtesy of FORD MOTOR CO.

104. Install the special tool.

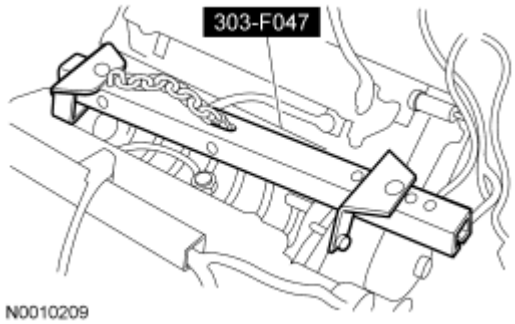

Fig. 485: Identifying Special Tool (303-F047)
Courtesy of FORD MOTOR CO.

105. Using a suitable floor crane, remove the engine from the engine stand.

NOTE: The rear crankshaft seal retainer plate does not have a sealant groove. Gasket maker must be applied to the rear crankshaft seal retainer mating surface on the engine block.

106. Apply a bead of gasket maker to the rear crankshaft seal retainer mating surface on the engine block.

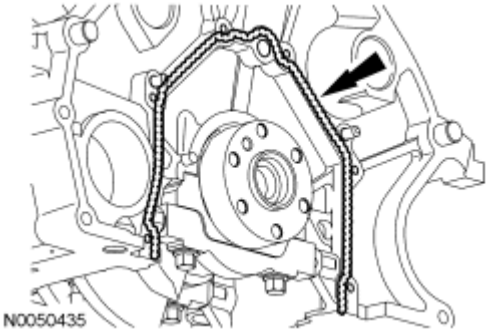

Fig. 486: Applying Bead Of Gasket Maker To Rear Crankshaft Seal Retainer
Courtesy of FORD MOTOR CO.

107. Install the crankshaft rear seal retainer plate and loosely install the 6 bolts.

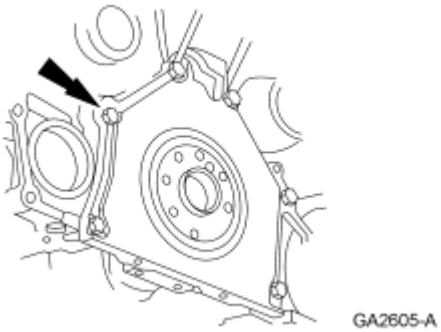

Fig. 487: Locating Crankshaft Rear Seal Retainer Plate Bolts
Courtesy of FORD MOTOR CO.

108. Tighten the 6 bolts in the sequence shown.
    - Tighten to 10 N.m (89 lb-in).

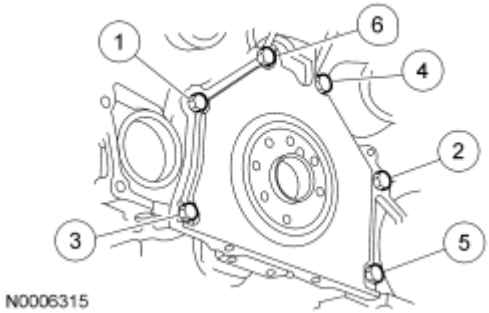

Fig. 488: Tightening Bolts In Sequence
Courtesy of FORD MOTOR CO.

CAUTION: Do not use metal scrapers, wire brushes, power abrasive discs or other abrasive means to clean the sealing surfaces. These tools cause scratches and gouges, which make leak paths. Use a plastic scraping tool to remove all traces of old sealant.

109. Inspect the oil pan. Clean the mating surface for the oil pan with silicone gasket remover and metal surface prep. Follow the directions on the packaging.

NOTE: If not secured within 4 minutes, the sealant must be removed and the sealing area cleaned. To clean the sealing area, use silicone gasket remover and metal surface prep. Follow the directions on the packaging. Failure to follow this procedure can cause future oil leakage.

110. Apply silicone gasket and sealant at the crankshaft rear seal retainer plate-to-cylinder block sealing surface.

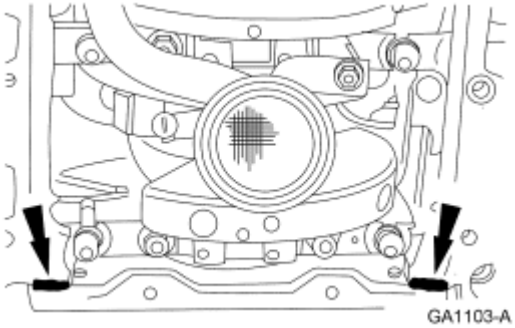

Fig. 489: Applying Silicone Gasket And Sealant
Courtesy of FORD MOTOR CO.

NOTE: **If not secured within 4 minutes, the sealant must be removed and the sealing area cleaned. To clean the sealing area, use silicone gasket remover and metal surface prep. Follow the directions on the packaging. Failure to follow this procedure can cause future oil leakage.**

111. Apply silicone gasket and sealant at the engine front cover-to-cylinder block sealing surface.

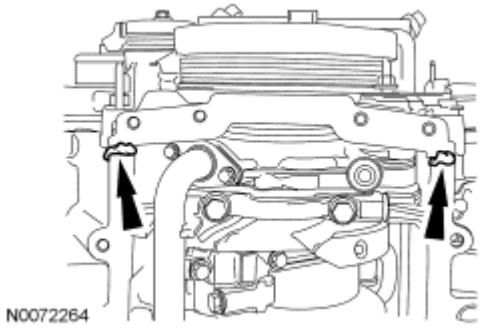

Fig. 490: Applying Silicone Gasket & Sealant At Engine Front Cover-To-Cylinder Block Sealing Surface
Courtesy of FORD MOTOR CO.

112. Install the new oil pan gasket and the oil pan and loosely install the 16 bolts.

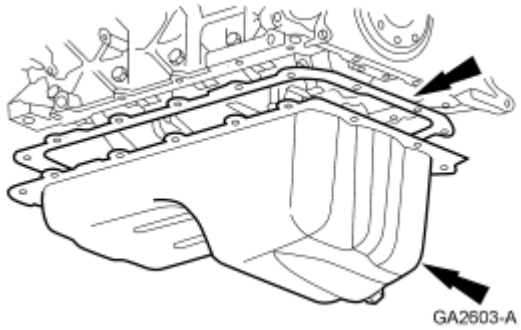

Fig. 491: Positioning New Oil Pan Gasket And Oil Pan

Courtesy of FORD MOTOR CO.

113. Tighten the 16 bolts in 3 stages, in the sequence shown.
    - Stage 1: Tighten to 2 N.m (18 lb-in).
    - Stage 2: Tighten to 20 N.m (15 lb-ft).
    - Stage 3: Tighten an additional 60 degrees.

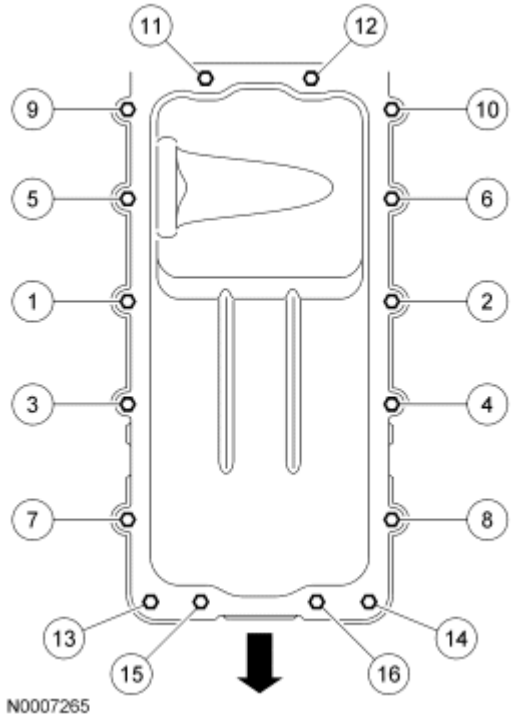

Fig. 492: Identifying Oil Pan Bolt Tightening Sequence
Courtesy of FORD MOTOR CO.

NOTE: Lubricate the inner lip of the crankshaft rear seal with clean engine oil.

114. Using the special tools, install a new crankshaft rear seal.

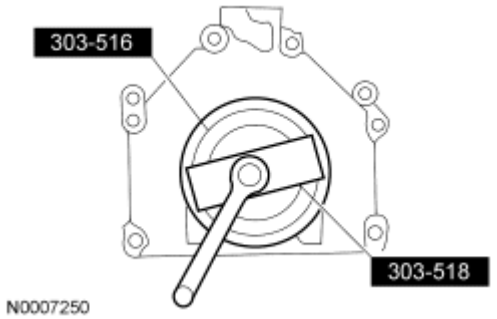

Fig. 493: Using Special Tools To Install New Crankshaft Rear Seal
Courtesy of FORD MOTOR CO.

115. Using the special tools, install a new crankshaft rear oil slinger.

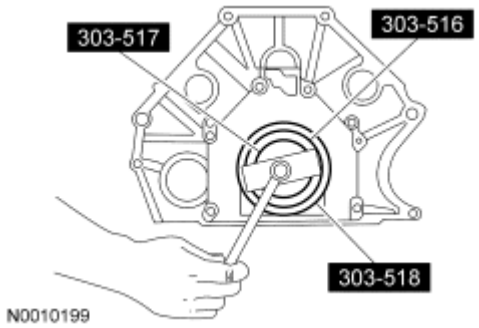

Fig. 494: Installing Crankshaft Rear Oil Slinger Using Special Tools (303-516, 303-517, 303-518)
Courtesy of FORD MOTOR CO.

Vehicles with automatic transmission

116. Install the flexplate and the 6 bolts in the sequence shown.
    - Tighten to 80 N.m (59 lb-ft).

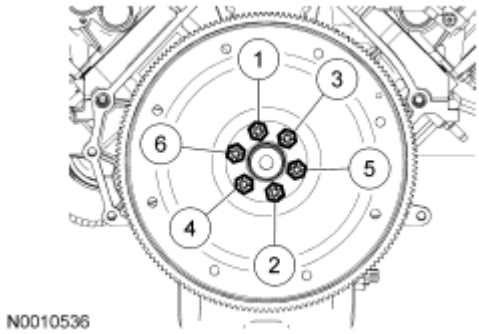

Fig. 495: Identifying Flexplate Bolts Tightening Sequence
Courtesy of FORD MOTOR CO.

Vehicles with manual transmission

117. Position the flywheel on the crankshaft pilot and start the 6 flywheel bolts.
118. Tighten the flywheel bolts evenly in the sequence shown to fully seat the flywheel on the crankshaft pilot.
    - Tighten to 80 Nm (59 lb-ft).

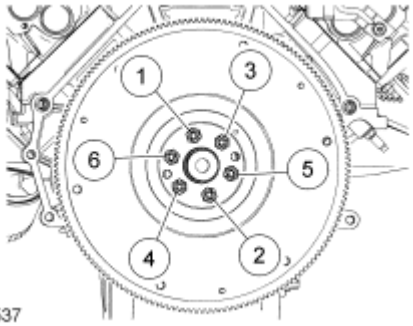

Fig. 496: Removing Bolts & Flywheel In Sequence
Courtesy of FORD MOTOR CO.

INSTALLATION

ENGINE

Special Tools

Illustration	Tool Name	Tool Number
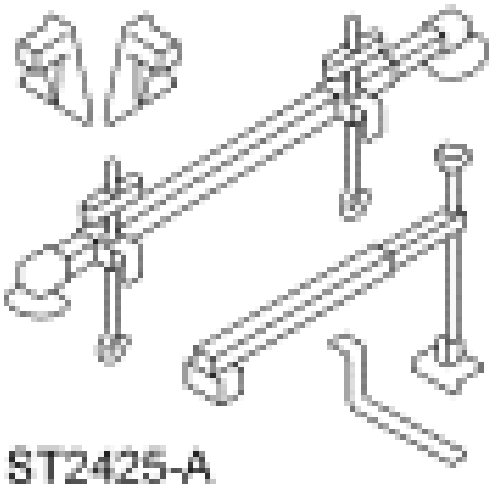	3-Bar Engine Support Kit	303-F072
	Lifting Brackets, Engine	303-050 (T70P-6000)

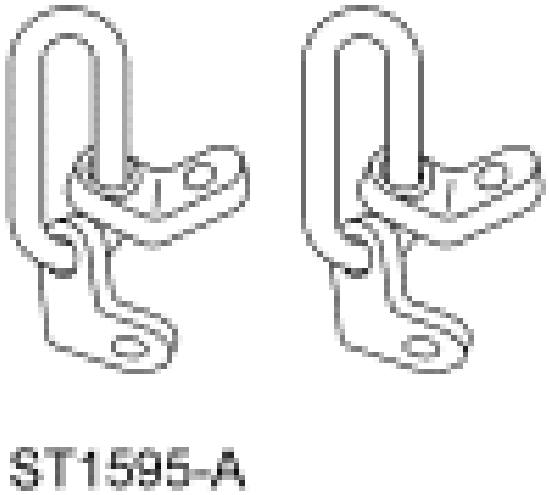 ST1595-A		
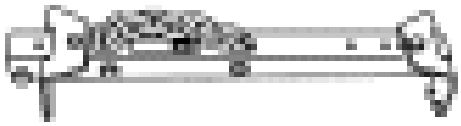 ST1377-A	Modular Engine Lift Bracket	303-F047 (014-00073) or equivalent

Material

Item	Specification
Motorcraft SAE 5W-20 Premium Synthetic Blend Motor Oil XO-5W20-QSP (US); Motorcraft SAE 5W-20 Super Premium Motor Oil CXO-5W20-LSP12 (Canada); or equivalent	WSS-M2C930-A

All vehicles

1. Install the special tool to the threaded hole located at the LH side of the engine block.

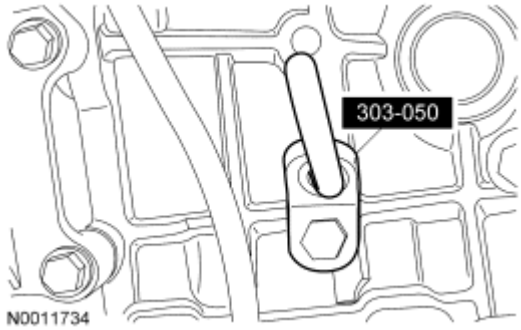

Fig. 497: Installing Special Tool (303-050) To Threaded Hole Located At LH Side Of Engine Block
Courtesy of FORD MOTOR CO.

CAUTION: Do not remove the engine crane until the special tool (3-bar support) is installed in the next step. The rear of the engine must be supported to prevent damage to the engine or cowl panel.

2. Using a suitable engine crane, position the engine in the vehicle.

CAUTION: Do not position the legs of the special tool (3-bar support) on the fenders. Instead, the legs should be positioned on the body structure near the suspension strut tower. Failure to follow these instructions may result in body damage.

3. Install the 3-bar support and a suitable length of chain to the engine lifting bracket installed in the previous step.
   - Remove the engine crane.

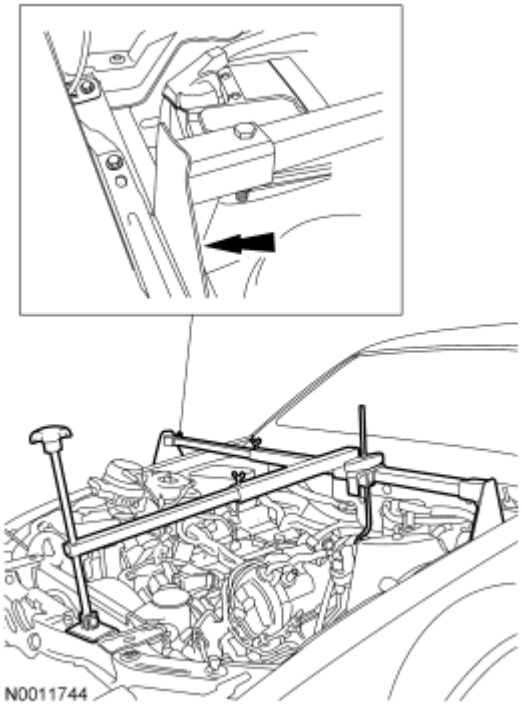

Fig. 498: Locating 3-Bar Engine Support
Courtesy of FORD MOTOR CO.

4. Remove the special tool.

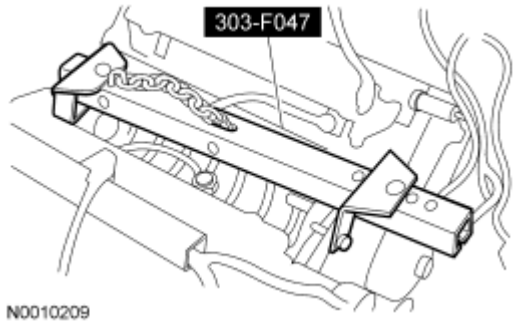

Fig. 499: Identifying Special Tool (303-F047)
Courtesy of FORD MOTOR CO.

NOTE: RH shown, LH similar.

5. Install the RH and LH engine support insulator nuts.
   - Tighten to 63 Nm (46 lb-ft).

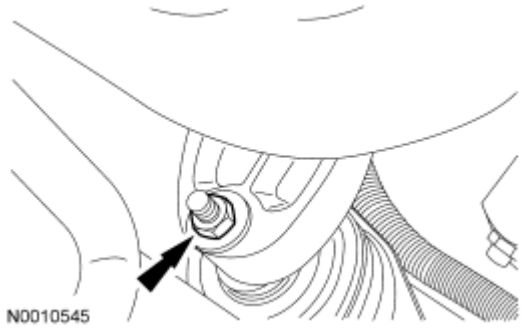

Fig. 500: Locating Engine Support Insulator Nuts
Courtesy of FORD MOTOR CO.

6. Install the LH radio interference capacitor and nut onto the engine front cover stud bolt.
   - Tighten to 25 Nm (18 lb-ft).

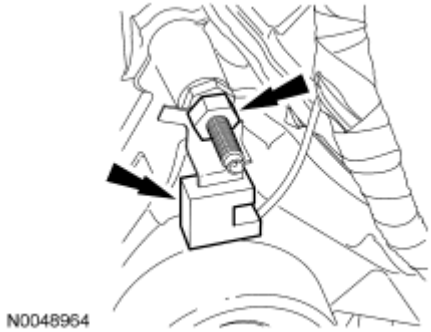

Fig. 501: Identifying Nut & LH Radio Interference Capacitor
Courtesy of FORD MOTOR CO.

7. Connect the 68-pin connector to the power distribution box and tighten the bolt.
   - Tighten to 6 Nm (53 lb-in).
   - Attach the power distribution box upper housing to the lower housing.

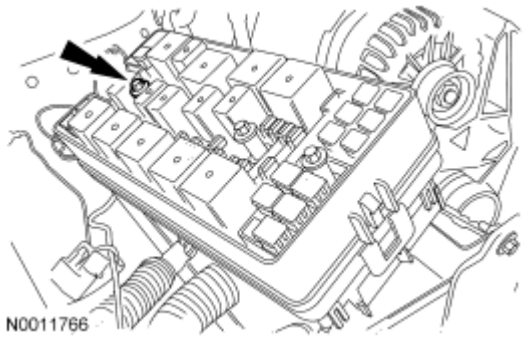

Fig. 502: Locating Power Distribution Box Upper Housing Bolt
Courtesy of FORD MOTOR CO.

8. Install the power distribution box cover.

9. Connect the 16-pin electrical connector and attach the 2 wiring retainers.

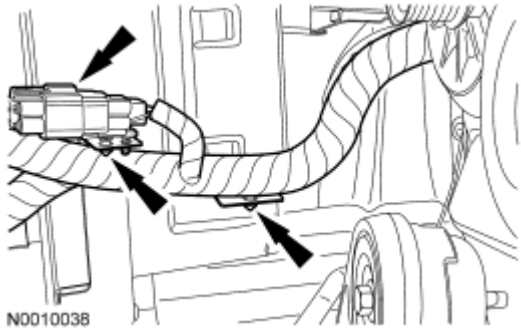

Fig. 503: Locating 16-Pin Electrical Connector
Courtesy of FORD MOTOR CO.

10. Connect the upper and lower PCM electrical connectors.

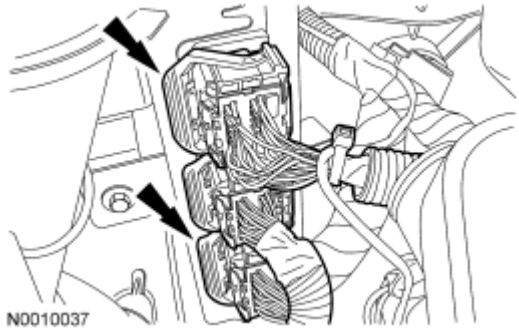

Fig. 504: Identifying Upper & Lower Powertrain Control Module (PCM) Electrical Connectors
Courtesy of FORD MOTOR CO.

11. Connect the generator jumper harness electrical connector.

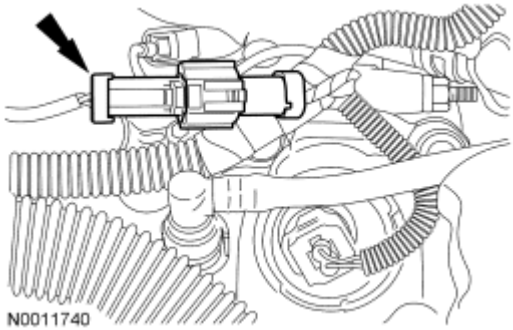

Fig. 505: Locating Generator Jumper Harness Electrical Connector
Courtesy of FORD MOTOR CO.

12. Install the ground strap and bolt to the cowl.
    - Tighten to 6 Nm (53 lb-in).

- Attach the pin-type retainer.

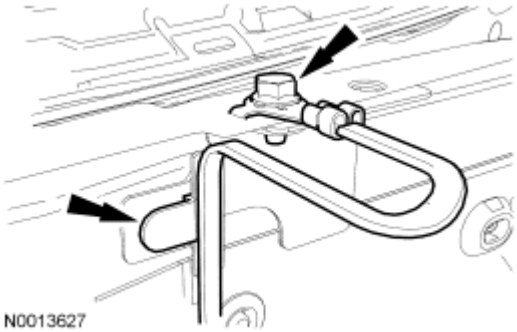

Fig. 506: Identifying Bolt And Ground Strap
Courtesy of FORD MOTOR CO.

13. Connect the heater hoses.

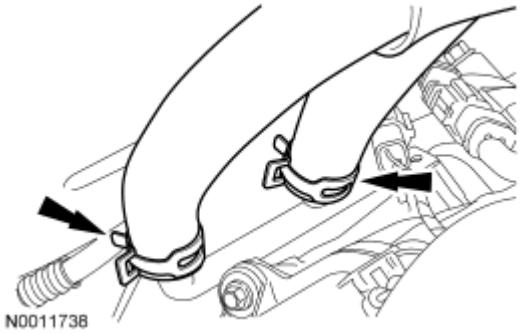

Fig. 507: Locating Heater Hoses
Courtesy of FORD MOTOR CO.

14. Install the engine-to-transmission spacer plate.

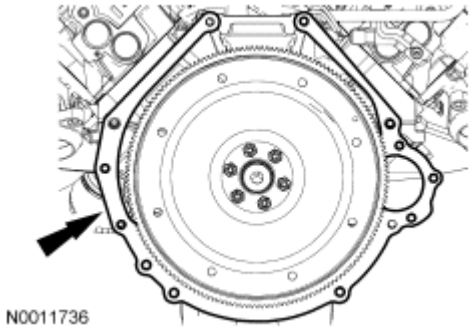

Fig. 508: Locating Engine-To-Transmission Spacer Plate
Courtesy of FORD MOTOR CO.

NOTE: RH shown, LH similar.

15. Connect the RH and LH catalyst monitor sensor.

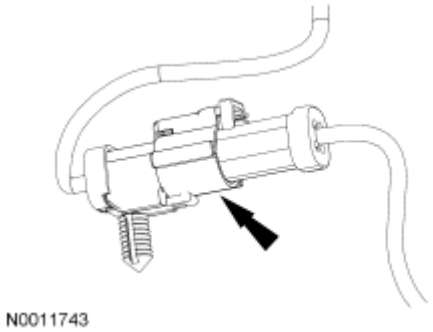

Fig. 509: Locating Catalyst Monitor Sensor
Courtesy of FORD MOTOR CO.

16. Connect the RH heated oxygen sensor (HO2S) electrical connector.

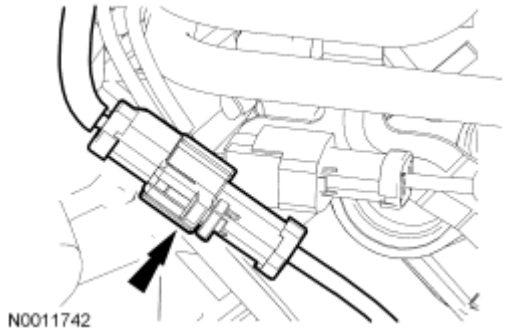

Fig. 510: Locating Heated Oxygen Sensor (HO2S) Electrical Connector
Courtesy of FORD MOTOR CO.

Vehicles with manual transmission

17. Install the clutch. For additional information, refer to **CLUTCH** article.

Vehicles with automatic transmission

18. Install the transmission. For additional information, refer to **AUTOMATIC TRANSAXLE/TRANSMISSION - 5R55S** article.
19. Install the transmission cooler tube bracket and nut.
    - Tighten to 25 Nm (18 lb-ft).

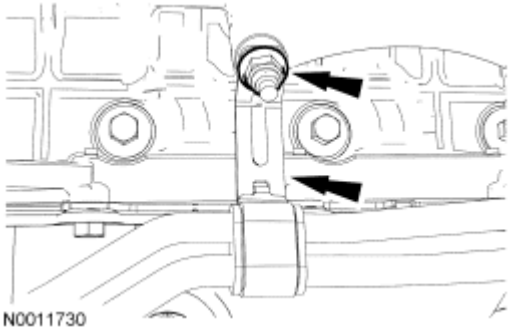

Fig. 511: Locating Transmission Cooler Tube Bracket And Nut
Courtesy of FORD MOTOR CO.

All vehicles

20. Remove the 3-bar support, chain and lifting eye from the engine.
21. Position the power steering pump and install the 3 stud bolts.
    - Tighten to 25 N.m (18 lb-ft).

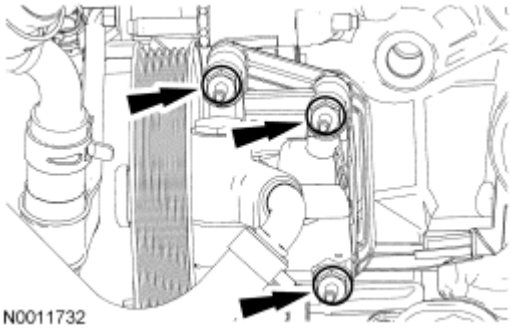

Fig. 512: Locating Power Steering Pump And Stud Bolts
Courtesy of FORD MOTOR CO.

22. Install the wiring retainer on the power steering stud bolt.

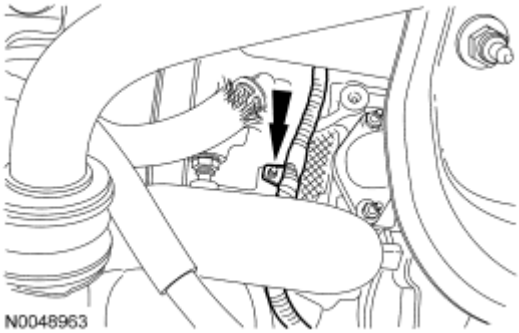

Fig. 513: Locating Power Steering Stud Bolt
Courtesy of FORD MOTOR CO.

23. Position the A/C compressor, bolt and install the 3 nuts.
    - Tighten to 25 N.m (18 lb-ft).

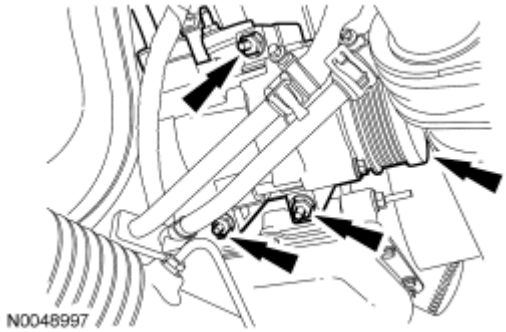

Fig. 514: Identifying A/C Compressor, Bolt & Nuts
Courtesy of FORD MOTOR CO.

24. Connect the A/C clutch and crankshaft position (CKP) sensor electrical connectors.
    - Attach the wiring harness retainers.

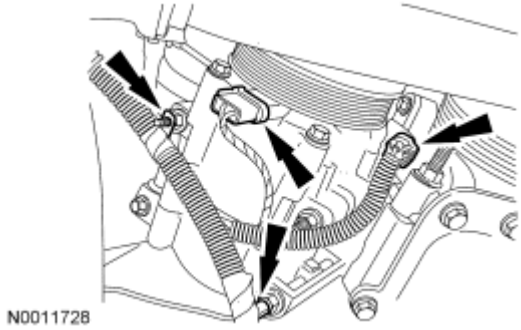

Fig. 515: Locating Wiring Harness Retainers
Courtesy of FORD MOTOR CO.

25. Install the ground wire onto the stud bolt.
    - Tighten to 25 N.m (18 lb-ft).
    - Attach the pin-type retainer from the A/C compressor.

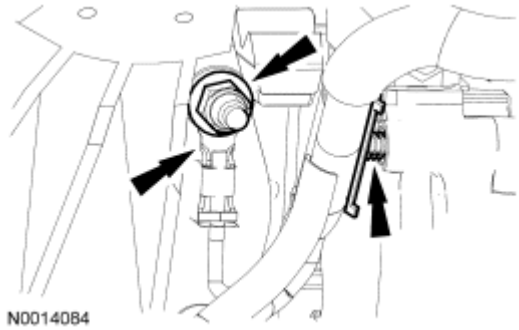

Fig. 516: Detaching Nut And Ground Wire From Stud Bolt
Courtesy of FORD MOTOR CO.

26. Attach the 2 pin-type retainers.

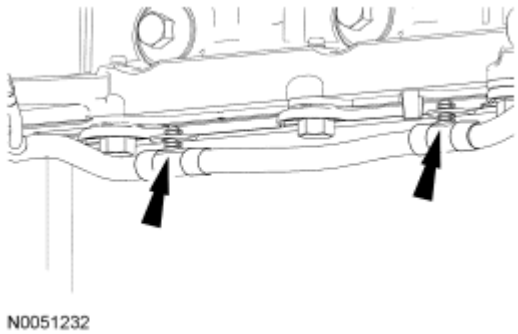

Fig. 517: Identifying Pin-Type Retainers
Courtesy of FORD MOTOR CO.

27. Connect the coolant hose to the oil filter adapter.

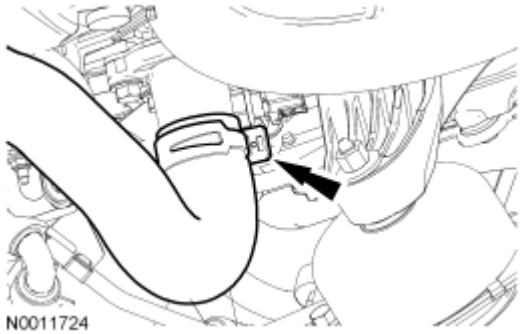

Fig. 518: Identifying Coolant Hose On Oil Filter Adapter
Courtesy of FORD MOTOR CO.

28. Connect the A/C pressure transducer electrical connector.

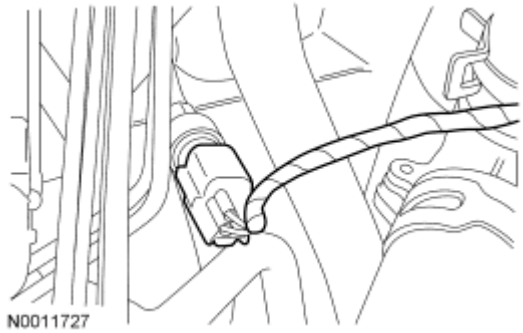

Fig. 519: Locating A/C Pressure Transducer Electrical Connector
Courtesy of FORD MOTOR CO.

29. Install the accessory drive belt. For additional information, refer to **ACCESSORY DRIVE** article.
30. Install the radiator sight shield and the 6 pin-type retainers.

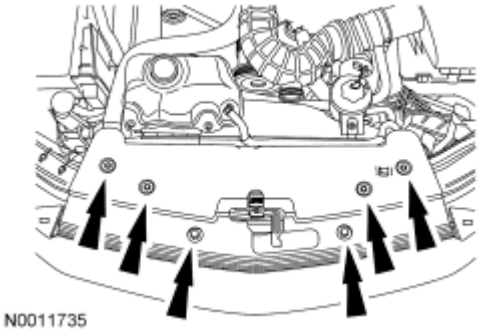

Fig. 520: Locating Pin-Type Retainers And Radiator Sight Shield
Courtesy of FORD MOTOR CO.

31. Install the engine coolant crossover. For additional information, refer to **ENGINE COOLING** article.
32. Install the degas bottle. For additional information, refer to **ENGINE COOLING** article.
33. Install the air cleaner and outlet pipe. For additional information, refer to **INTAKE AIR DISTRIBUTION AND FILTERING** article.
34. Install the cowl vent screen. For additional information, refer to **FRONT END BODY PANELS** article.

NOTE: Use the hood hinge location index marks made during removal to aid in hood installation.

35. Install the hood and 4 bolts.
36. Connect the windshield washer hose and position the hood insulation.

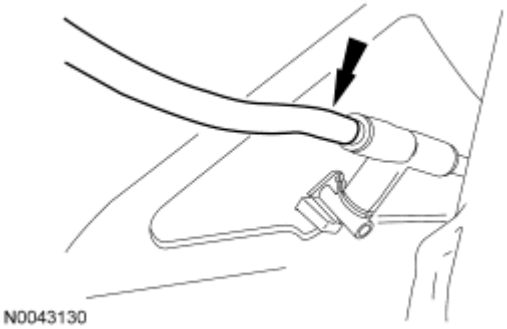

Fig. 521: Locating Windshield Washer Hose
Courtesy of FORD MOTOR CO.

37. Install the hood insulation pin-type retainer and attach the 2 windshield washer hose retainers.

Fig. 522: Locating Windshield Washer Hose Retainers
Courtesy of FORD MOTOR CO.

38. Fill the engine with clean engine oil.
39. Fill and bleed the engine cooling system. For additional information, refer to **ENGINE COOLING** article.
40. Connect the battery ground cable. For additional information, refer to **BATTERY, MOUNTING AND CABLES** article.

CYLINDER HEAD

Special Tools

Illustration	Tool Name	Tool Number
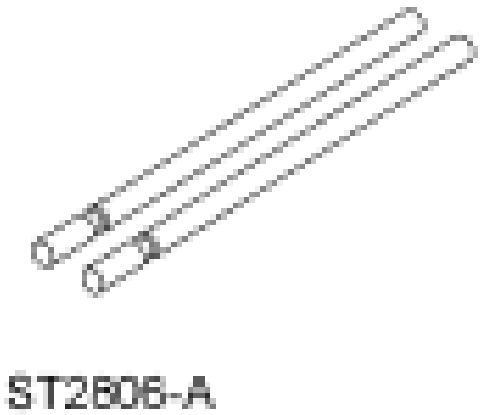	Alignment Pins, Cylinder Head	303-1040 (SR-015486)
	Compressor, Valve Spring	303-1039

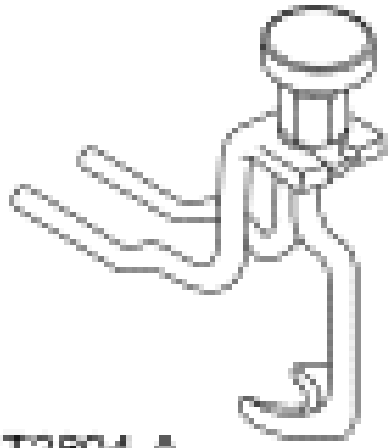 ST2804-A		
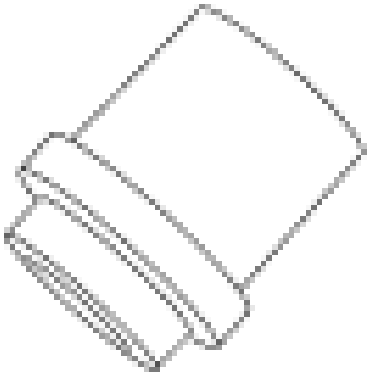 ST2197-A	Installer, Crankshaft Front Seal	303-635
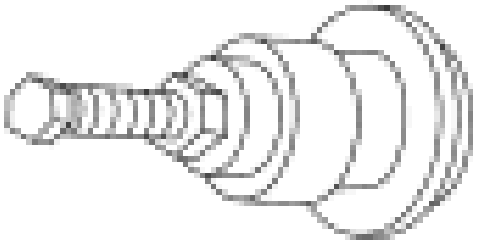 ST1328-A	Installer, Front Cover Seal	303-335 (T88T-6701-A)
	Installer, Crankshaft Vibration	303-102 (T74P-6316-B)

	Damper	
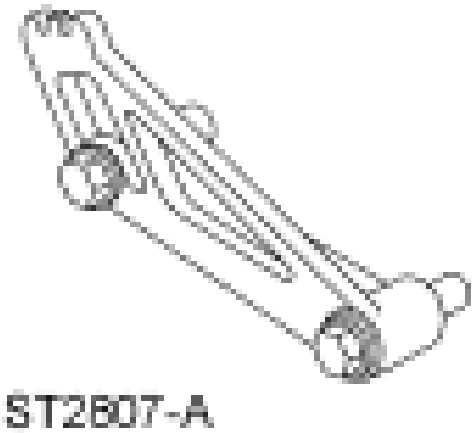	Locking Tool, Camshaft Phaser Sprocket	303-1046
	Modular Engine Lift Bracket	303-F047 (014-00073) or equivalent
	Remover/Installer, Cylinder	303-572 (T97T-6000-A)

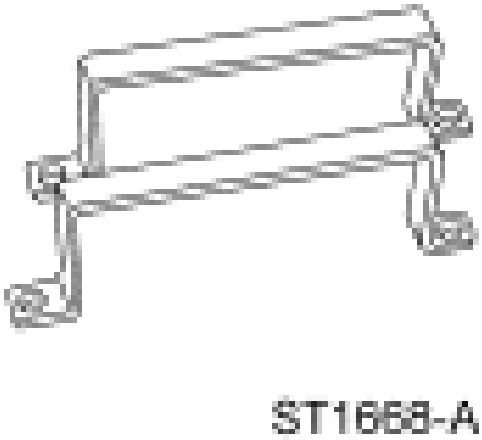	Head	

Material

Item	Specification
Hydraulic Chain Tensioner Retaining Clip 1L3Z-6P250-AA	-
Motorcraft Metal Surface Prep ZC-31	-
Motorcraft Premium Gold Engine Coolant with Bittering Agent (US only) VC-7-B (US); CVC-7-A (Canada); or equivalent (yellow color)	WSS-M97B51-A1
Motorcraft SAE 5W-20 Premium Synthetic Blend Motor Oil XO-5W20-QSP (US); Motorcraft SAE 5W-20 Super Premium Motor Oil CXO-5W20-LSP12 (Canada); or equivalent	WSS-M2C930-A
Silicone Gasket and Sealant TA-30	WSE-M4G323-A4
Silicone Gasket Remover ZC-30	-

All cylinder heads

CAUTION: Make sure all coolant residue and foreign material are cleaned from the block surface and cylinder bore. Failure to follow these instructions may result in engine damage.

CAUTION: The use of sealing aids (aviation cement, copper spray and glue) is not permitted. The gasket must be installed dry. Failure to follow these instructions may result in future oil leakage.

CAUTION: The cylinder head bolts must be discarded and new bolts installed. They are tighten-to-yield designed and cannot be reused.

NOTE: Do not turn the crankshaft until instructed to do so.

NOTE: LH shown, RH similar.

1. Using the special tools, position the cylinder head gaskets and cylinder heads over the dowels and install the cylinder head bolts loosely.

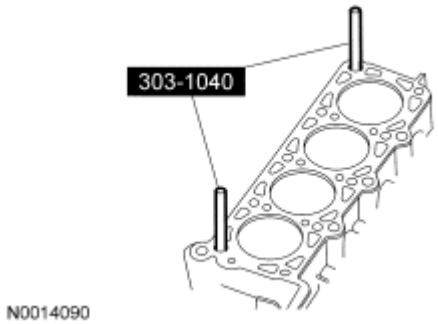

Fig. 523: Positioning Cylinder Head Gaskets And Cylinder Heads Over Dowels
Courtesy of FORD MOTOR CO.

NOTE: RH shown, LH similar.

2. Tighten the bolts in 3 stages, in the sequence shown.
   - Stage 1: Tighten to 40 N.m (30 lb-ft).
   - Stage 2: Tighten an additional 90 degrees.
   - Stage 3: Tighten an additional 90 degrees.

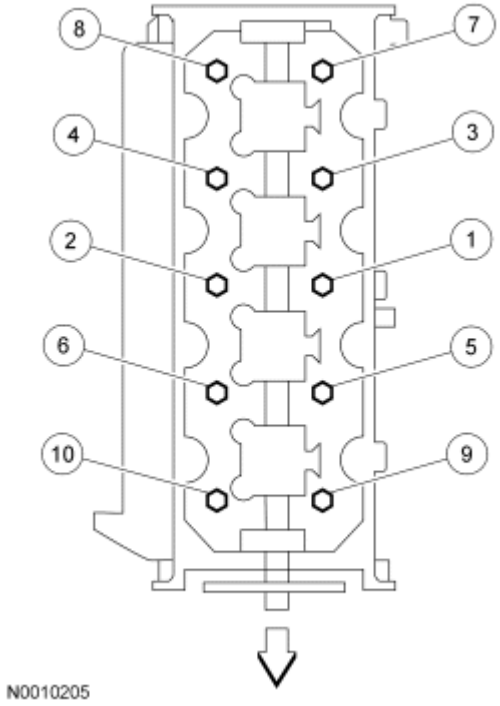

Fig. 524: Tightening Bolts In Sequence
Courtesy of FORD MOTOR CO.

LH cylinder head

3. Remove the special tool from the LH cylinder head.

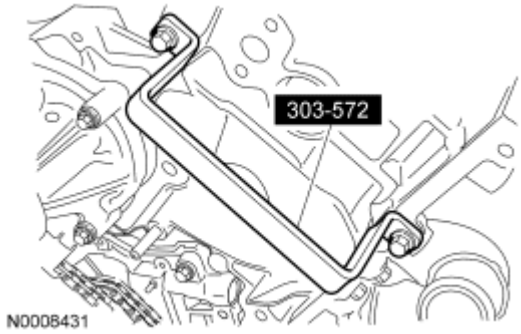

Fig. 525: Identifying Special Tool (303-572) LH Cylinder Head
Courtesy of FORD MOTOR CO.

NOTE: Lubricate the hydraulic lash adjusters with clean engine oil prior to installation.

NOTE: The hydraulic lash adjusters must be installed in their original locations.

4. Install the hydraulic lash adjusters into the LH cylinder head.

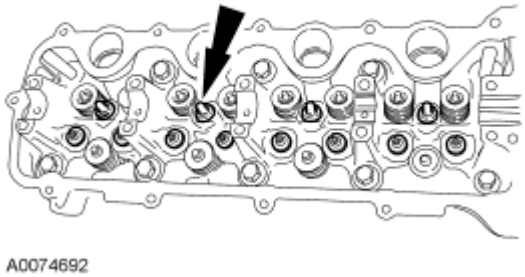

Fig. 526: Identifying Hydraulic Lash Adjusters
Courtesy of FORD MOTOR CO.

5. Install 8 new LH exhaust manifold studs.
   - Tighten to 12 Nm (9 lb-ft).
6. Position a new gasket, the LH exhaust manifold and tighten the 8 new nuts in the sequence shown.
   - Tighten to 25 N.m (18 lb-ft).

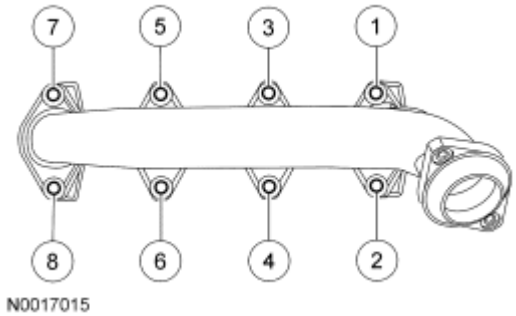

Fig. 527: Tightening LH Exhaust Manifold Nuts In Sequence
Courtesy of FORD MOTOR CO.

7. Install the ground strap and nut to the stud bolt.
   - Tighten to 10 Nm (89 lb-in).

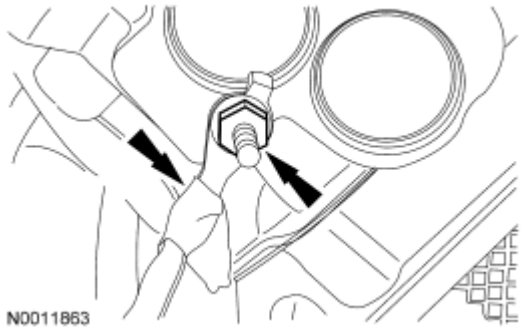

Fig. 528: Locating Ground Strap And Nut On Stud Bolt
Courtesy of FORD MOTOR CO.

RH cylinder head

8. Remove the special tool from the RH cylinder head.

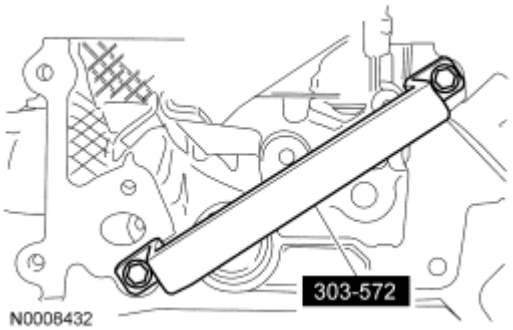

Fig. 529: Identifying Special Tool (303-572) RH Cylinder Head
Courtesy of FORD MOTOR CO.

NOTE: Lubricate the hydraulic lash adjusters with clean engine oil prior to installation.

NOTE: The hydraulic lash adjusters must be installed in their original locations.

9. Install the hydraulic lash adjusters into the RH cylinder head.

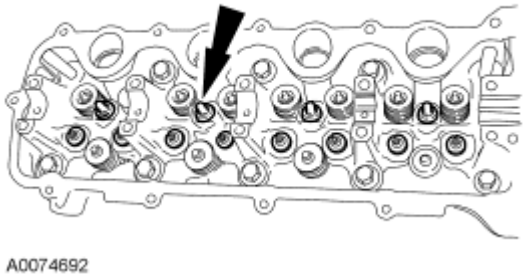

Fig. 530: Identifying Hydraulic Lash Adjusters
Courtesy of FORD MOTOR CO.

10. Install 8 new RH exhaust manifold studs.
    - Tighten to 12 Nm (9 lb-ft).
11. Position a new gasket, the RH exhaust manifold and tighten the 8 new nuts in the sequence shown.
    - Tighten to 25 N.m (18 lb-ft).

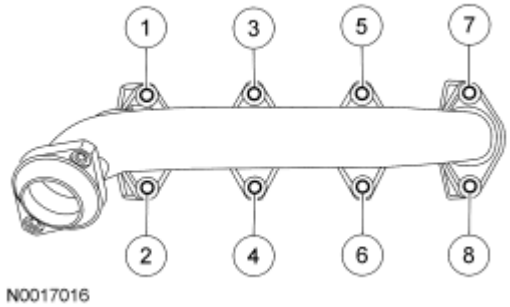

Fig. 531: Tightening RH Exhaust Manifold Bolts In Sequence
Courtesy of FORD MOTOR CO.

NOTE: Do not reuse the O-ring seals.

NOTE: Lubricate the O-ring seals with clean engine coolant prior to installation.

12. Slide the coolant tube forward with the new O-ring seals into the cylinder block.

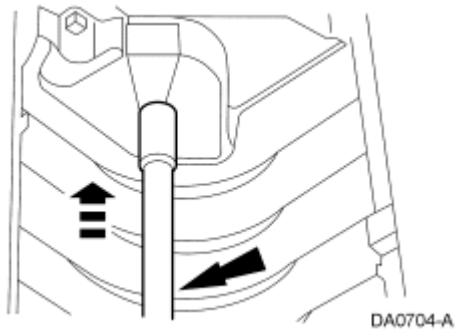

Fig. 532: Sliding Coolant Tube Forward With O-Ring Seals Into Cylinder Block
Courtesy of FORD MOTOR CO.

13. Install the coolant tube stud bolt.
    - Tighten to 10 N.m (89 lb-in).

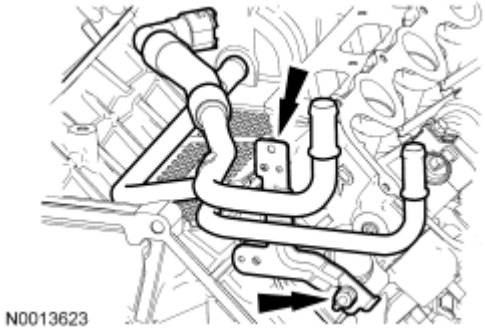

Fig. 533: Locating Coolant Tube Stud Bolt
Courtesy of FORD MOTOR CO.

All cylinder heads

NOTE: Lubricate the camshaft and camshaft journals with clean engine oil prior to installation.

14. Install the LH and RH camshafts.

NOTE: LH shown, RH similar.

NOTE: Lubricate the camshaft bearing caps with clean engine oil.

15. Install the LH and RH camshaft bearing caps in their original locations.
    - Position the front camshaft bearing cap.
    - Position the remaining camshaft bearing caps.
    - Install the bolts loosely.
    - Tighten to 10 N.m (89 lb-in) in the sequence shown.

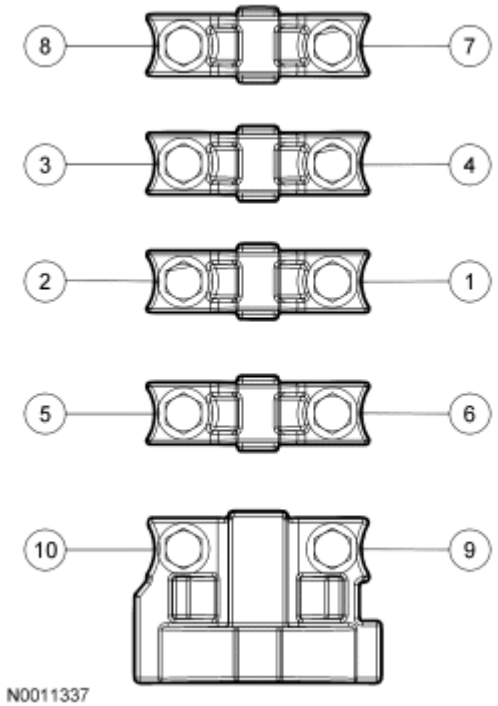

Fig. 534: Identifying Camshaft Bearing Cap Bolt Loosening/Tightening Sequence
Courtesy of FORD MOTOR CO.

CAUTION: Damage to the camshaft phaser sprocket assembly will occur if mishandled or used as a lifting or leveraging device.

NOTE: **The RH and LH camshaft phaser sprockets are similar. Refer to the single timing mark to identify the RH camshaft phaser sprocket and the L timing mark to identify the LH camshaft phaser sprocket.**

NOTE: **LH shown, RH similar.**

16. Install the camshaft phaser sprockets and new camshaft phaser bolts finger tight.

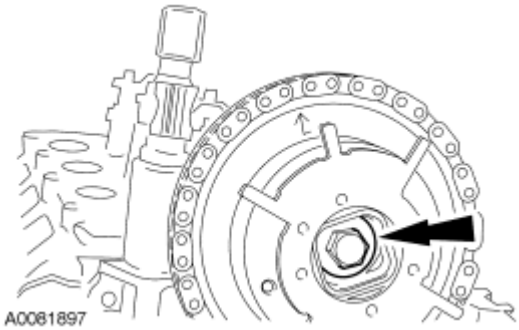

Fig. 535: Identifying Camshaft Phaser And Sprocket Assembly Bolt
Courtesy of FORD MOTOR CO.

CAUTION: **Damage to the camshaft phaser sprocket assembly will occur if mishandled or used as a lifting or leveraging device.**

CAUTION: **Only use hand tools to remove the camshaft phaser sprocket assembly or damage may occur to the camshaft or camshaft phaser unit.**

NOTE: **LH shown, RH similar.**

17. Using the special tool, tighten the LH and RH camshaft phaser sprocket bolts in 2 stages.
    - Stage 1: Tighten to 40 N.m (30 lb-ft).
    - Stage 2: Tighten an additional 90 degrees.

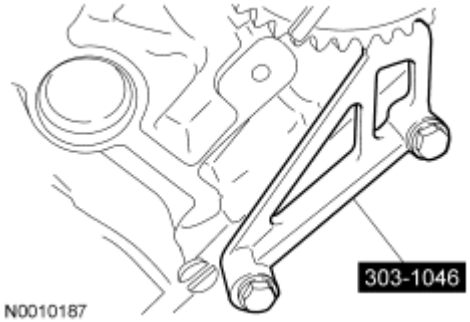

Fig. 536: Identifying Special Sprocket Phaser Tool

Courtesy of FORD MOTOR CO.

18. Install the crankshaft sprocket, making sure the flange faces forward.

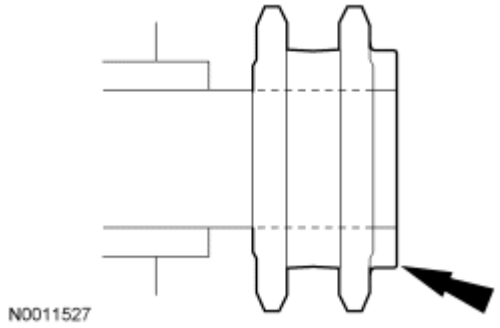

Fig. 537: Identifying Crankshaft Sprocket
Courtesy of FORD MOTOR CO.

19. Rotate the crankshaft to position the crankshaft sprocket timing mark in the 6 o'clock position.

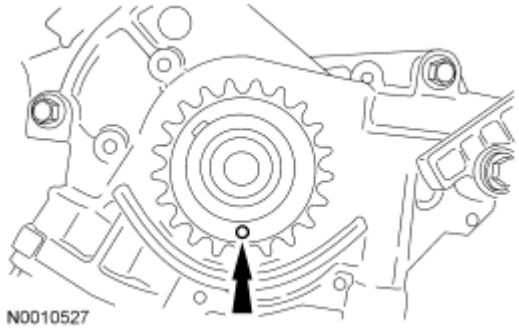

Fig. 538: Locating Crankshaft Sprocket Timing Mark
Courtesy of FORD MOTOR CO.

20. Rotate the camshaft sprockets to position the RH camshaft sprocket timing mark in the 11 o'clock position and the LH camshaft sprocket timing mark in the 12 o'clock position.

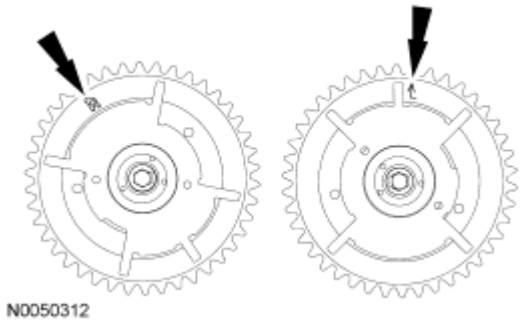

Fig. 539: Rotating Camshaft Sprockets To Position RH Camshaft Sprocket Timing Mark
Courtesy of FORD MOTOR CO.

CAUTION: If one or both tensioner mounting bolts are loosened or removed, the tensioner-sealing bead must be inspected for seal integrity. Any cracks, tears, cuts or separation from the tensioner body, or permanent compression of the seal bead, will require replacement of the tensioner.

21. Inspect the RH and LH timing chain tensioners.
    - Install new tensioners, as necessary.

CAUTION: Timing chain procedures must be followed exactly or damage to valves and pistons will result.

22. Compress the tensioner plunger, using a vise.

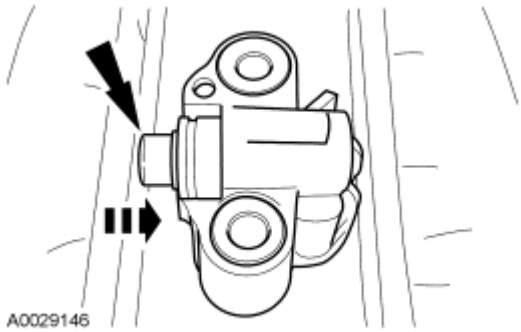

Fig. 540: Compressing Tensioner Plunger
Courtesy of FORD MOTOR CO.

23. Install a retaining clip on the tensioner to hold the plunger in during installation.

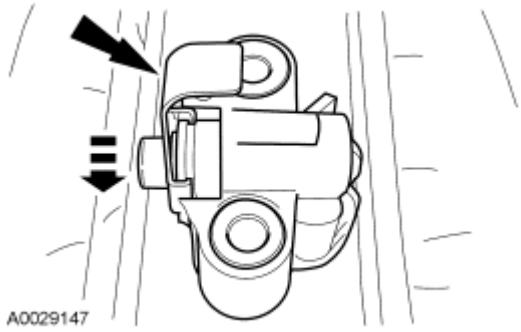

Fig. 541: Identifying Retaining Clip on Tensioner
Courtesy of FORD MOTOR CO.

24. Remove the tensioner from the vise.
25. If the colored links are not visible, mark one link on one end and one link on the other end and use as timing marks.

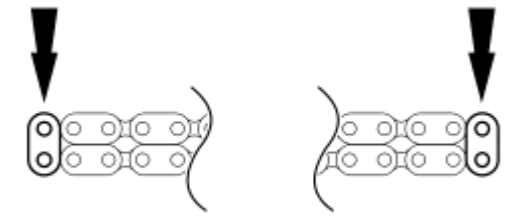

Fig. 542: Identifying Timing Chain Copper Links
Courtesy of FORD MOTOR CO.

26. Install the 4 bolts and the LH and RH timing chain guides.
    - Tighten to 10 N.m (89 lb-in).

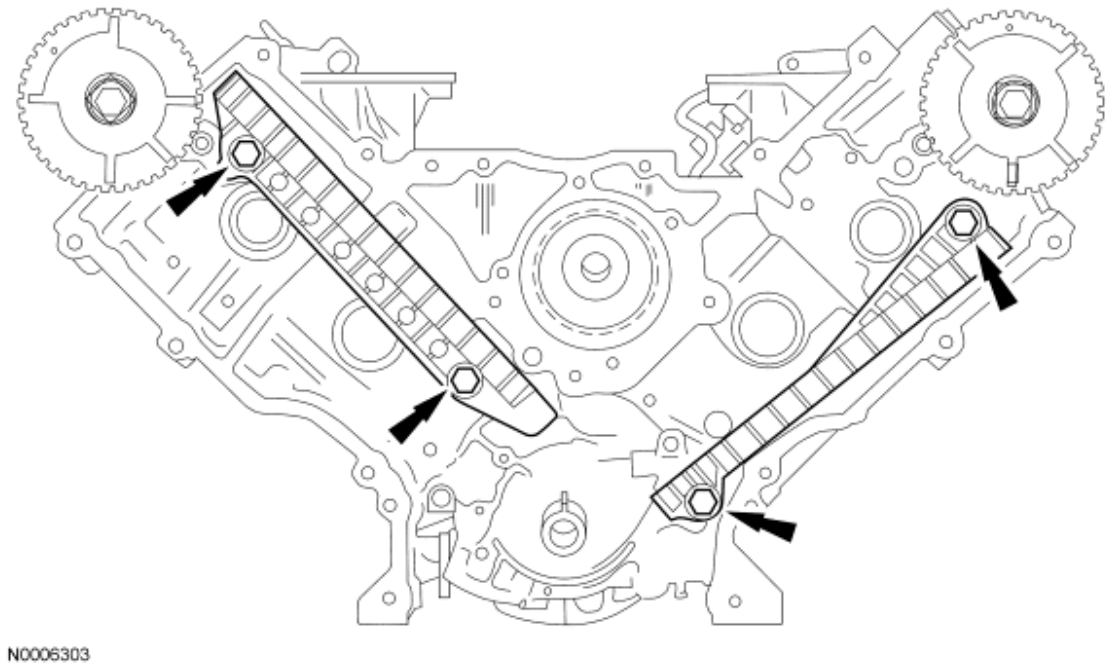

Fig. 543: Identifying Timing Chain Guides
Courtesy of FORD MOTOR CO.

27. Position the lower end of the LH (inner) timing chain on the crankshaft sprocket, aligning the timing mark on the outer flange of the crankshaft sprocket with the single colored (marked) link on the chain.

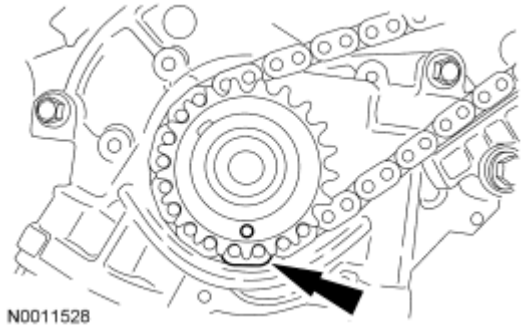

Fig. 544: Aligning Crankshaft Sprocket Timing Mark And LH Timing Chain Link
Courtesy of FORD MOTOR CO.

NOTE: Make sure the upper half of the timing chain is below the tensioner arm dowel.

28. Position the LH timing chain on the camshaft sprocket. Make sure the camshaft sprocket timing mark is aligned with the colored (marked) chain link.

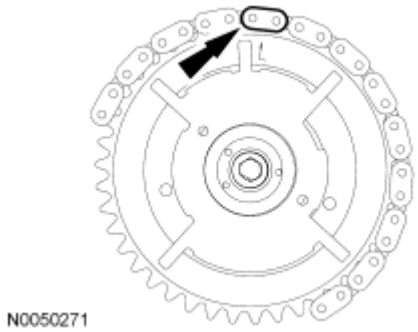

Fig. 545: Locating Camshaft Sprocket Timing Copper Mark
Courtesy of FORD MOTOR CO.

NOTE: The LH timing chain tensioner arm has a bump near the dowel hole for identification.

29. Position the LH timing chain tensioner arm on the dowel pin and install the LH timing chain tensioner and 2 bolts.
    - Tighten to 25 N.m (18 lb-ft).

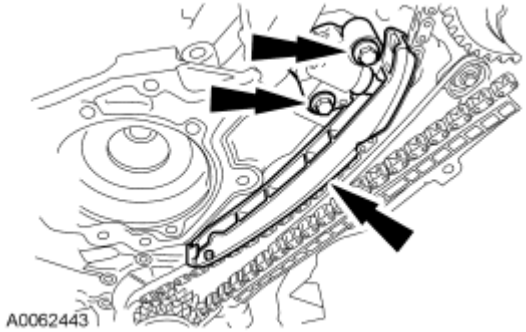

Fig. 546: Identifying LH Timing Chain Tensioner & Tensioner Arm
Courtesy of FORD MOTOR CO.

30. Remove the retaining clip from the LH timing chain tensioner.

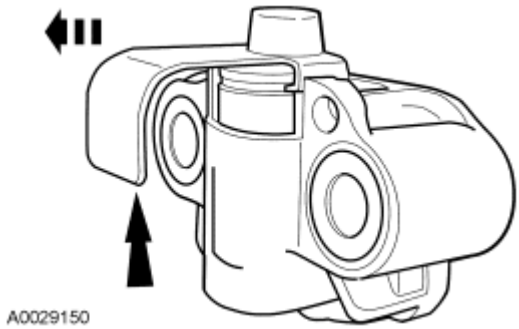

Fig. 547: Identifying Retaining Clip And Timing Chain Tensioner
Courtesy of FORD MOTOR CO.

31. Position the lower end of the RH (outer) timing chain on the crankshaft sprocket, aligning the timing mark on the sprocket with the single colored (marked) chain link.

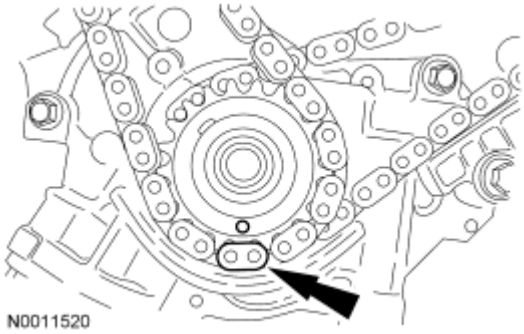

Fig. 548: Aligning Crankshaft Sprocket Timing Mark And RH Timing Chain Link
Courtesy of FORD MOTOR CO.

NOTE: The camshaft phaser and sprocket will be stamped with one of the illustrated timing marks for the RH camshaft.

NOTE: The lower half of the timing chain must be positioned above the tensioner arm dowel.

32. Position the RH timing chain on the camshaft sprocket. Make sure the camshaft sprocket timing mark is aligned with the colored (marked) chain link.

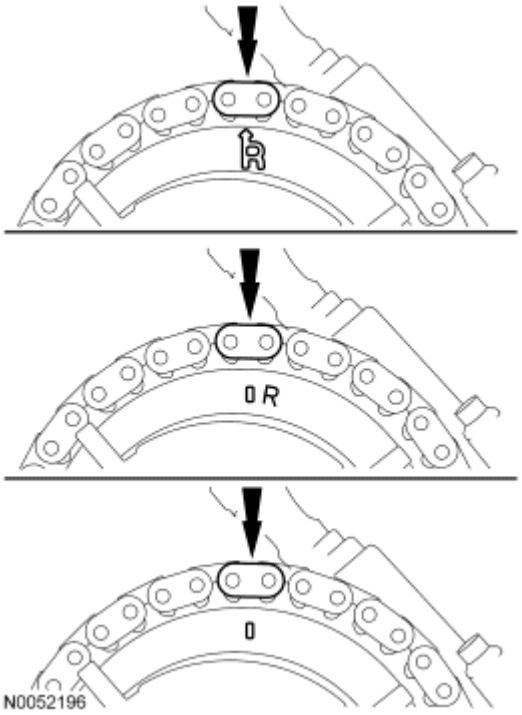

Fig. 549: Locating Camshaft Sprocket Timing Mark Aligned With Copper Chain Link
Courtesy of FORD MOTOR CO.

33. Position the RH timing chain tensioner arm on the dowel pin and install the RH timing chain tensioner and 2 bolts.
    - Tighten to 25 N.m (18 lb-ft).

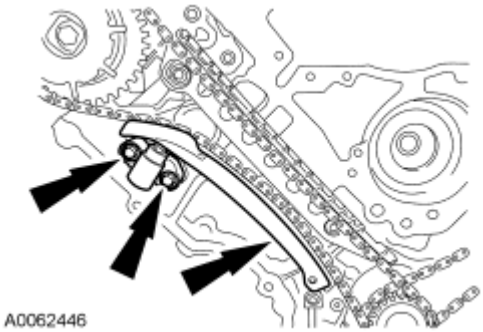

Fig. 550: Identifying RH Timing Chain Tensioner, Tensioner Arm And Bolts
Courtesy of FORD MOTOR CO.

34. Remove the retaining clip from the RH timing chain tensioner.

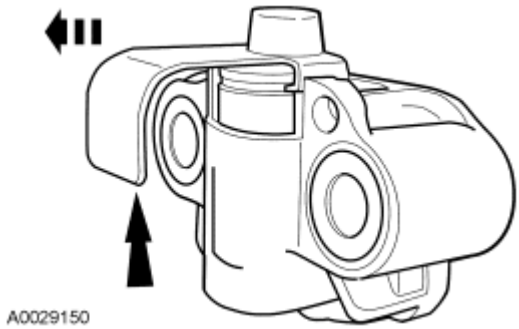

Fig. 551: Identifying Retaining Clip And Timing Chain Tensioner
Courtesy of FORD MOTOR CO.

NOTE: The RH and LH camshaft phaser sprockets are similar. Refer to the single timing mark to identify the RH camshaft phaser sprocket and the L timing mark to identify the LH camshaft phaser sprocket.

35. As a post-check, verify correct alignment of all timing marks. Make sure the timing marks on the sprockets correspond to the above note.

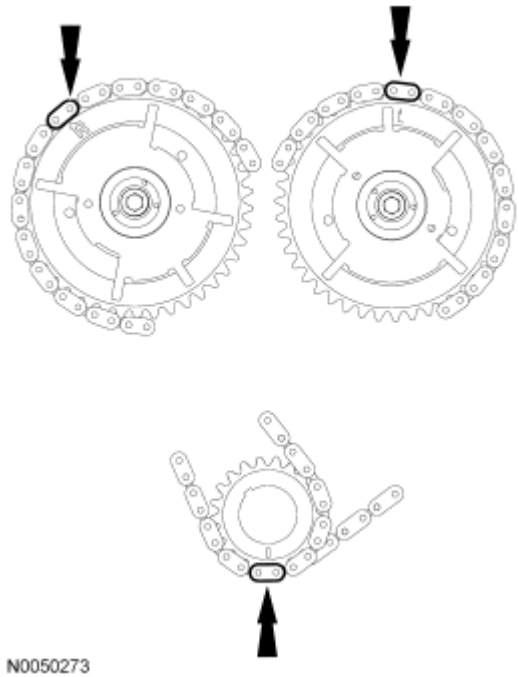

Fig. 552: Verify Correct Alignment Of All Timing Marks
Courtesy of FORD MOTOR CO.

36. Install the crankshaft sensor ring on the crankshaft.

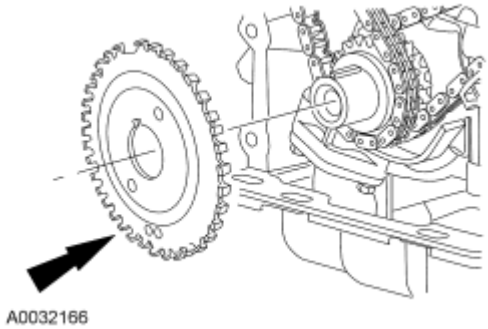

Fig. 553: View Of Crankshaft Sensor Ring At Crankshaft
Courtesy of FORD MOTOR CO.

NOTE: Lubricate the roller followers with clean engine oil prior to installation.

37. Using the special tool, install all of the camshaft roller followers.

Fig. 554: Compressing Spring Using Special Tool (303-1039)
Courtesy of FORD MOTOR CO.

CAUTION: Do not use metal scrapers, wire brushes, power abrasive discs or other abrasive means to clean the sealing surfaces. These tools cause scratches and gouges which make leak paths. Use a plastic scraping tool to remove all traces of old sealant.

NOTE: If the engine front cover is not secured within 4 minutes, the sealant must

be removed and the sealing area cleaned. To clean the sealing area, use silicone gasket remover and metal surface prep. Follow the directions on the packaging. Failure to follow this procedure can cause future oil leakage.

NOTE: Make sure that the engine front cover gasket is in place on the engine front cover before installation.

38. Apply a bead of silicone gasket and sealant along the cylinder head-to-cylinder block surface at the locations shown.

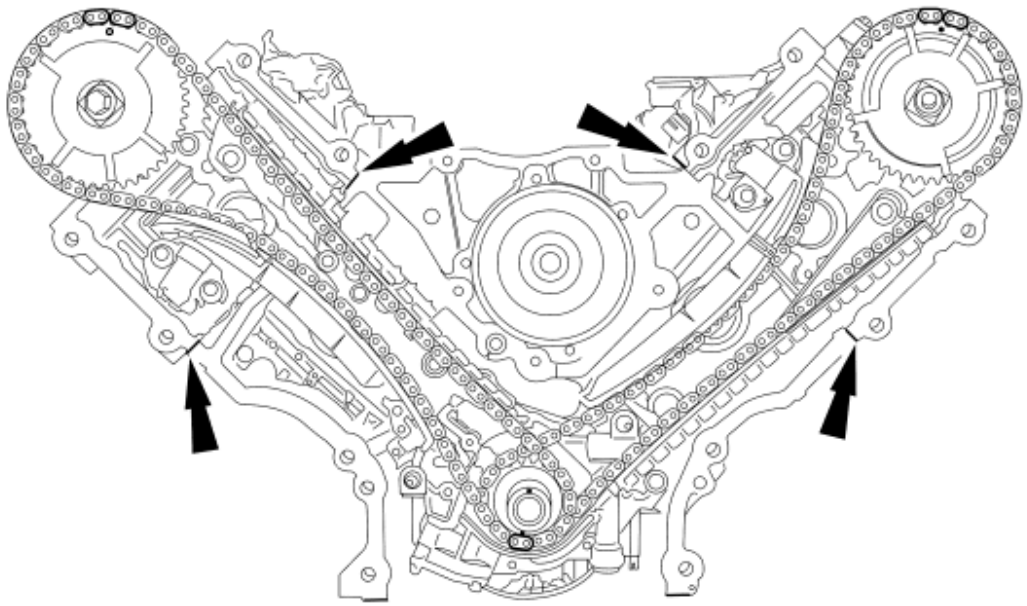

Fig. 555: Applying Bead Of Silicone Gasket And Sealant
Courtesy of FORD MOTOR CO.

39. Install a new engine front cover gasket on the engine front cover. Position the engine front cover onto the dowels. Install the 15 fasteners finger-tight.

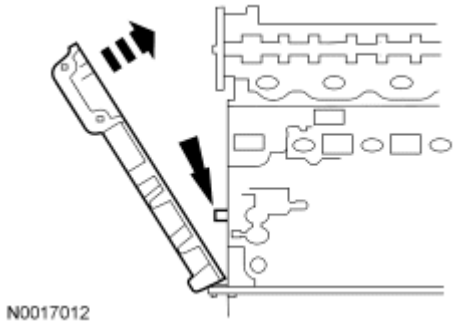

Fig. 556: Installing Engine Front Cover Gasket On Engine Front Cover
Courtesy of FORD MOTOR CO.

40. Tighten the 15 engine front cover fasteners in the sequence shown to 25 Nm (18 lb-ft).

Item	Part Number	Description
1	N806177	Bolt, Hex Flange Head Pilot, M8 x 1.25 x 53
2	N806177	Bolt, Hex Flange Head Pilot, M8 x 1.25 x 53
3	N806177	Bolt, Hex Flange Head Pilot, M8 x 1.25 x 53
4	N806177	Bolt, Hex Flange Head Pilot, M8 x 1.25 x 53
5	N806177	Bolt, Hex Flange Head Pilot, M8 x 1.25 x 53
6	W706508	Stud, Hex Shoulder Pilot, M8 x 1.25 x 50 - M6 x 1 x 10
7	N808586	Stud and Washer, Hex Head Pilot, M8 x 1.25 - M6 x 1 x 86.35
8	N806177	Bolt, Hex Flange Head Pilot, M8 x 1.25 x 53
9	N806177	Bolt, Hex Flange Head Pilot, M8 x 1.25 x 53
10	N806177	Bolt, Hex Flange Head Pilot, M8 x 1.25 x 53
11	N806177	Bolt, Hex Flange Head Pilot, M8 x 1.25 x 53
12	N806300	Stud, Hex Shoulder Pilot, M8 x 1.25 x 1.25 x 91.1
13	N806300	Stud, Hex Shoulder Pilot, M8 x 1.25 x 1.25 x 91.1
14	N806300	Stud, Hex Shoulder Pilot, M8 x 1.25 x 1.25 x 91.1
15	N806300	Stud, Hex Shoulder Pilot, M8 x 1.25 x 1.25 x 91.1

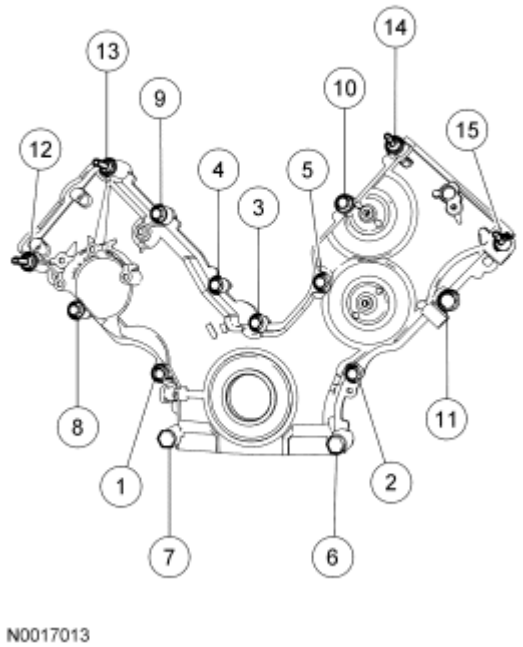

Fig. 557: Identifying Tightening Sequence Of Engine Front Cover Fasteners
Courtesy of FORD MOTOR CO.

41. Loosely install the 4 bolts, then tighten the bolts in 2 stages, in the sequence shown.
    - Stage 1: Tighten to 20 N.m (15 lb-ft).
    - Stage 2: Tighten an additional 60 degrees.

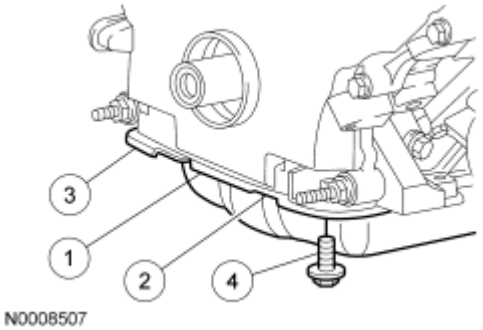

Fig. 558: Identifying Tightening Sequence Of Front Oil Pan Bolts
Courtesy of FORD MOTOR CO.

42. Lubricate the engine front cover and the crankshaft seal inner lip with clean engine oil.

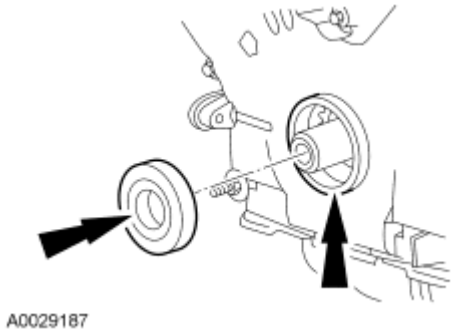

Fig. 559: Locating Crankshaft Front Seal
Courtesy of FORD MOTOR CO.

43. Using the special tools, install the crankshaft front oil seal into the engine front cover.

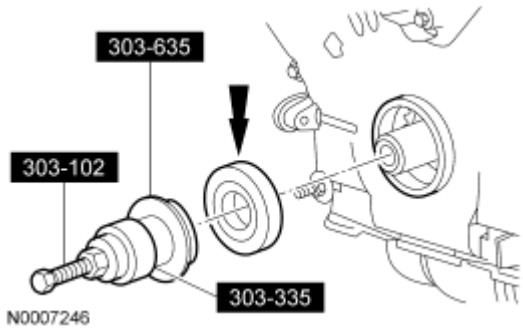

Fig. 560: Installing Crankshaft Front Seal Using Special Tools (303-102, 303-335, 303-635)
Courtesy of FORD MOTOR CO.

NOTE: **If not secured within 4 minutes, the sealant must be removed and the sealing area cleaned with silicone gasket remover and metal surface prep. Allow to dry until there is no sign of wetness, or 4 minutes, whichever is longer. Failure to follow this procedure can cause future oil leakage.**

44. Apply silicone gasket and sealant to the Woodruff key slot in the crankshaft pulley.

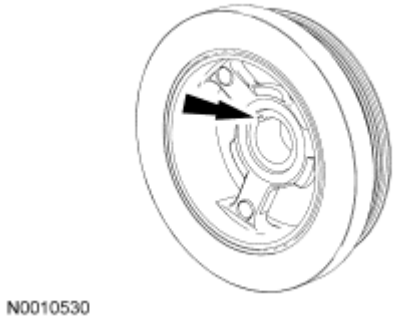

Fig. 561: Applying Silicone Gasket And Sealant To Woodruff Key Slot In Crankshaft Pulley
Courtesy of FORD MOTOR CO.

45. Using the special tool, install the crankshaft pulley.

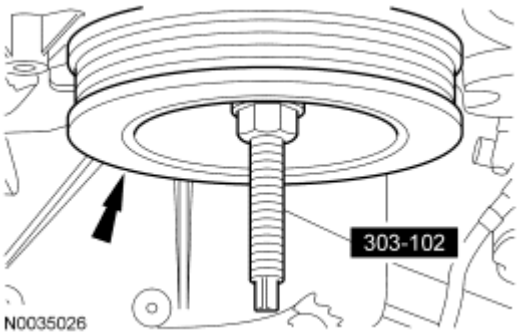

Fig. 562: Installing Crankshaft Pulley Using Special Tool (303-102)
Courtesy of FORD MOTOR CO.

46. Using a new crankshaft pulley bolt, install the bolt and washer and tighten the bolt in 4 stages.
    - Stage 1: Tighten to 90 N.m (66 lb-ft).
    - Stage 2: Loosen 360 degrees.
    - Stage 3: Tighten to 50 N.m (37 lb-ft).
    - Stage 4: Tighten an additional 90 degrees.
47. Install the RH side accessory drive belt idler pulley, the coolant pump pulley and the 5 bolts.
    - Tighten to 25 N.m (18 lb-ft).

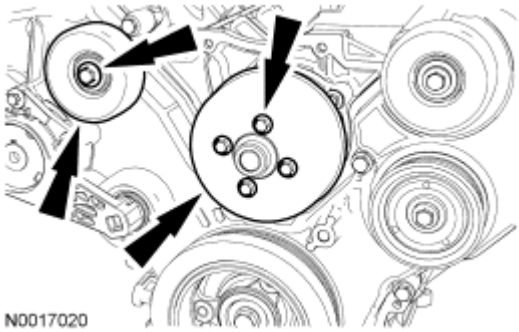

Fig. 563: Locating Accessory Drive Belt Idler Pulley And Bolts
Courtesy of FORD MOTOR CO.

48. Install the crankshaft position (CKP) sensor and the bolt.
    - Tighten to 10 N.m (89 lb-in).

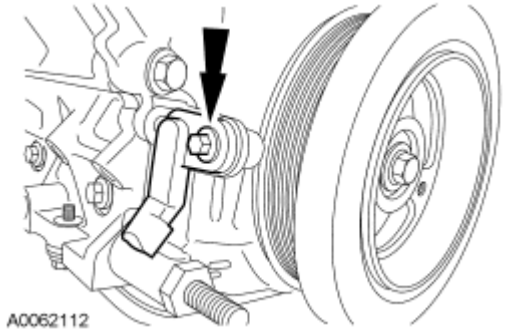

Fig. 564: Locating Crankshaft Position (CKP) Sensor Bolt
Courtesy of FORD MOTOR CO.

NOTE: Lubricate the new O-ring seal with clean engine oil prior to installation.

49. Install the LH camshaft position (CMP) sensor and the bolt.
    - Tighten to 10 N.m (89 lb-in).

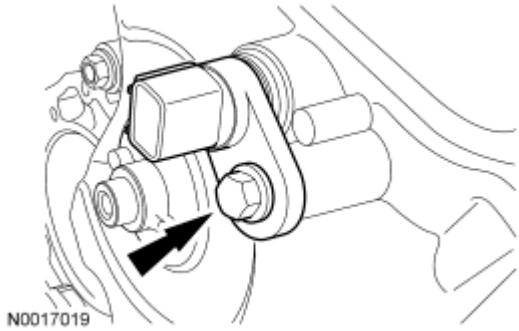

Fig. 565: Locating Camshaft Position (CMP) Sensor And Bolt
Courtesy of FORD MOTOR CO.

NOTE: Lubricate the new O-ring seal with clean engine oil prior to installation.

50. Install the RH CMP sensor and the bolt.
    - Tighten to 10 N.m (89 lb-in).

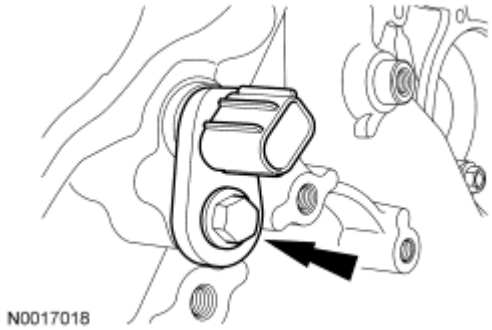

Fig. 566: Locating RH CMP Sensor And Bolt

Courtesy of FORD MOTOR CO.

CAUTION: Do not use metal scrapers, wire brushes, power abrasive discs or other abrasive means to clean sealing surfaces. These tools cause scratches and gouges which make leak paths. Use a plastic scraping tool to remove all traces of old sealant.

51. Clean the valve cover mating surface with silicone gasket remover and metal surface prep. Follow the directions on the packaging.

NOTE: If not secured within 4 minutes, the sealant must be removed and the sealing area cleaned. To clean the sealing area, use silicone gasket remover and metal surface prep. Follow the directions on the packaging. Failure to follow this procedure can cause future oil leakage.

52. Apply silicone gasket and sealant in 2 places where the engine front cover meets the cylinder head.

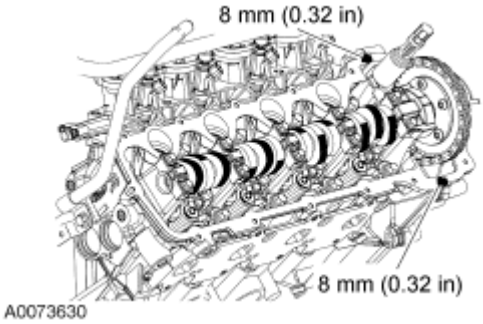

Fig. 567: Applying Bead Of Silicone Gasket And Sealant In 2 Places Where Engine Front Cover Meets Cylinder Head
Courtesy of FORD MOTOR CO.

CAUTION: When installing the valve cover, make sure to avoid damaging the variable camshaft timing (VCT) solenoid.

53. Position the RH valve cover and gasket on the cylinder head and tighten the bolts in the sequence shown.
    - Tighten to 10 N.m (89 lb-in).

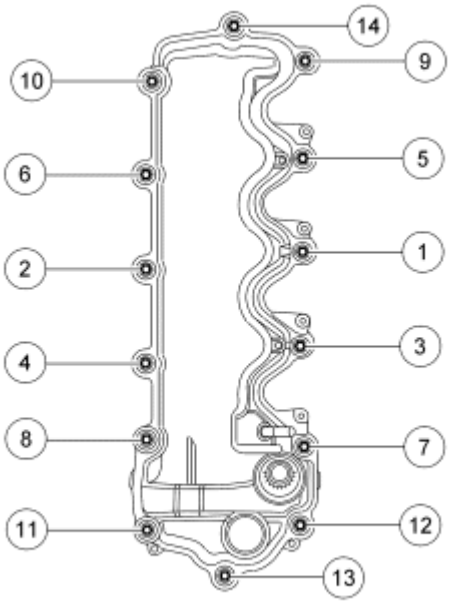

N0006317

Fig. 568: Identifying Tightening Sequence Of Valve Cover Bolts
Courtesy of FORD MOTOR CO.

CAUTION: Do not use metal scrapers, wire brushes, power abrasive discs or other abrasive means to clean sealing surfaces. These tools cause scratches and gouges which make leak paths. Use a plastic scraping tool to remove all traces of old sealant.

54. Clean the valve cover mating surface with silicone gasket remover and metal surface prep. Follow the directions on the packaging.

NOTE: If not secured within 4 minutes, the sealant must be removed and the sealing area cleaned. To clean the sealing area, use silicone gasket remover and metal surface prep. Follow the directions on the packaging. Failure to follow this procedure can cause future oil leakage.

55. Apply silicone gasket and sealant in 2 places where the engine front cover meets the cylinder head.

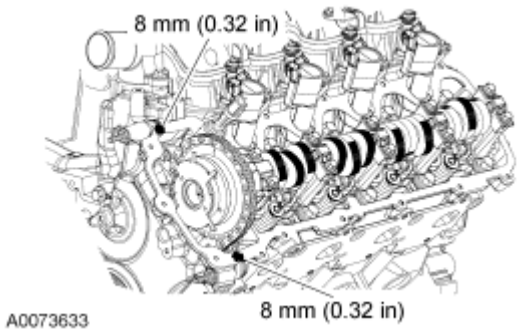

Fig. 569: Applying Bead Of Silicone Gasket And Sealant In 2 Places Where Engine Front Cover Meets Cylinder Head
Courtesy of FORD MOTOR CO.

CAUTION: When installing the valve cover, make sure to avoid damaging the variable camshaft timing (VCT) solenoid.

56. Position the LH valve cover and gasket on the cylinder head and tighten the bolts in the sequence shown.
    - Tighten to 10 N.m (89 lb-in).

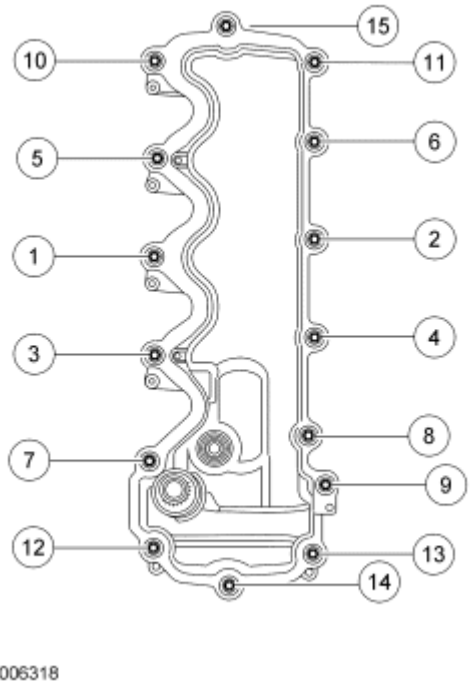

Fig. 570: Identifying Tighten Sequence Of Valve Cover Bolts
Courtesy of FORD MOTOR CO.

57. Install the oil level indicator tube and the bolt.
    - Install a new O-ring seal and lubricate the O-ring seal with clean engine oil prior to installation.

- Tighten to 10 N.m (89 lb-in).

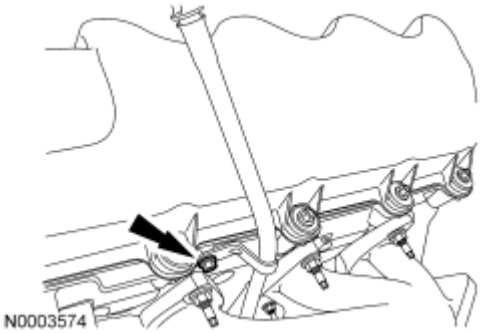

Fig. 571: Locating Oil Level Indicator Tube Bolt
Courtesy of FORD MOTOR CO.

58. Install a new oil filter.

NOTE: LH shown, RH similar.

59. Install the 8 ignition coils and the 8 bolts.
    - Tighten to 6 N.m (53 lb-in).

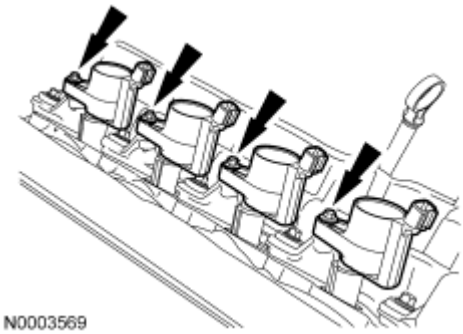

Fig. 572: Identifying Ignition Coils And Bolts
Courtesy of FORD MOTOR CO.

60. Position the engine wiring harness on the engine.
61. Connect the engine oil pressure (EOP) switch electrical connector.

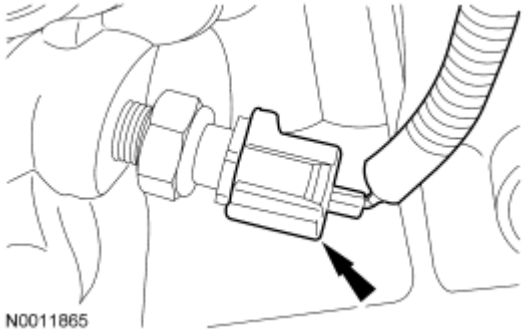

Fig. 573: Locating Engine Oil Pressure Sensor Electrical Connector
Courtesy of FORD MOTOR CO.

62. Attach the engine wiring harness retainer to the stud bolt.
    - Connect the LH heated oxygen sensor (HO2S) electrical connector.

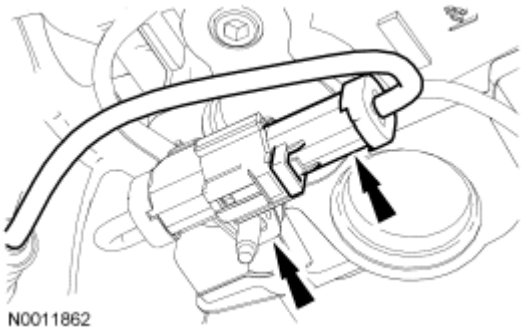

Fig. 574: Locating Heated Oxygen Sensor (HO2S) Electrical Connector
Courtesy of FORD MOTOR CO.

63. Connect the knock sensor (KS) electrical connector and pin-type retainer.

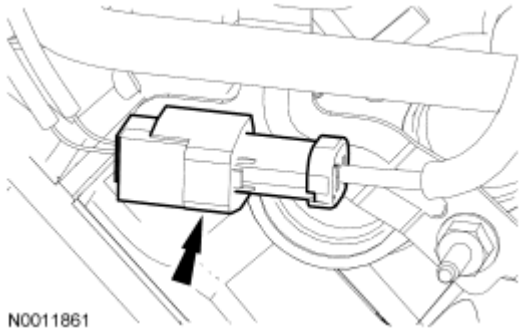

Fig. 575: Locating Knock Sensor (KS) Electrical Connector And Pin-Type Retainer
Courtesy of FORD MOTOR CO.

64. Attach the cylinder head temperature (CHT) sensor jumper harness electrical connector pin-type retainer.

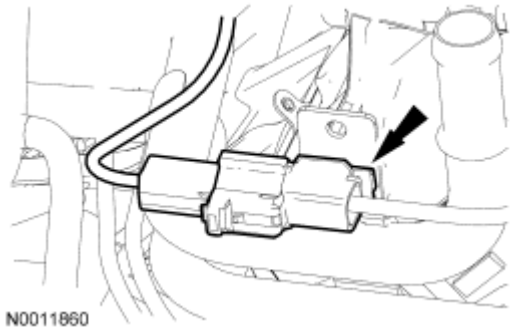

Fig. 576: Identifying Cylinder Head Temperature (CHT) Sensor Jumper Harness Electrical Connector
Courtesy of FORD MOTOR CO.

65. Connect the CHT sensor electrical connector.

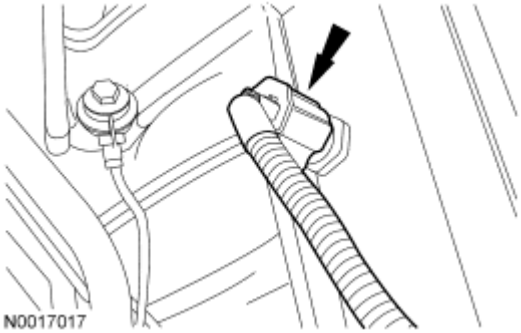

Fig. 577: Locating CHT Sensor Electrical Connector
Courtesy of FORD MOTOR CO.

66. Attach the engine wiring harness pin-type retainers.

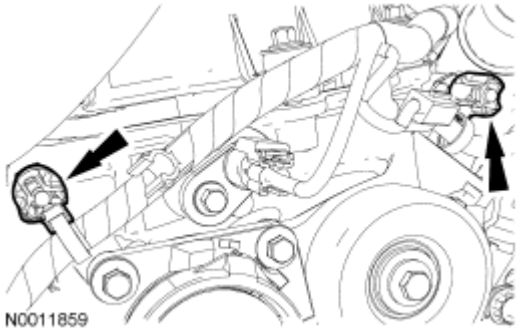

Fig. 578: Locating Engine Wiring Harness Pin-Type Retainers
Courtesy of FORD MOTOR CO.

67. Connect the 2 engine wiring harness retainers to the LH valve cover studs.

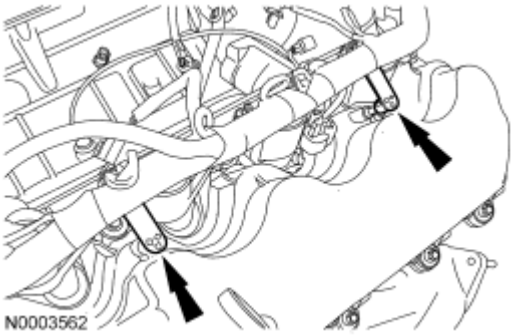

Fig. 579: Locating Engine Wiring Harness Retainers
Courtesy of FORD MOTOR CO.

68. Connect the 3 engine wiring harness retainers to the RH valve cover studs.

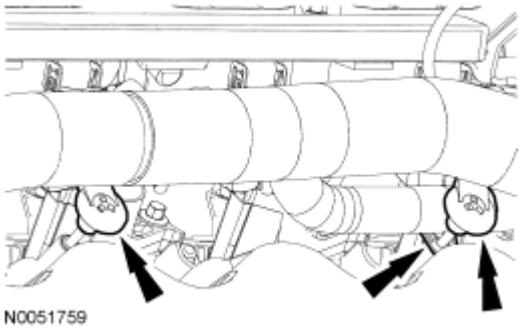

Fig. 580: Disconnecting Engine Wiring Harness Retainers From RH Valve Cover Studs
Courtesy of FORD MOTOR CO.

NOTE: RH shown, LH similar.

69. Connect the 4 RH and 4 LH ignition coil electrical connectors.

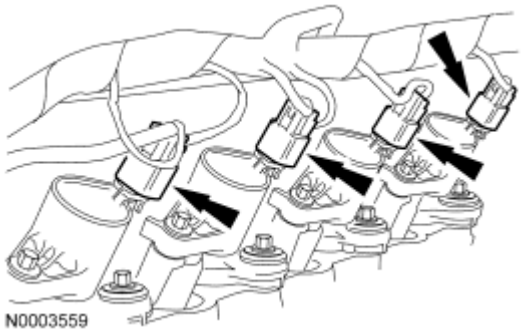

Fig. 581: Locating Ignition Coil Electrical Connectors
Courtesy of FORD MOTOR CO.

70. Connect the PCV tubes to the RH and LH valve covers.

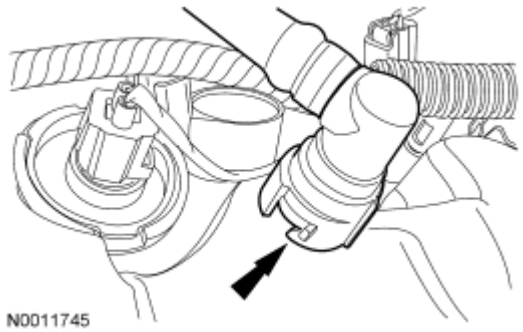

Fig. 582: Locating Positive Crankcase Ventilation Tubes
Courtesy of FORD MOTOR CO.

71. Install the RH radio ignition interference capacitor and nut.
    - Tighten to 10 Nm (89 lb-in).

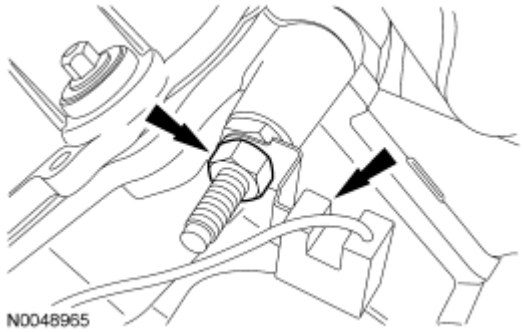

Fig. 583: Identifying Nut & RH Radio Ignition Interference Capacitor
Courtesy of FORD MOTOR CO.

72. Attach the engine wiring harness pin-type retainers.

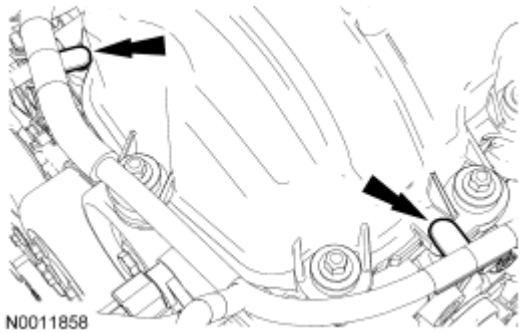

Fig. 584: Locating Engine Wiring Harness Pin-Type Retainers
Courtesy of FORD MOTOR CO.

NOTE: RH shown, LH similar.

73. Connect the RH and LH variable camshaft timing (VCT) solenoid electrical connectors.

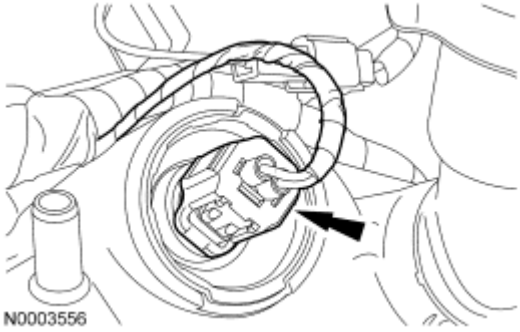

Fig. 585: Locating Camshaft Timing (VCT) Solenoid Electrical Connectors
Courtesy of FORD MOTOR CO.

NOTE: RH shown, LH similar.

74. Connect the RH and LH camshaft position (CMP) sensor electrical connectors.

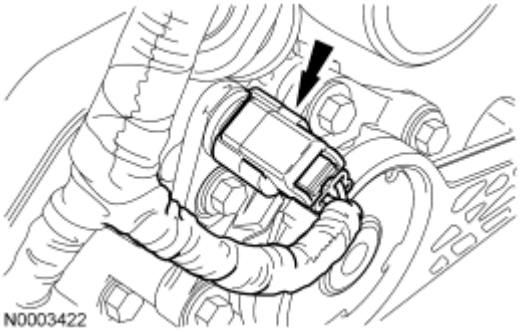

Fig. 586: Identifying RH CMP Sensor Electrical Connector
Courtesy of FORD MOTOR CO.

75. Install the special tool.

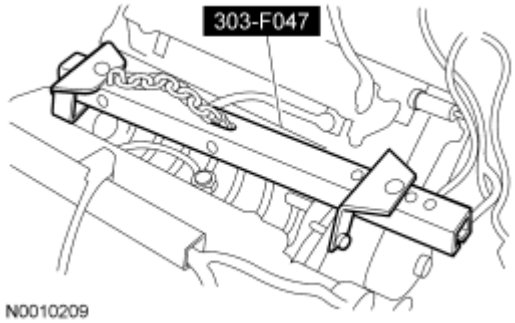

Fig. 587: Identifying Special Tool (303-F047)
Courtesy of FORD MOTOR CO.

76. Using a suitable floor crane, remove the engine from the engine stand.
77. Install the engine. For additional information, refer to **Engine**.

