## 2006 ENGINE

## Engine Mechanical - 3.4L - Equinox & Torrent

# SPECIFICATIONS

### FASTENER TIGHTENING SPECIFICATIONS

**Fastener Tightening Specifications**

| Application | Specification | |
|---|---|---|
| | Metric | English |
| A/C Compressor Bracket Bolt | 50 N.m | 37 lb ft |
| Automatic Transaxle to Engine Bolt | 75 N.m | 55 lb ft |
| Camshaft Position Sensor Bolt | 10 N.m | 89 lb in |
| Camshaft Sprocket Bolt | 140 N.m | 103 lb ft |
| Camshaft Thrust Plate Screw | 10 N.m | 89 lb in |
| Connecting Rod Bearing Cap Bolt | | |
| • First Pass | 20 N.m | 15 lb ft |
| • Final Pass | 75 degrees | |
| Coolant Drain Plug | 19 N.m | 14 lb ft |
| Coolant Temperature Sensor | 23 N.m | 17 lb ft |
| Crankshaft Balancer Bolt | | |
| • First Pass | 70 N.m | 52 lb ft |
| • Final Pass | 72 degrees | |
| Crankshaft Main Bearing Cap Bolt/Stud | | |
| • First Pass | 50 N.m | 37 lb ft |
| • Final Pass | 77 degrees | |
| Crankshaft Oil Deflector Nut | 25 N.m | 18 lb ft |
| Crankshaft Position Sensor Stud-Side of Engine Block | 11 N.m | 98 lb in |
| Crankshaft Position Sensor Shield Nut | 11 N.m | 98 lb in |
| Cylinder Head Bolt | | |
| • First Pass | 60 N.m | 44 lb ft |
| • Final Pass | 95 degrees | |
| Drive Belt Tensioner Bolt | 50 N.m | 37 lb ft |
| EGR Valve Pipe to Exhaust Manifold Bolt | 30 N.m | 22 lb ft |
| EGR Valve Pipe to EGR Valve Bolt | 30 N.m | 22 lb ft |
| EGR Valve to Upper Intake Manifold Bolt | 30 N.m | 22 lb ft |
| Engine Electrical Harness Ground Bolt | 25 N.m | 18 lb ft |
| Engine Front Cover Bolt | | |
| • Large Bolt | 55 N.m | 41 lb ft |

 © 2011 Mitchell Repair Information Company, LLC.

| | | |
|---|---|---|
| • Medium Bolt | 55 N.m | 41 lb ft |
| • Small Bolt | 27 N.m | 20 lb ft |
| Engine Lift Bracket - Rear | 50 N.m | 37 lb ft |
| Engine Lift and Generator Bracket Bolt | 50 N.m | 37 lb ft |
| Engine Mount Bracket Bolt | | |
| • Small Bolt | 25 N.m | 18 lb ft |
| • Large Bolt | 55 N.m | 41 lb ft |
| Engine Mount Bracket to Engine Block Bolt | 85 N.m | 63 lb ft |
| Engine Mount Bracket to Oil Pan | 58 N.m | 43 lb ft |
| Engine Mount to Engine Mount Bracket Nut | 53 N.m | 39 lb ft |
| Engine Mount to Engine Oil Pan Bolts | 58 N.m | 43 lb ft |
| Engine Mount to Frame Bolts | 47 N.m | 35 lb ft |
| Engine Mount to Lower Nut | 47 N.m | 35 lb ft |
| Engine Mount Strut Bolt | 48 N.m | 35 lb ft |
| Engine Mount Strut Bracket Bolt, Left | 70 N.m | 52 lb ft |
| Engine Mount Strut Bracket Bolt, Right | 50 N.m | 37 lb ft |
| Engine Mount Strut and Lift Bracket Bolt - Engine Lift Rear | 50 N.m | 37 lb ft |
| Engine Oil Pressure Indicator Switch | 16 N.m | 12 lb ft |
| Engine to Transaxle Brace Bolt | 50 N.m | 37 lb ft |
| Engine Wiring Harness Bracket Bolt | 13 N.m | 110 lb in |
| Exhaust Crossover Pipe Stud/Nut | 25 N.m | 18 lb ft |
| Exhaust Manifold Heat Shield Bolt | 10 N.m | 89 lb in |
| Exhaust Manifold Nut | 16 N.m | 12 lb ft |
| Exhaust Manifold Stud | 18 N.m | 13 lb ft |
| Flywheel Bolt | 71 N.m | 52 lb ft |
| Frame to Body Bolt | 155 N.m | 114 lb ft |
| Fuel Hose/Pipe Retainer Nut | 28 lb ft | 21 lb ft |
| Fuel Injector Rail Bolt | 10 N.m | 89 lb in |
| Fuel Injector Sight Shield Stud | 10 N.m | 89 lb in |
| Generator B+ Lead Nut | 20 N.m | 15 lb ft |
| Generator Bolt | 50 N.m | 37 lb ft |
| Generator Brace Nut | 25 N.m | 18 lb ft |
| Heated Oxygen Sensor | 42 N.m | 31 lb ft |
| Heater Inlet Pipe Nut | 25 N.m | 18 lb ft |
| Heater Inlet Pipe Stud | 50 N.m | 37 lb ft |
| Heater Outlet Pipe Adapter to Engine Front Cover Bolt | 12 N.m | 106 lb in |
| Heater Outlet Pipe to Throttle Body Bolt | 10 N.m | 89 lb in |
| Heater Outlet Pipe to Throttle Body Nut | 10 N.m | 89 lb in |
| Heater Outlet Pipe to Upper Intake Manifold Nut | 25 N.m | 18 lb ft |
| Ignition Coil Bracket Bolt/Nut/Stud | 25 N.m | 18 lb ft |
| | | |

 © 2011 Mitchell Repair Information Company, LLC.

| | | |
|---|---|---|
| Ignition Control Module Bracket Stud | 25 N.m | 18 lb ft |
| Intake Manifold Coolant Pipe Bolt | 10 N.m | 89 lb in |
| Knock Sensor | 25 N.m | 18 lb ft |
| Left Drive Belt Idler Pulley Bolt | 50 N.m | 37 lb ft |
| Left Engine Mount Strut Bracket to Engine Bolts | 50 N.m | 37 lb ft |
| Left Transaxle Mount to Transaxle Bolt | 50 N.m | 37 lb ft |
| Lower Drive Belt Idler Pulley Bolt | 50 N.m | 37 lb ft |
| Lower Intake Manifold Bolt - Center | | |
| • First Pass | 7 N.m | 62 lb in |
| • Final Pass | 13 N.m | 115 lb in |
| Lower Intake Manifold Bolt - Corner | | |
| • First Pass | 13 N.m | 115 lb in |
| • Final Pass | 25 N.m | 18 lb ft |
| MAP Sensor Bolt | 10 N.m | 89 lb in |
| Negative Battery Cable to Inner Fender Body Ground Nut | 12 N.m | 106 lb in |
| Negative Battery Cable to Transaxle Nut | 45 N.m | 33 lb ft |
| Oil Filter | 30 N.m | 22 lb ft |
| Oil Filter Adapter Bolt | 25 N.m | 18 lb ft |
| Oil Filter Bypass Hole Plug | 19 N.m | 14 lb ft |
| Oil Filter Fitting | 39 N.m | 29 lb ft |
| Oil Gallery Plug - 1/4 inch | 19 N.m | 14 lb ft |
| Oil Gallery Plug - 3/8 inch | 33 N.m | 24 lb ft |
| Oil Level Indicator Tube Bolt | 25 N.m | 18 lb ft |
| Oil Pan Bolt | 25 N.m | 18 lb ft |
| Oil Pan Drain Plug | 25 N.m | 18 lb ft |
| Oil Pan Side Bolt | 50 N.m | 37 lb ft |
| Oil Pressure Indicator Switch | 16 N.m | 12 lb ft |
| Oil Pump Cover Bolt | 10 N.m | 89 lb in |
| Oil Pump Drive Clamp Bolt | 36 N.m | 27 lb ft |
| Oil Pump Mounting Bolt | 41 N.m | 30 lb ft |
| Positive Crankcase Ventilation (PCV) Foul Air Pipe Retaining Clip Bolt | 10 N.m | 89 lb in |
| Right Drive Belt Idler Pulley Bolt | 50 N.m | 37 lb ft |
| Right Engine Mount to Engine Mount Bracket Bolt | 50 N.m | 37 lb ft |
| Spark Plug | 15 N.m | 11 lb ft |
| Spark Plug Wire Retainer Support Bolt | 25 N.m | 18 lb ft |
| Steering Intermediate Shaft Pinch Bolt | 34 N.m | 25 lb ft |
| Throttle Body Bolt/Stud | 10 N.m | 89 lb in |
| Timing Chain Dampener Bolt | 21 N.m | 15 lb ft |
| Torque Converter Bolt | 60 N.m | 44 lb ft |
| | | |

 © 2011 Mitchell Repair Information Company, LLC.

| | | |
|---|---|---|
| Transfer Case Mounting Bracket Bolt | 50 N.m | 37 lb ft |
| Upper Engine Mount Strut Bracket to Upper Radiator Support Bolts | 28 N.m | 21 lb in |
| Upper Intake Manifold Bolt/Stud | 25 N.m | 18 lb ft |
| Valve Lifter Guide Bolt | 10 N.m | 89 lb in |
| Valve Rocker Arm Bolt | 32 N.m | 24 lb ft |
| Valve Rocker Arm Cover Bolt | 10 N.m | 89 lb in |
| Water Outlet Bolt | 25 N.m | 18 lb ft |
| Water Pump Bolt | 11 N.m | 98 lb in |
| Water Pump Pulley Bolt | 25 N.m | 18 lb ft |

## ENGINE MECHANICAL SPECIFICATIONS

### Engine Mechanical Specifications

| Application | Specification | |
|---|---|---|
| | Metric | English |
| General Data | | |
| • Engine Type | 60 degree V-6 | |
| • Displacement | 3.4L | 204 cu in |
| • RPO | LNJ | |
| • VIN | F | |
| • Bore | 92 mm | 3.62 in |
| • Stroke | 84 mm | 3.31 in |
| • Compression Ratio | 9.6:1 | |
| • Firing Order | 1-2-3-4-5-6 | |
| • Spark Plug Gap | 1.52 mm | 0.60 in |
| Block | | |
| • Camshaft Bearing Bore Diameter - Front and Rear | 51.03-51.08 mm | 2.009-2.011 in |
| • Camshaft Bearing Bore Diameter - Middle #2, #3 | 50.77-50.82 mm | 1.999-2.001 in |
| • Crankshaft Main Bearing Bore Diameter | 72.1535-72.0695 mm | 2.840-2.841 in |
| • Crankshaft Main Bearing Bore Out-of-Round | 0.008 mm | 0.00031 in |
| • Cylinder Bore Diameter - Production | 92.020-92.038 mm | 3.622-3.623 in |
| • Cylinder Bore Diameter - Service | 92.020-92.038 mm | 3.622-3.623 in |
| • Cylinder Bore Out-of-Round - Diametral - Production | 0.020 mm | 0.0008 in |
| • Cylinder Bore Out-of-Round - Diametral - Service | 0.025 mm | 0.001 in |
| • Cylinder Bore Taper - Production | 0.020 mm | 0.0008 in |
| • Cylinder Bore Taper - Service | 0.025 mm | 0.001 in |

 © 2011 Mitchell Repair Information Company, LLC.

| | | |
|---|---|---|
| • Cylinder Head Deck Height | 224 mm | 8.818 in |
| • Cylinder Head Deck Surface Flatness | 0.05 mm per 152 mm | 0.0019 in per 6 in |
| • Valve Lifter Bore Diameter | 21.417-21.455 mm | 0.843-0.844 in |
| Camshaft | | |
| • Camshaft Bearing Inside Diameter | 47.523-47.549 mm | 1.871-1.872 in |
| • Camshaft Journal Diameter | 47.45-47.48 mm | 1.868-1.869 in |
| • Camshaft Journal Out-of-Round | 0.025 mm | 0.001 in |
| • Camshaft Lobe Lift - Exhaust | 6.9263 mm | 0.2727 in |
| • Camshaft Lobe Lift - Intake | 6.9263 mm | 0.2727 in |
| Cooling System | | |
| • Capacity | 12.4 liters | 13.1 quarts |
| • Thermostat Full Open Temperature | 91 C | 195 F |
| Connecting Rod | | |
| • Connecting Rod Bearing Clearance | 0.18-0.062 mm | 0.0007-0.017 in |
| • Connecting Rod Bore Diameter | 53.962-53.978 mm | 2.124-2.125 in |
| • Connecting Rod Bore Out-of-Round | 0.008 mm | 0.0002 in |
| • Connecting Rod Length - Center to Center | 144.75-144.81 mm | 5.69-5.70 in |
| • Connecting Rod Side Clearance | 0.25-0.37 mm | 0.010-0.015 in |
| Crankshaft | | |
| • Connecting Rod Journal Diameter | 50.768-50.784 mm | 1.9987-1.9994 in |
| • Connecting Rod Journal Out-of-Round | 0.005 mm | 0.0002 in |
| • Connecting Rod Journal Taper | 0.005 mm | 0.0002 in |
| • Connecting Rod Journal Width | 21.92-22.08 mm | 0.863-0.869 in |
| • Crankshaft End Play | 0.060-0.210 mm | 0.0024-0.0083 in |
| • Crankshaft Main Bearing Journal Width | 23.9-24.1 mm | 0.941-0.949 in |
| • Crankshaft Main Bearing Clearance - Except #3 | 0.019-0.064 mm | 0.0008-0.0025 in |
| • Crankshaft Main Bearing Clearance - #3 Thrust Bearing | 0.032-0.077 mm | 0.0012-0.0030 in |
| • Crankshaft Main Journal Diameter | 67.239-67.257 mm | 2.6473-2.6483 in |
| • Crankshaft Main Journal Out-of-Round | 0.005 mm | 0.0002 in |
| • Crankshaft Main Journal Taper | 0.005 mm | 0.0002 in |
| • Crankshaft Rear Flange Runout | 0.04 mm | 0.0016 in |
| Cylinder Head | | |
| • Combustion Chamber Depth - at Measurement Point | 2.2 mm | 0.087 in |
| | | |

 © 2011 Mitchell Repair Information Company, LLC.

| | | |
|---|---|---|
| • Surface Finish - Maximum | 2.8 Ra | |
| • Surface Flatness - Block Deck | 0.08 mm per 152 mm | 0.003 in per 6 in |
| • Surface Flatness - Exhaust Manifold Deck | 0.1 mm | 0.004 in |
| • Surface Flatness - Intake Manifold Deck | 0.1 mm | 0.004 in |
| • Valve Guide Bore - Exhaust | 8.01 mm | 0.315 in |
| • Valve Guide Bore - Intake | 8.01 mm | 0.315 in |
| • Valve Guide Installed Height | 16.6 mm | 0.654 in |
| Lubrication System | | |
| • Oil Capacity - with Filter | 4.3 liters | 4.5 quarts |
| • Oil Pressure - @ 1850 RPM | 207-241 kPa | 30-35 psi |
| Oil Pump | | |
| • Gear Diameter | 38.05-38.10 mm | 1.498-1.500 in |
| • Gear Pocket - Depth | 30.52-30.58 mm | 1.202-1.204 in |
| • Gear Pocket - Diameter | 38.176-38.226 mm | 1.503-1.505 in |
| • Gears Lash | 0.094-0.195 mm | 0.0037-0.0077 mm |
| • Relief Valve-to-Bore Clearance | 0.038-0.089 mm | 0.0015-0.0035 in |
| Piston Ring End Gap | | |
| • First Compression Ring | 0.15-0.36 mm | 0.006-0.014 in |
| • Second Compression Ring | 0.48-0.74 mm | 0.0188-0.0291 in |
| • Oil Control Ring | 0.25-0.77 mm | 0.0098-0.0303 in |
| Piston Ring to Groove Clearance | | |
| • First Compression Ring | 0.04-0.086 mm | 0.002-0.0033 in |
| • Second Compression Ring | 0.04-0.08 mm | 0.002-0.0031 in |
| • Oil Control Ring | 0.07-0.095 mm | 0.0028-0.0037 in |
| Piston Ring Thickness | | |
| • First Compression Ring | 1.164-1.190 mm | 0.046-0.047 in |
| • Second Compression Ring | 1.460-1.490 mm | 0.0574-0.0586 in |
| • Oil Control Ring - Maximum | 2.960 mm | 0.116 in |
| Piston | | |
| • Piston Diameter - production - cylinder 1-4 | 91.985-92.003 mm | 3.621-3.622 in |
| • Piston Diameter - service limit - cylinder 1-4 | 91.945 mm | 3.619 in |
| • Piston Diameter - production - cylinder 5-6 | 91.99-92.028 mm | 3.621-3.623 in |
| • Piston Diameter - service limit - cylinder 5-6 | 91.945 mm | 3.619 in |
| • Piston Pin Bore Diameter | 23.005-23.010 mm | 0.9057-0.9059 in |
| | | |

 © 2011 Mitchell Repair Information Company, LLC.

| | | |
|---|---|---|
| • Piston Ring Groove Width - First | 1.23-1.25 mm | 0.048-0.049 in |
| • Piston Ring Groove Width - Second | 1.53-1.55 mm | 0.060-0.061 in |
| • Piston Ring Groove Width - Oil Control | 3.03-3.055 mm | 0.119-0.120 in |
| • Piston to Bore Clearance - production - 1-4 | 0.17-0.053 mm | 0.0006-0.0020 in |
| • Piston to Bore Clearance - service limit- 1-4 | 0.093 mm | 0.0036 in |
| • Piston to Bore Clearance - production - 5-6 | -0.008-0.048 mm | -0.0003-0.0018 in |
| • Piston to Bore Clearance - service limit- 5-6 | 0.093 mm | 0.0036 in |
| Pin | | |
| • Piston Pin Clearance to Connecting Rod Bore - Press Fit | -0.047 to -0.019 mm | -0.0019 to -0.0007 in |
| • Piston Pin Clearance to Piston Pin Bore | 0.008-0.016 mm | 0.00031-0.00063 in |
| • Piston Pin Diameter | 22.994-22.997 mm | 0.9053-0.9054 in |
| Valves | | |
| • Valve Face Angle | 45 degrees | |
| • Valve Seat Angle | 46 degrees | |
| • Valve Seat Depth - Intake - from deck face | 7.9-8.1 mm | 0.311-0.318 in |
| • Valve Seat Depth - Exhaust - from deck face | 8.9-9.1 mm | 0.350-0.358 in |
| • Valve Seat Runout | 0.037 mm | 0.0015 in |
| • Valve Seat Width - Intake | 1.55-1.80 mm | 0.061-0.071 in |
| • Valve Seat Width - Exhaust | 1.70-2.0 mm | 0.067-0.079 in |
| • Valve Stem-to-Guide Clearance | 0.026-0.068 mm | 0.0010-0.0027 in |
| Valve Lifters/Push Rods | | |
| • Push Rod Length - Intake | 146.0 mm | 5.75 in |
| • Push Rod Length - Exhaust | 152.5 mm | 6.0 in |
| Valve Springs | | |
| • Valve Spring Free Length | 48.5 mm | 1.89 in |
| • Valve Spring Installed Height | 43.2 mm | 1.701 in |
| • Valve Spring Load - Closed | 320 N @ 43.2 mm | 75 lb @ 1.701 in |
| • Valve Spring Load - Open | 1036 N @ 32 mm | 230 lb @ 1.260 in |
| • Valve Spring Total Number of Coils | 6.55 | |

## SEALERS, ADHESIVES, AND LUBRICANTS

### Sealers, Adhesives, and Lubricants

| Application | Type of Material | GM Part Number | |
|---|---|---|---|
| | | United States | Canada |

 © 2011 Mitchell Repair Information Company, LLC.

| | | | |
|---|---|---|---|
| Camshaft Rear Bearing Hole Plug | Sealant | 12377901 | 10953504 |
| Coolant Drain Plug | Sealant | 12346004 | 10953480 |
| Coolant Temperature Sensor Threads | Sealant | 12346004 | 10953480 |
| Crankshaft Balancer Keyway | Sealant | 12346141 | 10953433 |
| Crankshaft Position Sensor Bolt/Stud Threads | Threadlock | 12345382 | 10953489 |
| Engine Block Coolant Drain Plug Threads | Sealant | 12346004 | 10953480 |
| Engine Block Oil Gallery Plug Threads | Sealant | 12346004 | 10953480 |
| Engine Front Cover Bolt Threads | Sealant | 12346004 | 10953480 |
| Engine Front Cover Gasket Lower Tabs | Sealant | 12346004 | 10953480 |
| Engine Oil | 10W-30 Oil | 12345616 | 993182 |
| Intake Manifold Bolt Threads - Upper and Lower | Threadlock | 12345382 | 10953489 |
| Intake Manifold Coolant Pipe | Sealant | 12345493 | 10953488 |
| Intake Manifold to Engine Block Mating Surface | Sealant | 12346141 | 10953433 |
| Knock Sensor Threads | Sealant | 12346004 | 10953480 |
| Oil Filter Bypass Hole Plug Threads | Sealant | 12346004 | 10953480 |
| Oil Pan Surface at Rear Crankshaft Main Bearing Cap | Sealant | 12346141 | 10953433 |
| Oil Pressure Switch Threads | Sealant | 12346004 | 10953480 |
| Oil Pump Suction Pipe | Sealant | 12346004 | 10953480 |
| Piston and Piston Pin | 10W-30 Oil | 12345616 | 993182 |
| Rear Crankshaft Main Bearing Cap | Sealant | 1052942 | 10953466 |
| Throttle Body Bolt and Stud | Threadlock | 12345382 | 10953489 |
| Valve Lifter Guide Bolt Threads | Threadlock | 12345382 | 10953489 |
| Valve Rocker Arm Cover Notch at Cylinder Head and Lower Intake Manifold | Sealant | 12346141 | 10953433 |
| Valve Lifter and Camshaft Prelube | Lubricant | 12345501 | 992704 |

# COMPONENT LOCATOR

### DISASSEMBLED VIEWS

 © 2011 Mitchell Repair Information Company, LLC.

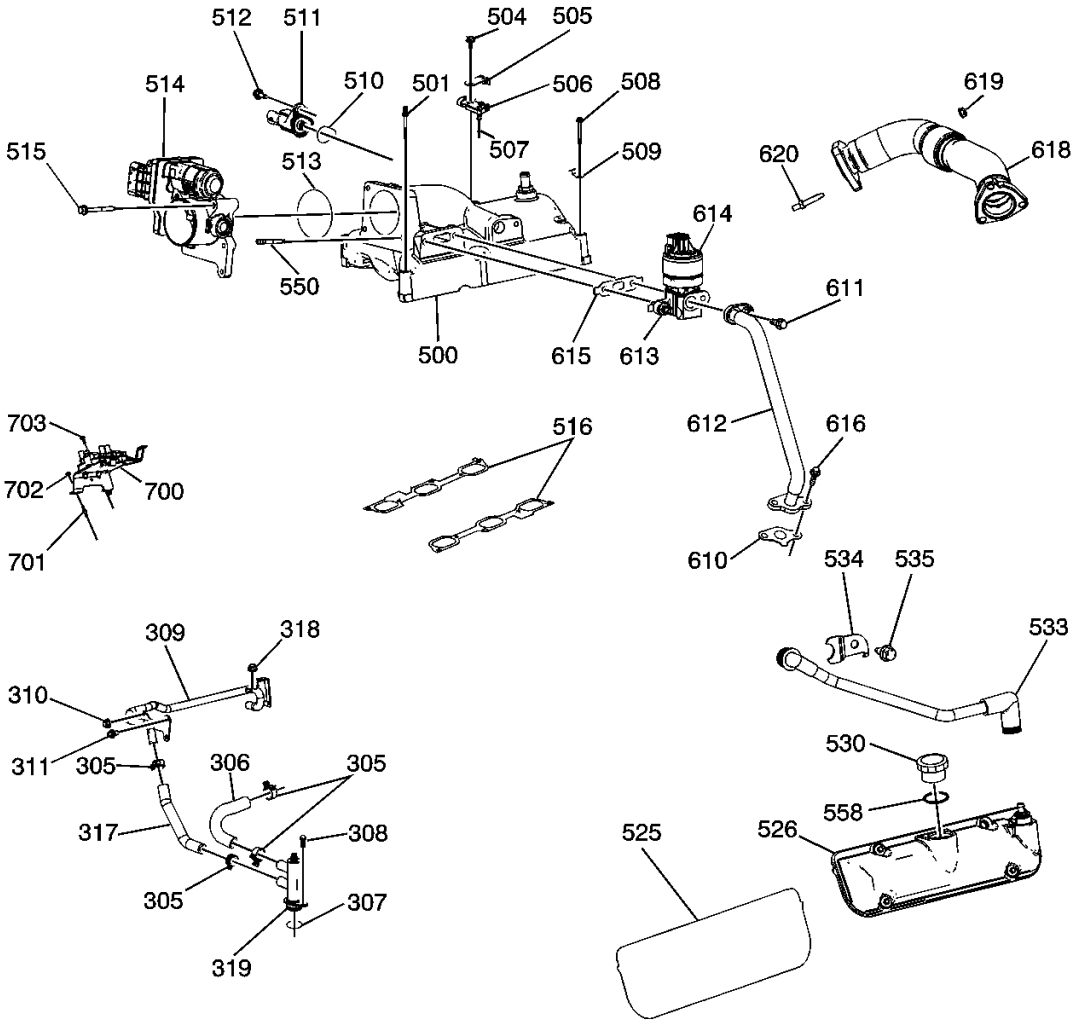


**Fig. 1: Upper Intake Manifold and Components**
**Courtesy of GENERAL MOTORS CORP.**

| Callout | Component Name |
|---|---|
| 305 | Heater Outlet Pipe Hose Clamp |
| 305 | Heater Outlet Pipe Hose Clamp |
| 305 | Heater Outlet Pipe Hose Clamp |
| 306 | Heater Outlet Pipe Hose |
| 307 | Heater Outlet Pipe Seal |
| 308 | Heater Outlet Pipe Bolt - To Front Cover |
| 309 | Heater Outlet Pipe |
| 310 | Heater Outlet Pipe Nut |
| 311 | Heater Outlet Pipe Bolt - To Throttle Body |
| 317 | Heater Outlet Hose |

 © 2011 Mitchell Repair Information Company, LLC.

| | |
|---|---|
| 318 | Heater Outlet Pipe Nut - To Intake |
| 319 | Thermostat Bypass Pipe Adapter |
| 500 | Upper Intake Manifold |
| 501 | Upper Intake Manifold Stud |
| 504 | MAP Sensor Bolt |
| 505 | MAP Sensor Clip |
| 506 | MAP Sensor |
| 507 | MAP Sensor Seal |
| 508 | Upper Intake Manifold Bolt |
| 509 | Spark Plug Support Bracket |
| 510 | EVAP Purge Valve Seal |
| 511 | EVAP Purge Valve |
| 512 | EVAP Purge Valve Bolt |
| 513 | Throttle Body Seal |
| 514 | Throttle Body |
| 515 | Throttle Body Bolt |
| 516 | Upper Intake Manifold Gasket |
| 525 | Valve Rocker Cover Seal |
| 526 | Valve Rocker Cover - Left |
| 530 | Oil Fill Cap |
| 533 | PCV Tube - Foul Air |
| 534 | PCV Tube Clip - Foul Air |
| 535 | PCV Tube Bolt - Foul Air |
| 550 | Throttle Body Stud |
| 558 | Oil Fill Cap O-ring |
| 610 | EGR Valve Gasket - To Exhaust Manifold |
| 611 | EGR Pipe Bolt - To EGR |
| 612 | EGR Pipe |
| 613 | EGR Valve Bolt |
| 614 | EGR Valve |
| 615 | EGR Valve Gasket - To Intake Manifold |
| 616 | EGR Pipe Bolt - To Exhaust Manifold |
| 618 | Exhaust Crossover Pipe |
| 619 | Exhaust Crossover Pipe Nut |
| 620 | Exhaust Crossover Pipe Stud |
| 700 | Ignition Coil Assembly |
| 701 | Ignition Coil Assembly Stud |
| 702 | Ignition Coil Assembly Nut |
| 703 | Ignition Coil Assembly Bolt |

 © 2011 Mitchell Repair Information Company, LLC.

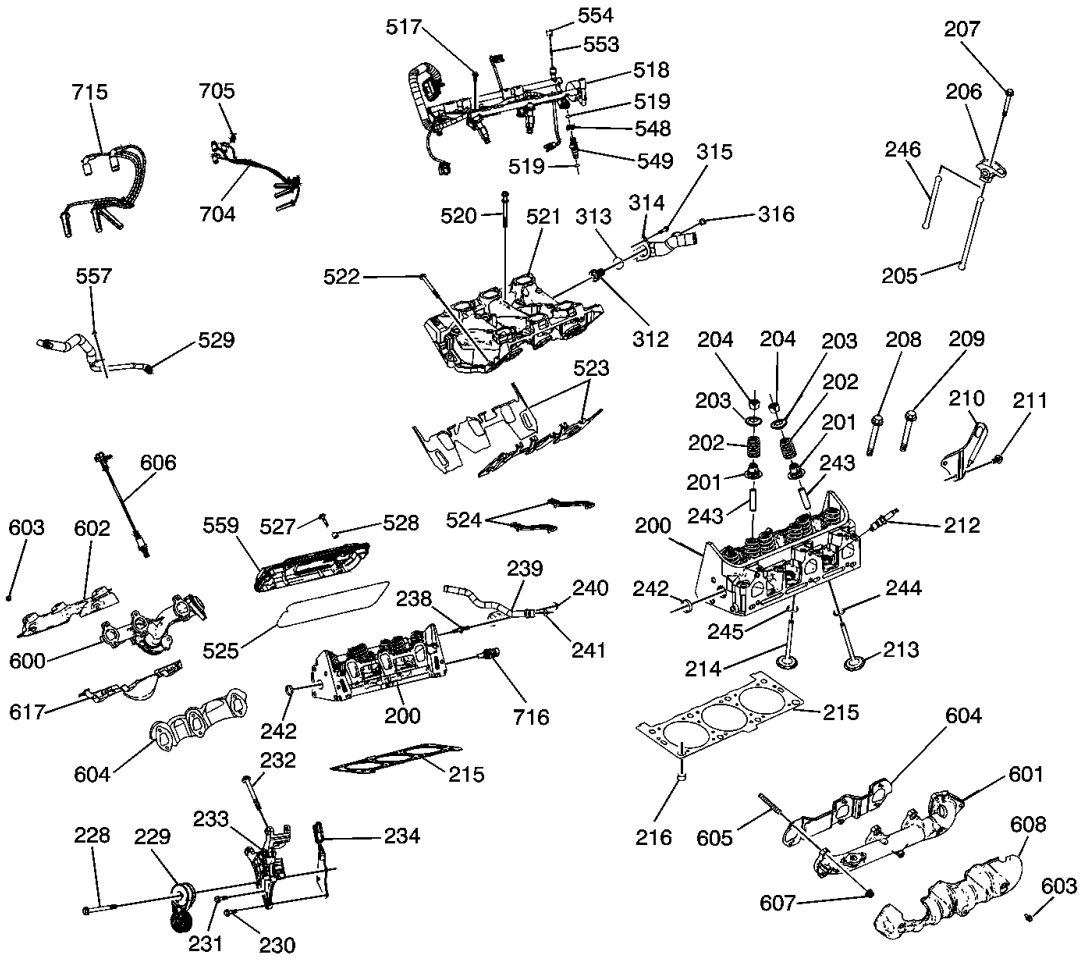


**Fig. 2: Lower Intake Manifold, Cylinder Head and Components**
**Courtesy of GENERAL MOTORS CORP.**

| Callout | Component Name |
|---|---|
| 200 | Cylinder Head |
| 200 | Cylinder Head |
| 201 | Valve Seal |
| 201 | Valve Seal |
| 202 | Valve Spring |
| 202 | Valve Spring |
| 203 | Valve Spring Cap |
| 203 | Valve Spring Cap |
| 204 | Valve Stem Key |
| 204 | Valve Stem Key |
| 205 | Valve Pushrod - Exhaust |
| 206 | Valve Rocker Arm |

 © 2011 Mitchell Repair Information Company, LLC.

| | |
|---|---|
| 207 | Valve Rocker Arm Bolt |
| 208 | Cylinder Head Bolt - Long |
| 209 | Cylinder Head Bolt - Short |
| 210 | Engine Lift Bracket - Rear |
| 211 | Engine Lift Bracket Bolt - Rear |
| 212 | Spark Plug |
| 213 | Exhaust Valve |
| 214 | Intake Valve |
| 215 | Cylinder Head Gasket |
| 215 | Cylinder Head Gasket |
| 216 | Cylinder Head Locating Pin |
| 228 | Drive Belt Tensioner Bolt |
| 229 | Drive Belt Tensioner |
| 230 | Generator Bracket Bolt - Short |
| 231 | Generator Bracket Bolt - Medium |
| 232 | Generator Bracket Bolt - Long |
| 233 | Generator Bracket |
| 234 | Engine Lift Bracket - Front |
| 238 | Heater Inlet Pipe Stud |
| 239 | Heater Inlet Pipe |
| 240 | Heater Inlet Pipe Nut |
| 241 | Heater Inlet Pipe Seal |
| 242 | Cylinder Head Expansion Plug |
| 242 | Cylinder Head Expansion Plug |
| 243 | Valve Guide |
| 243 | Valve Guide |
| 244 | Valve Seat - Exhaust |
| 245 | Valve Seat - Intake |
| 246 | Valve Pushrod - Intake |
| 312 | Engine Coolant Thermostat |
| 313 | Engine Coolant Thermostat Seal |
| 314 | Water Outlet Housing |
| 315 | Water Outlet Housing Bolt |
| 316 | Water Outlet Housing Fitting |
| 517 | Fuel Rail Bolt |
| 518 | Fuel Rail |
| 519 | Fuel Injector Seal |
| 519 | Fuel Injector Seal |
| 520 | Lower Intake Manifold Bolt - Long |
| 521 | Lower Intake Manifold |
| 522 | Lower Intake Manifold Bolt - Short |

 © 2011 Mitchell Repair Information Company, LLC.

| | |
|---|---|
| | Lower Intake Manifold Gasket |
| 524 | Lower Intake Manifold Seal |
| 525 | Valve Rocker Cover Seal |
| 527 | Valve Rocker Cover Bolt |
| 528 | Valve Rocker Cover Bolt Grommet |
| 529 | PCV Tube - Fresh Air |
| 548 | Fuel Injector Retaining Clip |
| 549 | Fuel Injector |
| 553 | Fuel Schrader Valve |
| 554 | Fuel Service Port Cap |
| 557 | PCV Tube Nut - Fresh Air |
| 559 | Valve Rocker Cover - Right |
| 600 | Exhaust Manifold - Left |
| 601 | Exhaust Manifold - Right |
| 602 | Exhaust Manifold Heat Shield - Right - Upper |
| 603 | Exhaust Manifold Heat Shield Bolt |
| 603 | Exhaust Manifold Heat Shield Bolt |
| 604 | Exhaust Manifold Gasket |
| 604 | Exhaust Manifold Gasket |
| 605 | Exhaust Manifold Stud |
| 606 | Heated Oxygen Sensor |
| 607 | Exhaust Manifold Nut |
| 608 | Exhaust Manifold Heat Shield - Left |
| 617 | Exhaust Manifold Heat Shield -Right - Lower |
| 704 | Spark Plug Wire Harness - Front |
| 705 | Spark Plug Wire Support |
| 715 | Spark Plug Wire Harness - Rear |
| 716 | Coolant Temperature Sensor |

 © 2011 Mitchell Repair Information Company, LLC.

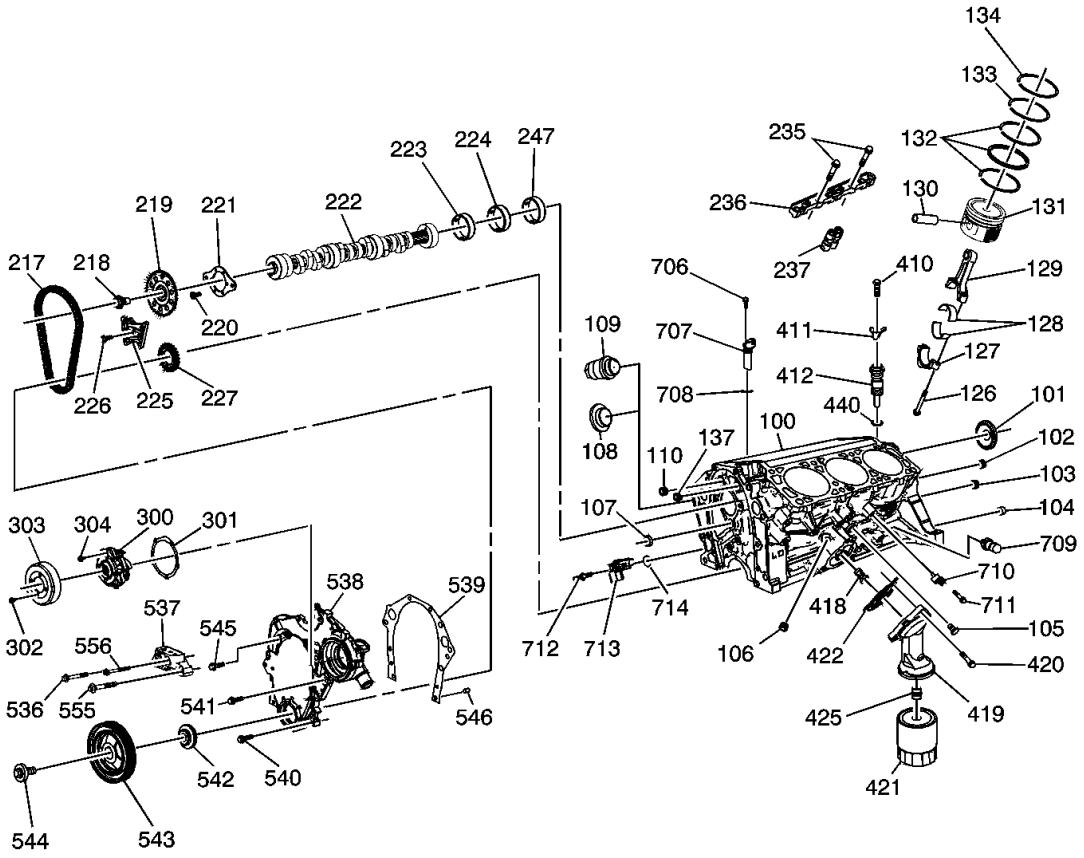


**Fig. 3: Engine Block and Components**
**Courtesy of GENERAL MOTORS CORP.**

| Callout | Component Name |
|---|---|
| 100 | Engine Block |
| 101 | Camshaft Rear Bearing Hole Plug |
| 102 | Engine Block Oil Gallery Plug Assembly - Rear - Large |
| 103 | Engine Block Oil Gallery Plug Assembly - Rear - Small |
| 104 | Transmission Locating Pin |
| 105 | Engine Block Coolant Drain Hole Plug |
| 106 | Oil Filter Bypass Hole Plug Assembly |
| 107 | Engine Block Oil Gallery Plug Assembly - Front |
| 108 | Engine Block Heater Plug |
| 109 | Engine Block Heater |
| 110 | Engine Block Oil Gallery Plug - Front - Small |
| 126 | Connecting Rod Bearing Cap Bolt |
| 127 | Connecting Rod Bearing Cap |
| 128 | Connecting Rod Bearing |
| | |

 © 2011 Mitchell Repair Information Company, LLC.

| | |
|---|---|
| 129 | Connecting Rod |
| 130 | Piston Pin |
| 131 | Piston |
| 132 | Piston Ring - Oil Control |
| 133 | Piston Ring - Compression - Lower |
| 134 | Piston Ring - Compression - Upper |
| 137 | Engine Block Oil Gallery Plug - Front - Large |
| 217 | Timing Chain |
| 218 | Camshaft Sprocket Bolt |
| 219 | Camshaft Sprocket |
| 220 | Camshaft Thrust Plate Bolt |
| 221 | Camshaft Thrust Plate |
| 222 | Camshaft |
| 223 | Camshaft Bearing - 1 |
| 224 | Camshaft Bearing - 2 and 3 |
| 225 | Timing Chain Dampener |
| 226 | Timing Chain Dampener Bolt |
| 227 | Crankshaft Sprocket |
| 235 | Valve Lifter Guide Bolt |
| 236 | Valve Lifter Guide |
| 237 | Valve Lifter |
| 247 | Camshaft Bearing - 4 |
| 300 | Water Pump |
| 301 | Water Pump Gasket |
| 302 | Water Pump Pulley Bolt |
| 303 | Water Pump Pulley |
| 304 | Water Pump Bolt |
| 410 | Oil Pump Drive Bolt |
| 411 | Oil Pump Drive Clamp |
| 412 | Oil Pump Drive |
| 418 | Oil Filter Bypass Valve |
| 419 | Oil Filter Adapter |
| 420 | Oil Filter Adapter Bolt |
| 421 | Oil Filter |
| 422 | Oil Filter Adapter Gasket |
| 425 | Oil Filter Fitting |
| 440 | Oil Pump Drive Seal |
| 536 | Engine Mount Snubber Bracket Bolt |
| 537 | Engine Mount Snubber Bracket |
| 538 | Engine Front Cover |
| 539 | Engine Front Cover Gasket |
| 540 | |

 © 2011 Mitchell Repair Information Company, LLC.

| | |
|---|---|
| | Engine Front Cover Bolt - Small |
| 541 | Engine Front Cover Bolt - Medium |
| 542 | Crankshaft Front Oil Seal |
| 543 | Crankshaft Balancer |
| 544 | Crankshaft Balancer Bolt |
| 545 | Engine Front Cover Bolt - Large |
| 546 | Engine Front Cover Locating Pin |
| 555 | Engine Mount Snubber Bracket Bolt - Large |
| 556 | Engine Mount Snubber Bracket Bolt - Small |
| 706 | Camshaft Sensor Bolt |
| 707 | Camshaft Sensor |
| 708 | Camshaft Sensor Seal |
| 709 | Engine Oil Pressure Sensor |
| 710 | Knock Sensor |
| 711 | Knock Sensor Bolt |
| 712 | Crankshaft Position Sensor Stud |
| 713 | Crankshaft Position Sensor |
| 714 | Crankshaft Position Sensor Seal |

 © 2011 Mitchell Repair Information Company, LLC.

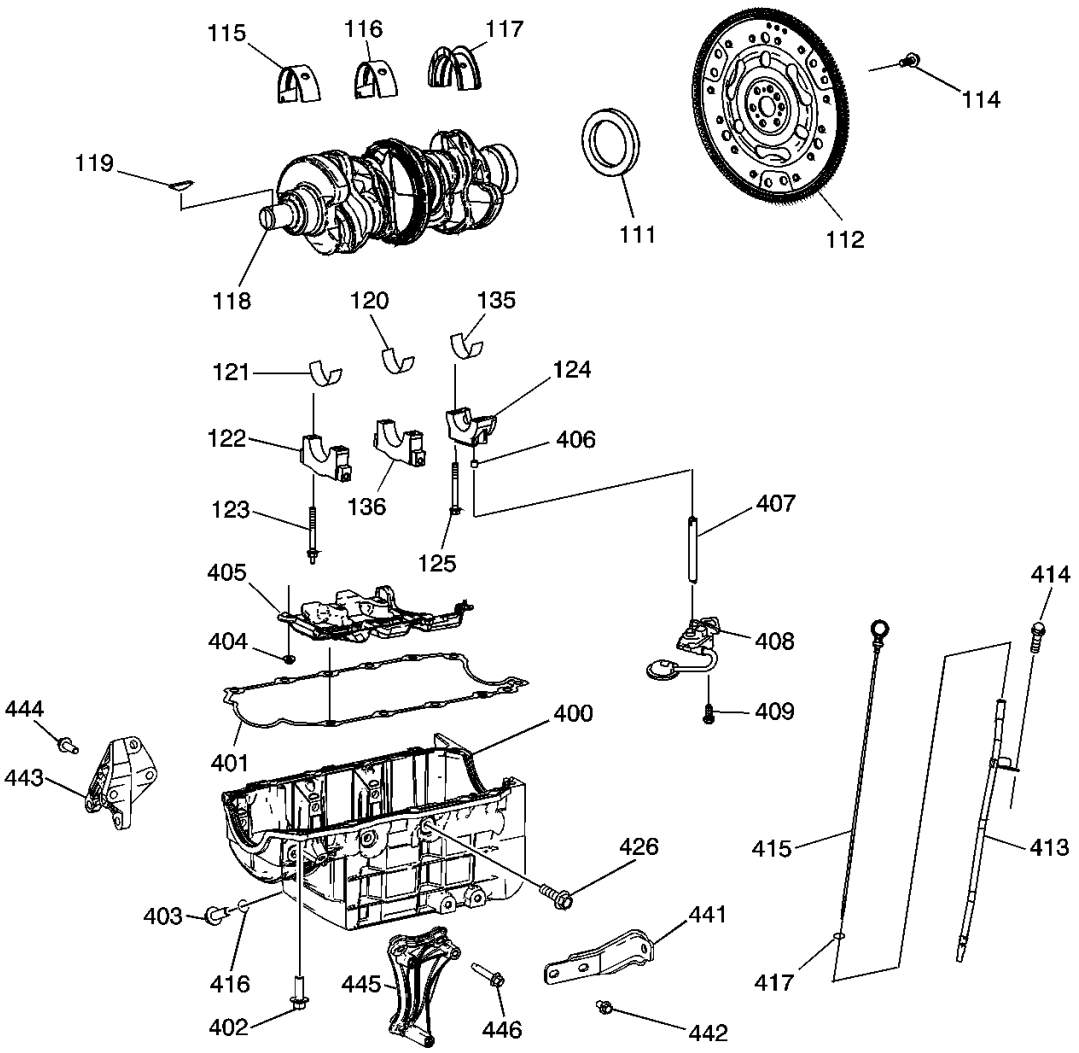


**Fig. 4: Crankshaft and Components**
**Courtesy of GENERAL MOTORS CORP.**

| Callout | Component Name |
|---|---|
| 111 | Crankshaft Rear Oil Seal Assembly |
| 112 | Flywheel |
| 114 | Flywheel Bolt |
| 115 | Crankshaft Upper Bearing - 1 and 4 |
| 116 | Crankshaft Upper Bearing - 2 |
| 117 | Crankshaft Upper Bearing - 3 |
| 118 | Crankshaft |
| 119 | Crankshaft Balancer Key |
| 120 | Crankshaft Lower Bearing - 2 |
| | |

 © 2011 Mitchell Repair Information Company, LLC.

| | |
|---|---|
| 121 | Crankshaft Lower Bearing - 1 and 4 |
| 122 | Crankshaft Bearing Cap - 1 |
| 123 | Crankshaft Bearing Cap Stud |
| 124 | Crankshaft Bearing Cap - 4 |
| 125 | Crankshaft Bearing Cap Bolt |
| 135 | Crankshaft Lower Bearing - 3 |
| 136 | Crankshaft Bearing Cap - 2 and 3 |
| 400 | Oil Pan |
| 401 | Oil Pan Gasket |
| 402 | Oil Pan Bolt - To Engine Block |
| 403 | Oil Pan Drain Plug |
| 404 | Crankshaft Oil Deflector Nut |
| 405 | Crankshaft Oil Deflector |
| 406 | Oil Pump Locating Pin |
| 407 | Oil Pump Shaft |
| 408 | Oil Pump |
| 409 | Oil Pump Bolt |
| 413 | Oil Level Indicator Tube |
| 414 | Oil Level Indicator Tube Bolt |
| 415 | Oil Level Indicator |
| 416 | Oil Pan Drain Plug Seal |
| 417 | Oil Level Indicator Seal |
| 426 | Oil Pan Bolt - Side of Pan |
| 441 | Oil Pan Support Bracket - To Transmission Bell Housing |
| 442 | Oil Pan Support Bracket Bolt - To Oil Pan |
| 443 | Oil Pan Support Bracket - To Transmission Tail Shaft |
| 444 | Oil Pan Support Bracket Bolt - To Transmission Tail Shaft |
| 445 | A/C Mounting Bracket |
| 446 | A/C Mounting Bracket Bolt |

**ENGINE IDENTIFICATION**

 © 2011 Mitchell Repair Information Company, LLC.

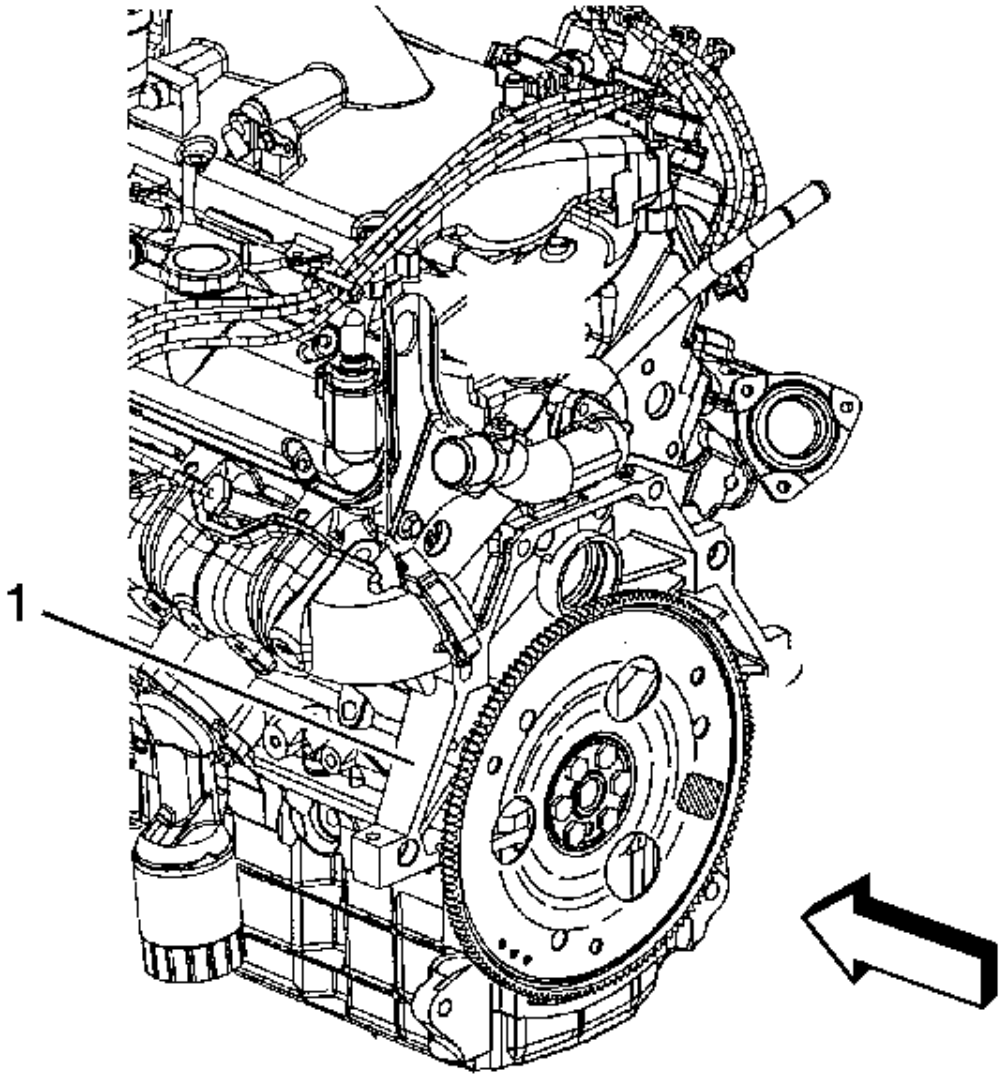


**Fig. 5: Locating VIN Derivative**
**Courtesy of GENERAL MOTORS CORP.**

The Vehicle Identification Number - VIN derivative (1) for 3400 LNJ is stamped or laser etched on the left side rear of the engine block. The Vehicle Identification Number - VIN derivative is 9 digits long and can be used to determine if a vehicle contains the original engine.

- The first digit identifies the division.
- The second digit identifies the model year.

 © 2011 Mitchell Repair Information Company, LLC.

- The third digit identifies the assembly plant.
- The fourth through ninth digits are the last six digits of the Vehicle Identification Number - VIN.

# DIAGNOSTIC INFORMATION AND PROCEDURES

## DIAGNOSTIC STARTING POINT - ENGINE MECHANICAL

Begin the system diagnosis by reviewing the **Disassembled Views**, **Engine Component Description**, **Drive Belt System Description**, and **Lubrication Description** in Engine Mechanical. Reviewing the description and operation information will help you determine the correct symptom diagnostic procedure when a malfunction exists. Reviewing the description and operation information will also help you determine if the condition described by the customer is normal operation. Refer to **Symptoms - Engine Mechanical** in order to identify the correct procedure for diagnosing the system and where the procedure is located.

## SYMPTOMS - ENGINE MECHANICAL

### Strategy Based Diagnostics

1. Perform **Diagnostic System Check - Vehicle** in Vehicle DTC Information before using the symptom tables if applicable.
2. Review the system operations in order to familiarize yourself with the system functions. Refer to **Disassembled Views**,**Engine Component Description**, **Drive Belt System Description**, and **Lubrication Description**.

All diagnosis on a vehicle should follow a logical process. Strategy based diagnostics is a uniform approach for repairing all systems. The diagnostic flow may always be used in order to resolve a system problem. The diagnostic flow is the place to start when repairs are necessary. For a detailed explanation, refer to **Strategy Based Diagnosis** in General Information.

### Visual/Physical Inspection

- Inspect for aftermarket devices which could affect the operation of the Engine. Refer to **Checking Aftermarket Accessories** in Wiring Systems.
- Inspect the easily accessible or visible system components for obvious damage or conditions which could cause the symptom.
- Check for the correct oil level, proper oil viscosity, and correct filter application.
- Verify the exact operating conditions under which the concern exists. Note factors such as engine RPM, ambient temperature, engine temperature, amount of engine warm-up time, and other specifics.
- Compare the engine sounds if applicable to a known good engine and make sure you are not trying to correct a normal condition.

### Intermittent

Test the vehicle under the same conditions that the customer reported in order to verify the system is operating properly.

 © 2011 Mitchell Repair Information Company, LLC.

**Symptom List**

Refer to a symptom diagnostic procedure from the following list in order to diagnose the symptom:

- **Base Engine Misfire without Internal Engine Noises**
- **Base Engine Misfire with Abnormal Internal Lower Engine Noises**
- **Base Engine Misfire with Abnormal Valve Train Noise**
- **Base Engine Misfire with Coolant Consumption**
- **Base Engine Misfire with Excessive Oil Consumption**
- **Engine Compression Test**
- **Engine Noise on Start-Up, but Only Lasting a Few Seconds**
- **Upper Engine Noise, Regardless of Engine Speed**
- **Lower Engine Noise, Regardless of Engine Speed**
- **Engine Noise Under Load**
- **Engine Will Not Crank - Crankshaft Will Not Rotate**
- **Oil Consumption Diagnosis**
- **Oil Pressure Diagnosis and Testing**
- **Oil Leak Diagnosis**
- **Drive Belt Chirping Diagnosis**
- **Drive Belt Squeal Diagnosis**
- **Drive Belt Whine Diagnosis**
- **Drive Belt Rumbling Diagnosis**
- **Drive Belt Vibration Diagnosis**
- **Drive Belt Falls Off Diagnosis**
- **Drive Belt Excessive Wear Diagnosis**
- **Drive Belt Tensioner Diagnosis**

## BASE ENGINE MISFIRE WITHOUT INTERNAL ENGINE NOISES

**Base Engine Misfire without Internal Engine Noises**

| Cause | Correction |
|---|---|
| Abnormalities consist of severe cracking, bumps, or missing areas in the accessory drive belt<br>Abnormalities in the accessory drive system and/or components may cause engine RPM variations and lead to a misfire DTC. A misfire code may be present without an actual misfire condition. | Replace the drive belt. Refer to **Drive Belt Tensioner Replacement**. |
| Worn, damaged, or mis-aligned accessory drive components or excessive pulley runout may lead to a misfire DTC.<br>A misfire code may be present without an actual misfire condition. | Inspect the components, and repair or replace as required. |

 © 2011 Mitchell Repair Information Company, LLC.

| | |
|---|---|
| Loose or improperly installed engine flywheel or crankshaft balancer<br>A misfire code may be present without an actual misfire condition. | Repair or replace the flywheel and/or balancer as required. Refer to **Engine Flywheel Replacement** or **Crankshaft Balancer Replacement**. |
| Restricted exhaust system<br>A severe restriction in the exhaust flow can cause significant loss of engine performance and may set a DTC. Possible causes of restrictions include collapsed or dented pipes or plugged mufflers and/or catalytic converters. | Repair or replace as required. |
| Improperly installed or damaged vacuum hoses | Repair or replace as required. |
| Improper sealing between the intake manifold and cylinder heads or throttle body. | Replace the intake manifold, gaskets, cylinder heads, and/or throttle body as required. |
| Worn or loose rocker arms<br>The rocker arm bearing end caps and/or needle bearings should be intact and in the proper position. | Replace the valve rocker arms as required. |
| Worn or bent pushrods | Replace the pushrods. |
| Stuck valves<br>Carbon buildup on the valve stem can cause the valve not to close properly. | Repair or replace as required. |
| Excessively worn or mis-aligned timing chain | Replace the timing chain and sprockets as required. |
| Worn camshaft lobes | Replace the camshaft and valve lifters. |
| Excessive oil pressure<br>A lubrication system with excessive oil pressure may lead to excessive valve lifter pump-up and loss of compression. | • Perform an oil pressure test. Refer to **Oil Pressure Diagnosis and Testing**.<br>• Repair or replace the oil pump as required. |
| Faulty cylinder head gaskets and/or cracking or other damage to the cylinder heads and engine block cooling system passages. Refer to **Diagnostic Starting Point - Engine Cooling** .<br>Coolant consumption may or may not cause the engine to overheat. | • Inspect for spark plugs saturated by coolant. Refer to **Spark Plug Inspection** in Engine Controls.<br>• Inspect the cylinder heads, engine block, and/or head gaskets.<br>• Repair or replace as required. |
| Worn Piston Rings<br>Oil consumption may or may not cause the engine to misfire. | • Inspect the spark plugs for oil deposits. Refer to **Spark Plug Inspection** in Engine Controls.<br>• Inspect the cylinders for a loss of compression. Refer to **Engine Compression Test**.<br>• Perform cylinder leak down and compression testing to identify the cause.<br>• Repair or replace as required. |

## BASE ENGINE MISFIRE WITH ABNORMAL INTERNAL LOWER ENGINE NOISES

### Base Engine Misfire with Abnormal Internal Lower Engine Noises

 © 2011 Mitchell Repair Information Company, LLC.

| Cause | Correction |
|---|---|
| Abnormalities consist of severe cracking, bumps or missing areas in the accessory drive belt<br>Abnormalities in the accessory drive system and/or components may cause engine RPM variations, noises similar to a faulty lower engine and also lead to a misfire condition. A misfire code may be present without an actual misfire condition. | Replace the drive belt. Refer to **Drive Belt Tensioner Replacement**. |
| Worn, damaged, or mis-aligned accessory drive components or excessive pulley runout<br>A misfire code may be present without an actual misfire condition. | Inspect the components, repair or replace as required. |
| Loose or improperly installed engine flywheel or crankshaft balancer<br>A misfire code may be present without an actual misfire condition. | Repair or replace the flywheel and/or balancer as required.<br>Refer to **Engine Flywheel Replacement** or **Crankshaft Balancer Replacement**. |
| Worn Piston Rings<br>Oil consumption may or may not cause the engine to misfire. | • Inspect the spark plugs for oil deposits. Refer to **Spark Plug Inspection** in Engine Controls.<br>• Inspect the cylinders for a loss of compression. Refer to **Engine Compression Test**.<br>• Perform cylinder leak down and compression testing to determine the cause.<br>• Repair or replace as required. |
| Worn Crankshaft Thrust Bearings<br>Severely worn thrust surfaces on the crankshaft and/or thrust bearing may permit fore and aft movement of the crankshaft and create a DTC without an actual misfire condition. | Replace the crankshaft and bearings as required. |

## BASE ENGINE MISFIRE WITH ABNORMAL VALVE TRAIN NOISE

### Base Engine Misfire with Abnormal Valve Train Noise

| Cause | Correction |
|---|---|
| Worn or loose rocker arms<br>The rocker arm bearing end caps and/or needle bearings should intact within the rocker arm assembly. | Replace the valve rocker arms as required. |
| Worn or bent pushrods | Replace the pushrods. |
| Stuck valves<br>Carbon buildup on the valve stem can cause the valve not to close properly. | Repair or replace as required. |
| Excessively worn or mis-aligned timing chain | Replace the timing chain and sprockets as required. |
| Worn camshaft lobes | Replace the camshaft and valve lifters. |
| Sticking lifters | Replace as required. |

 © 2011 Mitchell Repair Information Company, LLC.

## BASE ENGINE MISFIRE WITH COOLANT CONSUMPTION

**Base Engine Misfire with Coolant Consumption**

| Cause | Correction |
|---|---|
| Faulty cylinder head gaskets and/or cracking or other damage to the cylinder heads and engine block cooling system passages. Refer**Diagnostic Starting Point - Engine Cooling** .<br>Coolant consumption may or may not cause the engine to overheat. | • Inspect for spark plugs saturated by coolant. Refer to **Spark Plug Inspection** in Engine Controls.<br>• Perform a cylinder leak down test.<br>• Inspect the cylinder heads and engine block for damage to the coolant passages and/or a faulty head gasket.<br>• Repair or replace as required. |

## BASE ENGINE MISFIRE WITH EXCESSIVE OIL CONSUMPTION

**Base Engine Misfire with Excessive Oil Consumption**

| Cause | Correction |
|---|---|
| Worn valves, valve guides and/or valve stem oil seals | • Inspect the spark plugs for oil deposits. Refer to **Spark Plug Inspection** in Engine Controls.<br>• Repair or replace as required. |
| Worn Piston Rings<br>Oil consumption may or may not cause the engine to misfire. | • Inspect the spark plugs for oil deposits. Refer to **Spark Plug Inspection** in Engine Controls.<br>• Inspect the cylinders for a loss of compression. Refer to **Engine Compression Test**.<br>• Perform cylinder leak down and compression testing to determine the cause.<br>• Repair or replace as required. |
| Worn or faulty lower intake manifold gaskets | Replace as required. |

## ENGINE NOISE ON START-UP, BUT ONLY LASTING A FEW SECONDS

**Engine Noise on Start-Up, but Only Lasting a Few Seconds**

| Cause | Correction |
|---|---|
| Incorrect oil filter without anti-drainback feature | Install the correct oil filter. |
| Incorrect oil viscosity | 1. Drain the oil.<br>2. Install the correct viscosity oil. |
| Worn crankshaft thrust bearing | • Inspect the thrust bearing and crankshaft.<br>• Repair or replace as required. |
| High valve lifter leak down rate | Replace the lifters as required. |

## UPPER ENGINE NOISE, REGARDLESS OF ENGINE SPEED

 © 2011 Mitchell Repair Information Company, LLC.

**Upper Engine Noise, Regardless of Engine Speed**

| Cause | Correction |
|---|---|
| Low oil pressure | • Perform an oil pressure test. Refer to **Oil Pressure Diagnosis and Testing**.<br>• Repair or replace as required. |
| Loose and/or worn valve rocker arm attachments | • Inspect the valve rocker arm stud, nut, or bolt.<br>• Repair or replace as required. |
| Worn valve rocker arm | Replace the valve rocker arm. |
| Bent or damaged push rod | Inspect the following components, and replace as required:<br>• The valve rocker arm<br>• The valve push rod<br>• The valve lifter |
| Improper lubrication to the valve rocker arms | Inspect the following components, and repair or replace as required:<br>• The valve rocker arm<br>• The valve push rod<br>• The valve lifter<br>• The oil filter bypass valve<br>• The oil pump and pump screen<br>• The engine block oil galleries |
| Broken valve spring | Replace the valve spring. |
| Worn and/or damaged valve rotators | Replace the valve rotators as required. |
| Worn or dirty valve lifters | Replace the valve lifters. |
| Stretched or broken timing chain and/or damaged sprocket teeth | Replace the timing chain and sprockets. |
| Worn timing chain tensioner if applicable | Replace the timing chain tensioners as required. |
| Worn engine camshaft lobes | • Inspect the engine camshaft lobes.<br>• Replace the camshaft and valve lifters as required. |
| Damaged, broken, or dirty, balance shaft sprocket teeth if applicable | Inspect the following components, and repair as required:<br>• The balance shaft gear<br>• The camshaft gear<br>• The balance shaft rear bushing |
| Worn valve guides or valve stems | Inspect the following components, and repair as required: |

 © 2011 Mitchell Repair Information Company, LLC.

| | |
|---|---|
| | • The valves<br>• The valve guides |
| Stuck Valves<br>Carbon on the valve stem or valve seat may cause the valve to stay open | Inspect the following components, and repair as required:<br>• The valves<br>• The valve guides |

**LOWER ENGINE NOISE, REGARDLESS OF ENGINE SPEED**

**Lower Engine Noise, Regardless of Engine Speed**

| Cause | Correction |
|---|---|
| Low oil pressure | • Perform an oil pressure test. Refer to **Oil Pressure Diagnosis and Testing**.<br>• Repair or replace damaged components as required. |
| Worn accessory drive components<br>Abnormalities such as severe cracking, bumps or missing areas in the accessory drive belt and/or misalignment of system components. | • Inspect the accessory drive system.<br>• Repair or replace as required. |
| Loose or damaged crankshaft balancer | • Inspect the crankshaft balancer.<br>• Repair or replace as required. |
| Detonation or spark knock | Verify the correct operation of the ignition controls system. Refer to **Electronic Ignition (EI) System Description** in Engine Controls. |
| Loose torque converter bolts | • Inspect the torque converter bolts and flywheel.<br>• Repair or replace as required. |
| Loose or damaged flywheel | Repair or replace the flywheel. |
| Damaged oil pan, contacting the oil pump screen<br>An oil pan that has been damaged may improperly position the oil pump screen, preventing proper oil flow to the oil pump. | • Inspect the oil pan.<br>• Inspect the oil pump screen.<br>• Repair or replace as required. |
| Oil pump screen loose, damaged or restricted | • Inspect the oil pump screen.<br>• Repair or replace as required. |
| Excessive piston-to-cylinder bore clearance | • Inspect the piston and cylinder bore.<br>• Repair as required. |
| Excessive piston pin-to-bore clearance | • Inspect the piston, piston pin, and the connecting rod.<br>• Repair or replace as required. |
| Excessive connecting rod bearing clearance | Inspect the following components, and repair as |

 © 2011 Mitchell Repair Information Company, LLC.

| | |
|---|---|
| | required:<br>• The connecting rod bearings<br>• The connecting rods<br>• The crankshaft<br>• The crankshaft journals |
| Excessive crankshaft bearing clearance | Inspect the following components, and repair as required:<br>• The crankshaft bearings<br>• The crankshaft journals |
| Incorrect piston, piston pin and connecting rod installation<br>Pistons must be installed with the mark or dimple on the top of the piston facing the front of the engine. Piston pins must be centered in the connecting rod pin bore. | • Verify the pistons, piston pins and connecting rods are installed correctly.<br>• Repair as required. |

**ENGINE NOISE UNDER LOAD**

**Engine Noise Under Load**

| Cause | Correction |
|---|---|
| Low oil pressure | • Perform an oil pressure test. Refer to **Oil Pressure Diagnosis and Testing**.<br>• Repair or replace as required. |
| Detonation or spark knock | Verify the correct operation of the ignition controls. Refer to **Electronic Ignition (EI) System Description** in Engine Controls. |
| Loose torque converter bolts | • Inspect the torque converter bolts and flywheel.<br>• Repair as required. |
| Cracked flywheel automatic transmission | • Inspect the flywheel bolts and flywheel.<br>• Repair as required. |
| Excessive connecting rod bearing clearance | Inspect the following components, and repair as required:<br>• The connecting rod bearings<br>• The connecting rods<br>• The crankshaft |
| Excessive crankshaft bearing clearance | Inspect the following components, and repair as required:<br>• The crankshaft bearings |

 © 2011 Mitchell Repair Information Company, LLC.

| | |
|---|---|
| | • The crankshaft journals<br>• The cylinder block crankshaft bearing bore |

## ENGINE WILL NOT CRANK - CRANKSHAFT WILL NOT ROTATE

### Engine Will Not Crank - Crankshaft Will Not Rotate

| Cause | Correction |
|---|---|
| Seized accessory drive system component | 1. Remove accessory drive belt or belts.<br>2. Rotate crankshaft by hand at the balancer or flywheel location. |
| Hydraulically locked cylinder<br>• Coolant/antifreeze in cylinder<br>• Oil in cylinder<br>• Fuel in cylinder | 1. Remove spark plugs and check for fluid.<br>2. Inspect for broken head gasket or gaskets.<br>3. Inspect for cracked engine block or cylinder head.<br>4. Inspect for a sticking fuel injector and/or leaking fuel regulator. |
| Seized automatic transmission torque converter | 1. Remove the torque converter bolts.<br>2. Rotate crankshaft by hand at the balancer or flywheel location. |
| Broken timing chain and/or timing chain gears | 1. Inspect timing chain and gears.<br>2. Repair as required. |
| Seized balance shaft bearing if equipped | 1. Inspect balance shaft bearings.<br>2. Repair as required. |
| Material in cylinder<br>• Broken valve<br>• Piston material<br>• Foreign material | 1. Inspect cylinder for damaged components and/or foreign materials.<br>2. Repair or replace as required. |
| Seized crankshaft or connecting rod bearings | 1. Inspect crankshaft and connecting rod bearings.<br>2. Repair as required. |
| Bent or broken connecting rod | 1. Inspect connecting rods.<br>2. Repair as required. |
| Broken crankshaft | 1. Inspect crankshaft.<br>2. Repair as required. |

## COOLANT IN COMBUSTION CHAMBER

### Coolant in Combustion Chamber

| | |
|---|---|

 © 2011 Mitchell Repair Information Company, LLC.

| Cause | Correction |
|---|---|
| DEFINITION: Excessive white smoke and/or coolant type odor coming from the exhaust pipe may indicate coolant in the combustion chamber. Low coolant levels, an inoperative cooling fan, or a faulty thermostat may lead to an "overtemperature" condition which may cause engine component damage.<br><br>1. A slower than normal cranking speed may indicate coolant entering the combustion chamber. Refer to **Engine Will Not Crank - Crankshaft Will Not Rotate**.<br>2. Remove the spark plugs and inspect for spark plugs saturated by coolant or coolant in the cylinder bore.<br>3. Inspect by performing a **Cylinder Leakage Test**. During this test, excessive air bubbles within the coolant may indicate a faulty gasket or damaged component.<br>4. Inspect by performing a cylinder compression test. Two cylinders "side-by-side" on the engine block, with low compression, may indicate a failed cylinder head gasket. Refer to **Engine Compression Test**. | |
| Cracked intake manifold or failed gasket | Replace the components as required. |
| Faulty cylinder head gasket | Replace the head gasket and components as required. Refer to **Cylinder Head Cleaning and Inspection** and**Cylinder Head Replacement - Left** or **Cylinder Head Replacement - Right**. |
| Warped cylinder head | Machine the cylinder head to the proper flatness, if applicable and replace the cylinder head gasket. Refer to **Cylinder Head Replacement - Left** or **Cylinder Head Replacement - Right**. |
| Cracked cylinder head | Replace the cylinder head and gasket. |
| Cracked cylinder liner or engine block | Replace the components as required. |
| Cylinder head or engine block porosity | Replace the components as required. |
| Lower intake manifold damage or porosity | Replace the components as required. |

## COOLANT IN ENGINE OIL

### Coolant in Engine Oil

| Cause | Correction |
|---|---|
| DEFINITION: Foamy or discolored oil or an engine oil "overfill" condition may indicate coolant entering the engine crankcase. Low coolant levels, an inoperative cooling fan, or a faulty thermostat may lead to an "overtemperature" condition which may cause engine component damage. Contaminated engine oil and oil filter should be changed.<br><br>1. Inspect the oil for excessive foaming or an overfill condition. Oil diluted by coolant may not properly lubricate the crankshaft bearings and may lead to component damage. Refer to **Lower Engine Noise, Regardless of Engine Speed**.<br>2. Inspect by performing a **Cylinder Leakage Test**. During this test, excessive air bubbles within the cooling system may indicate a faulty gasket or damaged component.<br>3. Inspect by performing a cylinder compression test. Two cylinders "side-by-side" on the engine block with low compression may indicate a failed cylinder head gasket. Refer to **Engine** | |

 © 2011 Mitchell Repair Information Company, LLC.

| | |
|---|---|
| **Compression Test**. | |
| Faulty external engine oil cooler | Replace the components as required. |
| Faulty cylinder head gasket | Replace the head gasket and components as required. Refer to **Cylinder Head Cleaning and Inspection** and **Cylinder Head Replacement - Left** or **Cylinder Head Replacement - Right**. |
| Warped cylinder head | Machine the cylinder head to proper flatness, if applicable, and replace the cylinder head gasket. Refer to **Cylinder Head Replacement - Left** or **Cylinder Head Replacement - Right**. |
| Cracked cylinder head | Replace the cylinder head and gasket. |
| Cracked cylinder liner or engine block | Replace the components as required. |
| Cylinder head, block, or manifold porosity | Replace the components as required. |
| Faulty or damaged lower intake gaskets | Replace the components as required. |

**ENGINE COMPRESSION TEST**

A compression pressure test of the engine cylinders determines the condition of the rings, the valves, and the head gasket.

**IMPORTANT: Remove the Powertrain Control Module (PCM) and the ignition fuses from the I/P fuse block. Refer to Electrical Center Identification Views in Wiring Systems.**

1. Disable the ignition.
2. Disable the fuel systems.
3. Remove the spark plugs from all the cylinders.
4. Remove the air duct from the throttle body.
5. Block the throttle plate in the open position.
6. Measure the engine compression, using the following procedure:
    1. Firmly install the compression gauge to the spark plug hole.
    2. Have an assistant crank the engine through at least 4 compression strokes in the testing cylinder.
    3. Record the readings on the gauge at each stroke.
    4. Disconnect the gauge.
    5. Repeat the compression test for each cylinder.
7. Record the compression readings from all of the cylinders.
    - The lowest reading should not be less than 70 percent of the highest reading.
    - No cylinder reading should be less than 689 kPa (100 psi).
8. The following list contains examples of the possible measurements:
    - When the compression measurement is normal, the compression builds up quickly and evenly to the specified compression on each cylinder.
    - When the compression is low on the first stroke and tends to build up on the following strokes, but

 © 2011 Mitchell Repair Information Company, LLC.

does not reach the normal compression, the piston rings may be the cause.
- If the compression improves considerably with the addition of three squirts of oil, the piston rings may be the cause.
- When the compression is low on the first stroke and does not build up in the following strokes, the valves may be the cause.
- The addition of oil does not affect the compression, the valves may be the cause.
- When the compression is low on two adjacent cylinders, or coolant is present in the crankcase, the head gasket may be the cause.

9. Remove the block from the throttle plate.
10. Install the air duct to the throttle body.
11. Install the spark plugs.
12. Install the Powertrain Control Module (PCM) fuse.
13. Install the ignition fuse to the I/P fuse block.

## CYLINDER LEAKAGE TEST

### Testing Procedure

#### Tools Required

**J 35667-A** Cylinder Head Leakdown Tester. See **Special Tools**.

With the use of air pressure, a cylinder leakage test will aid in the diagnosis. Use the cylinder leakage test in conjunction with the engine compression test in order to isolate the cause of leaking cylinders.

**CAUTION: Refer to Battery Disconnect Caution in Cautions and Notices.**

1. Disconnect the negative battery cable.
2. Remove the spark plugs. Refer to **Spark Plug Replacement** in Engine Controls.
3. Install the **J 35667-A** . See **Special Tools**.
4. Measure each cylinder on the compression stroke, with both valves closed.

**IMPORTANT: Hold the crankshaft balancer bolt in order to prevent piston movement.**

5. Apply air pressure, using the **J 35667-A** . See **Special Tools**. Refer to the manufacturer's instructions.
6. Record the cylinder leakage readings for each cylinder.

**IMPORTANT:**
- **Normal cylinder leakage is from 12 to 18 percent.**
- **Make a note of any cylinder with more leakage than the other cylinders.**
- **Any cylinder with 30 percent leakage or more requires service.**

 © 2011 Mitchell Repair Information Company, LLC.

7. Inspect the 4 primary areas in order to properly diagnose a leaking cylinder.
8. If air is heard from the intake or exhaust system, perform the following procedure:
   - Remove the valve rocker arm cover of the suspect cylinder head.
     - Ensure that both valves are closed.
     - Inspect the cylinder head for a broken valve spring.
   - Remove and inspect the suspect cylinder head. Refer to **Cylinder Head Cleaning and Inspection**.
9. If air is heard from the crankcase system at the crankcase oil filler tube, perform the following procedure:
   1. Remove the piston from the suspect cylinder.
   2. Inspect the piston and connecting rod assembly. Refer to **Piston, Connecting Rod, and Bearings Cleaning and Inspection**.
   3. Inspect the engine block. Refer to **Engine Block Cleaning and Inspection**.
10. If bubbles are found in the radiator, perform the following procedure:
    - Remove and inspect both cylinder heads. Refer to **Cylinder Head Cleaning and Inspection**.
    - Inspect the engine block. Refer to **Engine Block Cleaning and Inspection**.
11. Remove the **J 35667-A** . See **Special Tools**.
12. Install the spark plugs. Refer to **Spark Plug Replacement** in Engine Controls.
13. Connect the negative battery cable. Refer to Battery Disconnect Caution in Cautions and Notices.

**OIL CONSUMPTION DIAGNOSIS**

An engine that has excessive oil consumption uses 0.9 L (1 qt) of oil, or more, within 3 200 km (2,000 mi). The following list indicates the conditions and corrections of excessive oil consumption:

- An improperly read oil level indicator dipstick
  - Inspect the oil level while the vehicle is parked on a level surface.
  - Allow adequate drain-down time.
- Improper oil viscosity

  Use the recommended SAE viscosity for prevailing temperatures.

- Continuous high-speed driving
- Severe hauling, such as a trailer. This causes decreased oil mileage.
- A malfunctioning crankcase ventilation system
- External oil leaks
  - Tighten the bolts, as needed.
  - Replace the gaskets and seals, as needed.
- Worn or omitted valve guides and/or valve stem seals
  - Ream the guides.
  - Install oversized service valves and/or new valve stem seals.
- Broken or worn piston rings

 © 2011 Mitchell Repair Information Company, LLC.

- Improperly installed or unseated piston rings
- Improperly installed or improperly fitted piston
- Plugged cylinder head gasket oil drain holes
- Damaged intake gaskets

## OIL PRESSURE DIAGNOSIS AND TESTING

### Low or No Oil Pressure

The following conditions may cause low or no oil pressure:

- Low oil level

  Fill to the full mark on the oil level indicator.

- Incorrect or malfunctioning oil pressure switch

  Replace the oil pressure switch.

- Incorrect or malfunctioning oil pressure gage

  Replace the oil pressure gage.

- Improper oil viscosity or diluted oil
  - Install oil of proper viscosity for expected temperature.
  - Install new oil if the oil is diluted.
- A worn or dirty oil pump

  Clean or replace the oil pump.

- A plugged oil filter

  Replace the oil filter.

- A loose or plugged oil pickup screen

  Replace the oil pickup screen.

- A hole in the oil pickup tube

  Replace the oil pickup tube.

- Excessive bearing clearance

  Replace the bearings.

 © 2011 Mitchell Repair Information Company, LLC.

- Cracked, porous, or plugged oil gallery

  Repair or replace the engine block.

- Missing or improperly installed gallery plugs

  Install or repair the plugs as needed.

- A stuck pressure regulator valve
  - Inspect the pressure regulator valve for sticking in the bore.
  - Inspect the bore for scoring and burrs.
- A worn or poorly machined camshaft

  Replace the camshaft.

**Oil Pressure Testing**

**Tools Required**

**J 25087-C** Oil Pressure Tester. See **Special Tools**.

If the vehicle has low oil pressure complete the following steps:

1. Inspect the oil level.
2. Raise and support the vehicle. Refer to **Lifting and Jacking the Vehicle** in General Information.
3. Remove the oil filter.
4. Assemble the plunger valve in the large hole of the **J 25087-C** base. See **Special Tools**. Insert the hose in the small hole of the **J 25087-C** base. See **Special Tools**. Connect the gage to the end of the hose.
5. Insert the flat side of the rubber plug in the bypass valve without depressing the bypass valve.
6. Install the **J 25087-C** on the filter mounting pad. See **Special Tools**.
7. Start the engine.
8. Inspect the overall oil pressure, the oil pressure switch, and for noisy lifters. Ensure that the engine is at operating temperature before inspecting the oil pressure. The oil pressure should be approximately 414 kPa (60 psi) at 1,850 RPM using 5W-30 engine oil.
9. If adequate oil pressure is indicated, test the oil pressure switch.
10. If a low reading is indicated, press the valve on the tester base in order to isolate the oil pump and/or its components from the lubricating system. An adequate reading at this time indicates a good pump and the previous low pressure was due to worn bearings, etc. A low reading while pressing the valve indicates a faulty pump.

## OIL LEAK DIAGNOSIS

**Tools Required**

 © 2011 Mitchell Repair Information Company, LLC.

**J 28428-E** High Intensity Black Light Kit. See **Special Tools**.

You may repair most fluid leaks by first visually locating the leak, repairing or replacing the component, or by resealing the gasket surface. Once the leak is identified, determine the cause of the leak. Repair the leak and the cause of leak.

**Locating and Identifying the Leak**

Use the visual inspection method in order to determine if the leaking fluid is one of the following items:

- Engine oil
- Transmission fluid
- Power steering fluid
- Brake fluid
- Some other fluid
- Engine coolant
- Fuel

**Visual Inspection Method**

Complete the following steps in order to perform the visual inspection method:

1. Bring the vehicle to normal operating temperature.
2. Park the vehicle over a large sheet of paper, or other clean surface.
3. Wait several minutes, then inspect for dripping fluids.
4. Identify the type of fluid, and the approximate location of the leak.
5. Visually inspect the suspected area. Use a small mirror if necessary.
6. Inspect for leaks at sealing surfaces, fittings, or from cracked or damaged components.
7. If you cannot locate the leak, perform the following steps:
    1. Completely clean the entire engine and surrounding components.
    2. Operate the vehicle for several miles at normal operation temperature and at varying speeds.
    3. Park the vehicle over a large sheet of paper, or other clean surface.
    4. Wait several minutes, then inspect for dripping fluids.
    5. Identify the type of fluid, and the approximate location of the leak.
    6. Visually inspect the suspected area. Use a small mirror if necessary.
8. If you still cannot locate the leak, use the powder method or the black light and dye method.

**Powder Method**

1. Completely clean the entire engine and surrounding components.
2. Apply an aerosol-type powder, baby powder, foot powder, etc., to the suspected area.
3. Operate the vehicle for several miles at normal operation temperature and at varying speeds.

 © 2011 Mitchell Repair Information Company, LLC.

4. Identify the type of fluid, and the approximate location of the leak, from the discolorations in the powder surface.
5. Visually inspect the suspected area. Use a small mirror to assist in looking at hard to see areas.

   Refer to Possible Causes for Leaks if necessary.

**Black Light and Dye Method**

A dye and light kit is available for finding leaks.

1. Use the **J 28428-E** or the equivalent. See **Special Tools**. Refer to the manufacturer's instructions when using the tool.
2. Visually inspect the suspected area. Use a small mirror if necessary

   Refer to Possible Causes for Leaks if necessary.

**Possible Causes for Leaks**

Inspect the vehicle for the following conditions:

- Higher than recommended fluid levels
- Higher than recommended fluid pressures
- Plugged or malfunctioning fluid filters or pressure bypass valves
- Plugged or malfunctioning engine ventilation system
- Improperly tightened or damaged fasteners
- Cracked or porous components
- Improper sealants or gaskets where required
- Improper sealant or gasket installation
- Damaged or worn gaskets or seals
- Damaged or worn sealing surfaces

## CRANKCASE VENTILATION SYSTEM INSPECTION/DIAGNOSIS

**Crankcase Ventilation (CV) System Inspection**

- Test for vacuum at the foul air hose where it connects to the positive crankcase ventilation (PCV) valve. There should be manifold vacuum present at the hose. If there is no vacuum, inspect for a plugged hose, leaking hose or a plugged intake manifold crankcase ventilation vacuum passage.
- Plug the end of the foul air hose while the engine is running. Inspect the hose for any areas that collapse when the end of the hose is blocked. Replace the hose if it collapses when blocked.
- If oil has accumulated in the intake air duct, inspect for the following conditions:
  - Plugged PCV valve.
  - Plugged foul air hose

 © 2011 Mitchell Repair Information Company, LLC.

  - Plugged intake manifold crankcase ventilation vacuum passage.
  - Missing or damaged PCV to valve rocker arm cover grommet.
  - Excessive air leakage past engine gaskets and/or seals preventing a vacuum condition in crankcase.
  - Excessive crankcase pressure or blow-by, refer to **Cylinder Leakage Test**.
- Additional items to inspect:
  - Plugged or leaking fresh air vent hose.
  - Plugged or restricted passages in the throttle body
  - Missing, damaged, or leaking; PCV to valve rocker arm cover grommet, valve rocker arm cover seals, oil pan seal, and all other crankcase seals and sealing areas for leaks.

**Results of Incorrect Operation**

A plugged PCV valve or foul air hose may contribute to the following conditions:

- A rough idle
- Stalling or a slow idle speed
- Oil leaks
- Oil accumulation in the intake air duct
- Sludge in the engine

A leaking PCV valve or hose may contribute to the following conditions:

- A rough idle
- Stalling
- Unstable idle speed

## DRIVE BELT CHIRPING DIAGNOSIS

**Diagnostic Aids**

The symptom may be intermittent due to moisture on the drive belt(s) or the pulleys. It may be necessary to spray a small amount of water on the drive belt(s) in order to duplicate the customers concern. If spraying water on the drive belt(s) duplicates the symptom, cleaning the belt pulleys may be the probable solution.

A loose or improper installation of a body component, a suspension component, or other items of the vehicle may cause the chirping noise.

**Test Description**

The number(s) below refer to the step number(s) on the diagnostic table.

**2:** The noise may not be engine related. This step is to verify that the engine is making the noise. If the engine is not making the noise do not proceed further with this table.

**3:** The noise may be an internal engine noise. Removing the drive belt and operating the engine for a brief

 © 2011 Mitchell Repair Information Company, LLC.

period will verify the noise is related to the drive belt. When removing the drive belt(s) the water pump may not be operating and the engine may overheat. Also DTCs may set when the engine is operating with the drive belt removed.

**4:** Inspect all drive belt pulleys for pilling. Pilling is the small balls or pills or it may be strings in the drive belt grooves from the accumulation of rubber dust.

**6:** Misalignment of the pulleys may be caused from improper mounting of the accessory drive component, incorrect installation of the accessory drive component pulley, or the pulley bent inward or outward from a previous repair. Test for a misalign pulley using a straight edge in the pulley grooves across two or three pulleys. If a misalign pulley is found refer to that accessory drive component for the proper installation procedure for that pulley.

**10:** Inspecting of the fasteners can eliminate the possibility that a wrong bolt, nut, spacer, or washer was installed.

**12:** Inspecting the pulleys for being bent should include inspecting for a dent or other damage to the pulleys that would prevent the drive belt from not seating properly in all of the pulley grooves or on the smooth surface of a pulley when the back side of the belt is used to drive the pulley.

**14:** Replacing the drive belt when it is not damaged or there is not excessive pilling will only be a temporary repair.

**Drive Belt Chirping Diagnosis**

| Step | Action | Yes | No |
|---|---|---|---|
| **NOTE:**<br>**Refer to Belt Dressing Notice in Cautions and Notices.**<br><br>DEFINITION: The following items are indications of chirping:<br><br>• A high pitched noise that is heard once per revolution of the drive belt or a pulley.<br>• It usually occurs on cold damp mornings. | | | |
| 1 | Did you review the Drive Belt Symptom operation and perform the necessary inspections? | Go to **Step 2** | Go to **Symptoms - Engine Mechanical** |
| **2** | Verify that there is a chirping noise.<br>Does the engine make the chirping noise? | Go to **Step 3** | Go to Diagnostic Aids |
| **3** | 1. Remove the drive belt.<br>2. Operate the engine for no longer than 30 to 40 seconds.<br><br>Does the chirping noise still exist? | Go to **Engine Noise on Start-Up, but Only Lasting a Few Seconds** or **Lower Engine Noise, Regardless of Engine Speed** | Go to **Step 4** |
| **4** | Inspect for severe pilling exceeding 1/3 of the belt groove depth.<br>Does the belt grooves have pilling? | Go to **Step 5** | Go to **Step 6** |
| 5 | Clean the drive belt pulleys with a suitable wire brush.<br>Did you complete the repair? | Go to **Step 15** | Go to **Step 6** |
| **6** | Inspect for misalignment of the pulleys.<br>Are any of the pulleys misaligned? | Go to **Step 7** | Go to **Step 8** |

 © 2011 Mitchell Repair Information Company, LLC.

| | | | |
|---|---|---|---|
| 7 | Replace or repair any misaligned pulleys.<br>Did you complete the repair? | Go to **Step 15** | Go to **Step 8** |
| 8 | Inspect for bent or cracked brackets.<br>Did you find any bent or cracked brackets? | Go to **Step 9** | Go to **Step 10** |
| 9 | Replace any bent or cracked brackets.<br>Did you complete the repair? | Go to **Step 15** | Go to **Step 10** |
| **10** | Inspect for improper, loose or missing fasteners.<br>Did you find the condition? | Go to **Step 11** | Go to **Step 12** |
| 11 | Tighten any loose fasteners.<br>Replace any improper or missing fasteners. Refer to **Fastener Tightening Specifications**.<br>Did you complete the repair? | Go to **Step 15** | Go to **Step 12** |
| **12** | Inspect for a bent pulley.<br>Did you find the condition? | Go to **Step 13** | Go to **Step 14** |
| 13 | Replace the bent pulley.<br>Did you complete the repair? | Go to **Step 15** | Go to **Step 14** |
| **14** | Replace the drive belt. Refer to **Drive Belt Replacement**.<br>Did you complete the repair? | Go to **Step 15** | Go to Diagnostic Aids |
| 15 | Operate the system in order to verify the repair.<br>Did you correct the condition? | System OK | Go to **Step 3** |

## DRIVE BELT SQUEAL DIAGNOSIS

### Diagnostic Aids

A loose or improper installation of a body component, a suspension component, or other items of the vehicle may cause the squeal noise.

If the noise is intermittent, verify the accessory drive components by varying their loads making sure they are operated to their maximum capacity. An overcharged A/C system, power steering system with a pinched hose or wrong fluid, or a generator failing are suggested items to inspect.

### Test Description

The number(s) below refer to the step number(s) on the diagnostic table.

**2:** The noise may not be engine related. This step is to verify that the engine is making the noise. If the engine is not making the noise do not proceed further with this table

**3:** The noise may be an internal engine noise. Removing the drive belt and operating the engine for a brief period will verify the squeal noise is the drive belt(s) or an accessory drive component. When removing the drive belt the water pump may not be operating and the engine may overheat. Also DTCs may set when the engine is operating with the drive belt removed.

**4:** This test is to verify that an accessory drive component does not have a seized bearing. With the belt remove test the bearings in the accessory drive components for turning smoothly. Also test the accessory drive components with the engine operating by varying the load on the components to verify that the

 © 2011 Mitchell Repair Information Company, LLC.

components operate properly.

**5:** This test is to verify that the drive belt tensioner operates properly. If the drive belt tensioner is not operating properly, proper belt tension may not be achieved to keep the drive belt from slipping which could cause a squeal noise.

**6:** This test is to verify that the drive belt(s) is not too long, which would prevent the drive belt tensioner from working properly. Also if an incorrect length drive belt was installed, it may not be routed properly and may be turning an accessory drive component in the wrong direction.

**7:** Misalignment of the pulleys may be caused from improper mounting of the accessory drive component, incorrect installation of the accessory drive component pulley, or the pulley bent inward or outward from a previous repair. Test for a misalign pulley using a straight edge in the pulley grooves across two or three pulleys. If a misalign pulley is found refer to that accessory drive component for the proper installation procedure for that pulley.

**8:** This test is to verify that the pulleys are the correct diameter or width. Using a known good vehicle compare the pulley sizes.

**Drive Belt Squeal Diagnosis**

| Step | Action | Yes | No |
|---|---|---|---|
| **NOTE:**<br>**Refer to Belt Dressing Notice in Cautions and Notices.**<br><br>DEFINITION: The following items are indications of drive belt squeal:<br><br>• A loud screeching noise that is caused by a slipping drive belt (this is unusual for a drive belt with multiple ribs)<br>• The noise occurs when a heavy load is applied to the drive belt, such as an air conditioning compressor engagement snapping the throttle, or slipping on a seized pulley or a faulty accessory drive component. | | | |
| 1 | Did you review the Drive Belt Symptom operation and perform the necessary inspections? | Go to **Step 2** | Go to **Symptoms - Engine Mechanical** |
| **2** | Verify that there is a squeal noise.<br>Does the engine make the squeal noise? | Go to **Step 3** | Go to Diagnostic Aids |
| **3** | 1. Remove the drive belt(s).<br>2. Operate the engine for no longer than 30 to 40 seconds.<br><br>Does the noise still exist? | Go to **Engine Noise on Start-Up, but Only Lasting a Few Seconds** or **Lower Engine Noise, Regardless of Engine Speed** | Go to **Step 4** |
| **4** | Inspect for an accessory drive component seized bearing or a faulty accessory drive component.<br>Did you find and correct the condition? | Go to **Step 9** | Go to **Step 5** |
| **5** | Test the drive belt tensioner for proper operation.<br>Refer to **Drive Belt Tensioner Diagnosis**.<br>Did you find and correct the condition? | Go to **Step 9** | Go to **Step 6** |
| | Inspect for the correct drive belt length. Refer to **Drive** | | |

 © 2011 Mitchell Repair Information Company, LLC.

| | | | |
|---|---|---|---|
| **6** | **Belt Replacement**.<br>Did you find and correct the condition? | Go to **Step 9** | Go to **Step 7** |
| **7** | Inspect for misalignment of a pulley.<br><br>Did you find and correct the condition? | Go to **Step 9** | Go to **Step 8** |
| **8** | Inspect for the correct pulley size.<br>Did you find and correct the condition? | Go to **Step 9** | Go to Diagnostic Aids |
| 9 | Operate the system in order to verify the repair.<br>Did you correct the condition? | System OK | Go to **Step 3** |

## DRIVE BELT WHINE DIAGNOSIS

**Drive Belt Whine Diagnosis**

| Step | Action | Yes | No |
|---|---|---|---|
| DEFINITION: A high pitched continuous noise that may be caused by a failed bearing. | | | |
| 1 | Check for a worn accessory component bearing.<br>Is a bearing making the noise? | Go to **Step 2** | System OK |
| 2 | Install new part as necessary.<br>Is the repair complete? | System OK | - |

## DRIVE BELT RUMBLING DIAGNOSIS

**Diagnostic Aids**

Vibration from the engine operating may cause a body component or another part of the vehicle to make rumbling noise.

The drive belt(s) may have a condition that can not be seen or felt. Sometimes replacing the drive belt may be the only repair for the symptom.

If replacing the drive belt(s), completing the diagnostic table, and the noise is only heard when the drive belt(s) is installed, there might be an accessory drive component with a failure. Varying the load on the different accessory drive components may aid in identifying which component is causing the rumbling noise.

**Test Description**

The number(s) below refer to the step number(s) on the diagnostic table.

**2:** This test is to verify that the symptom is present during diagnosing. Other vehicle components may cause a similar symptom.

**3:** This test is to verify that the drive belt(s) is causing the rumbling noise. Rumbling noise may be confused with an internal engine noise due to the similarity in the description. Remove only one drive belt at a time if the vehicle has multiple drive belts. When removing the drive belt the water pump may not be operating and the engine may overheat. Also DTCs may set when the engine is operating with the drive belt removed.

**4:** Inspecting the drive belt(s) is to ensure that it is not causing a the noise. Small cracks across the ribs of

 © 2011 Mitchell Repair Information Company, LLC.

the drive belt will not cause the noise. Belt separation is identified by the plys of the belt separating and may be seen at the edge of the belt our felt as a lump in the belt.

**5:** Small amounts of pilling is normal condition and acceptable. When the pilling is severe the drive belt does not have a smooth surface for proper operation.

**Drive Belt Rumbling Diagnosis**

| Step | Action | Yes | No |
|---|---|---|---|
| **NOTE:**<br>**Refer to Belt Dressing Notice in Cautions and Notices.**<br><br>DEFINITION:<br>• A low pitch tapping, knocking, or thumping noise heard at or just above idle.<br>• Heard once per revolution of the drive belt or a pulley.<br>• Rumbling may be caused from:<br>o Pilling, the accumulation of rubber dust that forms small balls (pills) or strings in the drive belt pulley groove<br>o The separation of the drive belt<br>o A damaged drive belt | | | |
| 1 | Did you review the Drive Belt Symptom operation and perform the necessary inspections? | Go to **Step 2** | Go to **Symptoms - Engine Mechanical** |
| **2** | Verify that there is a rumbling noise.<br>Does the engine make the rumbling noise? | Go to **Step 3** | Go to Diagnostic Aids |
| **3** | 1. Remove the drive belt(s).<br>2. Operate the engine for no longer than 30 to 40 seconds.<br><br>Does the rumbling noise still exist? | Go to **Engine Noise on Start-Up, but Only Lasting a Few Seconds** or **Lower Engine Noise, Regardless of Engine Speed** | Go to **Step 4** |
| **4** | Inspect the drive belt(s) for damage, separation, or sections of missing ribs.<br>Did you find any of these conditions? | Go to **Step 7** | Go to **Step 5** |
| **5** | Inspect for severe pilling of more than 1/3 of the drive belt pulley grooves.<br>Did you find severe pilling? | Go to **Step 6** | Go to **Step 7** |
| 6 | 1. Clean the drive belt pulleys using a suitable wire brush.<br>2. Reinstall the drive belt. Refer to **Drive Belt Replacement**.<br><br>Did you complete the repair? | Go to **Step 8** | Go to **Step 7** |
| 7 | Install a new drive belt. Refer to **Drive Belt Replacement**. | | |

 © 2011 Mitchell Repair Information Company, LLC.

| | | | |
|---|---|---|---|
| | Did you complete the replacement? | Go to **Step 8** | - |
| 8 | Operate the system in order to verify the repair.<br>Did you correct the condition? | System OK | Go to Diagnostic Aids |

## DRIVE BELT VIBRATION DIAGNOSIS

**Diagnostic Aids**

The accessory drive components can have an affect on engine vibration. Such as but not limited to the A/C system over charged, the power steering system restricted or the incorrect fluid, or an extra load on the generator. To help identify an intermittent or an improper condition, vary the loads on the accessory drive components.

**Test Description**

The number(s) below refer to the step number(s) on the diagnostic table.

**2:** This test is to verify that the symptom is present during diagnosing. Other vehicle components may cause a similar symptom such as the exhaust system, or the drivetrain.

**3:** This test is to verify that the drive belt(s) or accessory drive components may be causing the vibration. When removing the drive belt the water pump may not be operating and the engine may overheat. Also DTCs may set when the engine is operating with the drive belt removed.

**4:** The drive belt(s) may cause a vibration. While the drive belt(s) is removed this is the best time to inspect the condition of the belt.

**6:** Inspecting of the fasteners can eliminate the possibility that a wrong bolt, nut, spacer, or washer was installed.

**8:** This step should only be performed if the water pump is driven by the drive belt. Inspect the water pump shaft for being bent. Also inspect the water pump bearings for smoothness and excessive play. Compare the water pump with a known good water pump.

**9:** Accessory drive component brackets that are bent, cracked, or loose may put extra strain on that accessory component causing it to vibrate.

**Drive Belt Vibration Diagnosis**

| Step | Action | Yes | No |
|---|---|---|---|
| **NOTE:**<br>**Refer to Belt Dressing Notice in Cautions and Notices.**<br><br>DEFINITION: The following items are indications of drive belt vibration:<br><br>• The vibration is engine-speed related.<br>• The vibration may be sensitive to accessory load. | | | |
| 1 | Did you review the Drive Belt Symptom operation and perform the necessary inspections? | Go to **Step 2** | Go to **Symptoms - Engine Mechanical** |
| **2** | Verify that the vibration is engine related.<br>Does the engine make the vibration? | Go to **Step 3** | Go to Diagnostic Aids |

 © 2011 Mitchell Repair Information Company, LLC.

| | | | |
|---|---|---|---|
| **3** | 1. Remove the drive belt.<br>2. Operate the engine for no longer than 30 to 40 seconds.<br><br>Does the engine still make the vibration? | Go to **Vibration Analysis - Engine** in Vibration Diagnosis and Correction | Go to **Step 4** |
| **4** | Inspect the drive belt for wear, damage, debris build-up and missing drive belt ribs.<br>Did you find any of these conditions? | Go to **Step 5** | Go to **Step 6** |
| 5 | Install a new drive belt. Refer to **Drive Belt Replacement**.<br>Did you complete the replacement? | Go to **Step 10** | - |
| **6** | Inspect for improper, loose or missing fasteners.<br>Did you find any of these conditions? | Go to **Step 7** | Go to **Step 8** |
| 7 | Tighten any loose fasteners.<br>Replace improper or missing fasteners. Refer to **Fastener Tightening Specifications**.<br>Did you complete the repair? | Go to **Step 10** | - |
| **8** | Inspect for a bent water pump shaft, if the water pump is belt driven. Refer to **Water Pump Replacement** in Engine Cooling.<br>Did you find and correct the condition? | Go to **Step 10** | Go to **Step 9** |
| **9** | Inspect for bent or cracked brackets.<br>Did you find and correct the condition? | Go to **Step 10** | Go to Diagnostic Aids |
| 10 | Operate the system in order to verify the repair.<br>Did you correct the condition? | System OK | Go to **Step 3** |

## DRIVE BELT FALLS OFF DIAGNOSIS

### Diagnostic Aids

If the drive belt(s) repeatedly falls off the drive belt pulleys, this is because of pulley misalignment.

An extra load that is quickly applied on released by an accessory drive component may cause the drive belt to fall off the pulleys. Verify the accessory drive components operate properly.

If the drive belt(s) is the incorrect length, the drive belt tensioner may not keep the proper tension on the drive belt.

### Test Description

The number(s) below refer to the step number(s) on the diagnostic table.

**2:** This inspection is to verify the condition of the drive belt. Damage may of occurred to the drive belt when the drive belt fell off. The drive belt may of been damaged, which caused the drive belt to fall off. Inspect the belt for cuts, tears, sections of ribs missing, or damaged belt plys.

**4:** Misalignment of the pulleys may be caused from improper mounting of the accessory drive

 © 2011 Mitchell Repair Information Company, LLC.

component, incorrect installation of the accessory drive component pulley, or the pulley bent inward or outward from a previous repair. Test for a misalign pulley using a straight edge in the pulley grooves across two or three pulleys. If a misalign pulley is found refer to that accessory drive component for the proper installation procedure of that pulley.

**5:** Inspecting the pulleys for being bent should include inspecting for a dent or other damage to the pulleys that would prevent the drive belt from not seating properly in all of the pulley grooves or on the smooth surface of a pulley when the back side of the belt is used to drive the pulley.

**6:** Accessory drive component brackets that are bent or cracked may will let the drive belt fall off.

**7:** Inspecting of the fasteners can eliminate the possibility that a wrong bolt, nut, spacer, or washer was installed. Missing. loose, or the wrong fasteners may cause pulley misalignment from the bracket moving under load. Over tightening of the fasteners may cause misalignment of the accessory component bracket.

**Drive Belt Falls Off Diagnosis**

| Step | Action | Yes | No |
|---|---|---|---|
| **NOTE:**<br>**Refer to Belt Dressing Notice in Cautions and Notices.**<br><br>DEFINITION: The drive belt falls off the pulleys or may not ride correctly on the pulleys. | | | |
| 1 | Did you review the Drive Belt Symptom operation and perform the necessary inspections? | Go to **Step 2** | Go to **Symptoms - Engine Mechanical** |
| **2** | Inspect for a damaged drive belt.<br>Did you find the condition? | Go to **Step 3** | Go to **Step 4** |
| 3 | Install a new drive belt. Refer to **Drive Belt Replacement**.<br>Does the drive belt continue to fall off? | Go to **Step 4** | System OK |
| **4** | Inspect for misalignment of the pulleys.<br>Did you find and repair the condition? | Go to **Step 12** | Go to **Step 5** |
| **5** | Inspect for a bent or dented pulley.<br>Did you find and repair the condition? | Go to **Step 12** | Go to **Step 6** |
| **6** | Inspect for a bent or a cracked bracket.<br>Did you find and repair the condition? | Go to **Step 12** | Go to **Step 7** |
| **7** | Inspect for improper, loose or missing fasteners.<br>Did you find loose or missing fasteners? | Go to **Step 8** | Go to **Step 9** |
| 8 | Tighten any loose fasteners.<br>Replace improper or missing fasteners. Refer to **Fastener Tightening Specifications**.<br>Does the drive belt continue to fall off? | Go to **Step 9** | System OK |
| 9 | Test the drive belt tensioner for operating correctly. Refer to **Drive Belt Tensioner Diagnosis**.<br>Does the drive belt tensioner operate correctly? | Go to **Step 11** | Go to **Step 10** |
| 10 | Replace the drive belt tensioner. Refer to **Drive Belt Tensioner Replacement**.<br>Does the drive belt continue to fall off? | Go to **Step 11** | System OK |
| 11 | Inspect for failed drive belt idler and drive belt tensioner pulley bearings. | | Go to Diagnostic |

 © 2011 Mitchell Repair Information Company, LLC.

| | | | |
|---|---|---|---|
| | Did you find and repair the condition? | Go to **Step 12** | Aids |
| 12 | Operate the system in order to verify the repair.<br>Did you correct the condition? | System OK | Go to **Step 2** |

## DRIVE BELT EXCESSIVE WEAR DIAGNOSIS

**Diagnostic Aids**

Excessive wear on a drive belt(s) is usually caused by an incorrect installation or the wrong drive belt for the application.

Minor misalignment of the drive belt pulleys will not cause excessive wear, but will probably cause the drive belt(s) to make a noise or to fall off.

Excessive misalignment of the drive belt pulleys will cause excessive wear but may also make the drive belt(s) fall off.

**Test Description**

The number(s) below refer to the step number(s) on the diagnostic table.

**2:** The inspection is to verify the drive belt(s) is correctly installed on all of the drive belt pulleys. Wear on the drive belt(s) may be caused by mis-positioning the drive belt(s) by one groove on a pulley.

**3:** The installation of a drive belt that is two wide or two narrow will cause wear on the drive belt. The drive belt ribs should match all of the grooves on all of the pulleys.

**4:** This inspection is to verify the drive belt(s) is not contacting any parts of the engine or body while the engine is operating. There should be sufficient clearance when the drive belt accessory drive components load varies. The drive belt(s) should not come in contact with an engine or a body component when snapping the throttle.

**Drive Belt Excessive Wear Diagnosis**

| Step | Action | Yes | No |
|---|---|---|---|
| **NOTE:**<br>**Refer to Belt Dressing Notice in Cautions and Notices.**<br><br>DEFINITION: Wear at the outside ribs of the drive belt due to an incorrectly installed drive belt. | | | |
| 1 | Did you review the Drive Belt Symptom operation and perform the necessary inspections? | Go to **Step 2** | Go to **Symptoms - Engine Mechanical** |
| **2** | Inspect the drive belt(s) for the proper installation.<br>Refer to **Drive Belt Replacement**.<br>Did you find this condition? | Go to **Step 5** | Go to **Step 3** |
| **3** | Inspect for the proper drive belt.<br>Did you find this condition? | Go to **Step 5** | Go to **Step 4** |
| **4** | Inspect for the drive belt rubbing against a bracket, hose, or wiring harness. | | Go to Diagnostic |

 © 2011 Mitchell Repair Information Company, LLC.

| | | | |
|---|---|---|---|
| | Did you find and repair the condition? | Go to **Step 6** | Aids |
| 5 | Replace the drive belt. Refer to **Drive Belt Replacement**.<br>Did you complete the replacement? | Go to **Step 6** | - |
| 6 | Operate the system in order to verify the repair.<br>Did you correct the condition? | System OK | - |

**DRIVE BELT TENSIONER DIAGNOSIS**

**Drive Belt Tensioner Diagnosis**

| Step | Action | Yes | No |
|---|---|---|---|
| 1 | Remove the drive belt. Inspect the drive belt tensioner pulley.<br>Is the drive belt tensioner pulley loose or misaligned? | Go to **Step 4** | Go to **Step 2** |
| 2 | Rotate the drive belt tensioner.<br>Does the tensioner rotate without any unusual resistance or binding? | Go to **Step 3** | Go to **Step 4** |
| 3 | 1. Use a torque wrench in order to measure the torque required to move the tensioner off of the stop.<br>2. Use a torque wrench on a known good tensioner in order to measure the torque required to move the tensioner off of the stop.<br><br>Is the first torque reading within 10% of the second torque reading? | System OK | Go to **Step 4** |
| 4 | Replace the drive belt tensioner. Refer to **Drive Belt Tensioner Replacement**.<br>Is the repair complete? | System OK | - |

# REPAIR INSTRUCTIONS

## ON-VEHICLE REPAIR INSTRUCTIONS

### Fuel Injector Sight Shield Replacement

#### Removal Procedure

 © 2011 Mitchell Repair Information Company, LLC.

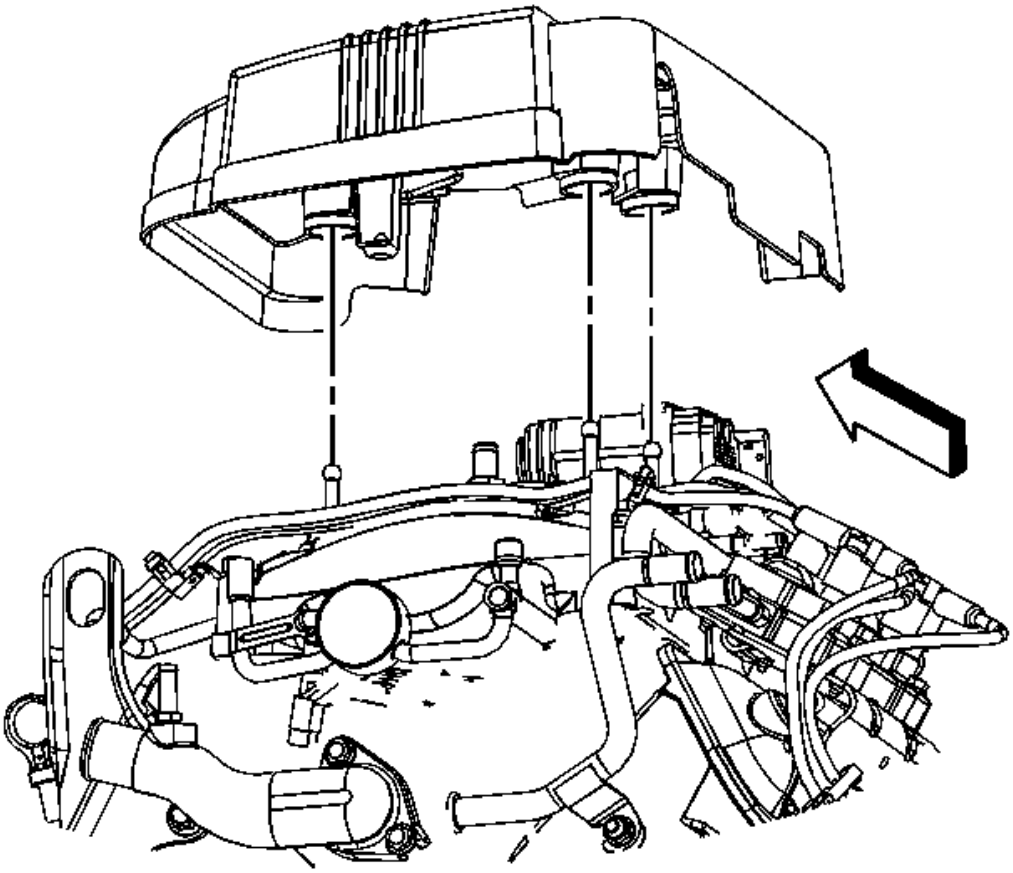

**Fig. 6: Injector Sight Shield**
**Courtesy of GENERAL MOTORS CORP.**

1. Remove the injector sight shield from the studs.

 © 2011 Mitchell Repair Information Company, LLC.

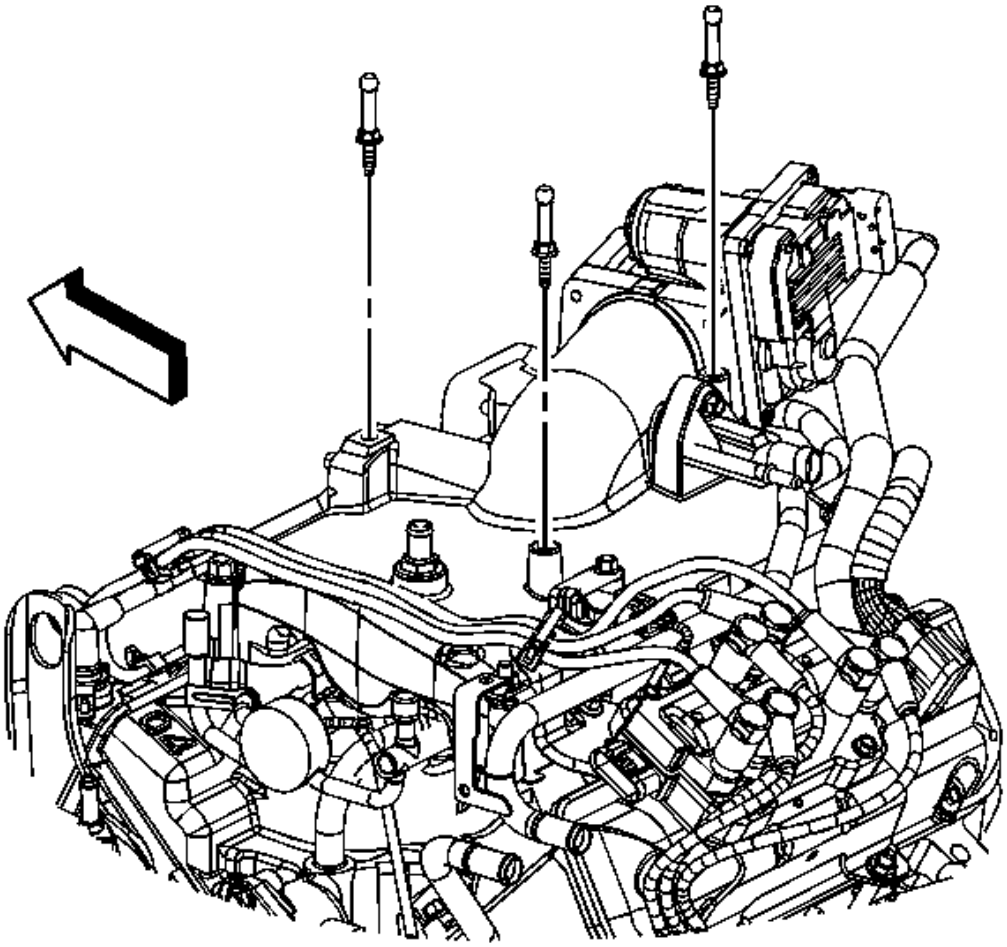

**Fig. 7: View Of Injector Sight Shield Studs**
**Courtesy of GENERAL MOTORS CORP.**

2. If replacing the sight shield studs, remove the studs from the intake manifold.

**Installation Procedure**

 © 2011 Mitchell Repair Information Company, LLC.

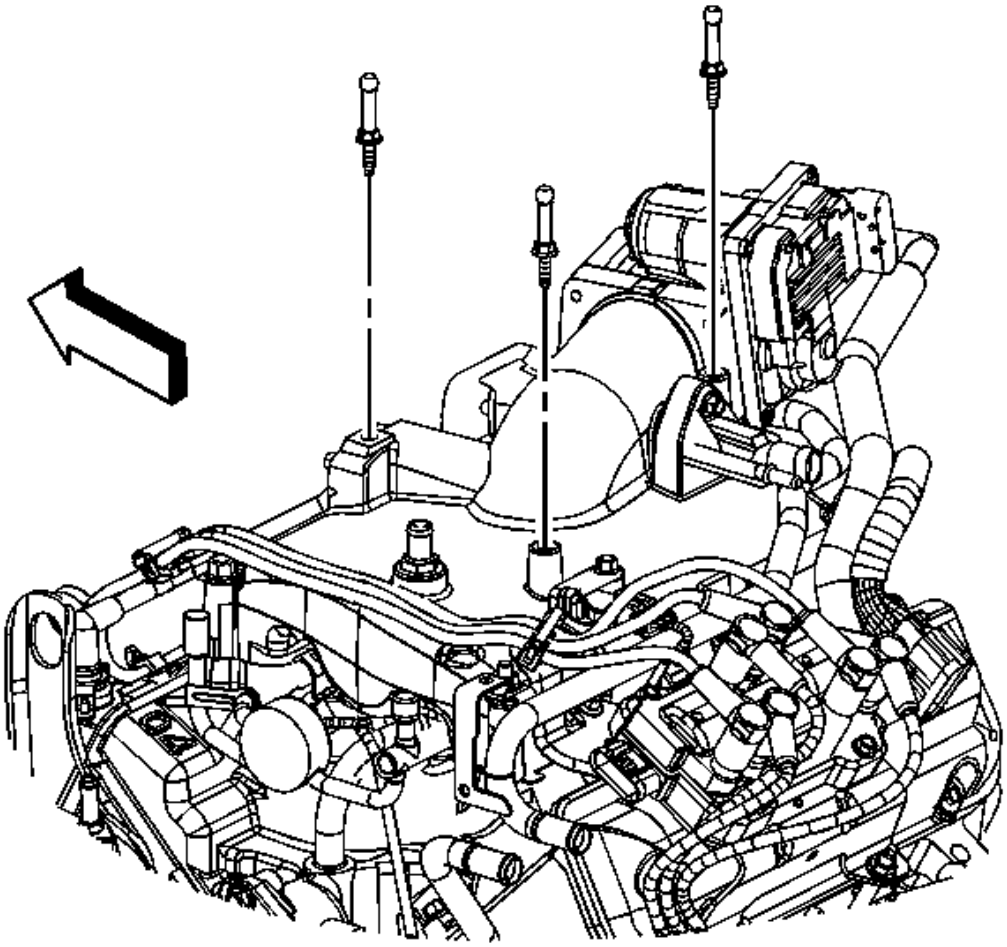

**Fig. 8: View Of Injector Sight Shield Studs**
**Courtesy of GENERAL MOTORS CORP.**

**NOTE: Refer to Fastener Notice in Cautions and Notices.**

1. If the injector sight shield studs were removed, install the studs to the intake manifold.

   **Tighten:** Tighten the studs to 10 N.m (89 lb in).

 © 2011 Mitchell Repair Information Company, LLC.

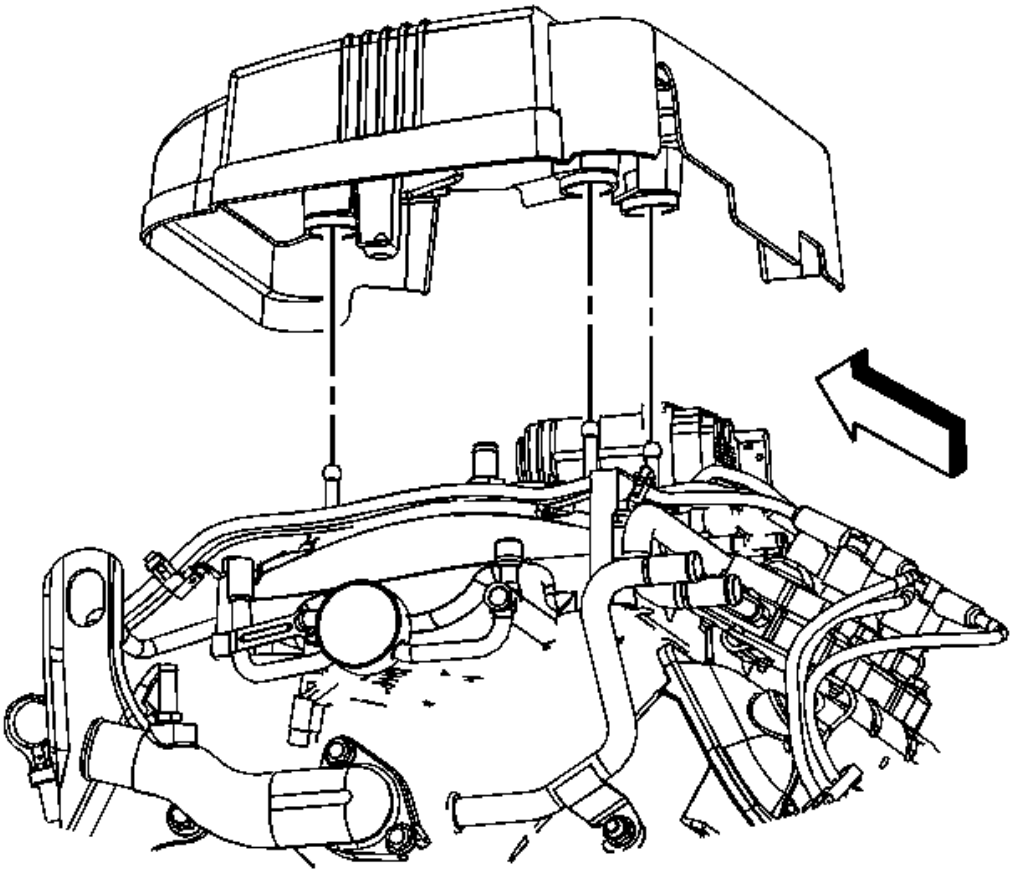

**Fig. 9: Injector Sight Shield**
**Courtesy of GENERAL MOTORS CORP.**

2. Install the injector sight shield to the studs.

**Drive Belt Replacement**

**Tools Required**

**J 39914** Serpentine Belt Tensioner Unloader. See **Special Tools**.

**Removal Procedure**

1. Remove the air cleaner assembly. Refer to **Air Cleaner Assembly Replacement** in Engine Controls - 3.4L.

 © 2011 Mitchell Repair Information Company, LLC.

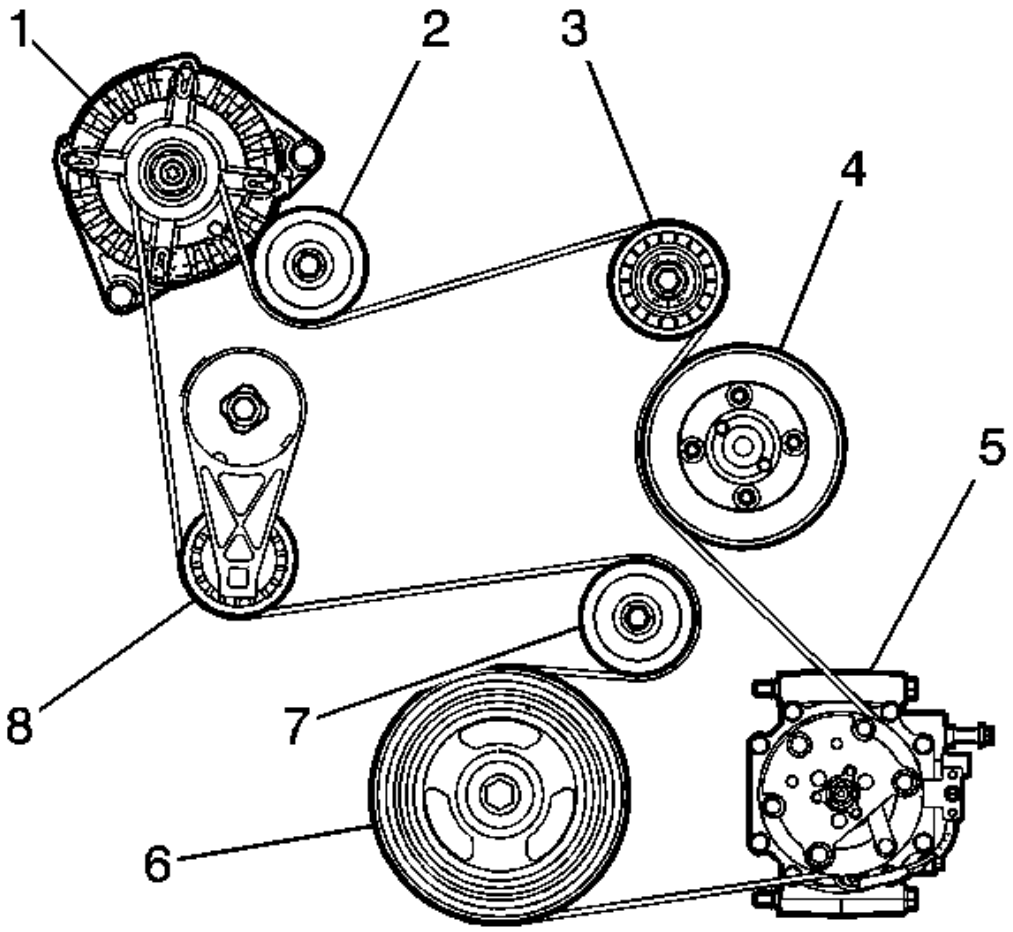


**Fig. 10: View Of Drive Belt Routing**
**Courtesy of GENERAL MOTORS CORP.**

2. Using **J 39914** rotate the drive belt tensioner (8) to release the tension on the drive belt. See **Special Tools**.
3. Remove the drive belt from the right idler pulley (2).
4. Carefully release **J 39914** to relieve the drive belt tensioner spring tension. See **Special Tools**.
5. Remove **J 39914** from the drive belt tensioner (8). See **Special Tools**.
6. Provided the vehicle will not be raised or lifted to perform additional work. Utilizing a floor jack and a wood block, support the front of the engine using the following procedure.
    1. Place the wood block between the lift point of the floor jack and the bottom of the engine oil pan.
    2. Raise the jack until the wood block comes into contact with the engine oil pan and is capable of supporting the weight of the engine.

 © 2011 Mitchell Repair Information Company, LLC.

7. If the vehicle is to be raised or lifted in order to perform additional work. Support the engine using the engine support fixture. Refer to **Engine Support Fixture**.
8. Remove the right engine mount. Refer to **Engine Mount Replacement - Right**.

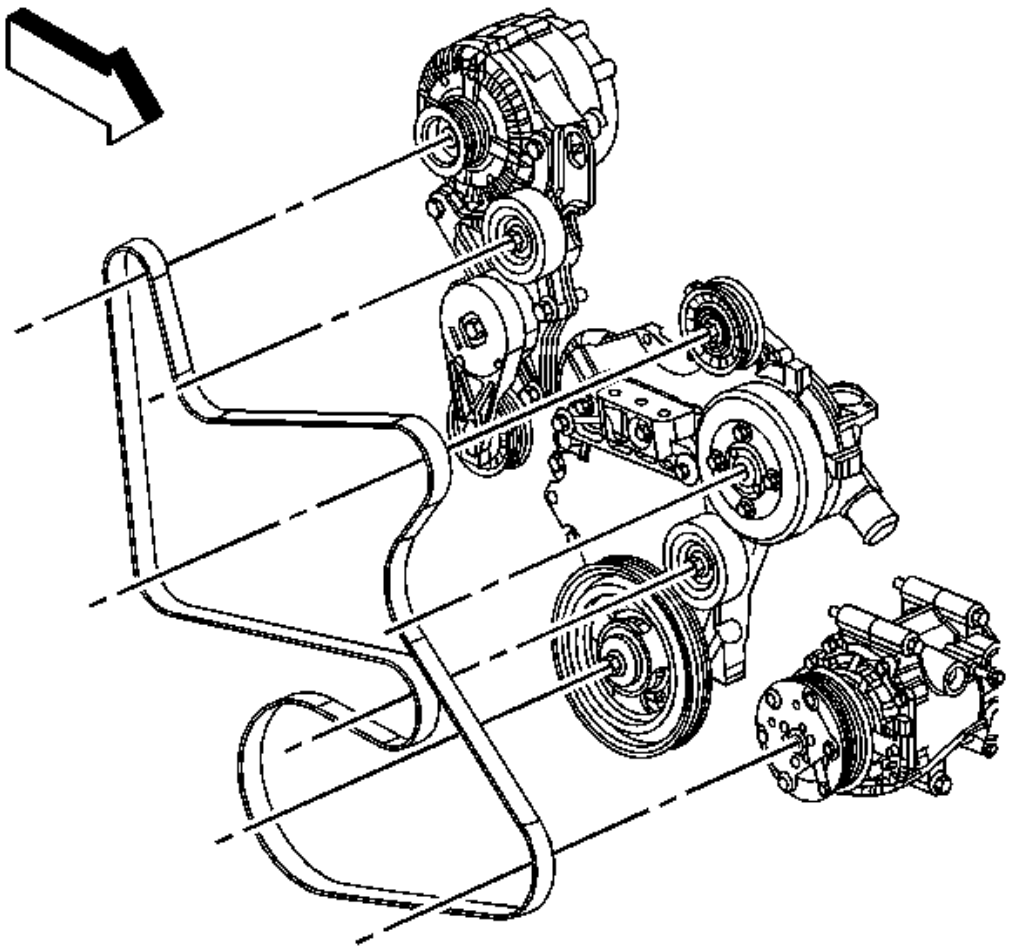

**Fig. 11: Removing/Installing Drive Belt**
**Courtesy of GENERAL MOTORS CORP.**

9. Remove the drive belt from the remaining pulleys.

**Installation Procedure**

 © 2011 Mitchell Repair Information Company, LLC.

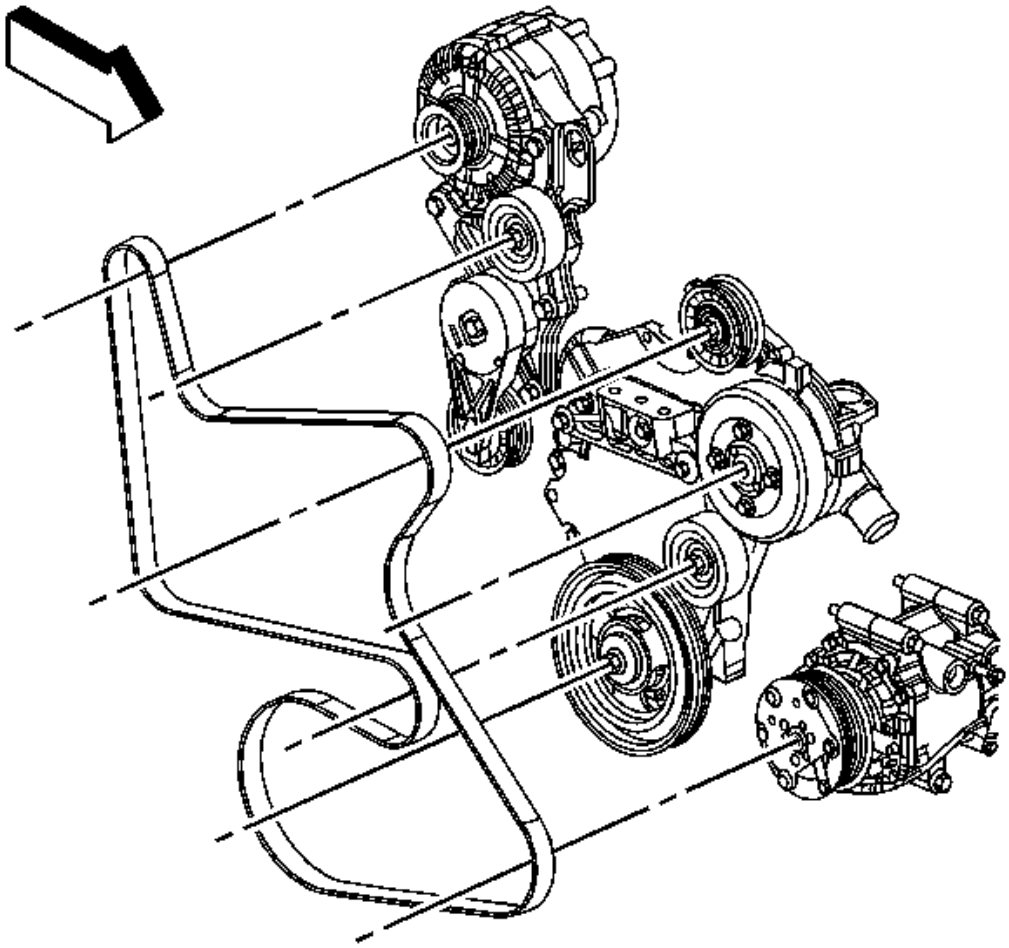

**Fig. 12: Removing/Installing Drive Belt**
**Courtesy of GENERAL MOTORS CORP.**

1. Install the drive belt to all the pulleys except the right idler pulley.
2. Install the right engine mount. Refer to **Engine Mount Replacement - Right**.
3. Depending on which method was used to support the engine. Remove the floor jack from under the engine oil pan or remove the engine support fixture.

 © 2011 Mitchell Repair Information Company, LLC.

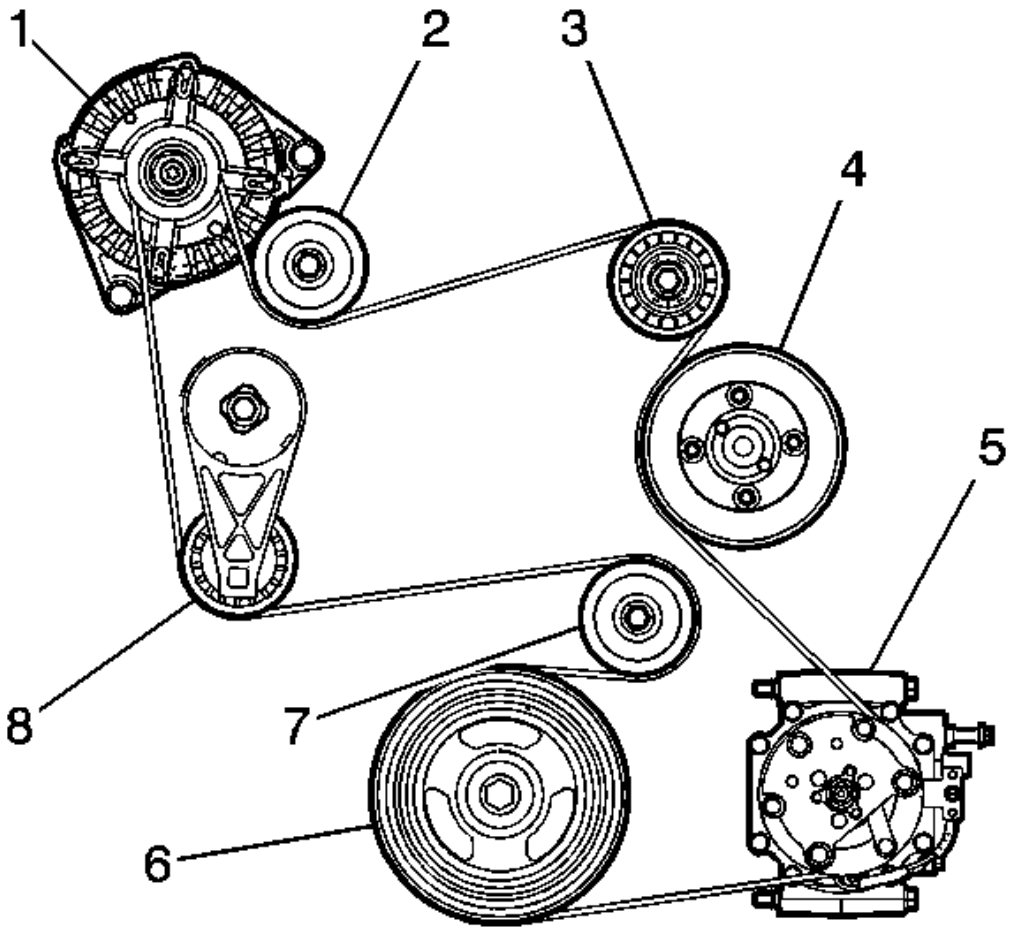


**Fig. 13: View Of Drive Belt Routing**
**Courtesy of GENERAL MOTORS CORP.**

4. Using **J 39914** rotate the drive belt tensioner away from the drive belt. See **Special Tools**.
5. Install the drive belt to the right idler pulley (2).
6. Carefully release **J 39914** allowing the drive belt tensioner (8) to come in contact with the drive belt. See **Special Tools**.
7. Remove **J 39914** from the drive belt tensioner (8). See **Special Tools**.
8. Inspect the drive belt to insure the belt is properly centered on all pulleys (1-8).
9. Install the air cleaner assembly. Refer to **Air Cleaner Assembly Replacement** in Engine Controls - 3.4L.

**Drive Belt Tensioner Replacement**

 © 2011 Mitchell Repair Information Company, LLC.

**Tools Required**

**J 39914** Serpentine Belt Tensioner Unloader. See **Special Tools**.

**Removal Procedure**

1. Remove the air cleaner intake duct. Refer to **Air Cleaner Intake Duct Replacement** in Engine Controls - 3.4L.

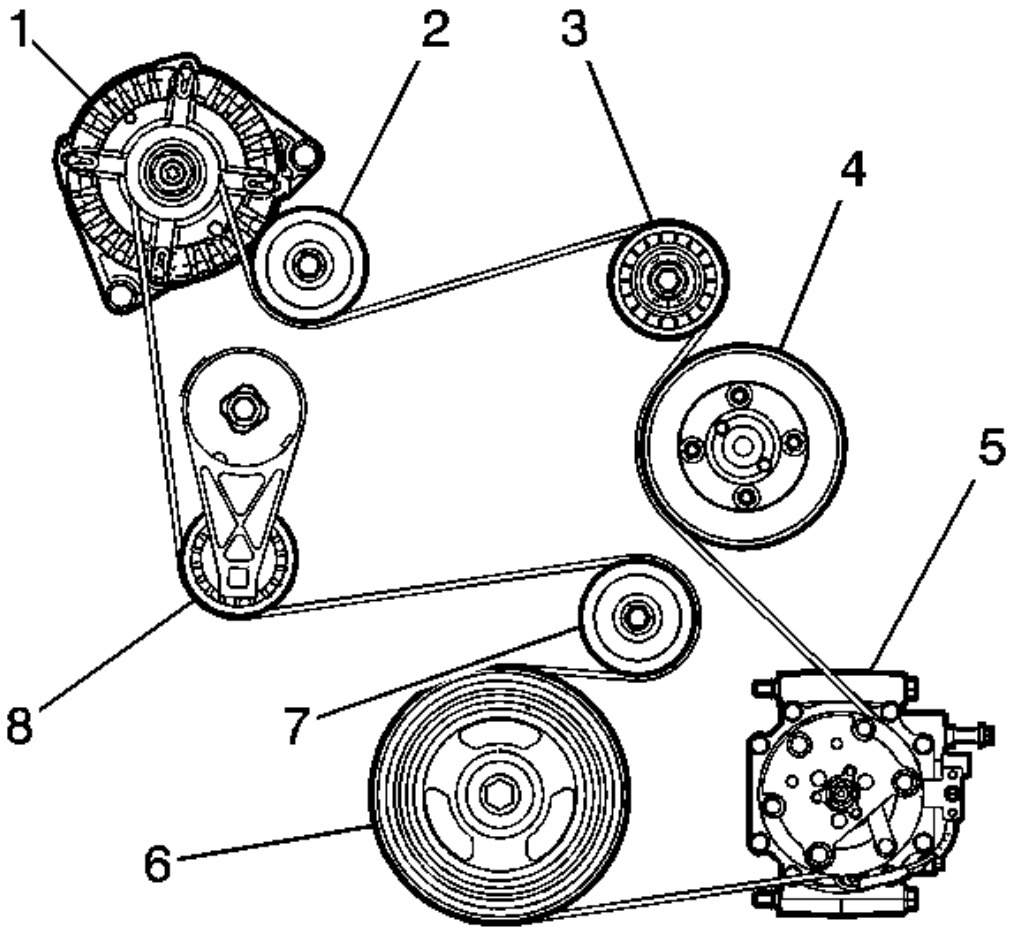


**Fig. 14: View Of Drive Belt Routing**
**Courtesy of GENERAL MOTORS CORP.**

2. Using**J 39914** rotate the drive belt tensioner (8) to release the tension on the drive belt. See **Special Tools**.
3. Remove the drive belt from the right idler pulley (2).

 © 2011 Mitchell Repair Information Company, LLC.

4. Carefully release **J 39914** to relieve the drive belt tensioner spring tension. See **Special Tools**.
5. Remove **J 39914** from the drive belt tensioner (8). See **Special Tools**.

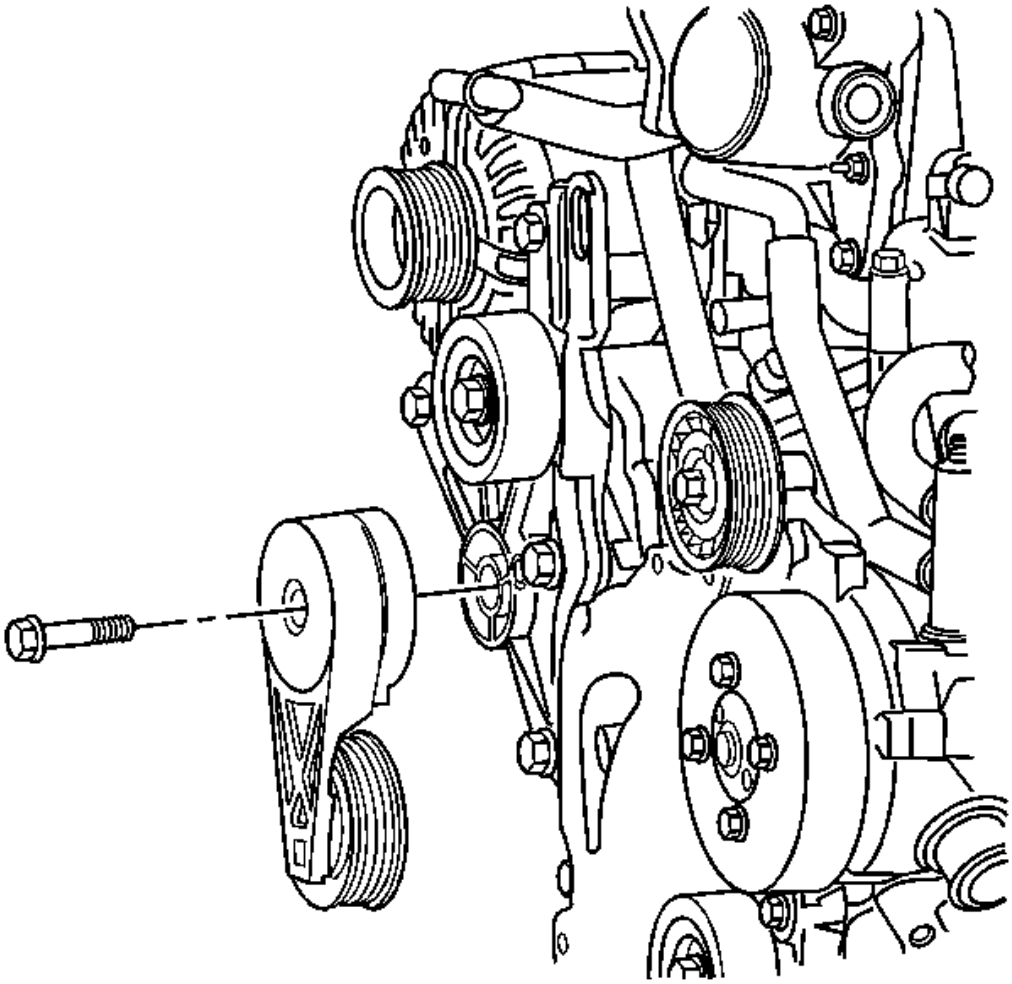

**Fig. 15: View Of Drive Belt Tensioner & Bolt**
**Courtesy of GENERAL MOTORS CORP.**

6. Loosen the drive belt tensioner bolt.
7. Remove the drive belt tensioner and bolt together from the generator bracket.
8. Separate the bolt from the drive belt tensioner once removed from vehicle.

**Installation Procedure**

 © 2011 Mitchell Repair Information Company, LLC.

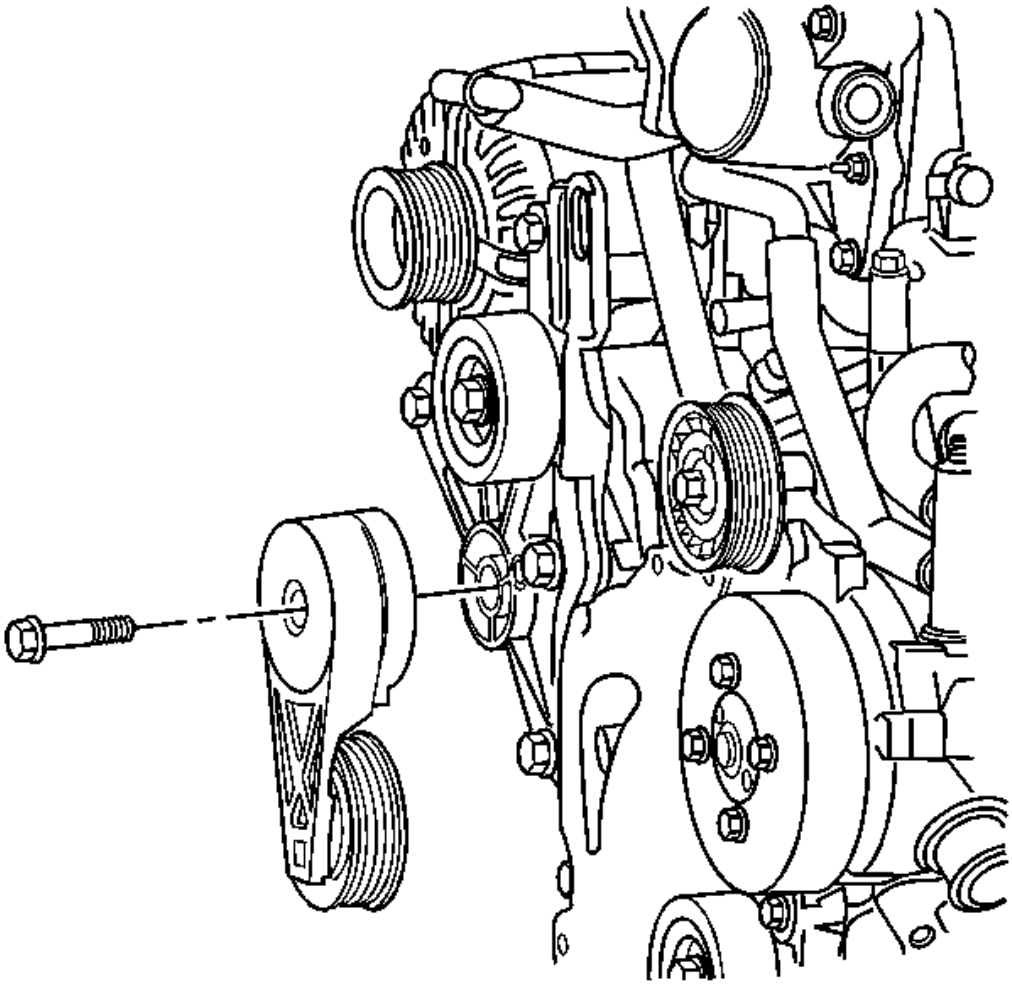

**Fig. 16: View Of Drive Belt Tensioner & Bolt**
**Courtesy of GENERAL MOTORS CORP.**

1. Install the bolt to the drive belt tensioner.

**NOTE:** **Refer to Fastener Notice in Cautions and Notices.**

2. Install the drive belt tensioner and bolt as an assembly to the generator bracket.

**Tighten:** Tighten the bolt to 50 N.m (37 lb ft).

 © 2011 Mitchell Repair Information Company, LLC.

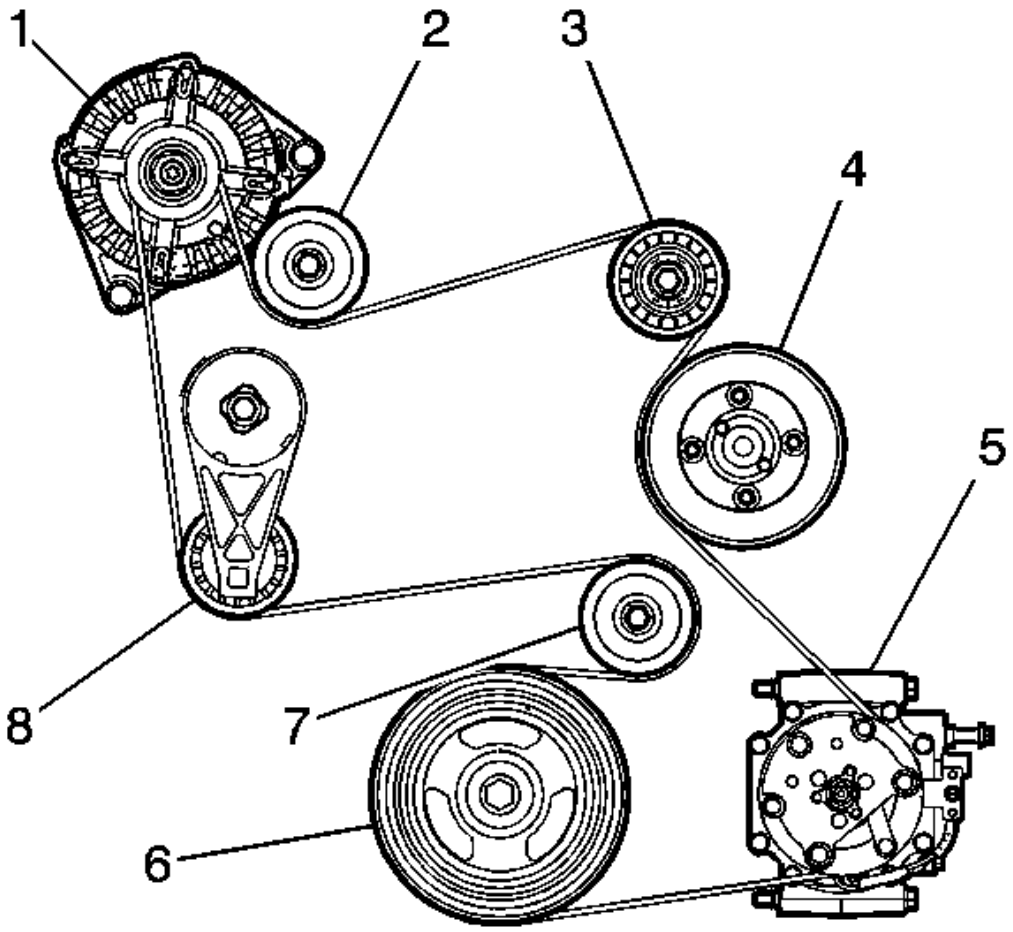


**Fig. 17: View Of Drive Belt Routing**
**Courtesy of GENERAL MOTORS CORP.**

3. Insure the drive belt is properly centered on all the pulleys except the right idler pulley (3).
4. Using **J 39914** rotate the drive belt tensioner away from the drive belt. See **Special Tools**.
5. Install the drive belt to the right idler pulley (2).
6. Carefully release **J 39914** allowing the drive belt tensioner (8) to come in contact with the drive belt. See **Special Tools**.
7. Remove **J 39914** from the drive belt tensioner (8). See **Special Tools**.
8. Inspect the drive belt to insure the belt is properly centered on all the pulleys (1-8).
9. Install the air cleaner intake duct. Refer to **Air Cleaner Intake Duct Replacement** in Engine Controls - 3.4L.

 © 2011 Mitchell Repair Information Company, LLC.

**Drive Belt Idler Pulley Replacement - Lower**

**Tools Required**

**J 39914** Serpentine Belt Tensioner Unloader. See **Special Tools**.

**Removal Procedure**

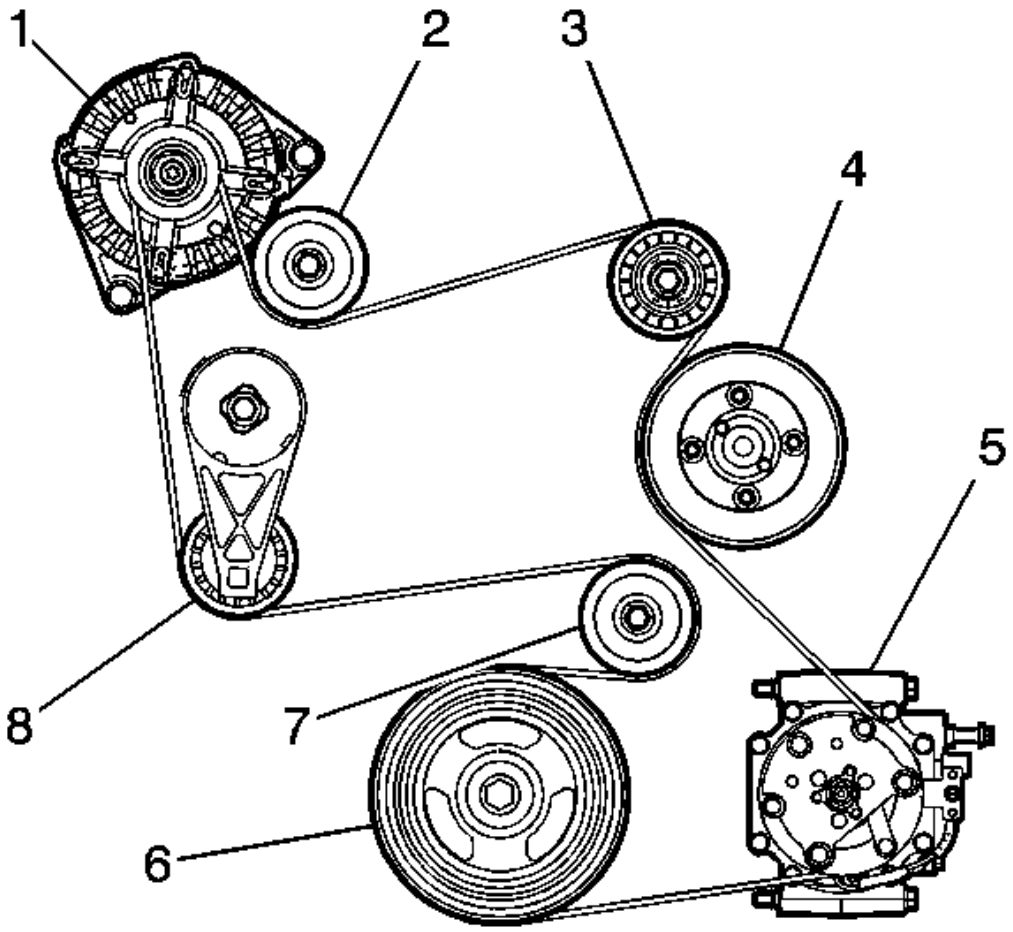


**Fig. 18: View Of Drive Belt Routing**
**Courtesy of GENERAL MOTORS CORP.**

1. Using**J 39914** rotate the drive belt tensioner (8) to release the tension on the drive belt. See **Special Tools**.
2. Remove the drive belt from the right idler pulley (2).

 © 2011 Mitchell Repair Information Company, LLC.

3. Carefully release **J 39914** to relieve the drive belt tensioner spring tension. See **Special Tools**.
4. Remove **J 39914** from the drive belt tensioner (8). See **Special Tools**.
5. Raise and support the vehicle. Refer to **Lifting and Jacking the Vehicle** in General Information.
6. Remove the right front wheel. Refer to **Tire and Wheel Removal and Installation** in Tires and Wheels.
7. Remove the engine splash shield. Refer to **Splash Shield Replacement - Engine** in Body Front End.

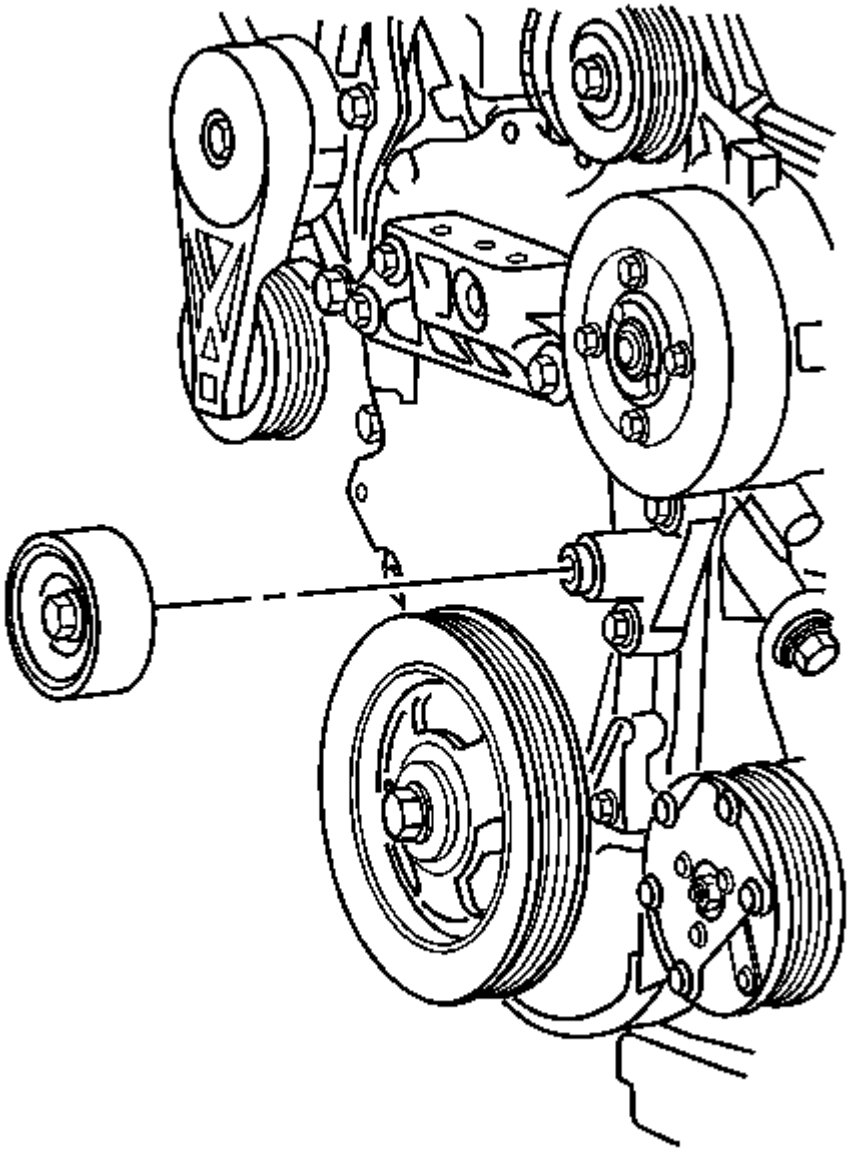

 © 2011 Mitchell Repair Information Company, LLC.

**Fig. 19: View Of Lower Belt Idler Pulley**
**Courtesy of GENERAL MOTORS CORP.**

8. Loosen the lower belt idler pulley bolt.
9. Remove the lower belt idler pulley and bolt from the engine front cover.

**Installation Procedure**

 © 2011 Mitchell Repair Information Company, LLC.

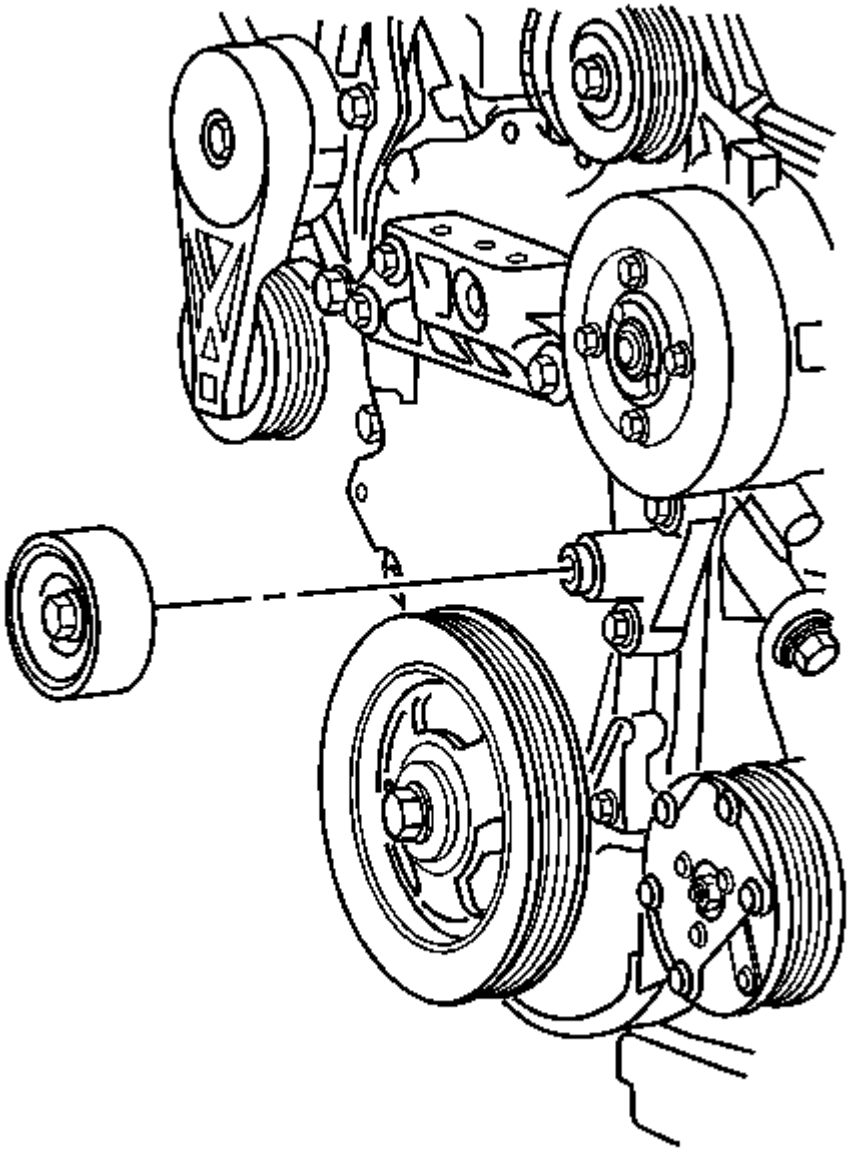

**Fig. 20: View Of Lower Belt Idler Pulley**
**Courtesy of GENERAL MOTORS CORP.**

**NOTE: Refer to Fastener Notice in Cautions and Notices.**

1. Install the lower belt idler pulley and bolt to the engine cover.

 © 2011 Mitchell Repair Information Company, LLC.

**Tighten:** Tighten the bolt to 50 N.m (37 lb ft).

2. Install the engine splash shield. Refer to **Splash Shield Replacement - Engine** in Body Front End.
3. Install the right front wheel. Refer to **Tire and Wheel Removal and Installation** in Tires and Wheels.
4. Lower the vehicle.

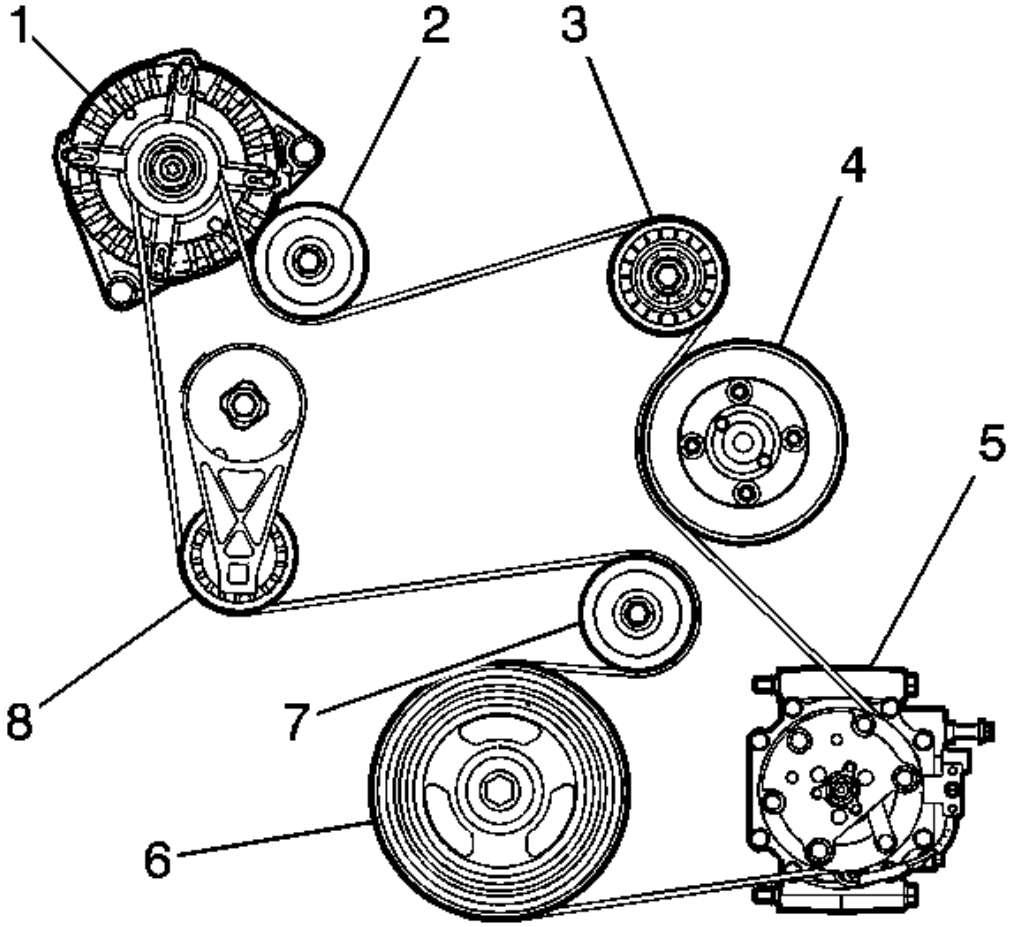


**Fig. 21: View Of Drive Belt Routing**
**Courtesy of GENERAL MOTORS CORP.**

5. Insure the drive belt is properly centered on all the pulleys except the right idler pulley (3).
6. Using **J 39914** rotate the drive belt tensioner away from the drive belt. See **Special Tools**.
7. Install the drive belt to the right idler pulley (2).
8. Carefully release **J 39914** allowing the drive belt tensioner (8) to come in contact with the drive belt. See

 © 2011 Mitchell Repair Information Company, LLC.

**Special Tools**.

9. Remove **J 39914** from the drive belt tensioner (8). See **Special Tools**.
10. Inspect the drive belt to insure the belt is properly centered on all the pulleys (1-8).

**Drive Belt Idler Pulley Replacement - Left**

**Tools Required**

**J 39914** Serpentine Belt Tensioner Unloader. See **Special Tools**.

**Removal Procedure**

1. Remove the air cleaner intake duct. Refer to **Air Cleaner Intake Duct Replacement** in Engine Controls - 3.4L.

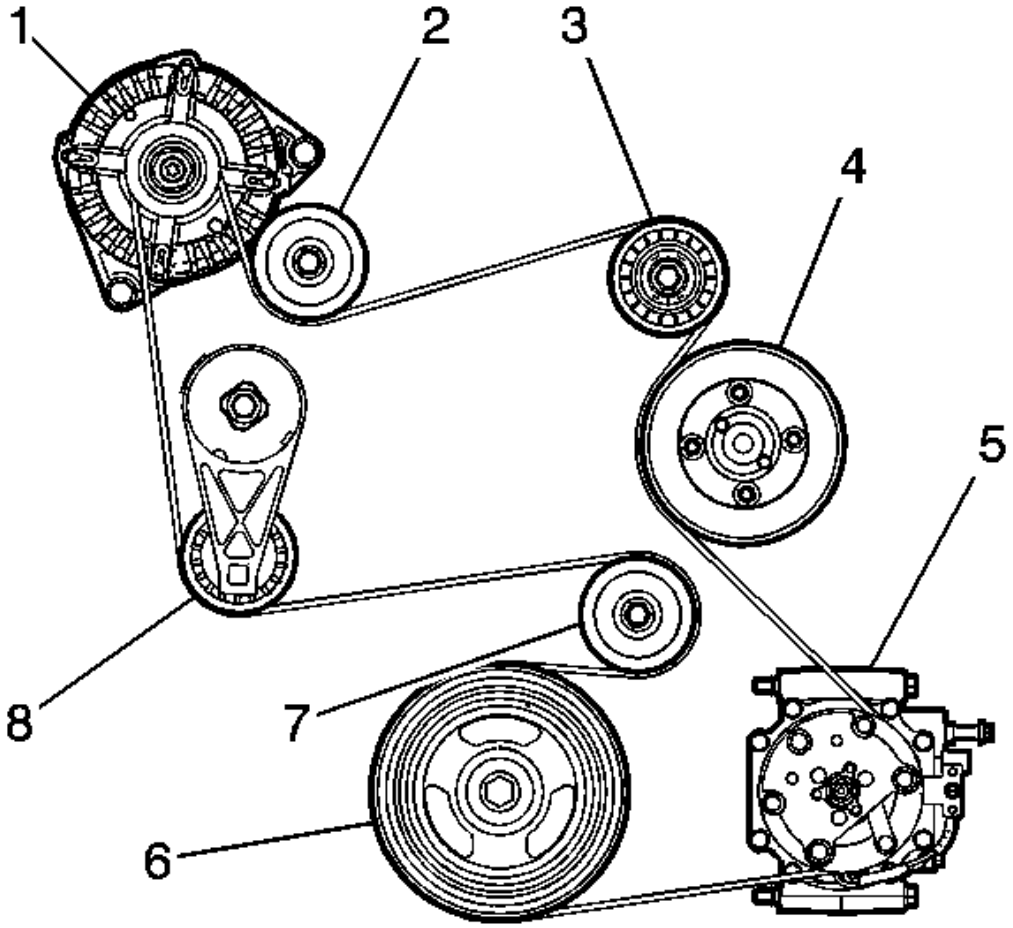


 © 2011 Mitchell Repair Information Company, LLC.

**Fig. 22: View Of Drive Belt Routing**
**Courtesy of GENERAL MOTORS CORP.**

2. Using**J 39914** rotate the drive belt tensioner (8) to release the tension on the drive belt. See **Special Tools**.
3. Remove the drive belt from the right idler pulley (2).
4. Carefully release **J 39914** to relieve the drive belt tensioner spring tension. See **Special Tools**.
5. Remove **J 39914** from the drive belt tensioner (8). See **Special Tools**.

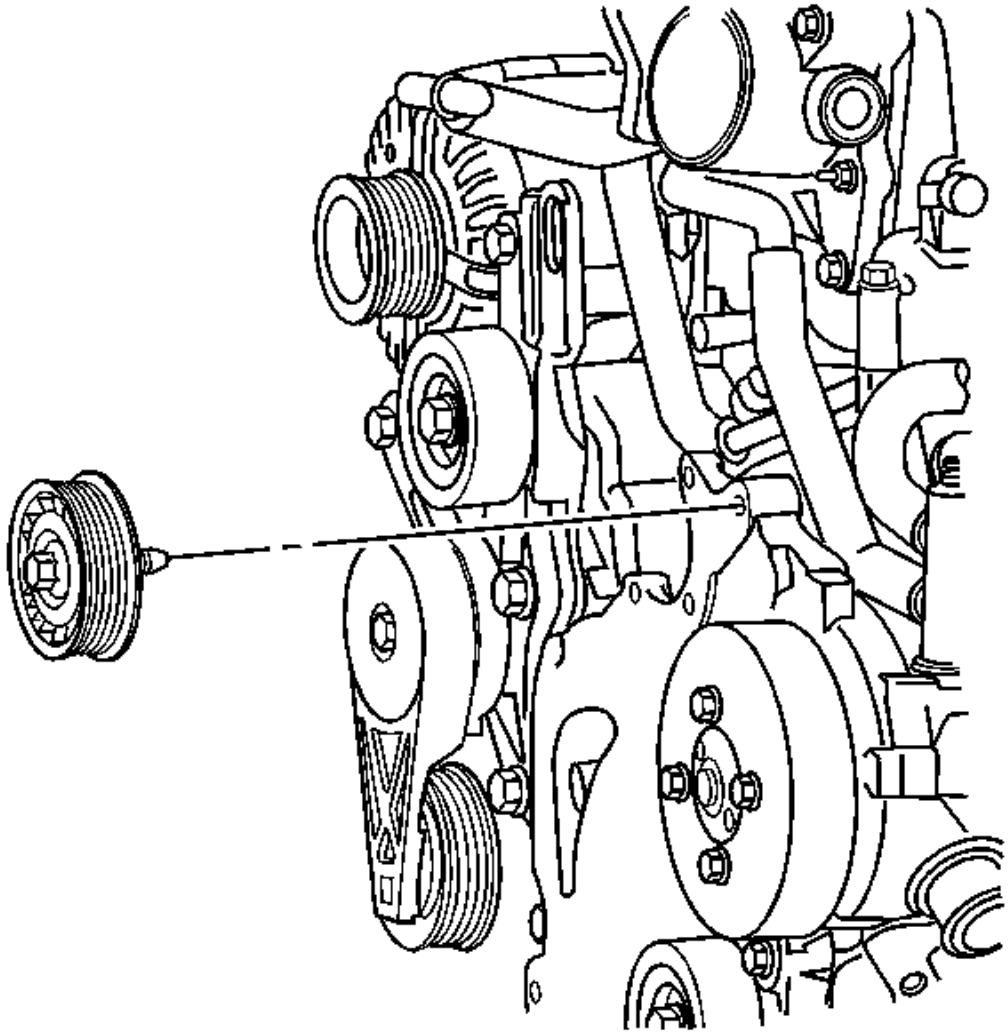

**Fig. 23: View Of Left Belt Idler Pulley**
**Courtesy of GENERAL MOTORS CORP.**

 © 2011 Mitchell Repair Information Company, LLC.

6. Loosen the left belt idler pulley bolt.
7. Remove the left belt idler pulley and bolt from the generator bracket.

**Installation Procedure**

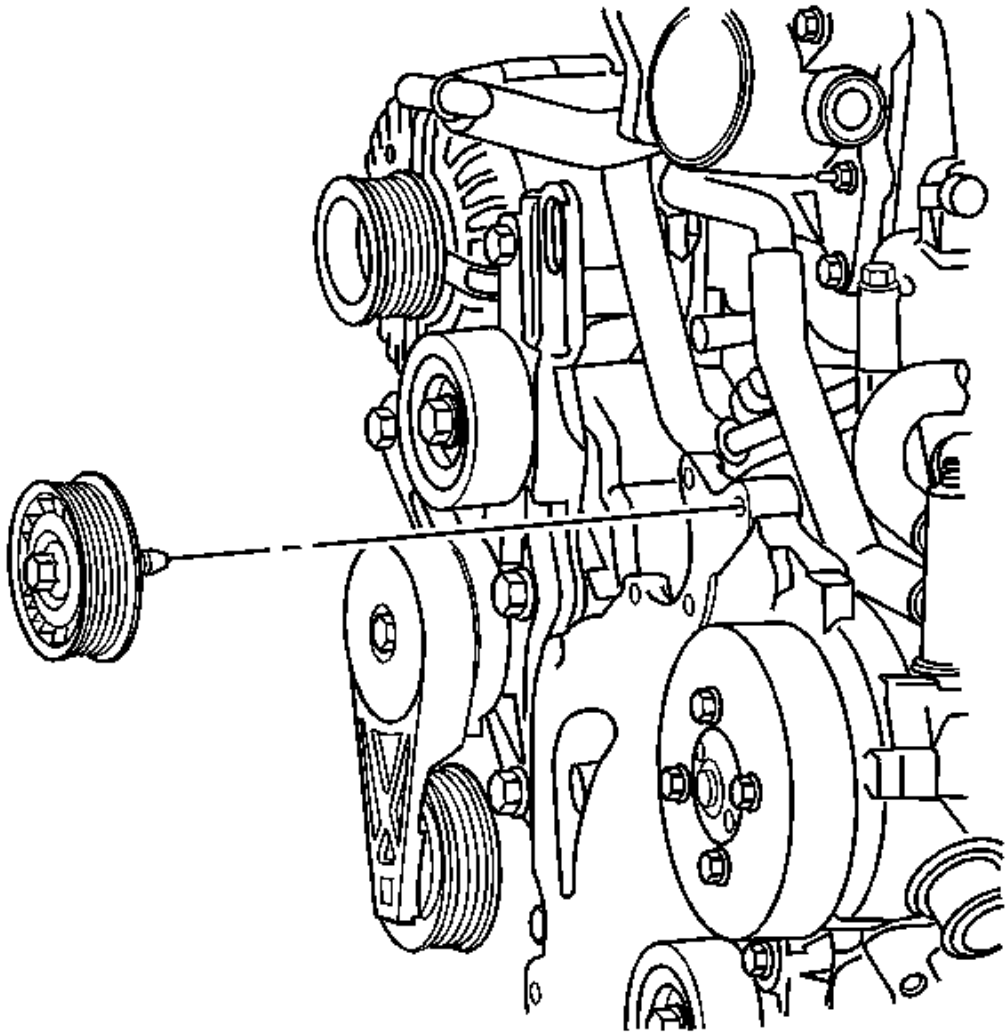

**Fig. 24: View Of Left Belt Idler Pulley**
**Courtesy of GENERAL MOTORS CORP.**

**NOTE: Refer to Fastener Notice in Cautions and Notices.**

1. Install the left belt idler pulley and bolt to the generator bracket.

 © 2011 Mitchell Repair Information Company, LLC.

**Tighten:** Tighten the bolt to 50 N.m (37 lb ft).

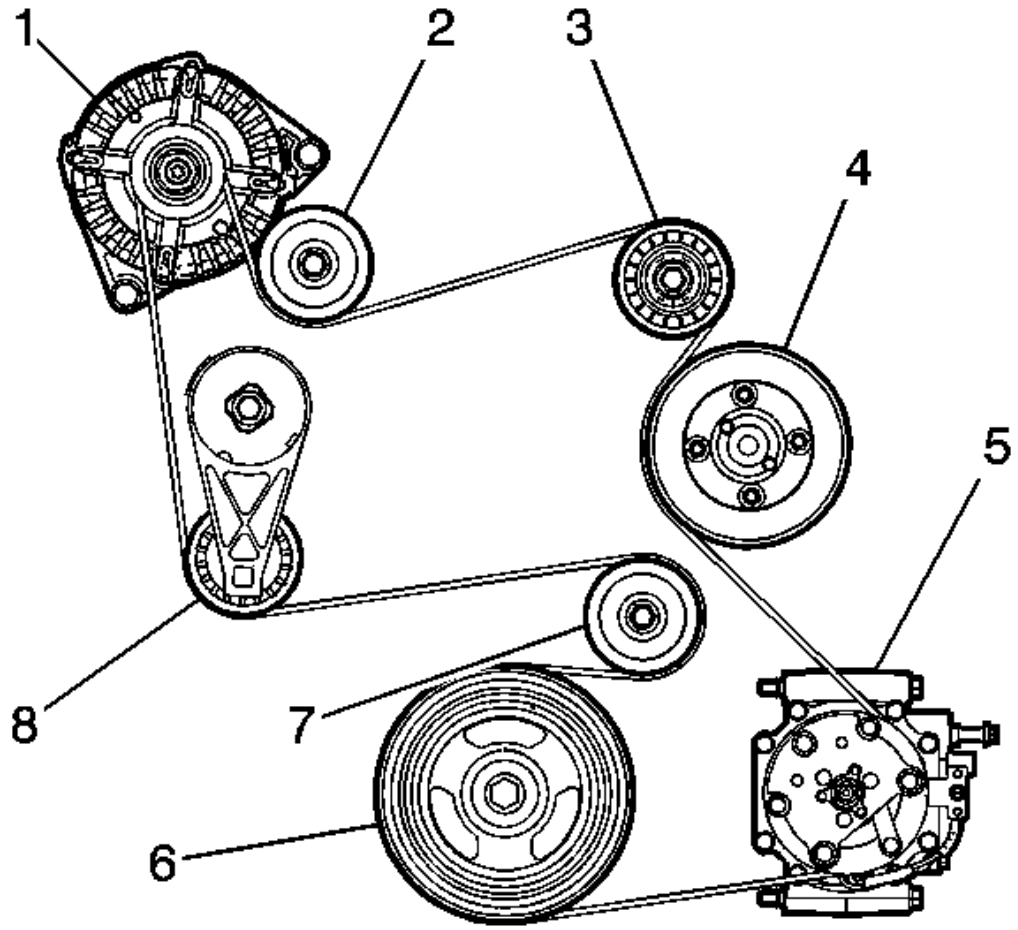


**Fig. 25: View Of Drive Belt Routing**
**Courtesy of GENERAL MOTORS CORP.**

2. Insure the drive belt is properly centered on all the pulleys except the right idler pulley (3).
3. Using **J 39914** rotate the drive belt tensioner away from the drive belt. See **Special Tools**.
4. Install the drive belt to the right idler pulley (2).
5. Carefully release **J 39914** allowing the drive belt tensioner (8) to come in contact with the drive belt. See **Special Tools**.
6. Remove **J 39914** from the drive belt tensioner (8). See **Special Tools**.
7. Inspect the drive belt to insure the belt is properly centered on all the pulleys (1-8).
8. Install the air cleaner intake duct. Refer to **Air Cleaner Intake Duct Replacement** in Engine Controls -

3.4L.

**Drive Belt Idler Pulley Replacement - Right**

**Tools Required**

**J 39914** Serpentine Belt Tensioner Unloader. See **Special Tools**.

**Removal Procedure**

1. Remove the air cleaner intake duct. Refer to **Air Cleaner Intake Duct Replacement** in Engine Controls - 3.4L.

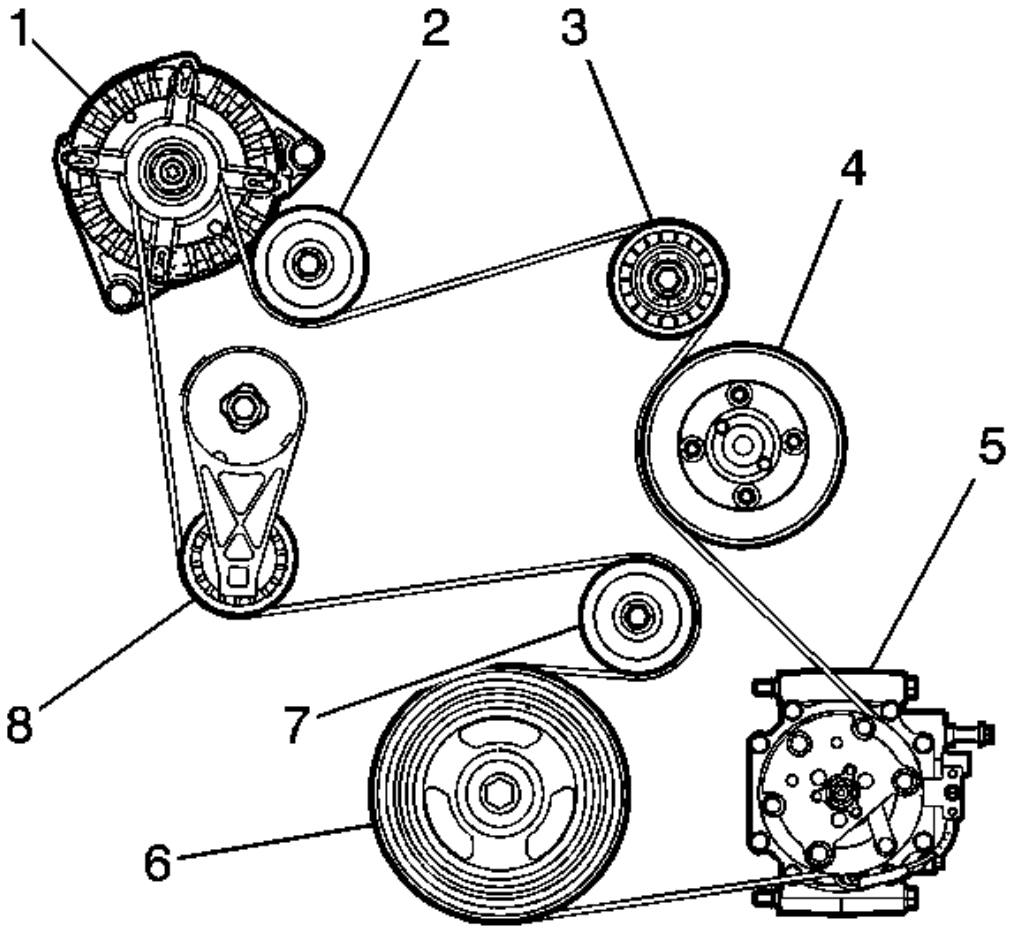


**Fig. 26: View Of Drive Belt Routing**
**Courtesy of GENERAL MOTORS CORP.**

 © 2011 Mitchell Repair Information Company, LLC.

2. Using**J 39914** rotate the drive belt tensioner (8) to release the tension on the drive belt. See **Special Tools**.
3. Remove the drive belt from the right idler pulley (2).
4. Carefully release **J 39914** to relieve the drive belt tensioner spring tension. See **Special Tools**.
5. Remove **J 39914** from the drive belt tensioner (8). See **Special Tools**.

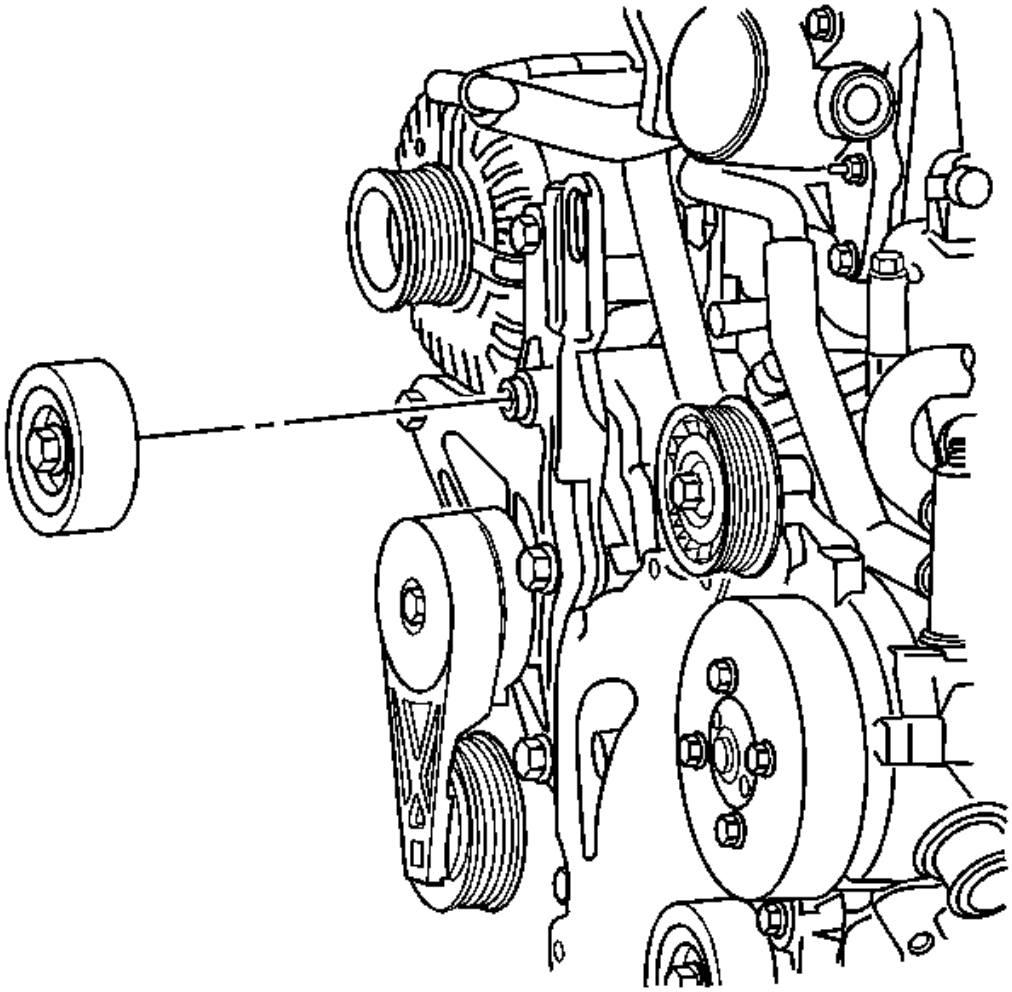

**Fig. 27: View Of Right Belt Idler Pulley**
**Courtesy of GENERAL MOTORS CORP.**

6. Loosen the right belt idler pulley bolt.
7. Remove the right belt idler pulley and bolt from the engine front cover.

 © 2011 Mitchell Repair Information Company, LLC.

**Installation Procedure**

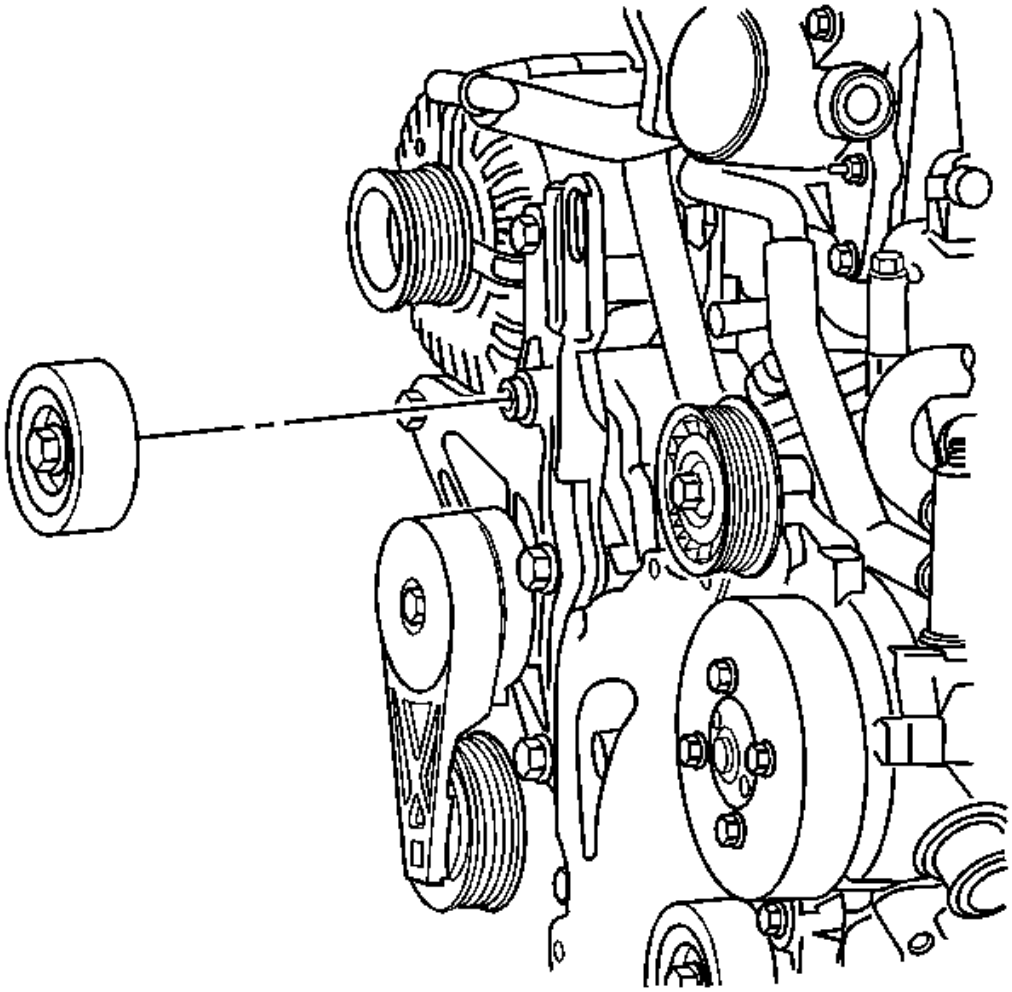

**Fig. 28: View Of Right Belt Idler Pulley**
**Courtesy of GENERAL MOTORS CORP.**

**NOTE: Refer to Fastener Notice in Cautions and Notices.**

1. Install the right belt idler pulley and bolt to the engine front cover.

   **Tighten:** Tighten the bolt to 50 N.m (37 lb ft).

 © 2011 Mitchell Repair Information Company, LLC.

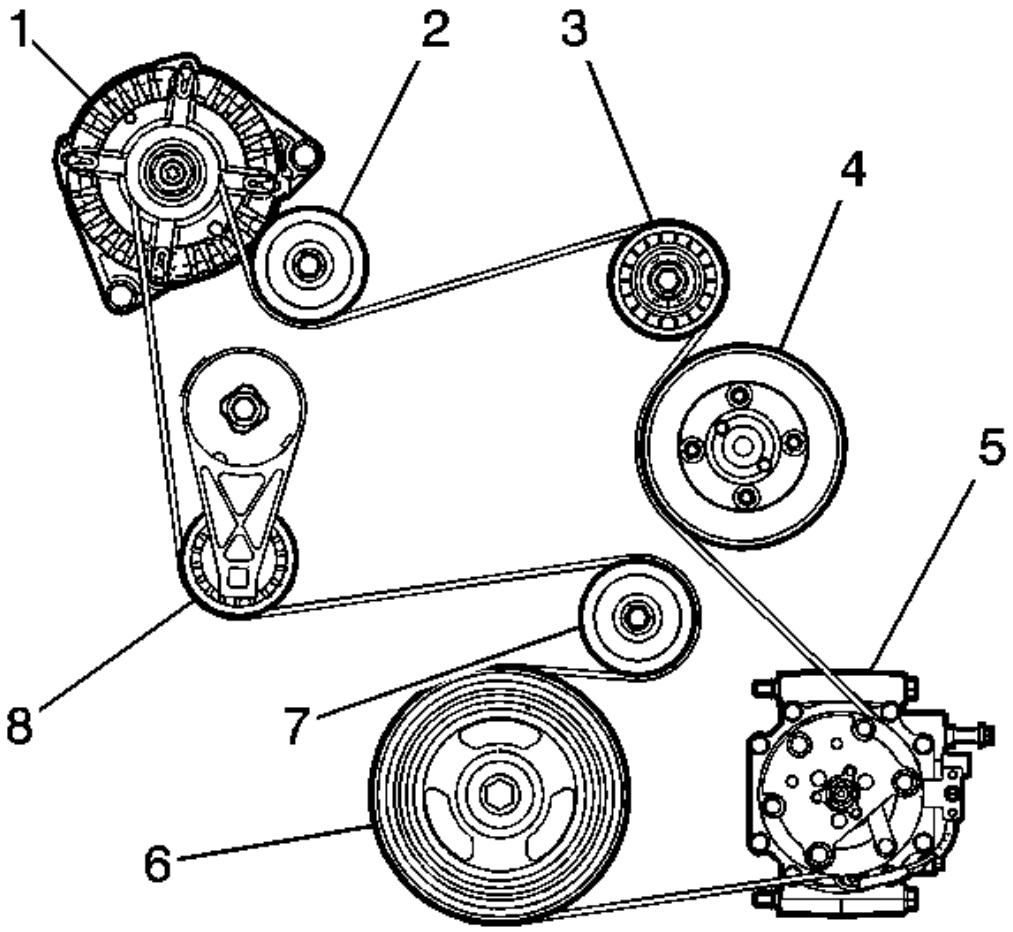


**Fig. 29: View Of Drive Belt Routing**
**Courtesy of GENERAL MOTORS CORP.**

2. Insure the drive belt is properly centered on all the pulleys except the right idler pulley (3).
3. Using **J 39914** rotate the drive belt tensioner away from the drive belt. See **Special Tools**.
4. Install the drive belt to the right idler pulley (2).
5. Carefully release **J 39914** allowing the drive belt tensioner (8) to come in contact with the drive belt. See **Special Tools**.
6. Remove **J 39914** from the drive belt tensioner (8). See **Special Tools**.
7. Inspect the drive belt to insure the belt is properly centered on all the pulleys (1-8).
8. Install the air cleaner intake duct. Refer to **Air Cleaner Intake Duct Replacement** in Engine Controls - 3.4L.

 © 2011 Mitchell Repair Information Company, LLC.

**Engine Support Fixture**

**Installation Procedure**

## Tools Required

- **J 28467-B** Universal Engine Support Fixture. See **Special Tools**.
- **J 36462-A** Engine Support Adapter Leg Set. See **Special Tools**.
- **J-28467-13** Engine Support Fixture Adapters. See **Special Tools**.
- GM P/N 11519137 4 Studs or equivalent

1. Remove the fuel injector sight shield. Refer to **Fuel Injector Sight Shield Replacement**.

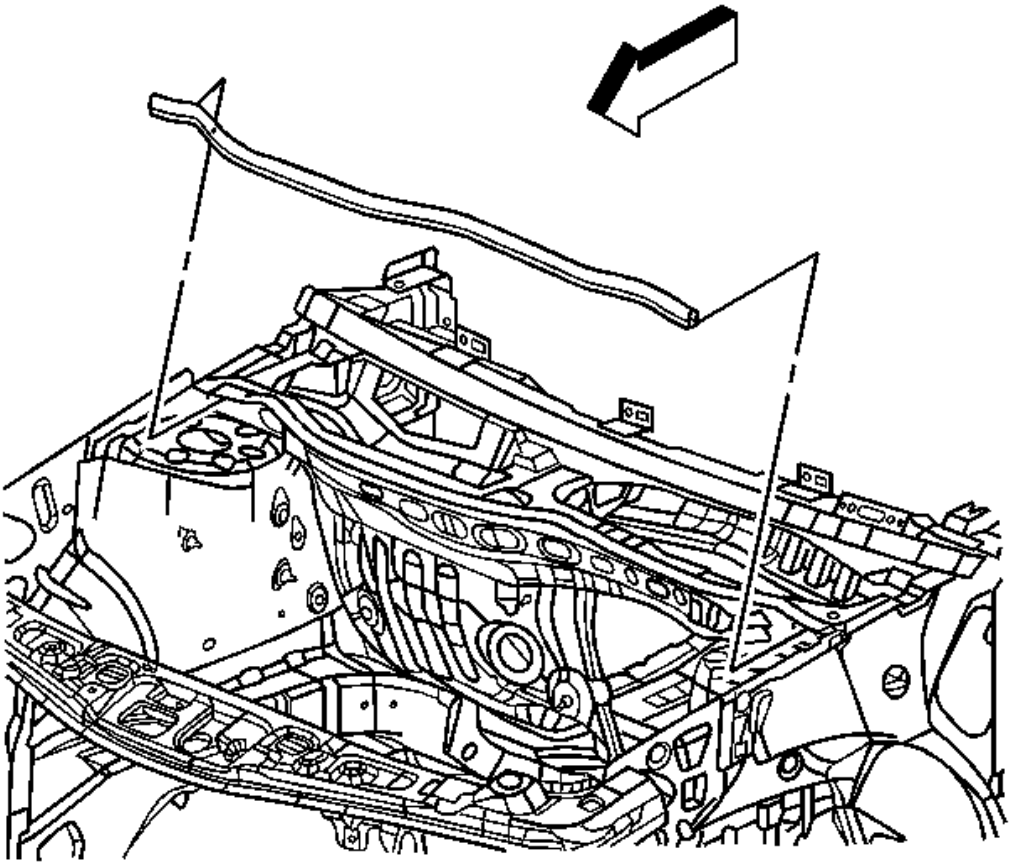

**Fig. 30: View Of Hood Rear Seal**
**Courtesy of GENERAL MOTORS CORP.**

 © 2011 Mitchell Repair Information Company, LLC.

2. Pull each end of the hood rear seal away from the cowl panel flange near both strut towers.

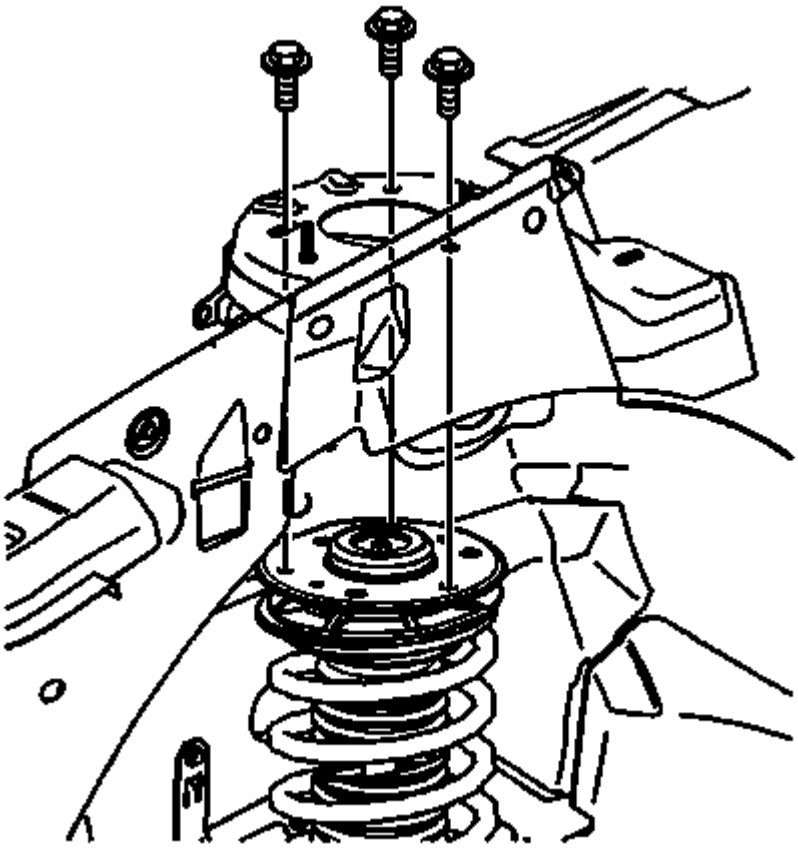

**Fig. 31: View Of Strut Assembly To Body Bolts**
**Courtesy of GENERAL MOTORS CORP.**

**NOTE: Refer to Fastener Notice in Cautions and Notices.**

3. Replace 2 strut bolts with studs GM P/N 11519137 on right and left sides of the vehicle for installation of support fixture.

   **Tighten:** Tighten the studs to 25 N.m (18 lb ft).

 © 2011 Mitchell Repair Information Company, LLC.

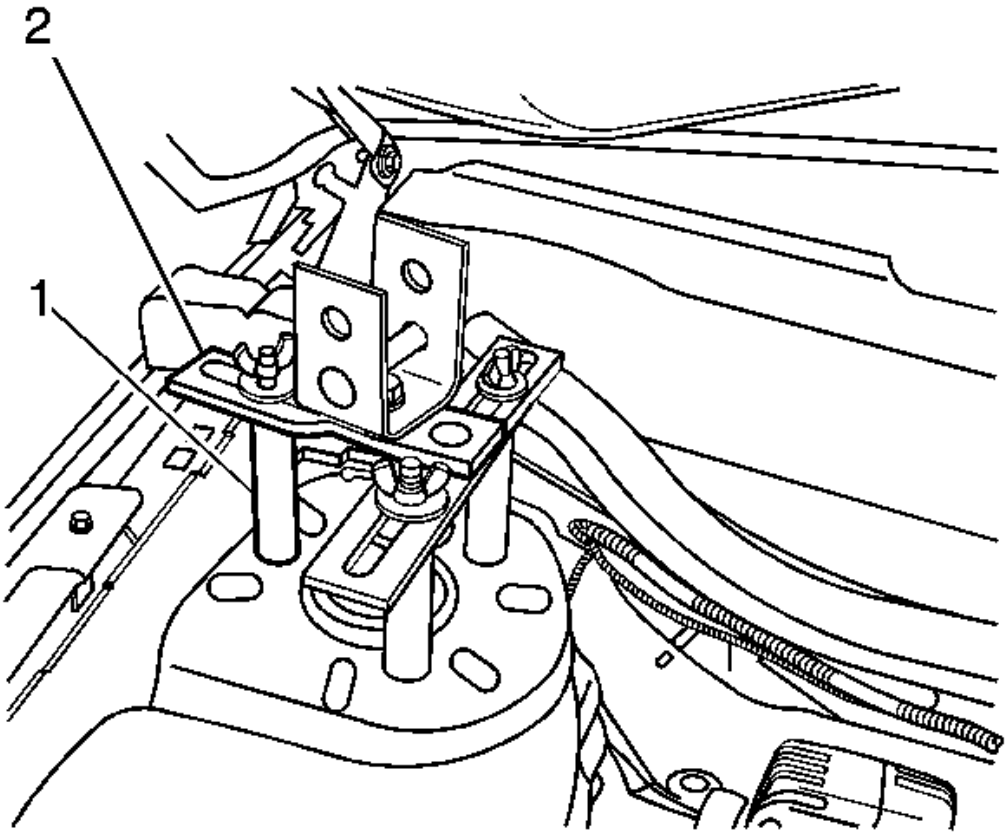


**Fig. 32: Installing J-28467-13 & J 28467-5 Strut Tower Adapter To Top Of Right Strut Tower**
**Courtesy of GENERAL MOTORS CORP.**

4. Install the **J-28467-13** (1) and J 28467-5 strut tower adapter (2) to the top of the right strut tower. See **Special Tools**.

 © 2011 Mitchell Repair Information Company, LLC.

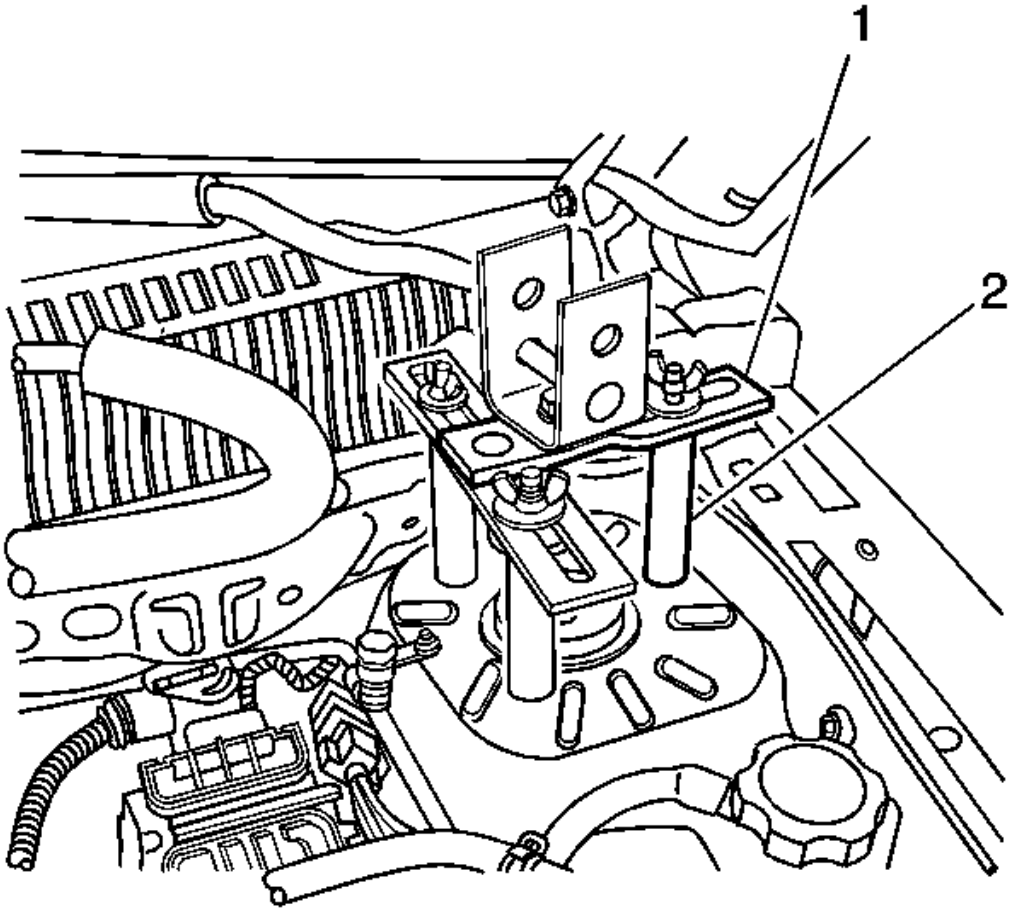


**Fig. 33: Installing J-28467-13 & J 28467-5 Strut Tower Adapter To Top Of Left Strut Tower**
**Courtesy of GENERAL MOTORS CORP.**

5. Install the **J-28467-13** (2) and J 28467-5 strut tower adapter (1) to the top of the left strut tower. See **Special Tools**.

 © 2011 Mitchell Repair Information Company, LLC.

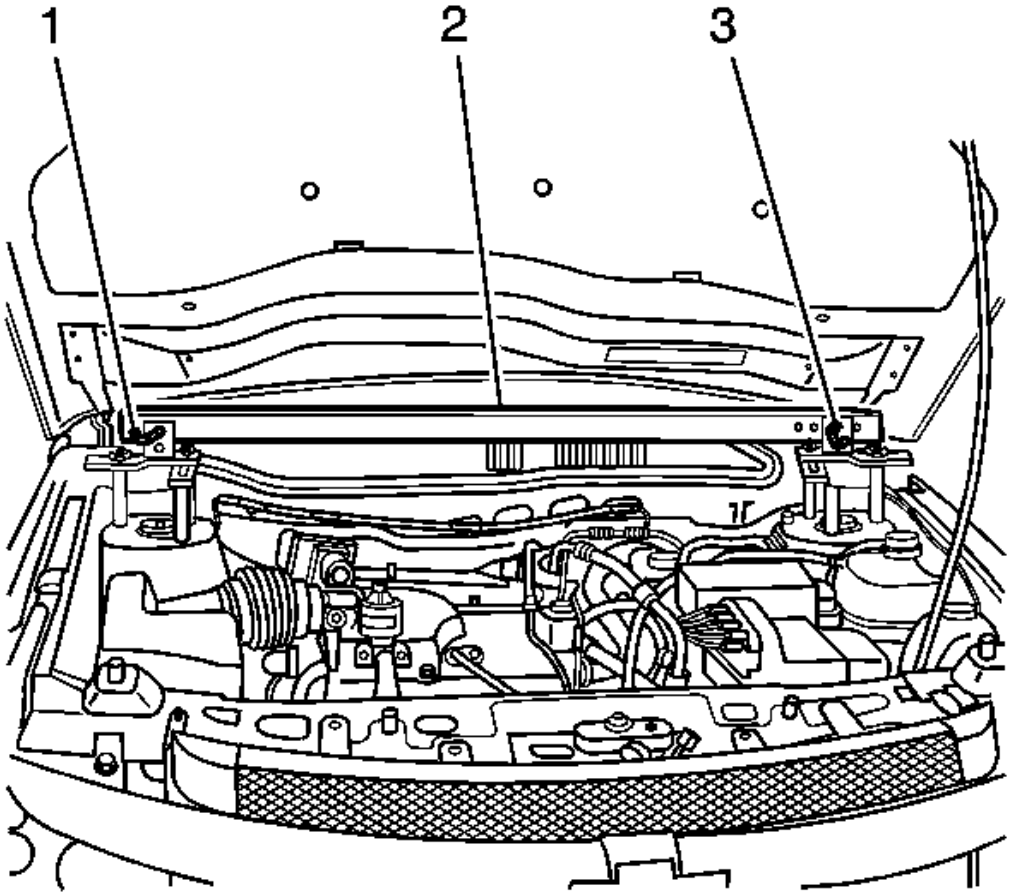


**Fig. 34: Installing Engine Support Fixture Cross Bar & Safety Pins**
**Courtesy of GENERAL MOTORS CORP.**

6. Install a 127 cm (50 in) engine support fixture cross bar (2) transversely across the vehicle between both J 28467-5 strut tower adapters.
7. Insert safety pins (1, 3) through the J 28467-5 strut tower adapters and the cross bar (2) to prevent movement.

**IMPORTANT: If 58 cm (23 in) length engine support cross bar is not available it may be necessary to remove the vehicle hood for additional clearance if a longer cross bar is to be substituted.**

 © 2011 Mitchell Repair Information Company, LLC.

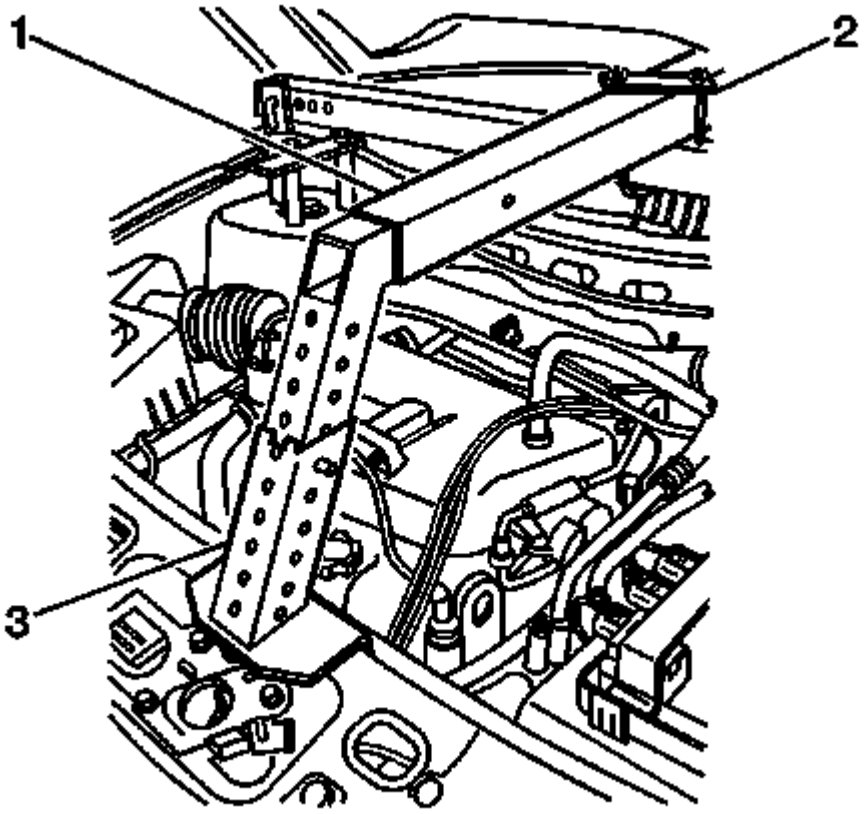


**Fig. 35: Securing Longitudinal Mounted Cross Bar To Transverse Mounted Cross Bar Using J 28467-1A Clamp**
**Courtesy of GENERAL MOTORS CORP.**

8. Position a 58 cm (23 in) engine support fixture cross bar (1) longitudinally with J 36462-A leg assembly (3) next to the rear engine lift bracket.
9. Install a J 28467-1A clamp (2) to secure the longitudinal mounted cross bar to the transverse mounted cross bar.

 © 2011 Mitchell Repair Information Company, LLC.

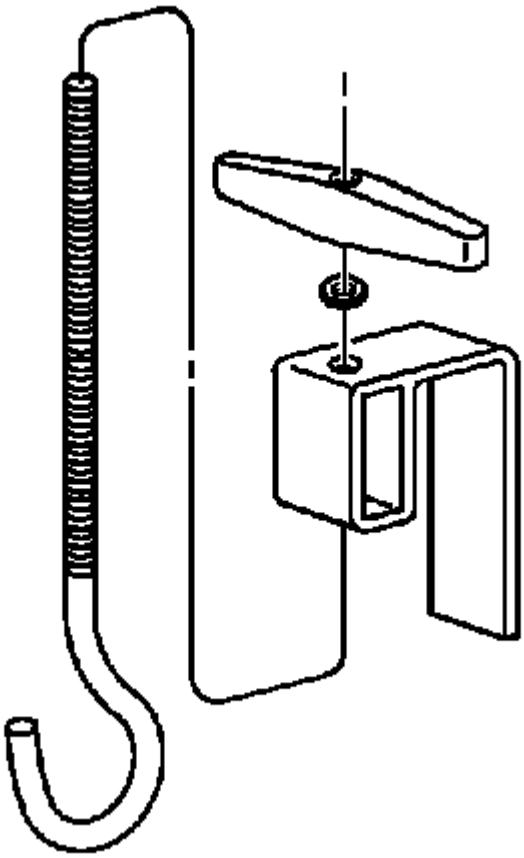

**Fig. 36: View Of Lift Hook Assembly**
**Courtesy of GENERAL MOTORS CORP.**

10. Insert a J 28467-7A lift hook through a J 28467-6 bracket and install a J 28467-34 wing nut.

 © 2011 Mitchell Repair Information Company, LLC.

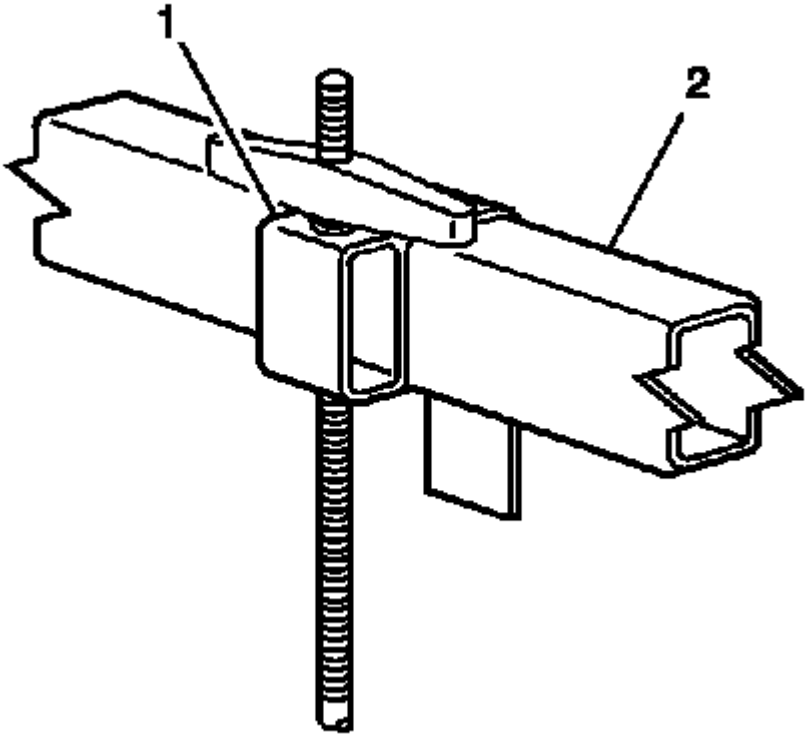


**Fig. 37: View Of Lift Hook & Bracket Assembly At Longitudinal Mounted Cross Bar**
**Courtesy of GENERAL MOTORS CORP.**

11. Install the lift hook and bracket assembly (1) to the longitudinal mounted cross bar (2).

 © 2011 Mitchell Repair Information Company, LLC.

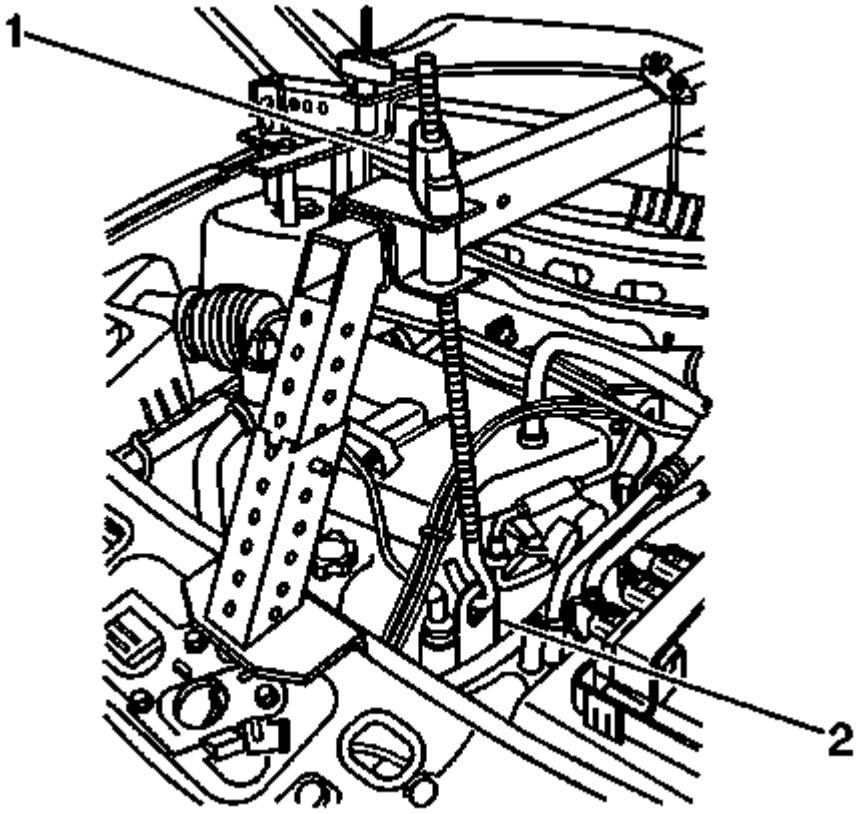


**Fig. 38: Positioning J 28467-7A Lift Hook To Rear Engine Lift Bracket**
**Courtesy of GENERAL MOTORS CORP.**

12. Position the J 28467-7A lift hook to the rear engine lift bracket (2).
13. Tighten the J 28467-34 wing nut (1) until all free slack is removed from the J 28467-7A bolt hook.

**IMPORTANT: If 58 cm (23 in) length engine support cross bar is not available it may be necessary to remove the vehicle hood for additional clearance if a longer cross bar is to be substituted.**

 © 2011 Mitchell Repair Information Company, LLC.

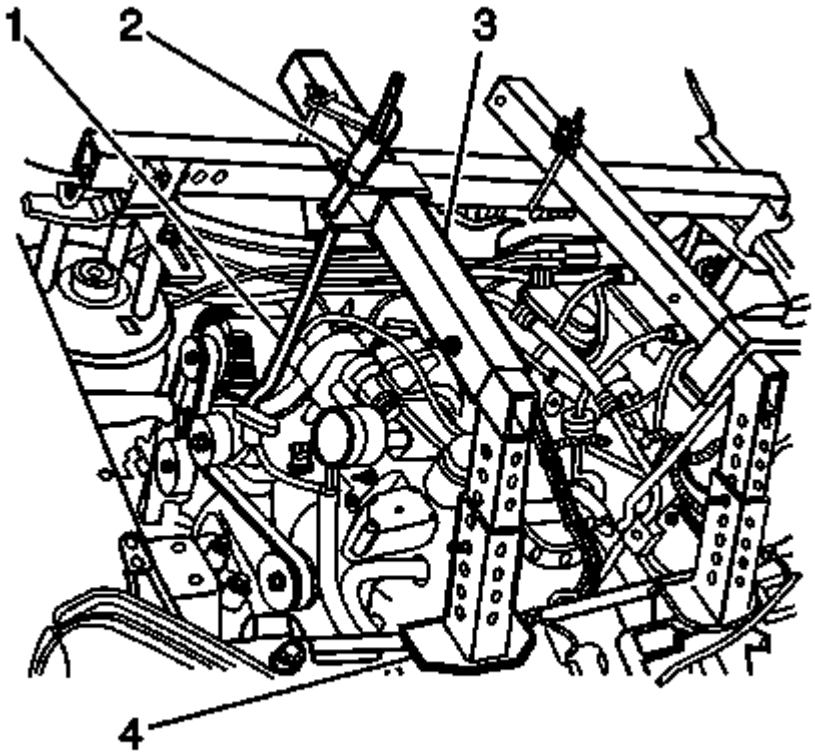


**Fig. 39: View Of J 28467-7A Lift Hook, J 28467-34 Wing Nut, Engine Support Fixture Cross Bar & J 36462-A Leg Assembly**
**Courtesy of GENERAL MOTORS CORP.**

14. Position a 58 cm (23 in) engine support fixture cross bar (3) longitudinally with J 36462-A leg assembly (4) next to the front engine lift bracket.
15. Install a J 28467-1A clamp to secure the longitudinal mounted cross bar to the transverse mounted cross bar.

 © 2011 Mitchell Repair Information Company, LLC.

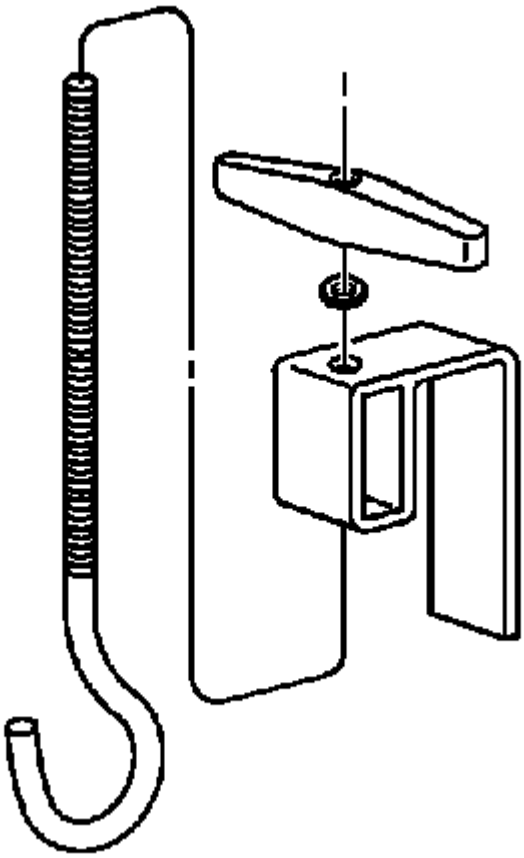

**Fig. 40: View Of Lift Hook Assembly**
**Courtesy of GENERAL MOTORS CORP.**

16. Insert a J 28467-7A lift hook through a J 28467-6 bracket and install a J 28467-34 wing nut.

 © 2011 Mitchell Repair Information Company, LLC.

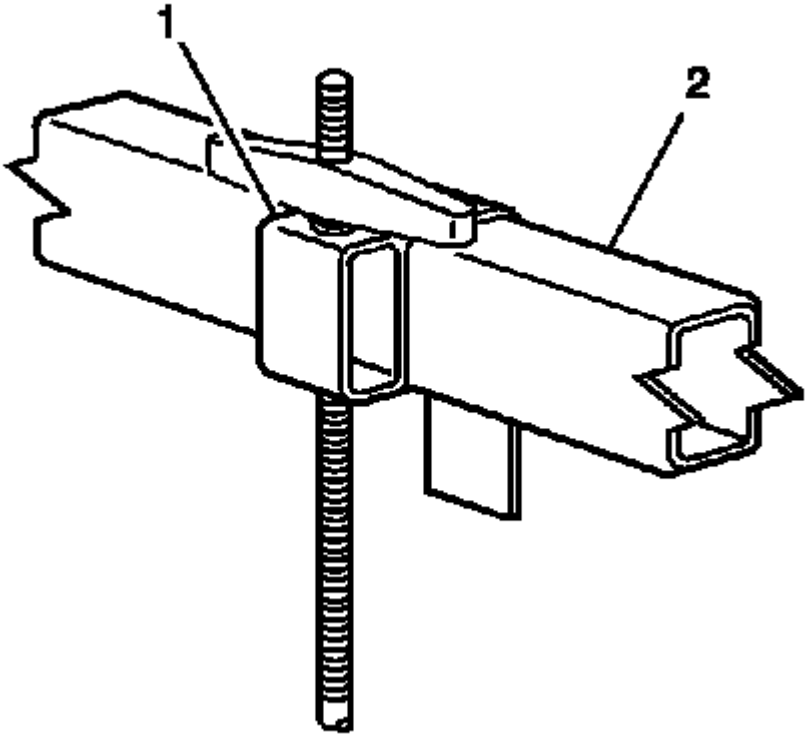


**Fig. 41: View Of Lift Hook & Bracket Assembly At Longitudinal Mounted Cross Bar**
**Courtesy of GENERAL MOTORS CORP.**

17. Install the lift hook and bracket assembly (1) to the longitudinal mounted cross bar (2).

 © 2011 Mitchell Repair Information Company, LLC.

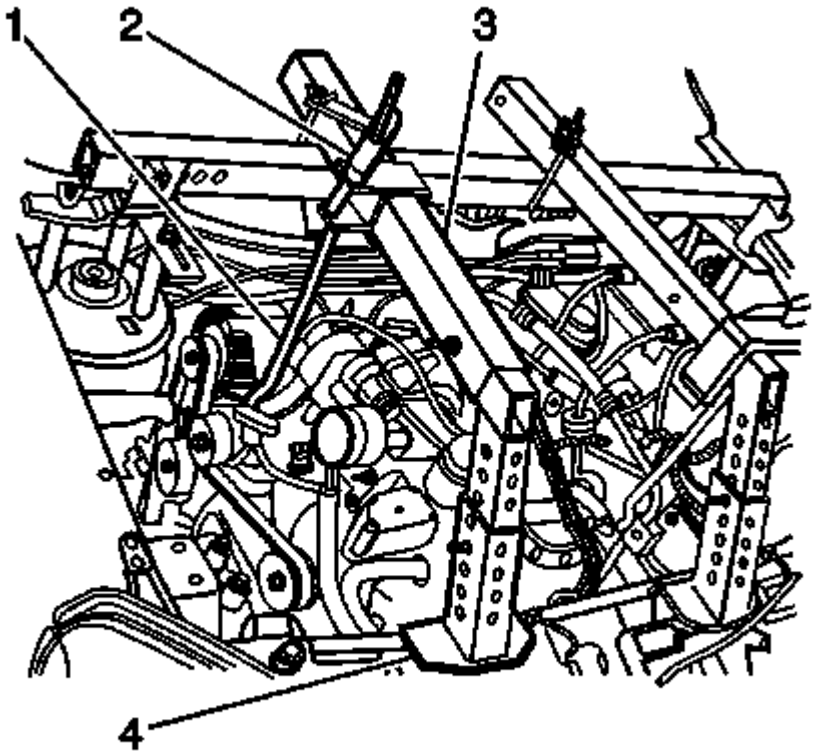


**Fig. 42: View Of J 28467-7A Lift Hook, J 28467-34 Wing Nut, Engine Support Fixture Cross Bar & J 36462-A Leg Assembly**
**Courtesy of GENERAL MOTORS CORP.**

18. Position the J 28467-7A bolt hook (1) to the front engine lift bracket.
19. Tighten the J 28467-34 wing nut (2) until all free slack is removed from the J 28467-7A lift hook (1).
20. Evenly tighten both wing nuts until the engine weight is supported by the engine support fixture and no longer carried by the engine mounts.

 © 2011 Mitchell Repair Information Company, LLC.

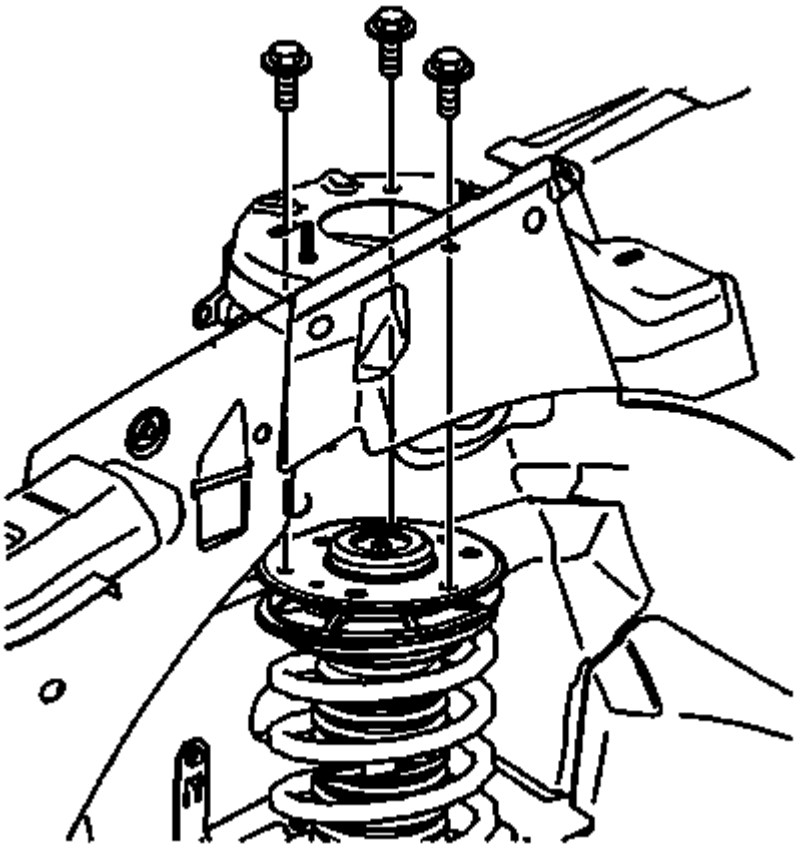

**Fig. 43: View Of Strut Assembly To Body Bolts**
**Courtesy of GENERAL MOTORS CORP.**

**NOTE: Refer to Fastener Notice in Cautions and Notices.**

21. After removing the engine support fixture, replace the temporary strut studs with the original strut bolts.

    **Tighten:** Tighten the studs to 25 N.m (18 lb ft).

**Engine Mount Inspection**

**IMPORTANT: Before replacing any engine mount due to suspected fluid loss, verify that the source of the fluid is the engine mount, not the engine or accessories.**

1. Install the engine support fixture. Refer to **Engine Support Fixture**.
2. Observe the engine mount while raising the engine. Raising the engine removes the weight from the engine mount and creates slight tension on the rubber.
3. Replace the engine mount if the engine mount exhibits any of the following conditions:
   - The hard rubber is covered with heat check cracks.
   - The rubber is separated from the metal plate of the engine mount.

 © 2011 Mitchell Repair Information Company, LLC.

- The rubber is split through the center of the engine mount.
- The engine mount itself is leaking fluid.

4. For engine mount replacement. Refer to the following procedures:
   - **Engine Mount Replacement - Right**
   - **Engine Mount Bracket Replacement - Right**
   - **Transmission Mount Replacement - Rear** in Automatic Transaxle - AF33-5
   - **Transmission Mount Replacement - Left** in Automatic Transaxle - AF33-5
   - **Transmission Mount Bracket Replacement - Rear** in Automatic Transaxle - AF33-5

**Engine Mount Replacement - Front**

**Removal Procedure**

1. Raise and support the vehicle. Refer to **Lifting and Jacking the Vehicle** in General Information.

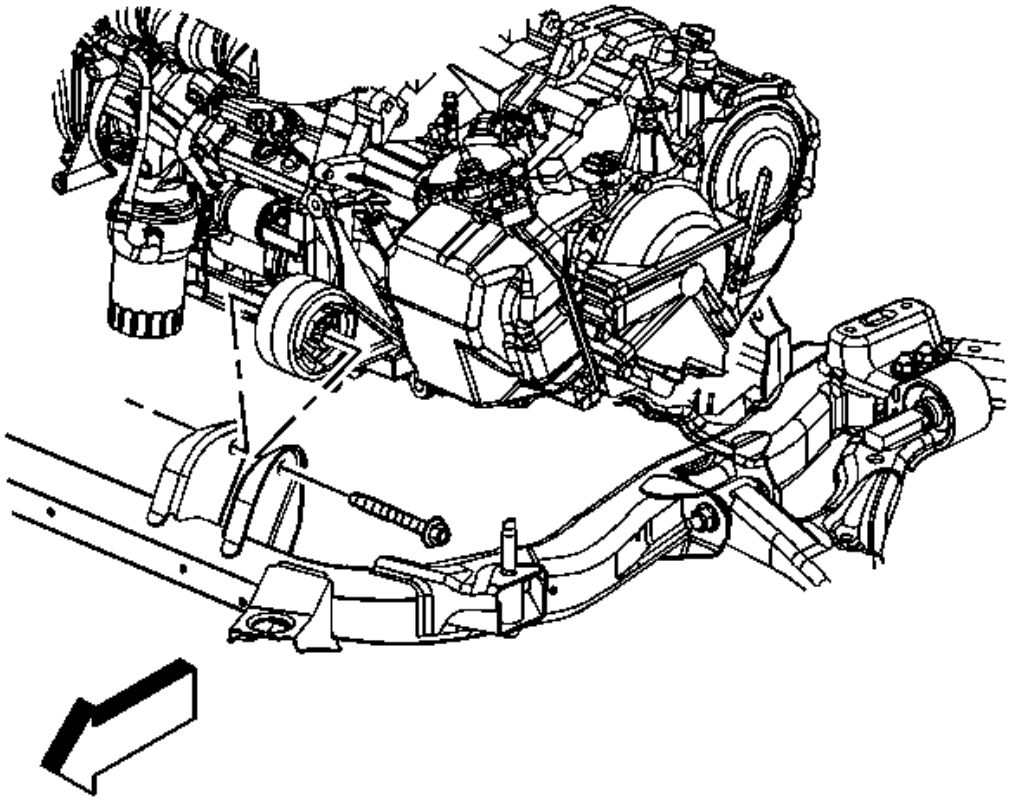

**Fig. 44: View Of Transmission Mount Bolt**

 © 2011 Mitchell Repair Information Company, LLC.

**Courtesy of GENERAL MOTORS CORP.**

2. Remove the transmission mount bolt.

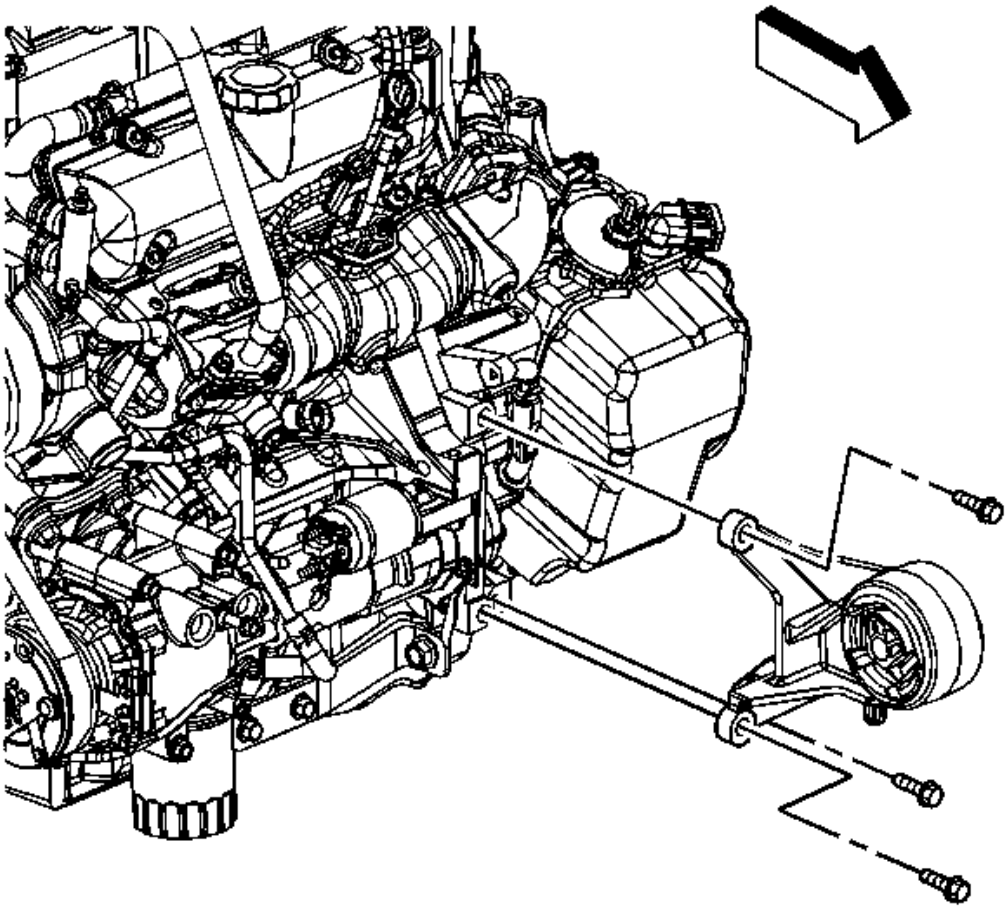

**Fig. 45: View Of Transmission Mount & Bolts**
**Courtesy of GENERAL MOTORS CORP.**

3. Remove the transmission mount-to-transmission bolts.
4. Remove the transmission mount from the vehicle.

**Installation Procedure**

 © 2011 Mitchell Repair Information Company, LLC.

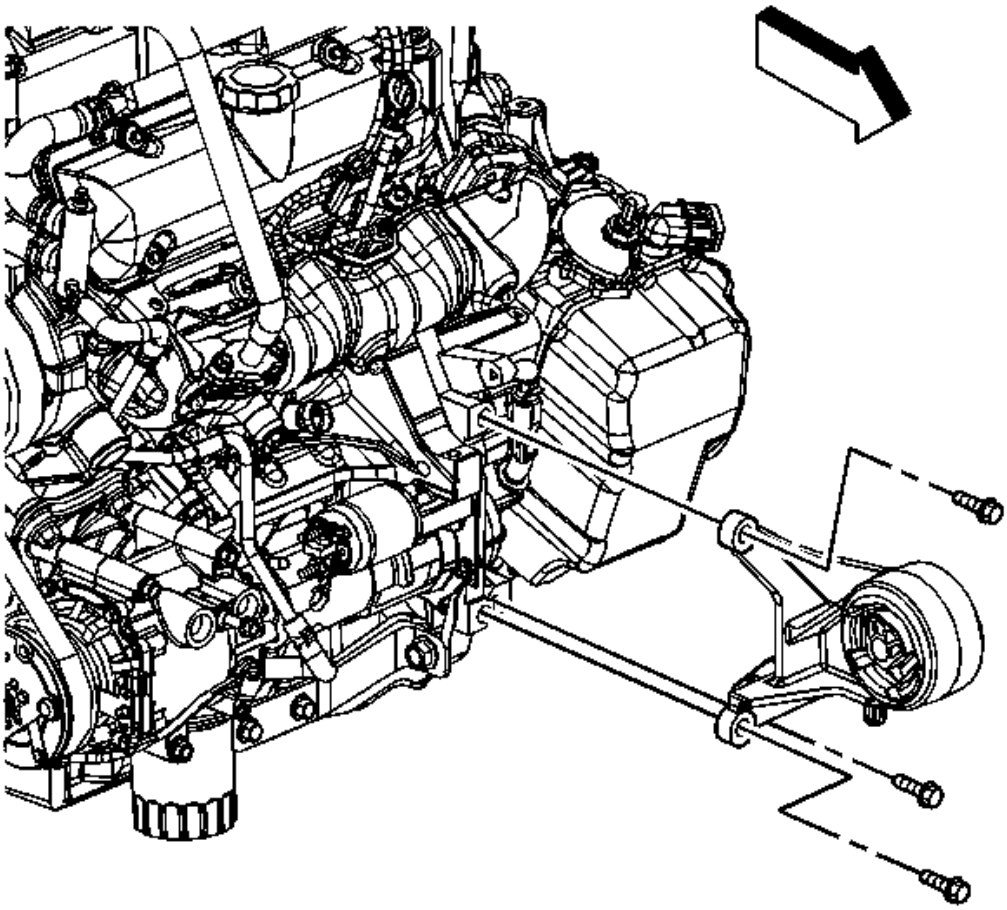

**Fig. 46: View Of Transmission Mount & Bolts**
**Courtesy of GENERAL MOTORS CORP.**

**NOTE: Refer to Fastener Notice in Cautions and Notices.**

1. Install the transmission mount-to-transmission bolts.

   **Tighten:** Tighten the bolts to 50 N.m (37 lb ft).

 © 2011 Mitchell Repair Information Company, LLC.

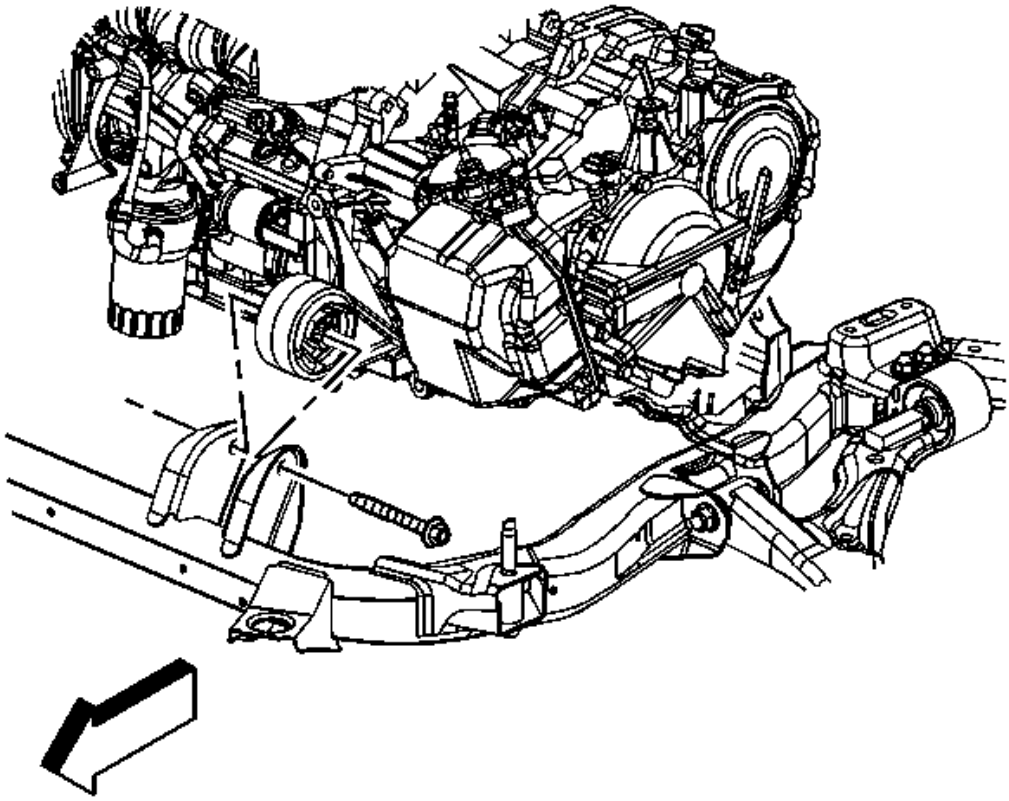

**Fig. 47: View Of Transmission Mount Bolt**
**Courtesy of GENERAL MOTORS CORP.**

2. Install the transmission mount bolt.

   **Tighten:** Tighten the bolts to 110 N.m (81 lb ft).

3. Lower the vehicle.

**Engine Mount Replacement - Right**

**Removal Procedure**

1. Remove the air cleaner assembly. Refer to **Air Cleaner Assembly Replacement** in Engine Controls - 3.4L.
2. Support the engine. Refer to **Engine Support Fixture**.
3. Raise and support the vehicle. Refer to **Lifting and Jacking the Vehicle** in General Information.

 © 2011 Mitchell Repair Information Company, LLC.

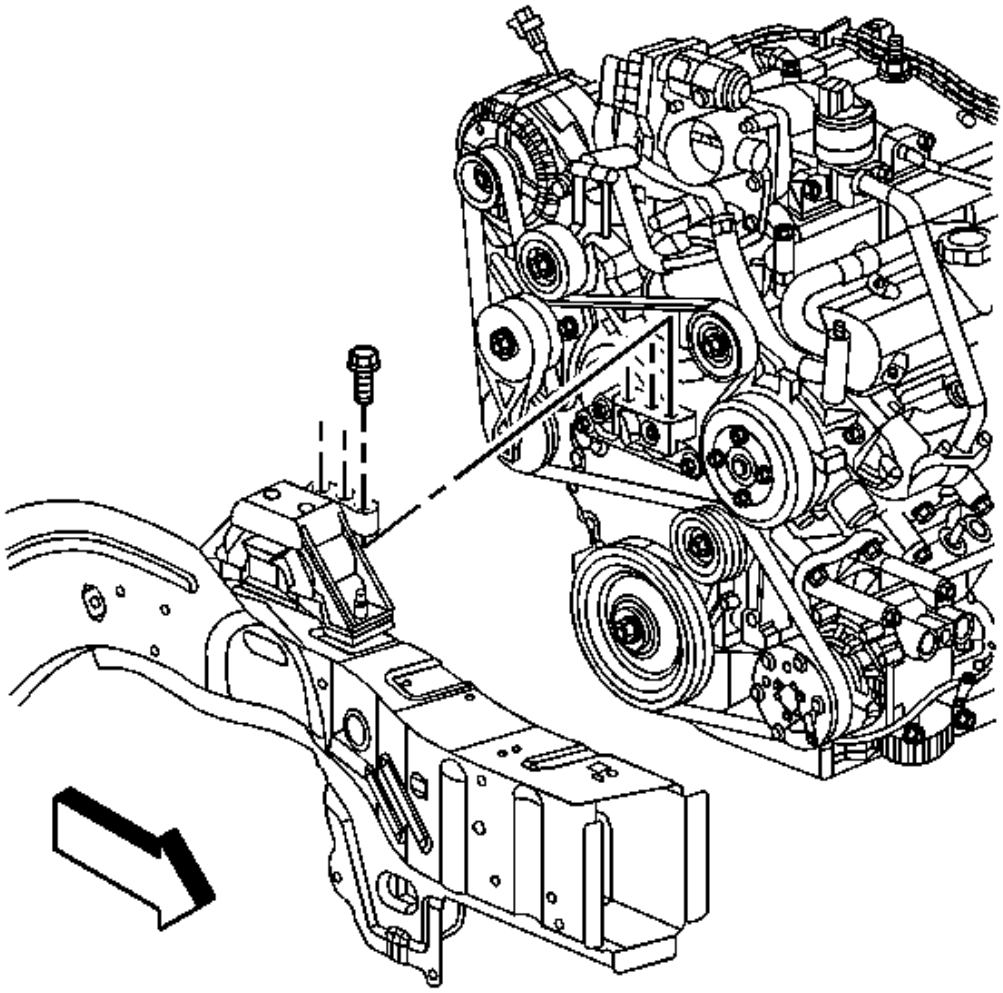

**Fig. 48: View Of Right Engine Mount To Bracket Bolts**
**Courtesy of GENERAL MOTORS CORP.**

4. Remove the engine mount to bracket bolts.

 © 2011 Mitchell Repair Information Company, LLC.

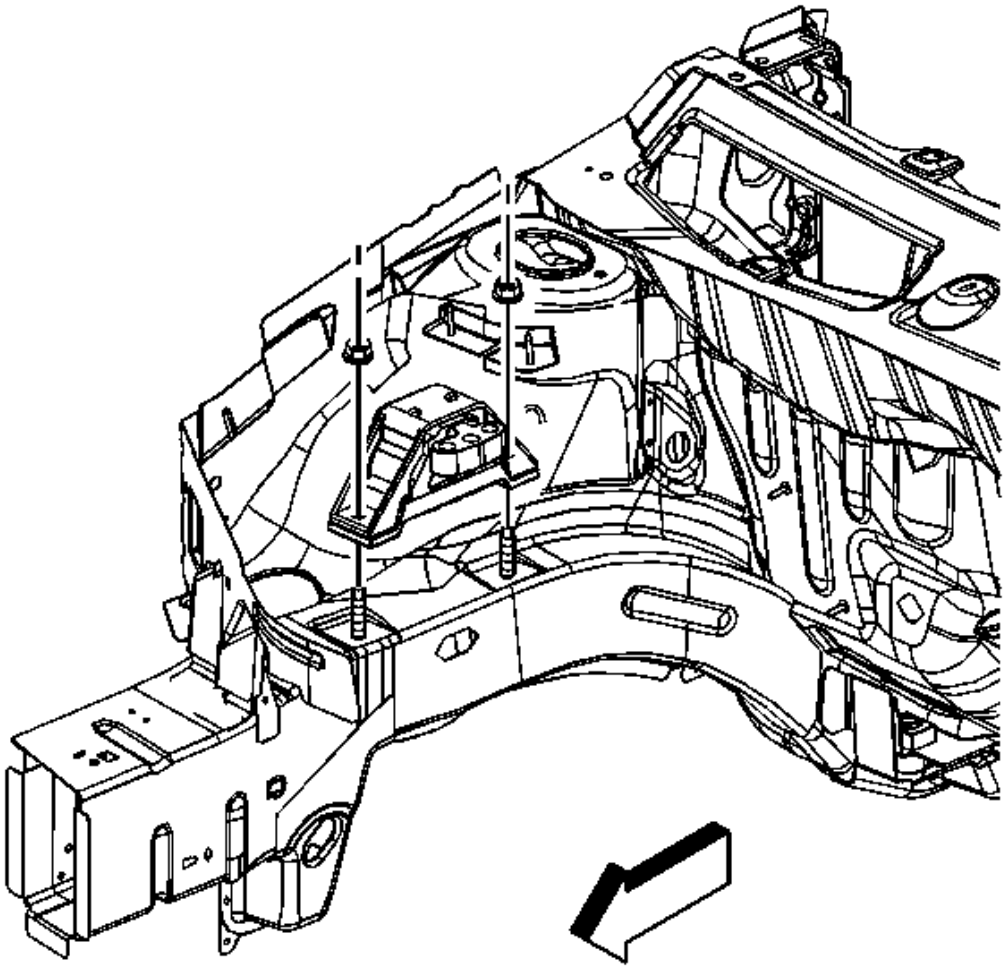

**Fig. 49: View Of Right Engine Mount To Frame Rail Nuts**
**Courtesy of GENERAL MOTORS CORP.**

5. Remove the engine mount to frame rail nuts.
6. Remove the engine mount from the vehicle.

**Installation Procedure**

 © 2011 Mitchell Repair Information Company, LLC.

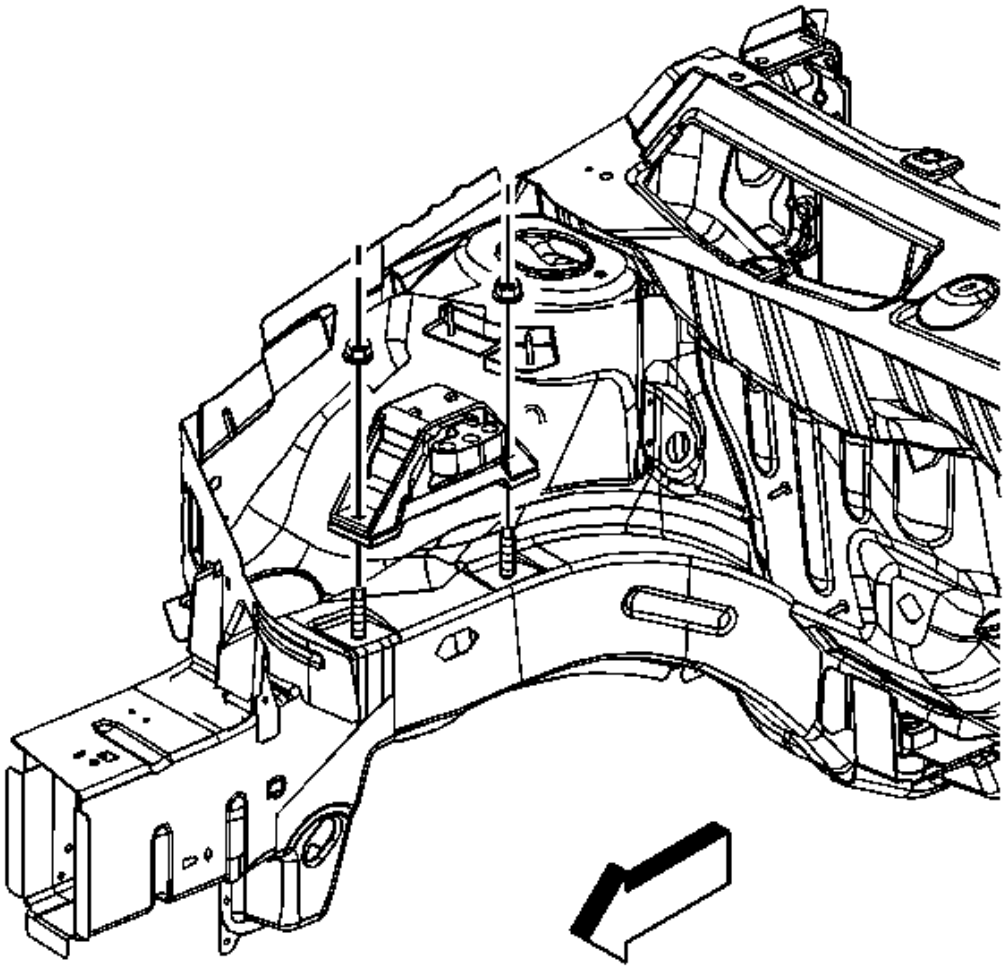

**Fig. 50: View Of Right Engine Mount To Frame Rail Nuts**
**Courtesy of GENERAL MOTORS CORP.**

1. Position the engine mount onto the frame rail studs.

**NOTE:** **Refer to Fastener Notice in Cautions and Notices.**

2. Install the engine mount to frame rail stud nuts.

**Tighten:** Tighten the nuts to 110 N.m (81 lb ft).

 © 2011 Mitchell Repair Information Company, LLC.

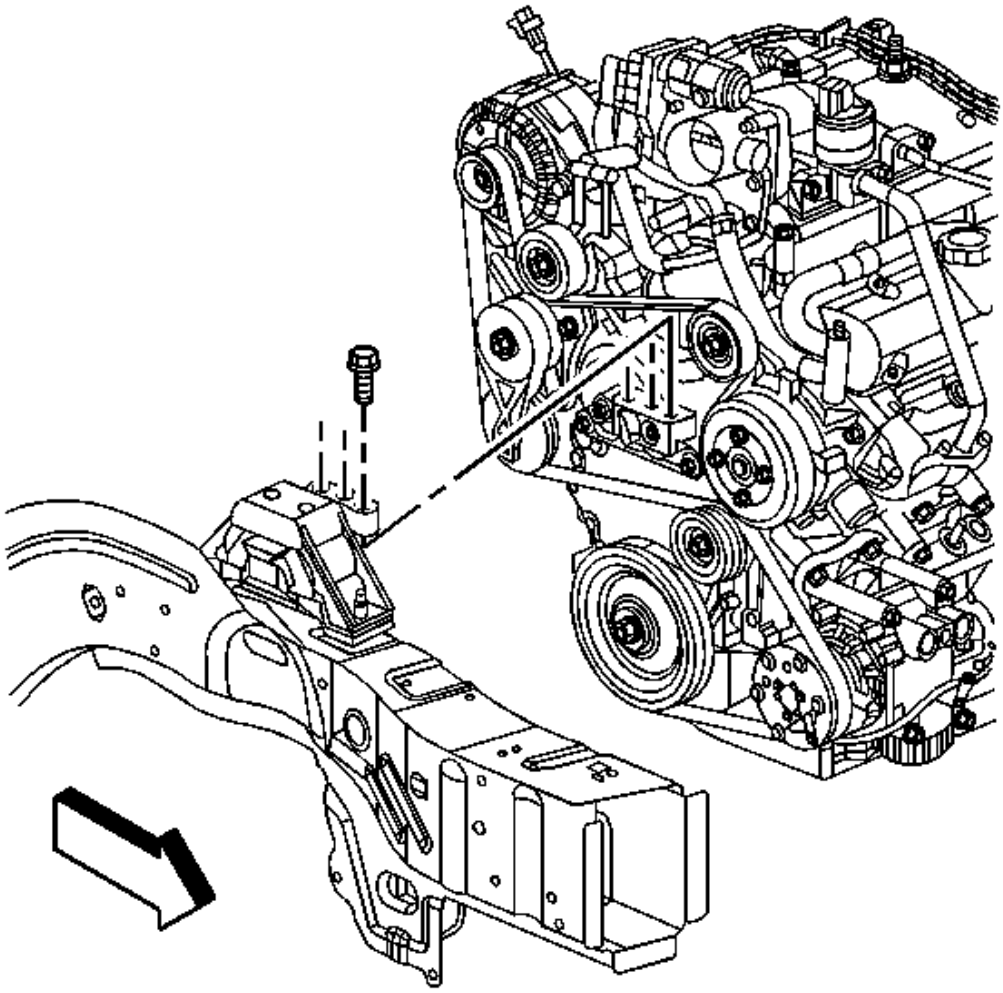

**Fig. 51: View Of Right Engine Mount To Bracket Bolts**
**Courtesy of GENERAL MOTORS CORP.**

3. Install the engine mount to engine mount bracket bolts. Take care when aligning the engine mount to engine mount bracket bolt holes, while hand tightening all the bolts.
4. Tighten the engine mount to engine mount bracket bolts.

   **Tighten:** Tighten the bolts to 50 N.m (81 lb ft).

5. Lower the vehicle.
6. Remove the engine support. Refer to **Engine Support Fixture**.
7. Install the air cleaner assembly. Refer to **Air Cleaner Assembly Replacement** in Engine Controls - 3.4L.

 © 2011 Mitchell Repair Information Company, LLC.

**Engine Mount Bracket Replacement - Right**

**Removal Procedure**

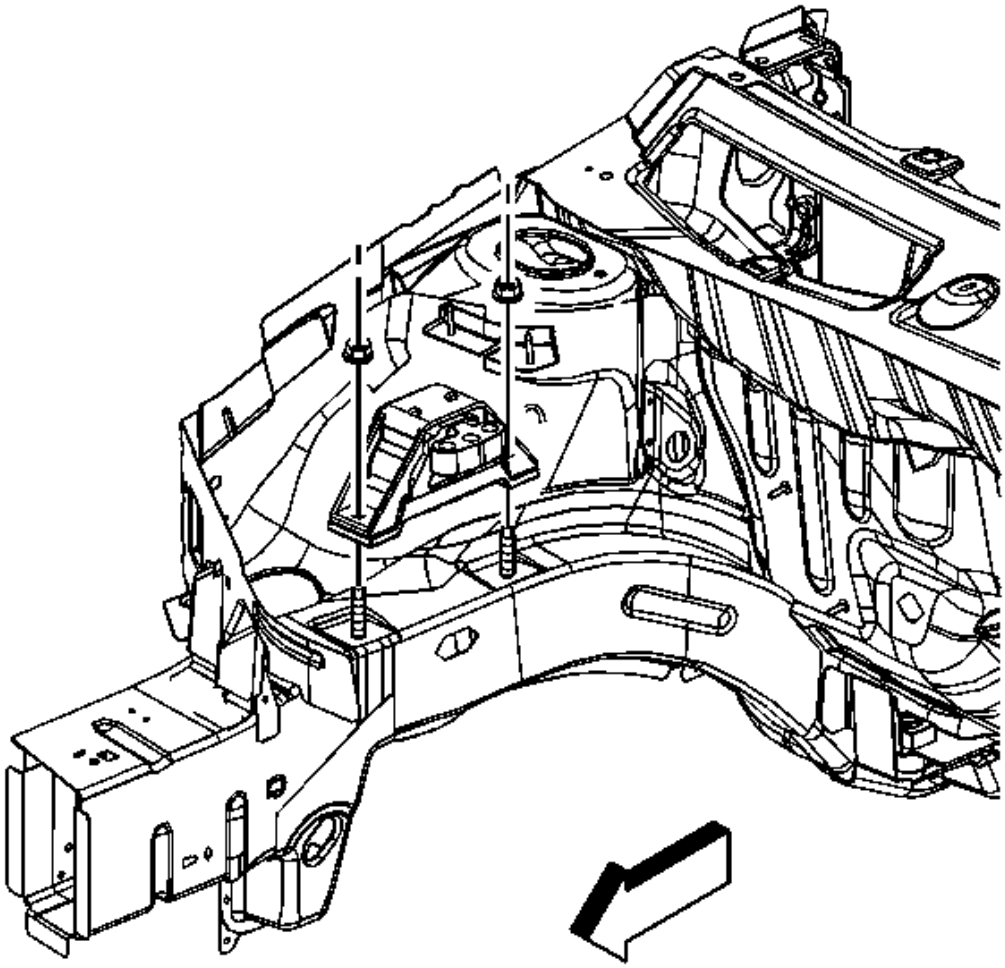

**Fig. 52: View Of Right Engine Mount To Frame Rail Nuts**
**Courtesy of GENERAL MOTORS CORP.**

1. Remove the right engine mount. Refer to **Engine Mount Replacement - Right**.

 © 2011 Mitchell Repair Information Company, LLC.

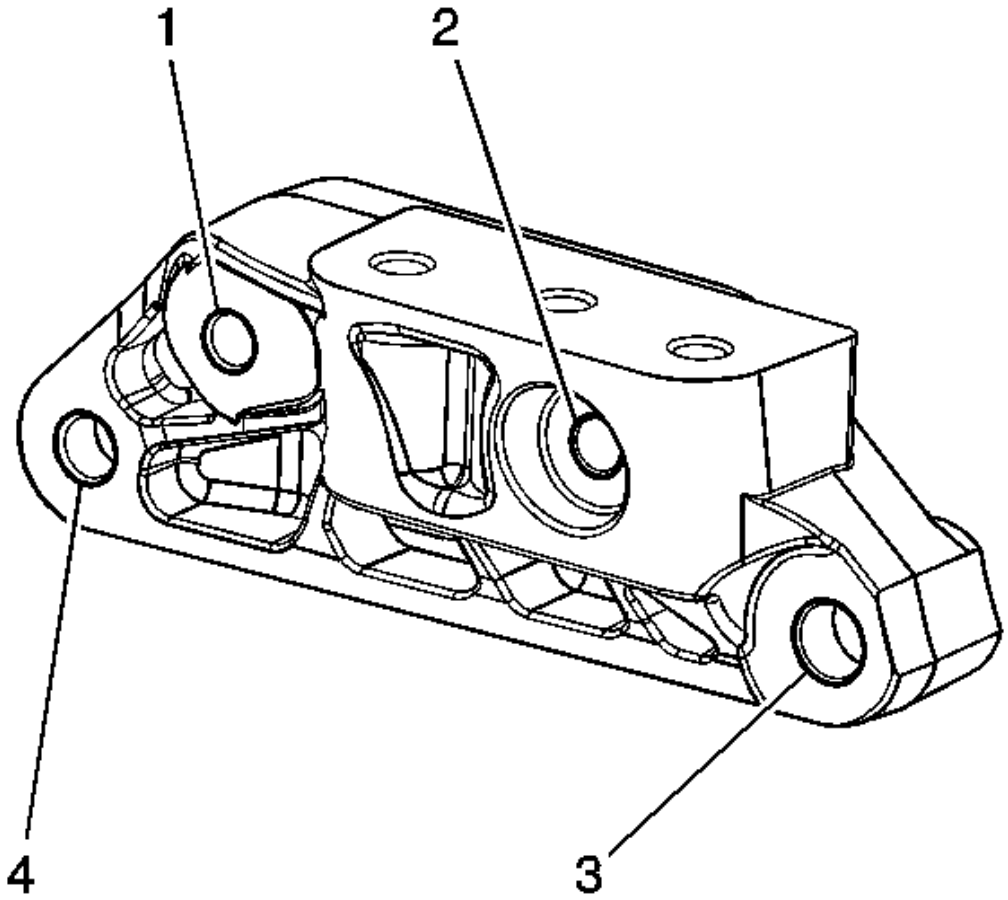


**Fig. 53: View Of Right Engine Mount Bracket**
**Courtesy of GENERAL MOTORS CORP.**

2. Remove the engine mount bracket to engine bolts (1-4).
3. Remove the engine mount bracket from the engine.

**Installation Procedure**

1. Position the engine mount bracket to the engine.

 © 2011 Mitchell Repair Information Company, LLC.

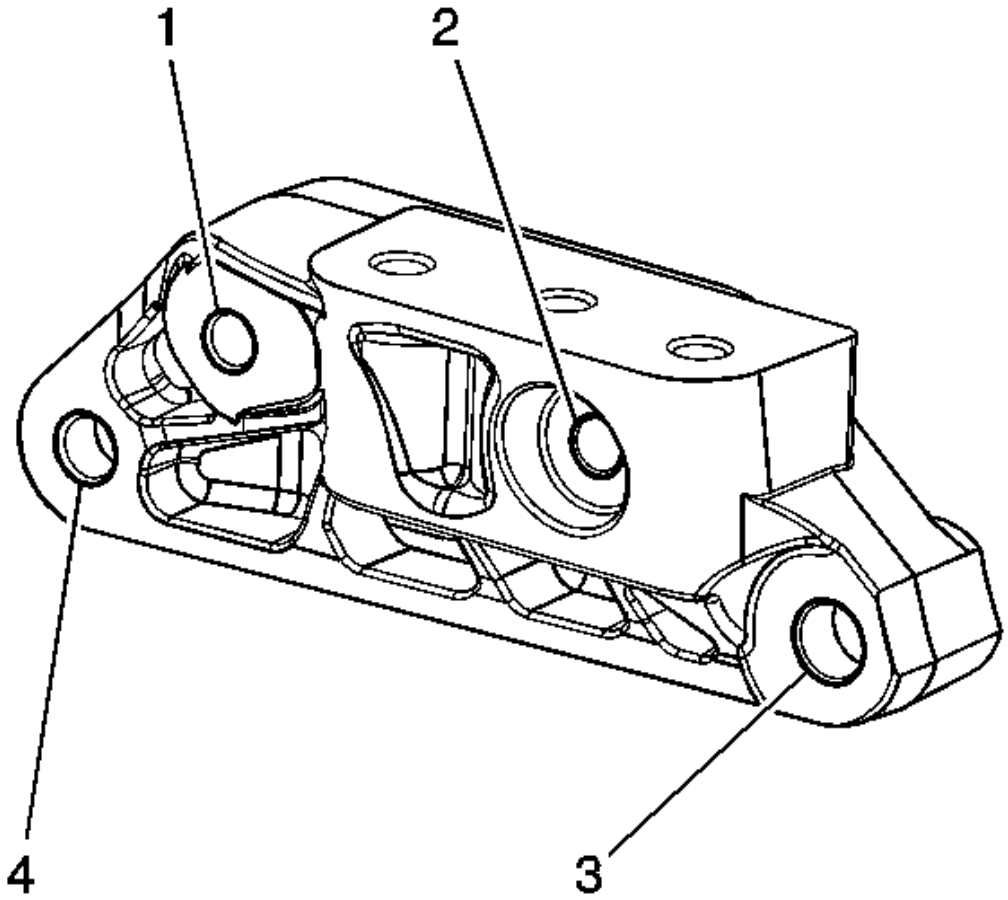


**Fig. 54: View Of Right Engine Mount Bracket**
**Courtesy of GENERAL MOTORS CORP.**

**NOTE: Refer to Fastener Notice in Cautions and Notices.**

2. Install the engine mount bracket to engine bolts (1-4).

**Tighten:**

1. Tighten the bolts in locations (1) and (2) to 27 N.m (20 lb ft).
2. Tighten the bolts in locations (3) and (4) to 55 N.m (41 lb ft).

 © 2011 Mitchell Repair Information Company, LLC.

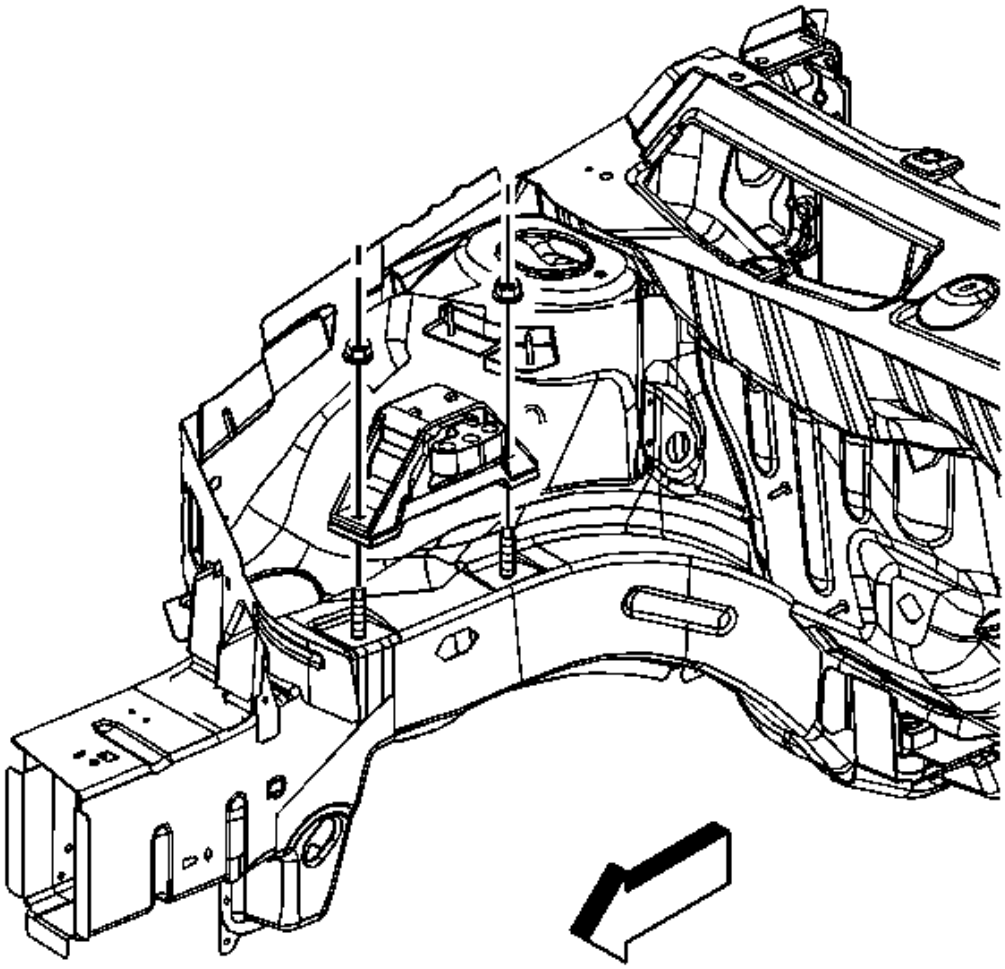

**Fig. 55: View Of Right Engine Mount To Frame Rail Nuts**
**Courtesy of GENERAL MOTORS CORP.**

3. Install the right engine mount. Refer to **Engine Mount Replacement - Right**.

**Engine Lift Bracket Replacement**

**Removal Procedure**

1. Remove the thermostat housing. Refer to **Thermostat Replacement** in Engine Cooling.

 © 2011 Mitchell Repair Information Company, LLC.

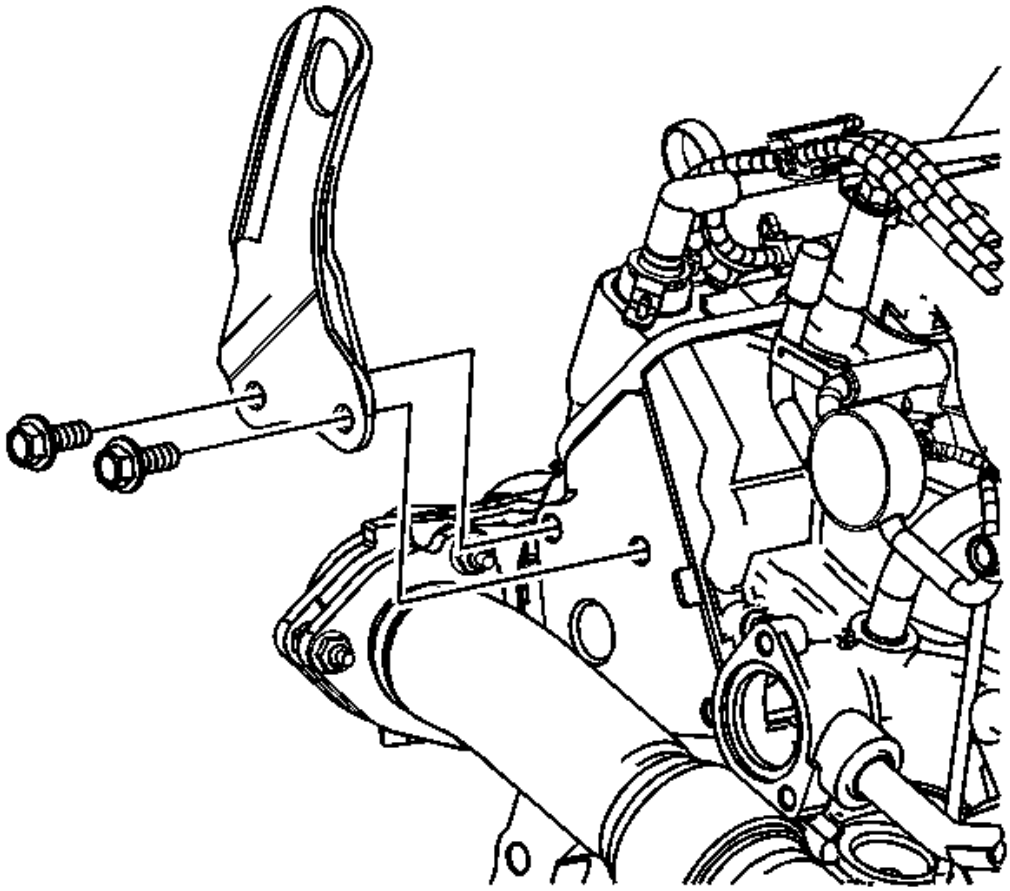

**Fig. 56: View Of Engine Lift Bracket & Bolts**
**Courtesy of GENERAL MOTORS CORP.**

2. Remove the engine lift bracket bolts.
3. Remove the engine lift bracket from the left cylinder head.

**Installation Procedure**

 © 2011 Mitchell Repair Information Company, LLC.

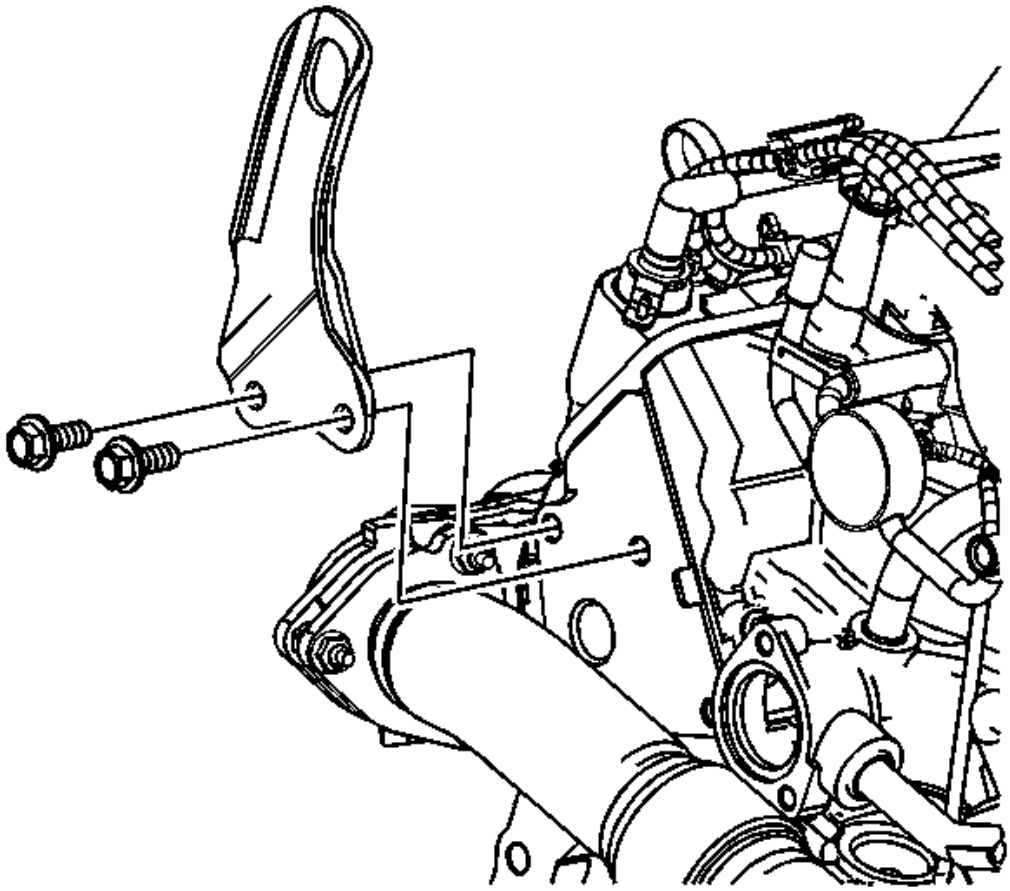

**Fig. 57: View Of Engine Lift Bracket & Bolts**
**Courtesy of GENERAL MOTORS CORP.**

1. Install the engine lift bracket to the left cylinder head.

**NOTE:** **Refer to Fastener Notice in Cautions and Notices.**

2. Install the engine lift bracket bolts.

   **Tighten:** Tighten the bolt to 50 N.m (37 lb ft).

3. Install the thermostat housing. Refer to **Thermostat Replacement** in Engine Cooling.

**Oil Filter Adapter and Bypass Valve Assembly Replacement**

 © 2011 Mitchell Repair Information Company, LLC.

**Removal Procedure**

1. Raise and support the vehicle. Refer to **Lifting and Jacking the Vehicle** in General Information.
2. Remove the oil filter. Refer to **Engine Oil and Oil Filter Replacement**.

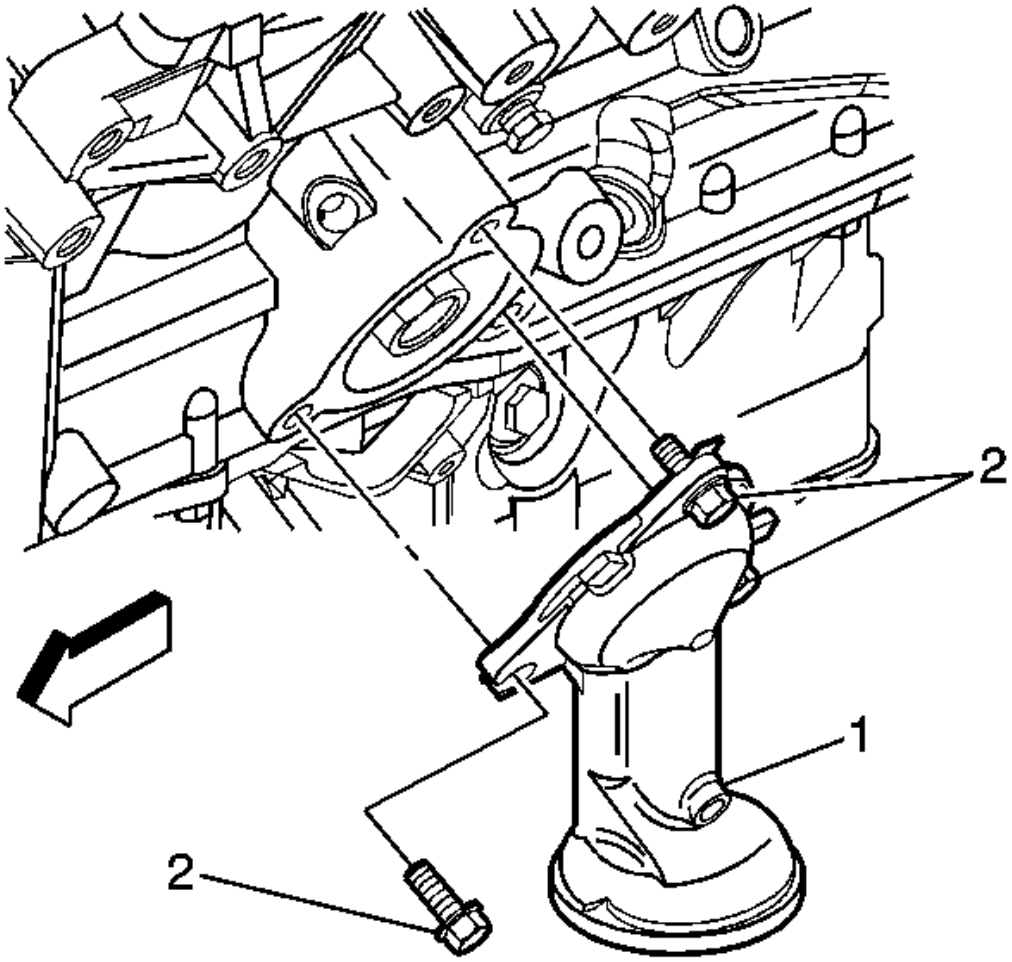


**Fig. 58: View Of Oil Filter Adapter & Bolts**
**Courtesy of GENERAL MOTORS CORP.**

3. Remove the oil filter adapter bolts (2).
4. Remove the oil filter adapter (1) and gasket from the engine block.

 © 2011 Mitchell Repair Information Company, LLC.

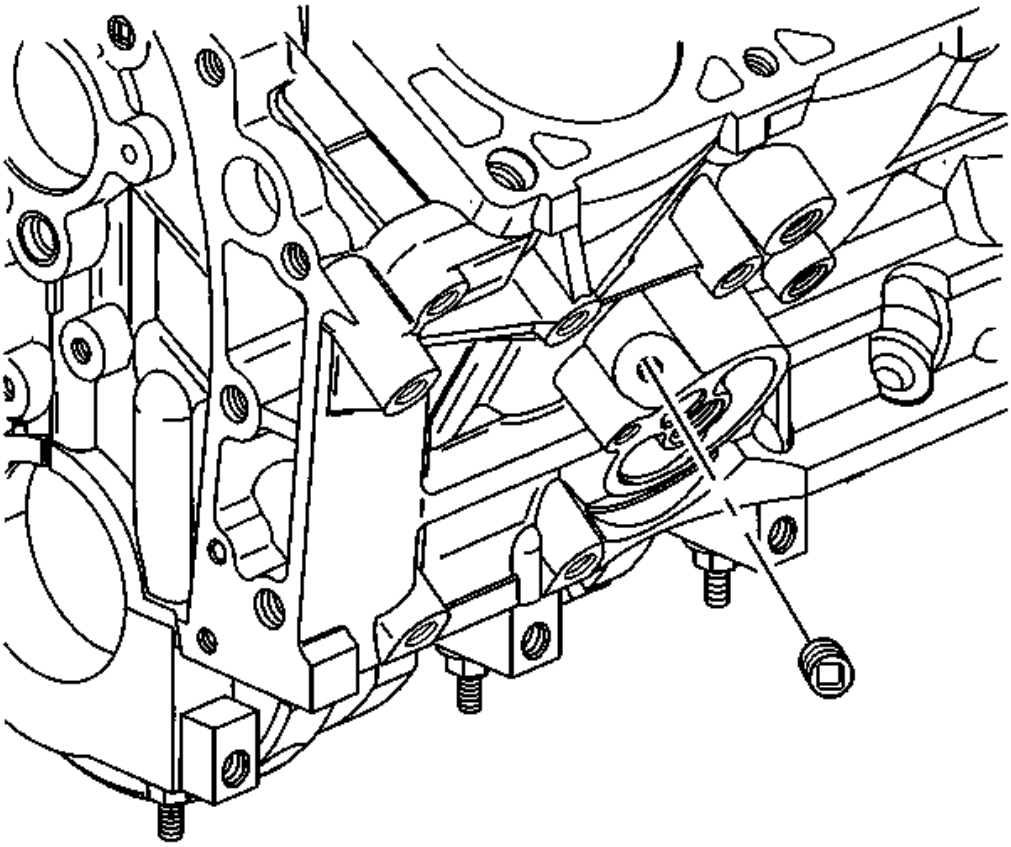

**Fig. 59: Oil Filter Bypass Hole Plug**
**Courtesy of GENERAL MOTORS CORP.**

5. Remove the oil filter bypass hole plug.

 © 2011 Mitchell Repair Information Company, LLC.

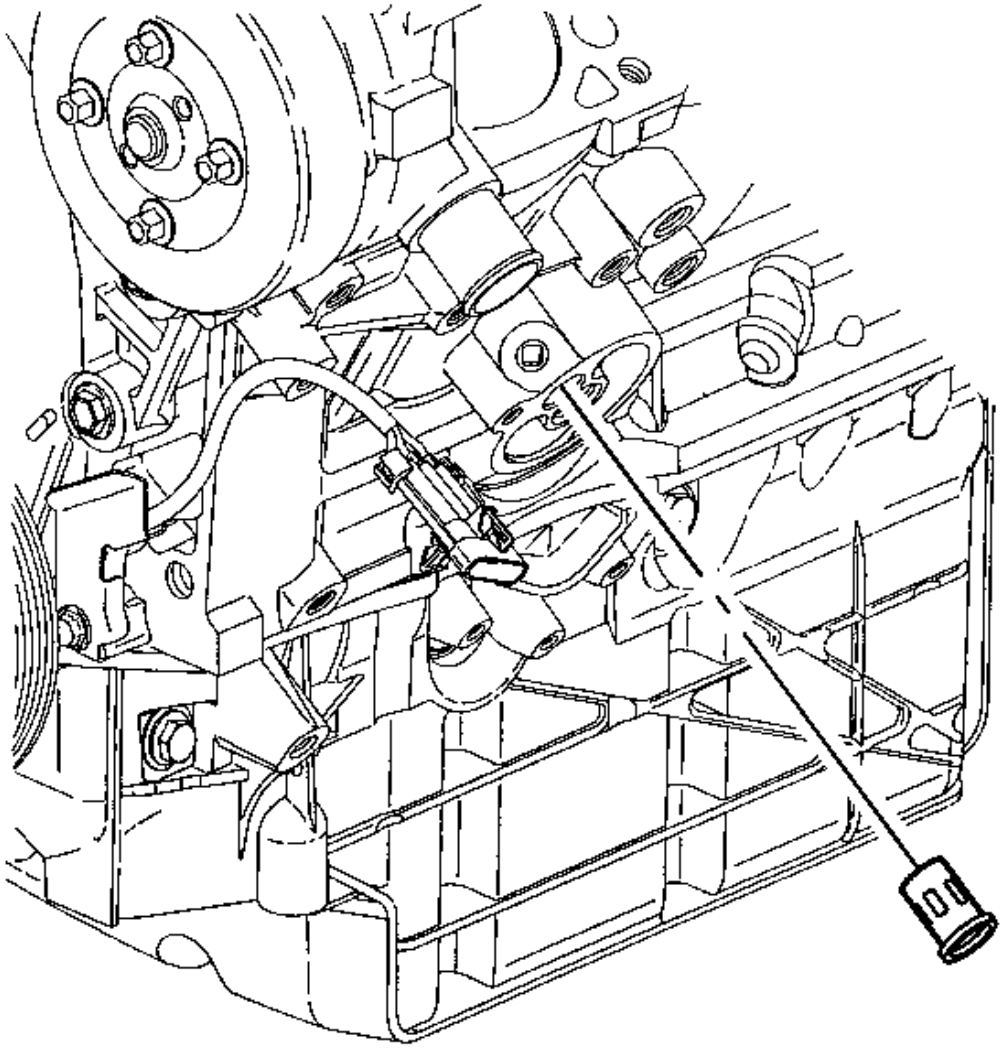

**Fig. 60: Oil Filter Bypass Valve**
**Courtesy of GENERAL MOTORS CORP.**

**IMPORTANT: Do not pry against the threads in the oil filter bypass hole when removing the bypass valve.**

6. Insert a flat-bladed tool into the oil filter bypass hole and force the bypass valve out in order to remove the bypass valve.

**Installation Procedure**

 © 2011 Mitchell Repair Information Company, LLC.

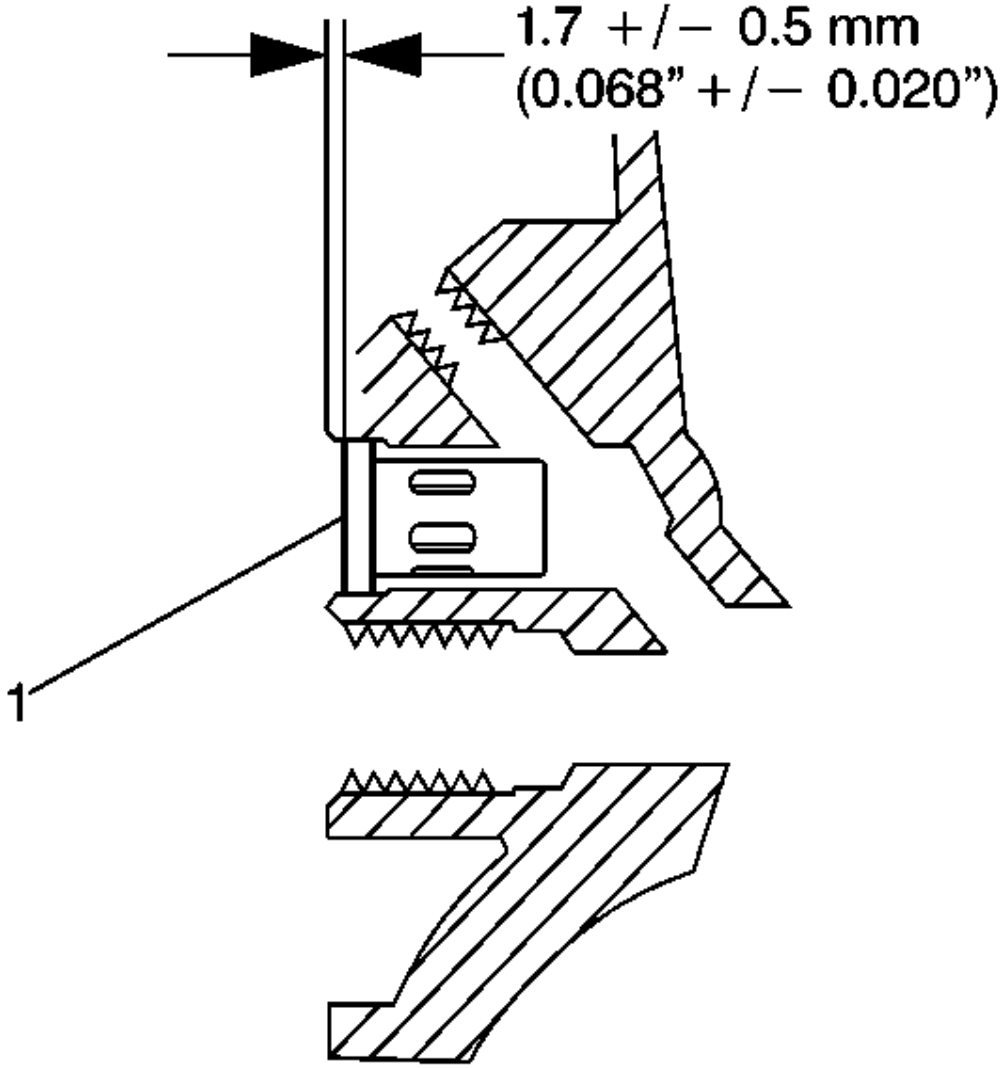


**Fig. 61: View Of Oil Filter Bypass Valve**
**Courtesy of GENERAL MOTORS CORP.**

1. Install the oil filter bypass valve (1) to the proper depth.

 © 2011 Mitchell Repair Information Company, LLC.

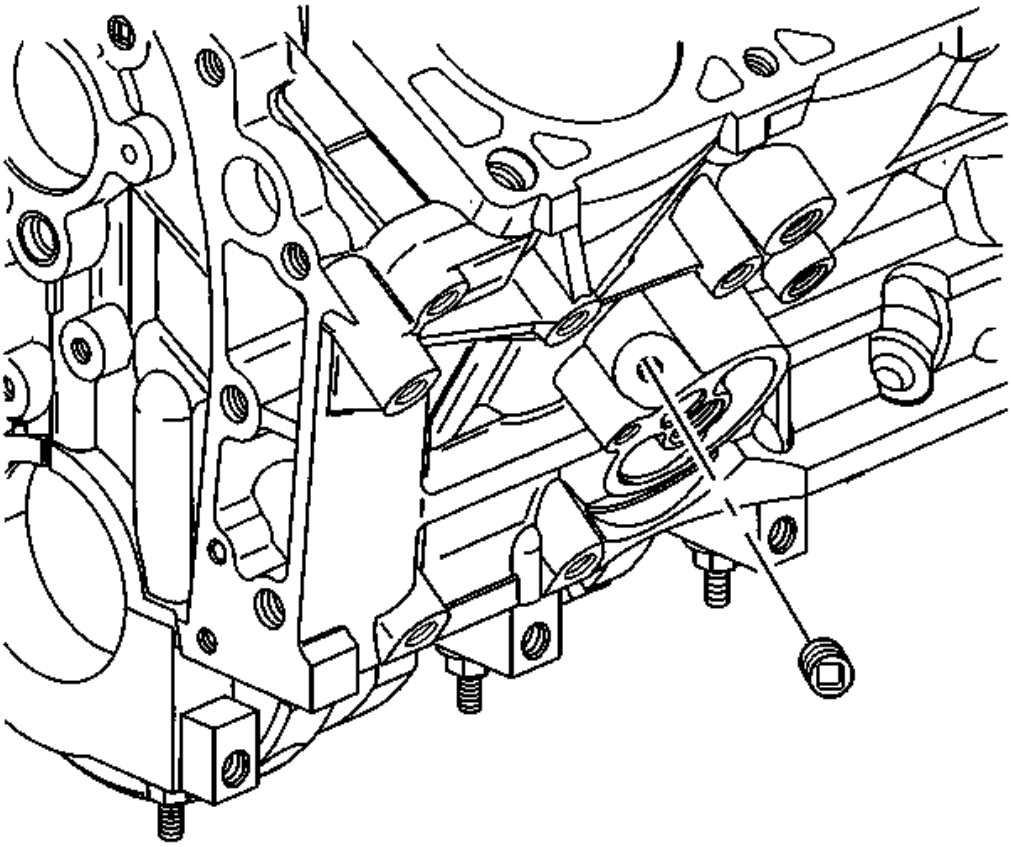

**Fig. 62: Oil Filter Bypass Hole Plug**
**Courtesy of GENERAL MOTORS CORP.**

**NOTE: Refer to Fastener Notice in Cautions and Notices.**

2. Install the oil filter bypass hole plug.

   **Tighten:** Tighten the plug to 19 N.m (14 lb ft).

 © 2011 Mitchell Repair Information Company, LLC.

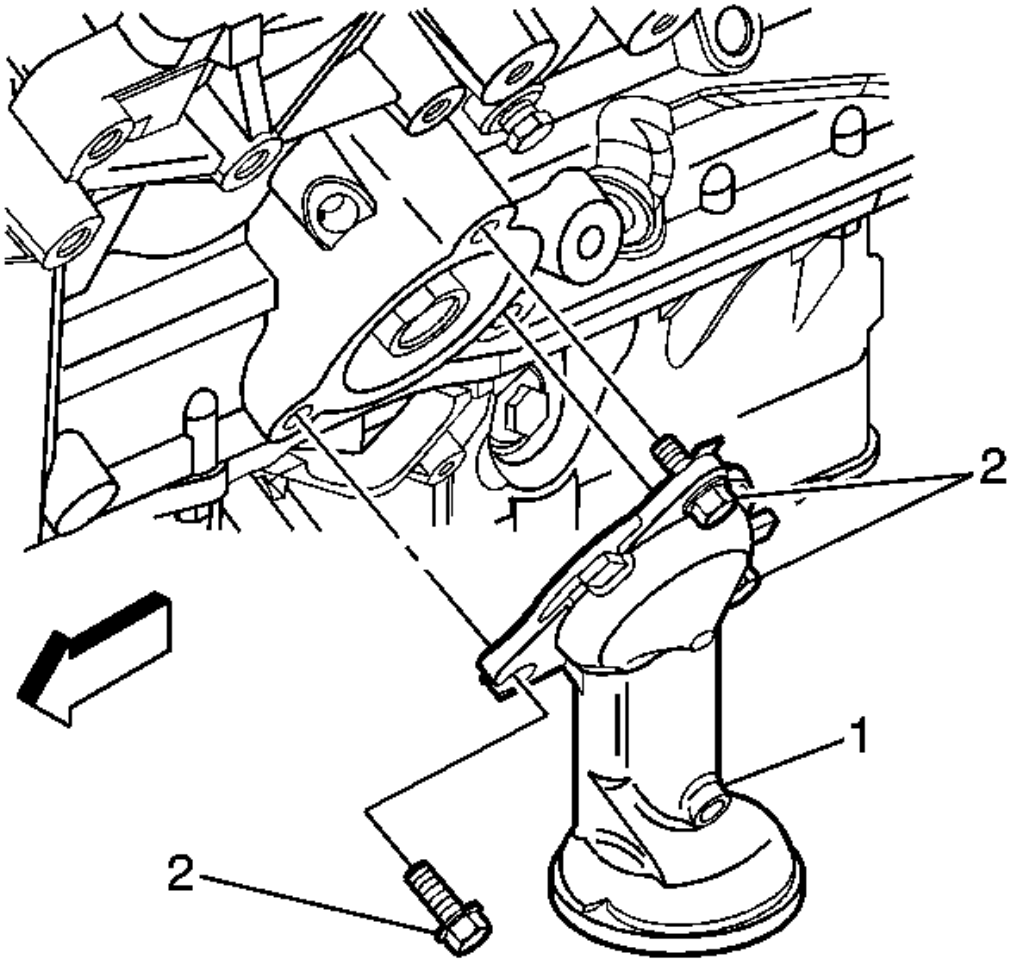


**Fig. 63: View Of Oil Filter Adapter & Bolts**
**Courtesy of GENERAL MOTORS CORP.**

3. Install the oil filter adapter (1) and gasket to the engine block.
4. Install the oil filter adapter bolts (2).

   **Tighten:** Tighten the bolts to 25 N.m (18 lb ft).

5. Install the oil filter. Refer to **Engine Oil and Oil Filter Replacement**.
6. Lower the vehicle.
7. Fill the engine with NEW engine oil. Refer to **Capacities - Approximate Fluid** , **Fluid and Lubricant Recommendations** and **Maintenance Schedule (North American Emissions)** in Maintenance and Lubrication.

 © 2011 Mitchell Repair Information Company, LLC.

**Oil Level Indicator and Tube Replacement**

**Removal Procedure**

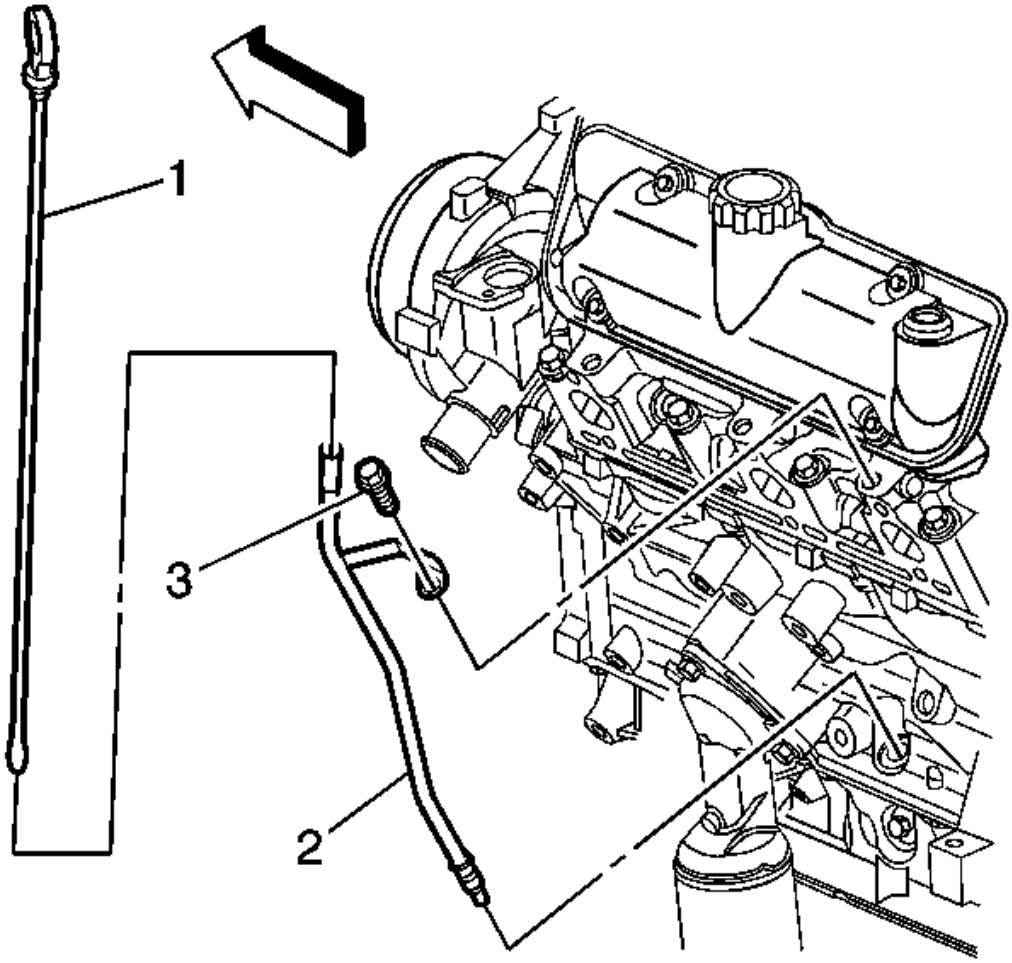


**Fig. 64: View Of Oil Level Indicator, Tube & Bolt**
**Courtesy of GENERAL MOTORS CORP.**

1. Remove the oil level indicator (1).
2. Remove the oil level indicator tube bolt (3).
3. Remove the oil level indicator tube (2).

If you are unable to remove the oil level indicator tube, perform the following steps:

 © 2011 Mitchell Repair Information Company, LLC.

1. Remove the stud in order to allow for lateral movement of the oil level indicator tube.
2. Apply penetrating oil to the bottom of the oil level indicator tube.
3. Move the oil level indicator tube back and forth in order to loosen the oil level indicator tube.

**Installation Procedure**

1. Clean the oil level indicator tube.
2. Apply GM sealant P/N 12345739 or equivalent around the oil level indicator tube 12.7 mm (0.50 in) below the bead.

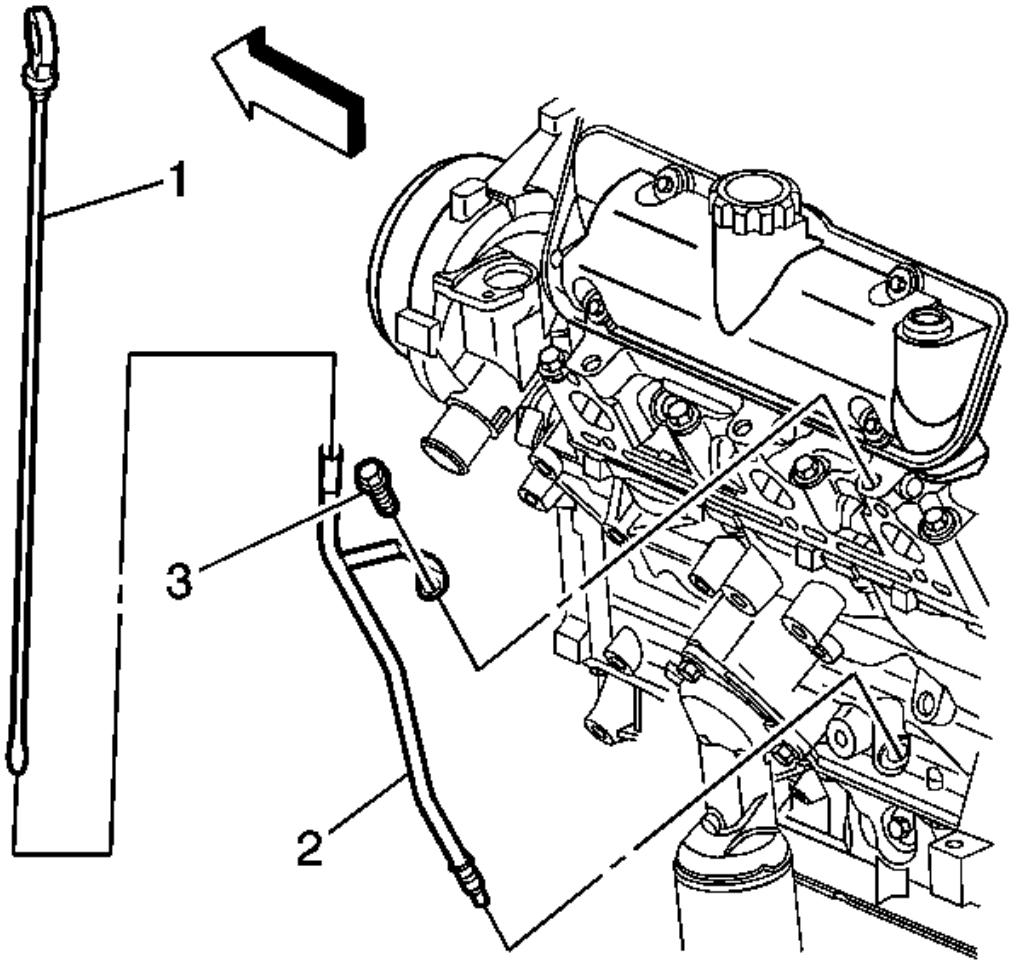


**Fig. 65: View Of Oil Level Indicator, Tube & Bolt**
**Courtesy of GENERAL MOTORS CORP.**

 © 2011 Mitchell Repair Information Company, LLC.

3. Install the oil level indicator tube (2) into the engine block.

**NOTE: Refer to Fastener Notice in Cautions and Notices.**

4. Install the oil level indicator tube bolt (3).

   **Tighten:** Tighten the bolt to 25 N.m (18 lb ft).

5. Install the oil level indicator (1).

**Intake Manifold Replacement - Upper**

**Removal Procedure**

1. Remove the fuel injector sight shield. Refer to **Fuel Injector Sight Shield Replacement**.

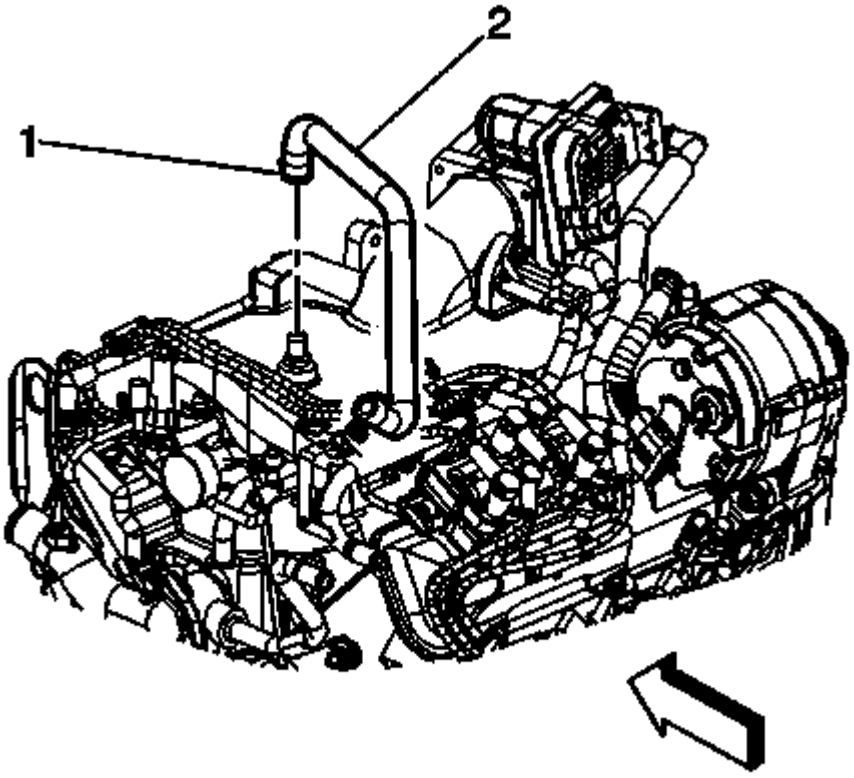


**Fig. 66: View Of Brake Booster Vacuum Hose**
**Courtesy of GENERAL MOTORS CORP.**

2. Release the clamp (1) from the brake booster vacuum hose connection.
3. Disconnect the brake booster vacuum hose (2) from the intake manifold.

 © 2011 Mitchell Repair Information Company, LLC.

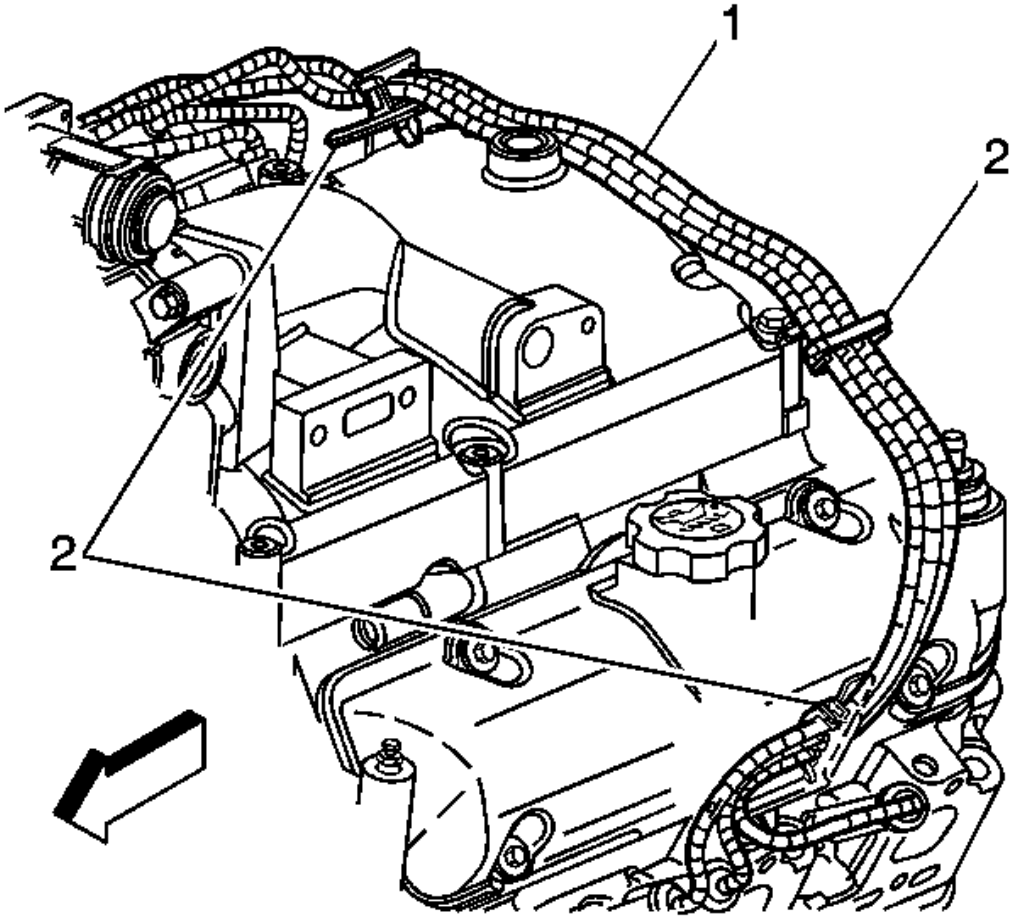


**Fig. 67: View Of Left Side Spark Plug Wires & Retainers**
**Courtesy of GENERAL MOTORS CORP.**

4. Disconnect the left side spark plug wires (1) from the retainers (2) and from the spark plugs. Refer to **Spark Plug Wire Replacement** in Engine Controls - 3.4L.
5. Remove the ignition control module bracket from the engine with the ignition control module and spark plug wires still attached. Position out of the way. Refer to **Ignition Control Module Bracket Replacement** in Engine Controls - 3.4L.
6. Remove the air cleaner intake duct. Refer to **Air Cleaner Intake Duct Replacement** in Engine Controls - 3.4L.

 © 2011 Mitchell Repair Information Company, LLC.

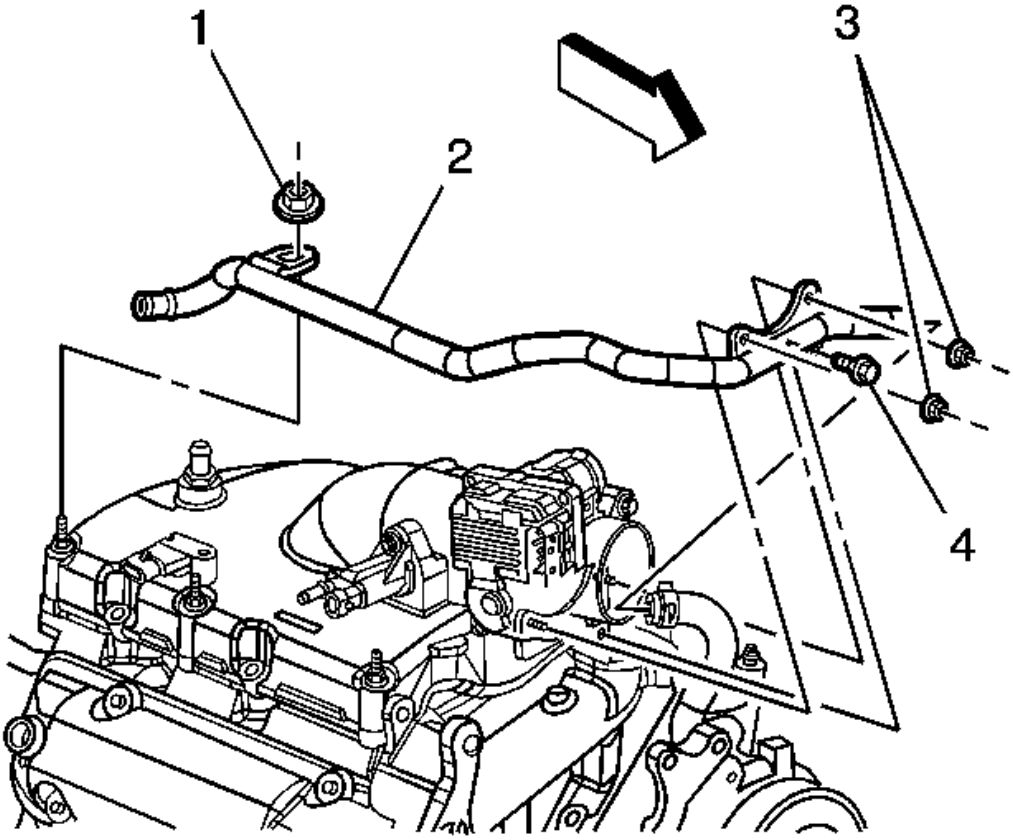


**Fig. 68: View Of Heater Outlet Pipe, Nuts & Bolts**
**Courtesy of GENERAL MOTORS CORP.**

7. Remove the heater outlet pipe nut (4) from the upper intake manifold.
8. Remove the heater outlet pipe nuts (2) and bolt (3) from the throttle body.
9. Position the heater outlet pipe out of the way without disconnecting the heater hoses.
10. Remove the exhaust gas recirculation (EGR) pipe. Refer to **Exhaust Gas Recirculation (EGR) Pipe Replacement** in Engine Controls - 3.4L.
11. Remove the positive crankcase ventilation (PCV) foul air hose. Refer to **Crankcase Ventilation Hoses/Pipes Replacement**.

 © 2011 Mitchell Repair Information Company, LLC.

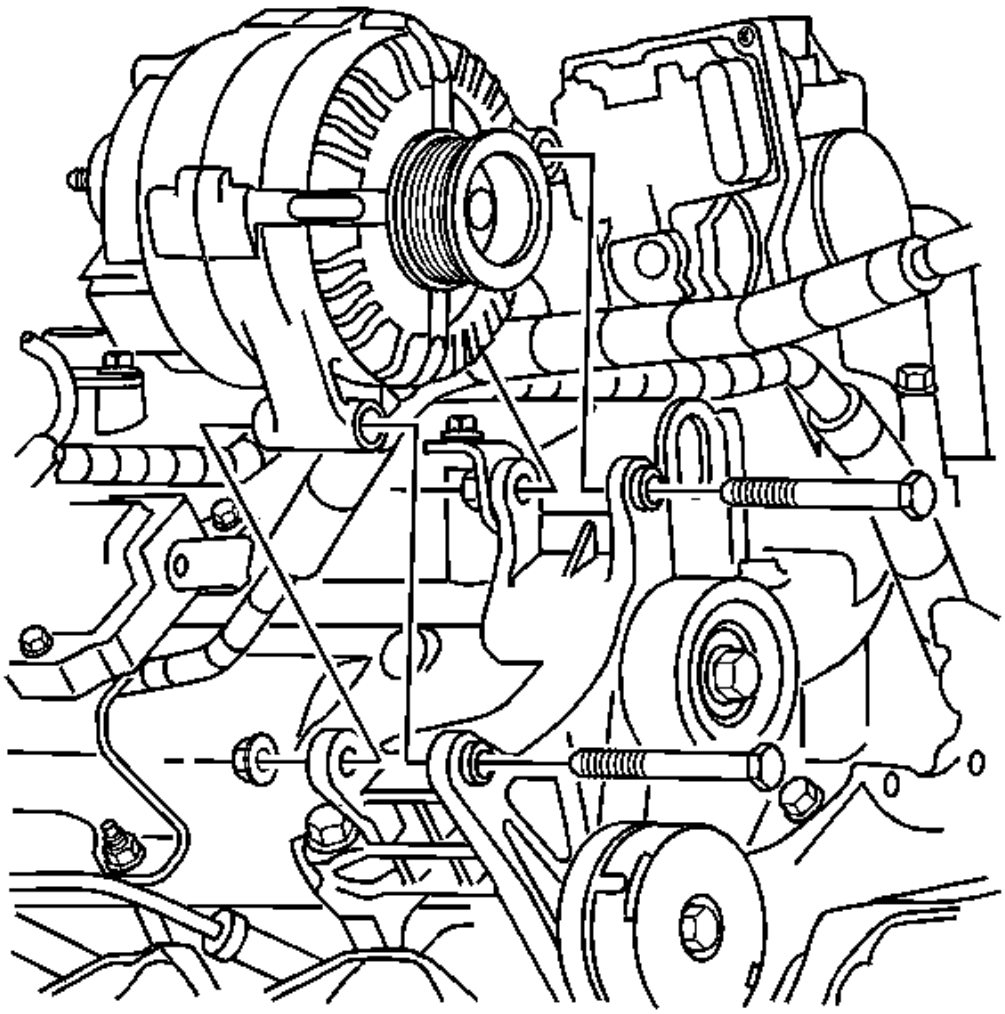

**Fig. 69: View Of Generator & Bolts**
**Courtesy of GENERAL MOTORS CORP.**

12. Loosen but do not completely remove the generator attachment bolt most near the intake manifold.

 © 2011 Mitchell Repair Information Company, LLC.

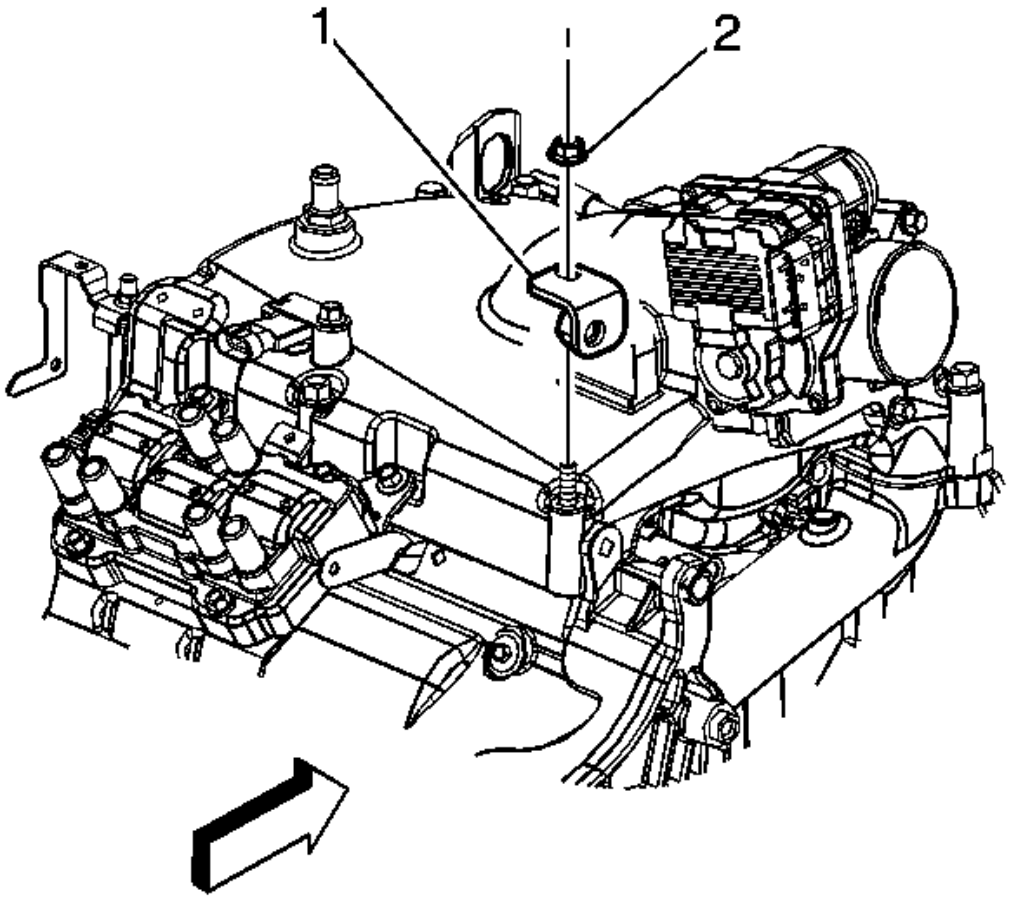


**Fig. 70: View Of Generator Brace & Nut**
**Courtesy of GENERAL MOTORS CORP.**

13. Remove the generator brace nut (2).
14. Remove the generator brace (1).

 © 2011 Mitchell Repair Information Company, LLC.

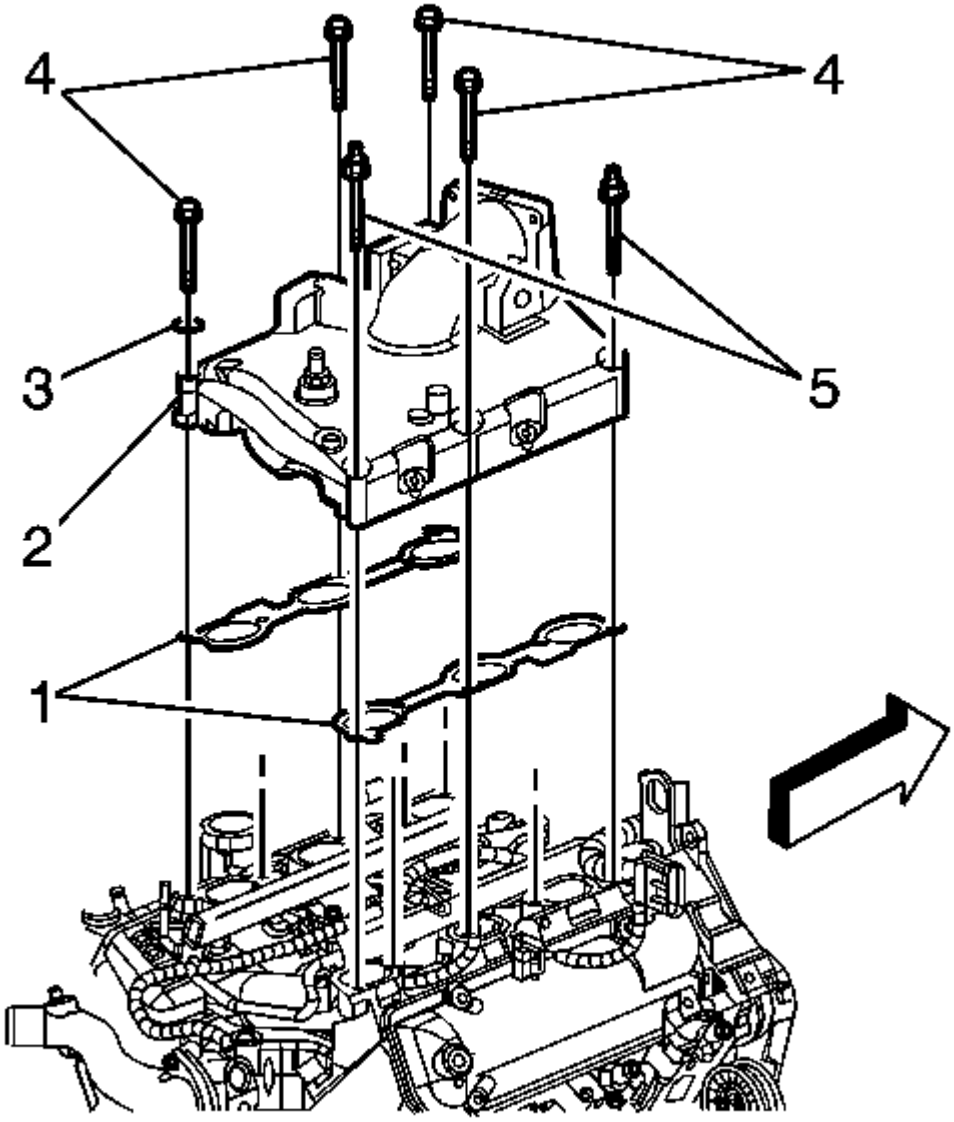


**Fig. 71: View Of Upper Intake Manifold, Gaskets & Bolts**
**Courtesy of GENERAL MOTORS CORP.**

15. Remove the upper intake manifold bolts (4, 5).
16. Remove the spark plug wire retainer (3).
17. Remove the upper intake manifold (2).
18. Remove the upper intake manifold gaskets (1).

 © 2011 Mitchell Repair Information Company, LLC.

19. If replacing the upper intake manifold complete the following steps:
    1. Remove the manifold absolute pressure (MAP) sensor. Refer to **Manifold Absolute Pressure (MAP) Sensor Replacement** in Engine Controls - 3.4L.
    2. Remove the EGR valve. Refer to **Exhaust Gas Recirculation (EGR) Valve Replacement** in Engine Controls - 3.4L.
    3. Remove the evaporative emissions (EVAP) purge solenoid valve. Refer to **Evaporative Emission (EVAP) Canister Purge Solenoid Valve Replacement** in Engine Controls - 3.4L.
    4. Remove the throttle body. Refer to **Throttle Body Assembly Replacement** in Engine Controls - 3.4L.
    5. Remove the fuel injector sight shield studs. Refer to **Fuel Injector Sight Shield Replacement**.

**Installation Procedure**

 © 2011 Mitchell Repair Information Company, LLC.

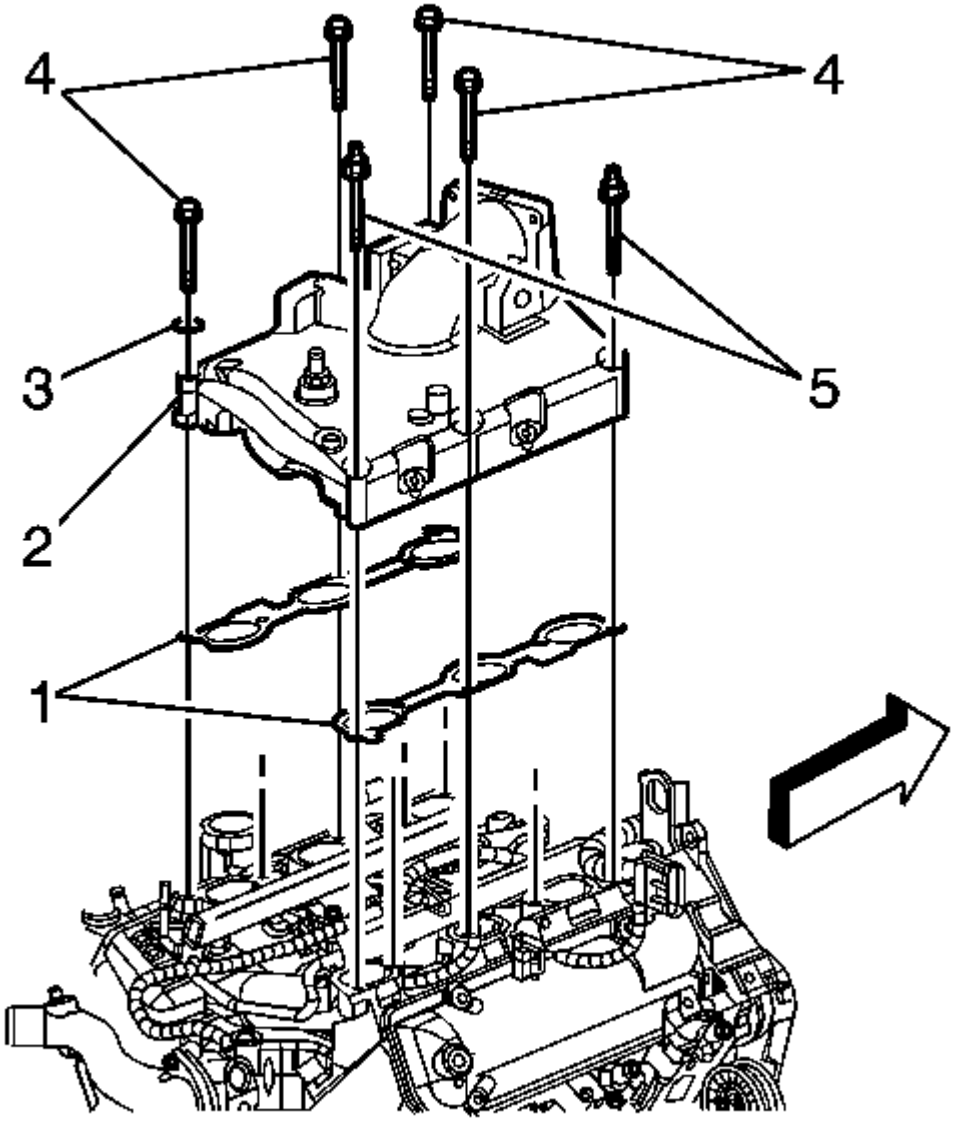


**Fig. 72: View Of Upper Intake Manifold, Gaskets & Bolts**
**Courtesy of GENERAL MOTORS CORP.**

1. Install the upper intake manifold gaskets (1) to the lower intake manifold and install the fir tree retainers to retain the upper intake manifold gasket position.
2. Install the upper intake manifold (2).
3. Install the spark plug wire retainer (3).

 © 2011 Mitchell Repair Information Company, LLC.

**NOTE: Refer to Fastener Notice in Cautions and Notices.**

4. Apply threadlock GM P/N 12345382 (Canadian P/N 10953489) to the bolt threads. Install the upper intake manifold bolts (4, 5).

   **Tighten:** Tighten the bolts to 25 N.m (18 lb ft).

5. If the upper manifold was replaced, complete the following steps:
   1. Install the fuel injector sight shield studs. Refer to **Fuel Injector Sight Shield Replacement**.
   2. Install the throttle body. Refer to **Throttle Body Assembly Replacement** in Engine Controls - 3.4L.
   3. Install the EVAP purge solenoid valve. Refer to **Evaporative Emission (EVAP) Canister Purge Solenoid Valve Replacement** in Engine Controls - 3.4L.
   4. Install the EGR valve. Refer to **Exhaust Gas Recirculation (EGR) Valve Replacement** in Engine Controls - 3.4L.
   5. Install MAP sensor. Refer to **Manifold Absolute Pressure (MAP) Sensor Replacement** in Engine Controls - 3.4L.

 © 2011 Mitchell Repair Information Company, LLC.

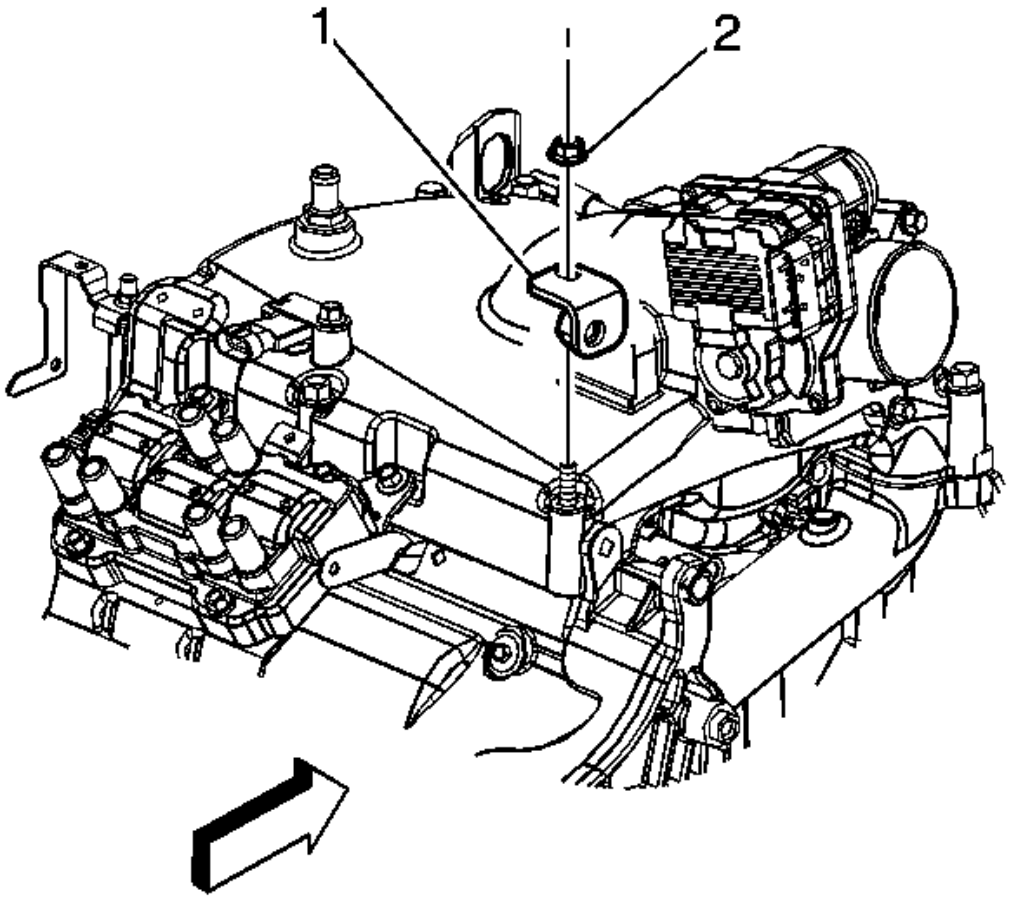


**Fig. 73: View Of Generator Brace & Nut**
**Courtesy of GENERAL MOTORS CORP.**

6. Install the generator brace (1).
7. Install the generator brace nut (2).

**Tighten:** Tighten the nut to 25 N.m (18 lb ft).

 © 2011 Mitchell Repair Information Company, LLC.

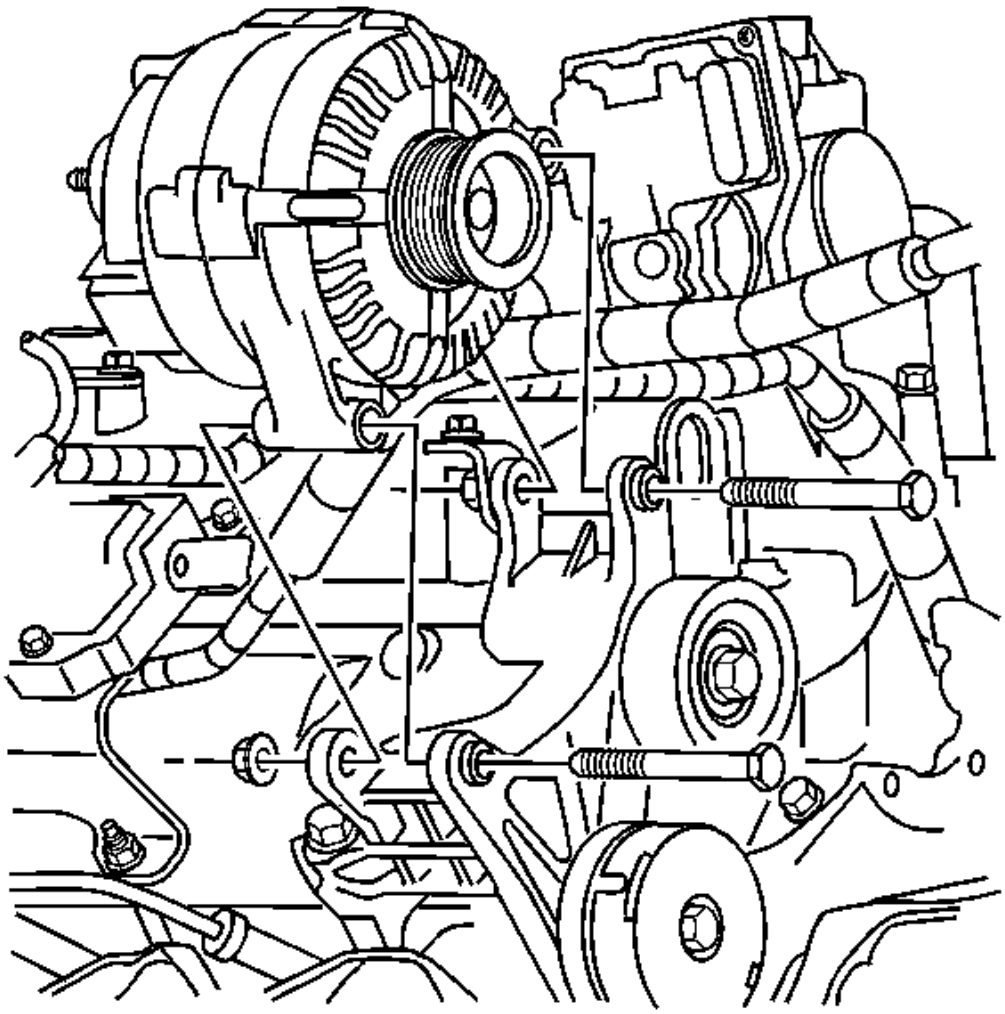

**Fig. 74: View Of Generator & Bolts**
**Courtesy of GENERAL MOTORS CORP.**

8. Fully insert the generator attachment bolt most near the intake manifold.

   **Tighten:** Tighten the bolt to 25 N.m (18 lb ft).

9. Install the PCV foul air hose. Refer to **Crankcase Ventilation Hoses/Pipes Replacement**.
10. Install the EGR pipe. Refer to **Exhaust Gas Recirculation (EGR) Pipe Replacement** in Engine Controls - 3.4L.

 © 2011 Mitchell Repair Information Company, LLC.

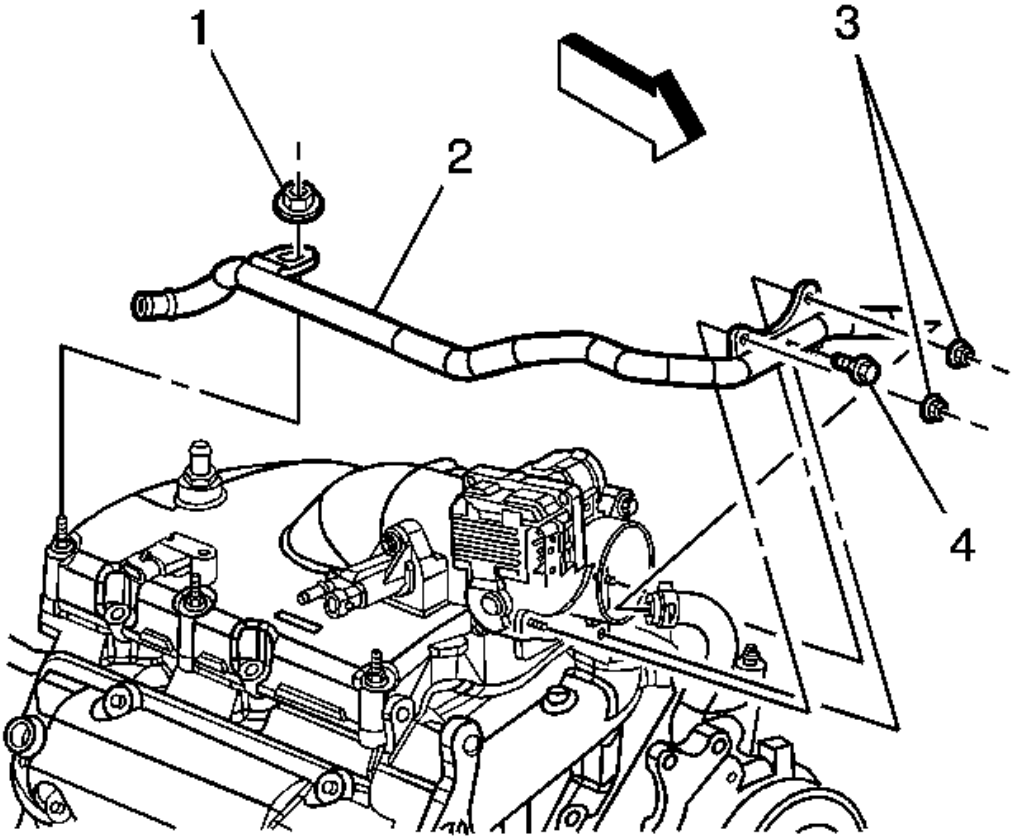


**Fig. 75: View Of Heater Outlet Pipe, Nuts & Bolts**
**Courtesy of GENERAL MOTORS CORP.**

11. Position the heater outlet pipe to the throttle body and the upper intake manifold.
12. Install the heater outlet pipe nuts (2) to the throttle body.

    **Tighten:** Tighten the nut to 10 N.m (89 lb in).

13. Install the heater outlet pipe bolt (3) to the throttle body.

    **Tighten:** Tighten the bolt to 10 N.m (89 lb in).

14. Install the heater outlet pipe nut (4) to the upper intake manifold.

    **Tighten:** Tighten the nut to 25 N.m (18 lb ft).

15. Install the air cleaner intake duct. Refer to **Air Cleaner Intake Duct Replacement** in Engine Controls -

 © 2011 Mitchell Repair Information Company, LLC.

3.4L.

16. Install the ignition control module bracket. Refer to **Ignition Control Module Bracket Replacement** in Engine Controls - 3.4L.

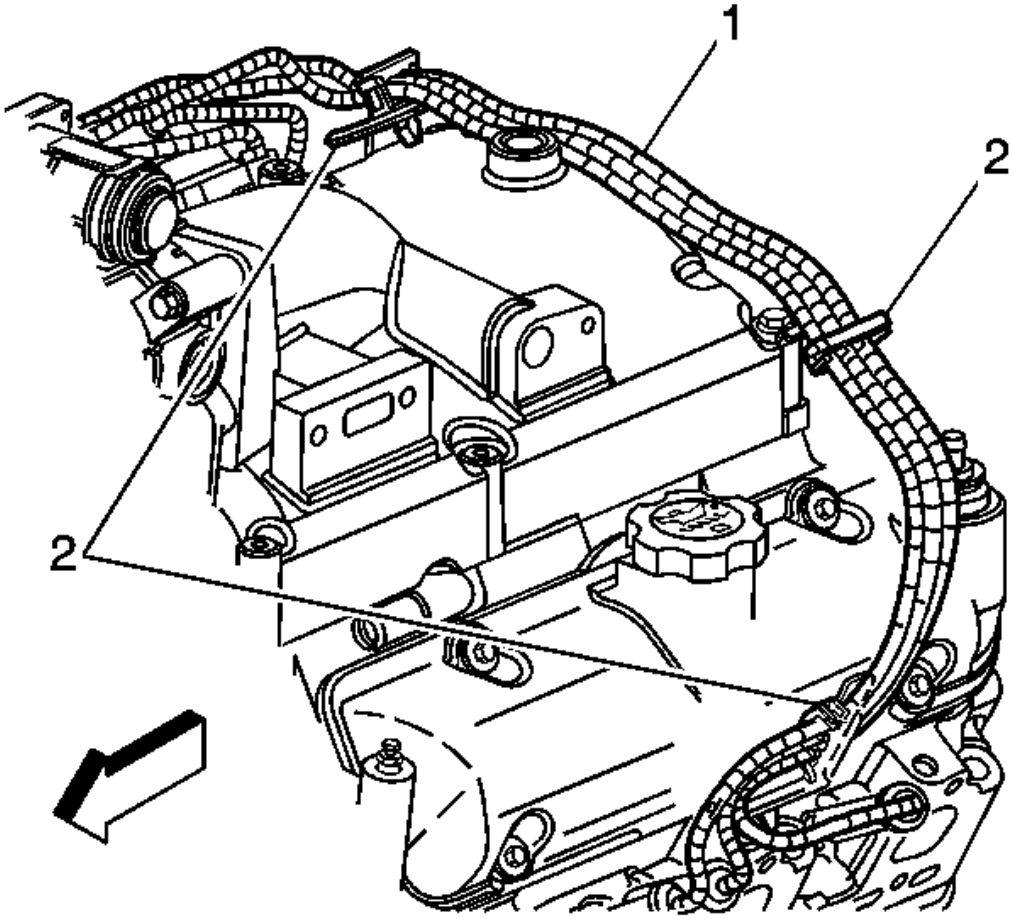


**Fig. 76: View Of Left Side Spark Plug Wires & Retainers**
**Courtesy of GENERAL MOTORS CORP.**

17. Connect the left side spark plug wires (1) to the spark plugs and to the spark plug wire retainers. Refer to **Spark Plug Wire Replacement** in Engine Controls - 3.4L.

 © 2011 Mitchell Repair Information Company, LLC.

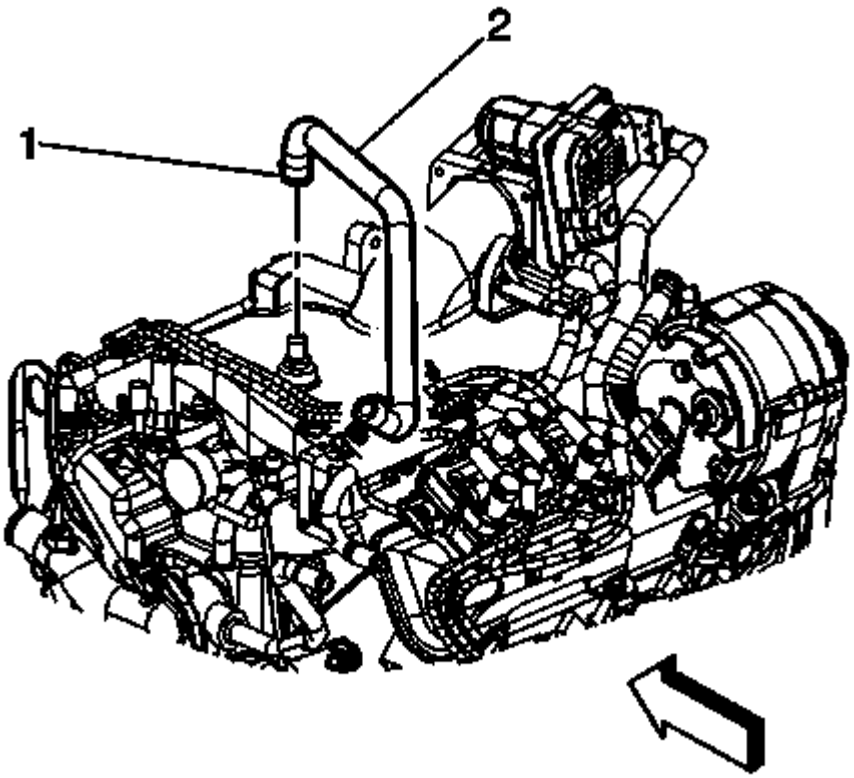


**Fig. 77: View Of Brake Booster Vacuum Hose**
**Courtesy of GENERAL MOTORS CORP.**

18. Connect the brake booster vacuum hose (2) to the intake manifold.
19. Install the clamp (1) to the brake booster vacuum hose connection.
20. Install the fuel injector sight shield. Refer to **Fuel Injector Sight Shield Replacement**.

**Intake Manifold Replacement - Lower**

**Removal Procedure**

1. Drain the cooling system. Refer to **Draining and Filling Cooling System (Static Fill)** or **Draining and Filling Cooling System (GE 47716 Fill)** in Engine Cooling.
2. Remove the upper intake manifold. Refer to **Fuel Injector Sight Shield Replacement**.
3. Remove the heater inlet pipe. Refer to **Heater Pipe Replacement - Inlet** in Engine Cooling.
4. Disconnect the radiator inlet hose from the thermostat housing. Refer to **Radiator Hose Replacement - Inlet** in Engine Cooling.
5. Remove the fuel rail assembly. Refer to **Fuel Rail Assembly Replacement** in Engine Controls - 3.4L.

 © 2011 Mitchell Repair Information Company, LLC.

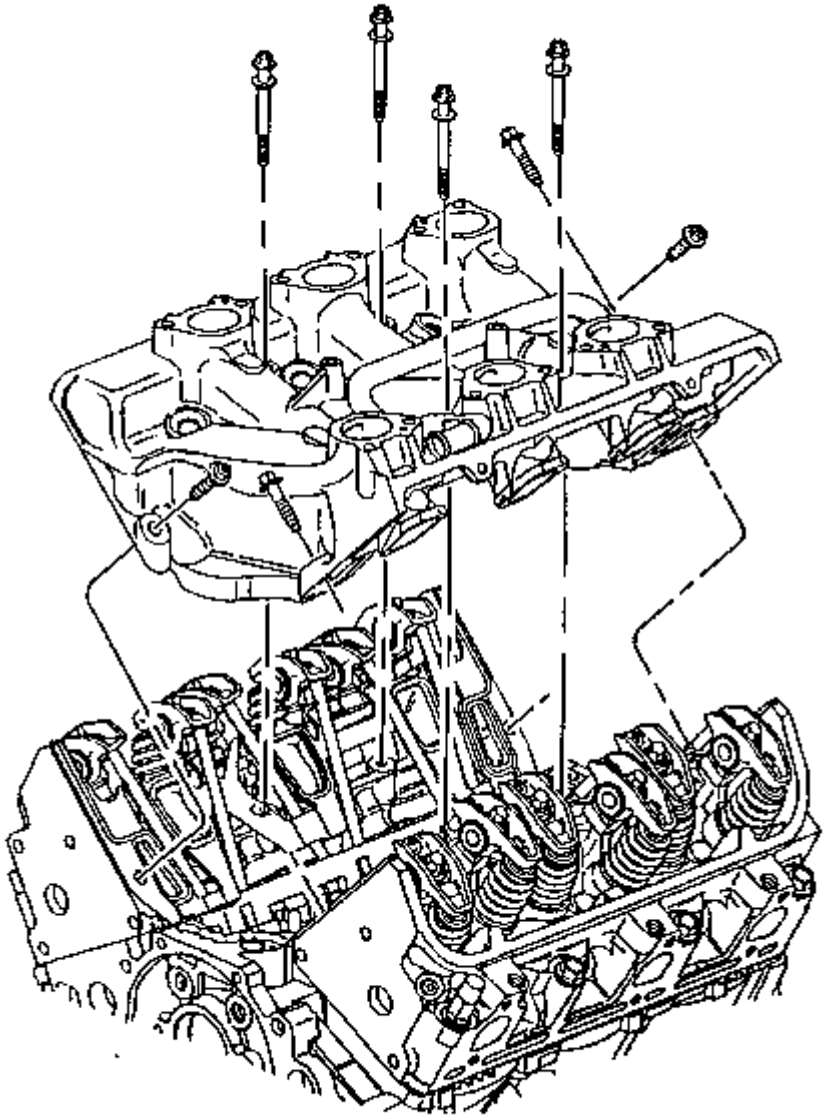

**Fig. 78: View Of Lower Intake Manifold & Bolts**
**Courtesy of GENERAL MOTORS CORP.**

6. Remove the lower intake manifold bolts.
7. Remove the lower intake manifold from the engine.
8. If replacing the lower intake manifold, remove the thermostat and housing. Refer to **Thermostat Replacement** in Engine Cooling.

 © 2011 Mitchell Repair Information Company, LLC.

9. Remove the rocker arms and push rods. Refer to **Valve Rocker Arm and Push Rod Replacement**.

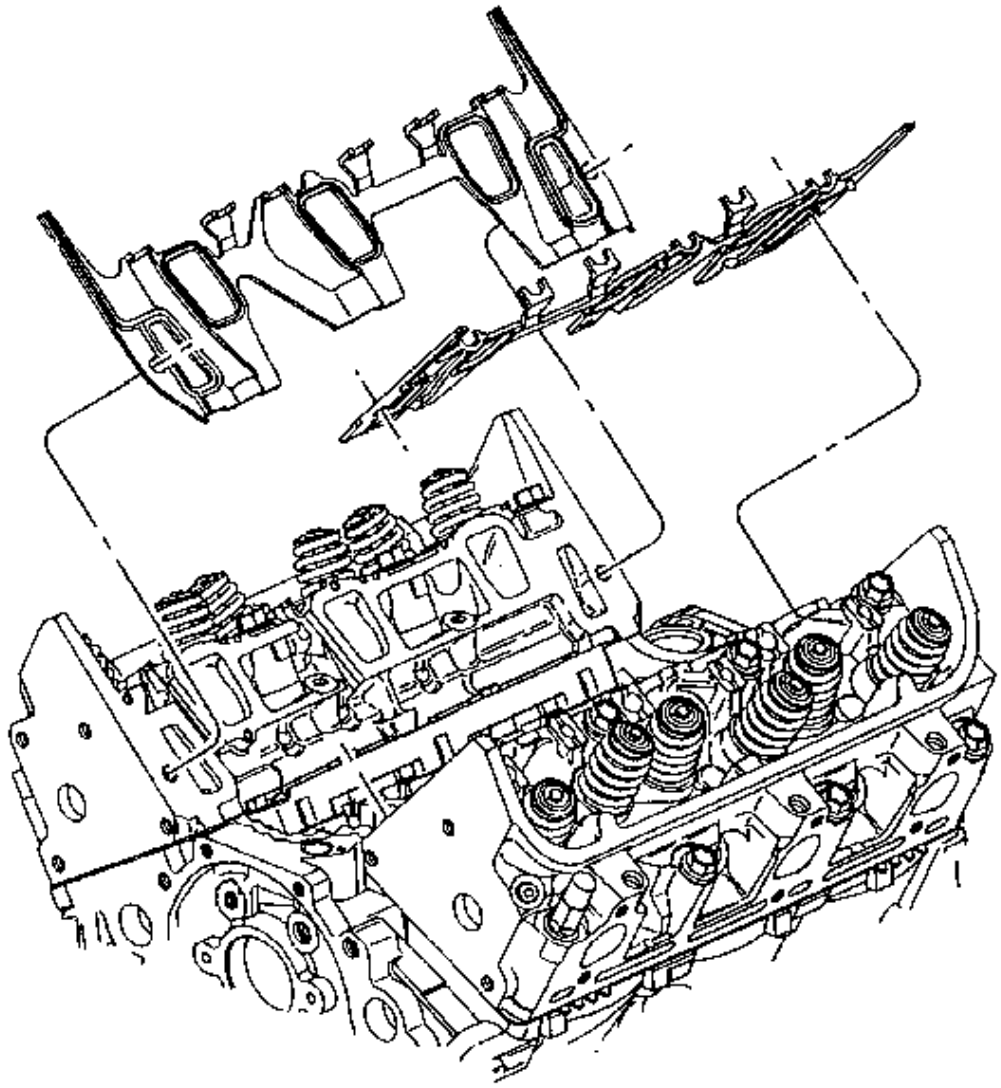

**Fig. 79: Intake Manifold Gaskets**
**Courtesy of GENERAL MOTORS CORP.**

10. Remove the lower intake manifold gaskets.

**Installation Procedure**

 © 2011 Mitchell Repair Information Company, LLC.

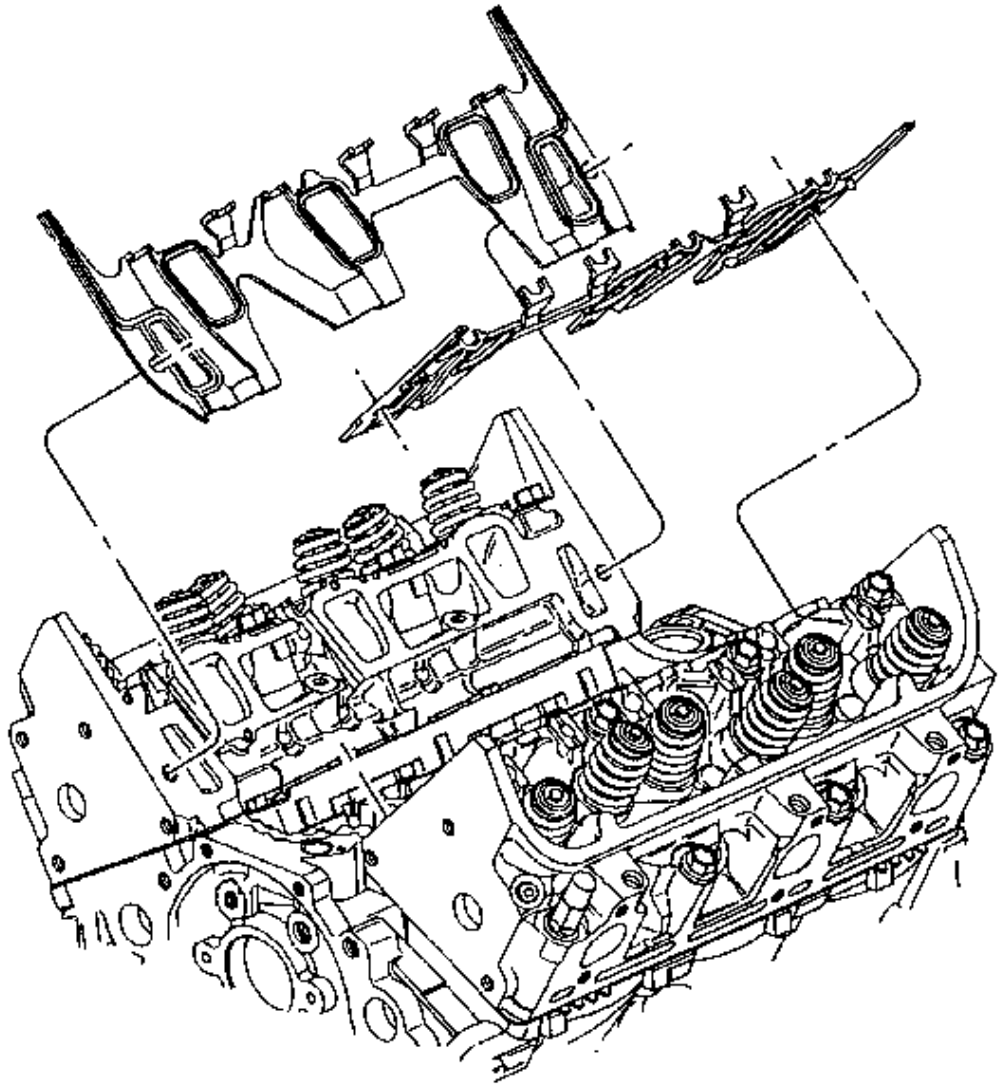

**Fig. 80: Intake Manifold Gaskets**
**Courtesy of GENERAL MOTORS CORP.**

**IMPORTANT: All gasket mating surfaces must remain free of oil and foreign material. Use GM P/N 12346139 (Canadian P/N 10953463) or equivalent to clean surfaces.**

**IMPORTANT: Do not apply room temperature vulcanizing (RTV) sealer to the engine block prior to the installation of the manifold gaskets. RTV sealer is not to**

 © 2011 Mitchell Repair Information Company, LLC.

**be placed under the lower intake manifold gaskets.**

1. Install the lower intake manifold gaskets.
2. Install the rocker arms and push rods. Refer to **Valve Rocker Arm and Push Rod Replacement**.

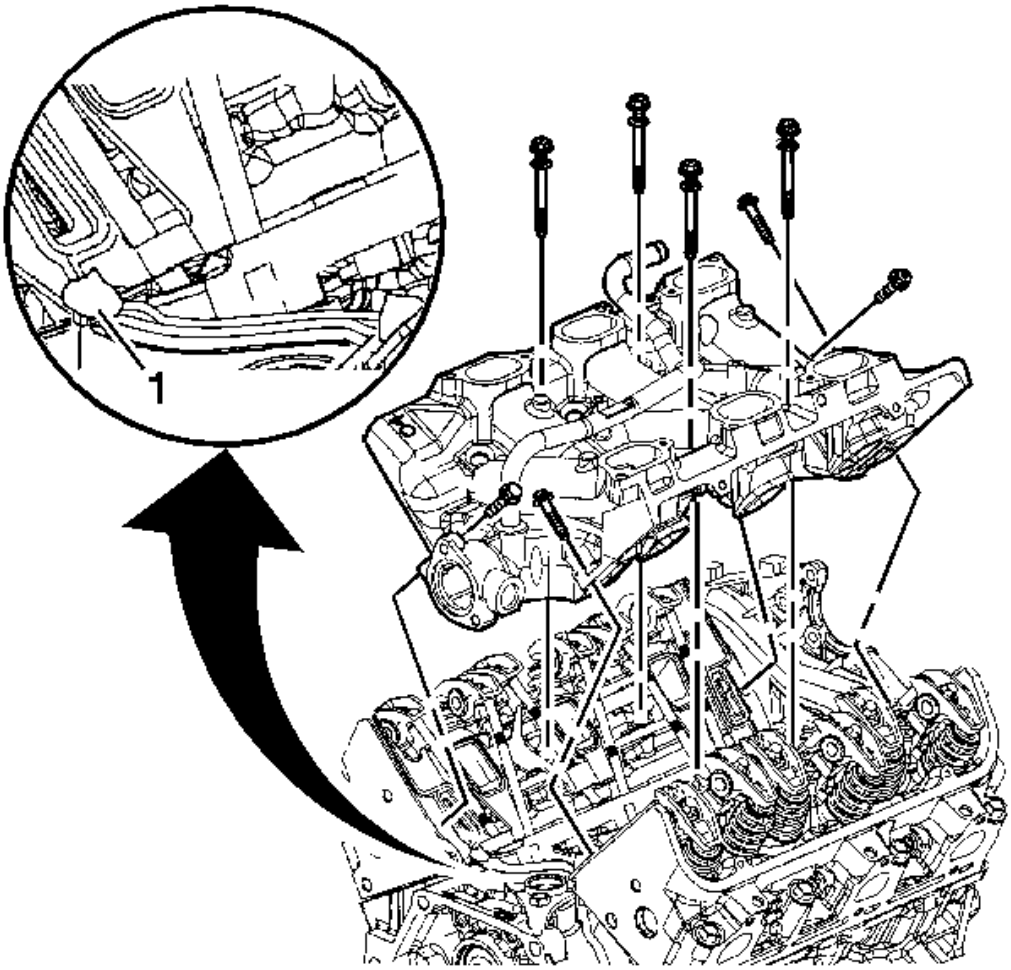


**Fig. 81: Installing Lower Intake Manifold**
**Courtesy of GENERAL MOTORS CORP.**

3. Install the lower intake manifold seals.
4. With the seals in place, apply a small drop 8-10 mm (0.31-0.39 in) of RTV sealer GM P/N 12346141 (Canadian P/N 10953433).
5. Install the lower intake manifold to the engine.

 © 2011 Mitchell Repair Information Company, LLC.

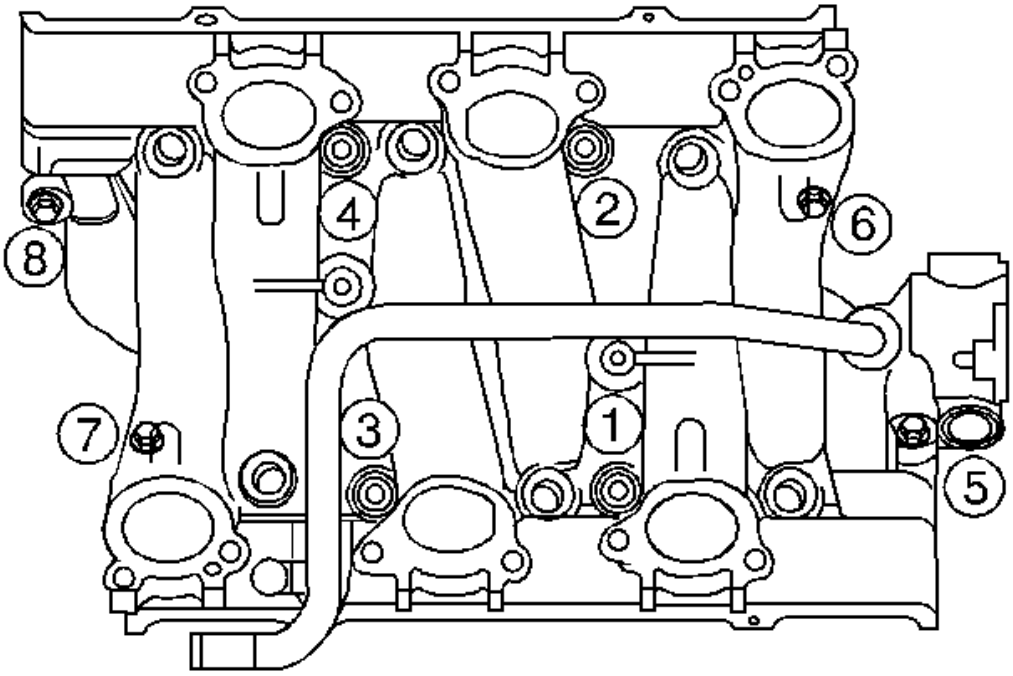


**Fig. 82: Lower Intake Manifold Bolt Tightening Sequence**
**Courtesy of GENERAL MOTORS CORP.**

**NOTE:** **Maximum gasket performance is achieved when using new fasteners, which contain a thread-locking patch. If the fasteners are not replaced, a thread locking chemical must be applied to the fastener threads. Failure to replace the fasteners or apply a thread-locking chemical MAY reduce gasket sealing capability.**

**NOTE:** **Refer to Fastener Notice in Cautions and Notices.**

**IMPORTANT:** **All lower intake manifold bolts need to be clean, free of foreign materials, and reused only if new bolts are unavailable. Use GM P/N 1234382 (Canadian P/N 10953489) or equivalent and apply to the old intake manifold bolt threads.**

**IMPORTANT:** **Manufacturer recommends the center bolts be fully torqued before the diagonal bolts to assure proper torque distribution.**

**IMPORTANT:** **Lower intake manifold bolts in locations (6) and (7) should be torqued to**

 © 2011 Mitchell Repair Information Company, LLC.

**specification using a crows foot type tool.**

6. Install the lower intake manifold bolts.

   **Tighten:**
   1. Tighten the lower intake manifold bolts in sequence to 13 N.m (115 lb in) on the first pass.
   2. Tighten the lower intake manifold bolts (1, 2, 3, 4) in sequence to 20 N.m (15 lb ft) on the final pass.
   3. Tighten the lower intake manifold bolts (5, 6, 7, 8) in sequence to 25 N.m (18 lb ft) on the final pass.

7. Install the fuel rail assembly. Refer to **Fuel Rail Assembly Replacement** in Engine Controls - 3.4L.
8. Connect the radiator inlet hose to the thermostat housing. Refer to **Radiator Hose Replacement - Inlet** in Engine Cooling.
9. Install the heater inlet pipe. Refer to **Heater Pipe Replacement - Inlet** in Engine Cooling.
10. Install the upper intake manifold. Refer to **Fuel Injector Sight Shield Replacement**.
11. Fill the cooling system. Refer to **Draining and Filling Cooling System (Static Fill)** or **Draining and Filling Cooling System (GE 47716 Fill)** in Engine Cooling.

**Positive Crankcase Ventilation (PCV) Valve Replacement**

**Removal Procedure**

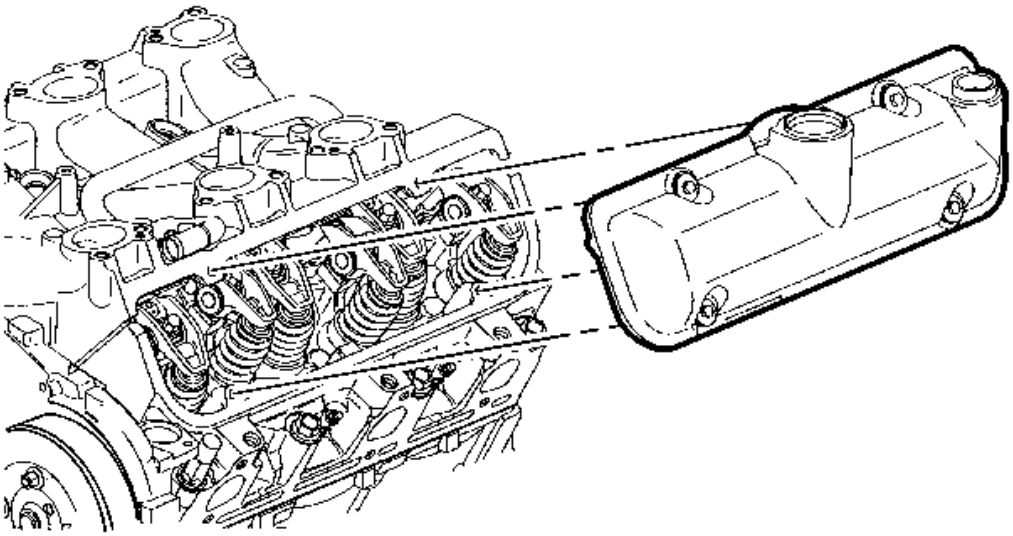

**Fig. 83: View Of Valve Rocker Arm Cover - Left**

 © 2011 Mitchell Repair Information Company, LLC.

**Courtesy of GENERAL MOTORS CORP.**

**IMPORTANT: The PCV valve is not removable from the valve rocker arm cover. The PCV valve and rocker arm cover must be replaced as an assembly.**

1. Remove the left valve rocker arm cover. Refer to **Valve Rocker Arm Cover Removal - Left**.

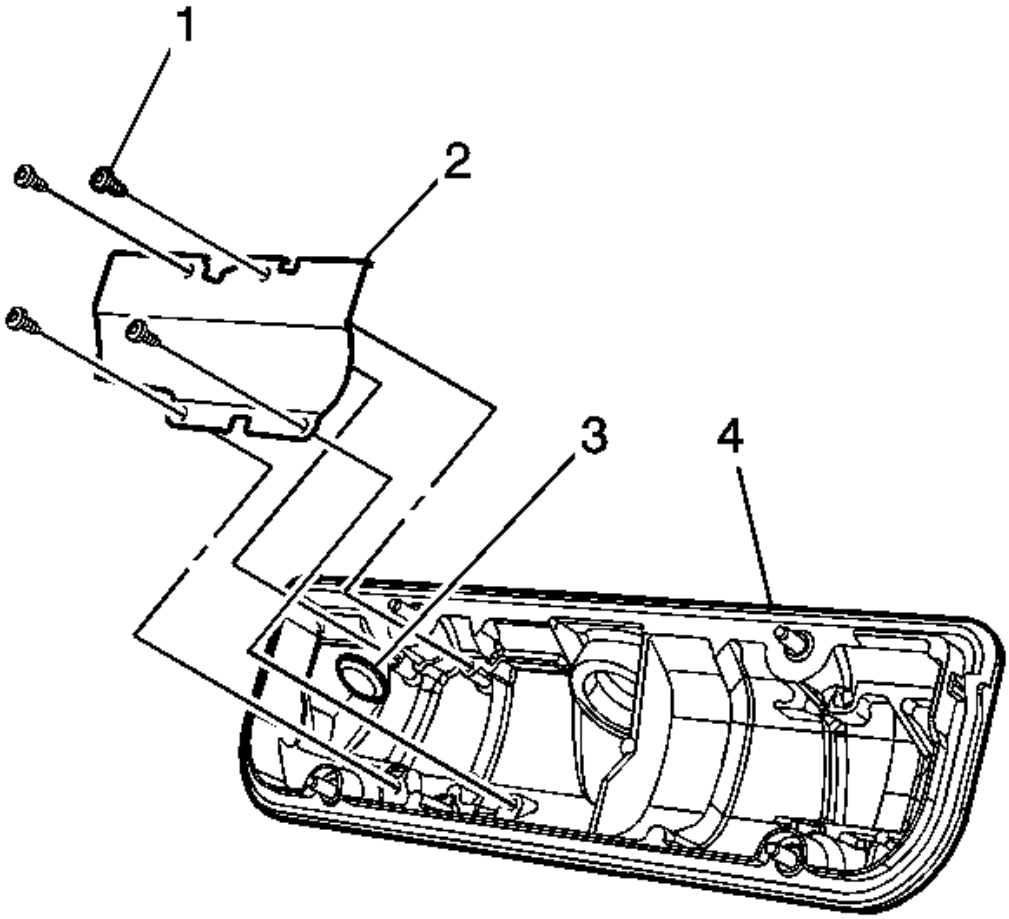


**Fig. 84: View Of PCV Baffle, Screws, PCV Valve & Valve Cover**
**Courtesy of GENERAL MOTORS CORP.**

2. Remove the screws (1) from the PCV baffle.
3. Remove the PCV baffle (2).
4. Clean the PCV valve (3) or replace the valve cover (4).

 © 2011 Mitchell Repair Information Company, LLC.

**Installation Procedure**

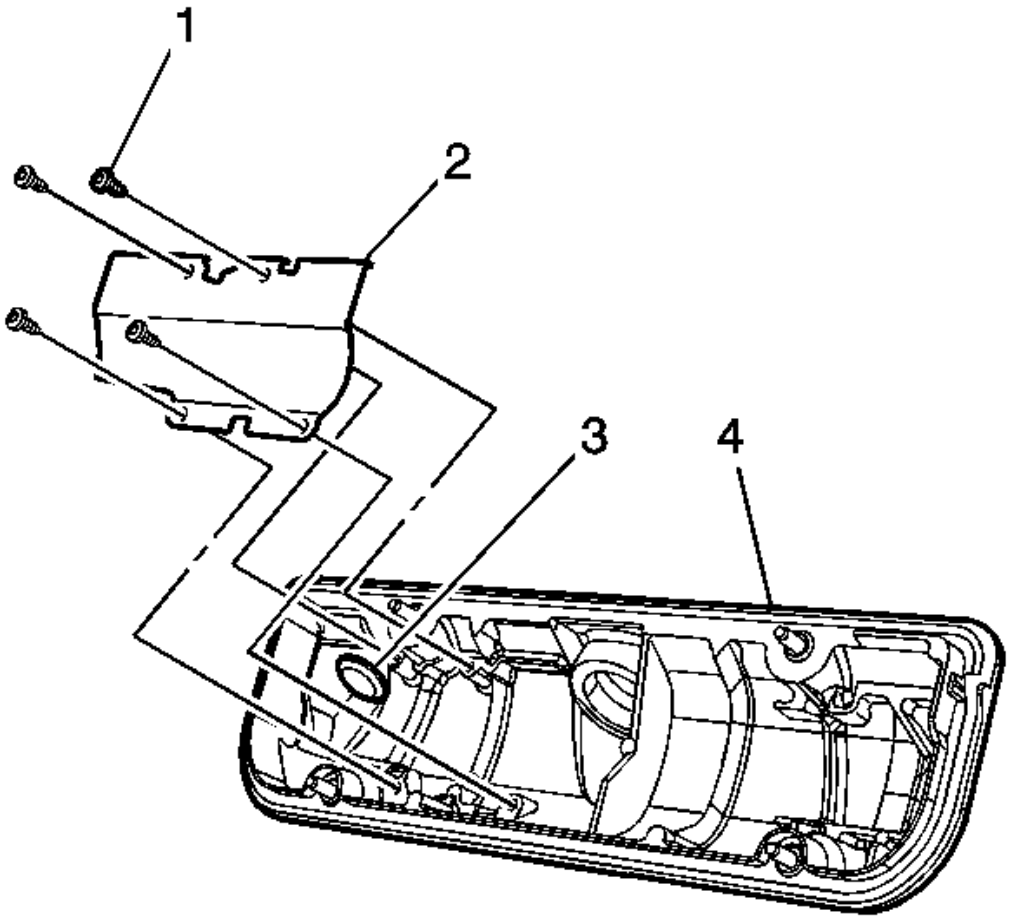


**Fig. 85: View Of PCV Baffle, Screws, PCV Valve & Valve Cover**
**Courtesy of GENERAL MOTORS CORP.**

1. Install the PCV baffle (2).

**NOTE:** **Refer to Fastener Notice in Cautions and Notices.**

2. Install the PCV baffle screws (1).

**Tighten:** Tighten the screws to 6 N.m (53 lb in).

 © 2011 Mitchell Repair Information Company, LLC.

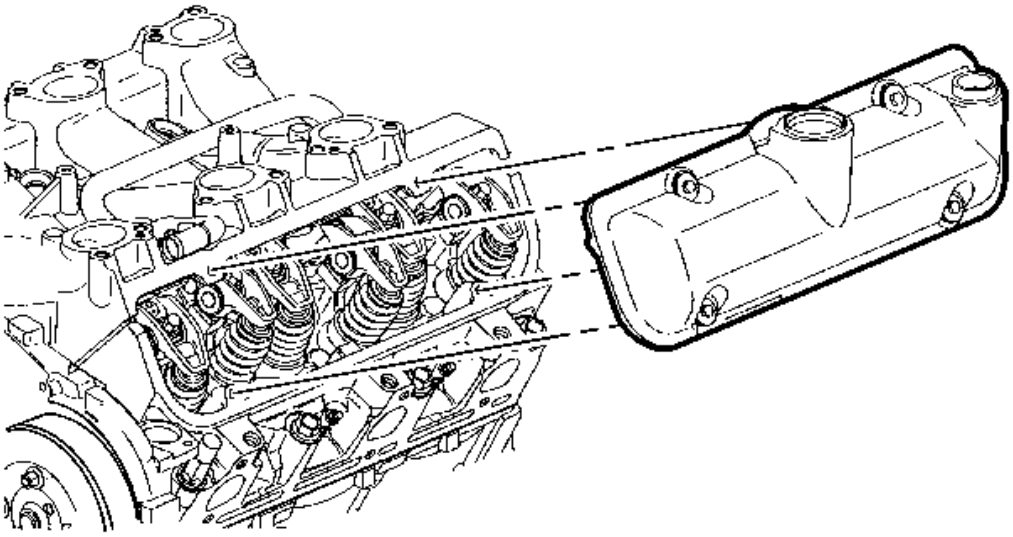

**Fig. 86: View Of Valve Rocker Arm Cover - Left**
**Courtesy of GENERAL MOTORS CORP.**

3. Install the left valve rocker arm cover. Refer to **Valve Rocker Arm Cover Removal - Left**.

**Crankcase Ventilation Hoses/Pipes Replacement**

**Removal Procedure**

1. Remove the fuel injector sight shield. Refer to **Fuel Injector Sight Shield Replacement**.

 © 2011 Mitchell Repair Information Company, LLC.

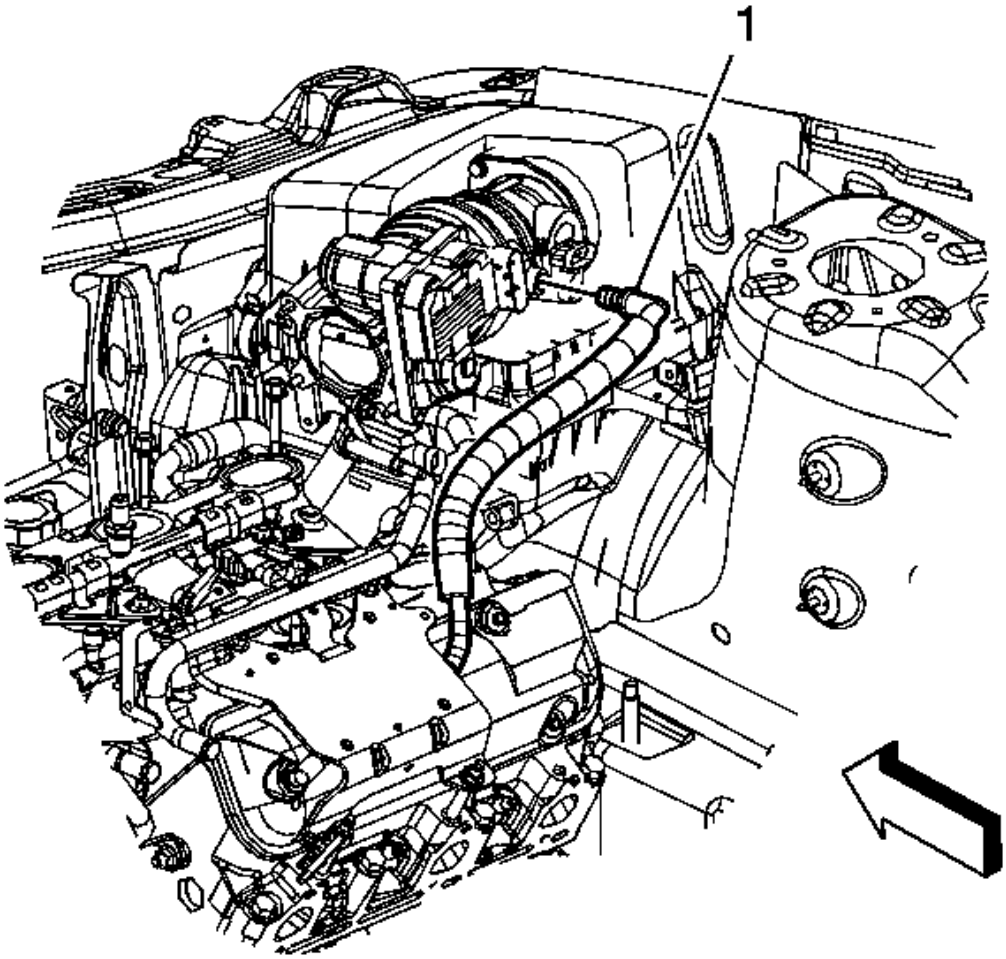


**Fig. 87: Disconnecting/Connecting PCV Fresh Air Pipe At Air Cleaner Duct**
**Courtesy of GENERAL MOTORS CORP.**

2. Disconnect the positive crankcase ventilation (PVC) fresh air pipe (1) from the air cleaner duct.
3. Remove the ignition control module bracket. Refer to **Ignition Control Module Bracket Replacement** in Engine Controls - 3.4L.

 © 2011 Mitchell Repair Information Company, LLC.

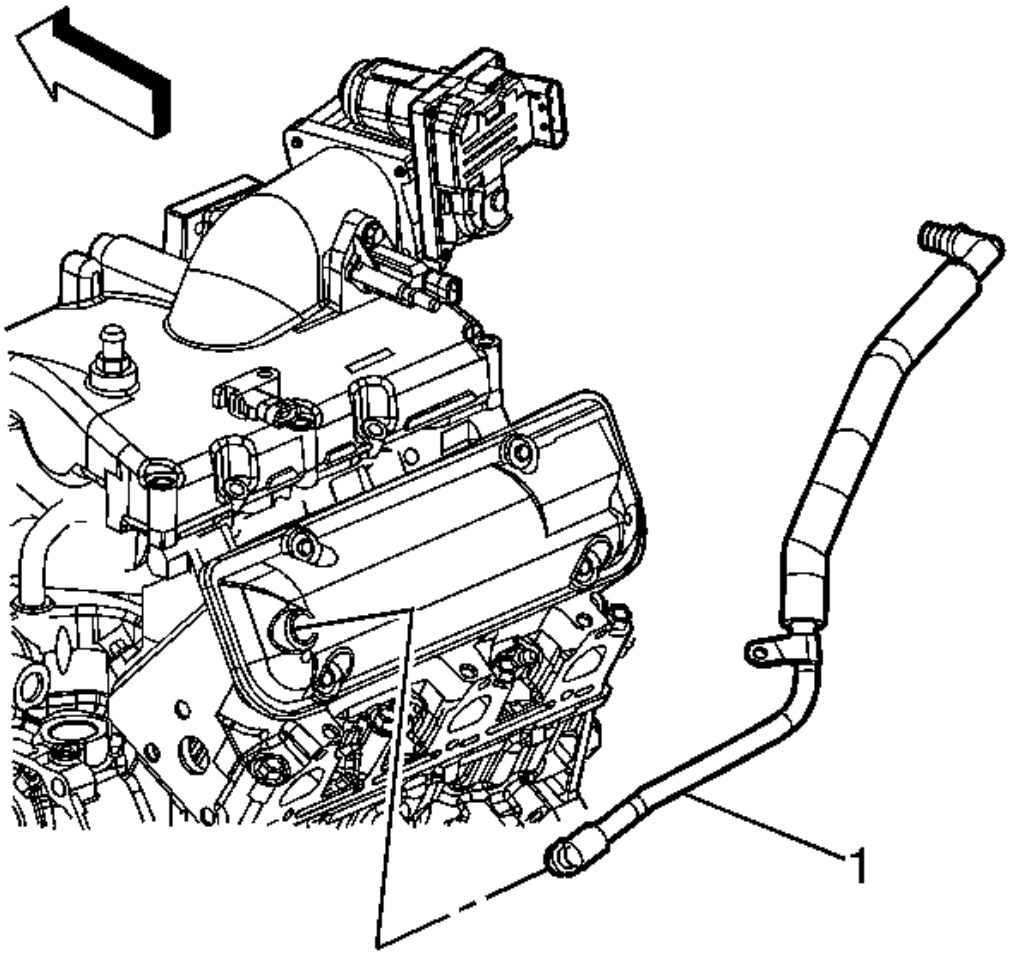


**Fig. 88: Disconnecting/Connecting PCV Fresh Air Pipe At Valve Cover**
**Courtesy of GENERAL MOTORS CORP.**

4. Disconnect the PVC fresh air pipe (1) from the valve cover.

 © 2011 Mitchell Repair Information Company, LLC.

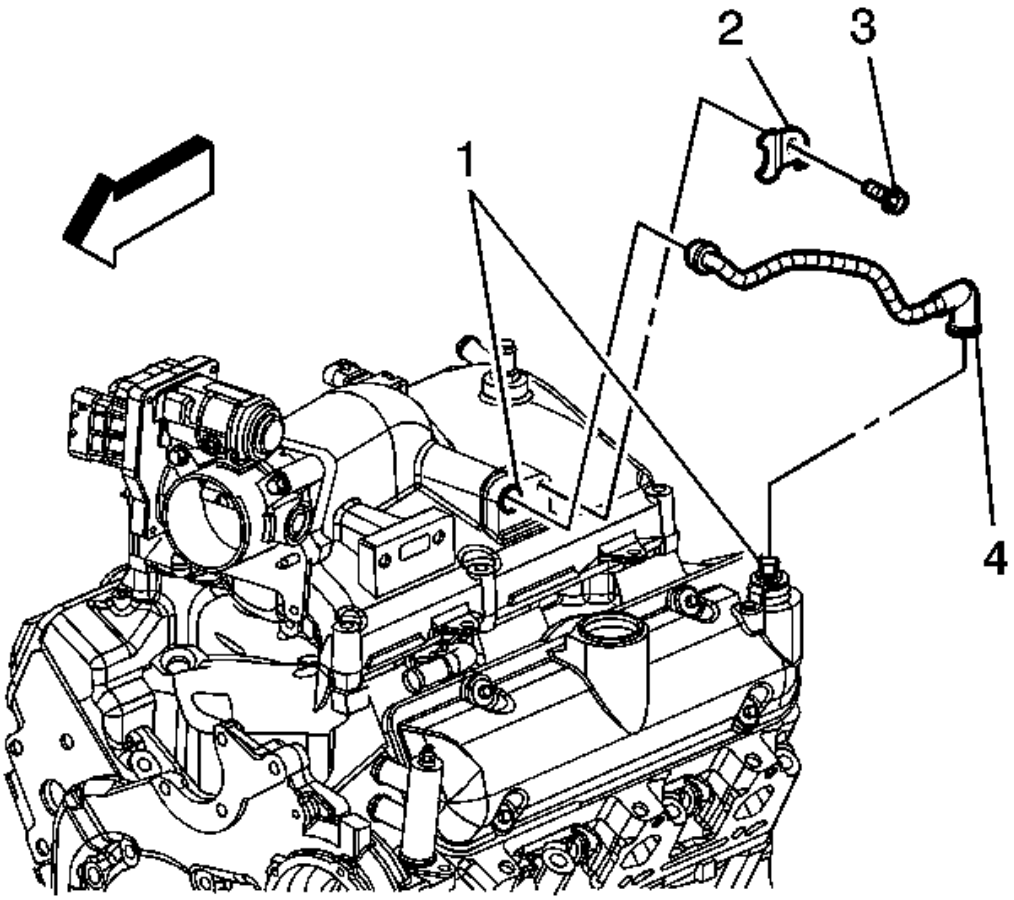


**Fig. 89: View Of PCV Foul Air Pipe, Retaining Clip & Bolt**
**Courtesy of GENERAL MOTORS CORP.**

5. Disconnect the PVC foul air pipe (4) from the PVC valve.
6. Remove the PVC foul air pipe retaining clip (2) and bolt (3) from the intake manifold.
7. Disconnect the PVC foul air pipe (4) from the intake manifold.

**Installation Procedure**

 © 2011 Mitchell Repair Information Company, LLC.

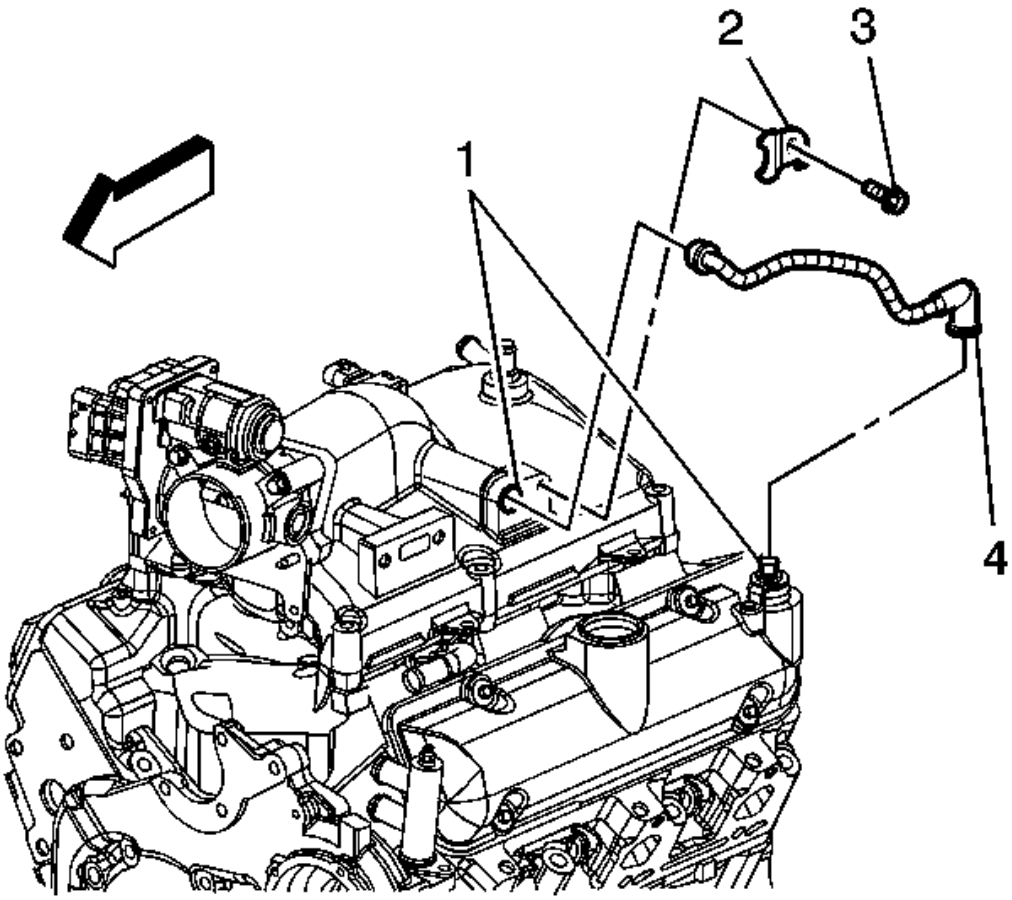


**Fig. 90: View Of PCV Foul Air Pipe, Retaining Clip & Bolt**
**Courtesy of GENERAL MOTORS CORP.**

1. Connect the PVC foul air pipe (4) to the intake manifold.

**NOTE:** **Refer to Fastener Notice in Cautions and Notices.**

2. Install the PVC foul air pipe retaining clip (2) and bolt (3) to the intake manifold.

   **Tighten:** Tighten the bolt to 10 N.m (89 lb in).

3. Connect the PVC foul air pipe (4) to the PVC valve.

 © 2011 Mitchell Repair Information Company, LLC.

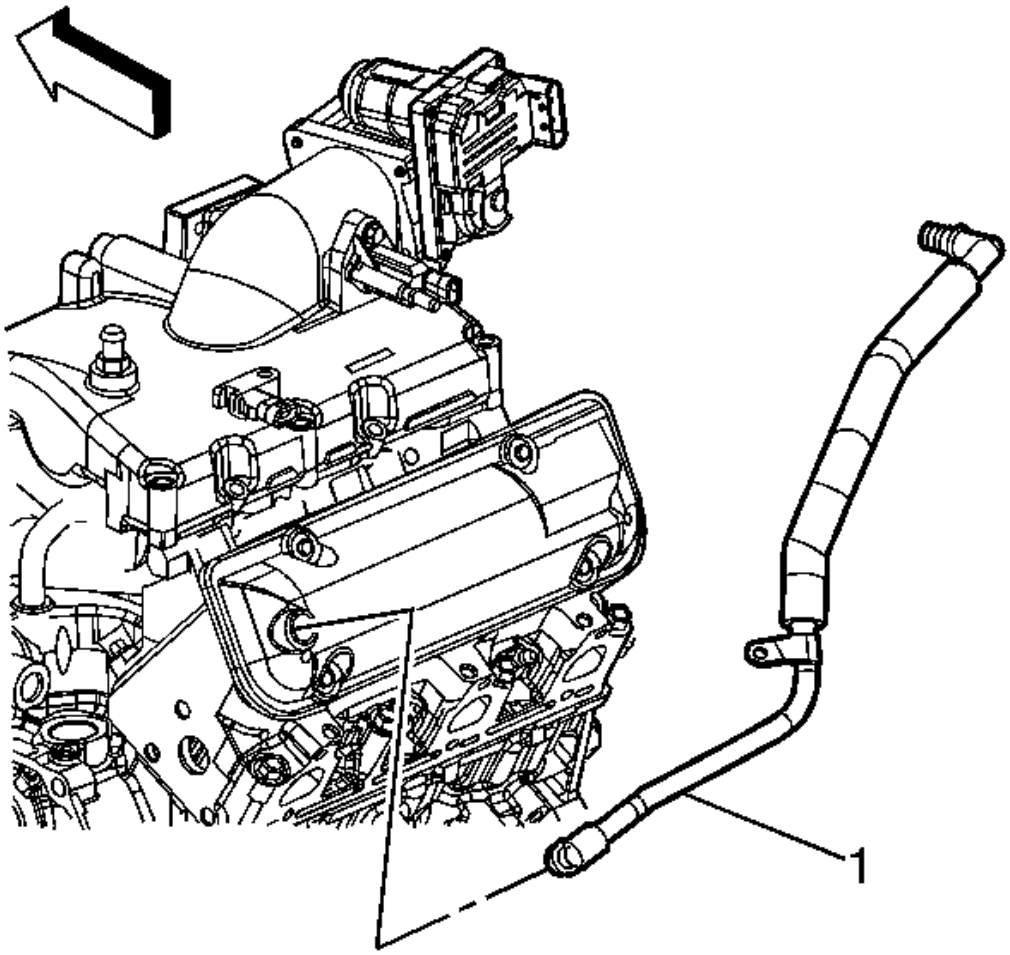


**Fig. 91: Disconnecting/Connecting PCV Fresh Air Pipe At Valve Cover**
**Courtesy of GENERAL MOTORS CORP.**

4. Connect the PVC fresh air pipe (1) to the valve cover.
5. Install the ignition control module bracket. Refer to **Ignition Control Module Bracket Replacement** in Engine Controls - 3.4L.

 © 2011 Mitchell Repair Information Company, LLC.

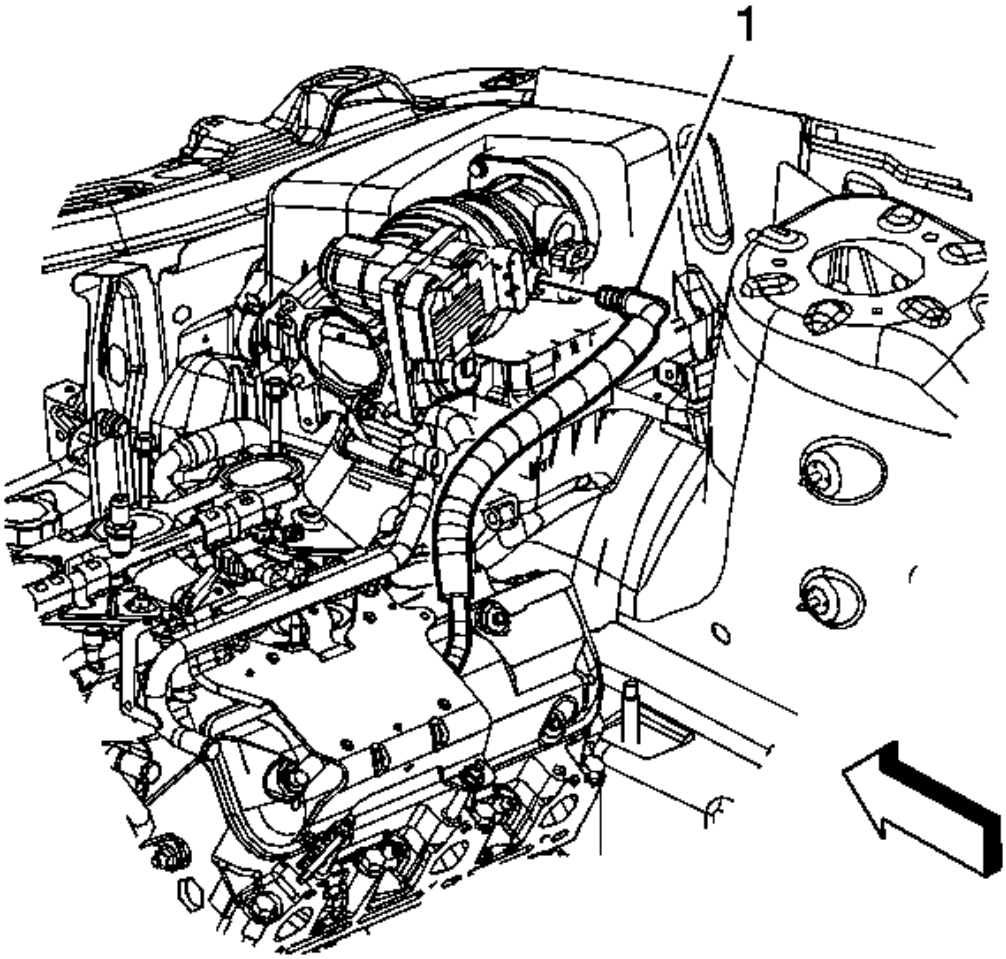


**Fig. 92: Disconnecting/Connecting PCV Fresh Air Pipe At Air Cleaner Duct**
**Courtesy of GENERAL MOTORS CORP.**

6. Connect the PVC fresh air pipe (1) to the air cleaner duct.
7. Install the fuel injector sight shield. Refer to **Fuel Injector Sight Shield Replacement**.

**Valve Rocker Arm Cover Replacement - Left**

**Removal Procedure**

1. Remove the fuel injector sight shield. Refer to **Fuel Injector Sight Shield Replacement**.

 © 2011 Mitchell Repair Information Company, LLC.

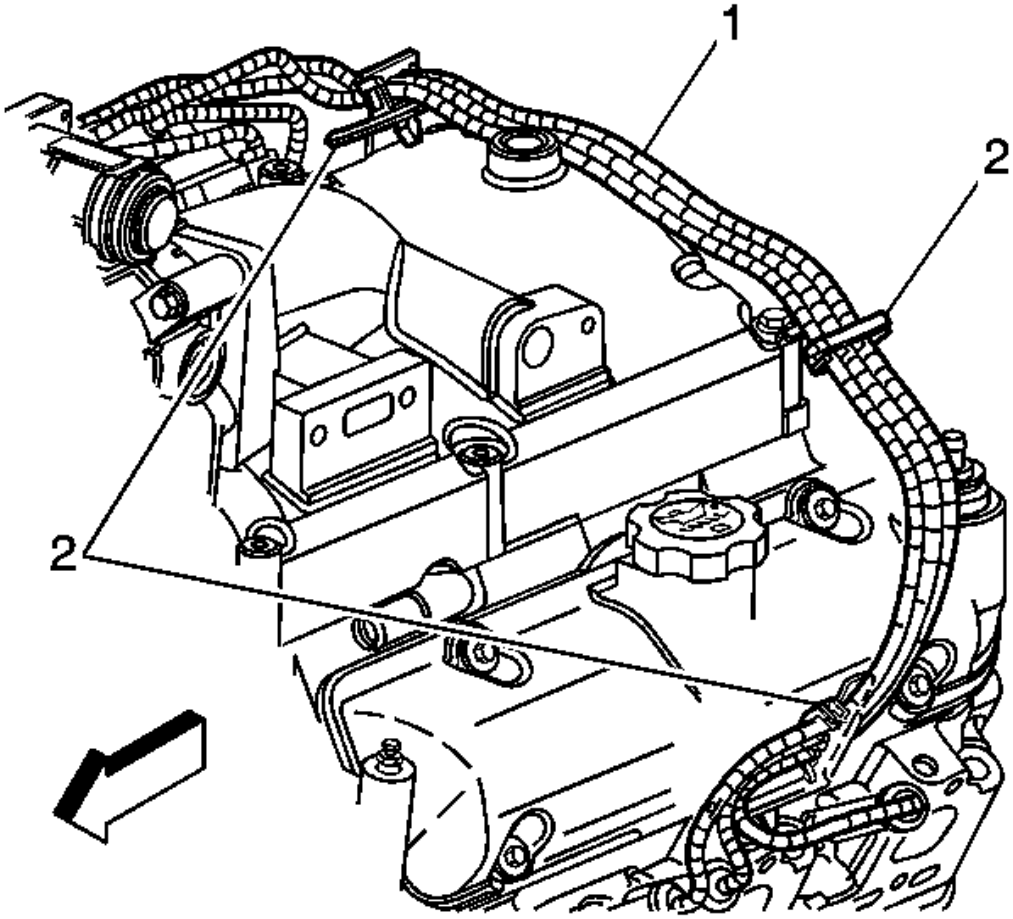


**Fig. 93: View Of Left Side Spark Plug Wires & Retainers**
**Courtesy of GENERAL MOTORS CORP.**

2. Disconnect the left side spark plug wires (1) from the retainers (2).

 © 2011 Mitchell Repair Information Company, LLC.

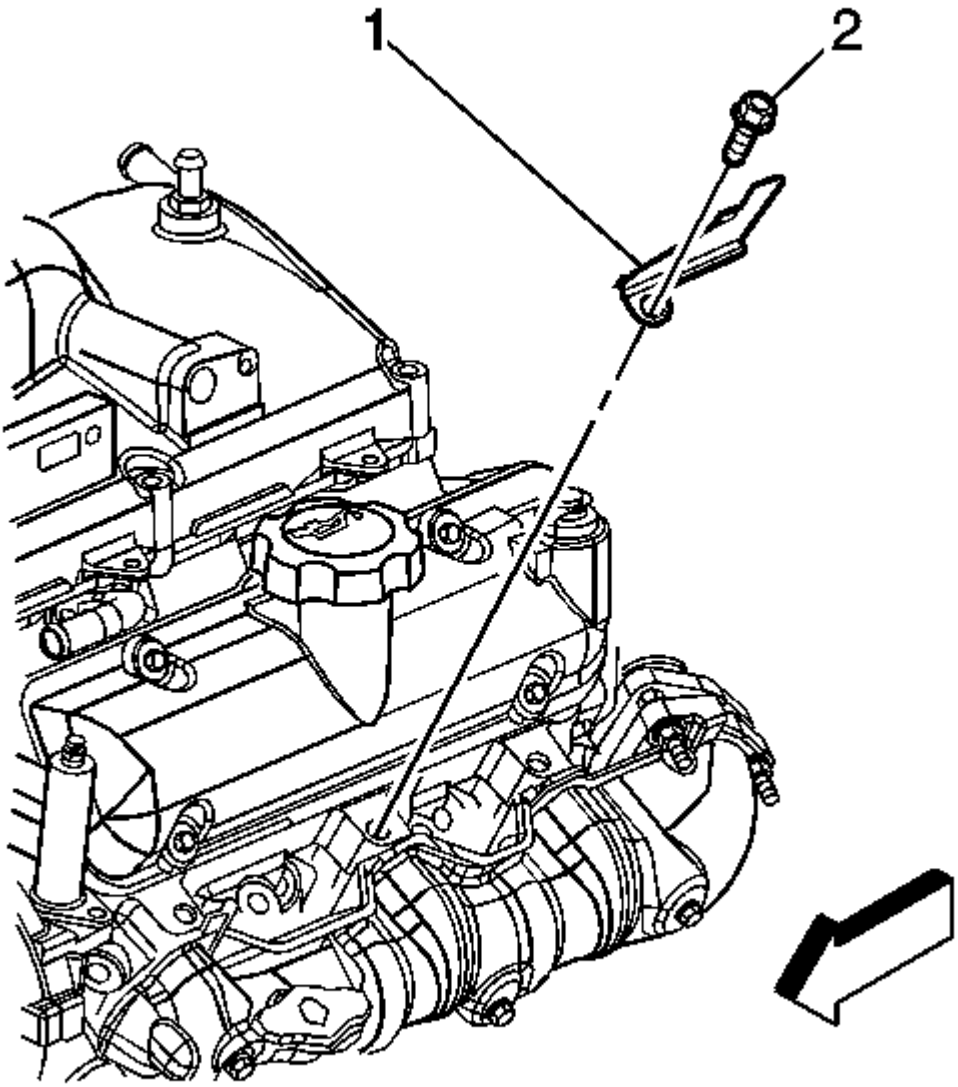


**Fig. 94: View Of Spark Plug Wire Support & Bolt**
**Courtesy of GENERAL MOTORS CORP.**

3. Remove the bolt (2) and the spark plug wire support (1).

 © 2011 Mitchell Repair Information Company, LLC.

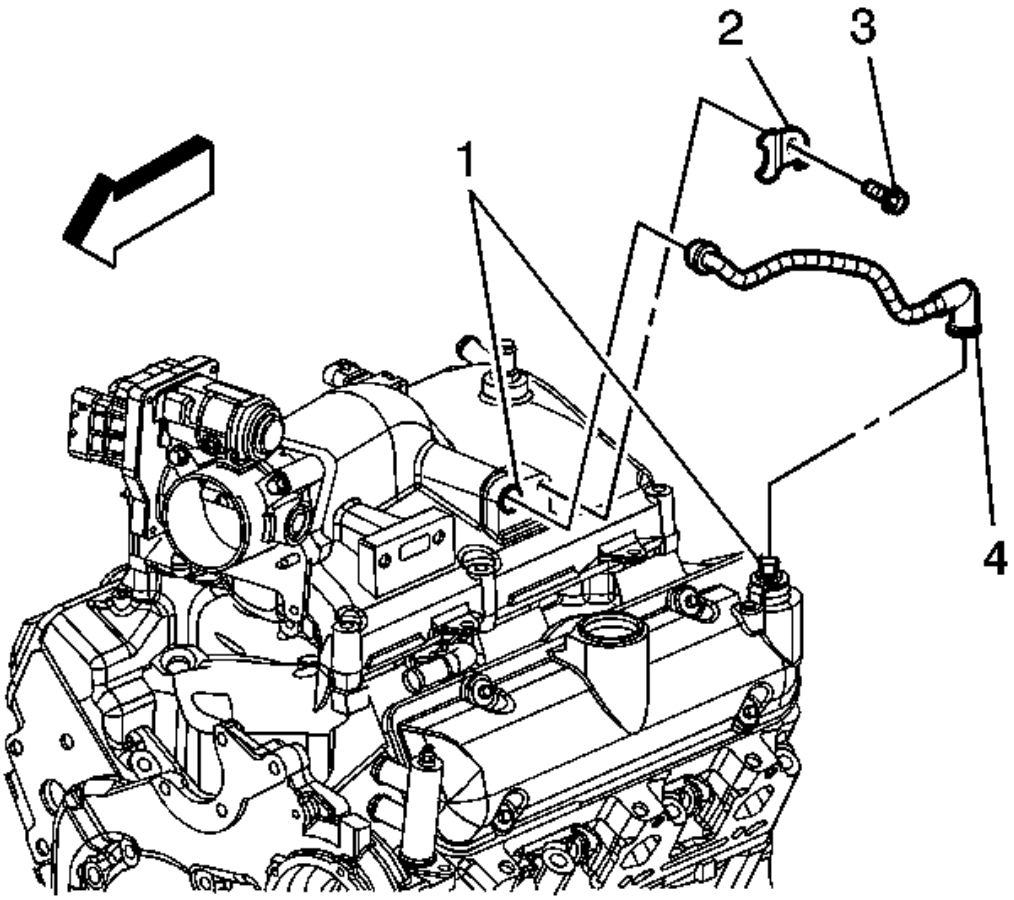


**Fig. 95: View Of PCV Foul Air Pipe, Retaining Clip & Bolt**
**Courtesy of GENERAL MOTORS CORP.**

4. Disconnect the positive crankcase ventilation (PCV) foul air pipe (4) from the PCV valve.

 © 2011 Mitchell Repair Information Company, LLC.

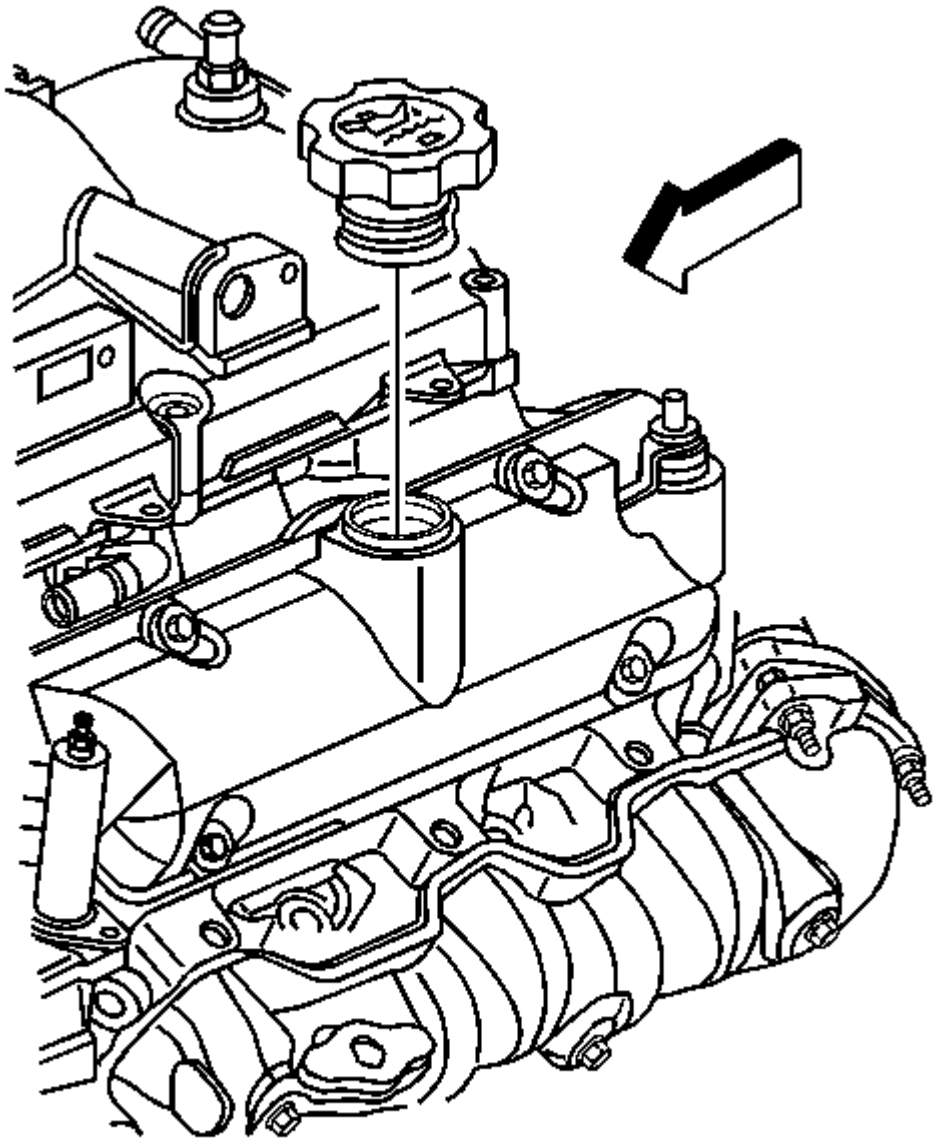

**Fig. 96: View Of Oil Filler Cap**
**Courtesy of GENERAL MOTORS CORP.**

5. Remove the oil filler cap from the valve rocker arm cover.

 © 2011 Mitchell Repair Information Company, LLC.

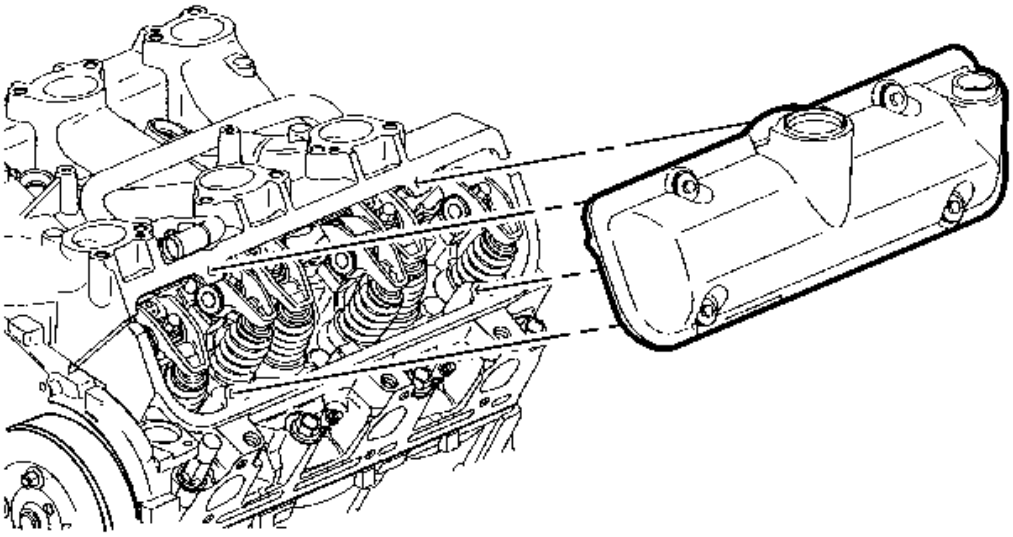

**Fig. 97: View Of Valve Rocker Arm Cover - Left**
**Courtesy of GENERAL MOTORS CORP.**

**NOTE:** **Valve rocker arm cover gasket and sealant must be carefully trimmed away from lower intake manifold gasket. Failure to do so will damage the lower intake manifold gasket, causing a severe oil leak.**

6. Loosen the valve rocker arm cover bolts.

 © 2011 Mitchell Repair Information Company, LLC.

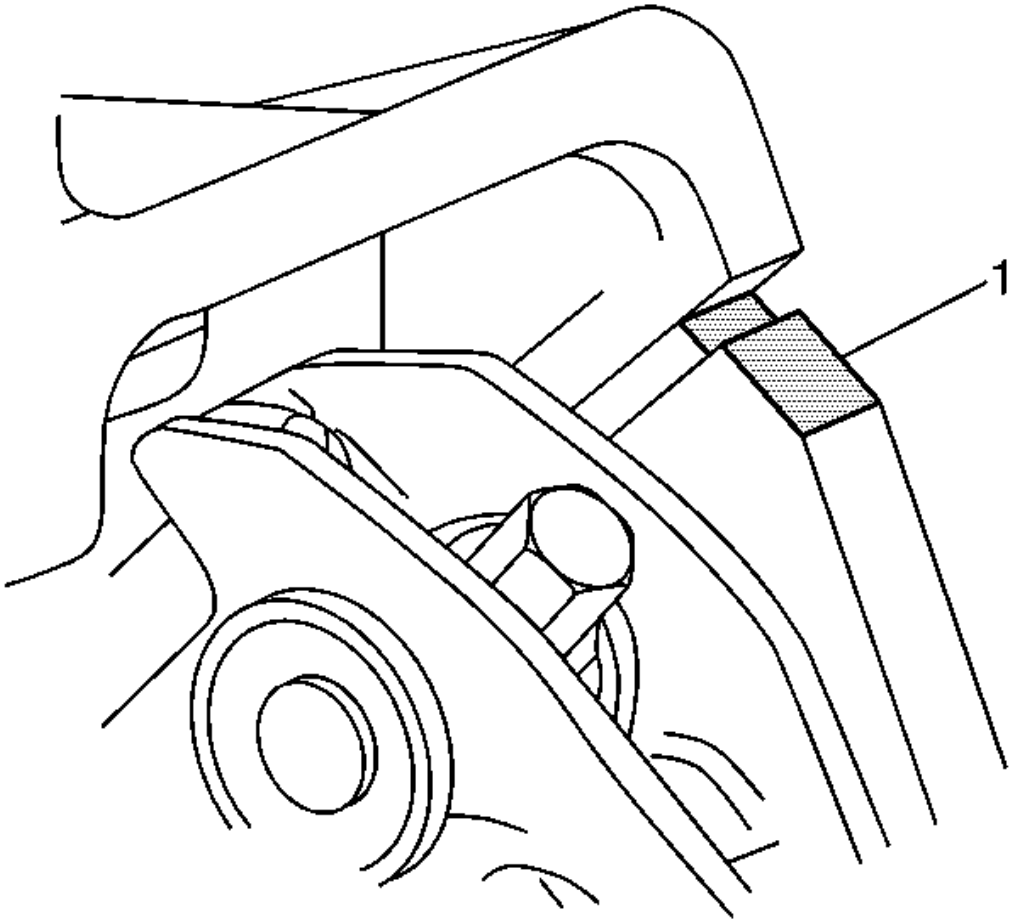


**Fig. 98: Identifying Cylinder Head To Lower Intake Manifold Joint**
**Courtesy of GENERAL MOTORS CORP.**

**IMPORTANT: When removing the valve rocker arm cover, ensure the gasket stays in place attached to the cylinder head.**

7. Remove the valve rocker arm cover.

   Bump the end of the valve rocker arm cover with the palm of your hand or a soft rubber mallet if the cover adheres to the cylinder head.

8. Trim the valve cover gasket and sealant away from the lower intake manifold gasket at the cylinder head to the lower intake manifold joints (1).
9. Remove the rocker arm cover gasket.

 © 2011 Mitchell Repair Information Company, LLC.

10. Clean the sealing surface on the cylinder head with degreaser.
11. Clean the valve rocker arm cover. Refer to **Valve Rocker Arm Cover Cleaning and Inspection**.

**Installation Procedure**

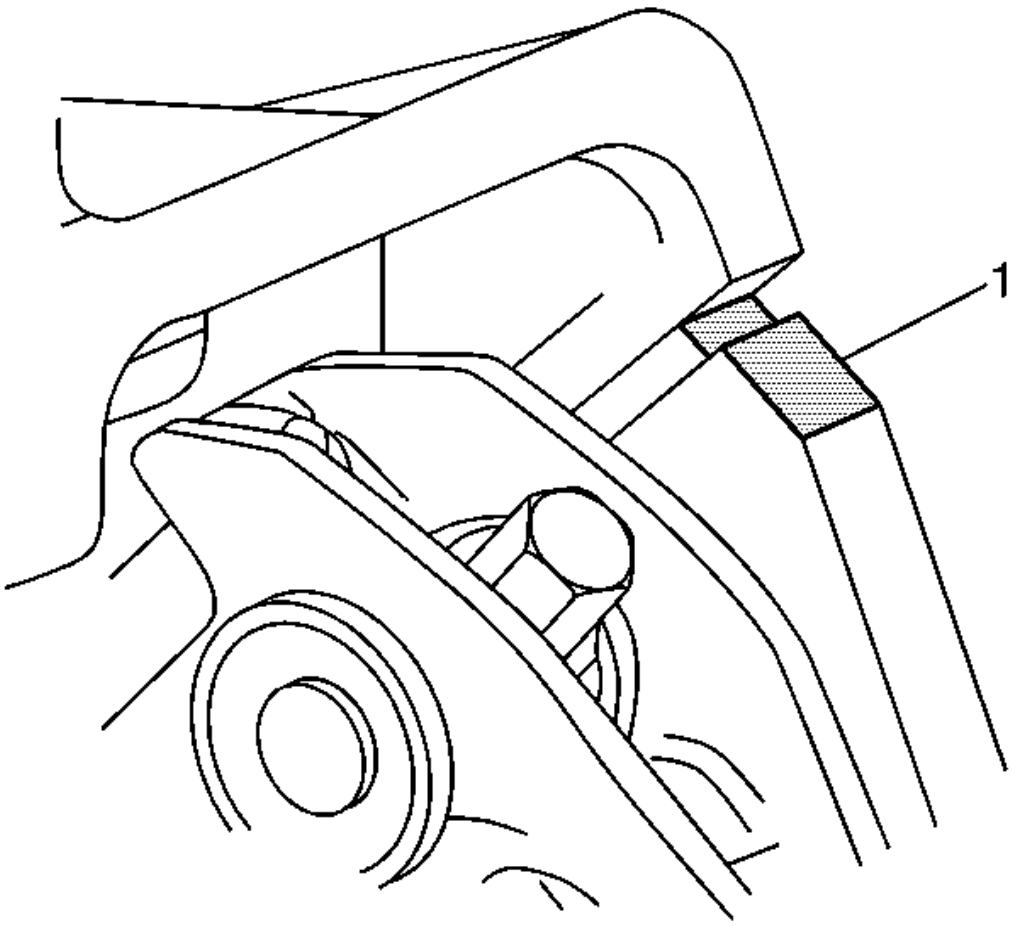


**Fig. 99: Identifying Cylinder Head To Lower Intake Manifold Joint**
**Courtesy of GENERAL MOTORS CORP.**

**IMPORTANT: All gasket mating surfaces need to be free of oil and foreign material. Use GM P/N 12346139 (Canadian P/N 10953463) or equivalent to clean surfaces.**

**IMPORTANT: Apply sealant GM P/N 12378521 (Canadian P/N 88901148) or equivalent, at the cylinder head to lower intake manifold joint.**

 © 2011 Mitchell Repair Information Company, LLC.

1. Apply sealant at the cylinder head to lower intake manifold joints (1).

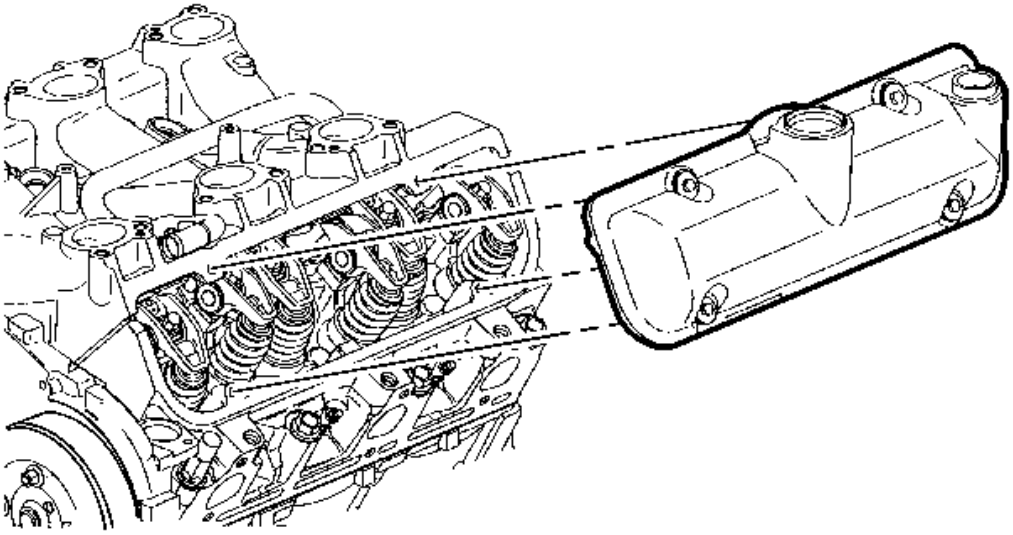

**Fig. 100: View Of Valve Rocker Arm Cover - Left**
**Courtesy of GENERAL MOTORS CORP.**

2. Install a new gasket to the valve rocker arm cover. Ensure the gasket is properly seated in the groove of the valve rocker arm cover.

**NOTE:** **Refer to Fastener Notice in Cautions and Notices.**

3. Install the valve rocker arm cover.

   **Tighten:** Tighten the bolts to 10 N.m (89 lb in).

 © 2011 Mitchell Repair Information Company, LLC.

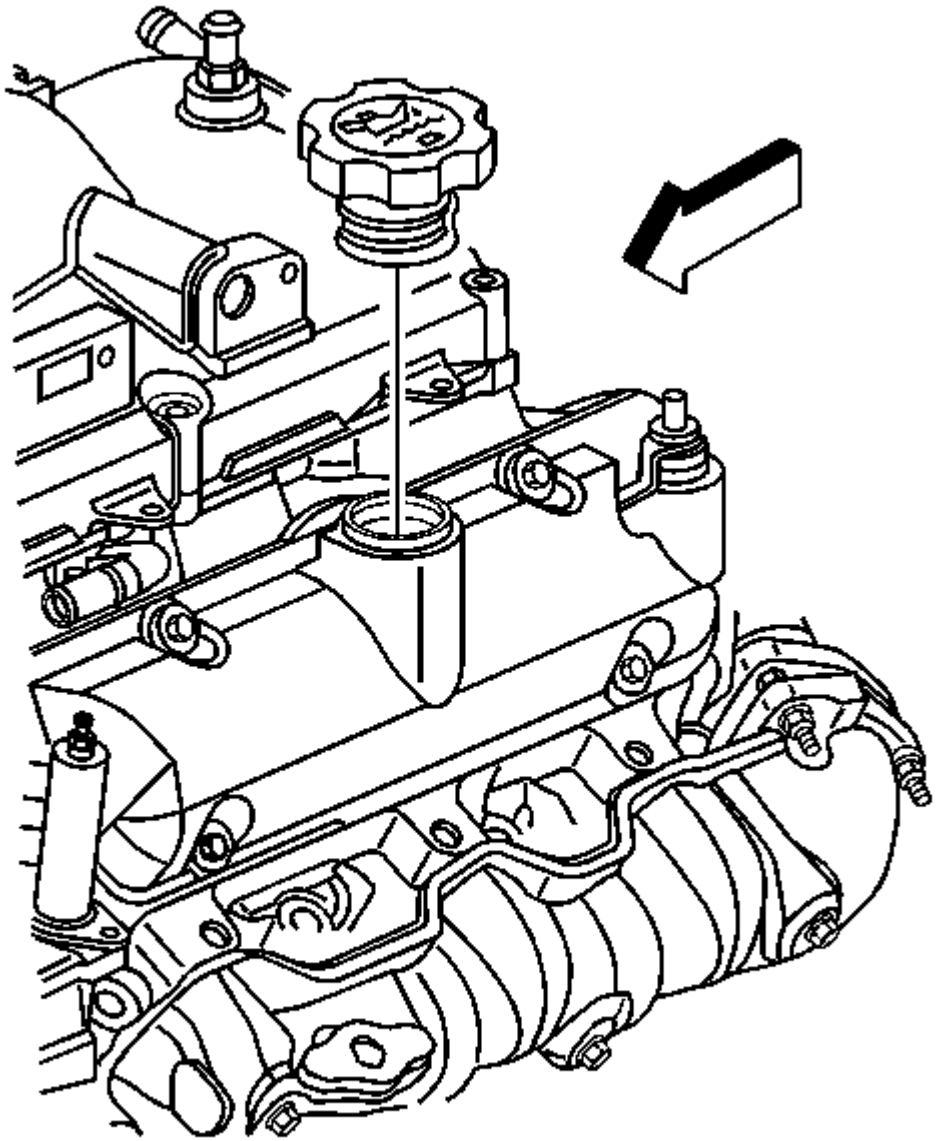

**Fig. 101: View Of Oil Filler Cap**
**Courtesy of GENERAL MOTORS CORP.**

4. Install the oil filler cap to the valve rocker arm cover.

 © 2011 Mitchell Repair Information Company, LLC.

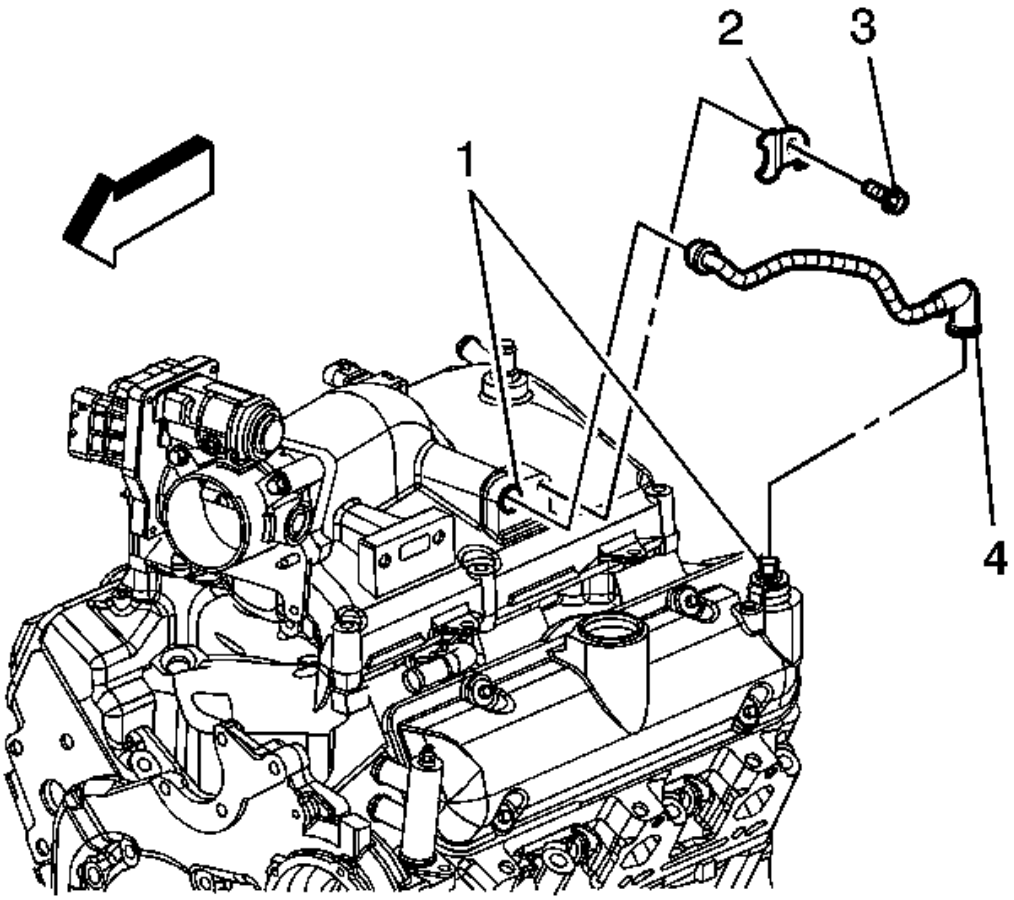


**Fig. 102: View Of PCV Foul Air Pipe, Retaining Clip & Bolt**
**Courtesy of GENERAL MOTORS CORP.**

5. Connect the PCV foul air pipe (4) to the PCV valve.

 © 2011 Mitchell Repair Information Company, LLC.

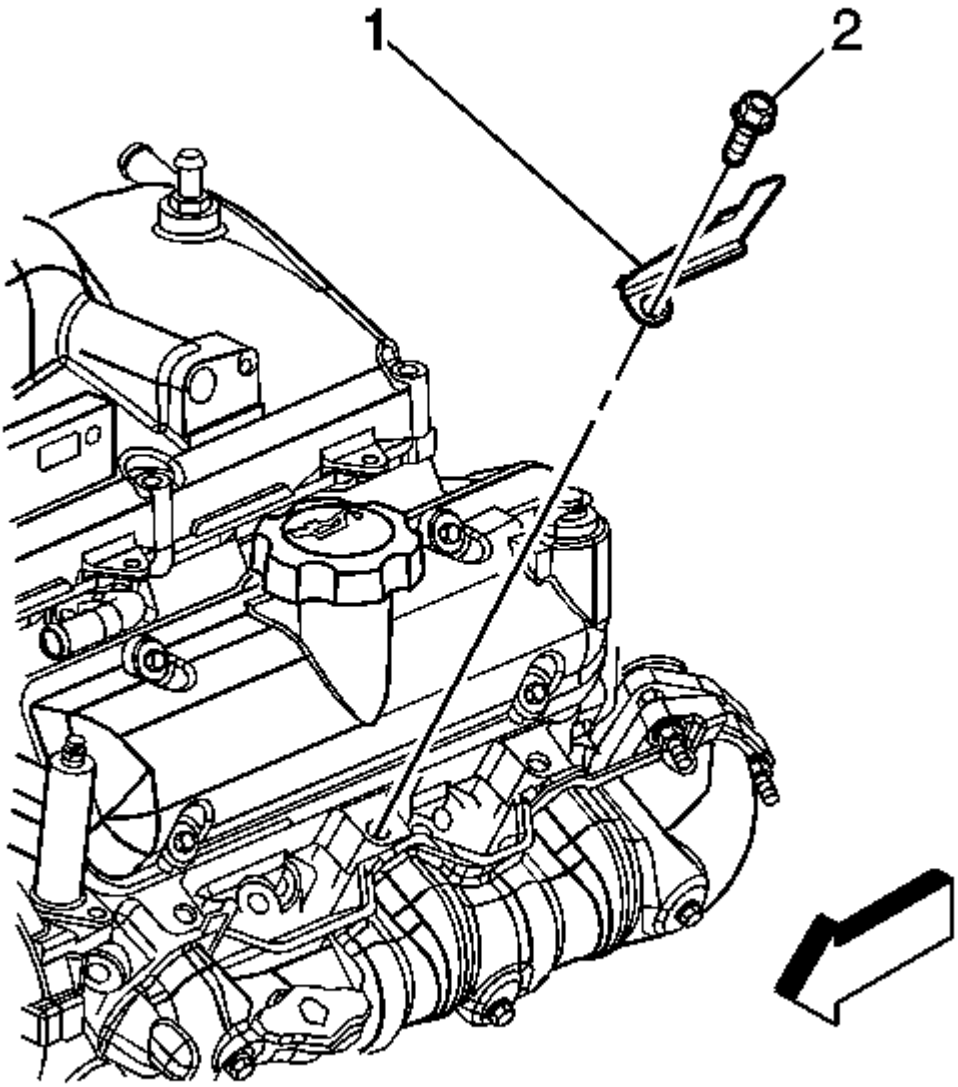


**Fig. 103: View Of Spark Plug Wire Support & Bolt**
**Courtesy of GENERAL MOTORS CORP.**

6. Install the spark plug wire support (1) and bolt (2).

   **Tighten:** Tighten the bolt to 25 N.m (18 lb ft).

 © 2011 Mitchell Repair Information Company, LLC.

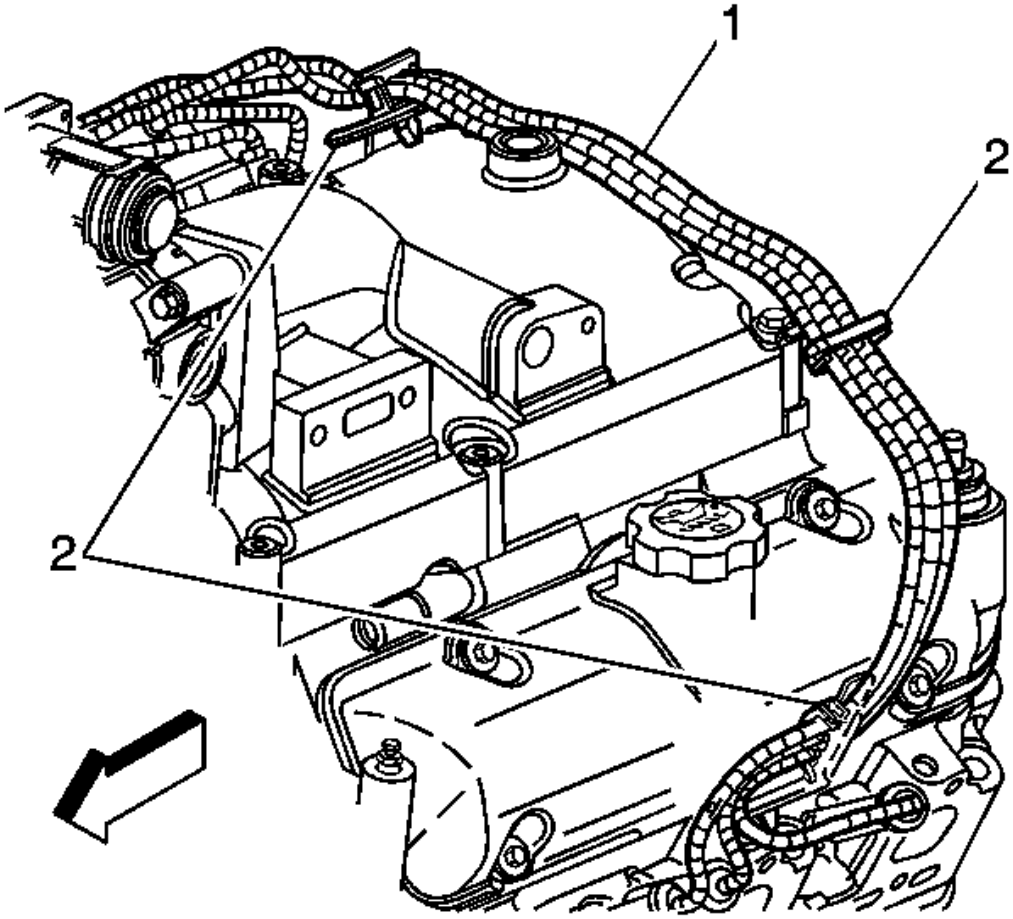


**Fig. 104: View Of Left Side Spark Plug Wires & Retainers**
**Courtesy of GENERAL MOTORS CORP.**

7. Connect the left side spark plug wires (1) to the spark plug wire retainers (2).
8. Install the fuel injector sight shield. Refer to **Fuel Injector Sight Shield Replacement**.

**Valve Rocker Arm Cover Replacement - Right**

**Removal Procedure**

1. Remove the fuel injector sight shield. Refer to **Fuel Injector Sight Shield Replacement**.
2. Remove the generator bracket. Refer to **Generator Bracket/Engine Lift Bracket Replacement** in Engine Electrical.
3. Remove the ignition control module bracket from the engine with the ignition control module and spark

 © 2011 Mitchell Repair Information Company, LLC.

plug wires still attached. Position out of the way. Refer to **Ignition Control Module Bracket Replacement** in Engine Controls - 3.4L.

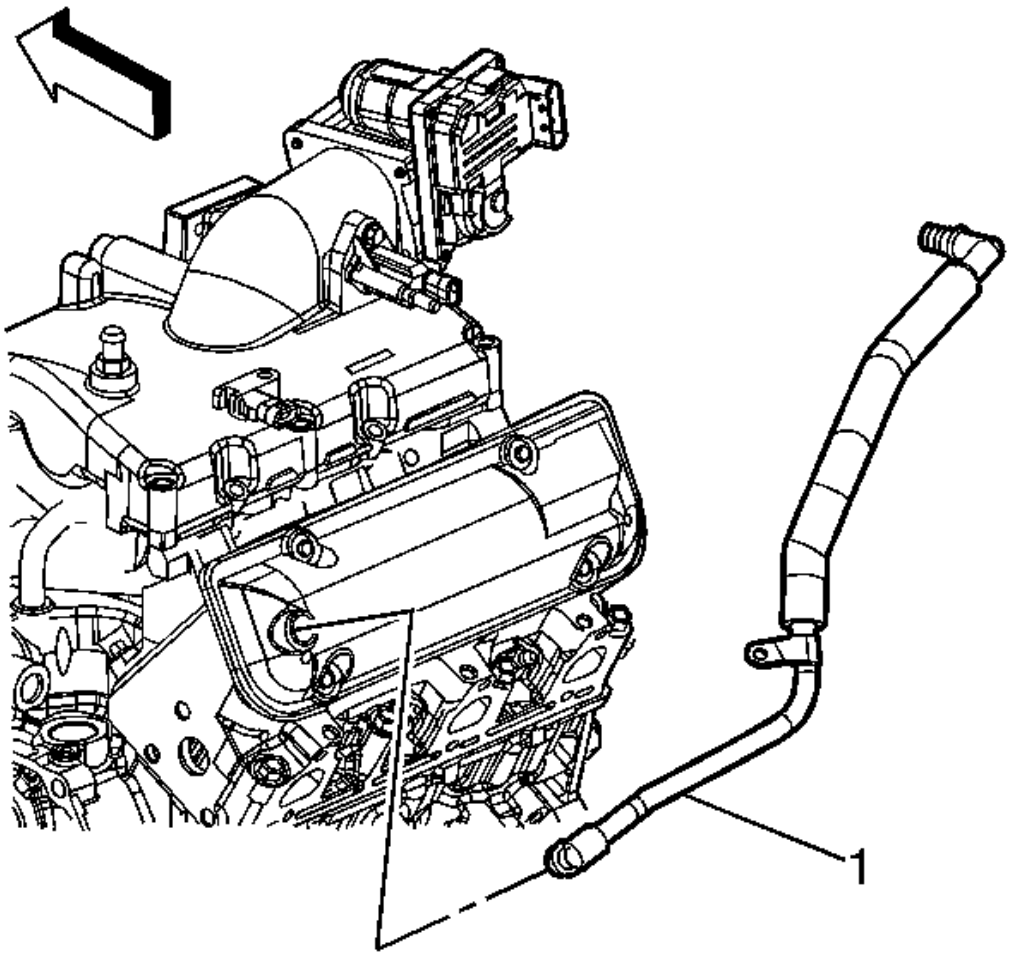


**Fig. 105: Disconnecting/Connecting PCV Fresh Air Pipe At Valve Cover**
**Courtesy of GENERAL MOTORS CORP.**

4. Disconnect the positive crankcase ventilation (PCV) fresh air pipe (1) from the right valve rocker arm cover.

 © 2011 Mitchell Repair Information Company, LLC.

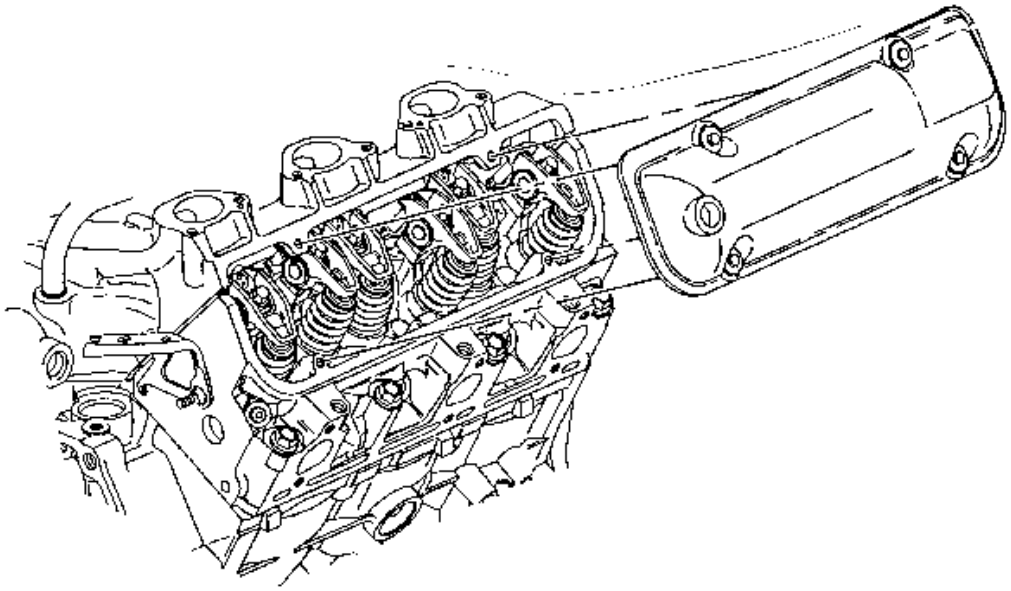

**Fig. 106: View Of Valve Rocker Arm Cover - Right**
**Courtesy of GENERAL MOTORS CORP.**

**NOTE:** **Valve rocker arm cover gasket and sealant must be carefully trimmed away from lower intake manifold gasket. Failure to do so will damage the lower intake manifold gasket, causing a severe oil leak.**

5. Loosen the valve rocker arm cover bolts.

 © 2011 Mitchell Repair Information Company, LLC.

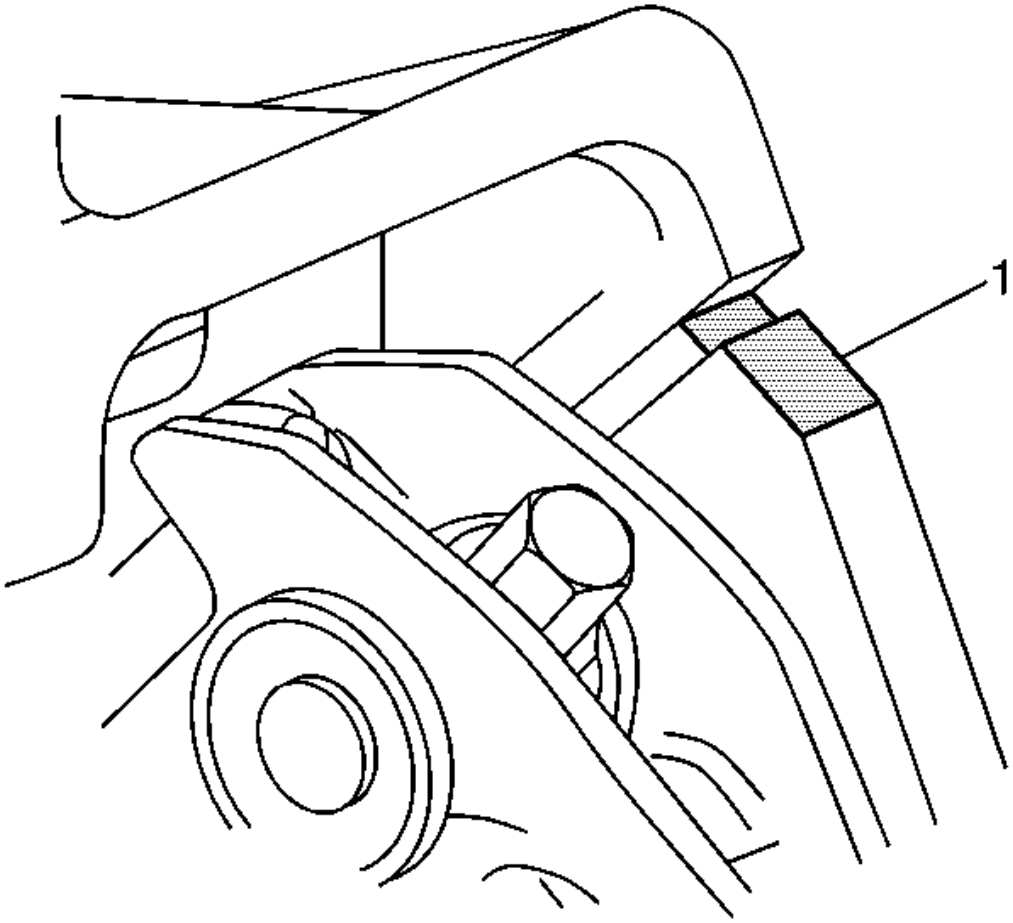


**Fig. 107: Identifying Cylinder Head To Lower Intake Manifold Joint**
**Courtesy of GENERAL MOTORS CORP.**

**IMPORTANT: When removing the valve rocker arm cover, ensure the gasket stays in place attached to the cylinder head.**

6. Remove the valve rocker arm cover.

   Bump the end of the valve rocker arm cover with the palm of your hand or a soft rubber mallet if the cover adheres to the cylinder head.

7. Trim the valve cover gasket and sealant away from the lower intake manifold gasket at the cylinder head to lower intake manifold joints (1).
8. Remove the valve rocker arm cover gasket.

 © 2011 Mitchell Repair Information Company, LLC.

9. Clean the sealing surface on the cylinder head with degreaser.
10. Clean the valve rocker arm cover. Refer to **Valve Rocker Arm Cover Cleaning and Inspection**.

**Installation Procedure**

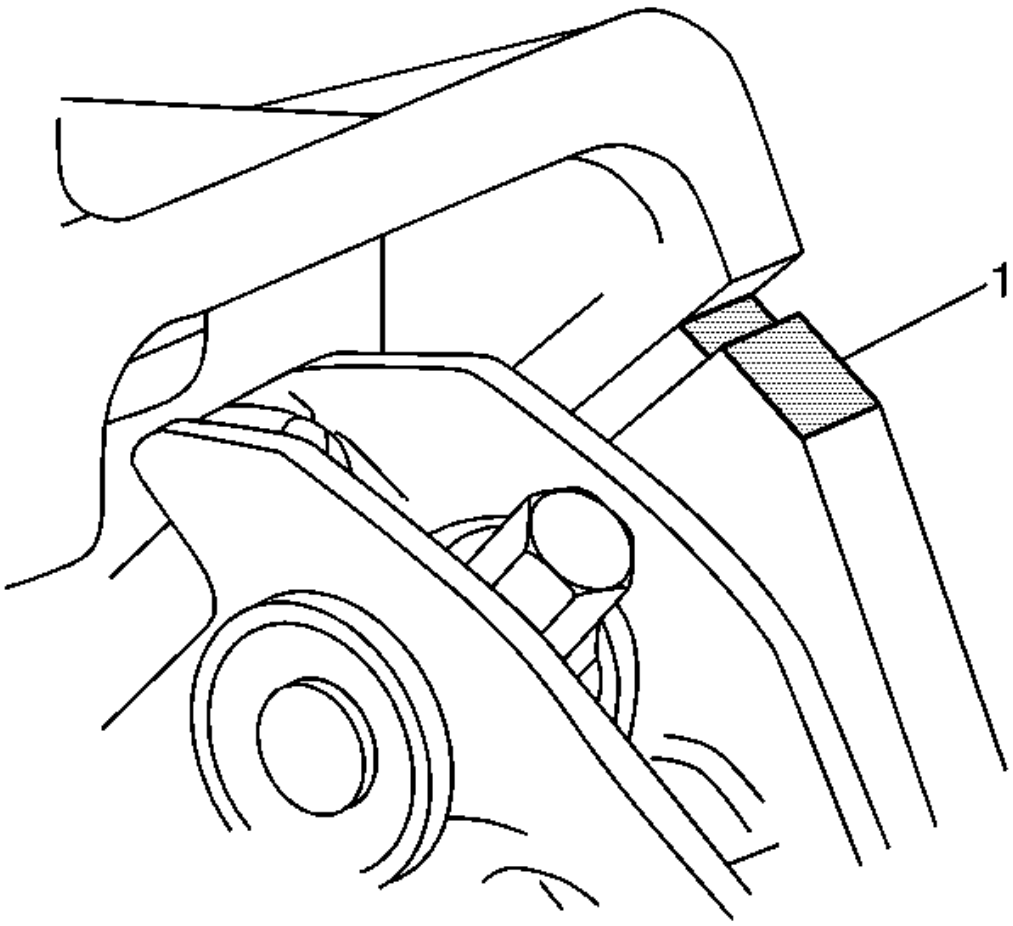


**Fig. 108: Identifying Cylinder Head To Lower Intake Manifold Joint**
**Courtesy of GENERAL MOTORS CORP.**

**IMPORTANT: All gasket mating surfaces need to be free of oil and foreign material. Use GM P/N 12346139 (Canadian P/N 10953463) or equivalent to clean surfaces.**

**IMPORTANT: Apply sealer GM P/N 12378521 (Canadian P/N 88901148) or equivalent, at the cylinder head to lower intake manifold joint.**

 © 2011 Mitchell Repair Information Company, LLC.

1. Apply sealant at the cylinder head to lower intake manifold joints (1).

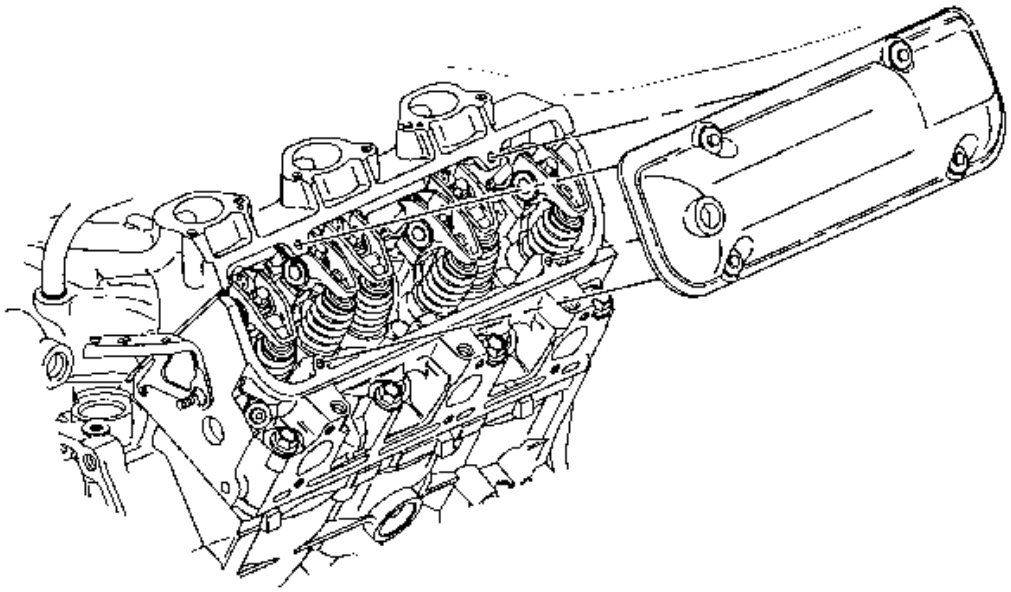

**Fig. 109: View Of Valve Rocker Arm Cover - Right**
**Courtesy of GENERAL MOTORS CORP.**

2. Install a new gasket to the valve rocker arm cover. Ensure the gasket is properly seated in the groove of the valve rocker arm cover.

**NOTE:** **Refer to Fastener Notice in Cautions and Notices.**

3. Install the valve rocker arm cover.

**Tighten:** Tighten the bolts to 10 N.m (89 lb in).

 © 2011 Mitchell Repair Information Company, LLC.

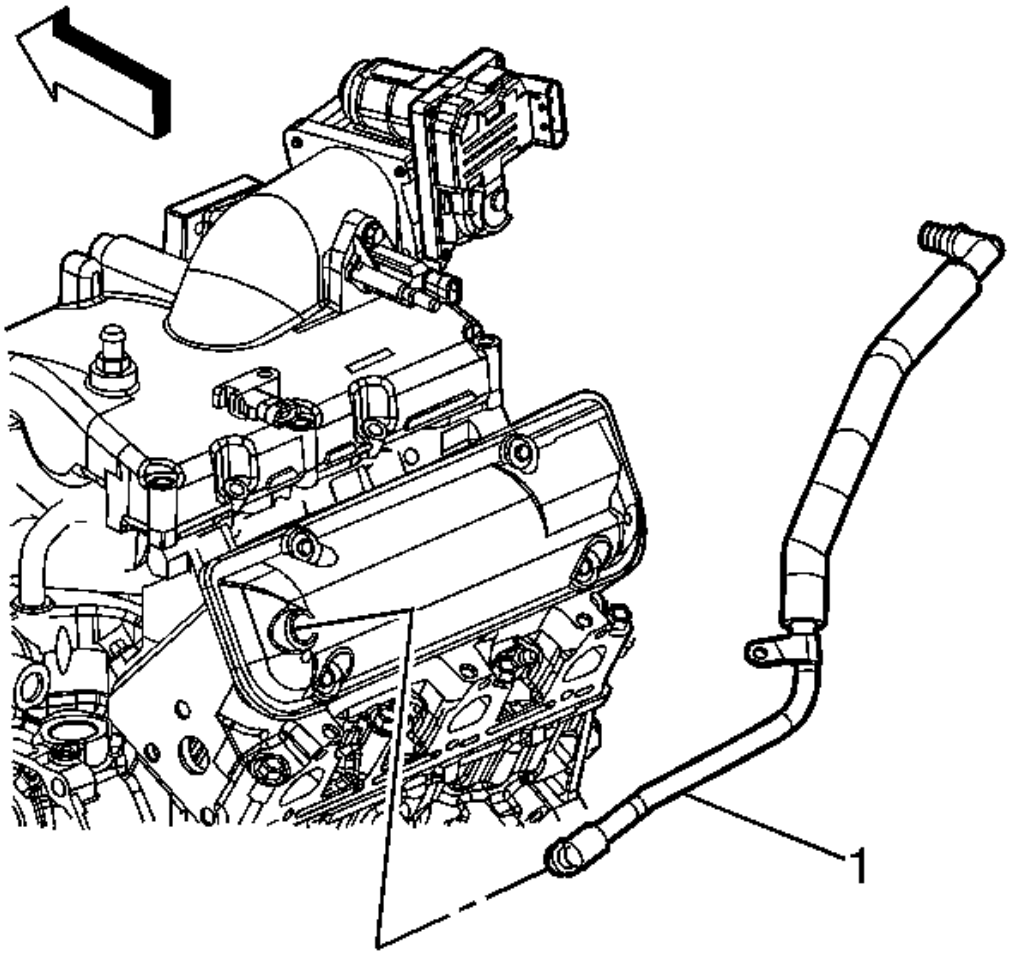


**Fig. 110: Disconnecting/Connecting PCV Fresh Air Pipe At Valve Cover**
**Courtesy of GENERAL MOTORS CORP.**

4. Connect the PCV fresh air pipe (1) to the right valve rocker arm cover.
5. Install the ignition control module bracket with the ignition control module and spark plug wired still attached. Refer to **Ignition Control Module Bracket Replacement** in Engine Controls - 3.4L.
6. Install the generator bracket. Refer to **Generator Bracket/Engine Lift Bracket Replacement** in Engine Electrical.
7. Install the fuel injector sight shield. Refer to **Fuel Injector Sight Shield Replacement**.

**Valve Rocker Arm and Push Rod Replacement**

**Removal Procedure**

 © 2011 Mitchell Repair Information Company, LLC.

1. Remove the valve rocker arm cover(s). Refer to **Valve Rocker Arm Cover Replacement - Left** and/or **Valve Rocker Arm Cover Replacement - Right**.

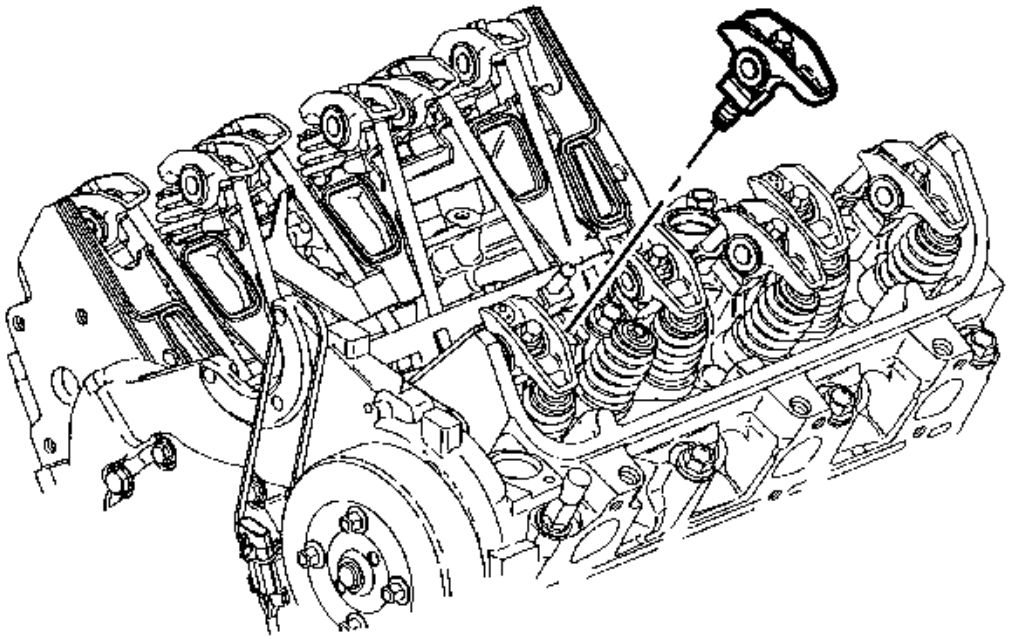

**Fig. 111: View Of Valve Rocker Arm**
**Courtesy of GENERAL MOTORS CORP.**

2. Remove the rocker arm bolt(s).
3. Remove the valve rocker arm(s) and the pushrod(s).

**Installation Procedure**

 © 2011 Mitchell Repair Information Company, LLC.

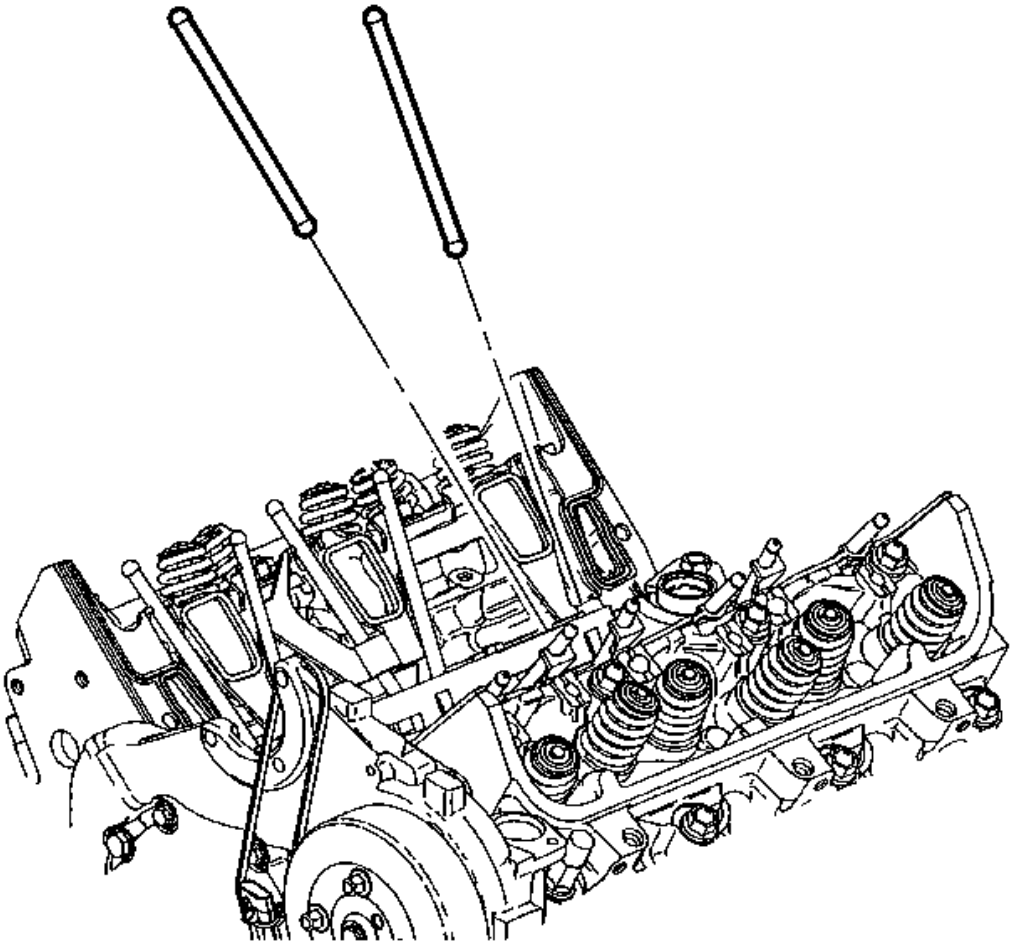

**Fig. 112: Removing/Installing Push Rods**
**Courtesy of GENERAL MOTORS CORP.**

1. Coat the ends of the push rods using prelube GM P/N 1052367 (Canadian P/N 992869) or the equivalent.

**IMPORTANT: The intake valve push rods measure 146.0 mm (5.75 in) in length. The exhaust valve push rods measure 152.5 mm (6.0 in) in length.**

2. Install the push rods in their original location.

 © 2011 Mitchell Repair Information Company, LLC.

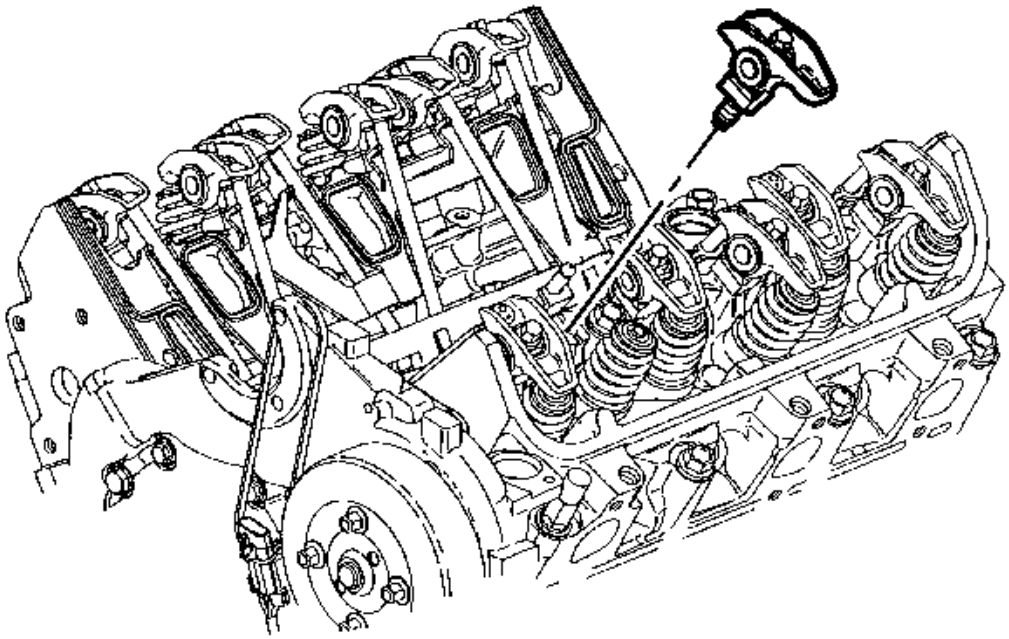

**Fig. 113: View Of Valve Rocker Arm**
**Courtesy of GENERAL MOTORS CORP.**

3. Coat the rocker arm friction surfaces using prelube GM P/N 1052367 (Canadian P/N 992869) or the equivalent.

**IMPORTANT: Shims may be required under the valve rocker arm pedestals if reconditioning has been performed on the cylinder head or its components.**

4. Install the valve rocker arms in their original positions.

**NOTE: Refer to Fastener Notice in Cautions and Notices.**

5. Install the valve rocker arm bolts.

   **Tighten:** Tighten the bolts to 32 N.m (24 lb ft).

6. Install the valve rocker arm cover(s). Refer to **Valve Rocker Arm Cover Replacement - Left** and/or **Valve Rocker Arm Cover Replacement - Right**.

**Valve Stem Oil Seal and Valve Spring Replacement**

 © 2011 Mitchell Repair Information Company, LLC.

## Tools Required

- **J 22794** Spark Plug Port Adapter. See **Special Tools**.
- **J 38606** Valve Spring Compressor. See **Special Tools**.

### Removal Procedure

1. Remove the rocker arm. Refer to **Valve Rocker Arm and Push Rod Removal**.
2. Remove the spark plug. Refer to **Spark Plug Replacement** in Engine Controls - 3.4L.

**IMPORTANT: Before you remove the valve keys, rotate the engine so that the piston in the cylinder you are working on is at (TDC) top dead center. This will eliminate the possibility of the valve accidentally falling inside the cylinder.**

3. Install the **J 22794** into the spark plug port. See **Special Tools**. Apply compressed air in order to hold the valves in place.

 © 2011 Mitchell Repair Information Company, LLC.

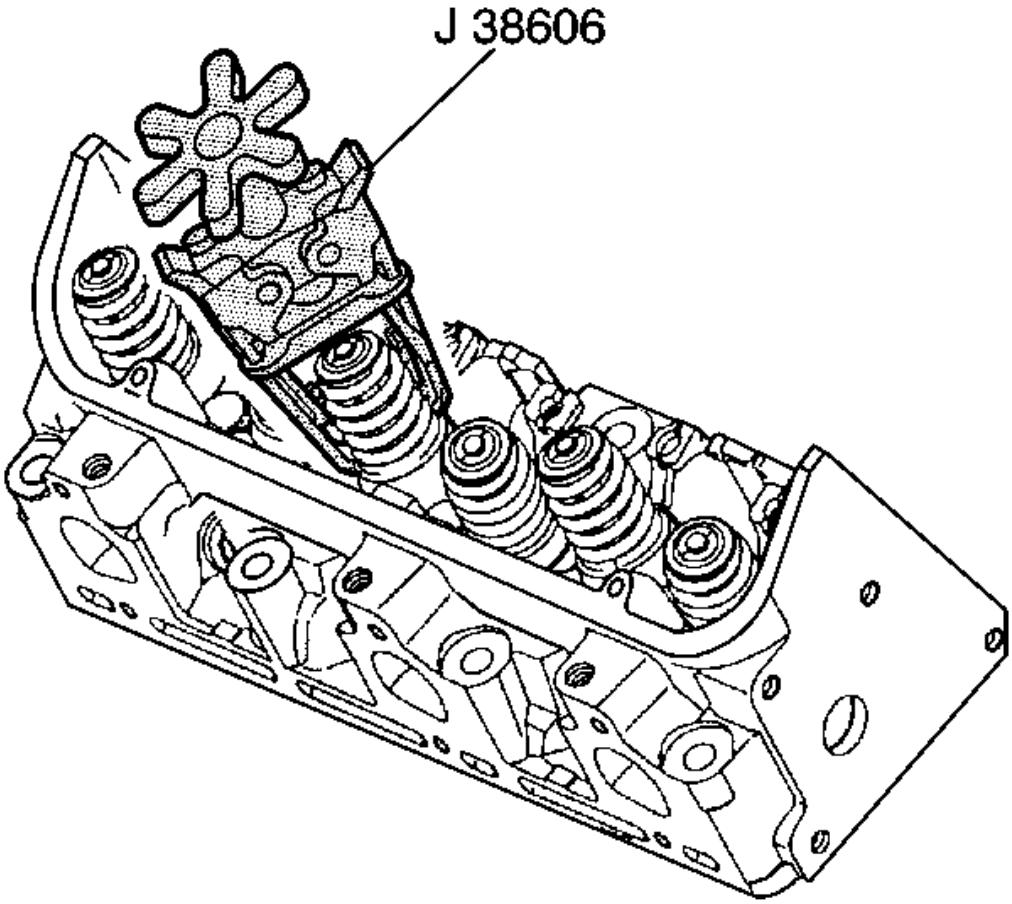


**Fig. 114: Compressing Valve Springs**
**Courtesy of GENERAL MOTORS CORP.**

4. Compress the valve spring with the **J 38606** . See **Special Tools**.

 © 2011 Mitchell Repair Information Company, LLC.

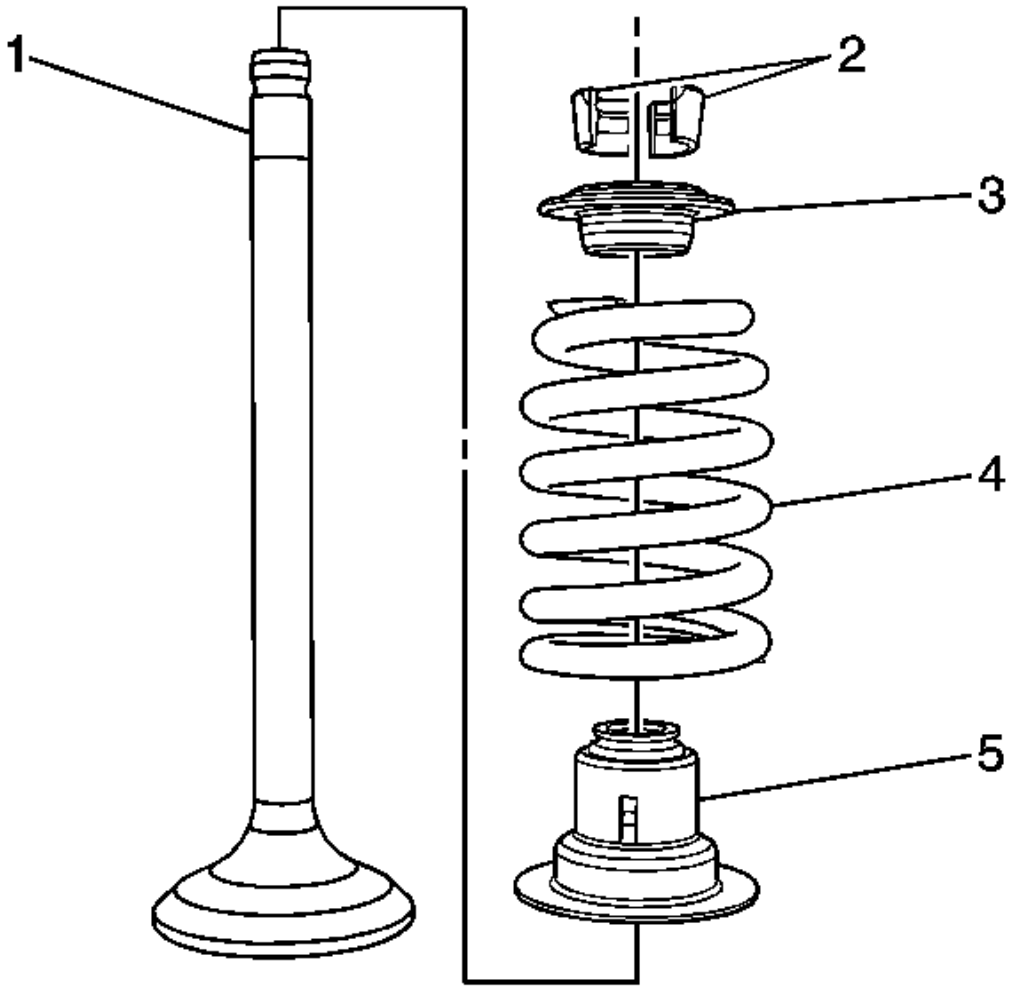


**Fig. 115: View Of Valve, Keys, Spring, Spring Cap & Valve Stem Oil Seal**
**Courtesy of GENERAL MOTORS CORP.**

5. Remove the valve keys (2).
6. Remove the valve spring cap (3).
7. Remove the valve spring (4).
8. Inspect the valve spring for damage. Replace the spring if it is damaged.
9. Remove the spring seat/valve stem oil seal (5).

**Installation Procedure**

 © 2011 Mitchell Repair Information Company, LLC.

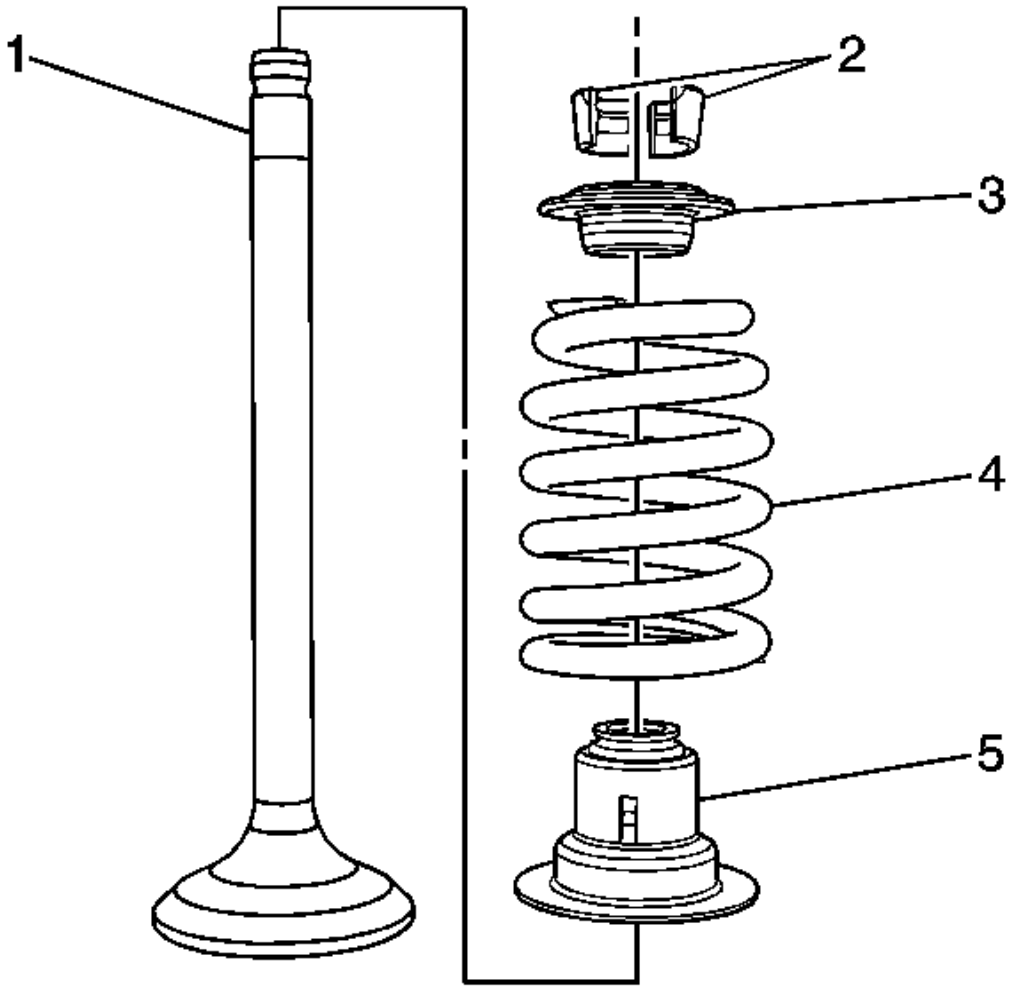


**Fig. 116: View Of Valve, Keys, Spring, Spring Cap & Valve Stem Oil Seal**
**Courtesy of GENERAL MOTORS CORP.**

1. Install the valve stem oil seal/spring seat (5).
   - Use a suitable driver.
   - Press over the valve guide boss.
2. Install the valve spring (4).
3. Install the valve spring cap (3).

 © 2011 Mitchell Repair Information Company, LLC.

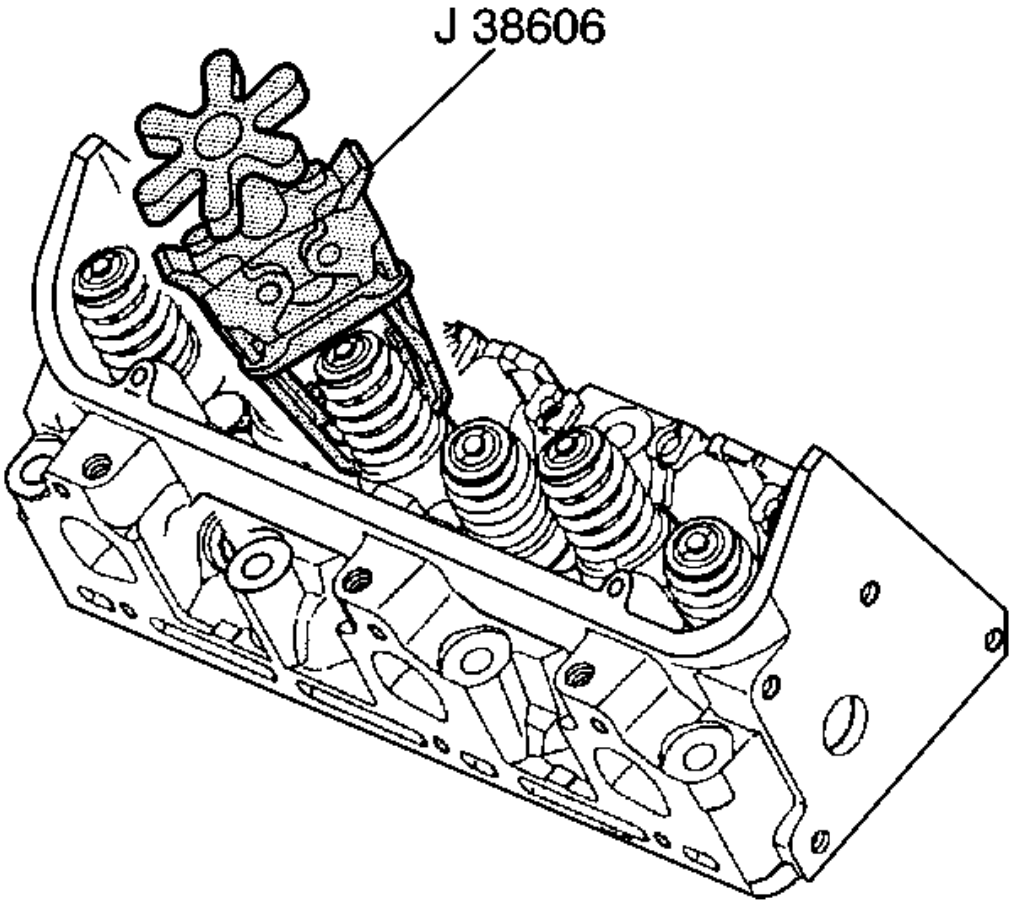


**Fig. 117: Compressing Valve Springs**
**Courtesy of GENERAL MOTORS CORP.**

4. Compress the valve spring using the **J 38606** .
5. Install the valve keys. If necessary, hold the valve keys in place with grease.
6. Remove the **J 38606** in order to release the valve spring.
7. Ensure that the valve keys are seated.
8. Release the air pressure and remove the **J 22794** . See **Special Tools**.
9. Install the valve rocker arm. Refer to **Valve Rocker Arm and Push Rod Removal**.
10. Install the spark plug. Refer to **Spark Plug Replacement** in Engine Controls - 3.4L.

**Valve Lifter Replacement**

**Removal Procedure**

 © 2011 Mitchell Repair Information Company, LLC.

1. Remove the valve rocker arm cover. Refer to **Valve Rocker Arm Cover Replacement - Left** or **Valve Rocker Arm Cover Replacement - Right**.
2. Remove the lower intake manifold. Refer to **Intake Manifold Replacement - Lower**.
3. Remove the valve rocker arms and pushrods. Refer to **Valve Rocker Arm and Push Rod Replacement**.

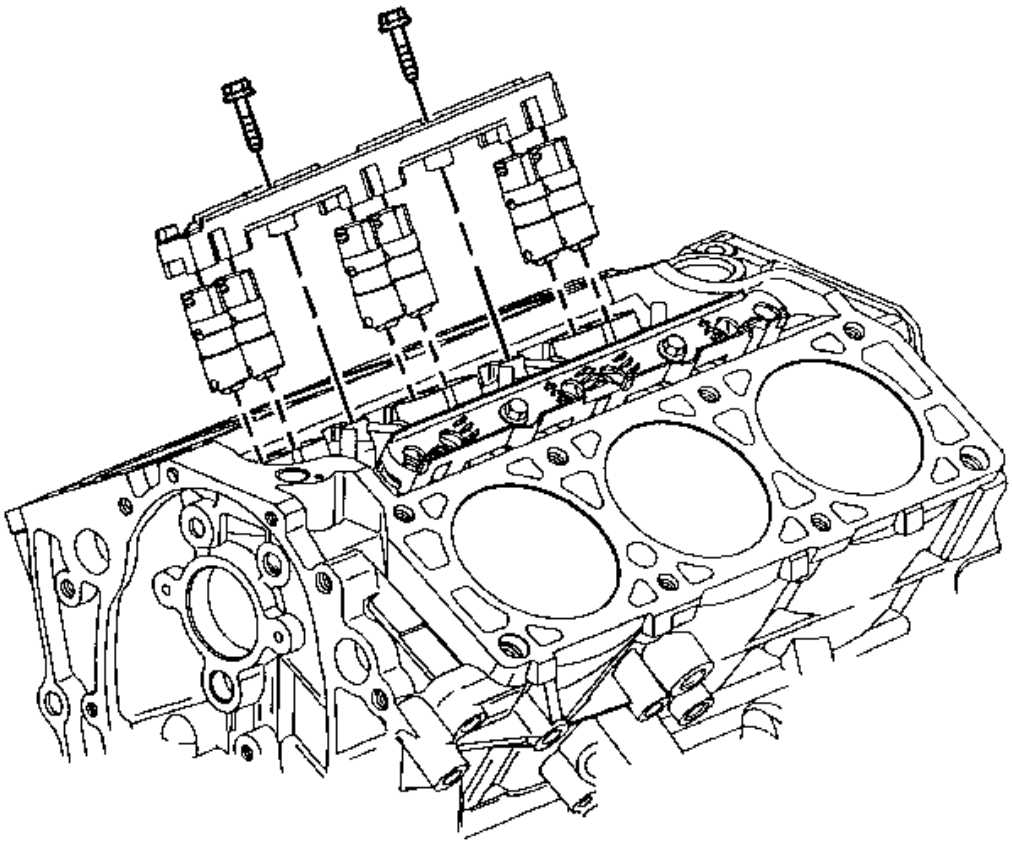

**Fig. 118: View Of Lifter Guide**
**Courtesy of GENERAL MOTORS CORP.**

4. Remove the lifter guide bolts.
5. Remove the lifter guide.

**IMPORTANT: Place the valve lifters in an organized order to ensure that they are installed in the same location from which they were removed.**

6. Remove the lifters.

 © 2011 Mitchell Repair Information Company, LLC.

**Installation Procedure**

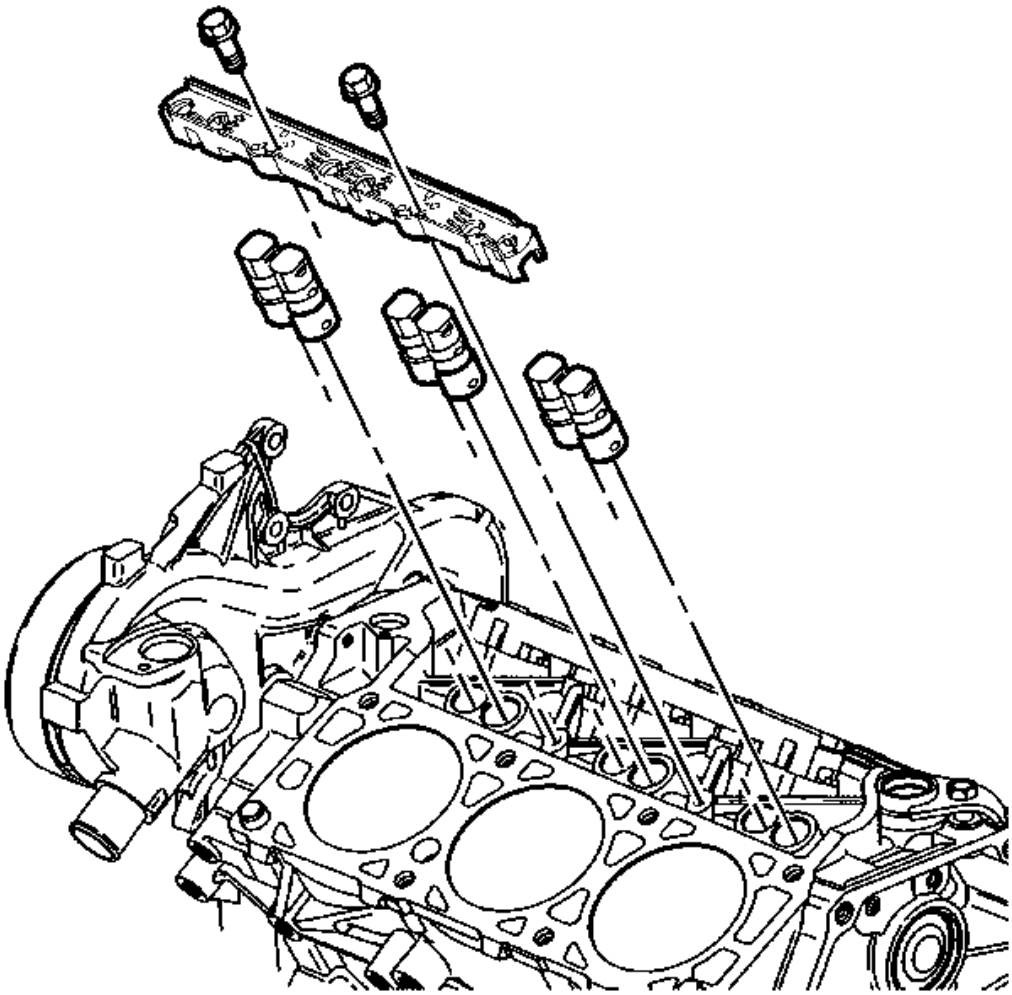

**Fig. 119: View Of Valve Lifters & Lifter Guides**
**Courtesy of GENERAL MOTORS CORP.**

1. Coat the valve lifters using prelube GM P/N 1052367 (Canadian P/N 992869) or the equivalent.
2. Install the valve lifters in their original locations.
3. Install the lifter guide.

**NOTE: Refer to Fastener Notice in Cautions and Notices.**

4. Apply threadlock GM P/N 12345382 (Canadian P/N 10953489) or the equivalent to the lifter guide bolt

 © 2011 Mitchell Repair Information Company, LLC.

threads and install the bolts.

**Tighten:** Tighten the bolts to 10 N.m (89 lb in).

5. Install the valve rocker arms and pushrods. Refer to **Valve Rocker Arm and Push Rod Replacement**.
6. Install the lower intake manifold. Refer to **Intake Manifold Replacement - Lower**.
7. Install the valve rocker arm cover. Refer to **Valve Rocker Arm Cover Replacement - Left** or **Valve Rocker Arm Cover Replacement - Right**.
8. Inspect for leaks.

**Crankshaft Balancer Replacement**

## Tools Required

- **J 39914** Serpentine Belt Tensioner Unloader. See **Special Tools**.
- **J 41816-A** Crankshaft Balancer Remover. See **Special Tools**.
- **J 29113** Balancer and Crank Sprocket Puller. See **Special Tools**.
- **J 45059** Angle Meter. See **Special Tools**.
- **EN 46359** Puller End Protector. See **Special Tools**.

**Removal Procedure**

 © 2011 Mitchell Repair Information Company, LLC.

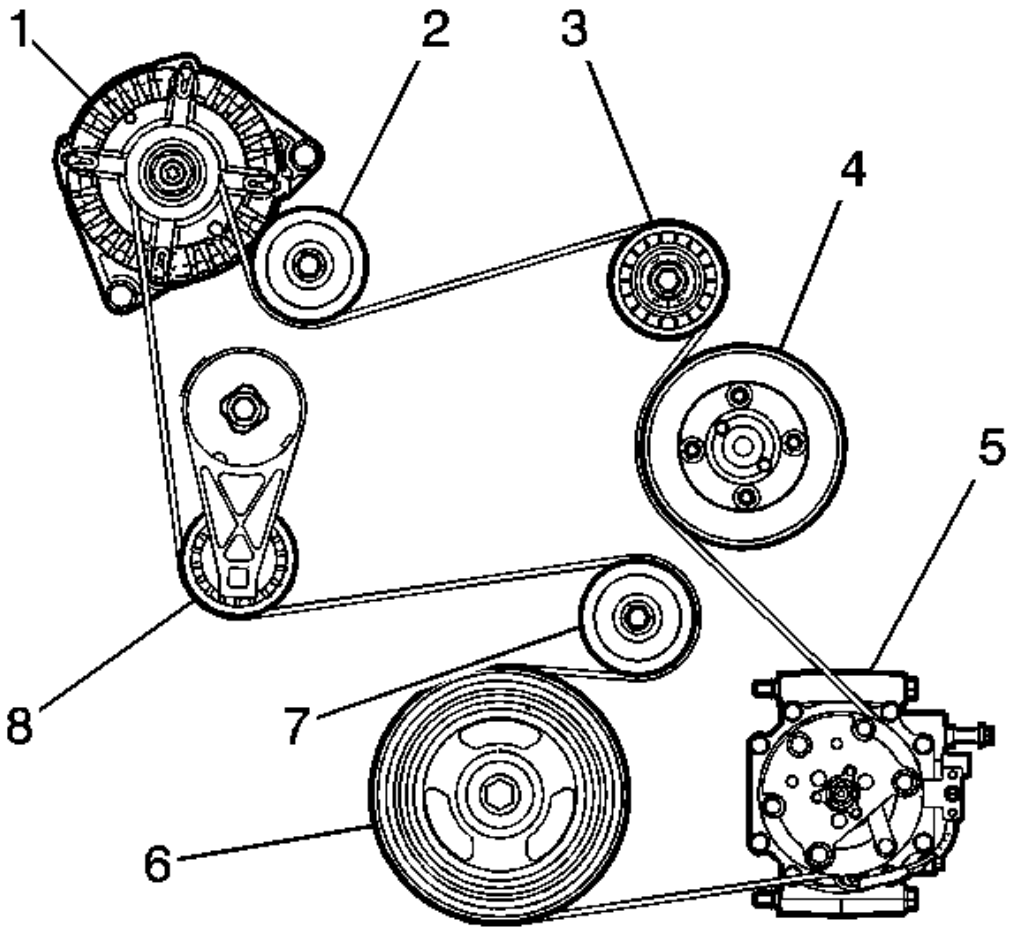


**Fig. 120: View Of Drive Belt Routing**
**Courtesy of GENERAL MOTORS CORP.**

1. Using**J 39914** rotate the drive belt tensioner (8) to release the tension on the drive belt. See **Special Tools**.
2. Remove the drive belt from the right idler pulley (2).
3. Carefully release **J 39914** to relieve the drive belt tensioner spring tension. See **Special Tools**.
4. Remove **J 39914** from the drive belt tensioner (8). See **Special Tools**.
5. Raise and support the vehicle. Refer to **Lifting and Jacking the Vehicle** in General Information.
6. Remove the right front wheel. Refer to **Tire and Wheel Removal and Installation** in Tires and Wheels.
7. Remove the wheelhouse liner. Refer to **Splash Shield Replacement - Engine** in Body Front End.

 © 2011 Mitchell Repair Information Company, LLC.

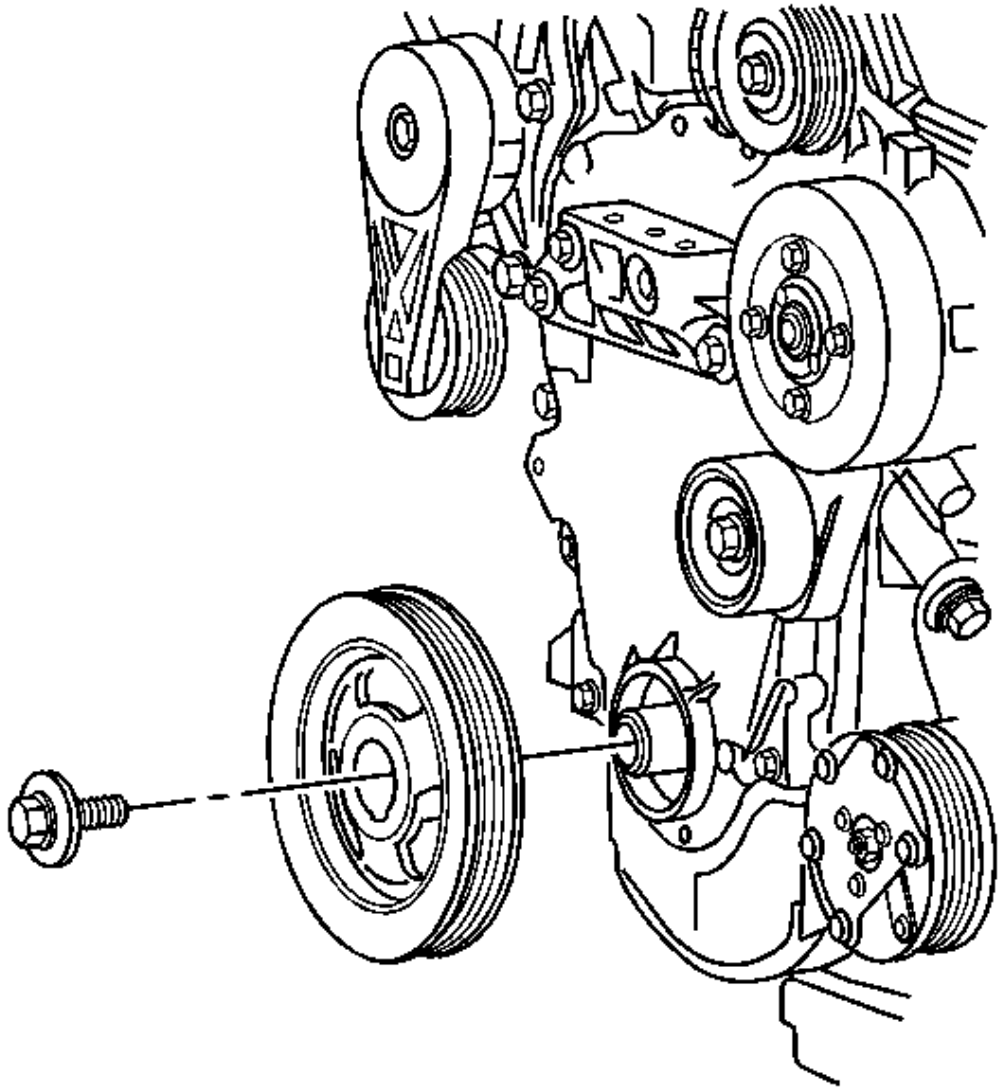

**Fig. 121: View Of Crankshaft Balancer, Bolt & Washer**
**Courtesy of GENERAL MOTORS CORP.**

8. Remove the crankshaft balancer bolt and washer.

 © 2011 Mitchell Repair Information Company, LLC.

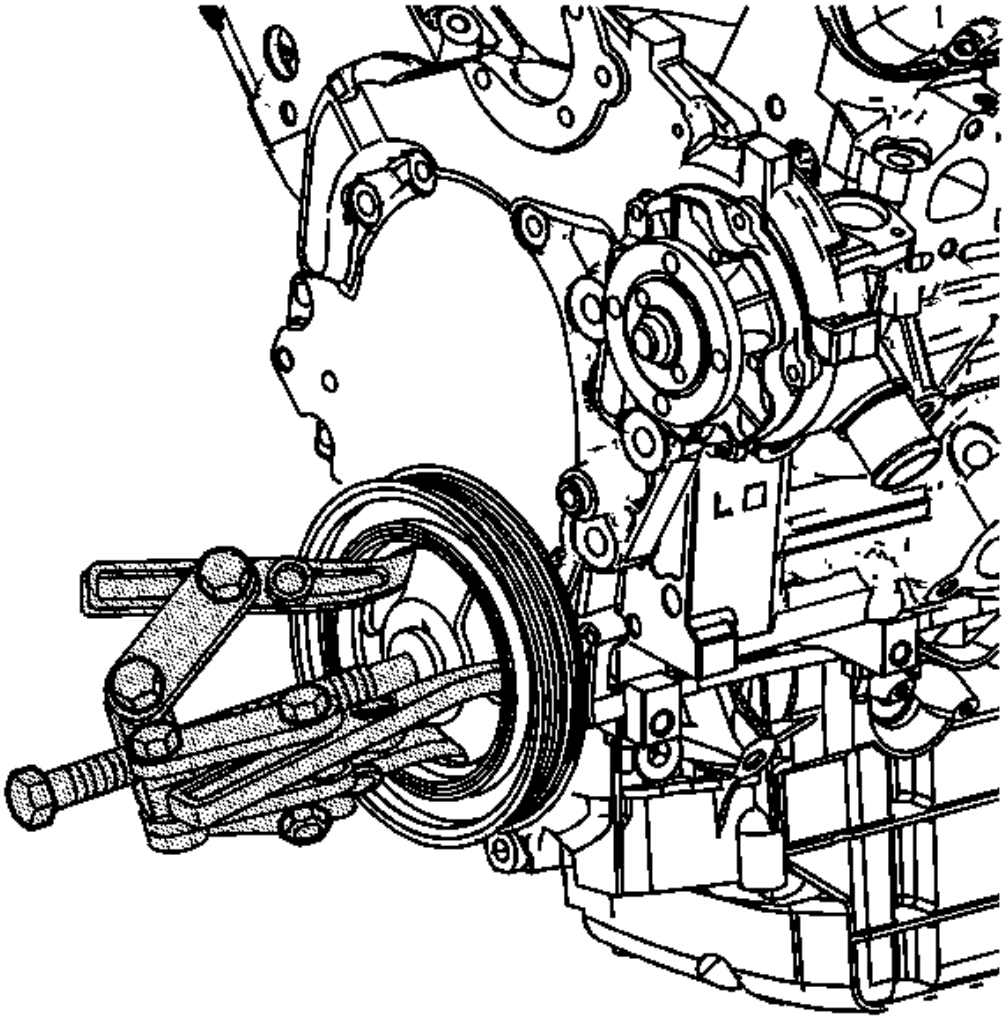

**Fig. 122: Removing Crankshaft Balancer**
**Courtesy of GENERAL MOTORS CORP.**

**NOTE:** **The inertial weight section of the crankshaft balancer is assembled to the hub with a rubber type material. The correct installation procedures (with the proper tool) must be followed or movement of the inertial weight section of the hub will destroy the tuning of the crankshaft balancer.**

**NOTE:** **Do NOT use a power-assisted tool with the special tool in order to remove or install this component. You cannot properly control the alignment of this component using a power-assisted tool, and this can damage the**

 © 2011 Mitchell Repair Information Company, LLC.

**component.**

9. Remove the crankshaft balancer using the **J 41816-A** along with **EN 46359** . See **Special Tools**.

**Installation Procedure**

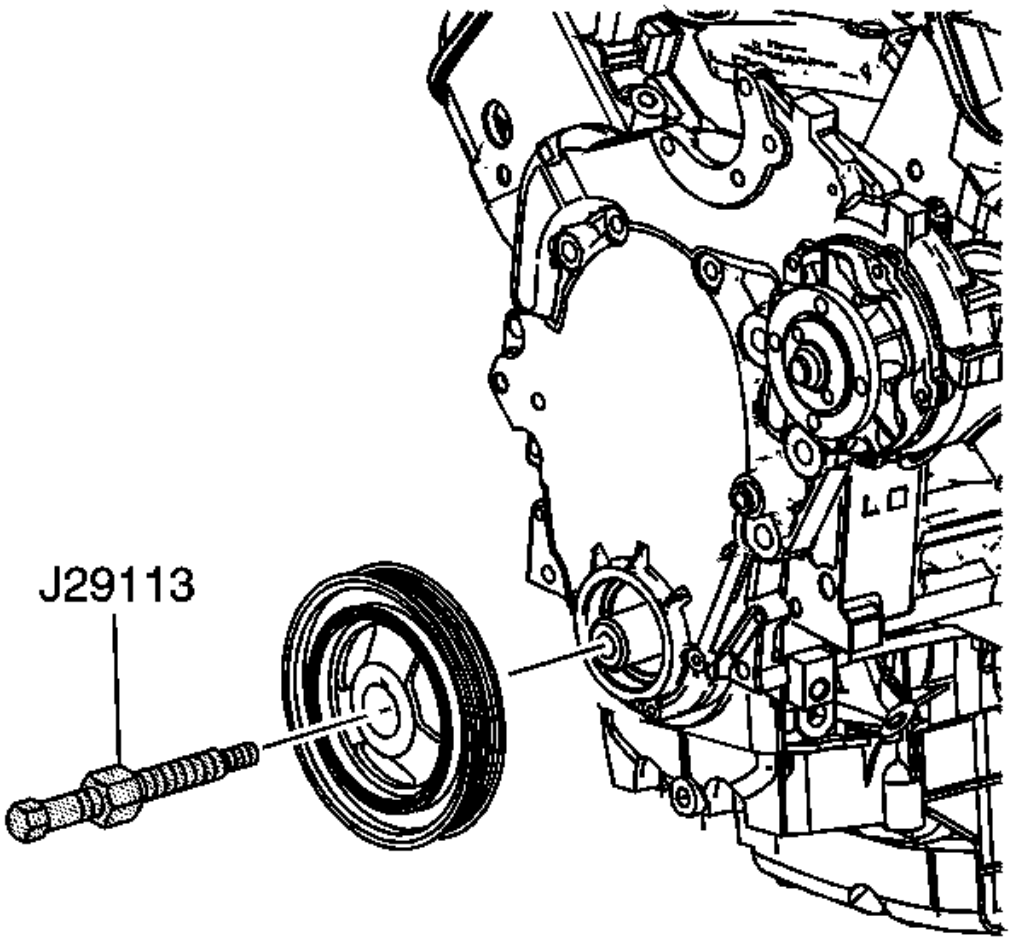


**Fig. 123: Installing J 29113 Onto Crankshaft**
**Courtesy of GENERAL MOTORS CORP.**

1. Apply sealer GM P/N 12378521 (Canadian P/N 88901148) or the equivalent, to the keyway of the crankshaft balancer.
2. Place the crankshaft balancer into position over the key in the crankshaft.

**NOTE: Do NOT use a power-assisted tool with the special tool in order to remove**

 © 2011 Mitchell Repair Information Company, LLC.

**or install this component. You cannot properly control the alignment of this component using a power-assisted tool, and this can damage the component.**

3. Install the **J 29113** onto the crankshaft. See **Special Tools**.
4. Rotate the hex nut on the **J 29113** to install the crankshaft balancer onto the crankshaft. See **Special Tools**.
5. Remove the **J 29113** from the crankshaft. See **Special Tools**.

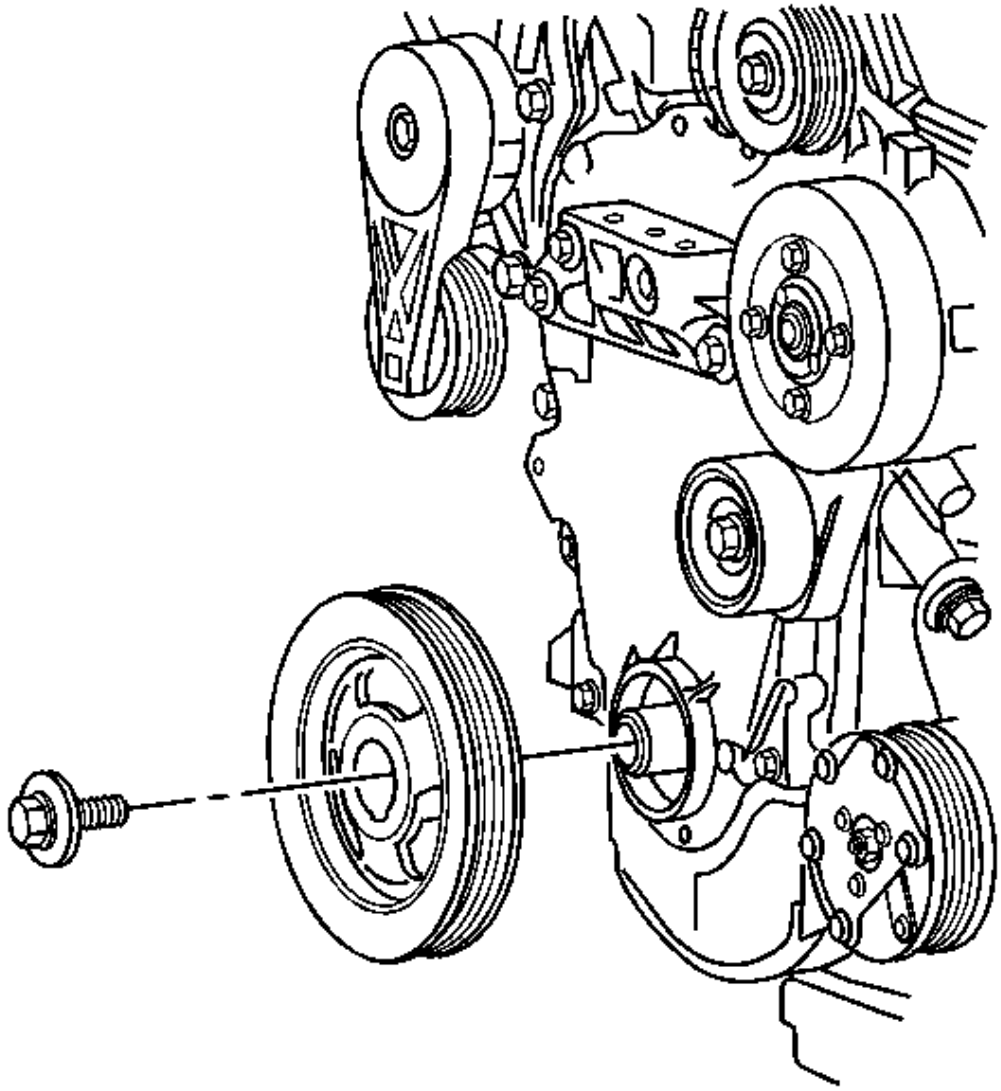

 © 2011 Mitchell Repair Information Company, LLC.

**Fig. 124: View Of Crankshaft Balancer, Bolt & Washer**
**Courtesy of GENERAL MOTORS CORP.**

**NOTE: Refer to Fastener Notice in Cautions and Notices.**

6. Install the crankshaft balancer bolt.

   **Tighten:** Tighten the bolt to 70 N.m (52 lb ft). Turn the bolt an additional 70 degrees using the **J 45059** . See **Special Tools**.

7. Install the wheelhouse liner. Refer to **Splash Shield Replacement - Engine** in Body Front End.
8. Install the right front wheel. Refer to **Tire and Wheel Removal and Installation** in Tires and Wheels.
9. Lower the vehicle.

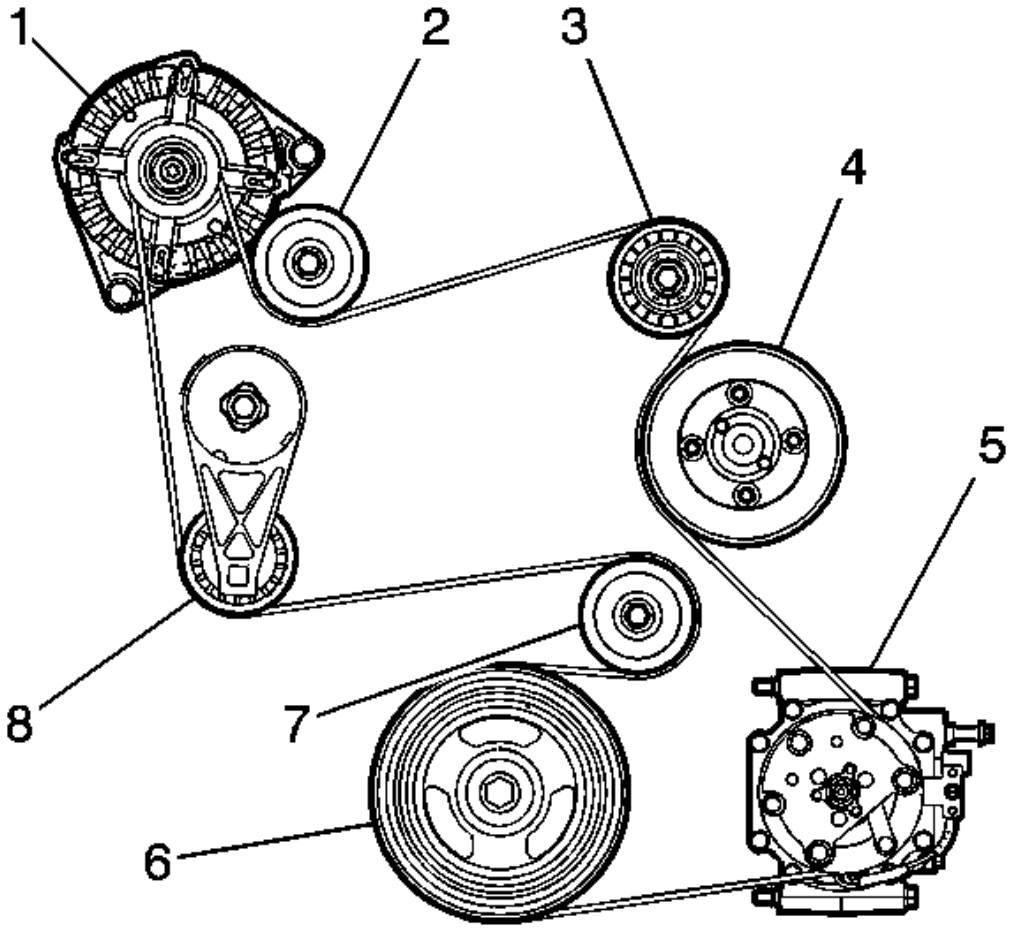

**Fig. 125: View Of Drive Belt Routing**
**Courtesy of GENERAL MOTORS CORP.**

10. Insure the drive belt is properly centered on all the pulleys except the right idler pulley (3).
11. Using **J 39914** rotate the drive belt tensioner away from the drive belt. See **Special Tools**.
12. Install the drive belt to the right idler pulley (2).
13. Carefully release **J 39914** allowing the drive belt tensioner (8) to come in contact with the drive belt. See **Special Tools**.
14. Remove **J 39914** from the drive belt tensioner (8). See **Special Tools**.
15. Inspect the drive belt to insure the belt is properly centered on all the pulleys (1-8).

**Oil Pan Replacement**

**Tools Required**

**J 39505** Torque Wrench Adapter. See **Special Tools**.

**Removal Procedure**

1. Disconnect the battery negative cable. Refer to **Battery Negative Cable Disconnect/Connect Procedure** .
2. Install the engine support fixture. Refer to **Engine Support Fixture**.
3. Raise and support the vehicle. Refer to **Lifting and Jacking the Vehicle** .
4. Remove the air conditioning (A/C) compressor. Refer to **Compressor Replacement** .

 © 2011 Mitchell Repair Information Company, LLC.

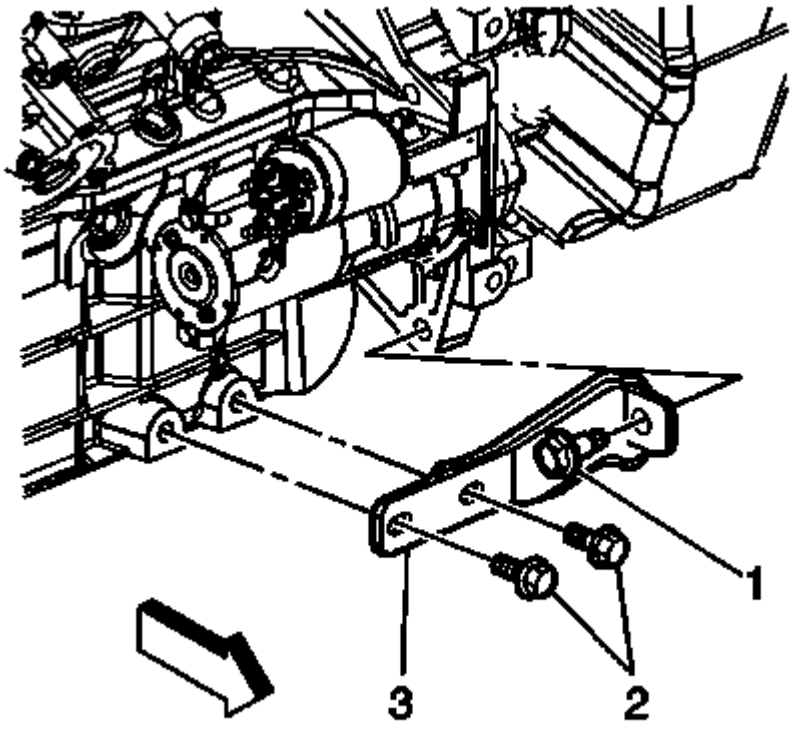


**Fig. 126: View Of Engine-To-Transaxle Brace & Bolts**
**Courtesy of GENERAL MOTORS CORP.**

5. Remove the engine-to-transaxle brace bolts (1, 2).
6. Remove the engine-to-transaxle brace (3).
7. Remove the starter. Refer to **Starter Motor Replacement** .
8. If equipped with all wheel drive (AWD), remove the transfer case. Refer to **Transfer Case Replacement**
9. If equipped with front wheel drive (FWD), remove the intermediate shaft. Refer to **Intermediate Shaft Replacement (L61)** or **Intermediate Shaft Replacement (L66)** .
10. Drain the engine oil and remove the oil filter. Refer to **Engine Oil and Oil Filter Replacement**.

 © 2011 Mitchell Repair Information Company, LLC.

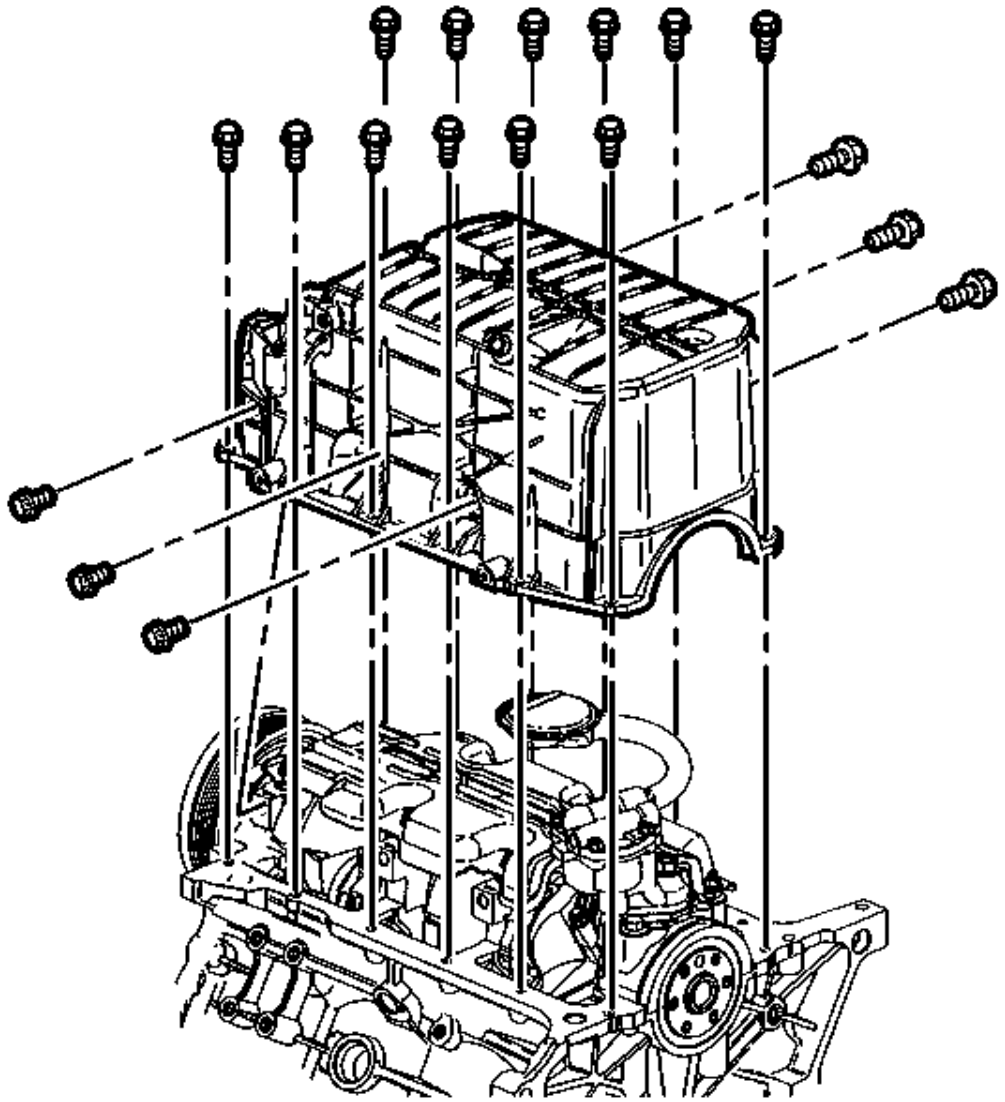

**Fig. 127: View Of Oil Pan & Bolts**
**Courtesy of GENERAL MOTORS CORP.**

11. Remove the oil pan side bolts.
12. Remove the oil pan sealing surface bolts.
13. Remove the oil pan.
14. Clean the oil pan and the engine block gasket surface.

**Installation Procedure**

 © 2011 Mitchell Repair Information Company, LLC.

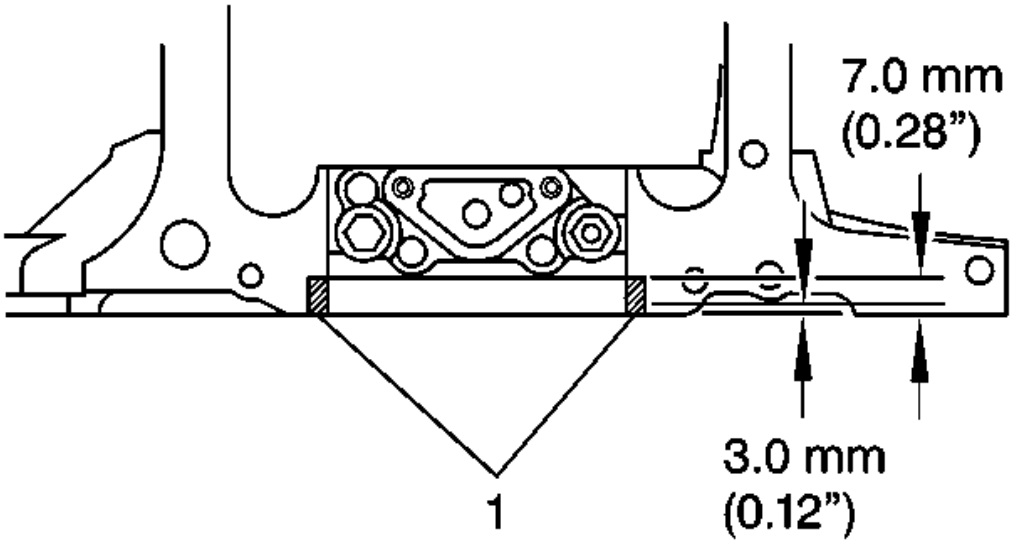


**Fig. 128: Illustrating Proper Sealer Application**
**Courtesy of GENERAL MOTORS CORP.**

**IMPORTANT: Provided the rear main bearing cap and engine front cover have not been removed and provided the sealant on either side of the rear main bearing cap and engine front cover has not been disturbed, it may not be necessary to apply additional sealant in these locations.**

1. Apply sealer GM P/N 12378521 (Canadian P/N 88901148) or the equivalent, to both sides of the crankshaft rear main bearing cap (1) and where the engine front cover meets the engine block. Press the sealer into the gap using a putty knife.

 © 2011 Mitchell Repair Information Company, LLC.

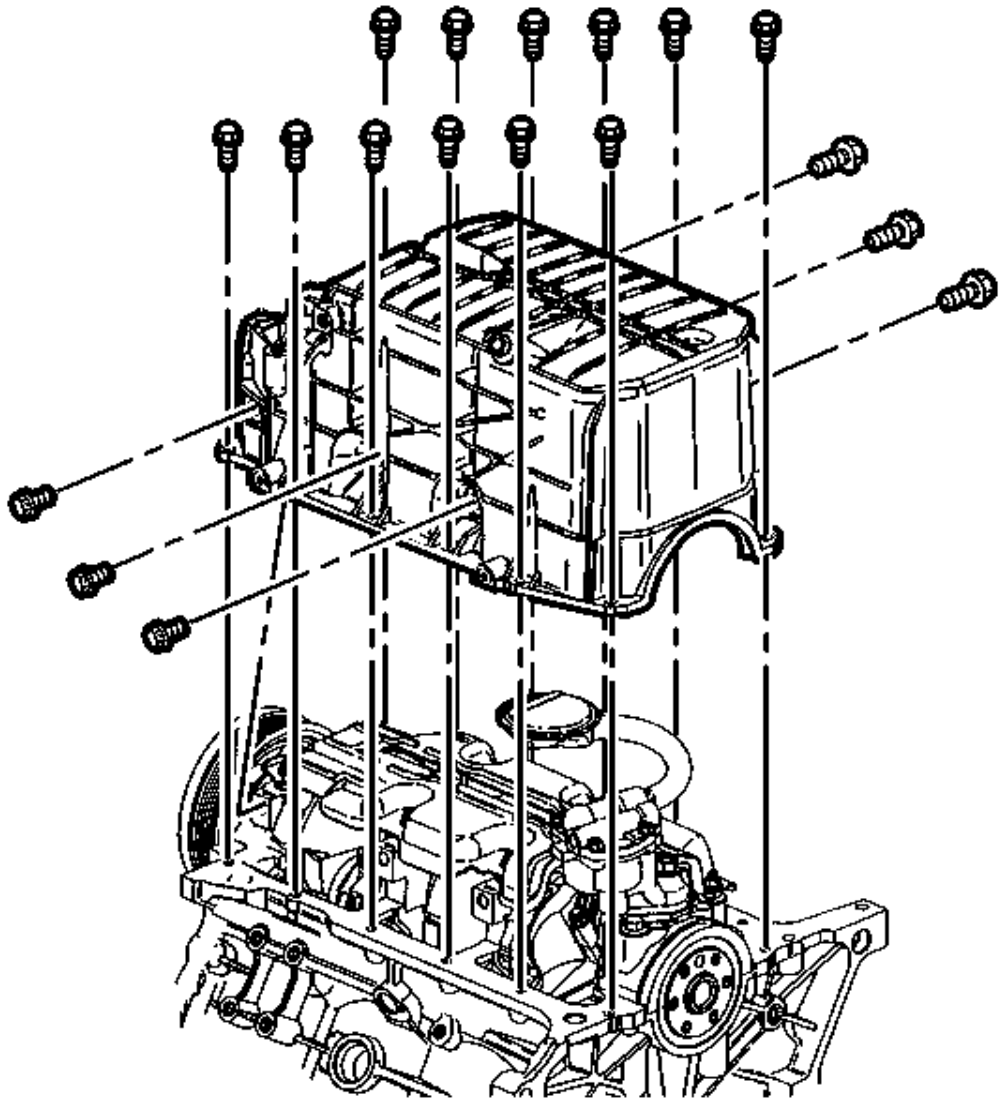

**Fig. 129: View Of Oil Pan & Bolts**
**Courtesy of GENERAL MOTORS CORP.**

2. Install the oil pan gasket.
3. Install the oil pan.

**NOTE:** **Refer to Fastener Notice .**

4. Install the oil pan flange bolts.

 © 2011 Mitchell Repair Information Company, LLC.

**Tighten:** Tighten the bolts to 25 N.m (18 lb ft).

5. Install the oil pan side bolts.

   **Torque:** Using **J 39505** torque the bolts to 50 N. See **Special Tools**.m (37 lb ft).

6. Install a NEW oil filter. Refer to **Engine Oil and Oil Filter Replacement**.
7. If equipped with FWD, install the intermediate shaft. Refer to **Intermediate Shaft Replacement (L61)** or **Intermediate Shaft Replacement (L66)** .
8. If equipped with AWD, install the transfer case. Refer to **Transfer Case Replacement** .
9. Install the starter. Refer to **Starter Motor Replacement** .

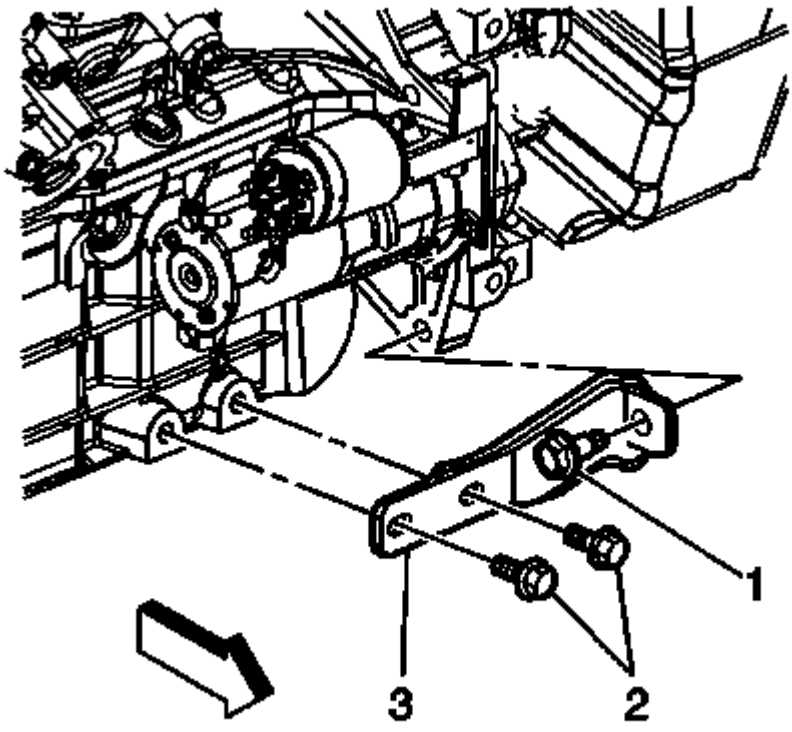


**Fig. 130: View Of Engine-To-Transaxle Brace & Bolts**
**Courtesy of GENERAL MOTORS CORP.**

10. Install the engine-to-transaxle brace (3).
11. Install the engine-to-transaxle brace bolts (1, 2).

    **Tighten:** Tighten the bolts to 50 N.m (37 lb ft).

12. Install the A/C compressor. Refer to **Compressor Replacement** .

 © 2011 Mitchell Repair Information Company, LLC.

13. Lower the vehicle.
14. Remove the engine support fixture.
15. Connect the negative battery cable. Refer to **Battery Negative Cable Disconnect/Connect Procedure** .
16. Fill the engine with new engine oil. Refer to **Capacities - Approximate Fluid** , **Fluid and Lubricant Recommendations** , and **Maintenance Schedule (North American Emissions)** .

**Engine Oil Pressure Sensor and/or Switch Replacement**

**Removal Procedure**

1. Raise and support the vehicle. Refer to **Lifting and Jacking the Vehicle** in General Information.

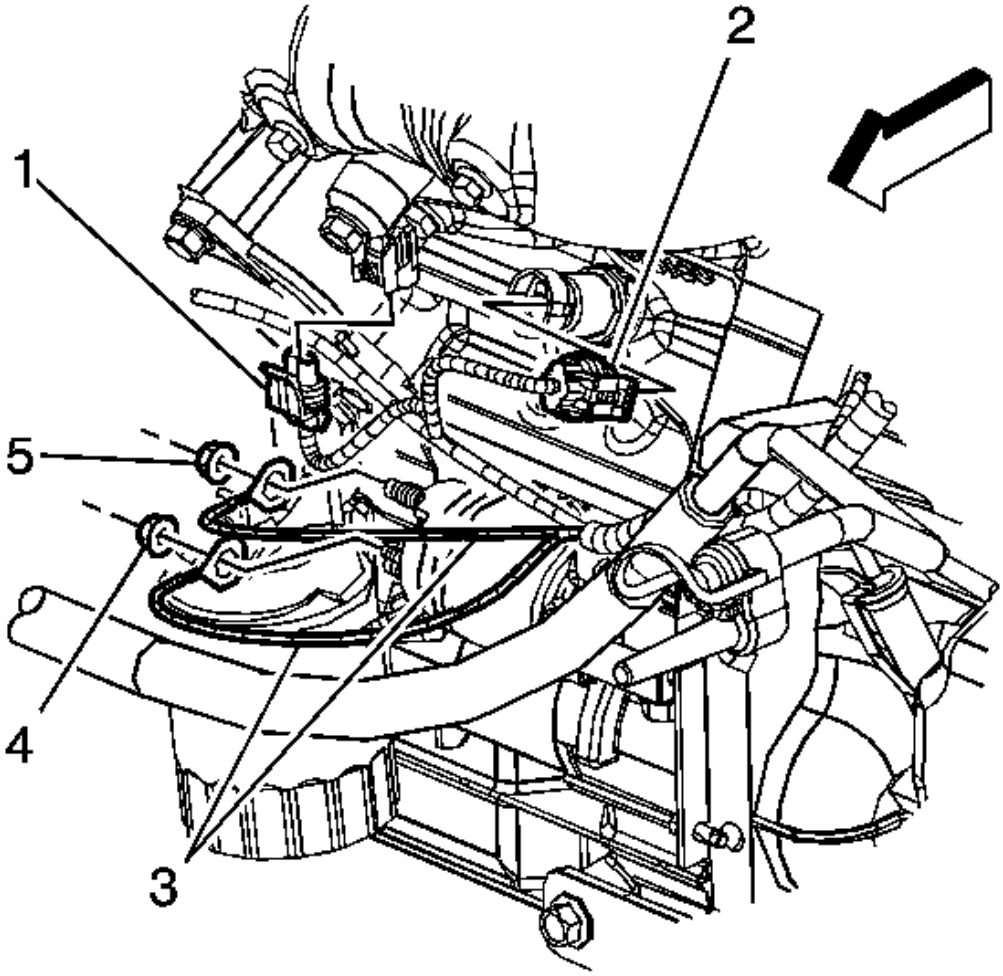


 © 2011 Mitchell Repair Information Company, LLC.

**Fig. 131: View Of Knock Sensor & Oil Pressure Indicator Switch Electrical Connectors**
**Courtesy of GENERAL MOTORS CORP.**

2. Disconnect the oil pressure indicator switch electrical connector (2).

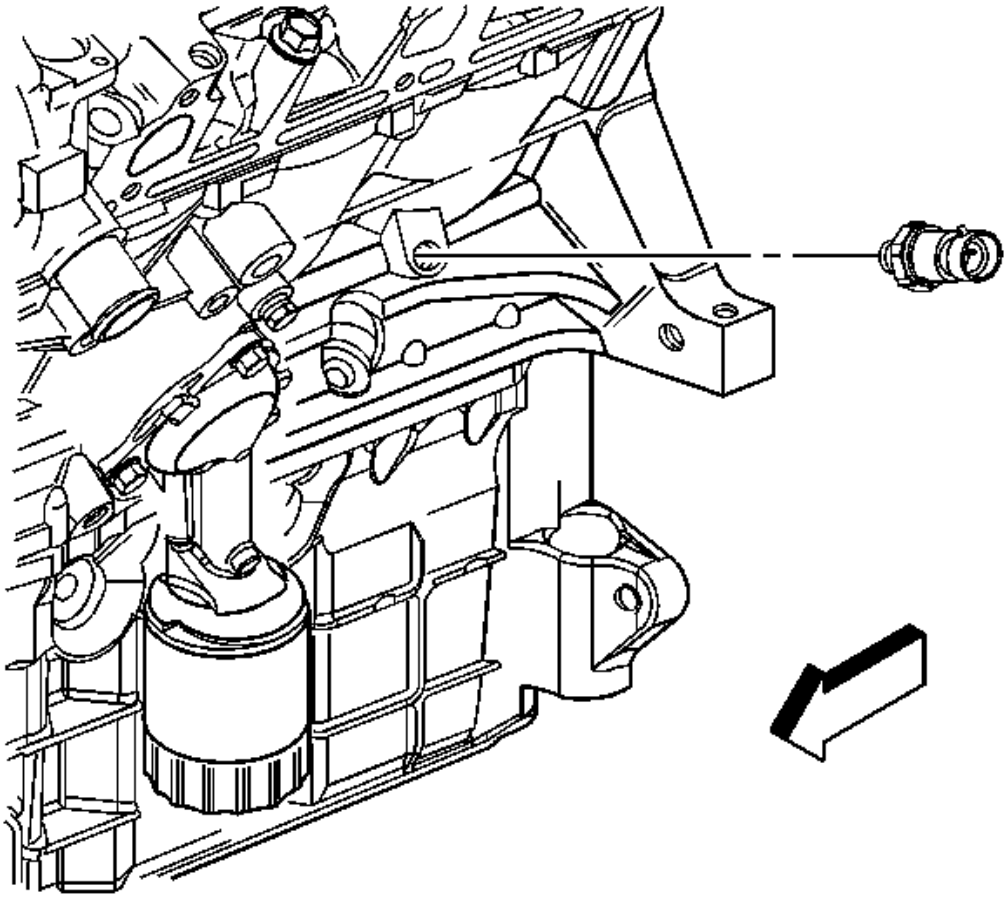

**Fig. 132: View Of Oil Pressure Indicator Switch**
**Courtesy of GENERAL MOTORS CORP.**

3. Remove the oil pressure indicator switch from the engine block.

**Installation Procedure**

 © 2011 Mitchell Repair Information Company, LLC.

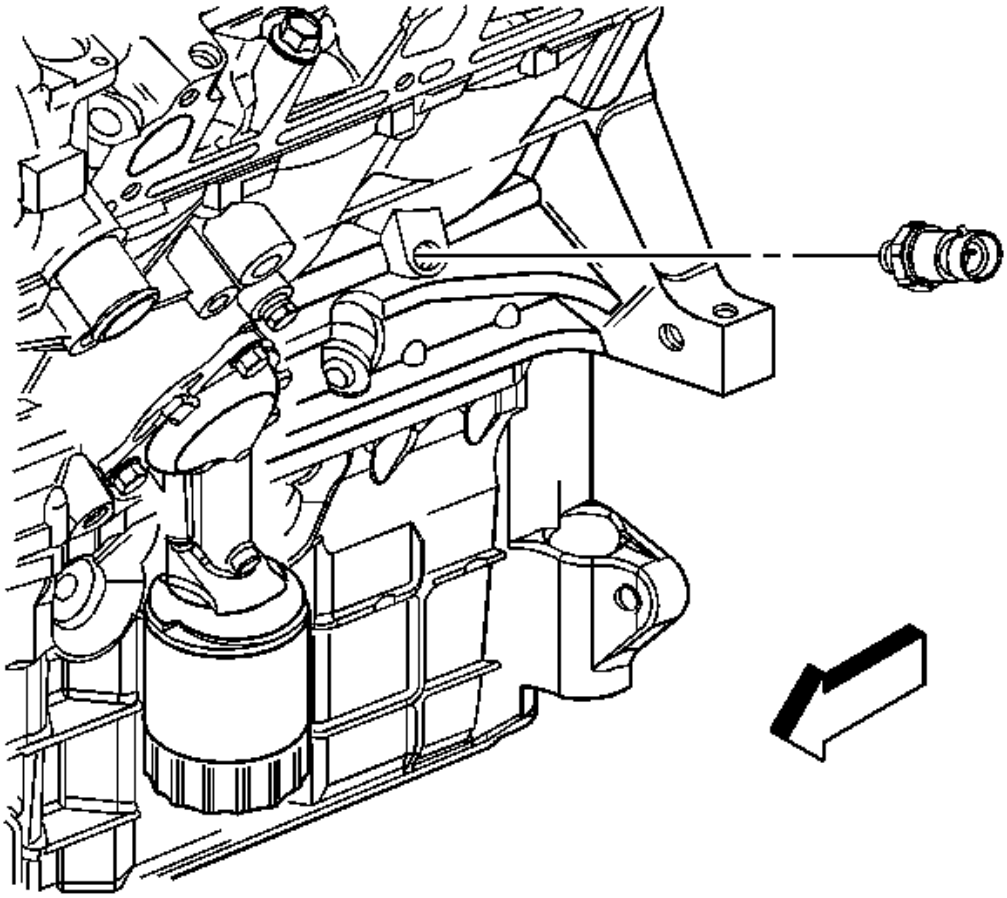

**Fig. 133: View Of Oil Pressure Indicator Switch**
**Courtesy of GENERAL MOTORS CORP.**

1. Apply sealer GM P/N 12346004 (Canadian P/N 10953480) or the equivalent to the oil pressure indicator switch threads.

**NOTE:** **Refer to Component Fastener Tightening Notice in Cautions and Notices.**

2. Install the oil pressure indicator switch.

   **Tighten:** Tighten the switch to 16 N.m (12 lb ft).

 © 2011 Mitchell Repair Information Company, LLC.

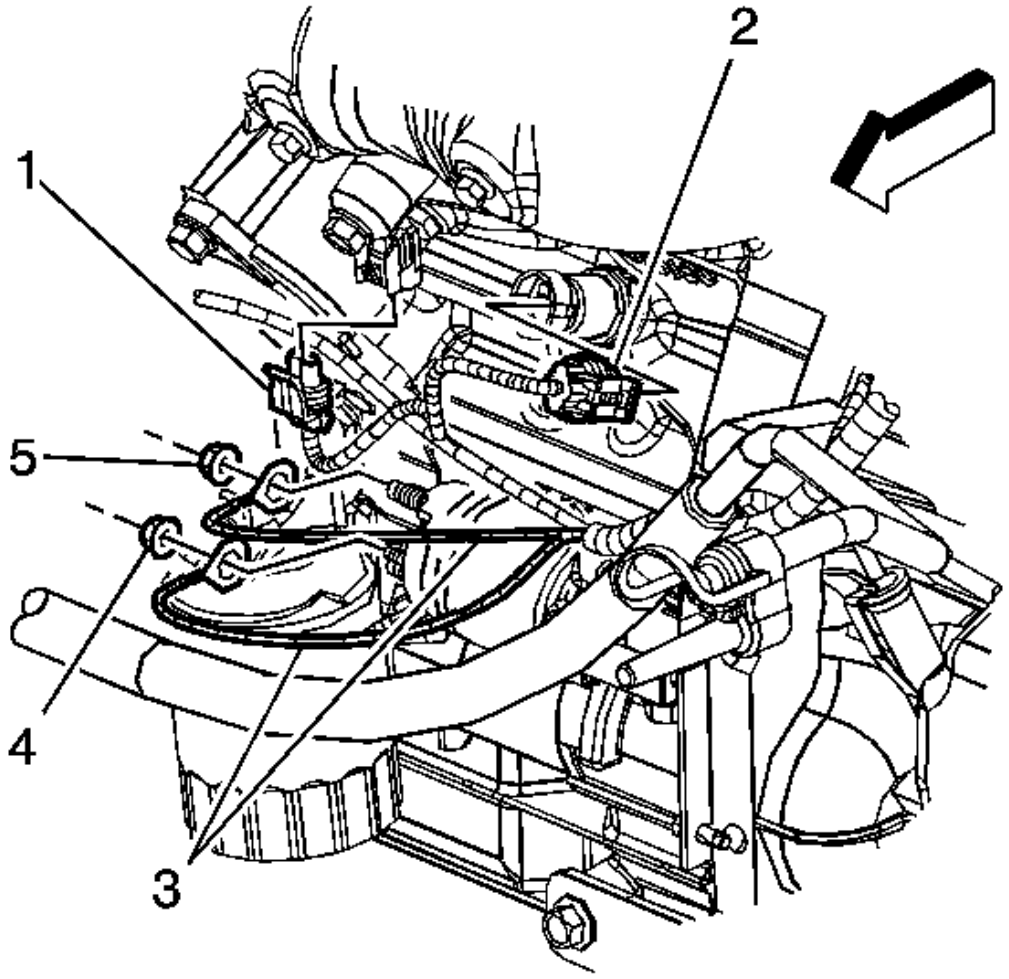


**Fig. 134: View Of Knock Sensor & Oil Pressure Indicator Switch Electrical Connectors**
**Courtesy of GENERAL MOTORS CORP.**

3. Connect the oil pressure indicator switch electrical connector (2).
4. Lower the vehicle.

**Oil Pump Replacement**

**Removal Procedure**

1. Remove the oil pan. Refer to **Oil Pan Replacement**.

 © 2011 Mitchell Repair Information Company, LLC.

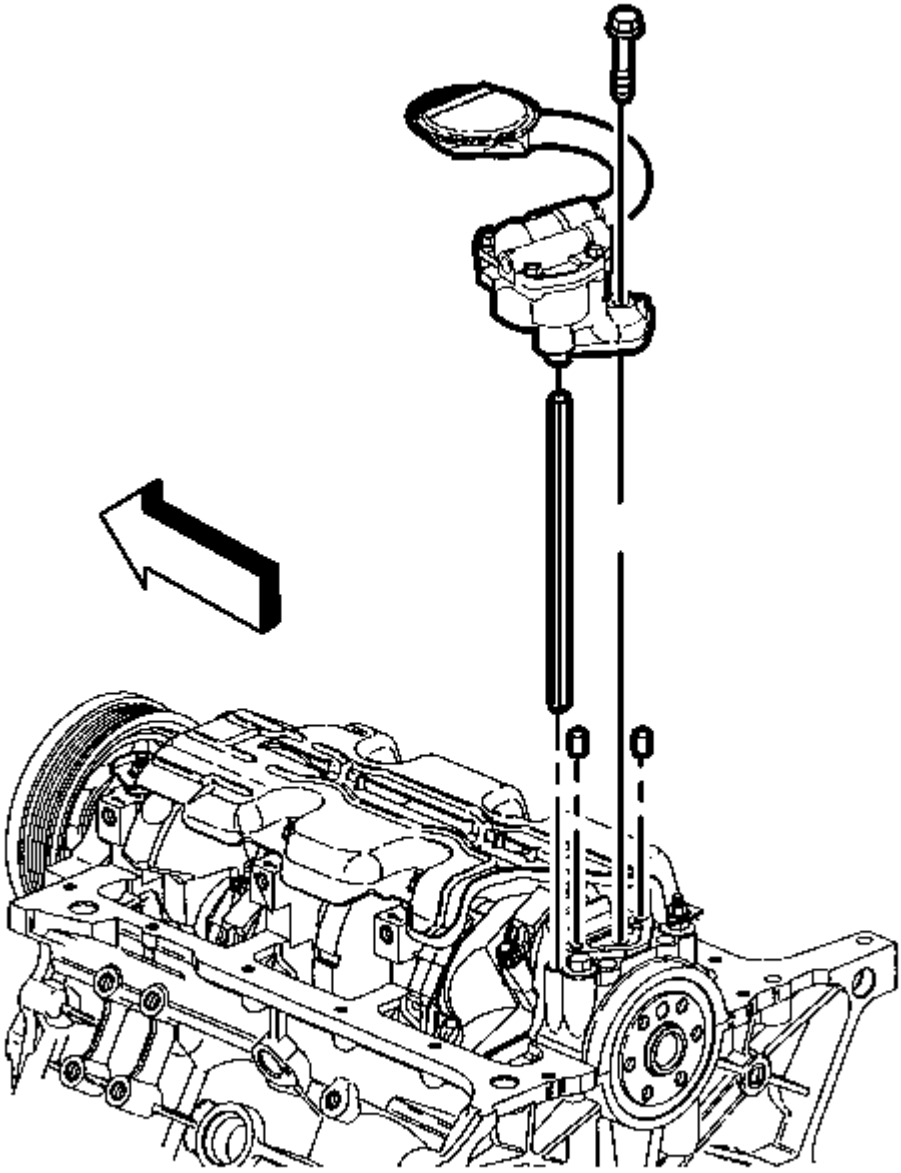

**Fig. 135: Removing Oil Pump & Oil Pump Drive Shaft**
**Courtesy of GENERAL MOTORS CORP.**

2. Remove the oil pump bolt.
3. Remove the oil pump and oil pump drive shaft.
4. Inspect the oil pump driveshaft at both ends for rounding of the corners.

 © 2011 Mitchell Repair Information Company, LLC.

**Installation Procedure**

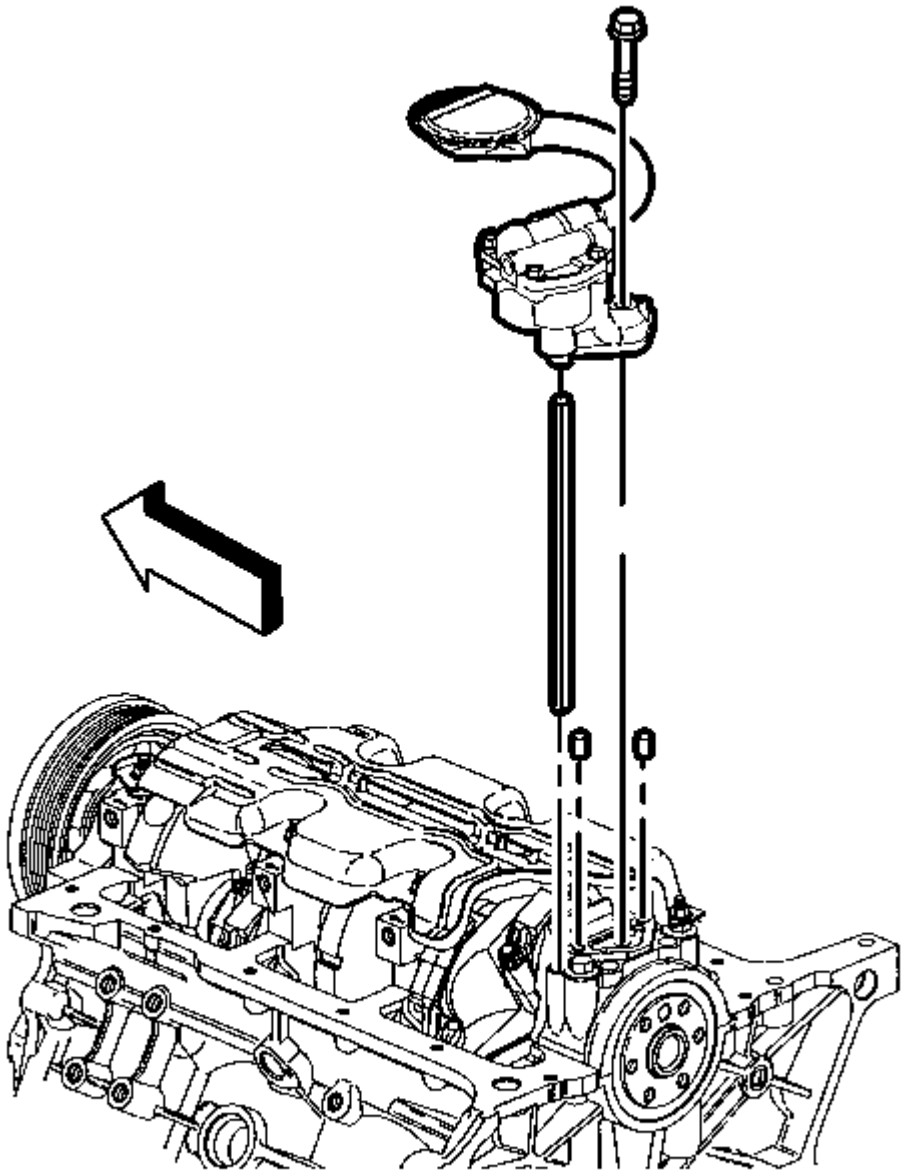

**Fig. 136: Removing Oil Pump & Oil Pump Drive Shaft**
**Courtesy of GENERAL MOTORS CORP.**

**IMPORTANT: Rotate the oil pump driveshaft as necessary in order to obtain the engagement with the oil pump drive.**

 © 2011 Mitchell Repair Information Company, LLC.

1. Install the oil pump and oil pump drive shaft.

   **NOTE: Refer to Fastener Notice in Cautions and Notices.**

2. Install the oil pump bolt.

   **Tighten:** Tighten the bolt to 41 N.m (30 lb ft).

3. Install the oil pan. Refer to **Oil Pan Replacement**.

**Oil Pump Drive Replacement**

**Removal Procedure**

1. Remove the lower intake manifold. Refer to **Intake Manifold Replacement - Lower**.

 © 2011 Mitchell Repair Information Company, LLC.

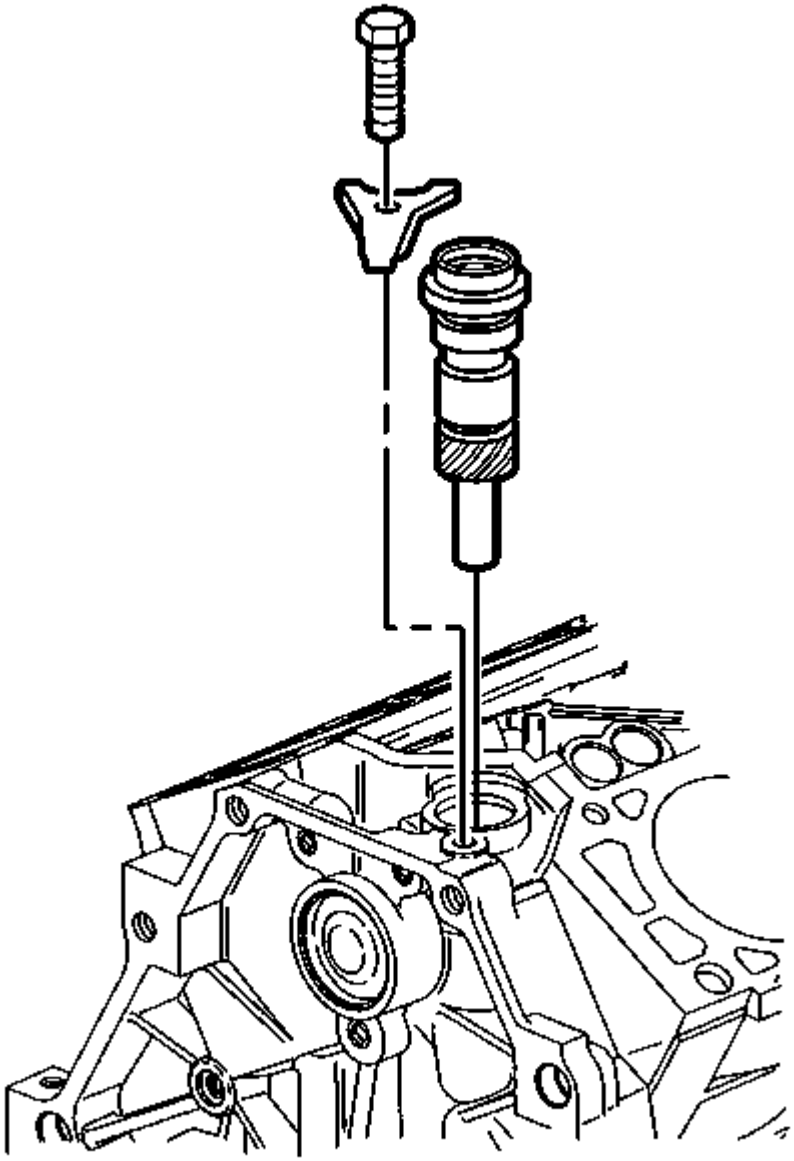

**Fig. 137: View Of Oil Pump Drive**
**Courtesy of GENERAL MOTORS CORP.**

2. Remove the oil pump drive clamp bolt.
3. Remove the oil pump drive clamp.
4. Remove the oil pump drive.

 © 2011 Mitchell Repair Information Company, LLC.

**Installation Procedure**

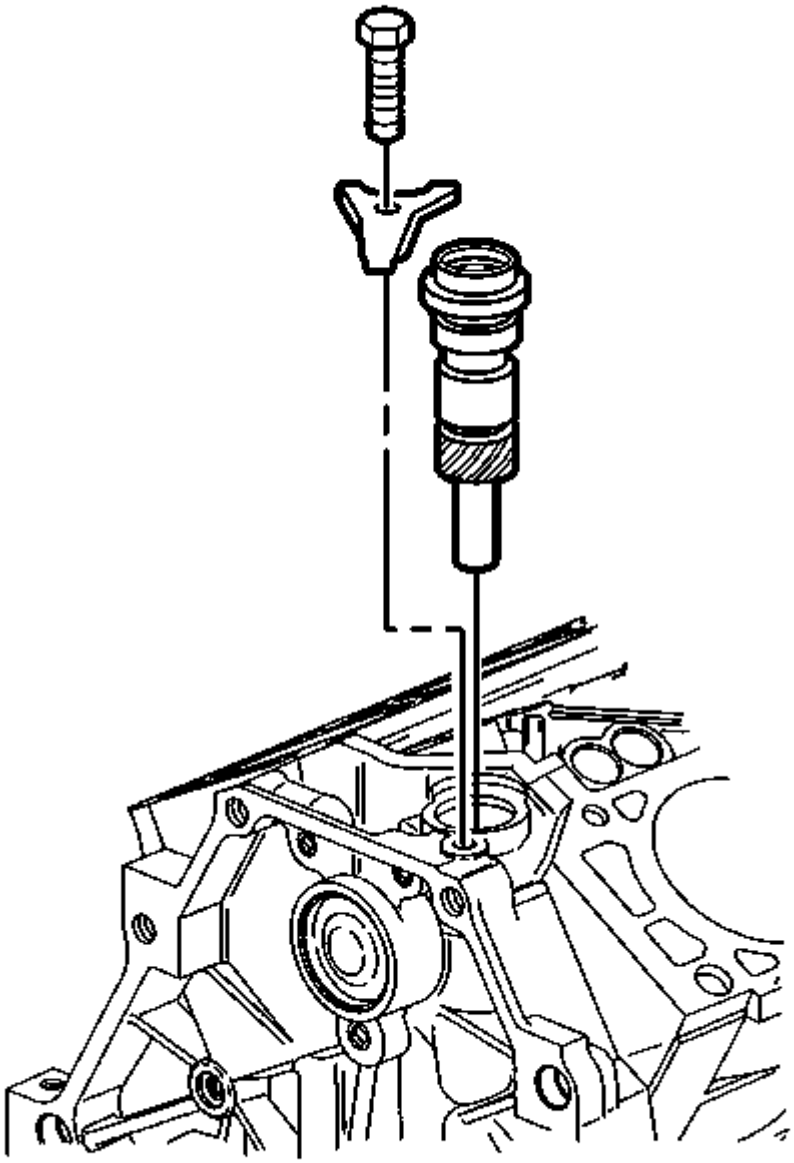

**Fig. 138: View Of Oil Pump Drive**
**Courtesy of GENERAL MOTORS CORP.**

1. Apply prelube GM P/N 12345501 (Canadian P/N 992704) or the equivalent to the oil pump drive gear.
2. Apply engine oil to the oil pump drive gear assembly for ease of assembly.

 © 2011 Mitchell Repair Information Company, LLC.

3. Install the oil pump drive gear assembly.
4. Install the oil pump drive gear clamp.

**NOTE: Refer to Fastener Notice in Cautions and Notices.**

5. Install the oil pump drive gear clamp bolt.

   **Tighten:** Tighten the bolt to 36 N.m (27 lb ft).

6. Install the lower intake manifold. Refer to **Intake Manifold Replacement - Lower**.

**Crankshaft Front Oil Seal Replacement**

**Tools Required**

**J 35468** Cover Aligner and Seal Installer. See **Special Tools**.

**Removal Procedure**

1. Remove the crankshaft balancer. Refer to **Crankshaft Balancer Replacement**.

 © 2011 Mitchell Repair Information Company, LLC.

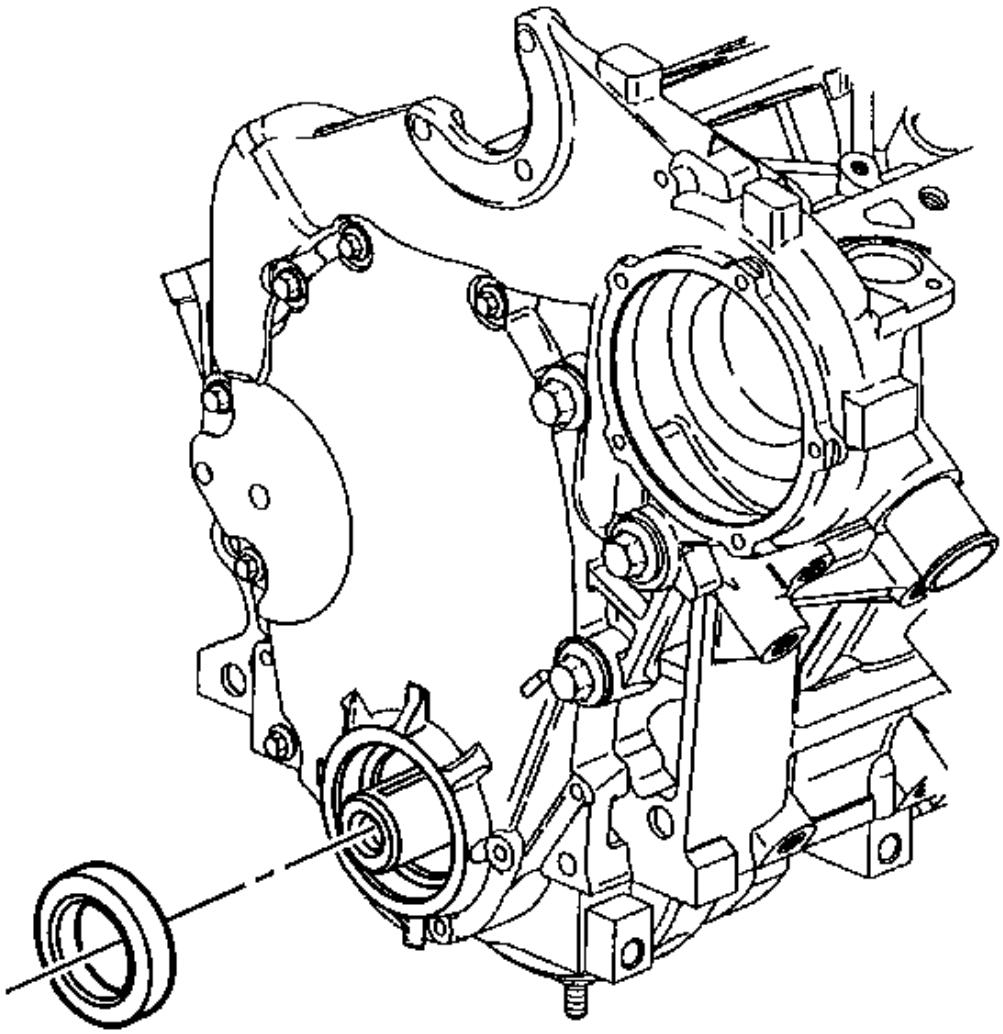

**Fig. 139: Removing Crankshaft Front Oil Seal**
**Courtesy of GENERAL MOTORS CORP.**

2. Pry out the crankshaft front oil seal using a suitable tool. Use care not to damage the engine front cover or the crankshaft.
3. Inspect the crankshaft, the crankshaft balancer and the engine front cover for wear and/or damage. Replace the components as necessary.

**Installation Procedure**

 © 2011 Mitchell Repair Information Company, LLC.

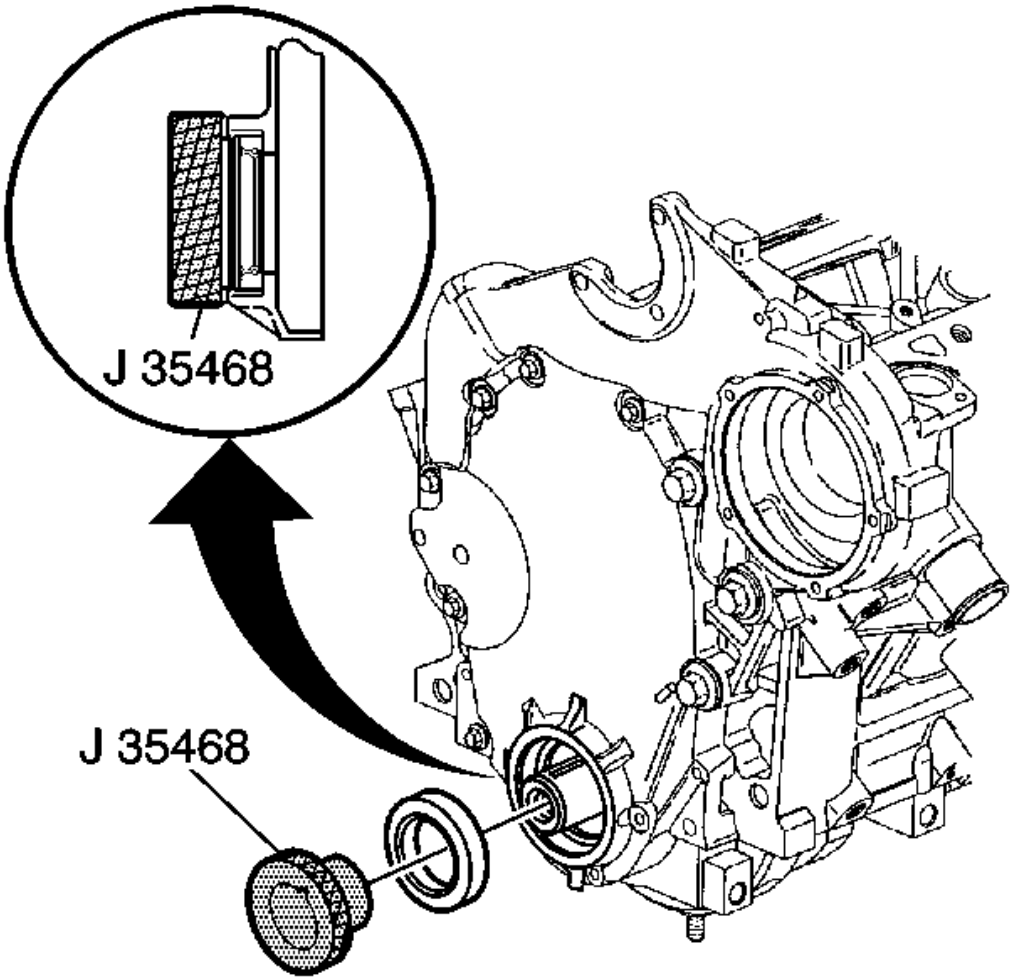


**Fig. 140: Installing Crankshaft Front Oil Seal**
**Courtesy of GENERAL MOTORS CORP.**

1. Align the **J 35468** and the crankshaft front oil seal with the engine front cover and crankshaft. See **Special Tools**.
2. Install the crankshaft front oil seal using the **J 35468** and a suitable tool. See **Special Tools**.
3. Install the crankshaft balancer. Refer to **Crankshaft Balancer Replacement**.

**Engine Front Cover Replacement**

**Removal Procedure**

1. Disconnect the negative battery cable. Refer to **Battery Negative Cable Disconnect/Connect Procedure**

 © 2011 Mitchell Repair Information Company, LLC.

in Engine Electrical.

2. Remove the air cleaner assembly. Refer to **Air Cleaner Assembly Replacement** in Engine Controls.
3. Install the engine support fixture. Refer to **Engine Support Fixture**.
4. Remove the drive belt. Refer to **Drive Belt Replacement**.
5. Drain the cooling system. Refer to **Draining and Filling Cooling System (Static Fill)** or **Draining and Filling Cooling System (GE 47716 Fill)** in Engine Cooling.
6. Raise and support the vehicle. Refer to **Lifting and Jacking the Vehicle** in General Information.
7. Remove the crankshaft balancer. Refer to **Crankshaft Balancer Replacement**.
8. Remove the lower belt idler pulley. Refer to **Drive Belt Idler Pulley Replacement - Lower**.
9. Remove the engine oil pan. Refer to **Oil Pan Replacement**.
10. Lower the vehicle.
11. Remove the left belt idler pulley. Refer to **Drive Belt Idler Pulley Replacement - Left**.

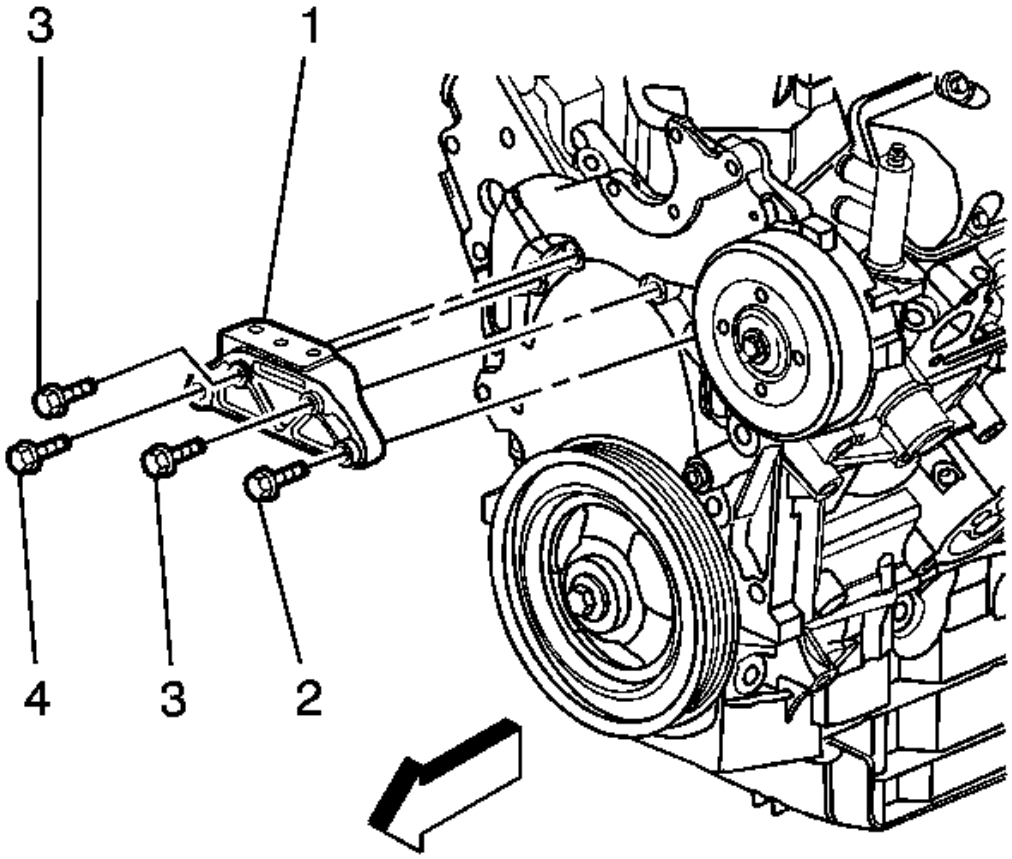


**Fig. 141: View Of Right Engine Mount Bracket**

 © 2011 Mitchell Repair Information Company, LLC.

**Courtesy of GENERAL MOTORS CORP.**

12. Remove the right engine mount bracket bolts (2-4).
13. Remove the right engine mount bracket (1).
14. Remove the water pump. Refer to **Water Pump Replacement** in Engine Cooling.
15. Remove the thermostat bypass hose adapter. Refer to **Thermal Bypass Fitting Replacement** in Engine Cooling.
16. Remove the radiator outlet hose from the engine front cover. Refer to **Radiator Hose Replacement - Outlet** in Engine Cooling.

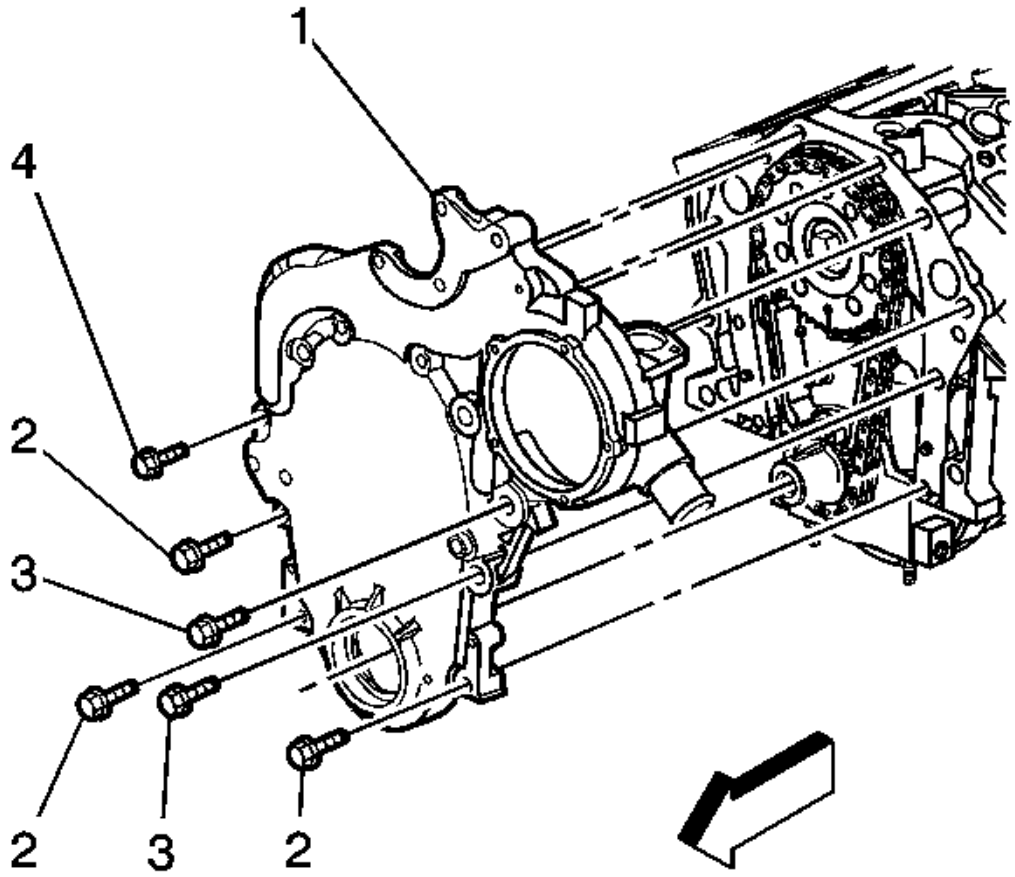


**Fig. 142: View Of Engine Front Cover & Bolts**
**Courtesy of GENERAL MOTORS CORP.**

17. Remove the engine front cover bolts (2-4).
18. Remove the engine front cover (1).

 © 2011 Mitchell Repair Information Company, LLC.

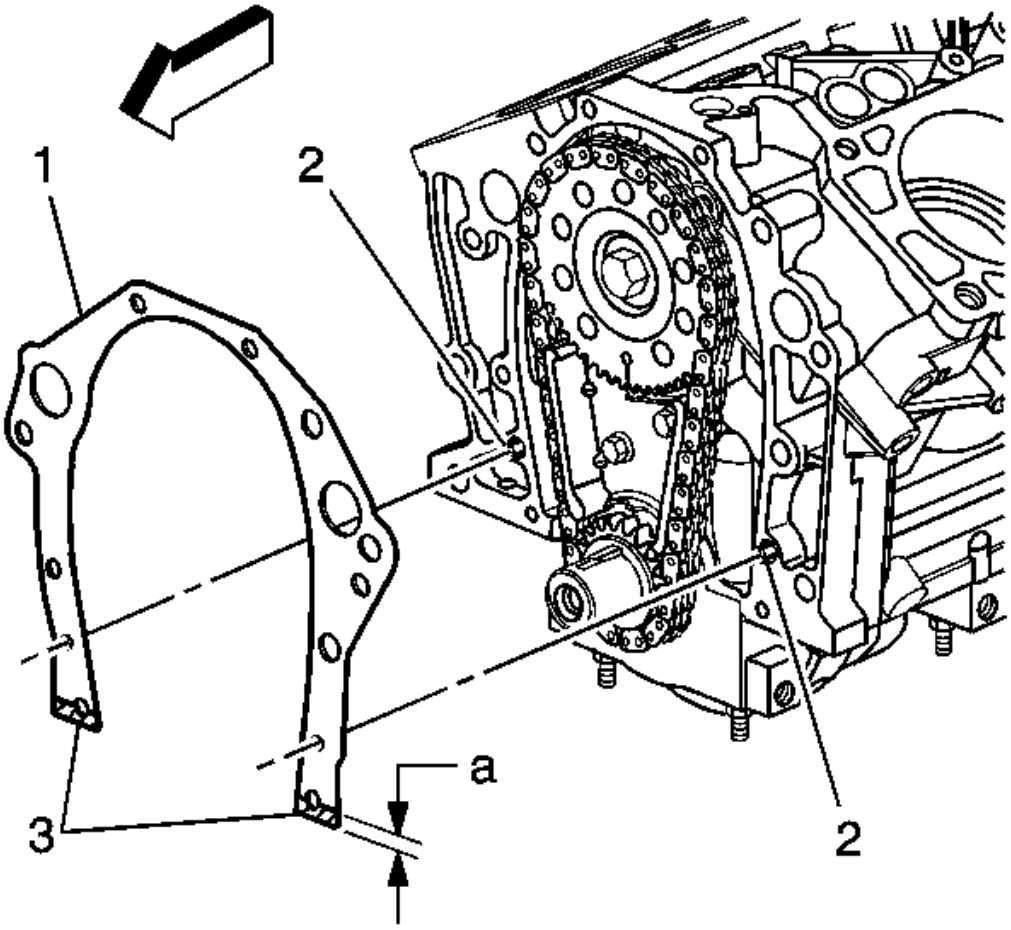


**Fig. 143: View Of Engine Front Cover Gasket**
**Courtesy of GENERAL MOTORS CORP.**

19. Remove the engine front cover gasket (1).
20. Clean the engine block and front cover gasket sealing surfaces.

**Installation Procedure**

 © 2011 Mitchell Repair Information Company, LLC.

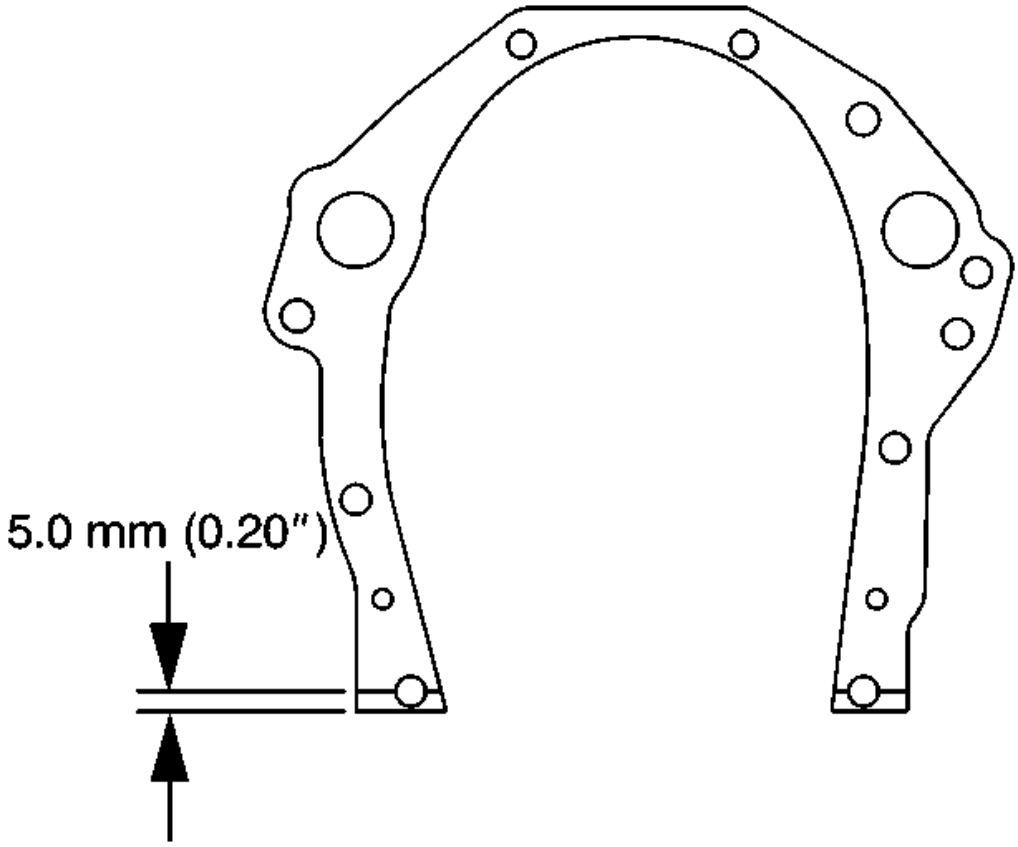


**Fig. 144: Applying Sealer To Lower Tabs Of Engine Front Cover Gasket**
**Courtesy of GENERAL MOTORS CORP.**

1. Apply sealer GM P/N 12346004 (Canadian P/N 10953480) or the equivalent, to the lower tabs of the engine front cover gasket. Uniformly apply the sealer to both sides of the gasket lower tabs with the sealant bead being no less than 5.0 mm (0.20 in) wide as shown. Torque front cover immediately after installation of sealer coated gasket.

 © 2011 Mitchell Repair Information Company, LLC.

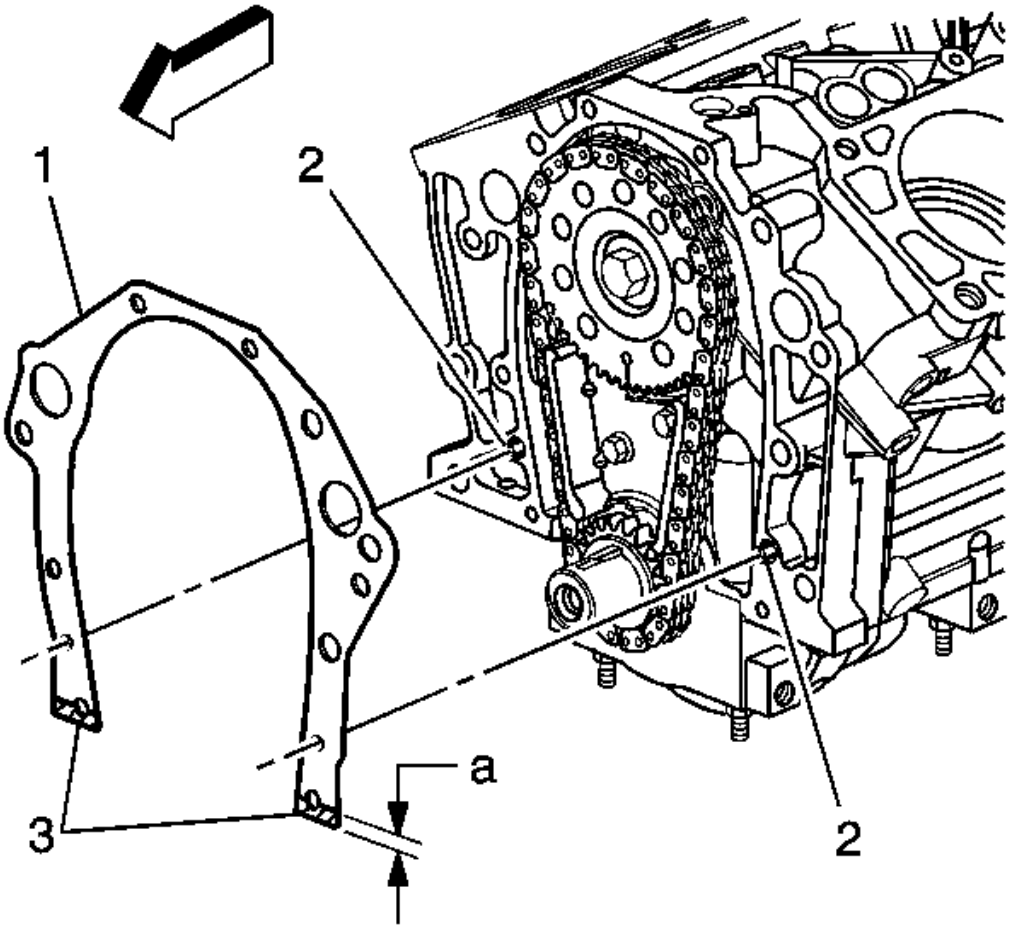


**Fig. 145: View Of Engine Front Cover Gasket**
**Courtesy of GENERAL MOTORS CORP.**

2. Install the gasket (1) to the engine block positioning the gasket on the locating pins (2).

 © 2011 Mitchell Repair Information Company, LLC.

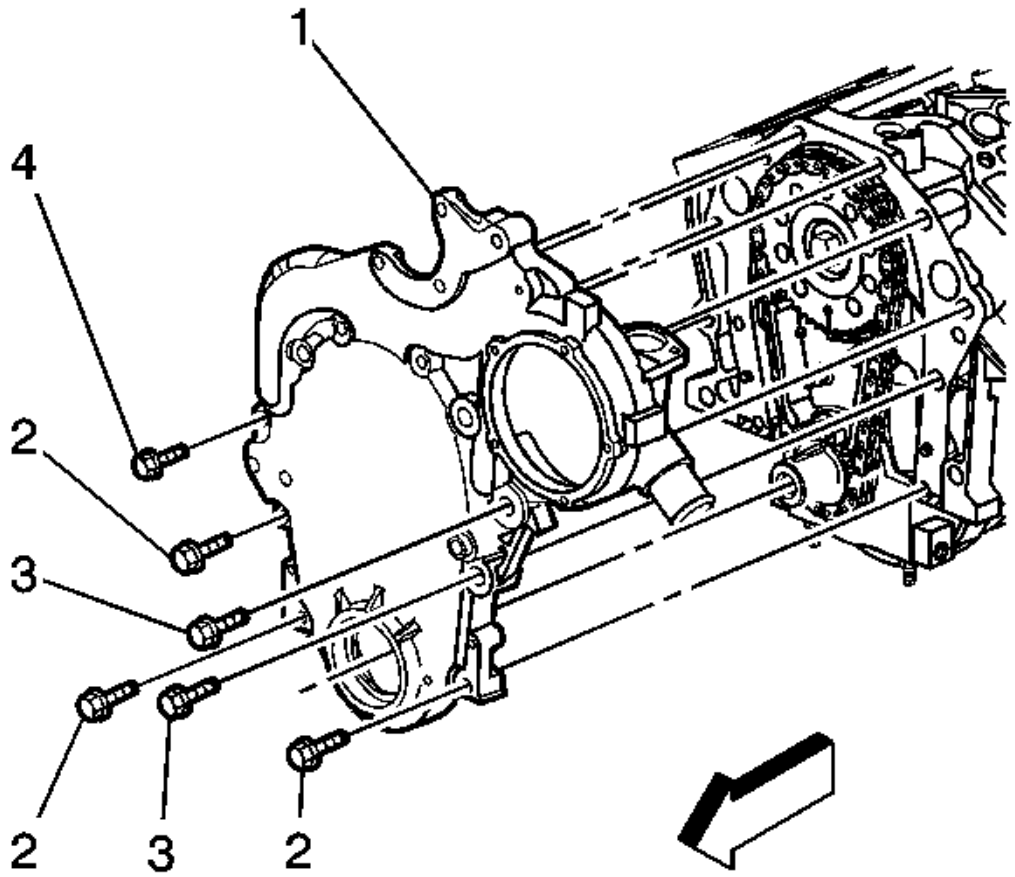


**Fig. 146: View Of Engine Front Cover & Bolts**
**Courtesy of GENERAL MOTORS CORP.**

3. Install the engine front cover (1) to the engine block aligning the cover with the locating pins.

**NOTE:** **Refer to Fastener Notice in Cautions and Notices.**

4. Install the engine front cover bolts (3, 4).

   **Tighten:** Tighten the bolts to 55 N.m (41 lb ft).

5. Install the engine front cover bolts (2).

   **Tighten:** Tighten the bolts to 27 N.m (20 lb ft).

6. Install the radiator outlet hose to the engine front cover. Refer to **Radiator Hose Replacement - Outlet**

 © 2011 Mitchell Repair Information Company, LLC.

in Engine Cooling.

7. Install the thermostat bypass hose adapter. Refer to **Thermal Bypass Fitting Replacement** in Engine Cooling.
8. Install the water pump. Refer to **Water Pump Replacement** in Engine Cooling.

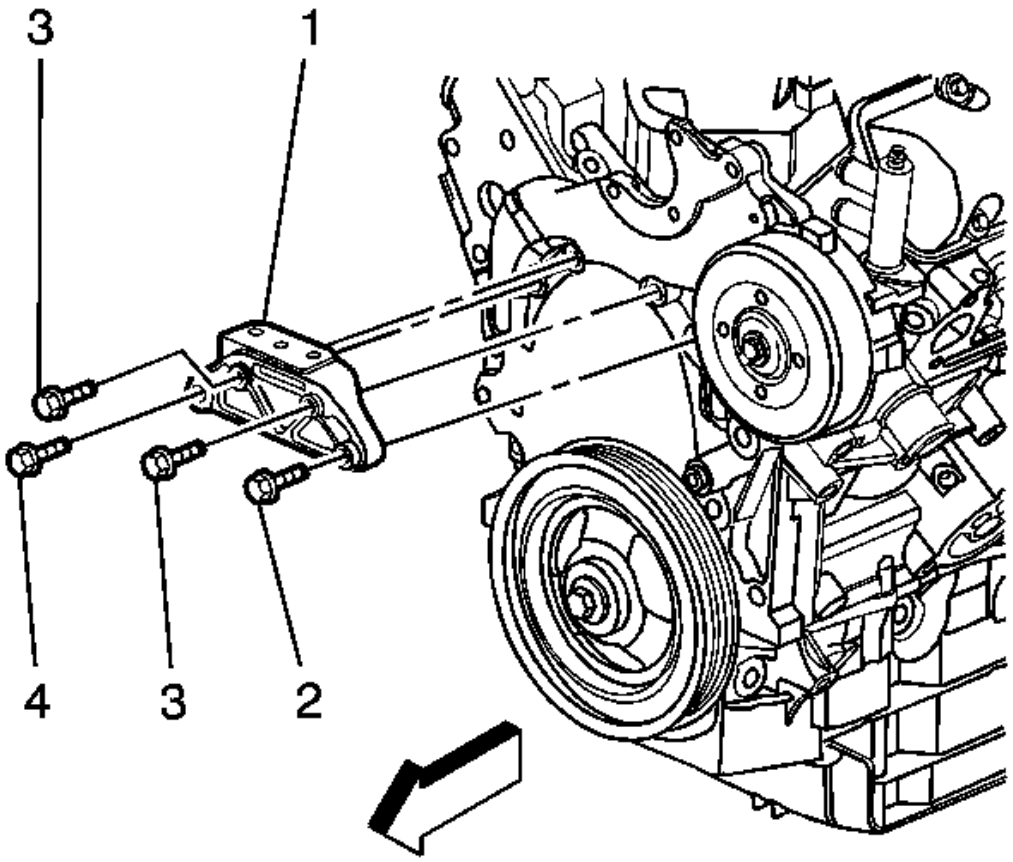


**Fig. 147: View Of Right Engine Mount Bracket**
**Courtesy of GENERAL MOTORS CORP.**

9. Install the right engine mount bracket (1).
10. Install the right engine mount bracket bolts (2-4).

    **Tighten:** Tighten the bolts to 55 N.m (41 lb ft).

11. Install the engine mount bracket bolts (3).

    **Tighten:** Tighten the bolts to 25 N.m (18 lb ft).

 © 2011 Mitchell Repair Information Company, LLC.

12. Install the left belt idler pulley. Refer to **Drive Belt Idler Pulley Replacement - Left**.
13. Raise and support the vehicle. Refer to **Lifting and Jacking the Vehicle** in General Information.
14. Install the engine oil pan. Refer to **Oil Pan Replacement**.
15. Install the lower belt idler pulley. Refer to **Drive Belt Idler Pulley Replacement - Lower**.
16. Install the crankshaft balancer. Refer to **Crankshaft Balancer Replacement**.
17. Lower the vehicle.
18. Install the drive belt. Refer to **Drive Belt Replacement**.
19. Remove the engine support fixture.
20. Install the air cleaner assembly. Refer to **Air Cleaner Assembly Replacement** in Engine Controls.
21. Connect the negative battery cable. Refer to **Battery Negative Cable Disconnect/Connect Procedure** in Engine Electrical.
22. Fill the cooling system. Refer to **Draining and Filling Cooling System (Static Fill)** or **Draining and Filling Cooling System (GE 47716 Fill)** in Engine Cooling.

**Timing Chain and Sprockets Replacement**

**Removal Procedure**

1. Remove the engine front cover. Refer to **Engine Front Cover Replacement**.

 © 2011 Mitchell Repair Information Company, LLC.

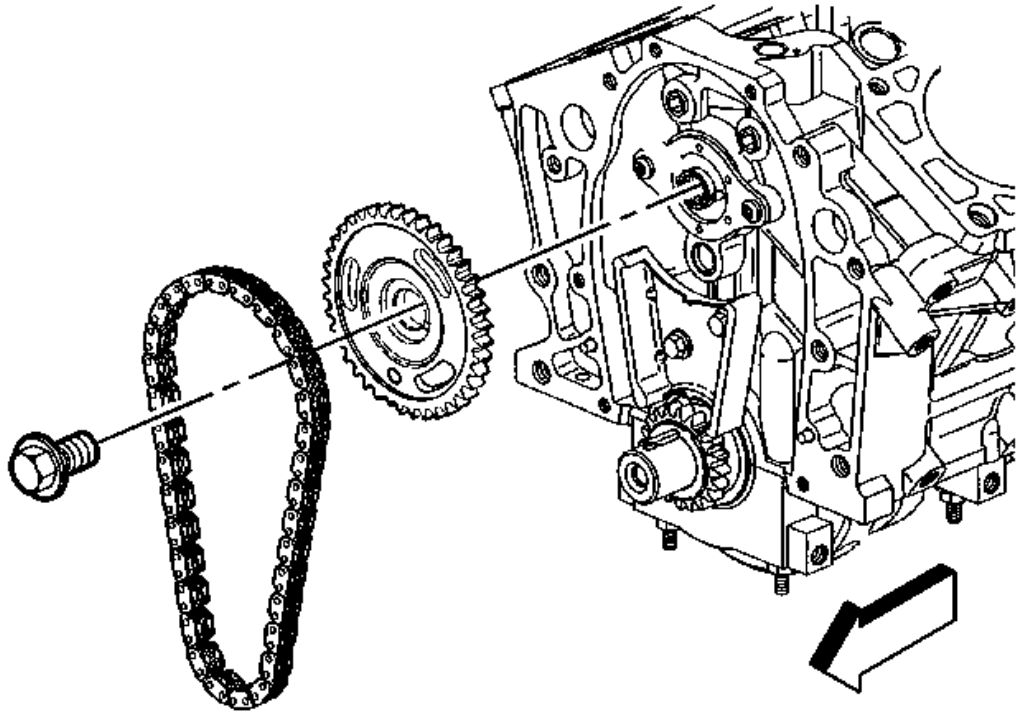

**Fig. 148: Identifying Camshaft Sprocket Bolt**
**Courtesy of GENERAL MOTORS CORP.**

2. Remove the camshaft sprocket bolt.
3. Remove the camshaft sprocket and timing chain.

 © 2011 Mitchell Repair Information Company, LLC.

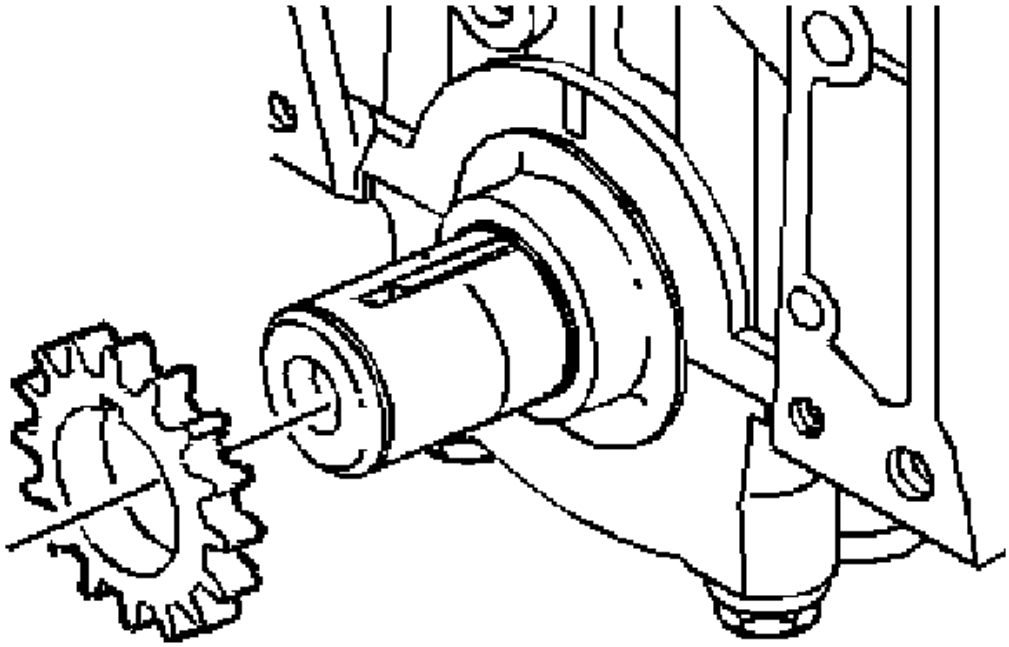

**Fig. 149: View Of Crankshaft Sprocket**
**Courtesy of GENERAL MOTORS CORP.**

4. Remove the crankshaft sprocket.

 © 2011 Mitchell Repair Information Company, LLC.

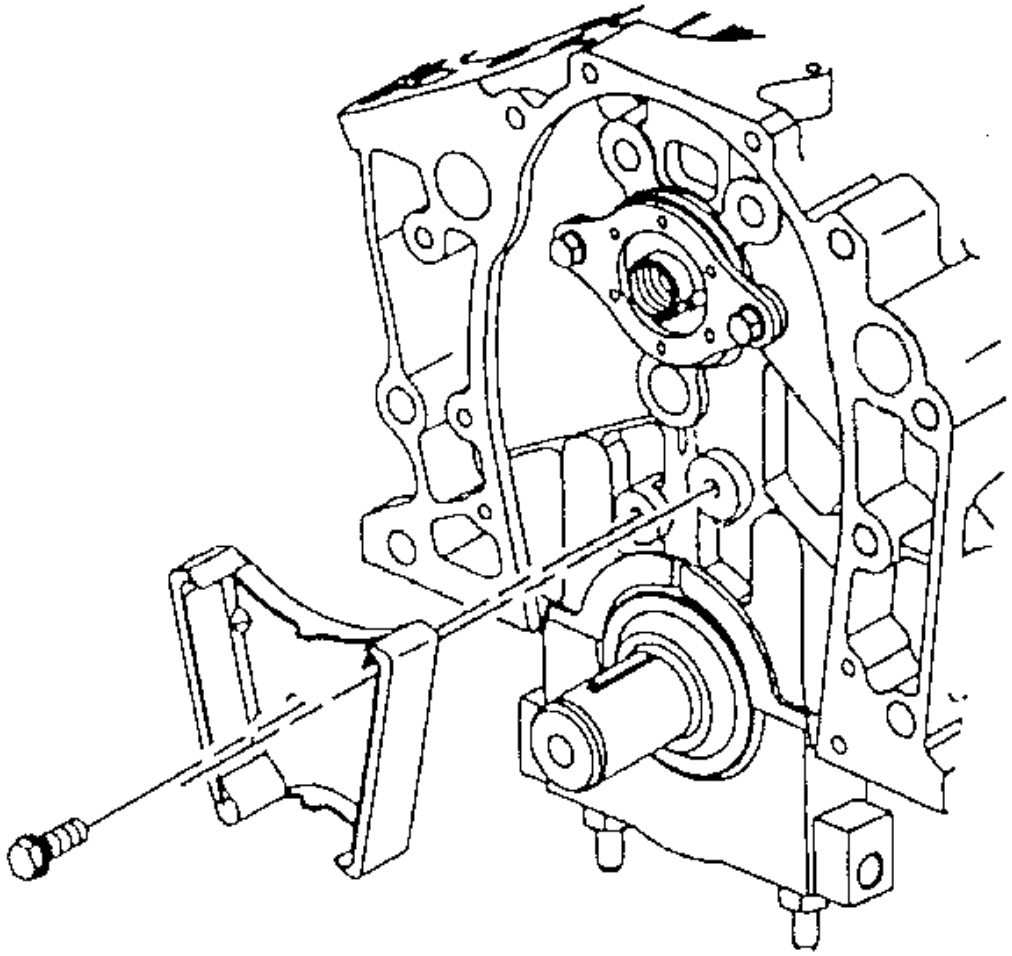

**Fig. 150: View Of Timing Chain Dampener & Bolts**
**Courtesy of GENERAL MOTORS CORP.**

5. Remove the timing chain dampener bolts.
6. Remove the timing chain dampener.

**Installation Procedure**

 © 2011 Mitchell Repair Information Company, LLC.

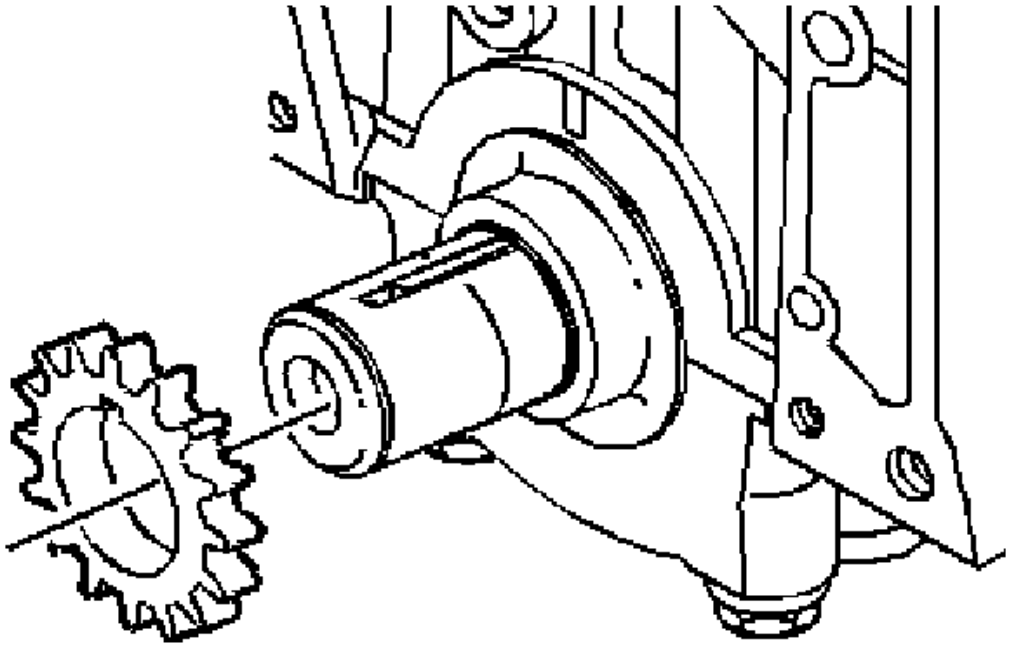

**Fig. 151: View Of Crankshaft Sprocket**
**Courtesy of GENERAL MOTORS CORP.**

1. Install the crankshaft sprocket.
2. Apply prelube GM P/N 12345501 (Canadian P/N 992704) or the equivalent to the crankshaft sprocket thrust surface.

 © 2011 Mitchell Repair Information Company, LLC.

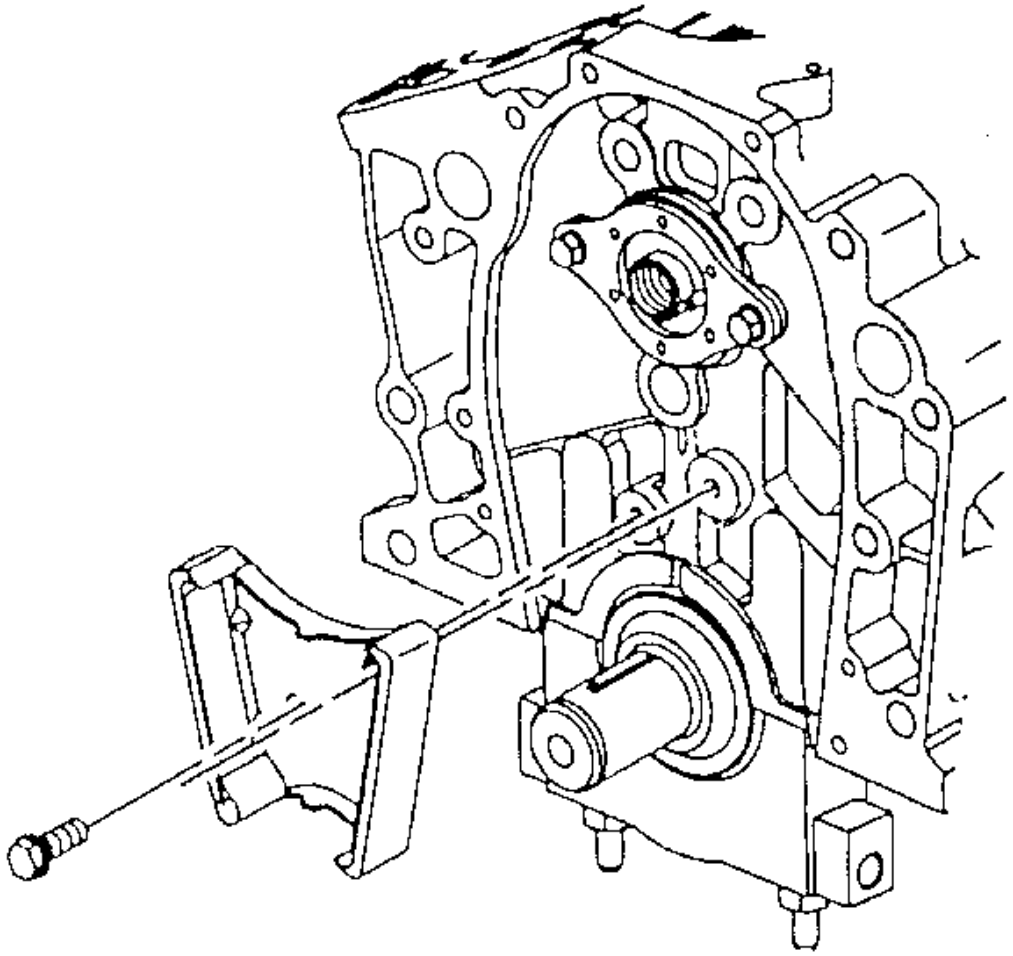

**Fig. 152: View Of Timing Chain Dampener & Bolts**
**Courtesy of GENERAL MOTORS CORP.**

3. Install the timing chain dampener.

**NOTE:** **Refer to Fastener Notice in Cautions and Notices.**

4. Install the timing chain dampener bolts.

**Tighten:** Tighten the bolt to 21 N.m (15 lb ft).

 © 2011 Mitchell Repair Information Company, LLC.

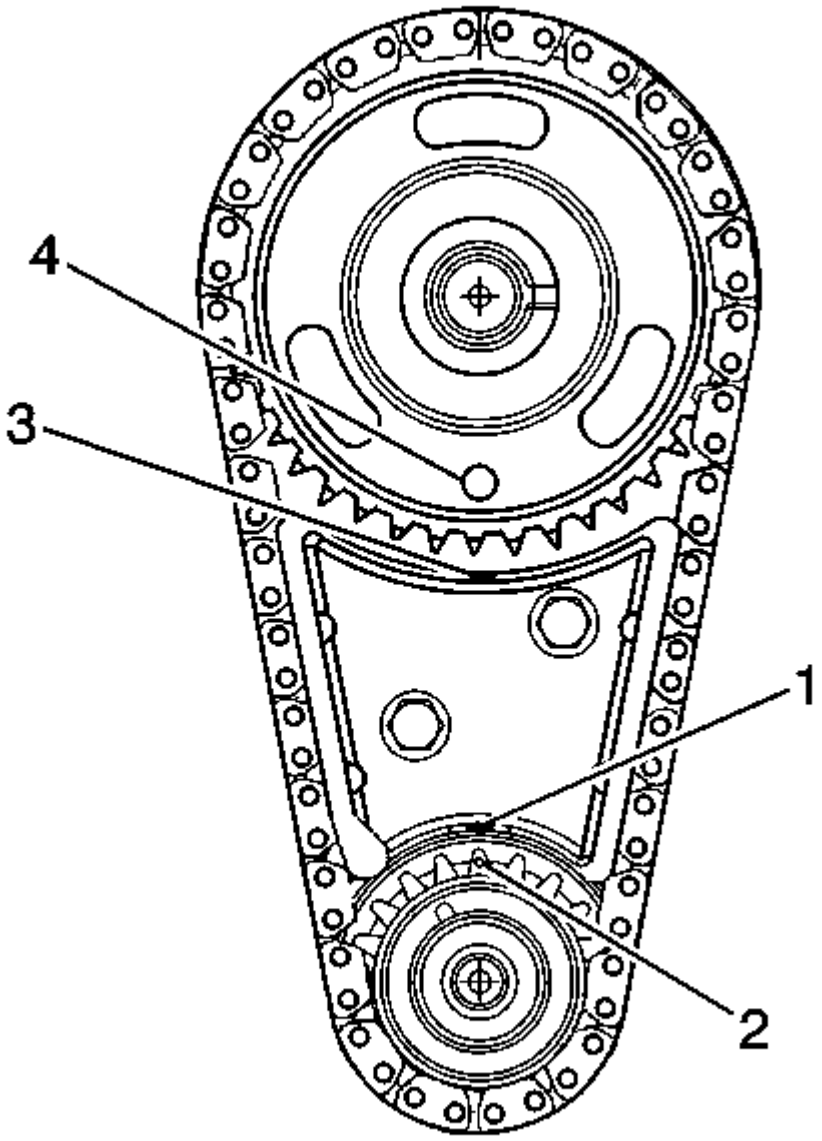


**Fig. 153: Aligning The Dowel In The Camshaft With The Dowel Hole In The Camshaft Sprocket**
**Courtesy of GENERAL MOTORS CORP.**

5. Align the crankshaft timing mark (2) to the timing mark on the bottom of the timing chain dampener (1).
6. Hold the camshaft sprocket with the timing chain hanging down and install the timing chain to the crankshaft gear.
7. Align the timing mark on the camshaft gear (4) with the timing mark on top of the timing chain dampener

 © 2011 Mitchell Repair Information Company, LLC.

(3).

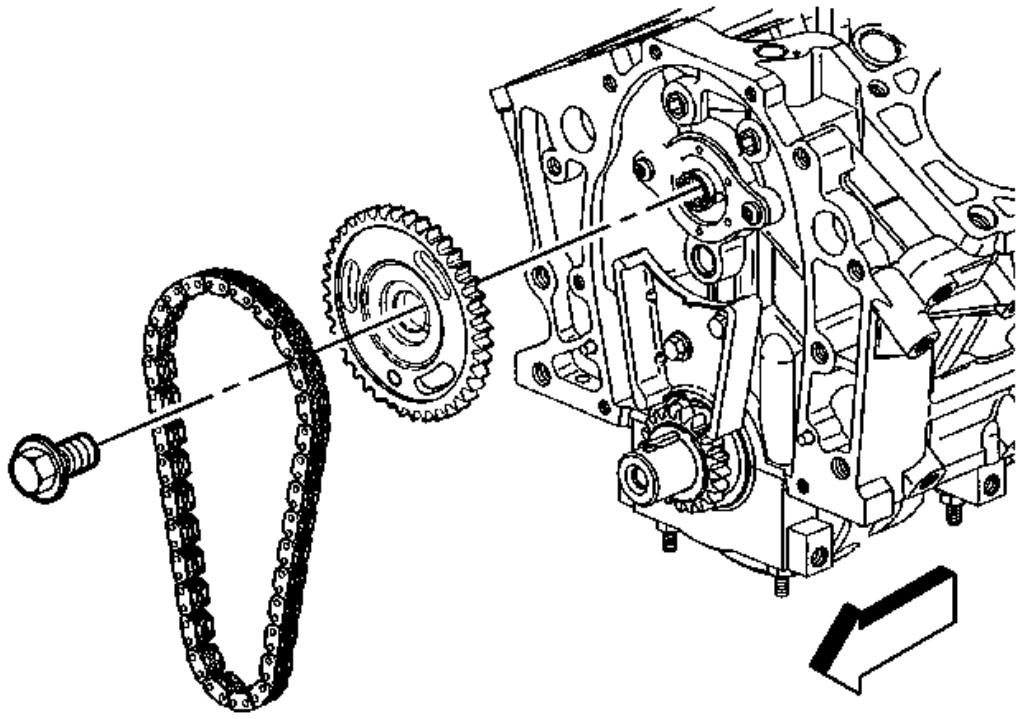

**Fig. 154: Identifying Camshaft Sprocket Bolt**
**Courtesy of GENERAL MOTORS CORP.**

8. Align the dowel in the camshaft with the dowel hole in the camshaft sprocket.
9. Draw the camshaft sprocket onto the camshaft using the mounting bolt.
10. Coat the crankshaft and camshaft sprocket with engine oil.

    **Tighten:** Tighten the bolt to 140 N.m (103 lb ft).

11. Install the engine front cover. Refer to **Engine Front Cover Replacement**.

**Cylinder Head Replacement - Left**

**Tools Required**

**J 45059** Angle Meter. See **Special Tools**.

**Removal Procedure**

 © 2011 Mitchell Repair Information Company, LLC.

1. Drain the engine coolant from the cooling system. Refer to **Draining and Filling Cooling System (Static Fill)** or **Draining and Filling Cooling System (GE 47716 Fill)** in Engine Cooling.
2. Remove the engine left side spark plug wires from the spark plugs. Refer to **Spark Plug Wire Replacement** in Engine Controls - 3.4L.

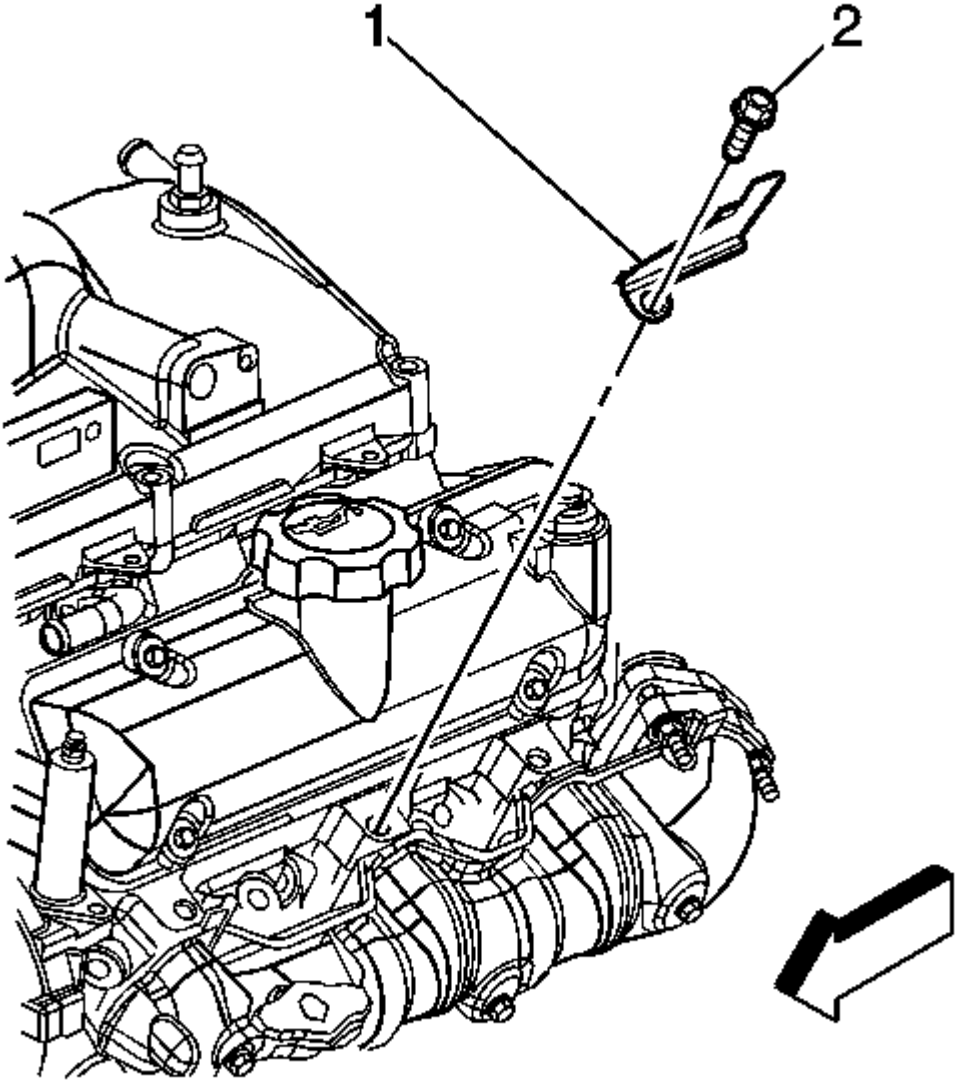


**Fig. 155: View Of Spark Plug Wire Support & Bolt**
**Courtesy of GENERAL MOTORS CORP.**

3. Remove the spark plug wire retainer support bolt (2) and support (1).

 © 2011 Mitchell Repair Information Company, LLC.

4. Remove the engine left side spark plugs. Refer to **Spark Plug Replacement** in Engine Controls - 3.4L.
5. Remove the left valve rocker arm cover. Refer to **Valve Rocker Arm Cover Removal - Left**.
6. Remove the lower intake manifold. Refer to **Intake Manifold Replacement - Lower**.
7. Remove the oil level indicator tube. Refer to **Oil Level Indicator and Tube Replacement**.
8. Remove the exhaust crossover pipe. Refer to **Exhaust Crossover Pipe Replacement** in Engine Exhaust.
9. Remove the engine left side exhaust manifold. Refer to **Exhaust Manifold Replacement - Left** in Engine Exhaust.

 © 2011 Mitchell Repair Information Company, LLC.

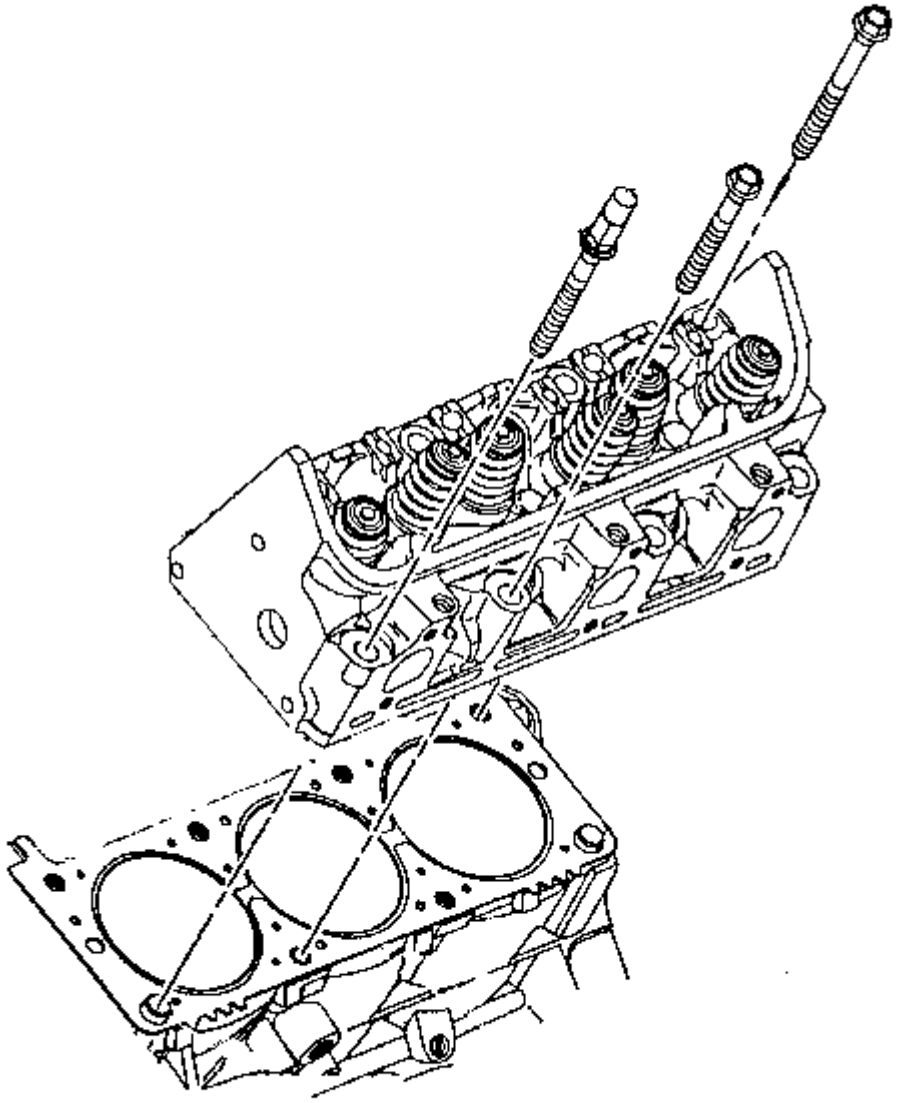

**Fig. 156: View Of Cylinder Head**
**Courtesy of GENERAL MOTORS CORP.**

10. Remove the cylinder head bolts and discard.
11. Remove the cylinder head.

 © 2011 Mitchell Repair Information Company, LLC.

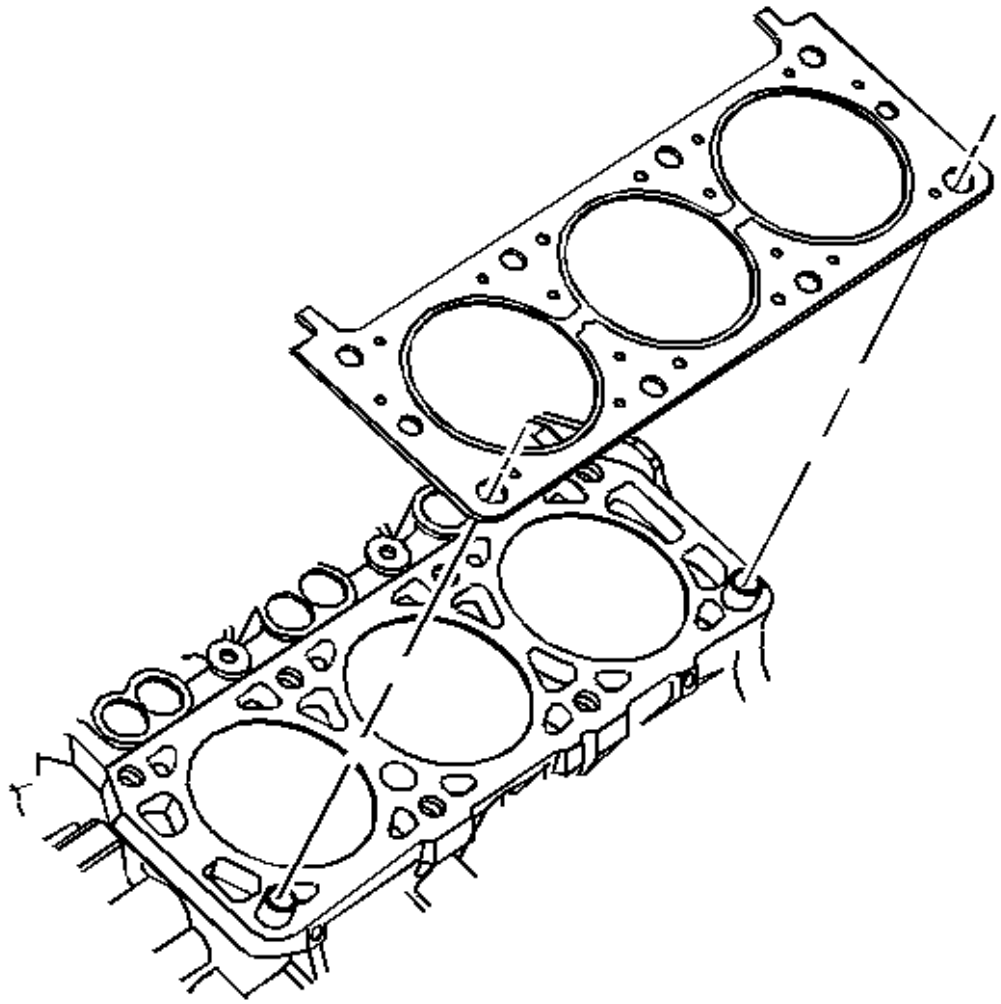

**Fig. 157: View Of Cylinder Head Gasket And Alignment Pins**
**Courtesy of GENERAL MOTORS CORP.**

12. Remove the cylinder head gasket.

**IMPORTANT: All gasket mating surfaces must remain free of oil and foreign material. Use GM P/N 12346139 (Canadian P/N 10953463) or equivalent to clean surfaces.**

13. Clean the following areas:
    - The gasket sealing surfaces on the cylinder head, cylinder block, intake manifold, and exhaust

 © 2011 Mitchell Repair Information Company, LLC.

manifold
- The cylinder block bolt threads

**Installation Procedure**

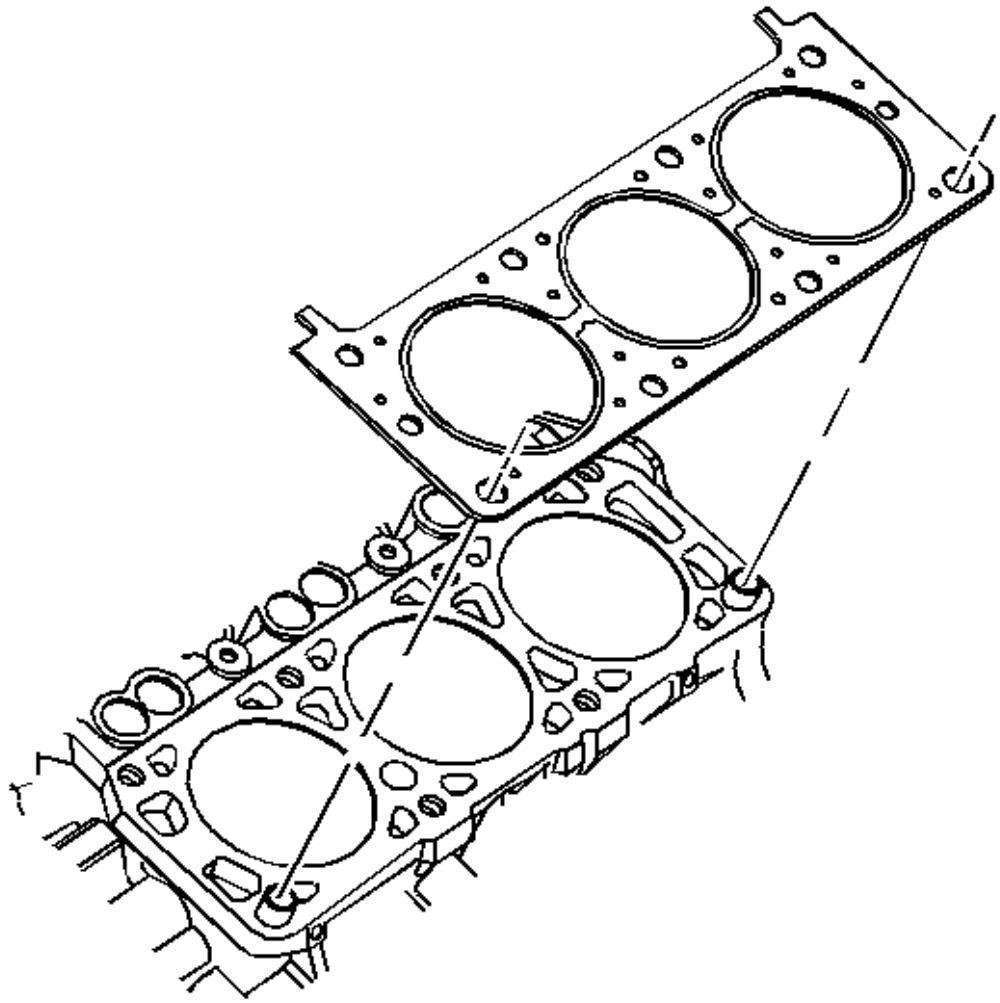

**Fig. 158: View Of Cylinder Head Gasket And Alignment Pins**
**Courtesy of GENERAL MOTORS CORP.**

1. Install the cylinder head gasket.

 © 2011 Mitchell Repair Information Company, LLC.

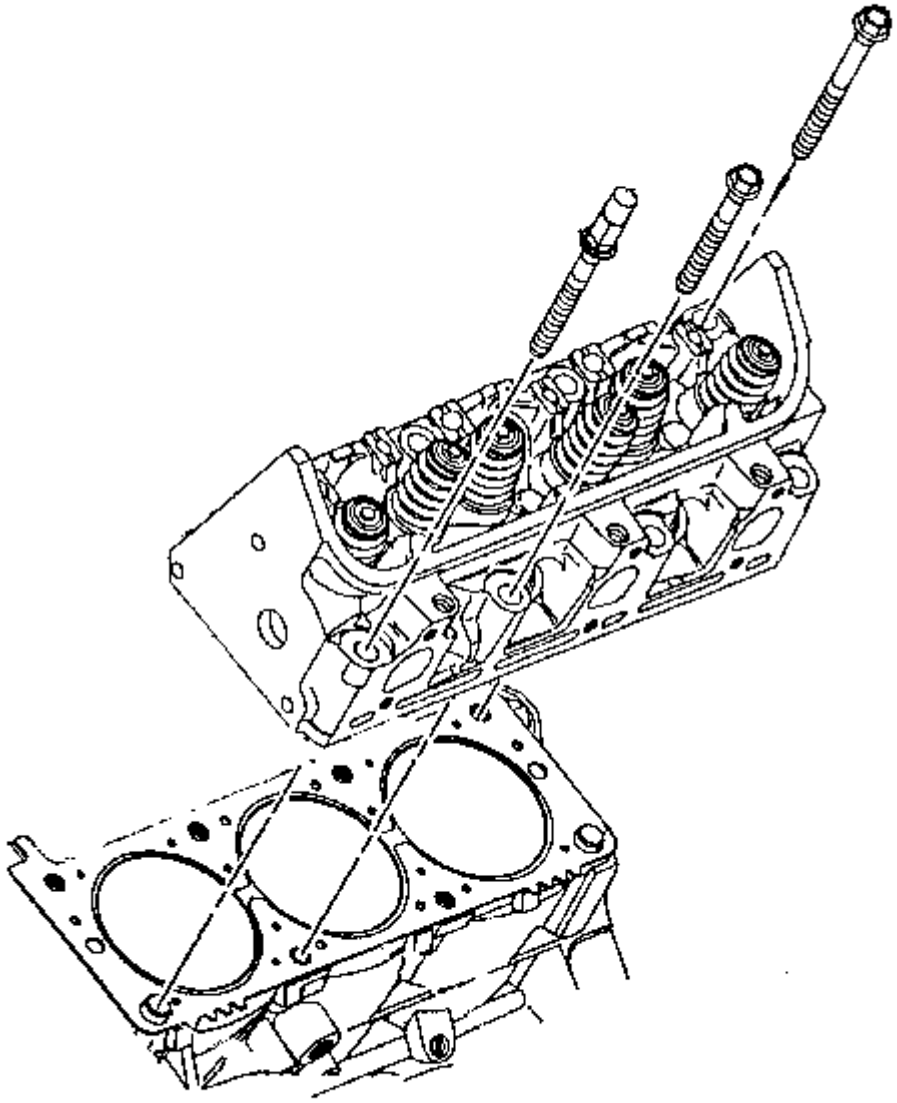

**Fig. 159: View Of Cylinder Head**
**Courtesy of GENERAL MOTORS CORP.**

2. Install the cylinder head.

 © 2011 Mitchell Repair Information Company, LLC.

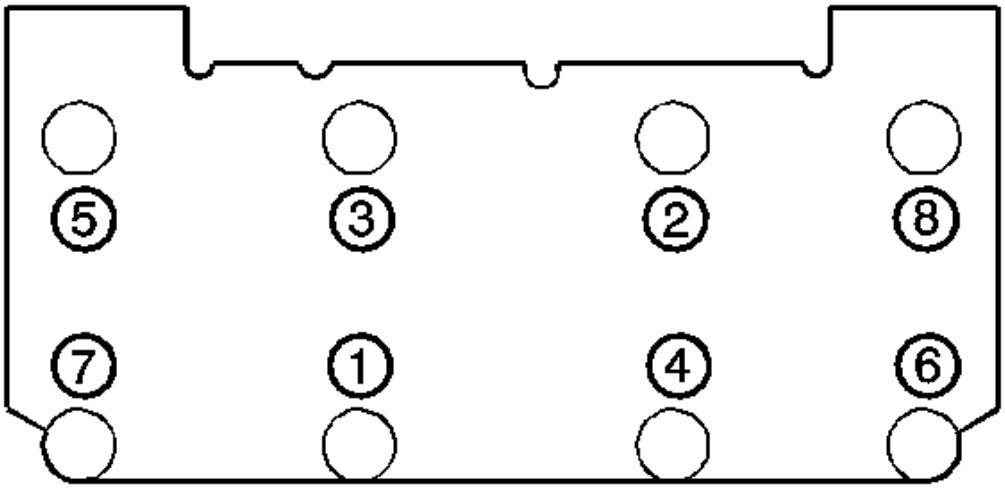


**Fig. 160: View Of Cylinder Head Bolt Tightening Sequence**
**Courtesy of GENERAL MOTORS CORP.**

**NOTE:** **This component uses torque-to-yield bolts. When servicing this component do not reuse the bolts, New torque-to-yield bolts must be installed. Reusing used torque-to-yield bolts will not provide proper bolt torque and clamp load. Failure to install NEW torque-to-yield bolts may lead to engine damage.**

**NOTE:** **Refer to Fastener Notice in Cautions and Notices.**

3. Install the NEW cylinder head bolts.

   **Tighten:** Tighten the bolts in sequence to 60 N.m (44 lb ft). Turn the bolts an additional 95 degrees using the**J 45059** . See **Special Tools**.

4. Install the engine left side exhaust manifold. Refer to **Exhaust Manifold Replacement - Left** in Engine Exhaust.
5. Install the exhaust crossover pipe. Refer to **Exhaust Crossover Pipe Replacement** in Engine Exhaust.
6. Install the oil level indicator tube. Refer to **Oil Level Indicator and Tube Replacement**.
7. Install the lower intake manifold. Refer to **Intake Manifold Replacement - Lower**.
8. Install the left valve rocker arm cover. Refer to **Valve Rocker Arm Cover Removal - Left**.
9. Install the engine left side spark plugs. Refer to **Spark Plug Replacement** in Engine Controls - 3.4L.

 © 2011 Mitchell Repair Information Company, LLC.

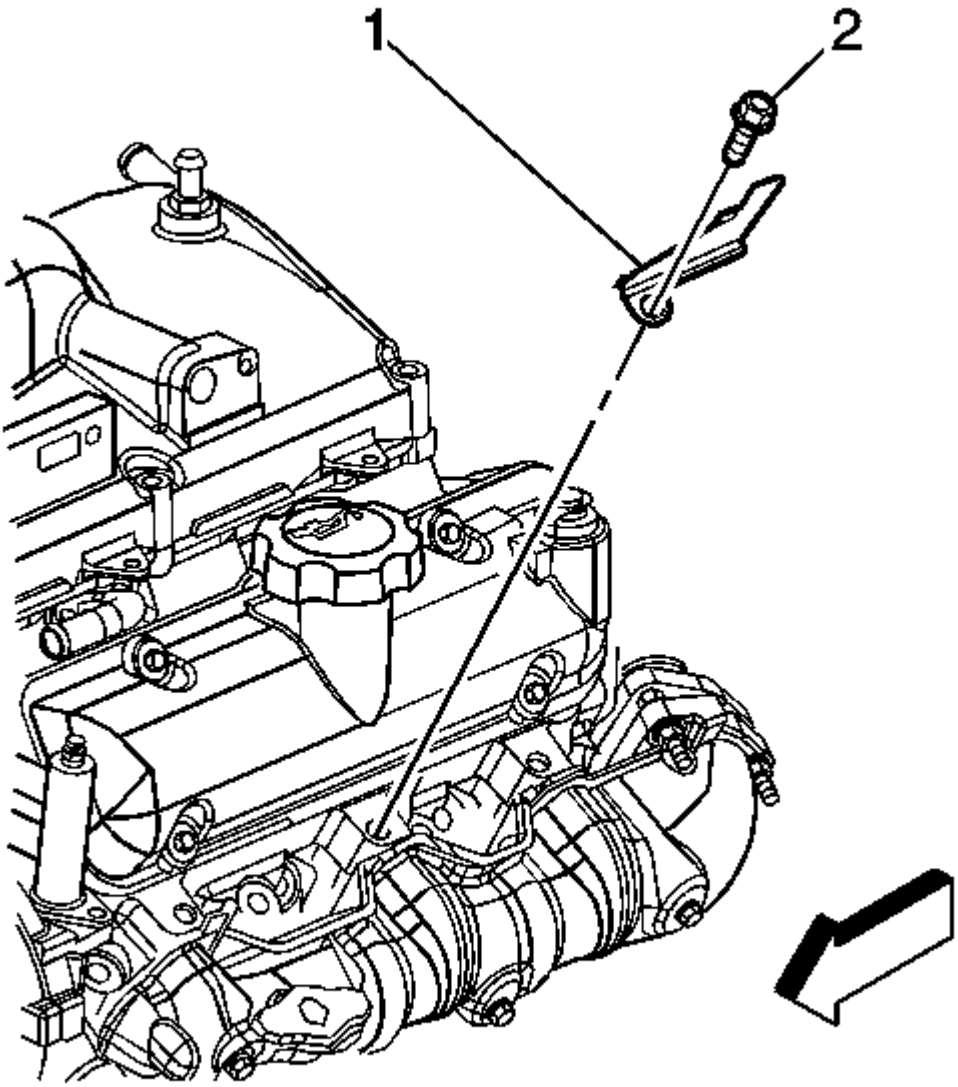


**Fig. 161: View Of Spark Plug Wire Support & Bolt**
**Courtesy of GENERAL MOTORS CORP.**

10. Install the spark plug wire retainer support (1) and bolt (2).

    **Tighten:** Tighten the bolt to 25 N.m (18 lb ft).

11. Install the engine left side spark plug wires to the spark plugs. Refer to **Spark Plug Wire Replacement** in Engine Controls - 3.4L.

 © 2011 Mitchell Repair Information Company, LLC.

12. Fill the cooling system with engine coolant. Refer to **Draining and Filling Cooling System (Static Fill)** or **Draining and Filling Cooling System (GE 47716 Fill)** in Engine Cooling.

**Cylinder Head Replacement - Right**

**Tools Required**

**J 45059** Angle Meter. See **Special Tools**.

**Removal Procedure**

1. Drain the engine coolant from the cooling system. Refer to **Draining and Filling Cooling System (Static Fill)** or **Draining and Filling Cooling System (GE 47716 Fill)** in Engine Cooling.
2. Remove the heater outlet pipe. Refer to **Heater Pipe Replacement - Outlet** in Engine Cooling.

 © 2011 Mitchell Repair Information Company, LLC.

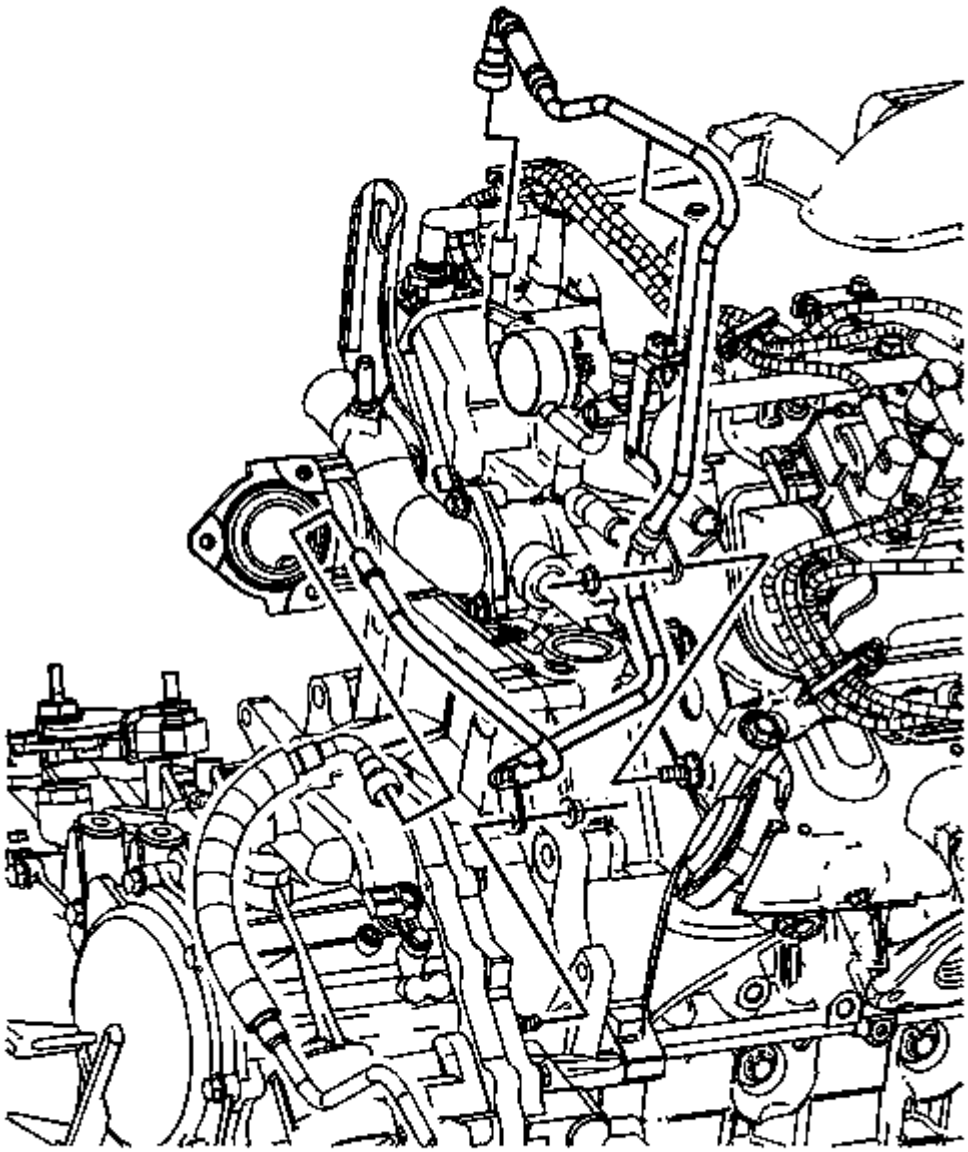

**Fig. 162: View Of Hose/Pipe Retainer-To-Right Cylinder Head Nut & Fuel Pipe-To-Transaxle Nut**
**Courtesy of GENERAL MOTORS CORP.**

3. Remove the nut securing the hose/pipe retainer to the right cylinder head.
4. Remove the engine coolant temperature sensor. Refer to **Engine Coolant Temperature (ECT) Sensor Replacement** in Engine Controls - 3.4L.

 © 2011 Mitchell Repair Information Company, LLC.

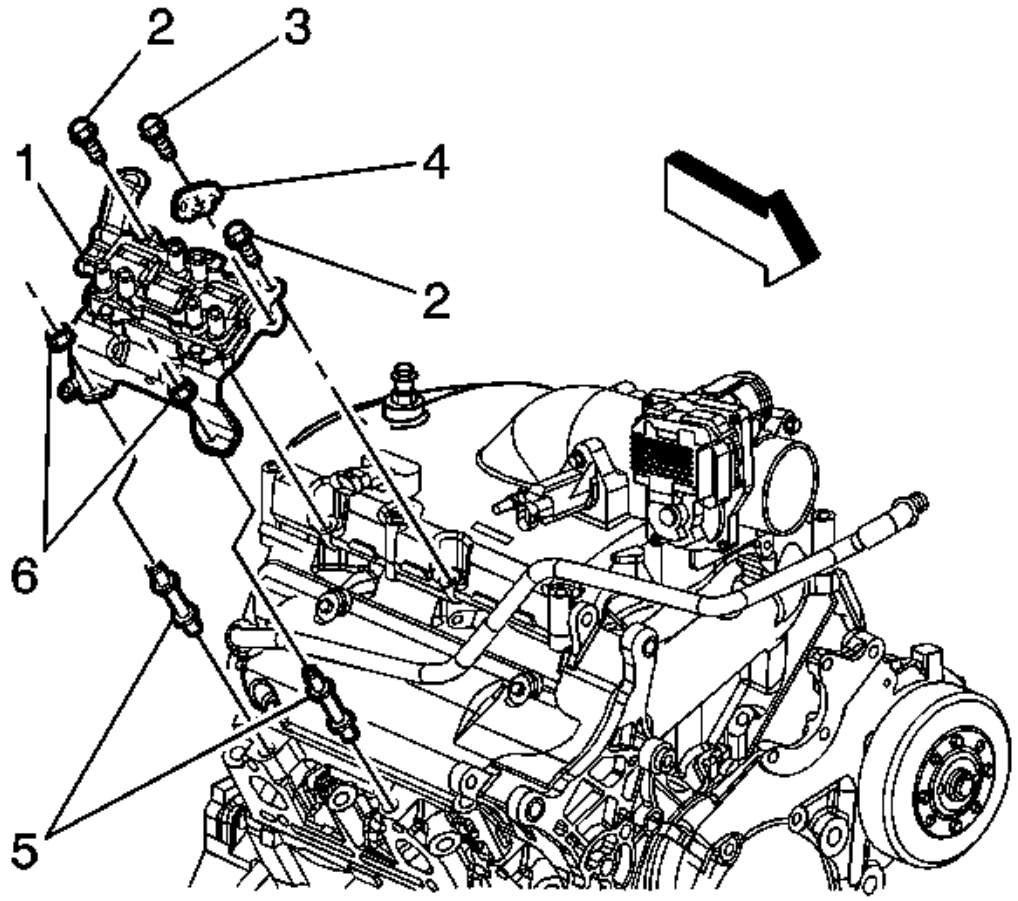


**Fig. 163: View Of Ignition Control Module Bracket & Components**
**Courtesy of GENERAL MOTORS CORP.**

5. Remove the ignition control module and bracket (1). Refer to **Ignition Control Module Bracket Replacement** in Engine Controls - 3.4L.
6. Remove the ignition control module bracket studs (5).
7. Remove the engine right side spark plug wires from the spark plugs. Refer to **Spark Plug Wire Replacement** in Engine Controls - 3.4L.
8. Remove the engine right side spark plugs. Refer to **Spark Plug Replacement** in Engine Controls - 3.4L.
9. Remove the right valve rocker arm cover. Refer to **Valve Rocker Arm Cover Removal - Right**.
10. Remove the lower intake manifold. Refer to **Intake Manifold Replacement - Lower**.
11. Remove the exhaust crossover pipe. Refer to **Exhaust Crossover Pipe Replacement** in Engine Exhaust.
12. Remove the engine right side exhaust manifold. Refer to **Exhaust Manifold Replacement - Right** in Engine Exhaust.

 © 2011 Mitchell Repair Information Company, LLC.

13. Remove the generator bracket and engine lift bracket. Refer to **Generator Bracket/Engine Lift Bracket Replacement** in Engine Electrical.

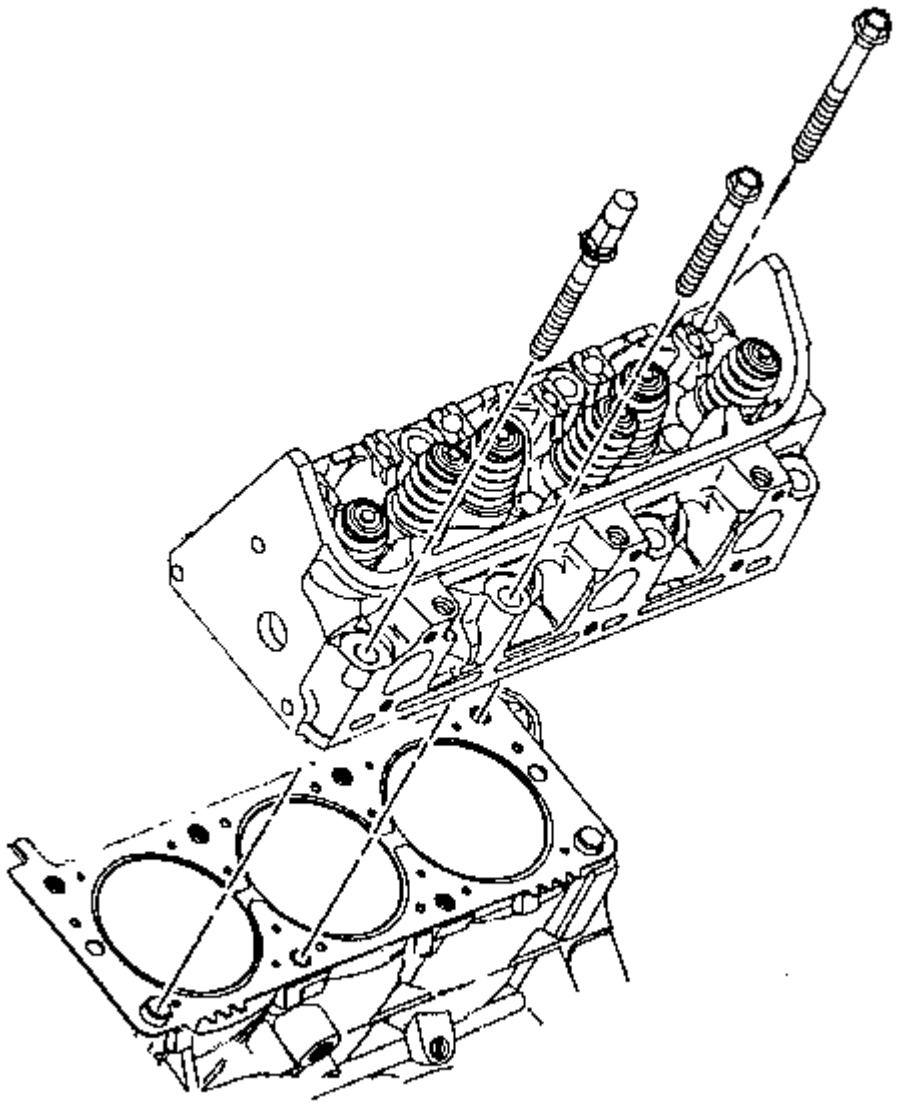

**Fig. 164: View Of Cylinder Head**
**Courtesy of GENERAL MOTORS CORP.**

14. Remove the cylinder head bolts and discard.
15. Remove the cylinder head.

 © 2011 Mitchell Repair Information Company, LLC.

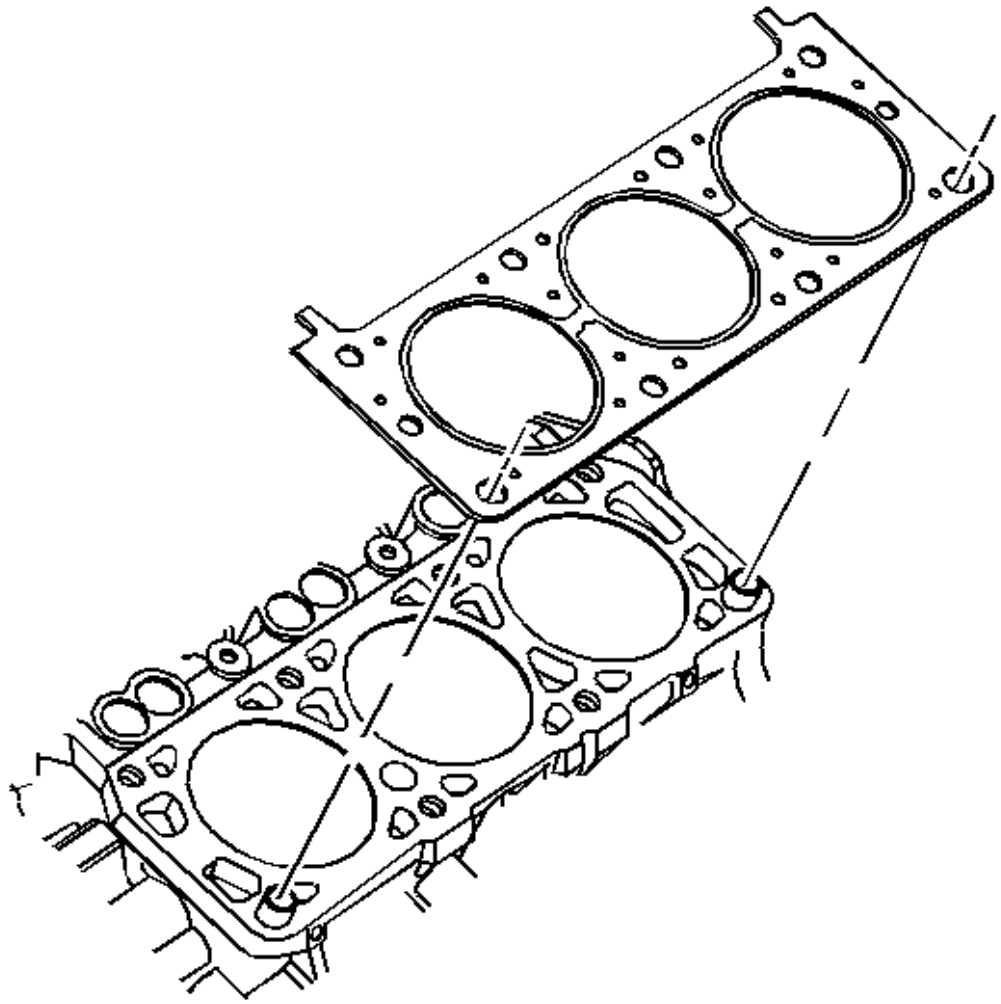

**Fig. 165: View Of Cylinder Head Gasket And Alignment Pins**
**Courtesy of GENERAL MOTORS CORP.**

16. Remove the cylinder head gasket.

**IMPORTANT: All gasket mating surfaces must remain free of oil and foreign material. Use GM P/N 12346139 (Canadian P/N 10953463) or equivalent to clean surfaces.**

17. Clean the following areas:
    - The gasket sealing surfaces on the cylinder head, cylinder block, intake manifold, and exhaust

 © 2011 Mitchell Repair Information Company, LLC.

manifold
- The cylinder block bolt threads

**Installation Procedure**

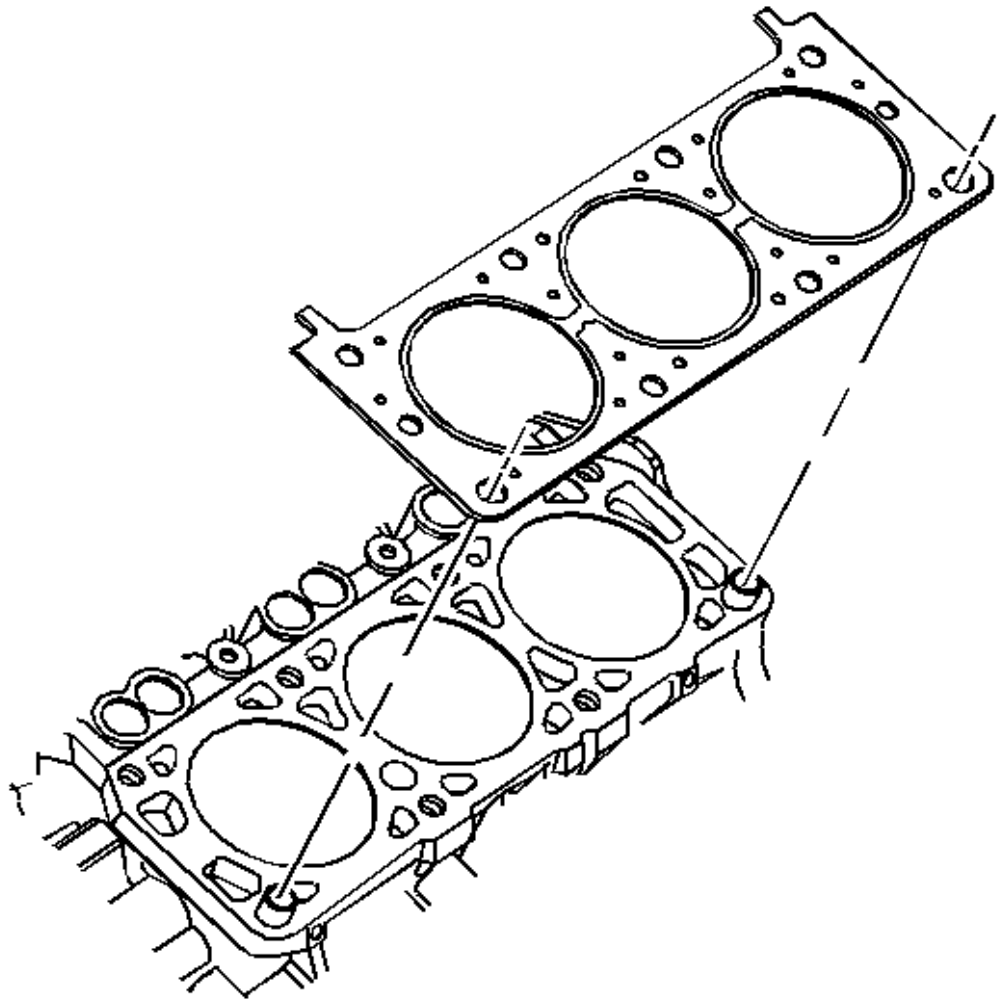

**Fig. 166: View Of Cylinder Head Gasket And Alignment Pins**
**Courtesy of GENERAL MOTORS CORP.**

1. Install the cylinder head gasket.

 © 2011 Mitchell Repair Information Company, LLC.

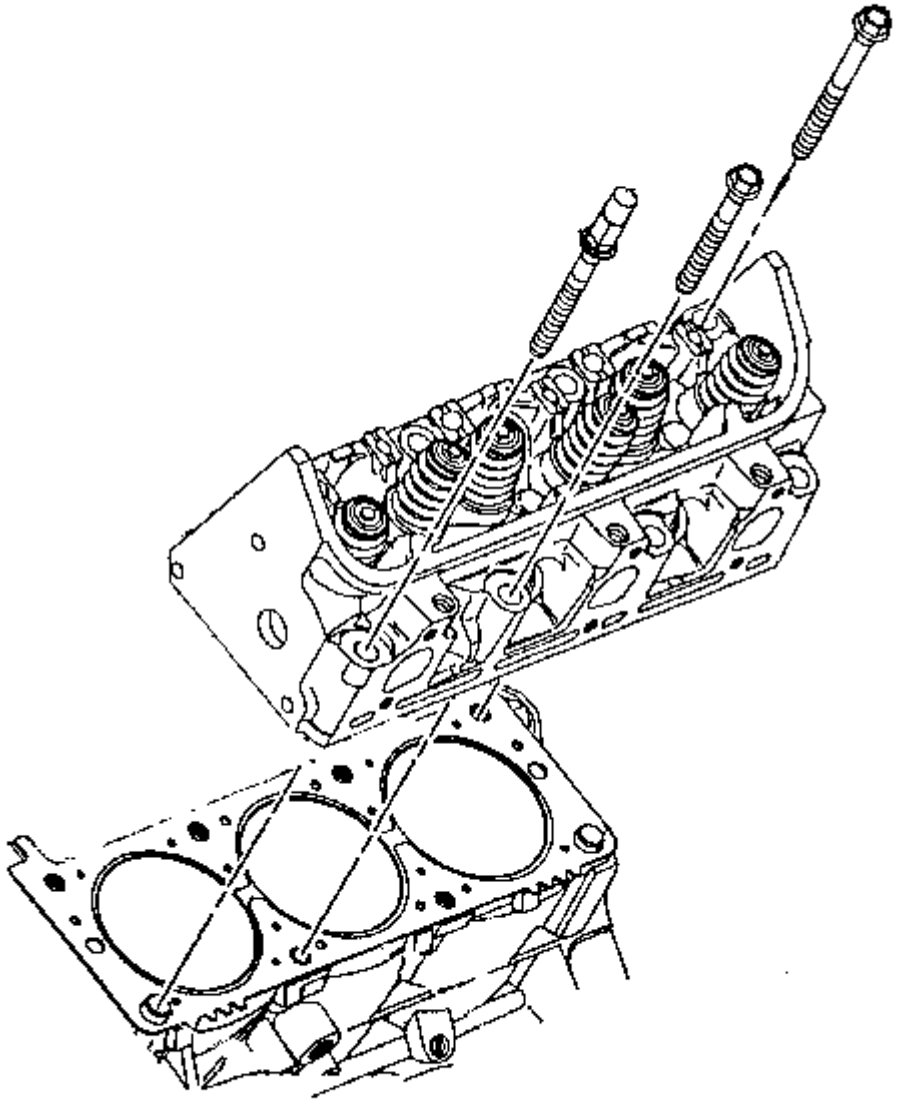

**Fig. 167: View Of Cylinder Head**
**Courtesy of GENERAL MOTORS CORP.**

2. Install the cylinder head.

 © 2011 Mitchell Repair Information Company, LLC.

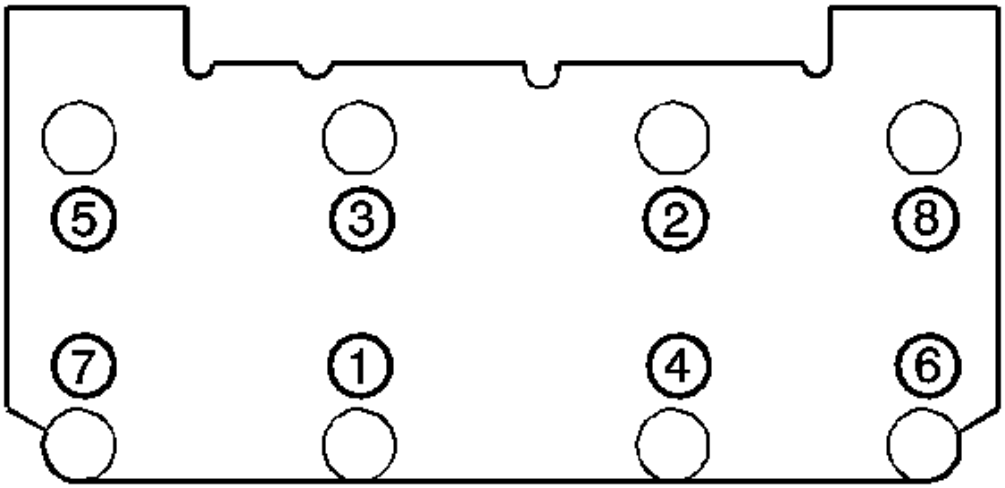


**Fig. 168: View Of Cylinder Head Bolt Tightening Sequence**
**Courtesy of GENERAL MOTORS CORP.**

**NOTE:** **This component uses torque-to-yield bolts. When servicing this component do not reuse the bolts, New torque-to-yield bolts must be installed. Reusing used torque-to-yield bolts will not provide proper bolt torque and clamp load. Failure to install NEW torque-to-yield bolts may lead to engine damage.**

**NOTE:** **Refer to Fastener Notice in Cautions and Notices.**

3. Install the NEW cylinder head bolts.

   **Tighten:** Tighten the bolts in sequence to 60 N.m (44 lb ft). Turn the bolts an additional 95 degrees using the **J 45059** . See **Special Tools**.

4. Install the generator bracket and engine lift bracket. Refer to **Generator Bracket/Engine Lift Bracket Replacement** in Engine Electrical.
5. Install the engine right side exhaust manifold. Refer to **Exhaust Manifold Replacement - Right** in Engine Exhaust.
6. Install the exhaust crossover pipe. Refer to **Exhaust Crossover Pipe Replacement** in Engine Exhaust.
7. Install the lower intake manifold. Refer to **Intake Manifold Replacement - Lower**.
8. Install the right valve rocker arm cover. Refer to **Valve Rocker Arm Cover Removal - Right**.
9. Install the engine left side spark plugs. Refer to **Spark Plug Replacement** in Engine Controls - 3.4L.

 © 2011 Mitchell Repair Information Company, LLC.

10. Install the engine left side spark plug wires to the spark plugs. Refer to **Spark Plug Wire Replacement** in Engine Controls - 3.4L.

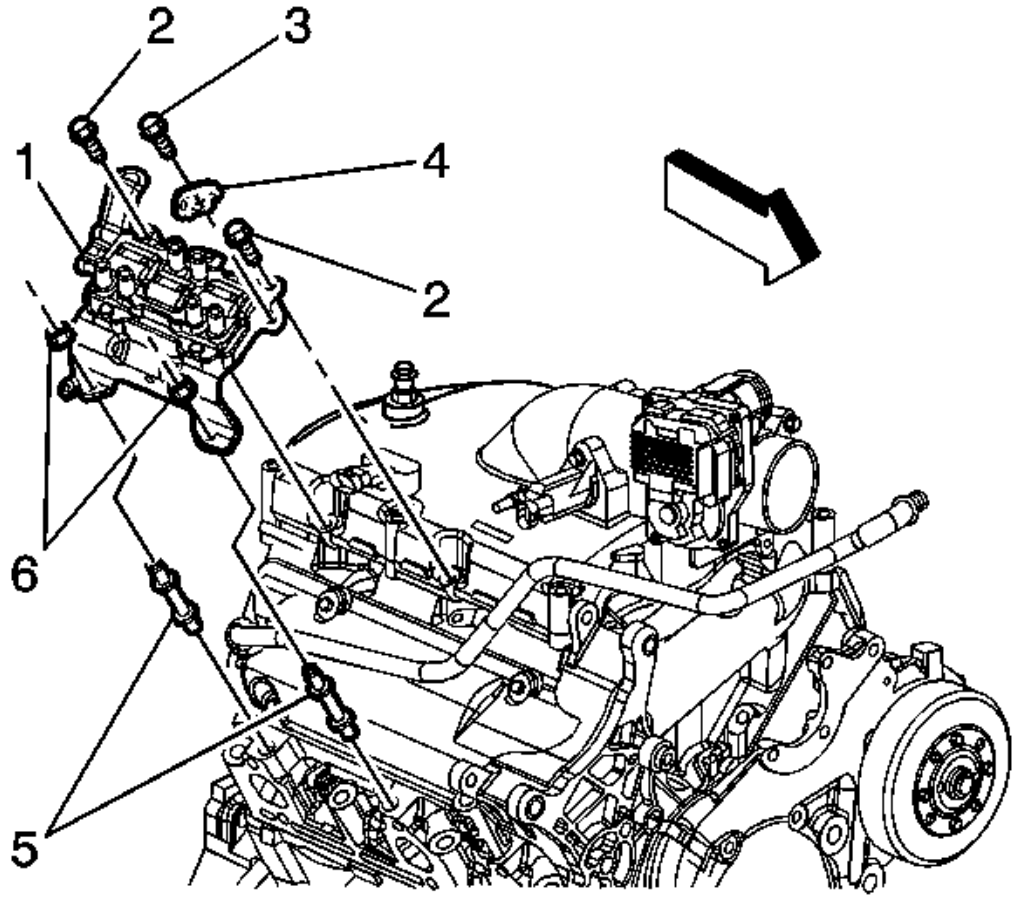


**Fig. 169: View Of Ignition Control Module Bracket & Components**
**Courtesy of GENERAL MOTORS CORP.**

11. Install the ignition module bracket studs (5).

    **Tighten:** Tighten the studs to 25 N.m (18 lb ft).

12. Install the ignition control module and bracket (1). Refer to **Ignition Control Module Bracket Replacement** in Engine Controls - 3.4L.
13. Install the engine coolant temperature sensor. Refer to **Engine Coolant Temperature (ECT) Sensor Replacement** in Engine Controls - 3.4L.

 © 2011 Mitchell Repair Information Company, LLC.

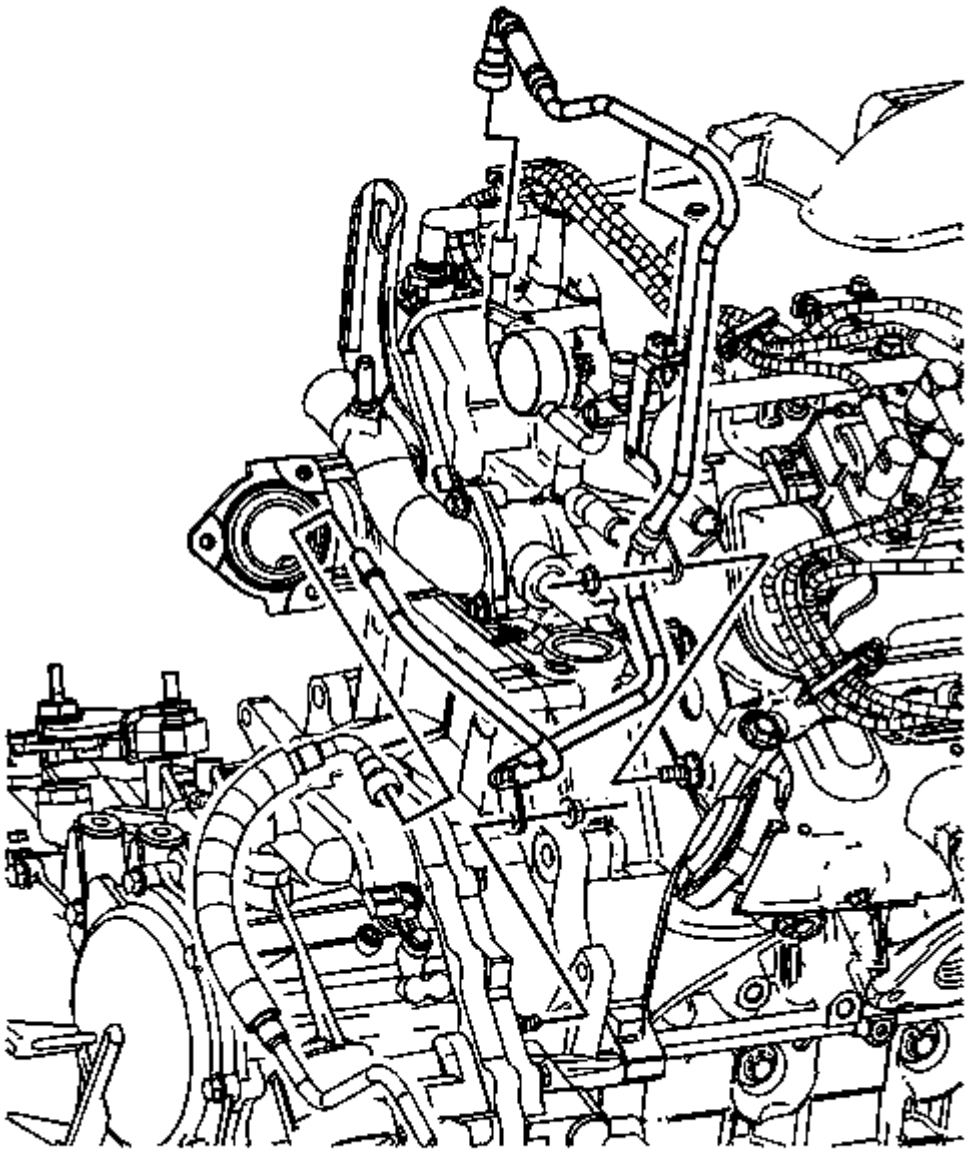

**Fig. 170: View Of Hose/Pipe Retainer-To-Right Cylinder Head Nut & Fuel Pipe-To-Transaxle Nut**
**Courtesy of GENERAL MOTORS CORP.**

14. Install the nut securing the hose/pipe retainer to the right cylinder head.

    **Tighten:** Tighten the nut to 25 N.m (18 lb ft).

 © 2011 Mitchell Repair Information Company, LLC.

15. Install the heater outlet pipe. Refer to **Heater Pipe Replacement - Outlet** in Engine Cooling.
16. Fill the cooling system with engine coolant. Refer to **Draining and Filling Cooling System (Static Fill)** or **Draining and Filling Cooling System (GE 47716 Fill)** in Engine Cooling.

**Engine Flywheel Replacement**

**Removal Procedure**

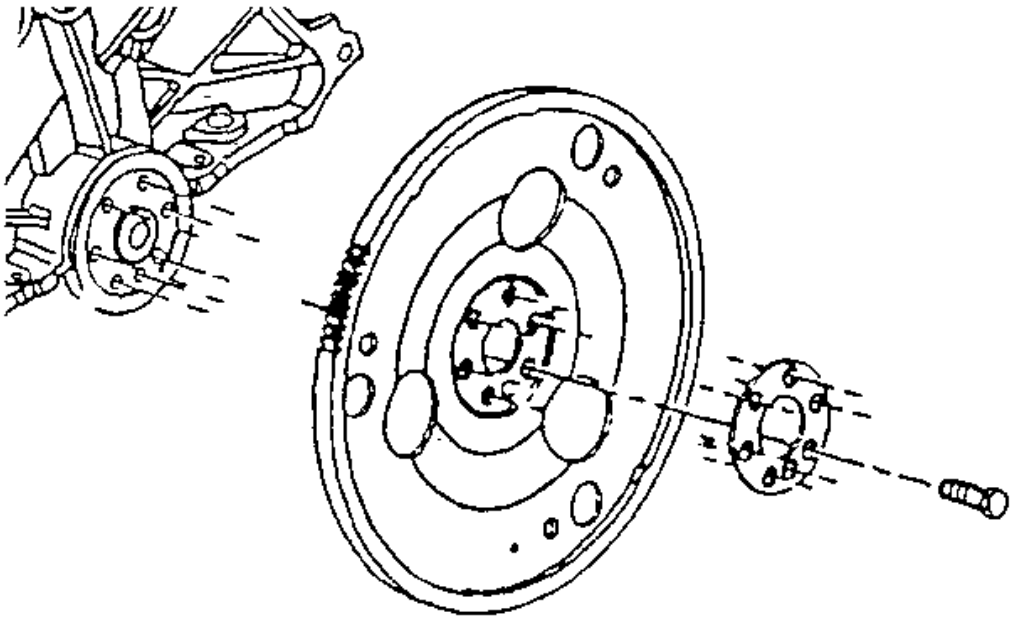

**Fig. 171: Identifying Engine Flywheel & Components**
**Courtesy of GENERAL MOTORS CORP.**

1. Remove the automatic transaxle. Refer to **Transaxle Replacement** in Automatic Transaxle - AF 33-5.
2. Remove the engine flywheel bolts and flywheel.
3. Clean the engine flywheel bolt threads and bolt holes.
4. Clean and inspect the engine flywheel.

**Installation Procedure**

 © 2011 Mitchell Repair Information Company, LLC.

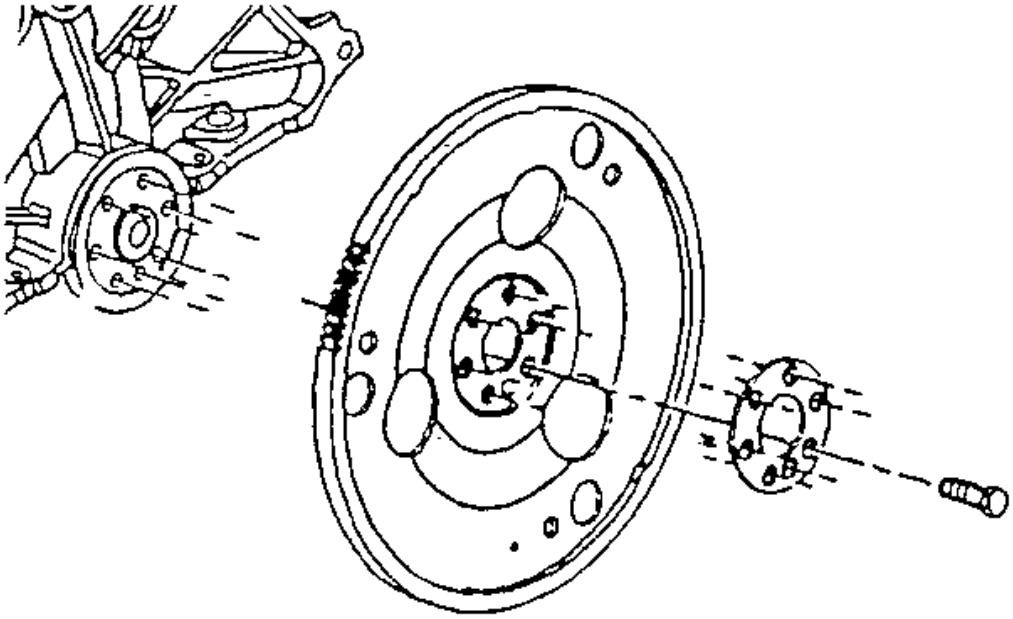

**Fig. 172: Identifying Engine Flywheel & Components**
**Courtesy of GENERAL MOTORS CORP.**

**NOTE: Refer to Fastener Notice in Cautions and Notices.**

1. Install the engine flywheel and bolts

   **Tighten:** Tighten bolts to 71 N.m (52 lb ft).

2. Install the automatic transaxle. Refer to **Transaxle Replacement** in Automatic Transaxle - AF 33-5.

**Crankshaft Rear Oil Seal Replacement**

**Tools Required**

**J 34686** Rear Main Seal Installer. See **Special Tools**.

**Removal Procedure**

 © 2011 Mitchell Repair Information Company, LLC.

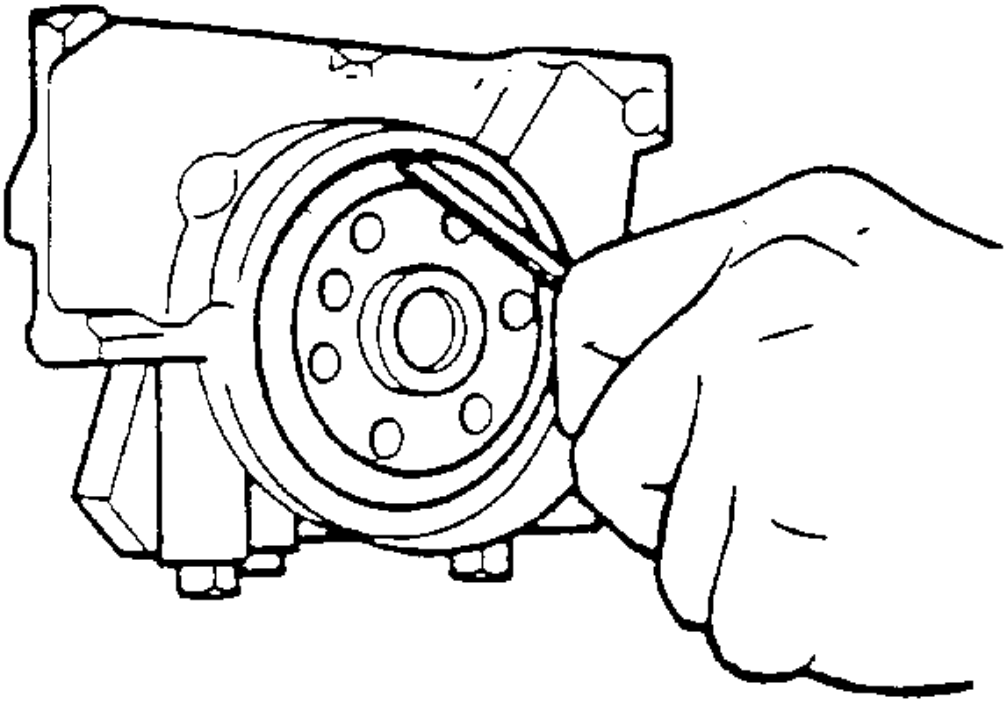

**Fig. 173: Removing Crankshaft Rear Oil Seal**
**Courtesy of GENERAL MOTORS CORP.**

**IMPORTANT: Do not damage the crankshaft or seal bore.**

1. Remove the engine flywheel. Refer to **Engine Flywheel Replacement**.
2. Remove the crankshaft rear oil seal.

   Pry the crankshaft rear oil seal out using a suitable tool.

**Installation Procedure**

 © 2011 Mitchell Repair Information Company, LLC.

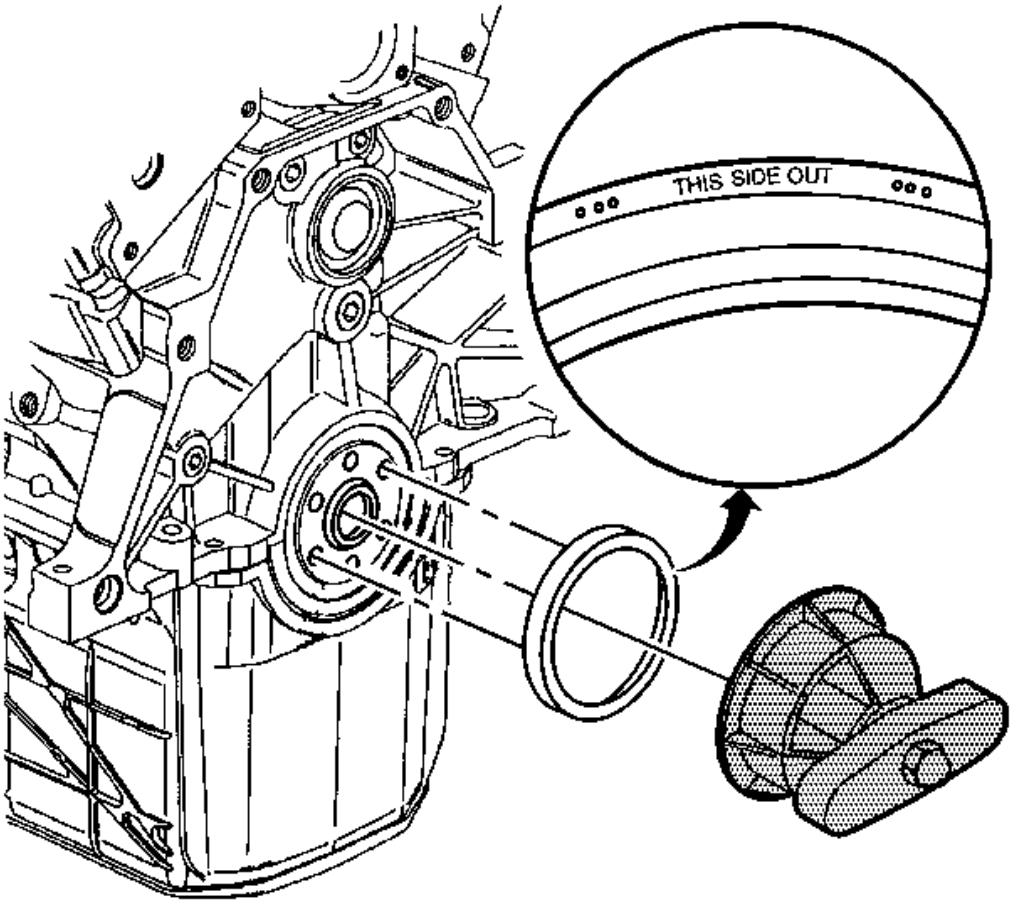


**Fig. 174: Installing Crankshaft Rear Oil Seal**
**Courtesy of GENERAL MOTORS CORP.**

**NOTE:** **Do not apply or use any oil lubrication on the crankshaft rear oil seal, or the seal installer. Do not touch the sealing lip of the oil seal once the protective sleeve is removed. Doing so will damage/deform the seal.**

**NOTE:** **Clean the crankshaft sealing surface with a clean, lint free towel. Inspect lead-in edge of crankshaft for burrs/sharp edges that could damage the rear main oil seal. Remove burrs/sharp edges with crocus cloth before proceeding.**

**IMPORTANT:** **Notice the direction of the rear oil seal. The new design is a reverse style as opposed to what has been used in the past. "THIS SIDE OUT" has been**

 © 2011 Mitchell Repair Information Company, LLC.

**stamped into the seal as shown in the graphic.**

1. Carefully remove the protection sleeve from the new crankshaft rear oil seal.
2. Install the crankshaft rear oil seal onto the **J 34686** by sliding the crankshaft rear oil seal over the mandrel using a twisting motion until the back of the crankshaft rear oil seal bottoms squarely against the collar of the tool. See **Special Tools**.

**NOTE: Refer to Fastener Notice in Cautions and Notices.**

3. Perform the following steps in order to install the crankshaft rear oil seal:
   1. Align the dowel pin of the **J 34686** with the dowel pin in the crankshaft. See **Special Tools**.
   2. Attach the **J 34686** to the crankshaft by hand, or tighten the attaching screws to 5 N. See **Special Tools**.m (45 lb in).
   3. Turn the T-handle of the **J 34686** in order to engage allow the collar to push the seal into the bore. See **Special Tools**. Turn the handle until the collar is tight against the engine block.

      Ensure that the seal is seated properly.

   4. Loosen the T-handle until the handle comes to a stop.
   5. Remove the attaching screws.
4. Install the engine flywheel. Refer to **Engine Flywheel Replacement**.

**Camshaft Rear Bearing Hole Plug Replacement**

**Removal Procedure**

1. Remove the engine flywheel. Refer to **Engine Flywheel Replacement**.

 © 2011 Mitchell Repair Information Company, LLC.

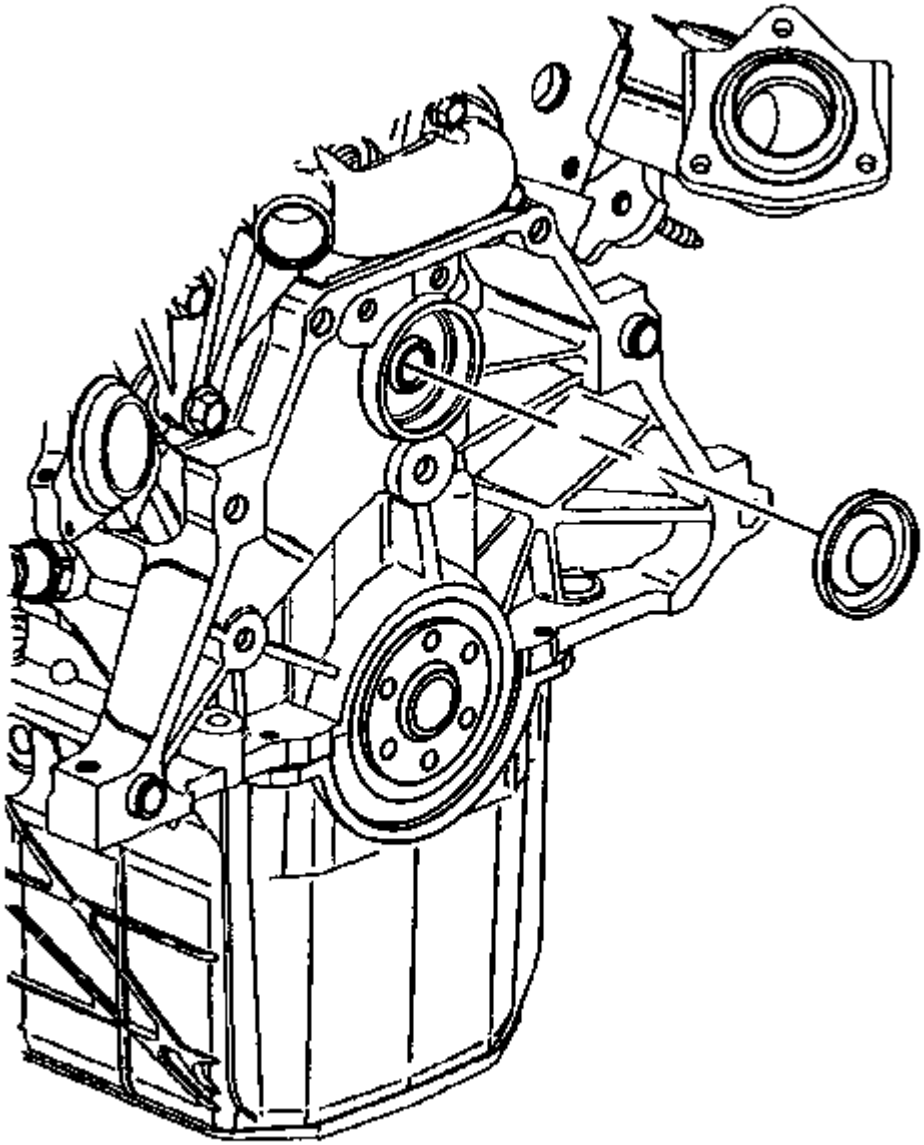

**Fig. 175: View Of Camshaft Rear Bearing Hole Plug**
**Courtesy of GENERAL MOTORS CORP.**

2. Remove the camshaft rear bearing hole plug.

**Installation Procedure**

 © 2011 Mitchell Repair Information Company, LLC.

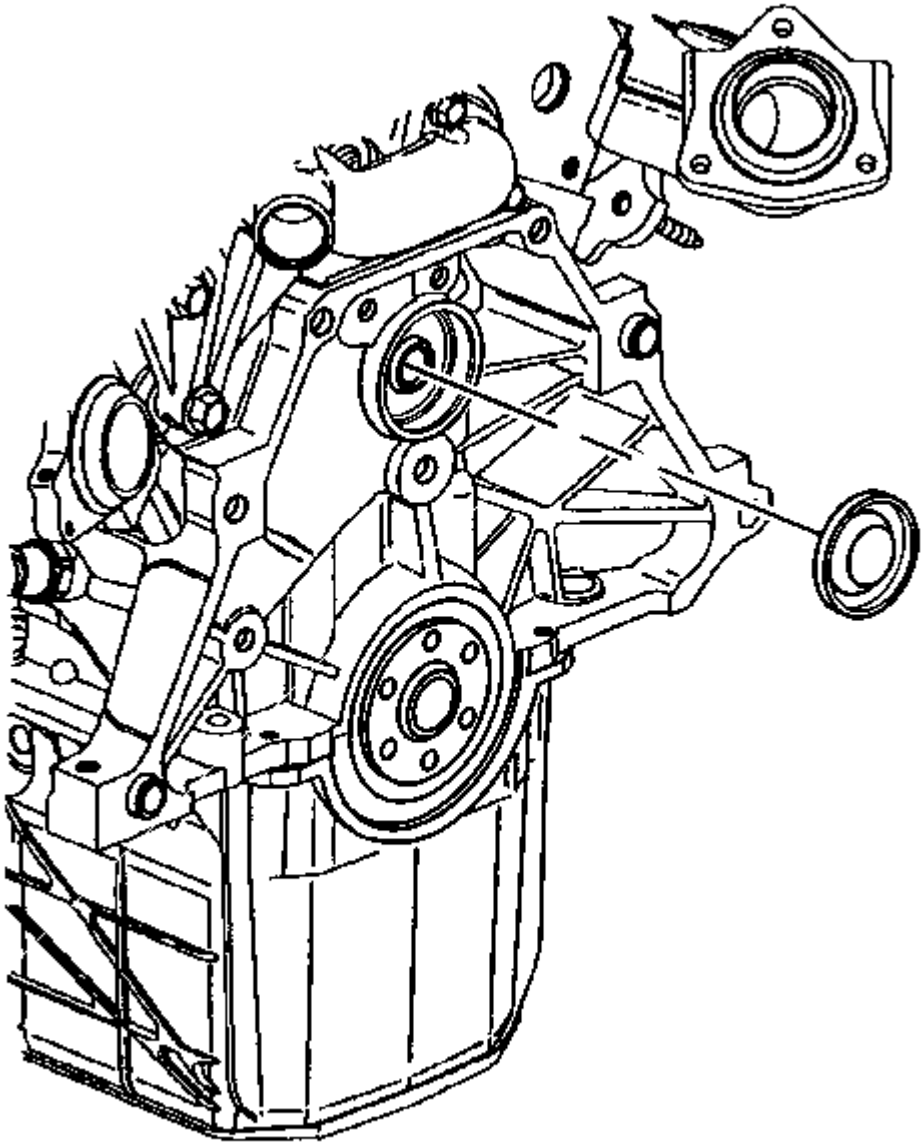

**Fig. 176: View Of Camshaft Rear Bearing Hole Plug**
**Courtesy of GENERAL MOTORS CORP.**

**IMPORTANT: Inspect plug bore for old sealant. Ensure bore is clean and free of knicks and burs.**

1. Apply sealer GM P/N 12377901 (Canadian P/N 10953504) or equivalent to the camshaft rear bearing

 © 2011 Mitchell Repair Information Company, LLC.

hole plug.

2. Install the camshaft rear bearing hole plug.

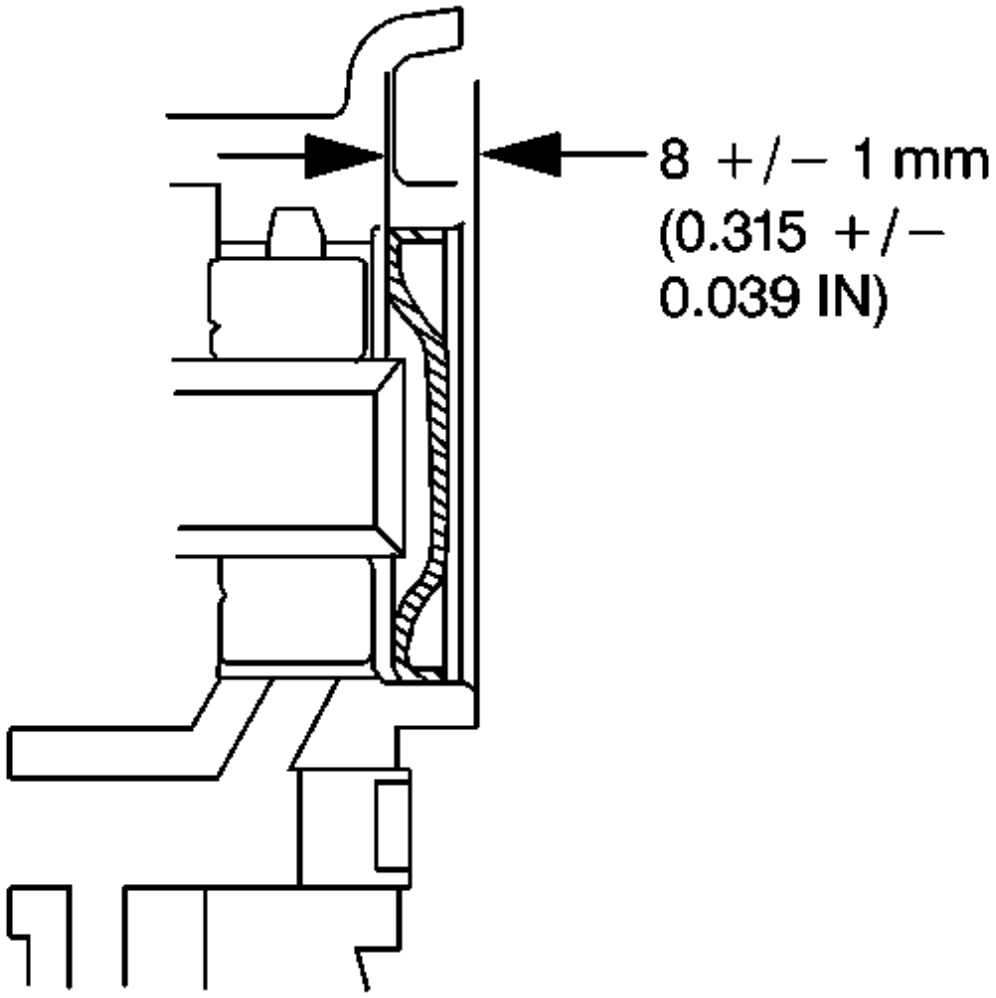


**Fig. 177: Illustrating Proper Camshaft Rear Bearing Plug Specifications**
**Courtesy of GENERAL MOTORS CORP.**

3. Ensure that the camshaft rear bearing plug is installed to specifications.
4. Install the engine flywheel. Refer to **Engine Flywheel Replacement**.

**Engine Replacement**

 © 2011 Mitchell Repair Information Company, LLC.

**Removal Procedure**

1. Remove the battery box and carefully set the engine control module (ECM) on top of the engine. Refer to **Battery Box Replacement** in Engine Electrical.

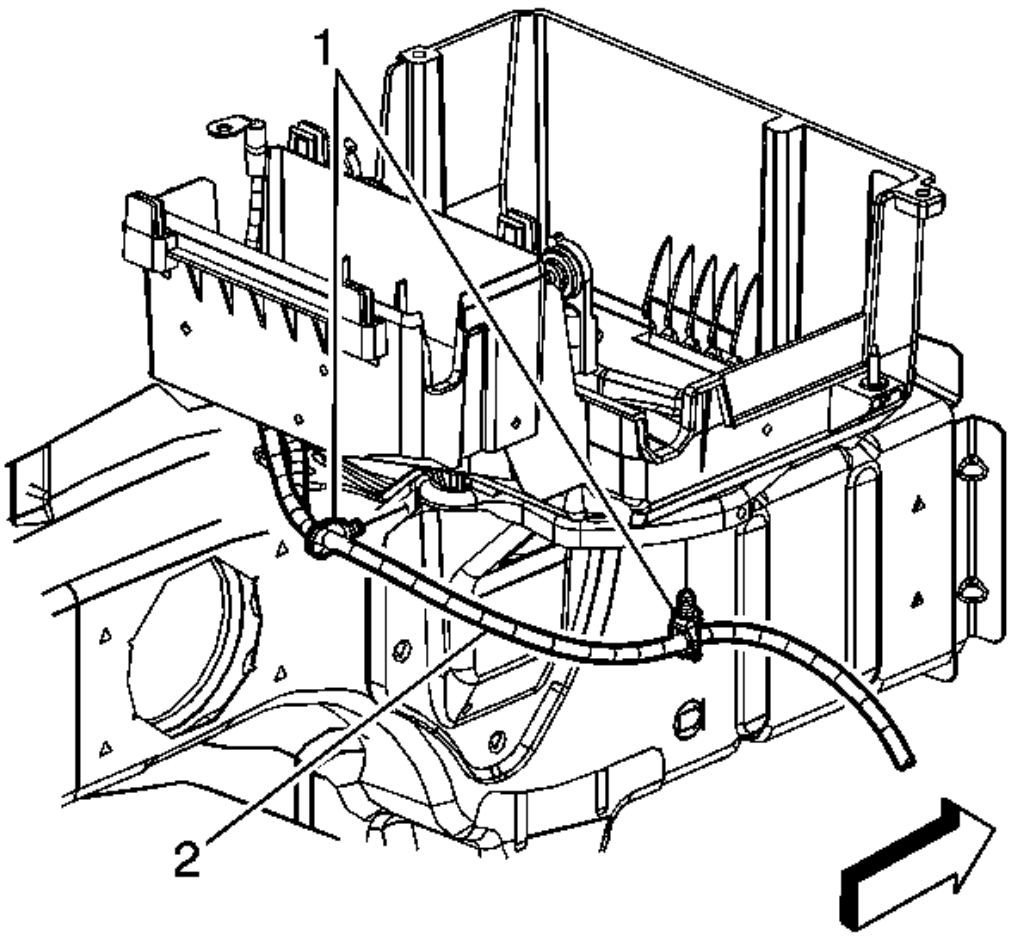


**Fig. 178: View Of Battery Cable Retainers At Battery Tray**
**Courtesy of GENERAL MOTORS CORP.**

2. Remove the battery cable retainers (1) from the battery tray.

 © 2011 Mitchell Repair Information Company, LLC.

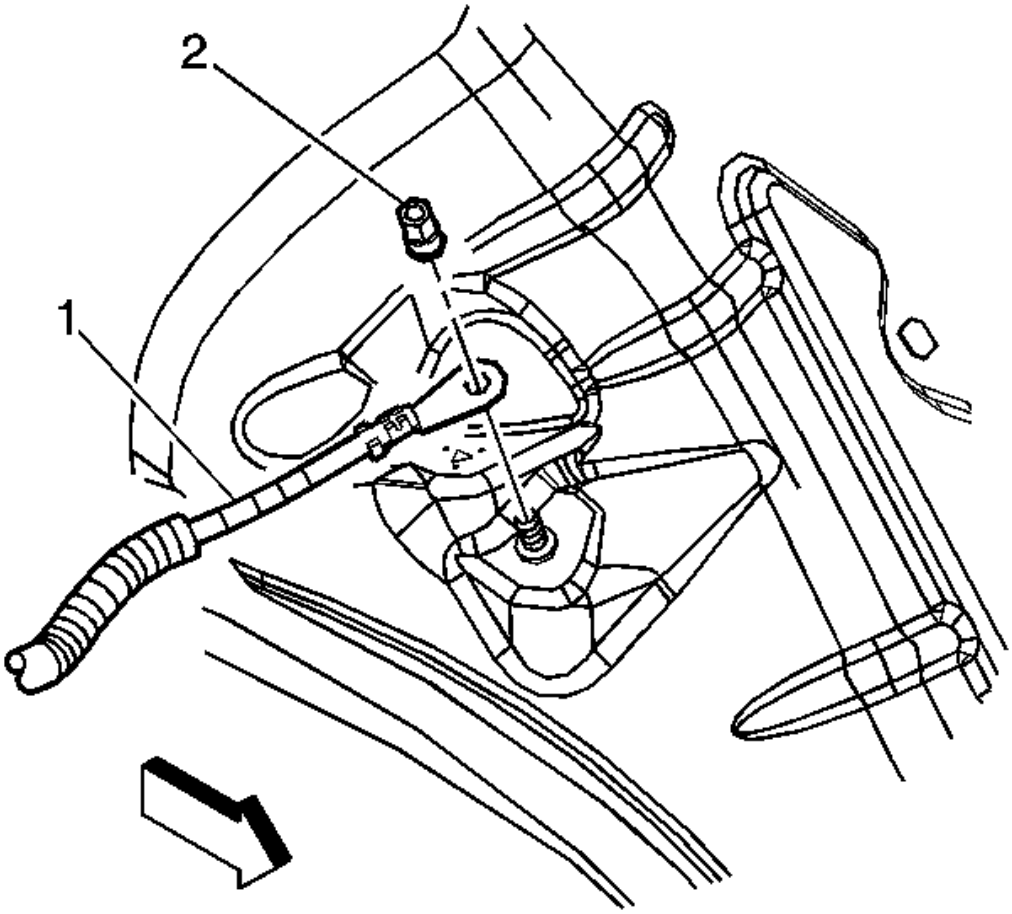


**Fig. 179: View Of Negative Battery Cable At Inner Fender Body Ground Stud**
**Courtesy of GENERAL MOTORS CORP.**

3. Remove the negative battery cable nut (2) from the inner fender body ground stud.
4. Remove the negative battery cable (1) from the inner fender body ground stud.
5. Remove the fuel injector sight shield. Refer to **Fuel Injector Sight Shield Replacement**.

 © 2011 Mitchell Repair Information Company, LLC.

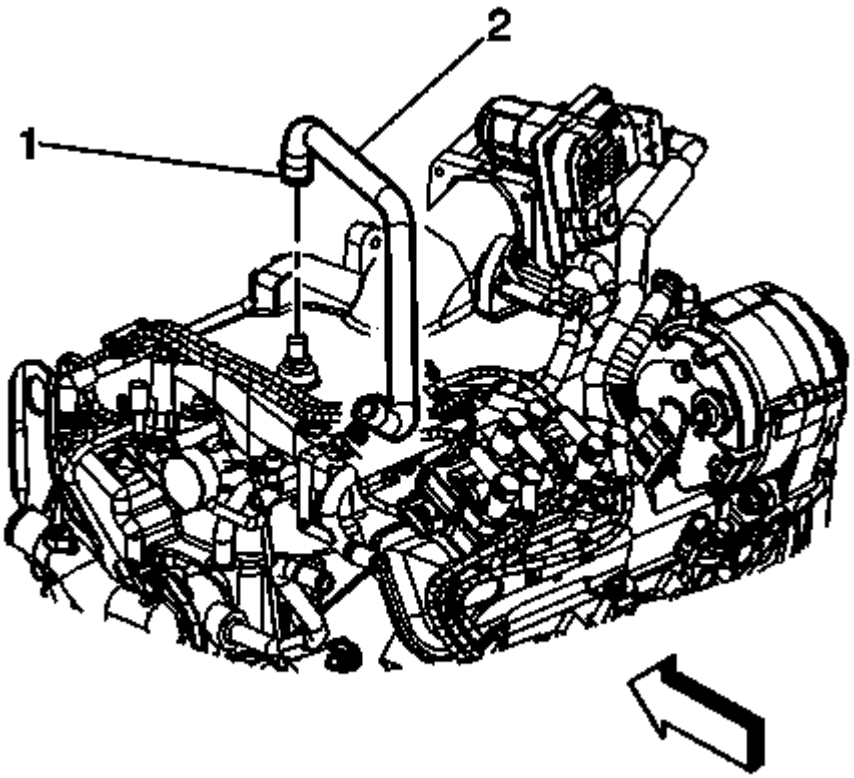


**Fig. 180: View Of Brake Booster Vacuum Hose**
**Courtesy of GENERAL MOTORS CORP.**

6. Release the clamp (1) from the brake booster vacuum hose connection.
7. Disconnect the brake booster vacuum hose (2) from the intake manifold.

 © 2011 Mitchell Repair Information Company, LLC.

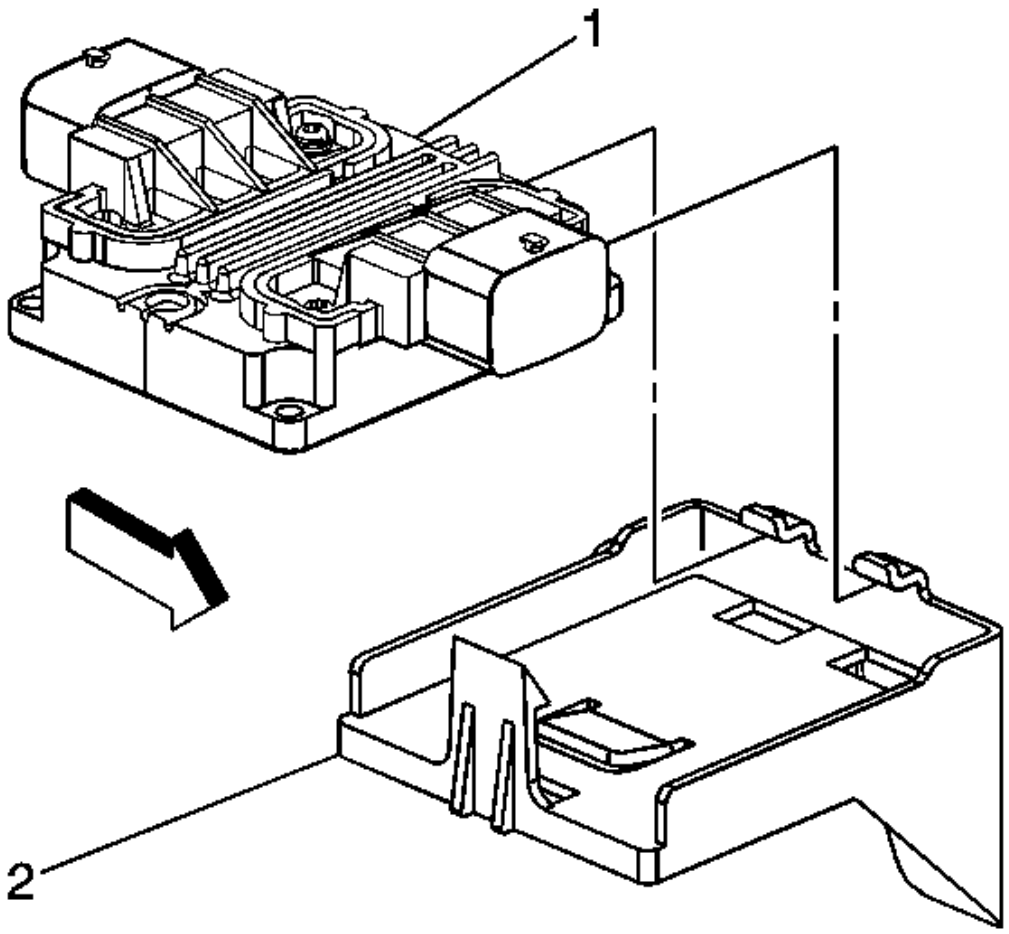


**Fig. 181: View Of TCM & Bracket**
**Courtesy of GENERAL MOTORS CORP.**

8. Remove the transaxle control module (TCM) (1) from the bracket (2) and set the TCM on top of the engine.
9. Remove the air cleaner assembly and air intake duct. Refer to **Air Cleaner Assembly Replacement** in Engine Controls - 3.4L.
10. Discharge the fuel system. Refer to **Fuel Pressure Relief Procedure** in Engine Controls - 3.4L.
11. Disconnect the evaporative emission (EVAP) hose/pipe from the EVAP canister purge solenoid valve. Refer to **Quick Connect Fitting(s) Service (Plastic Collar)** in Engine Controls - 3.4L.

 © 2011 Mitchell Repair Information Company, LLC.

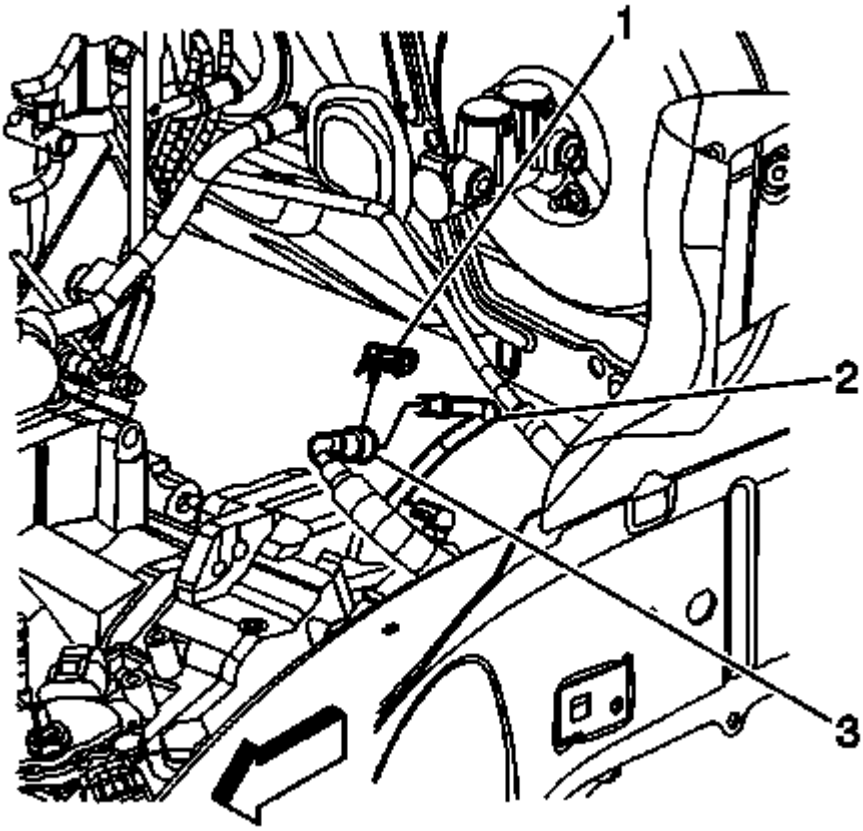


**Fig. 182: Disconnecting/Connecting Engine Fuel Hose/Pipe At Chassis Fuel Hose/Pipe**
**Courtesy of GENERAL MOTORS CORP.**

12. Disconnect the engine fuel hose/pipe (3) from the chassis fuel hose/pipe (2). Refer to **Quick Connect Fitting(s) Service (Metal Collar)** in Engine Controls - 3.4L.
13. Discharge the air conditioning (A/C) system. Refer to **Refrigerant Recovery and Recharging** in Heating, Ventilation and Air Conditioning.
14. Remove the A/C compressor hose assembly from the compressor. Cap or plug the hoses and compressor to prevent contamination. Refer to **Compressor Hose Assembly Replacement** in Heating, Ventilation and Air Conditioning.
15. Disconnect the transaxle shift control cable from the transaxle. Refer to **Shift Control Cable Replacement** in Automatic Transaxle - AF33-5.

 © 2011 Mitchell Repair Information Company, LLC.

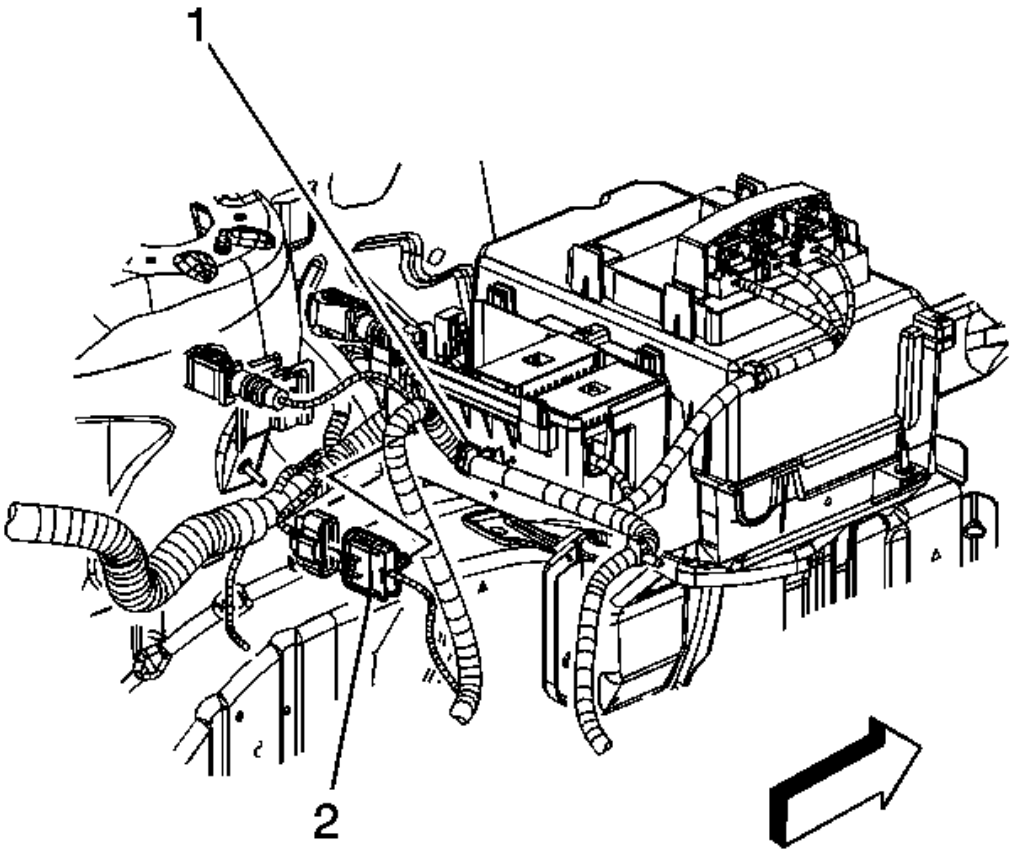


**Fig. 183: View Of Engine Wire Harness Retainer & Connector**
**Courtesy of GENERAL MOTORS CORP.**

16. Disconnect engine to body inline connector C102 (2).
17. Drain the engine coolant from the cooling system. Refer to **Draining and Filling Cooling System (Static Fill)** or **Draining and Filling Cooling System (GE 47716 Fill)** in Engine Cooling.
18. Tie the radiator, A/C condenser, and fan module assembly to the upper radiator support to keep the assembly with the vehicle when the frame and drivetrain is removed.
19. Remove the coolant surge tank. Refer to **Surge Tank Replacement** in Engine Cooling.
20. Disconnect the heater hoses from the engine. Refer to **Heater Hose Replacement - Inlet** in Heating, Ventilation and Air Conditioning.
21. Remove the radiator inlet hose. Refer to **Radiator Hose Replacement - Inlet** in Engine Cooling.
22. Raise and support the vehicle. Refer to **Lifting and Jacking the Vehicle** in General Information.
23. Remove the radiator outlet hose. Refer to **Radiator Hose Replacement - Outlet** in Engine Cooling.

 © 2011 Mitchell Repair Information Company, LLC.

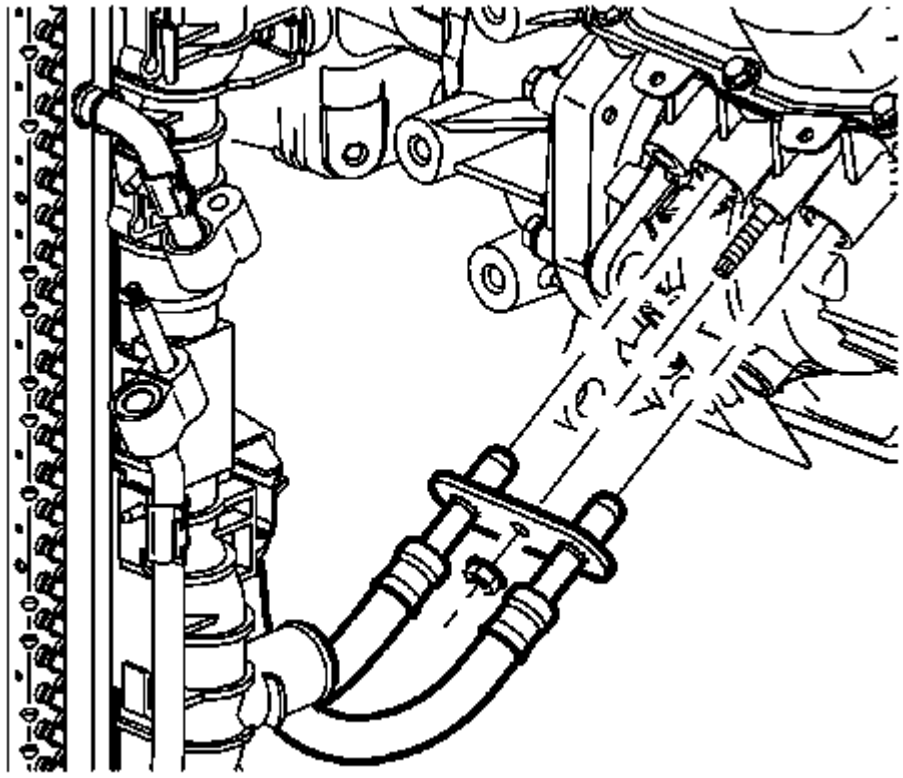

**Fig. 184: View Of Transaxle Oil Cooler Line Assembly**
**Courtesy of GENERAL MOTORS CORP.**

24. Disconnect the transaxle oil cooler lines from the transaxle and remove the seals. Refer to **Oil Cooler Pipe Seals Replacement** in Automatic Transaxle - AF33-5.
25. Cap the transaxle oil cooler lines and plug the transaxle oil cooler line fittings to prevent loss of transmission fluid.
26. Remove the front bumper fascia air deflector. Refer to **Air Deflector Replacement - Front Bumper Fascia** in Bumpers.

 © 2011 Mitchell Repair Information Company, LLC.

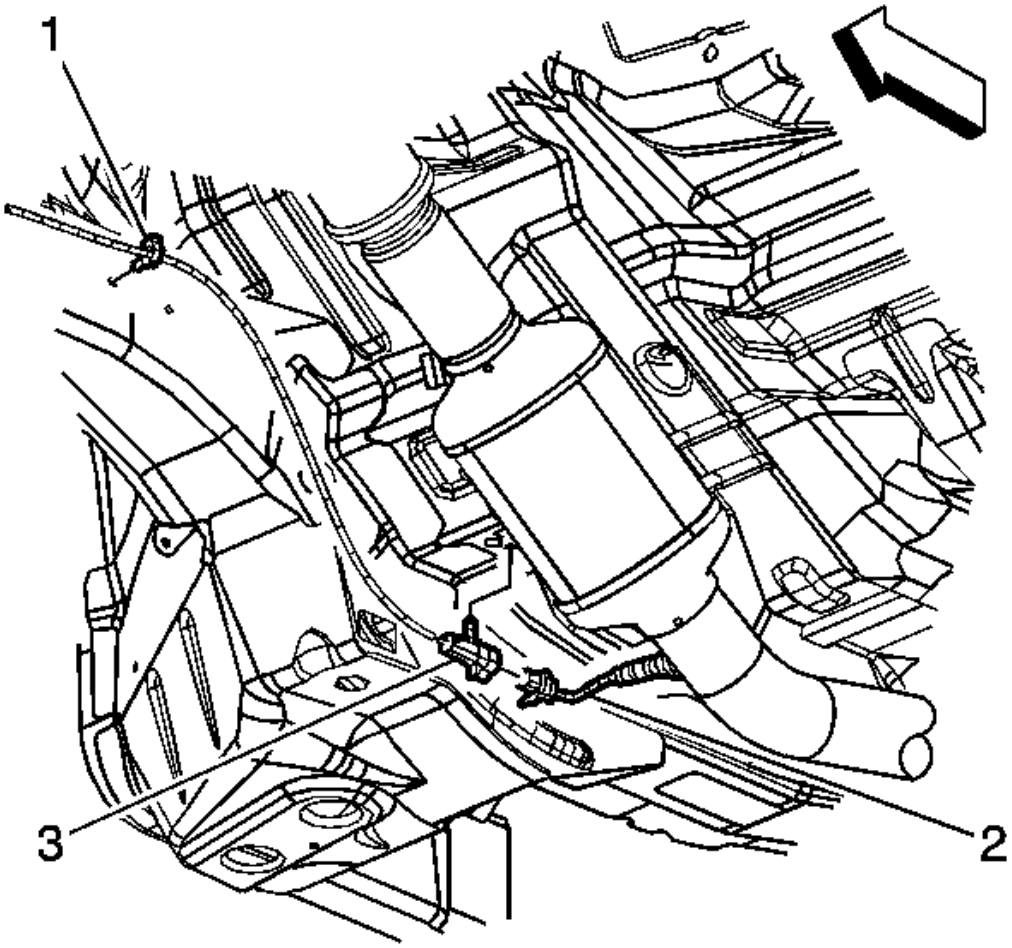


**Fig. 185: View Of HO2S 2 & Harness Connector**
**Courtesy of GENERAL MOTORS CORP.**

27. Disconnect the heated oxygen sensor (HO2S) 2 wiring harness (2).
28. Remove the HO2S 2 wiring harness retainers (1, 3) from the vehicle underbody.
29. Remove the catalytic converter and secure the rear half of the exhaust system to the vehicle underbody. Refer to **Catalytic Converter Replacement** in Engine Exhaust.

 © 2011 Mitchell Repair Information Company, LLC.

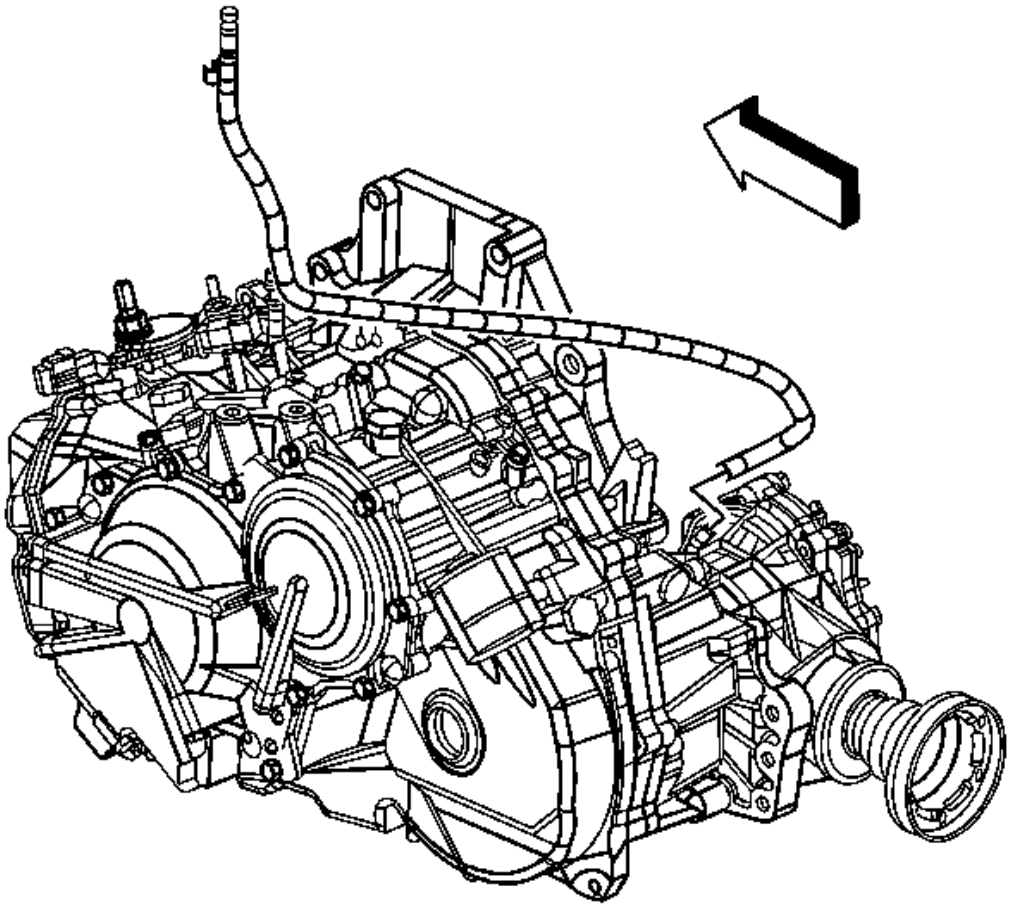

**Fig. 186: View Of Transfer Case Vent Hose**
**Courtesy of GENERAL MOTORS CORP.**

30. If equipped with all wheel drive (AWD), disconnect the transfer case vent hose from the transfer case.
31. Remove the front tires. Refer to **Tire and Wheel Removal and Installation** in Tires and Wheels.
32. Remove the right and left engine splash shields. Refer to **Splash Shield Replacement - Engine** in Body Front End.

 © 2011 Mitchell Repair Information Company, LLC.

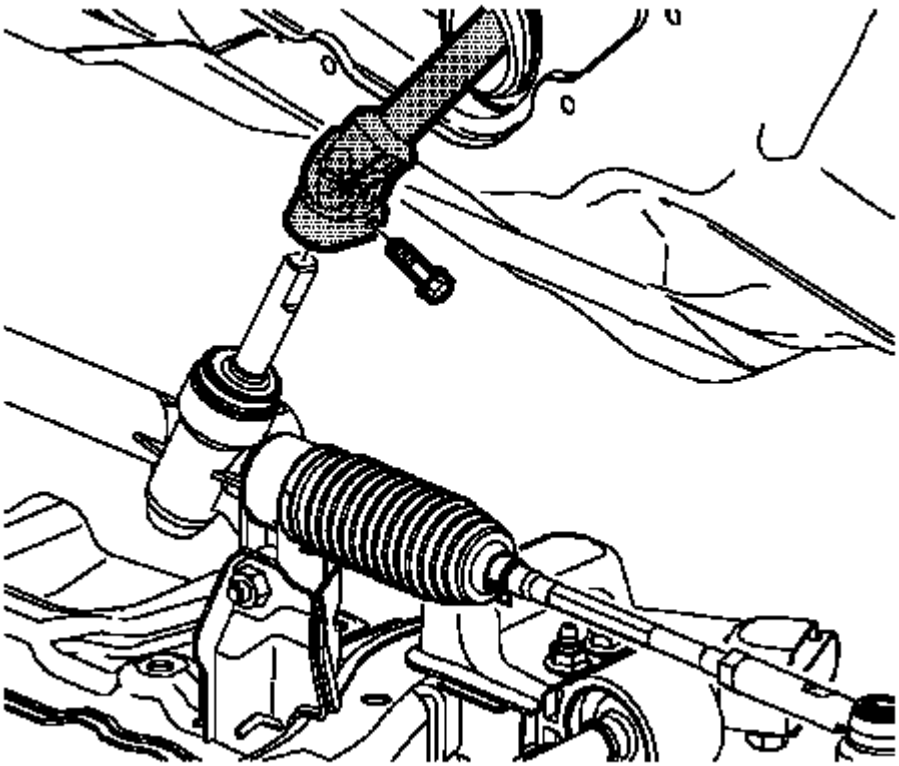

**Fig. 187: Removing/Installing Steering Shaft To Intermediate Shaft**
**Courtesy of GENERAL MOTORS CORP.**

33. Remove the steering intermediate shaft pinch bolt and discard the bolt.
34. Disconnect the steering intermediate shaft from the steering gear.

 © 2011 Mitchell Repair Information Company, LLC.

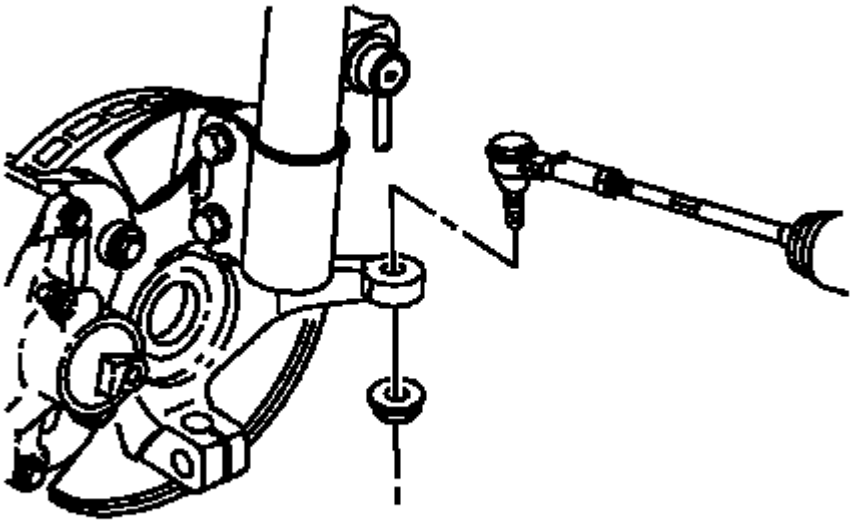

**Fig. 188: View Of Tie Rod End To Steering Knuckle**
**Courtesy of GENERAL MOTORS CORP.**

35. Remove the right and left outer tie rod ends from the steering knuckles. Refer to **Rack and Pinion Outer Tie Rod End Replacement** in Power Steering System.

 © 2011 Mitchell Repair Information Company, LLC.

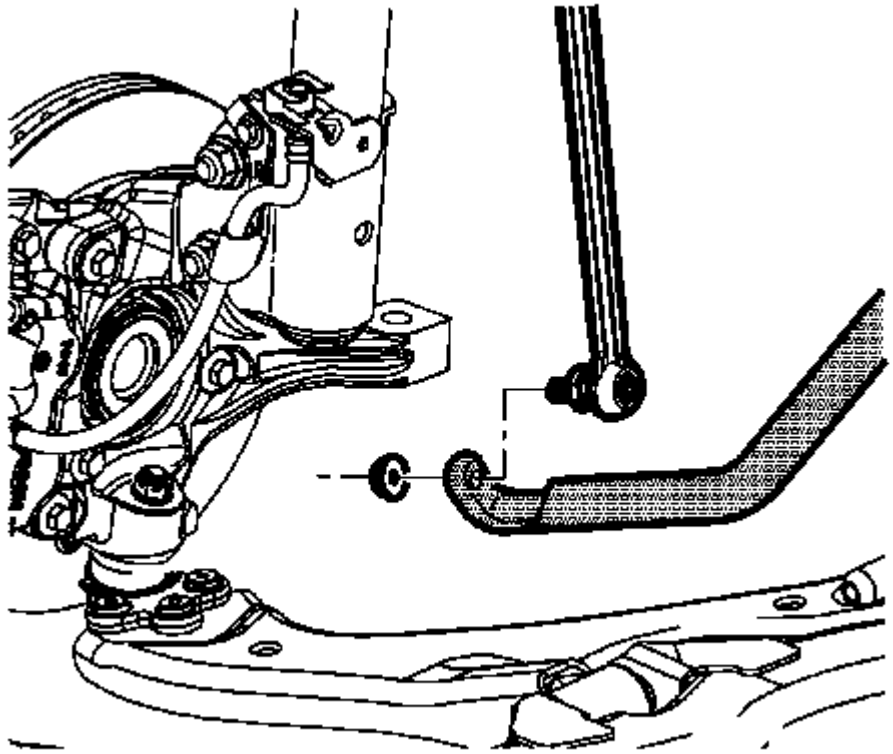

**Fig. 189: View Of Stabilizer Shaft & Link**
**Courtesy of GENERAL MOTORS CORP.**

36. Remove the right and left stabilizer shaft links from the stabilizer shaft. Refer to **Stabilizer Shaft Link Replacement** in Front Suspension.

 © 2011 Mitchell Repair Information Company, LLC.

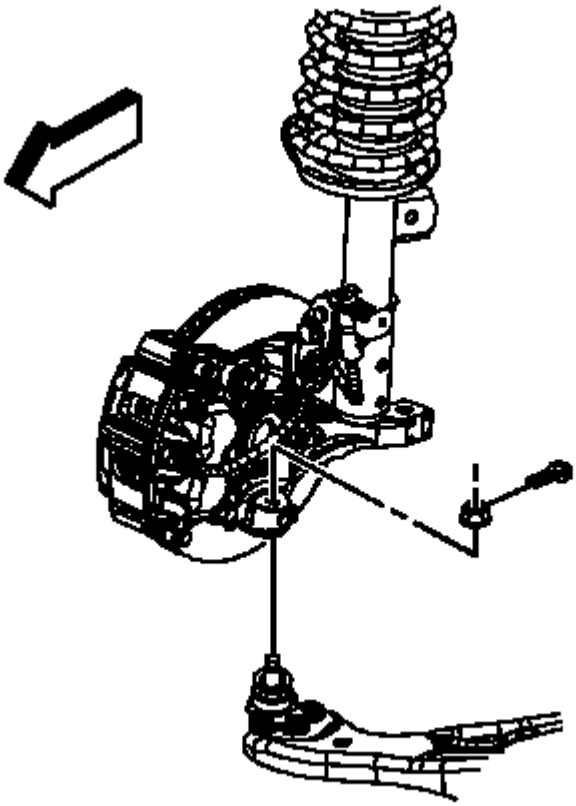

**Fig. 190: View Of Lower Ball Joint At Steering Knuckle**
**Courtesy of GENERAL MOTORS CORP.**

37. Remove the right and left lower ball joints from the steering knuckles. Refer to **Lower Control Arm Replacement** in Front Suspension.
38. Remove the right and left front wheel drive shafts. Refer to **Wheel Drive Shaft Replacement - Front** in Wheel Drive Shafts.
39. If equipped with AWD, remove the rear propeller shaft. Refer to **Propeller Shaft Replacement** in Propeller Shaft.

 © 2011 Mitchell Repair Information Company, LLC.

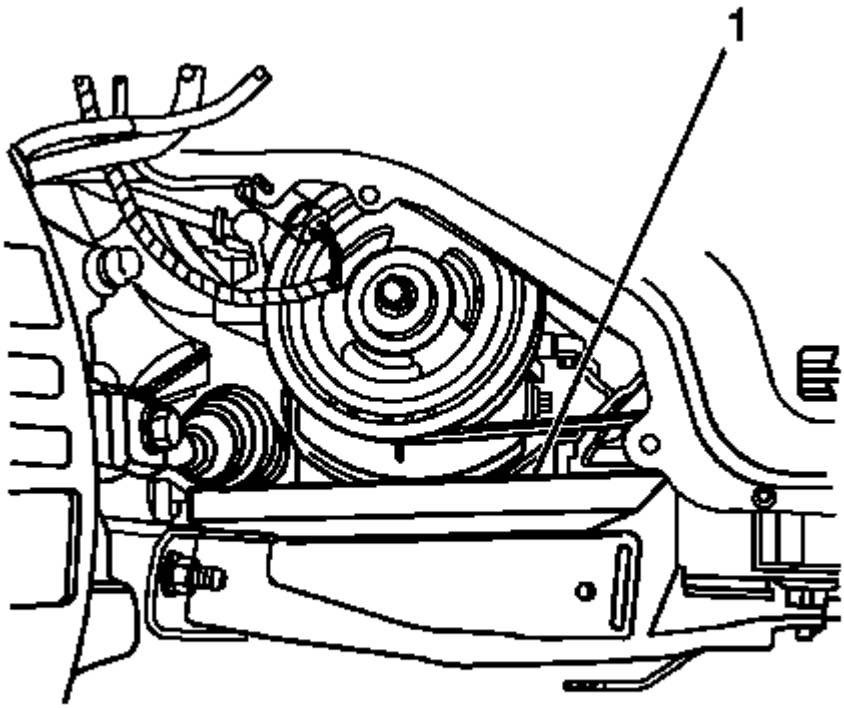


**Fig. 191: Removing/Installing Block Of Wood Between Frame & Engine Oil Pan**
**Courtesy of GENERAL MOTORS CORP.**

40. Place a block of wood (1) between the frame and the engine oil pan in order to support the engine once the bolts are removed from the right engine mount.

 © 2011 Mitchell Repair Information Company, LLC.

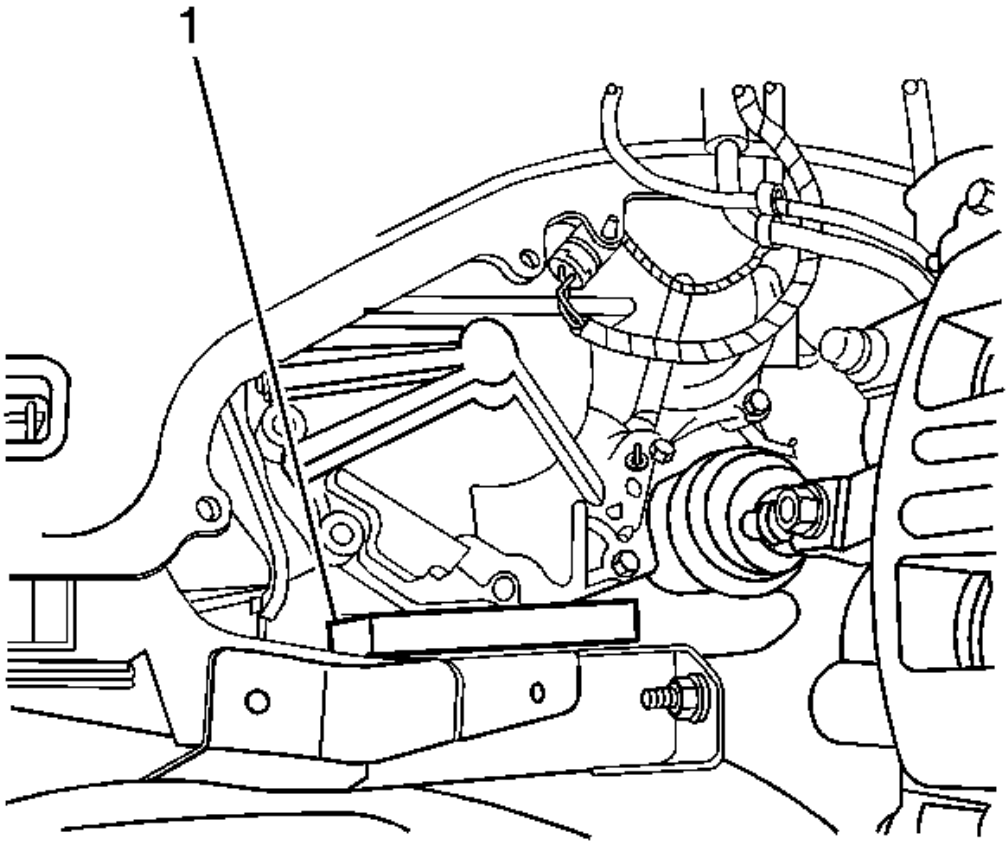


**Fig. 192: Removing/Installing Block Of Wood Between Frame & Transaxle**
**Courtesy of GENERAL MOTORS CORP.**

41. Place a block of wood (1) between the frame and the transaxle in order to support the transaxle once the bolts are removed from the left transaxle mount.
42. Lower the vehicle.

 © 2011 Mitchell Repair Information Company, LLC.

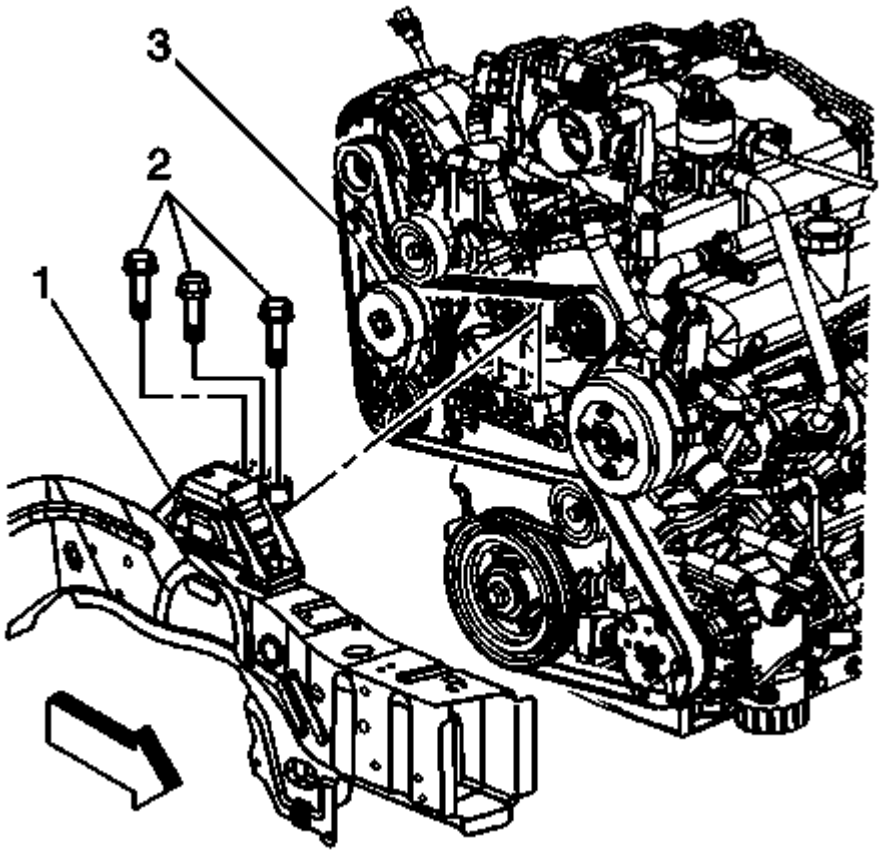


**Fig. 193: View Of Right Engine Mount & Bolts**
**Courtesy of GENERAL MOTORS CORP.**

43. Remove the bolts (2) that secure the right engine mount (1) to the engine (3).

 © 2011 Mitchell Repair Information Company, LLC.

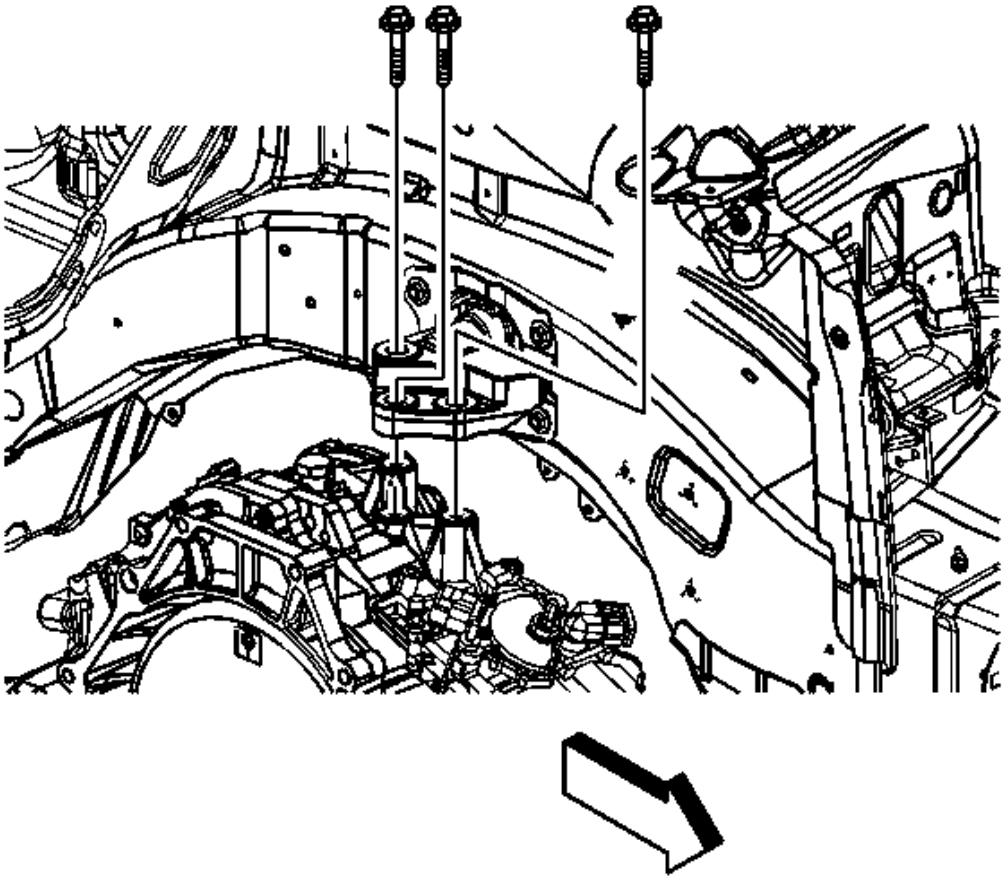

**Fig. 194: Removing/Installing Transaxle Mount (Left) Bolts**
**Courtesy of GENERAL MOTORS CORP.**

44. Remove the bolts that secure the left transaxle mount to the transaxle.

**IMPORTANT: Insure the vehicle body is secured to the hoist.**

45. Raise the vehicle.
46. Place a universal frame support fixture or jackstands under the frame.
47. Lower the vehicle until the frame contacts the frame support fixture or jackstands.

 © 2011 Mitchell Repair Information Company, LLC.

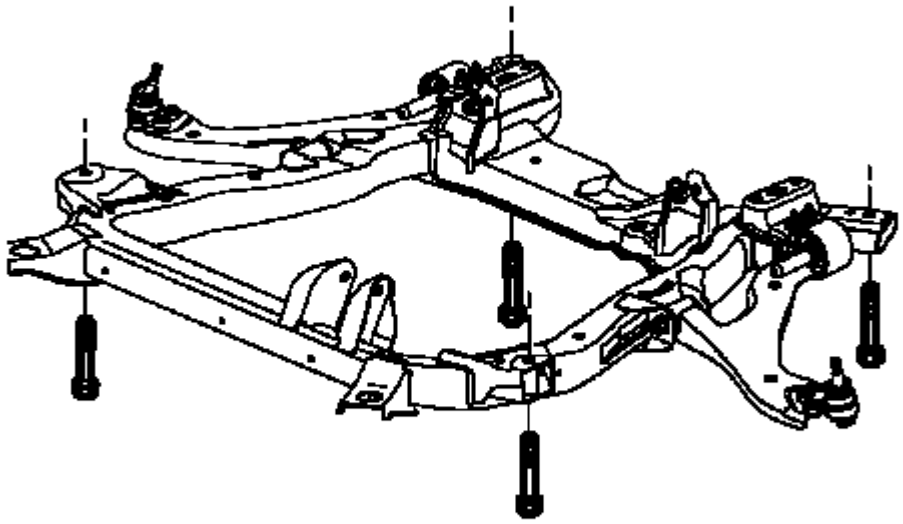

**Fig. 195: Removing/Installing Frame To Body Bolts**
**Courtesy of GENERAL MOTORS CORP.**

48. Remove the frame-to-body bolts. Discard the bolts.

**IMPORTANT: Inspect for areas of body to powertrain contact or entanglement of wires and hoses while separating the vehicle body and powertrain.**

49. Carefully raise the vehicle body up away from the powertrain.

 © 2011 Mitchell Repair Information Company, LLC.

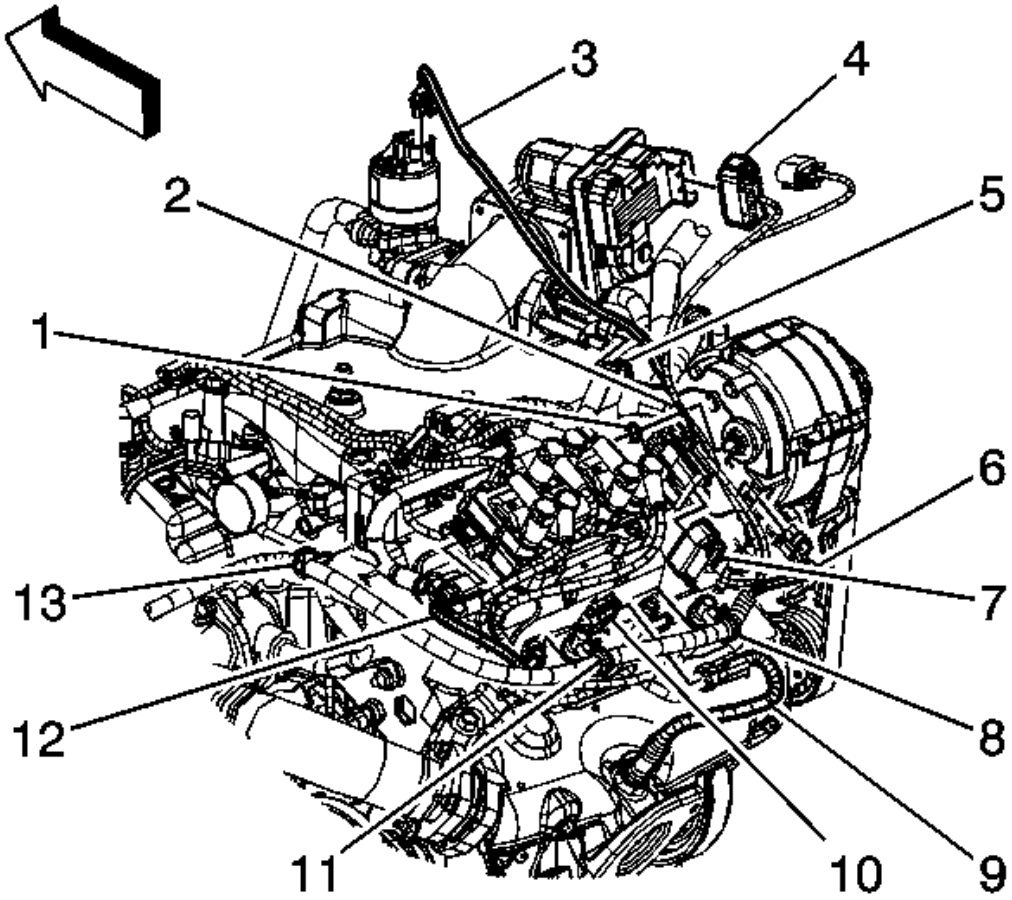


**Fig. 196: View Of Engine Electrical Wiring Harness Connections**
**Courtesy of GENERAL MOTORS CORP.**

50. Disconnect the engine electrical wiring harness from the following components:
    - Exhaust gas recirculation (EGR) valve (3)
    - Throttle body (4)
    - EVAP purge solenoid (5)
    - Remove nut (1) and generator B+ lead (2)
    - Generator regulator (6)
    - Fuel injector inline connector (7)
    - Heated oxygen sensor (H2OS) 1 (9, 10)
    - Ignition coil/control module (12)
    - Remove wire harness from retainers (8, 11, 13)

 © 2011 Mitchell Repair Information Company, LLC.

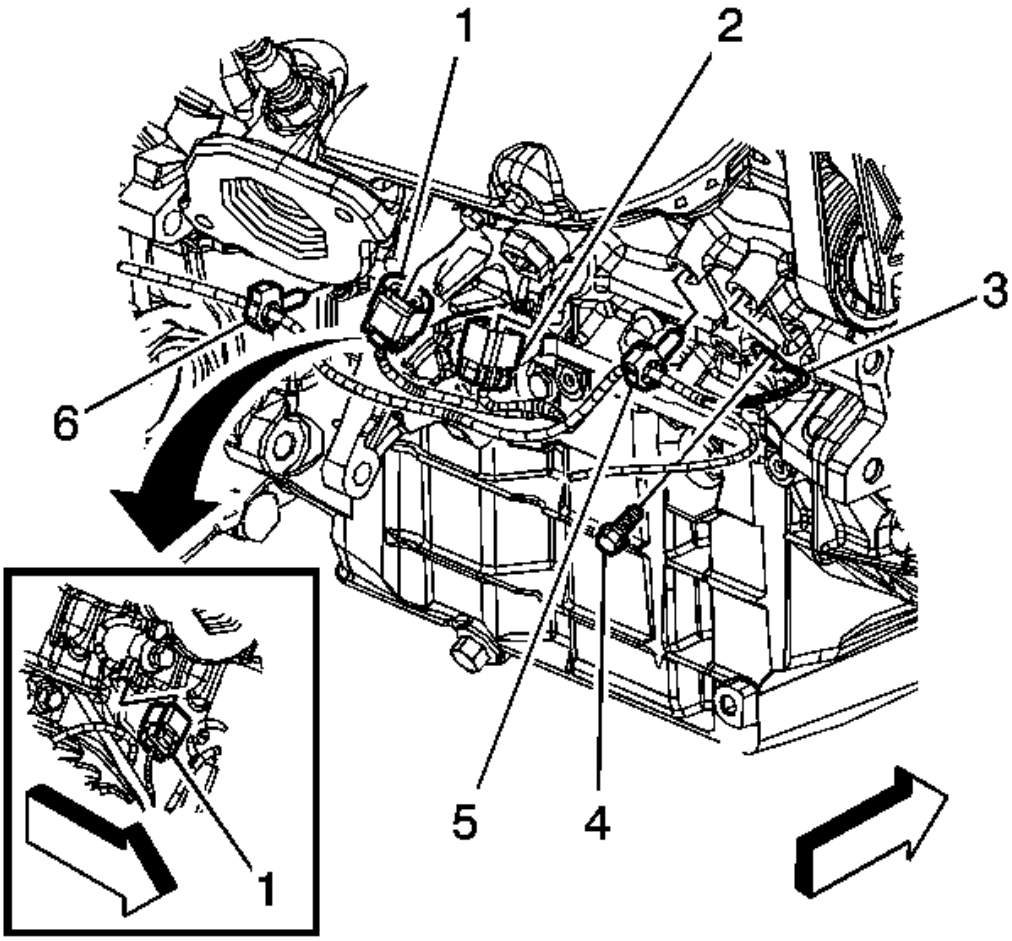


**Fig. 197: View Of Crankshaft Position Sensor & Knock Sensor Electrical Connectors**
**Courtesy of GENERAL MOTORS CORP.**

51. Disconnect the engine electrical wiring harness from the following components:
    - Knock sensor (KS) (1)
    - Crankshaft position (CKP) sensor (2)
    - Remove bolt (4) and ground lead (3)
    - Remove the wire harness from retainers (5, 6)

 © 2011 Mitchell Repair Information Company, LLC.

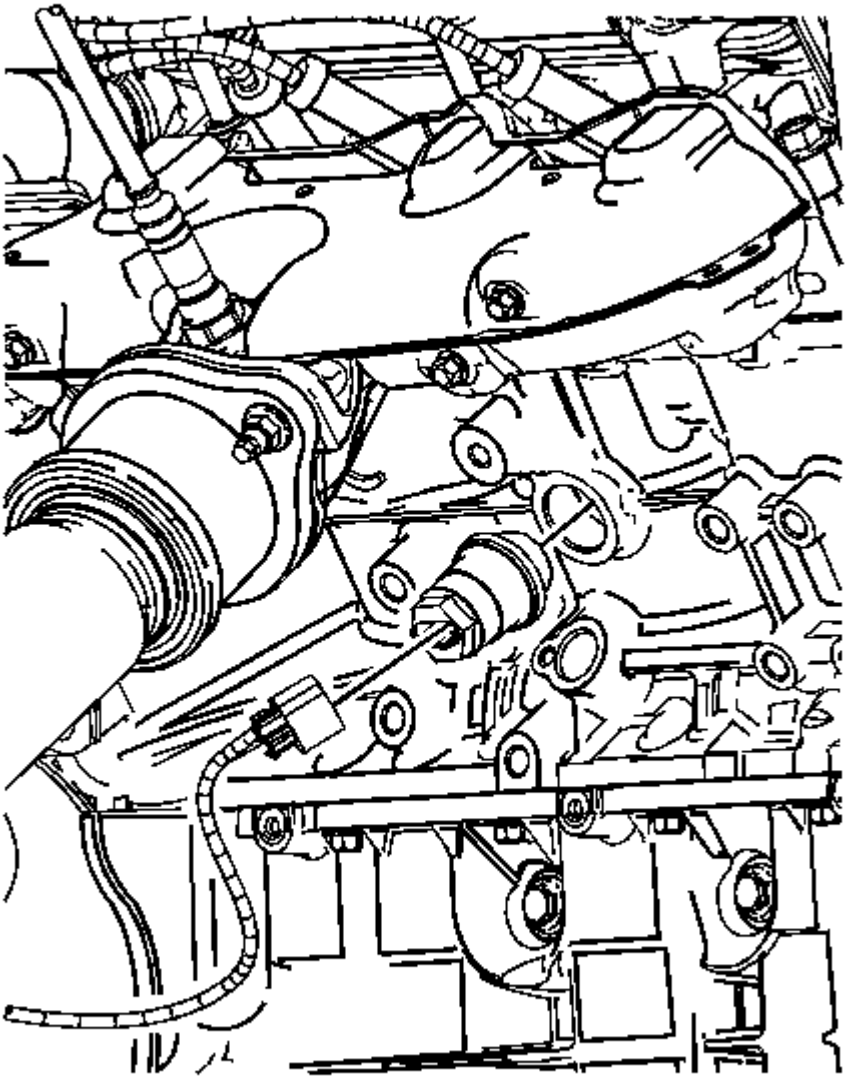

**Fig. 198: View Of Coolant Heater**
**Courtesy of GENERAL MOTORS CORP.**

52. If equipped with an engine coolant heater, disconnect the coolant heater cord.

 © 2011 Mitchell Repair Information Company, LLC.

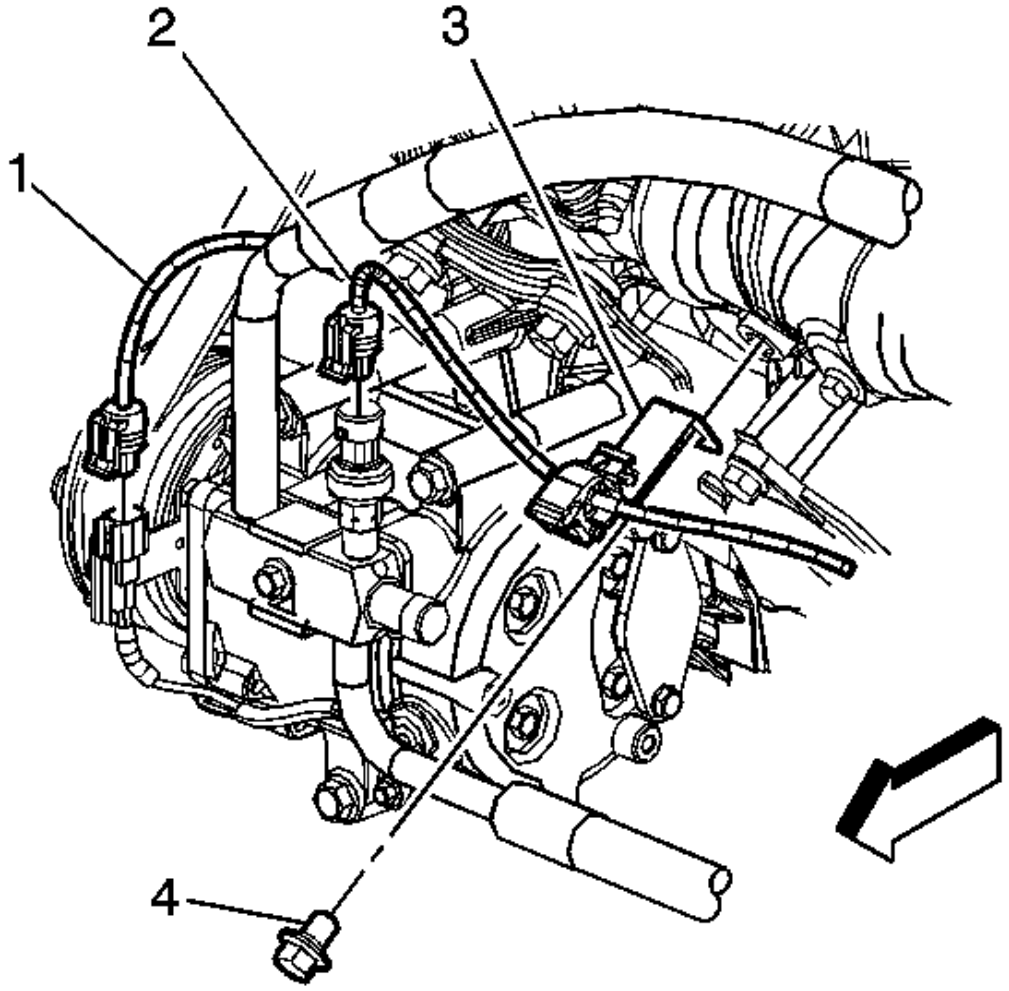


**Fig. 199: View Of A/C Compressor Clutch, A/C Refrigerant Pressure Sensor & Wire Harness Retainers**
**Courtesy of GENERAL MOTORS CORP.**

53. Disconnect the engine electrical wiring harness from the following components:
    - Air conditioning (AC) compressor clutch (1)
    - AC refrigerant pressure sensor (2)
    - Remove wire harness from retainer (3)

 © 2011 Mitchell Repair Information Company, LLC.

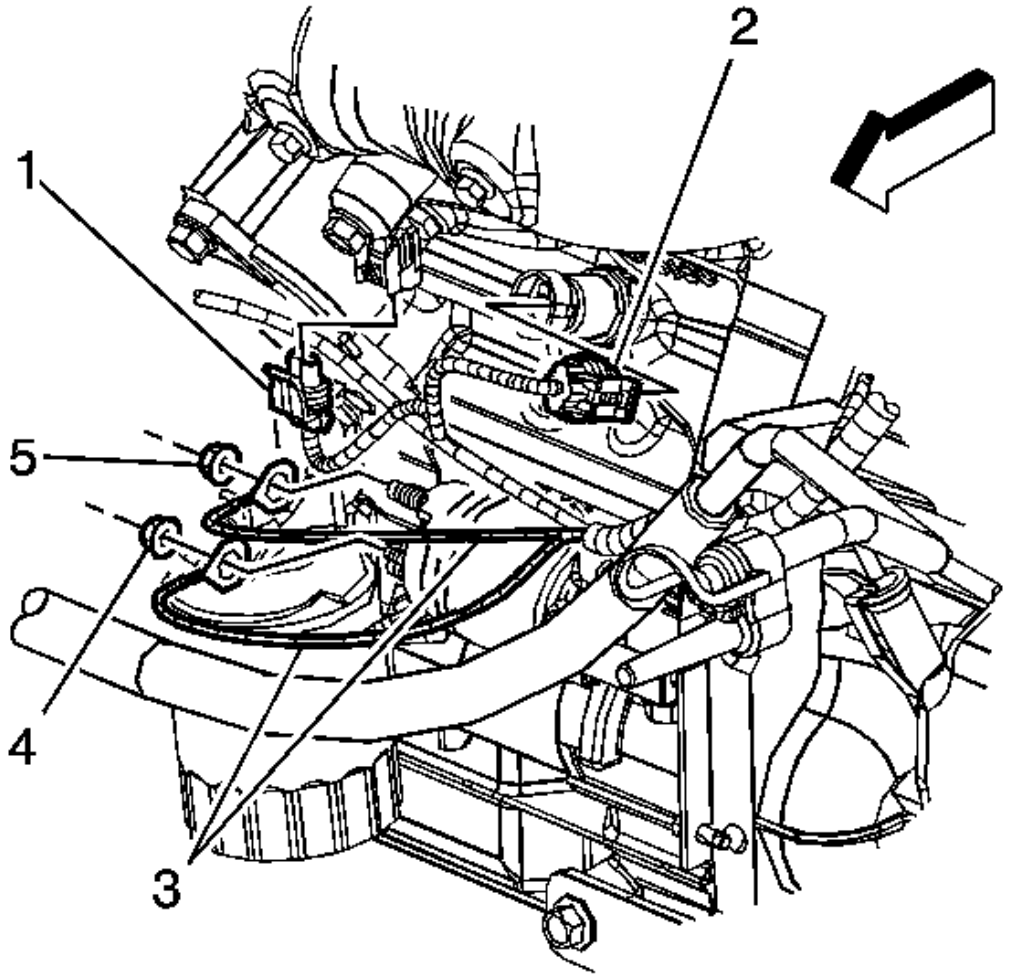


**Fig. 200: View Of Knock Sensor & Oil Pressure Indicator Switch Electrical Connectors**
**Courtesy of GENERAL MOTORS CORP.**

54. Disconnect the engine electrical wiring harness from the following components:
    - Knock sensor (KS) (1)
    - Oil pressure indicator switch (2)
55. Remove the throttle body assembly. Refer to **Throttle Body Assembly Replacement** in Engine Controls - 3.4L.

 © 2011 Mitchell Repair Information Company, LLC.

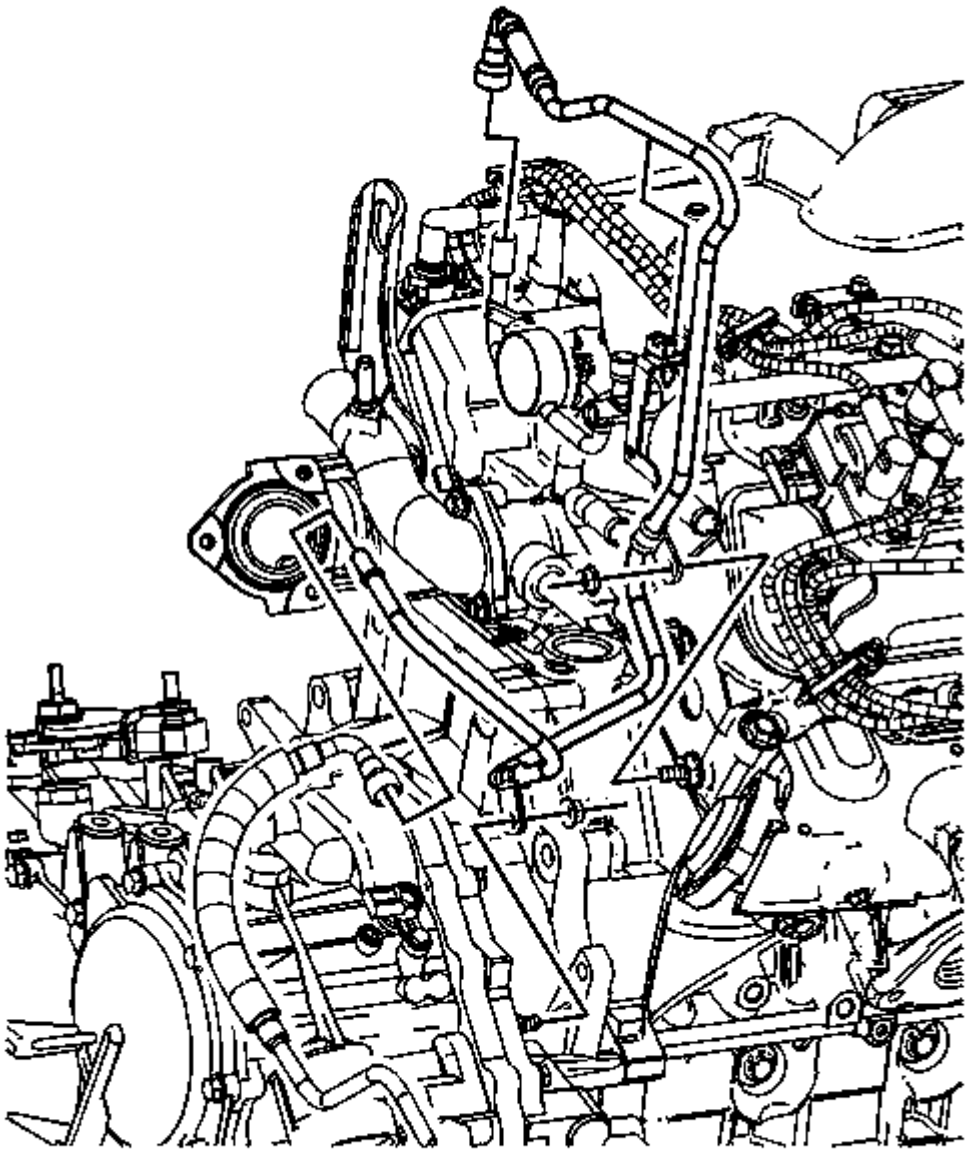

**Fig. 201: View Of Hose/Pipe Retainer-To-Right Cylinder Head Nut & Fuel Pipe-To-Transaxle Nut**
**Courtesy of GENERAL MOTORS CORP.**

56. Remove the nut securing the fuel pipe to the transaxle.
57. Remove the fuel pipe retainer from the threaded stud on the transaxle.

 © 2011 Mitchell Repair Information Company, LLC.

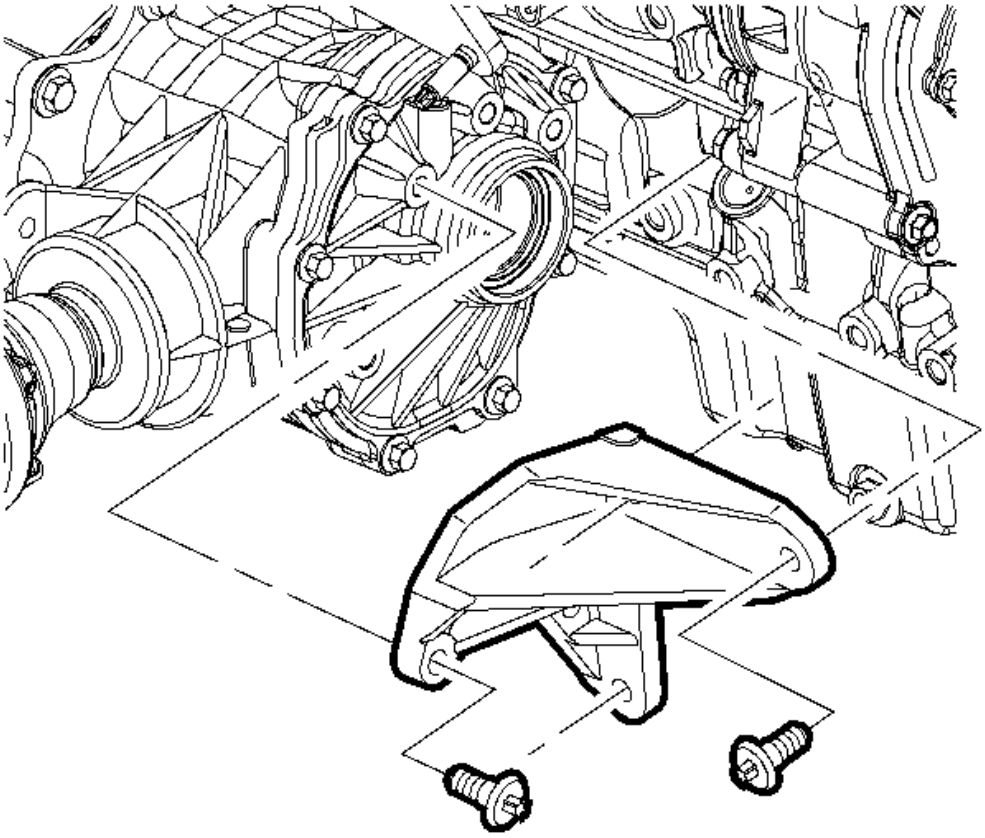

**Fig. 202: View Of Transfer Case Mounting Bracket**
**Courtesy of GENERAL MOTORS CORP.**

58. If equipped with AWD, remove the transfer case mounting bracket bolts and bracket.
59. If equipped with front wheel drive (FWD), remove the intermediate shaft. Refer to **Intermediate Shaft Replacement (L61)** or **Intermediate Shaft Replacement (L66)** in Wheel Drive Shafts.

 © 2011 Mitchell Repair Information Company, LLC.

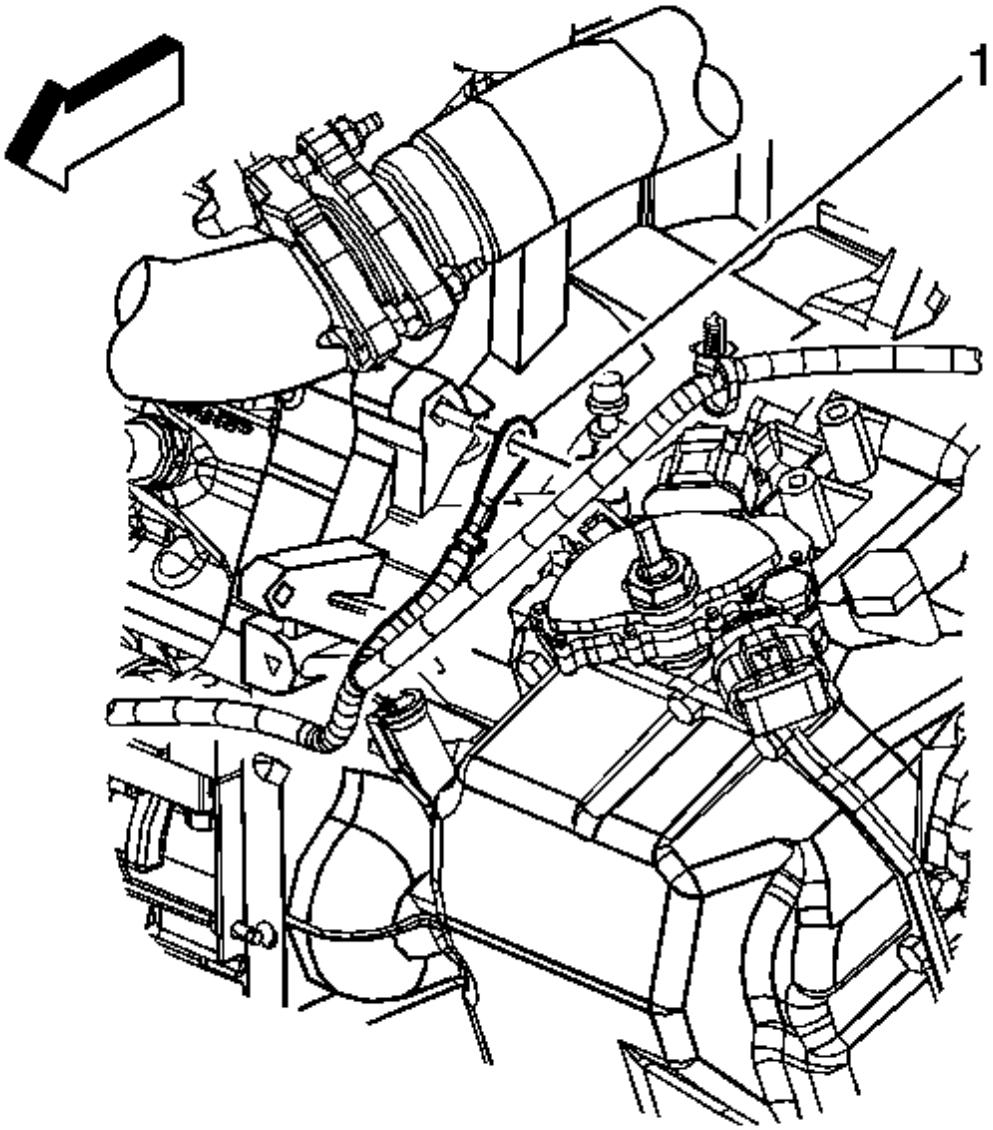


**Fig. 203: View Of Negative Battery Cable At Transaxle Stud**
**Courtesy of GENERAL MOTORS CORP.**

60. Remove the negative battery cable-to-transaxle nut from the transaxle stud
61. Remove the negative battery cable (1) from the transaxle stud.

 © 2011 Mitchell Repair Information Company, LLC.

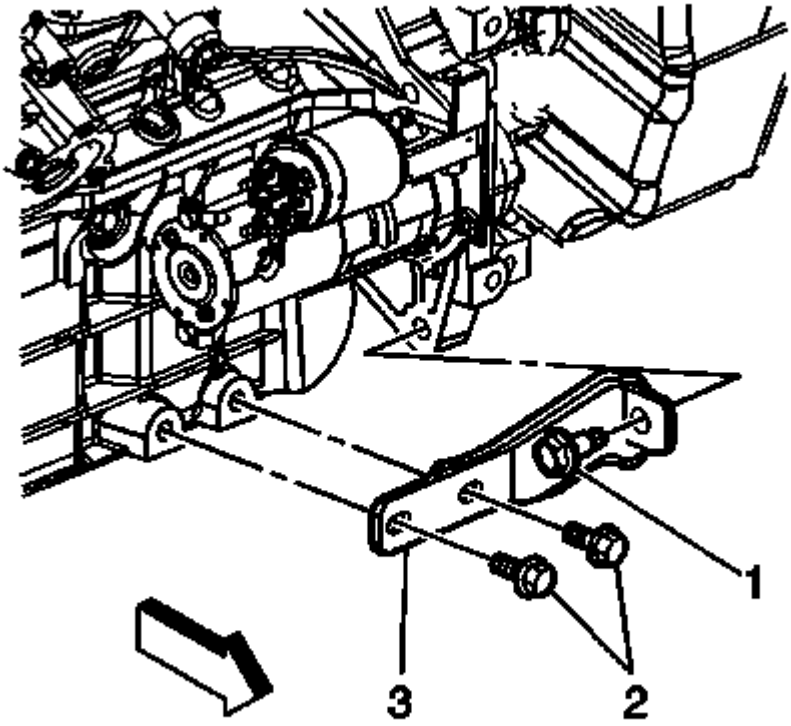


**Fig. 204: View Of Engine-To-Transaxle Brace & Bolts**
**Courtesy of GENERAL MOTORS CORP.**

62. Remove the engine-to-transaxle brace bolts (1, 2) and brace (3).
63. Remove the starter motor. Refer to **Starter Motor Replacement** in Engine Electrical.

 © 2011 Mitchell Repair Information Company, LLC.

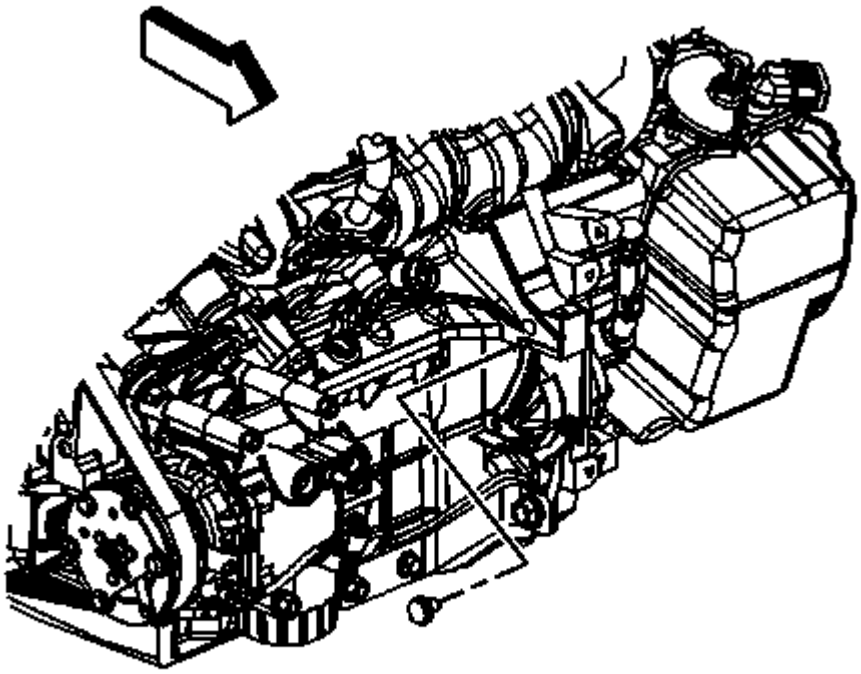

**Fig. 205: View Of Torque Converter Bolts**
**Courtesy of GENERAL MOTORS CORP.**

64. Remove the torque converter bolts.
65. Install an engine lift chain to the engine lift brackets.
66. Support the engine weight with an engine hoist.

 © 2011 Mitchell Repair Information Company, LLC.

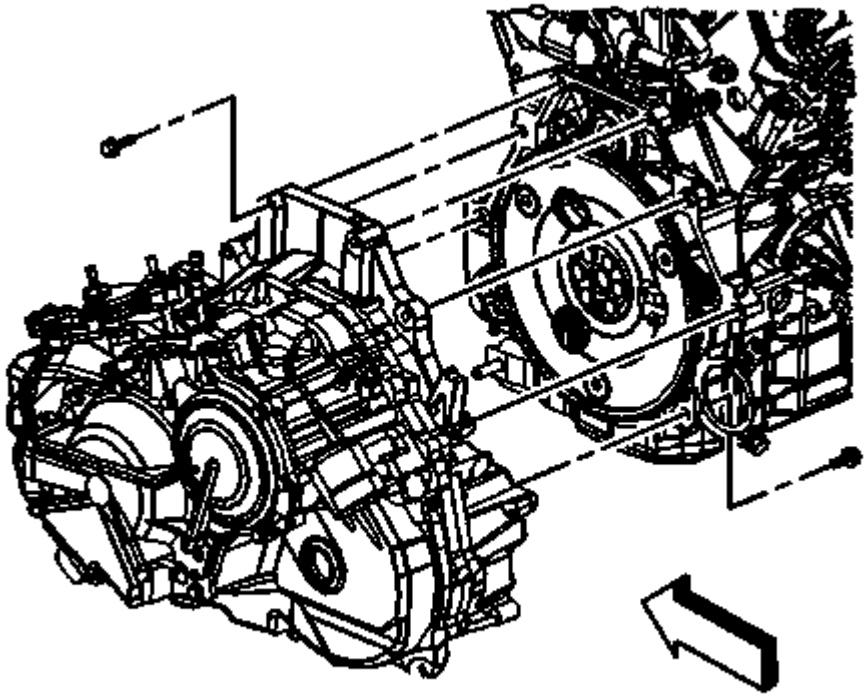

**Fig. 206: View Of Transaxle & Bolts**
**Courtesy of GENERAL MOTORS CORP.**

67. Remove the automatic transaxle bolts.
68. Separate the automatic transaxle from the engine.
69. Lift the engine away from the frame and the automatic transaxle.
70. Secure the engine to an engine stand.
71. Remove any additional engine components as necessary. Refer to appropriate component sections in manual if needed.

**Installation Procedure**

1. Remove the engine from the engine stand.

 © 2011 Mitchell Repair Information Company, LLC.

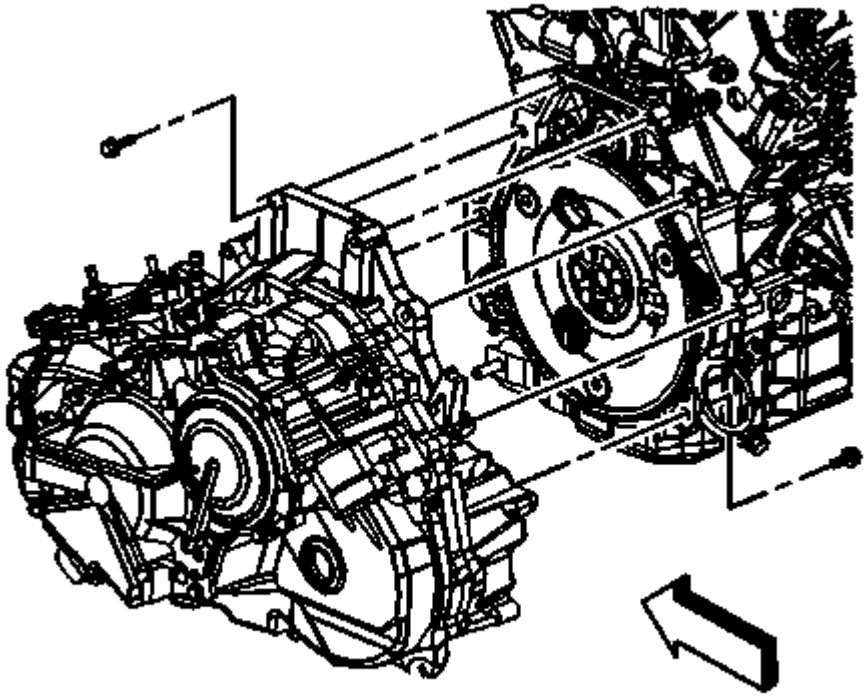

**Fig. 207: View Of Transaxle & Bolts**
**Courtesy of GENERAL MOTORS CORP.**

2. Align the engine to the frame and automatic transaxle.

**NOTE:** **Refer to Fastener Notice in Cautions and Notices.**

3. Install the automatic transaxle bolts.

   **Tighten:** Tighten the bolts to 75 N.m (55 lb ft).

4. Place a block of wood between the frame and the engine oil pan in order to support the engine on the frame once the engine hoist is removed.
5. Remove the engine hoist and lift chain.

 © 2011 Mitchell Repair Information Company, LLC.

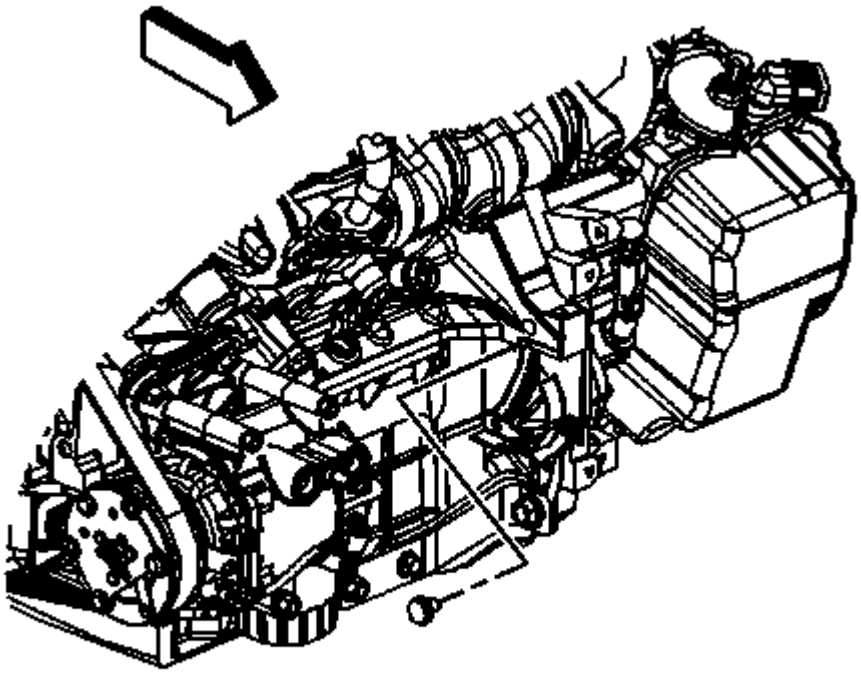

**Fig. 208: View Of Torque Converter Bolts**
**Courtesy of GENERAL MOTORS CORP.**

6. Install the torque converter bolts.

   **Tighten:** Tighten the bolts to 60 N.m (44 lb ft).

7. Install the starter motor. Refer to **Starter Motor Replacement** in Engine Electrical.

 © 2011 Mitchell Repair Information Company, LLC.

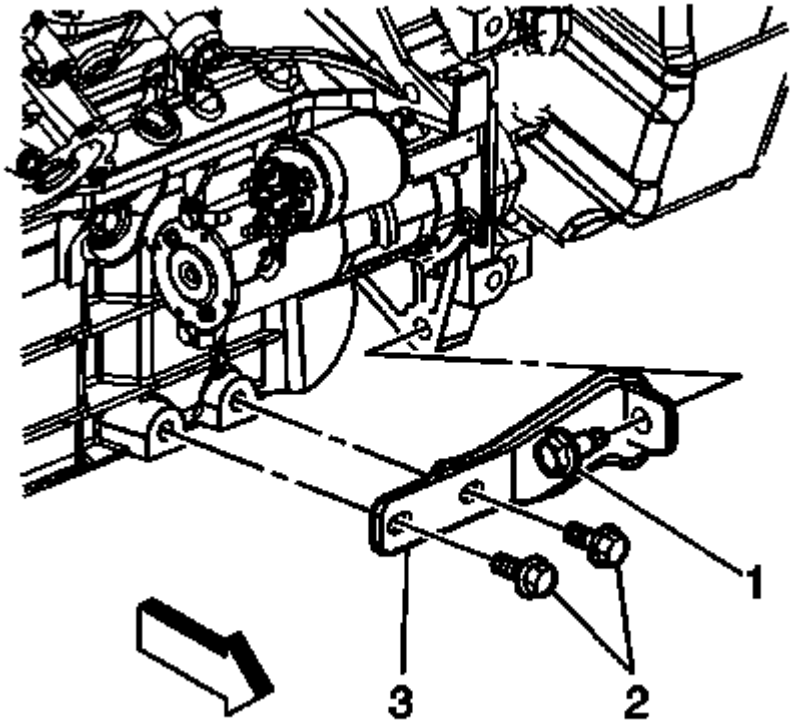


**Fig. 209: View Of Engine-To-Transaxle Brace & Bolts**
**Courtesy of GENERAL MOTORS CORP.**

8. Install the engine to transaxle brace (3) and bolts (1, 2).

   **Tighten:** Tighten the bolts to 50 N.m (37 lb ft).

 © 2011 Mitchell Repair Information Company, LLC.

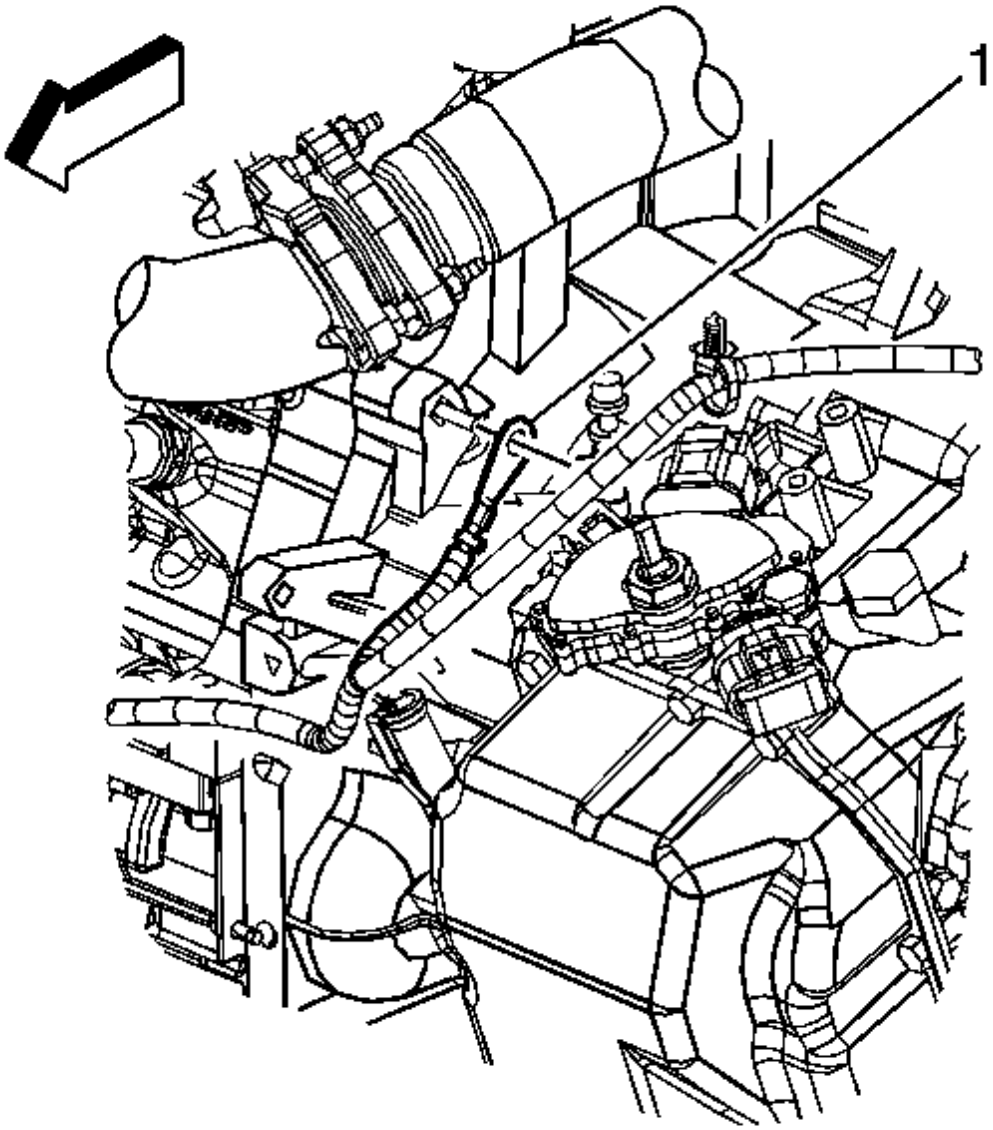


**Fig. 210: View Of Negative Battery Cable At Transaxle Stud**
**Courtesy of GENERAL MOTORS CORP.**

9. Install the negative battery cable (1) to the transaxle stud.
10. Install the negative battery cable-to-transaxle nut to the transaxle stud.

**Tighten:** Tighten the nut to 45 N.m (33 lb ft).

 © 2011 Mitchell Repair Information Company, LLC.

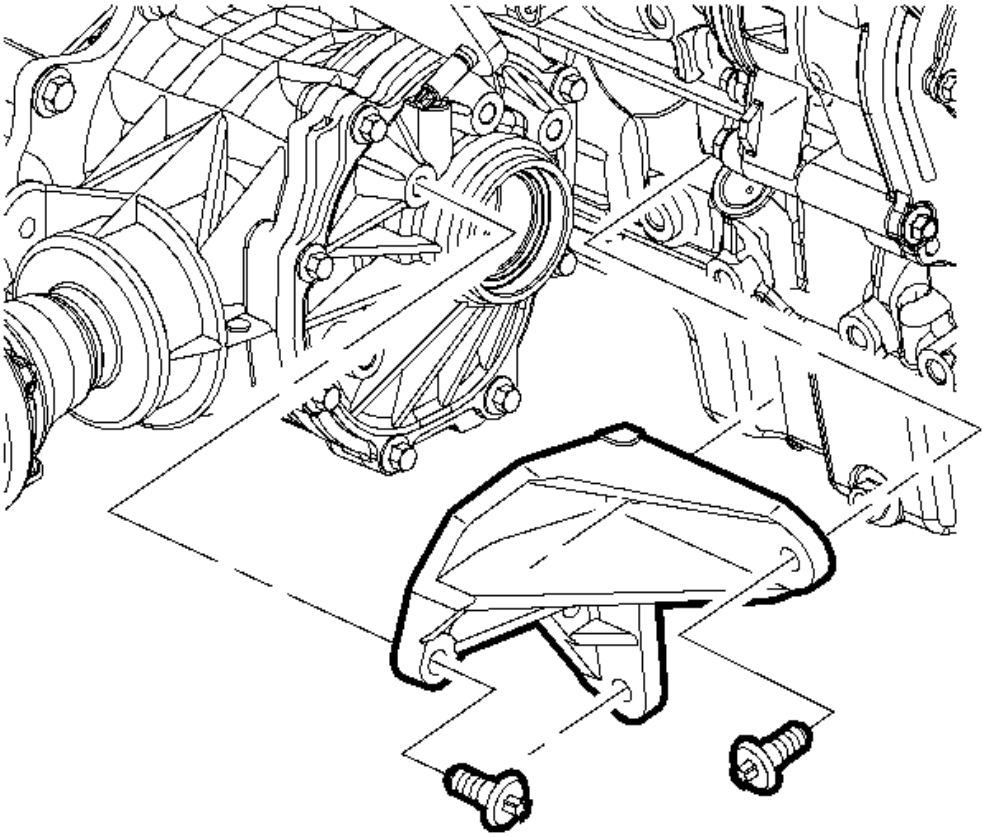

**Fig. 211: View Of Transfer Case Mounting Bracket**
**Courtesy of GENERAL MOTORS CORP.**

11. If equipped with AWD, install the transfer case mounting bracket and bolts.

    **Tighten:** Tighten the bolts to 60 N.m (44 lb ft).

12. If equipped with FWD, install the intermediate shaft. Refer to **Intermediate Shaft Replacement (L61)** or **Intermediate Shaft Replacement (L66)** in Wheel Drive Shafts.

 © 2011 Mitchell Repair Information Company, LLC.

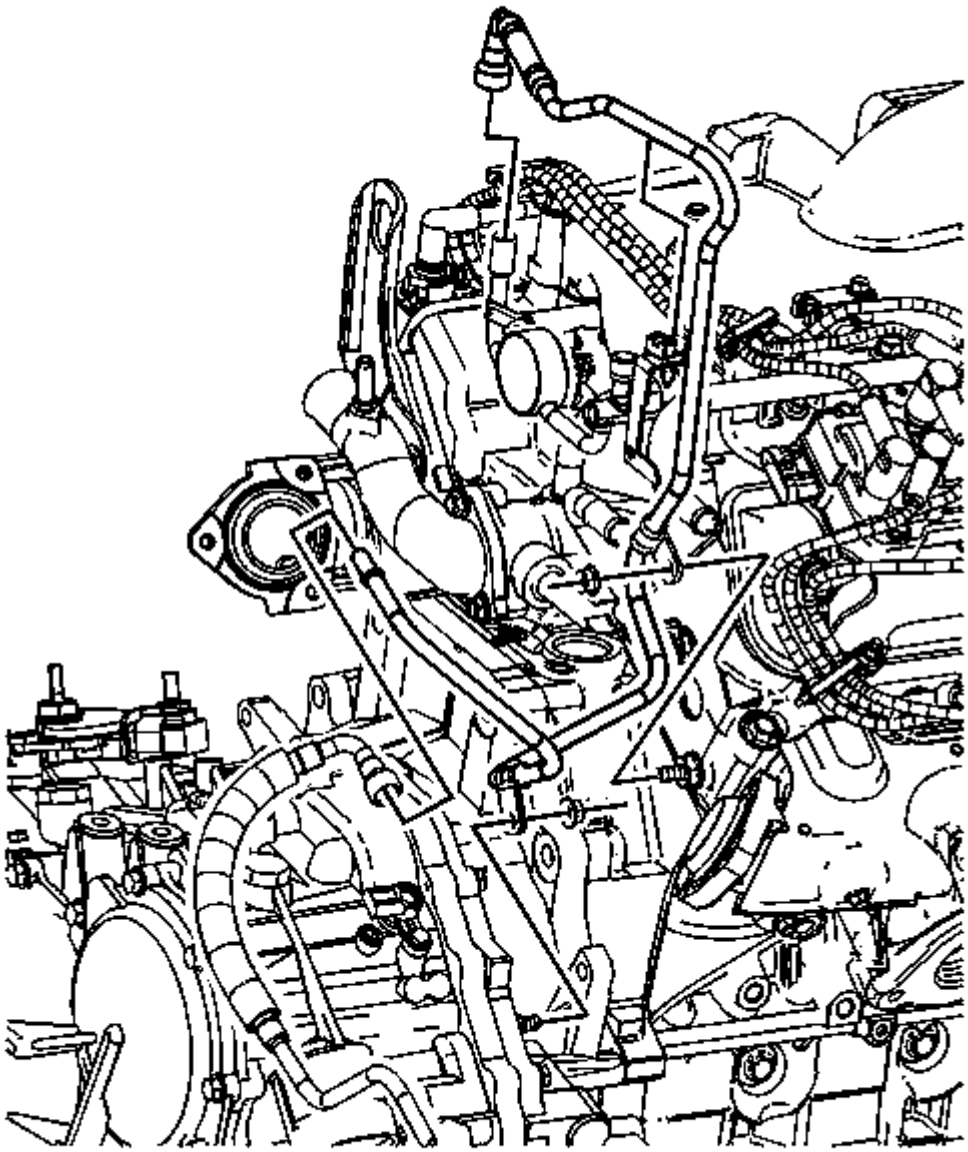

**Fig. 212: View Of Hose/Pipe Retainer-To-Right Cylinder Head Nut & Fuel Pipe-To-Transaxle Nut**
**Courtesy of GENERAL MOTORS CORP.**

13. Install the fuel pipe retainer to the threaded stud on the transaxle.
14. Install the nut securing the fuel pipe to the transaxle.

**Tighten:** Tighten the nut to 28 N.m (21 lb ft).

 © 2011 Mitchell Repair Information Company, LLC.

15. Install the throttle body assembly. Refer to **Throttle Body Assembly Replacement** in Engine Controls - 3.4L.

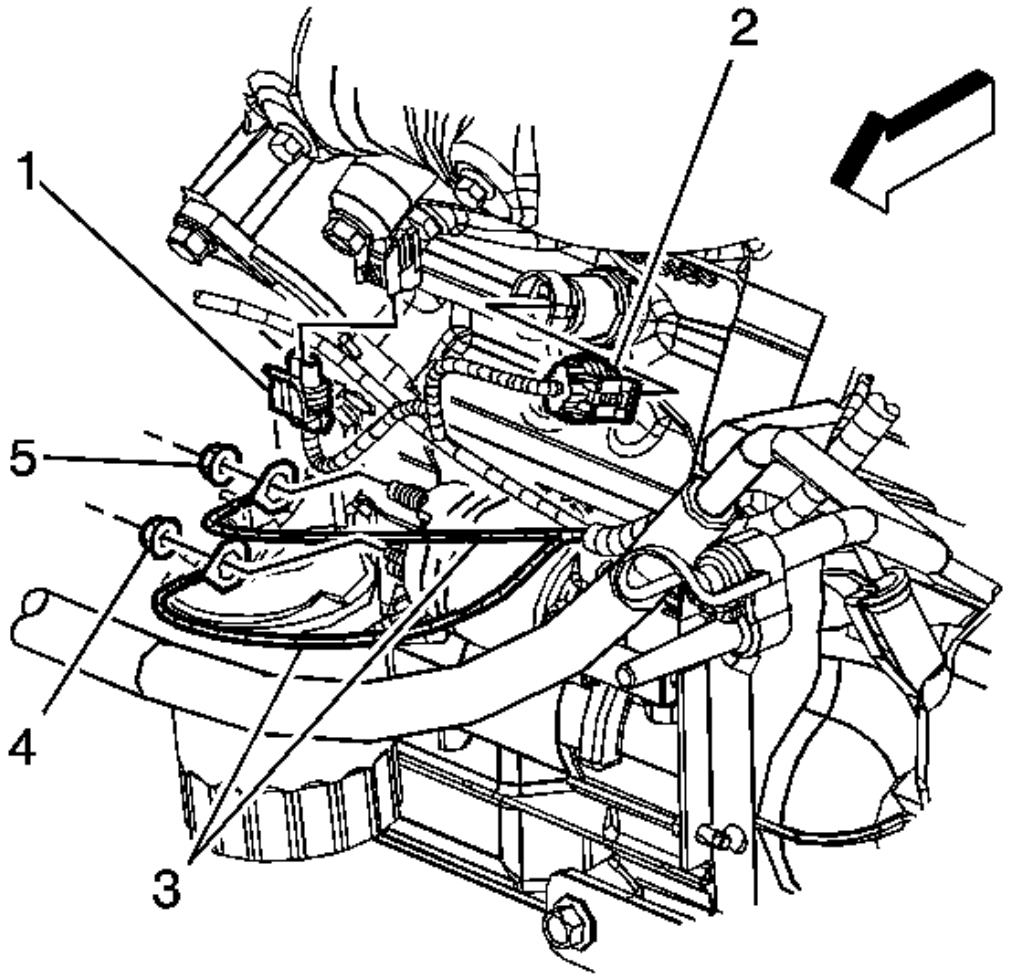


**Fig. 213: View Of Knock Sensor & Oil Pressure Indicator Switch Electrical Connectors**
**Courtesy of GENERAL MOTORS CORP.**

16. Connect the engine electrical wiring harness to the following components:
    - Oil pressure indicator switch (2)
    - Knock sensor (KS) (1)

 © 2011 Mitchell Repair Information Company, LLC.

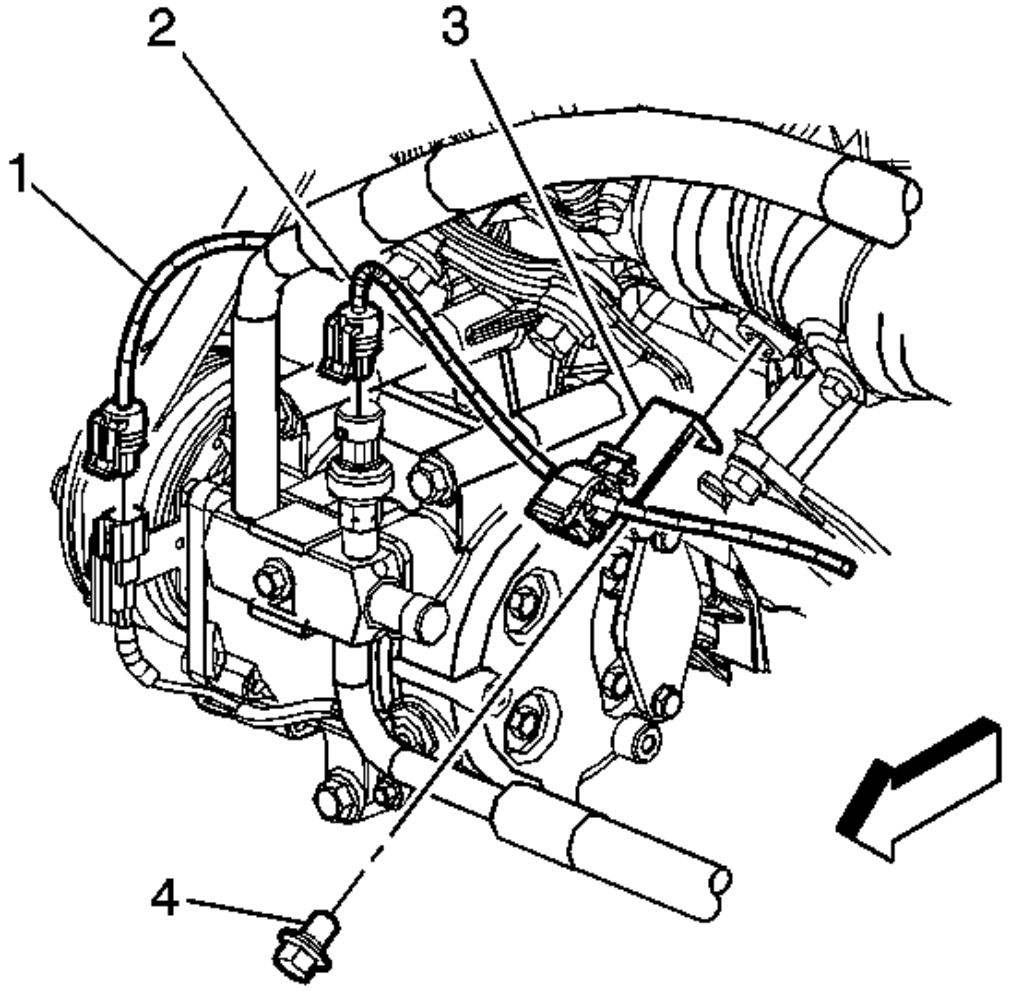


**Fig. 214: View Of A/C Compressor Clutch, A/C Refrigerant Pressure Sensor & Wire Harness Retainers**
**Courtesy of GENERAL MOTORS CORP.**

17. Connect the engine electrical wiring harness to the following components:
    - Install wire harness to retainer (3)
    - AC refrigerant pressure sensor (2)
    - Air conditioning (AC) compressor clutch (1)

 © 2011 Mitchell Repair Information Company, LLC.

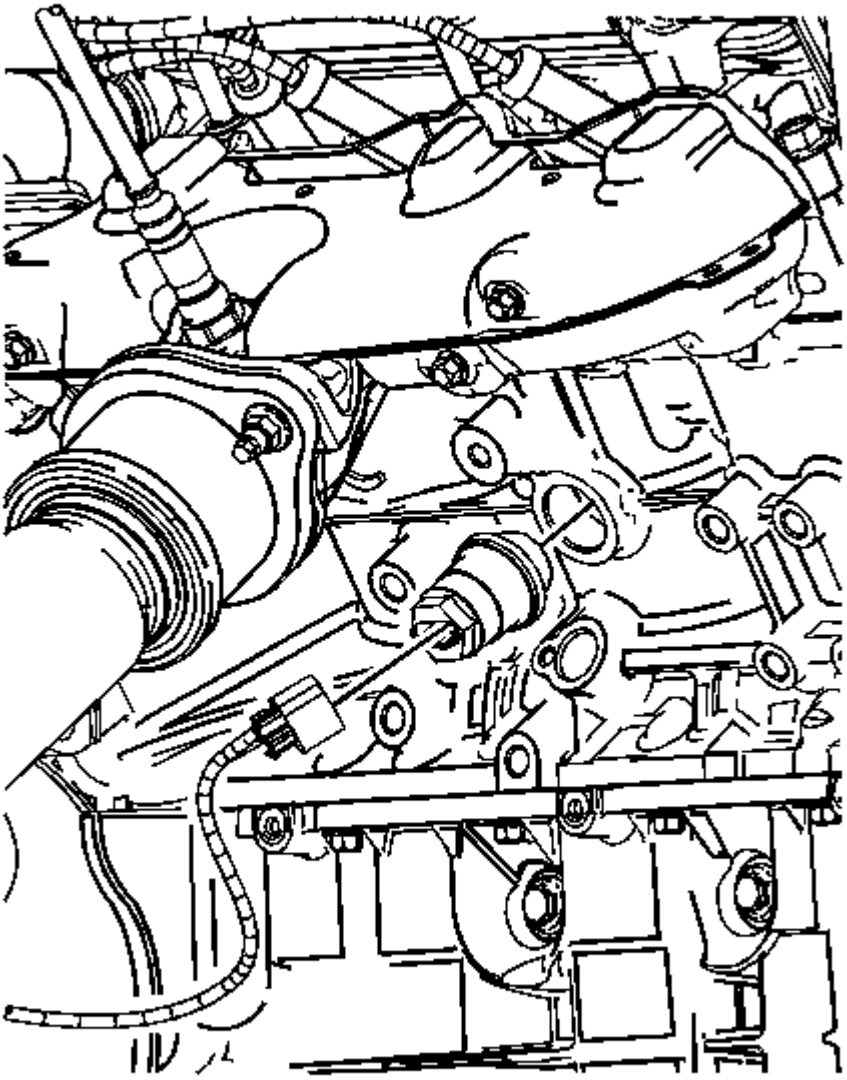

**Fig. 215: View Of Coolant Heater**
**Courtesy of GENERAL MOTORS CORP.**

18. If equipped with an engine coolant heater, connect the coolant heater cord.

 © 2011 Mitchell Repair Information Company, LLC.

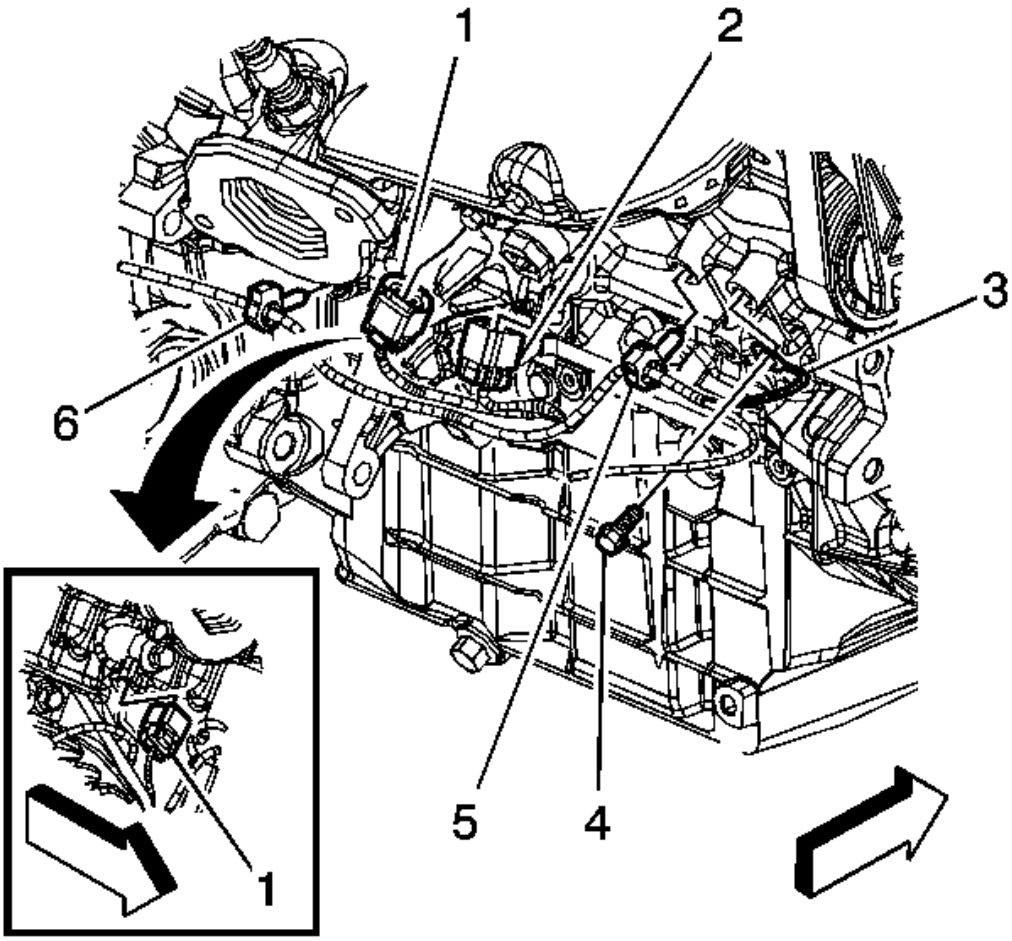


**Fig. 216: View Of Crankshaft Position Sensor & Knock Sensor Electrical Connectors**
**Courtesy of GENERAL MOTORS CORP.**

19. Connect the engine electrical wiring harness to the following components:
    - Install the wire harness to retainers (5, 6).
    - Install ground lead (3) and bolt (4).

      **Tighten:** Tighten the bolt to 25 N.m (18 lb ft).

    - CKP sensor (2)
    - KS (1)

 © 2011 Mitchell Repair Information Company, LLC.

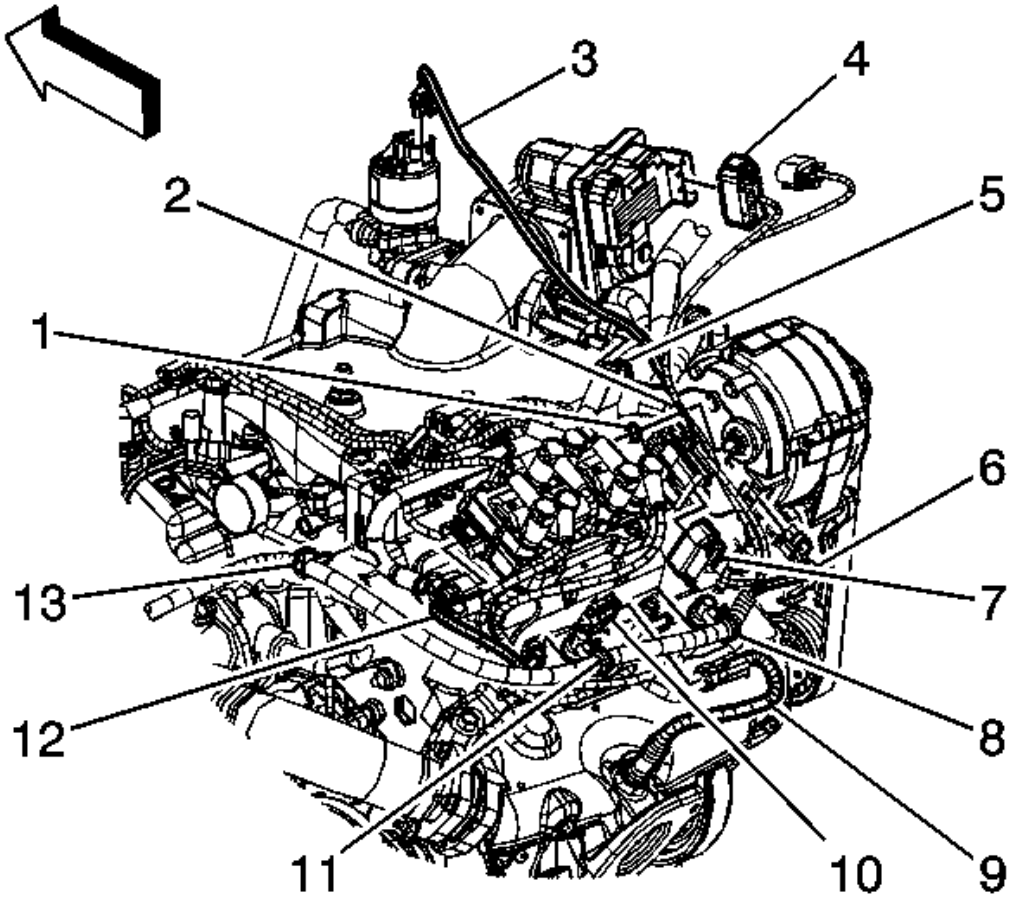


**Fig. 217: View Of Engine Electrical Wiring Harness Connections**
**Courtesy of GENERAL MOTORS CORP.**

20. Connect the engine electrical wiring harness to the following components:
    - Install wire harness to retainers (8, 11, 13)
    - Ignition coil/control module (12)
    - H2OS 1 (9, 10)
    - Fuel injector inline connector (7)
    - Generator regulator (6)
    - Install generator B+ lead (2) and nut (1)

      **Tighten:** Tighten the nut to 13 N.m (115 lb in).

    - EVAP purge solenoid (5)

 © 2011 Mitchell Repair Information Company, LLC.

- Throttle body (4)
- EGR valve (3)

**IMPORTANT: Inspect for areas of body to powertrain contact or entanglement of wires and hoses while joining the vehicle body to the powertrain.**

21. Carefully lower the vehicle body down to the powertrain.

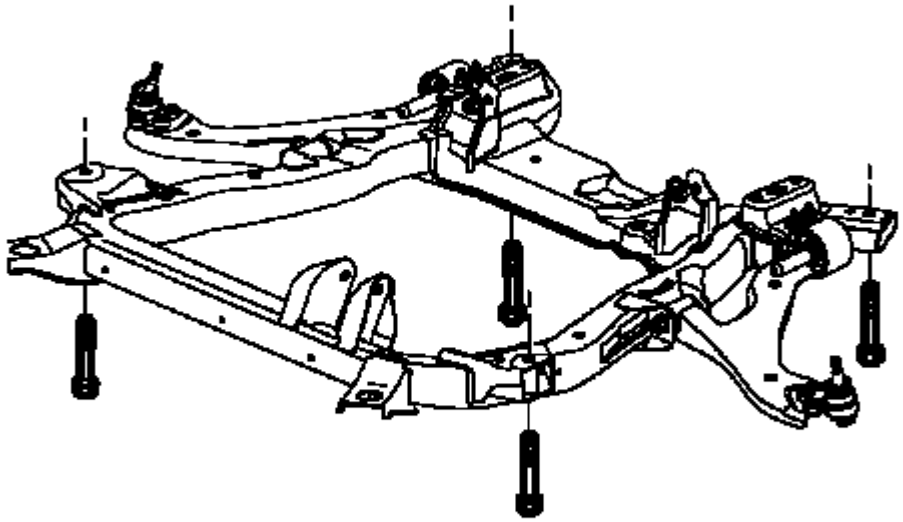

**Fig. 218: Removing/Installing Frame To Body Bolts**
**Courtesy of GENERAL MOTORS CORP.**

22. Install NEW frame-to-body bolts.

    **Tighten:** Tighten the bolts to 155 N.m (114 lb ft).

23. Raise the vehicle up away from the frame support fixture or jackstands and remove the support fixture or jackstands from under the vehicle.
24. Lower the vehicle.

 © 2011 Mitchell Repair Information Company, LLC.

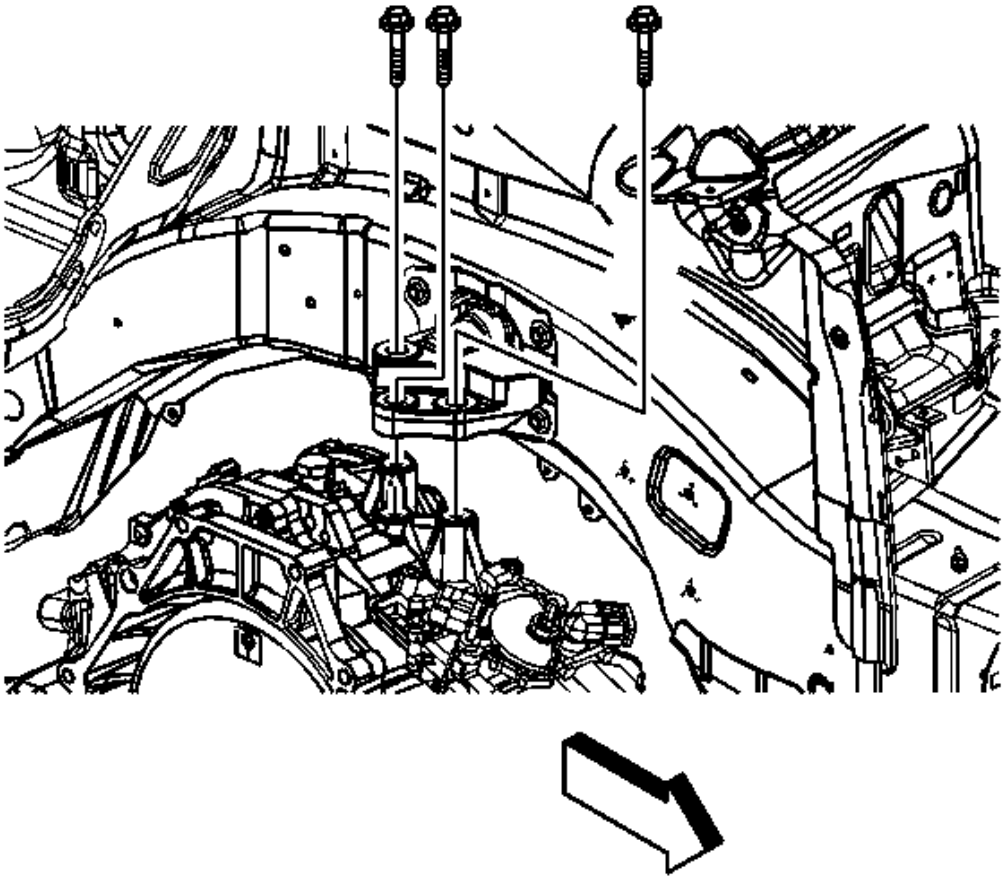

**Fig. 219: Removing/Installing Transaxle Mount (Left) Bolts**
**Courtesy of GENERAL MOTORS CORP.**

25. Install the bolts that secure the left transaxle mount to the transaxle.

    **Tighten:** Tighten the bolts to 50 N.m (37 lb ft).

 © 2011 Mitchell Repair Information Company, LLC.

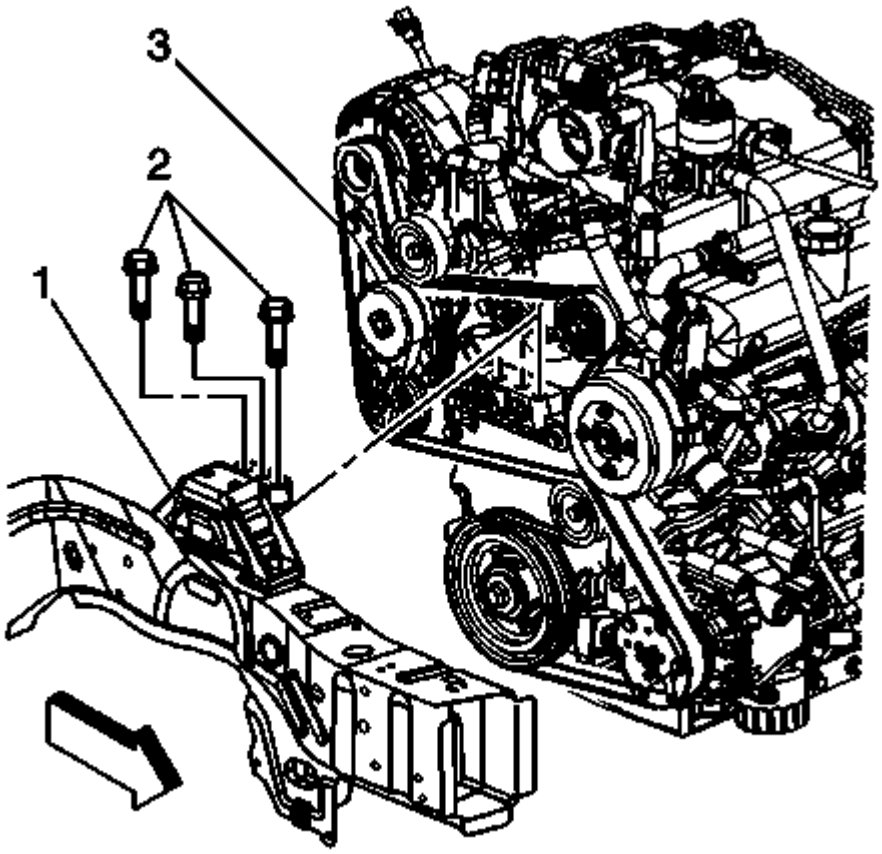


**Fig. 220: View Of Right Engine Mount & Bolts**
**Courtesy of GENERAL MOTORS CORP.**

26. Install the bolts (2) that secure the right engine mount (1) to the engine (3).

    **Tighten:** Tighten the bolts to 50 N.m (37 lb ft).

27. Raise the vehicle.

 © 2011 Mitchell Repair Information Company, LLC.

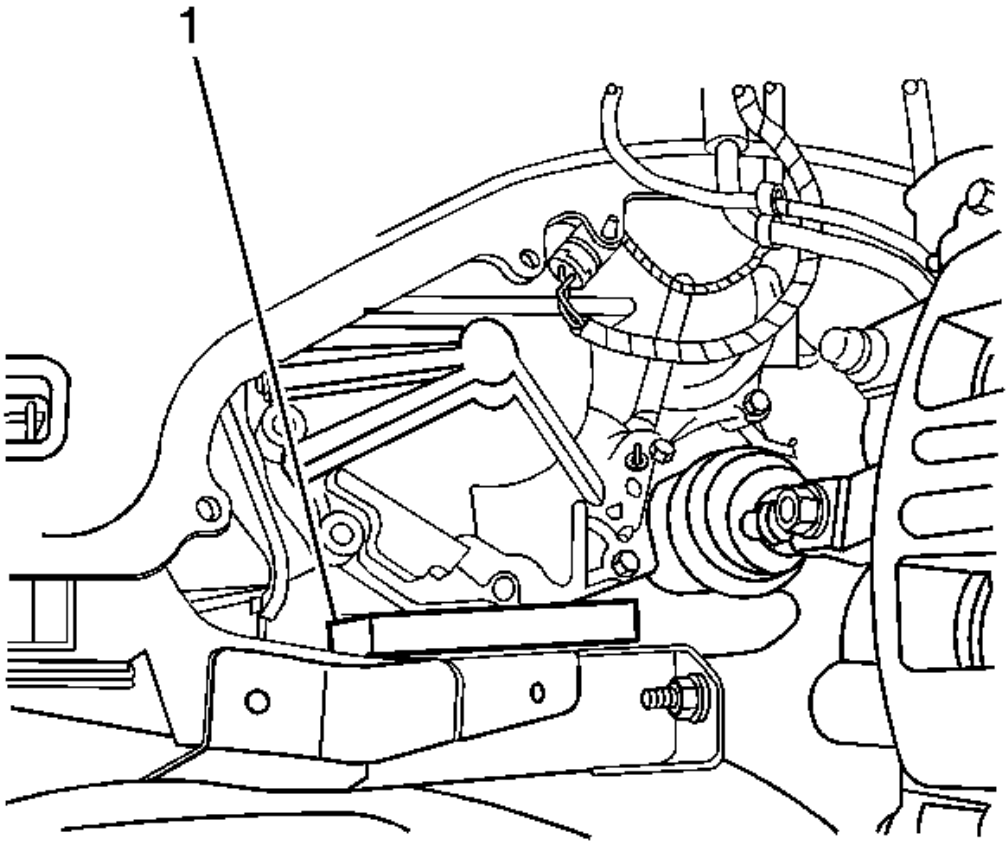


**Fig. 221: Removing/Installing Block Of Wood Between Frame & Transaxle**
**Courtesy of GENERAL MOTORS CORP.**

28. Remove the block of wood (1) between the frame and the transaxle used to support the transaxle while the bolts were removed from the left transaxle mount.

 © 2011 Mitchell Repair Information Company, LLC.

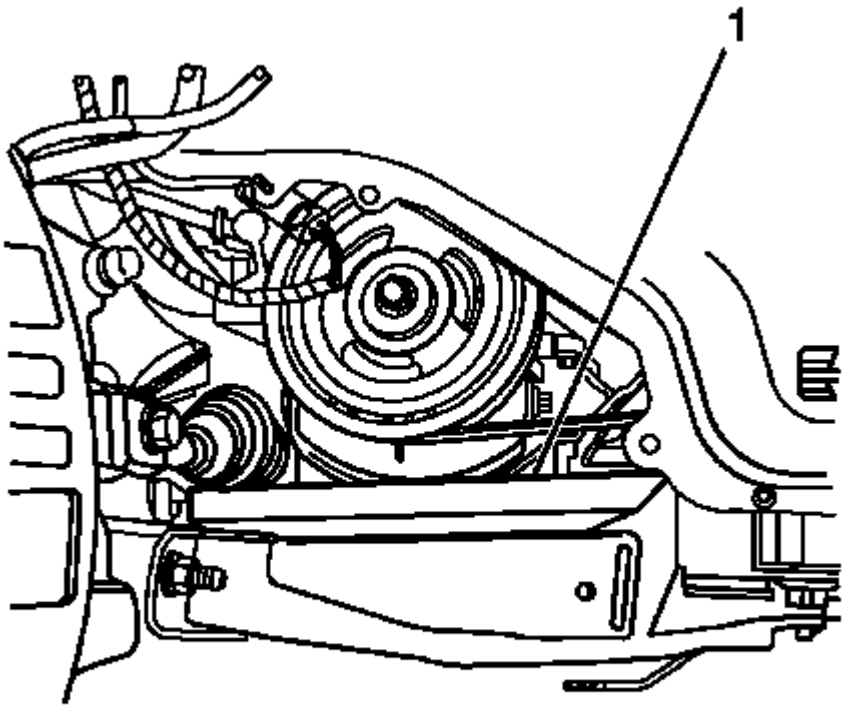


**Fig. 222: Removing/Installing Block Of Wood Between Frame & Engine Oil Pan**
**Courtesy of GENERAL MOTORS CORP.**

29. Remove the block of wood (1) between the frame and the engine oil pan used to support the engine while the bolts were removed from the right engine mount.
30. If equipped with AWD, install the rear propeller shaft. Refer to **Propeller Shaft Replacement** in Propeller Shaft.
31. Install the right and left front wheel drive shafts. Refer to **Wheel Drive Shaft Replacement - Front** in Wheel Drive Shafts.

 © 2011 Mitchell Repair Information Company, LLC.

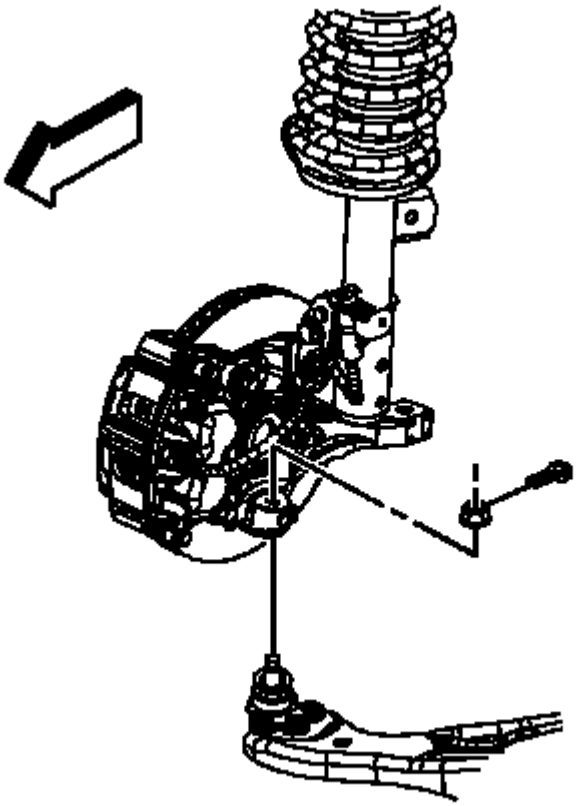

**Fig. 223: View Of Lower Ball Joint At Steering Knuckle**
**Courtesy of GENERAL MOTORS CORP.**

32. Install the right and left lower ball joints to the steering knuckles. Refer to **Lower Control Arm Replacement** in Front Suspension.

 © 2011 Mitchell Repair Information Company, LLC.

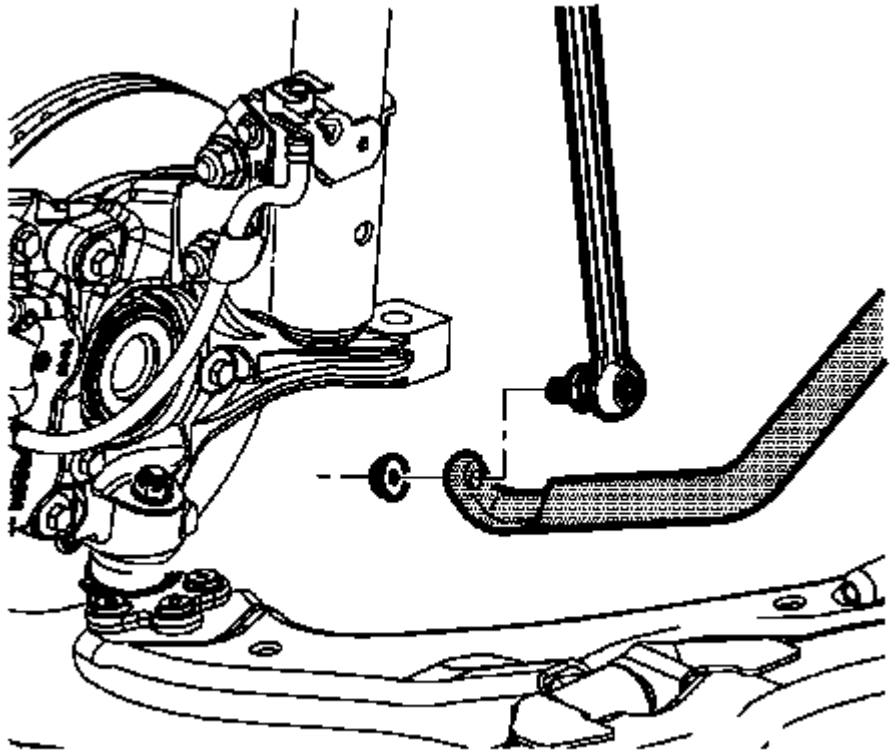

**Fig. 224: View Of Stabilizer Shaft & Link**
**Courtesy of GENERAL MOTORS CORP.**

33. Install the right and left stabilizer shaft links to the stabilizer shaft. Refer to **Stabilizer Shaft Link Replacement** in Front Suspension.

 © 2011 Mitchell Repair Information Company, LLC.

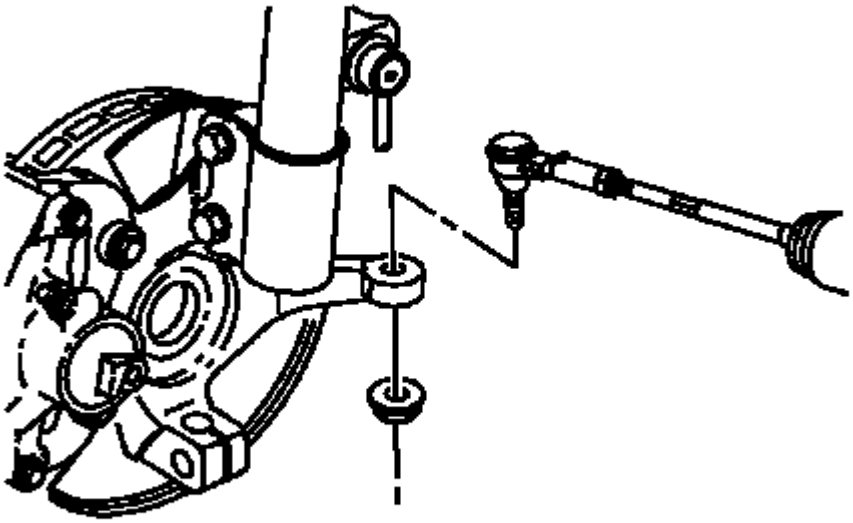

**Fig. 225: View Of Tie Rod End To Steering Knuckle**
**Courtesy of GENERAL MOTORS CORP.**

34. Install the right and left tie rod ends to the steering knuckles. Refer to **Rack and Pinion Outer Tie Rod End Replacement** in Power Steering System.

 © 2011 Mitchell Repair Information Company, LLC.

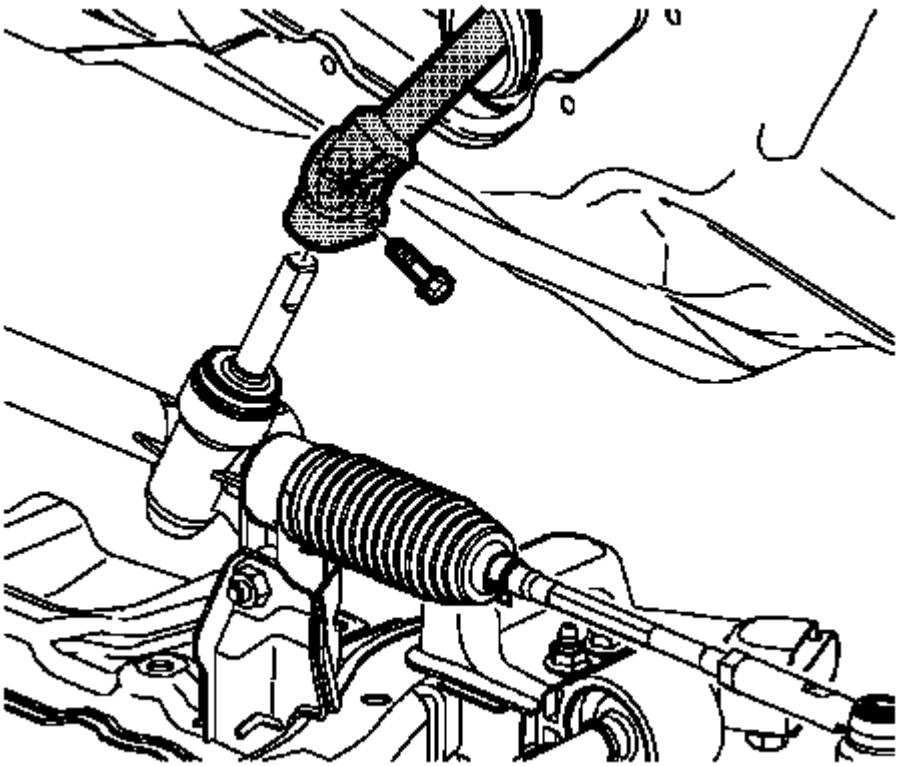

**Fig. 226: Removing/Installing Steering Shaft To Intermediate Shaft**
**Courtesy of GENERAL MOTORS CORP.**

35. Connect the steering intermediate shaft to the steering gear.
36. Install a NEW pinch bolt to the steering intermediate shaft.

    **Tighten:** Tighten the bolt to 34 N.m (25 lb ft).

37. Install the right and left engine splash shields. Refer to **Splash Shield Replacement - Engine** in Body Front End.
38. Install the front tires. Refer to **Tire and Wheel Removal and Installation** in Tires and Wheels.

 © 2011 Mitchell Repair Information Company, LLC.

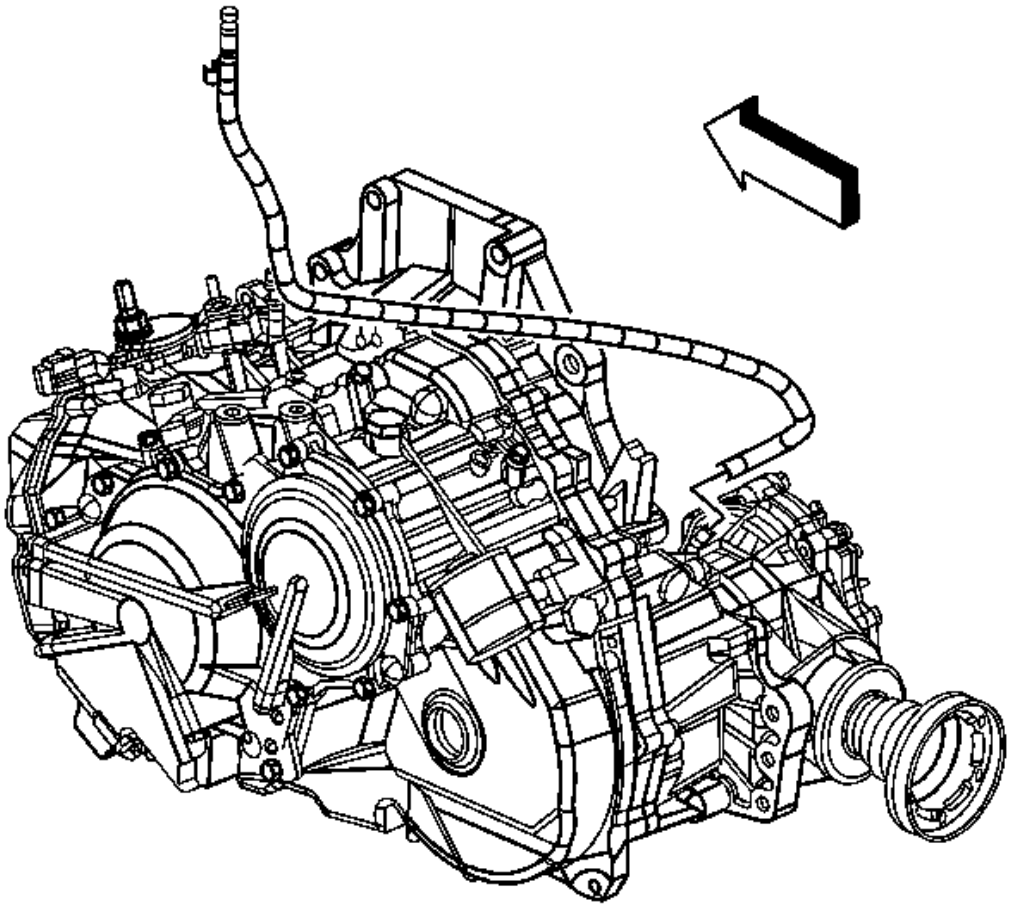

**Fig. 227: View Of Transfer Case Vent Hose**
**Courtesy of GENERAL MOTORS CORP.**

39. If equipped with AWD, connect the transfer case vent hose to the transfer case.
40. Install the catalytic converter. Refer to **Catalytic Converter Replacement** in Engine Exhaust.

 © 2011 Mitchell Repair Information Company, LLC.

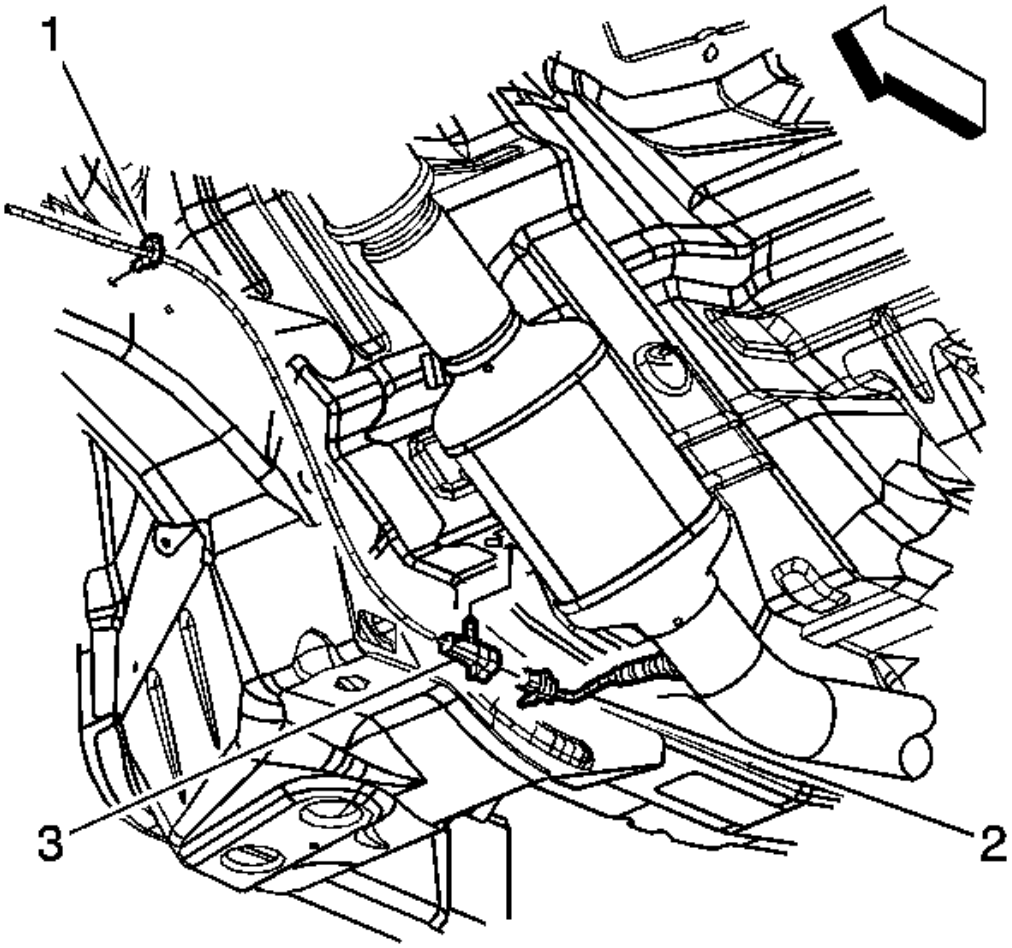


**Fig. 228: View Of HO2S 2 & Harness Connector**
**Courtesy of GENERAL MOTORS CORP.**

41. Install the HO2S 2 wiring harness retainers (1, 3) to the vehicle underbody.
42. Connect the HO2S 2 wiring harness.
43. Install the front bumper fascia air deflector. Refer to **Air Deflector Replacement - Front Bumper Fascia** in Bumpers.

 © 2011 Mitchell Repair Information Company, LLC.

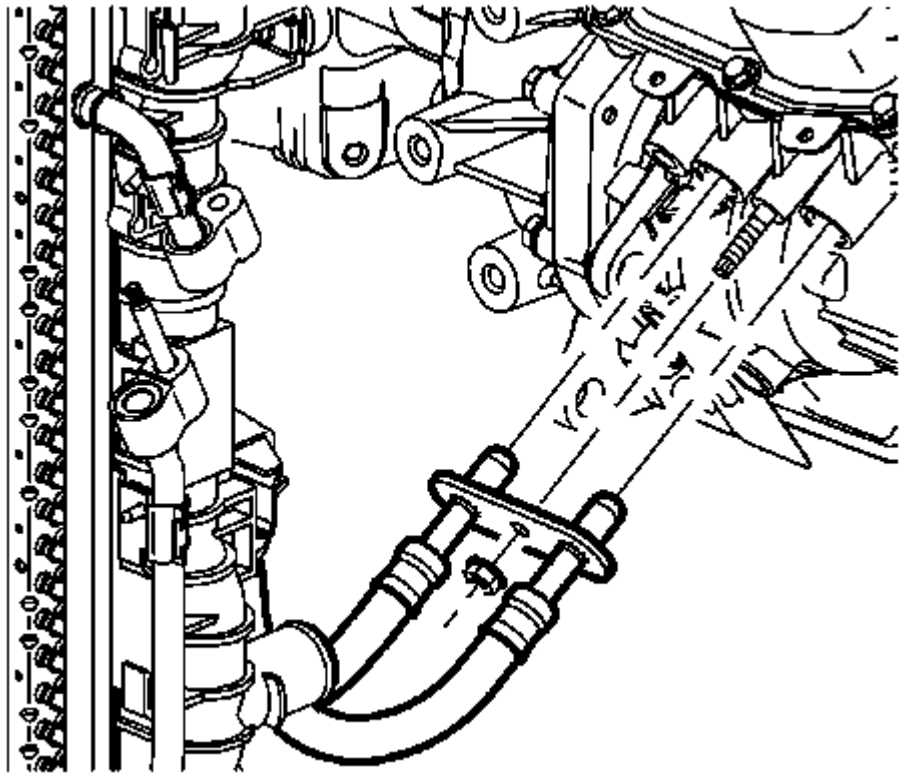

**Fig. 229: View Of Transaxle Oil Cooler Line Assembly**
**Courtesy of GENERAL MOTORS CORP.**

44. Install new seals and connect the transaxle oil cooler lines to the transaxle. Refer to **Oil Cooler Pipe Seals Replacement** in Automatic Transaxle - AF33-5.
45. Install the radiator outlet hose. Refer to **Radiator Hose Replacement - Outlet** in Engine Cooling.
46. Lower the vehicle.
47. Install the radiator inlet hose. Refer to **Radiator Hose Replacement - Inlet** in Engine Cooling.
48. Connect the heater hoses to the engine. Refer to **Heater Hose Replacement - Inlet** and **Heater Hose Replacement - Outlet** in Heating, Ventilation and Air Conditioning.
49. Install the coolant surge tank. Refer to **Surge Tank Replacement** in Engine Cooling.
50. Untie the radiator, AC condenser, and fan module assembly from the upper radiator support.

 © 2011 Mitchell Repair Information Company, LLC.

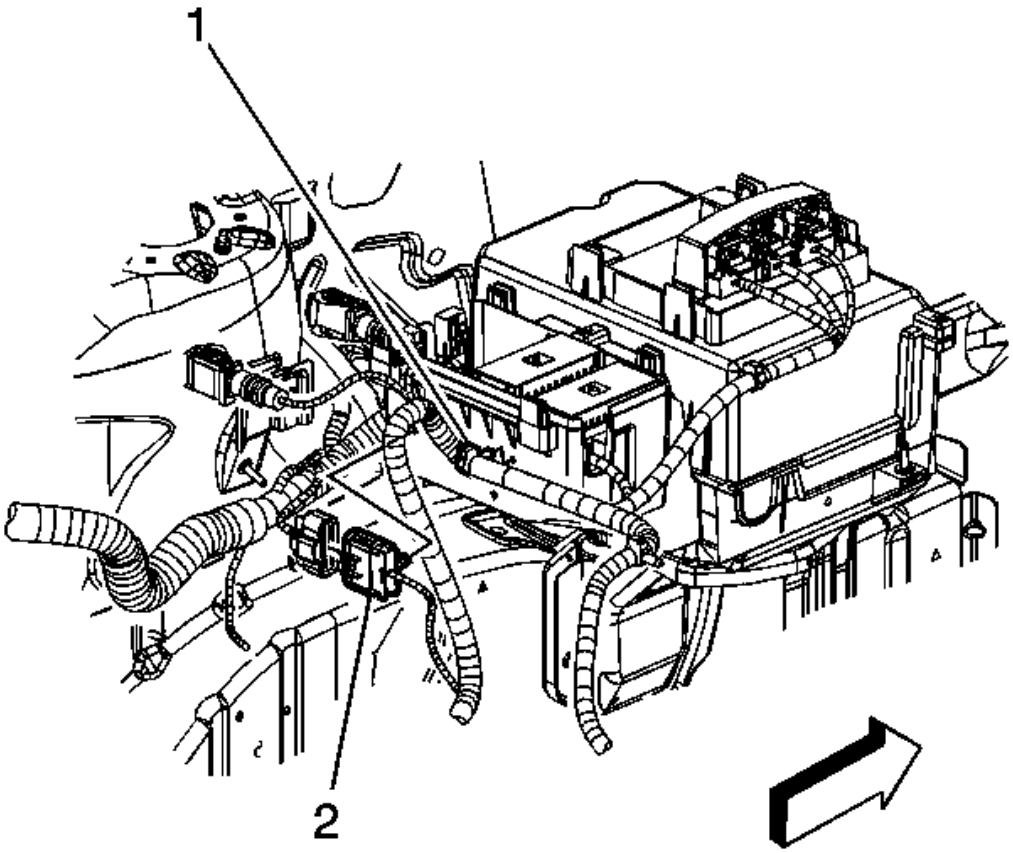


**Fig. 230: View Of Engine Wire Harness Retainer & Connector**
**Courtesy of GENERAL MOTORS CORP.**

51. Connect engine to body inline connector C102 (2).
52. Connect the transaxle shift control cable to the transaxle. Refer to **Shift Control Cable Replacement** in Automatic Transaxle - AF33-5.
53. Install the AC compressor hose assembly to the compressor. Refer to **Compressor Hose Assembly Replacement** in Heating, Ventilation and Air Conditioning.

 © 2011 Mitchell Repair Information Company, LLC.

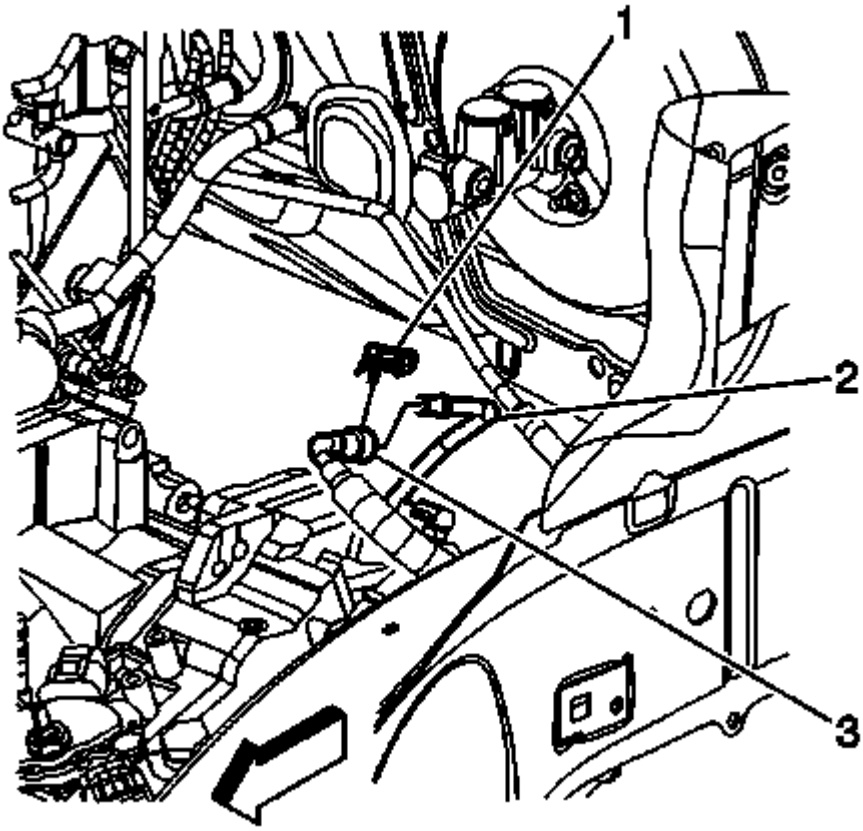


**Fig. 231: Disconnecting/Connecting Engine Fuel Hose/Pipe At Chassis Fuel Hose/Pipe**
**Courtesy of GENERAL MOTORS CORP.**

54. Connect the engine fuel hose/pipe (3) to the chassis fuel hose/pipe (2). Refer to **Quick Connect Fitting (s) Service (Metal Collar)** in Engine Controls - 3.4L.
55. Connect the EVAP hose/pipe to the EVAP canister purge solenoid valve. Refer to **Quick Connect Fitting(s) Service (Plastic Collar)** in Engine Controls - 3.4L.
56. Install the air cleaner assembly and air intake duct. Refer to **Air Cleaner Assembly Replacement** in Engine Controls - 3.4L.

 © 2011 Mitchell Repair Information Company, LLC.

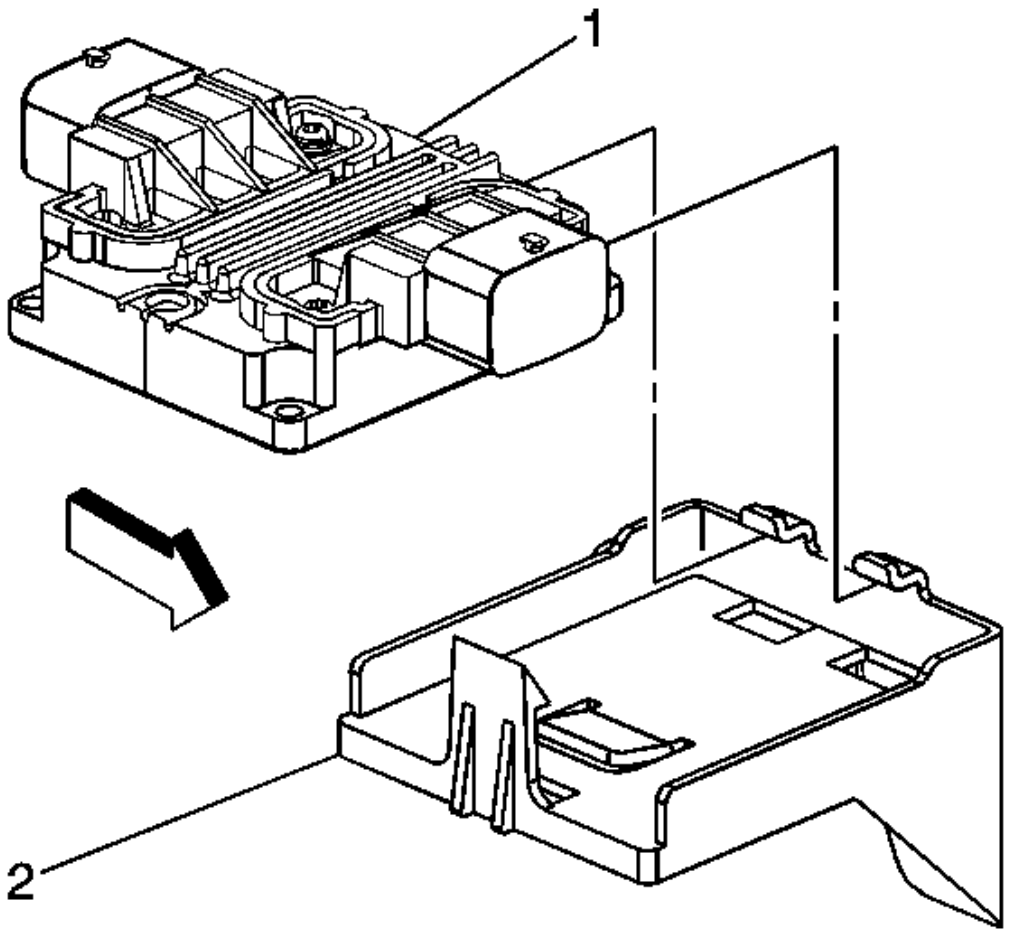


**Fig. 232: View Of TCM & Bracket**
**Courtesy of GENERAL MOTORS CORP.**

57. Install the TCM (1) to the TCM bracket (2).

 © 2011 Mitchell Repair Information Company, LLC.

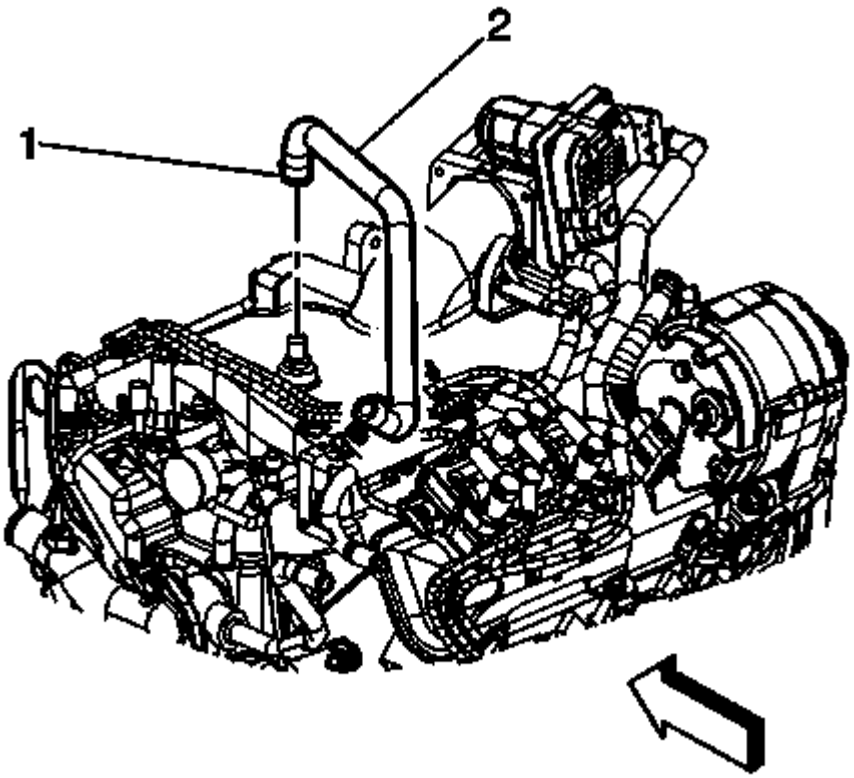


**Fig. 233: View Of Brake Booster Vacuum Hose**
**Courtesy of GENERAL MOTORS CORP.**

58. Connect the brake booster vacuum hose (2) to the intake manifold.
59. Position the clamp (1) on the brake booster vacuum hose connection.
60. Install the fuel injector sight shield. Refer to **Fuel Injector Sight Shield Replacement**.

 © 2011 Mitchell Repair Information Company, LLC.

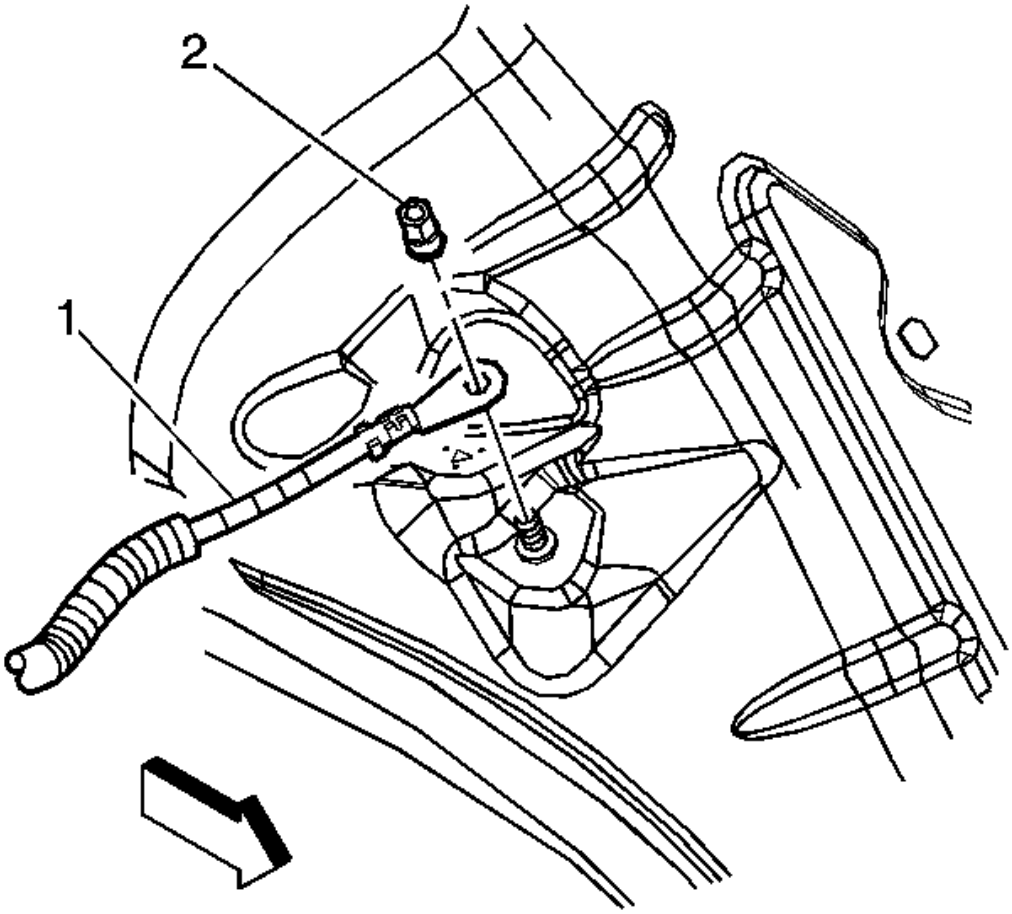


**Fig. 234: View Of Negative Battery Cable At Inner Fender Body Ground Stud**
**Courtesy of GENERAL MOTORS CORP.**

61. Install the negative battery cable from the inner fender body ground stud.
62. Install the negative battery cable nut (2) to the inner fender body ground stud.

**Tighten:** Tighten the nut to 12 N.m (106 lb in).

 © 2011 Mitchell Repair Information Company, LLC.

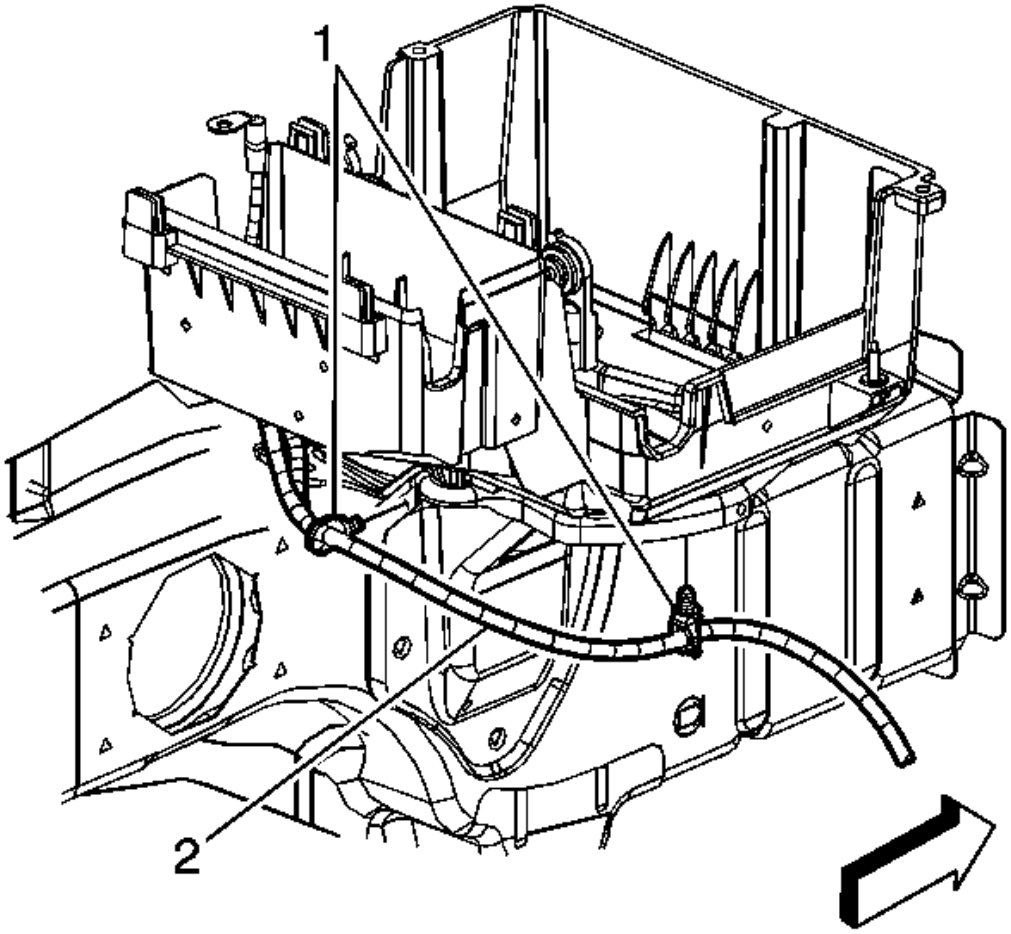


**Fig. 235: View Of Battery Cable Retainers At Battery Tray**
**Courtesy of GENERAL MOTORS CORP.**

63. Install the battery cable retainers (1) to the battery tray.
64. Install the battery box, battery and ECM. Refer to **Battery Box Replacement** in Engine Electrical.
65. Fill the engine with engine oil. Refer to **Capacities - Approximate Fluid** , **Fluid and Lubricant Recommendations** , and **Maintenance Schedule (North American Emissions)** in Maintenance and Lubrication.
66. Fill the engine with coolant. Refer to **Draining and Filling Cooling System (Static Fill)** or **Draining and Filling Cooling System (GE 47716 Fill)** in Engine Cooling.
67. Check the transaxle fluid level. Refer to **Sealers, Adhesives, and Lubricants** , **Transmission General Specifications** , and **Fluid Capacity Specifications** in Automatic Transaxle - AF33-5.
68. Charge the AC system. Refer to **Refrigerant Recovery and Recharging** in Heating, Ventilation and Air

 © 2011 Mitchell Repair Information Company, LLC.

Conditioning.

69. Prime the fuel system.
    1. Cycle the ignition ON for 5 seconds then OFF for 10 seconds. Repeat cycling twice.
    2. Crank the engine until it starts. The maximum starter motor cranking time is 20 seconds.
    3. If the engine does not start, repeat the steps.
70. Perform the CKP system variation learn procedure. Refer to **CKP System Variation Learn Procedure** in Engine Controls - 3.4L.

**Engine Oil and Oil Filter Replacement**

**Removal Procedure**

1. Raise and support the vehicle. Refer to **Lifting and Jacking the Vehicle** in General Information.
2. Position the oil drain pan under the engine oil drain plug.

 © 2011 Mitchell Repair Information Company, LLC.

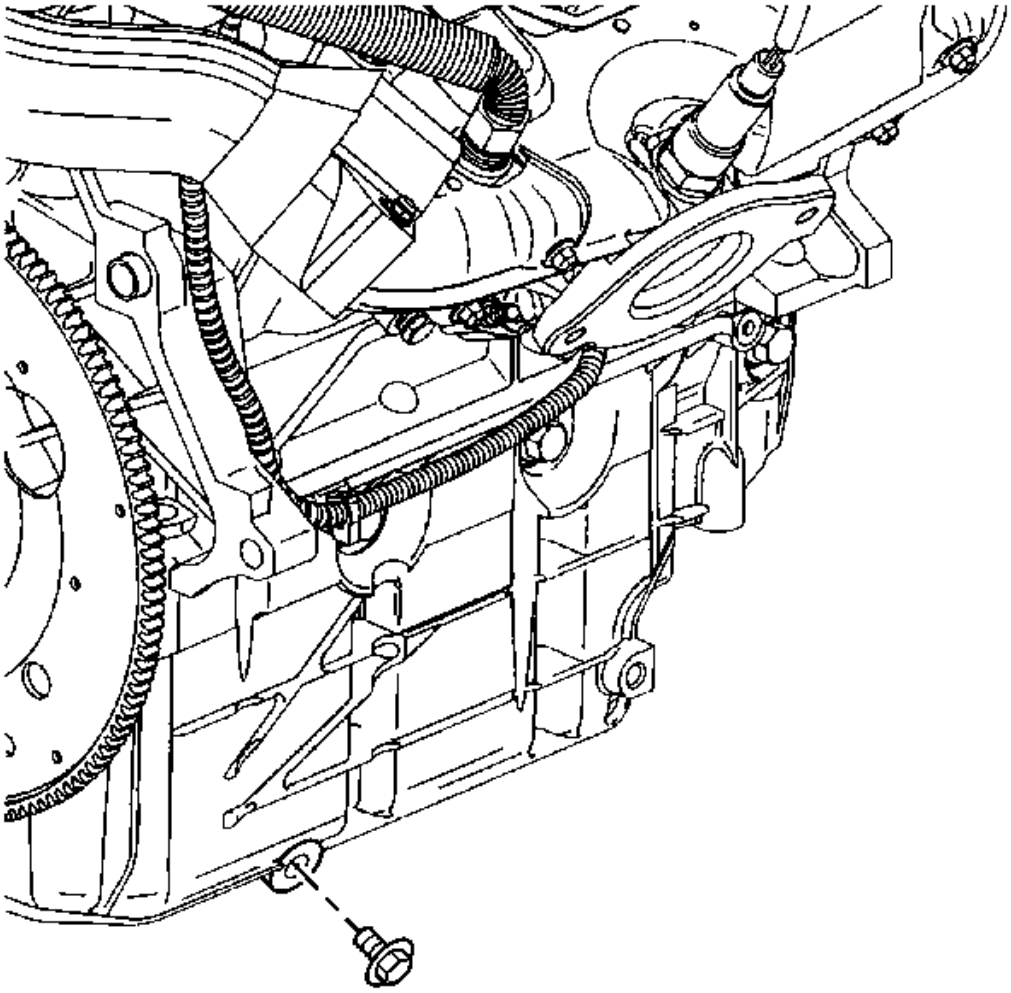

**Fig. 236: View Of Engine Oil Drain Plug**
**Courtesy of GENERAL MOTORS CORP.**

3. Remove the engine oil drain plug.
4. Clean and inspect the engine oil drain plug, replace if necessary.
5. Clean and inspect the engine oil drain plug sealing surface on the oil pan, repair or replace oil pan if necessary.

 © 2011 Mitchell Repair Information Company, LLC.

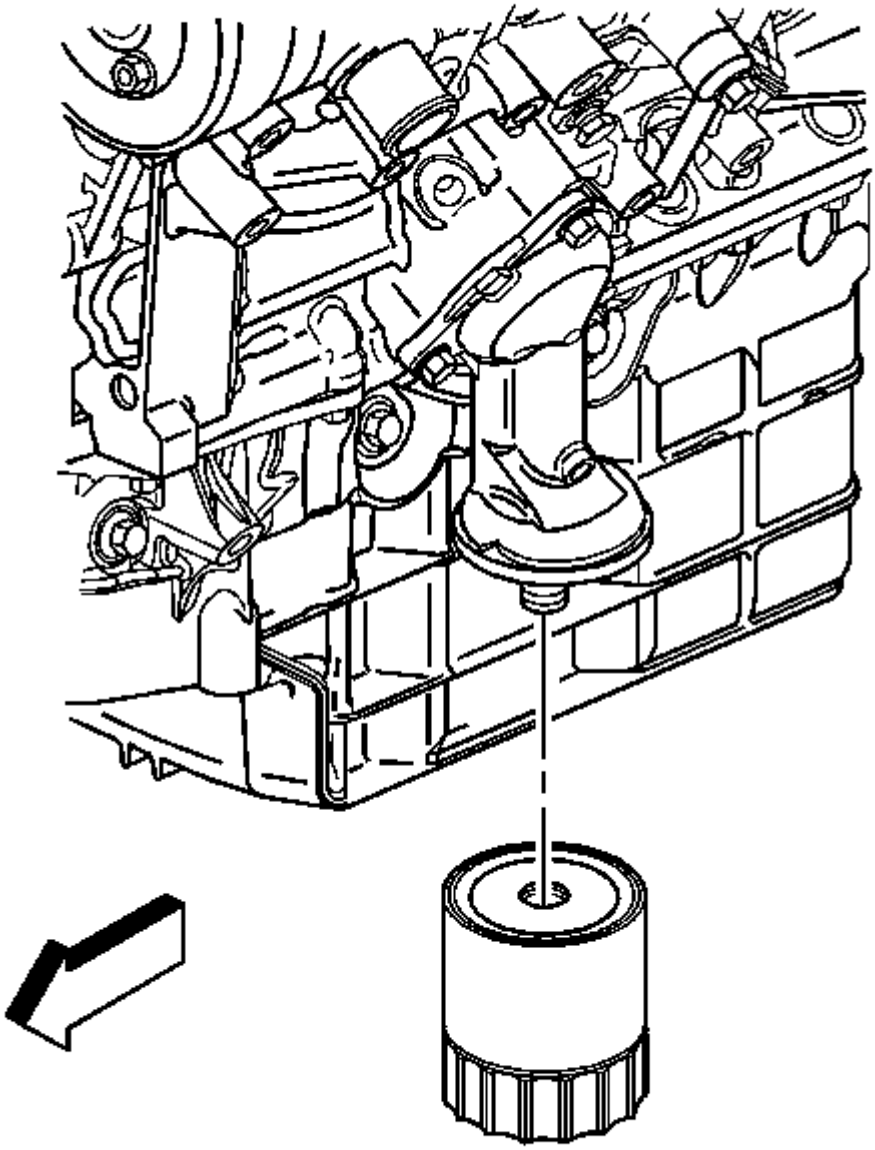

**Fig. 237: View Of Oil Filter**
**Courtesy of GENERAL MOTORS CORP.**

6. Remove the oil filter.
7. Clean and inspect the oil filter sealing area on the oil filter adapter, repair or replace if necessary.

**Installation Procedure**

 © 2011 Mitchell Repair Information Company, LLC.

1. Lightly oil the replacement oil filter gasket with clean oil.

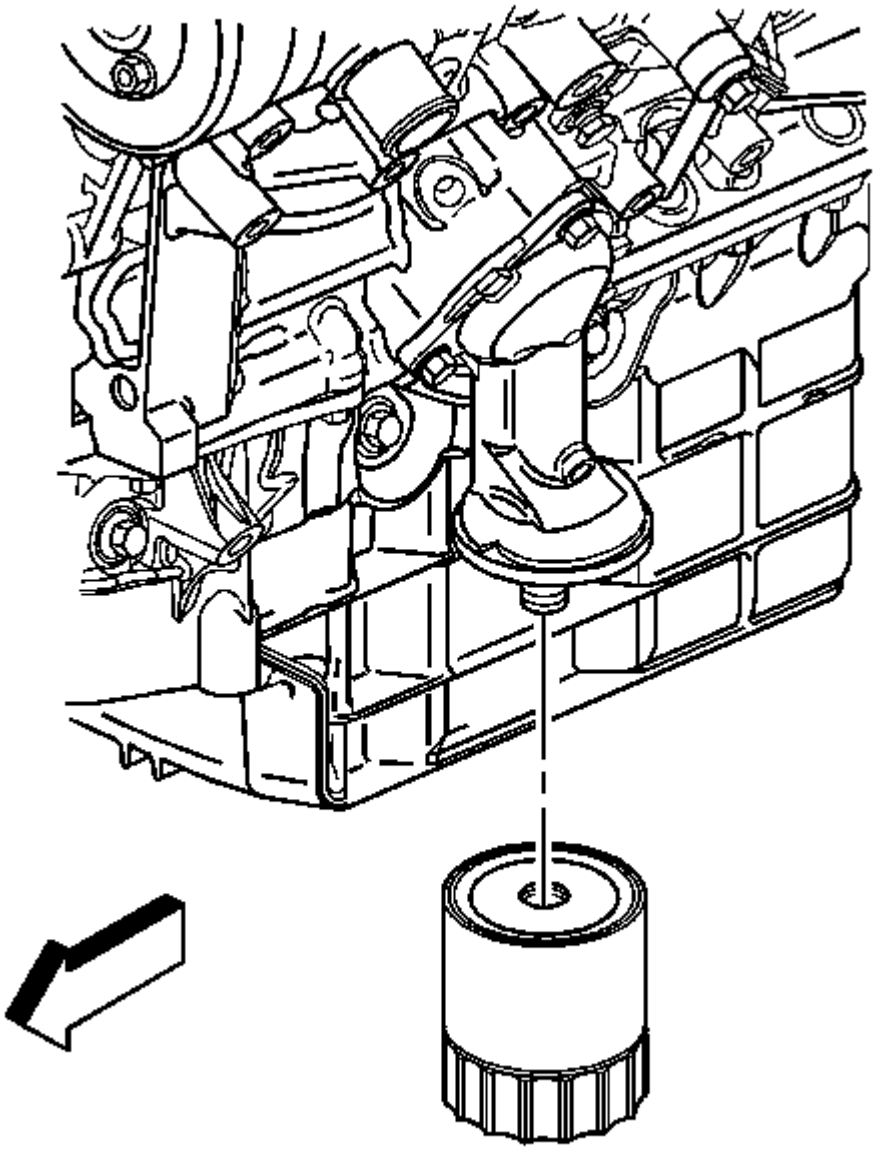

**Fig. 238: View Of Oil Filter**
**Courtesy of GENERAL MOTORS CORP.**

**NOTE: Refer to Component Fastener Tightening Notice in Cautions and Notices.**

 © 2011 Mitchell Repair Information Company, LLC.

2. Install the new oil filter. Refer to **Maintenance Items** in Maintenance and Lubrication.

   **Tighten:** Tighten the filter to 3/4 to 1 full turn, after the oil filter gasket contacts the oil filter mounting surface.

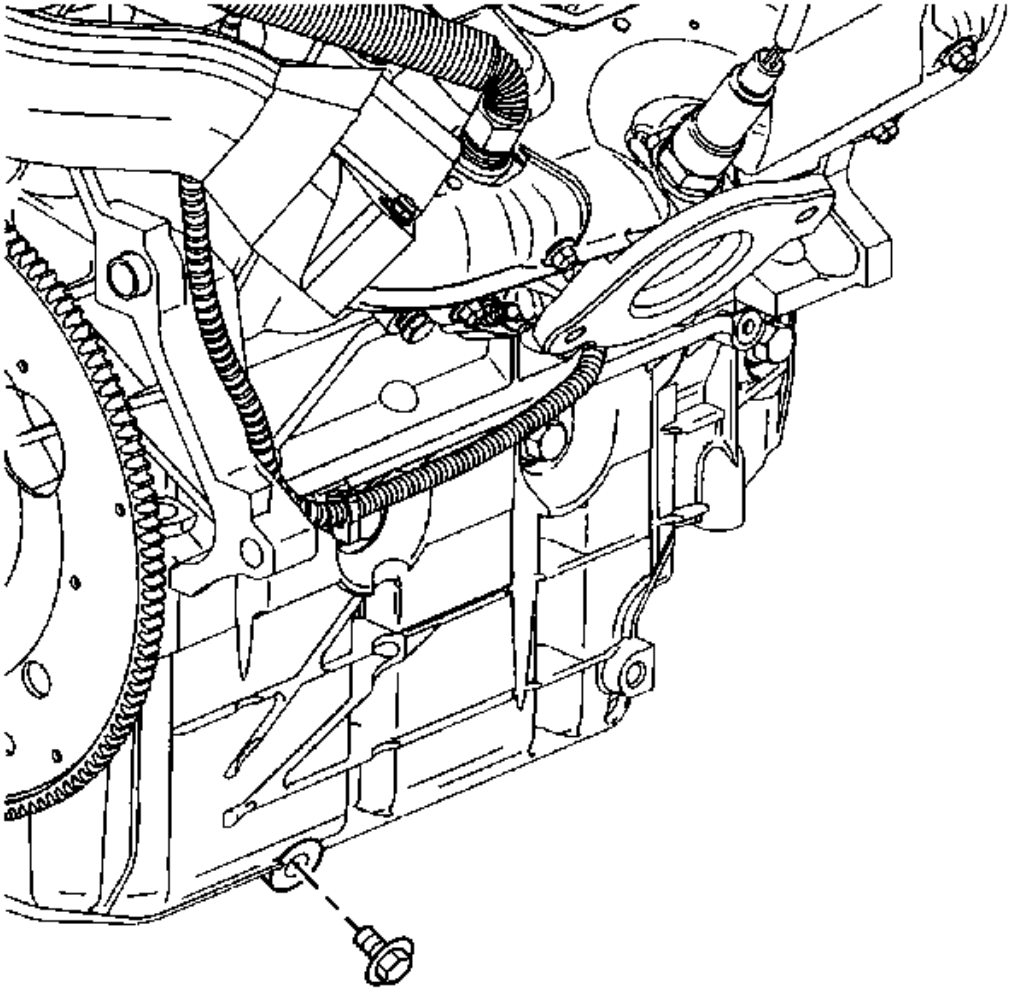

**Fig. 239: View Of Engine Oil Drain Plug**
**Courtesy of GENERAL MOTORS CORP.**

3. Install the engine oil drain plug.

   **Tighten:** Tighten the plug to 25 N.m (18 lb ft).

4. Remove the oil drain pan.

 © 2011 Mitchell Repair Information Company, LLC.

5. Lower the vehicle.

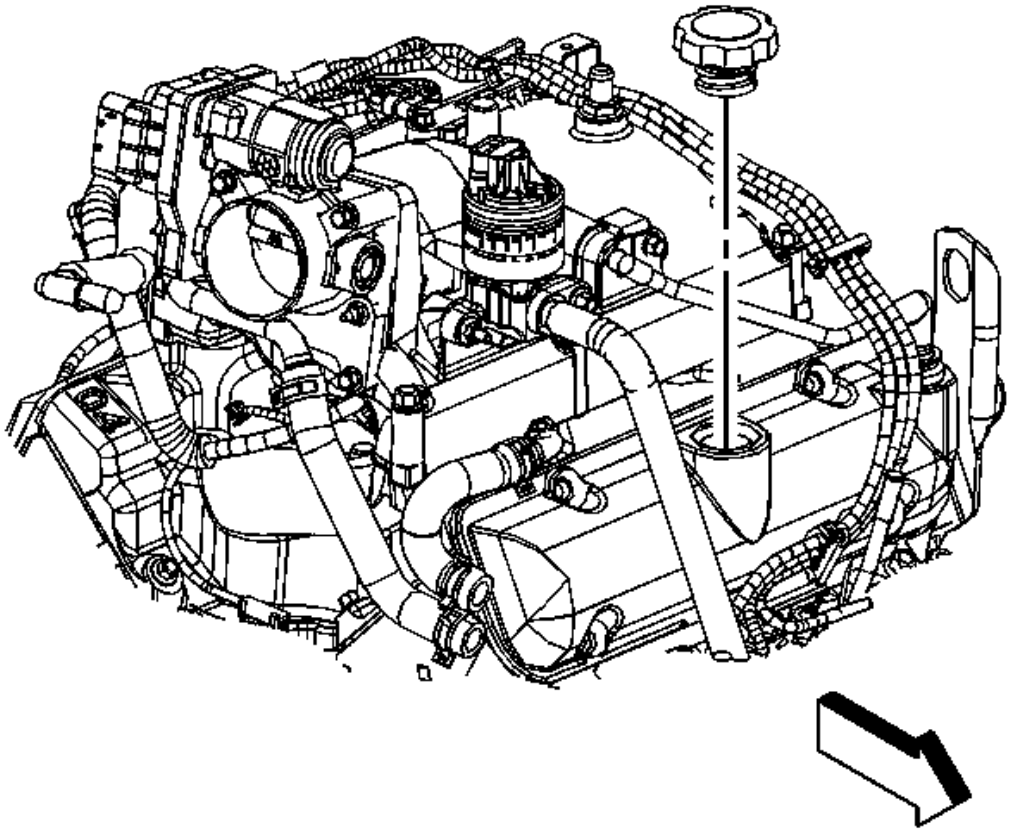

**Fig. 240: View Of Oil Fill Cap**
**Courtesy of GENERAL MOTORS CORP.**

6. Remove the oil fill cap from the rocker arm cover.
7. Fill the engine with new engine oil. Refer to **Capacities - Approximate Fluid** , **Fluid and Lubricant Recommendations** and **Maintenance Schedule (North American Emissions)** in Maintenance and Lubrication.
8. Install the oil fill cap to the rocker arm cover.

## OFF-VEHICLE REPAIR INSTRUCTIONS

### Draining Fluids and Oil Filter Removal

 © 2011 Mitchell Repair Information Company, LLC.

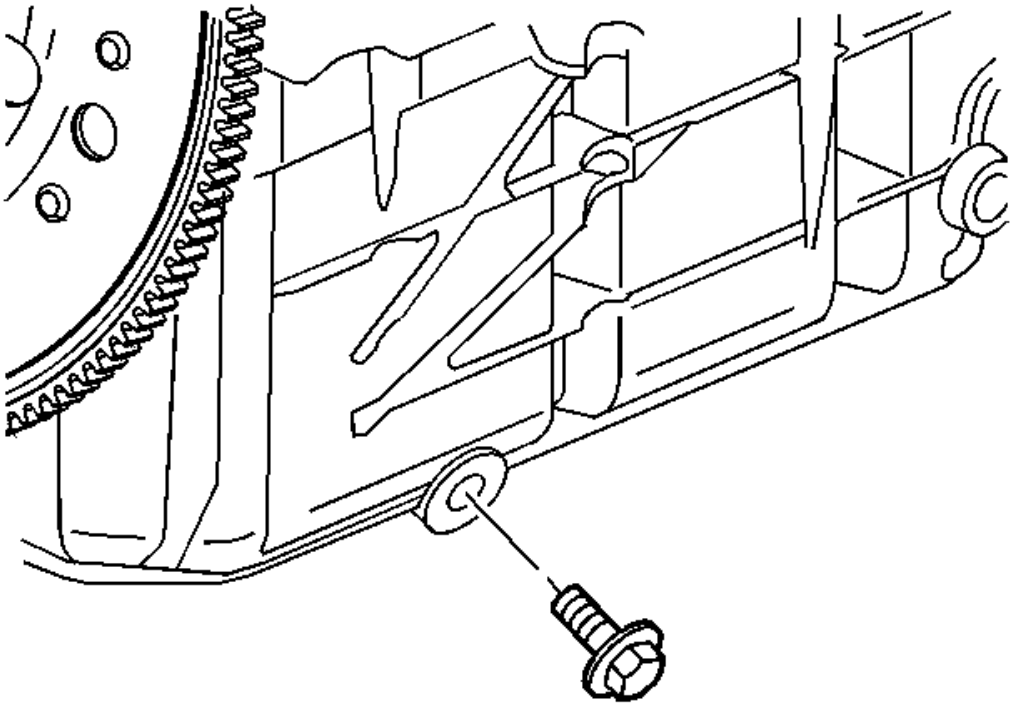

**Fig. 241: Removing Oil Pan Drain Plug**
**Courtesy of GENERAL MOTORS CORP.**

1. Remove the oil pan drain plug.
2. Drain the engine oil.

 © 2011 Mitchell Repair Information Company, LLC.

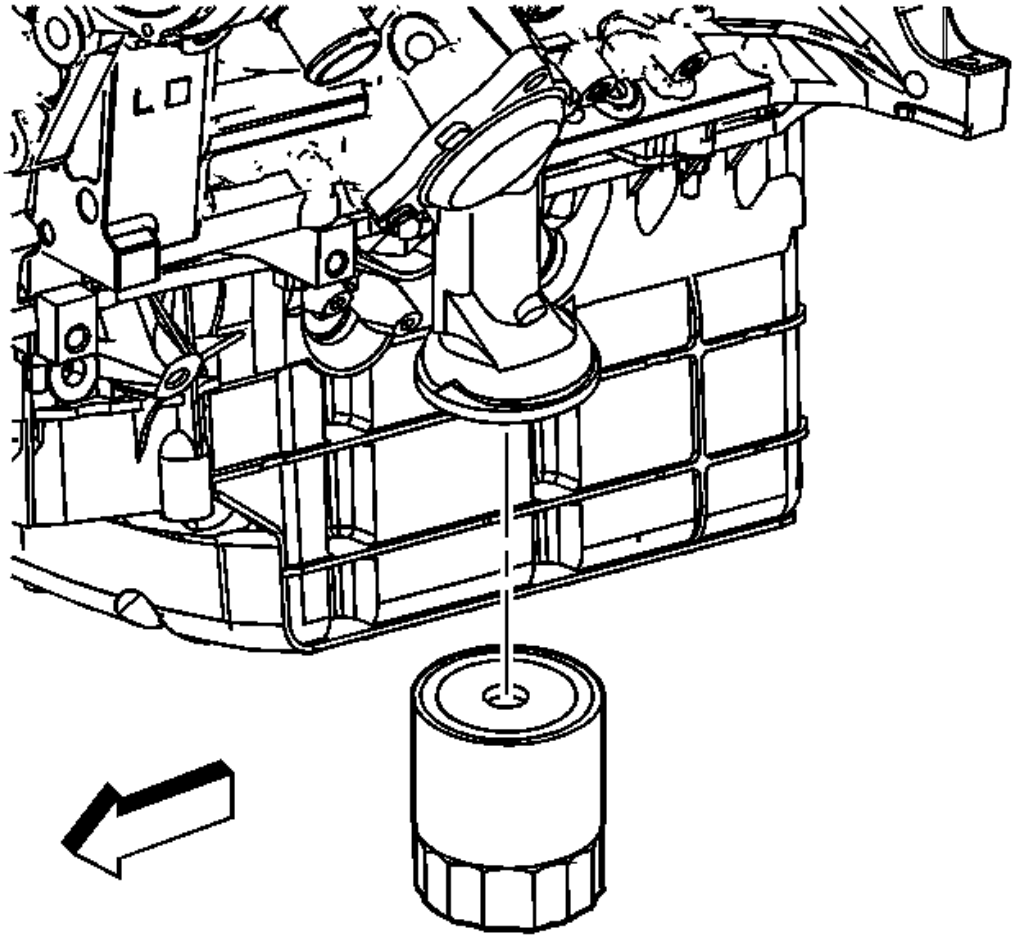

**Fig. 242: Removing Oil Filter**
**Courtesy of GENERAL MOTORS CORP.**

3. Remove the oil filter.

 © 2011 Mitchell Repair Information Company, LLC.

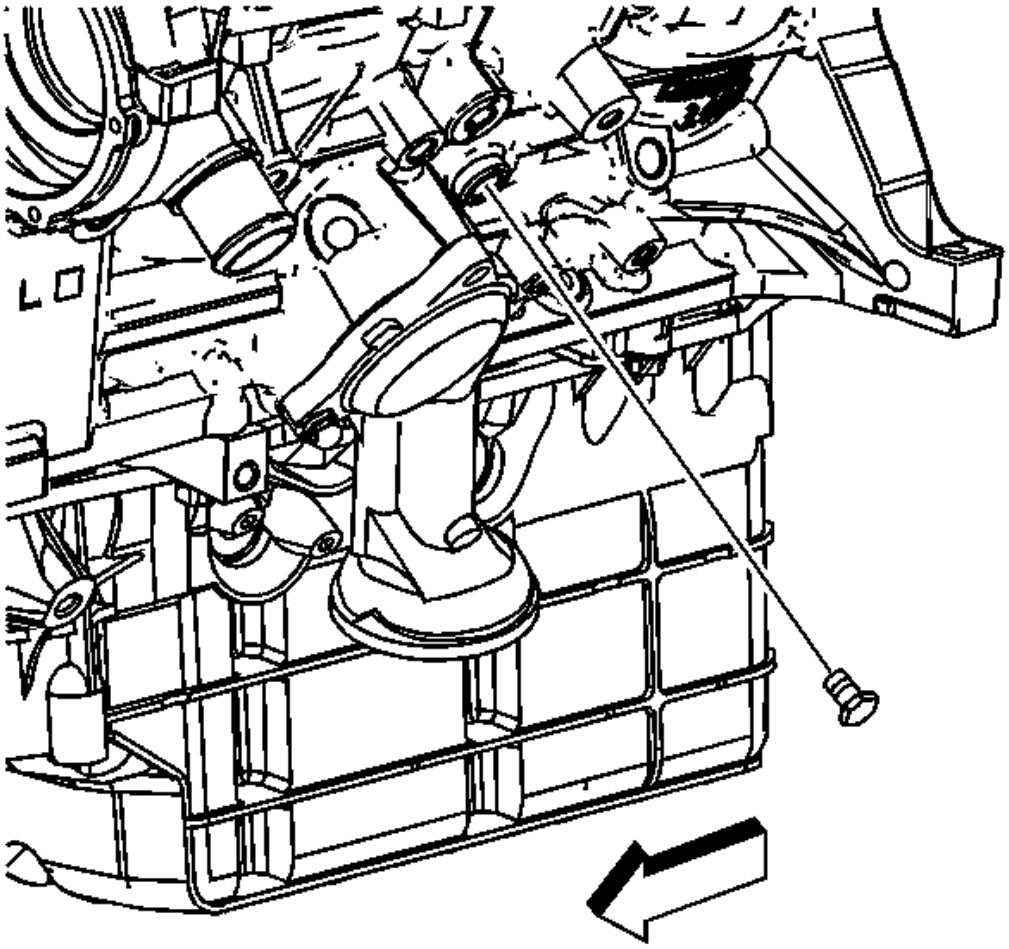

**Fig. 243: Removing Coolant Drain Plug From Left Side**
**Courtesy of GENERAL MOTORS CORP.**

4. Remove the coolant drain plug from the left side.

 © 2011 Mitchell Repair Information Company, LLC.

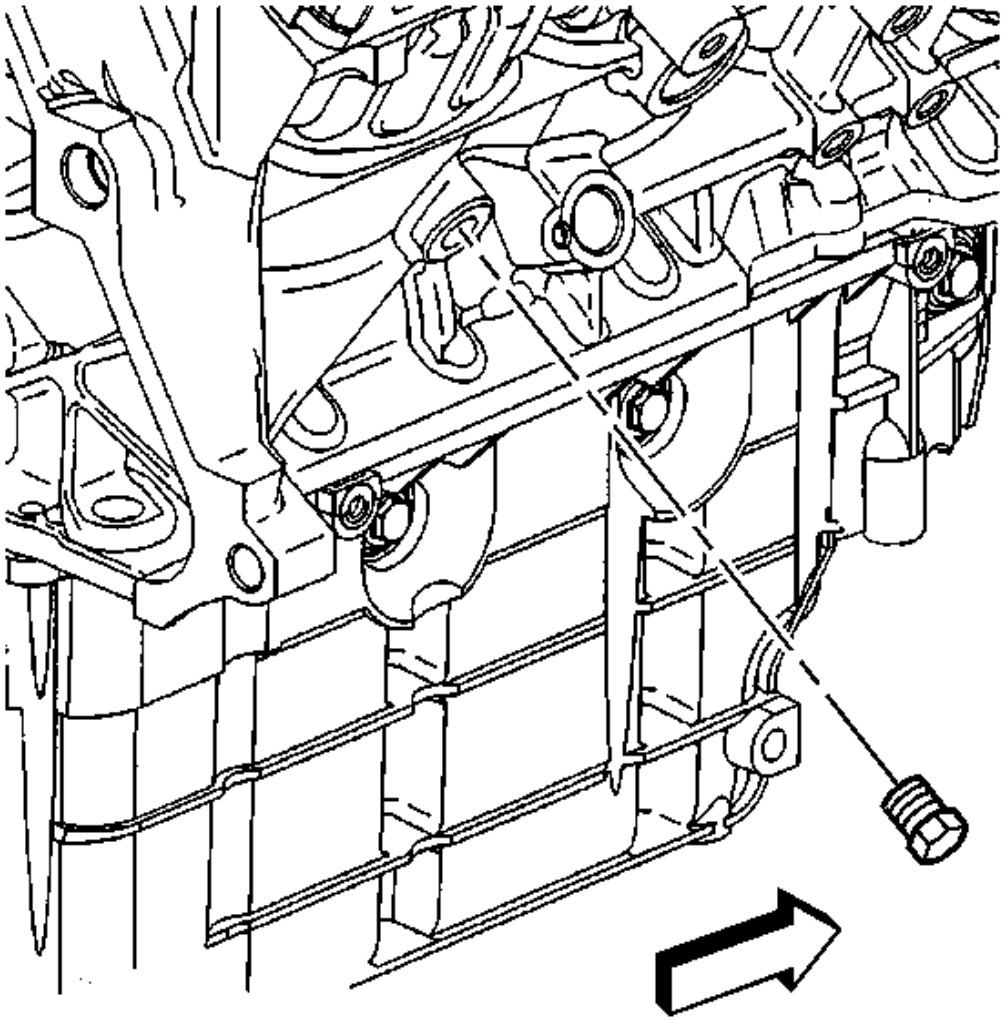

**Fig. 244: Removing Coolant Drain Plug From Right Side**
**Courtesy of GENERAL MOTORS CORP.**

5. Remove the coolant drain plug from the right side.
6. Drain the coolant.

**Crankshaft Balancer Removal**

## Tools Required

- **J 41816-A** Crankshaft Balancer Remover. See **Special Tools**.

 © 2011 Mitchell Repair Information Company, LLC.

- **EN 46359** Puller End Protector. See **Special Tools**.

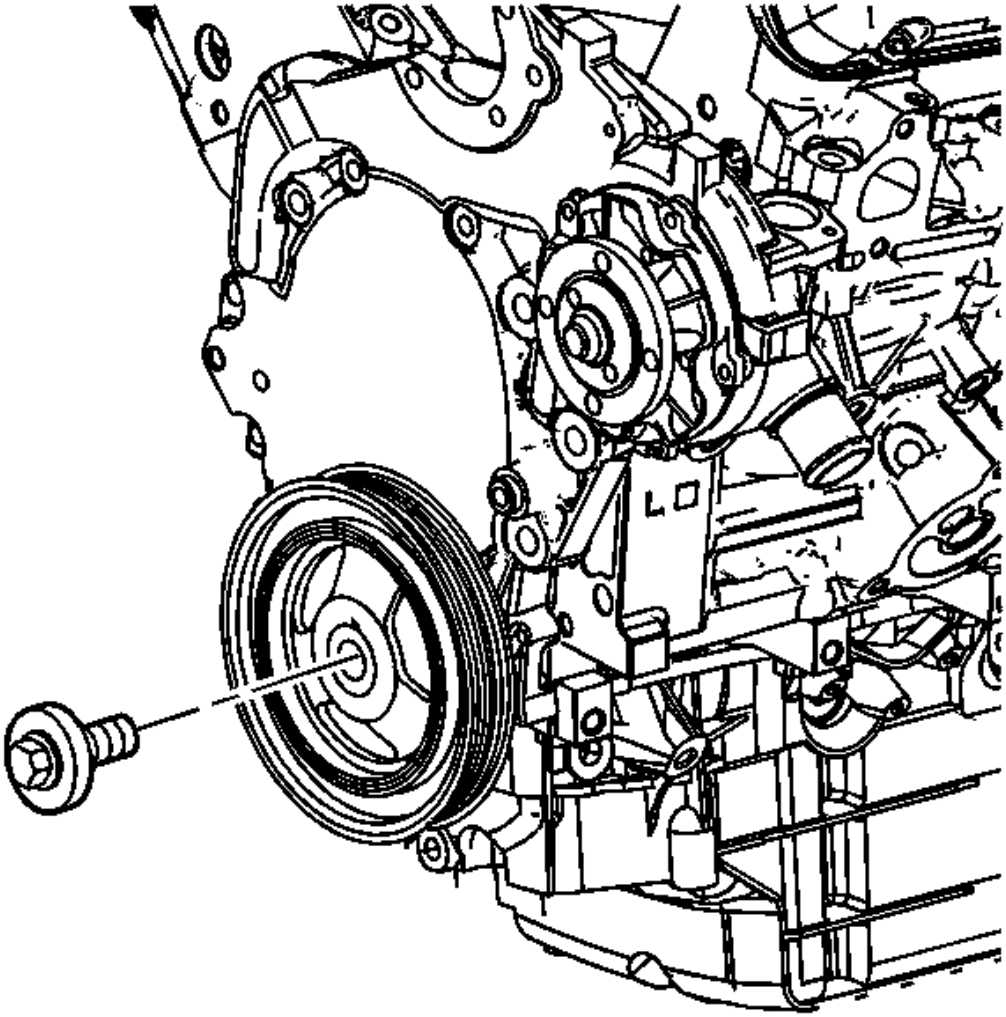

**Fig. 245: Removing Crankshaft Balancer Bolt And Washer**
**Courtesy of GENERAL MOTORS CORP.**

1. Remove the crankshaft balancer bolt and washer.

 © 2011 Mitchell Repair Information Company, LLC.

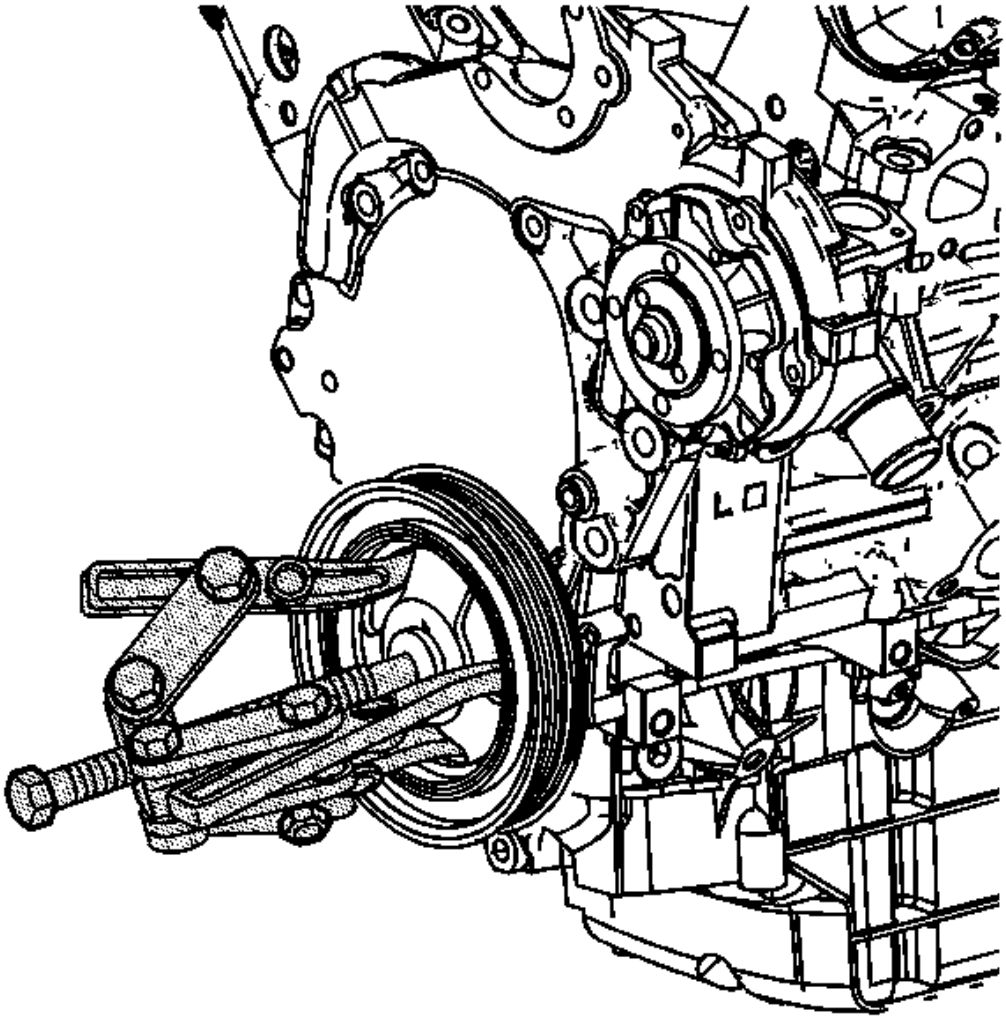

**Fig. 246: Removing Crankshaft Balancer**
**Courtesy of GENERAL MOTORS CORP.**

**NOTE:** **Do NOT use a power-assisted tool with the special tool in order to remove or install this component. You cannot properly control the alignment of this component using a power-assisted tool, and this can damage the component.**

2. Remove the crankshaft balancer using the **J 41816-A** along with **EN 46359** or equivalent. See **Special Tools**.

**Engine Flywheel Removal**

 © 2011 Mitchell Repair Information Company, LLC.

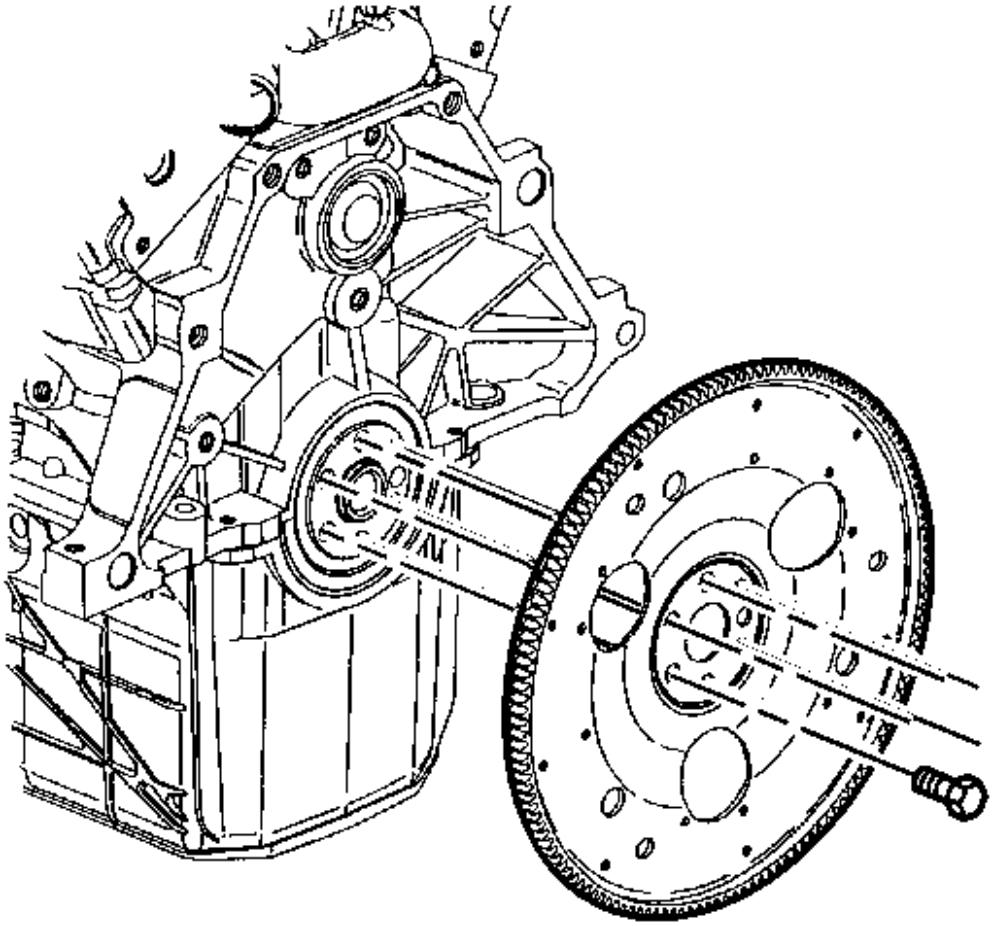

**Fig. 247: View Of Engine Flywheel**
**Courtesy of GENERAL MOTORS CORP.**

1. Remove the flywheel bolts.
2. Remove the flywheel.

**Drive Belt Tensioner Removal**

 © 2011 Mitchell Repair Information Company, LLC.

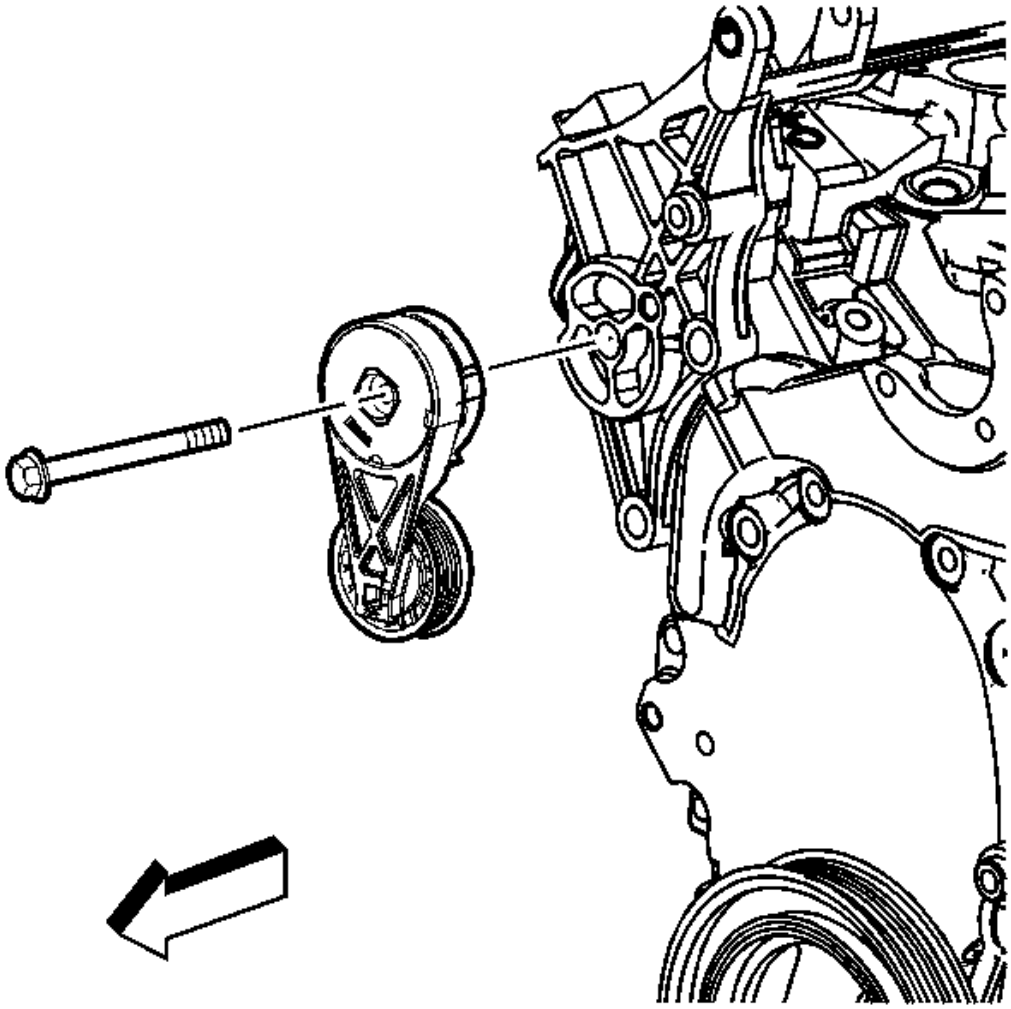

**Fig. 248: Removing Drive Belt Tensioner Bolt**
**Courtesy of GENERAL MOTORS CORP.**

1. Remove the drive belt tensioner bolt.
2. Remove the drive belt tensioner.

**Engine Mount Support and Strut Bracket Removal**

 © 2011 Mitchell Repair Information Company, LLC.

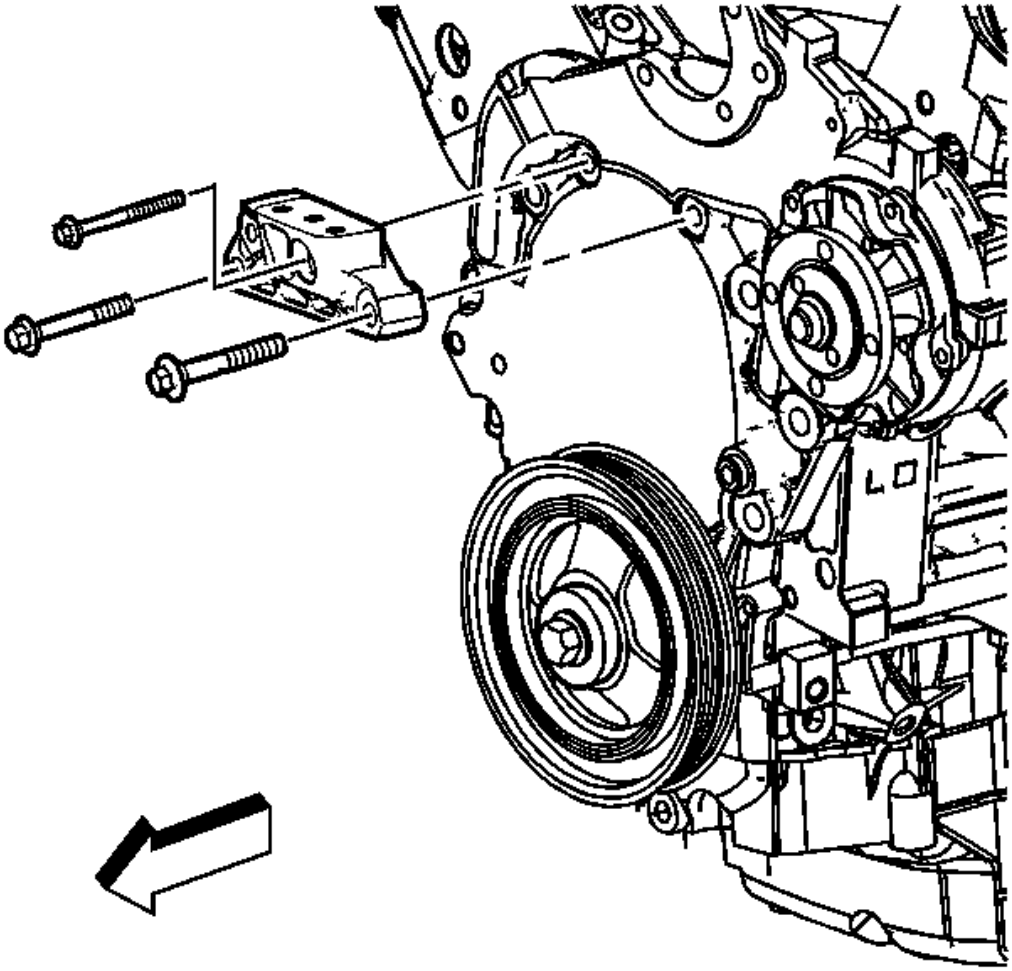

**Fig. 249: View Of Engine Mount Support & Strut Bracket**
**Courtesy of GENERAL MOTORS CORP.**

1. Remove the engine mount support and strut bracket bolts.
2. Remove the engine mount support and strut bracket.

**Engine Lift Bracket and Generator Bracket Removal**

 © 2011 Mitchell Repair Information Company, LLC.

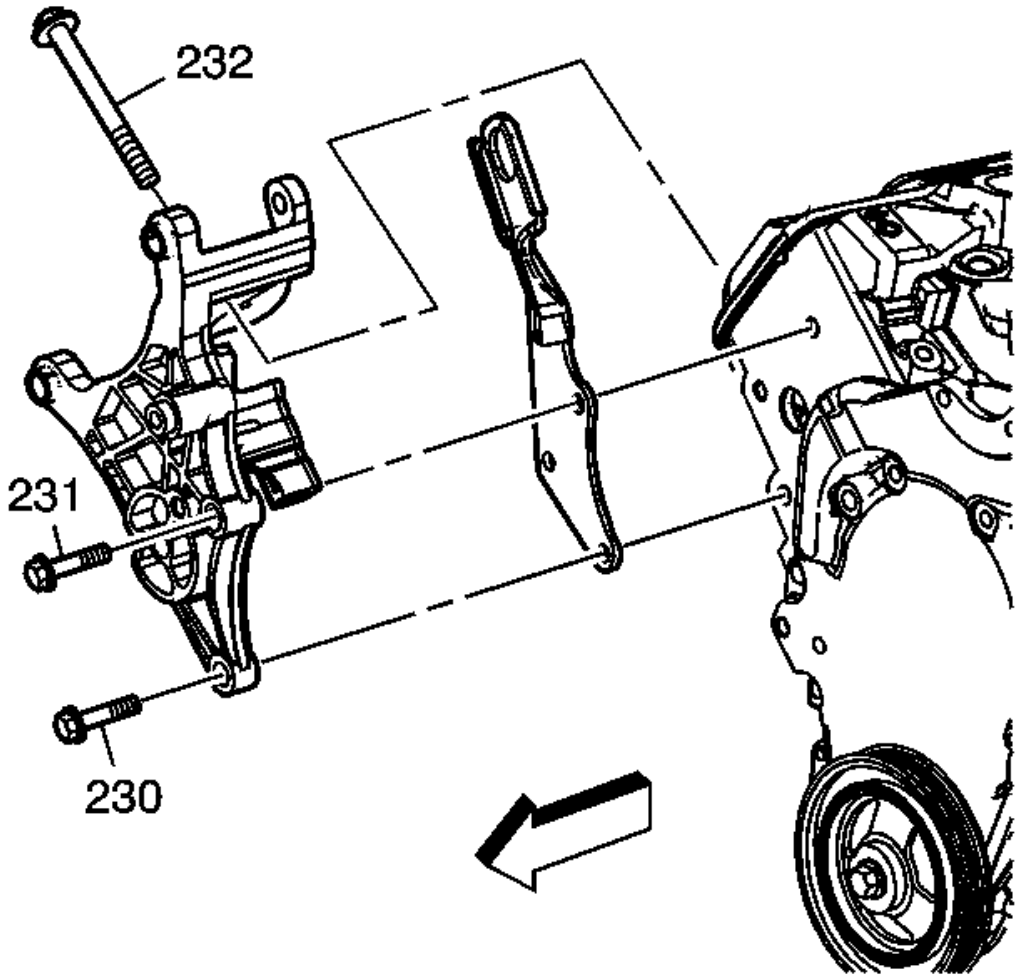


**Fig. 250: View Of Generator Bracket Assembly, Bolts & Front Engine Lift Hook**
**Courtesy of GENERAL MOTORS CORP.**

1. Remove the generator bracket assembly bolts (230, 231, 232).
2. Remove the generator assembly bracket.
3. Remove the front engine lift hook.

**Engine Lift Bracket Removal - Rear**

 © 2011 Mitchell Repair Information Company, LLC.

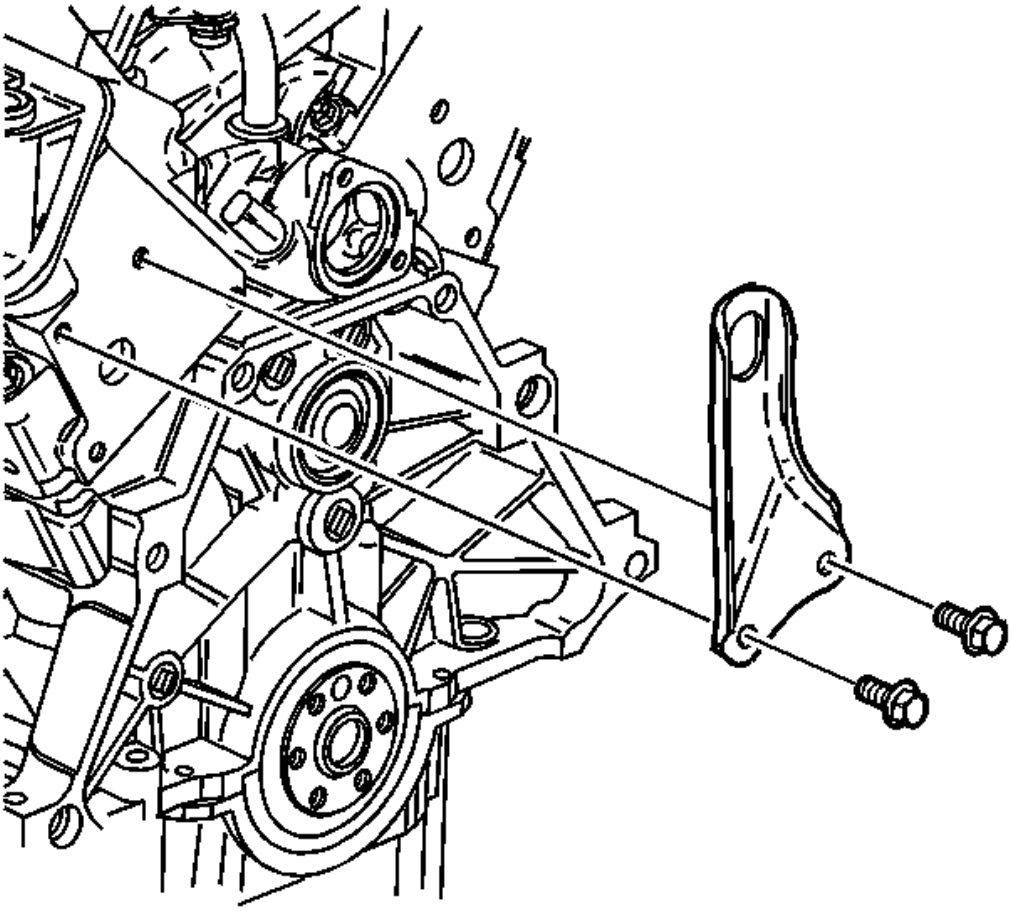

**Fig. 251: Removing Rear Engine Lift Bracket Bolts**
**Courtesy of GENERAL MOTORS CORP.**

1. Remove the rear engine lift bracket bolts.
2. Remove the rear engine lift bracket.

**Oil Level Indicator and Tube Removal**

 © 2011 Mitchell Repair Information Company, LLC.

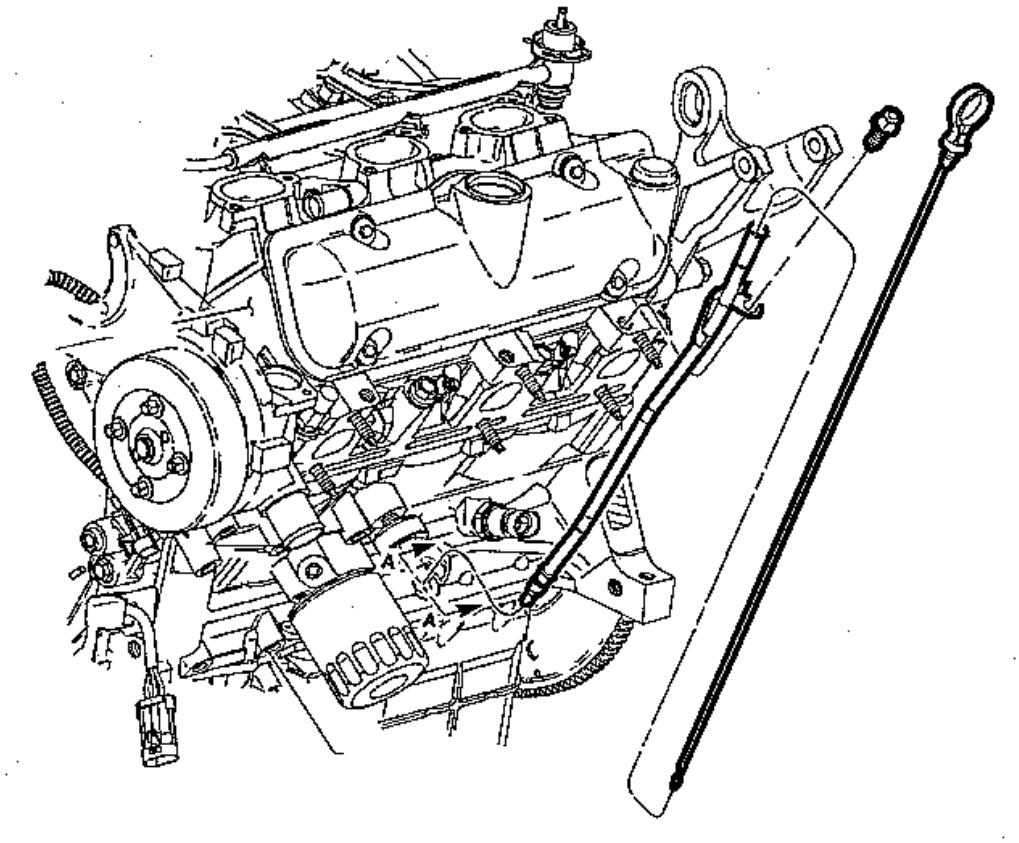


**Fig. 252: Locating Oil Level Indicator And Oil Level Indicator Tube**
**Courtesy of GENERAL MOTORS CORP.**

1. Remove the oil level indicator tube bolt.
2. Remove the oil level indicator and oil level indicator tube.

**Oil Filter Adapter Removal**

 © 2011 Mitchell Repair Information Company, LLC.

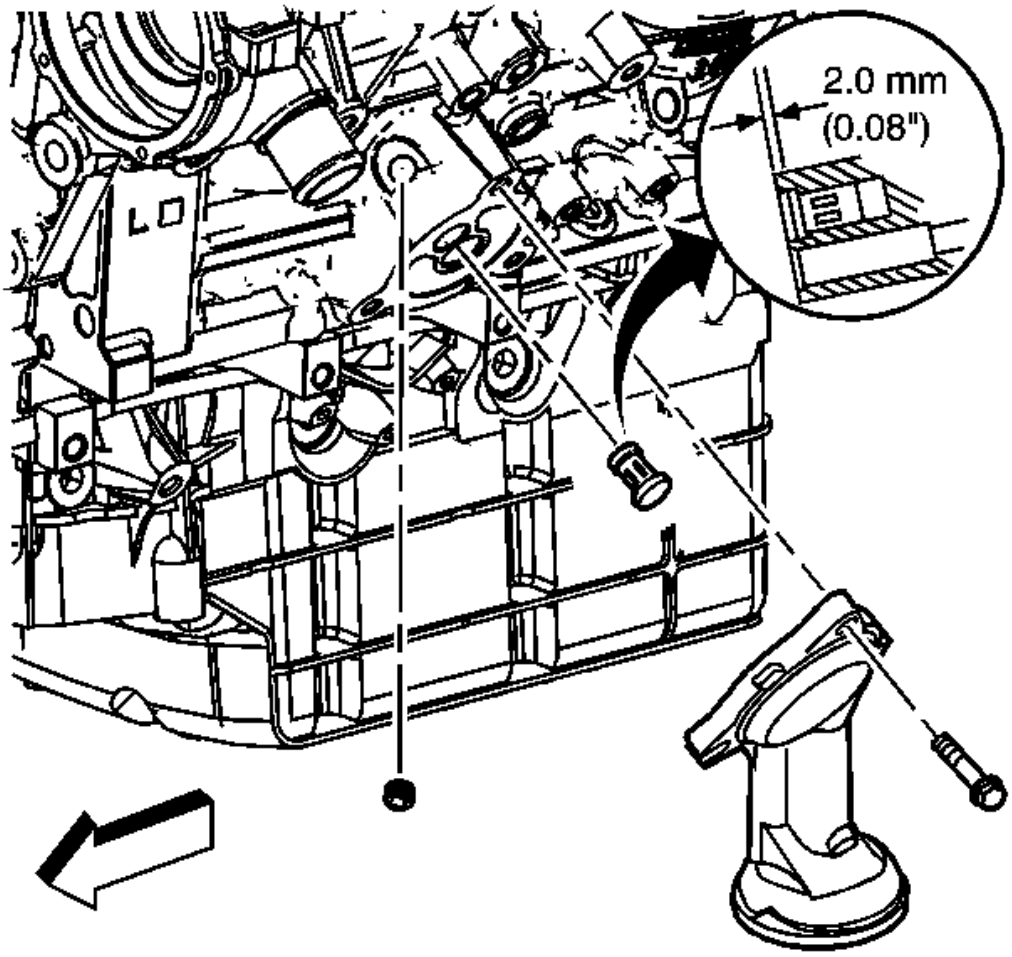


**Fig. 253: Removing Oil Filter Adapter Bolts**
**Courtesy of GENERAL MOTORS CORP.**

1. Remove the oil filter adapter bolts.
2. Remove the oil filter adapter and gasket.
3. Remove the oil filter bypass hole plug.

**IMPORTANT: Do not pry against the threads in the oil filter bypass hole when removing the bypass valve.**

4. Remove the oil filter bypass valve by prying out with a suitable tool.

**Exhaust Crossover Pipe Removal**

 © 2011 Mitchell Repair Information Company, LLC.

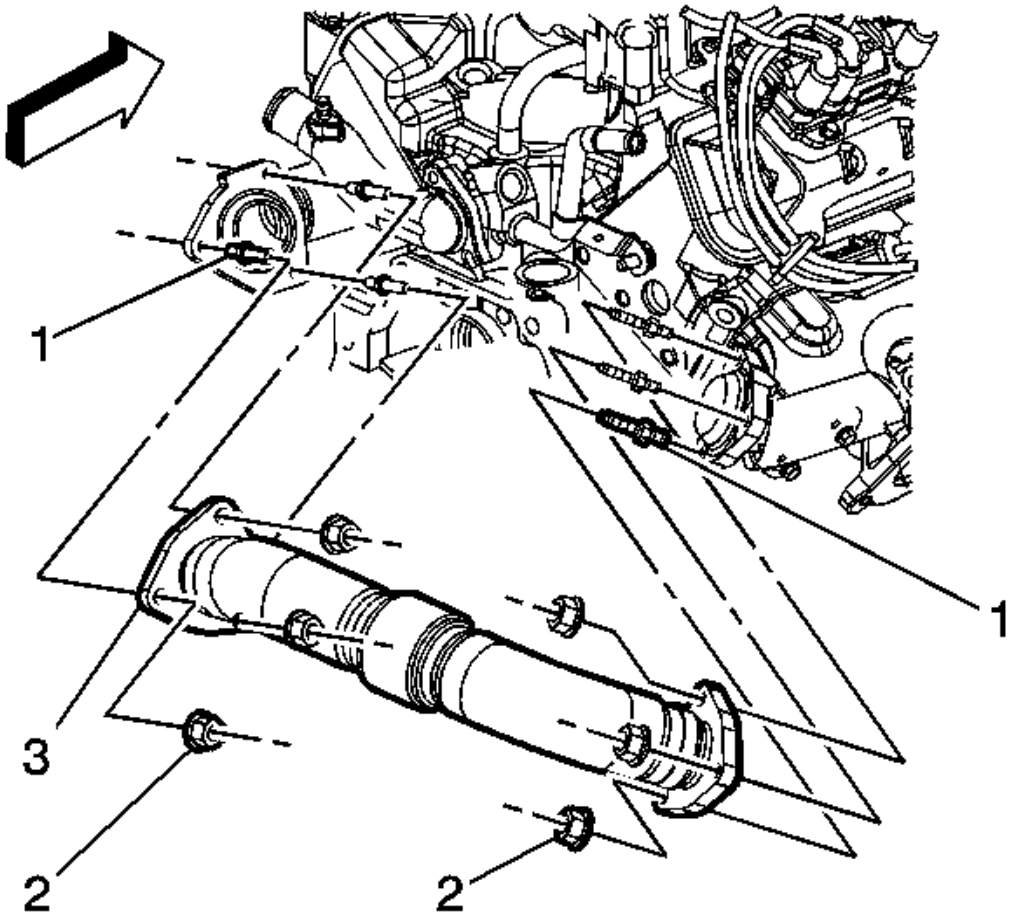


**Fig. 254: View Of Exhaust Crossover Pipe, Studs & Nuts**
**Courtesy of GENERAL MOTORS CORP.**

1. Remove the exhaust crossover pipe nuts (2).
2. Remove the exhaust crossover pipe (3).
3. Remove the exhaust crossover pipe studs if necessary (1).

**Exhaust Manifold Removal - Left**

 © 2011 Mitchell Repair Information Company, LLC.

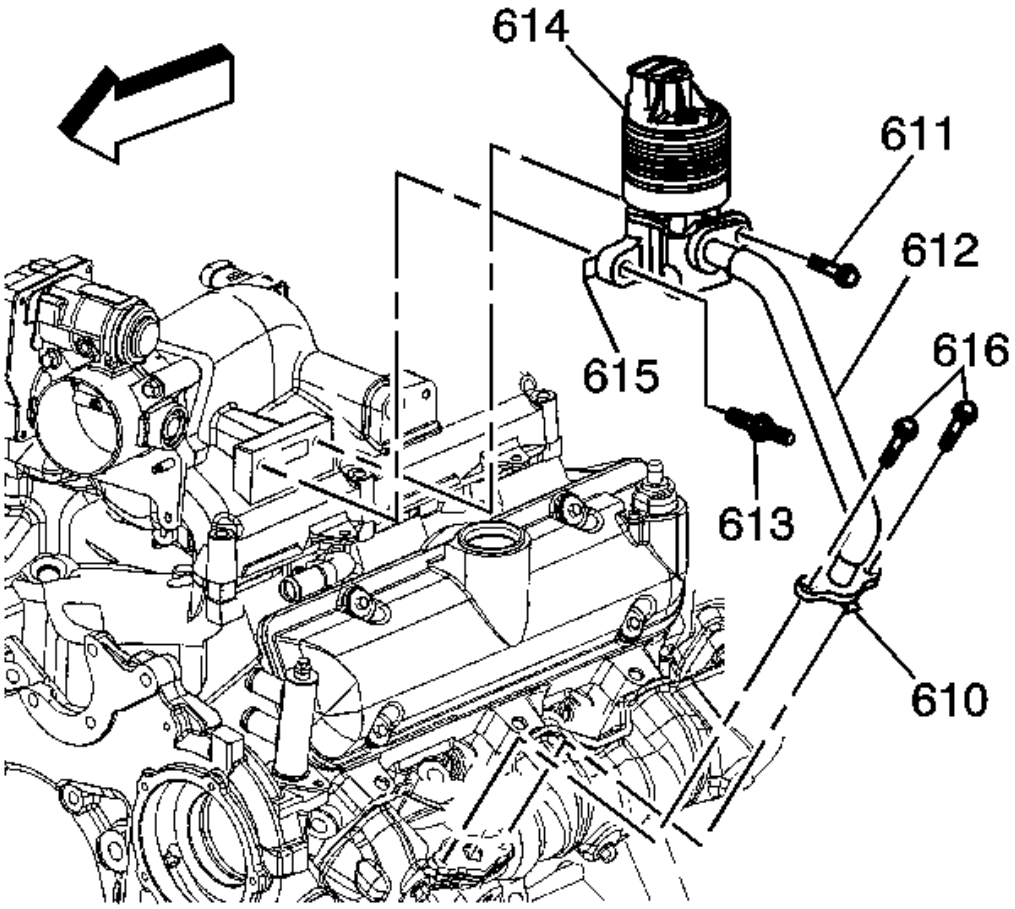


**Fig. 255: View Of EGR Valve & Components**
**Courtesy of GENERAL MOTORS CORP.**

1. Remove the exhaust gas recirculation (EGR) pipe bolts (616) and gasket (610) from the left exhaust manifold.
2. Remove the EGR valve bolts (613), EGR valve (614), and gasket (615) from the upper intake manifold and remove the assembly from the engine.

 © 2011 Mitchell Repair Information Company, LLC.

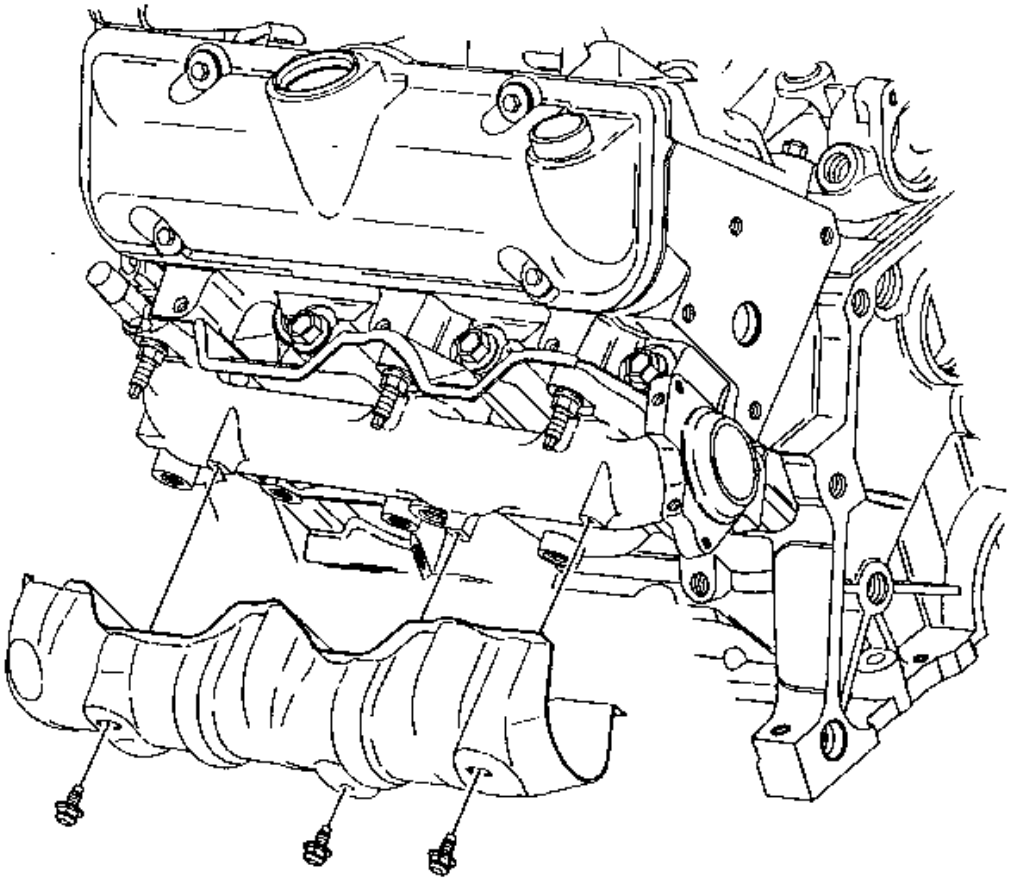

**Fig. 256: View Of Exhaust Manifold Heat Shield & Bolts - Left**
**Courtesy of GENERAL MOTORS CORP.**

3. Remove the spark plug wires from the spark plugs.
4. Remove the spark plugs.
5. Remove the exhaust manifold heat shield bolts.
6. Remove the exhaust manifold heat shield.

 © 2011 Mitchell Repair Information Company, LLC.

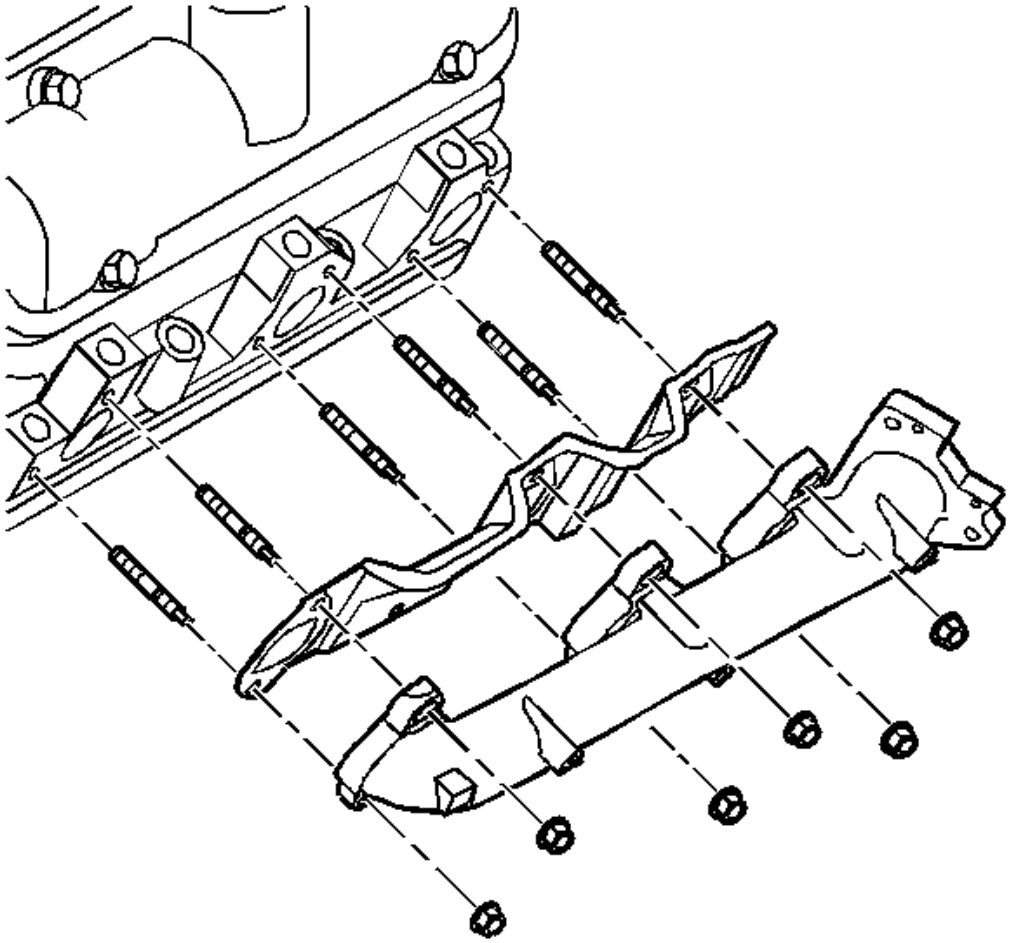

**Fig. 257: View Of Exhaust Manifold & Exhaust Manifold Gasket - Left**
**Courtesy of GENERAL MOTORS CORP.**

7. Remove the exhaust manifold nuts.
8. Remove the exhaust manifold.
9. Remove the exhaust manifold gasket.
10. Remove the exhaust studs, if required.

**Exhaust Manifold Removal - Right**

 © 2011 Mitchell Repair Information Company, LLC.

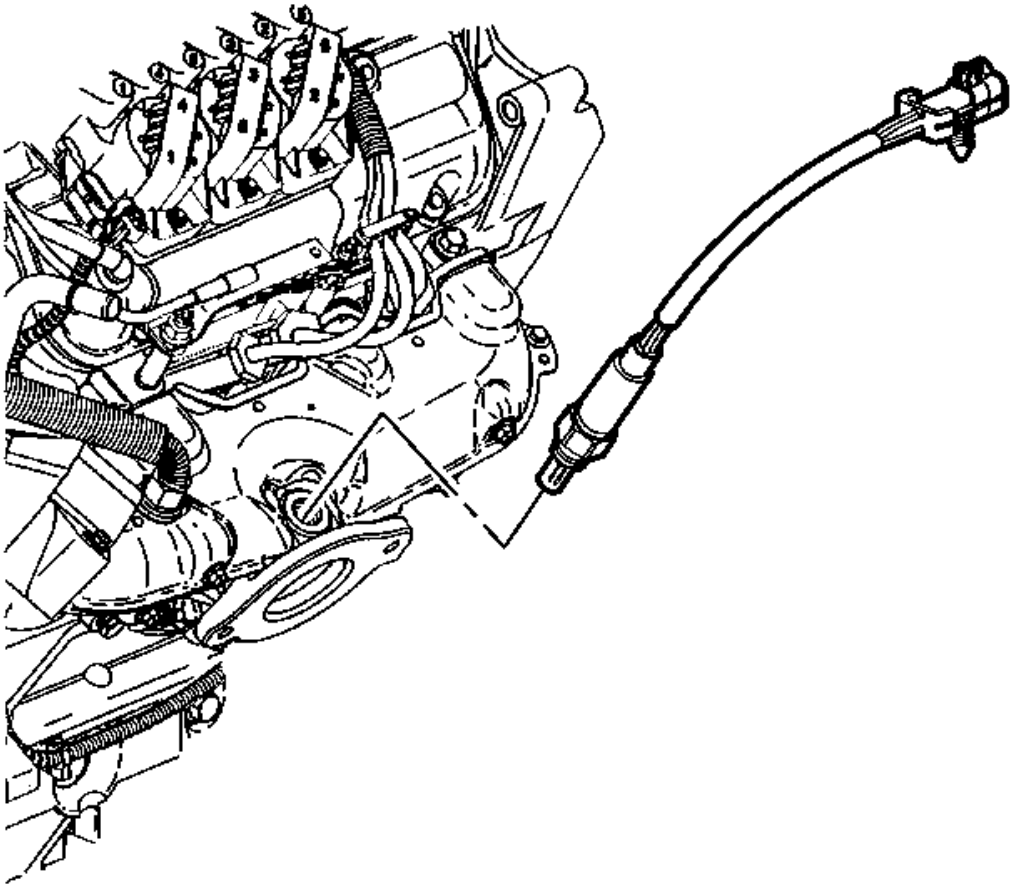

**Fig. 258: Identifying Heated Oxygen Sensor**
**Courtesy of GENERAL MOTORS CORP.**

1. Remove the spark plug wires from the spark plugs.
2. Remove the spark plugs.
3. Remove the heated oxygen sensor.

 © 2011 Mitchell Repair Information Company, LLC.

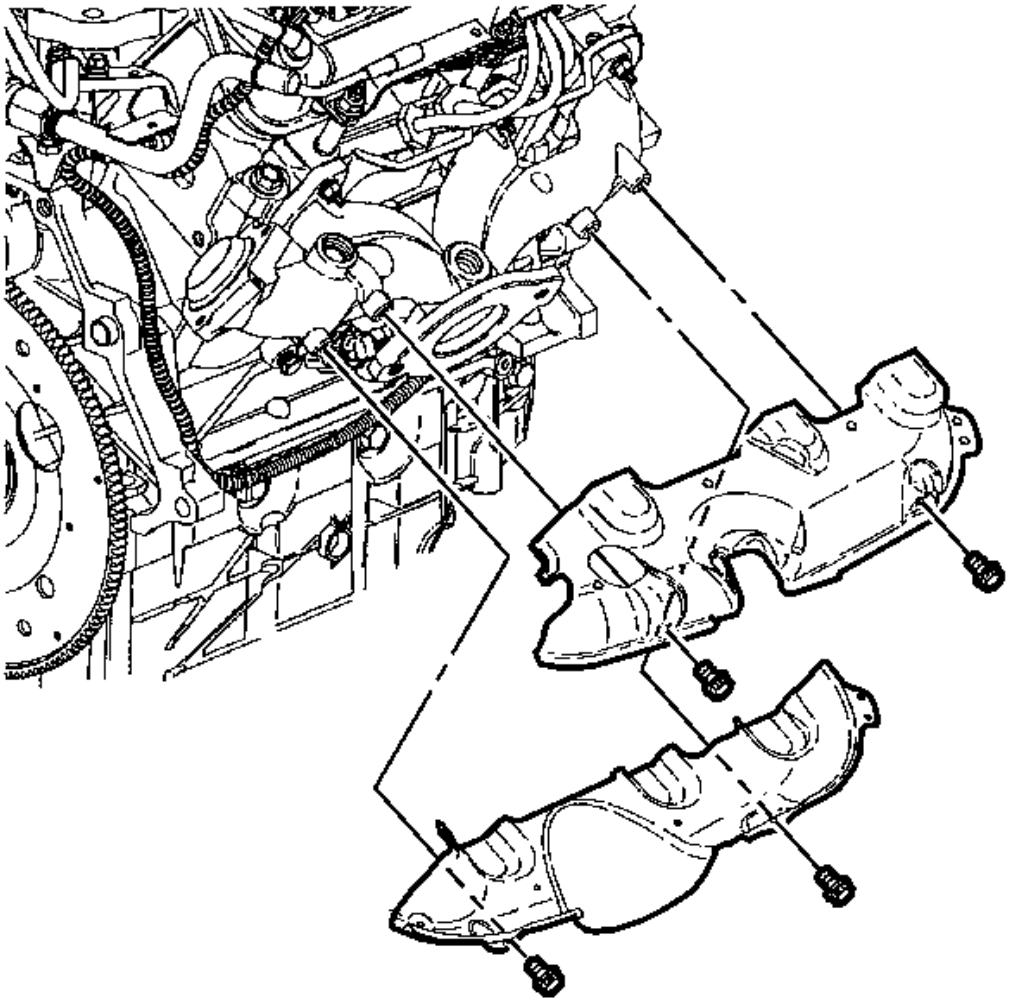

**Fig. 259: View Of Right Exhaust Manifold Heat Shields & Bolts**
**Courtesy of GENERAL MOTORS CORP.**

4. Remove the exhaust manifold heat shield bolts.
5. Remove the exhaust manifold heat shields.

 © 2011 Mitchell Repair Information Company, LLC.

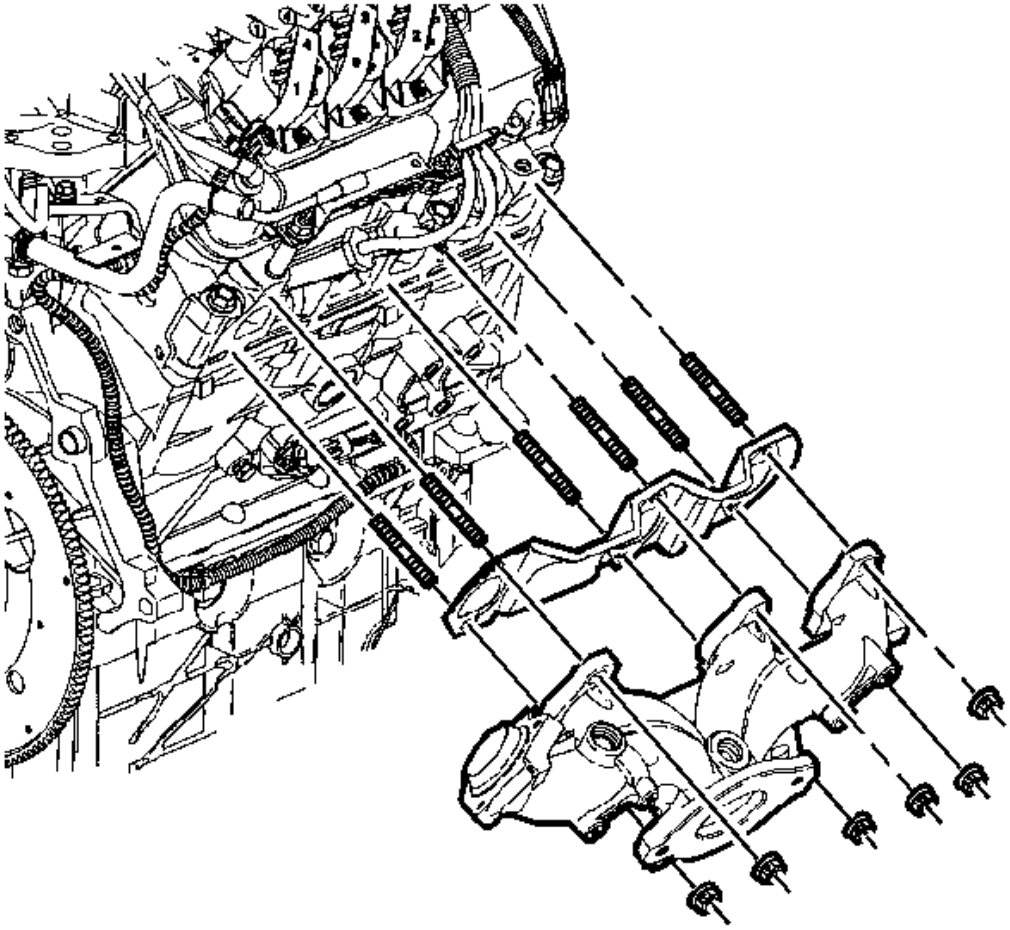

**Fig. 260: Right Exhaust Manifold (3.4L)**
**Courtesy of GENERAL MOTORS CORP.**

6. Remove the exhaust manifold nuts.
7. Remove the exhaust manifold.
8. Remove the exhaust manifold gasket.
9. Remove the exhaust studs, if required.

**Water Outlet and Thermostat Removal**

 © 2011 Mitchell Repair Information Company, LLC.

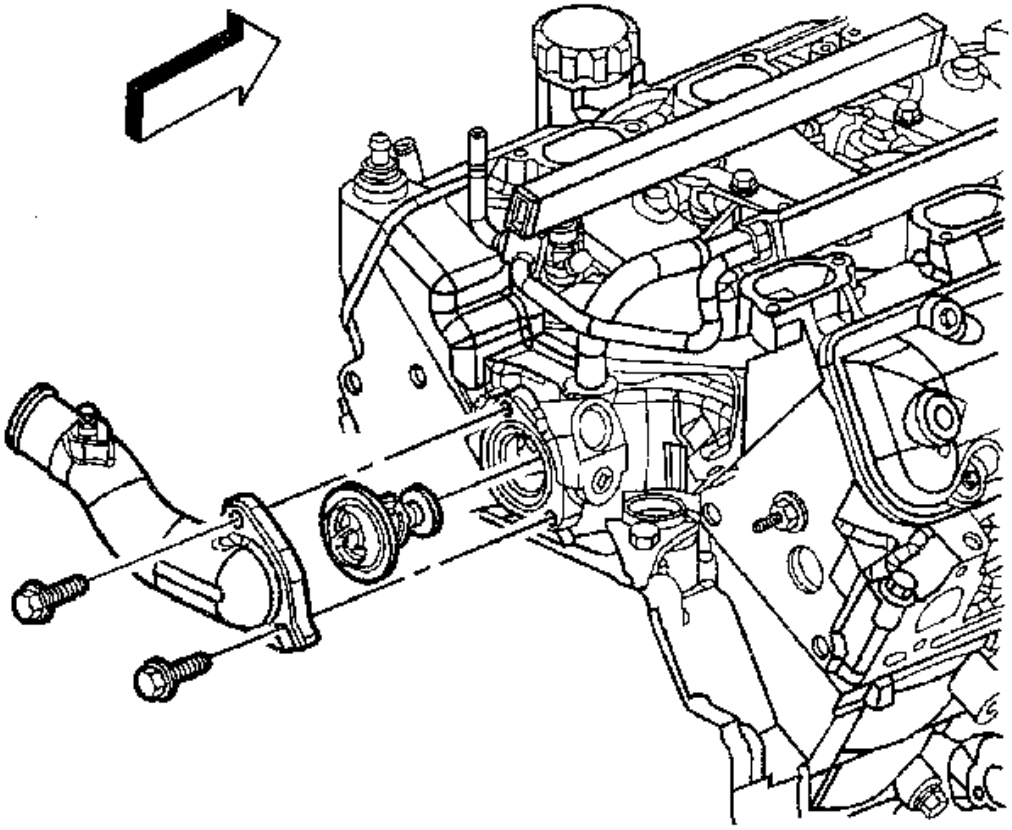

**Fig. 261: View Of Water Outlet & Thermostat**
**Courtesy of GENERAL MOTORS CORP.**

1. Remove the water outlet bolts.
2. Remove the water outlet.
3. Remove the thermostat.

**Valve Rocker Arm Cover Removal - Left**

 © 2011 Mitchell Repair Information Company, LLC.

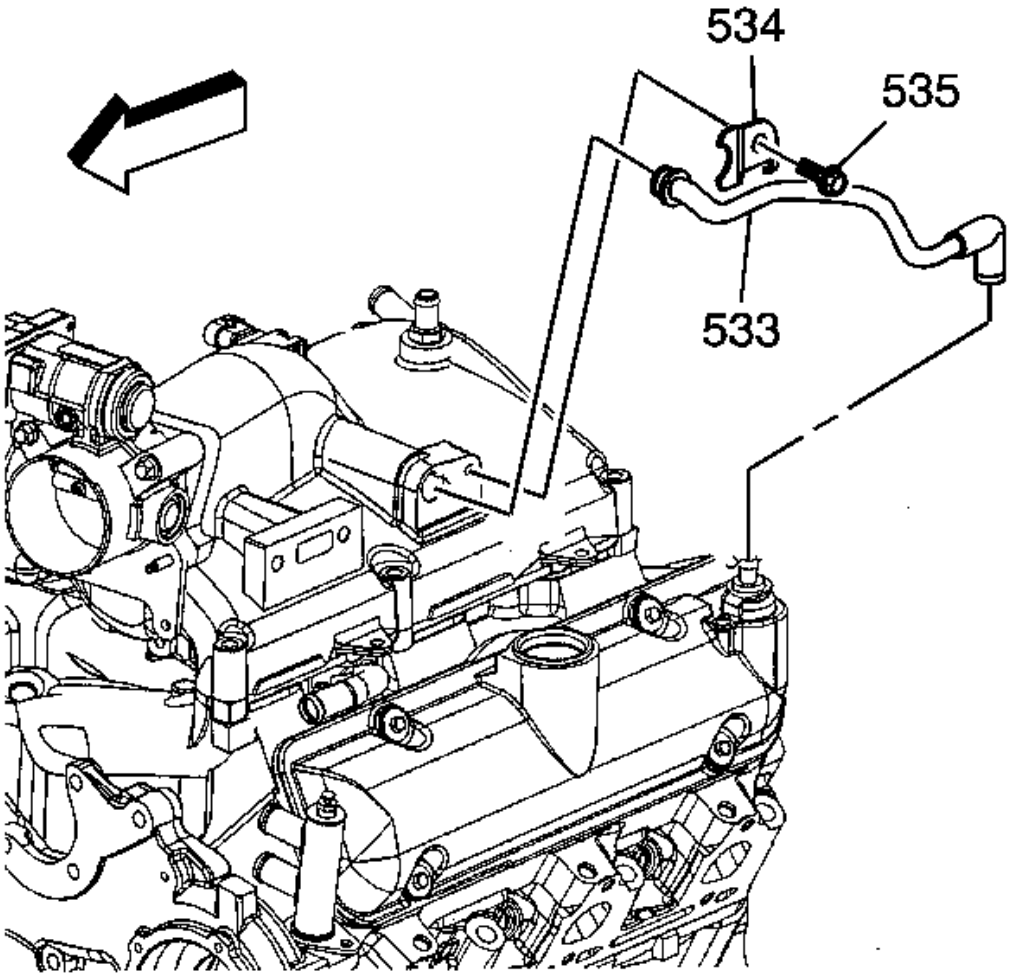


**Fig. 262: View Of Foul Air Tube**
**Courtesy of GENERAL MOTORS CORP.**

1. Remove the foul air tube bolt (535) and the clip (534).
2. Remove the foul air tube (533).

 © 2011 Mitchell Repair Information Company, LLC.

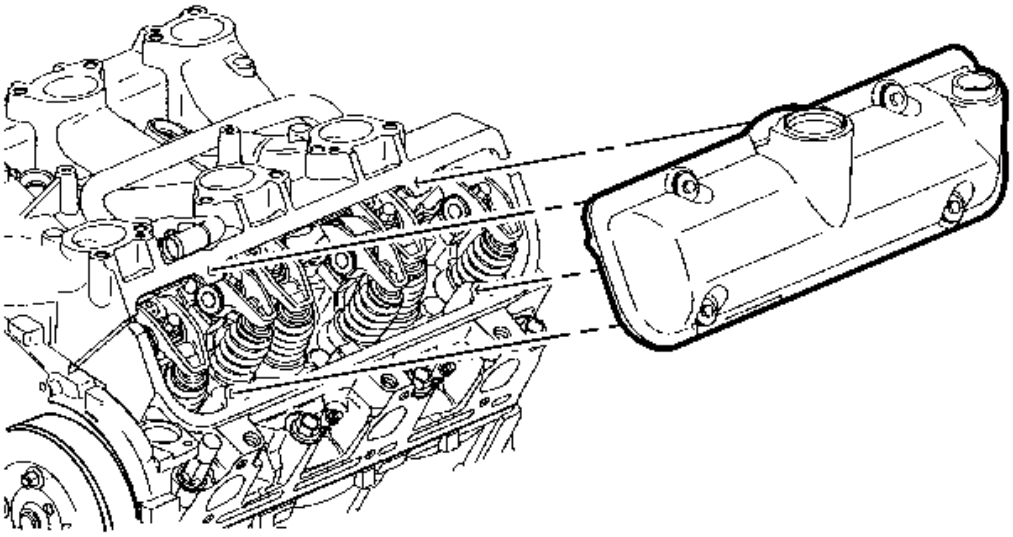

**Fig. 263: View Of Valve Rocker Arm Cover - Left**
**Courtesy of GENERAL MOTORS CORP.**

**NOTE:** **Valve rocker arm cover gasket and sealant must be carefully trimmed away from lower intake manifold gasket. Failure to do so will damage the lower intake manifold gasket, causing a severe oil leak.**

**IMPORTANT:** **When removing the valve rocker arm cover make sure the gasket stays in place attached to the cylinder head.**

3. Remove the valve rocker arm cover bolts.
4. Remove the valve rocker arm cover.

 © 2011 Mitchell Repair Information Company, LLC.

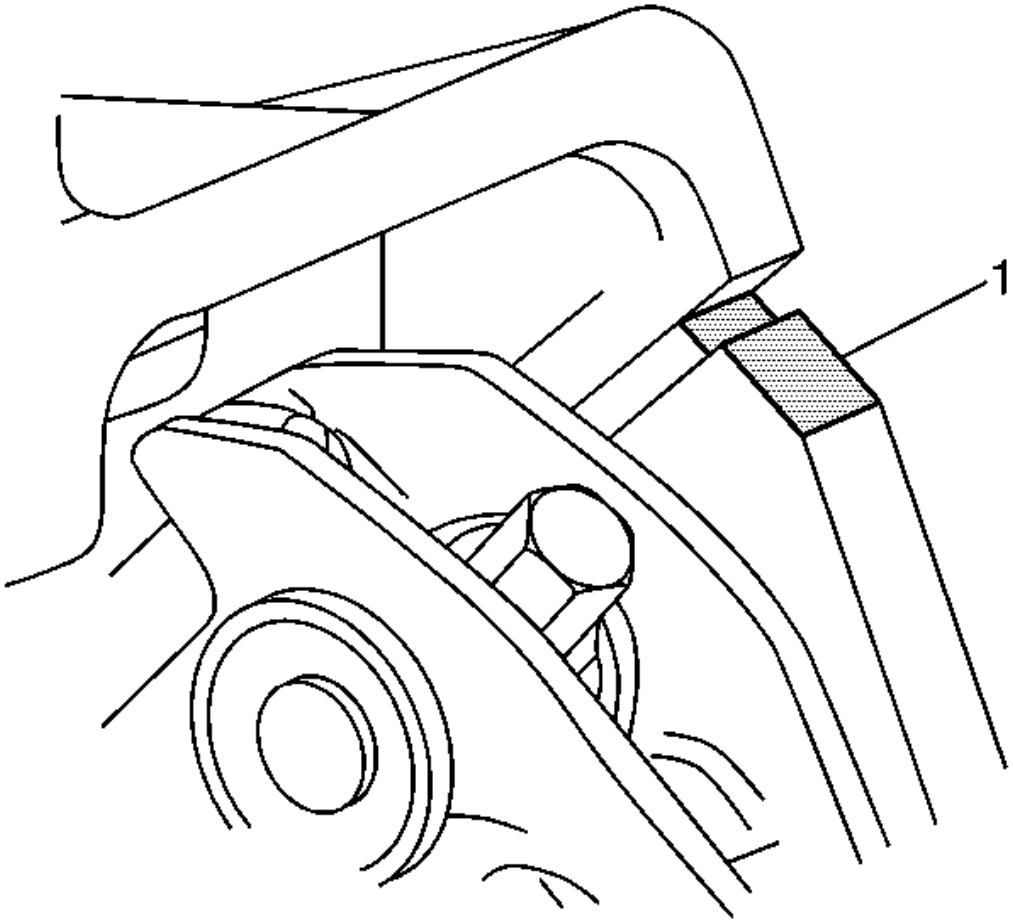


**Fig. 264: Identifying Cylinder Head To Lower Intake Manifold Joint**
**Courtesy of GENERAL MOTORS CORP.**

5. Trim valve cover gasket and sealant away from lower intake manifold gasket at the cylinder head to lower intake manifold joints (1).
6. Remove the valve rocker arm cover gasket.

**Valve Rocker Arm Cover Removal - Right**

 © 2011 Mitchell Repair Information Company, LLC.

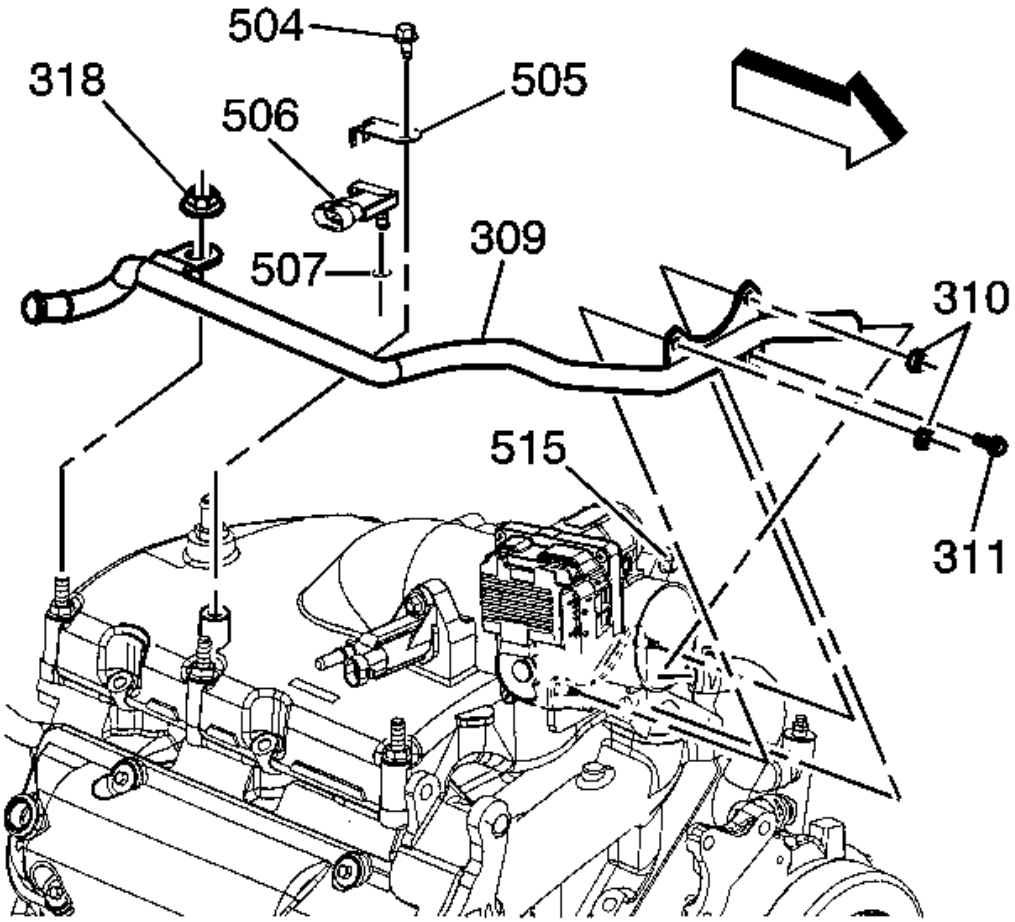


**Fig. 265: View Of MAP Sensor & Heater Outlet Pipe**
**Courtesy of GENERAL MOTORS CORP.**

1. Remove the manifold absolute pressure (MAP) sensor bolt (504), the clip (505), and the sensor (506) from the upper intake manifold.
2. Remove the heater outlet pipe hose clamp and hose from the pipe.
3. Remove the heater outlet pipe nuts and bolt (310, 311, 318) from the upper intake manifold.
4. Remove the heater outlet pipe (309).

 © 2011 Mitchell Repair Information Company, LLC.

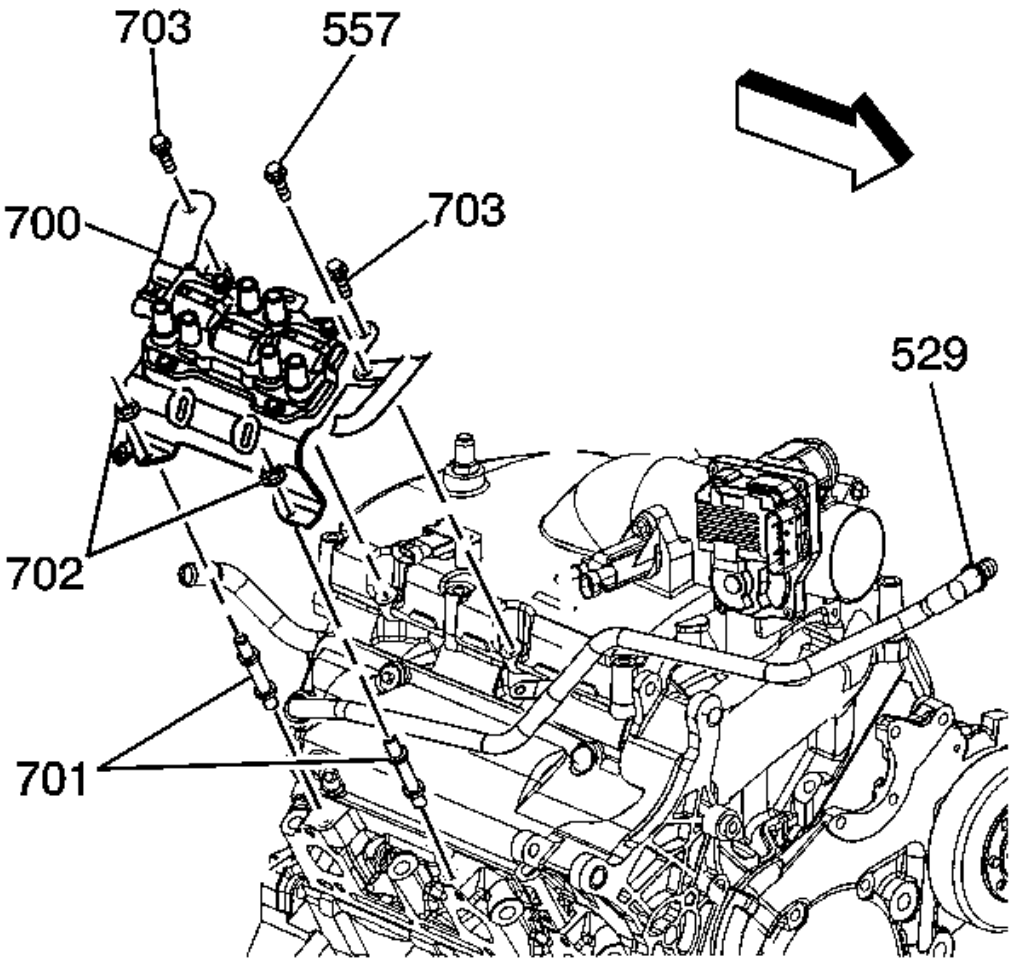


**Fig. 266: View Of Ignition Module & PCV Fresh Air Tube**
**Courtesy of GENERAL MOTORS CORP.**

5. Remove the fresh air tube and the wire harness retaining bolt (557).
6. Remove the ignition module nuts (702) and bolts (703).
7. Remove the ignition module with the ignition wires attached (700).
8. Remove the ignition module studs (701).
9. Remove the PCV fresh air tube (529).

 © 2011 Mitchell Repair Information Company, LLC.

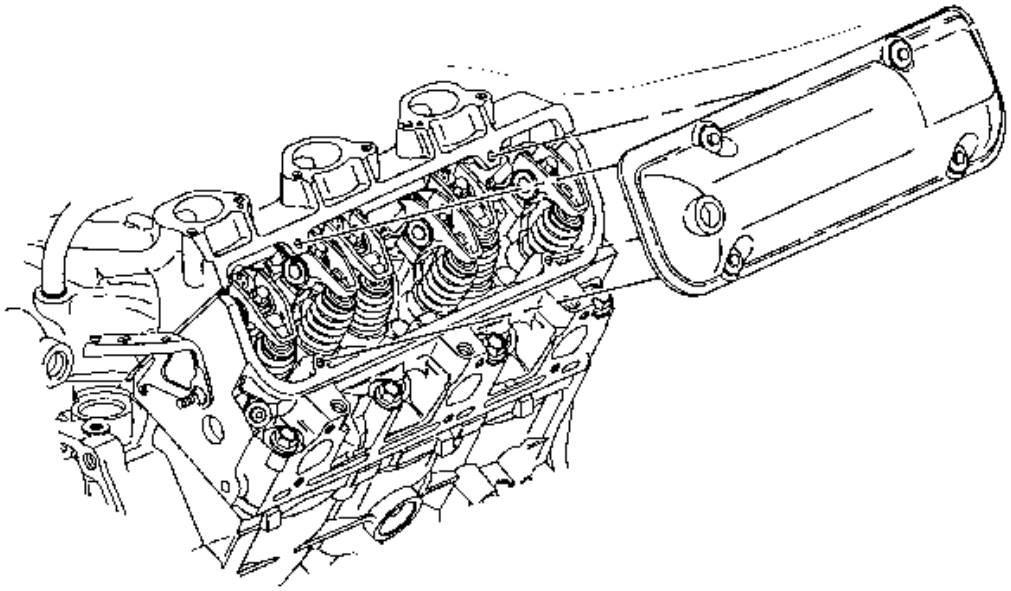

**Fig. 267: View Of Valve Rocker Arm Cover - Right**
**Courtesy of GENERAL MOTORS CORP.**

**NOTE:** **Valve rocker arm cover gasket and sealant must be carefully trimmed away from lower intake manifold gasket. Failure to do so will damage the lower intake manifold gasket, causing a severe oil leak.**

**IMPORTANT:** **When removing the valve rocker arm cover make sure the gasket stays in place attached to the cylinder head.**

10. Remove the valve rocker arm cover bolts.
11. Remove the valve rocker arm cover.

 © 2011 Mitchell Repair Information Company, LLC.

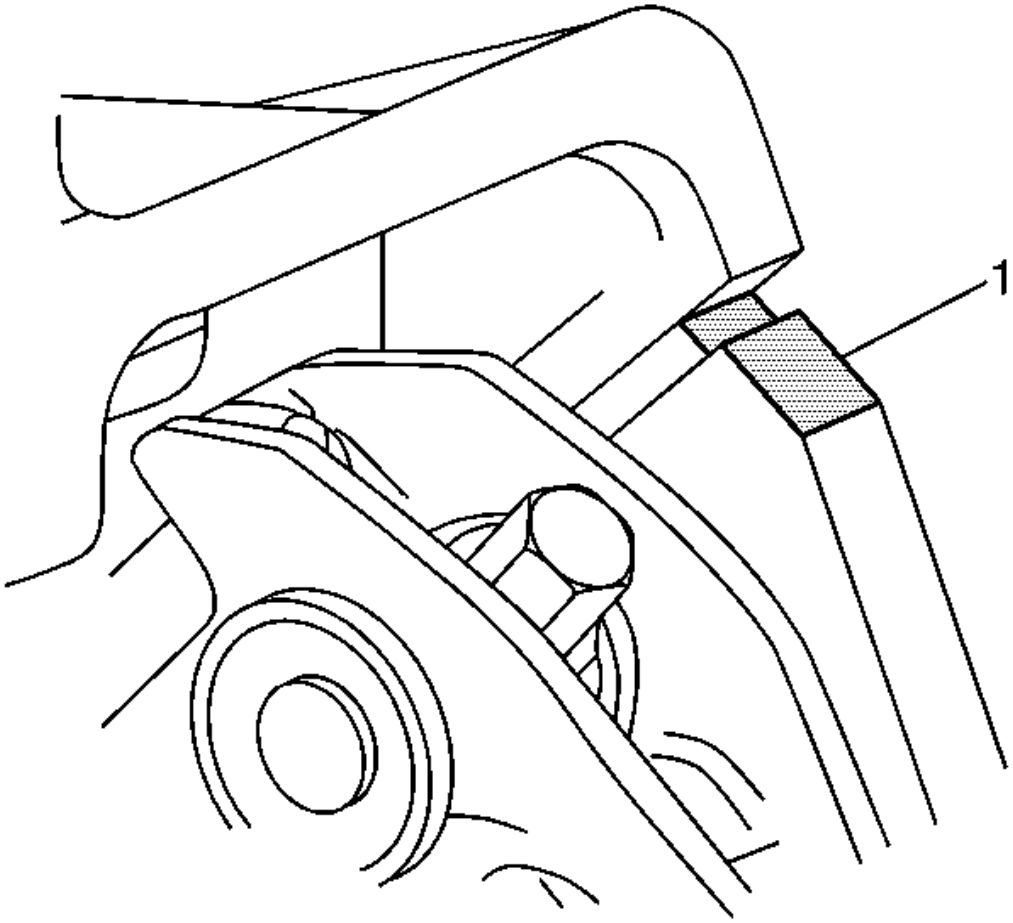


**Fig. 268: Identifying Cylinder Head To Lower Intake Manifold Joint**
**Courtesy of GENERAL MOTORS CORP.**

12. Trim valve cover gasket and sealant away from lower intake manifold gasket at the cylinder head to lower intake manifold joints (1).
13. Remove the valve rocker arm cover gasket.

**Intake Manifold Removal - Upper**

 © 2011 Mitchell Repair Information Company, LLC.

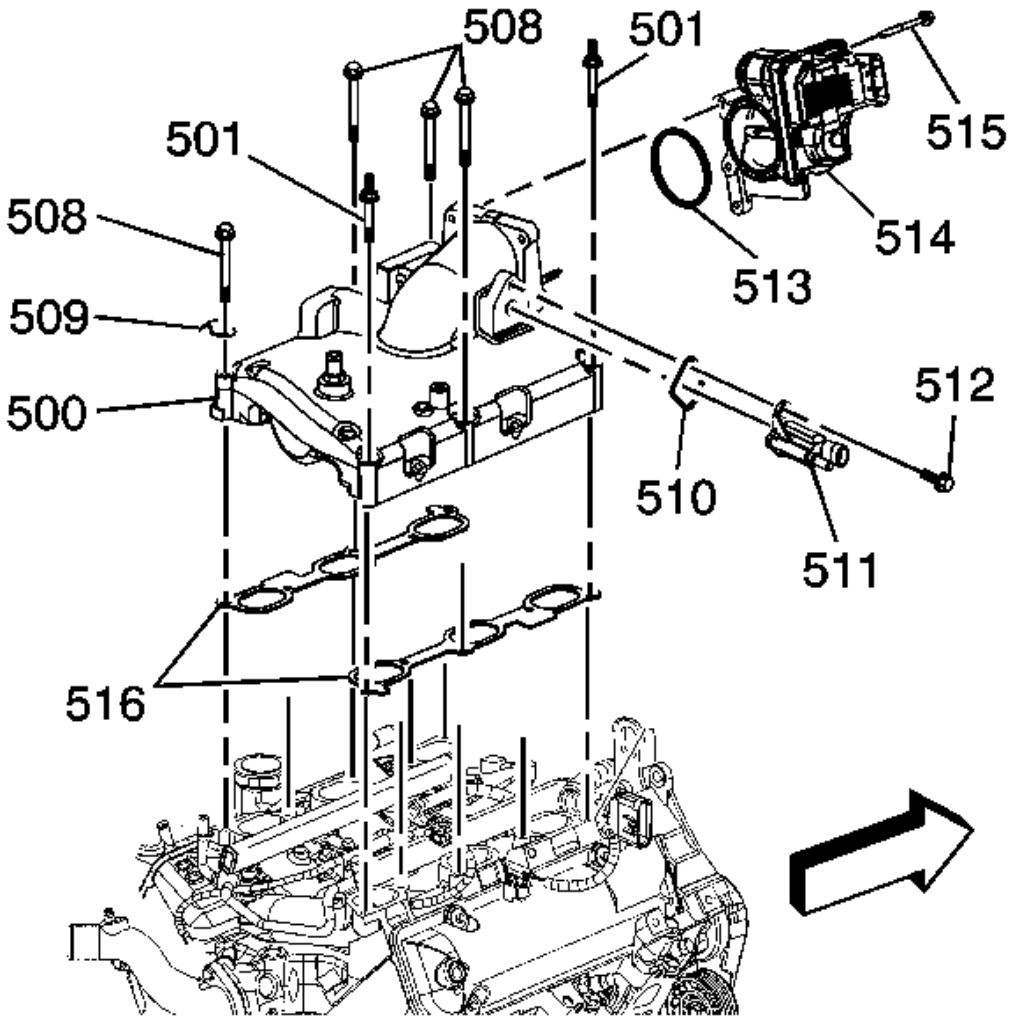


**Fig. 269: View Of Throttle Body, Intake Manifold & Components**
**Courtesy of GENERAL MOTORS CORP.**

1. Remove the purge valve bolt (512) and valve (511).
2. Remove the throttle body bolts (515).
3. Remove the throttle body (514) and seal (513).
4. Remove the upper intake manifold bolts (501, 508).
5. Remove the upper intake manifold (500) and gaskets (516).

**Intake Manifold Removal - Lower**

 © 2011 Mitchell Repair Information Company, LLC.

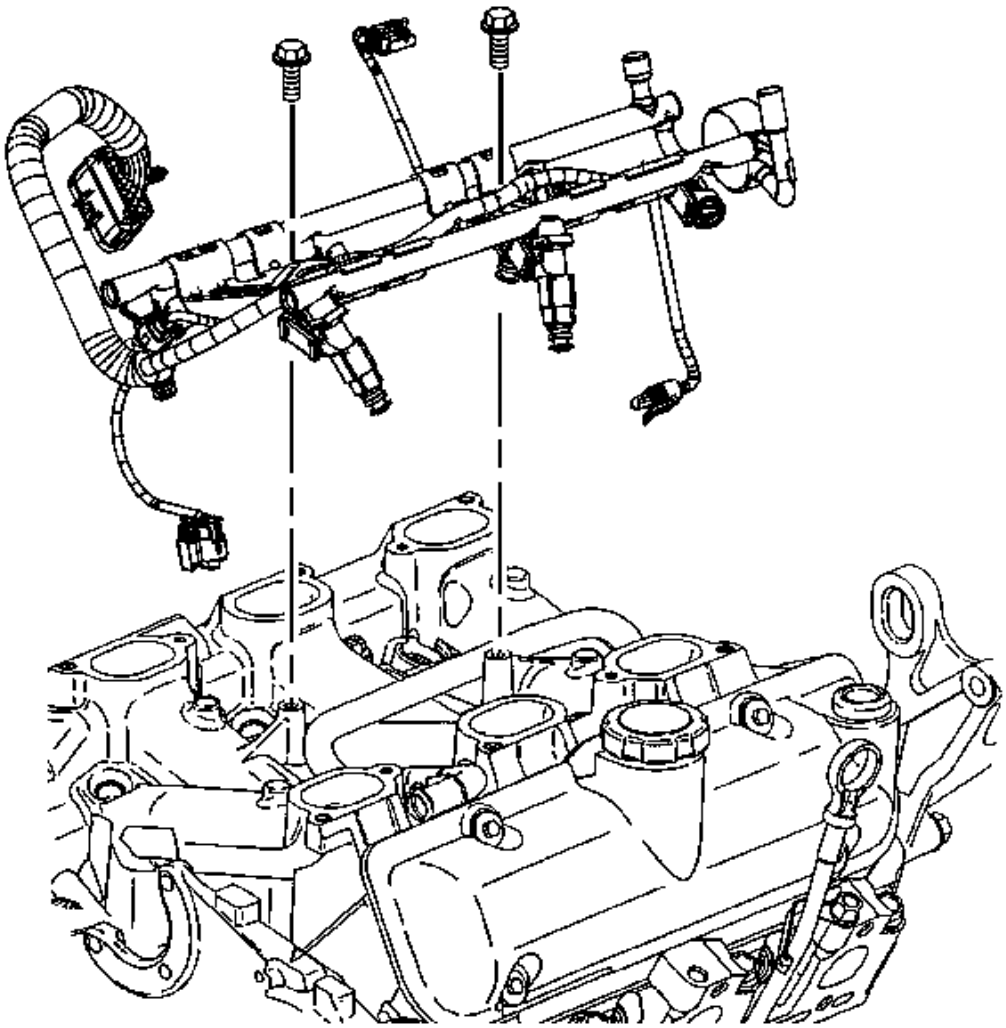

**Fig. 270: View Of Fuel Injector Rail Assembly**
**Courtesy of GENERAL MOTORS CORP.**

1. Disconnect the camshaft position sensor and engine coolant temperature sensor electrical connector.
2. Remove the fuel injector rail bolts.
3. Remove the fuel injector rail assembly.

 © 2011 Mitchell Repair Information Company, LLC.

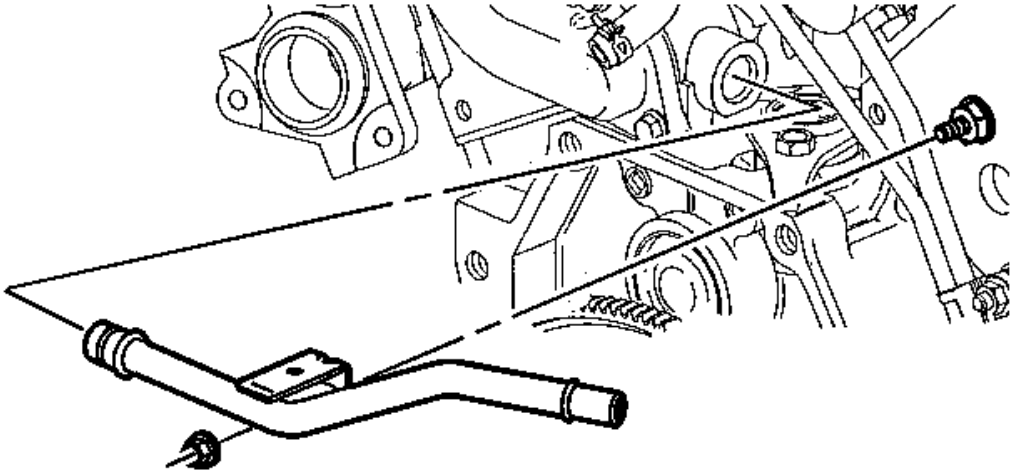

**Fig. 271: View Of Heater Inlet Pipe & Nut**
**Courtesy of GENERAL MOTORS CORP.**

4. Remove the heater inlet pipe nut.
5. Remove the heater inlet pipe.
6. Remove the hose clamp and hose from the thermostat bypass pipe.

 © 2011 Mitchell Repair Information Company, LLC.

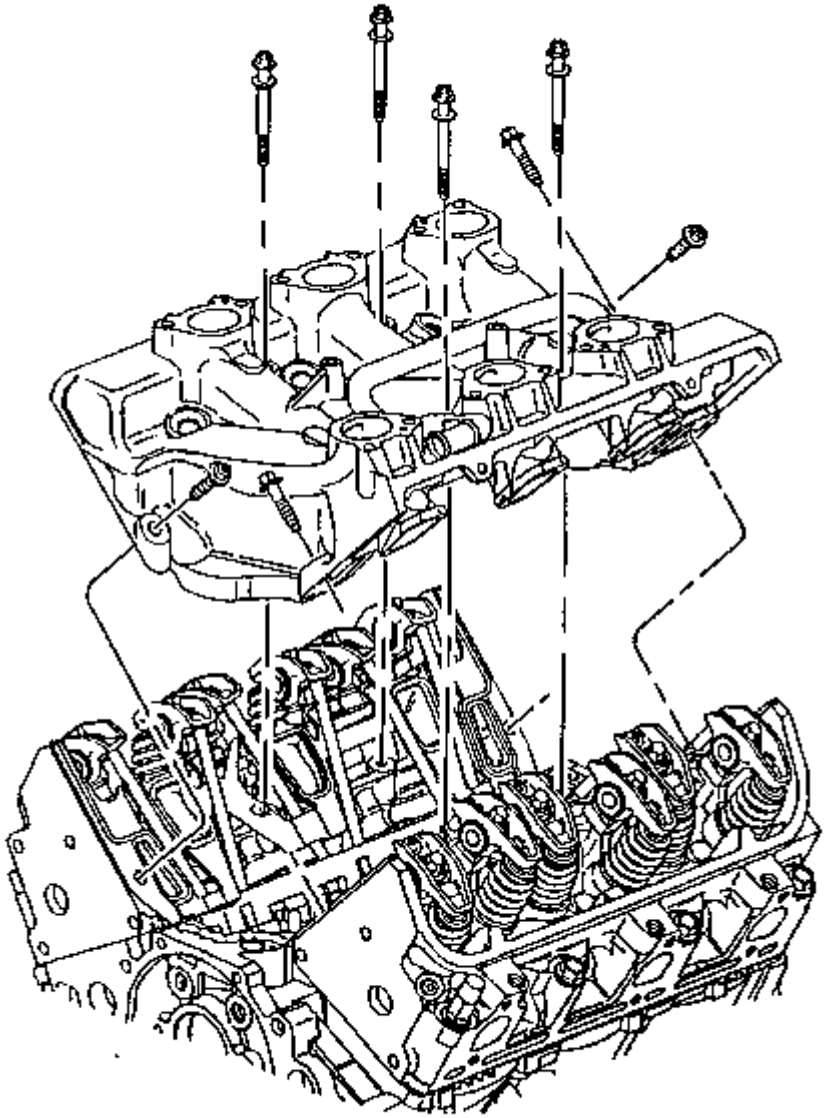

**Fig. 272: View Of Lower Intake Manifold & Bolts**
**Courtesy of GENERAL MOTORS CORP.**

7. Remove the lower intake manifold bolts.
8. Remove the lower intake manifold.

**Valve Rocker Arm and Push Rod Removal**

 © 2011 Mitchell Repair Information Company, LLC.

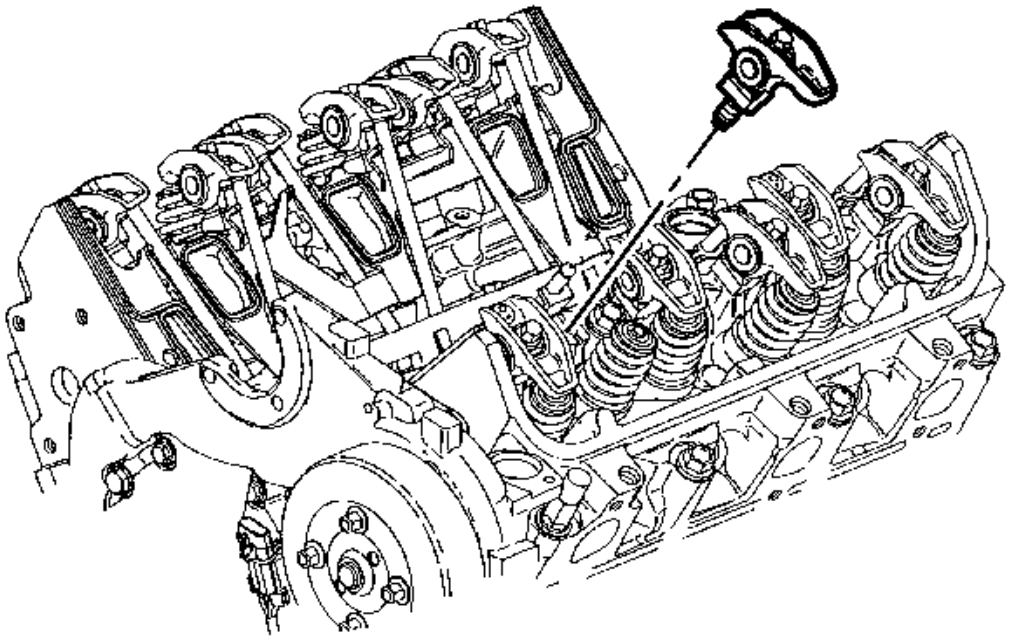

**Fig. 273: Loosening Valve Rocker Arm Bolts**
**Courtesy of GENERAL MOTORS CORP.**

1. Loosen the valve rocker arm bolts.

**IMPORTANT: Place the valve train components in a rack in order to ensure that the components are installed in the same location from which they where removed.**

2. Remove the valve rocker arms.

 © 2011 Mitchell Repair Information Company, LLC.

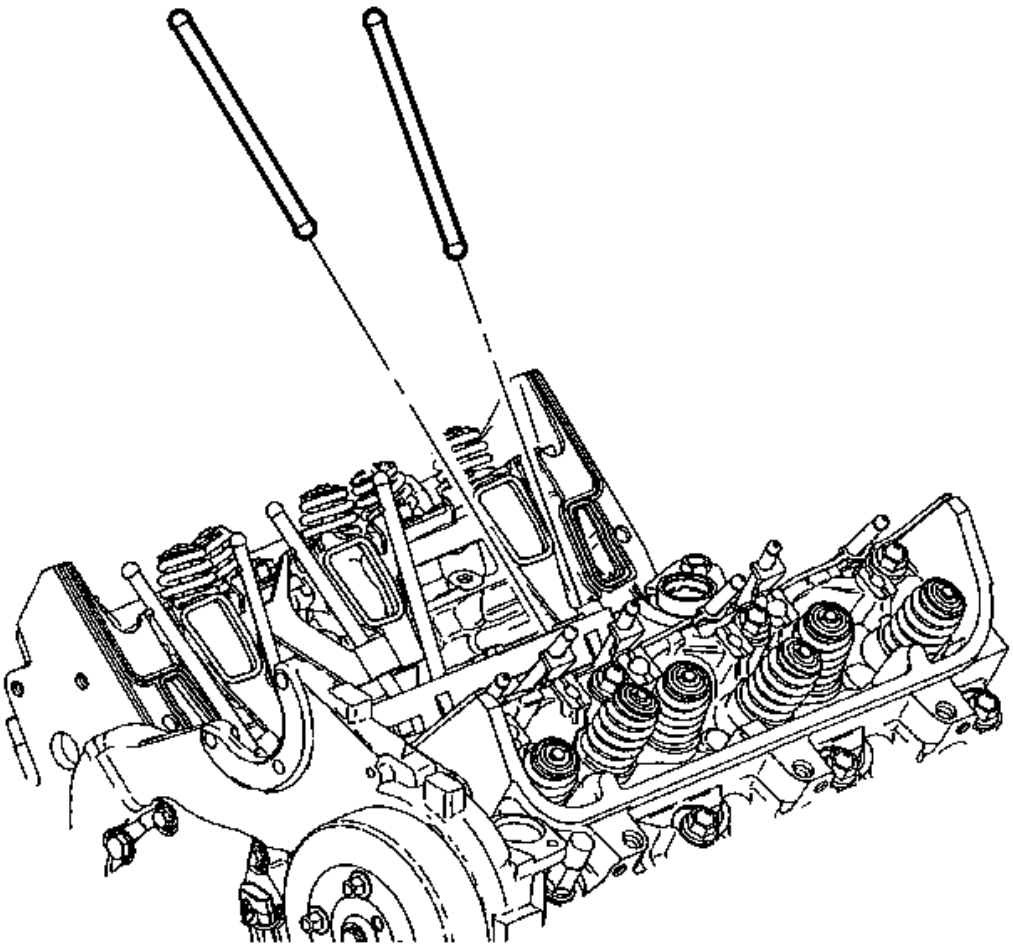

**Fig. 274: Removing Push Rods**
**Courtesy of GENERAL MOTORS CORP.**

3. Remove the push rods.
   - The intake push rods measure 144.18 mm (5.68 in).
   - The exhaust push rods measure 152.51 mm (6.0 in).

 © 2011 Mitchell Repair Information Company, LLC.

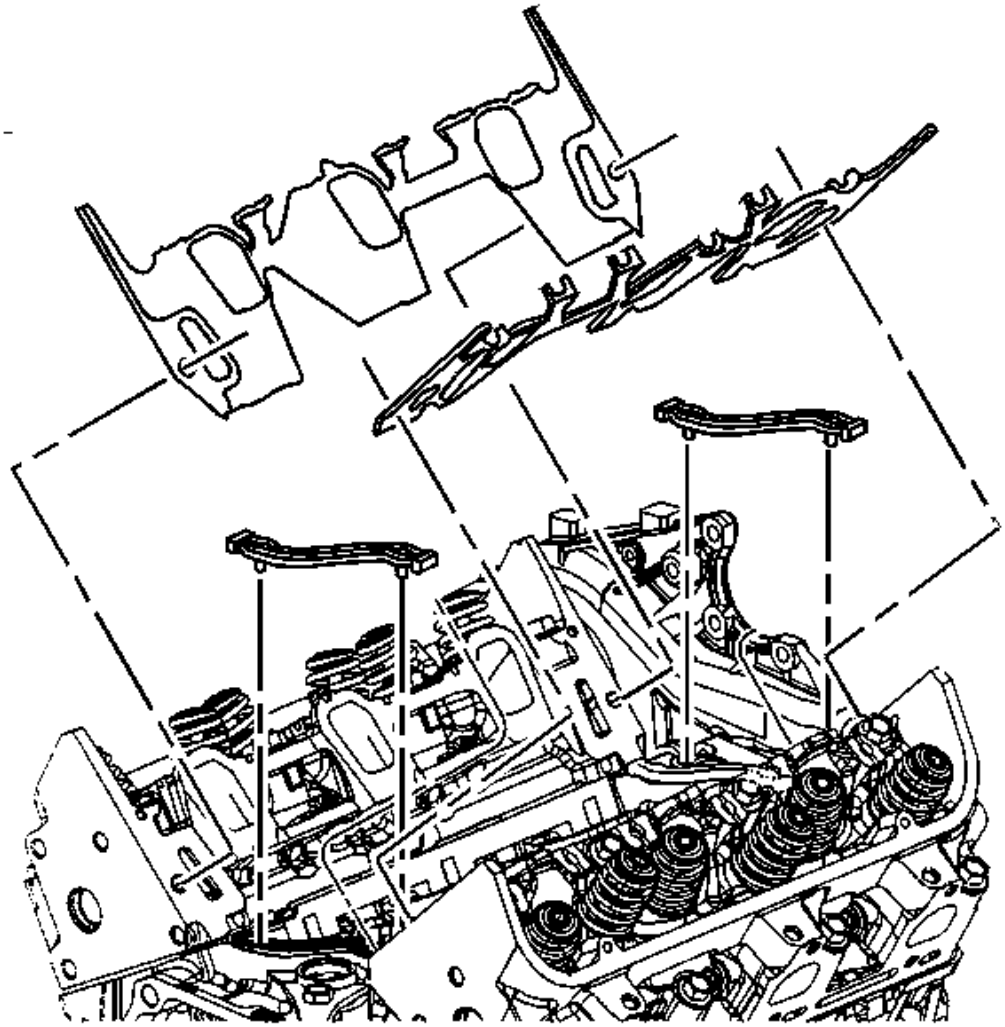

**Fig. 275: Removing Intake Manifold Gaskets**
**Courtesy of GENERAL MOTORS CORP.**

4. Remove the intake manifold gaskets.

**Valve Lifter Removal**

 © 2011 Mitchell Repair Information Company, LLC.

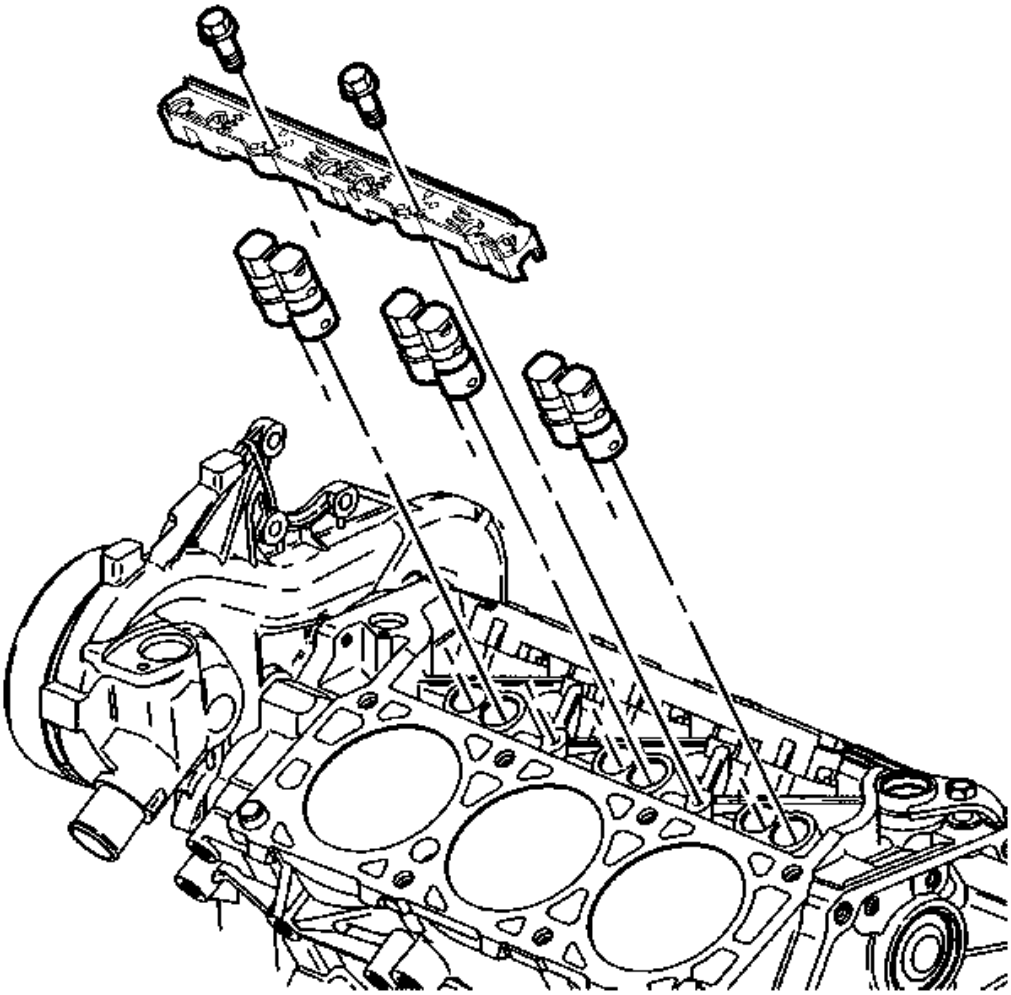

**Fig. 276: View Of Valve Lifters & Lifter Guides**
**Courtesy of GENERAL MOTORS CORP.**

1. Remove the valve lifter guide bolts.
2. Remove the valve lifter guides.

**IMPORTANT: Once removed, place the valve lifters in an organized order so the valve lifters can be installed into the original locations.**

3. Remove the valve lifters.

**Water Pump Removal**

 © 2011 Mitchell Repair Information Company, LLC.

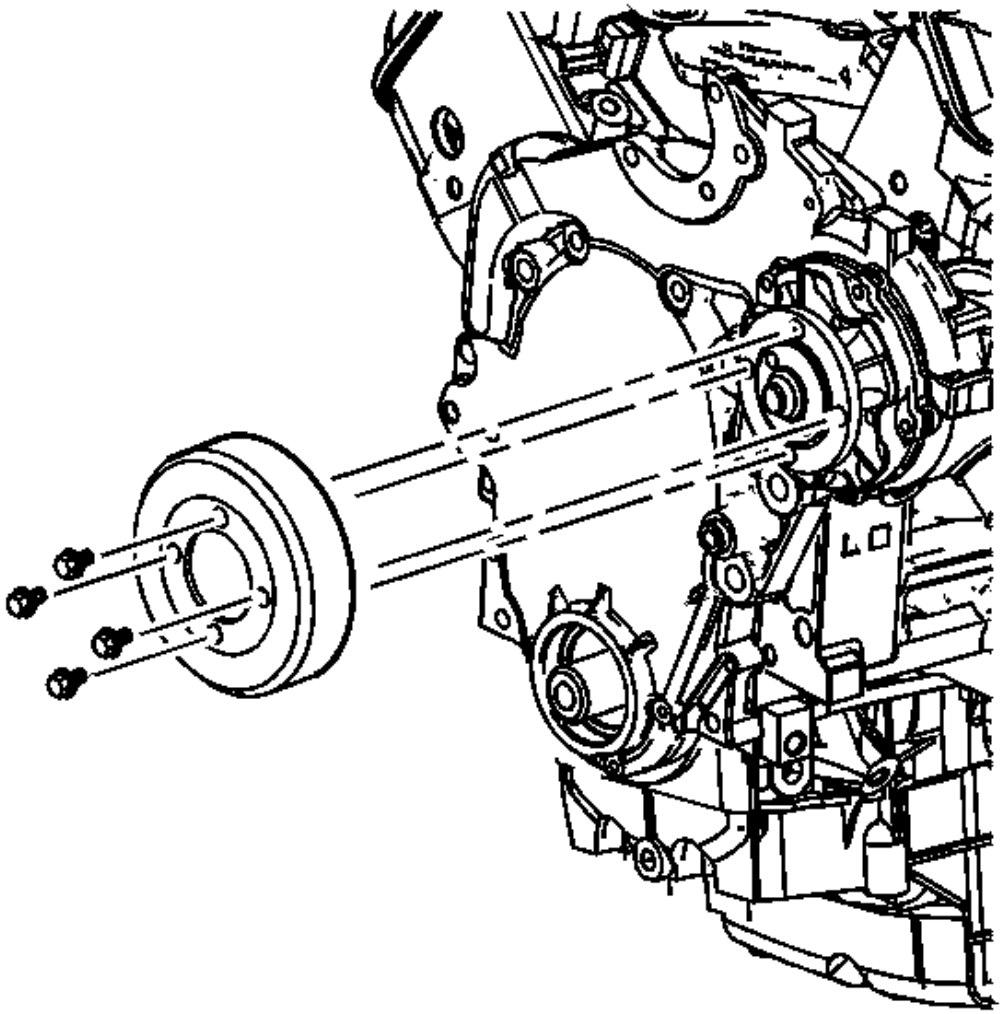

**Fig. 277: Removing Water Pump Pulley**
**Courtesy of GENERAL MOTORS CORP.**

1. Remove the water pump pulley bolts.
2. Remove the water pump pulley.

 © 2011 Mitchell Repair Information Company, LLC.

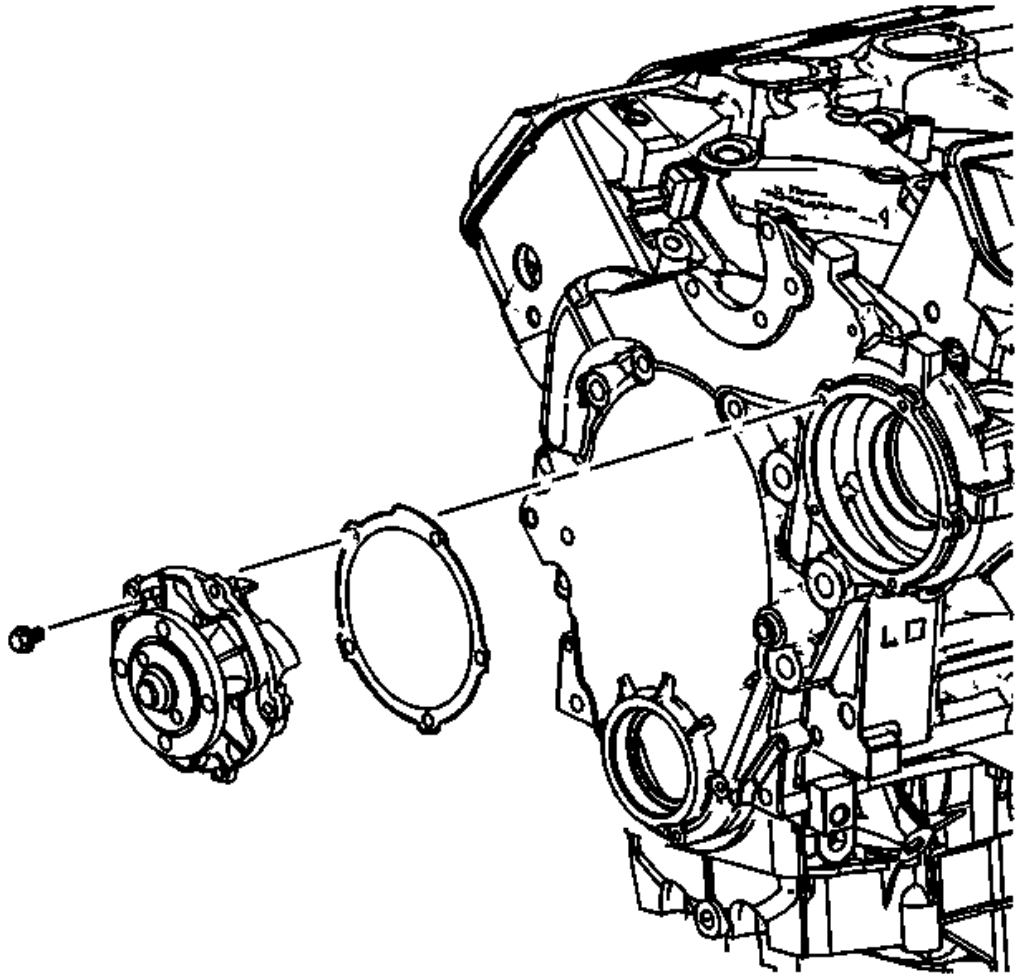

**Fig. 278: Removing Water Pump**
**Courtesy of GENERAL MOTORS CORP.**

3. Remove the water pump bolts.
4. Remove the water pump.
5. Remove the water pump gasket.

**Cylinder Head Removal - Left**

 © 2011 Mitchell Repair Information Company, LLC.

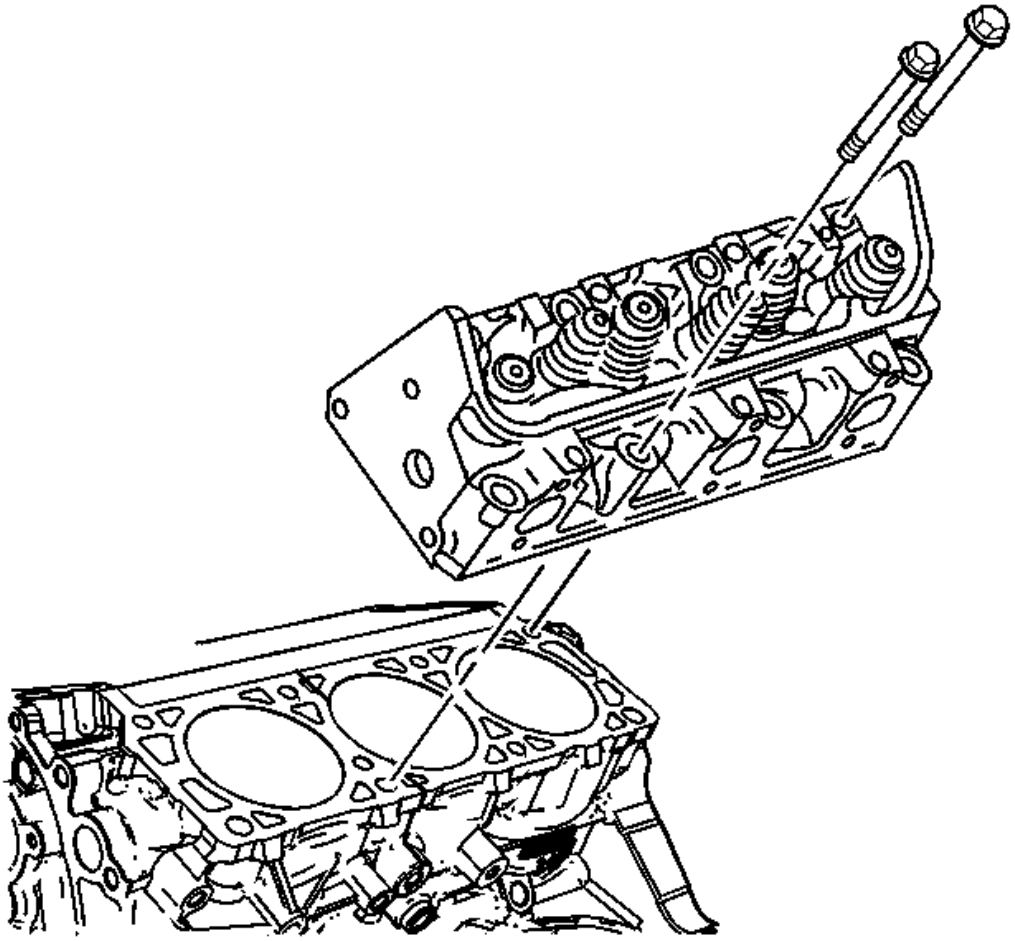

**Fig. 279: Removing/Installing Cylinder Head**
**Courtesy of GENERAL MOTORS CORP.**

1. Remove the cylinder head bolts and discard.
2. Remove the cylinder head.

 © 2011 Mitchell Repair Information Company, LLC.

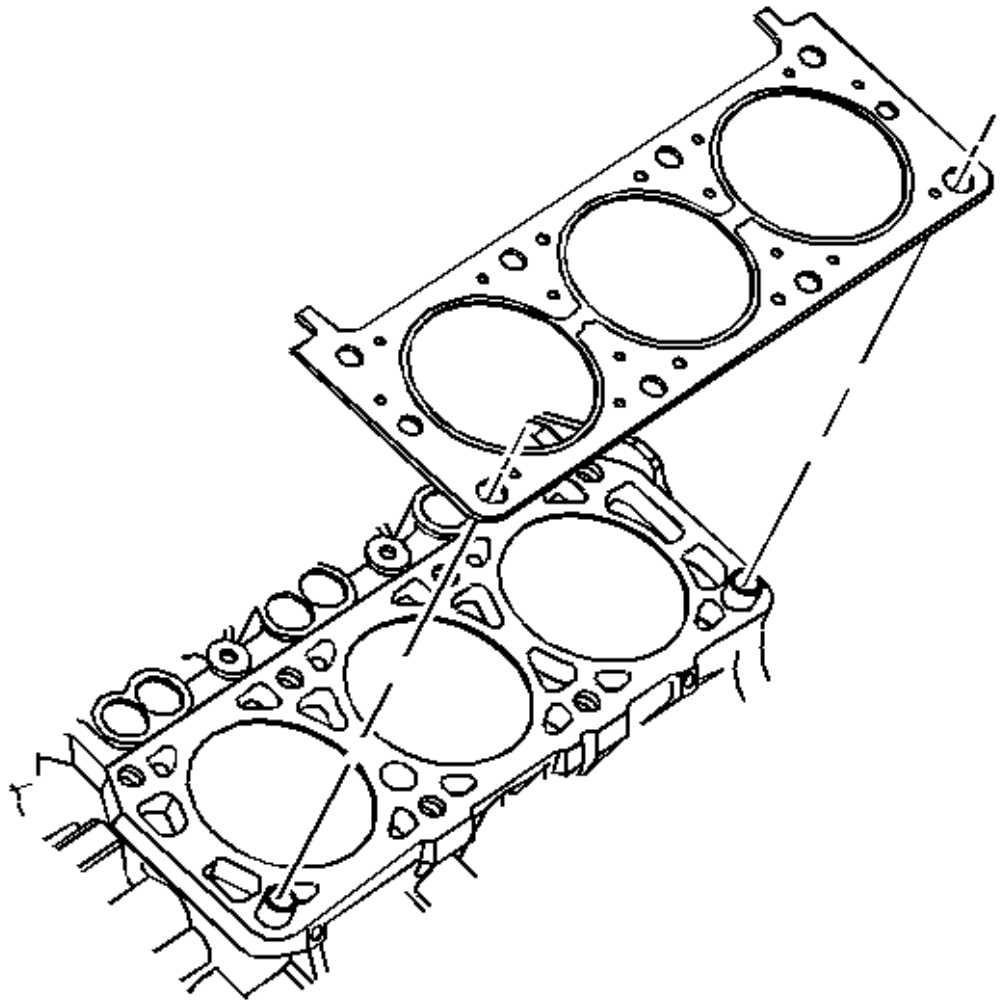

**Fig. 280: View Of Cylinder Head Gasket And Alignment Pins**
**Courtesy of GENERAL MOTORS CORP.**

3. Remove the cylinder head gasket.
4. Remove the cylinder head locator dowel pins if required.

**Cylinder Head Removal - Right**

 © 2011 Mitchell Repair Information Company, LLC.

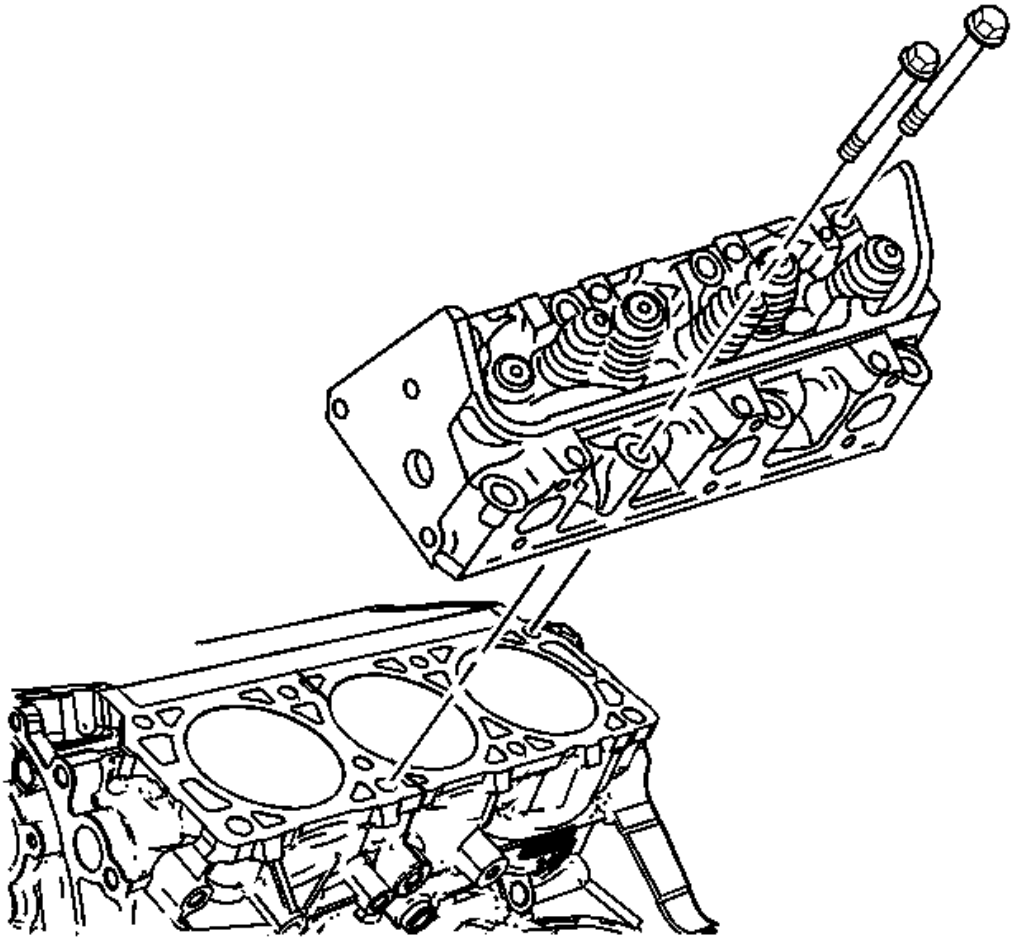

**Fig. 281: Removing/Installing Cylinder Head**
**Courtesy of GENERAL MOTORS CORP.**

1. Remove the cylinder head bolts and discard.
2. Remove the cylinder head.

 © 2011 Mitchell Repair Information Company, LLC.

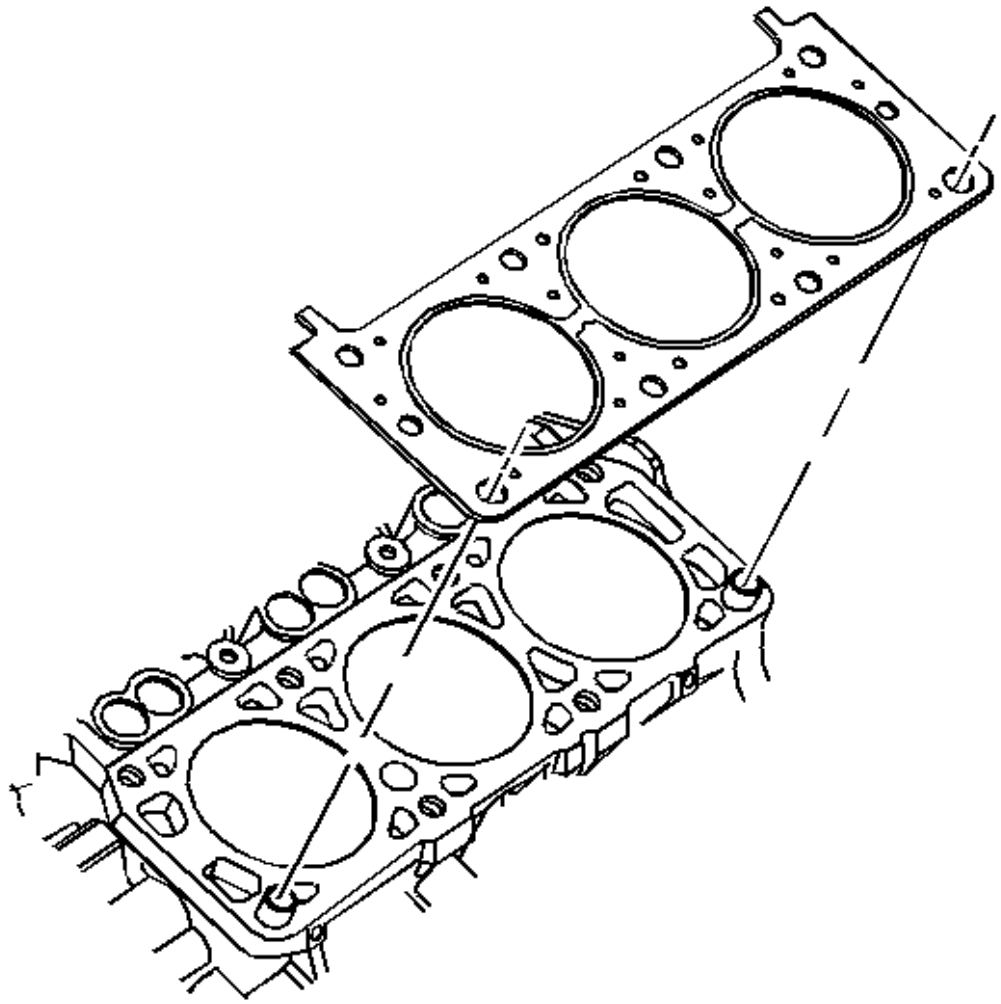

**Fig. 282: View Of Cylinder Head Gasket And Alignment Pins**
**Courtesy of GENERAL MOTORS CORP.**

3. Remove the cylinder head gasket.
4. Remove the cylinder head locator dowel pins if required.

**Oil Pan Removal**

 © 2011 Mitchell Repair Information Company, LLC.

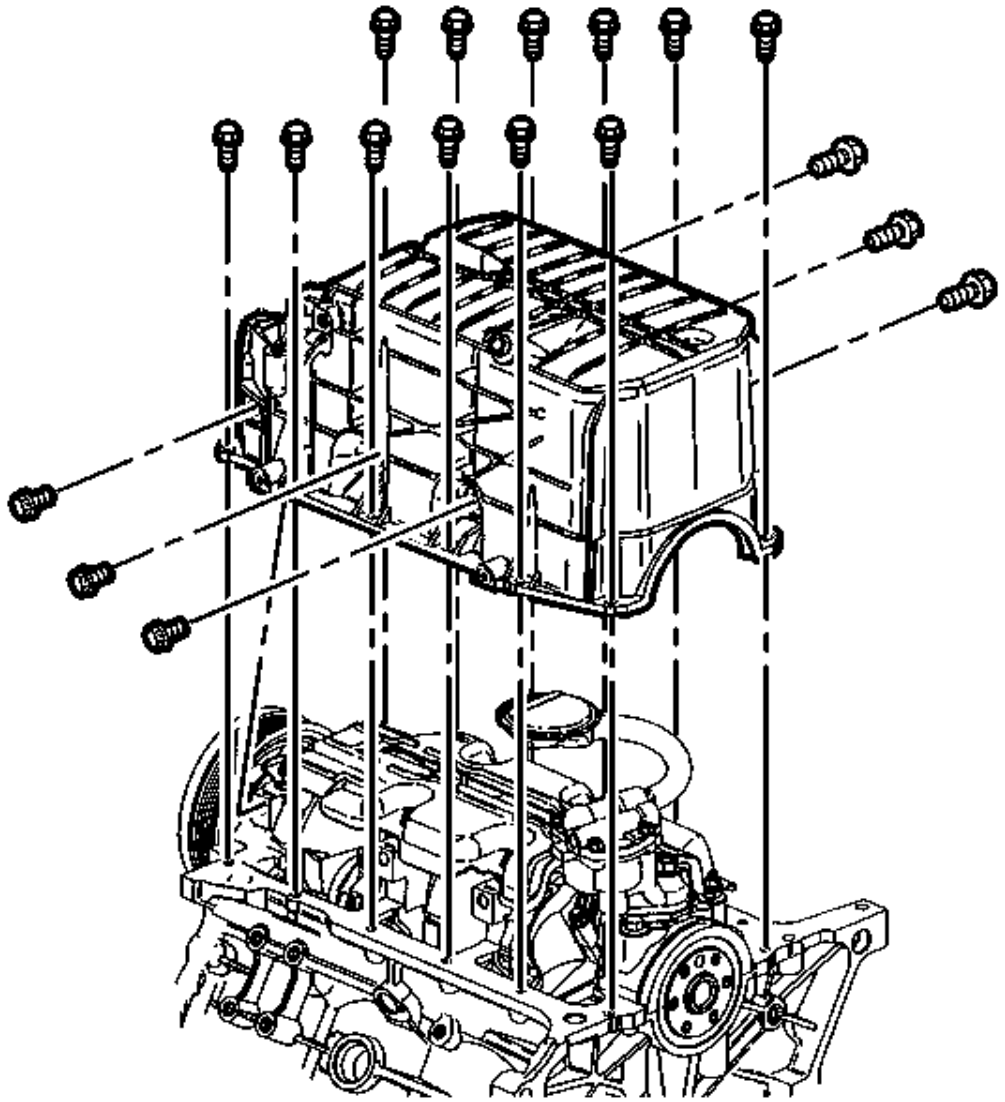

**Fig. 283: View Of Oil Pan & Bolts**
**Courtesy of GENERAL MOTORS CORP.**

1. Remove the oil pan side bolts.
2. Remove the oil pan bolts.
3. Remove the oil pan.
4. Remove the oil pan gasket.

**Oil Pump Removal**

 © 2011 Mitchell Repair Information Company, LLC.

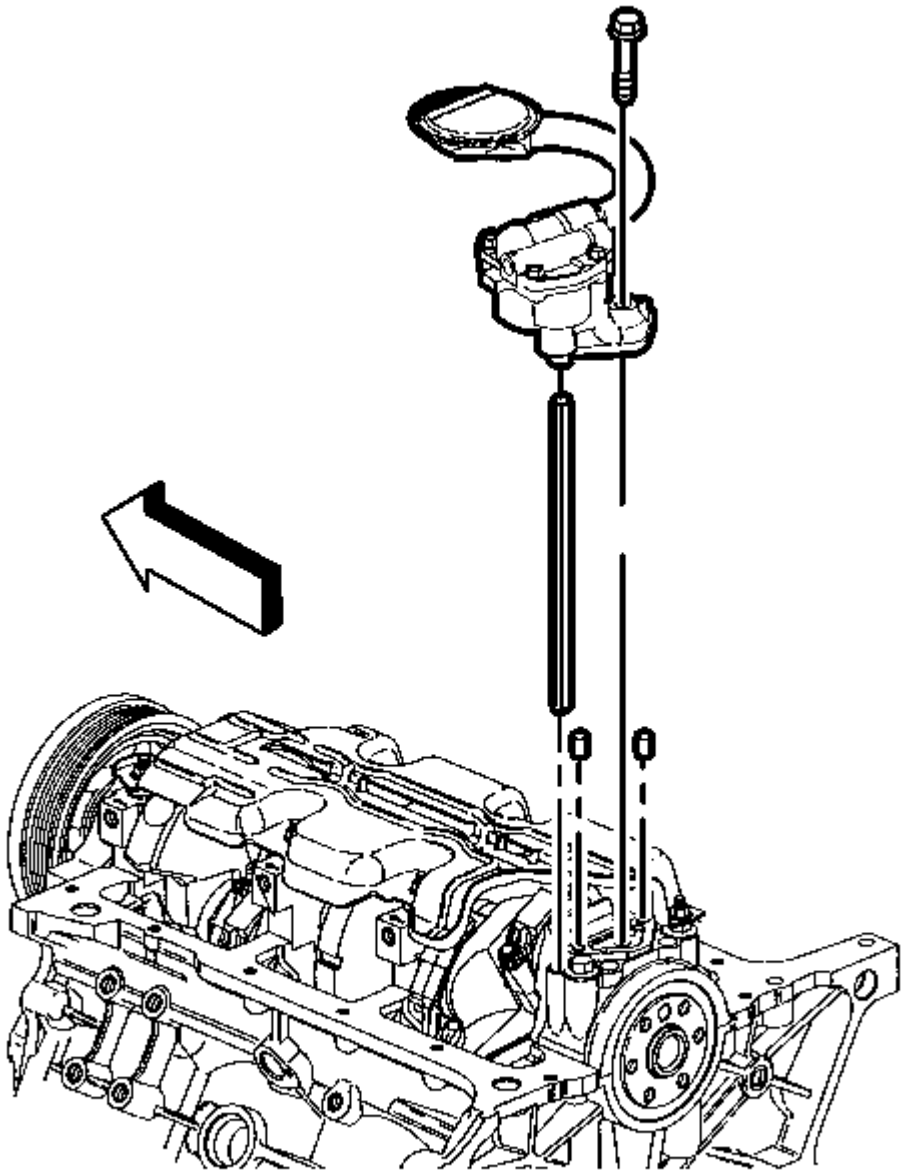

**Fig. 284: Removing Oil Pump & Oil Pump Drive Shaft**
**Courtesy of GENERAL MOTORS CORP.**

1. Remove the oil pump bolt.
2. Remove the oil pump and oil pump drive shaft.

 © 2011 Mitchell Repair Information Company, LLC.

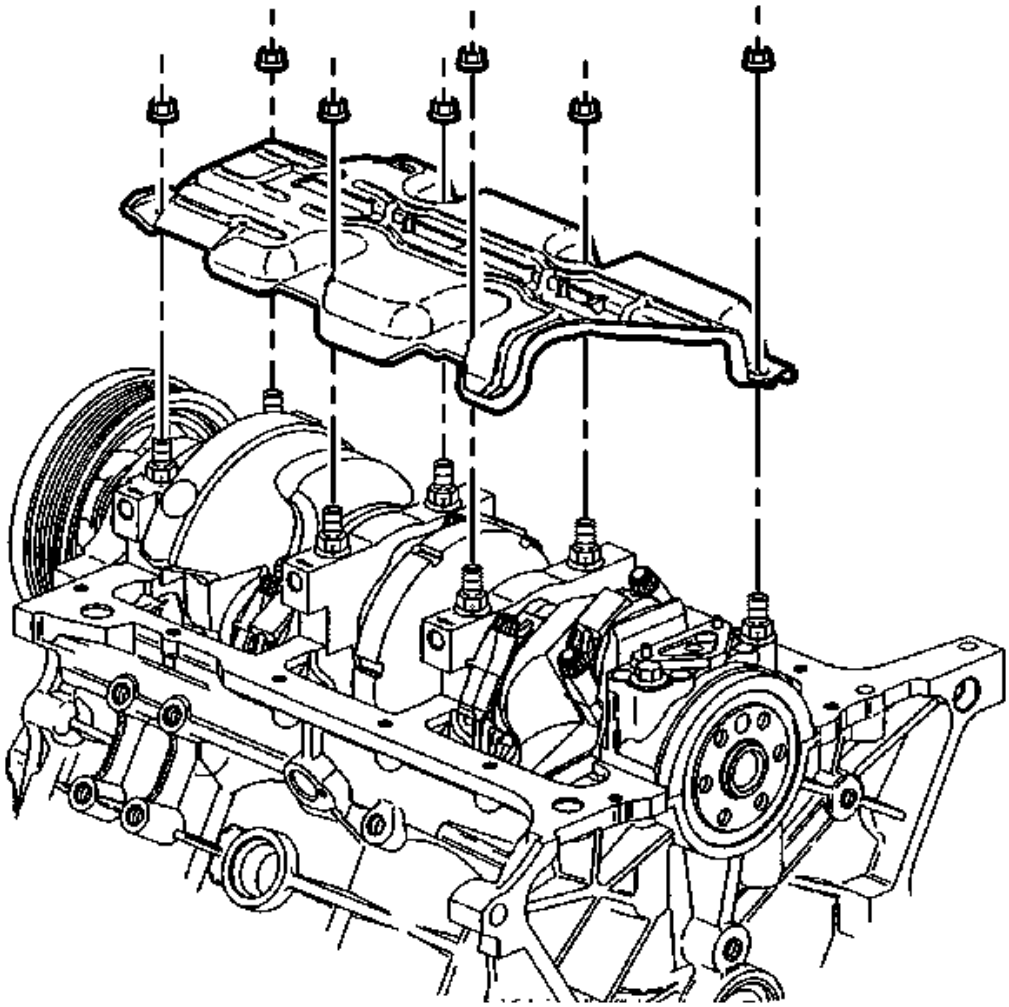

**Fig. 285: View Of Crankshaft Oil Deflector & Nuts**
**Courtesy of GENERAL MOTORS CORP.**

3. Remove the crankshaft oil deflector nuts.
4. Remove the crankshaft oil deflector.

**Oil Pump Drive Removal**

 © 2011 Mitchell Repair Information Company, LLC.

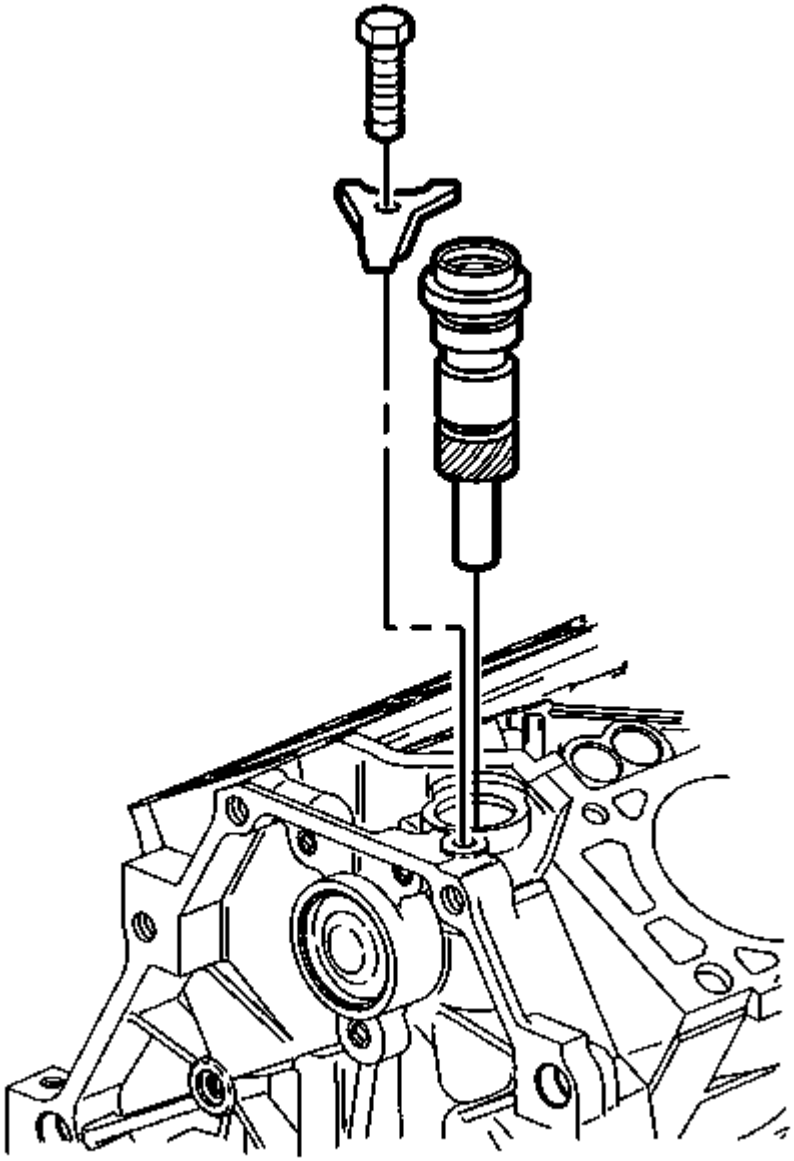

**Fig. 286: View Of Oil Pump Drive**
**Courtesy of GENERAL MOTORS CORP.**

1. Remove the oil pump drive clamp bolt.
2. Remove the oil pump drive clamp.
3. Remove the oil pump drive.

 © 2011 Mitchell Repair Information Company, LLC.

**Crankshaft Front Oil Seal Removal**

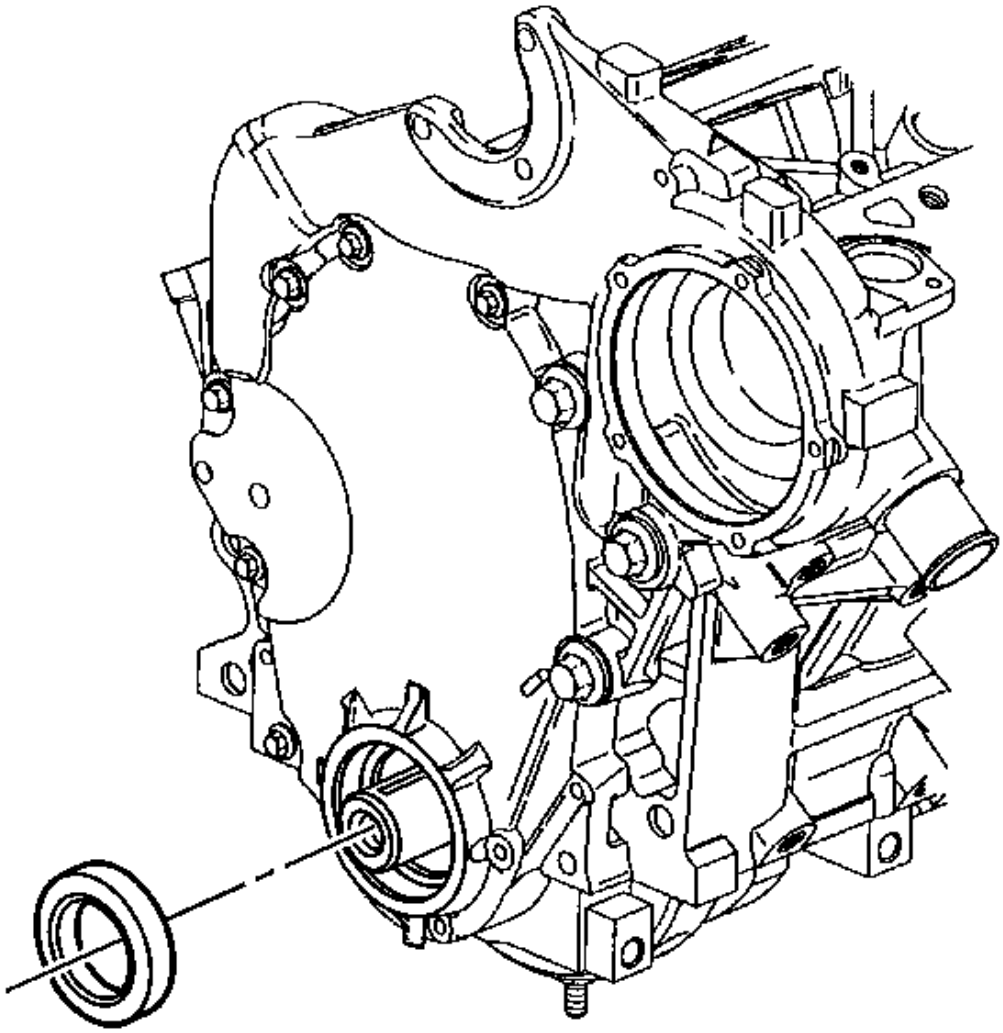

**Fig. 287: Removing Crankshaft Front Oil Seal**
**Courtesy of GENERAL MOTORS CORP.**

Pry out the crankshaft front oil seal using a suitable tool. Use care not to damage the engine front cover or the crankshaft.

**Engine Front Cover Removal**

 © 2011 Mitchell Repair Information Company, LLC.

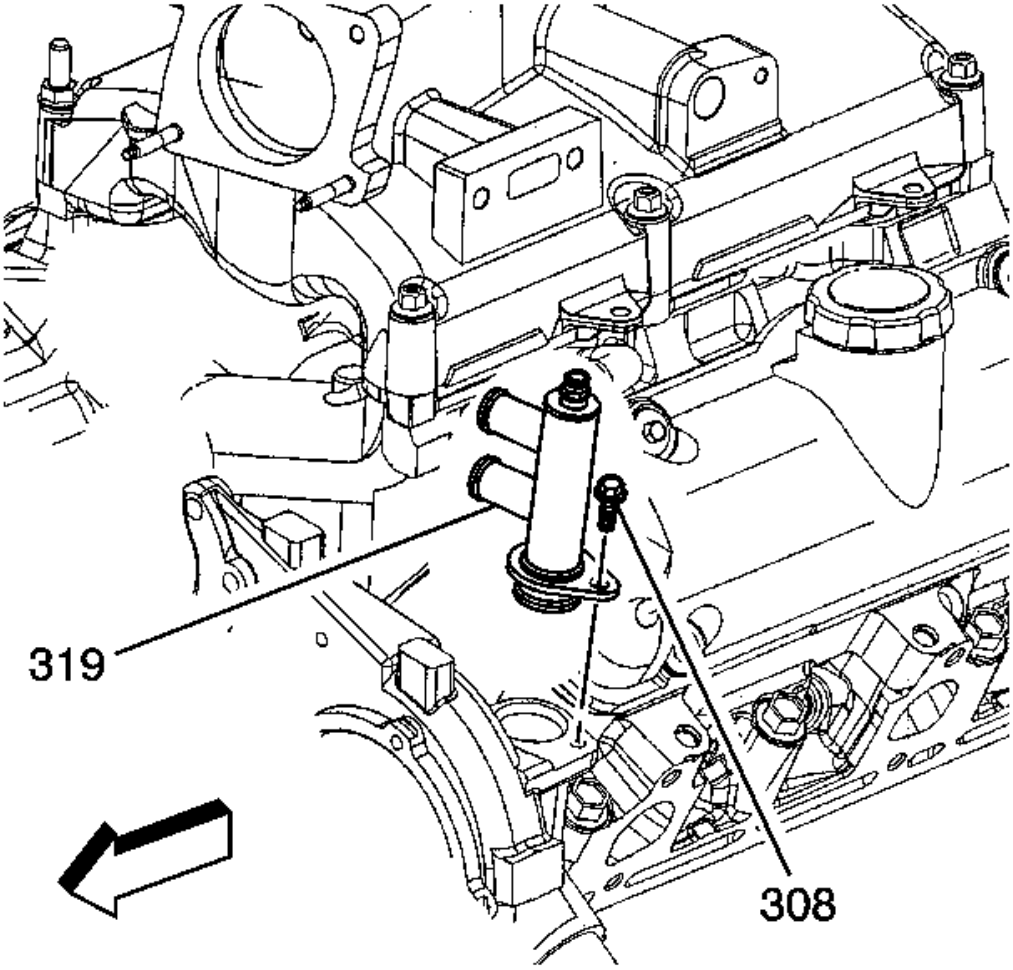


**Fig. 288: View Of Heater Outlet Pipe Adapter**
**Courtesy of GENERAL MOTORS CORP.**

1. Remove the heater outlet pipe adapter bolt (308) and adapter (319).

 © 2011 Mitchell Repair Information Company, LLC.

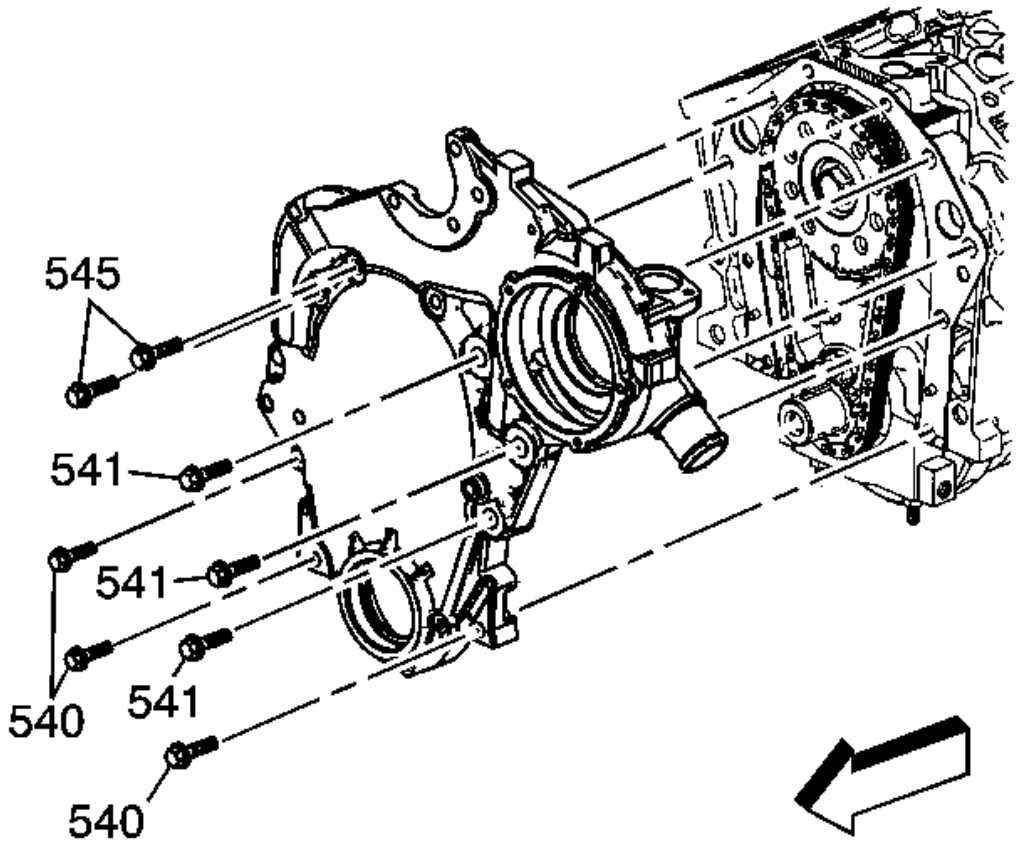


**Fig. 289: Removing Engine Front Cover Bolts (540, 541, 545)**
**Courtesy of GENERAL MOTORS CORP.**

2. Remove the engine front cover bolts (540, 541, 545).
3. Remove the engine front cover.
4. Remove the engine front cover gasket.

**Timing Chain and Sprockets Removal**

 © 2011 Mitchell Repair Information Company, LLC.

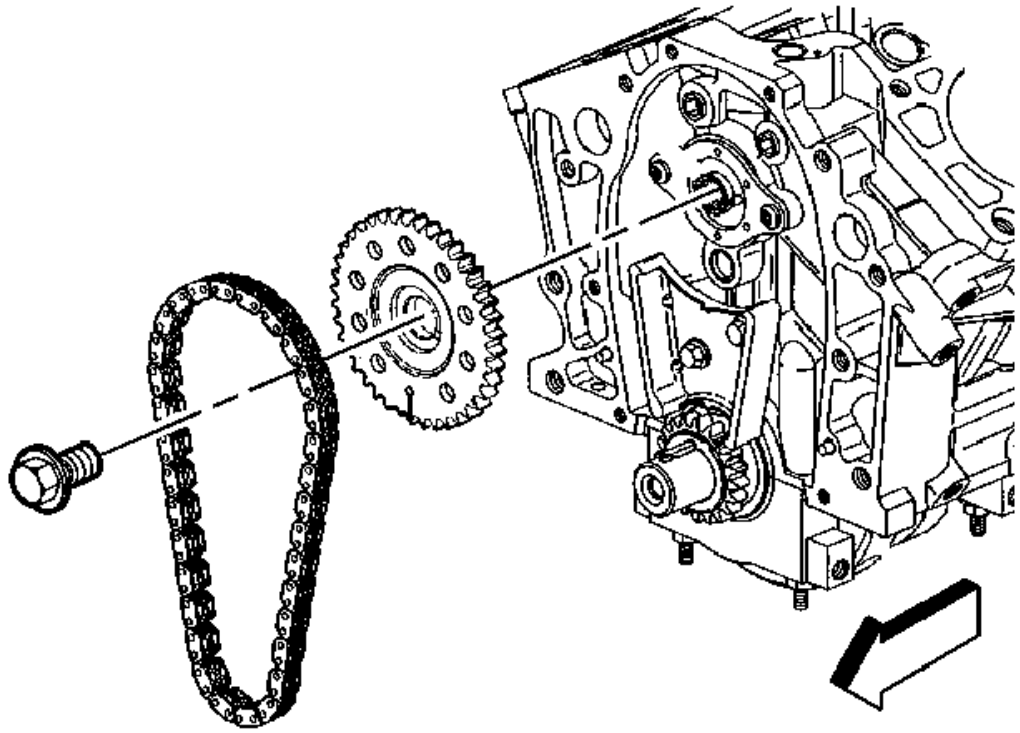

**Fig. 290: View Of Timing Chain & Camshaft Sprocket**
**Courtesy of GENERAL MOTORS CORP.**

1. Remove the camshaft sprocket bolt.
2. Remove the camshaft sprocket and timing chain.

 © 2011 Mitchell Repair Information Company, LLC.

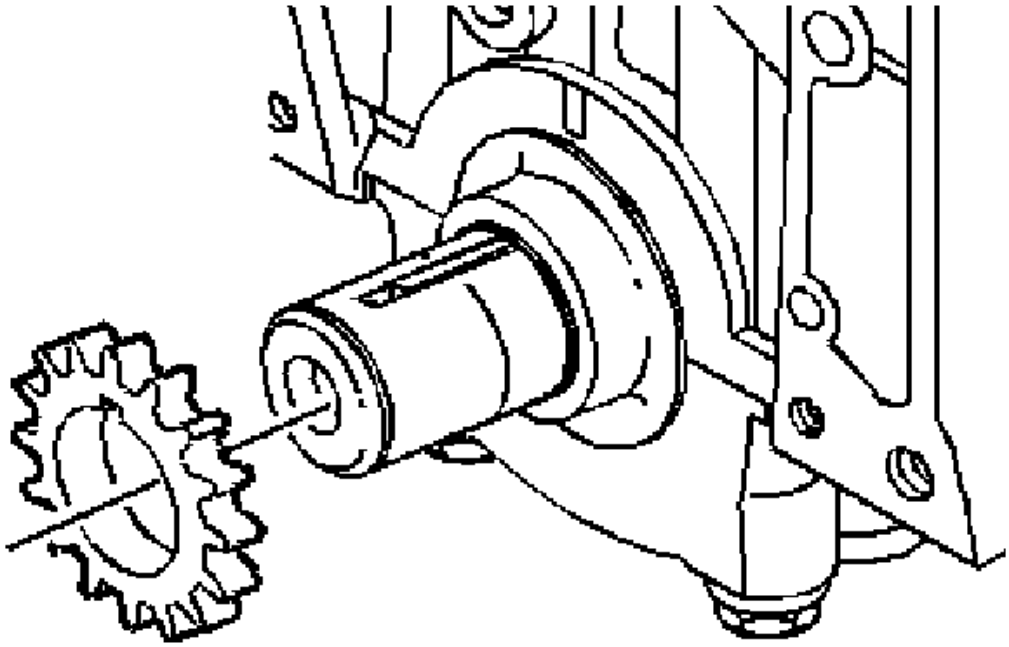

**Fig. 291: View Of Crankshaft Sprocket**
**Courtesy of GENERAL MOTORS CORP.**

3. Remove the crankshaft sprocket.

 © 2011 Mitchell Repair Information Company, LLC.

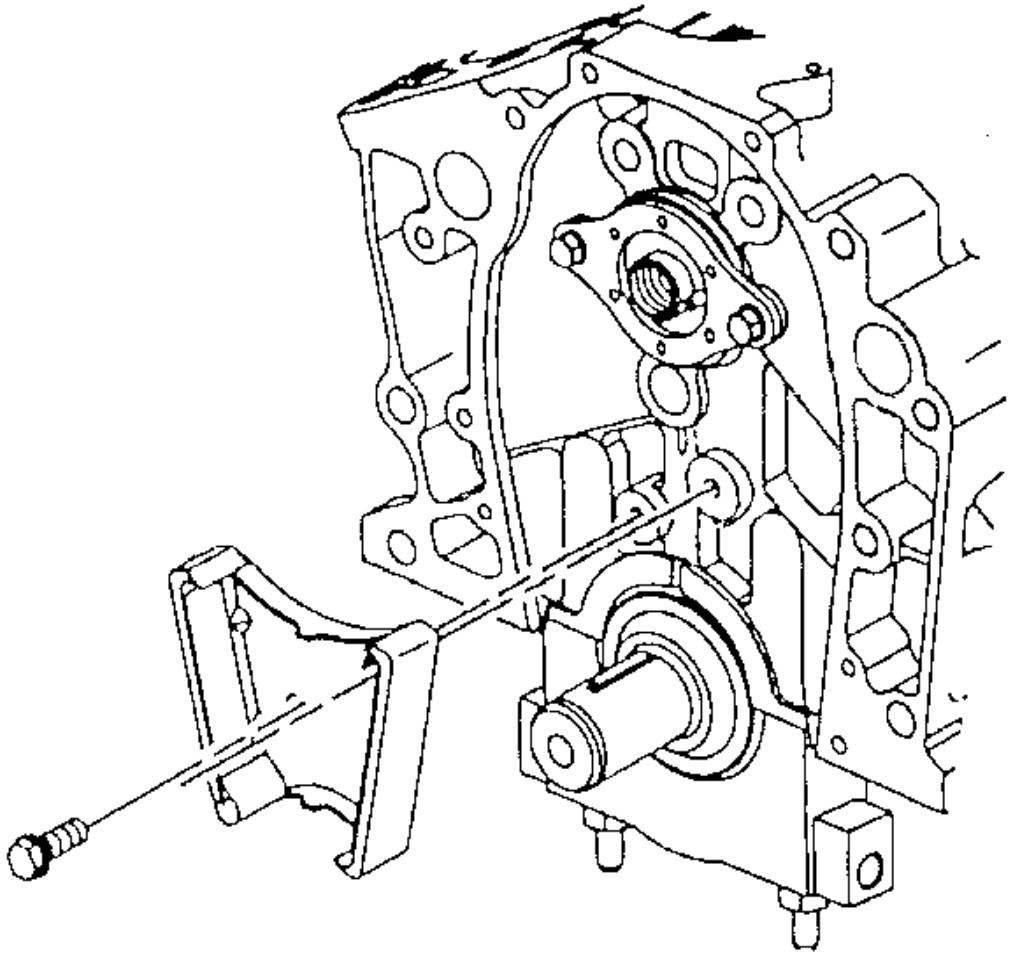

**Fig. 292: View Of Timing Chain Dampener & Bolts**
**Courtesy of GENERAL MOTORS CORP.**

4. Remove the timing chain dampener bolts.
5. Remove the timing chain dampener.

**Camshaft Removal**

 © 2011 Mitchell Repair Information Company, LLC.

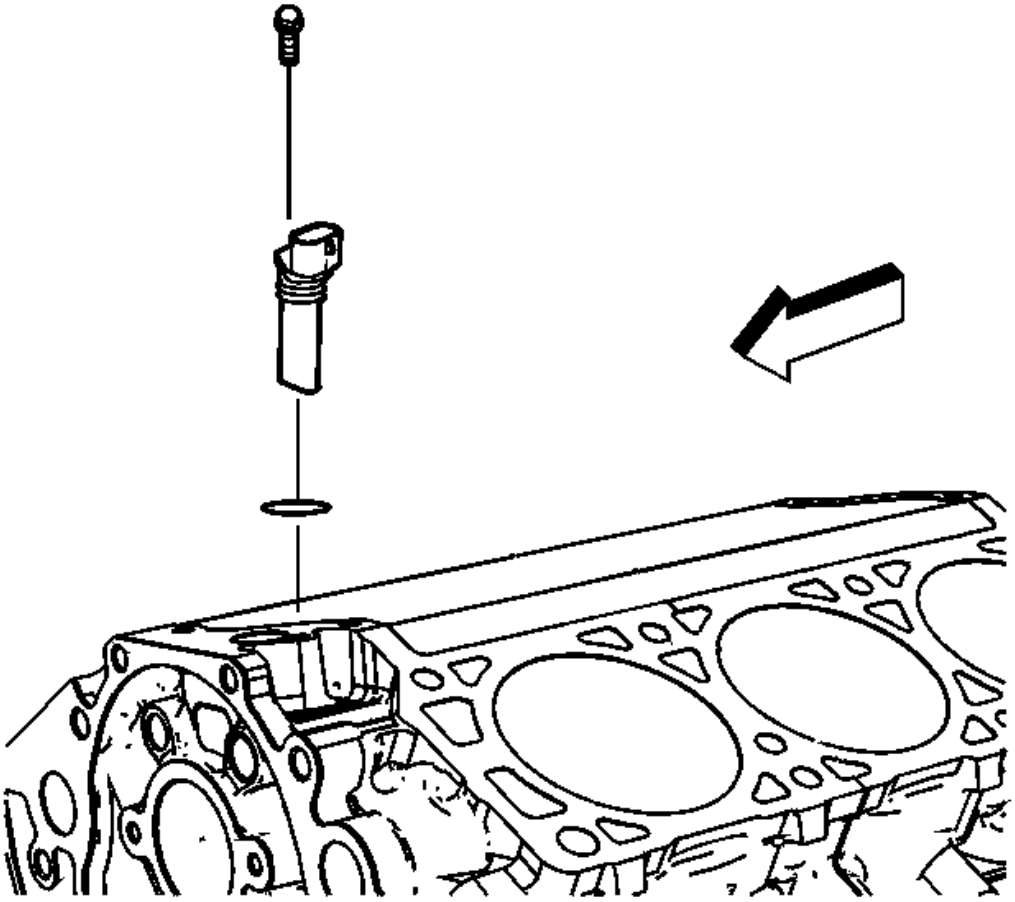

**Fig. 293: View Of Camshaft Position Sensor**
**Courtesy of GENERAL MOTORS CORP.**

1. Remove the camshaft position sensor bolt.
2. Remove the camshaft position sensor.

 © 2011 Mitchell Repair Information Company, LLC.

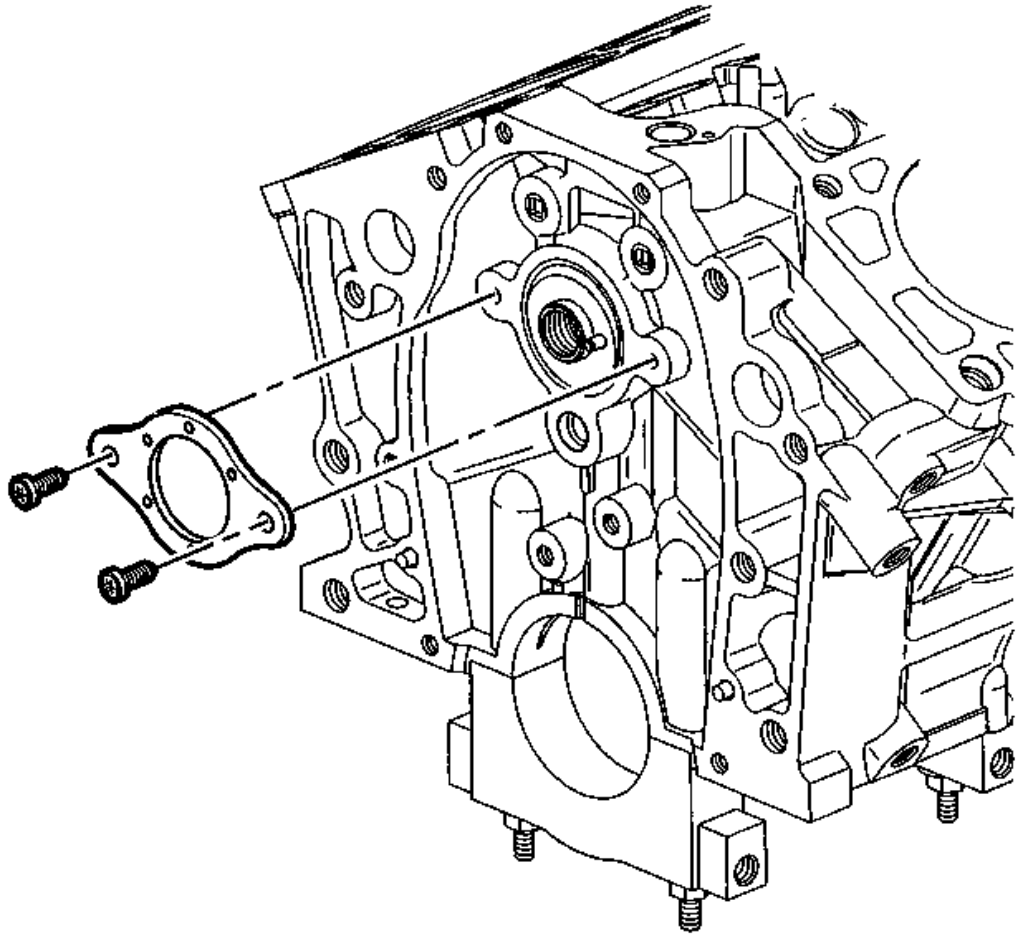

**Fig. 294: View Of Camshaft Thrust Plate**
**Courtesy of GENERAL MOTORS CORP.**

3. Remove the camshaft thrust plate screws.
4. Remove the camshaft thrust plate.

 © 2011 Mitchell Repair Information Company, LLC.

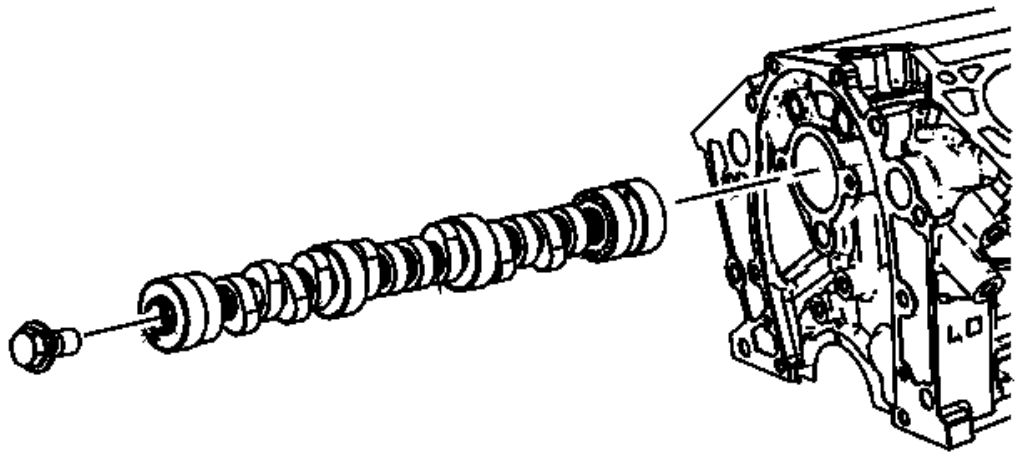

**Fig. 295: Inspecting Camshaft Journals**
**Courtesy of GENERAL MOTORS CORP.**

**NOTE:** **All camshaft journals are the same diameter, so care must be used in removing or installing the camshaft to avoid damage to the camshaft bearings.**

5. Complete the following steps in order to remove the camshaft.
    1. Install the camshaft sprocket bolt into the camshaft. Tighten finger tight only.
    2. Carefully rotate and remove the camshaft from the engine block.

**Piston, Connecting Rod, and Bearing Removal**

## Tools Required

- **J 24270** Ridge Reamer. See **Special Tools**.
- **J 41556** Connecting Rod Guide. See **Special Tools**.

 © 2011 Mitchell Repair Information Company, LLC.

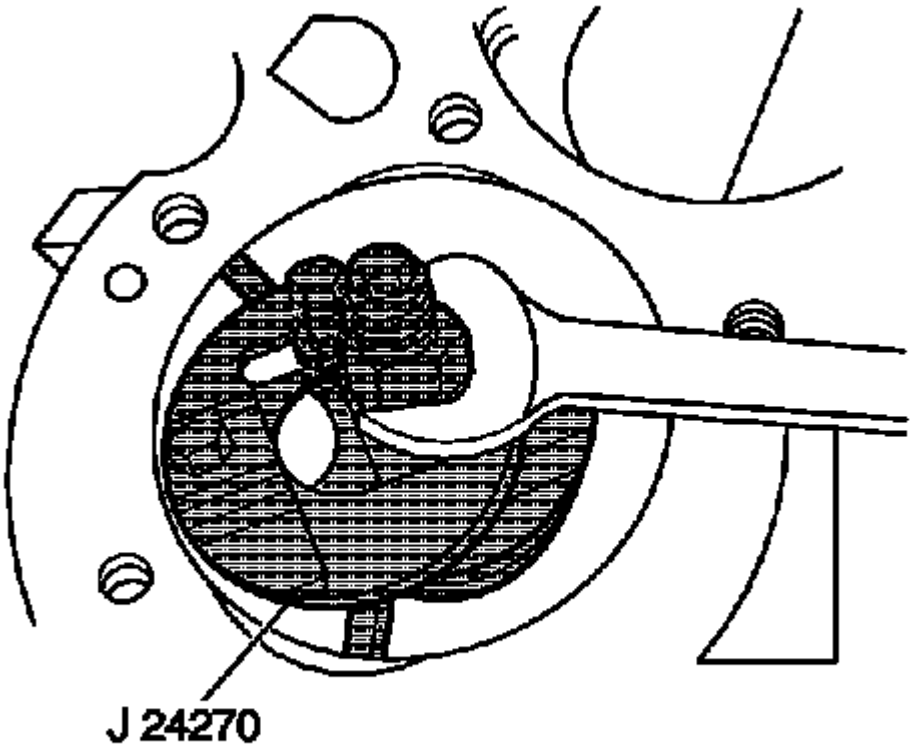


**Fig. 296: Removing Cylinder Bore Ring Ridge**
**Courtesy of GENERAL MOTORS CORP.**

1. Mark the piston with the number of the cylinder from which the piston is being removed.
2. Mark the connecting rod and the connecting rod cap in order to ensure correct assembly.

**NOTE:** **If there is a pronounced ridge at the top of the piston travel, the ridge must be removed with a ridge reamer before the piston and connecting rod assembly are removed. Applying force may break the piston rings or damage the piston.**

3. Use the **J 24270** in order to remove the cylinder bore ring ridge. See **Special Tools**.

   Complete the following steps:

   1. Turn the crankshaft until the piston is at the bottom of the stroke.
   2. Cover the piston with a cloth.
   3. Remove the cylinder ring ridge.
   4. Turn the crankshaft until the piston is at the top of the stroke.

 © 2011 Mitchell Repair Information Company, LLC.

5. Remove the cloth.
6. Remove the metal shavings from the cylinder and piston.

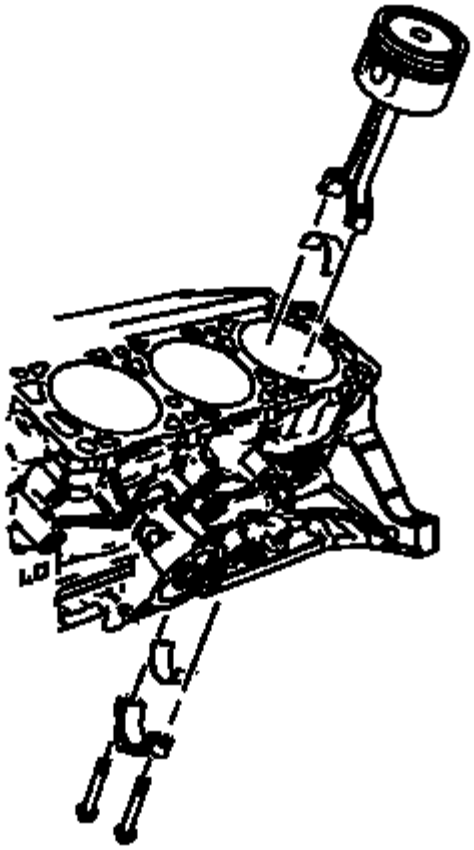

**Fig. 297: Removing Connecting Rod Bolts**
**Courtesy of GENERAL MOTORS CORP.**

4. Remove the connecting rod bolts.
5. Remove the connecting rod cap and bearing half.
6. Install **J 41556** onto the connecting rod bolts. See **Special Tools**.
7. Remove the connecting rod and piston assembly.
8. Push out the assembly using a suitable tool.

**Crankshaft Rear Oil Seal Removal**

 © 2011 Mitchell Repair Information Company, LLC.

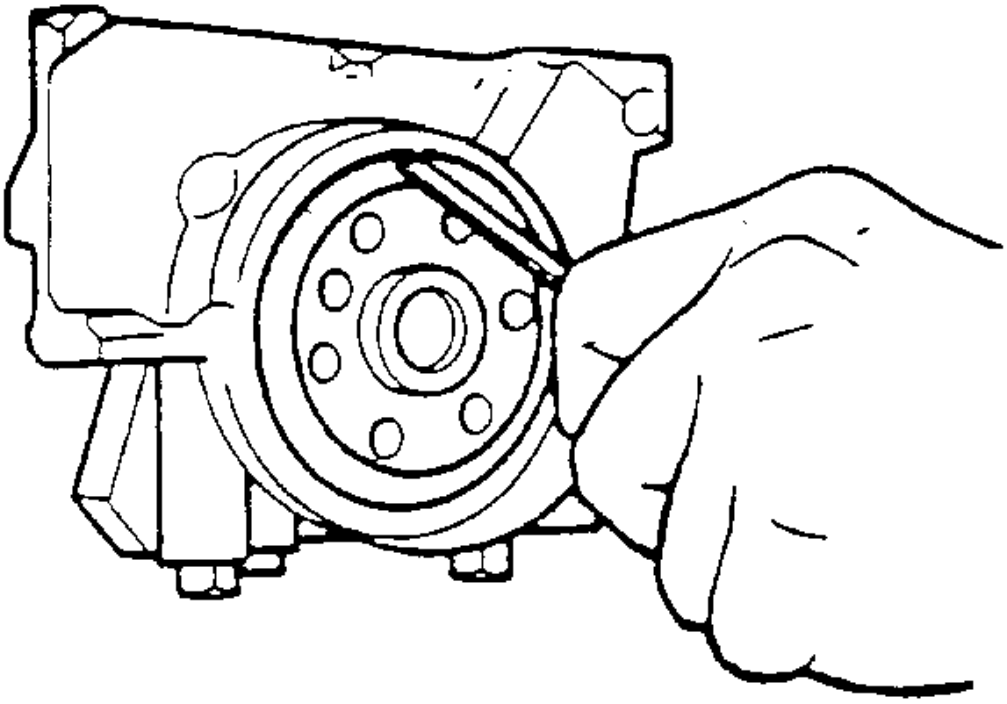

**Fig. 298: Removing Crankshaft Rear Oil Seal**
**Courtesy of GENERAL MOTORS CORP.**

1. Remove the crankshaft rear oil seal.

**IMPORTANT: Do not damage the crankshaft or seal bore.**

2. Pry out the crankshaft rear oil seal out using a suitable tool.

**Crankshaft and Bearings Removal**

 © 2011 Mitchell Repair Information Company, LLC.

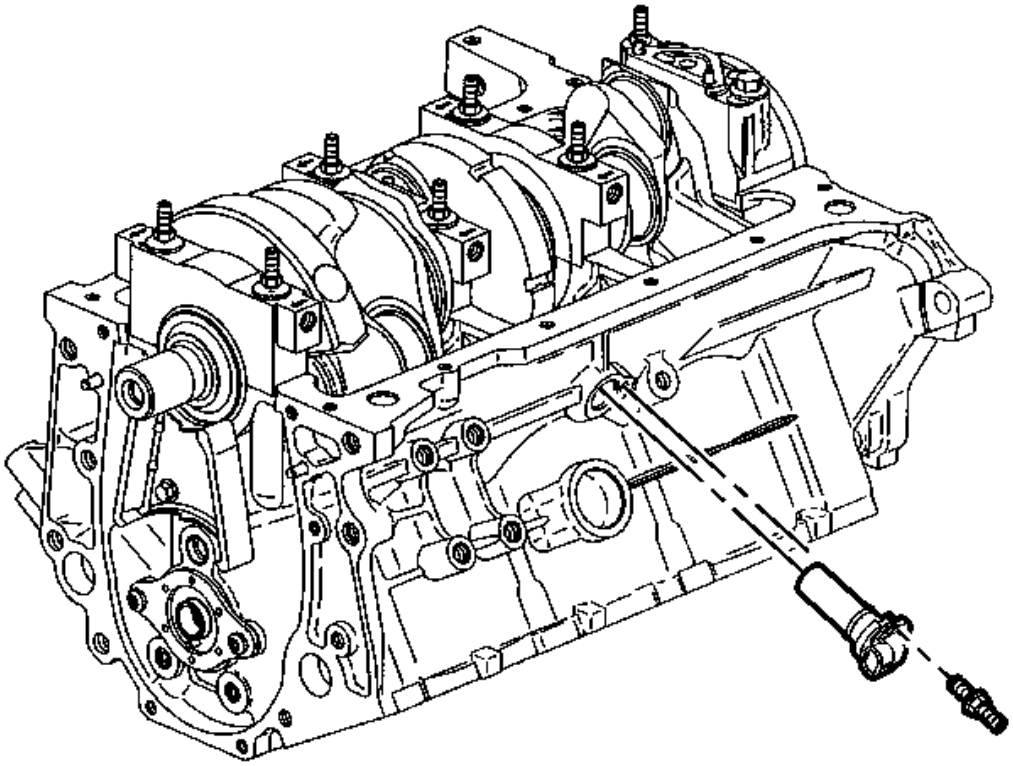

**Fig. 299: View Of Crankshaft Position Sensor & Stud**
**Courtesy of GENERAL MOTORS CORP.**

1. Remove the crankshaft position sensor heat shield nut and heat shield.
2. Remove the crankshaft position sensor stud.
3. Remove the crankshaft position sensor from the side of the block.

 © 2011 Mitchell Repair Information Company, LLC.

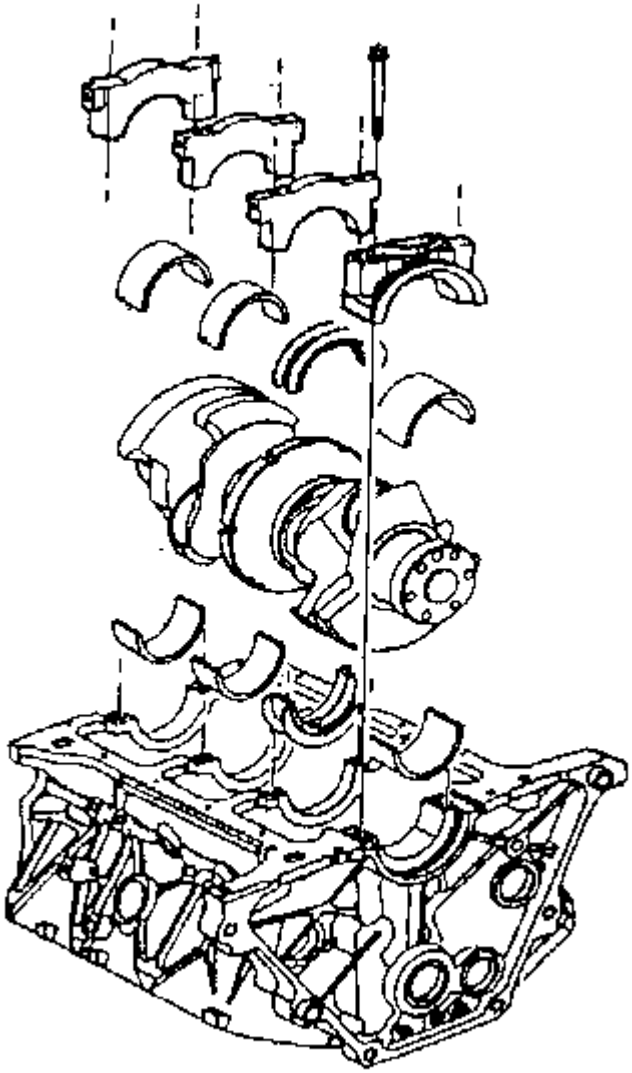

**Fig. 300: View Of Crankshaft, Main Bearings And Bearing Caps**
**Courtesy of GENERAL MOTORS CORP.**

4. Remove the crankshaft main bearing cap bolt and studs.
5. Remove the crankshaft main bearing caps and lower crankshaft main bearing halves.

**IMPORTANT: Use Care when handling the crankshaft. Avoid damage to the crankshaft position sensor reluctor wheel teeth. Nicks, burrs or other damage to the teeth may effect On-board Diagnostics (OBD) II system performance.**

 © 2011 Mitchell Repair Information Company, LLC.

6. Remove the crankshaft.
7. Remove the upper crankshaft main bearing halves.

**Camshaft Bearing Removal**

**Tools Required**

**J 33049** Camshaft Bearing Service Set. See **Special Tools**.

 © 2011 Mitchell Repair Information Company, LLC.

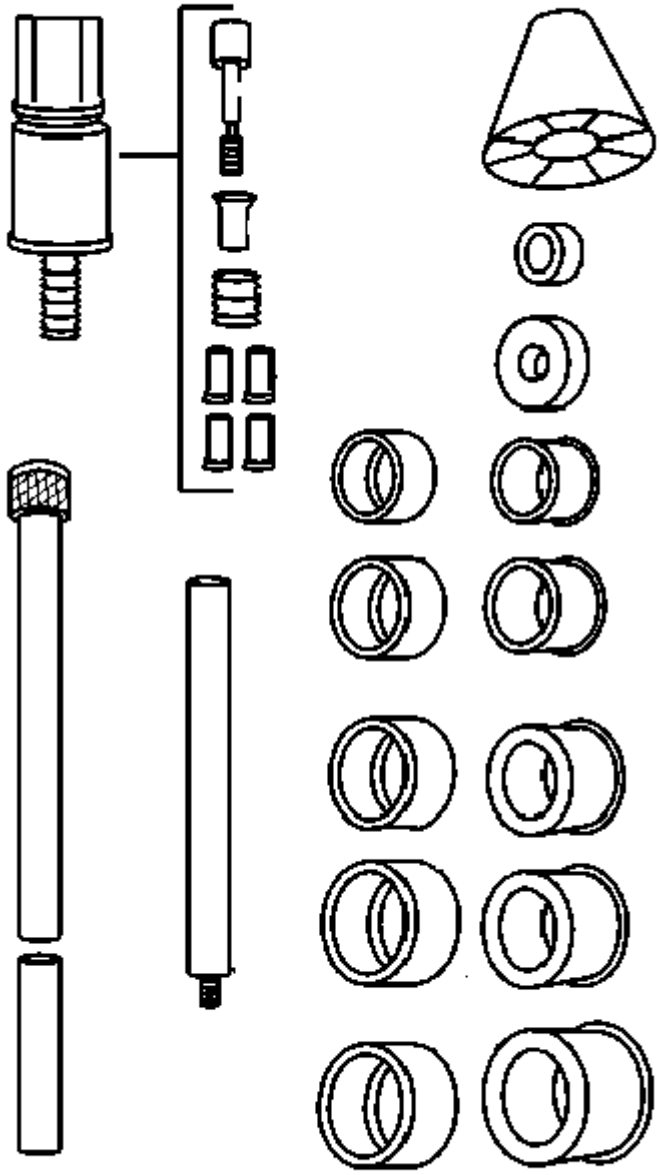

**Fig. 301: Camshaft Bearing Service Set**
**Courtesy of GENERAL MOTORS CORP.**

1. Select the expander assembly and driving washer.
2. Assemble the **J 33049** . See **Special Tools**.

 © 2011 Mitchell Repair Information Company, LLC.

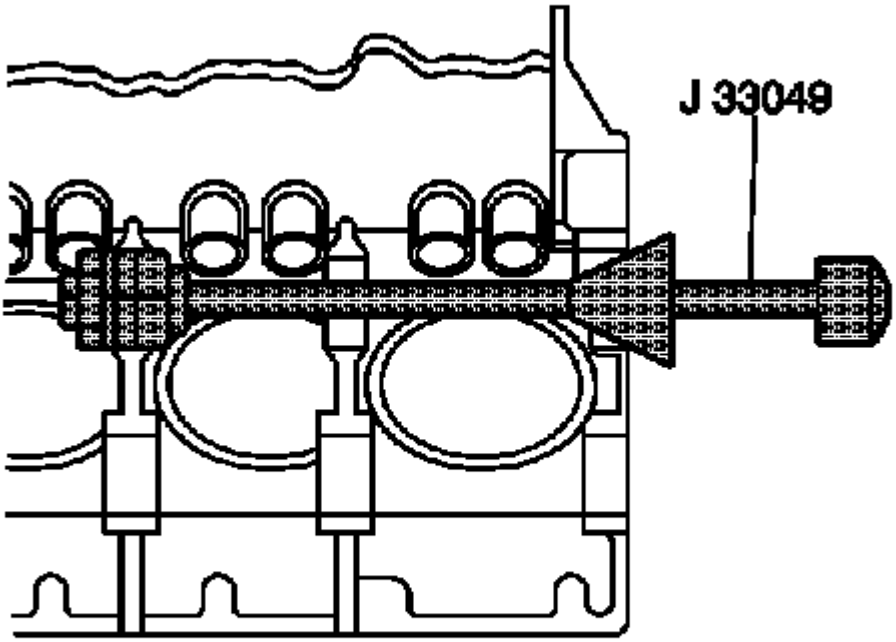


**Fig. 302: Removing/Installation Camshaft Inner Bearing Using J 33049**
**Courtesy of GENERAL MOTORS CORP.**

3. Drive out the camshaft bearings. Use the **J 33049** . See **Special Tools**.

**Engine Block Disassemble**

 © 2011 Mitchell Repair Information Company, LLC.

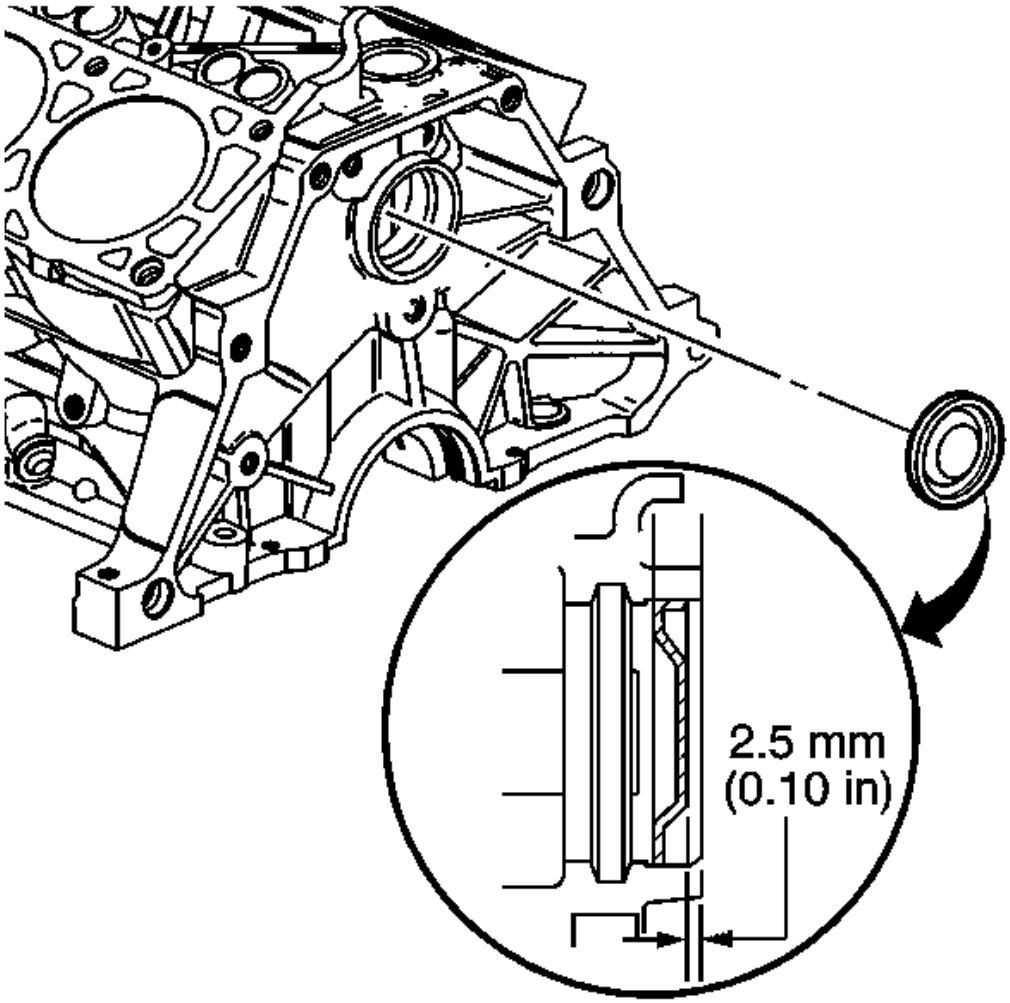


**Fig. 303: Identifying Camshaft Rear Bearing Hole Plug Installation Depth**
**Courtesy of GENERAL MOTORS CORP.**

**NOTE:** **Maximum gasket performance is achieved when using new fasteners, which contain a thread-locking patch. If the fasteners are not replaced, a thread locking chemical must be applied to the fastener threads. Failure to replace the fasteners or apply a thread-locking chemical MAY reduce gasket sealing capability.**

1. Remove the camshaft rear bearing hole plug.

 © 2011 Mitchell Repair Information Company, LLC.

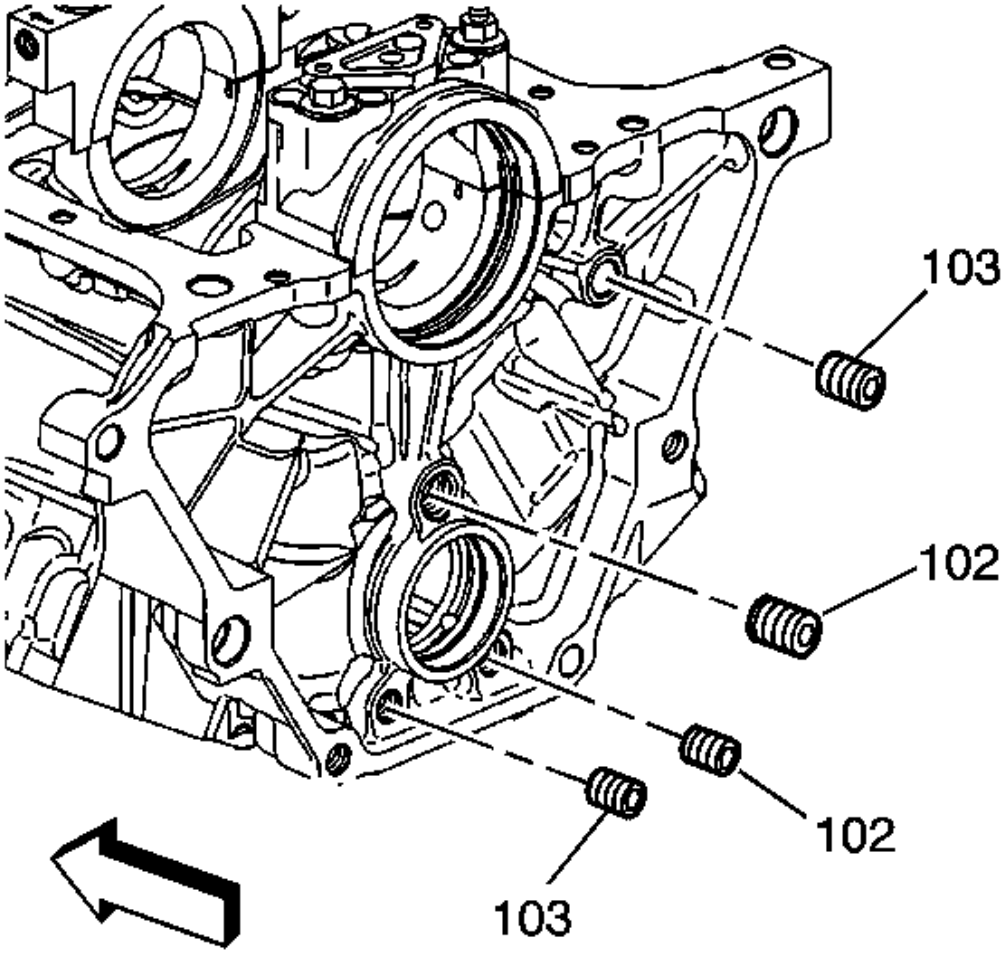


**Fig. 304: Removing Rear Oil Gallery Plugs (102, 103)**
**Courtesy of GENERAL MOTORS CORP.**

2. Remove the rear oil gallery plugs (102, 103).

 © 2011 Mitchell Repair Information Company, LLC.

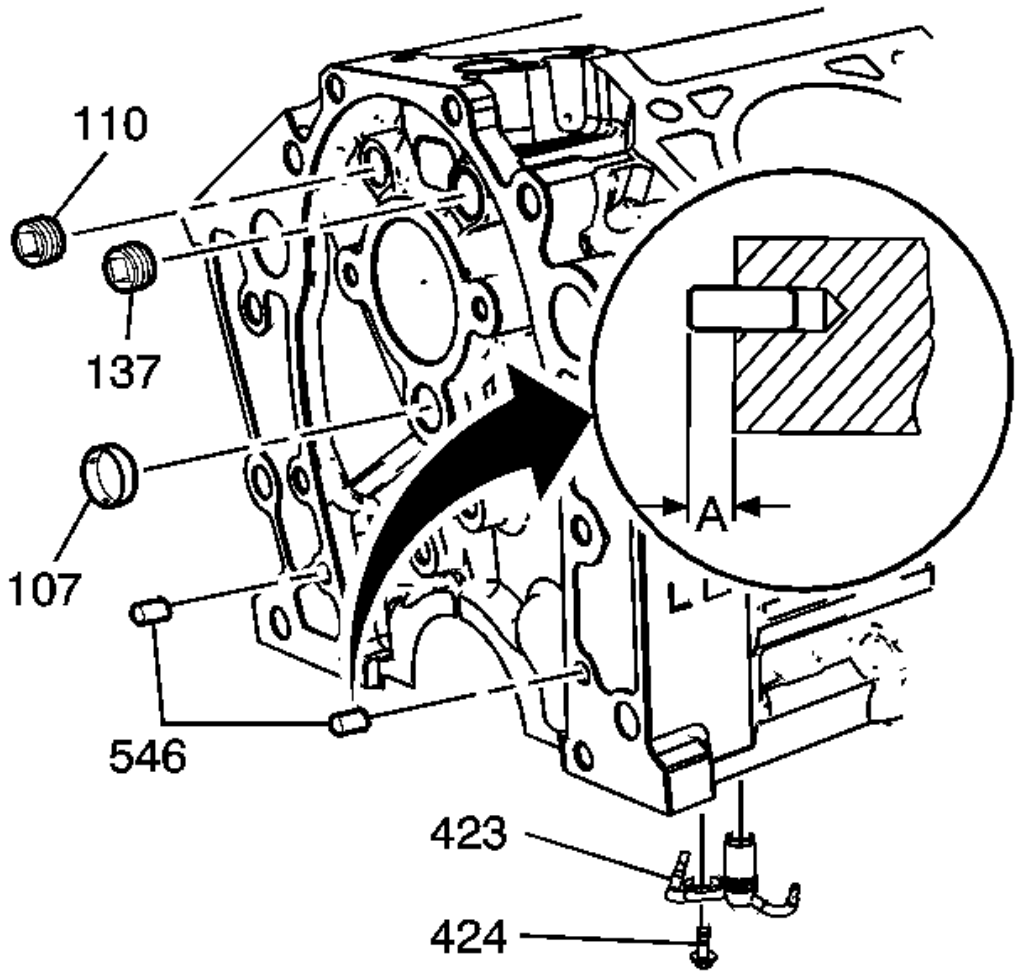


**Fig. 305: Removing Front Oil Gallery Plugs (107, 110, 137)**
**Courtesy of GENERAL MOTORS CORP.**

3. Remove the front oil gallery plugs (107, 110, 137).
4. Remove the engine front cover locating pins (546).
5. Remove the piston oil nozzle bolt (424) and nozzle (423).

 © 2011 Mitchell Repair Information Company, LLC.

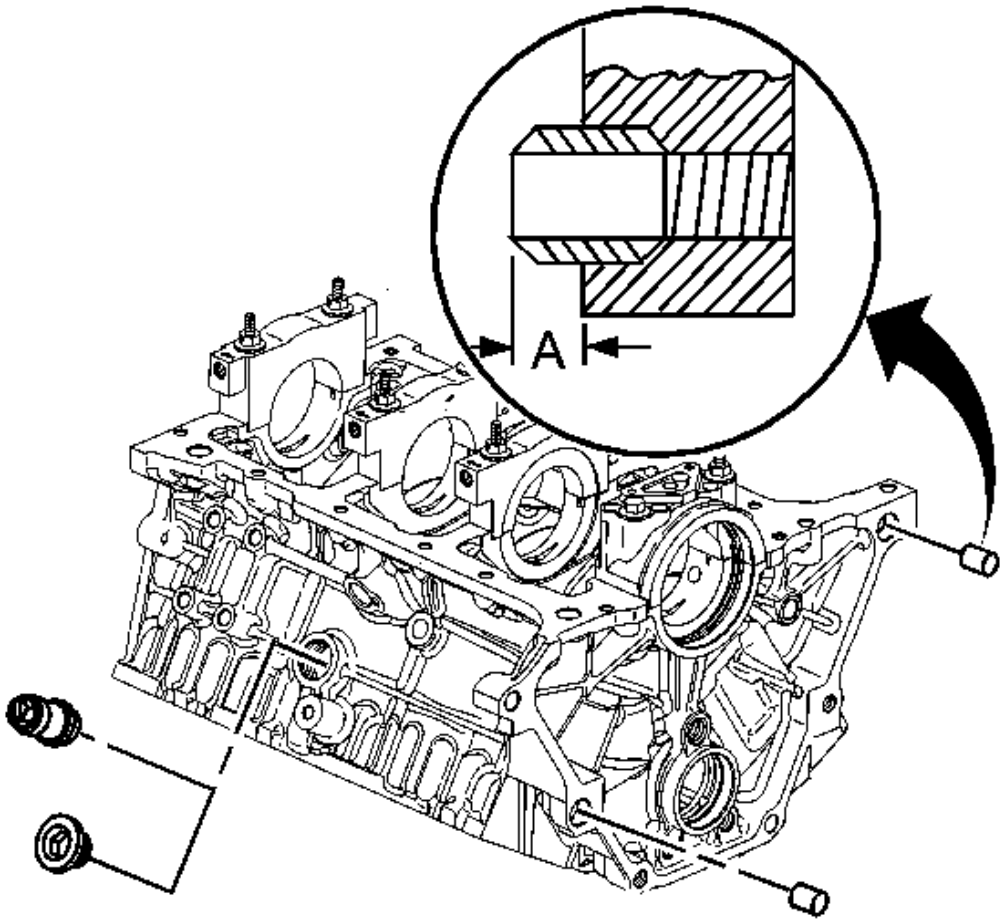


**Fig. 306: Removing Engine Block Plug**
**Courtesy of GENERAL MOTORS CORP.**

6. Remove the engine block plug, if applicable.
7. Remove the engine block heater, if applicable.
8. Remove the transmission locating pins.

 © 2011 Mitchell Repair Information Company, LLC.

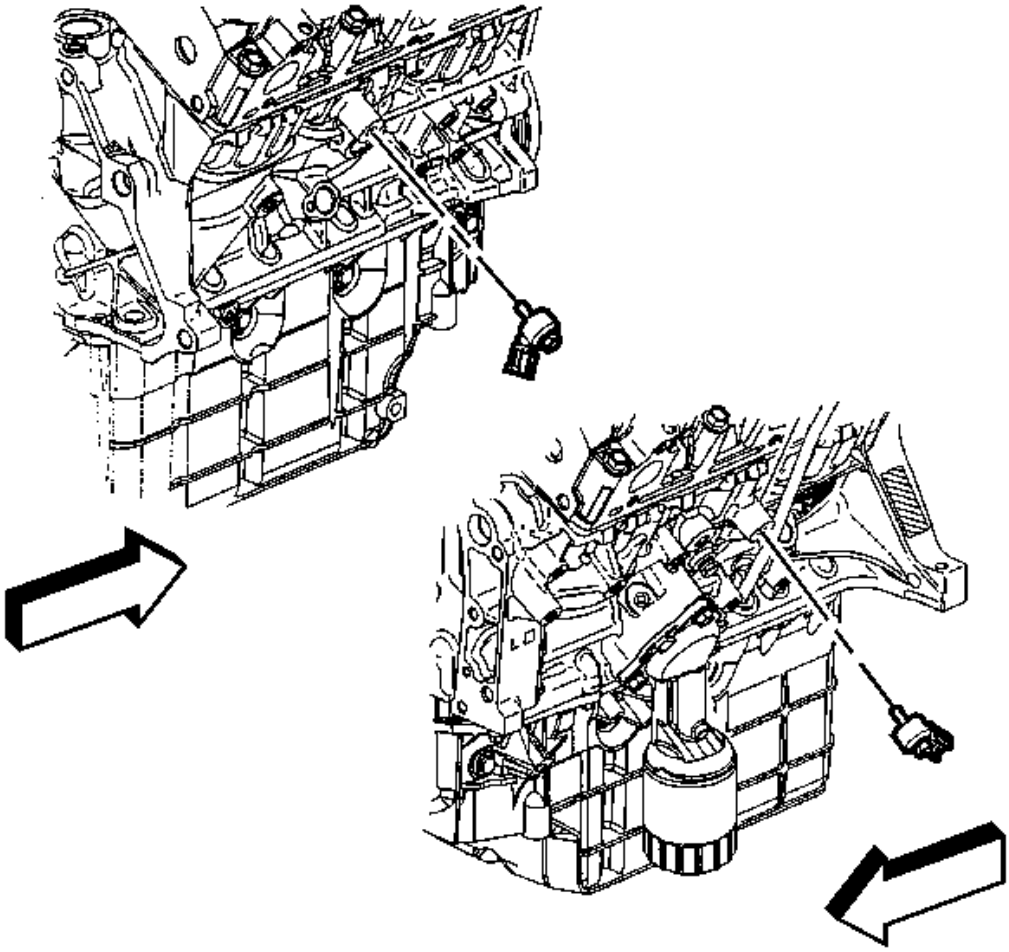

**Fig. 307: View Of Knock Sensors**
**Courtesy of GENERAL MOTORS CORP.**

9. Remove the knock sensors.

 © 2011 Mitchell Repair Information Company, LLC.

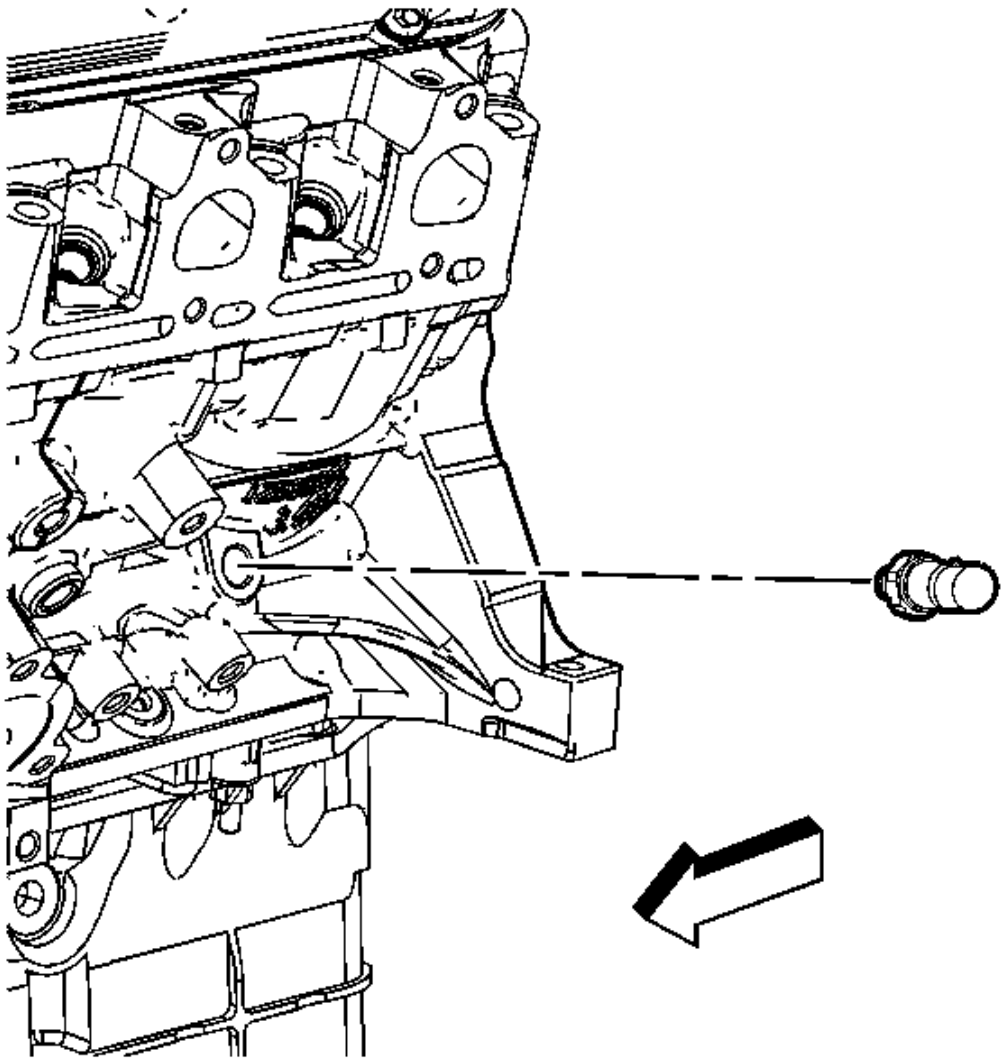

**Fig. 308: Locating Engine Oil Pressure Indicator Switch**
**Courtesy of GENERAL MOTORS CORP.**

10. Remove the engine oil pressure indicator switch.

**Engine Block Cleaning and Inspection**

## Tools Required

- **J 8001** Dial Indicator Set

 © 2011 Mitchell Repair Information Company, LLC.

- **J 8087** Cylinder Bore Gage

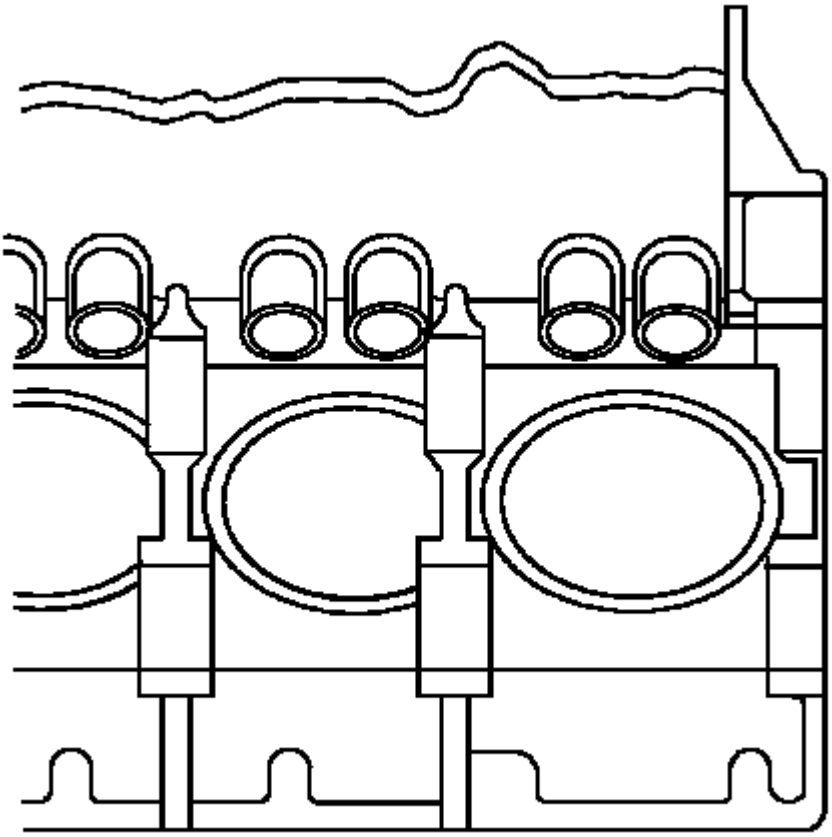

**Fig. 309: View Of Gasket Mating Surfaces**
**Courtesy of GENERAL MOTORS CORP.**

1. Clean the sealing material from the gasket mating surfaces.
2. Boil the engine block in caustic solution.
3. Flush the engine block with clean water or steam.
4. Clean the oil passages.
5. Clean the blind holes.
6. Spray the cylinder bores and the machined surfaces with engine oil.
7. Inspect the threaded holes.
8. Clean the holes with a tap. Drill out the holes and install thread inserts, as needed.

 © 2011 Mitchell Repair Information Company, LLC.

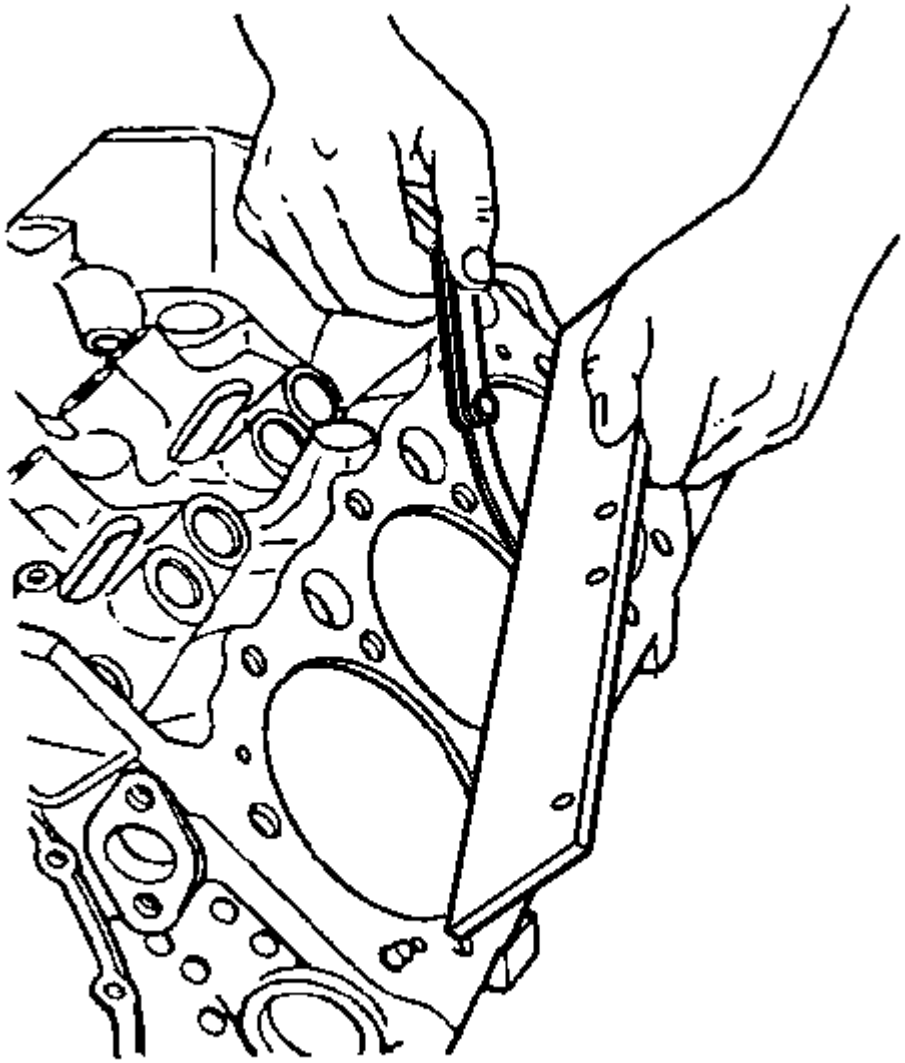

**Fig. 310: Testing Block Deck Surface For Flatness**
**Courtesy of GENERAL MOTORS CORP.**

9. Use a straight edge and a feeler gauge in order to test the deck surface for flatness. Replace the block if it is outside of the specification limit.
10. Inspect the oil pan rail for nicks.

    Inspect the front cover attaching area for nicks.

 © 2011 Mitchell Repair Information Company, LLC.

Use a flat mill file in order to remove any nicks.

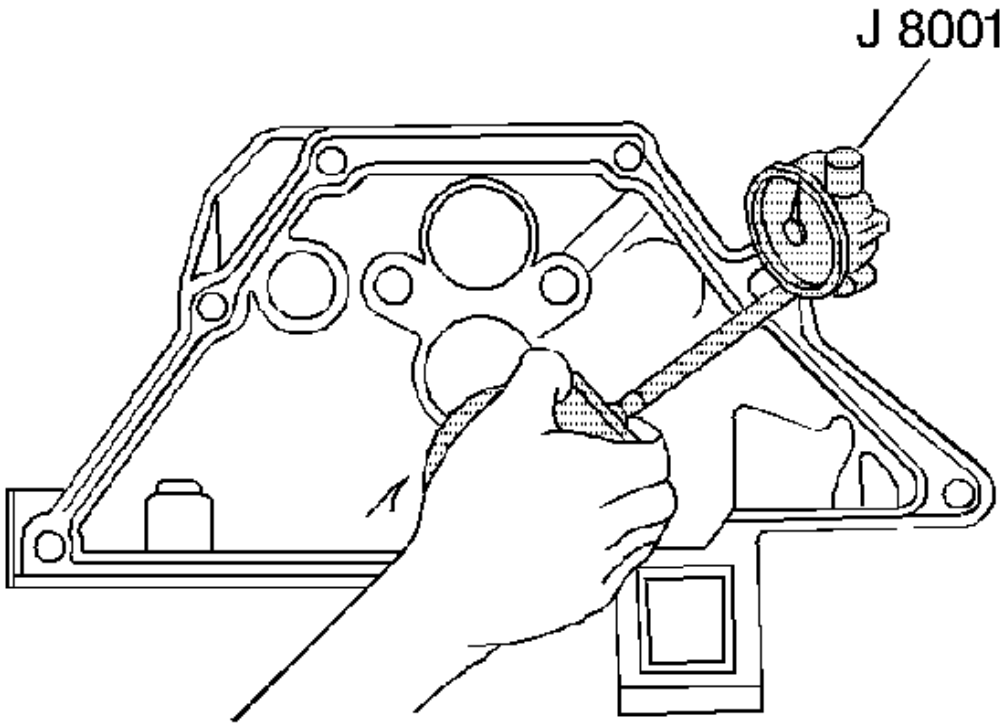


**Fig. 311: Inspect Mating Surfaces Of Transmission Case**
**Courtesy of GENERAL MOTORS CORP.**

11. Inspect the mating surfaces of the transmission case.

**NOTE:** **A broken flywheel may result if the transmission case mating surface is not flat.**

12. Use the following procedure in order to measure the engine block flange runout at the 6 mounting bolt hole bosses:
    1. Temporarily install the crankshaft. Measure the crankshaft flange runout.
    2. Hold the **J 8001** gage plate flat against the crankshaft flange.
    3. Place the dial indicator stem on the transmission mounting bolt hole boss. Set the indicator to 0.
    4. Record the readings obtained from all of the bolt hole bosses. The measurements should not vary more than 0.25 mm (0.010 in).
    5. Retest the crankshaft flange runout if the readings vary more than 0.25 mm (0.010 in). If the

 © 2011 Mitchell Repair Information Company, LLC.

crankshaft flange runout is not within the specification, replace the engine block.

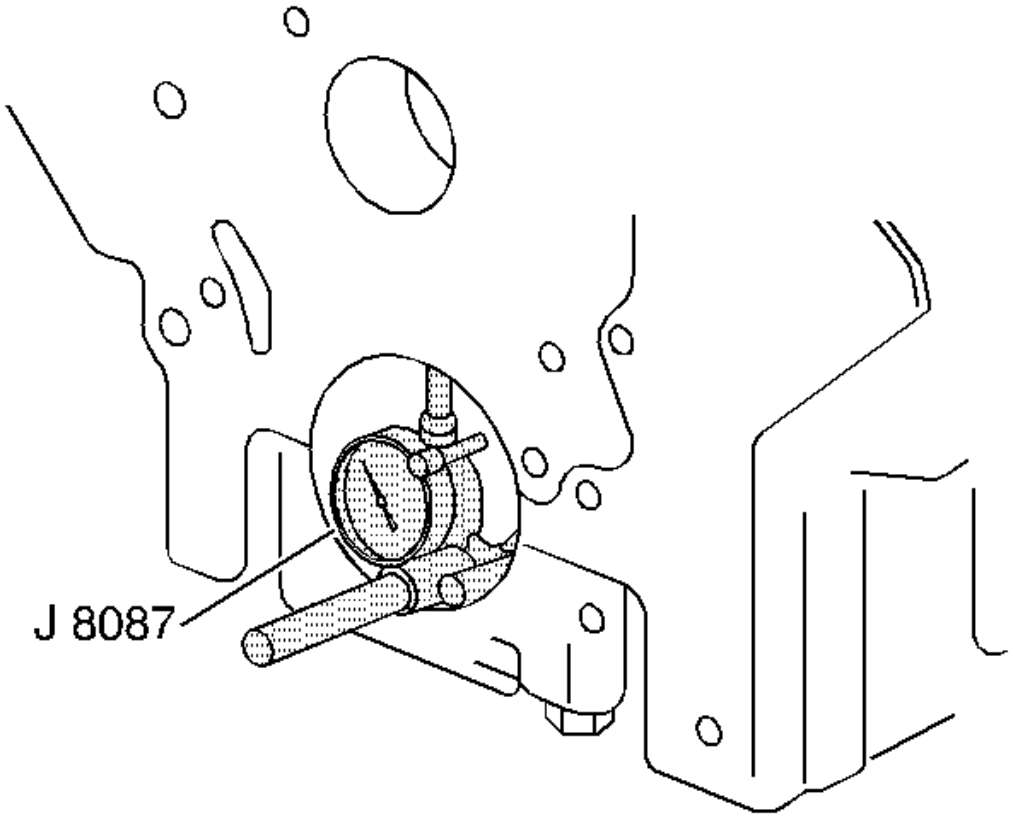


**Fig. 312: Inspecting Crankshaft Main Bearing Bores**
**Courtesy of GENERAL MOTORS CORP.**

**IMPORTANT: Perform the following inspections, and reconditioning if necessary, with the crankshaft main bearing caps installed and tightened to specification.**

13. Inspect the crankshaft main bearing bores. Use the **J 8087** in order to measure the bearing bore concentricity and alignment at the following locations:
    - The camshaft
    - The crankshaft
14. Replace the engine block if the bores are out of specification.

 © 2011 Mitchell Repair Information Company, LLC.

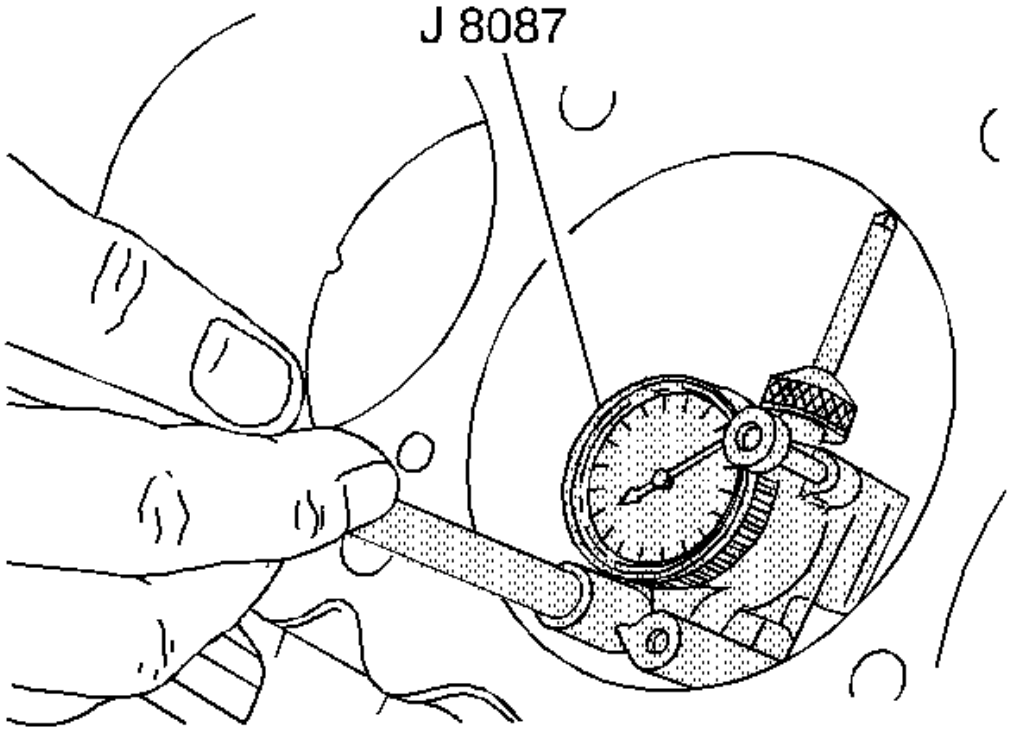


**Fig. 313: Inspecting Cylinder Bores Using J 8087**
**Courtesy of GENERAL MOTORS CORP.**

15. Use the **J 8087** in order to inspect the cylinder bores. Inspect the bores for the following conditions:
    - Wear
    - Taper
    - Runout
    - Ridging

**IMPORTANT: If the bore is worn beyond the limits, refit the bore with 0.5 mm (0.02 in) oversized pistons.**

16. Leave sufficient material in order to allow honing when fitting the piston.

**Cylinder Boring and Honing**

**Boring Procedure**

1. Before honing or boring, measure all of the new pistons. Select the smallest piston for the piston fitting.

 © 2011 Mitchell Repair Information Company, LLC.

Slightly varied pistons in a set may provide correction, if the first piston is too loosely fitted.

2. Before using any type of boring bar, file the top of the engine block to remove any dirt or burrs. If the cylinder block is not straight, the boring bar may be tilted, causing the bored cylinder wall to have incorrect right angles to the crankshaft.
3. Carefully follow the instructions furnished by the manufacturer regarding use of equipment.
4. Install all crankshaft main bearing caps to specification when boring cylinders. Cover or tape the crankshaft bearings and other internal parts to protect these parts during the boring or honing operation.
5. Leave 0.03 mm (0.001 in) on the diameter for finish honing when performing the final cut with a boring bar. Carefully perform the honing and boring operation to maintain the specified clearances between pistons, rings, and cylinder bores.

**Honing Procedure**

1. Follow the manufacturer's recommendations for use, cleaning, and lubrication when honing the cylinders. Use only clean, sharp stones of the proper grade for the amount of material to be removed. Dull, dirty stones cut unevenly and generate excessive heat. When using coarse or medium-grade stones, leave sufficient metal so all stone marks may be removed with the fine stones used for finishing to provide the proper clearance.
2. During the honing operation, thoroughly clean the cylinder bore. Check for the correct piston fit.

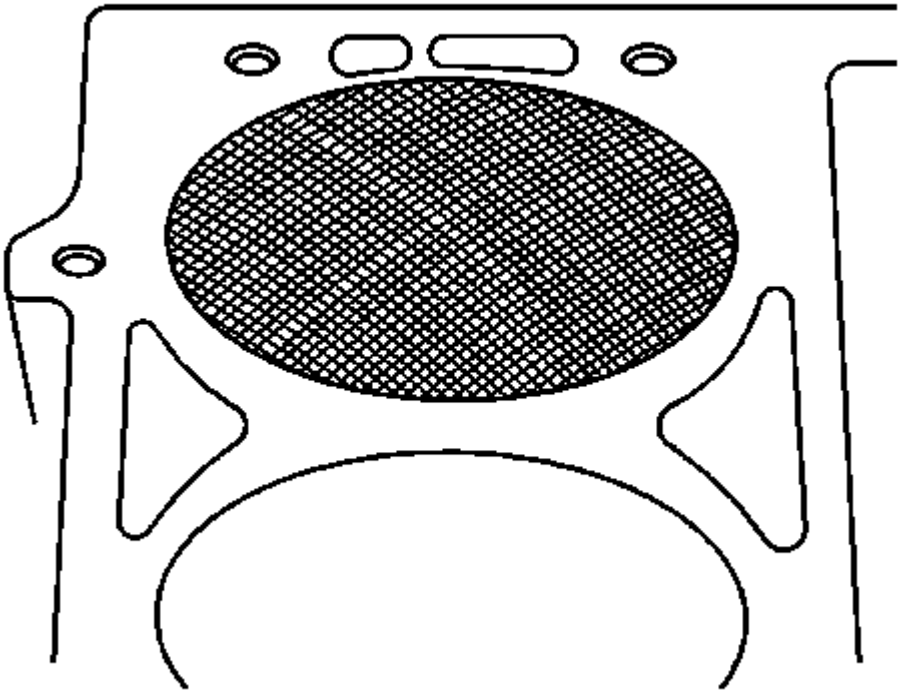

**Fig. 314: Identifying Cylinder Bore Cross Hatch Pattern**
**Courtesy of GENERAL MOTORS CORP.**

 © 2011 Mitchell Repair Information Company, LLC.

3. Make full strokes in the cylinder to eliminate taper. Repeatedly check the measurement at the top, the middle, and the bottom of the cylinder bore.

**NOTE:** **Handle the pistons with care. Do not force the pistons through the cylinder until you hone the cylinder to the correct size. The piston can be distorted through careless handling.**

4. When finish honing a cylinder bore to fit a piston, move the hone up and down at a sufficient speed to obtain a fine and uniform surface finish in a cross hatch pattern.
5. The finish marks should be clean but not sharp. The finish marks should be free from imbedded particles and torn or folded metal.
6. Determine the finish hone cylinder measurement by measuring the piston to be installed, and by adding the average of the clearance specification. Measure the block and the piston at normal room temperature.
7. True up the refinished cylinder bores. Final hone each cylinder bore to remove all stone or cutter marks.
8. After final honing and before the piston is checked for fit, clean the bores with hot water and detergent. Scrub the bores with a stiff bristle brush and rinse the bores thoroughly with hot water. Do not allow any abrasive material to remain in the cylinder bores. This abrasive material will wear the new rings, the cylinder bores, and the bearings lubricated by the contaminated oil. After washing dry the bore.
9. Permanently mark the piston for the cylinder to which the piston has been fitted.
10. Apply clean engine oil to each bore to prevent rusting.

**Engine Block Assemble**

 © 2011 Mitchell Repair Information Company, LLC.

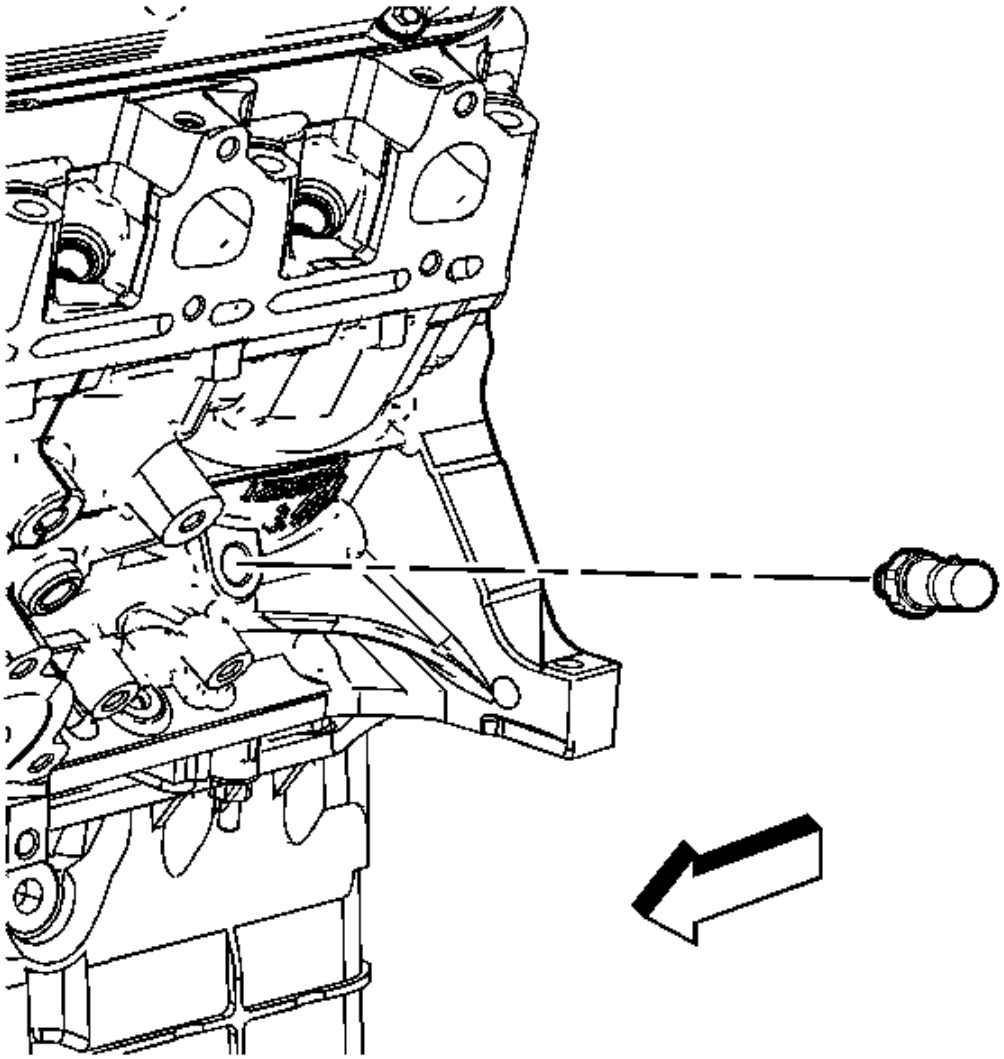

**Fig. 315: Locating Engine Oil Pressure Indicator Switch**
**Courtesy of GENERAL MOTORS CORP.**

1. Apply sealer GM P/N 12346004 (Canadian P/N 10953480), or equivalent to the oil pressure switch threads.

**NOTE: Refer to Fastener Notice in Cautions and Notices.**

2. Install the engine oil pressure switch.

 © 2011 Mitchell Repair Information Company, LLC.

**Tighten:** Tighten the engine oil pressure switch to 16 N.m (12 lb ft).

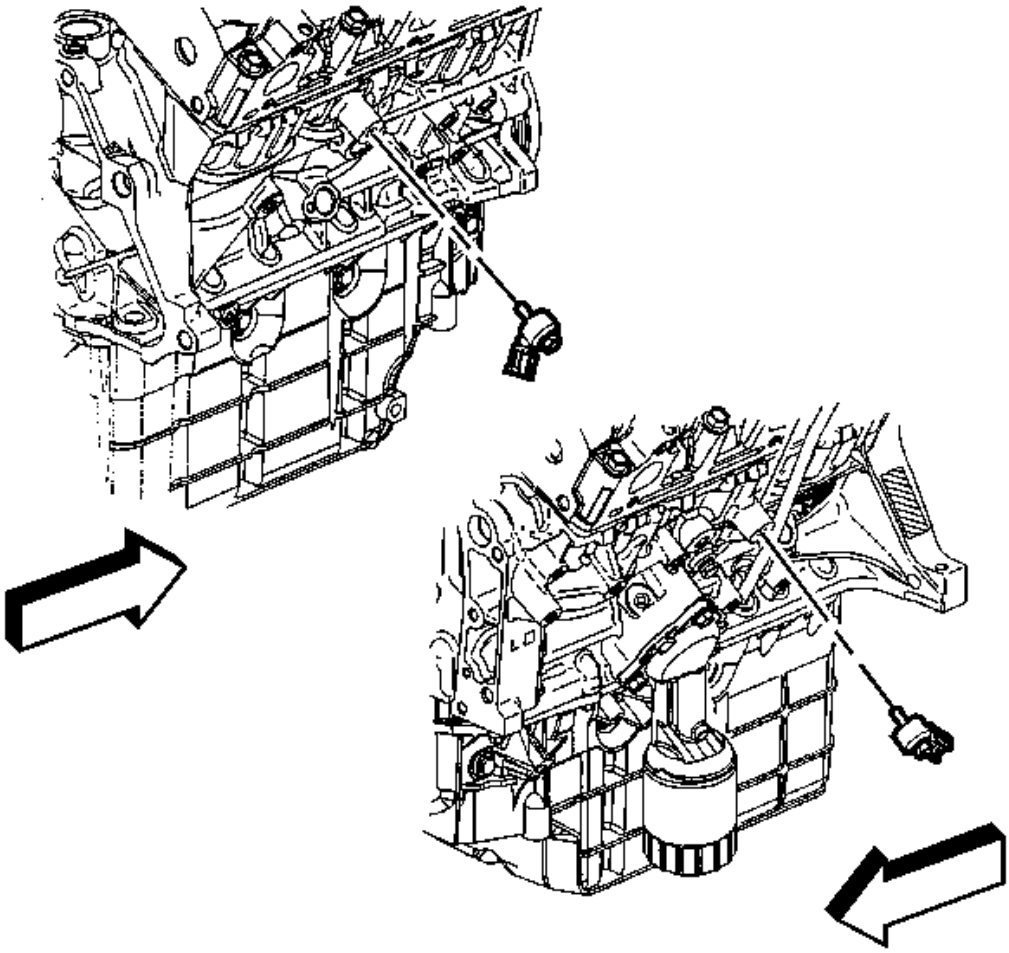

**Fig. 316: View Of Knock Sensors**
**Courtesy of GENERAL MOTORS CORP.**

3. Install the knock sensors.

   **Tighten:** Tighten the knock sensors to 25 N.m (18 lb ft).

 © 2011 Mitchell Repair Information Company, LLC.

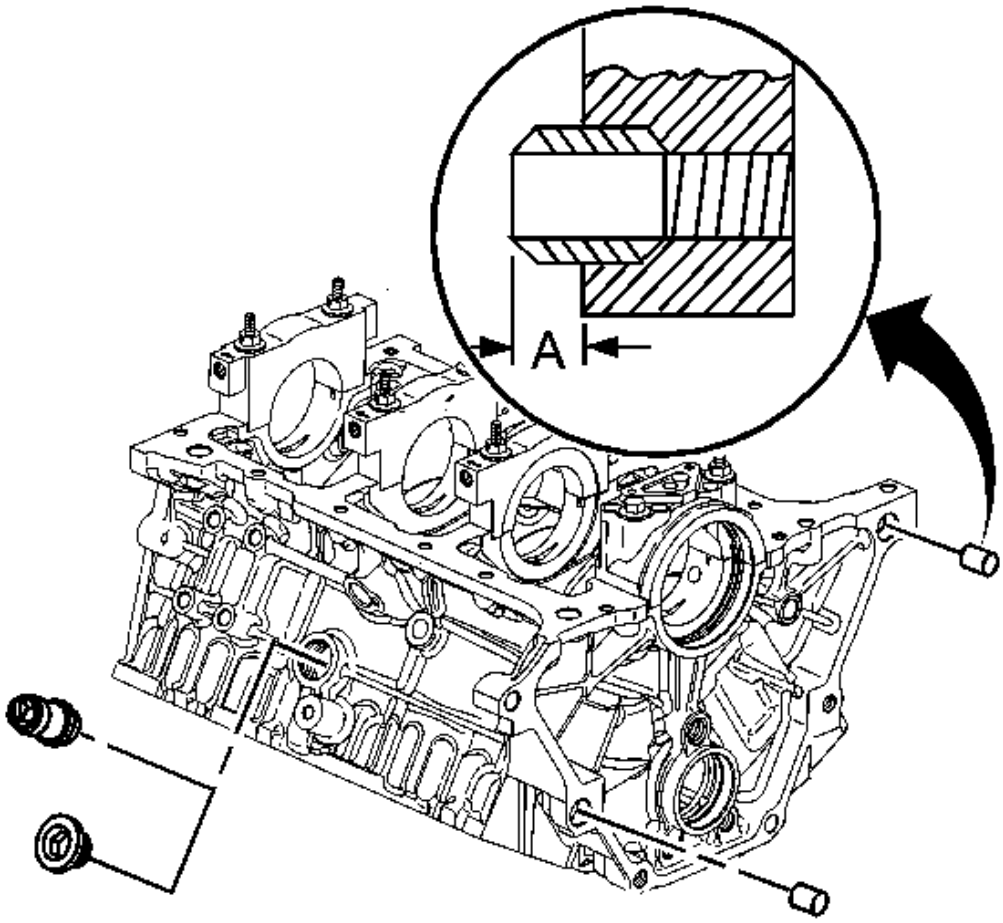


**Fig. 317: Removing Engine Block Plug**
**Courtesy of GENERAL MOTORS CORP.**

4. Apply sealer GM P/N 12346004 (Canadian P/N 10953480), or equivalent to the engine block plug or engine block heater, if applicable.
5. Install the engine block plug or engine block heater, if applicable.

   **Tighten:** Tighten the engine block plug or engine block heater to 60 N.m (44 lb ft).

6. Install the transmission locating pins. The installation height should be 8.3-9.3 mm (0.327-0.366 in) (A).

 © 2011 Mitchell Repair Information Company, LLC.

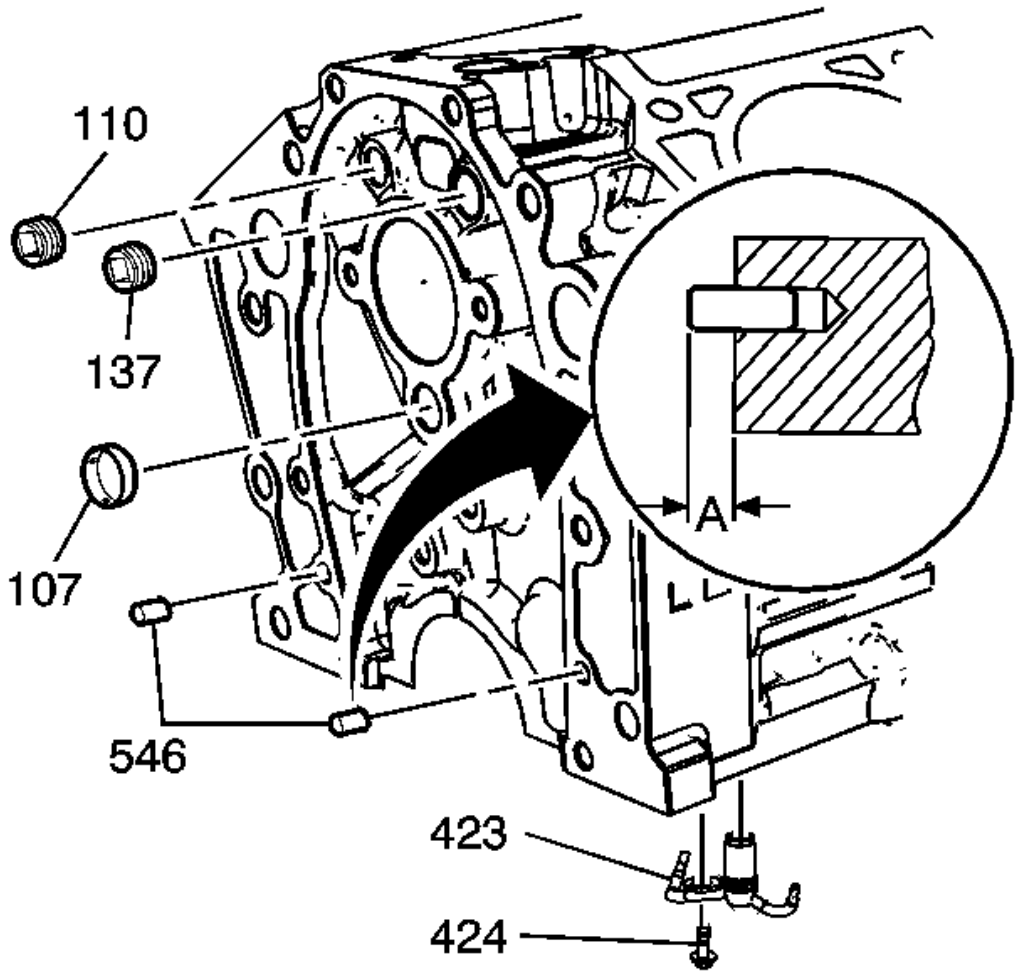


**Fig. 318: Removing Front Oil Gallery Plugs (107, 110, 137)**
**Courtesy of GENERAL MOTORS CORP.**

7. Apply sealer GM P/N 12346004 (Canadian P/N 10953480), or equivalent to the front oil gallery plug threads (110, 137).
8. Install the front oil gallery plug (110).

   **Tighten:** Tighten the front oil gallery plug to 19 N.m (14 lb ft).

9. Install the front oil gallery plug (137).

   **Tighten:** Tighten the front oil gallery plug to 33 N.m (24 lb ft).

 © 2011 Mitchell Repair Information Company, LLC.

10. Apply sealer GM P/N 12377901 (Canadian P/N 10953504), or equivalent to the front oil gallery plug (107).
11. Install the front oil gallery plug (107) so that it is 2.3 mm (0.10 in) below flush of the engine block.
12. Install the engine front cover locating pins (546). The installation height should be 5.8-8.2 mm (0.228-0.323 in) (A).

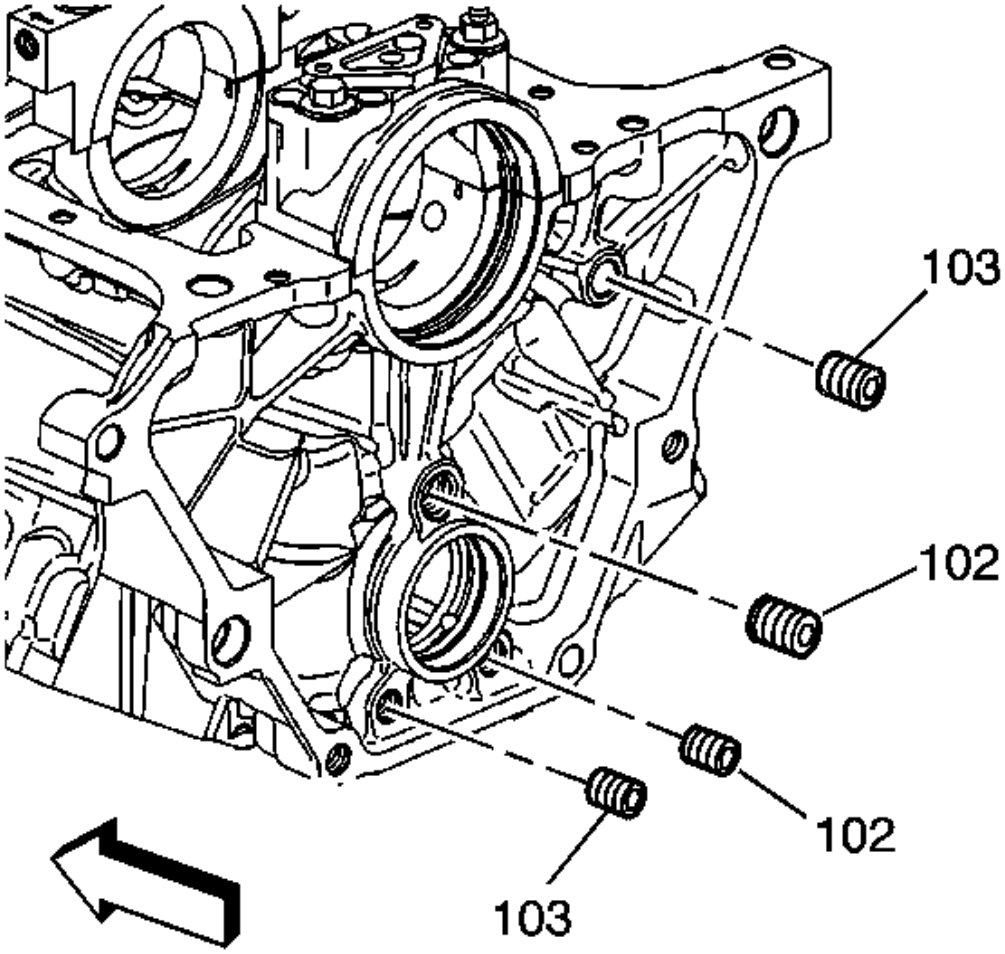


**Fig. 319: Removing Rear Oil Gallery Plugs (102, 103)**
**Courtesy of GENERAL MOTORS CORP.**

13. Install the piston oil nozzle and bolt.

    **Tighten:** Tighten the piston oil nozzle bolt to 10 N.m (89 lb in).

 © 2011 Mitchell Repair Information Company, LLC.

14. Apply Sealer GM P/N 12346004 (Canadian P/N 10953480), or equivalent to the rear oil gallery plugs.
15. Install the rear oil gallery plugs (103).

    **Tighten:** Tighten the rear oil gallery plugs to 19 N.m (14 lb ft).

16. Install the rear oil gallery plugs (102).

    **Tighten:** Tighten the rear oil gallery plugs to 33 N.m (24 lb ft).

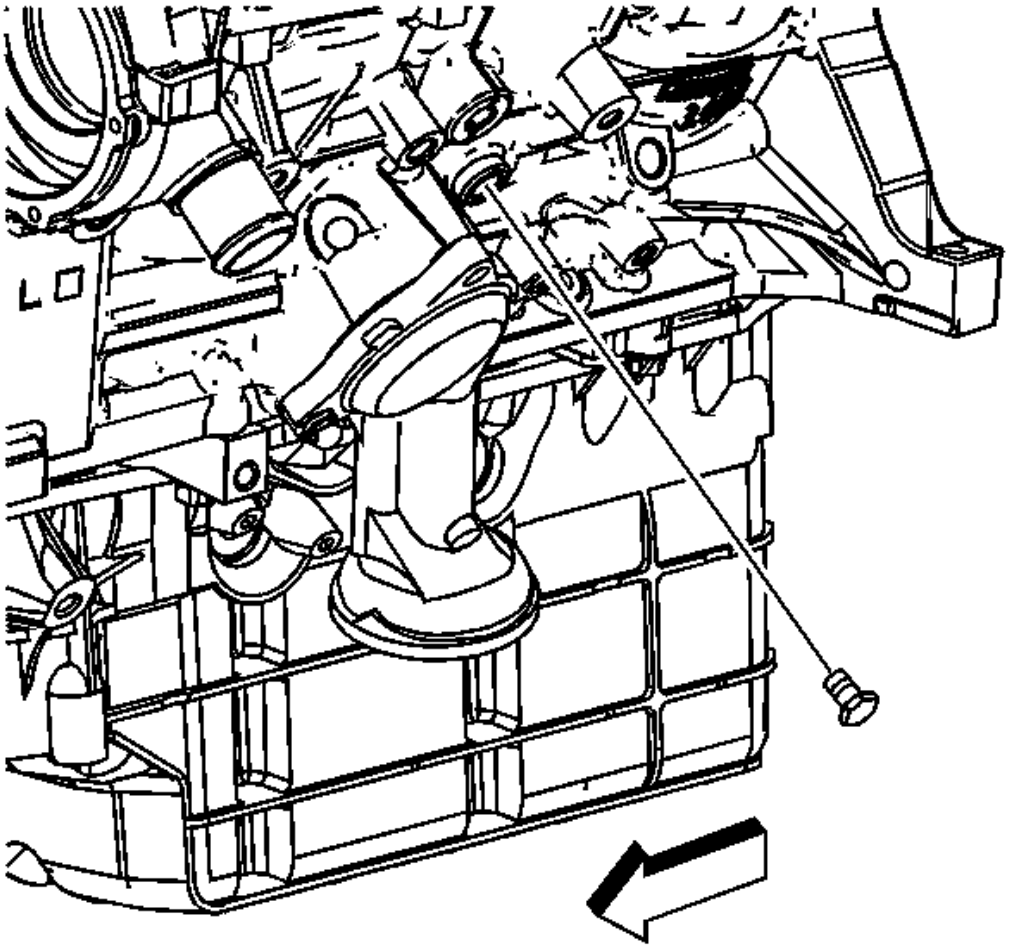

**Fig. 320: Removing Coolant Drain Plug From Left Side**
**Courtesy of GENERAL MOTORS CORP.**

**NOTE: Maximum gasket performance is achieved when using new fasteners,**

 © 2011 Mitchell Repair Information Company, LLC.

**which contain a thread-locking patch. If the fasteners are not replaced, a thread locking chemical must be applied to the fastener threads. Failure to replace the fasteners or apply a thread-locking chemical MAY reduce gasket sealing capability.**

17. Apply sealer GM P/N 12346004 (Canadian P/N 10953480), or equivalent to the left and right coolant drain plug threads.
18. Install the left coolant drain plug.

    **Tighten:** Tighten the left coolant drain plug to 19 N.m (14 lb ft).

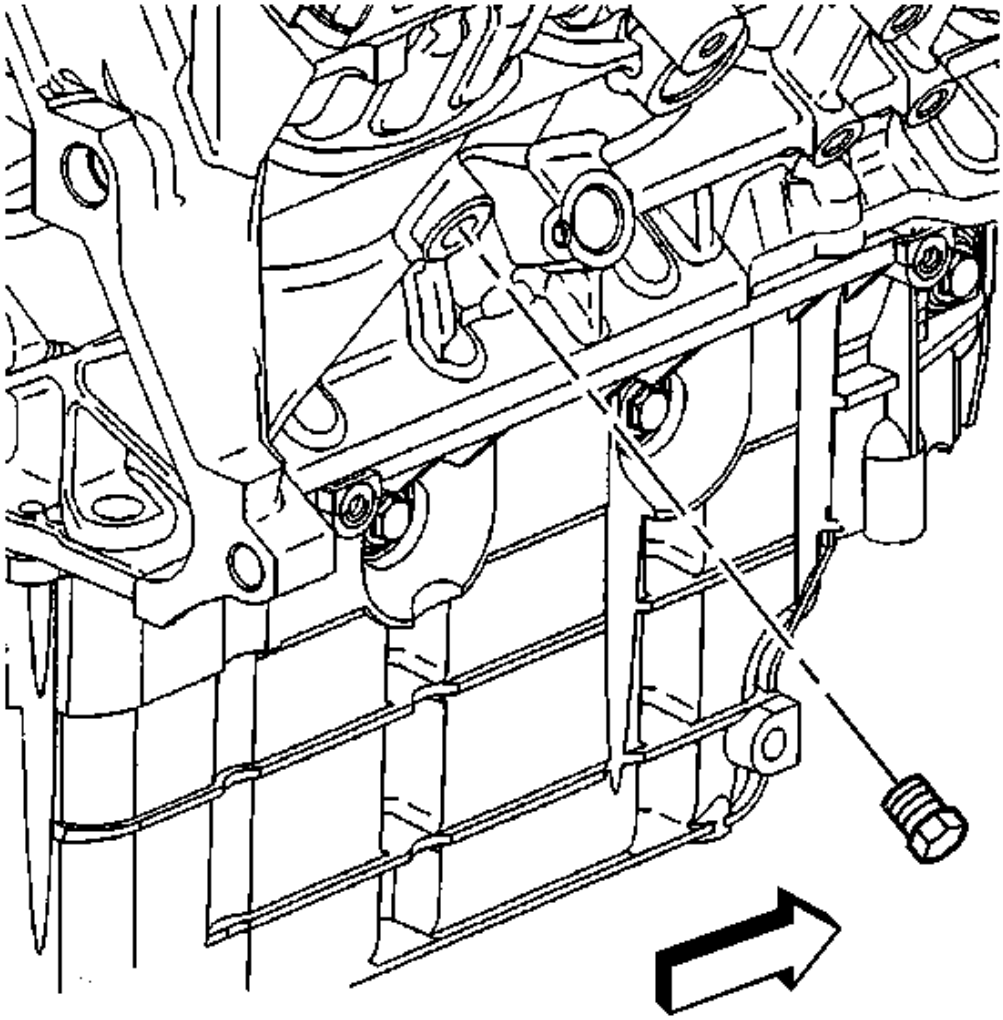

 © 2011 Mitchell Repair Information Company, LLC.

**Fig. 321: Removing Coolant Drain Plug From Right Side**
**Courtesy of GENERAL MOTORS CORP.**

19. Install the right coolant drain plug.

    **Tighten:** Tighten the right coolant drain plug to 19 N.m (14 lb ft).

**Crankshaft and Bearings Cleaning and Inspection**

## Tools Required

- **J 8087** Cylinder Bore Gage. See **Special Tools**.
- **J 45059** Angle Meter. See **Special Tools**.

 © 2011 Mitchell Repair Information Company, LLC.

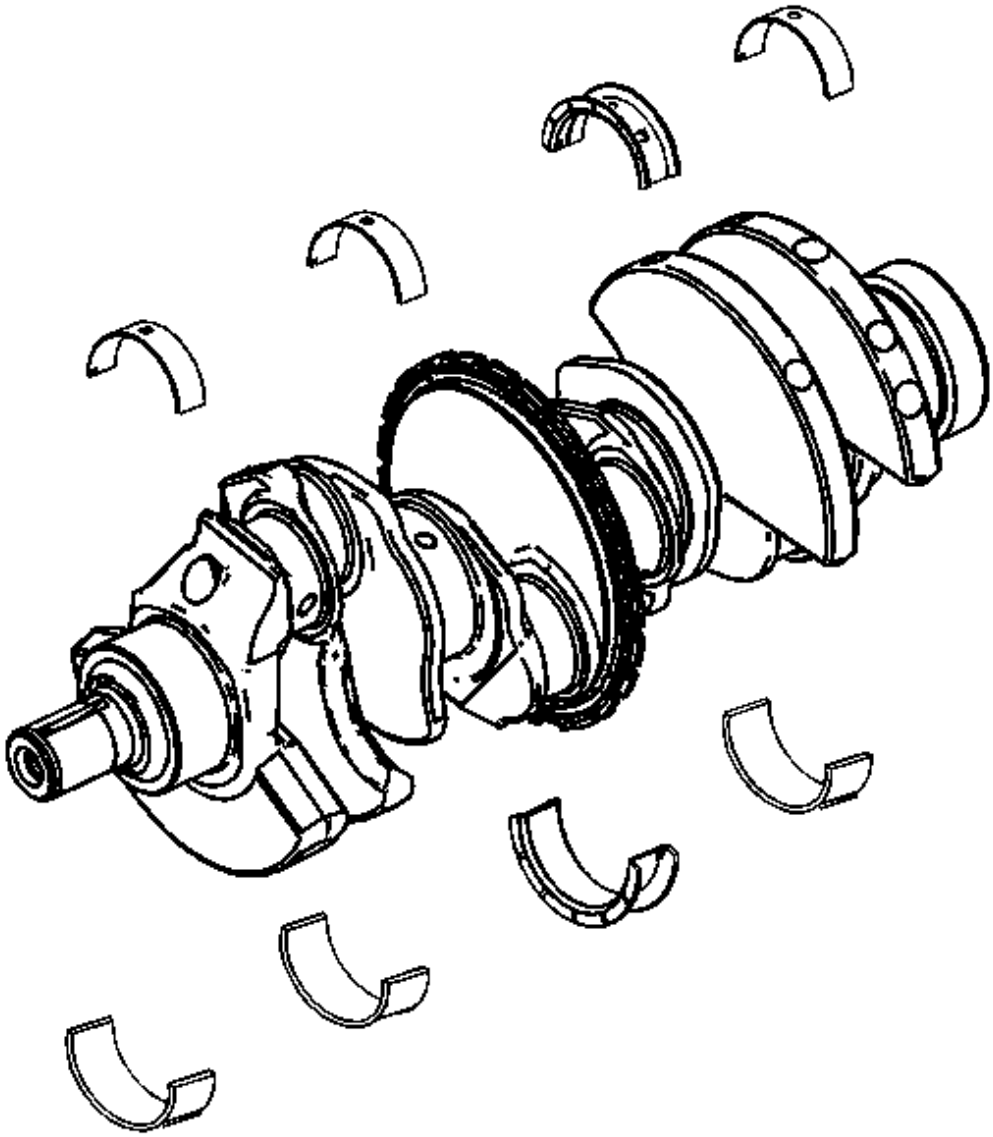

**Fig. 322: View Of Crankshaft**
**Courtesy of GENERAL MOTORS CORP.**

**IMPORTANT: Use Care when handling the crankshaft. Avoid damage to the crankshaft position sensor reluctor wheel teeth. Nicks, burrs or other damage to the teeth may effect On-board Diagnostics - OBD II system performance.**

 © 2011 Mitchell Repair Information Company, LLC.

1. Clean the crankshaft of the following elements:
   - Oil
   - Sludge
   - Carbon
2. Inspect the crankshaft oil passages for obstructions.

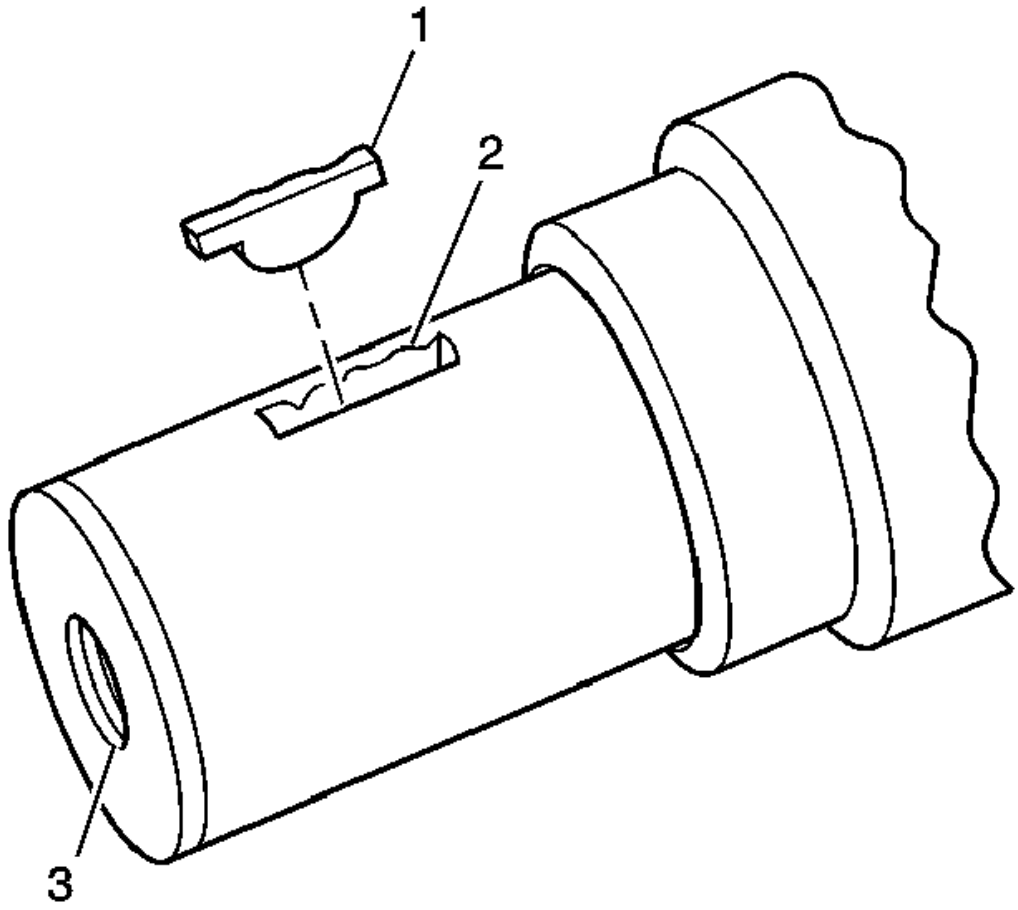


**Fig. 323: Inspecting Crankshaft Keyway**
**Courtesy of GENERAL MOTORS CORP.**

3. Inspect the crankshaft keyway for the following conditions:
   - A worn crankshaft key (1)
   - A worn crankshaft keyway (2)
4. Inspect the crankshaft threads (3) for damage.

 © 2011 Mitchell Repair Information Company, LLC.

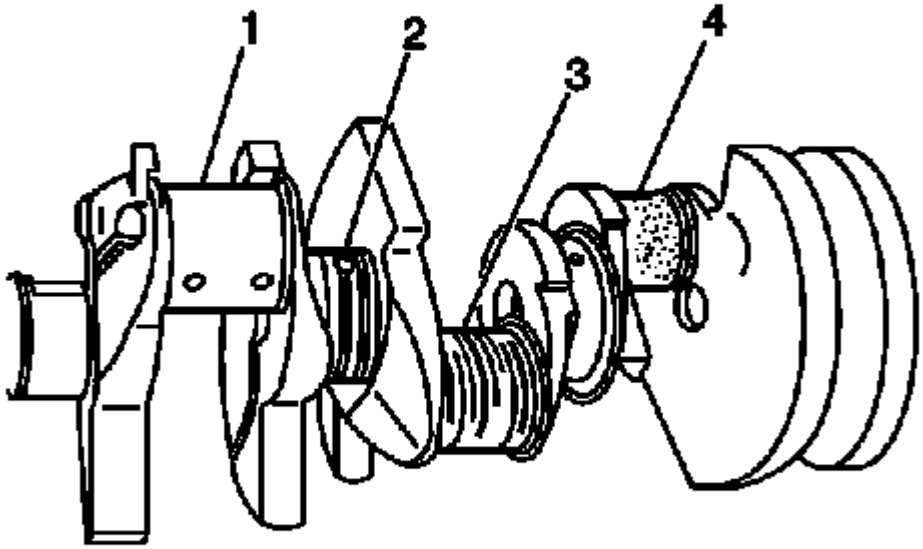


**Fig. 324: Identifying Different Crankshaft Journal Wear Patterns**
**Courtesy of GENERAL MOTORS CORP.**

**IMPORTANT: If cracks, severe gouges or burned spots are found, replace the crankshaft. Remove slight roughness using a fine polishing cloth soaked in clean engine oil. Remove any burrs using a fine oil stone.**

5. Inspect the crankshaft bearing journals and the crankshaft thrust surfaces for the following conditions:
   - Wear without any grooves or scratches (1)
   - Grooves or scoring (2)
   - Scratches or excessive wear (3)
   - Pitting or embedded bearing material (4)

     Inspect the corresponding crankshaft bearing inserts for embedded material and determine the source of the material.

   - Overheating - discoloration

 © 2011 Mitchell Repair Information Company, LLC.

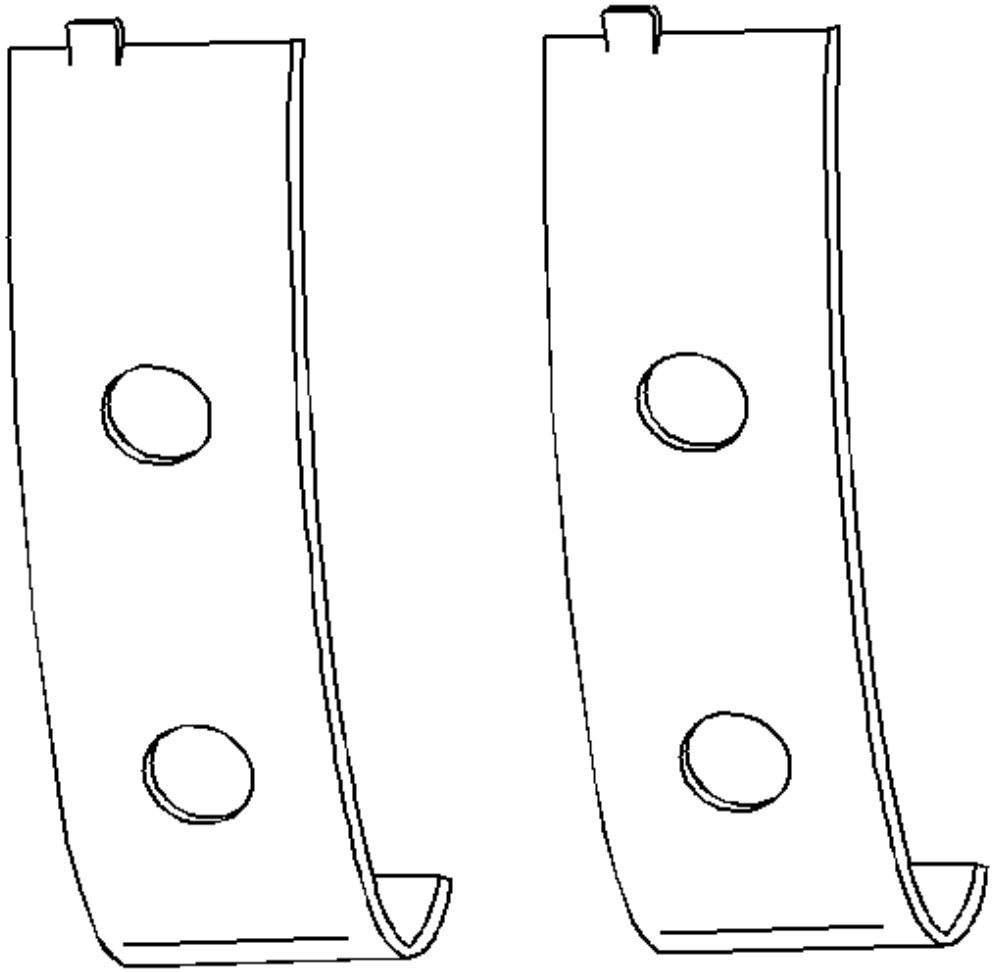

**Fig. 325: View Of Crankshaft Bearings**
**Courtesy of GENERAL MOTORS CORP.**

6. The crankshaft bearings are the precision insert type.
7. Inspect the outer surfaces of the crankshaft bearings for the following conditions:
   - Wear - surface wear indicates either movement of the insert, or high spots in the surrounding material - spot wear.
   - Overheating or discoloration
   - Looseness or rotation indicated by flattened tangs and wear grooves

 © 2011 Mitchell Repair Information Company, LLC.

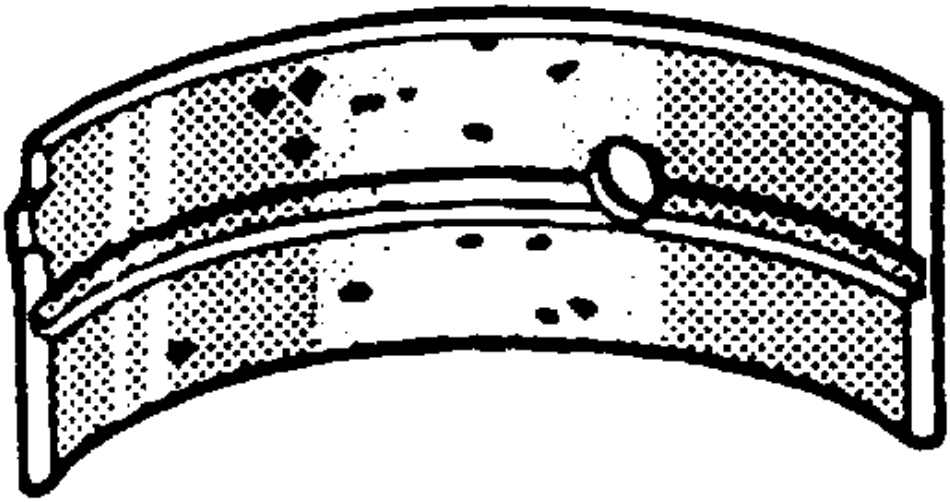

**Fig. 326: Identifying Crankshaft Bearing Craters Or Pockets**
**Courtesy of GENERAL MOTORS CORP.**

**IMPORTANT: Note the location of the crankshaft main bearing high spots. If the spots are not in line, the crankshaft is bent. Replace the crankshaft.**

8. Inspect the crankshaft main bearings for craters or pockets. Flattened sections on the crankshaft bearing halves also indicate fatigue.
9. Inspect the thrust surfaces of the main thrust bearing for the following conditions:
   - Wear
   - Grooving - Grooves are caused by irregularities of the crankshaft thrust surface.

 © 2011 Mitchell Repair Information Company, LLC.

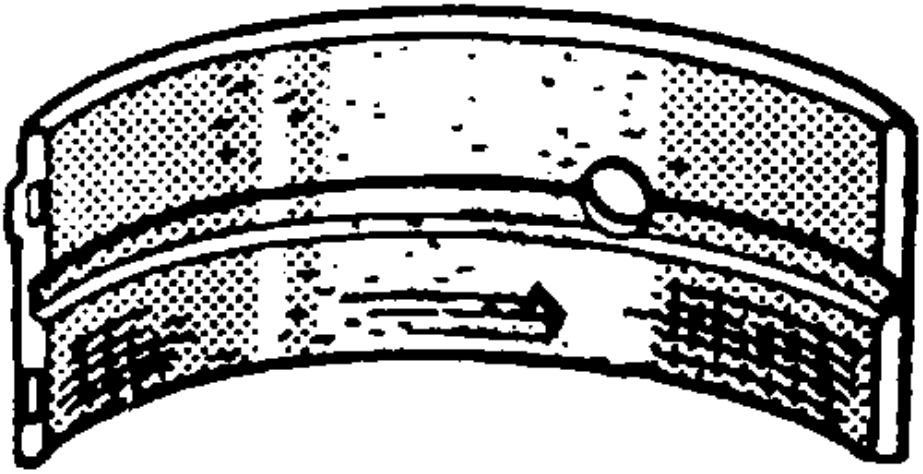

**Fig. 327: Identifying Connecting Rod Bearing Scoring Or Discoloration**
**Courtesy of GENERAL MOTORS CORP.**

10. Inspect the crankshaft bearings for excessive scoring or discoloration.
11. Inspect the crankshaft main bearings for dirt or imbedded debris.

 © 2011 Mitchell Repair Information Company, LLC.

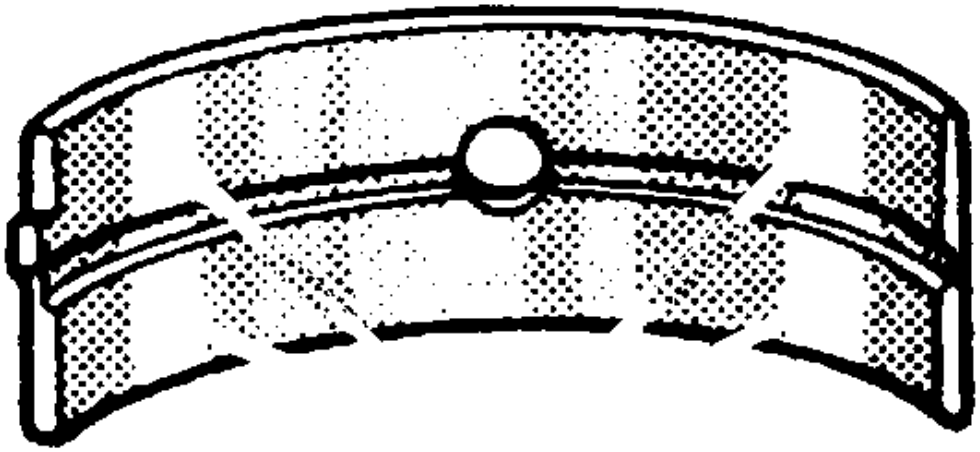

**Fig. 328: Crankshaft Bearing Polished Sections (Improper Seating)**
**Courtesy of GENERAL MOTORS CORP.**

12. Inspect the crankshaft main bearings for improper seating indicated by bright, polished sections.
13. Inspect the crankshaft bearings for uneven side-to-side wear. This may indicate a bent crankshaft or a tapered bearing journal.

 © 2011 Mitchell Repair Information Company, LLC.

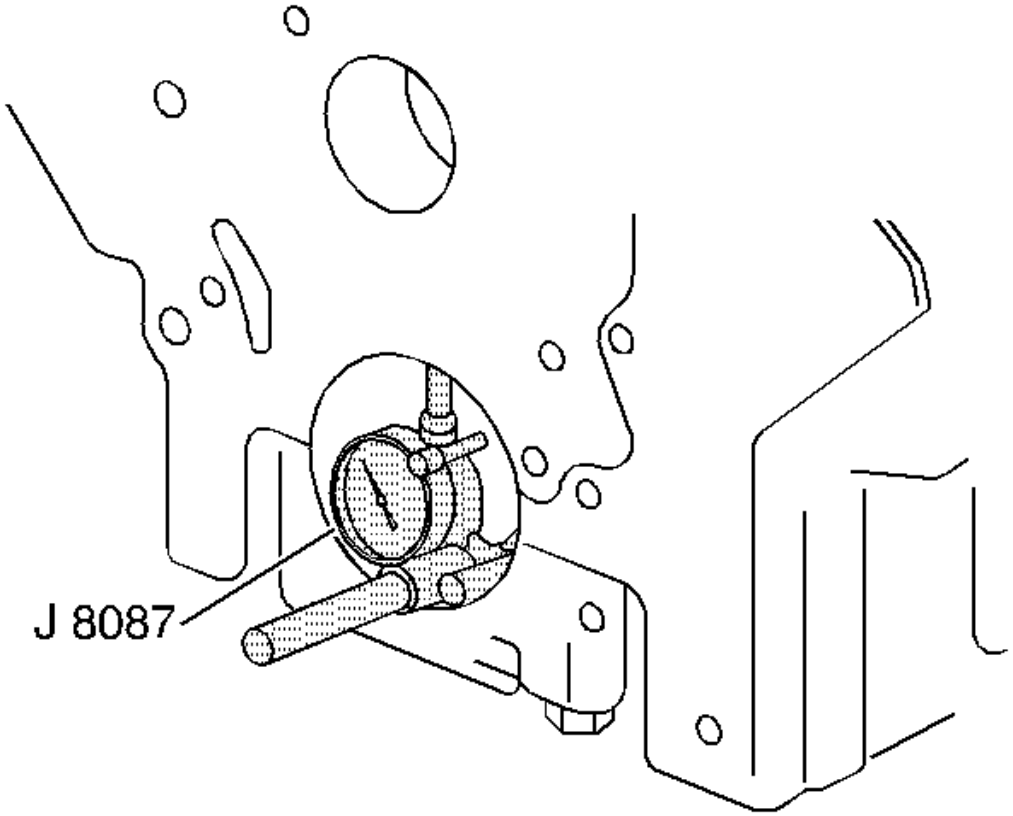


**Fig. 329: Inspecting Crankshaft Main Bearing Bores**
**Courtesy of GENERAL MOTORS CORP.**

**IMPORTANT: If crankshaft bearing failure is due to conditions other than normal wear, investigate the cause of the condition. Inspect the crankshaft or connecting rod bearing bores.**

14. Inspect the connecting rod bearing bores or crankshaft main bearing bores using the following procedure:
    1. Tighten the bearing cap to specification.
    2. Use the **J 8087** in order to measure the bearing bore for taper and out-of-round. See **Special Tools**. Record the readings for bearing selection.
    3. No taper or out-of-round should exist.

**Bearing Selection**

Measure the bearing clearance to determine the correct replacement bearing insert size. There are two methods to measure bearing clearance. Method A gives more reliable results and is preferred.

 © 2011 Mitchell Repair Information Company, LLC.

- Method A yields measurement from which the bearing clearance can be computed.
- Method B yields the bearing clearance directly. Method B does not give any indication of bearing run-out.

**Method A**

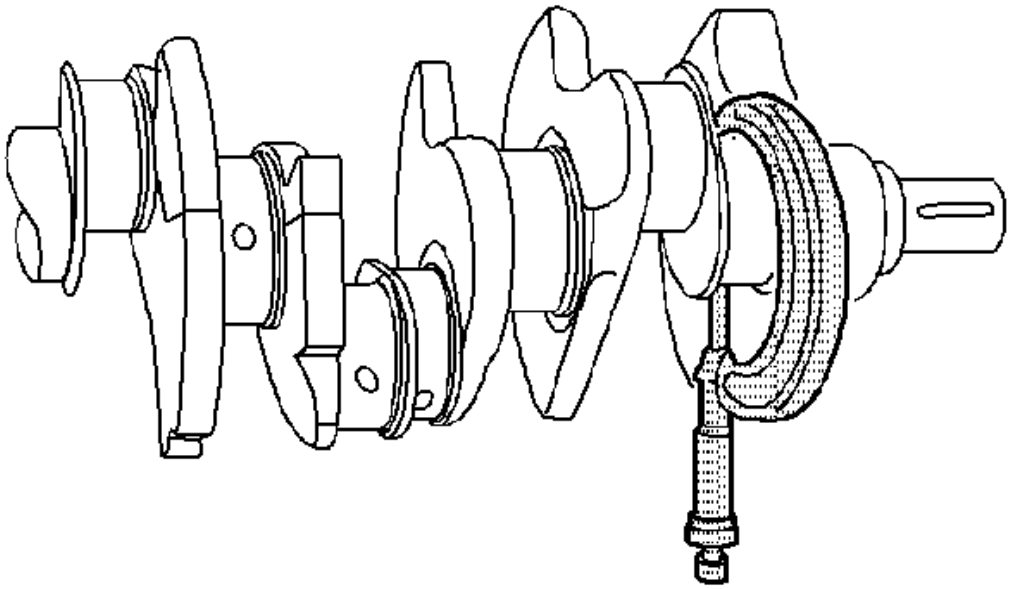

**Fig. 330: Measuring Crankshaft Bearing Journal Diameter**
**Courtesy of GENERAL MOTORS CORP.**

**IMPORTANT: Do not mix inserts of different nominal size in the same bearing bore.**

1. Measure the crankshaft bearing journal diameter with a micrometer in several places, 90 degrees apart. Average the measurements.
2. Measure the crankshaft bearing journal taper and runout.
3. Install the crankshaft bearing inserts. Tighten the bearing cap bolts to specification using **J 45059** . See **Special Tools**.
4. Measure the connecting rod inside diameter in the same direction as the length of the rod with an inside micrometer.
5. Measure the crankshaft main bearing inside diameter with an inside micrometer.
6. Select a set of bearing inserts that will produce the desired clearance.
7. If the specified clearances cannot be met, the crankshaft journals must be reconditioned and undersized bearing inserts installed.

 © 2011 Mitchell Repair Information Company, LLC.

**Method B**

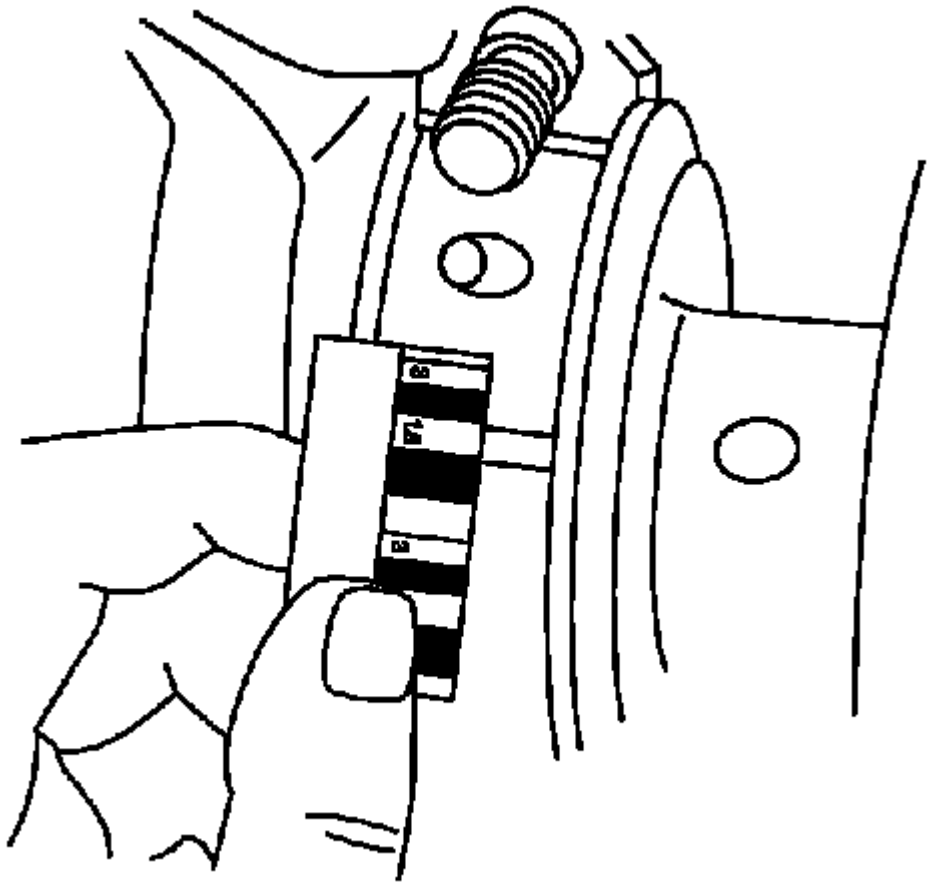

**Fig. 331: Measuring Gaging Plastic**
**Courtesy of GENERAL MOTORS CORP.**

**IMPORTANT: Do not mix inserts of different nominal size in the same bearing bore.**

1. Clean the used bearing inserts.
2. Install the used bearing inserts.
3. Place a piece of gaging plastic across the entire bearing width.
4. Install the bearing caps.

**NOTE:** **In order to prevent the possibility of cylinder block or crankshaft bearing cap damage, the crankshaft bearing caps are tapped into the cylinder block cavity using a brass, lead, or a leather mallet before the attaching bolts are installed. Do not use attaching bolts to pull the crankshaft bearing caps into the seats. Failure to use this process may damage a cylinder block or a bearing cap.**

 © 2011 Mitchell Repair Information Company, LLC.

5. Install the bearing cap bolts to specification using **J 45059** . See **Special Tools**.

**IMPORTANT: Do not rotate the crankshaft.**

6. Remove the bearing cap, leaving the gaging plastic in place. It does not matter whether the gaging plastic adheres to the journal or to the bearing cap.
7. Measure the gaging plastic at its widest point with the scale printed on the gaging plastic package.
8. Remove the gaging plastic.
9. Select a set of bearing inserts that will produce the desired clearance.

**Crankshaft Balancer Cleaning and Inspection**

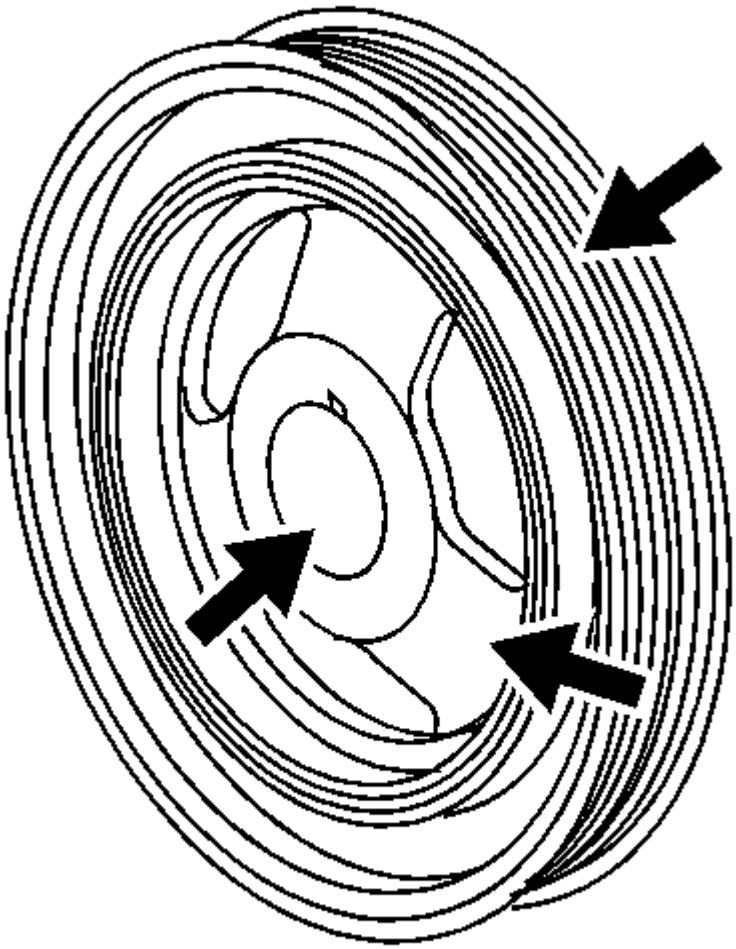

 © 2011 Mitchell Repair Information Company, LLC.

**Fig. 332: Cleaning Crankshaft Balancer**
**Courtesy of GENERAL MOTORS CORP.**

**CAUTION: Bodily injury may occur if the cleaning solvent is inhaled or exposed to the skin.**

1. Clean the crankshaft balancer in solvent.
2. Clean the belt grooves of all dirt or debris with a wire brush.
3. Inspect the crankshaft balancer for the following:

**IMPORTANT: A crankshaft balancer hub seal surface with excessive scoring, grooves, rust or other damage must be replaced. Minor imperfections on the hub seal surface may be removed with polishing compound or fine grade emery cloth.**

- Worn, grooved, or damaged hub seal surface

**IMPORTANT: In order for the belt to track properly, the belt grooves should be free of all dirt, debris, nicks, gouges or other damage. Minor imperfections may be removed with a fine file.**

- Dirty or damaged belt grooves.
- Worn, chunking or deteriorated rubber between the hub and pulley

**Engine Flywheel Cleaning and Inspection**

 © 2011 Mitchell Repair Information Company, LLC.

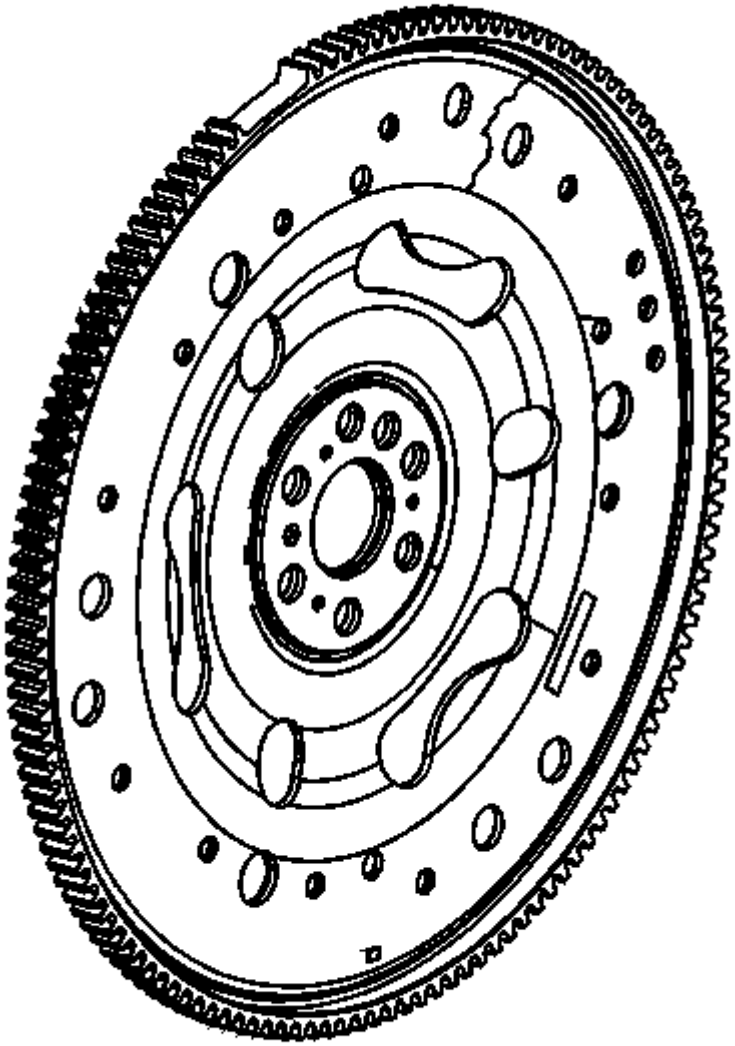

**Fig. 333: Inspecting Engine Flywheel**
**Courtesy of GENERAL MOTORS CORP.**

**CAUTION: Bodily injury may occur if the cleaning solvent is inhaled or exposed to the skin.**

1. Clean the engine flywheel with solvent.
2. Dry the engine flywheel with compressed air.
3. Inspect the engine flywheel for the following:

 © 2011 Mitchell Repair Information Company, LLC.

- Damaged ring gear teeth
- Stress cracks around the flywheel-to-crankshaft bolt hole locations

**IMPORTANT: Do not attempt to repair the welded areas that retain the ring gear to the flywheel plate. Install a new flywheel.**

- Welded areas that retain the ring gear onto the flywheel for cracking

**Piston and Connecting Rod Disassemble**

**Tools Required**

**J 24086-C** Piston Pin Remover/Installer Set. See **Special Tools**.

 © 2011 Mitchell Repair Information Company, LLC.

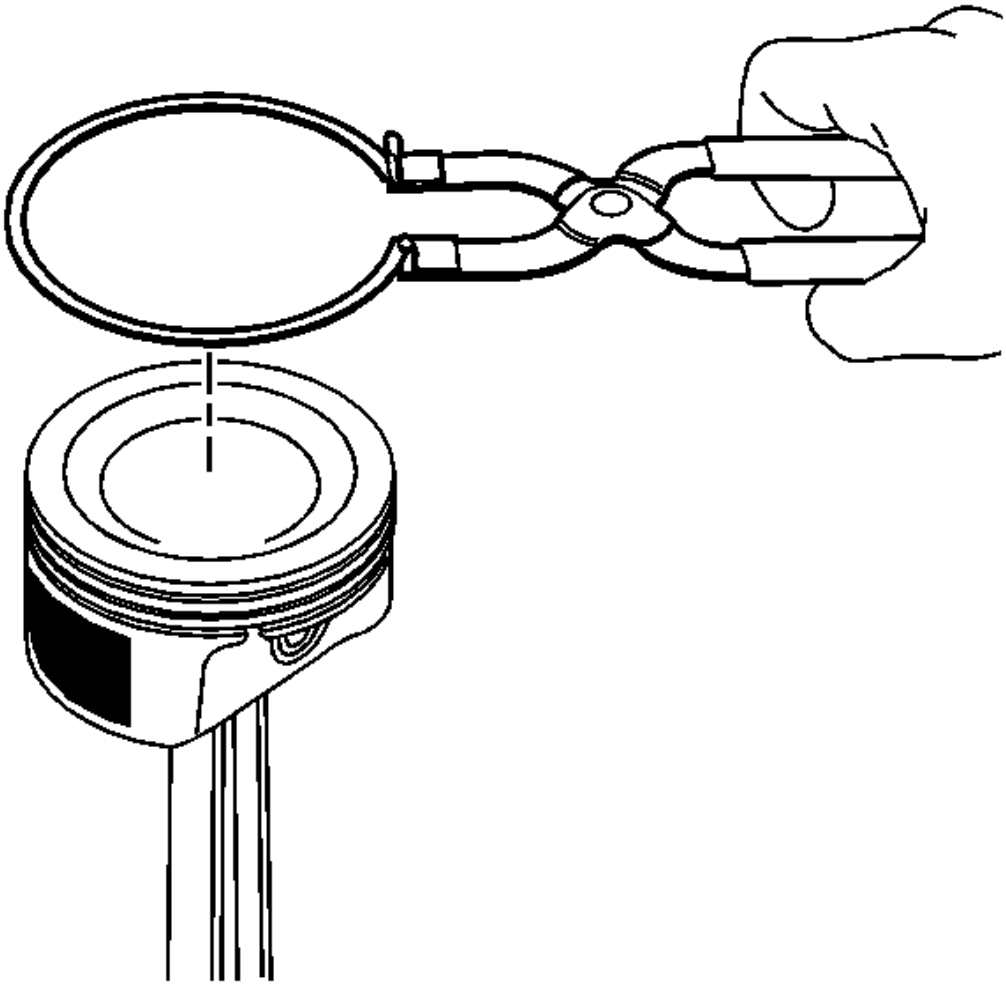

**Fig. 334: View Of Removing/Installing Piston Rings**
**Courtesy of GENERAL MOTORS CORP.**

**IMPORTANT: This procedure is to be used for oversized pistons only. Standard size pistons are supplied as an assembly consisting of a piston, piston pin, connecting rod and piston rings.**

1. Using piston ring pliers, remove the piston rings from the piston.

 © 2011 Mitchell Repair Information Company, LLC.

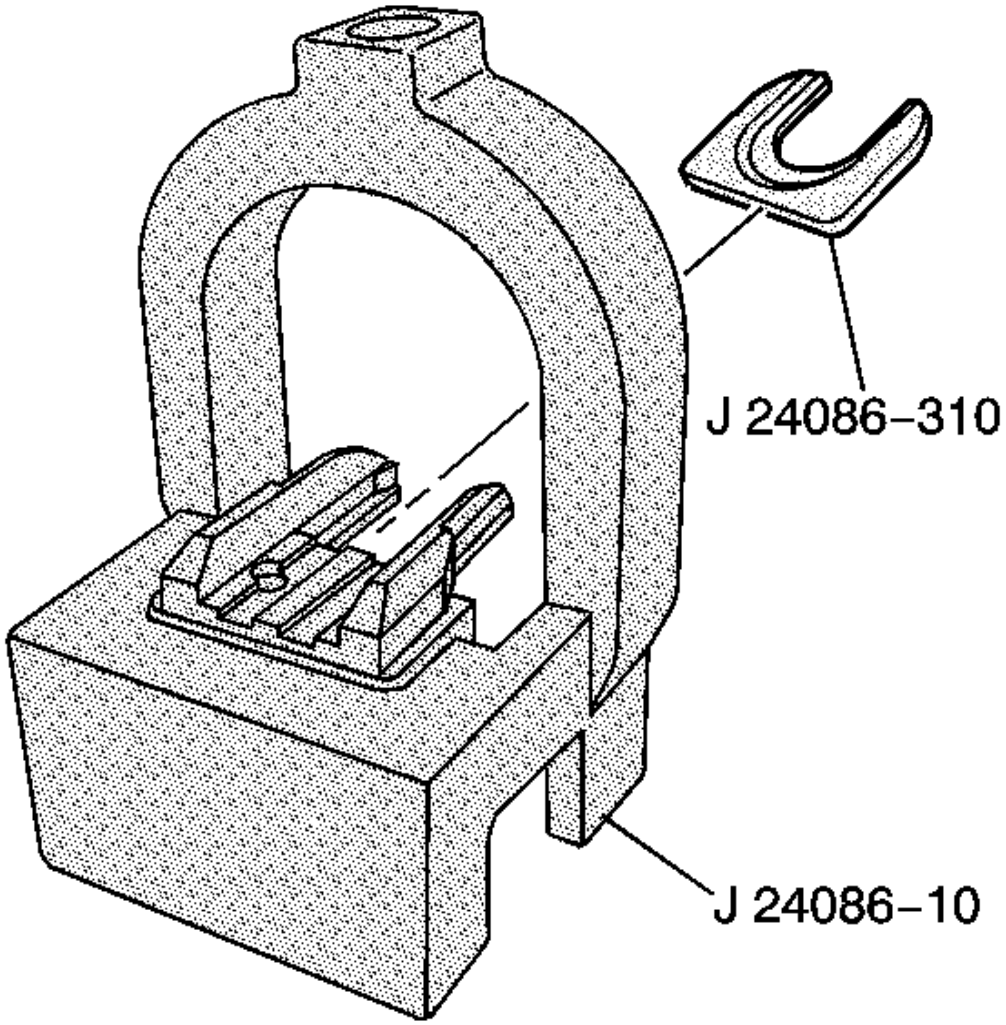


**Fig. 335: Installing J 24086-310 Into J 24086-10**
**Courtesy of GENERAL MOTORS CORP.**

2. Install fork insert J 24086-310 into fixture J 24086-10 piston pin remover/installer base, which are part of **J 24086-C** . See **Special Tools**.

 © 2011 Mitchell Repair Information Company, LLC.

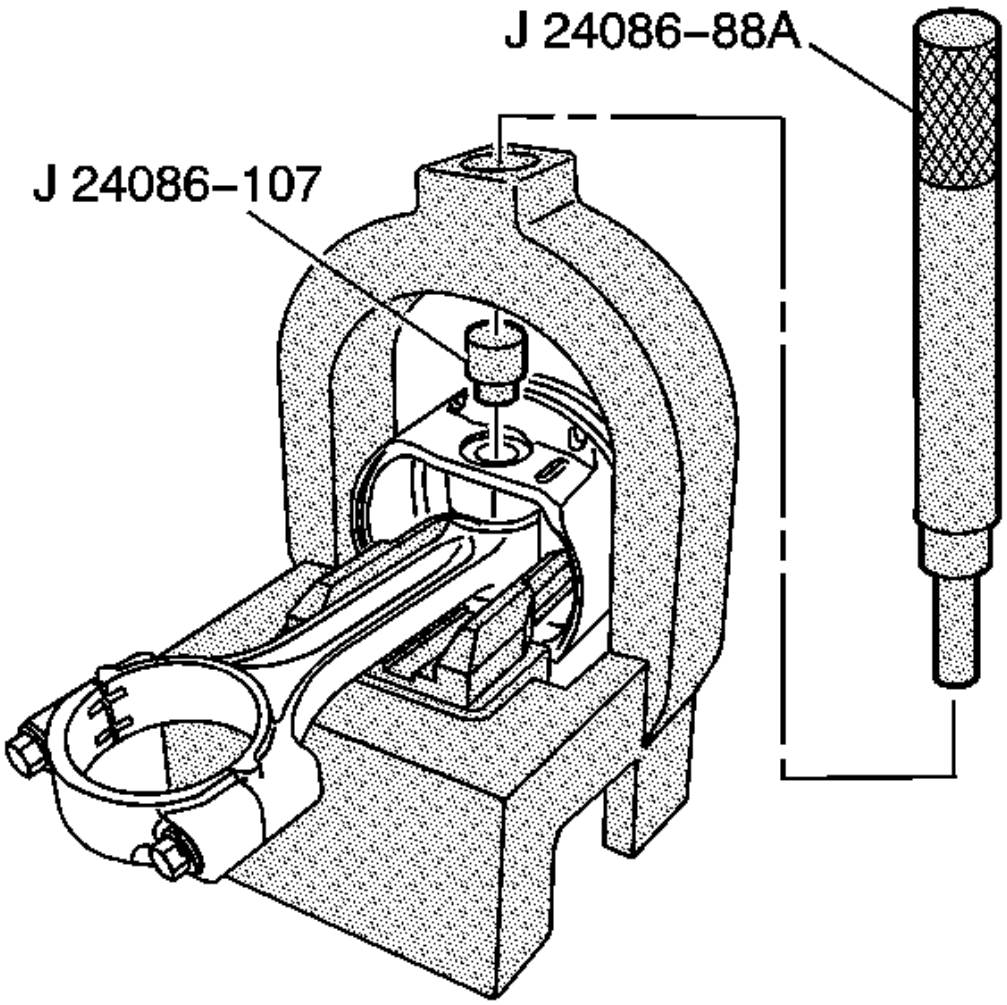


**Fig. 336: View Of J 24086-107 & J 24086-88A**
**Courtesy of GENERAL MOTORS CORP.**

3. Install the piston and connecting rod assembly onto J 24086-10.
4. Install the J 24086-107 onto the piston pin and J 24086-88A through the fixture and onto J 24086-107, which are part of **J 24086-C** . See **Special Tools**.

 © 2011 Mitchell Repair Information Company, LLC.

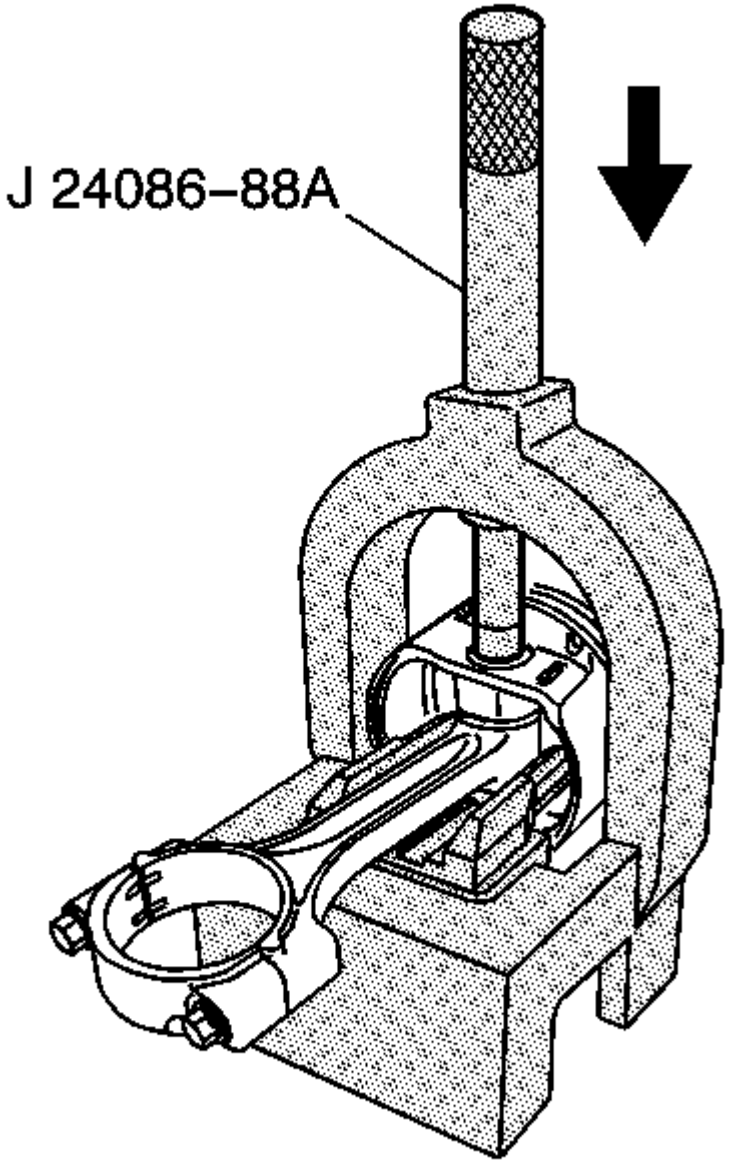


**Fig. 337: View Of J 24086-88A**
**Courtesy of GENERAL MOTORS CORP.**

**NOTE:** **After the installer hub bottoms on the support assembly, do not exceed 35 000 kPa (5,000 psi) pressure, this could cause damage to the tool.**

5. Press the piston pin from the piston and connecting rod assembly.

 © 2011 Mitchell Repair Information Company, LLC.

6. The piston and pin are a matched set and are not to be serviced separately. Mark, sort organize the piston and the matching piston pin.

**Piston, Connecting Rod, and Bearings Cleaning and Inspection**

**Tools Required**

**J 8087** Cylinder Bore Gage. See **Special Tools**.

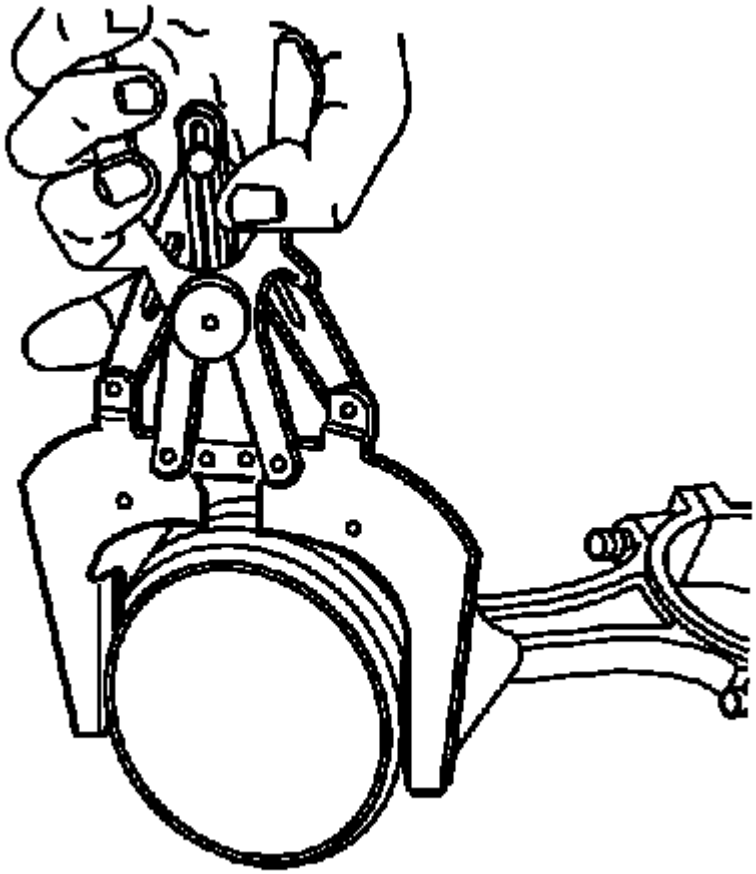

**Fig. 338: Cleaning The Piston Ring Grooves With Suitable Ring Groove Cleaning Tool**
**Courtesy of GENERAL MOTORS CORP.**

**CAUTION: Bodily injury may occur if the cleaning solvent is inhaled or exposed to the skin.**

**IMPORTANT: Measurement of all components should be taken with the components at room temperature. Do not use a wire brush in order to clean any part of the piston or connecting rod assembly.**

 © 2011 Mitchell Repair Information Company, LLC.

**IMPORTANT: Some steps in this procedure may reflect on a disassembled oversized piston. Others will only apply to the standard size pistons that are NOT to be disassembled.**

1. Clean the piston and connecting rod in solvent.
2. Dry off the piston and connecting rod with compressed air.
3. Clean the piston ring grooves with a suitable ring groove cleaning tool.
4. Clean the piston oil lubrication holes and slots.

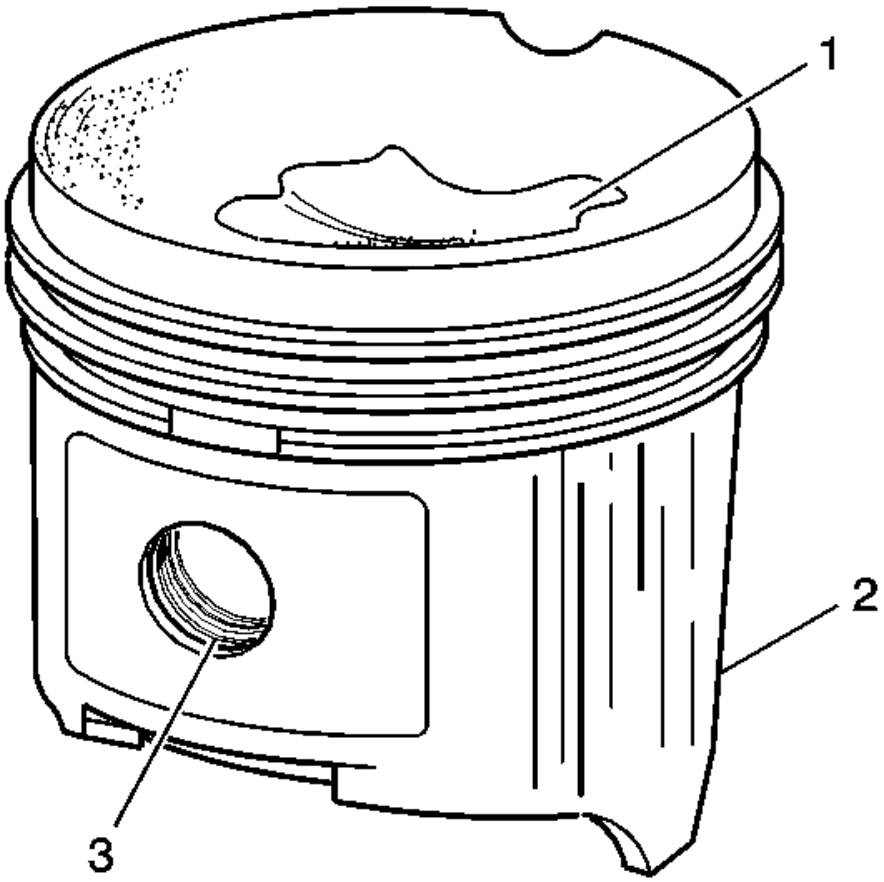


**Fig. 339: Identifying Piston Damage Inspection Areas**
**Courtesy of GENERAL MOTORS CORP.**

5. Inspect the piston for the following:
   - Eroded areas (1) on the top of the piston
   - Scuffed or damaged skirt (2)
   - Damage to the pin bore (3)

 © 2011 Mitchell Repair Information Company, LLC.

- Cracks in the piston ring lands, the piston skirt, or the pin bosses
- Piston ring grooves for nicks, burrs, or other warpage which may cause the piston ring to bind

6. Inspect the piston pin for scoring, wear or other damage.

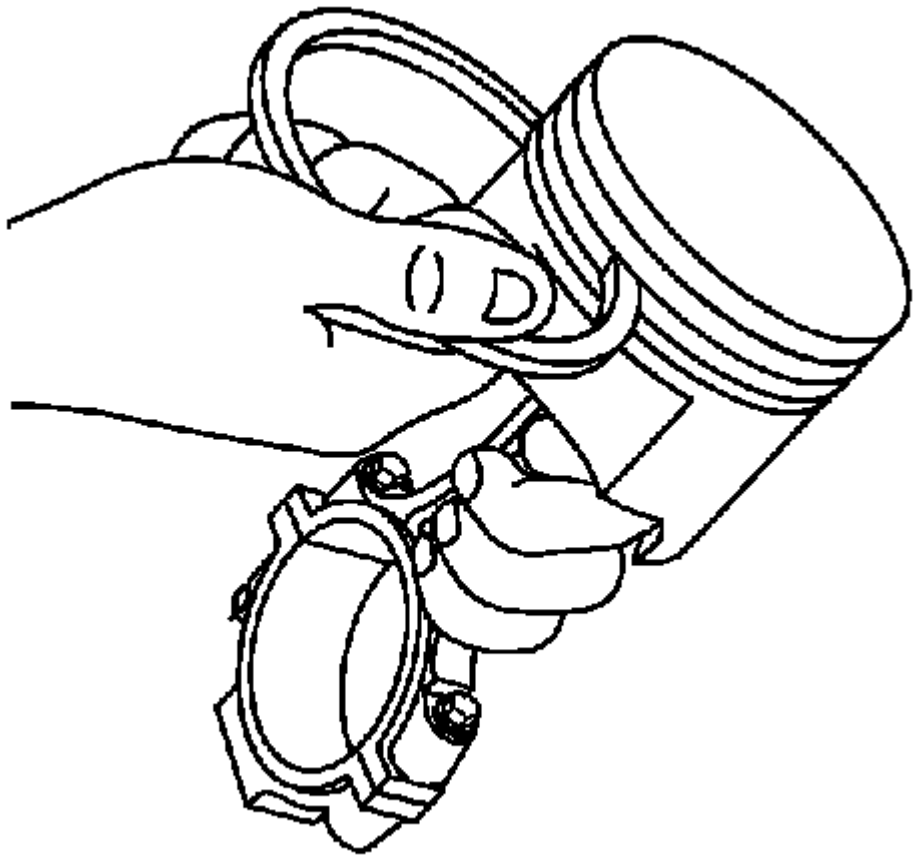

**Fig. 340: Inserting Piston Ring Into Ring Groove**
**Courtesy of GENERAL MOTORS CORP.**

7. Measure the piston ring-to-piston ring groove side clearance.
    1. Insert the edge of the piston ring into the piston ring groove.
    2. Roll the piston ring completely around the piston ring groove.
        - If binding is caused by distorted piston ring groove, replace the piston.
        - If binding is caused by a distorted piston ring, replace the piston ring.

 © 2011 Mitchell Repair Information Company, LLC.

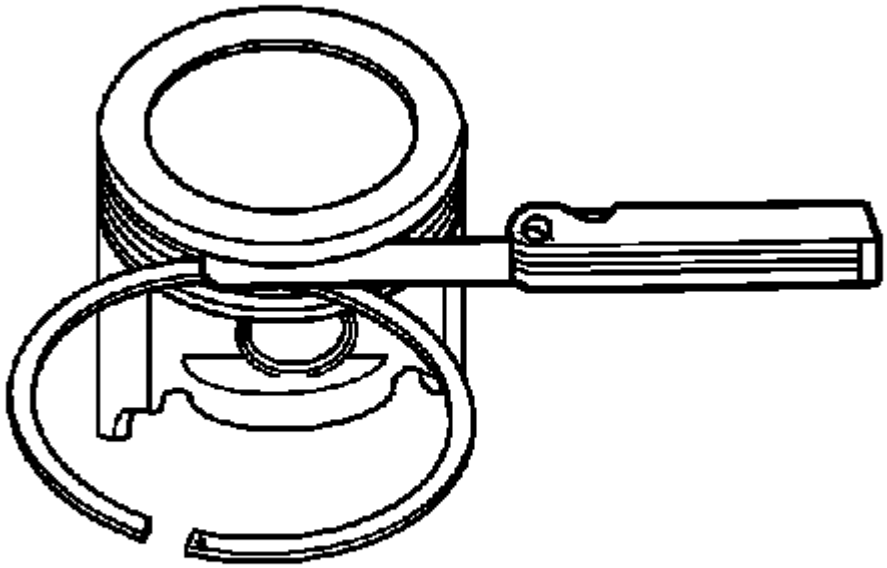

**Fig. 341: Measuring Piston Ring Side Clearance**
**Courtesy of GENERAL MOTORS CORP.**

8. Measure the piston ring side clearance with a feeler gage.
9. If the side clearance is too small try another ring set.
10. If the proper piston ring-to-piston ring groove clearance cannot be achieved, replace the piston and pin assembly.
    - Proper ring-to-piston ring groove clearance for the top ring is 0.03-0.076 mm (0.001-0.003 in).
    - Proper ring-to-piston ring groove clearance for the second ring is 0.04-0.078 mm (0.002-0.003 in).

 © 2011 Mitchell Repair Information Company, LLC.

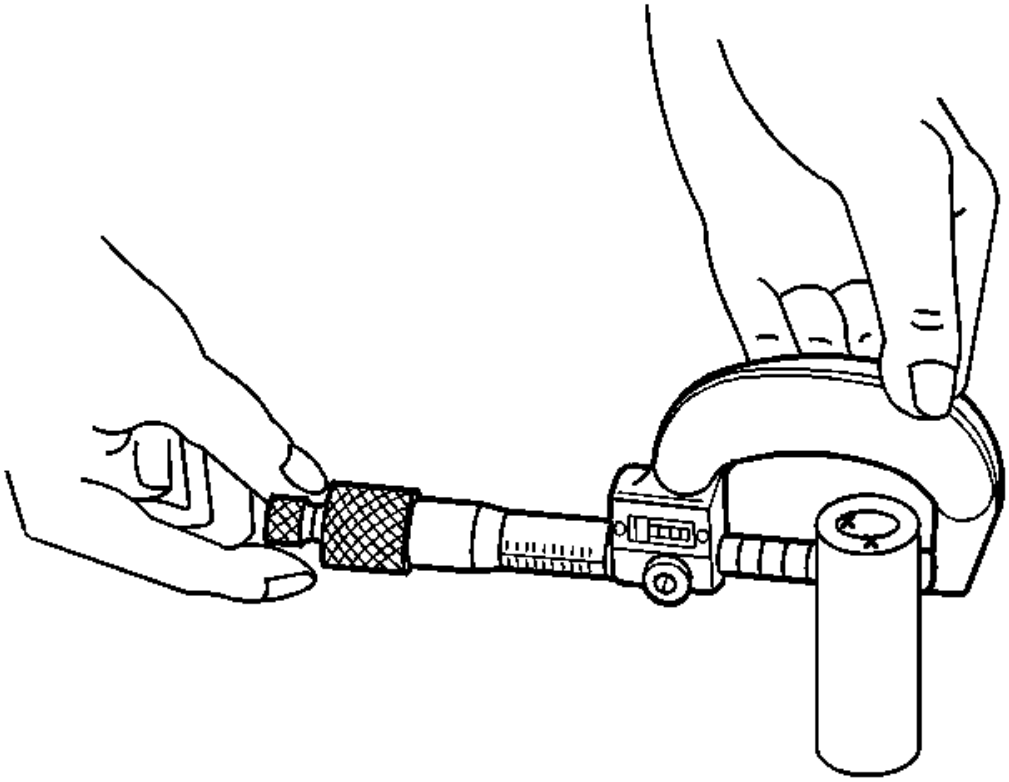

**Fig. 342: Measuring Piston Pin Diameter**
**Courtesy of GENERAL MOTORS CORP.**

11. Measure the piston pin diameter using and outside micrometer.

 © 2011 Mitchell Repair Information Company, LLC.

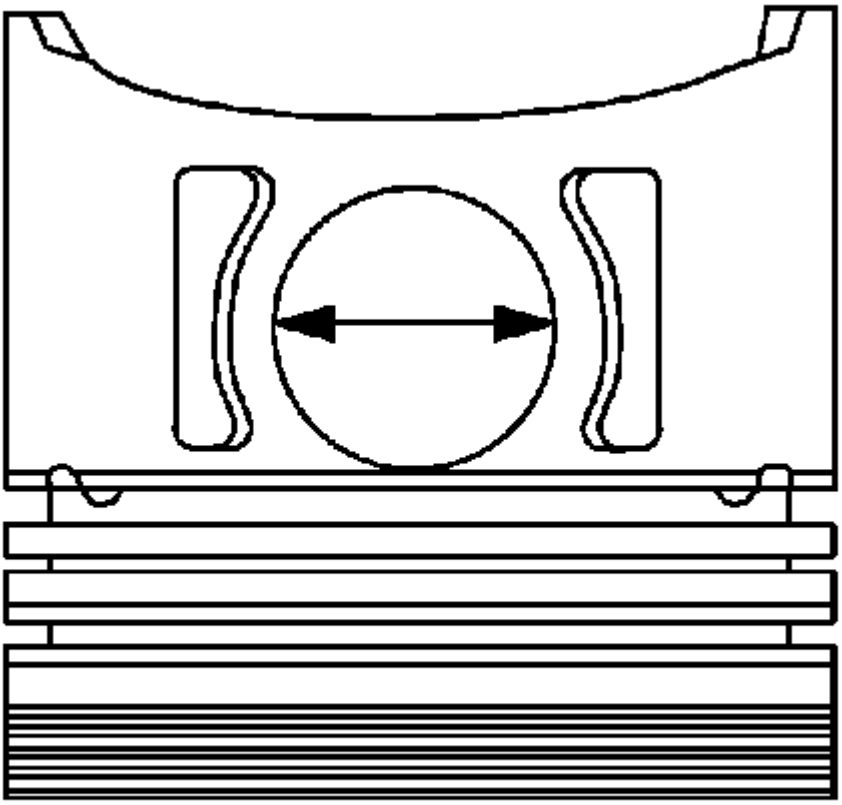

**Fig. 343: Measuring The Piston Pin Bore**
**Courtesy of GENERAL MOTORS CORP.**

**IMPORTANT: When fitting pistons, consider both the pistons and the cylinder bore conditions together. Production and service pistons have the same nominal weight and may be intermixed without affecting engine balance. If necessary, used pistons may be fitted selectively to any cylinder of the engine, providing the pistons are in good condition and the same weight. Do not cut oversize pistons down or the engine balance may be affected. Finish hone when selecting the pistons.**

12. Measure the piston pin bore using an inside micrometer.
13. Subtract the piston pin diameter from the piston pin bore diameter in order to determine the piston pin-to-piston pin bore clearance.
14. Piston-to-piston pin bore clearance must measure 0.008-0.016 mm (0.0003-0.0006 in). Replace the piston and the piston pin if the piston and the piston pin are not within specifications.

 © 2011 Mitchell Repair Information Company, LLC.

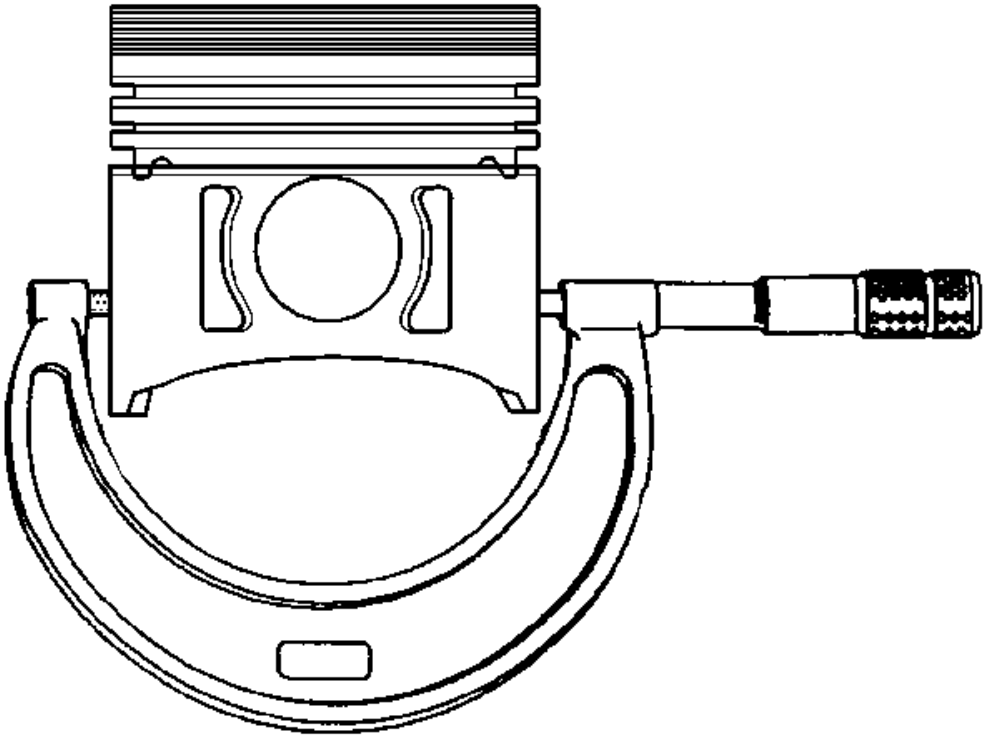

**Fig. 344: Measuring Piston Diameter**
**Courtesy of GENERAL MOTORS CORP.**

15. Measure the piston diameter with a micrometer at a right angle to the piston bore with the piston pin removed, and record the measurement. Measure the piston at 43 mm (1.692 in) from dome of piston. Piston diameter must measure no less than 93.960 mm (3.699 in). Replace the piston and the pin as an assembly if the piston is not within specifications.

 © 2011 Mitchell Repair Information Company, LLC.

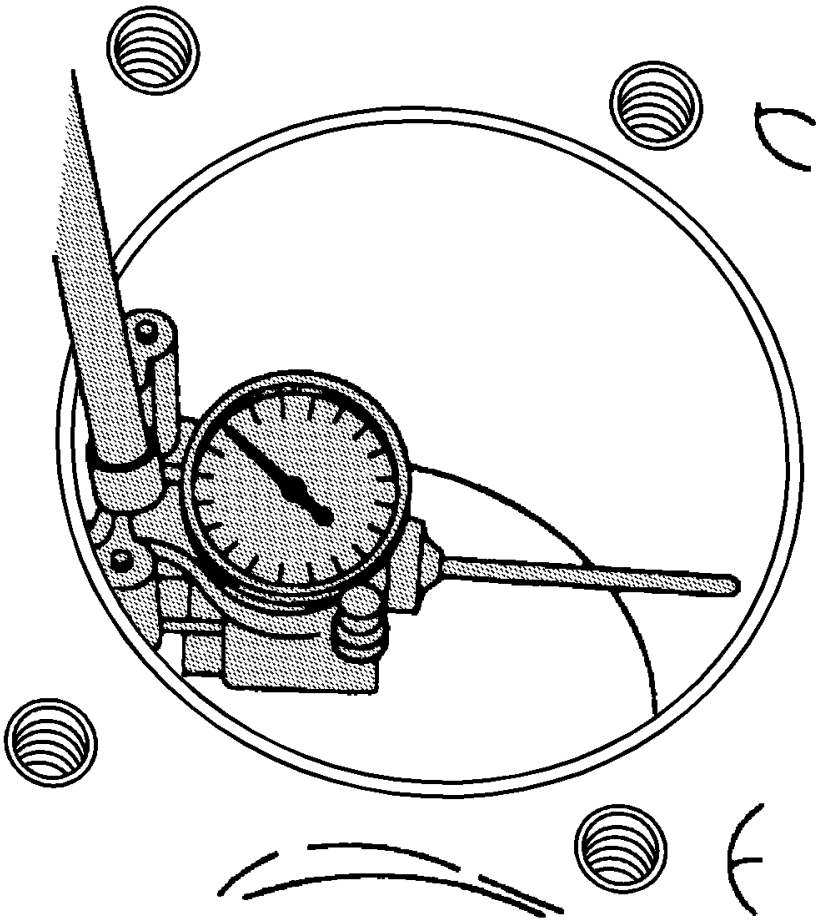

**Fig. 345: Measuring Cylinder Bore**
**Courtesy of GENERAL MOTORS CORP.**

16. Measure the cylinder bore, using **J 8087** . See **Special Tools**.

 © 2011 Mitchell Repair Information Company, LLC.

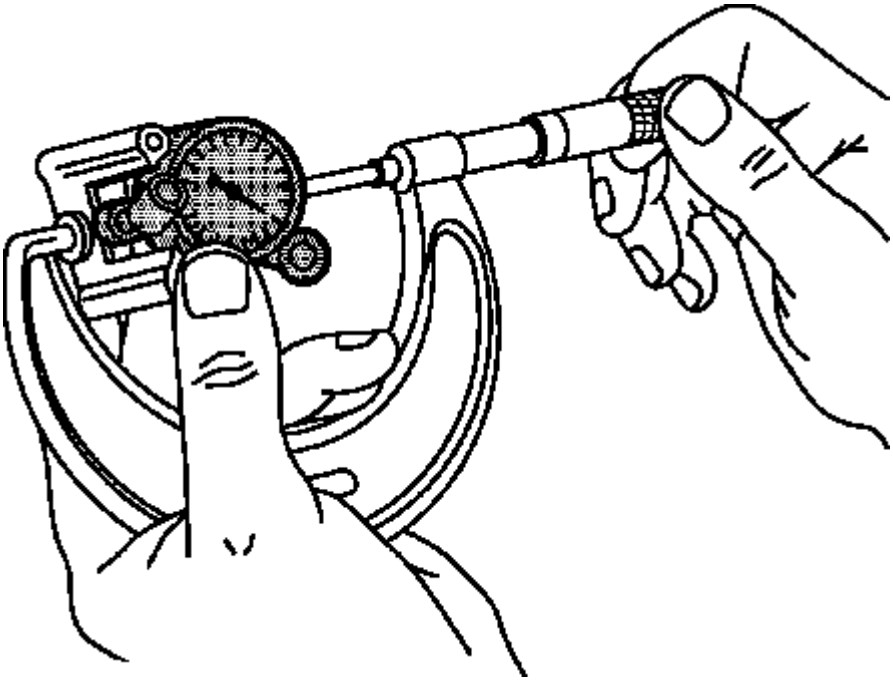

**Fig. 346: Measuring Bore Gauge With Micrometer**
**Courtesy of GENERAL MOTORS CORP.**

17. Measure the **J 8087** . See **Special Tools**. Record this reading.
18. Subtract the diameter of the piston from the diameter of the cylinder bore to determine the piston-to-bore clearance. The cylinder bore clearance must be no more than 0.080 mm (0.003 in).
19. If a used piston is not acceptable, inspect the service piston size and determine if a new piston may be selected. Service pistons are available in standard and 0.5 mm (0.012 in) oversize.
20. When a piston has been selected, mark the piston in order to identify the cylinder for which the piston was fitted.

 © 2011 Mitchell Repair Information Company, LLC.

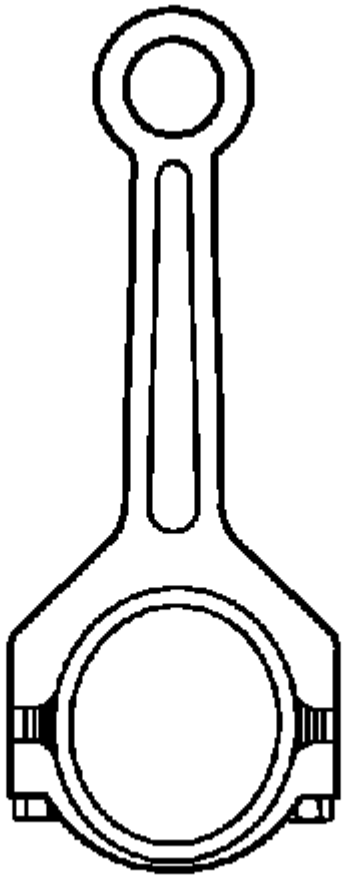

**Fig. 347: View Of Connecting Rod**
**Courtesy of GENERAL MOTORS CORP.**

21. Inspect the connecting rod for an out-of-round bearing bore. If the out-of-round measurement exceeds 0.005 mm (0.0002 in) the connecting rod must be replaced.

 © 2011 Mitchell Repair Information Company, LLC.

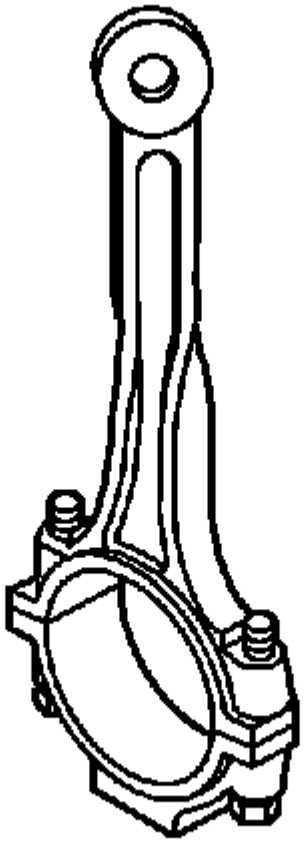

**Fig. 348: Identifying Twisted Connecting Rod**
**Courtesy of GENERAL MOTORS CORP.**

22. Inspect the connecting rod for twisting.
    1. Install the connecting rod cap.
    2. Place the connecting rod assembly on a checking fixture. Inspect the assembly for bending or twisting.
    3. Do not attempt to straighten the connecting rod. Ensure that the connecting rod meets the following conditions:
        - The connecting rods are not bent more than 0.18 mm (0.007 in).
        - The connecting rods are not twisted more than 0.38 mm (0.015 in).
    4. Replace any bent or twisted connecting rods.
    5. Inspect the new connecting rods before using the new rods.
23. Inspect the connecting rod for damage to the bearing cap and bolt threads.

 © 2011 Mitchell Repair Information Company, LLC.

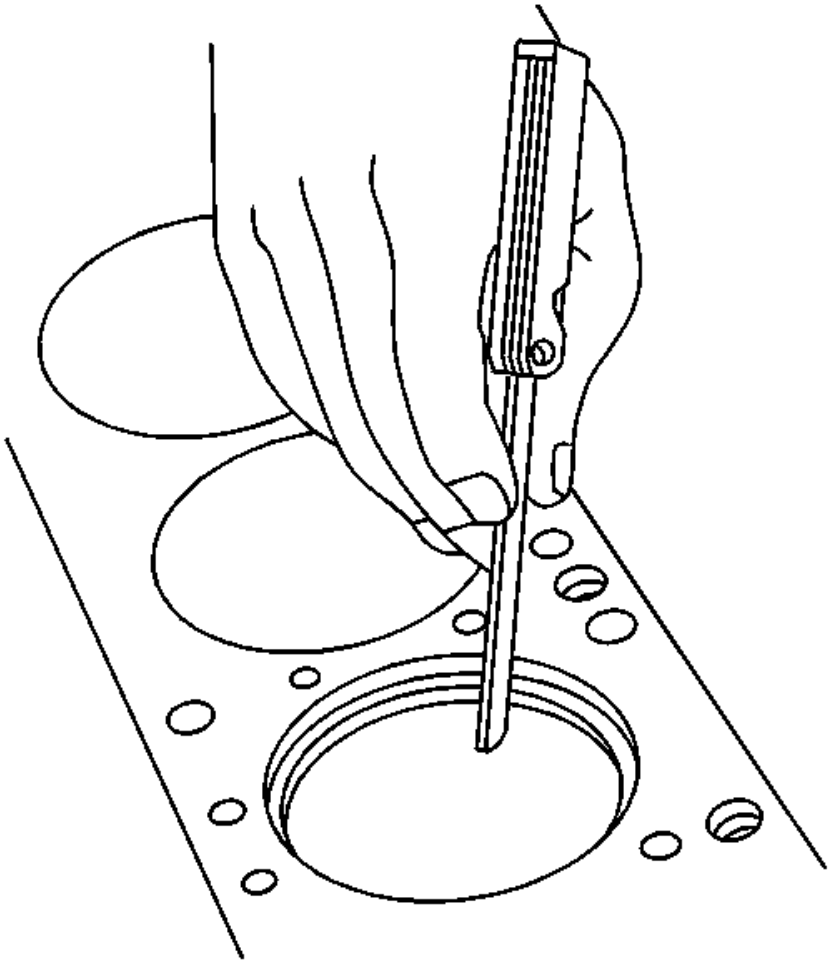

**Fig. 349: Measuring Piston Ring End Gap**
**Courtesy of GENERAL MOTORS CORP.**

24. Measure the piston compression ring end gap.

**IMPORTANT: Fit each compression ring to the cylinder in which it will be used.**

1. Place the compression ring into the cylinder bore.
2. Push the compression ring into the bottom of the cylinder bore to approximately 6.5 mm (0.25 in) above ring travel. The ring must be square to the cylinder wall.
3. Use a feeler gage in order to measure the end gap. The first compression ring end gap must measure 0.18-0.39 mm (0.007-0.015 in), the second compression ring must measure 0.48-0.74 mm (0.019-0.029 in).
4. Select another size ring set if the end gap exceeds specifications. If ring gap clearance is below specifications, increase the gap by carefully filing off excess material.

 © 2011 Mitchell Repair Information Company, LLC.

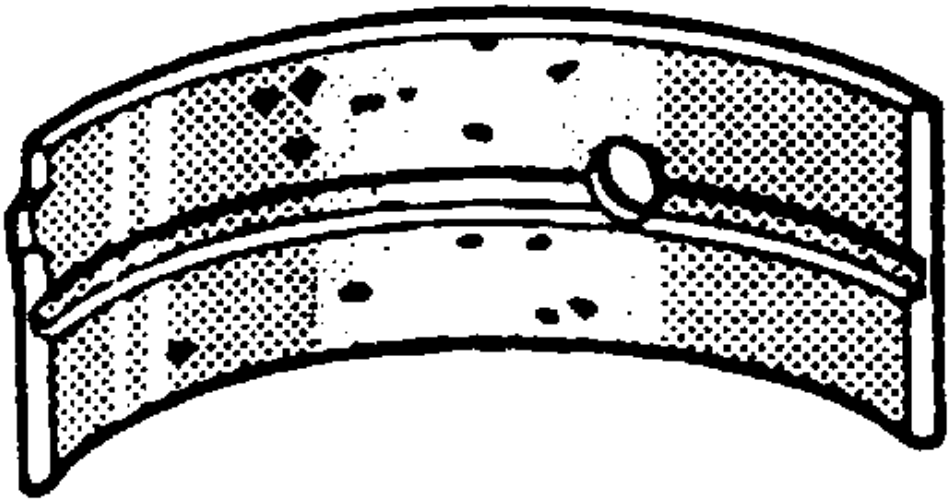

**Fig. 350: Identifying Crankshaft Bearing Craters Or Pockets**
**Courtesy of GENERAL MOTORS CORP.**

25. Inspect the connecting rod bearings for craters or pockets. Flattened sections on the connecting rod bearing halves may indicate fatigue.

 © 2011 Mitchell Repair Information Company, LLC.

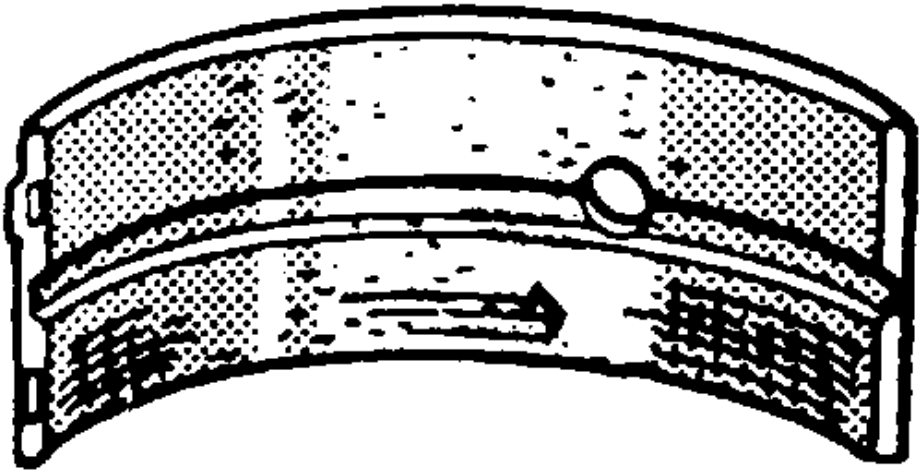

**Fig. 351: Identifying Connecting Rod Bearing Scoring Or Discoloration**
**Courtesy of GENERAL MOTORS CORP.**

26. Inspect the connecting rod bearings for excess scoring or discoloration.
27. Inspect the connecting rod bearings for dirt or debris imbedded into the connecting rod bearing halves.

 © 2011 Mitchell Repair Information Company, LLC.

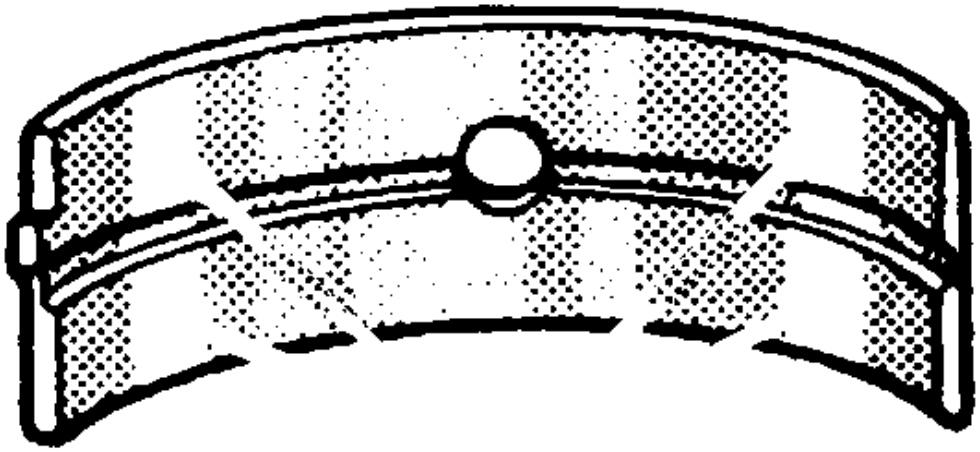

**Fig. 352: Crankshaft Bearing Polished Sections (Improper Seating)**
**Courtesy of GENERAL MOTORS CORP.**

28. Inspect the connecting rod bearings for improper seating indicated by bright, polished sections of the bearings.
29. Inspect the inside of the connecting rod bearing and the outside diameter of the connecting rod bearing journal for wear. This indicates high spots.

**Piston and Connecting Rod Assemble**

**Tools Required**

**J 24086-C** Piston Pin Remover/Installer Set. See **Special Tools**.

 © 2011 Mitchell Repair Information Company, LLC.

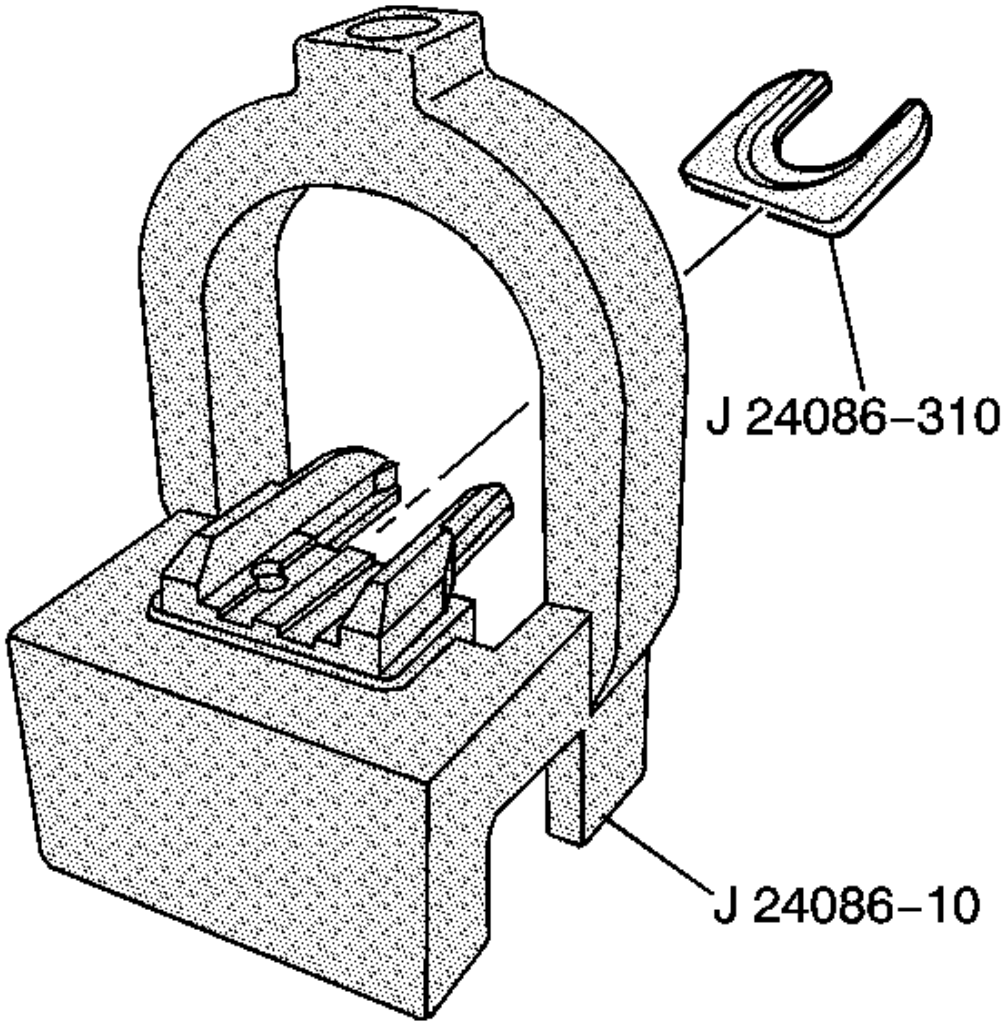


**Fig. 353: Installing J 24086-310 Into J 24086-10**
**Courtesy of GENERAL MOTORS CORP.**

**IMPORTANT: This procedure is to be used for oversized pistons only. Standard size pistons are supplied as an assembly consisting of a piston, piston pin, connecting rod and piston rings. Assemble the piston for the specific cylinder with the connecting rod for the corresponding crankshaft journal.**

1. Install fork insert J 24086-310 into fixture J 24086-10, which are part of **J 24086-C** . See **Special Tools**.

 © 2011 Mitchell Repair Information Company, LLC.

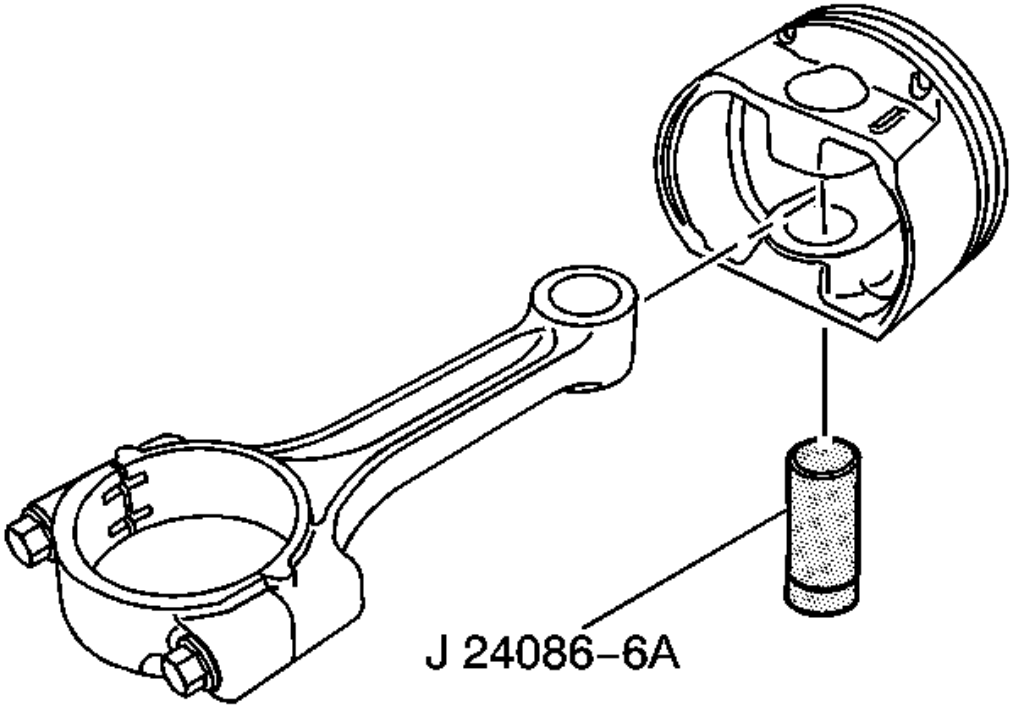


**Fig. 354: Assemble J 24086-C With Piston Assembly**
**Courtesy of GENERAL MOTORS CORP.**

2. Lubricate the piston pin with clean engine oil.

**IMPORTANT: Ensure that the marks on the piston and connecting rod are aligned the same as when removed. If installing a new piston, ensure that the arrow on top faces towards the front of the engine. If no identification marks were made during disassembly, ensure that the flat area on the bottom of the piston pin skirt is aligned with the small dimple above the connecting rod crankshaft bearing bore.**

3. Assemble the piston, connecting rod and adapter J 24086-6A and install onto fixture J 24086-10, which are part of **J 24086-C** . See **Special Tools**.

 © 2011 Mitchell Repair Information Company, LLC.

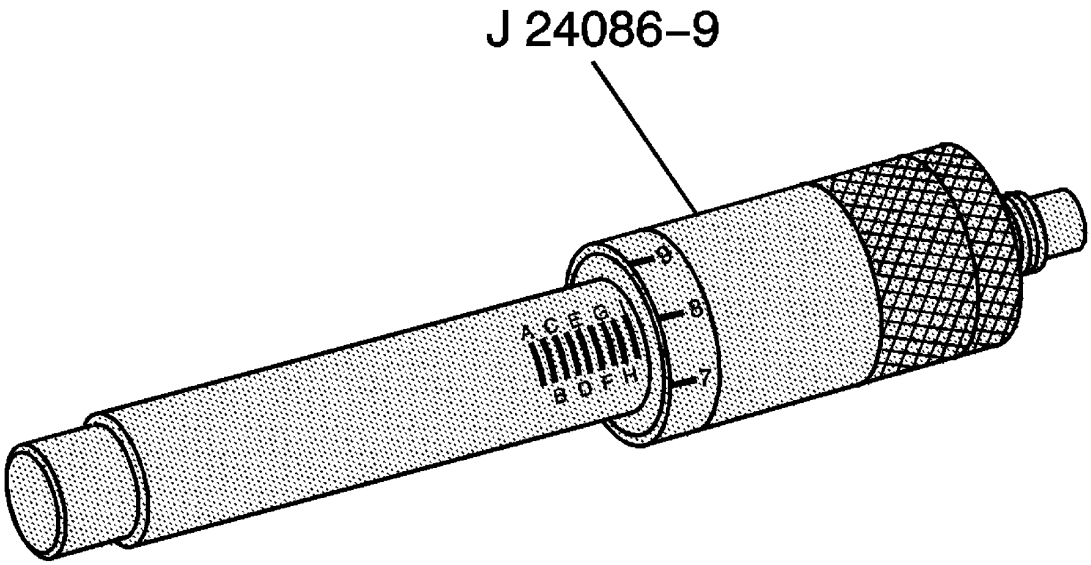


**Fig. 355: Closeup View Of J 24086-9**
**Courtesy of GENERAL MOTORS CORP.**

4. Adjust installation pin J 24086-9 to G-4.

 © 2011 Mitchell Repair Information Company, LLC.

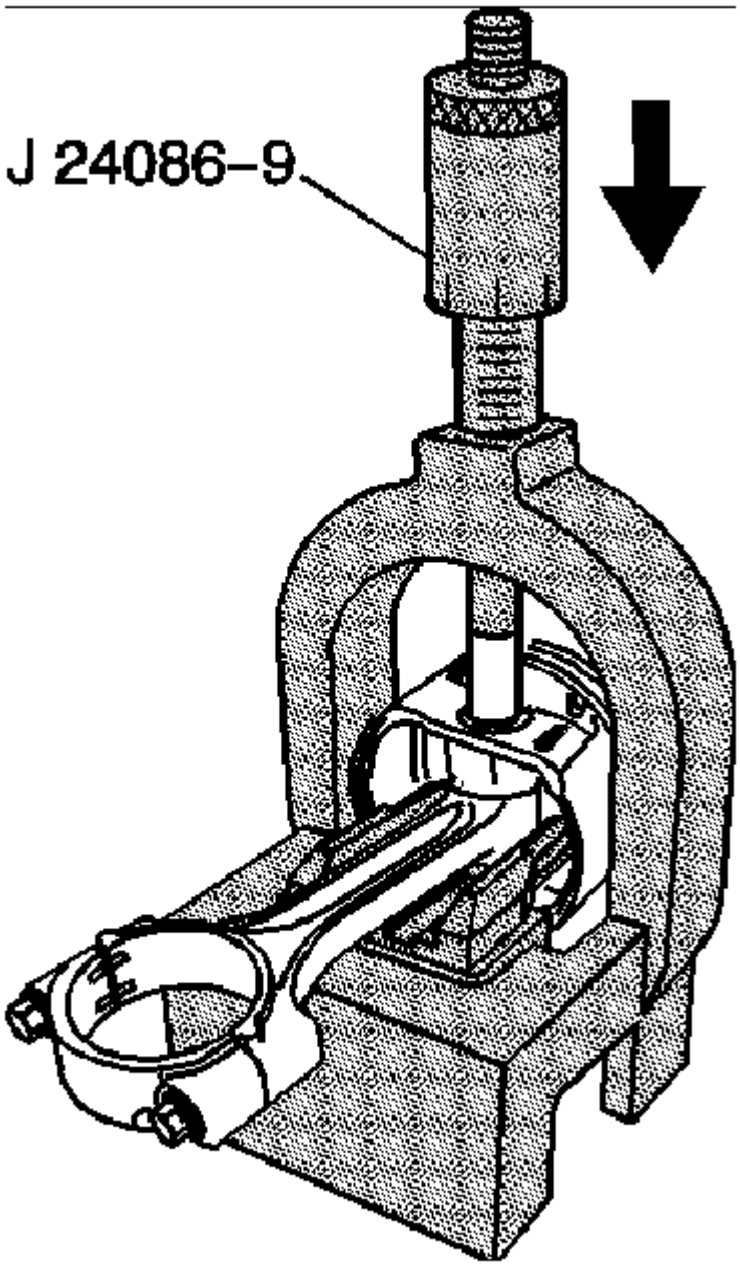


**Fig. 356: View Of J 24086-9**
**Courtesy of GENERAL MOTORS CORP.**

**NOTE:** **After the installer hub bottoms on the support assembly, do not exceed 35**

 © 2011 Mitchell Repair Information Company, LLC.

**000 kPa (5,000 psi) pressure, this could cause damage to the tool.**

5. Insert pin J 24086-9 through fixture J 24086-10, which are part of **J 24086-C** and to the piston pin. See **Special Tools**.
6. Press pin J 24086-9 until it bottoms on fixture J 24086-10.

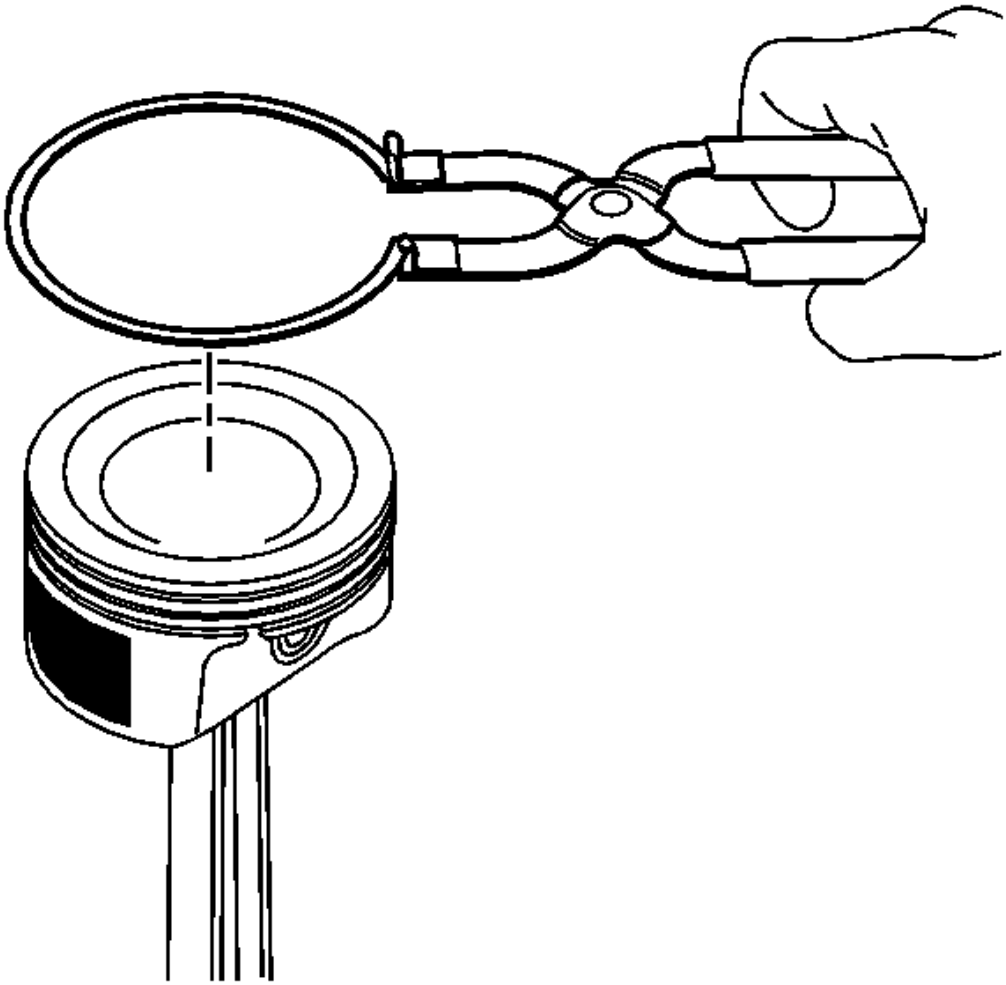

**Fig. 357: View Of Removing/Installing Piston Rings**
**Courtesy of GENERAL MOTORS CORP.**

**NOTE:** **Use a piston ring expander to install the piston rings. The rings may be damaged if expanded more than necessary.**

 © 2011 Mitchell Repair Information Company, LLC.

**IMPORTANT: To provide an effective compression seal, the ring gaps must be staggered a minimum of 90 degrees.**

7. Using piston ring pliers, install the piston rings onto the piston.
    1. Install the oil control ring spacer into the bottom groove of the piston.
    2. Install the lower oil control ring. The oil control rings do not have a dimple or orientation mark and may be installed in either direction.
    3. Install the upper oil control ring.
    4. Install the middle compression ring with the dot facing up.
    5. Install the top compression ring in either direction. The ring has no orientation markings.

**Camshaft and Bearings Cleaning and Inspection**

**Tools Required**

**J 7872** Magnetic Base Dial Indicator Set. See **Special Tools**.

1. Clean the camshaft with cleaning solvent.

 © 2011 Mitchell Repair Information Company, LLC.

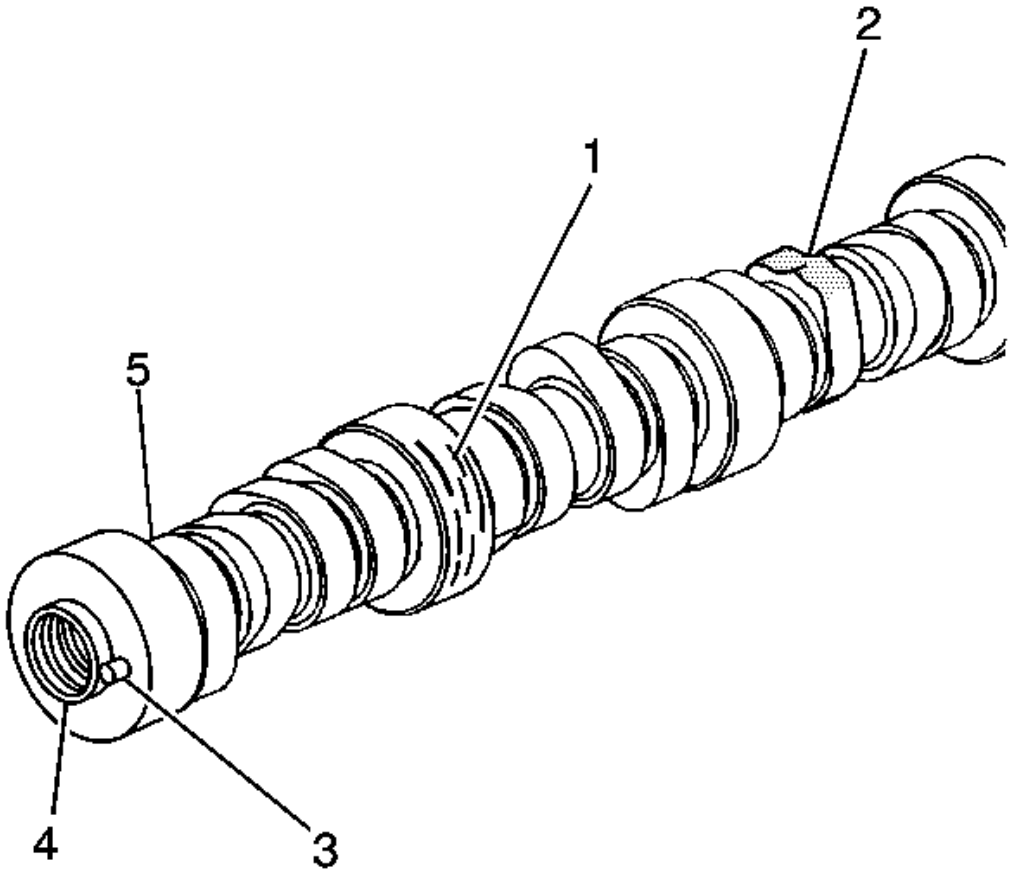


**Fig. 358: Inspecting Camshaft**
**Courtesy of GENERAL MOTORS CORP.**

**CAUTION: Refer to Cleaning Solvent Caution in Cautions and Notices.**

2. Inspect the camshaft for the following conditions:
   - Scored camshaft bearing journals (1)
   - Damaged camshaft lobes (2)
   - Damaged camshaft sprocket locator pins (3)
   - Damaged threads (4)
   - Damage to the camshaft reluctor tooth (5)

 © 2011 Mitchell Repair Information Company, LLC.

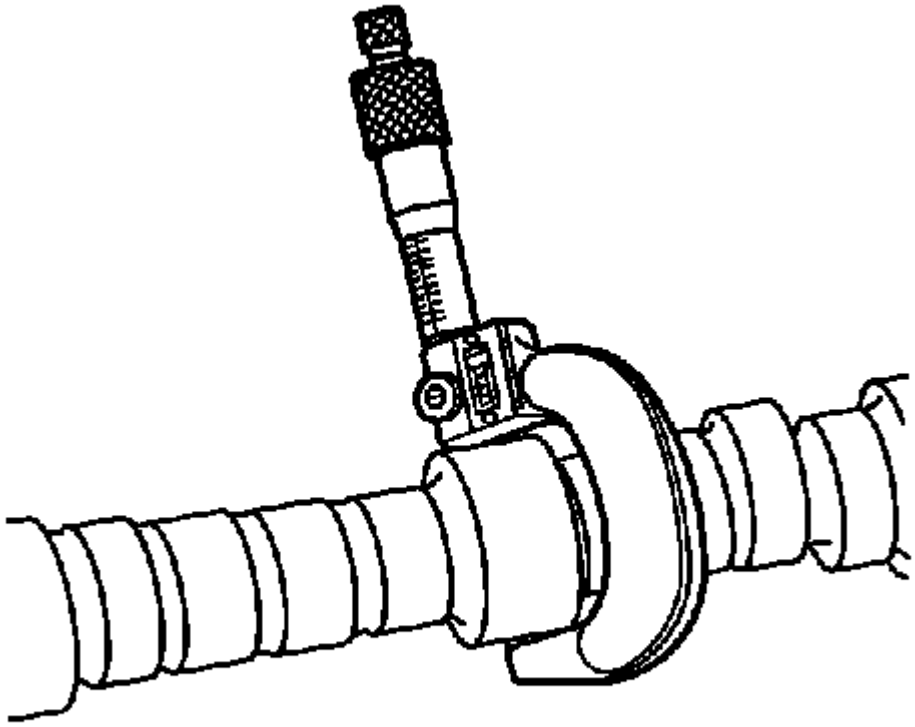

**Fig. 359: Measure Camshaft Journals With Micrometer**
**Courtesy of GENERAL MOTORS CORP.**

3. Measure the camshaft journals using a micrometer.

   If the camshaft journals are not within specifications, replace the camshaft.

 © 2011 Mitchell Repair Information Company, LLC.

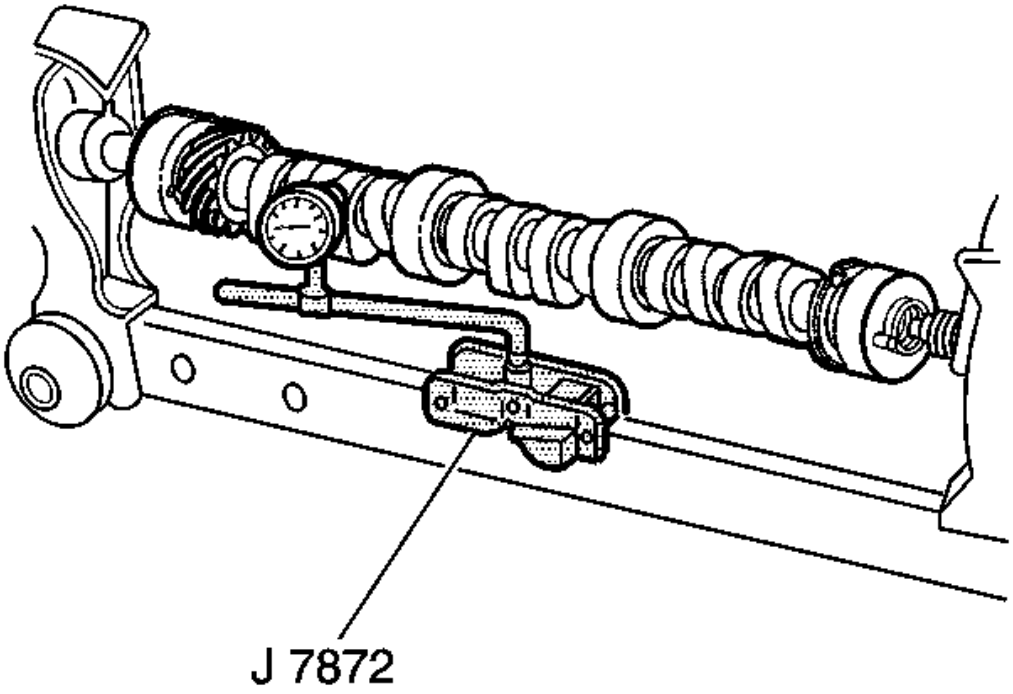


**Fig. 360: Measuring Camshaft With J 7872**
**Courtesy of GENERAL MOTORS CORP.**

4. Measure the camshaft runout using the **J 7872** . See **Special Tools**.
    1. Mount the camshaft in V-blocks between the centers.
    2. Use the **J 7872** in order to measure the intermediate camshaft journal. See **Special Tools**.
5. Measure the camshaft lobe lift using the **J 7872** . See **Special Tools**.
    1. Lubricate the camshaft using GM P/N United States 12345501, GM P/N Canada 992704 or the equivalent.
    2. Set the camshaft on V-blocks.
    3. Use the **J 7872** in order to measure the lobe lift. See **Special Tools**.
6. If the runout or lobe lift is not within specifications, replace the camshaft.

**Timing Chain and Sprockets Cleaning and Inspection**

 © 2011 Mitchell Repair Information Company, LLC.

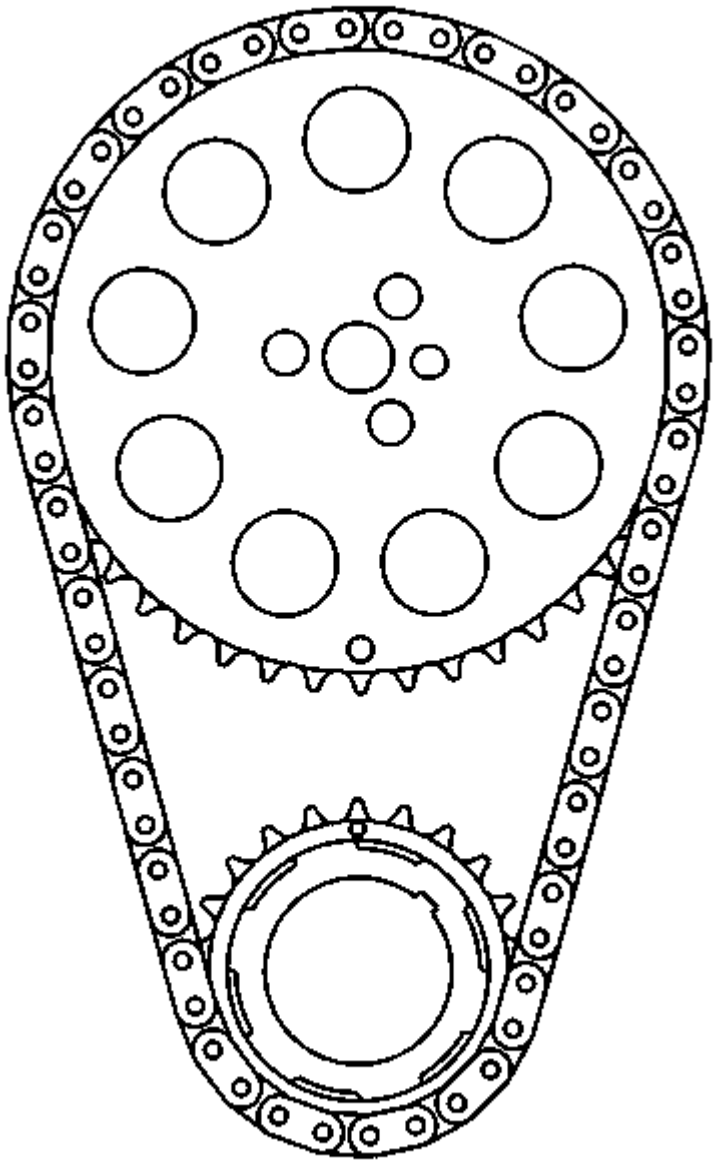

**Fig. 361: View Of Camshaft & Crankshaft Sprockets Timing Marks Aligned**
**Courtesy of GENERAL MOTORS CORP.**

**CAUTION: Bodily injury may occur if the cleaning solvent is inhaled or exposed to the skin.**

 © 2011 Mitchell Repair Information Company, LLC.

1. Clean all components with cleaning solvent.
2. Dry the components with compressed air.
3. Inspect the timing chain for binding or wear.

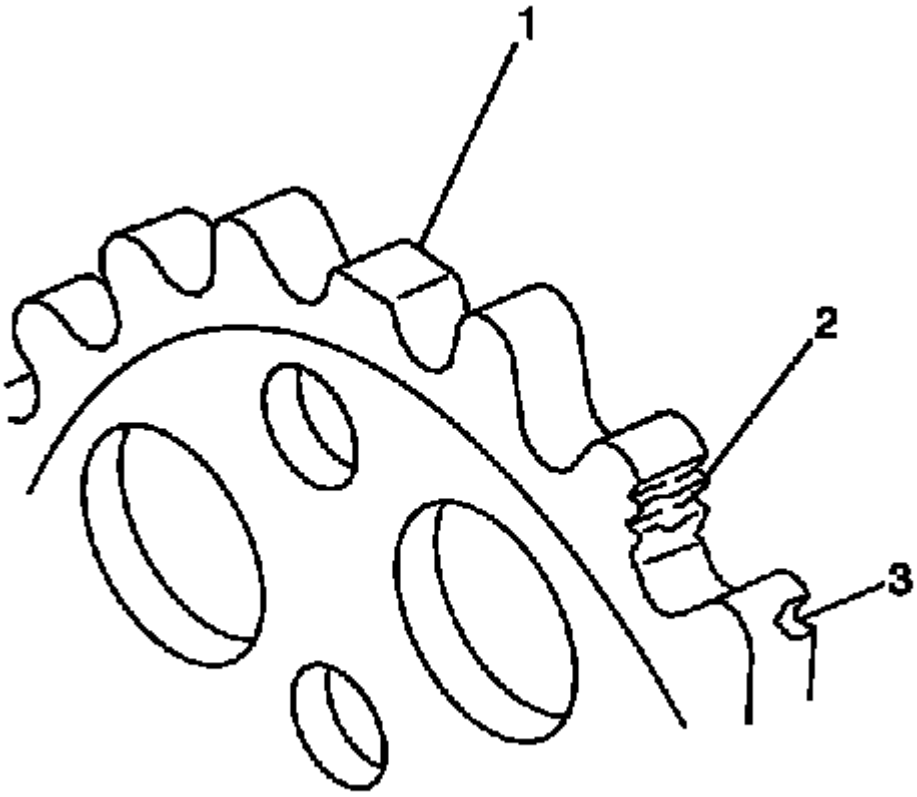


**Fig. 362: Identifying Damaged Sprocket Teeth**
**Courtesy of GENERAL MOTORS CORP.**

4. Inspect the camshaft and crankshaft sprockets for:
   - Worn teeth (1)
   - Broken teeth (2)
   - Chipped teeth (3)
5. Inspect the timing chain dampener for excessive wear or cracks.

**Valve Lifters Cleaning and Inspection**

1. Clean the valve lifters in cleaning solvent.

**CAUTION: Refer to Safety Glasses Caution in Cautions and Notices.**

 © 2011 Mitchell Repair Information Company, LLC.

2. Dry the valve lifters with compressed air.

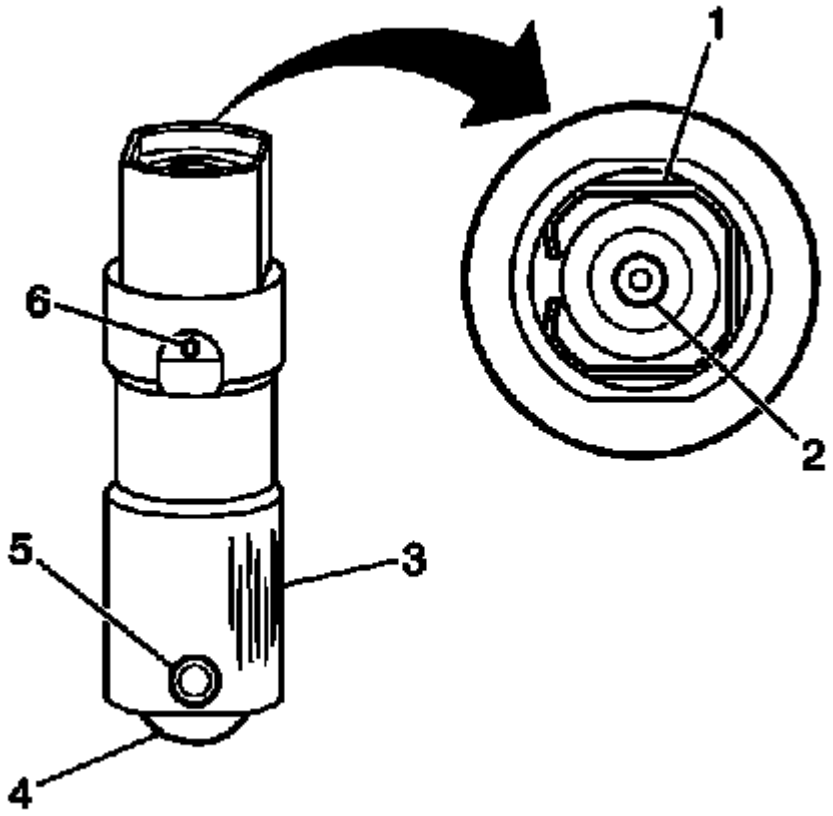


**Fig. 363: Inspecting Areas Of Valve Lifters**
**Courtesy of GENERAL MOTORS CORP.**

3. Inspect the valve lifters for the following:
   - Bent or broken clip (1)
   - Worn push rod socket (2)
   - Scuffed or worn sides (3)

     If the valve lifter shows wear, inspect the engine block lifter bores for wear or damage.

   - Flat spots on the roller (4)
   - Loose or damaged pin (5)
   - Plugged oil hole (6)
   - Worn or damaged roller bearing

     The roller should rotate freely with no binding or roughness.

 © 2011 Mitchell Repair Information Company, LLC.

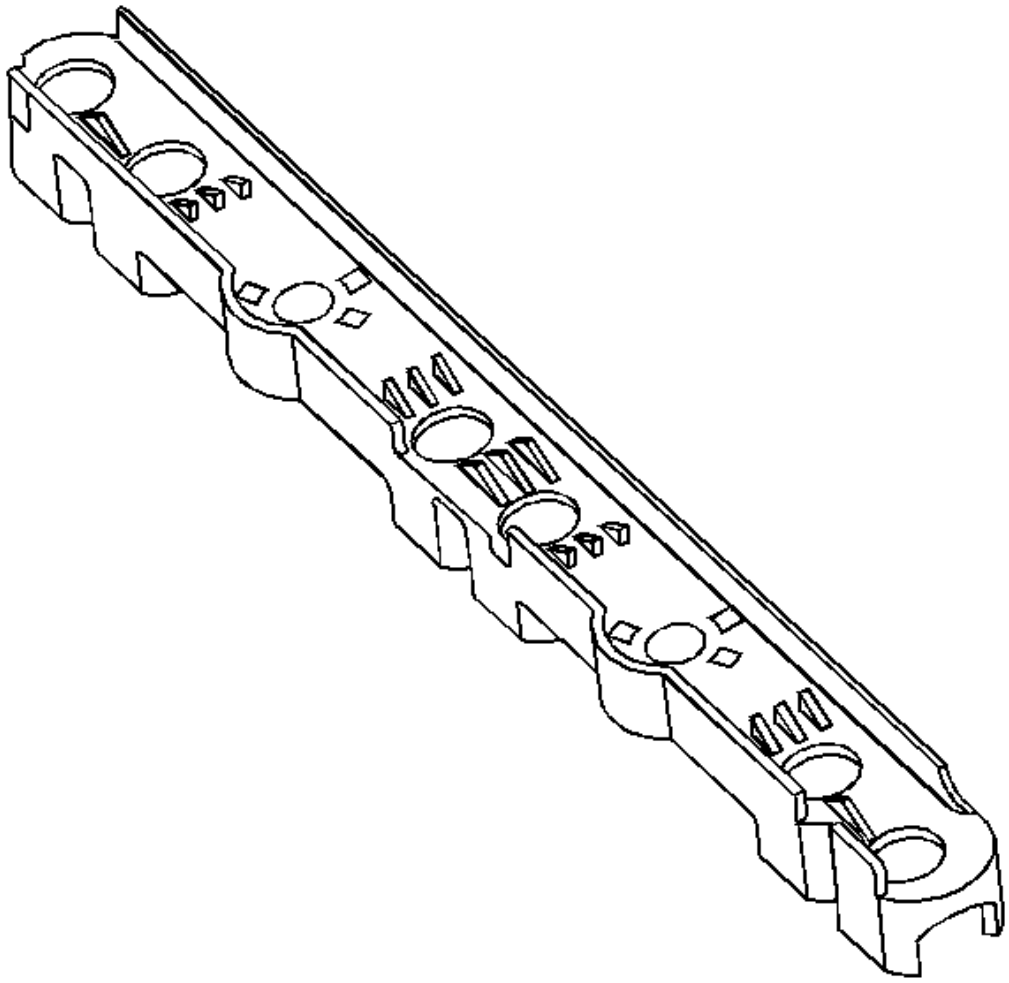

**Fig. 364: View Of Valve Lifter Guides**
**Courtesy of GENERAL MOTORS CORP.**

4. Inspect the valve lifter guides for the following:
   - For cracks or damage
   - Excessive wear in the lifter mounting bores

**Valve Rocker Arm and Push Rods Cleaning and Inspection**

**CAUTION: Refer to Cleaning Solvent Caution in Cautions and Notices.**

 © 2011 Mitchell Repair Information Company, LLC.

1. Clean the valve rocker arms and push rods in cleaning solvent.

**CAUTION: Refer to Safety Glasses Caution in Cautions and Notices.**

2. Dry the valve rocker arms and push rods with compressed air.

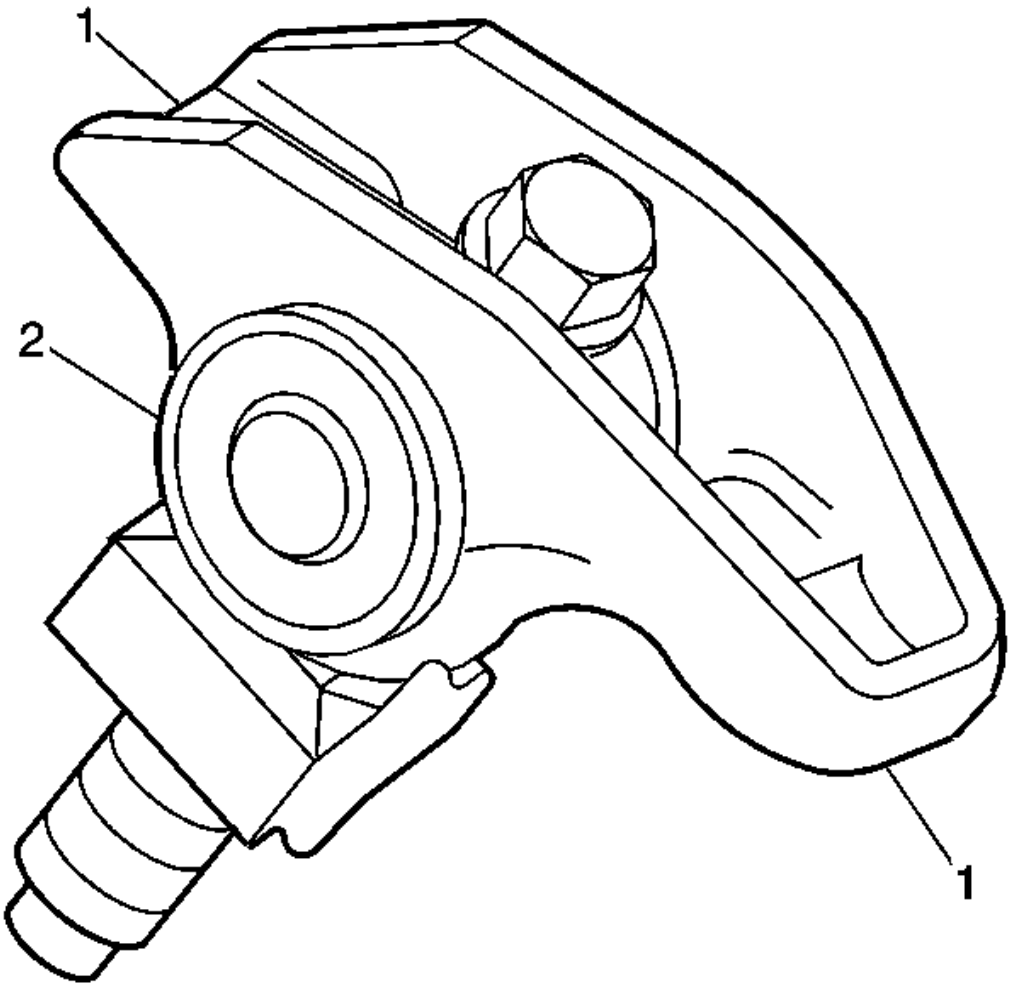


**Fig. 365: Identifying Valve Rocker Arm**
**Courtesy of GENERAL MOTORS CORP.**

3. Inspect the valve rocker arms for the following conditions:
   - Excessive wear at the valve contact or push rod socket area (1)

 © 2011 Mitchell Repair Information Company, LLC.

- A loose or damaged pin (2)
- A worn or damaged roller bearing (2)

  The roller should rotate freely with no binding or roughness.

- The bolt threads for damage

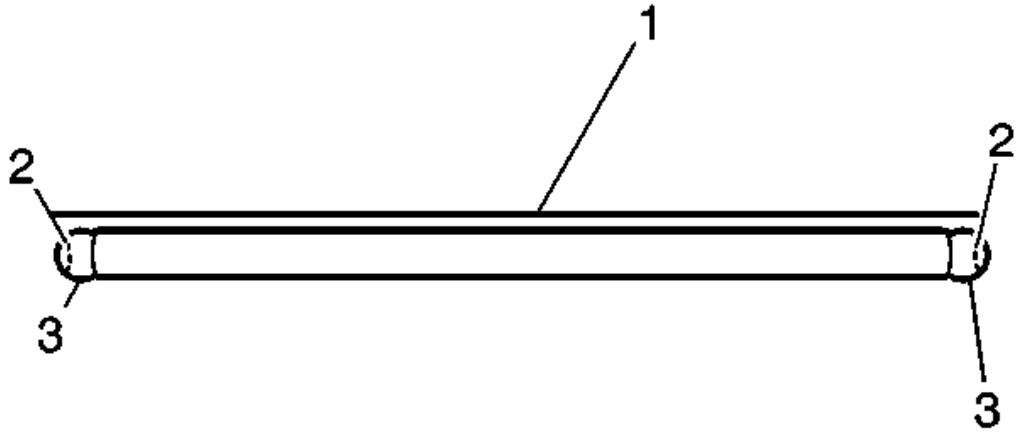


**Fig. 366: Inspecting Push Rods**
**Courtesy of GENERAL MOTORS CORP.**

**IMPORTANT: Keep the push rods in order. The intake and exhaust are different lengths.**

4. Inspect the push rods for the following conditions:
   - Straightness using a straight edge (1)
   - Excessive wear on the push rod ends (3)
   - Clogging of the oil passage (2)

**Cylinder Head Disassemble**

**Tools Required**

**J 38606** Valve Spring Compressor. See **Special Tools**.

 © 2011 Mitchell Repair Information Company, LLC.

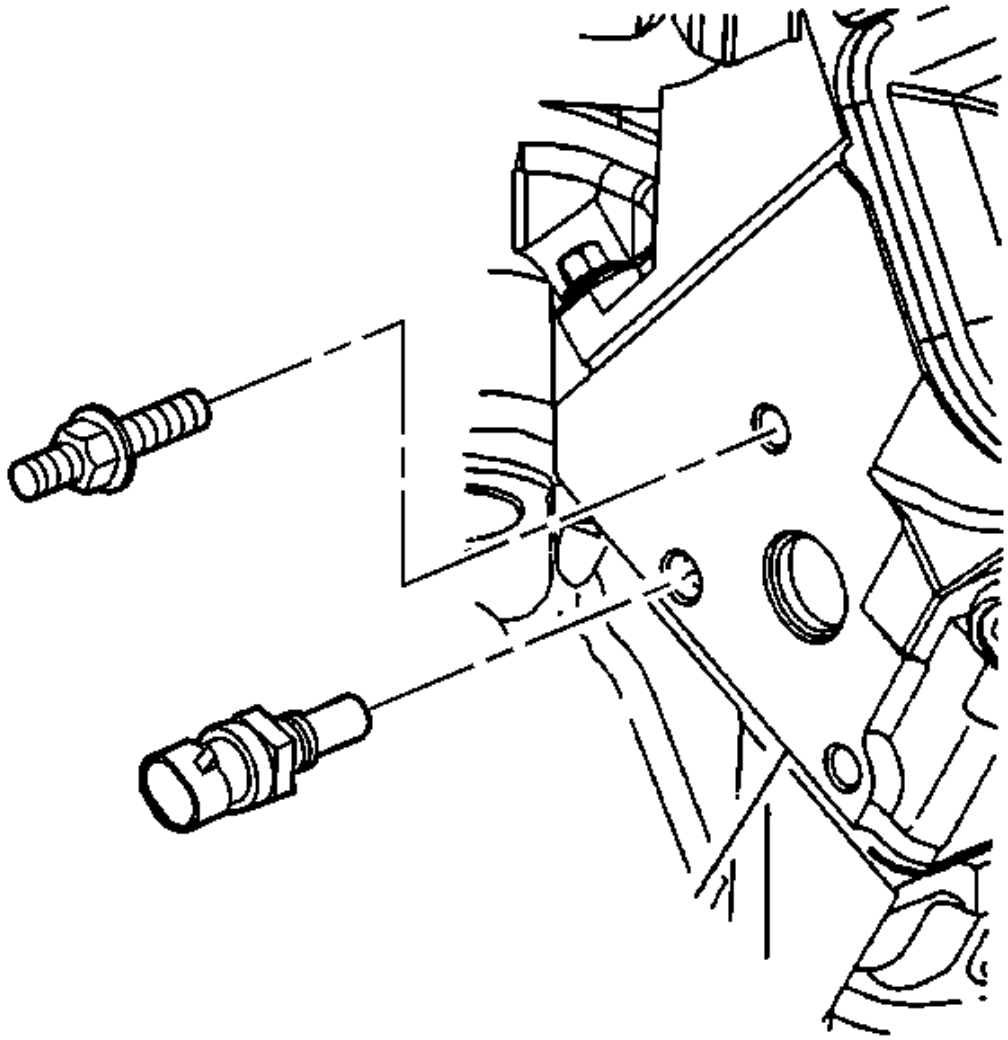

**Fig. 367: Removing Heater Inlet Pipe Stud From Right Cylinder Head**
**Courtesy of GENERAL MOTORS CORP.**

1. Remove the heater inlet pipe stud from the right cylinder head, if required.
2. Remove the coolant temperature sensor from the right cylinder head, if required.

 © 2011 Mitchell Repair Information Company, LLC.

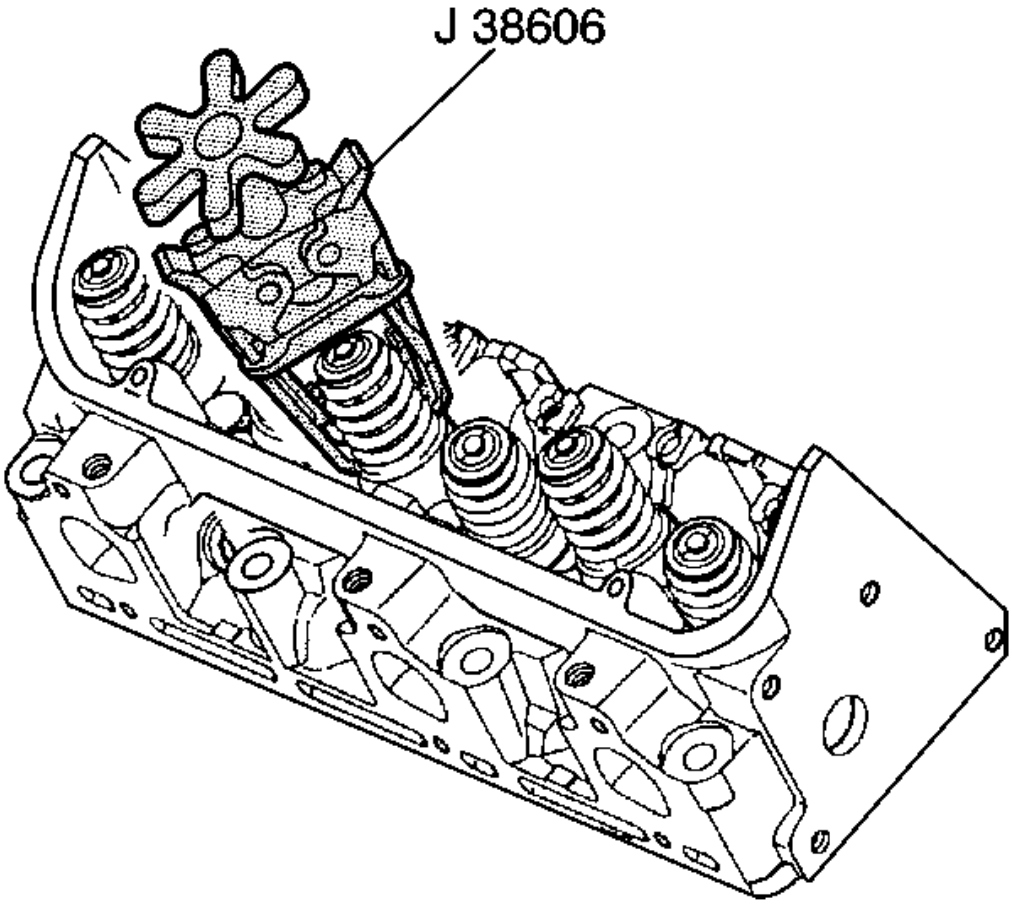


**Fig. 368: Compressing Valve Springs**
**Courtesy of GENERAL MOTORS CORP.**

3. Compress the valve springs using the **J 38606** . See **Special Tools**.

 © 2011 Mitchell Repair Information Company, LLC.

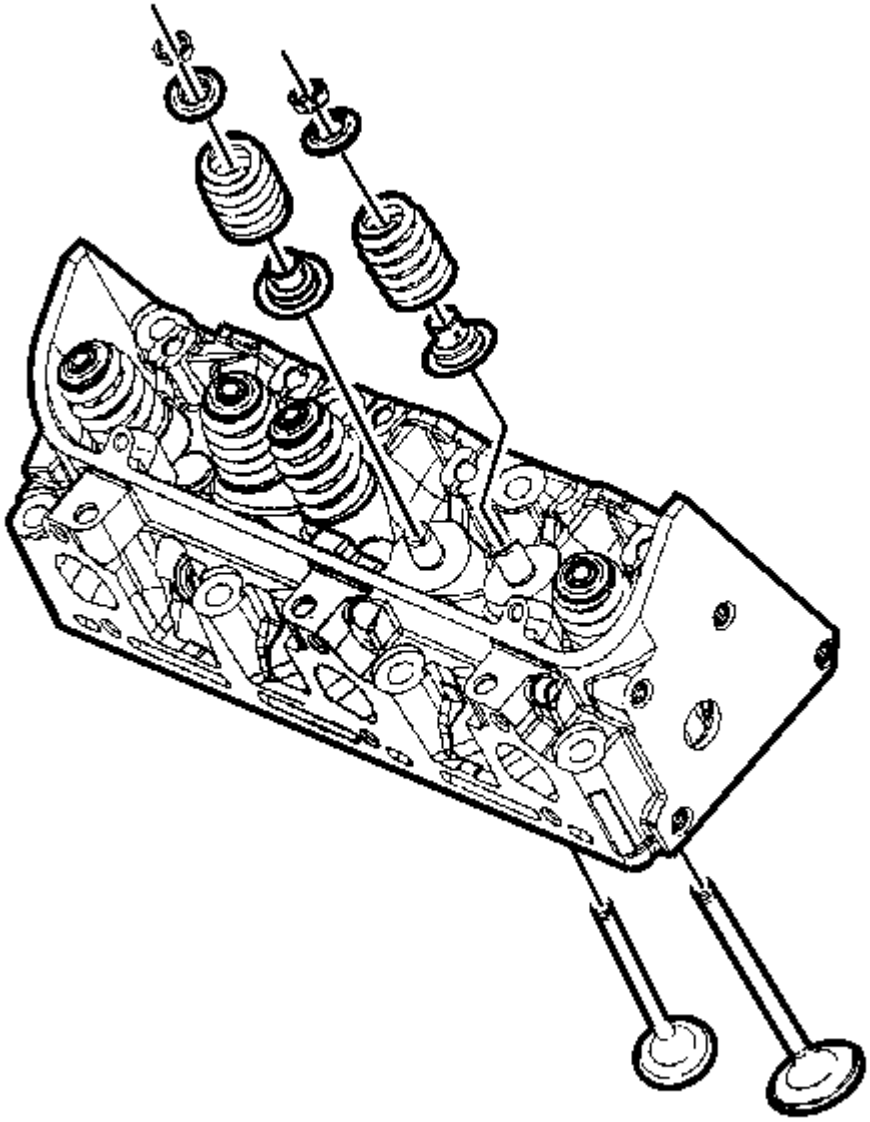

**Fig. 369: View Of Valve Components**
**Courtesy of GENERAL MOTORS CORP.**

**NOTE:** **Do not damage the valve guide. Remove any burrs that have formed at the key groove by chamfering the valve stem with an oil stone or a file.**

**IMPORTANT:** **Ensure that the valve train components are marked, organized or sorted**

 © 2011 Mitchell Repair Information Company, LLC.

**when disassembling the cylinder head. Install the valve train components in the original location from which the component were removed.**

4. Remove the valve spring cap keys.
5. Remove the valve spring caps.
6. Remove the valve springs.
7. Remove the valves.
8. Remove the valve stem oil seals and spring seats as an assembly.

**Cylinder Head Cleaning and Inspection**

## Tools Required

- **J 8089** Carbon Removing Brush. See **Special Tools**.
- **J 9666** Valve Spring Tester

 © 2011 Mitchell Repair Information Company, LLC.

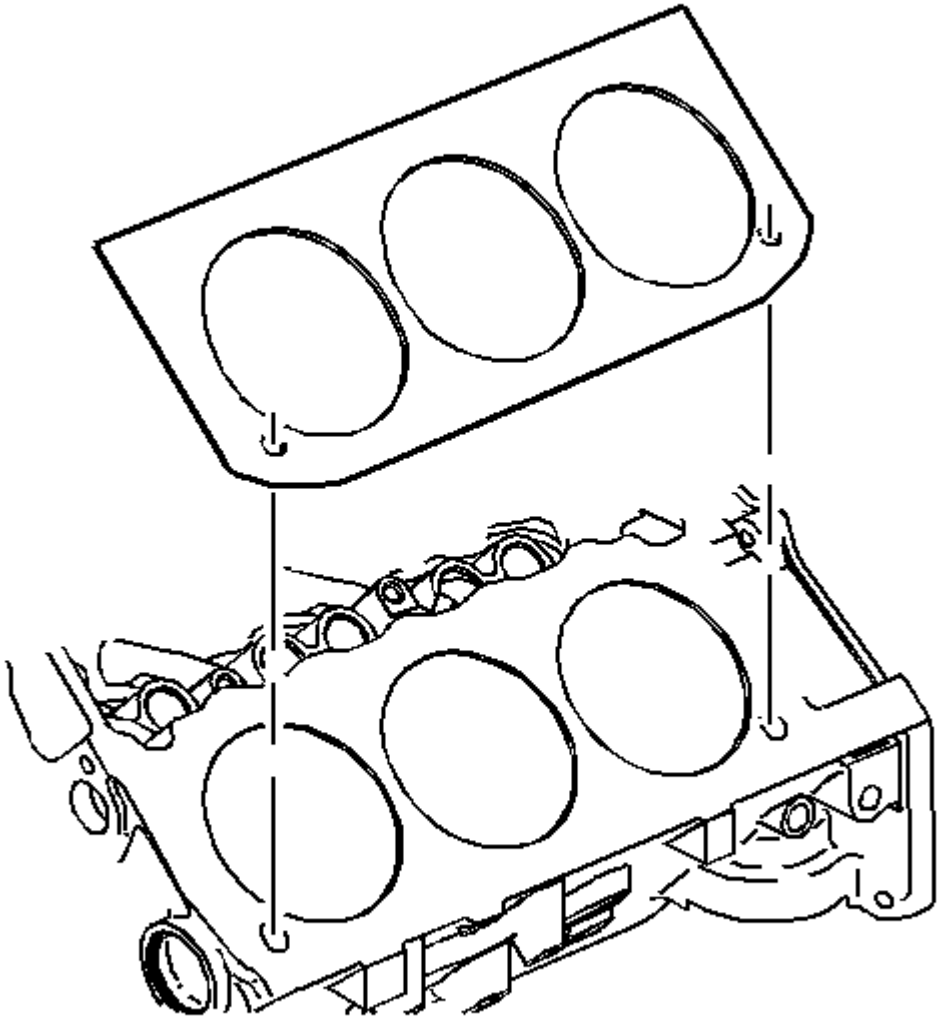

**Fig. 370: View Of Cylinder Head Gasket**
**Courtesy of GENERAL MOTORS CORP.**

1. Inspect the cylinder head gasket and the mating surfaces. Inspect for leaks, corrosion, and blowby.
2. If the gasket failed, determine the cause. The following conditions may cause gasket failure:
   - Improper installation
   - A loose or warped cylinder head
   - Missing, off location, or not fully seated dowel pins
   - Low torque on the cylinder head bolts

 © 2011 Mitchell Repair Information Company, LLC.

- Cylinder head bolts with the incorrect length
- A warped engine block surface
- Scratched surfaces
- Excessive intake manifold torque
- Cracked engine block threaded holes

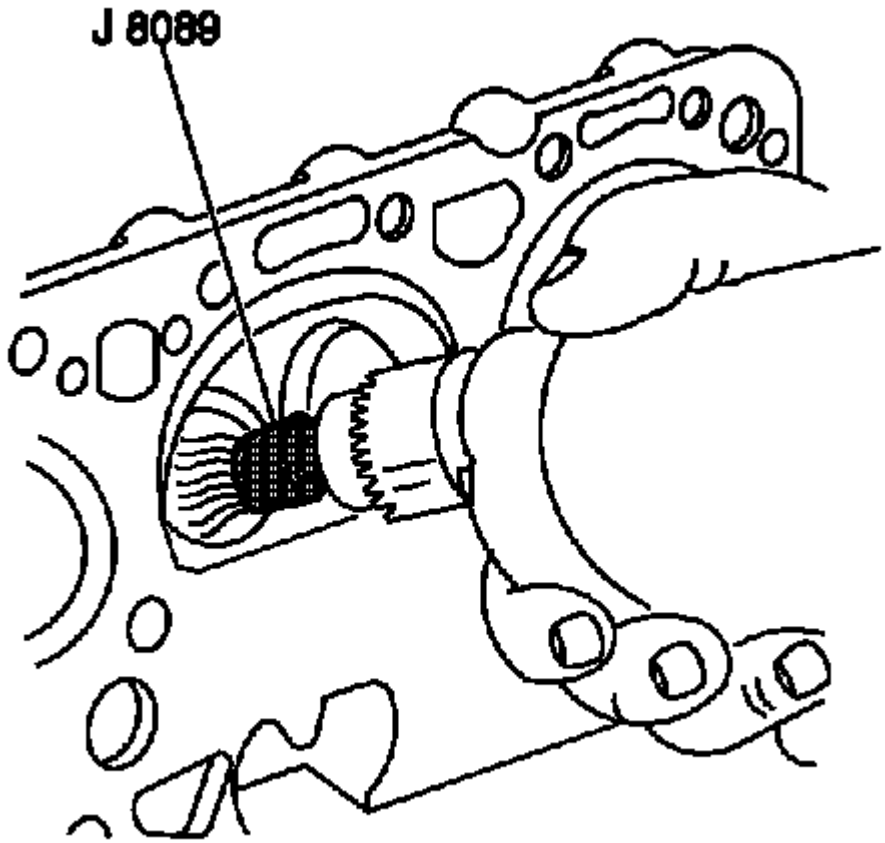


**Fig. 371: Removing Carbon From Combustion Chambers**
**Courtesy of GENERAL MOTORS CORP.**

**CAUTION: Refer to Safety Glasses Caution in Cautions and Notices.**

**IMPORTANT: Do not scuff the chamber.**

3. Use the **J 8089** in order to remove the carbon from the combustion chambers. See **Special Tools**.
4. Clean the following components:
    - The gasket surfaces

 © 2011 Mitchell Repair Information Company, LLC.

Do not use a motorized brush on any gasket sealing surface.

- Valve stems and heads on a buffing wheel
- The bolt hole threads

Remove all dirt, debris, or threadlocking material from the bolt holes.

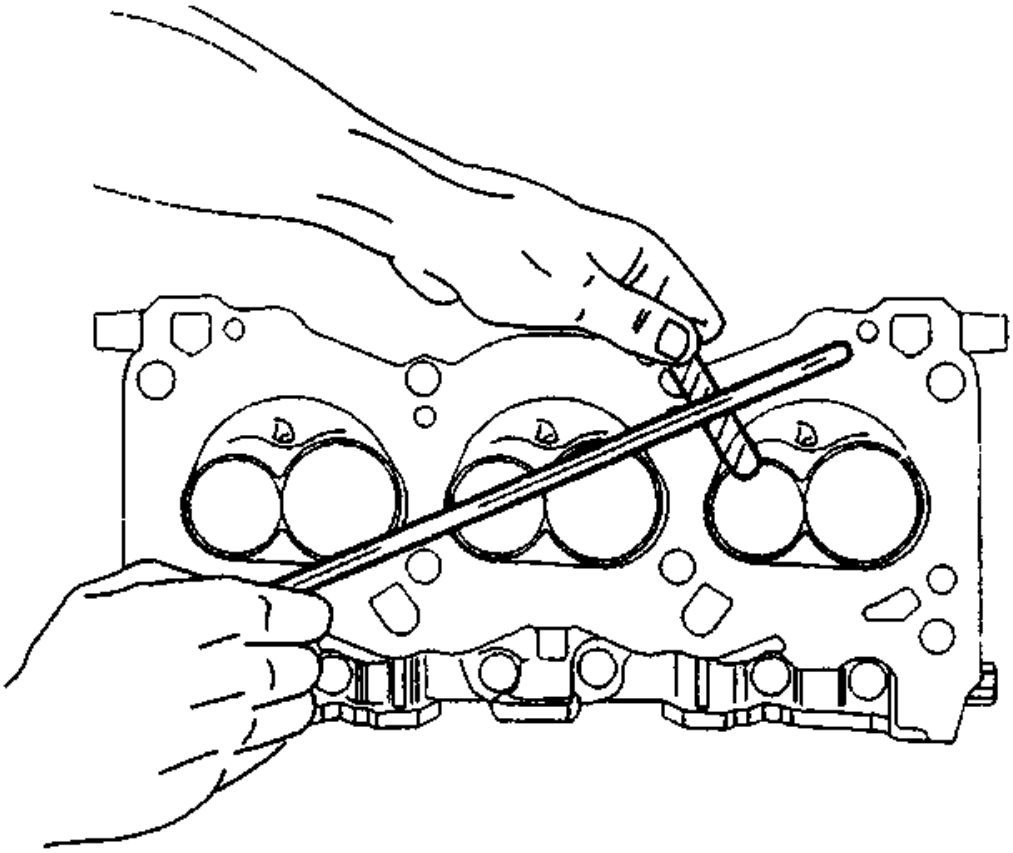

**Fig. 372: Inspecting Cylinder Head Mating Surfaces For Flatness**
**Courtesy of GENERAL MOTORS CORP.**

5. Inspect the cylinder head mating surfaces for flatness. Replace the cylinder head if it is outside of the specification limit.
6. Inspect the cylinder head for cracks.
7. Inspect the cylinder head deck for corrosion. Do not attempt to weld the cylinder head. If the cylinder head is damaged, replace the cylinder head.

 © 2011 Mitchell Repair Information Company, LLC.

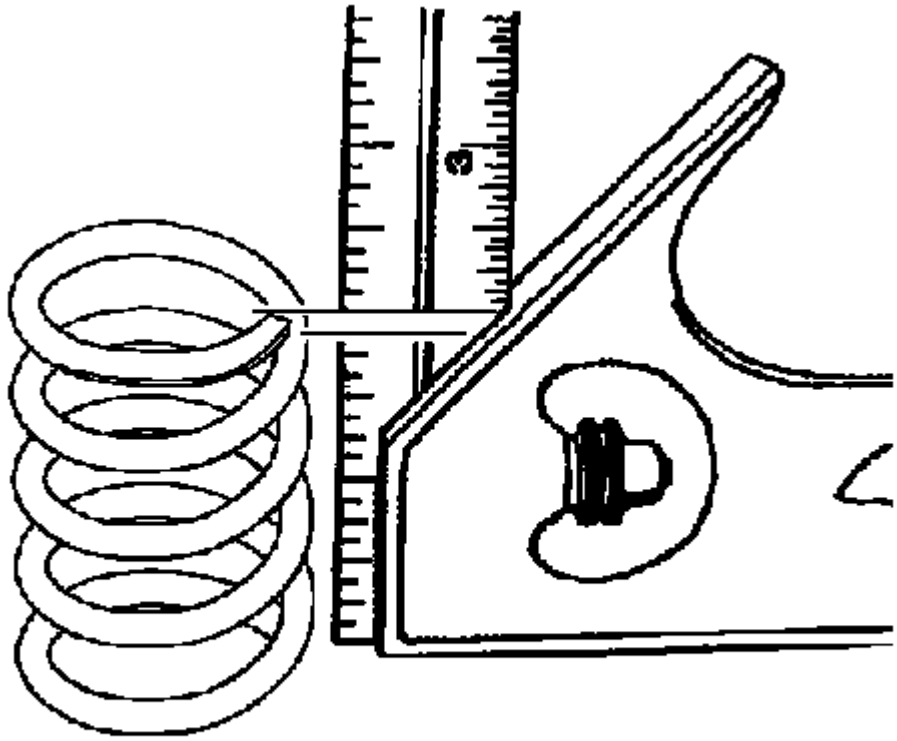

**Fig. 373: Inspecting Valve Spring For Squareness**
**Courtesy of GENERAL MOTORS CORP.**

8. Inspect the valve springs for squareness.

 © 2011 Mitchell Repair Information Company, LLC.

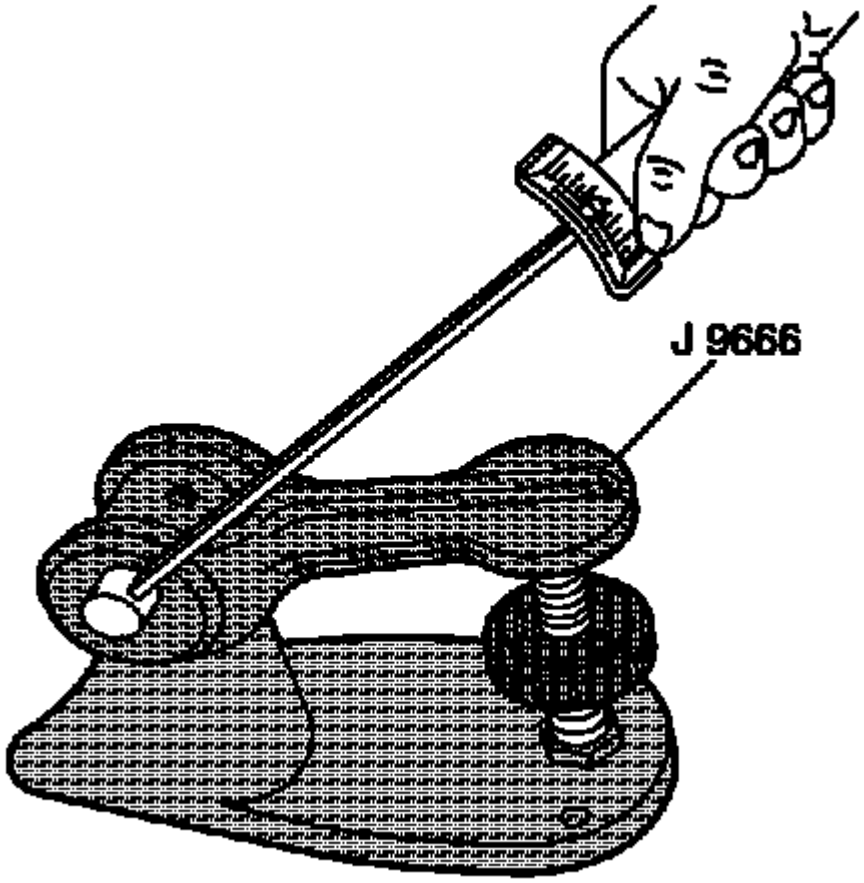


**Fig. 374: Measuring Valve Spring Tension**
**Courtesy of GENERAL MOTORS CORP.**

9. Use the **J 9666** in order to measure the valve spring tension.

   Replace the spring if the spring tension is not within specification.

**Valve Guide Reaming/Valve and Seat Grinding**

**Tools Required**

**J 8520** Camshaft Lobe Lift Indicator Set. See **Special Tools**.

 © 2011 Mitchell Repair Information Company, LLC.

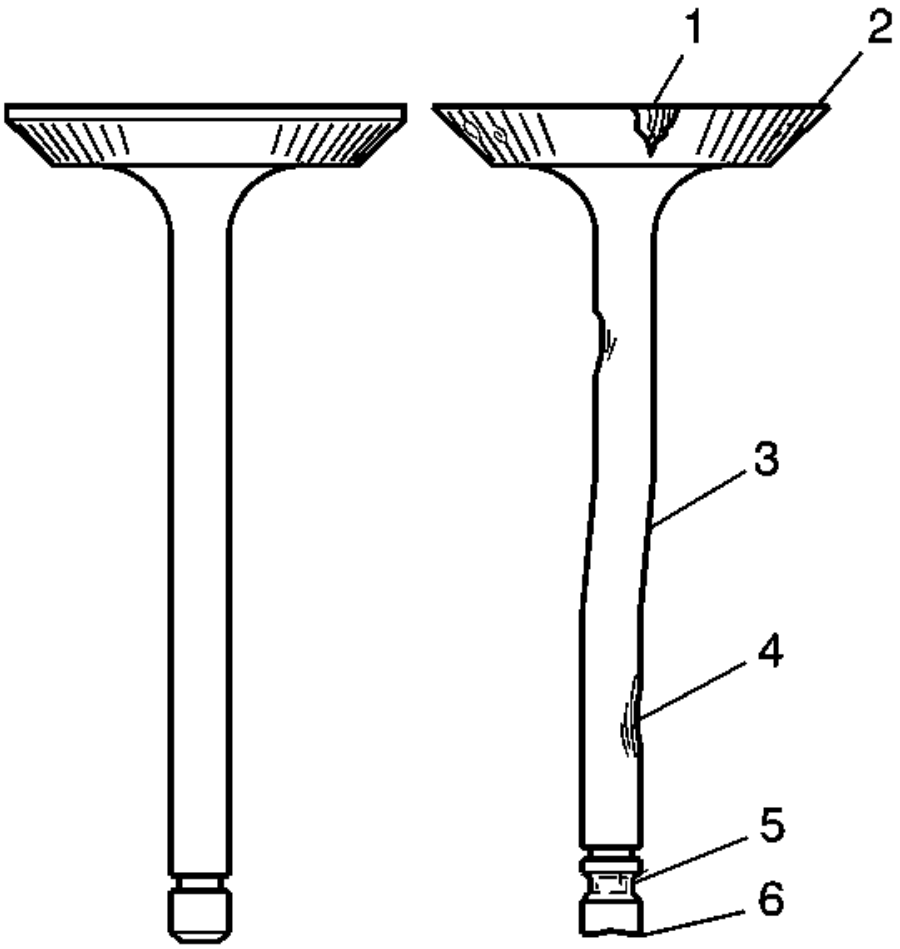


**Fig. 375: Identifying Inspection Points For Valves Damage**
**Courtesy of GENERAL MOTORS CORP.**

1. Inspect the valves for the following conditions:
   - Burnt or eroded areas (1)
   - A worn margin (2)
   - A bent stem (3)
   - A worn or scored stem (4)
   - A worn key groove (5)
   - A worn stem tip (6)

 © 2011 Mitchell Repair Information Company, LLC.

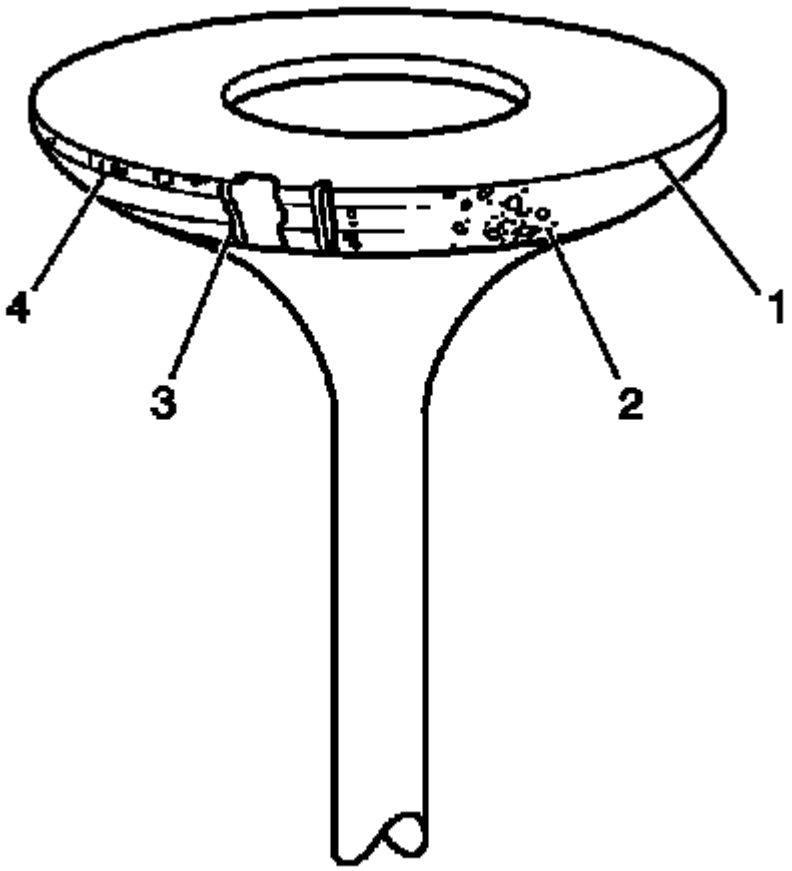


**Fig. 376: Inspecting Valve Face For Burning, Pitting & Cracking**
**Courtesy of GENERAL MOTORS CORP.**

2. Inspect the valve face for the following conditions:
   - Worn margin (4)
   - No margin (1)
   - Pitted surfaces (2)
   - Burnt or eroded areas (3)
3. Inspect the valve seats for a loose fit in the cylinder head.

 © 2011 Mitchell Repair Information Company, LLC.

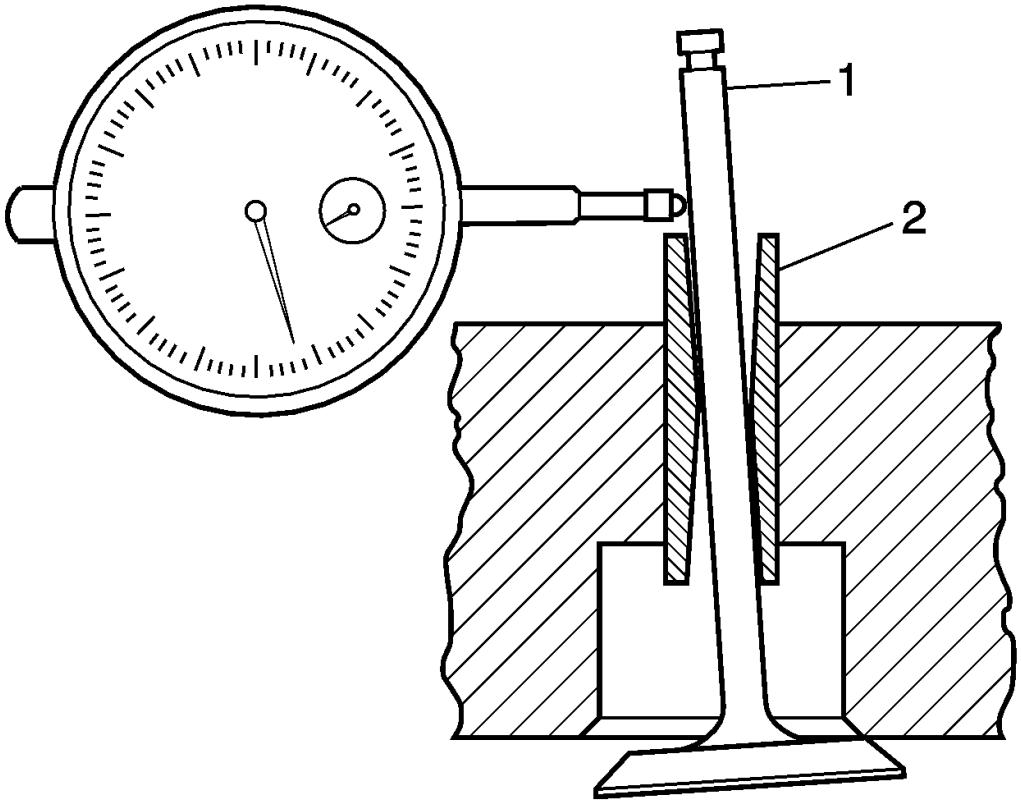


**Fig. 377: Inspecting For Excessive Valve Stem To Guide Clearance**
**Courtesy of GENERAL MOTORS CORP.**

**NOTE:** **Proper valve stem-to-valve guide clearance is necessary for proper engine operation and component life. Excessive clearance may cause a noisy valve train, premature valve stem oil seal failure, excessive oil consumption and related component damage. Insufficient clearance may cause a noisy valve train, rough engine operation or sticking valves that may lead to related component damage. Failure to inspect valve stem-to-valve guide clearance and repair or replace necessary components may lead to extensive engine damage.**

**IMPORTANT:** **Excessive valve stem-to guide clearance may cause the following conditions:**

- **A noisy valve train**
- **Premature valve stem oil seal wear**
- **Component damage**

 © 2011 Mitchell Repair Information Company, LLC.

- **Excessive engine oil consumption**

4. Inspect for excessive valve stem (1) to guide (2) clearance.

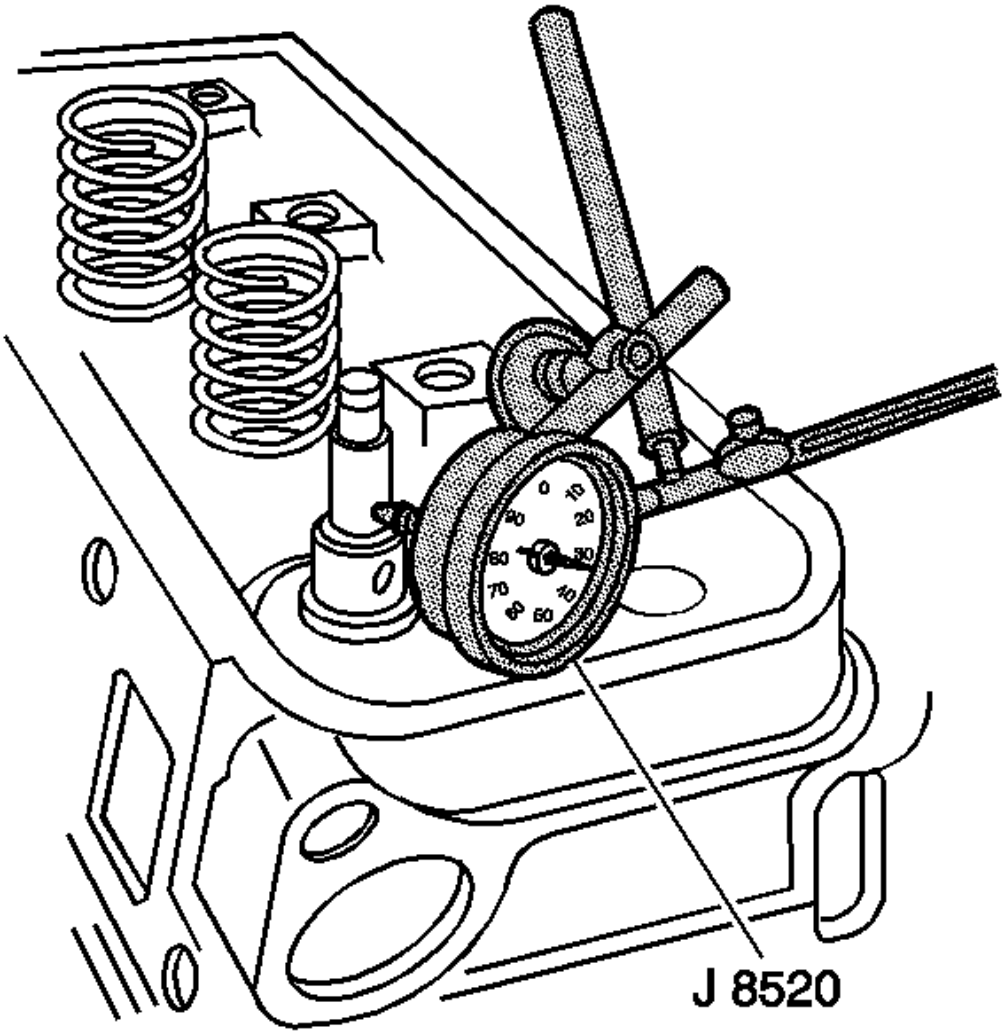


**Fig. 378: Identifying J 8520**
**Courtesy of GENERAL MOTORS CORP.**

5. Use a dial indicator in order to measure the valve stem-to-guide clearance. Complete the following steps:
   1. Install the valve into the guide.
   2. Install the **J 8520** onto the cylinder head. See **Special Tools**.

 © 2011 Mitchell Repair Information Company, LLC.

3. Locate the dial indicator so that the movement of the valve stem from side to side, crosswise to the cylinder head, will cause a direct movement on the indicator stem.
4. Ensure that the indicator stem contacts the side of the valve stem just above the valve guide.
5. Drop the valve head about 2 mm (1/8 in) off the valve seat.
6. Use light pressure and move the valve stem side to side in order to obtain a clearance reading.
7. If the valve stem to guide clearance is not within specification, replace the valve and/or repair the guide in order to obtain the proper clearances.

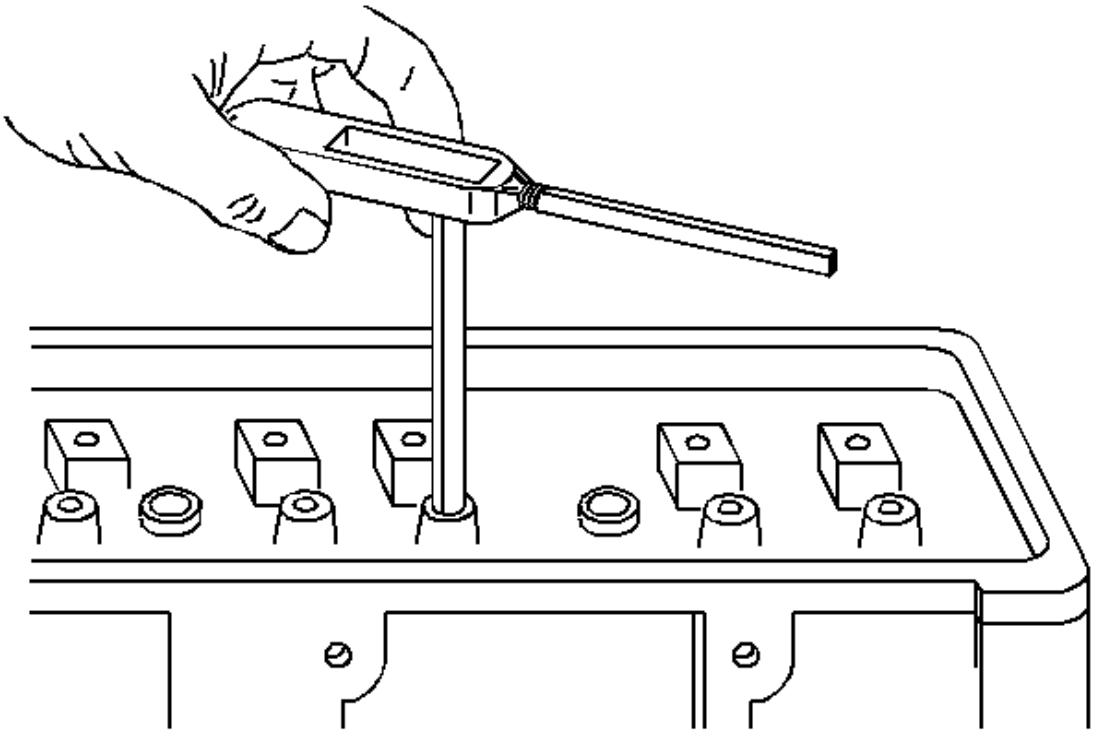

**Fig. 379: Reaming Valve Guides For Oversize Valves**
**Courtesy of GENERAL MOTORS CORP.**

**IMPORTANT: Replace a valve stem that has excessive scoring or wear. A valve guide that is worn and has excessive stem-to-guide clearance may need to be sleeved.**

 © 2011 Mitchell Repair Information Company, LLC.

6. Ream the valve guides for oversize valves if the clearance exceeds the specifications.

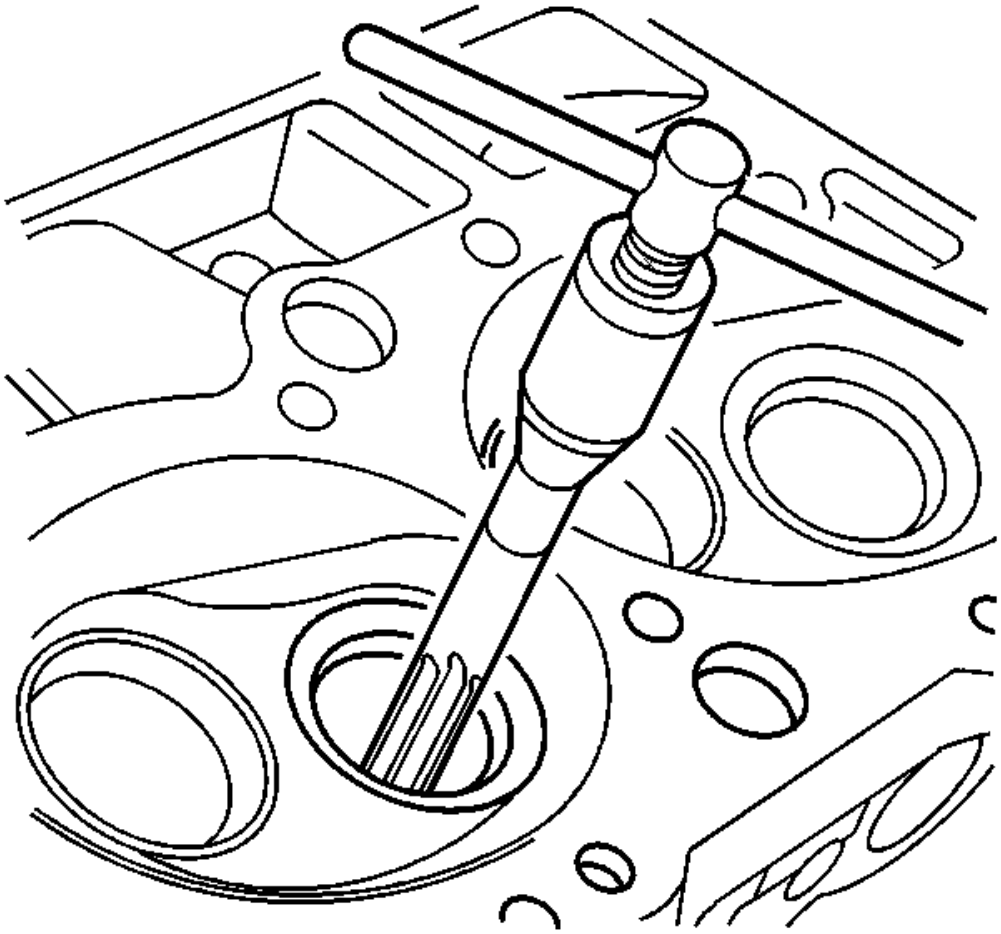

**Fig. 380: Reaming Valve Guide**
**Courtesy of GENERAL MOTORS CORP.**

**IMPORTANT: Follow the manufacturers instructions when using valve guide reamers, sleeves, and installers.**

7. Ream the valve guide in order to obtain the proper specification.

 © 2011 Mitchell Repair Information Company, LLC.

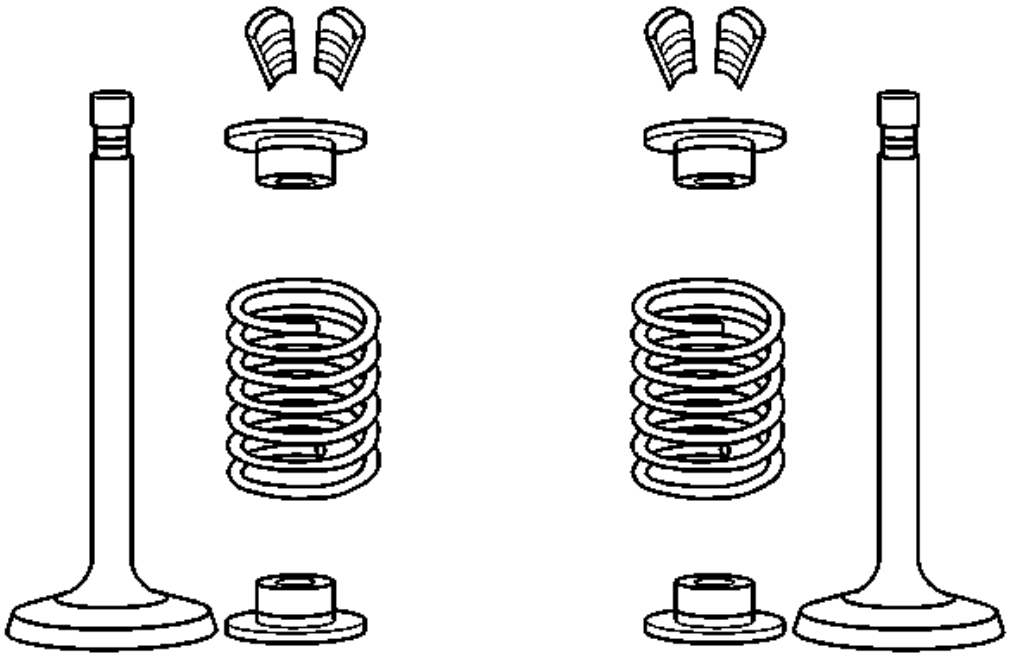

**Fig. 381: Valve Locks, Caps, Seats & Spring**
**Courtesy of GENERAL MOTORS CORP.**

**IMPORTANT: Valves that are pitted must be refaced to the proper angle. Replace valve stems that show excessive wear, or replace valves that are warped. Several different types of equipment are available for refacing valves and valve seats. Follow the manufacturers recommendations when performing these procedures.**

8. Inspect the valves for excessive scoring.

 © 2011 Mitchell Repair Information Company, LLC.

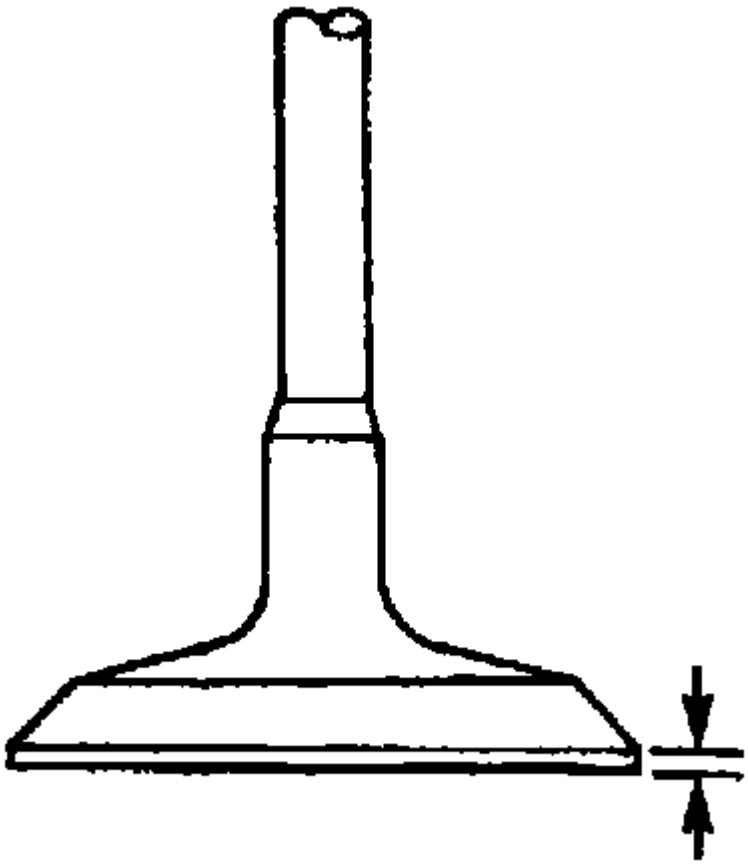

**Fig. 382: Inspecting Valve Margin**
**Courtesy of GENERAL MOTORS CORP.**

9. Inspect the valve face.

   Replace the valve if the valve margin is not within specifications after grinding.

10. Reface pitted valves on a valve refacing machine in order to ensure the correct relationship between the head and the stem.

**IMPORTANT: Reconditioning the valve seats is very important. Ensure perfect seating of the valves in the engine in order to deliver optimum power and performance. Clean the valve guides of all debris and dirt before grinding the valve seat.**

11. Recondition the valve seats after reaming the valve guide bores or installing the new valve guides.
12. The valve seats should be concentric to within 0.05 mm (0.031 in) total indicator reading.

**Cylinder Head Assemble**

**Tools Required**

 © 2011 Mitchell Repair Information Company, LLC.

**J 38606** Valve Spring Compressor. See **Special Tools**.

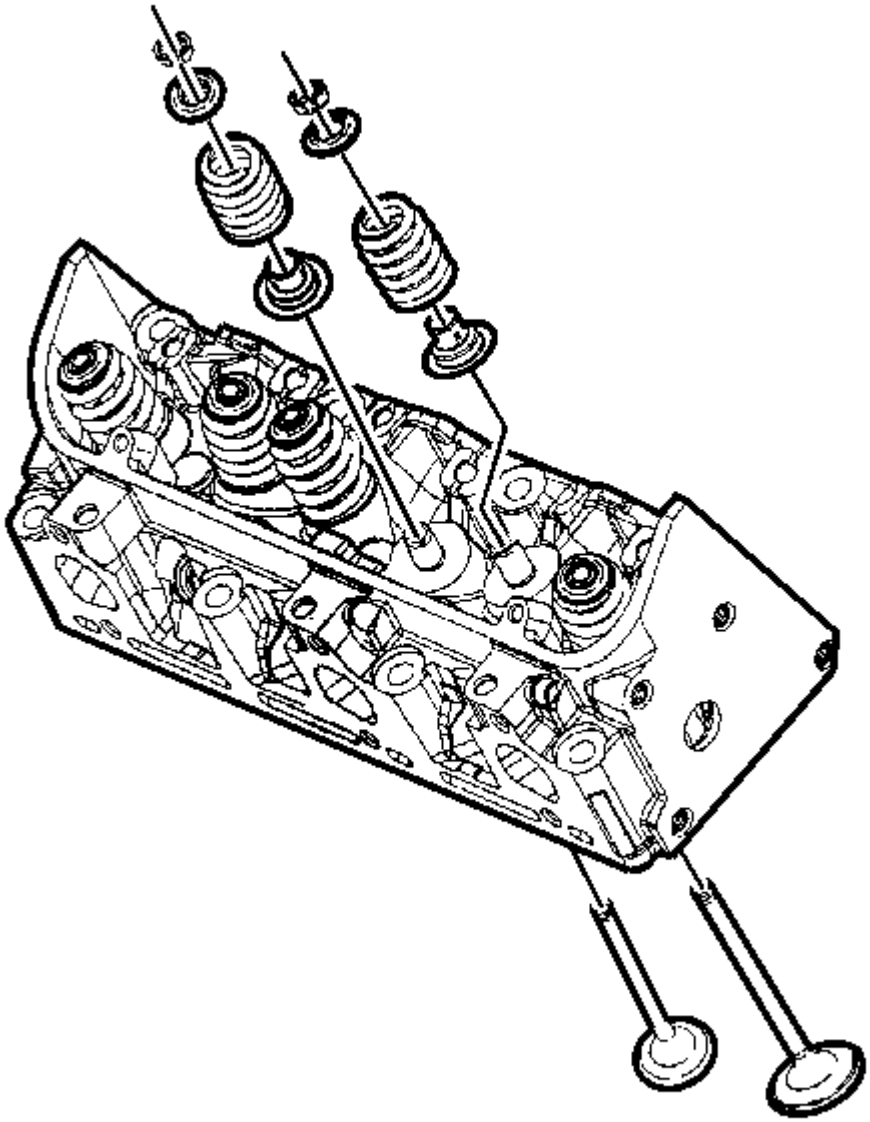

**Fig. 383: View Of Valve Components**
**Courtesy of GENERAL MOTORS CORP.**

**IMPORTANT: Use oversize valve stem seals if you install oversize valves.**

1. Lubricate the valve stem with clean engine oil.

 © 2011 Mitchell Repair Information Company, LLC.

2. Install the valves.
3. Lightly tap the new or reconditioned valves into the valve seat.
4. Install the valve stem oil seals using a suitable tool.
5. Install the valve springs.
6. Install the valve spring caps.

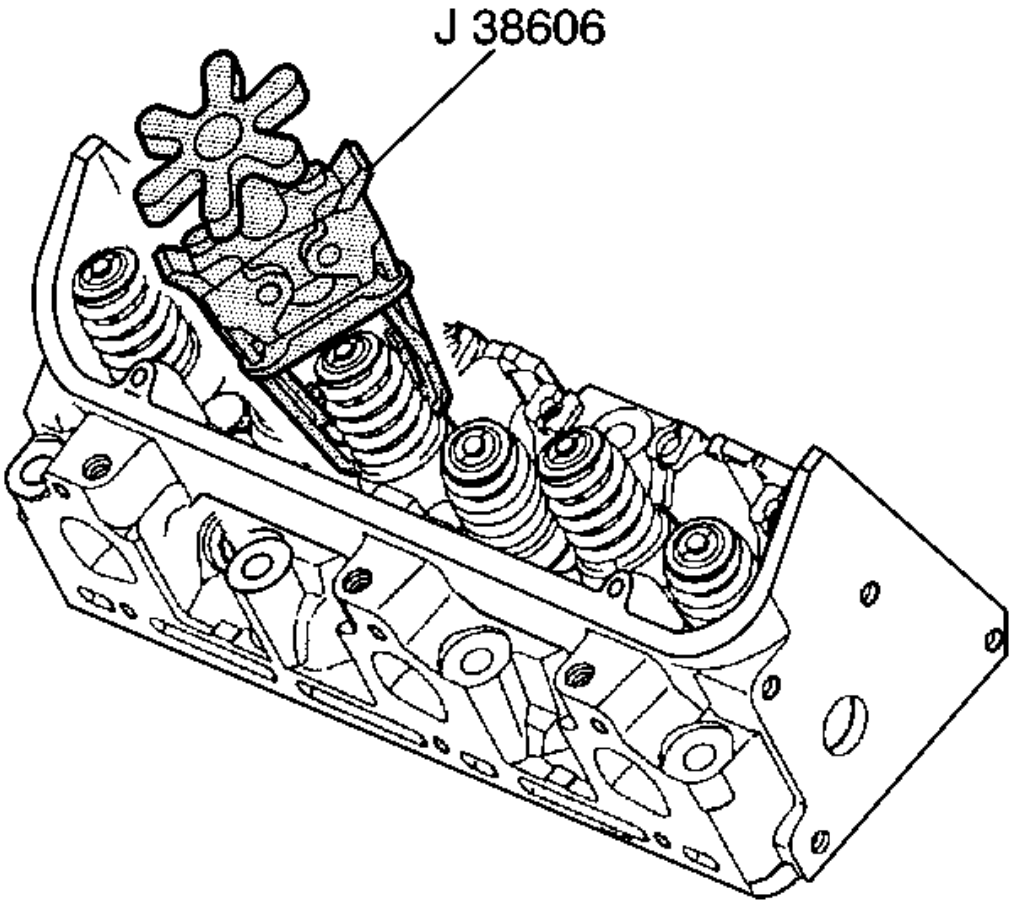


**Fig. 384: Compressing Valve Springs**
**Courtesy of GENERAL MOTORS CORP.**

7. Compress the valve springs using the **J 38606** . See **Special Tools**.
8. Install the valve spring cap keys. Hold the valves in place with grease, if necessary.
9. Release the valve springs.
10. Ensure that the valve locks are seated.

 © 2011 Mitchell Repair Information Company, LLC.

11. Measure valve spring installed height.
12. If the valve spring installed height is not within specifications install 0.25 mm (0.010 in) rocker arm shims as needed. If more than 2 shims are needed replace the cylinder head or valve.

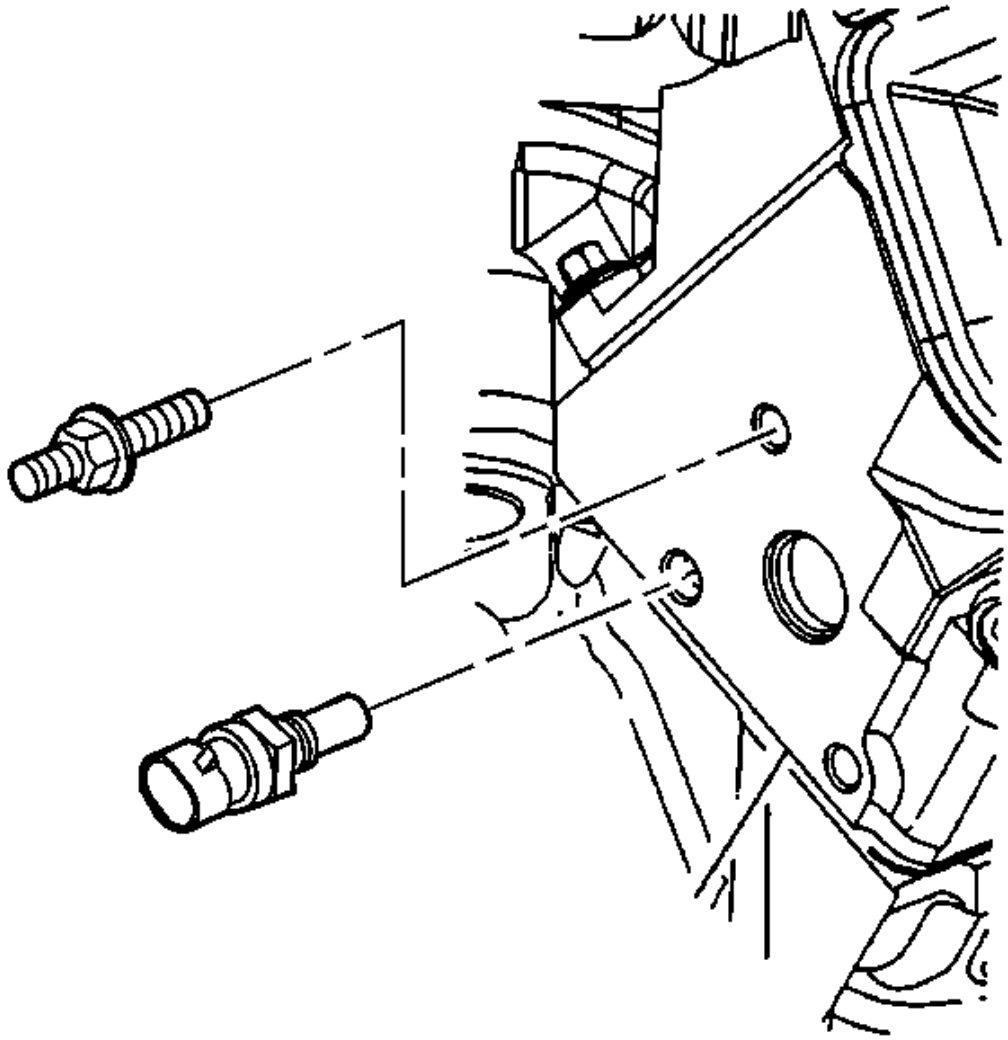

**Fig. 385: Removing Heater Inlet Pipe Stud From Right Cylinder Head**
**Courtesy of GENERAL MOTORS CORP.**

**NOTE: Refer to Fastener Notice in Cautions and Notices.**

13. Install the coolant temperature sensor, if required.

 © 2011 Mitchell Repair Information Company, LLC.

**Tighten:** Tighten the coolant temperature sensor to 23 N.m (17 lb ft).

14. Install the heater inlet pipe stud, if required.

    **Tighten:** Tighten the heater inlet pipe stud to 35 N.m (26 lb ft).

**Oil Pump Disassemble**

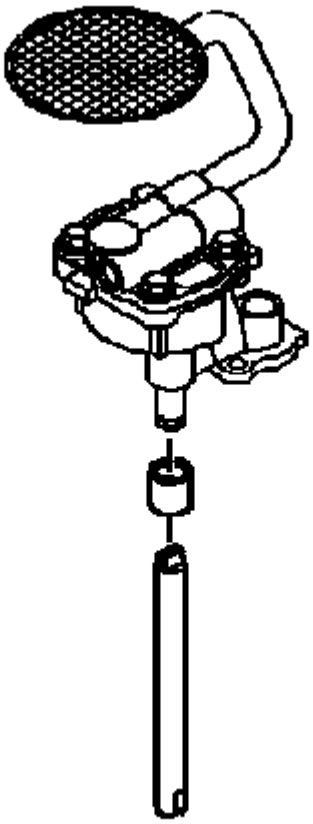

**Fig. 386: View Of Oil Pump Driveshaft & Oil Pump Driveshaft Retainer**
**Courtesy of GENERAL MOTORS CORP.**

1. Remove the oil pump driveshaft and oil pump driveshaft retainer.

 © 2011 Mitchell Repair Information Company, LLC.

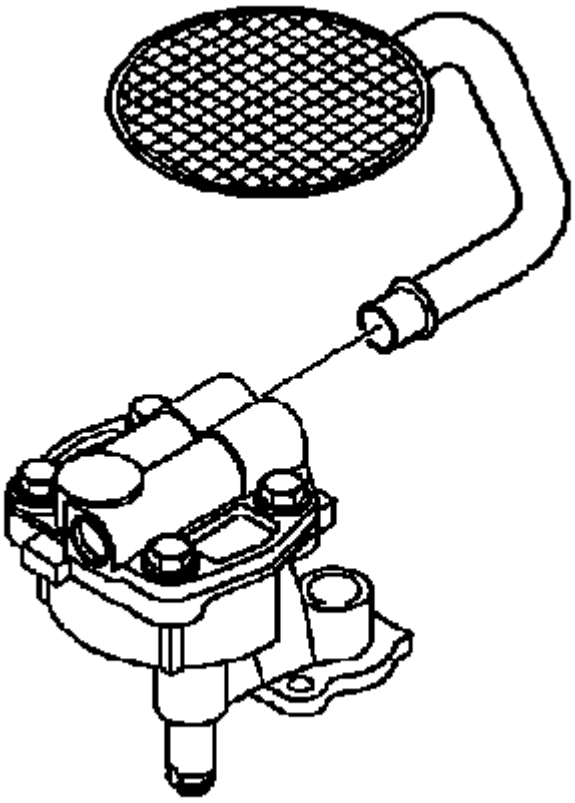

**Fig. 387: Removing Oil Pump Pipe**
**Courtesy of GENERAL MOTORS CORP.**

**IMPORTANT: DO NOT remove the oil pump screen from the pipe. The pipe and oil pump screen are serviced as a complete assembly.**

2. Remove the oil pump screen, if necessary.

   The oil pump screen has a press fit into the oil pump cover.

 © 2011 Mitchell Repair Information Company, LLC.

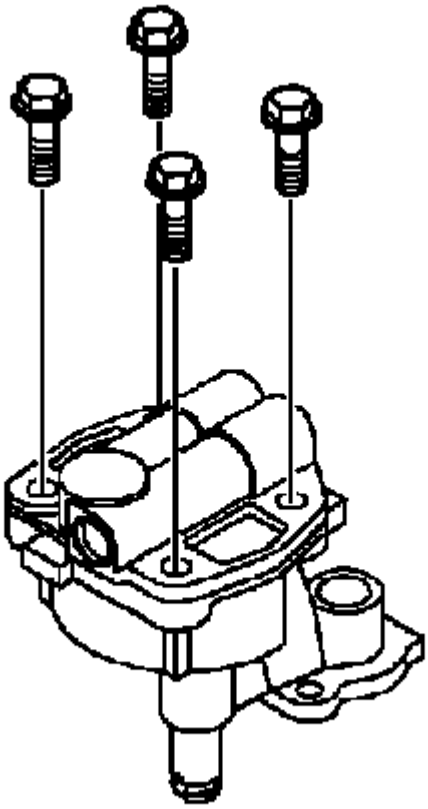

**Fig. 388: View Of Oil Pump Cover Bolts**
**Courtesy of GENERAL MOTORS CORP.**

3. Remove the oil pump cover bolts.

 © 2011 Mitchell Repair Information Company, LLC.

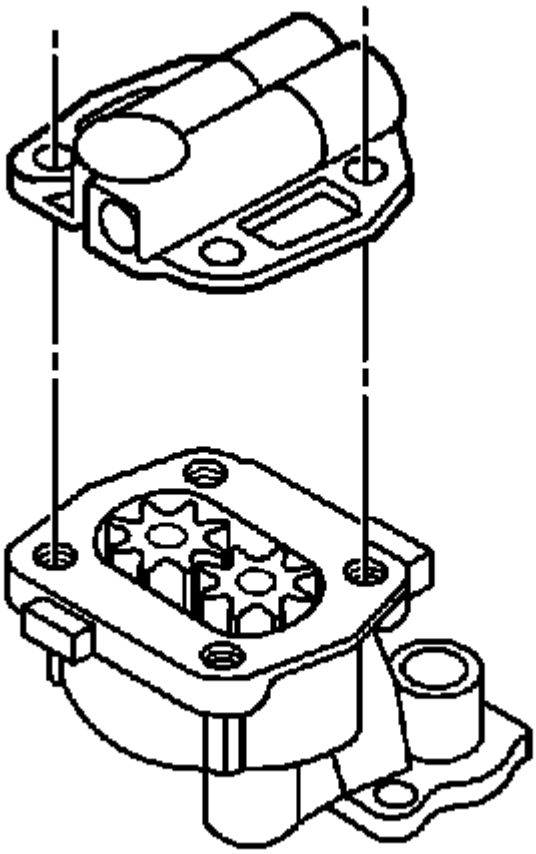

**Fig. 389: View Of Oil Pump Cover**
**Courtesy of GENERAL MOTORS CORP.**

4. Remove the oil pump cover.

 © 2011 Mitchell Repair Information Company, LLC.

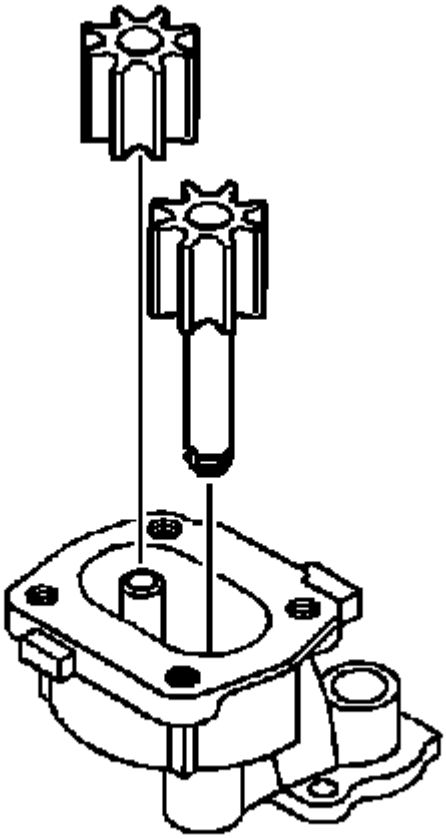

**Fig. 390: View Of Oil Pump Drive Gear & Driven Gear**
**Courtesy of GENERAL MOTORS CORP.**

5. Remove the oil pump drive gear and the oil pump driven gear.
6. Matchmark the gear teeth for assembly.

 © 2011 Mitchell Repair Information Company, LLC.

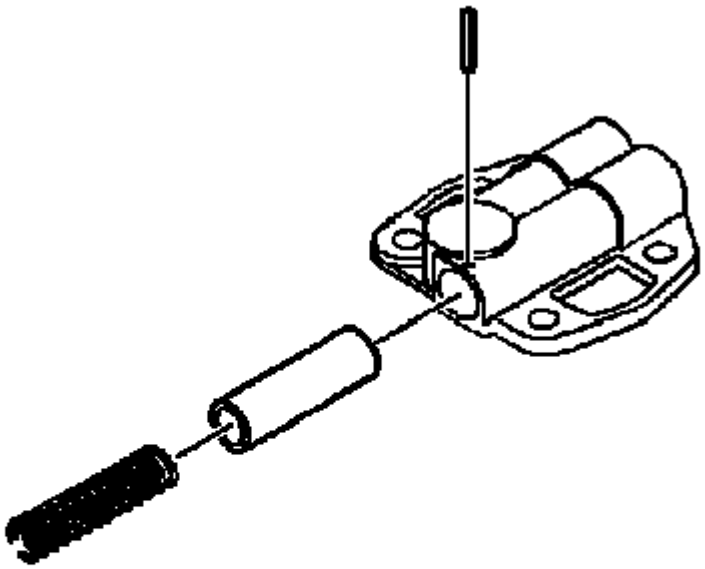

**Fig. 391: View Of Oil Pump Pressure Relief Valve, Spring & Spring Straight Pin**
**Courtesy of GENERAL MOTORS CORP.**

**CAUTION: Refer to Safety Glasses Caution in Cautions and Notices.**

**CAUTION: In some models, the pressure regulator valve spring is under pressure. Remove the retaining pin carefully in order to avoid bodily injury.**

7. Remove the following items:
   1. The oil pump pressure relief valve spring straight pin.
   2. The oil pump pressure relief spring.

**CAUTION: Refer to Cleaning Solvent Caution in Cautions and Notices.**

   3. The oil pump pressure relief valve. If the valve is stuck, soak the pump housing in cleaning solvent.

**Oil Pump Cleaning and Inspection**

 © 2011 Mitchell Repair Information Company, LLC.

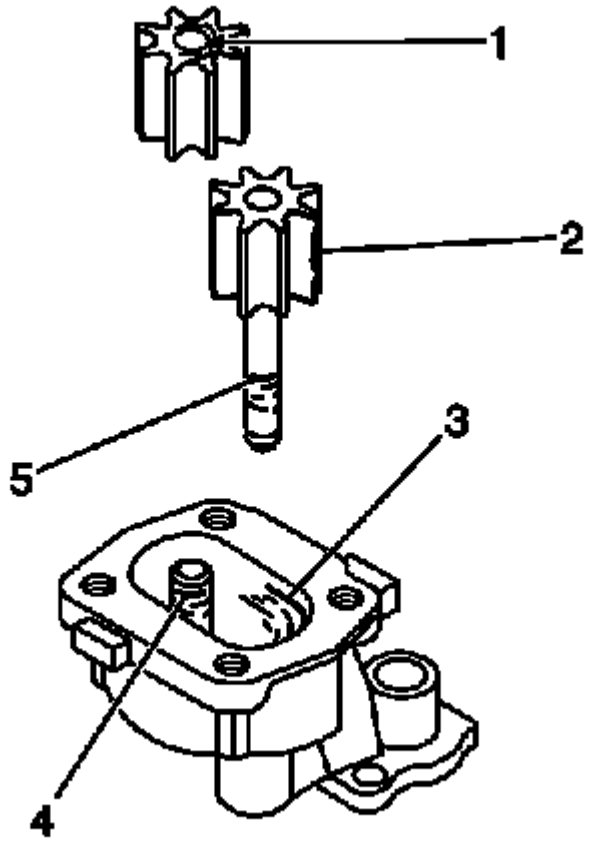


**Fig. 392: Oil Pump Components**
**Courtesy of GENERAL MOTORS CORP.**

**CAUTION: Bodily injury may occur if the cleaning solvent is inhaled or exposed to the skin.**

1. Clean all parts of sludge, oil, and varnish by soaking in cleaning solvent.
2. Inspect for foreign material and determine the source of the foreign material.
3. Inspect the pump housing and cover for the following conditions:
   - Cracks or casting imperfections
   - Scoring (3)
   - Damaged threads
4. Do not attempt to repair the pump housing.

   Replace the pump housing.

5. Inspect the oil pump gears for the following conditions:
   - Scoring (1)

 © 2011 Mitchell Repair Information Company, LLC.

- Excessive wear (2)

6. Inspect the idler shaft for looseness or scoring (4).

   If loose or damaged, replace the oil pump.

7. Inspect the drive gear shaft for looseness or scoring (5).

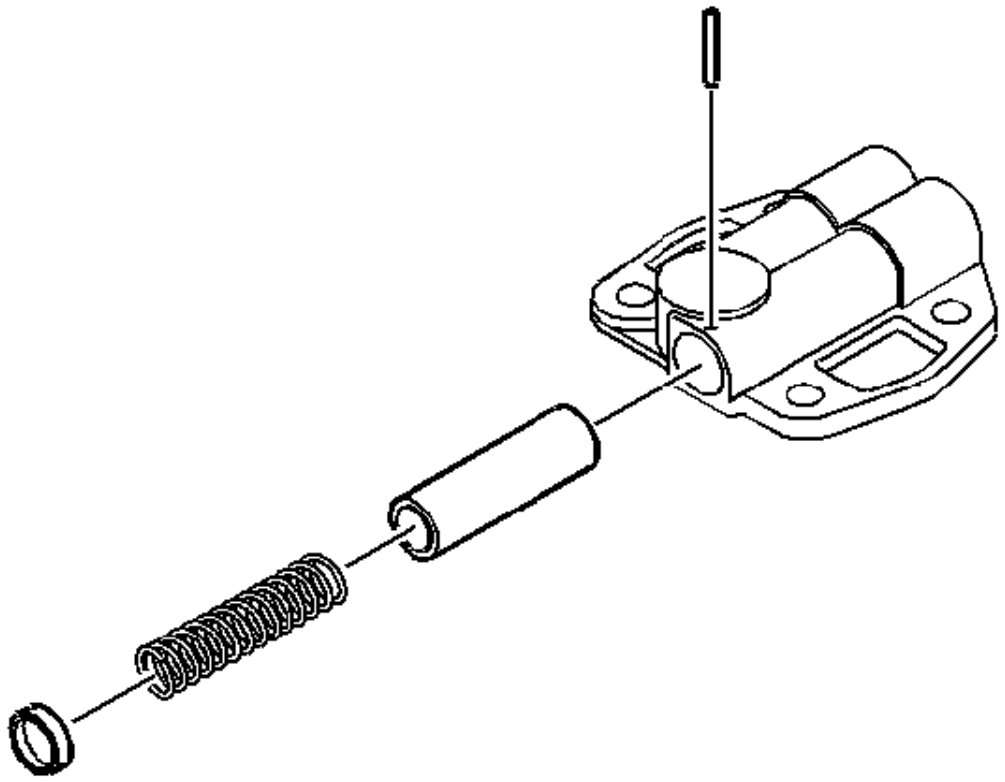

**Fig. 393: View Of Pressure Regulator Valve & Spring**
**Courtesy of GENERAL MOTORS CORP.**

8. Inspect the pressure regulator valve for the following conditions:
   - Scoring
   - Sticking

     Burrs may be removed using a fine oil stone.

9. Inspect the pressure regulator valve spring for the following conditions:

 © 2011 Mitchell Repair Information Company, LLC.

- Loss of tension
- Bending

10. Inspect the suction pipe and screen assembly for the following conditions:
    - Looseness

      If the suction pipe is loose, bent or has been removed, replace the pump body cover and suction pipe.

    - Broken wire mesh or screen

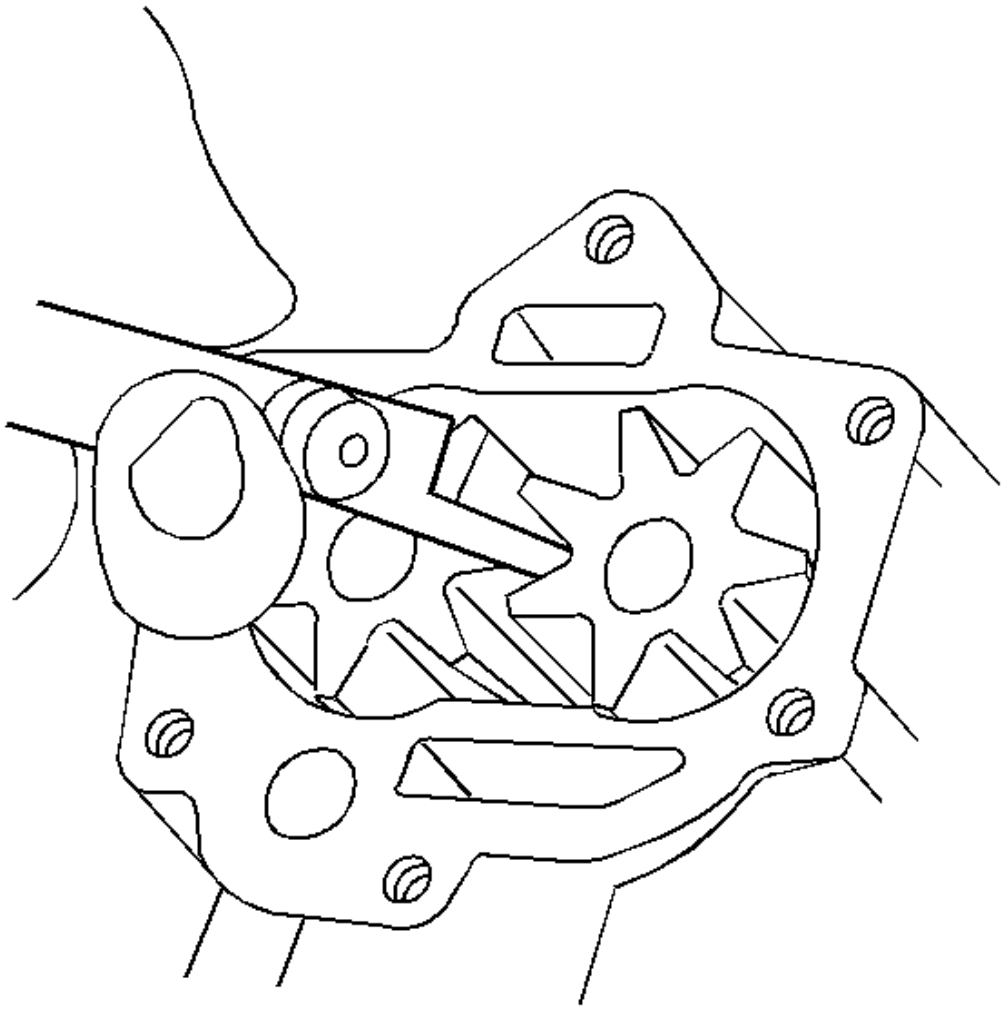

**Fig. 394: Measuring Oil Pump Gear Lash**

 © 2011 Mitchell Repair Information Company, LLC.

**Courtesy of GENERAL MOTORS CORP.**

11. Measure the oil pump gear lash. Install the gears, and measure in several places.

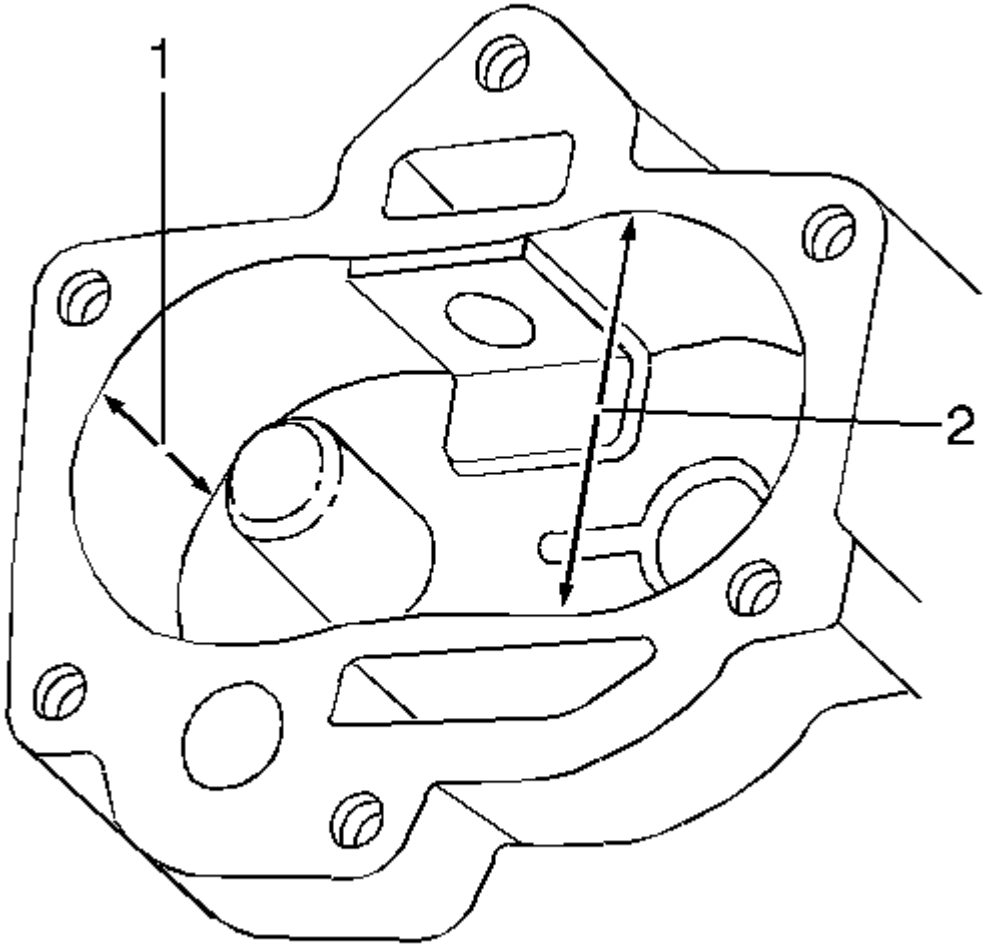


**Fig. 395: Checking Oil Pump Housing Gear Pocket**
**Courtesy of GENERAL MOTORS CORP.**

12. Measure the oil pump housing gear pocket (1, 2).

 © 2011 Mitchell Repair Information Company, LLC.

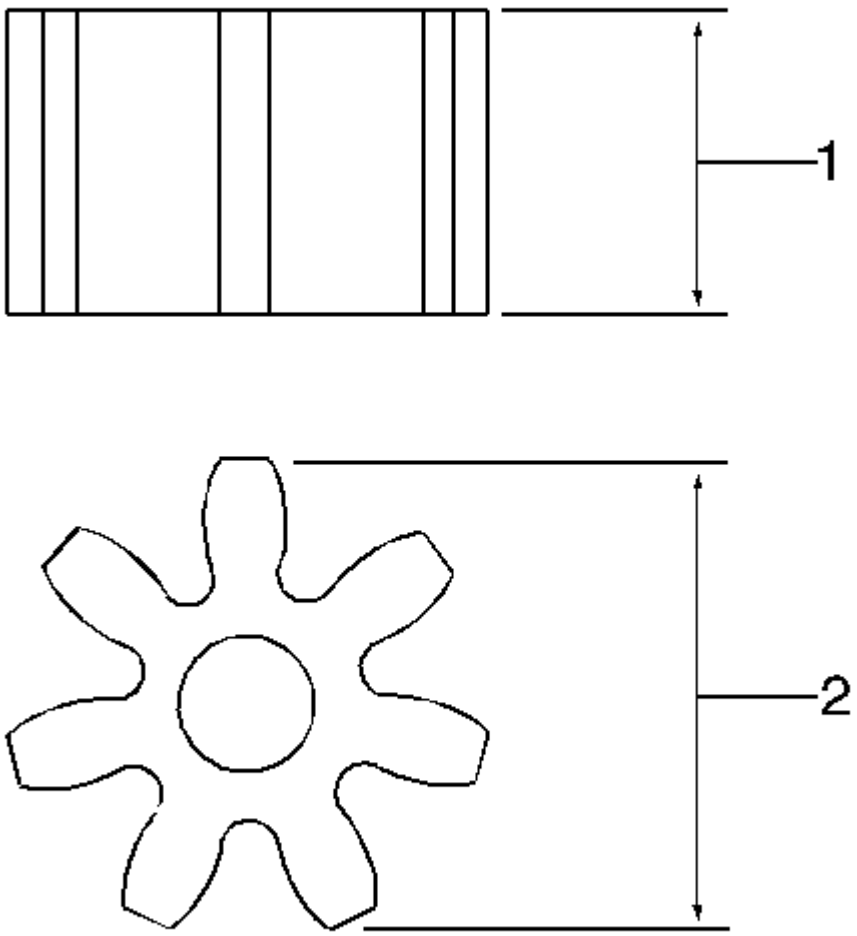


**Fig. 396: View Of Oil Pump Gears**
**Courtesy of GENERAL MOTORS CORP.**

13. Measure the oil pump gears (1, 2).

 © 2011 Mitchell Repair Information Company, LLC.

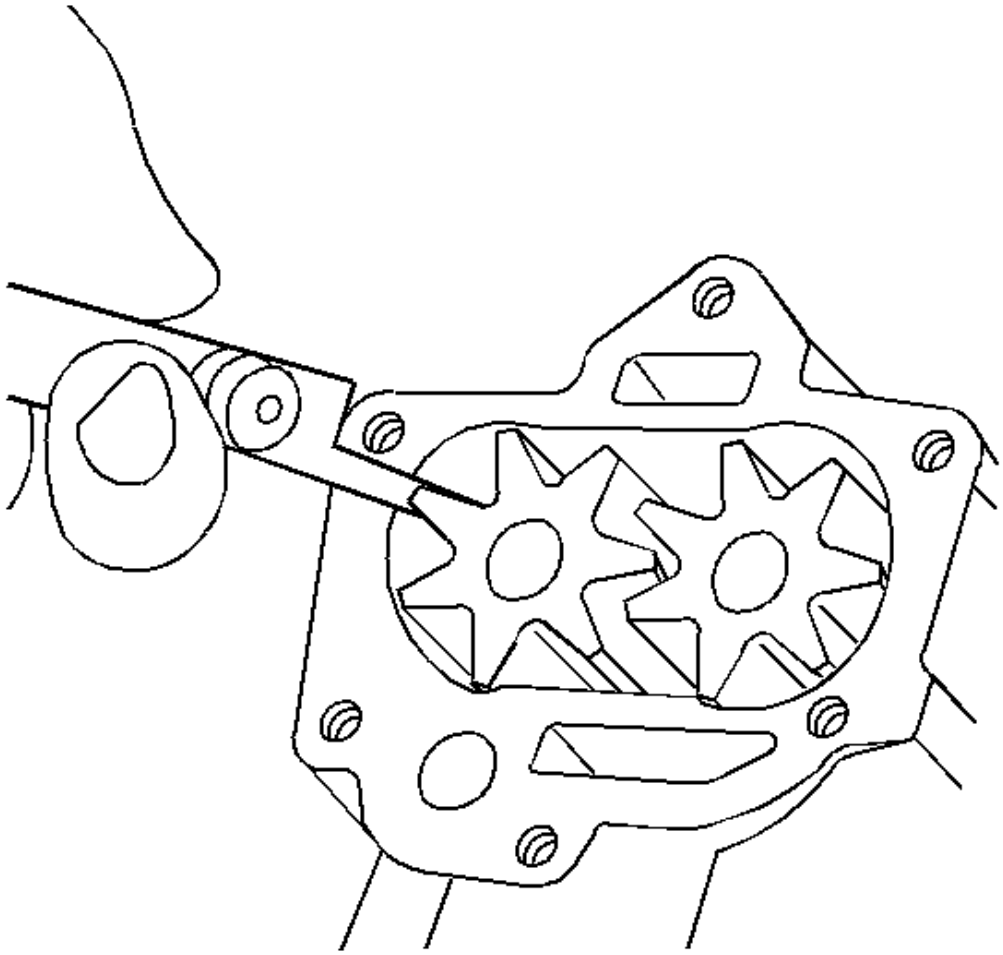

**Fig. 397: Measuring Oil Pump Gear Side Clearance**
**Courtesy of GENERAL MOTORS CORP.**

**IMPORTANT: When deciding pump serviceability based on end clearance, consider depth of the wear pattern in the pump cover.**

14. Measure the oil pump gear side clearance.

**Oil Pump Assemble**

**Tools Required**

**J 22144** Oil Suction Pipe Installer. See **Special Tools**.

 © 2011 Mitchell Repair Information Company, LLC.

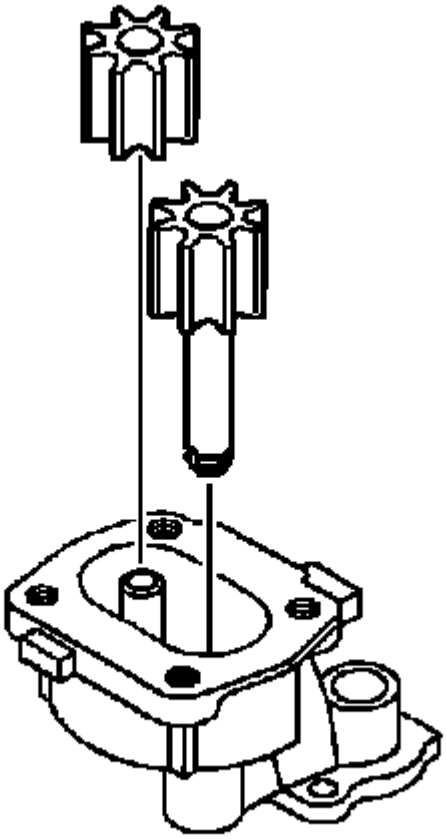

**Fig. 398: View Of Oil Pump Drive Gear & Driven Gear**
**Courtesy of GENERAL MOTORS CORP.**

1. Lubricate all the internal oil pump parts using engine oil during assembly.
2. Install the oil pump gears.

 © 2011 Mitchell Repair Information Company, LLC.

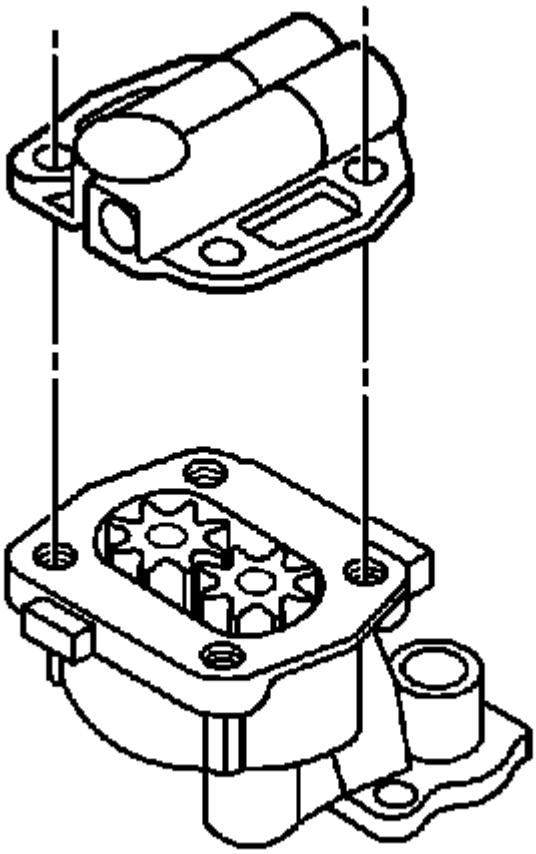

**Fig. 399: View Of Oil Pump Cover**
**Courtesy of GENERAL MOTORS CORP.**

3. Install the oil pump cover.

**NOTE:** **Refer to Fastener Notice in Cautions and Notices.**

4. Install the oil pump cover bolts.

**Tighten:** Tighten the oil pump cover bolts to 10 N.m (89 lb in).

 © 2011 Mitchell Repair Information Company, LLC.

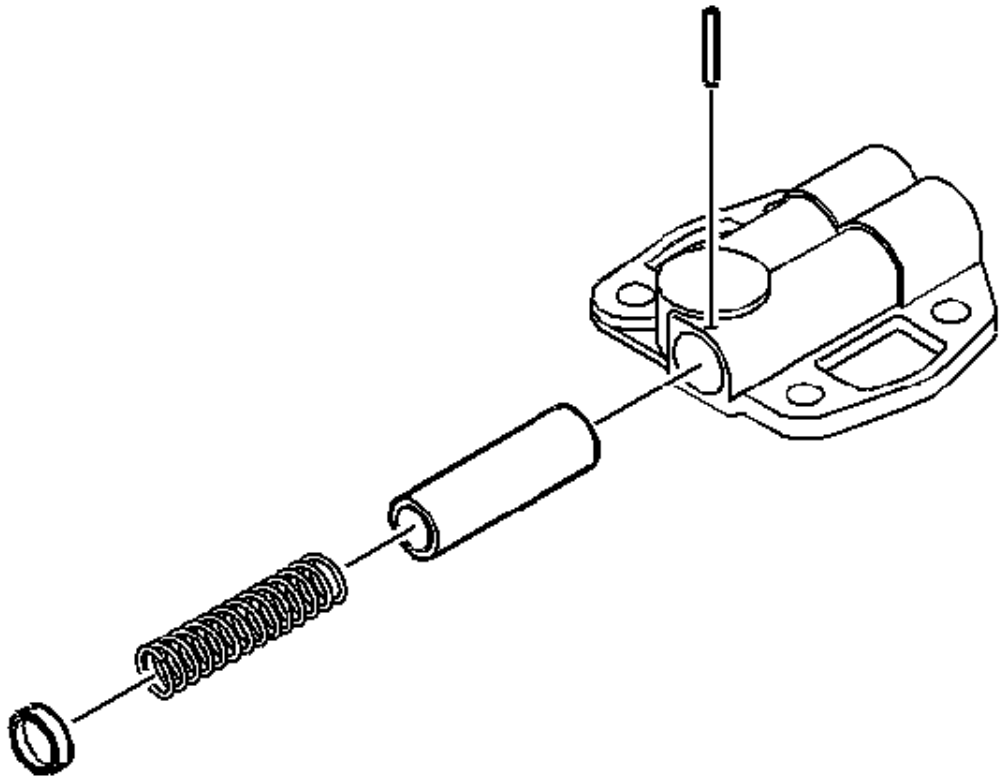

**Fig. 400: View Of Pressure Regulator Valve & Spring**
**Courtesy of GENERAL MOTORS CORP.**

5. Install the pressure regulator valve.
6. Install the pressure regulator spring.
7. Install the cotter pin.

**IMPORTANT: Make sure the cotter pin is properly secured.**

8. Apply sealer GM P/N 12346004, (Canadian P/N 10953480) or the equivalent to the new suction pipe.
9. Tap the new suction pipe into place using **J 22144** and a plastic hammer. See **Special Tools**.

**Engine Front Cover Cleaning and Inspection**

 © 2011 Mitchell Repair Information Company, LLC.

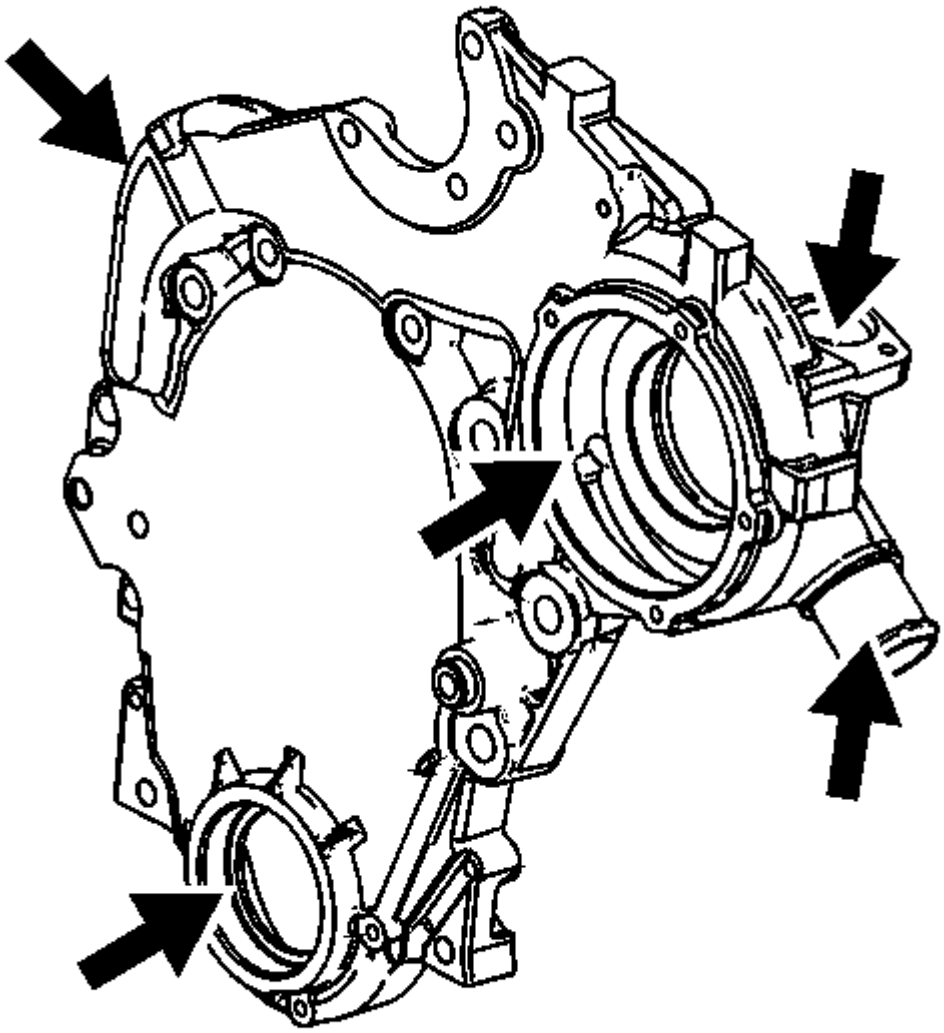

**Fig. 401: Cleaning Engine Front Cover**
**Courtesy of GENERAL MOTORS CORP.**

**CAUTION: Bodily injury may occur if the cleaning solvent is inhaled or exposed to the skin.**

1. Clean the engine front cover with solvent.
2. Dry the engine front cover with compressed air.
3. Inspect the engine front cover sealing surfaces for damage.

 © 2011 Mitchell Repair Information Company, LLC.

4. Inspect the engine front cover threaded holes.
5. Repair or replace the engine front cover as needed.

**Valve Rocker Arm Cover Cleaning and Inspection**

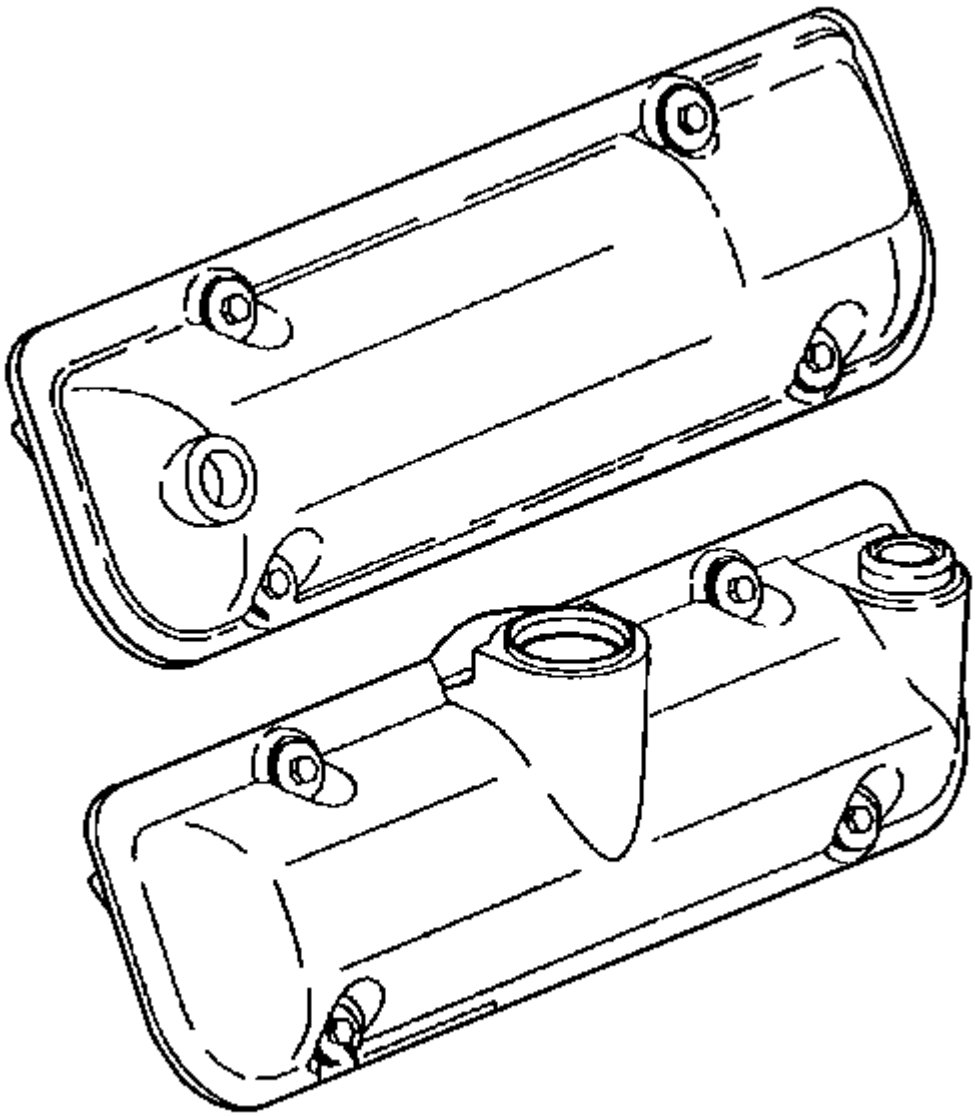

**Fig. 402: Cleaning Valve Rocker Arm Covers**
**Courtesy of GENERAL MOTORS CORP.**

 © 2011 Mitchell Repair Information Company, LLC.

**NOTE:** **Do not attempt to remove the valve from the valve rocker arm cover. The positive crankcase ventilation (PCV) valve is a fixed orifice system. Attempting to remove the PCV valve may result in damage to the rocker arm valve cover.**

1. Remove all rubber grommets from the valve rocker arm covers.
2. Inspect the rubber grommets, if cracked or torn replace.

**CAUTION:** **Bodily injury may occur if the cleaning solvent is inhaled or exposed to the skin.**

3. Clean the valve rocker arm covers with solvent.
4. Flush the carbon from the PCV valve orifices (1) using solvent.
5. Dry the PCV valve orifices using compressed air.
6. Dry the valve rocker arm covers with compressed air.
7. Inspect the valve rocker arm covers for damage and replace if necessary.
8. Install all rubber grommets into the valve rocker arm covers.

**Oil Pan Cleaning and Inspection**

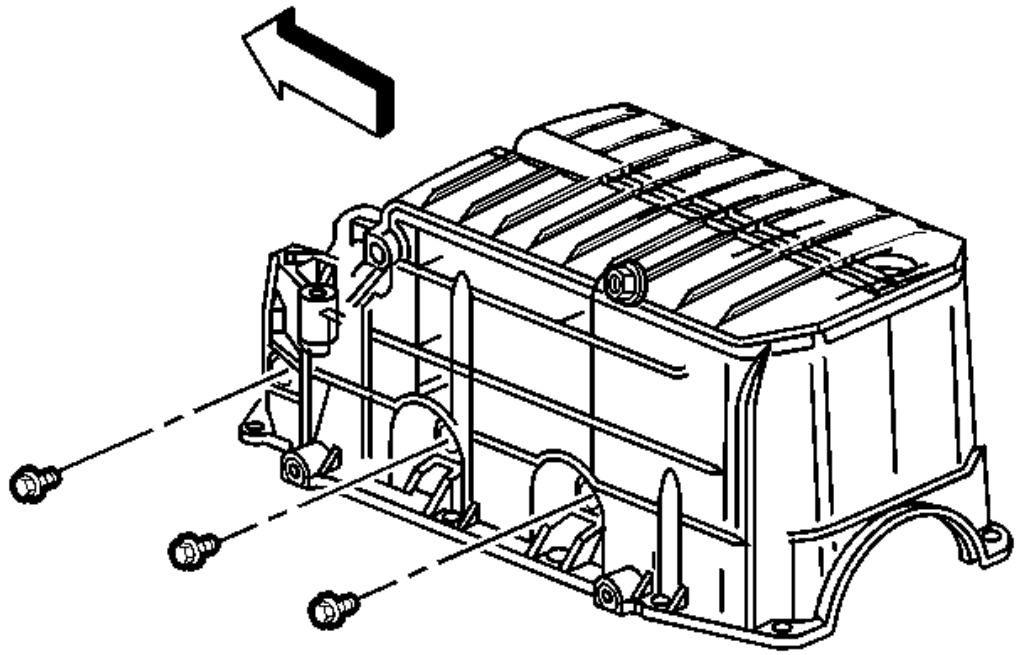

 © 2011 Mitchell Repair Information Company, LLC.

**Fig. 403: Oil Pan**
**Courtesy of GENERAL MOTORS CORP.**

**CAUTION: Bodily injury may occur if the cleaning solvent is inhaled or exposed to the skin.**

1. Clean the oil pan with solvent. Remove all sludge and debris from the oil pan.
2. Dry the oil pan with compressed air.
3. Inspect the oil pan sealing surface for damage and replace if necessary.

**Intake Manifold Cleaning and Inspection - Lower**

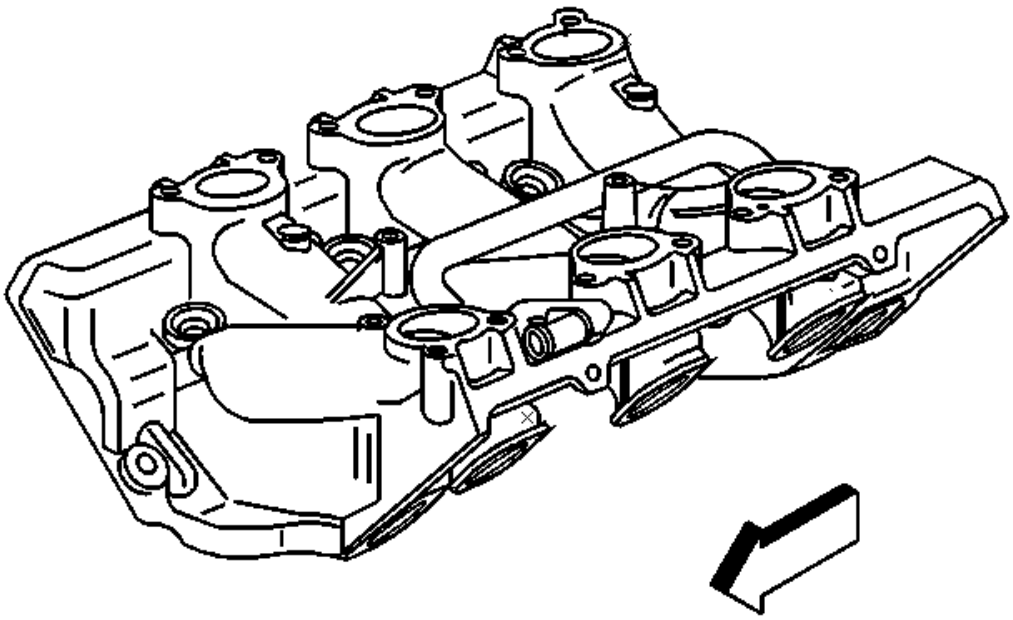

**Fig. 404: Inspecting Lower Intake Manifold**
**Courtesy of GENERAL MOTORS CORP.**

1. Clean the intake manifold gasket mating surfaces using GM P/N 12346139 (Canadian P/N 10953463) or equivalent.
2. Clean the fuel injector bores.
3. Inspect the intake manifold for damage.
4. Repair or replace the intake manifold as necessary.

**Intake Manifold Cleaning and Inspection - Upper**

 © 2011 Mitchell Repair Information Company, LLC.

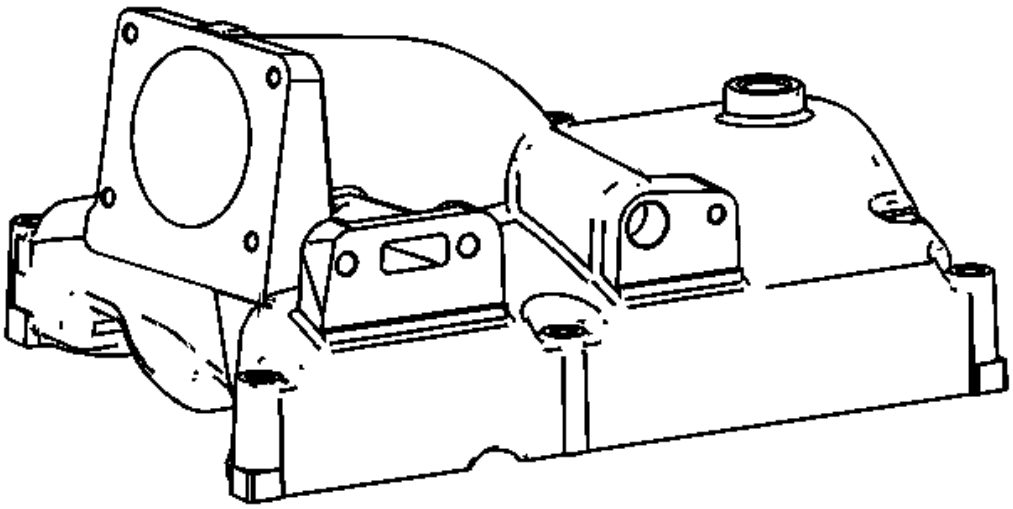

**Fig. 405: Inspecting Upper Intake Manifold**
**Courtesy of GENERAL MOTORS CORP.**

1. Remove the throttle body studs, if required.

**CAUTION: Bodily injury may occur if the cleaning solvent is inhaled or exposed to the skin.**

2. Clean the intake manifold with solvent.
3. Dry the intake manifold with compressed air.
4. Inspect all gasket mating surfaces for nicks or cracks and replace if necessary.
5. Install the throttle body studs, if required.

**Tighten:** Tighten the throttle body studs to 6 N.m (53 lb in).

**Exhaust Manifold Cleaning and Inspection**

 © 2011 Mitchell Repair Information Company, LLC.

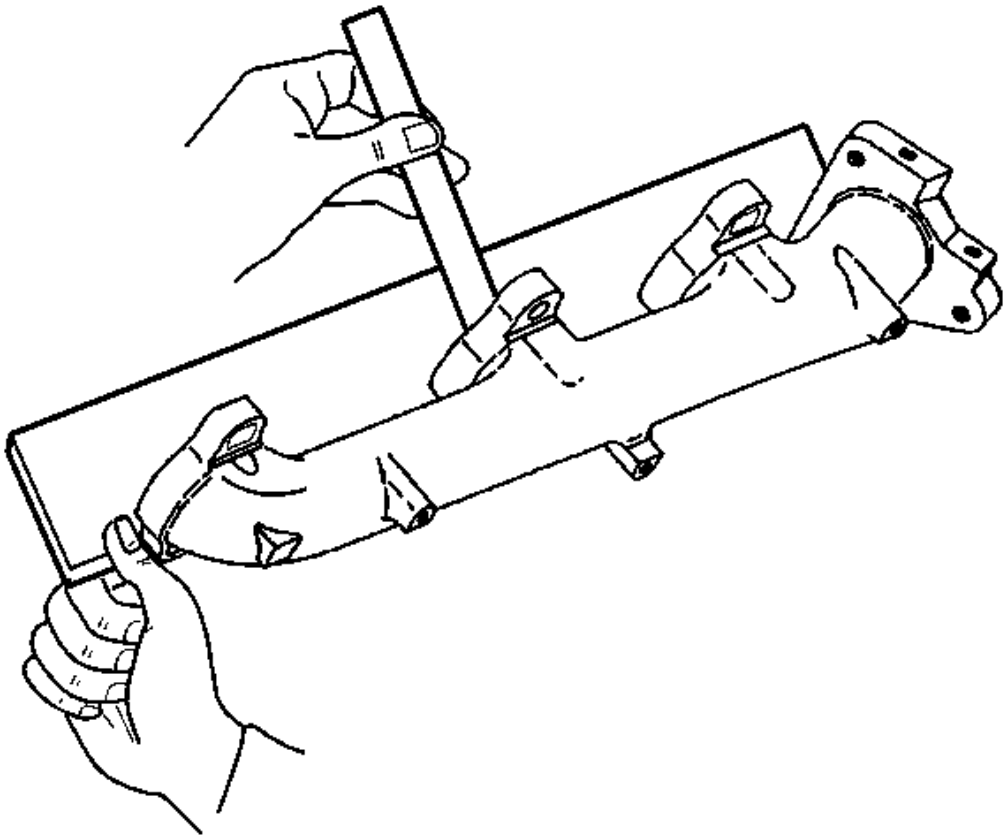

**Fig. 406: Inspecting Exhaust Manifold**
**Courtesy of GENERAL MOTORS CORP.**

**CAUTION: Bodily injury may occur if the cleaning solvent is inhaled or exposed to the skin.**

1. Clean the exhaust manifold and heat shield in solvent.
2. Dry the exhaust manifold and heat shield with compressed air.
3. Inspect the exhaust manifold for cracks or damage.
4. Inspect the left exhaust manifold Exhaust Gas Recirculation (EGR) flange for excessive scratches or damage.
5. Inspect the left exhaust manifold EGR flange bolt hole threads for damage.
6. Inspect the exhaust manifold mating surface for flatness.
7. Use a feeler gage and straight edge to measure the exhaust manifold mating surface which should not exceed 0.5 mm (0.02 in) overall. Any exhaust manifold that is not within specifications must be replaced.

 © 2011 Mitchell Repair Information Company, LLC.

**Water Pump Cleaning and Inspection**

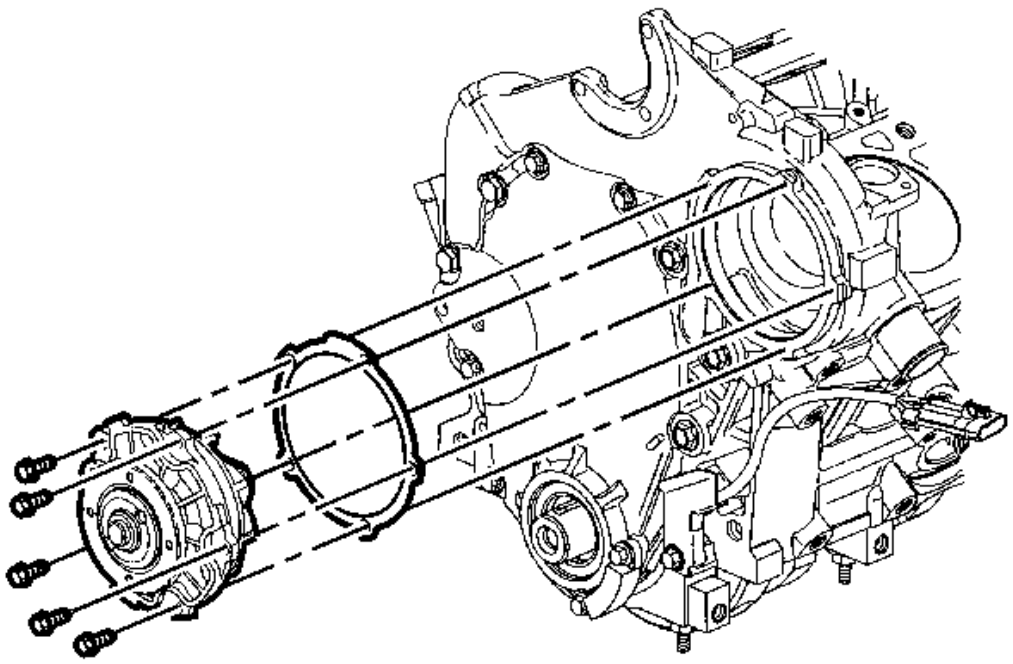

**Fig. 407: View Of Water Pump Assembly & Bolts**
**Courtesy of GENERAL MOTORS CORP.**

1. Remove all gasket material from the sealing surface.
2. Inspect the water pump impeller for damage.
3. Inspect the water pump shaft for looseness.
4. Replace the water pump if necessary.

**Thread Repair**

General purpose thread repair kits are available commercially.

 © 2011 Mitchell Repair Information Company, LLC.

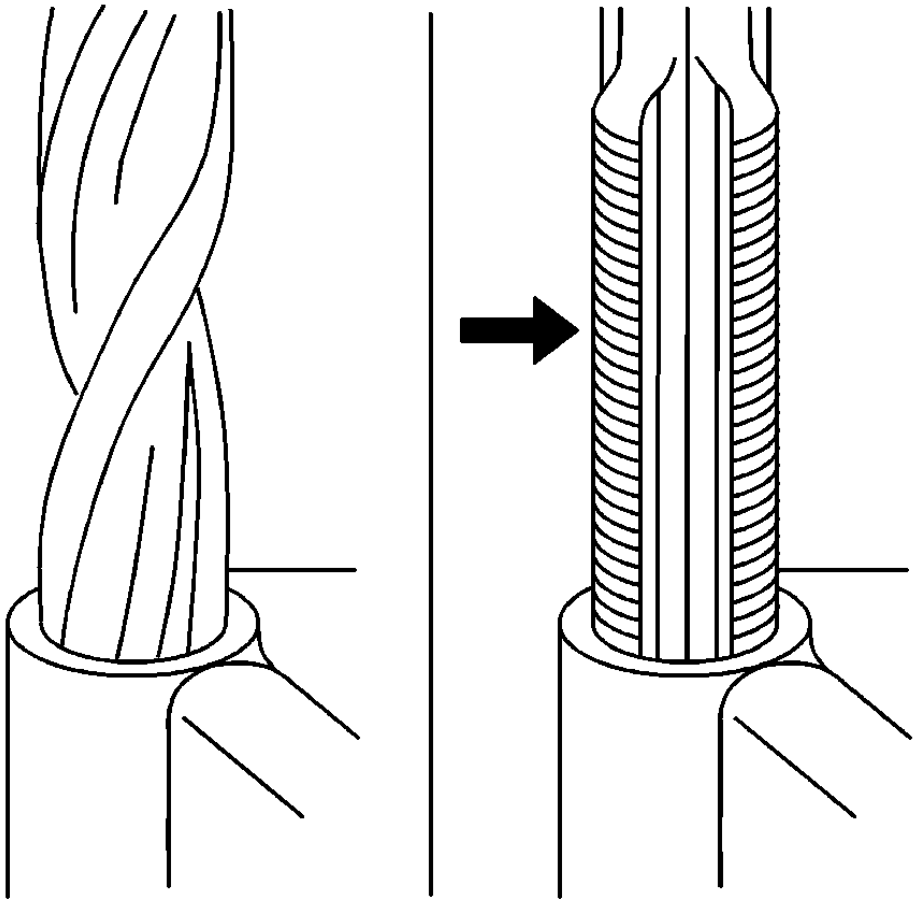

**Fig. 408: Drilling & Tapping Damaged Threads**
**Courtesy of GENERAL MOTORS CORP.**

**CAUTION: Refer to Safety Glasses Caution in Cautions and Notices.**

**IMPORTANT: Refer to the thread repair kit manufacturer's instructions regarding the size of the drill and which tap to use.**
**Always avoid any buildup of chips. Back out the tap every few turns and remove the chips.**

1. Determine the size, the pitch, and the depth of the damaged thread.
2. Adjust the stop collars on the cutting tool as needed. Tap the stop collars to the required depth.
3. Drill out the damaged thread.
4. Remove the chips.
5. Apply clean engine oil to the top thread.

 © 2011 Mitchell Repair Information Company, LLC.

6. Use the tap in order to cut new thread.
7. Clean the thread.

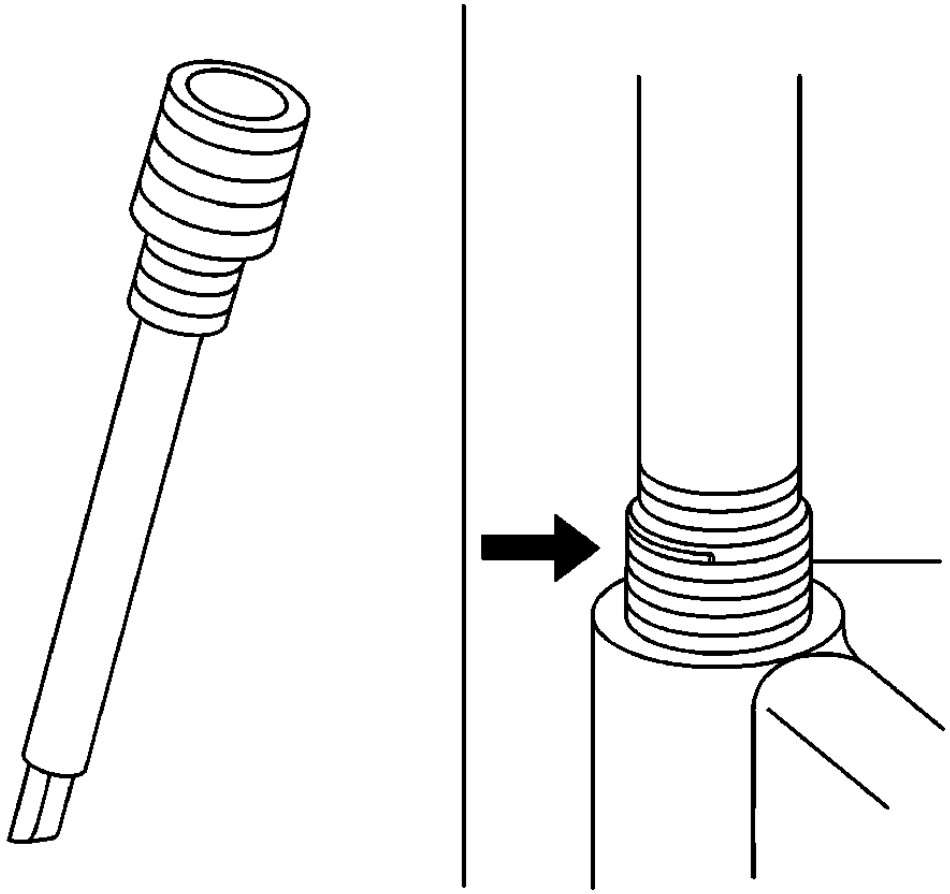

**Fig. 409: Installing Thread Insert**
**Courtesy of GENERAL MOTORS CORP.**

8. Screw the thread insert onto the mandrel of the thread insert installer. Engage the tang of the thread insert onto the end of the mandrel.

**IMPORTANT: The thread insert should be flush to 1 turn below the surface.**

9. Lubricate the thread insert with clean engine oil - except when installing in aluminum - and install the thread insert.
10. If the tang of the thread insert does not break off when backing out the thread insert installer, break off the tang using a drift punch.

**Service Prior to Assembly**

 © 2011 Mitchell Repair Information Company, LLC.

Dirt will cause premature wear of the rebuilt engine. Clean all of the components. Use the proper tools in order to measure components when inspecting for excessive wear. Repair or replace the components that are not within the manufacturers specification. When components are reinstalled into an engine, return the components to their original location, position, and direction. During assembly, lubricate all of the moving parts with clean engine oil or engine assembly lubricant unless otherwise specified. This will provide initial lubrication when the engine is first started.

**Camshaft Bearing Installation**

**Tools Required**

**J 33049** Camshaft Bearing Service Set. See **Special Tools**.

 © 2011 Mitchell Repair Information Company, LLC.

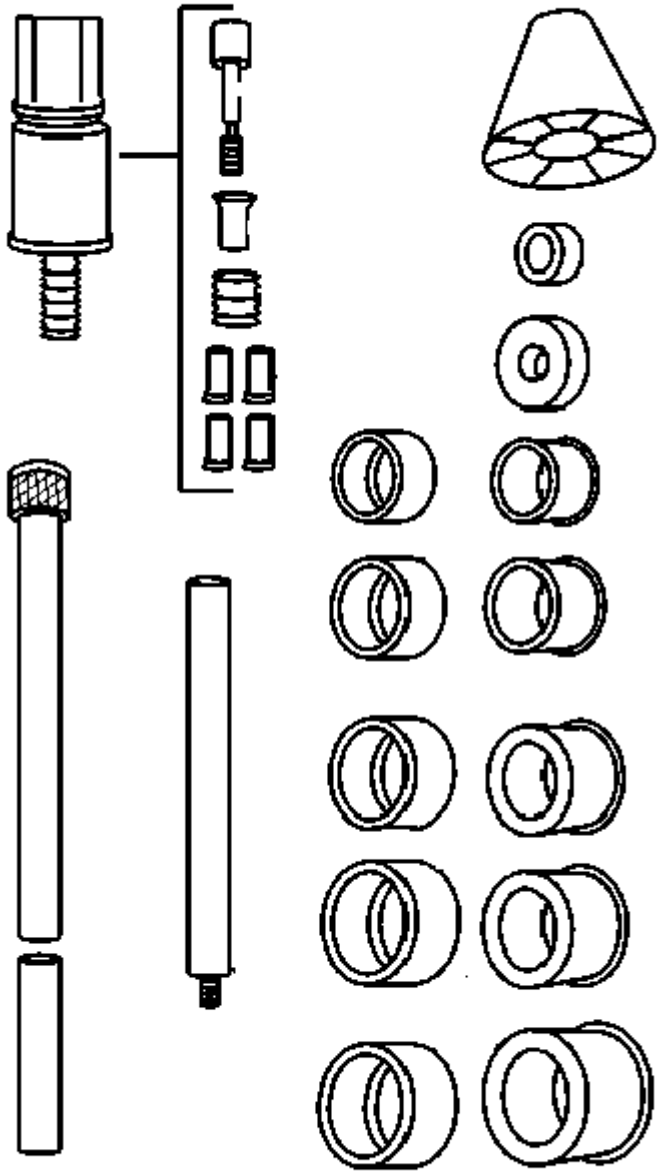

**Fig. 410: Camshaft Bearing Service Set**
**Courtesy of GENERAL MOTORS CORP.**

1. Assemble the **J 33049** according to the manufacturer's instructions. See **Special Tools**.

 © 2011 Mitchell Repair Information Company, LLC.

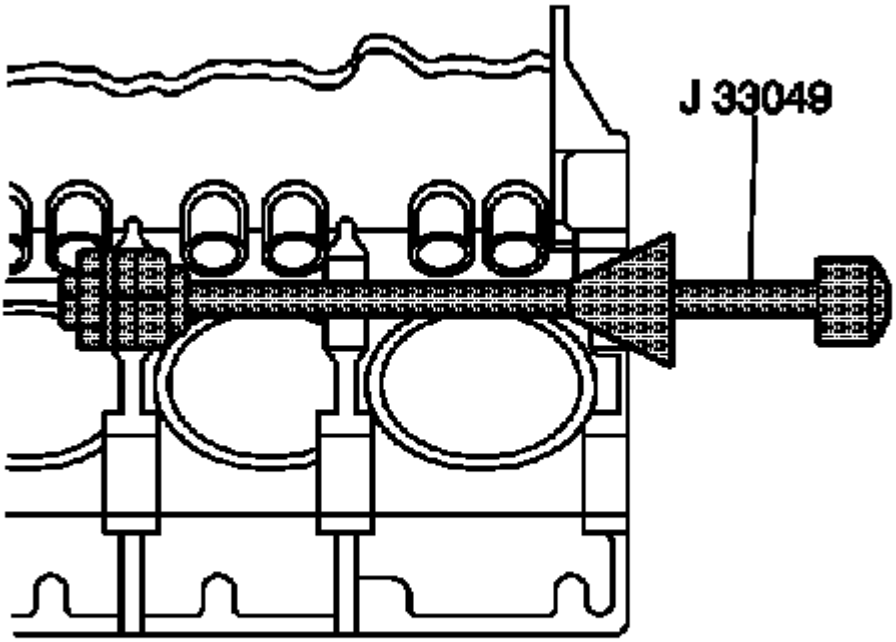


**Fig. 411: Removing/Installation Camshaft Inner Bearing Using J 33049**
**Courtesy of GENERAL MOTORS CORP.**

**NOTE: Severe engine damage may result if the oil holes are not correctly aligned.**

2. Install the camshaft bearings in the following order:
    1. Index the camshaft bearing oil holes with the engine block oil passages.
    2. Place the bearing on the **J 33049** . See **Special Tools**.
    3. Install the third camshaft bearing.
    4. Install the second camshaft bearing.
    5. Install the outer camshaft bearings.

 © 2011 Mitchell Repair Information Company, LLC.

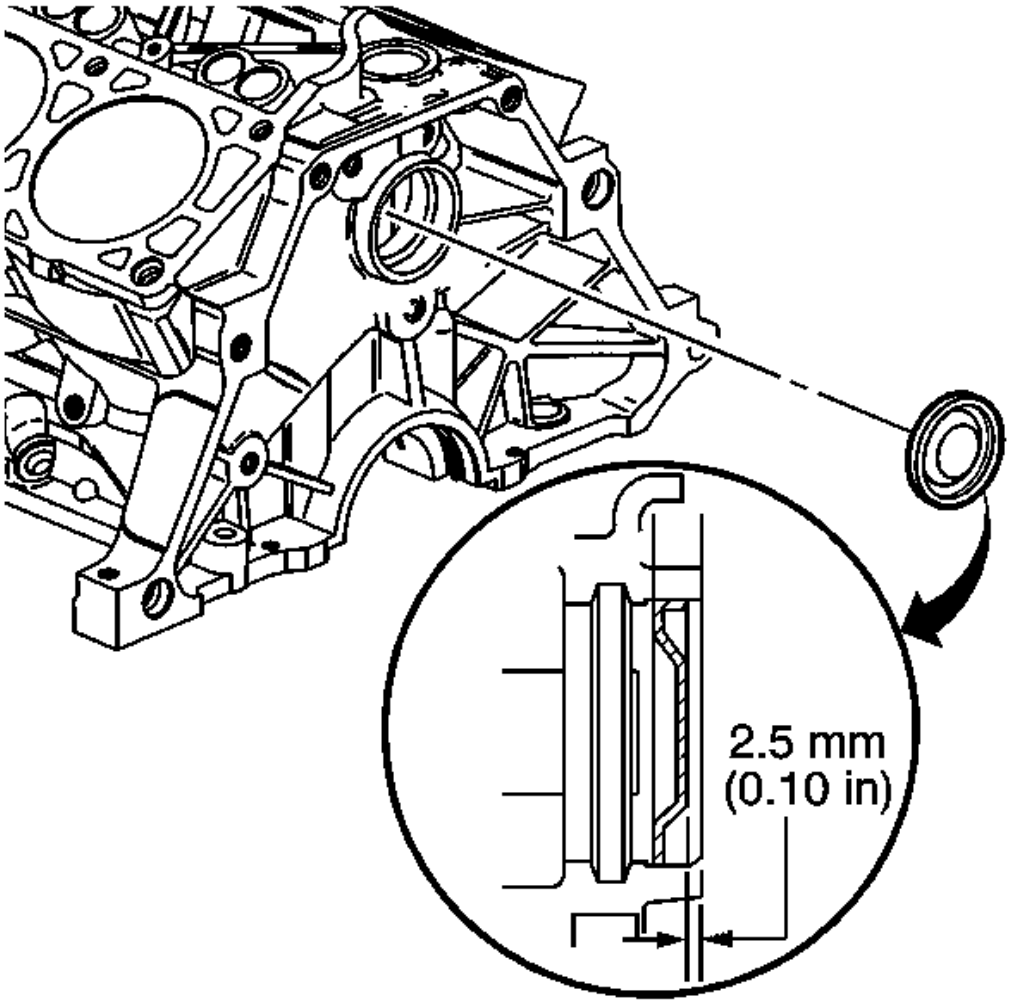


**Fig. 412: Identifying Camshaft Rear Bearing Hole Plug Installation Depth**
**Courtesy of GENERAL MOTORS CORP.**

3. Apply sealer GM P/N 12377901 (Canadian P/N 10953504) or the equivalent to the camshaft rear bearing hole plug.
4. Install the camshaft rear bearing hole plug.

**Crankshaft and Bearings Installation**

**Tools Required**

**J 45059** Angle Meter. See **Special Tools**.

 © 2011 Mitchell Repair Information Company, LLC.

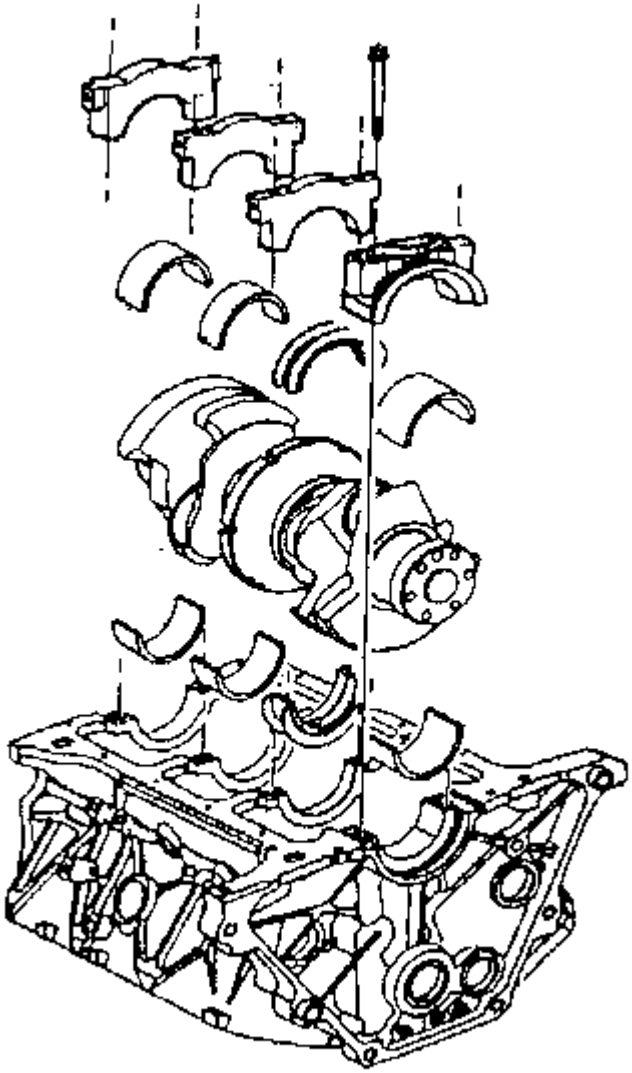

**Fig. 413: View Of Crankshaft, Main Bearings And Bearing Caps**
**Courtesy of GENERAL MOTORS CORP.**

**IMPORTANT: Ensure that the crankshaft bearing cap bolt holes and the crankshaft bearing cap mating surfaces are clean and dry.**

1. Dip the crankshaft bearing cap bolts in clean engine oil.

**NOTE: Upper and lower inserts may be different. Do not obstruct any oil**

 © 2011 Mitchell Repair Information Company, LLC.

**passages.**

2. Place the crankshaft bearing inserts into the crankshaft bearing cap and into the engine block.

**IMPORTANT: The crankshaft bearing inserts will project slightly when put into place. Ensure that the bearing inserts project an equal distance on both sides. Ensure that the insert tangs are engaged.**

3. Lubricate the crankshaft main bearing surface with clean engine oil.
4. Install the crankshaft.

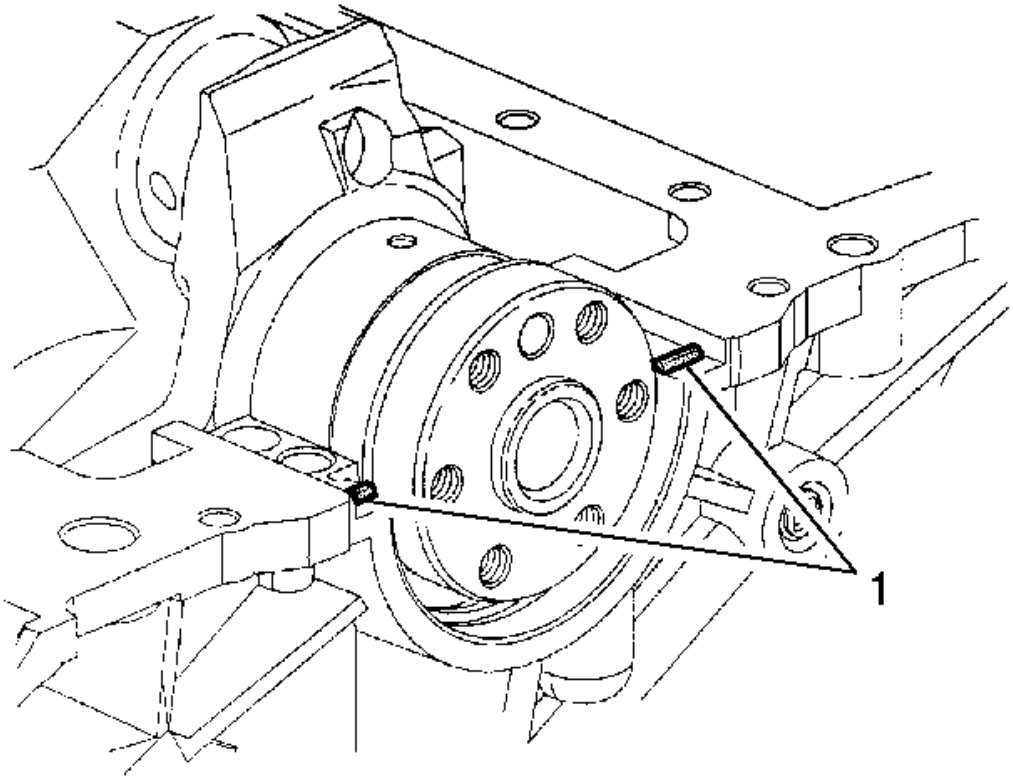


**Fig. 414: Applying Sealer To #4 Crankshaft Main Bearing Cap Sealing Surface**
**Courtesy of GENERAL MOTORS CORP.**

5. Apply a 3.0 mm (0.12 in) bead of GM P/N 1052942 (Canadian P/N 10953466) to the #4 crankshaft main bearing cap sealing surface (1).

 © 2011 Mitchell Repair Information Company, LLC.

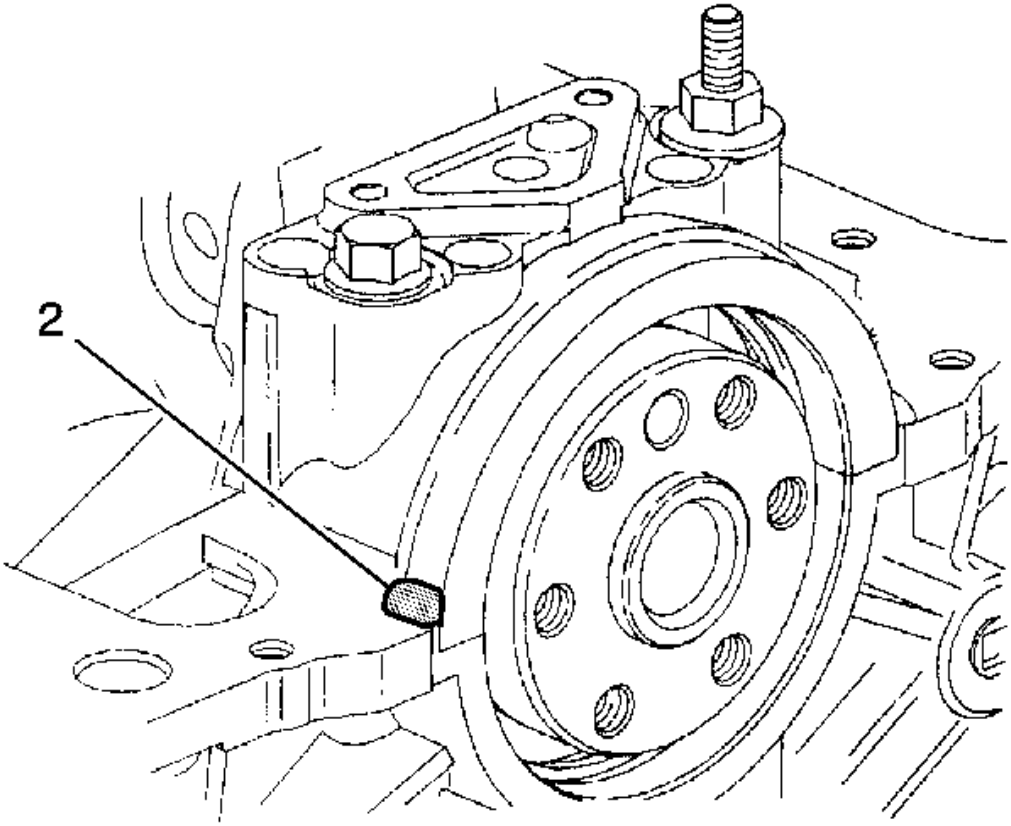


**Fig. 415: Applying Sealer To Rear Of #4 Crankshaft Main Bearing Cap Sealing Surface**
**Courtesy of GENERAL MOTORS CORP.**

**NOTE:** **In order to prevent the possibility of cylinder block or crankshaft bearing cap damage, the crankshaft bearing caps are tapped into the cylinder block cavity using a brass, lead, or a leather mallet before the attaching bolts are installed. Do not use attaching bolts to pull the crankshaft bearing caps into the seats. Failure to use this process may damage a cylinder block or a bearing cap.**

6. Install the crankshaft main bearing caps. Apply a small amount of sealer GM P/N 1052942 (Canadian P/N 10953466) to the rear of the #4 crankshaft main bearing cap sealing surface (2).

**NOTE:** **Refer to Fastener Notice in Cautions and Notices.**

7. Install the crankshaft main bearing cap bolts.

 © 2011 Mitchell Repair Information Company, LLC.

**Tighten:** Use the **J 45059** in order to tighten the crankshaft main bearing cap bolts to 50 N. See **Special Tools**.m (37 lb ft) plus 77 degrees.

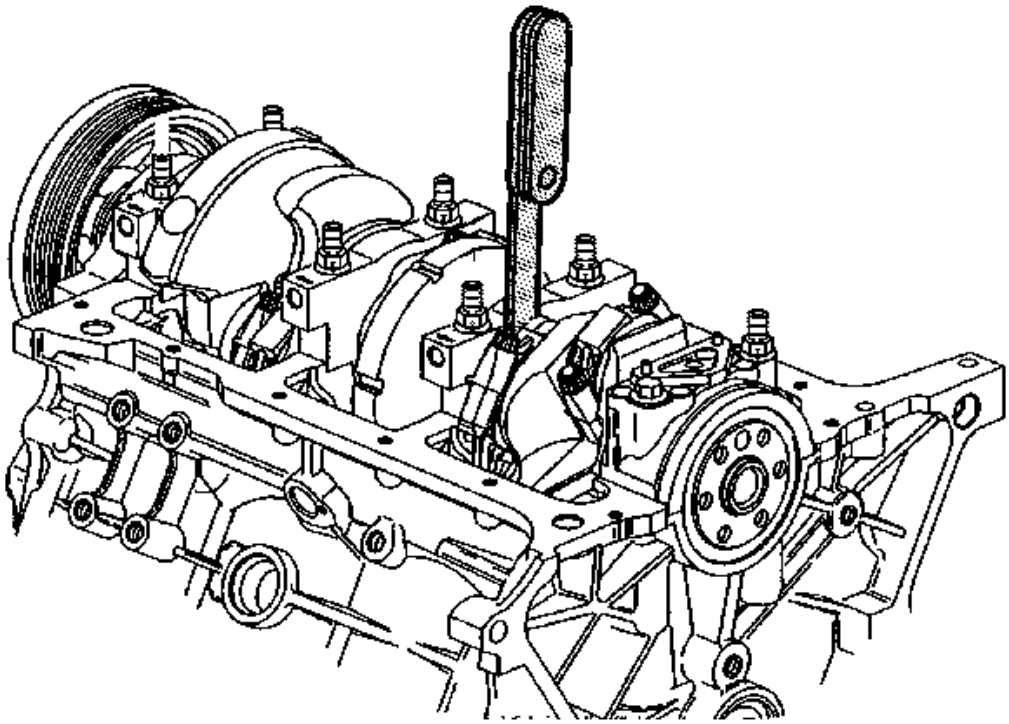

**Fig. 416: Measuring Crankshaft End Play**
**Courtesy of GENERAL MOTORS CORP.**

8. Measure the crankshaft end play.
    1. Thrust the crankshaft forward or rearward.
    2. Insert a feeler gage between the number 3 crankshaft bearing and the bearing surface of the crankshaft and measure the bearing clearance. The proper crankshaft end play clearance is 0.06-0.21 mm (0.002-0.008 in).
    3. If the bearing clearance is not within specifications, inspect the thrust surfaces for nicks, gouges or raised metal. Minor imperfections may be removed with a fine stone.

 © 2011 Mitchell Repair Information Company, LLC.

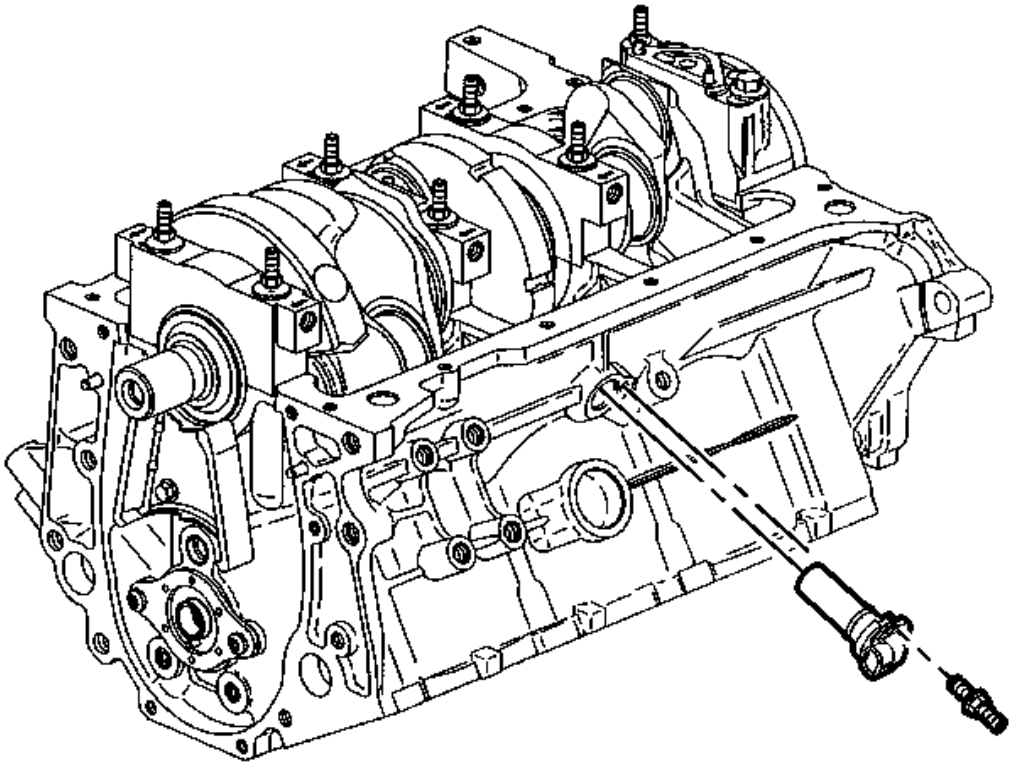

**Fig. 417: View Of Crankshaft Position Sensor & Stud**
**Courtesy of GENERAL MOTORS CORP.**

9. Install the crankshaft position sensor into the side of the engine block.
10. Apply threadlock GM P/N 12345382 (Canadian P/N 10953489) or the equivalent to the crankshaft position sensor stud threads.
11. Install the crankshaft position sensor stud.

    **Tighten:** Tighten the crankshaft position sensor stud to 11 N.m (98 lb in).

12. Install the crankshaft position sensor shield and nut.

    **Tighten:** Tighten the crankshaft position sensor shield nut to 11 N.m (98 lb in).

**Crankshaft Rear Oil Seal Installation**

**Tools Required**

**J 34686** Rear Main Seal Installer. See **Special Tools**.

 © 2011 Mitchell Repair Information Company, LLC.

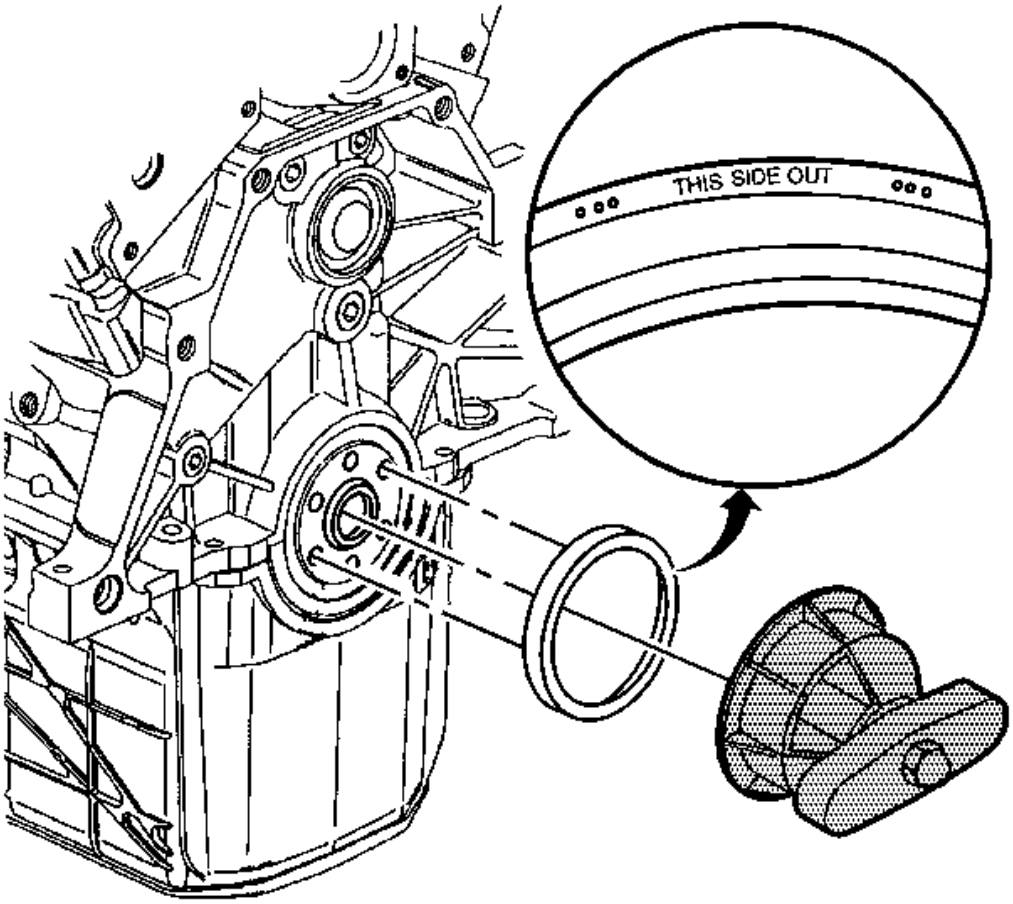


**Fig. 418: Installing Crankshaft Rear Oil Seal**
**Courtesy of GENERAL MOTORS CORP.**

**NOTE:** **Do not apply or use any oil lubrication on the crankshaft rear oil seal, or the seal installer. Do not touch the sealing lip of the oil seal once the protective sleeve is removed. Doing so will damage/deform the seal.**

**NOTE:** **Clean the crankshaft sealing surface with a clean, lint free towel. Inspect lead-in edge of crankshaft for burrs/sharp edges that could damage the rear main oil seal. Remove burrs/sharp edges with crocus cloth before proceeding.**

**IMPORTANT:** **Notice the direction of the rear oil seal. The new design seal is a reverse style as opposed to what has been used in the past. "THIS SIDE OUT" has**

 © 2011 Mitchell Repair Information Company, LLC.

**been stamped into the seal as shown in the graphic.**

1. Carefully remove the protection sleeve from the new crankshaft rear oil seal.
2. Install the crankshaft rear oil seal onto the **J 34686** by sliding the crankshaft rear oil seal over the mandrel using a twisting motion until the back of the crankshaft rear oil seal bottoms squarely against the collar of the tool. See **Special Tools**.

**NOTE: Refer to Fastener Notice in Cautions and Notices.**

3. Perform the following steps in order to install the crankshaft rear oil seal:
   1. Align the dowel pin of the **J 34686** with the dowel pin in the crankshaft. See **Special Tools**.
   2. Attach the **J 34686** to the crankshaft by hand, or tighten attaching screws to 5 N. See **Special Tools**.m (45 lb in).
   3. Turn the T-handle of the **J 34686** in order to engage allow the collar to push the seal into the bore. See **Special Tools**.

      Turn the handle until the collar is tight against the engine block. Ensure that the seal is seated properly.

   4. Loosen the T-handle until the T-handle comes to a stop.
   5. Remove the attaching screws.

**Piston, Connecting Rod, and Bearing Installation**

## Tools Required

- **J 41556** Connecting Rod Guide. See **Special Tools**.
- **J 8037** Piston Ring Compressor. See **Special Tools**.
- **J 45059** Angle Meter. See **Special Tools**.

 © 2011 Mitchell Repair Information Company, LLC.

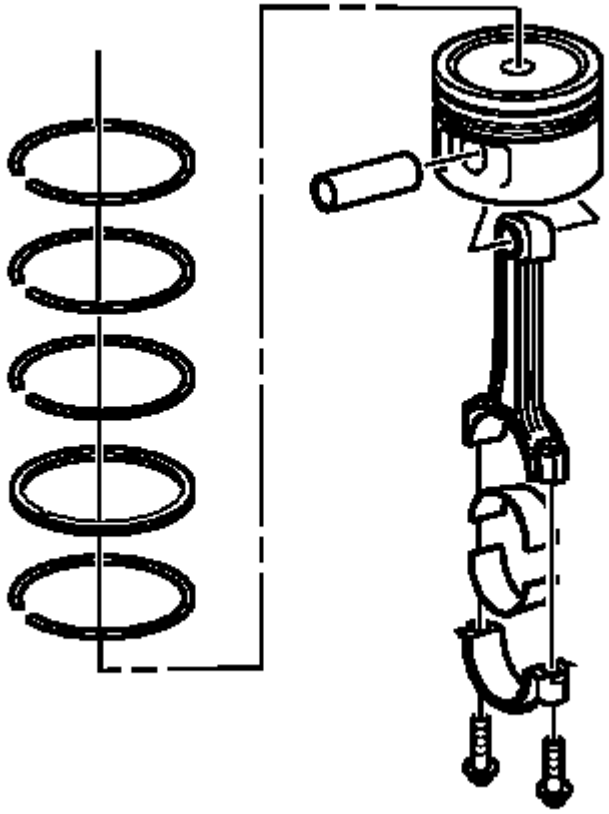

**Fig. 419: Lubricating Piston Components**
**Courtesy of GENERAL MOTORS CORP.**

**IMPORTANT: The piston and cylinder bore have been measured and the bore has been sized for the proper clearance. Install the piston and connecting rod assembly into the proper cylinder bore. The piston alignment mark MUST face the front of the engine block.**

1. Lightly lubricate the following components with clean engine oil:
   - The piston
   - The piston rings
   - The cylinder bore
   - The bearing surfaces
2. Stagger the oil control ring end gaps a minimum of 90 degrees.
3. Stagger the compression ring end gaps a minimum of 25 mm (1.0 in).
4. Install the **J 8037** onto the piston and compress the piston rings. See **Special Tools**.

 © 2011 Mitchell Repair Information Company, LLC.

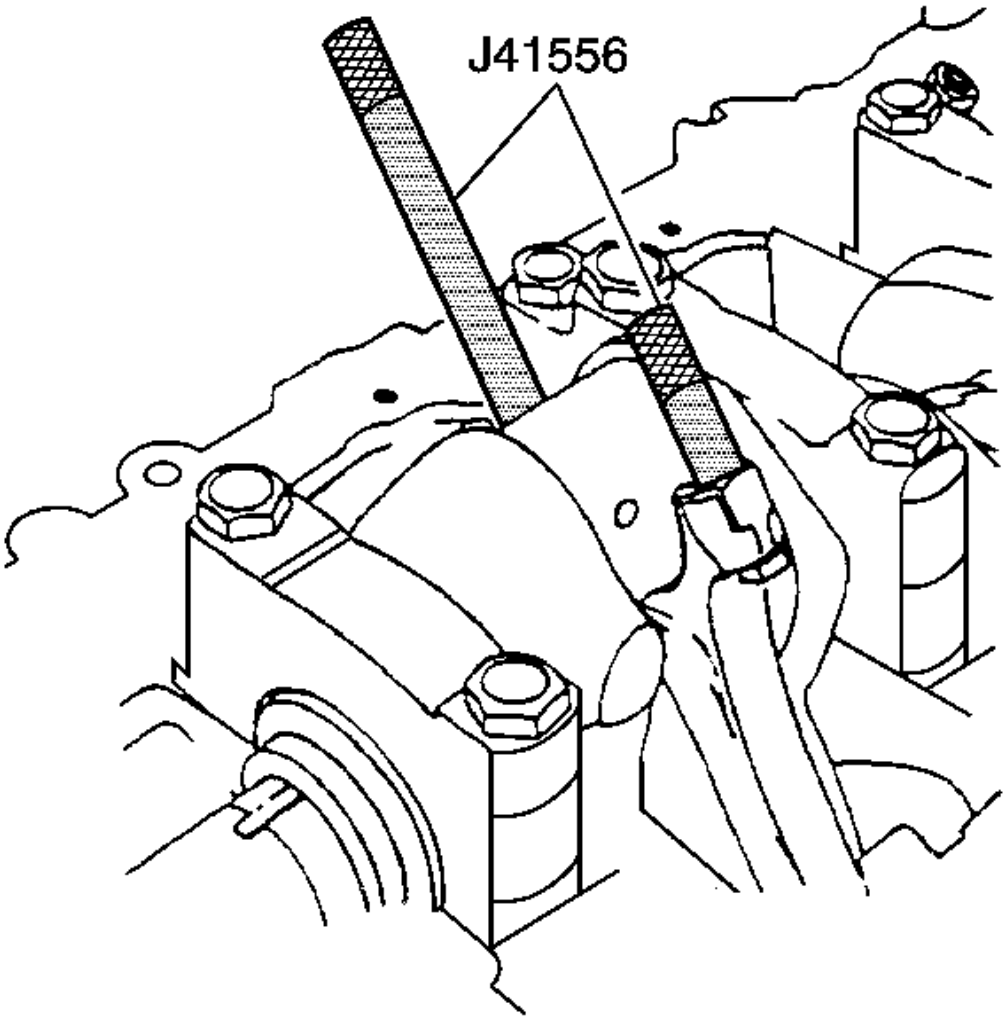


**Fig. 420: Installing J 41556 On Connecting Rod Guides**
**Courtesy of GENERAL MOTORS CORP.**

**IMPORTANT: The piston alignment mark MUST be facing the front of the engine block.**

5. Install the **J 41556** on the connecting rod guides. See **Special Tools**.

 © 2011 Mitchell Repair Information Company, LLC.

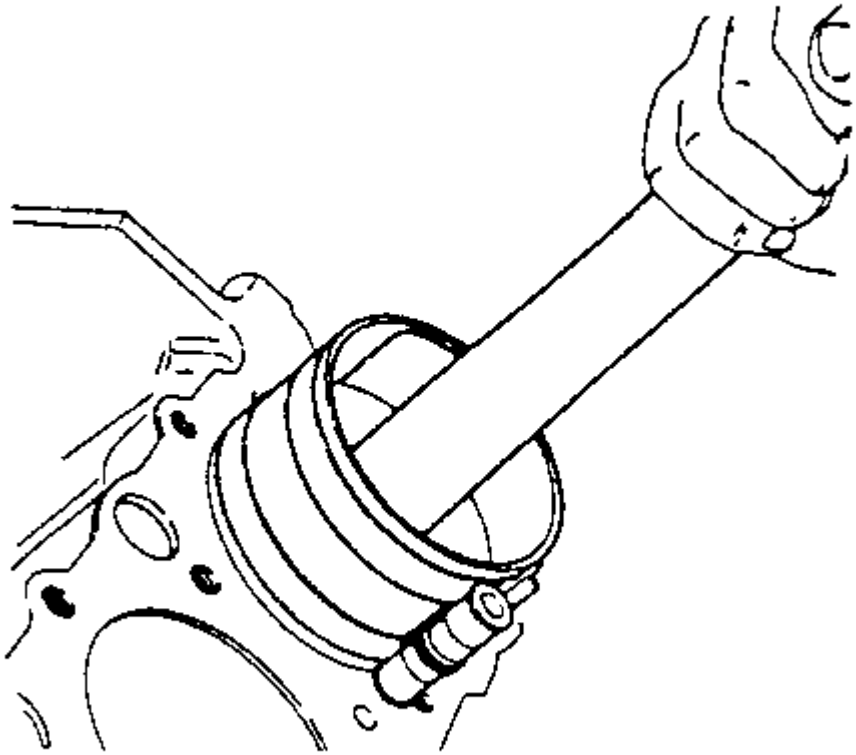

**Fig. 421: Installing Piston & Connecting Rod Assembly Into Cylinder**
**Courtesy of GENERAL MOTORS CORP.**

6. Install the piston and connecting rod assembly into the proper cylinder bore.
7. Hold the piston ring compressor firmly against the engine block. Using a wooden hammer handle, lightly tap the top of the piston until all of the piston rings enter the cylinder bore.

 © 2011 Mitchell Repair Information Company, LLC.

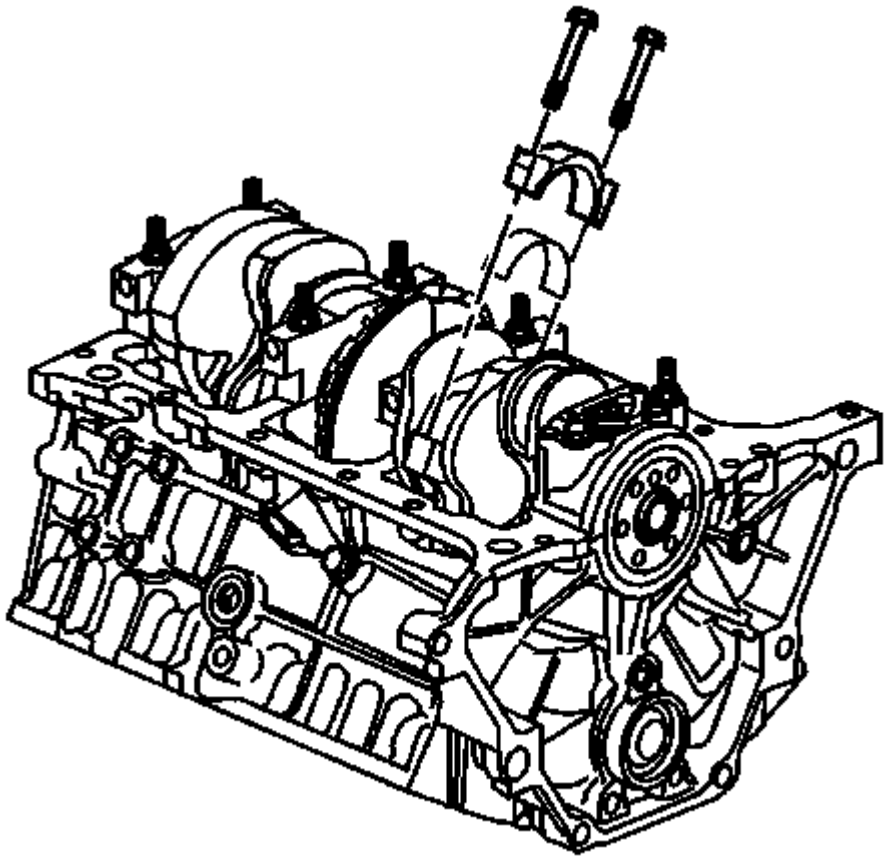

**Fig. 422: Installing Bearing, Bearing Cap And Bolts**
**Courtesy of GENERAL MOTORS CORP.**

8. Guide the connecting rod end onto the crankshaft journal.

**NOTE: Refer to Fastener Notice in Cautions and Notices.**

9. Install the bearing, cap, and bolts.

**Tighten:**

1. Tighten the connecting rod bearing cap bolts a first pass to 20 N.m (15 lb ft).
2. Tighten the connecting rod bearing cap bolts a second pass to 75 degrees using the **J 45059** . See **Special Tools**.

 © 2011 Mitchell Repair Information Company, LLC.

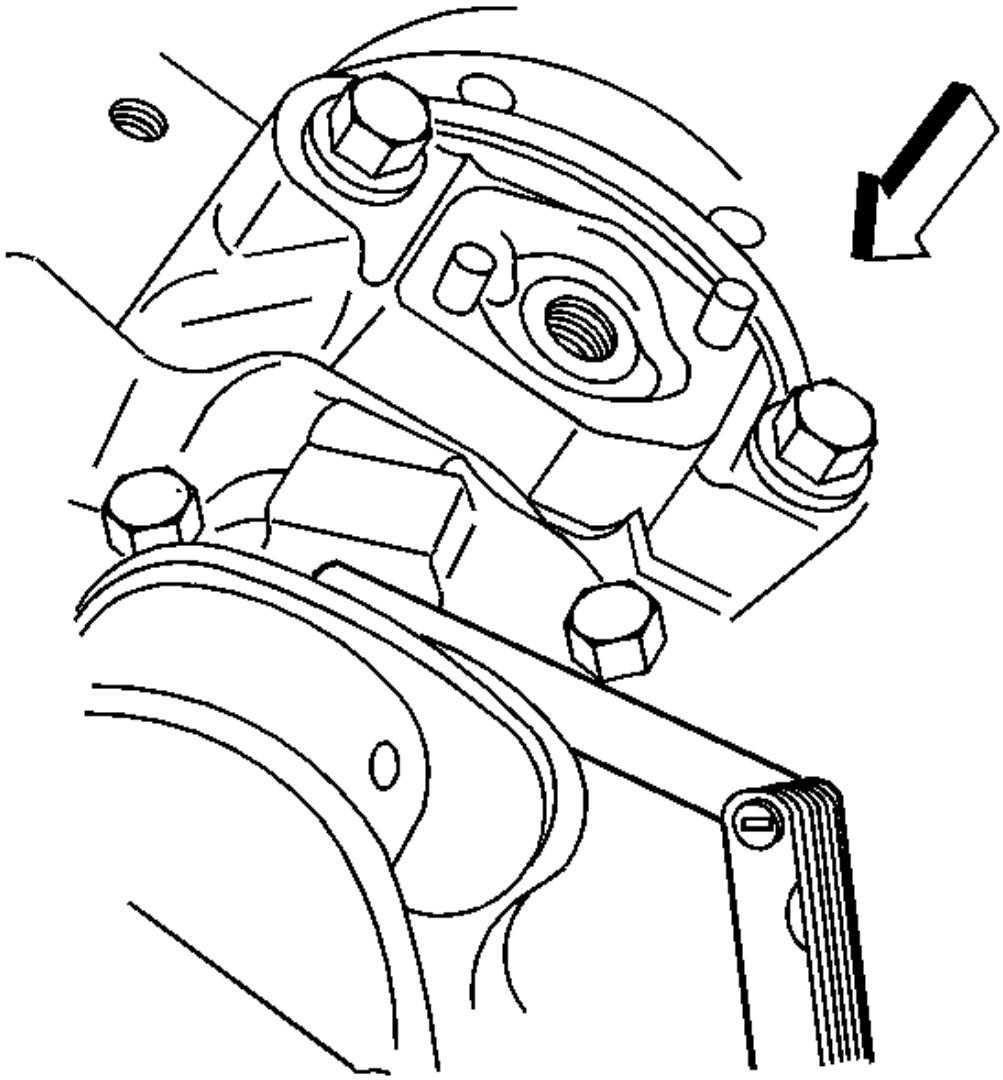

**Fig. 423: Measuring Connecting Rod Side Clearance**
**Courtesy of GENERAL MOTORS CORP.**

10. With the pistons and connecting rods installed, use a soft faced mallet and lightly tap each connecting rod assembly parallel to the crankpin to make sure that the rods have side clearance.
11. Measure the connecting rod side clearance using a feeler gage or dial indicator. Connecting rod side clearance should be within 0.18-0.44 mm (0.007-0.017 in).

**Camshaft Installation**

 © 2011 Mitchell Repair Information Company, LLC.

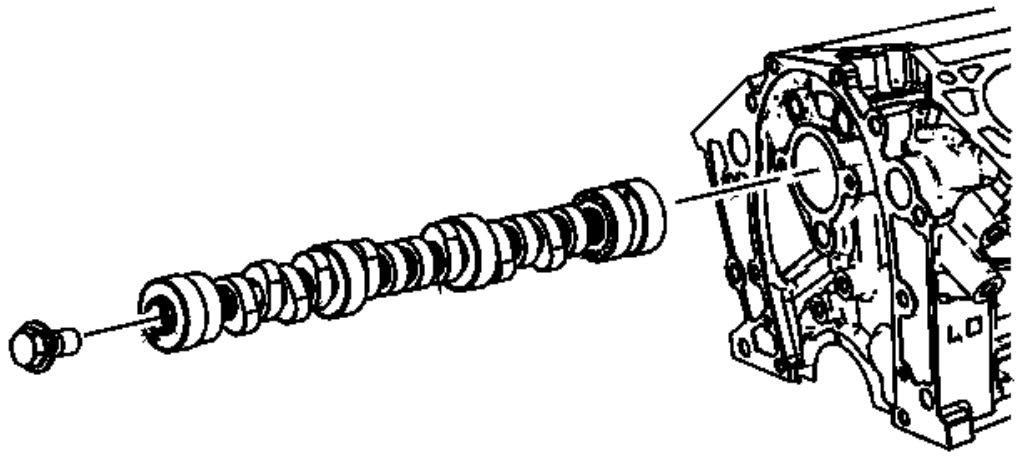

**Fig. 424: Inspecting Camshaft Journals**
**Courtesy of GENERAL MOTORS CORP.**

1. Coat the camshaft journals with clean engine oil.
2. Coat the camshaft lobes with prelube GM P/N 12345501 (Canadian P/N 992704) or the equivalent.
3. Install the camshaft using the following procedure:
    1. Install the camshaft sprocket bolt into the camshaft. Tighten finger tight only.
    2. Carefully rotate the camshaft while installing the camshaft into the camshaft bearings.

 © 2011 Mitchell Repair Information Company, LLC.

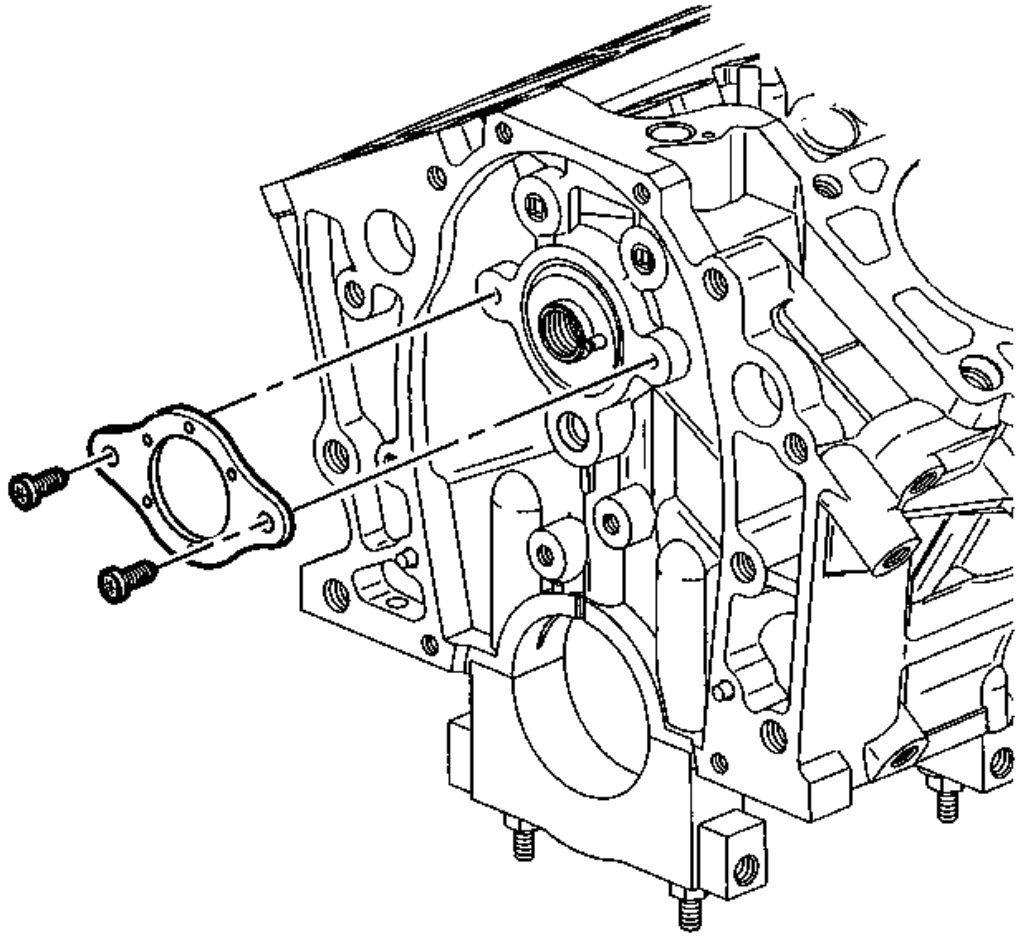

**Fig. 425: View Of Camshaft Thrust Plate**
**Courtesy of GENERAL MOTORS CORP.**

4. Install the camshaft thrust plate.

**NOTE:** **Refer to Fastener Notice in Cautions and Notices.**

5. Install the camshaft thrust plate screws.

**Tighten:** Tighten the camshaft thrust plate screws to 10 N.m (89 lb in).

 © 2011 Mitchell Repair Information Company, LLC.

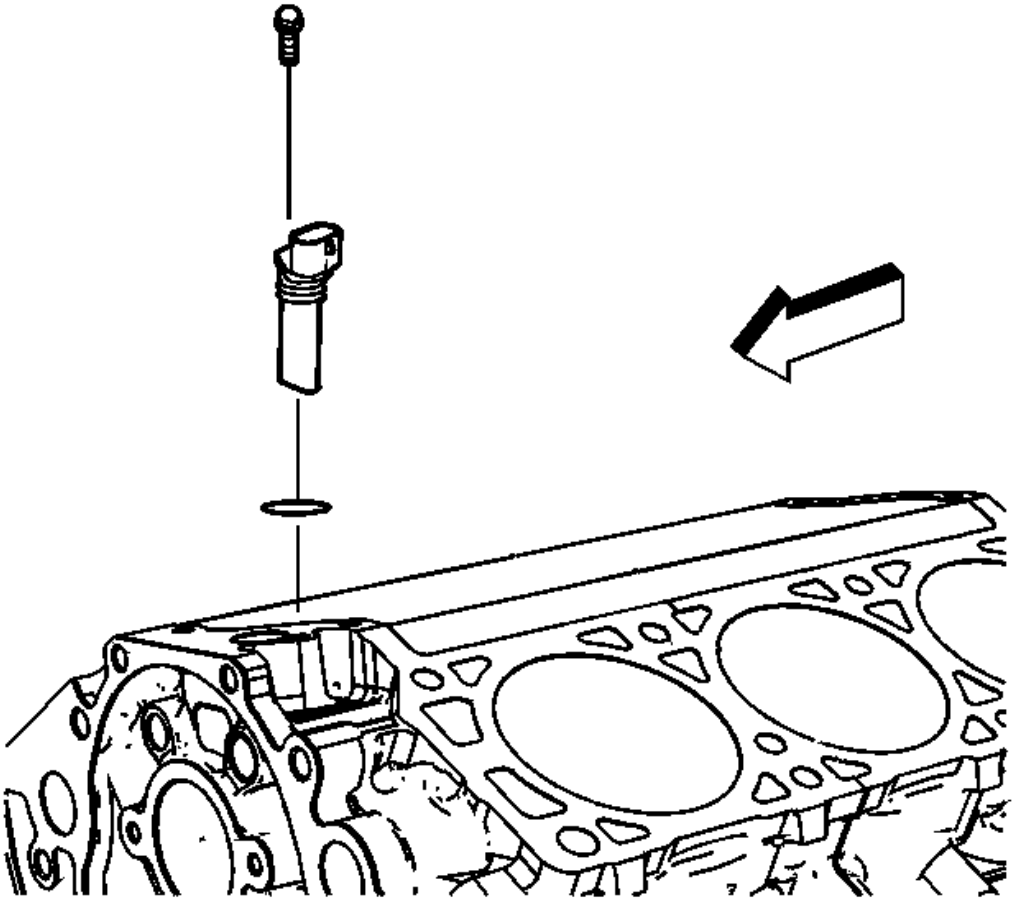

**Fig. 426: View Of Camshaft Position Sensor**
**Courtesy of GENERAL MOTORS CORP.**

6. Install the camshaft position sensor.
7. Install the camshaft position sensor bolt.

   **Tighten:** Tighten the camshaft position sensor bolt to 10 N.m (89 lb in).

**Timing Chain and Sprockets Installation**

 © 2011 Mitchell Repair Information Company, LLC.

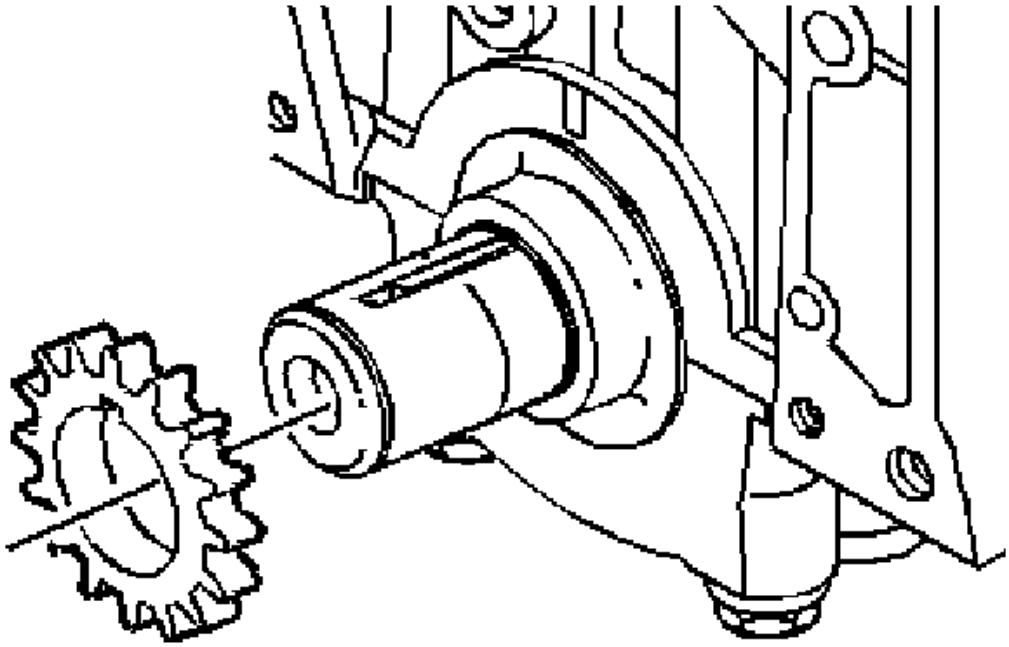

**Fig. 427: View Of Crankshaft Sprocket**
**Courtesy of GENERAL MOTORS CORP.**

1. Install the crankshaft sprocket.
2. Apply prelube GM P/N United States 12345501, GM P/N Canada 992704 or the equivalent to the crankshaft sprocket thrust surface.

 © 2011 Mitchell Repair Information Company, LLC.

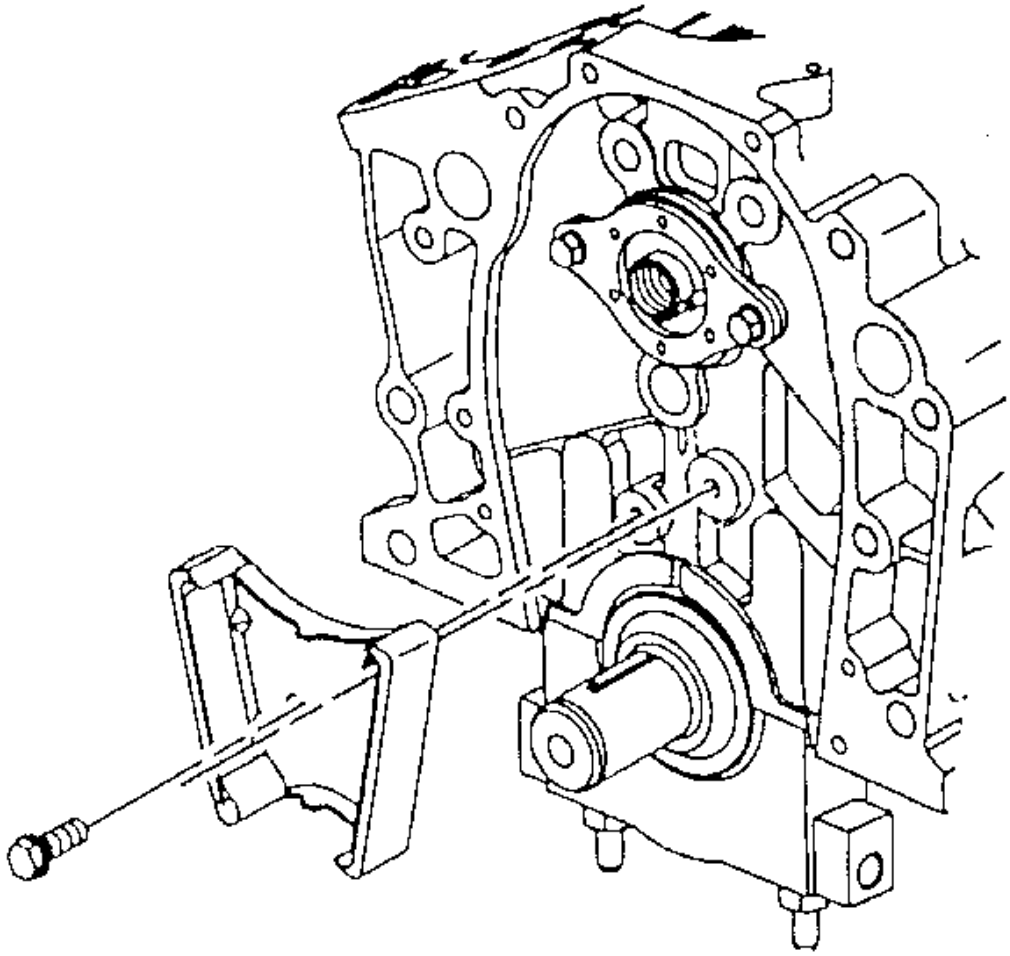

**Fig. 428: View Of Timing Chain Dampener & Bolts**
**Courtesy of GENERAL MOTORS CORP.**

3. Install the timing chain dampener.

**NOTE:** **Refer to Fastener Notice in Cautions and Notices.**

4. Install the timing chain dampener bolts.

**Tighten:** Tighten the timing chain dampener bolt to 21 N.m (15 lb ft).

 © 2011 Mitchell Repair Information Company, LLC.

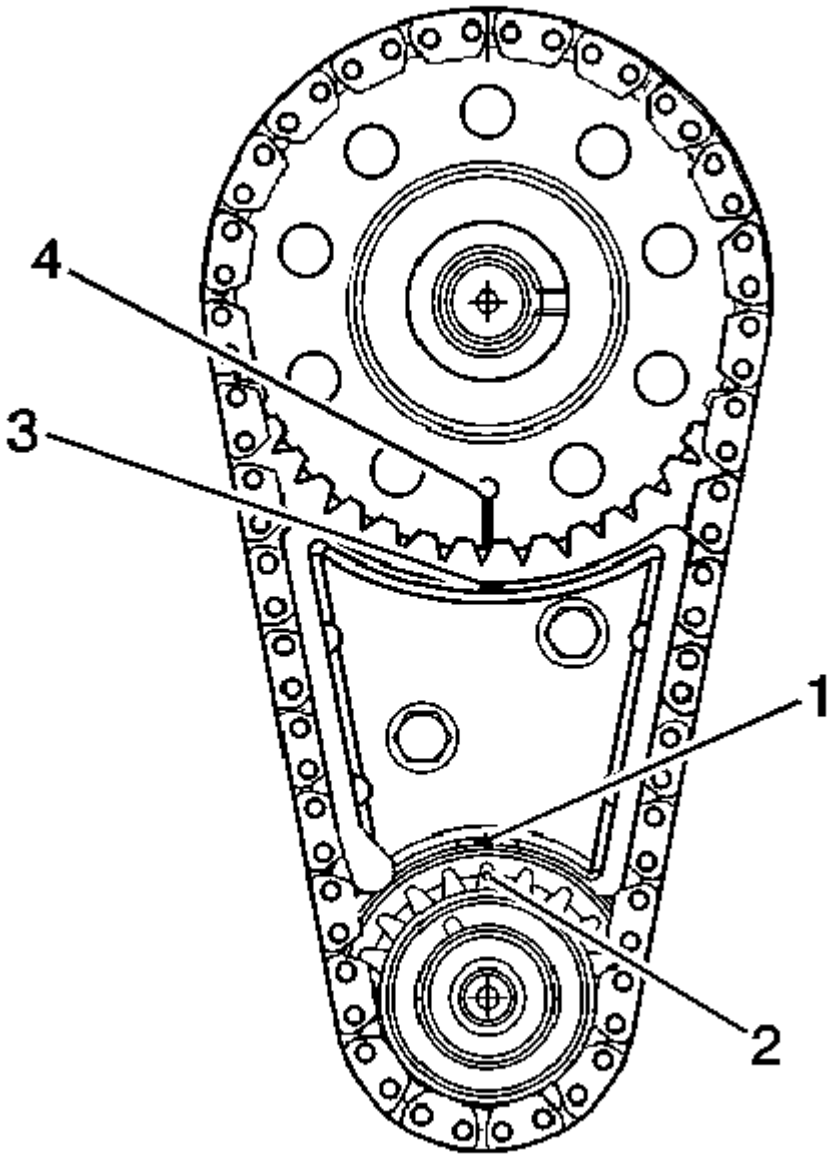


**Fig. 429: Locating Timing Marks**
**Courtesy of GENERAL MOTORS CORP.**

5. Align the crankshaft timing mark (2) to the timing mark on the bottom of the timing chain dampener (1).
6. Hold the camshaft sprocket with the timing chain hanging down and install the timing chain to the crankshaft gear.
7. Align the timing mark on the camshaft gear (4) with the timing mark on top of the timing chain dampener

 © 2011 Mitchell Repair Information Company, LLC.

(3).

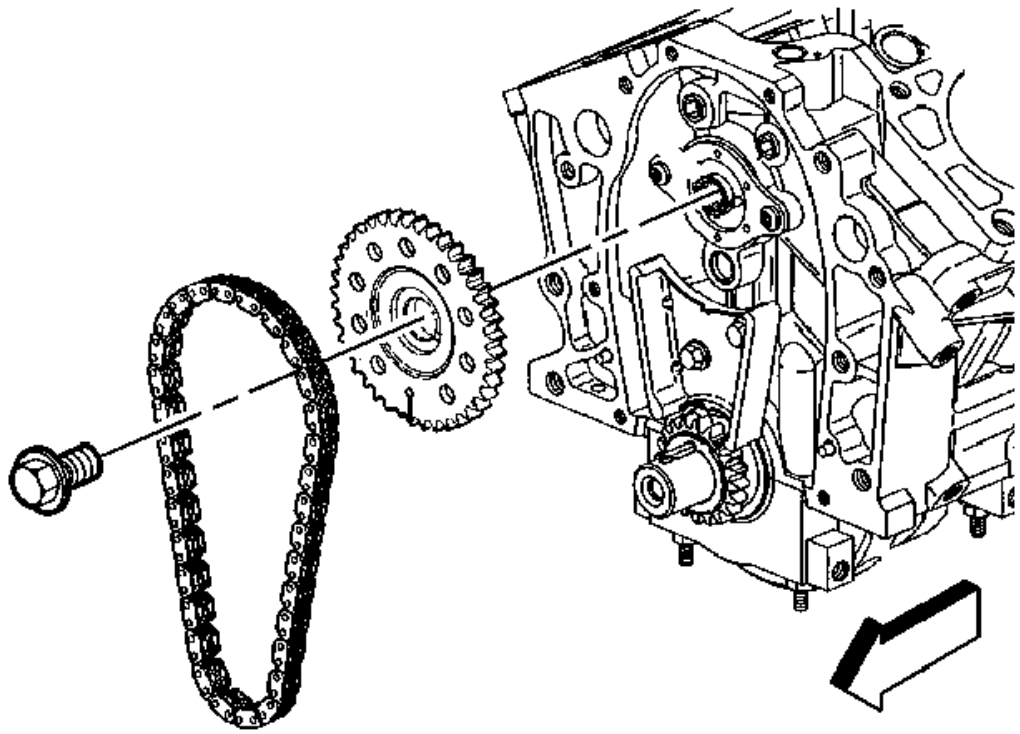

**Fig. 430: View Of Timing Chain & Camshaft Sprocket**
**Courtesy of GENERAL MOTORS CORP.**

8. Align the dowel in the camshaft with the dowel hole in the camshaft sprocket.
9. Draw the camshaft sprocket onto the camshaft using the mounting bolt.
10. Coat the crankshaft and camshaft sprocket with engine oil.

**Tighten:** Tighten the bolt to 140 N.m (103 lb ft).

**Engine Front Cover Installation**

 © 2011 Mitchell Repair Information Company, LLC.

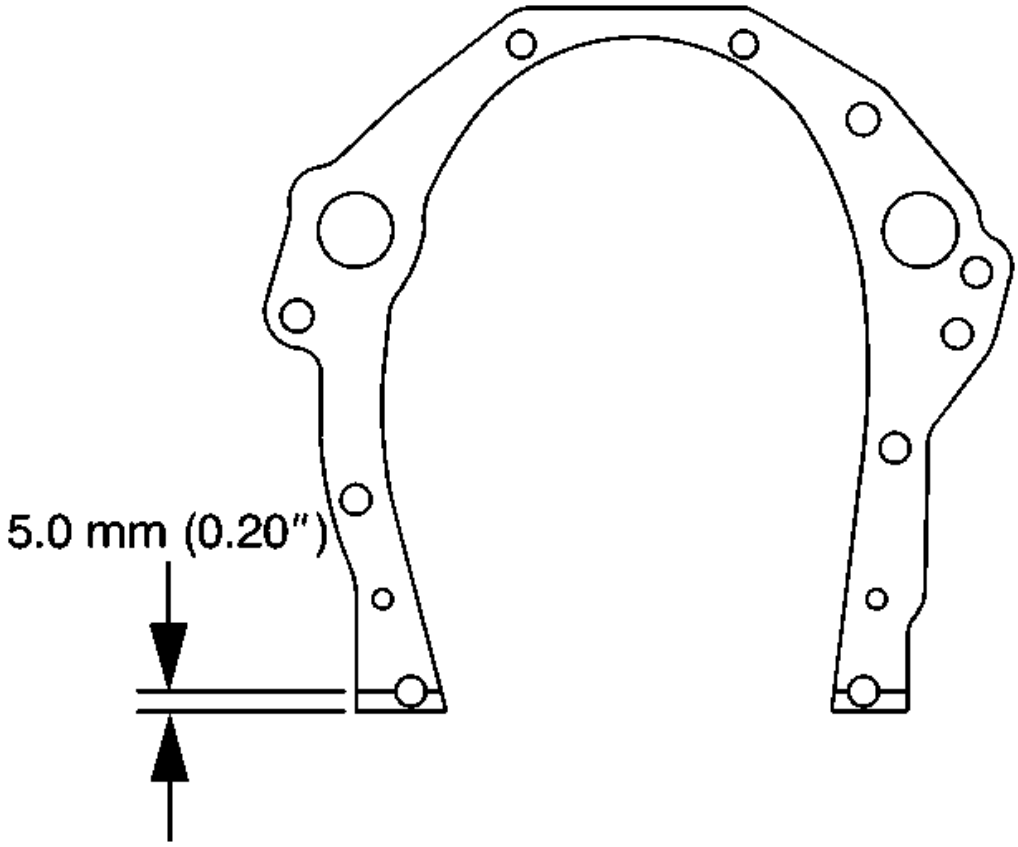


**Fig. 431: Applying Sealer To Lower Tabs Of Engine Front Cover Gasket**
**Courtesy of GENERAL MOTORS CORP.**

1. Install the engine front cover gasket.
2. Apply sealer GM P/N 12346004 (Canadian P/N 10953480) or equivalent to both sides of the lower tabs of the engine front cover gasket. Apply the sealer no less than 5.0 mm (0.20 in) wide.

 © 2011 Mitchell Repair Information Company, LLC.

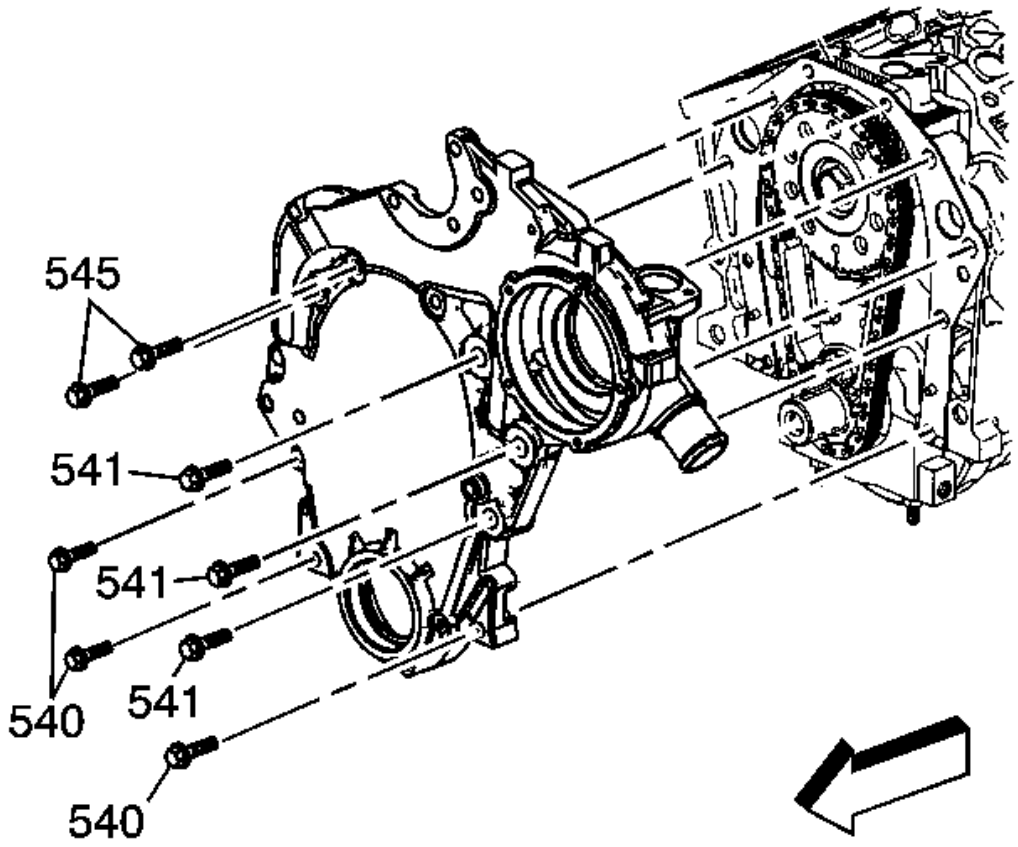


**Fig. 432: Removing Engine Front Cover Bolts (540, 541, 545)**
**Courtesy of GENERAL MOTORS CORP.**

3. Install the engine front cover.

**NOTE:** **Refer to Fastener Notice in Cautions and Notices.**

4. Install the engine front cover bolts (545).

   **Tighten:** Tighten the engine front cover bolts to 27 N.m (20 lb ft).

5. Install the engine front cover bolts (540, 541).

   **Tighten:** Tighten the engine front cover bolts to 55 N.m (41 lb ft).

 © 2011 Mitchell Repair Information Company, LLC.

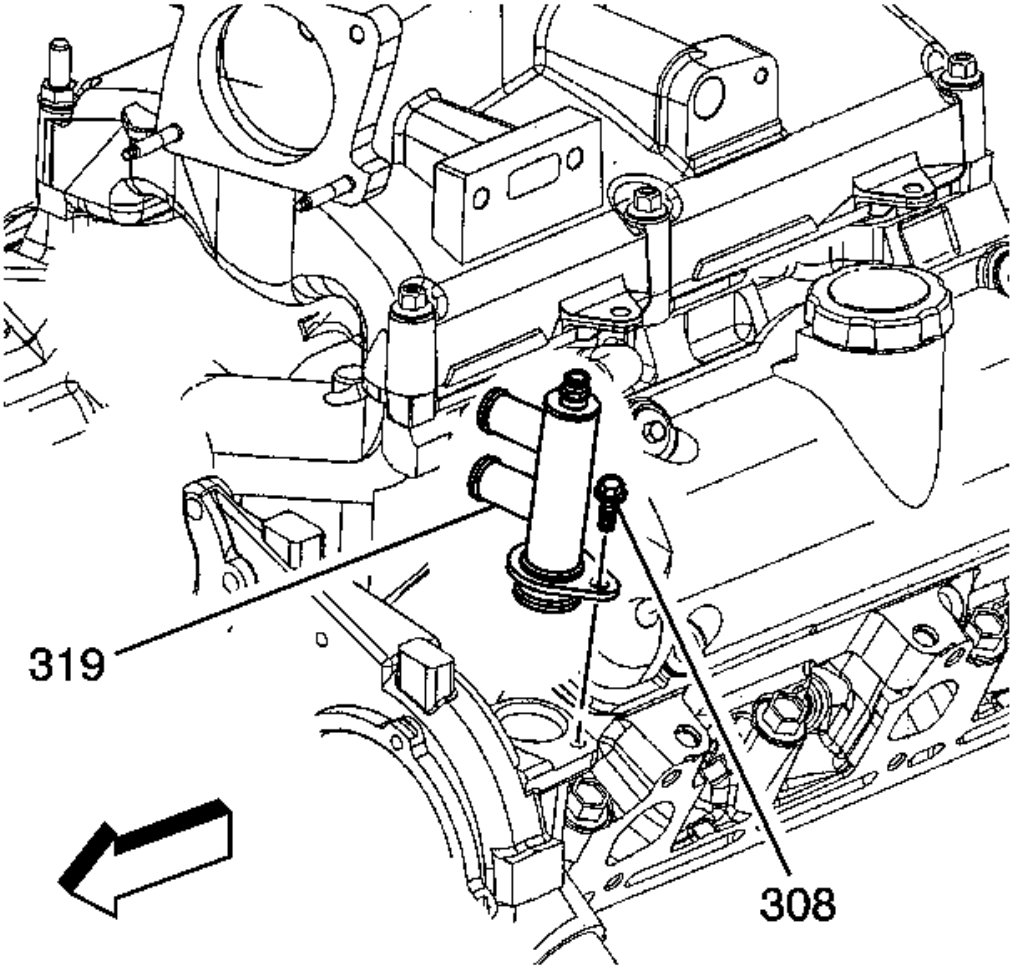


**Fig. 433: View Of Heater Outlet Pipe Adapter**
**Courtesy of GENERAL MOTORS CORP.**

6. Install the heater outlet pipe adapter (319).
7. Install the heater outlet pipe adapter bolt (308).

**Tighten:** Tighten the heater outlet pipe adapter bolt to 12 N.m (106 lb in).

**Crankshaft Front Oil Seal Installation**

**Tools Required**

**J 35468** Cover Aligner and Seal Installer. See **Special Tools**.

 © 2011 Mitchell Repair Information Company, LLC.

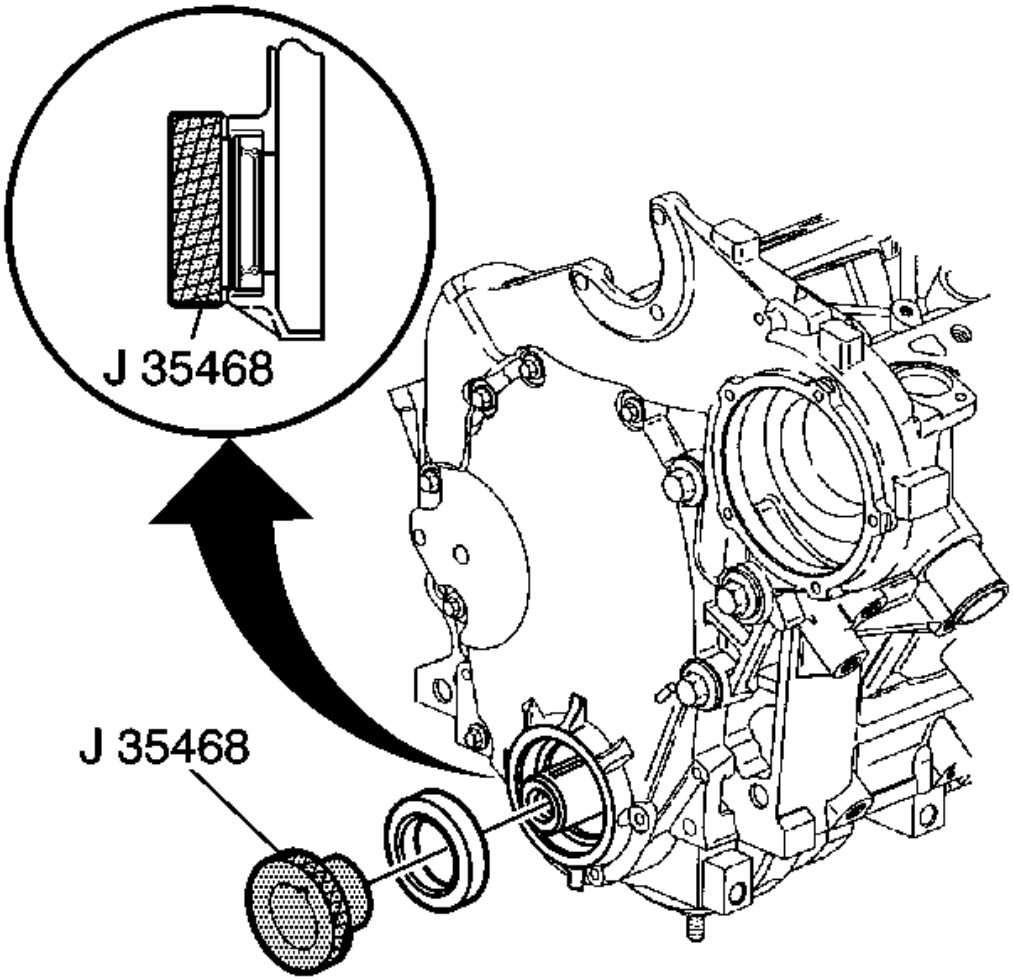


**Fig. 434: Installing Crankshaft Front Oil Seal**
**Courtesy of GENERAL MOTORS CORP.**

1. Align the **J 35468** and the crankshaft front oil seal with the engine front cover and crankshaft. See **Special Tools**.
2. Install the crankshaft front oil seal using the **J 35468** and a suitable tool. See **Special Tools**.

**Oil Pump Drive Installation**

 © 2011 Mitchell Repair Information Company, LLC.

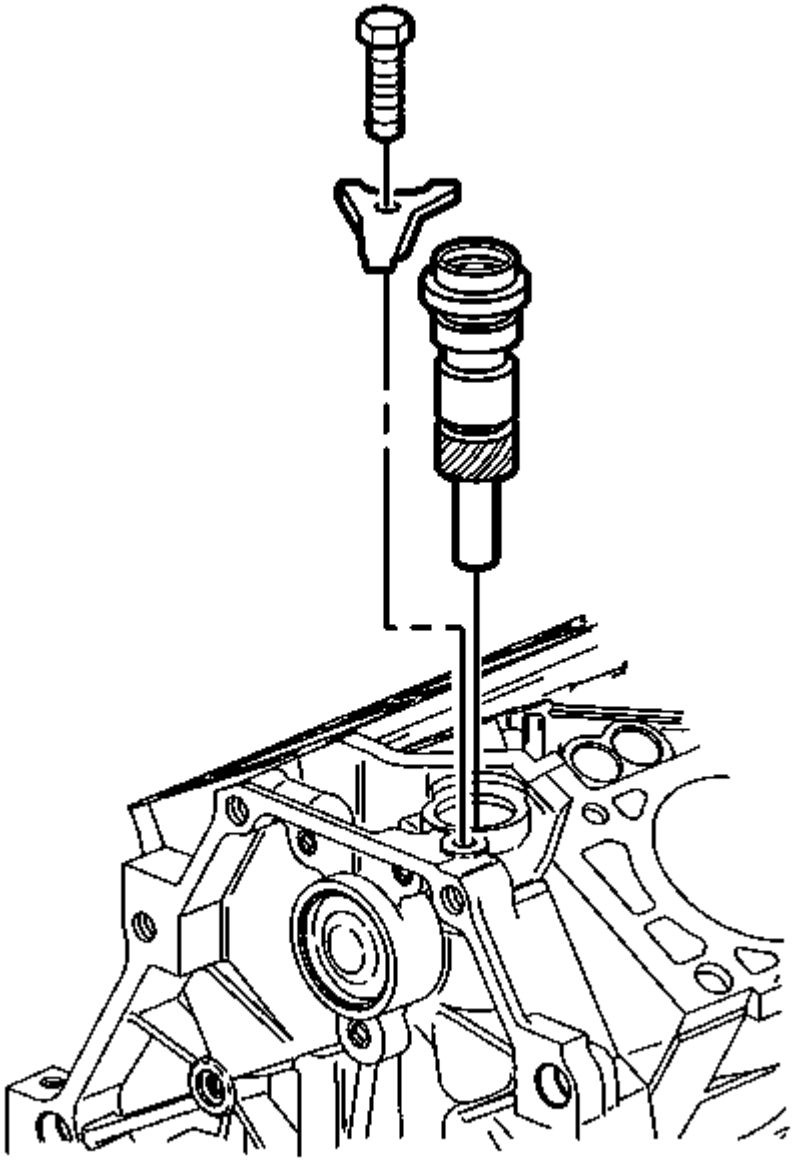

**Fig. 435: View Of Oil Pump Drive**
**Courtesy of GENERAL MOTORS CORP.**

1. Apply prelube GM P/N United States 12345501, GM P/N Canada 992704 or the equivalent to the oil pump drive gear.
2. Apply engine oil to the oil pump drive gear assembly for ease of assembly.

 © 2011 Mitchell Repair Information Company, LLC.

3. Install the oil pump drive gear assembly.
4. Install the oil pump drive gear clamp.

**NOTE: Refer to Fastener Notice in Cautions and Notices.**

5. Install the oil pump drive gear clamp bolt.

**Tighten:** Tighten the oil pump drive gear clamp bolt to 36 N.m (27 lb ft).

**Oil Pump Installation**

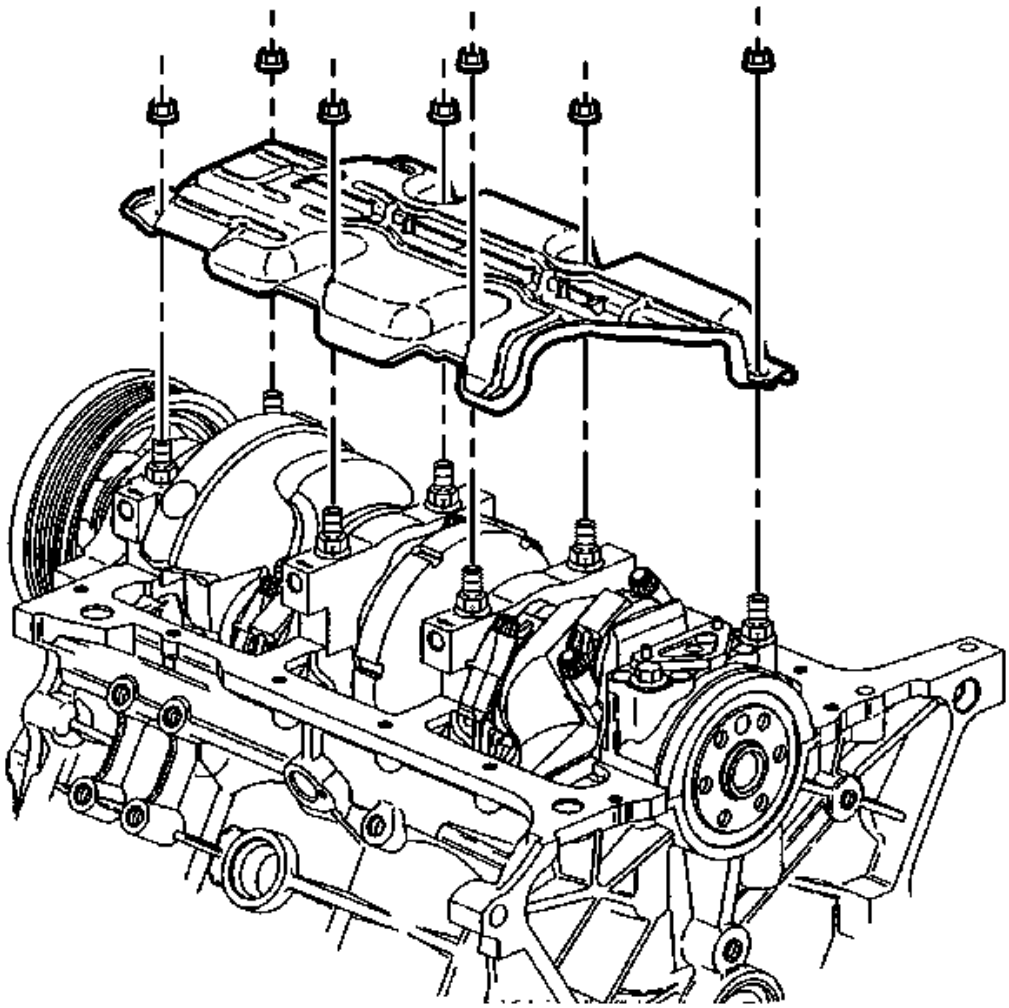

**Fig. 436: View Of Crankshaft Oil Deflector & Nuts**

 © 2011 Mitchell Repair Information Company, LLC.

**Courtesy of GENERAL MOTORS CORP.**

1. Install the crankshaft oil deflector.

**NOTE: Refer to Fastener Notice in Cautions and Notices.**

2. Install the crankshaft oil deflector nuts.

**Tighten:** Tighten the crankshaft oil deflector nuts to 25 N.m (18 lb ft).

 © 2011 Mitchell Repair Information Company, LLC.

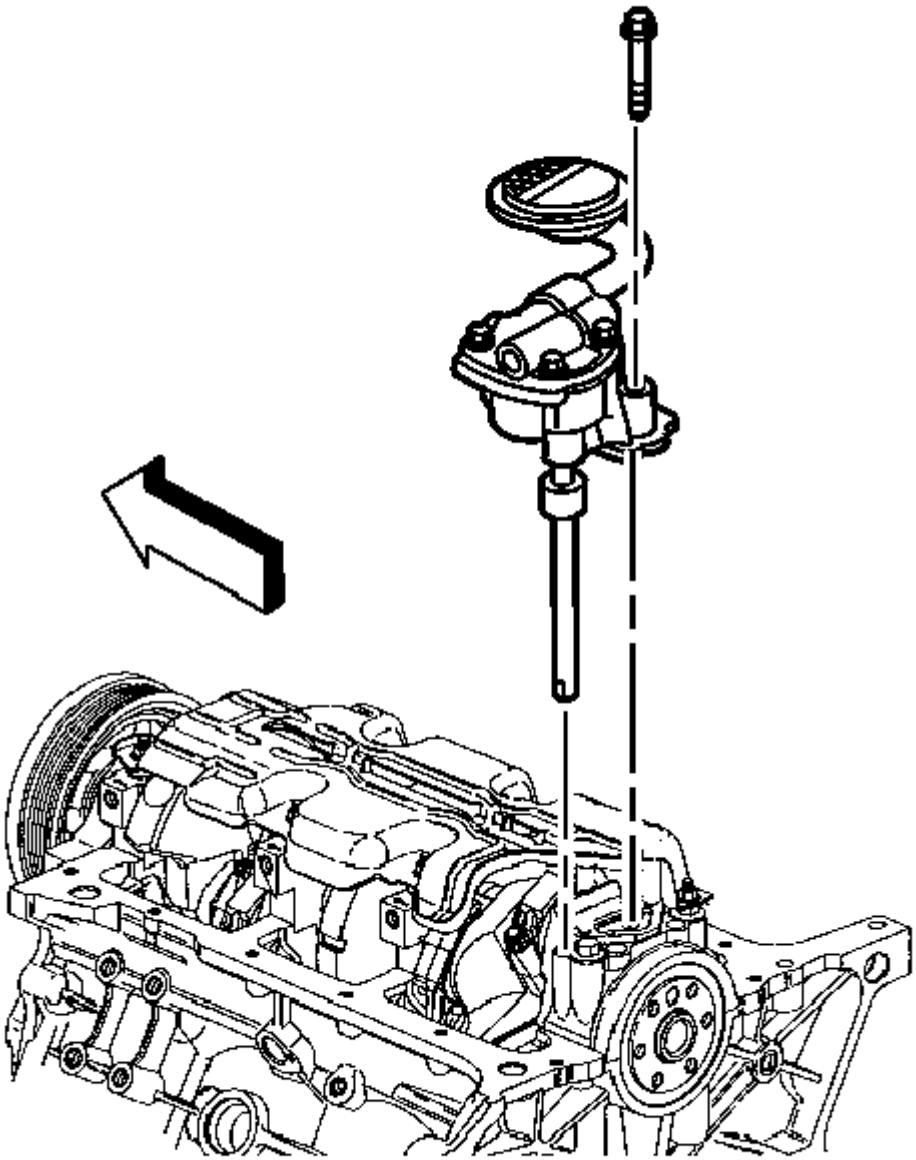

**Fig. 437: Oil Pump**
**Courtesy of GENERAL MOTORS CORP.**

**IMPORTANT: Do not reuse the oil pump driveshaft retainer. During assembly, install a NEW oil pump driveshaft retainer.**

3. Install the oil pump.

 © 2011 Mitchell Repair Information Company, LLC.

4. Position the oil pump onto the pins.
5. Install the oil pump bolt attaching the oil pump to the rear crankshaft bearing cap.

   **Tighten:** Tighten the oil pump bolt to 41 N.m (30 lb ft).

**Oil Pan Installation**

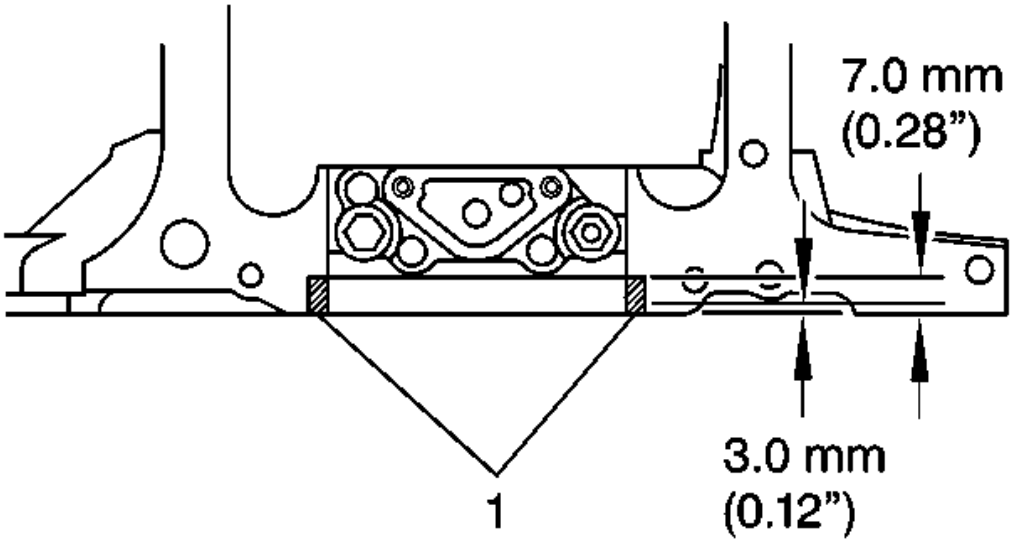


**Fig. 438: Illustrating Proper Sealer Application**
**Courtesy of GENERAL MOTORS CORP.**

1. Apply sealer GM P/N 12378521, (Canadian P/N 88901148) or the equivalent to both sides of the crankshaft rear main bearing cap (1).

 © 2011 Mitchell Repair Information Company, LLC.

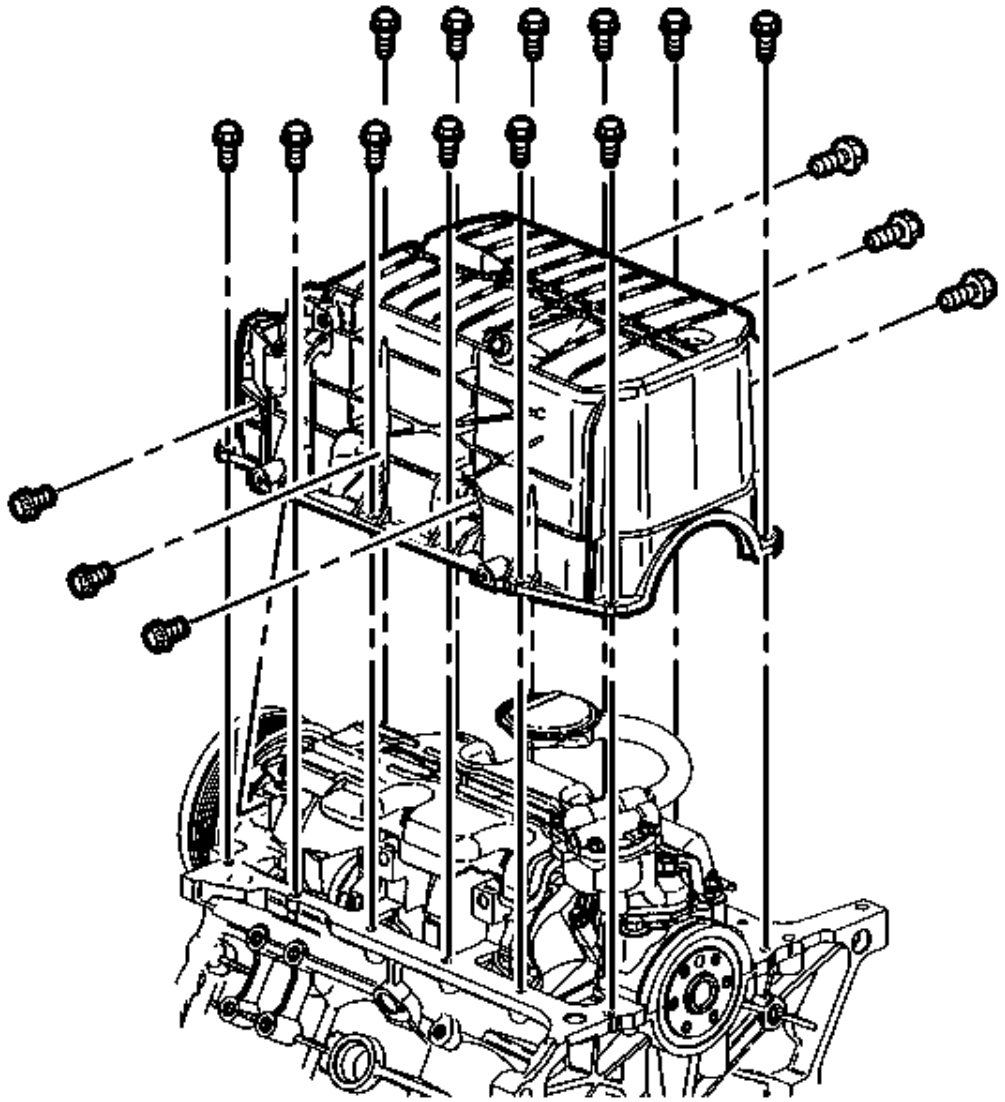

**Fig. 439: View Of Oil Pan & Bolts**
**Courtesy of GENERAL MOTORS CORP.**

2. Install the oil pan gasket.
3. Install the oil pan.

**NOTE: Refer to Fastener Notice In Cautions and Notices.**

4. Install the oil pan bolts.

 © 2011 Mitchell Repair Information Company, LLC.

**Tighten:** Tighten the oil pan bolts to 25 N.m (18 lb ft).

5. Install the oil pan side bolts.

   **Tighten:** Tighten the oil pan side bolts to 50 N.m (37 lb ft).

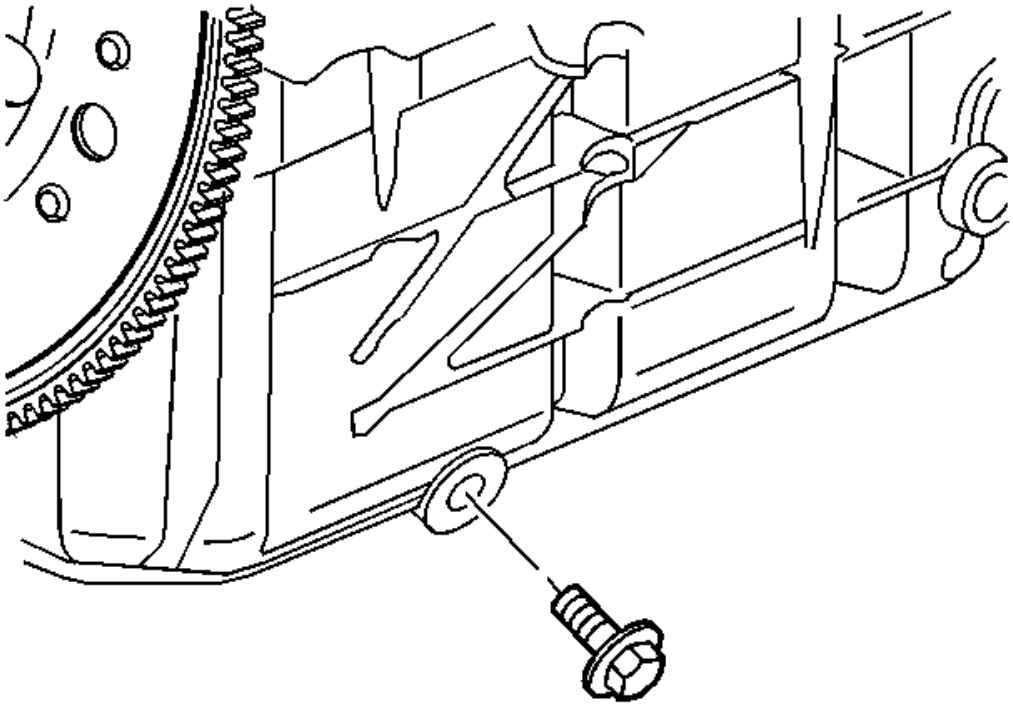

**Fig. 440: Removing Oil Pan Drain Plug**
**Courtesy of GENERAL MOTORS CORP.**

6. Install the oil pan drain plug.

   **Tighten:** Tighten the oil pan drain to 25 N.m (18 lb ft).

**Cylinder Head Installation - Left**

**Tools Required**

**J 45059** Angle Meter. See **Special Tools**.

 © 2011 Mitchell Repair Information Company, LLC.

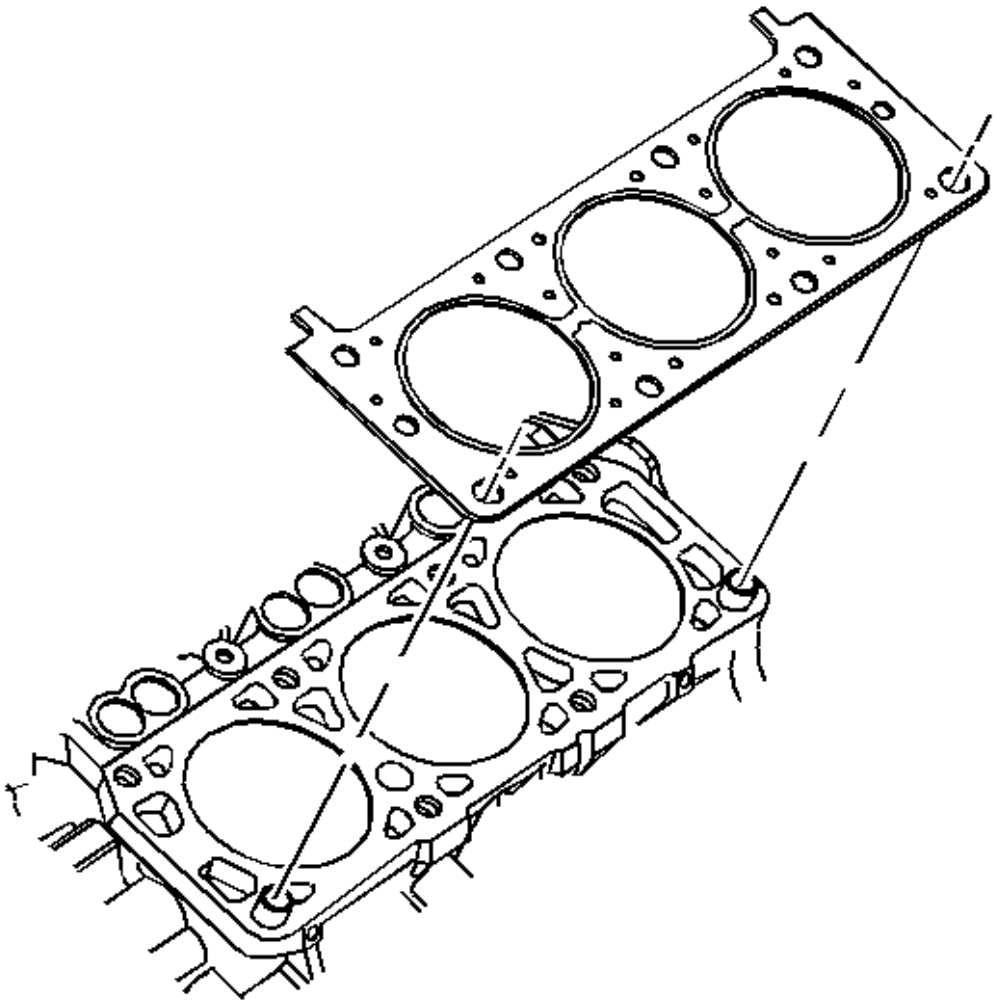

**Fig. 441: View Of Cylinder Head Gasket And Alignment Pins**
**Courtesy of GENERAL MOTORS CORP.**

**NOTE:** **This component uses torque-to-yield bolts. When servicing this component do not reuse the bolts, New torque-to-yield bolts must be installed. Reusing used torque-to-yield bolts will not provide proper bolt torque and clamp load. Failure to install NEW torque-to-yield bolts may lead to engine damage.**

1. Install the cylinder head locator dowel pins, if necessary.
2. Inspect the cylinder head locator dowel pins for proper installation.

 © 2011 Mitchell Repair Information Company, LLC.

3. Install the cylinder head gasket.

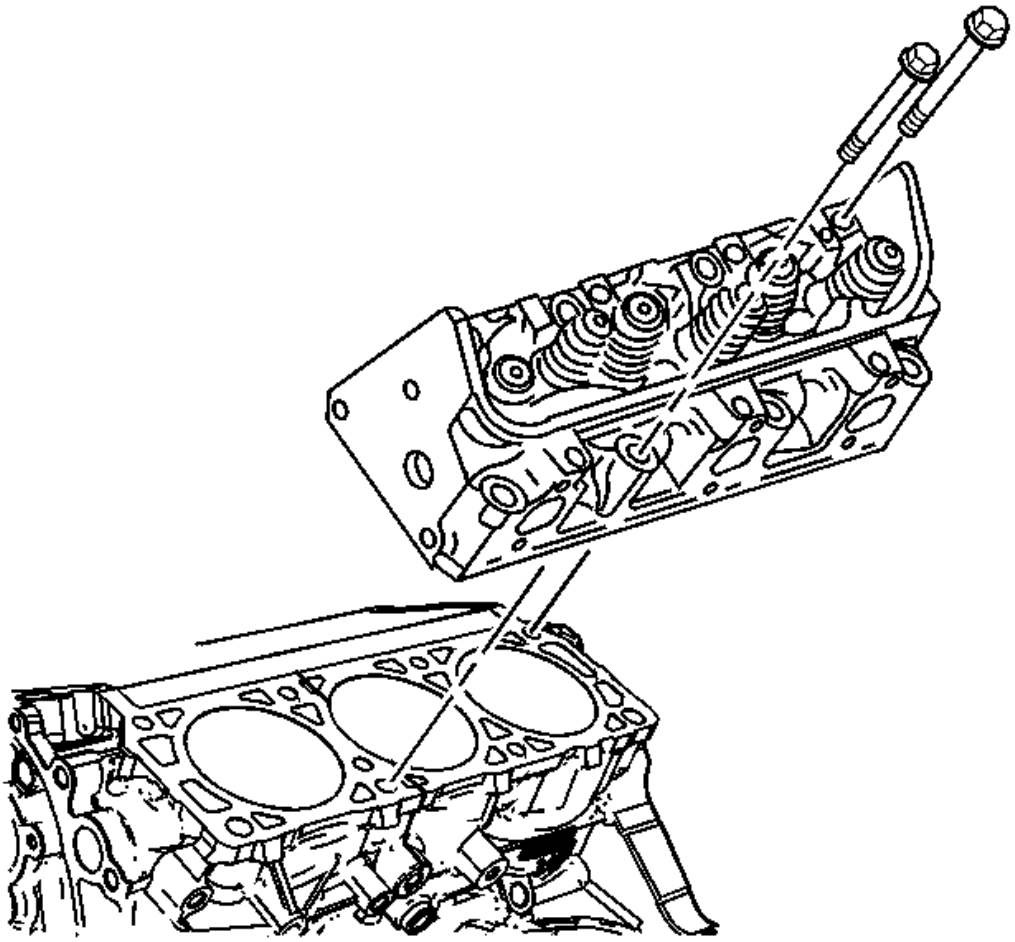

**Fig. 442: Removing/Installing Cylinder Head**
**Courtesy of GENERAL MOTORS CORP.**

4. Install the cylinder head.

 © 2011 Mitchell Repair Information Company, LLC.

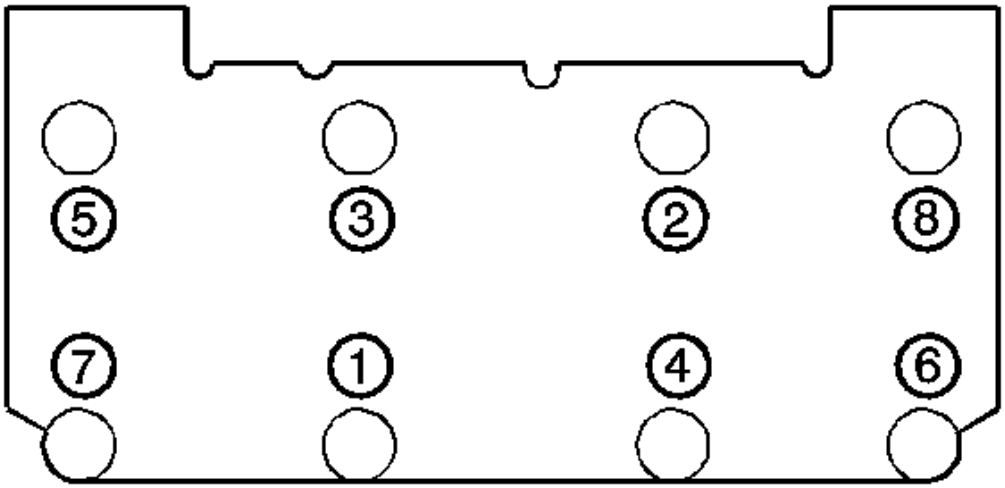


**Fig. 443: View Of Cylinder Head Bolt Tightening Sequence**
**Courtesy of GENERAL MOTORS CORP.**

**NOTE: Refer to Fastener Notice in Cautions and Notices.**

5. Install the new cylinder head bolts.

**Tighten:**

1. Tighten the cylinder head bolts a first pass in sequence to 60 N.m (44 lb ft).
2. Tighten the cylinder head bolts a final pass in sequence to 95 degrees using the **J 45059** . See **Special Tools**.

**Cylinder Head Installation - Right**

**Tools Required**

**J 45059** Angle Meter. See **Special Tools**.

 © 2011 Mitchell Repair Information Company, LLC.

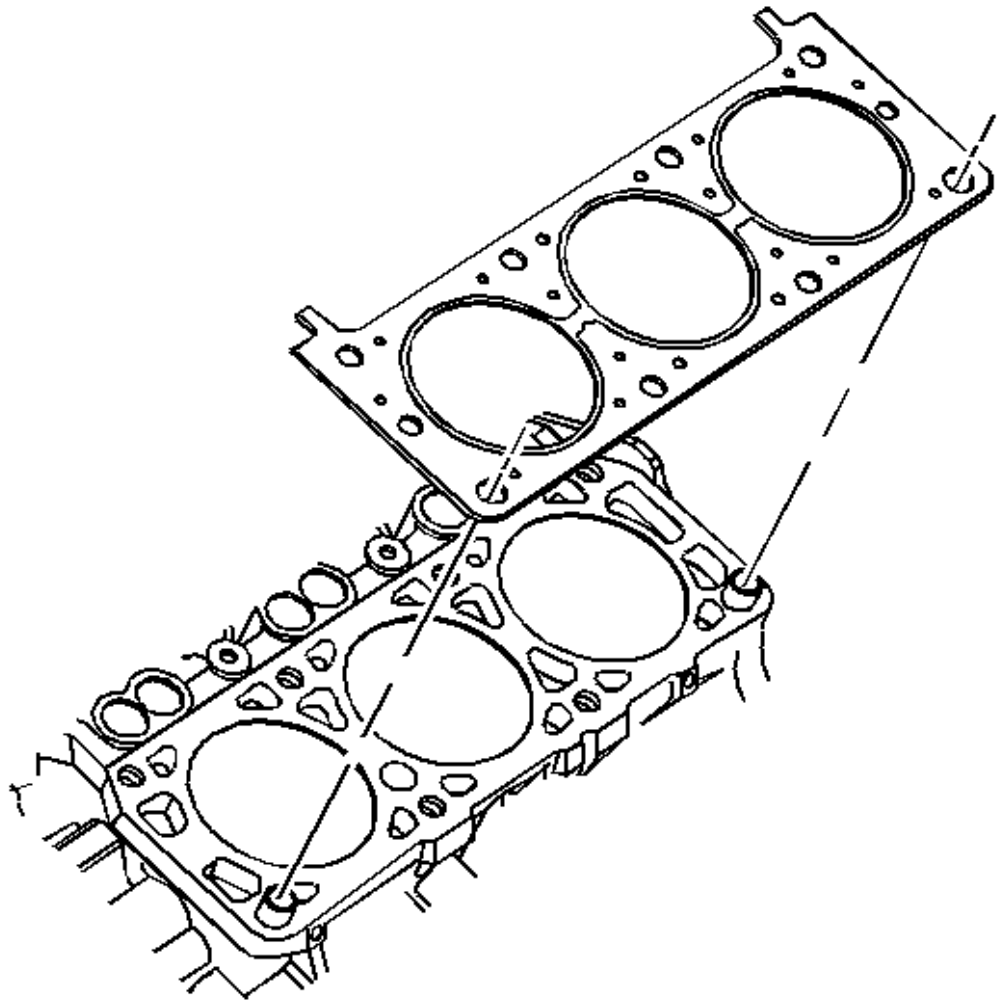

**Fig. 444: View Of Cylinder Head Gasket And Alignment Pins**
**Courtesy of GENERAL MOTORS CORP.**

**NOTE:** **This component uses torque-to-yield bolts. When servicing this component do not reuse the bolts, New torque-to-yield bolts must be installed. Reusing used torque-to-yield bolts will not provide proper bolt torque and clamp load. Failure to install NEW torque-to-yield bolts may lead to engine damage.**

1. Install the cylinder head locator dowel pins, if necessary.
2. Inspect the cylinder head locator dowel pins for proper installation.

 © 2011 Mitchell Repair Information Company, LLC.

3. Install the cylinder head gasket.

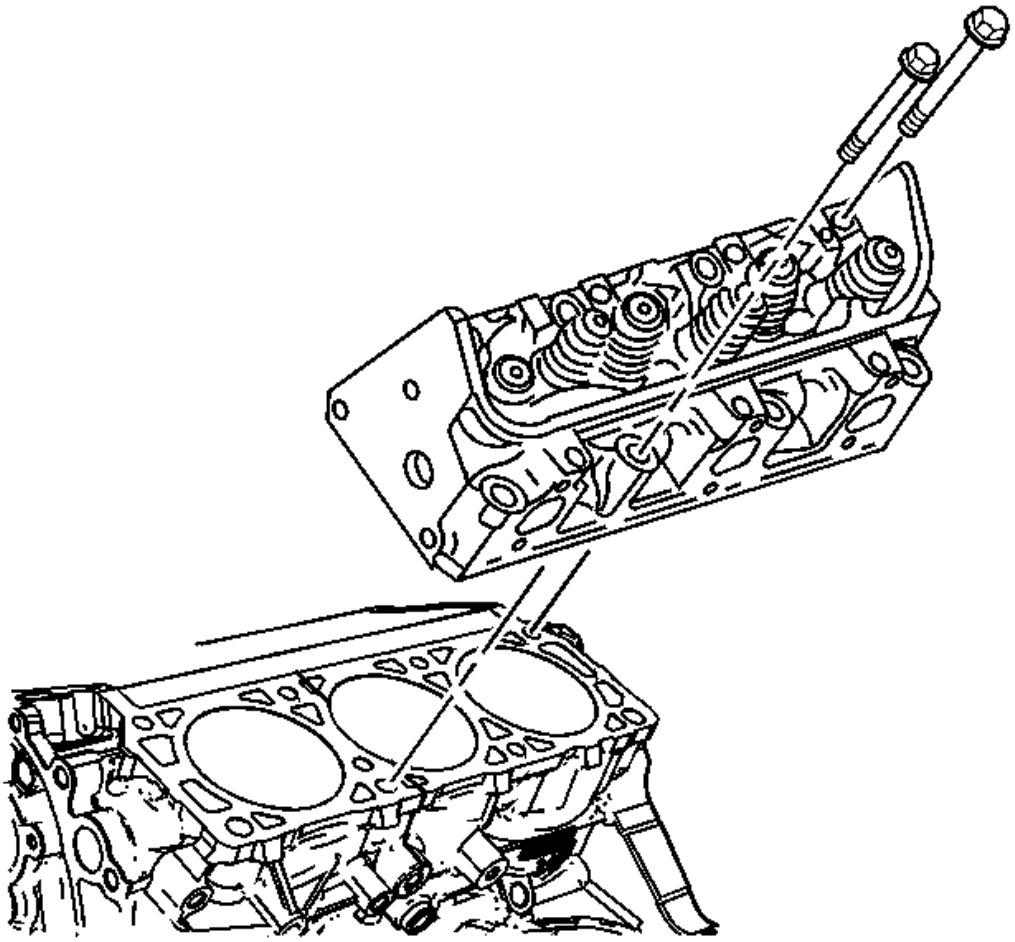

**Fig. 445: Removing/Installing Cylinder Head**
**Courtesy of GENERAL MOTORS CORP.**

4. Install the cylinder head.

 © 2011 Mitchell Repair Information Company, LLC.

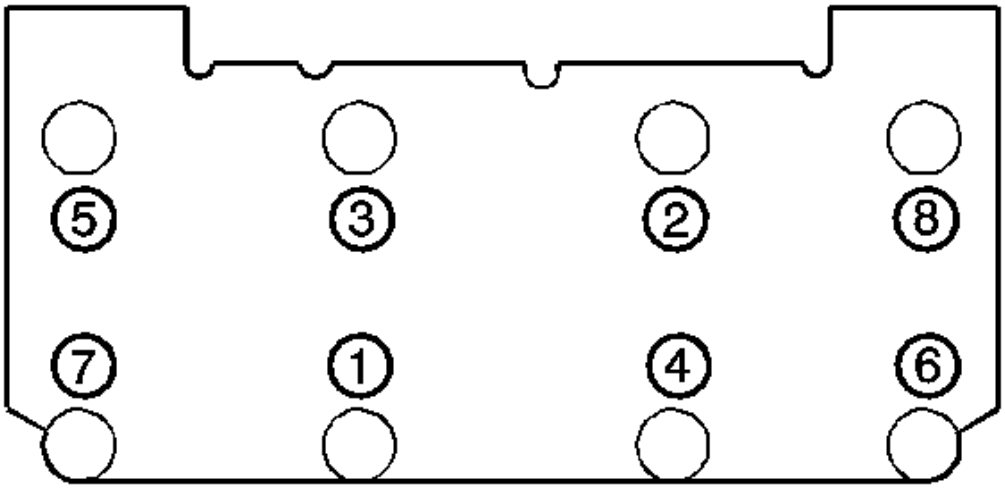


**Fig. 446: View Of Cylinder Head Bolt Tightening Sequence**
**Courtesy of GENERAL MOTORS CORP.**

**NOTE: Refer to Fastener Notice in Cautions and Notices.**

5. Install the new cylinder head bolts.

   **Tighten:**
   1. Tighten the cylinder head bolts a first pass in sequence to 60 N.m (44 lb ft).
   2. Tighten the cylinder head bolts a final pass in sequence to 95 degrees using the **J 45059** . See **Special Tools**.

**Water Pump Installation**

 © 2011 Mitchell Repair Information Company, LLC.

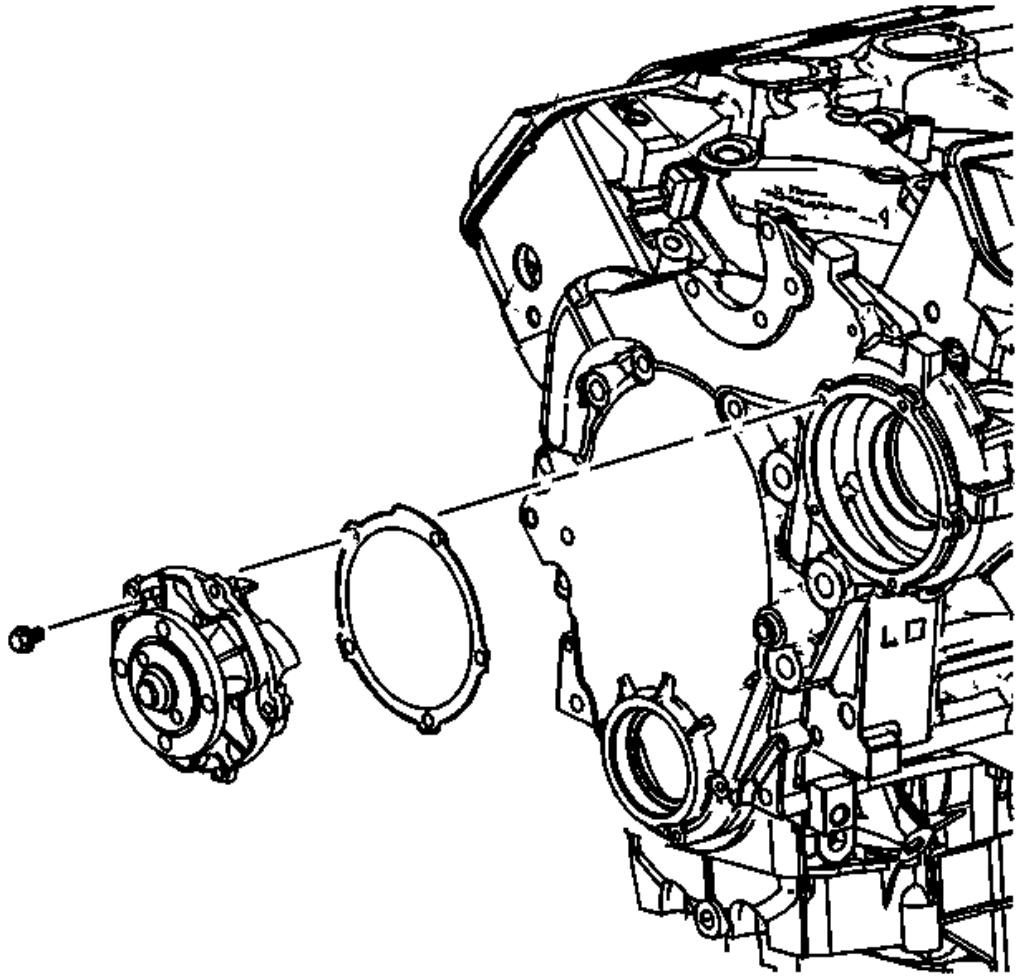

**Fig. 447: Removing Water Pump**
**Courtesy of GENERAL MOTORS CORP.**

1. Install the water pump gasket.
2. Install the water pump.

**NOTE: Refer to Fastener Notice in Cautions and Notices.**

3. Install the water pump bolts.

**Tighten:** Tighten the water pump bolts to 10 N.m (89 lb in).

 © 2011 Mitchell Repair Information Company, LLC.

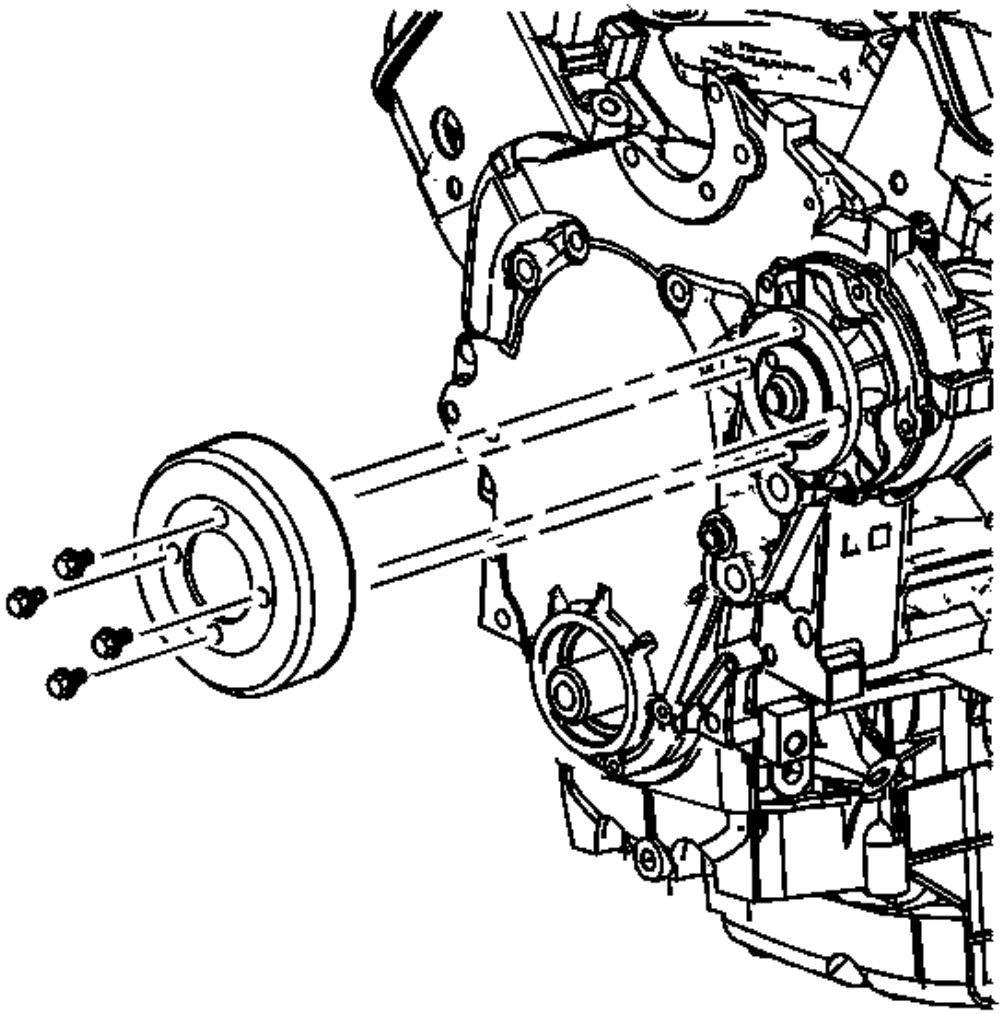

**Fig. 448: Removing Water Pump Pulley**
**Courtesy of GENERAL MOTORS CORP.**

4. Install the water pump pulley.
5. Install the water pump pulley bolts.

**Tighten:** Tighten the water pump pulley bolts to 25 N.m (18 lb ft).

**Valve Lifter Installation**

 © 2011 Mitchell Repair Information Company, LLC.

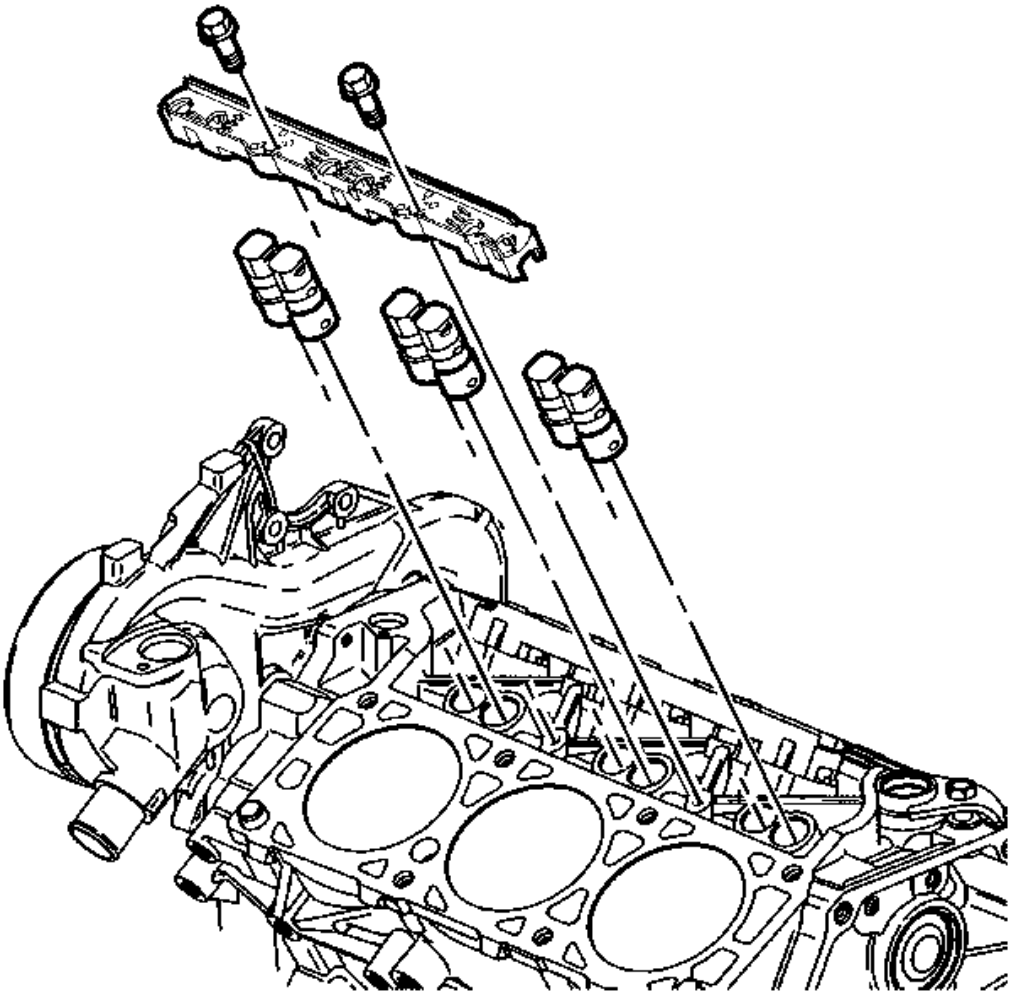

**Fig. 449: View Of Valve Lifters & Lifter Guides**
**Courtesy of GENERAL MOTORS CORP.**

1. Coat the valve lifters using prelube GM P/N 12345501 (Canadian P/N 992704) or the equivalent.
2. Install the valve lifters in their original locations.
3. Apply threadlock GM P/N 12345382 (Canadian P/N 10953489) or the equivalent to the threads.

**NOTE: Refer to Fastener Notice in Cautions and Notices.**

4. Install the valve lifter guides and guide bolts.

   **Tighten:** Tighten the valve lifter guide bolts to 10 N.m (89 lb in).

 © 2011 Mitchell Repair Information Company, LLC.

**Valve Rocker Arm and Push Rod Installation**

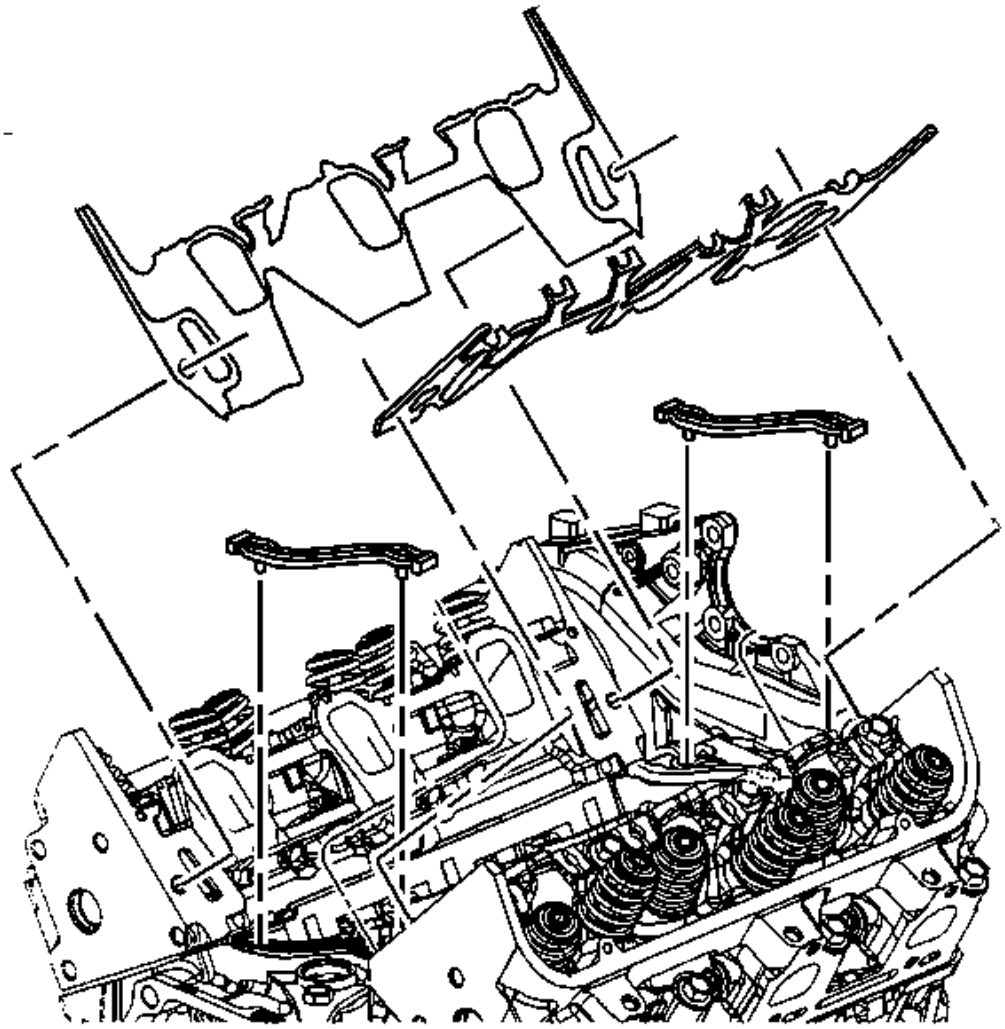

**Fig. 450: Removing Intake Manifold Gaskets**
**Courtesy of GENERAL MOTORS CORP.**

**IMPORTANT: All gasket mating surfaces must be free of oil and foreign material. Use GM P/N 12346139 (Canadian P/N 10953463) or equivalent to clean surfaces.**

**IMPORTANT: RTV sealer is not to be placed under the lower intake manifold gaskets.**

 © 2011 Mitchell Repair Information Company, LLC.

1. Install the lower intake manifold gaskets.

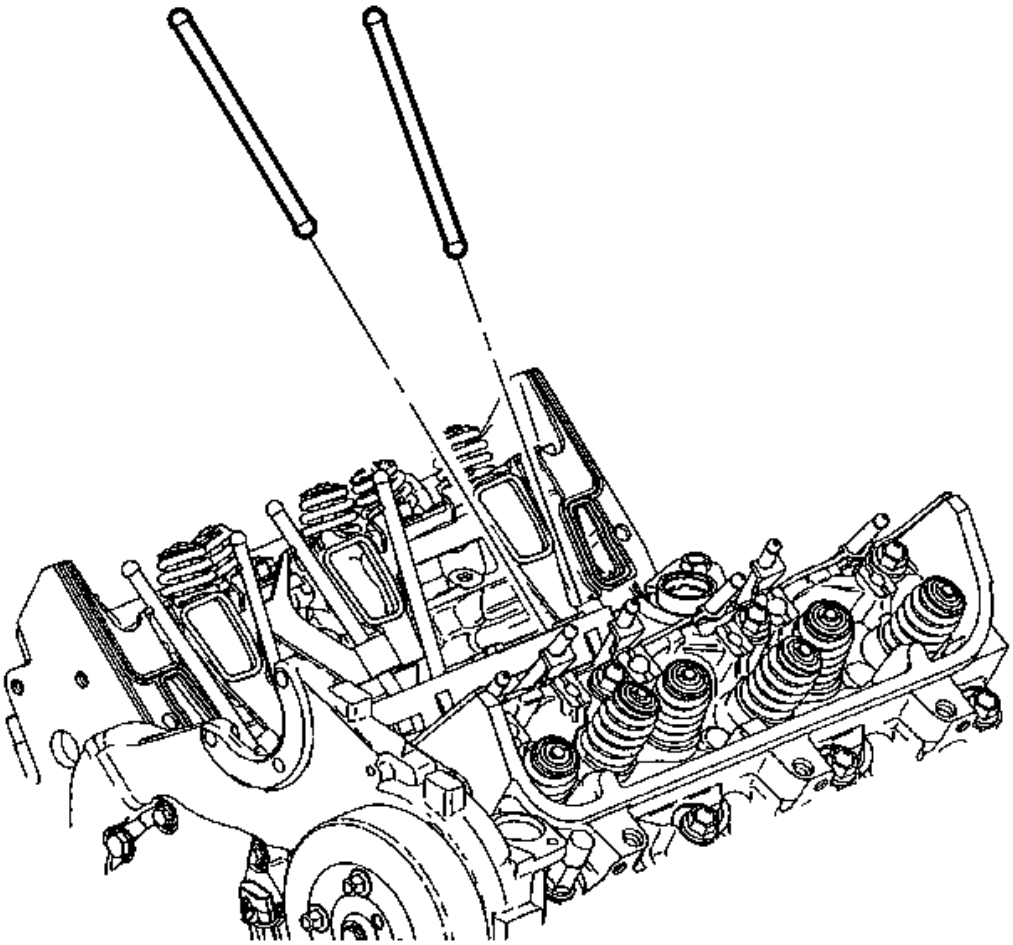

**Fig. 451: Removing Push Rods**
**Courtesy of GENERAL MOTORS CORP.**

2. Coat the ends of the push rods using prelube GM P/N 12345501 (Canadian P/N 992704) or the equivalent.

**IMPORTANT: The intake valve push rods measure 146.0 mm (5.75 in) and the exhaust valve push rods measure 152.5 mm (6.0 in) in length.**

3. Install the push rods in their original location.

 © 2011 Mitchell Repair Information Company, LLC.

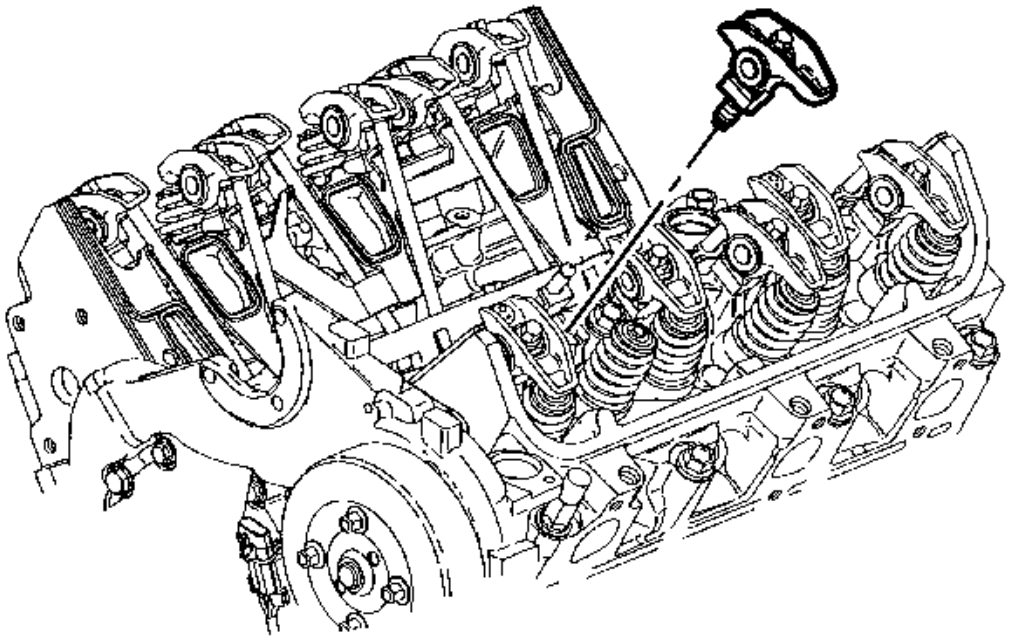

**Fig. 452: Loosening Valve Rocker Arm Bolts**
**Courtesy of GENERAL MOTORS CORP.**

4. Coat the rocker arm friction surfaces using prelube GM P/N 12345501 (Canadian P/N 992704) or the equivalent.

**IMPORTANT: Shims may be required under the valve rocker arm pedestals if reconditioning has been performed on the cylinder head or its components.**

5. Install the valve rocker arms in their original positions.

**NOTE: Refer to Fastener Notice in Cautions and Notices.**

6. Install the valve rocker arm bolts.

   **Tighten:** Tighten the valve rocker arm bolts to 32 N.m (24 lb ft).

**Intake Manifold Installation - Lower**

 © 2011 Mitchell Repair Information Company, LLC.

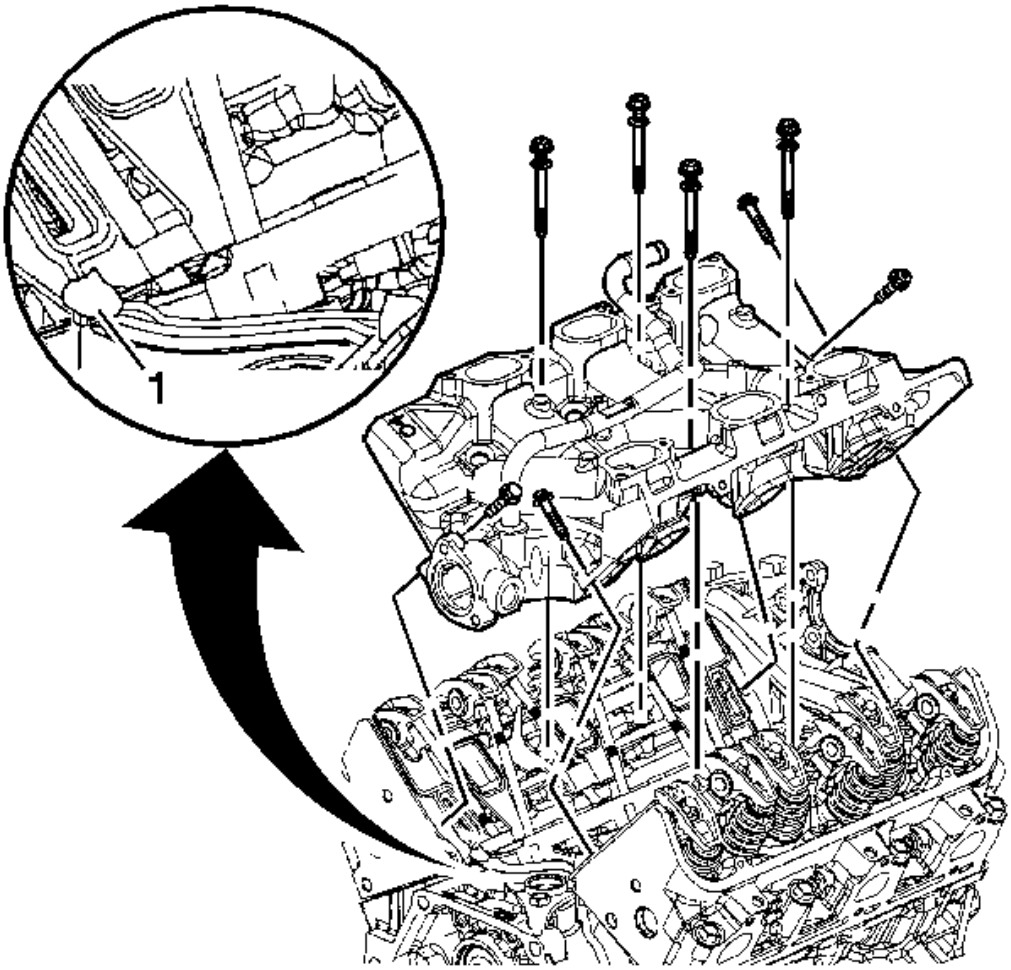


**Fig. 453: Installing Lower Intake Manifold**
**Courtesy of GENERAL MOTORS CORP.**

**IMPORTANT: All gasket-mating surfaces need to be free of oil, and foreign material. Use GM P/N 12346139 (Canadian P/N 10953463) or equivalent to clean surfaces.**

1. Install the lower intake manifold seals.
2. With the seals in place apply a small drop 8-10 mm (0.31-0.39 in) of RTV sealer GM P/N 12346141 (Canadian P/N 10953433) or equivalent to the 4 corners of the intake manifold to block joint (1).
3. Install the lower intake manifold.

 © 2011 Mitchell Repair Information Company, LLC.

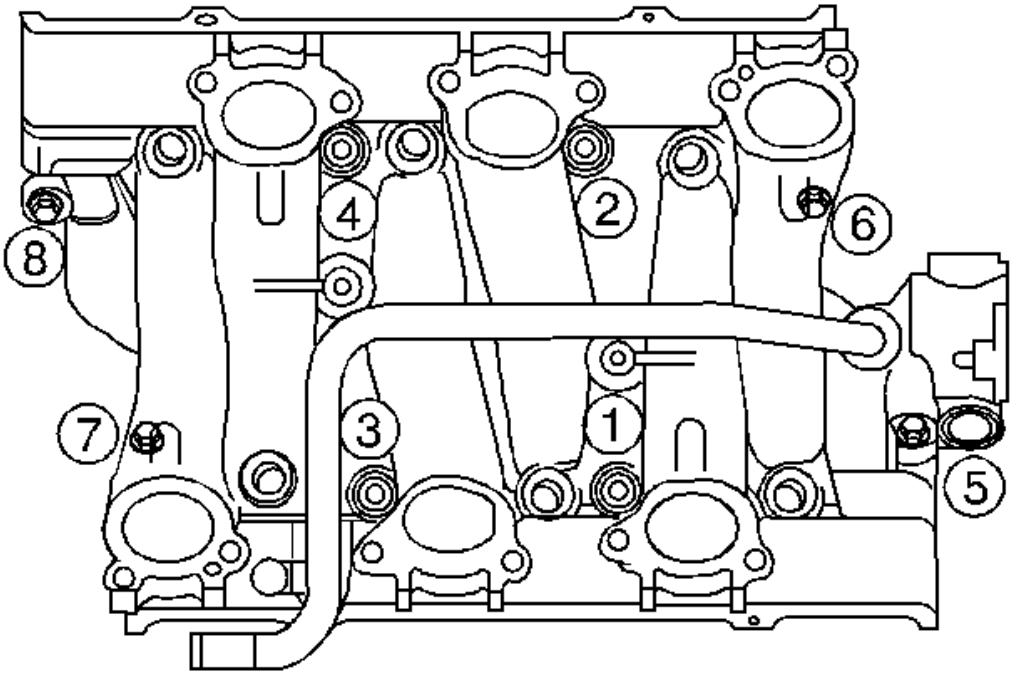


**Fig. 454: Lower Intake Manifold Bolt Tightening Sequence**
**Courtesy of GENERAL MOTORS CORP.**

**NOTE:** **Maximum gasket performance is achieved when using new fasteners, which contain a thread-locking patch. If the fasteners are not replaced, a thread locking chemical must be applied to the fastener threads. Failure to replace the fasteners or apply a thread-locking chemical MAY reduce gasket sealing capability.**

**NOTE:** **Refer to Fastener Notice in Cautions and Notices.**

**IMPORTANT:** **All lower intake manifold bolts need to be cleaned, free of any foreign material, and reused only if new bolts are unavailable. Use GM P/N 12345382 (Canadian P/N 10953489) or equivalent and apply to the old intake manifold bolt threads.**

**IMPORTANT:** **Manufacturer recommends the center bolts be fully torqued before the diagonal bolts to assure proper seal ability.**

**IMPORTANT:** **Lower intake manifold bolts in location 6 and 7 should be torqued to**

 © 2011 Mitchell Repair Information Company, LLC.

**specification using a crows foot type tool.**

4. Install the lower intake manifold bolts.

**Tighten:**

1. Tighten the lower intake manifold bolts (1, 2, 3, 4) in sequence to 7 N.m (62 lb in) on the first pass.
2. Tighten the lower intake manifold bolts (5, 6, 7, 8) in sequence to 13 N.m (115 lb in) on the first pass.
3. Tighten the lower intake manifold bolts (1, 2, 3, 4) in sequence to 13 N.m (115 lb in) on the final pass.
4. Tighten the lower intake manifold bolts (5, 6, 7, 8) in sequence to 25 N.m (18 lb ft) on the final pass.

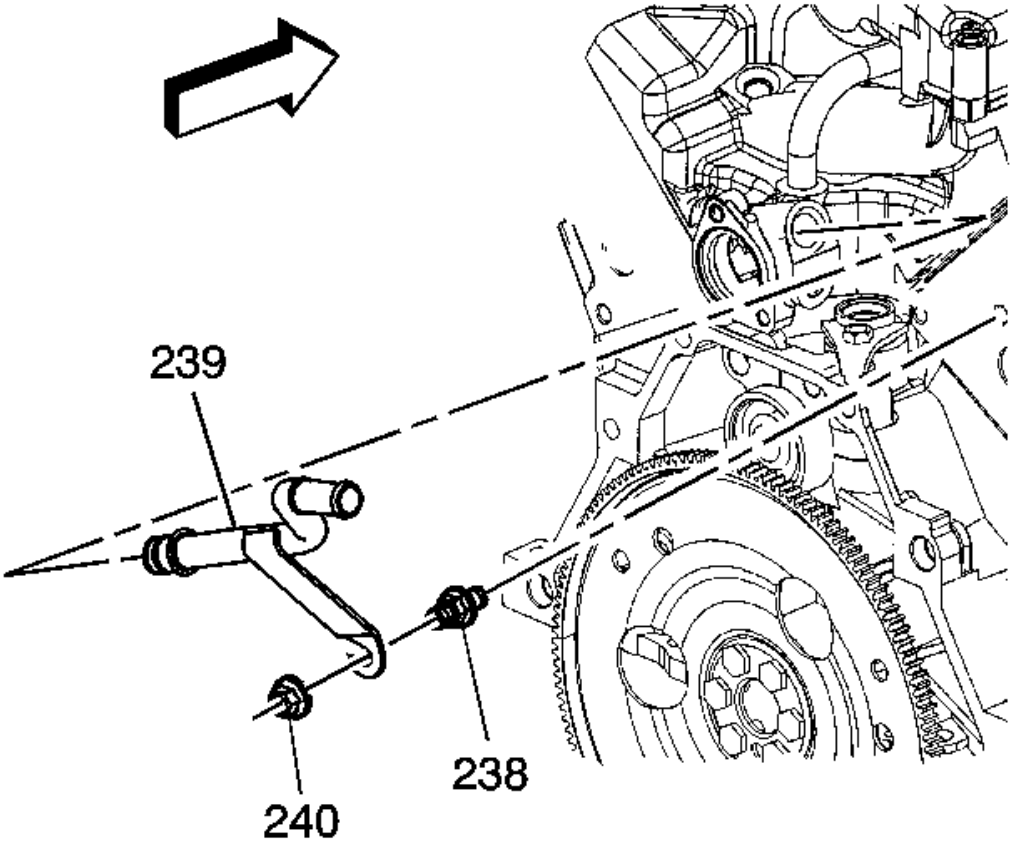


**Fig. 455: View Of Heater Inlet Pipe & Nut**
**Courtesy of GENERAL MOTORS CORP.**

 © 2011 Mitchell Repair Information Company, LLC.

5. Install the heater outlet pipe adapter hose and clamp to the thermostat bypass pipe.
6. Install the heater inlet pipe.
7. Install the heater inlet pipe nut.

**Tighten:** Tighten the heater inlet pipe nut to 25 N.m (18 lb ft).

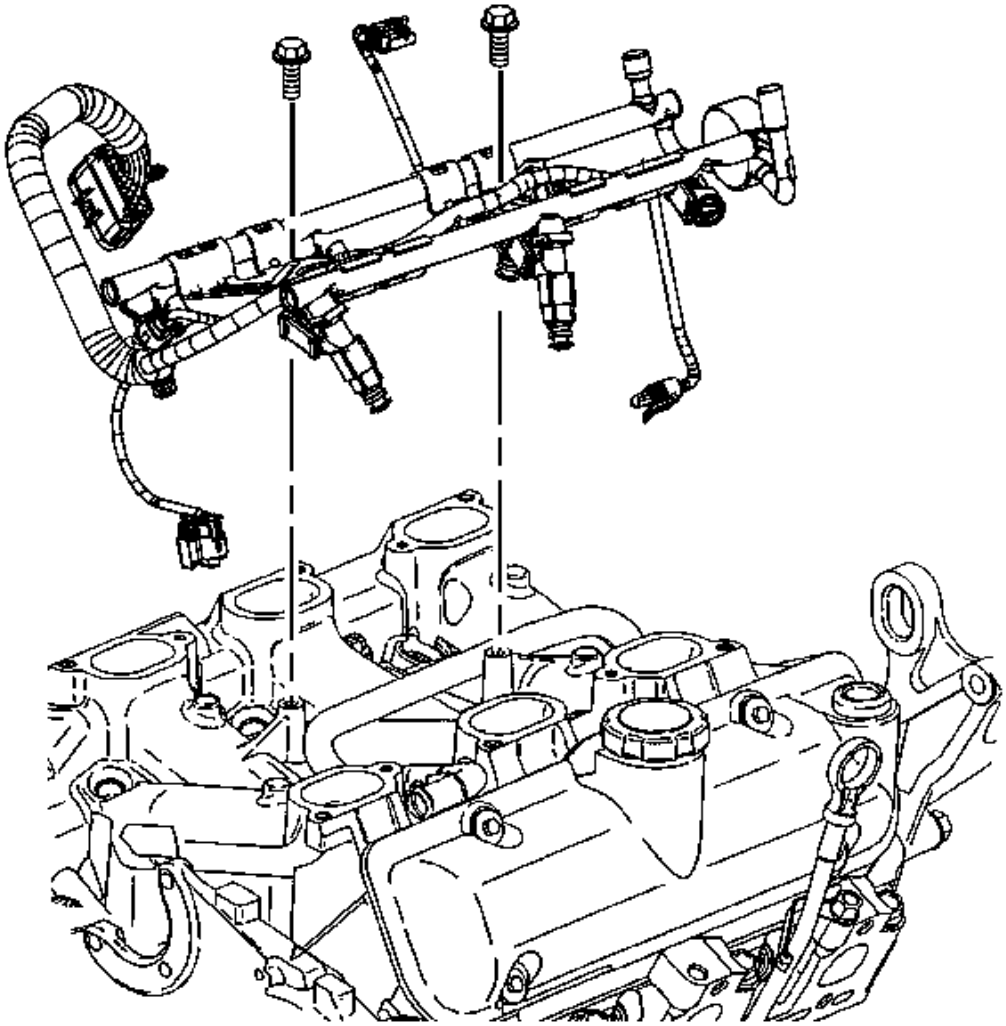

**Fig. 456: View Of Fuel Injector Rail Assembly**
**Courtesy of GENERAL MOTORS CORP.**

**IMPORTANT: Do not use the fuel injector O-ring seals twice. Install NEW fuel injector O-**

 © 2011 Mitchell Repair Information Company, LLC.

**ring seals during assembly.**

**IMPORTANT: Do not press on the fuel pressure regulator valve when installing the fuel injector rail assembly.**

8. Install the fuel injector rail assembly.
    1. Install the fuel injector O-rings, lubricate using GM P/N 12345616, (Canadian P/N 993182) or equivalent.
    2. Install the injector nozzles into the lower intake manifold injector bores.
    3. Press on the injector rail using the palms of both hands until the injectors are fully seated.
9. Install the fuel injector rail bolts.

    **Tighten:** Tighten the fuel injector rail bolts to 10 N.m (89 lb in).

10. Install the coolant temperature sensor and camshaft position sensor connectors.

**Intake Manifold Installation - Upper**

 © 2011 Mitchell Repair Information Company, LLC.

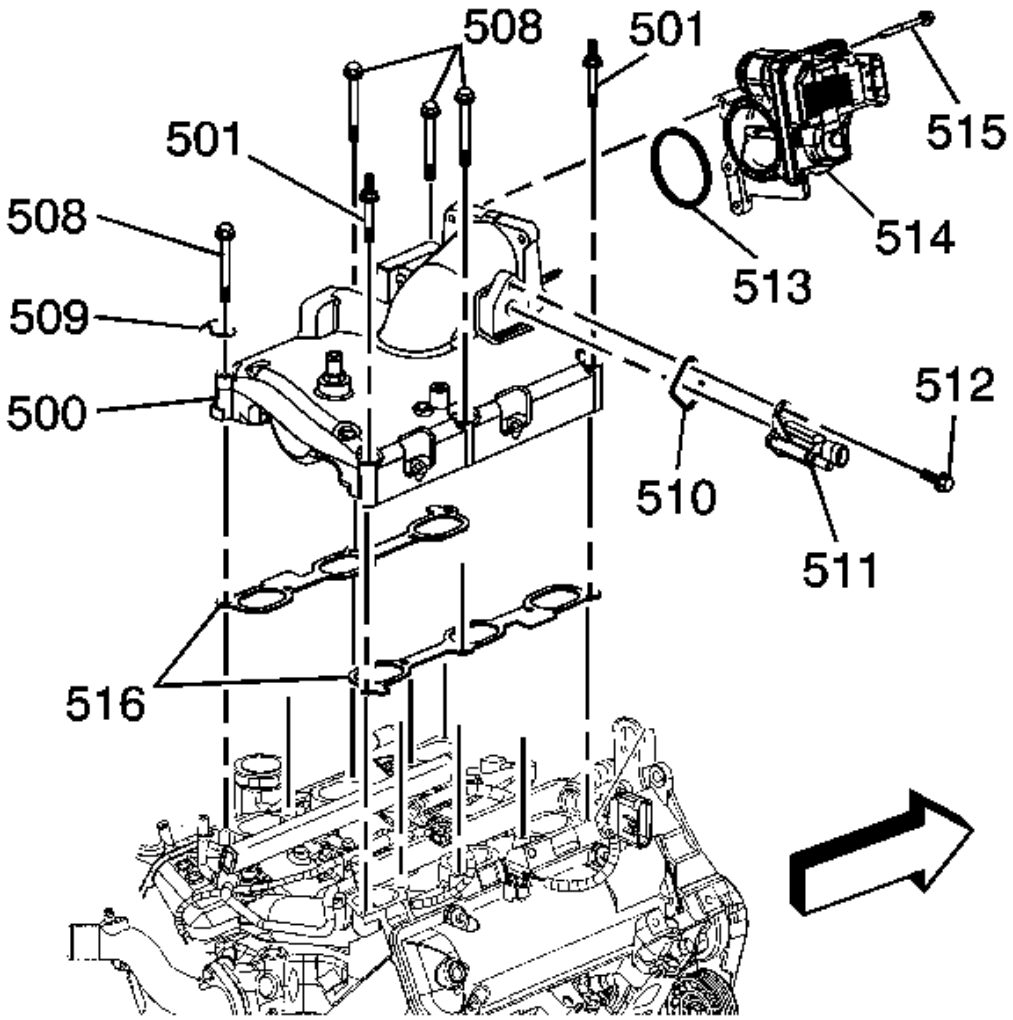


**Fig. 457: View Of Throttle Body, Intake Manifold & Components**
**Courtesy of GENERAL MOTORS CORP.**

1. Install the upper intake manifold gaskets (516).
2. Install the upper intake manifold (500).

**NOTE: Refer to Fastener Notice in Cautions and Notices.**

3. Install the upper intake manifold bolts and studs (501, 508). Apply threadlock GM P/N 12345382 (Canadian P/N 10953489) to the threads.

 © 2011 Mitchell Repair Information Company, LLC.

**Tighten:** Tighten the upper intake manifold bolts and studs to 25 N.m (18 lb ft).

4. Install the throttle body seal (513) and the throttle body (514).

**IMPORTANT: Do not tighten the throttle body bolts until the heater outlet pipe is installed.**

5. Install the purge valve assembly (510, 511) and the bolt (512).

**Tighten:** Tighten the purge valve bolt to 10 N.m (89 lb in).

**Valve Rocker Arm Cover Installation - Right**

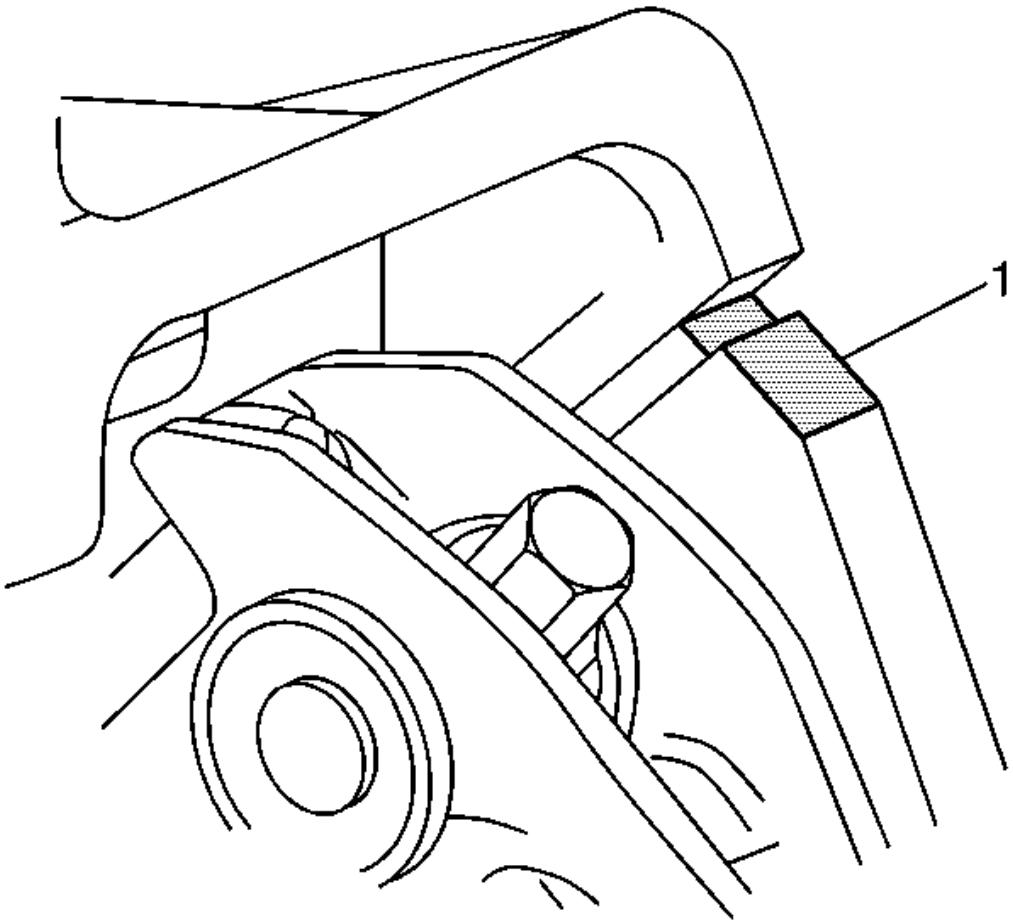


**Fig. 458: Identifying Cylinder Head To Lower Intake Manifold Joint**
**Courtesy of GENERAL MOTORS CORP.**

 © 2011 Mitchell Repair Information Company, LLC.

**IMPORTANT: All gasket-mating surfaces need to be free of oil and foreign material. Use P/N 12378392 or equivalent to clean surfaces.**

**IMPORTANT: Apply sealant GM P/N 12378521 (Canadian P/N 88901148), or equivalent, at the cylinder head to lower intake manifold joint.**

1. Install a new gasket to the valve rocker arm cover. Ensure that the gasket is properly seated in the groove of the valve rocker arm cover.
2. Apply sealer GM P/N 12378521 (Canadian P/N 88901148), or equivalent to the joint surfaces (1) where the cylinder head and intake manifold meet.

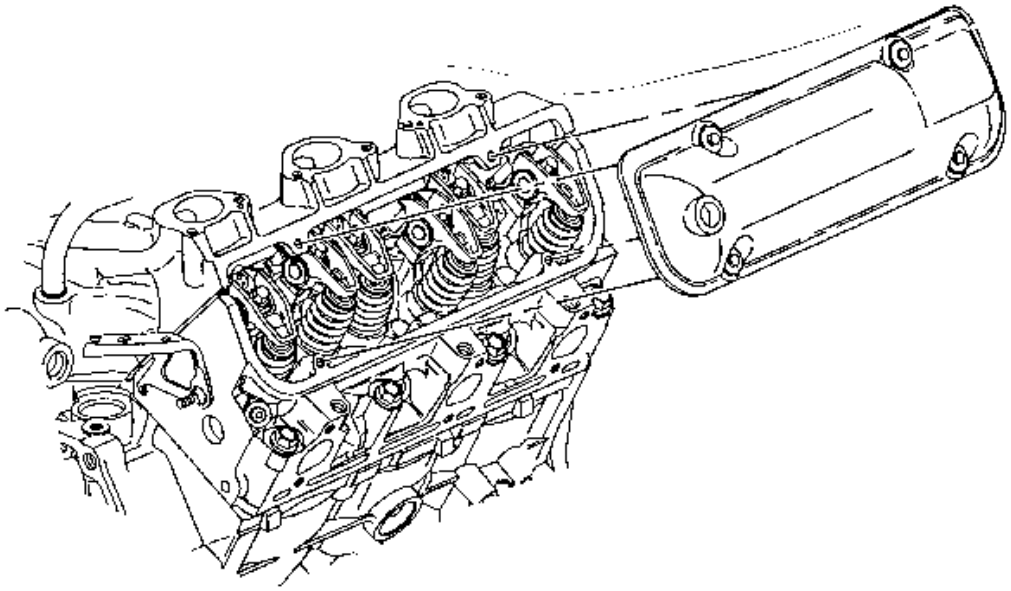

**Fig. 459: View Of Valve Rocker Arm Cover - Right**
**Courtesy of GENERAL MOTORS CORP.**

3. Install the valve rocker arm cover.

**NOTE: Refer to Fastener Notice in Cautions and Notices.**

4. Install the valve rocker arm cover bolts.

**Tighten:** Tighten the valve rocker arm cover bolts to 10 N.m (89 lb in).

 © 2011 Mitchell Repair Information Company, LLC.

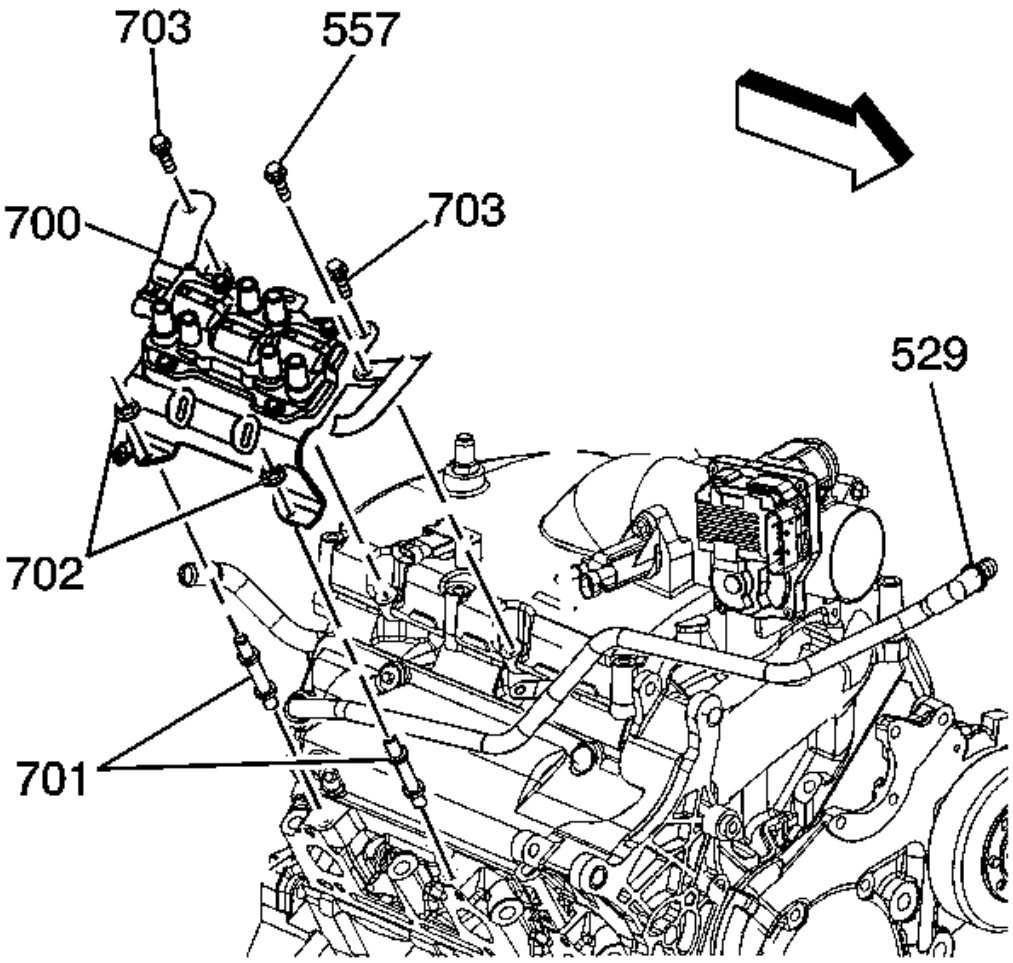


**Fig. 460: View Of Ignition Module & PCV Fresh Air Tube**
**Courtesy of GENERAL MOTORS CORP.**

5. Install the PCV fresh air tube (529).
6. Install the ignition module studs (701).

   **Tighten:** Tighten the ignition module studs to 25 N.m (18 lb ft).

7. Install the ignition module with the ignition wires still attached (700).
8. Install the ignition module nuts (702) and bolts (703).

   **Tighten:** Tighten the ignition module nuts and bolts to 25 N.m (18 lb ft).

 © 2011 Mitchell Repair Information Company, LLC.

9. Install the fresh air tube and wire harness retaining bolt (557).

   **Tighten:** Tighten the fresh air tube and wire harness retaining bolt to 5 N.m (44 lb in).

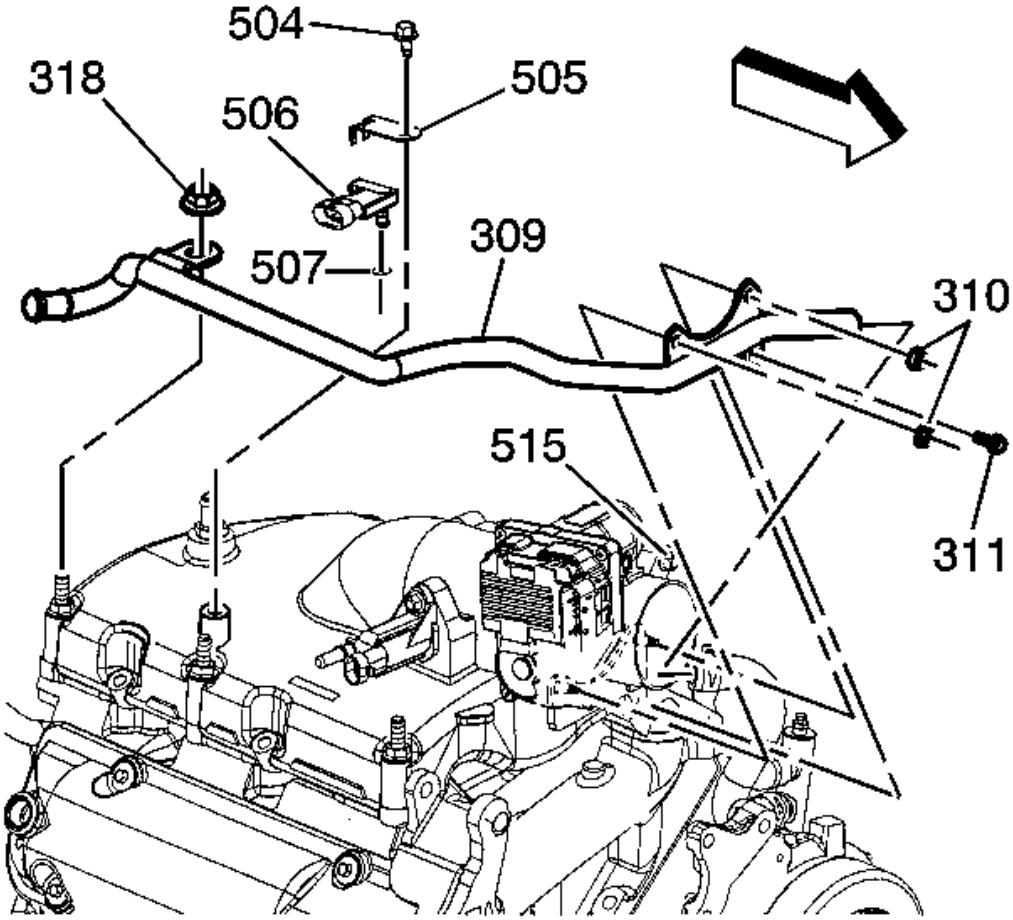


**Fig. 461: View Of MAP Sensor & Heater Outlet Pipe**
**Courtesy of GENERAL MOTORS CORP.**

10. Install the heater outlet pipe (309).
11. Install the heater outlet pipe nuts and bolt (310, 311, 318) to the upper intake manifold.

    **Tighten:**
    - Tighten the heater outlet pipe nuts (310) and bolt (311) to 10 N.m (89 lb in).
    - Tighten the heater outlet pipe nut (318) to 25 N.m (18 lb ft).
    - Tighten the throttle body bolts (515) to 10 N.m (89 lb in).

 © 2011 Mitchell Repair Information Company, LLC.

12. Install the heater outlet pipe hose and hose clamp to the pipe.
13. Install the manifold absolute pressure (MAP) sensor (506), clip (505), and bolt (504) to the intake.

    **Tighten:** Tighten the MAP sensor bolt to 10 N.m (89 lb in).

**Valve Rocker Arm Cover Installation - Left**

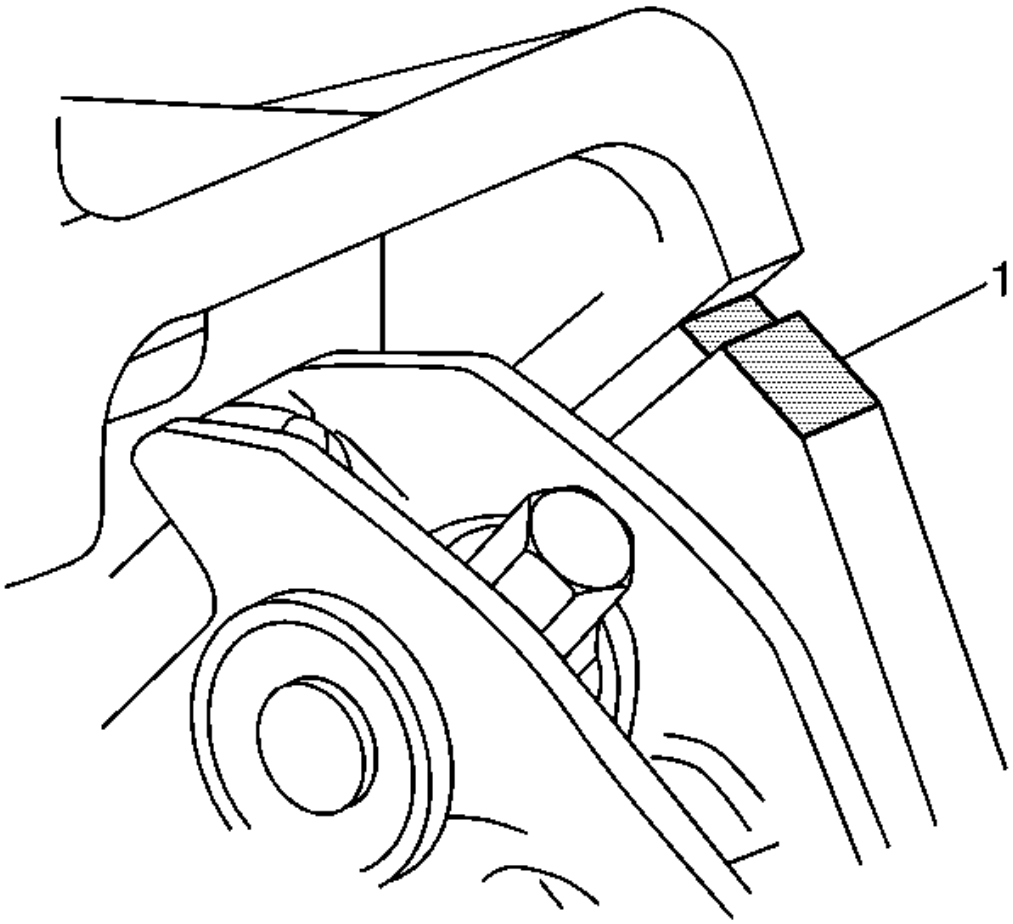


**Fig. 462: Identifying Cylinder Head To Lower Intake Manifold Joint**
**Courtesy of GENERAL MOTORS CORP.**

**IMPORTANT: All gasket-mating surfaces need to be free of oil and foreign material. Use P/N 12378392 or equivalent to clean surfaces.**

**IMPORTANT: Apply sealant GM P/N 12378521 (Canadian P/N 88901148), or equivalent,**

 © 2011 Mitchell Repair Information Company, LLC.

**at the cylinder head to lower intake manifold joint.**

1. Install a new gasket to the valve rocker arm cover. Ensure that the gasket is properly seated in the groove of the valve rocker arm cover.
2. Apply sealer GM P/N 12378521 (Canadian P/N 88901148), or equivalent to the joint surfaces (1) where the cylinder head and intake manifold meet.

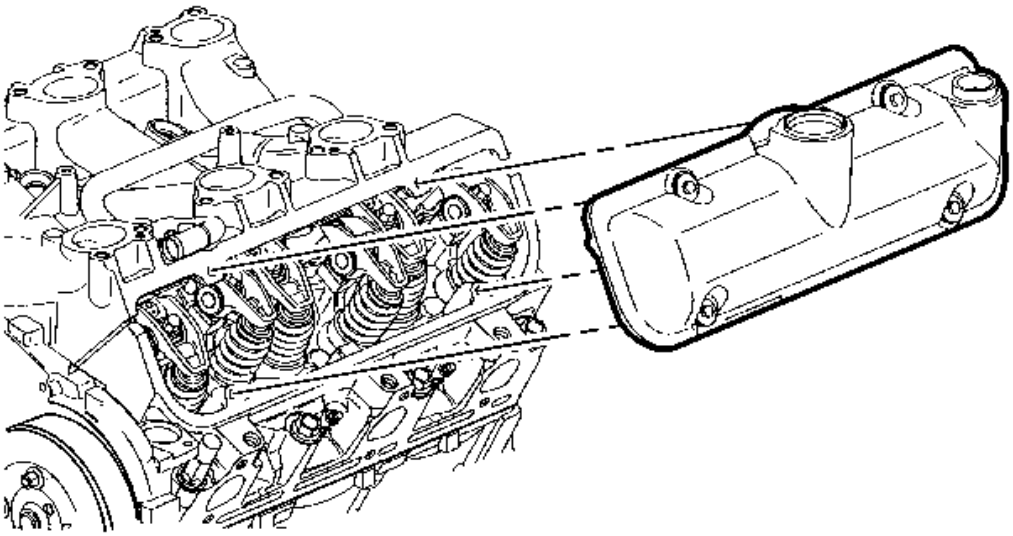

**Fig. 463: View Of Valve Rocker Arm Cover - Left**
**Courtesy of GENERAL MOTORS CORP.**

3. Install the valve rocker arm cover.

**NOTE: Refer to Fastener Notice in Cautions and Notices.**

4. Install the valve rocker arm cover bolts.

**Tighten:** Tighten the valve rocker arm cover bolts to 10 N.m (89 lb in).

 © 2011 Mitchell Repair Information Company, LLC.

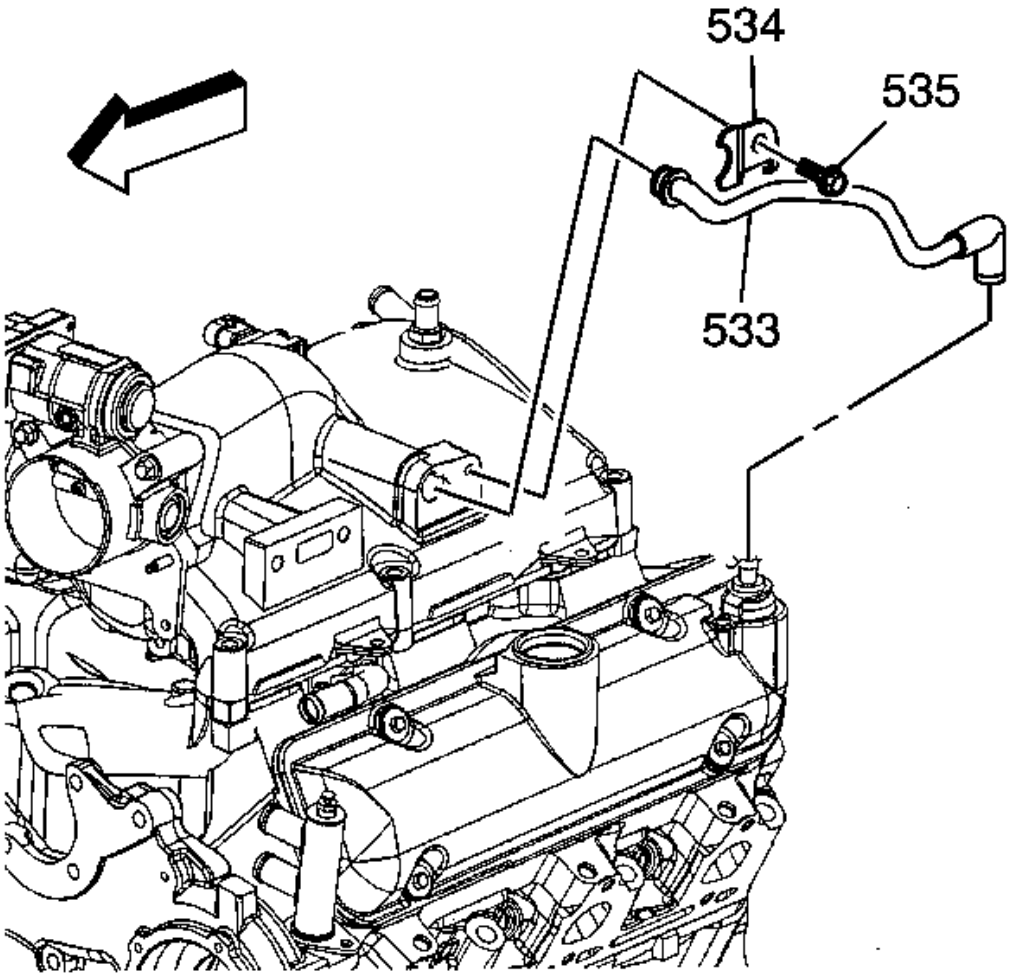


**Fig. 464: View Of Foul Air Tube**
**Courtesy of GENERAL MOTORS CORP.**

5. Install the PCV fresh air tube (533).
6. Install the PCV fresh air tube clip (534) and bolt (535).

**Tighten:** Tighten the PCV fresh air tube bolt to 10 N.m (89 lb in).

**Water Outlet and Thermostat Installation**

 © 2011 Mitchell Repair Information Company, LLC.

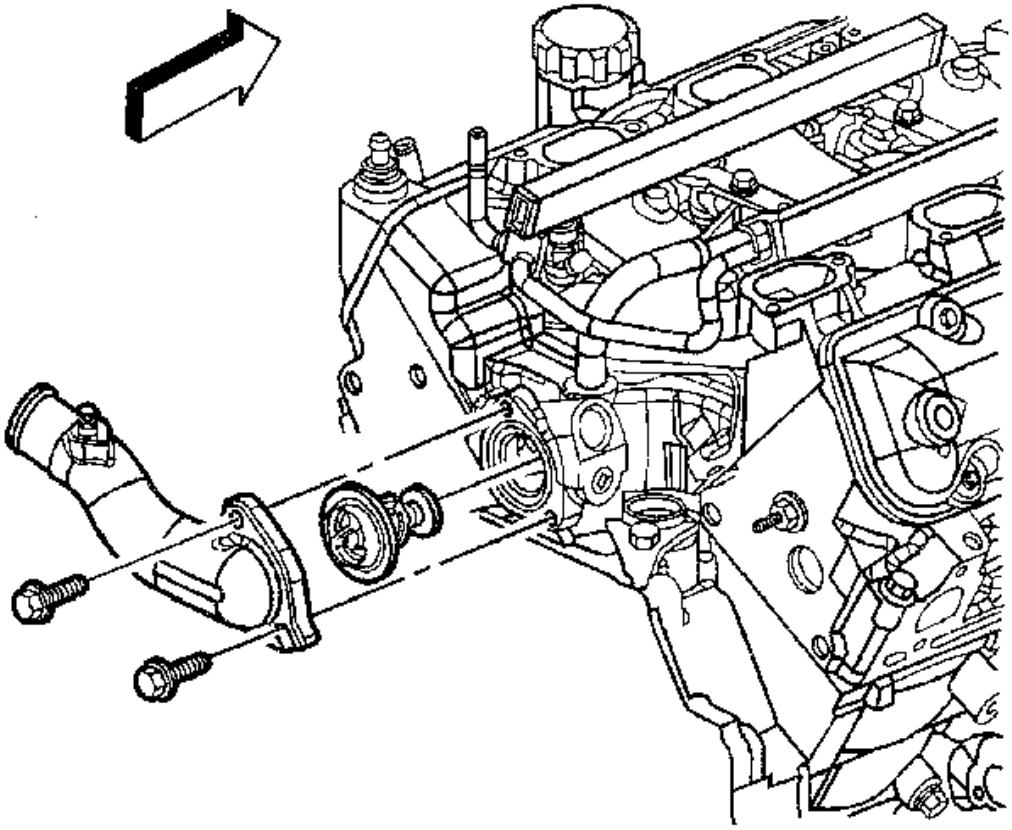

**Fig. 465: View Of Water Outlet & Thermostat**
**Courtesy of GENERAL MOTORS CORP.**

1. Install the thermostat.
2. Install the water outlet.

**NOTE: Refer to Fastener Notice in Cautions and Notices.**

3. Install the water outlet bolts.

   **Tighten:** Tighten the water outlet bolts to 25 N.m (18 lb ft).

**Exhaust Manifold Installation - Left**

 © 2011 Mitchell Repair Information Company, LLC.

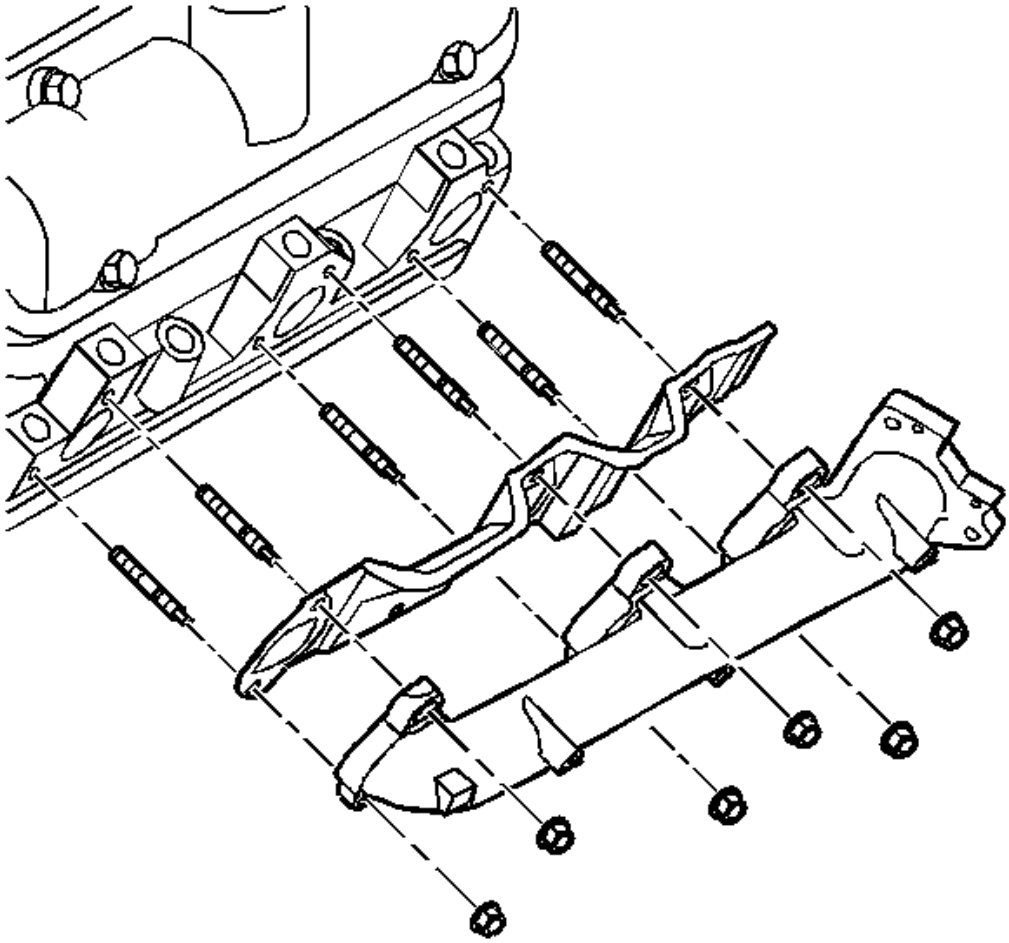

**Fig. 466: View Of Exhaust Manifold & Exhaust Manifold Gasket - Left**
**Courtesy of GENERAL MOTORS CORP.**

**NOTE: Refer to Fastener Notice in Cautions and Notices.**

1. Install the exhaust manifold studs.

   **Tighten:** Tighten the exhaust manifold studs to 18 N.m (13 lb ft).

2. Install the exhaust manifold gasket.
3. Install the exhaust manifold.
4. Install the exhaust manifold nuts in sequence.

 © 2011 Mitchell Repair Information Company, LLC.

**Tighten:** Tighten the exhaust manifold nuts in sequence working from the center out to 16 N.m (12 lb ft).

5. Install the left side spark plugs.

   **Tighten:** Tighten the spark plugs to 15 N.m (11 lb ft).

6. Install the spark plug wires to the spark plugs.

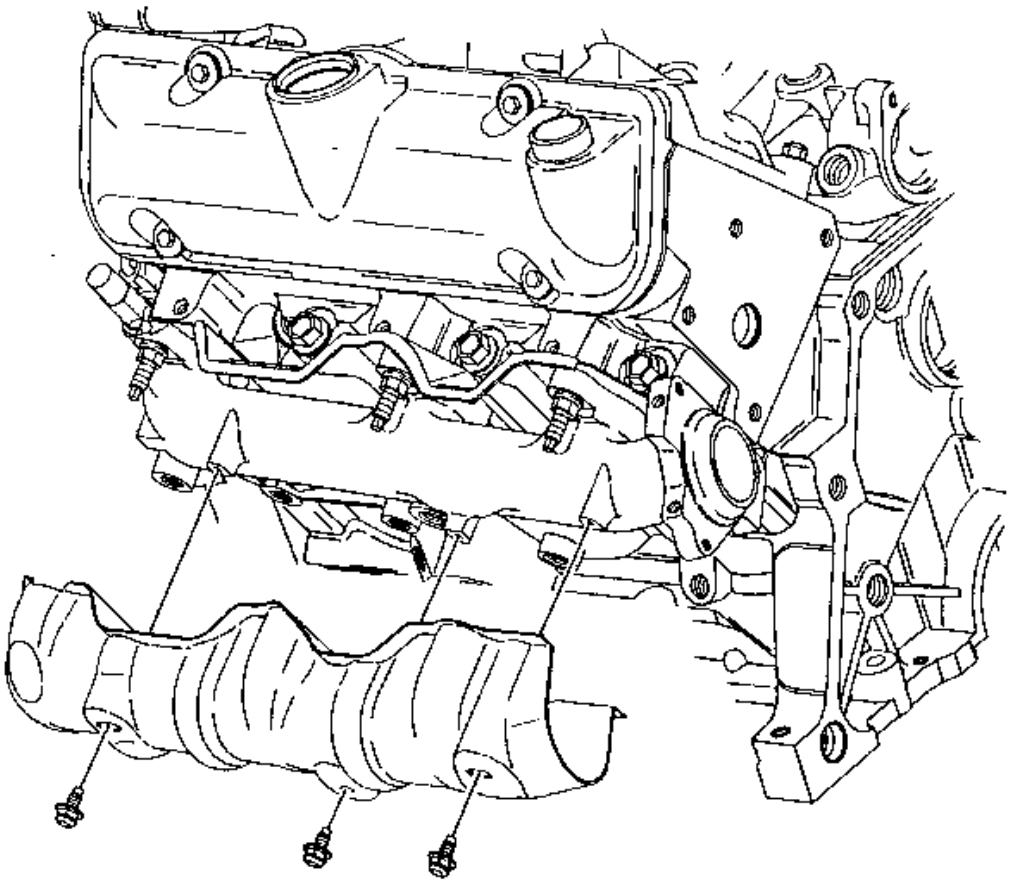

**Fig. 467: View Of Exhaust Manifold Heat Shield & Bolts - Left**
**Courtesy of GENERAL MOTORS CORP.**

7. Install the exhaust manifold heat shield.
8. Install the exhaust manifold heat shield bolts.

   **Tighten:** Tighten the exhaust manifold heat shield bolts to 10 N.m (89 lb in).

 © 2011 Mitchell Repair Information Company, LLC.

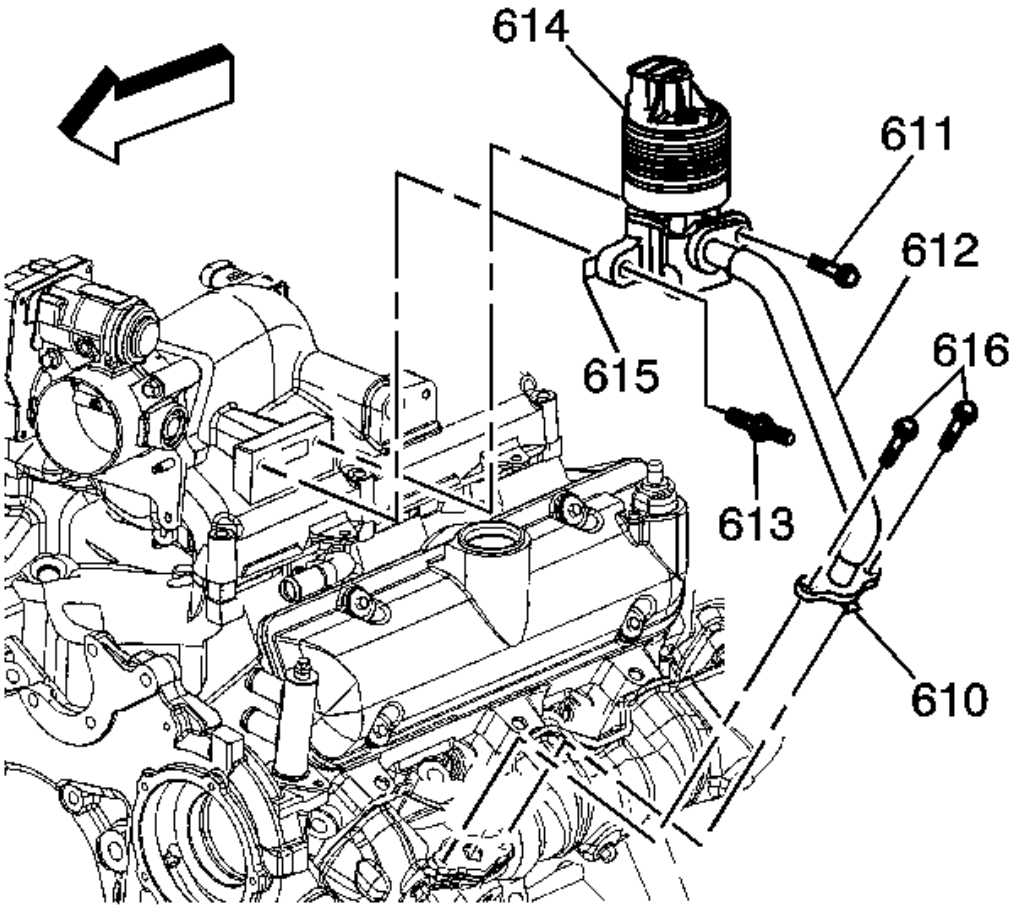


**Fig. 468: View Of EGR Valve & Components**
**Courtesy of GENERAL MOTORS CORP.**

9. Install the exhaust gas recirculation (EGR) valve gasket (615) and the EGR assembly (612, 614) to the upper intake manifold.
10. Install the EGR valve bolts (616).

    **Tighten:** Tighten the EGR valve bolts to 30 N.m (22 lb ft).

11. Install the EGR pipe gasket (610) and pipe (612) to the left exhaust manifold.
12. Install the EGR pipe bolts (616).

    **Tighten:** Tighten the EGR pipe bolts to 30 N.m (22 lb ft).

**Exhaust Manifold Installation - Right**

 © 2011 Mitchell Repair Information Company, LLC.

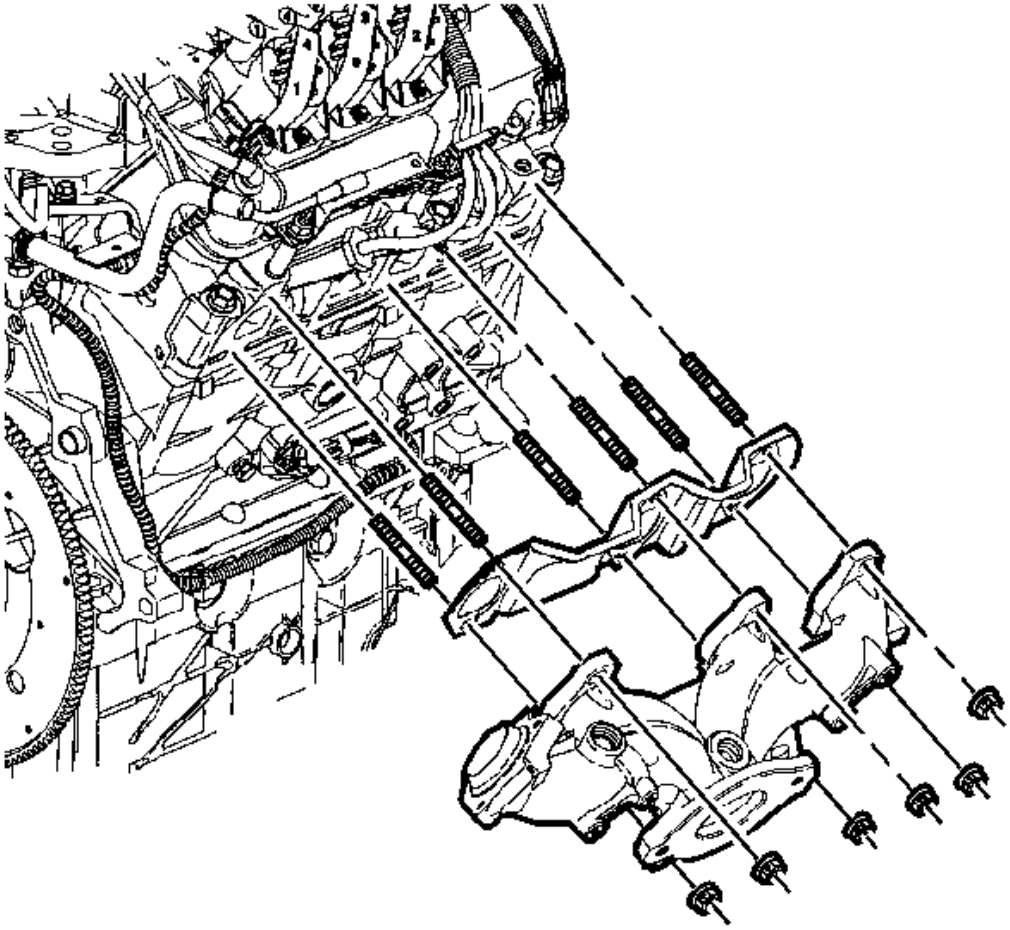

**Fig. 469: Right Exhaust Manifold (3.4L)**
**Courtesy of GENERAL MOTORS CORP.**

**NOTE: Refer to Fastener Notice in Cautions and Notices.**

1. Install the exhaust manifold studs.

   **Tighten:** Tighten the exhaust manifold studs to 18 N.m (13 lb ft).

2. Install the exhaust manifold gasket.
3. Install the exhaust manifold.
4. Install the exhaust manifold nuts.

   **Tighten:** Tighten the exhaust manifold nuts working from the center out to 16 N.m (12 lb ft).

 © 2011 Mitchell Repair Information Company, LLC.

5. Install the right side spark plugs.

   **Tighten:** Tighten the spark plugs to 15 N.m (11 lb ft).

6. Install the spark plug wires onto the spark plugs.

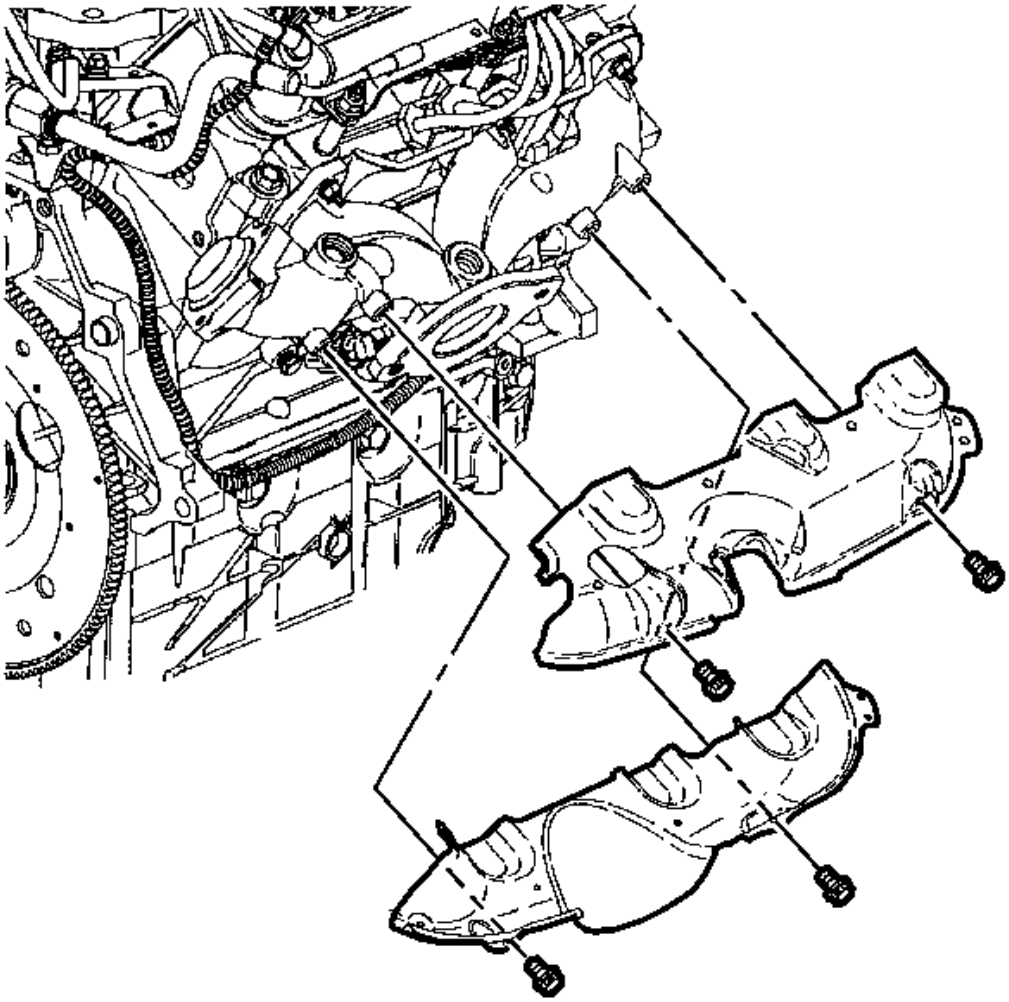

**Fig. 470: View Of Right Exhaust Manifold Heat Shields & Bolts**
**Courtesy of GENERAL MOTORS CORP.**

7. Install the lower exhaust manifold heat shield.
8. Install the upper exhaust manifold heat shield.
9. Install the exhaust manifold heat shield bolts.

 © 2011 Mitchell Repair Information Company, LLC.

**Tighten:** Tighten the exhaust manifold heat shield bolts to 10 N.m (89 lb in).

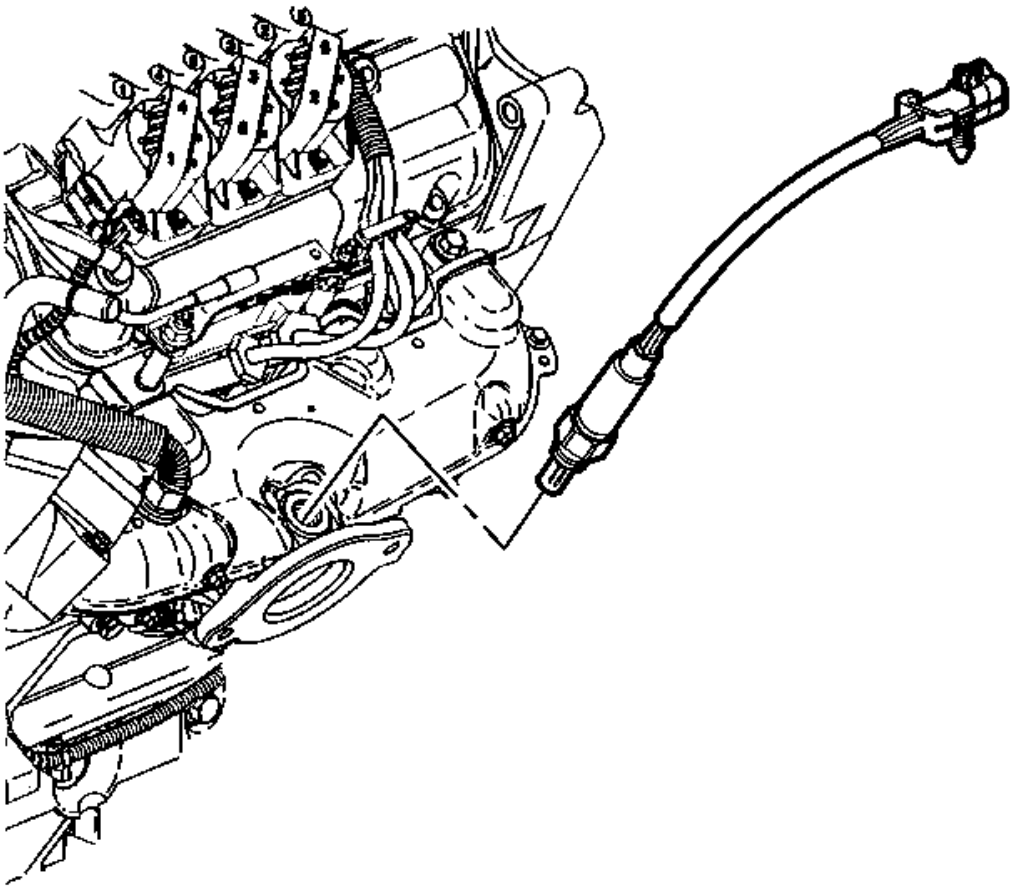

**Fig. 471: Identifying Heated Oxygen Sensor**
**Courtesy of GENERAL MOTORS CORP.**

10. Coat the threads of the heated oxygen sensor with anti seize compound.
11. Install the heated oxygen sensor.

    **Tighten:** Tighten the heated oxygen sensor to 42 N.m (31 lb ft).

12. Install the spark plug wires.

**Exhaust Crossover Pipe Installation**

 © 2011 Mitchell Repair Information Company, LLC.

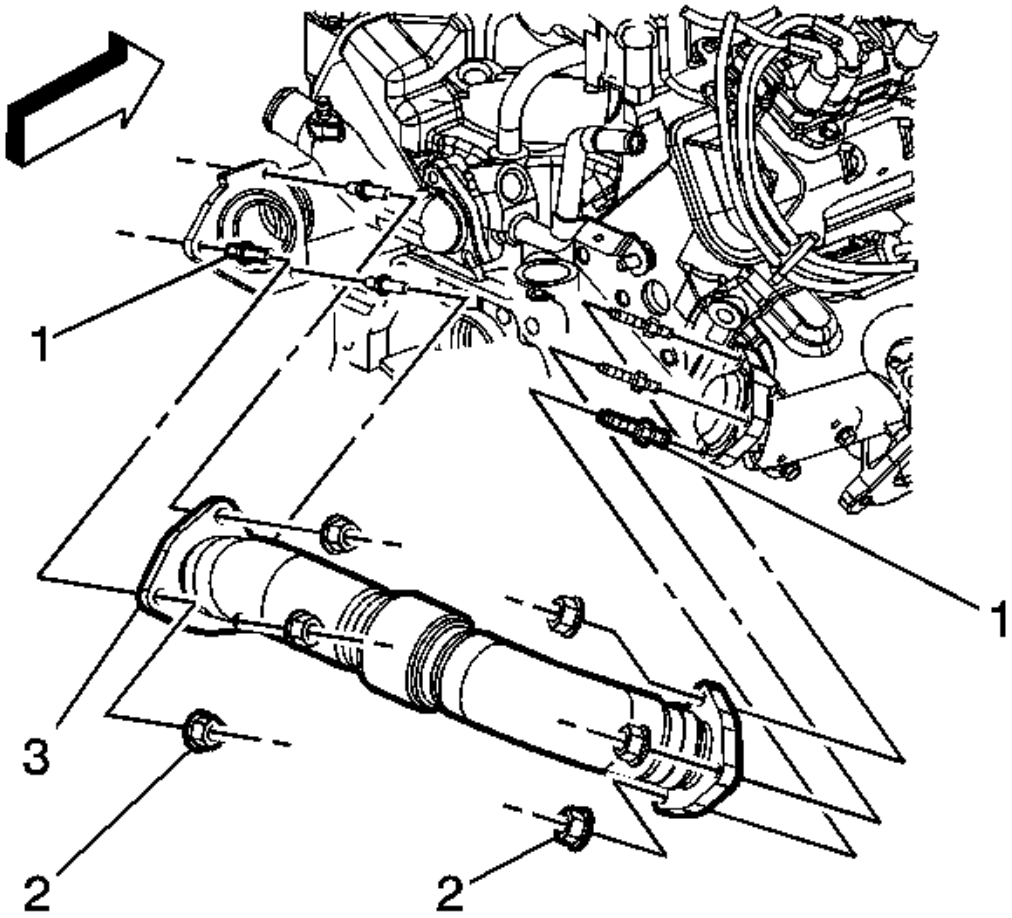


**Fig. 472: View Of Exhaust Crossover Pipe, Studs & Nuts**
**Courtesy of GENERAL MOTORS CORP.**

**NOTE:** **Refer to Fastener Notice in Cautions and Notices.**

1. Install the exhaust crossover pipe studs if necessary (1).

   **Tighten:** Tighten the exhaust crossover pipe studs to 25 N.m (18 lb ft).

2. Install the exhaust crossover pipe (3).

   **NOTE:** **When tightening the exhaust crossover pipe nuts be sure the pipe is in its original location, approximately 6.35 mm (0.25 in) from the thermostat housing. If the pipe is not installed in the correct location it could possibly**

 © 2011 Mitchell Repair Information Company, LLC.

**contact this housing. If there is contact between the exhaust crossover pipe and thermostat housing, engine performance could be affected.**

3. Install the exhaust crossover pipe nuts (2).

   **Tighten:** Tighten the exhaust crossover pipe nuts to 25 N.m (18 lb ft).

**Oil Filter Adapter Installation**

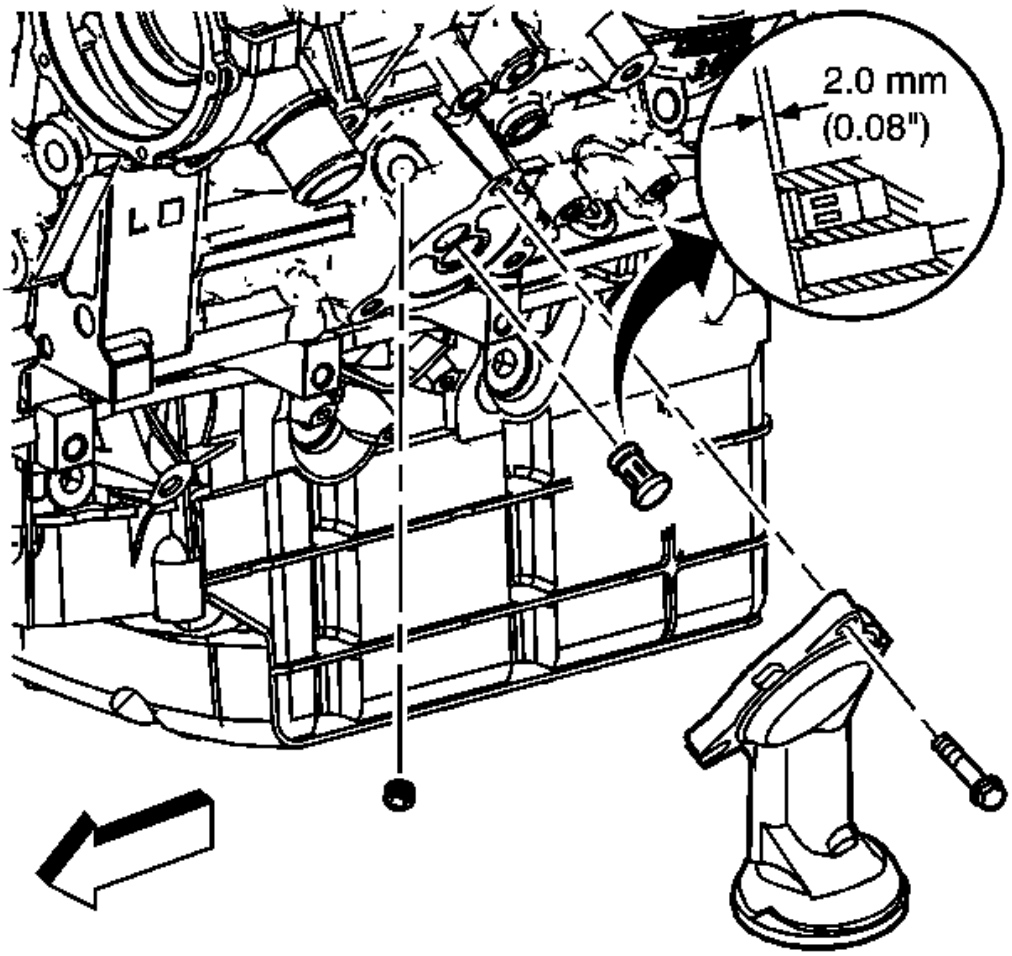


**Fig. 473: Removing Oil Filter Adapter Bolts**
**Courtesy of GENERAL MOTORS CORP.**

**NOTE:** **Maximum gasket performance is achieved when using new fasteners,**

 © 2011 Mitchell Repair Information Company, LLC.

**which contain a thread-locking patch. If the fasteners are not replaced, a thread locking chemical must be applied to the fastener threads. Failure to replace the fasteners or apply a thread-locking chemical MAY reduce gasket sealing capability.**

1. Install the oil filter bypass valve.

**NOTE:** **Refer to Fastener Notice in Cautions and Notices.**

2. Install the oil filter bypass hold plug.

   **Tighten:** Tighten the oil filter bypass hole plug to 19 N.m (14 lb ft).

3. Install the oil filter adapter.
4. Apply threadlocker P/N 21485277 to the bolt threads if required.
5. Install the oil filter adapter bolts.

   **Tighten:** Tighten the oil filter adapter bolts to 25 N.m (18 lb ft).

 © 2011 Mitchell Repair Information Company, LLC.

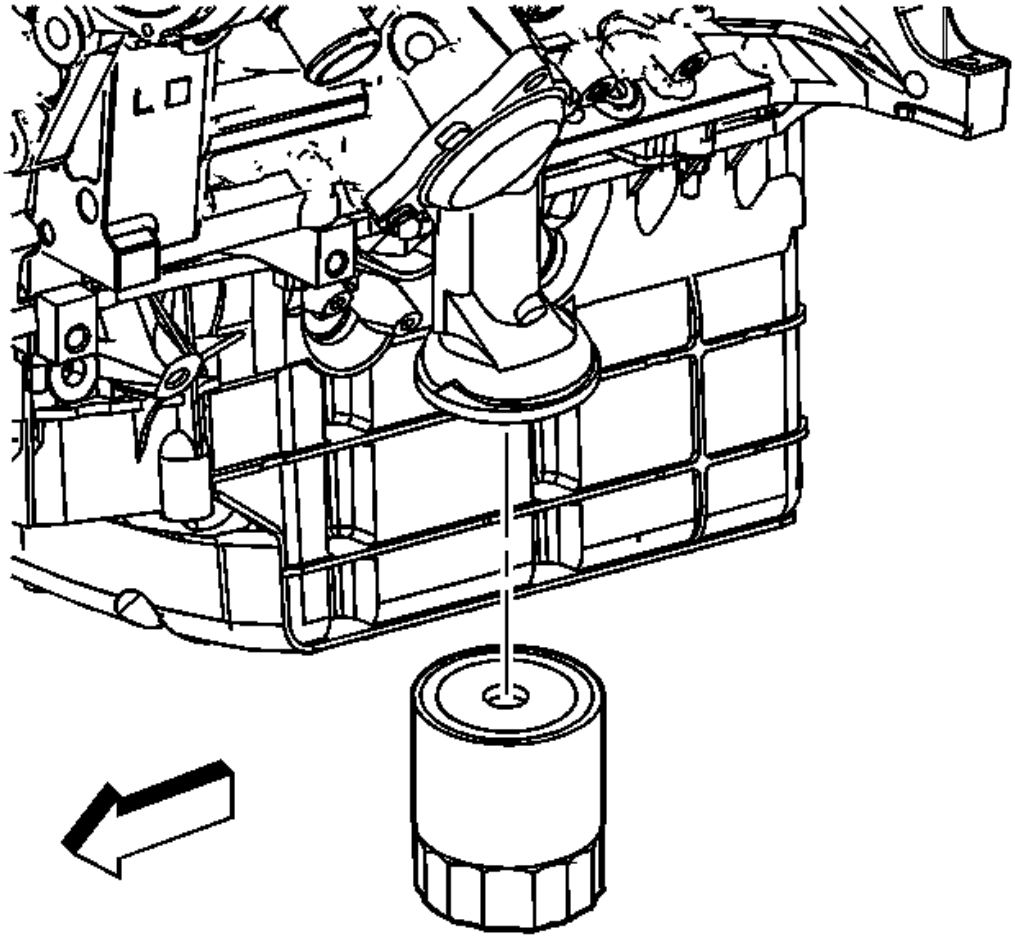

**Fig. 474: Removing Oil Filter**
**Courtesy of GENERAL MOTORS CORP.**

6. Install the oil filter.

   **Tighten:** Tighten the oil filter to 30 N.m (22 lb ft).

**Oil Level Indicator and Tube Installation**

 © 2011 Mitchell Repair Information Company, LLC.

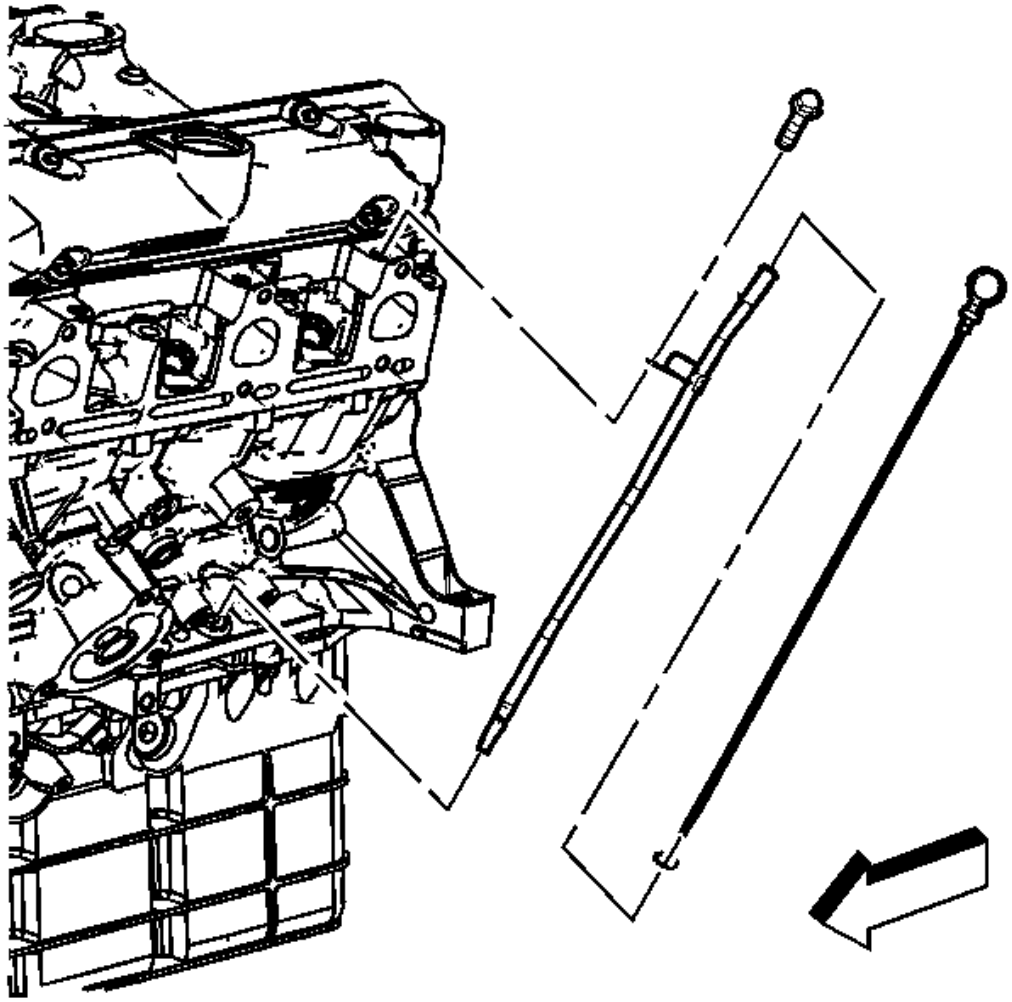

**Fig. 475: Removing Oil Level Indicator Tube Bolt**
**Courtesy of GENERAL MOTORS CORP.**

1. Install the oil level indicator tube and oil level indicator.

**NOTE:** **Refer to Fastener Notice in Cautions and Notices.**

2. Install the oil level indicator tube bolt.

**Tighten:** Tighten the oil level indicator tube bolt to 25 N.m (18 lb ft).

**Engine Lift Bracket and Generator Bracket Installation**

 © 2011 Mitchell Repair Information Company, LLC.

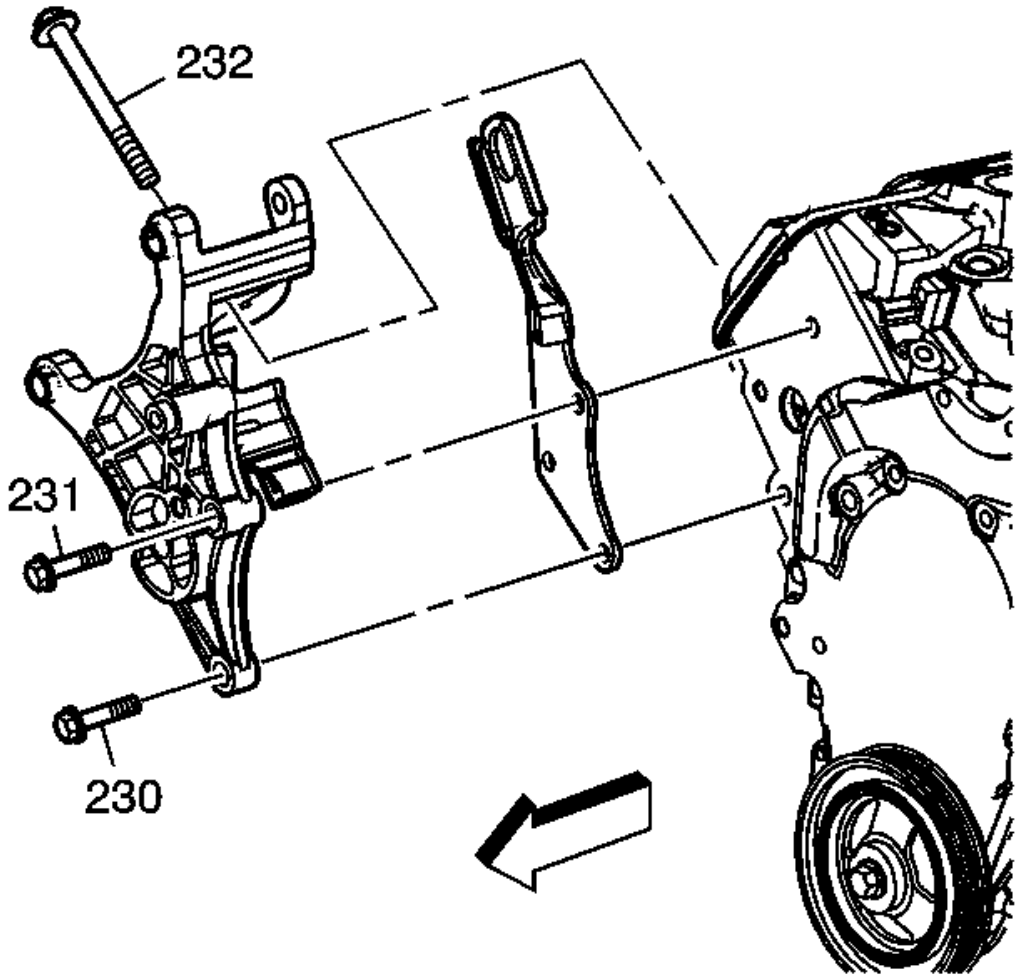


**Fig. 476: View Of Generator Bracket Assembly, Bolts & Front Engine Lift Hook**
**Courtesy of GENERAL MOTORS CORP.**

1. Install the front engine lift hook.
2. Install the generator bracket assembly.

**NOTE: Refer to Fastener Notice in Cautions and Notices.**

3. Install the generator bracket assembly bolts (230, 231, 232).

   **Tighten:** Tighten the generator bracket assembly bolts to 50 N.m (37 lb ft).

**Engine Mount Support and Strut Bracket Installation**

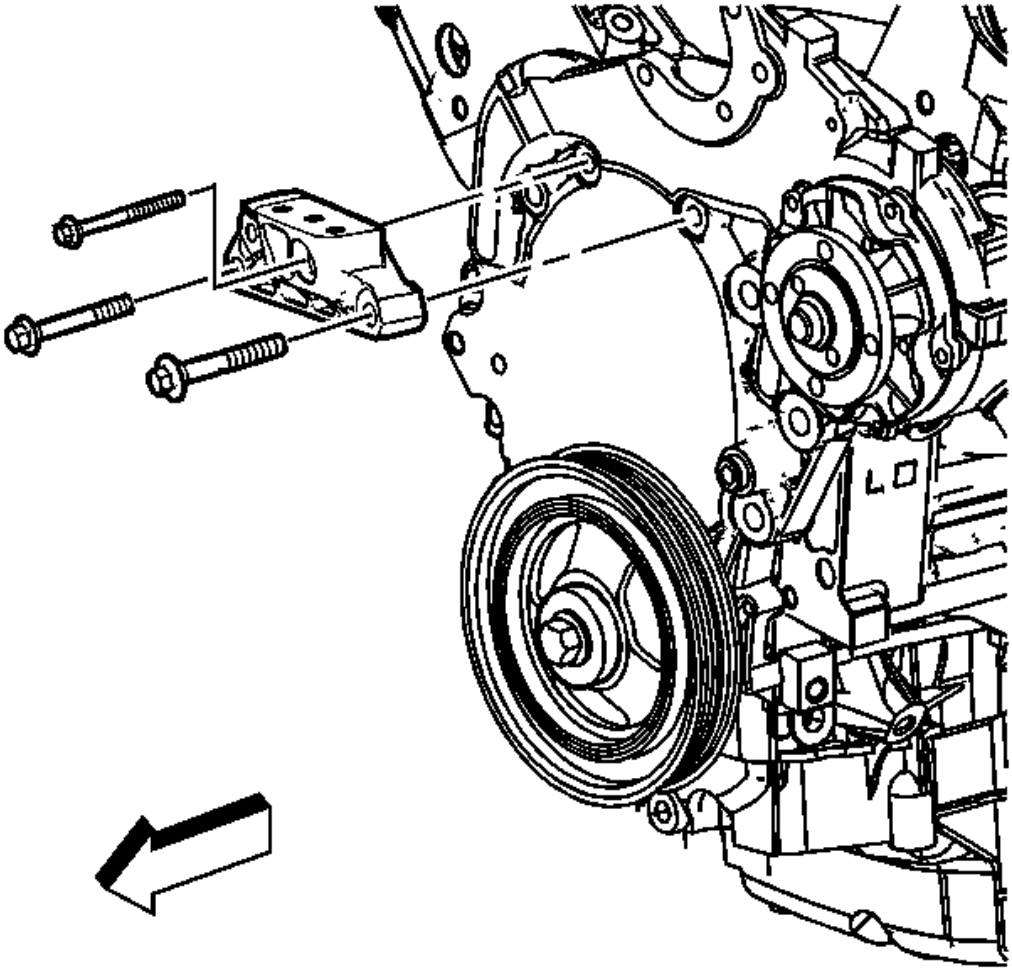

**Fig. 477: View Of Engine Mount Support & Strut Bracket**
**Courtesy of GENERAL MOTORS CORP.**

1. Install the engine mount support and strut bracket.

**NOTE:** **Refer to Fastener Notice in Cautions and Notices.**

2. Install the engine mount support and strut bracket bolts.

**Tighten:** Tighten the engine mount support and strut bracket bolts to 25 N.m (18 lb ft).

**Engine Lift Bracket Installation - Rear**

 © 2011 Mitchell Repair Information Company, LLC.

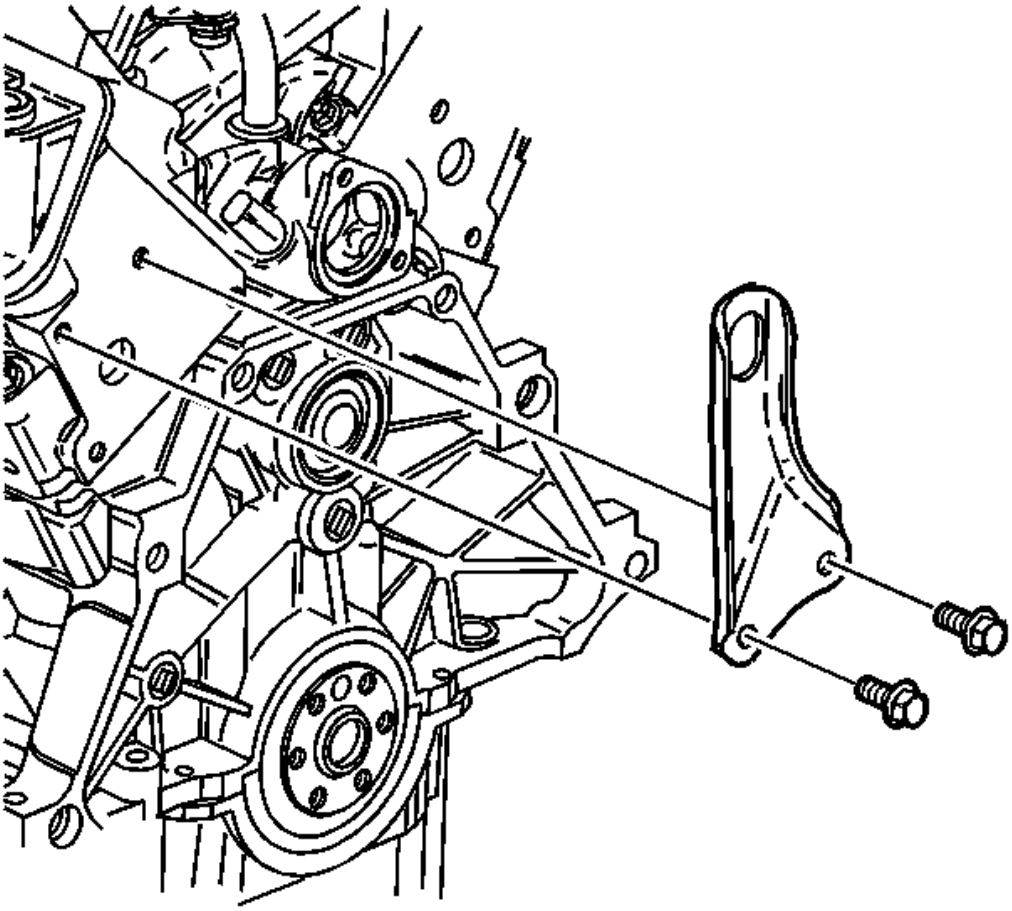

**Fig. 478: Removing Rear Engine Lift Bracket Bolts**
**Courtesy of GENERAL MOTORS CORP.**

1. Install the rear engine lift bracket.

**NOTE:** **Refer to Fastener Notice in Cautions and Notices.**

2. Install the rear engine lift bracket bolts.

**Tighten:** Tighten the rear engine lift bracket bolts to 50 N.m (37 lb ft).

**Drive Belt Tensioner Installation**

 © 2011 Mitchell Repair Information Company, LLC.

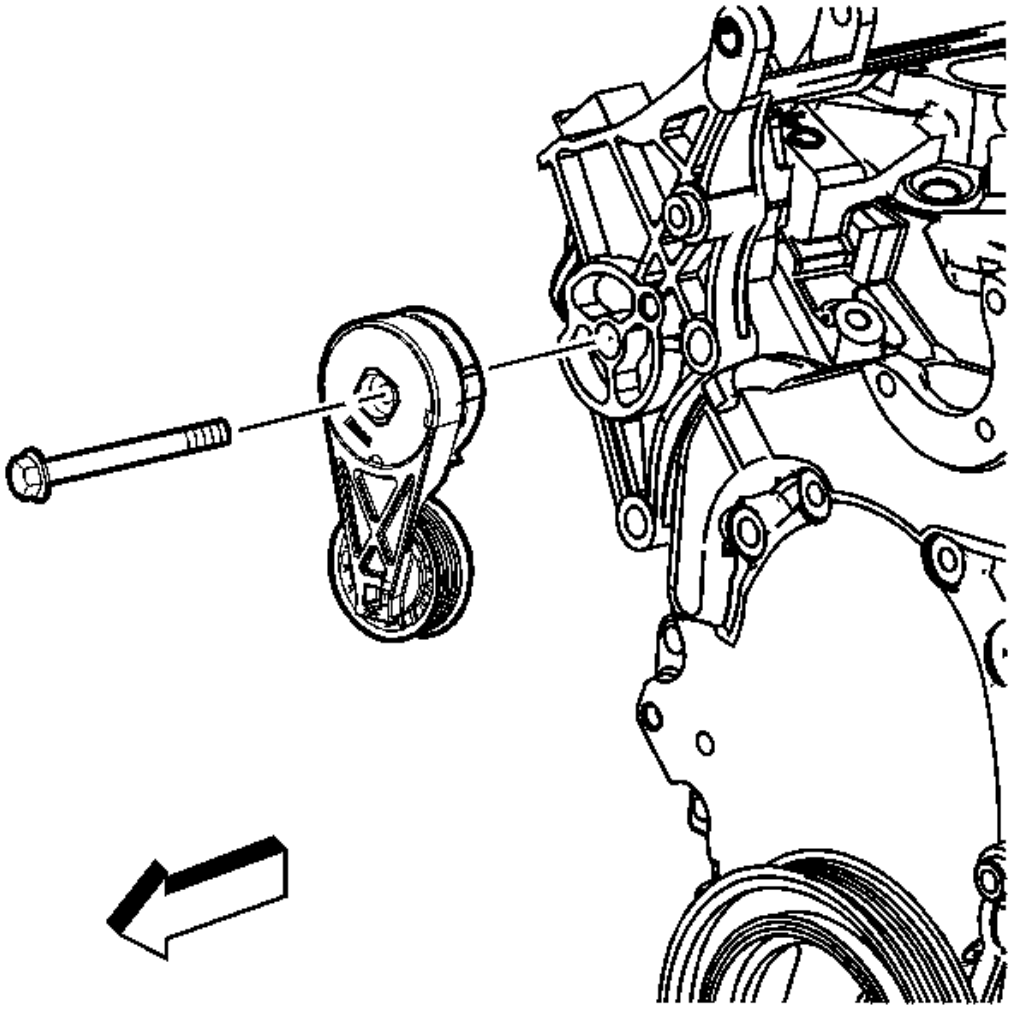

**Fig. 479: Removing Drive Belt Tensioner Bolt**
**Courtesy of GENERAL MOTORS CORP.**

1. Install the drive belt tensioner.

**NOTE:** **Refer to Fastener Notice in Cautions and Notices.**

2. Install the drive belt tensioner bolt.

**Tighten:** Tighten the drive belt tensioner bolt to 50 N.m (37 lb ft).

**Engine Flywheel Installation**

 © 2011 Mitchell Repair Information Company, LLC.

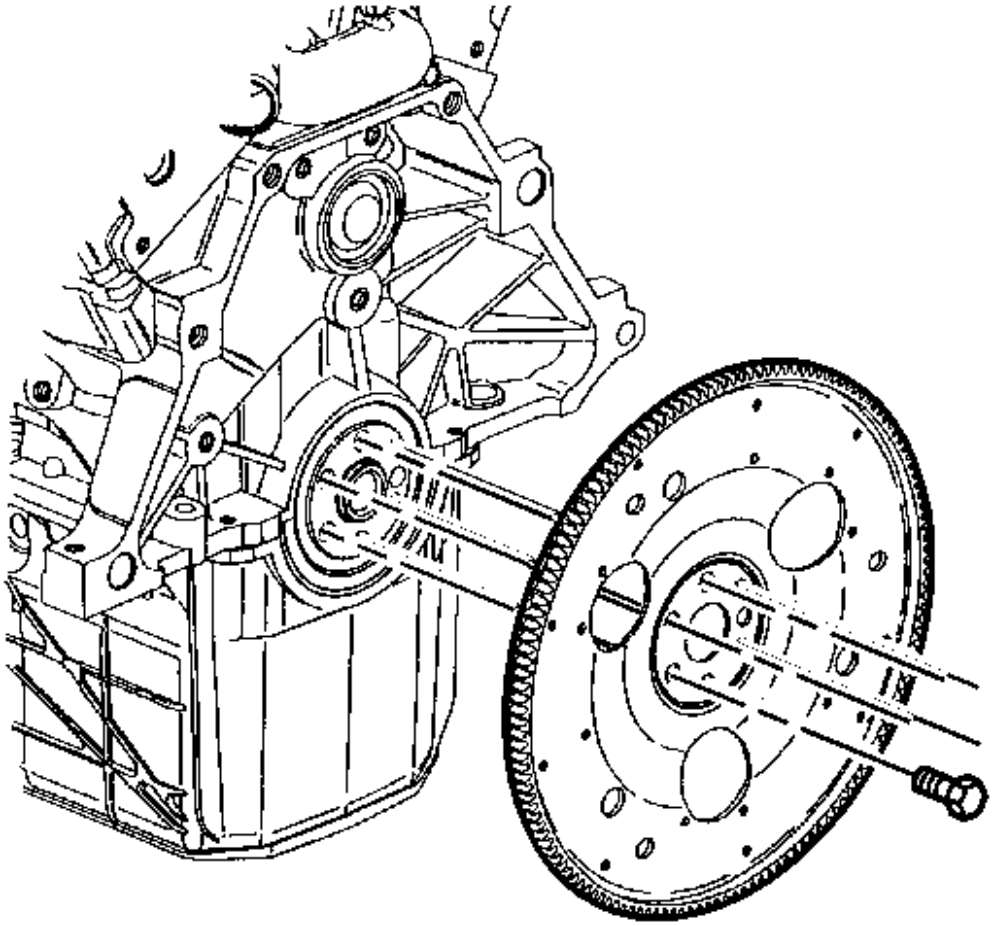

**Fig. 480: View Of Engine Flywheel**
**Courtesy of GENERAL MOTORS CORP.**

1. Install the flywheel.

**NOTE:** **Refer to Fastener Notice in Cautions and Notices.**

2. Install the flywheel bolts.

**Tighten:** Tighten the flywheel bolts to 70 N.m (52 lb ft).

**Crankshaft Balancer Installation**

 © 2011 Mitchell Repair Information Company, LLC.

**Tools Required**

- **J 29113** Balancer and Crank Sprocket Puller. See **Special Tools**.
- **J 45059** Angle Meter. See **Special Tools**.

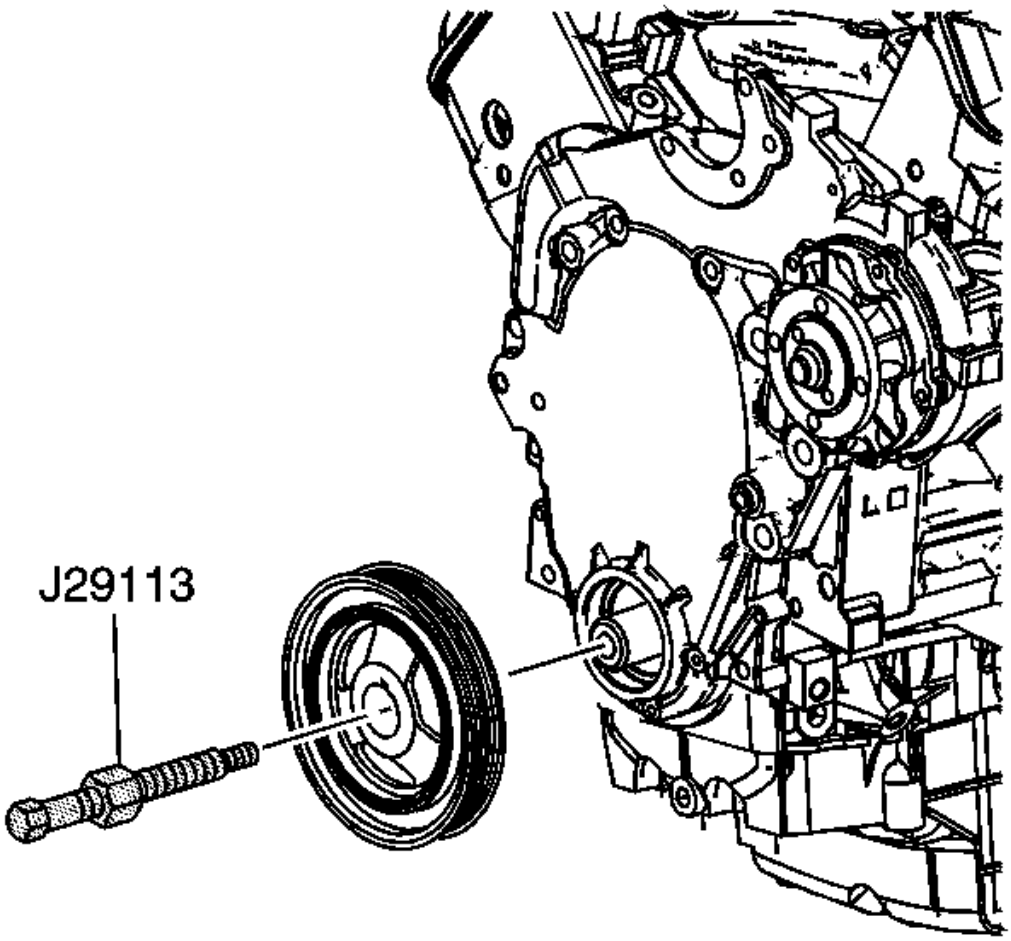


**Fig. 481: Installing J 29113 Onto Crankshaft**
**Courtesy of GENERAL MOTORS CORP.**

1. Apply sealer GM P/N 12378521 (Canadian P/N 88901148) or the equivalent to the keyway of the crankshaft balancer.
2. Place the crankshaft balancer into position over the key in the crankshaft.

**NOTE: Do NOT use a power-assisted tool with the special tool in order to remove**

 © 2011 Mitchell Repair Information Company, LLC.

**or install this component. You cannot properly control the alignment of this component using a power-assisted tool, and this can damage the component.**

3. Install the **J 29113** onto the crankshaft. See **Special Tools**.
4. Rotate the hex nut on the **J 29113** to install the crankshaft balancer onto the crankshaft. See **Special Tools**.
5. Remove the **J 29113** from the crankshaft. See **Special Tools**.

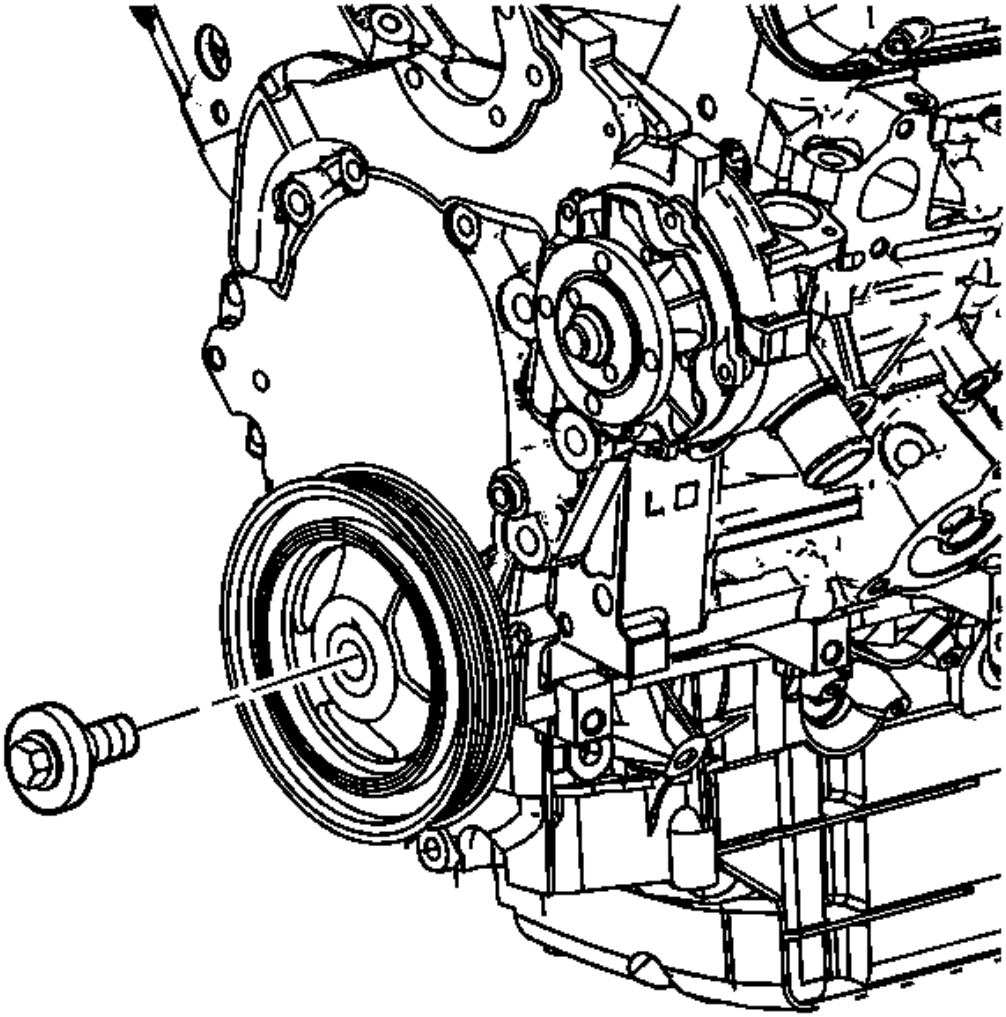

**Fig. 482: Removing Crankshaft Balancer Bolt And Washer**
**Courtesy of GENERAL MOTORS CORP.**

 © 2011 Mitchell Repair Information Company, LLC.

**NOTE: Refer to Fastener Notice in Cautions and Notices.**

6. Install the crankshaft balancer washer and bolt.

**Tighten:**

- Tighten the crankshaft balancer bolt a first pass to 70 N.m (52 lb ft).
- Tighten the crankshaft balancer bolt a final pass to 70 degrees using the **J 45059** . See **Special Tools**.

**Engine Prelubing**

**Tools Required**

**J 45299** Engine Preluber. See **Special Tools**.

 © 2011 Mitchell Repair Information Company, LLC.

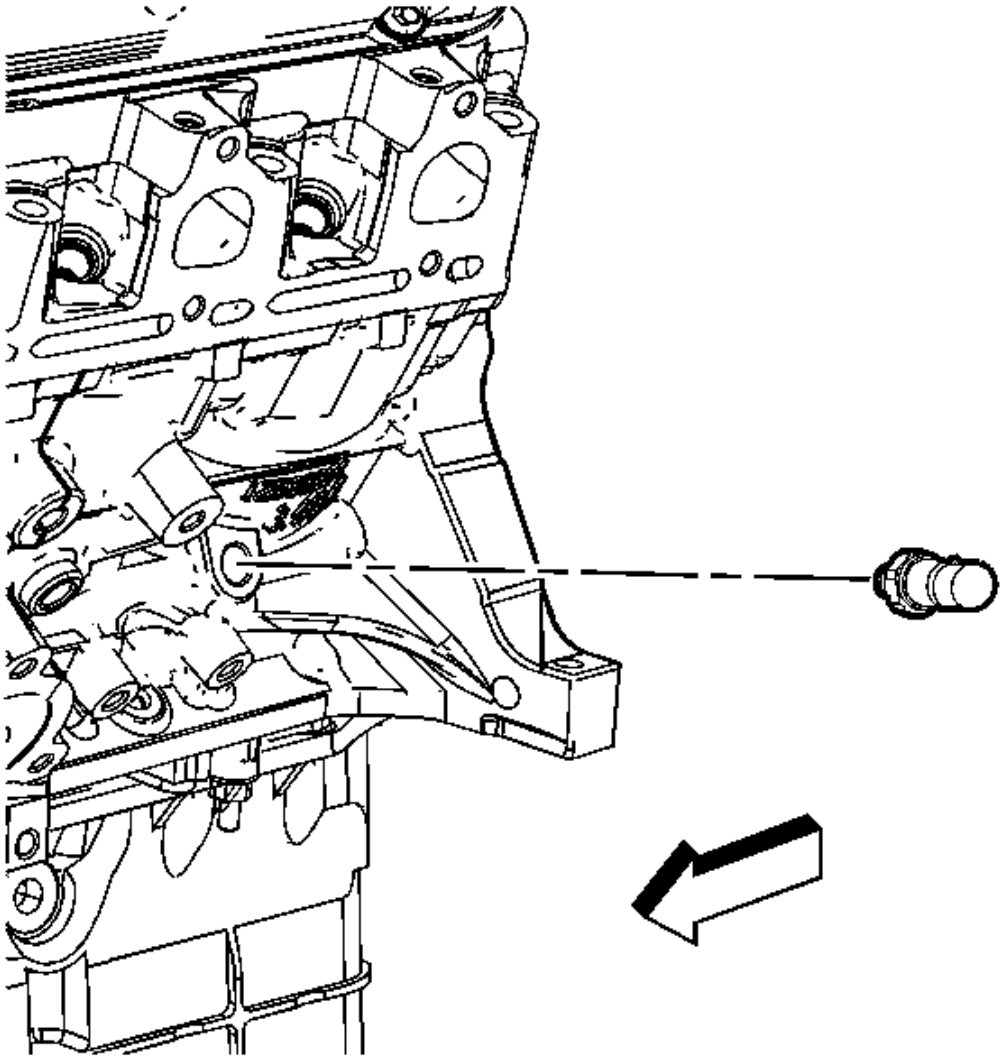

**Fig. 483: Locating Engine Oil Pressure Indicator Switch**
**Courtesy of GENERAL MOTORS CORP.**

**NOTE:** **Refer to Fastener Notice in Cautions and Notices.**

**IMPORTANT:** **A constant/continuous flow of clean engine oil is required in order to properly prime the engine. Be sure to use an approved engine oil as specified in the owners manual.**

1. Remove the engine oil filter, fill with clean engine oil, and reinstall.

 © 2011 Mitchell Repair Information Company, LLC.

**Tighten:** Tighten the oil filter to 30 N.m (22 lb ft).

2. Locate the engine oil pressure indicator switch on the left side of the engine and remove.
3. Install the 1/4 inch adapter P/N 509373.

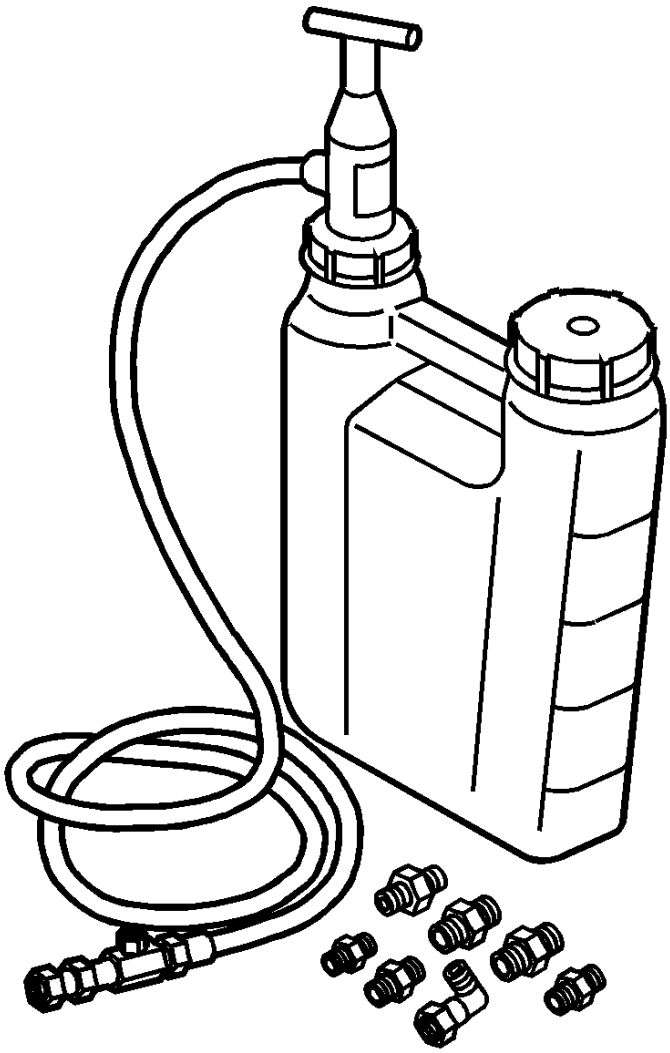

**Fig. 484: Identifying Engine Preluber J 45299**
**Courtesy of GENERAL MOTORS CORP.**

4. Install the flexible hose to the adapter and open the valve.
5. Pump the handle on **J 45299** to flow a minimum of 1-2 quarts of engine oil. See **Special Tools**. Observe the flow of engine oil through the flexible hose and into the engine assembly.
6. Close the valve and remove the flexible hose and adapter from the engine.
7. Install the engine oil pressure indictor switch.

**Tighten:** Tighten the engine oil pressure indictor switch to 16 N.m (12 lb ft).

 © 2011 Mitchell Repair Information Company, LLC.

8. Top off the engine oil to the proper level.

# DESCRIPTION AND OPERATION

## CRANKCASE VENTILATION SYSTEM DESCRIPTION

### General Description

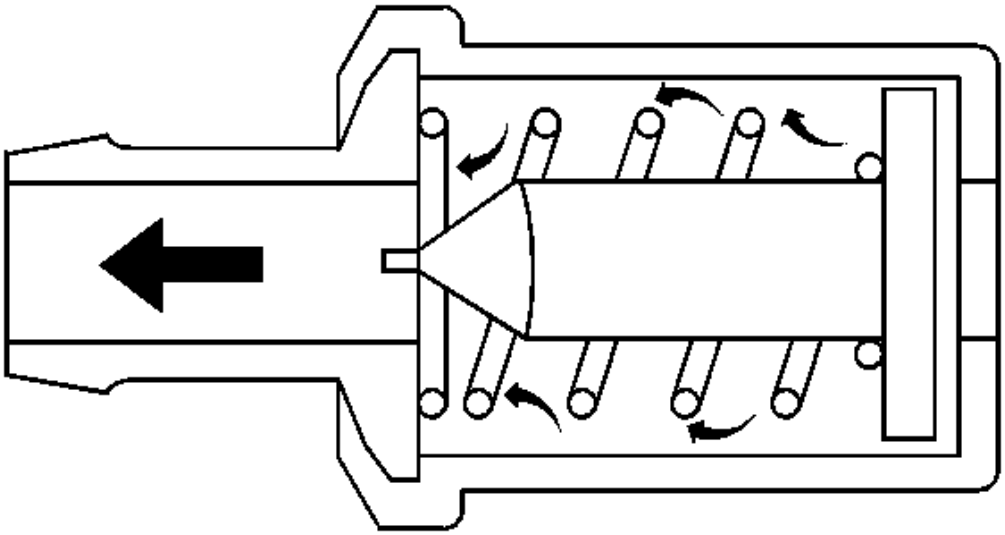

**Fig. 485: Crankcase Ventilation System Flow Diagram**
**Courtesy of GENERAL MOTORS CORP.**

A crankcase ventilation system is used to consume crankcase vapors in the combustion process instead of venting them to atmosphere. Fresh air from the throttle body is supplied to the crankcase, mixed with blow by gases and then passed through a PCV valve into the intake manifold.

### Operation

 © 2011 Mitchell Repair Information Company, LLC.

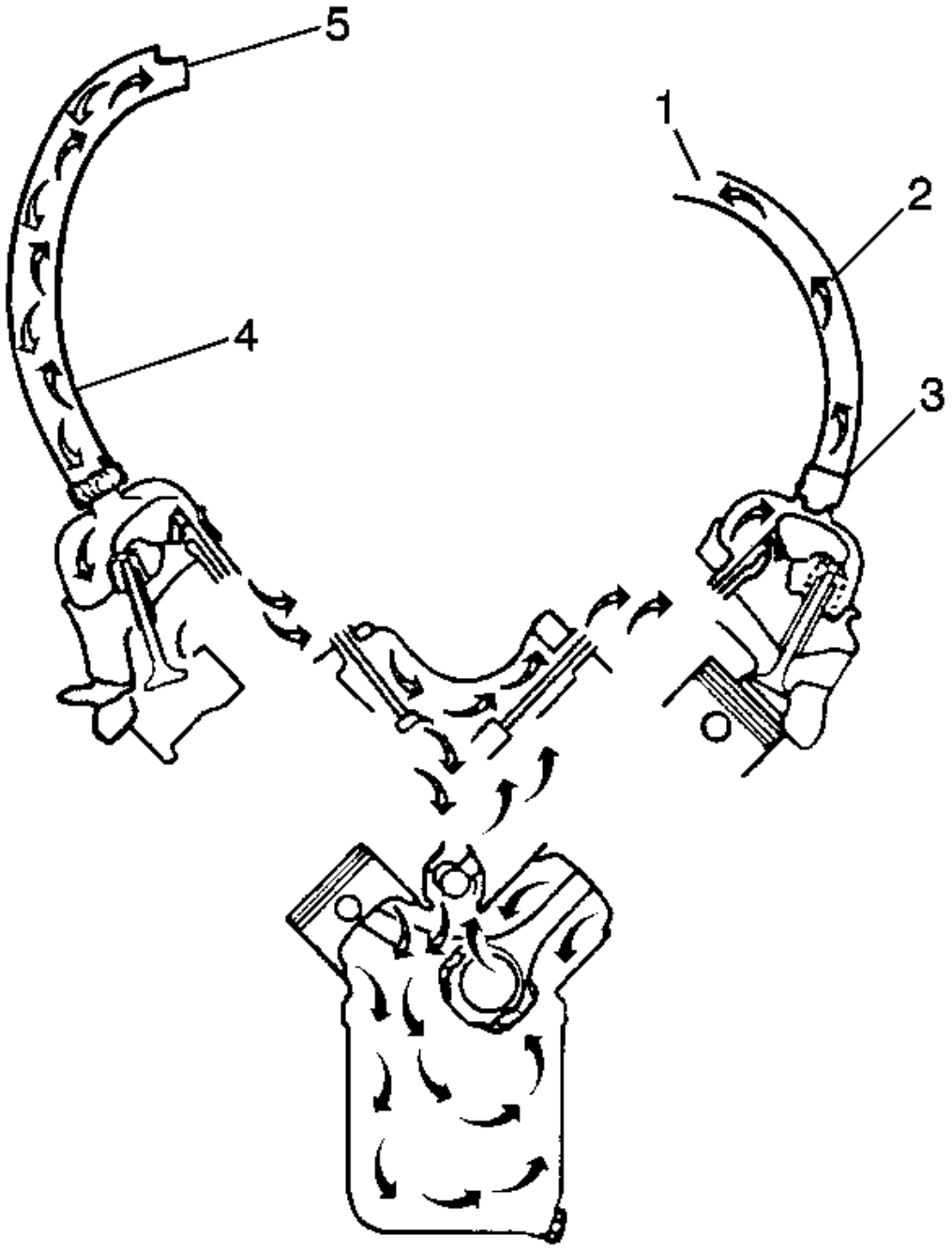


**Fig. 486: Crankcase Ventilation System Flow Diagram**
**Courtesy of GENERAL MOTORS CORP.**

 © 2011 Mitchell Repair Information Company, LLC.

The primary control is through the positive crankcase ventilation (PCV) valve which meters the flow at a rate depending on inlet vacuum. To maintain idle quality, the PCV valve restricts the flow when inlet vacuum is high. If abnormal operating conditions arise, the system is designed to allow excessive amounts of blow by gases to back flow through the crankcase vent into the throttle body to be consumed by normal combustion.

**Results of Incorrect Operation**

A plugged valve may cause the following conditions:

- Rough idle
- Stalling or slow idle speed
- Oil leaks
- Sludge in engine

A leaking valve would cause:

- Rough idle
- Stalling
- High idle speed

**Functional Check of PCV valve**

If an engine is idling rough, check for a clogged PCV valve. Replace if required. Use the following procedure:

1. Remove PCV valve from intake manifold.
2. Shake valve and listen for the rattle of needle inside the valve.
3. If valve does not rattle, replace valve.

With this system, any blow-by in excess of the system capacity (from a badly worn engine, sustained heavy load, etc.) is exhausted into the intake manifold and is drawn into the engine.

Proper operation of the crankcase ventilation system is dependent upon a sealed engine. If oil sludging or dilution is noted, and the crankcase ventilation system is functioning properly, check engine for possible cause and correct to ensure that system will function as intended.

## DRIVE BELT SYSTEM DESCRIPTION

The drive belt system consists of the following components:

- The drive belt
- The drive belt tensioner
- The drive belt idler pulley
- The crankshaft balancer pulley
- The accessory drive component mounting brackets

 © 2011 Mitchell Repair Information Company, LLC.

- The accessory drive components
  - The power steering pump, if belt driven
  - The generator
  - The A/C compressor, if equipped
  - The engine cooling fan, if belt driven
  - The water pump, if belt driven
  - The vacuum pump, if equipped
  - The air compressor, if equipped

The drive belt system may use one belt or two belts. The drive belt is thin so that it can bend backwards and has several ribs to match the grooves in the pulleys. There also may be a V-belt style belt used to drive certain accessory drive components. The drive belts are made of different types of rubbers (chloroprene or EPDM) and have different layers or plys containing either fiber cloth or cords for reinforcement.

Both sides of the drive belt may be used to drive the different accessory drive components. When the back side of the drive belt is used to drive a pulley, the pulley is smooth.

The drive belt is pulled by the crankshaft balancer pulley across the accessory drive component pulleys. The spring loaded drive belt tensioner keeps constant tension on the drive belt to prevent the drive belt from slipping. The drive belt tensioner arm will move when loads are applied to the drive belt by the accessory drive components and the crankshaft.

The drive belt system may have an idler pulley, which is used to add wrap to the adjacent pulleys. Some systems use an idler pulley in place of an accessory drive component when the vehicle is not equipped with the accessory.

**ENGINE COMPONENT DESCRIPTION**

The cylinder block is made of cast alloy iron. The cylinder block has 6 cylinders that are arranged in a V shape. There are 3 cylinders in each bank. The cylinder banks are set at a 60 degree angle from each other.

Starting from the front of the engine, the left bank cylinders are 2, 4, 6. The right bank cylinders are 1, 3, 5.

Four main bearings support the crankshaft. The crankshaft is retained by the bearing caps. The bearing caps are machined with the block for proper alignment and clearances. The main bearing caps are drilled and tapped for the structural oil pan side bolts.

The aluminum cylinder heads have individual intake and exhaust ports for each cylinder. The valve guides are pressed in. The roller rocker arms are located on a pedestal in a slot in the cylinder head. The roller rocker arms are retained on individual threaded bolts.

The crankshaft is cast nodular iron with deep rolled fillets on all 6 crankpins and all 4 main journals. Four steel-backed aluminum bearings are used. The #3 bearing is the end-thrust bearing.

The camshaft is made from a new metal composite design. The camshaft profile is a hydraulic roller design.

 © 2011 Mitchell Repair Information Company, LLC.

The camshaft is supported by 4 journals. The camshaft includes an oil pump drive gear.

The pistons are cast aluminum using 2 compression rings and 1 oil control ring. The piston pin is offset 0.8 mm (0.031 in) towards the major thrust side. This placement allows for a gradual change in thrust pressure against the cylinder wall as the piston travels its path. The pins are chromium steel. The pins have a floating fit in the pistons. The pins are retained in the connecting rods by a press fit.

The connecting rods are made of forged steel. Full pressure lubrication is directed to the connecting rods by drilled oil passages from the adjacent main bearing journal.

A roller rocker type valve train is used. Motion is transmitted from the camshaft through the hydraulic roller lifter and from the pushrod to the roller rocker arm. The rocker arm pivots on the needle roller bearings. The rocker arm transmits the camshaft motion to the valve. The rocker arm pedestal is located in a slot in the cylinder head. The rocker arm is retained in the cylinder head by a bolt. The pushrod is located by the rocker arm.

The intake manifold is a 2-piece cast aluminum unit. The intake manifold centrally supports a fuel rail with 6 fuel injectors.

The exhaust manifolds are cast nodular iron.

**LUBRICATION DESCRIPTION**

Full pressure lubrication, through a full flow oil filter, is furnished by a gear type oil pump. The oil is drawn up through the pickup screen and the tube. The oil passes through the pump to the oil filter.

The oil filter is a full flow paper element unit. An oil filter bypass is used in order to ensure oil supply during the following conditions:

- On a cold start
- If the filter is plugged
- If the filter develops excessive pressure drop

The bypass is designed to open at 69-83 kPa (10-12 psi).

A priority oil delivery system supplies oil first to the crankshaft journals. The oil from the crankshaft main bearings is supplied to the connecting rod bearings by intersecting the passages drilled in the crankshaft. The passages supply the oil to the crankshaft main bearings and the camshaft bearings through the intersecting vertical drilled holes. The oil passages from the camshaft journals supply oil to the hydraulic lifters.

The hydraulic lifters pump oil up through the pushrods to the rocker arms. The cast dams in the crankcase casting direct the oil that drains back from the rocker arms in order to supply the camshaft lobes. The camshaft chain drive is lubricated by indirect oil splash.

**CLEANLINESS AND CARE**

An automobile engine is a combination of many of the following surfaces:

 © 2011 Mitchell Repair Information Company, LLC.

- Machined
- Honed
- Polished
- Lapped

The tolerances of these surfaces are measured in the ten-thousandths of an inch. When you service any internal engine part, cleanliness and care are important. Apply a liberal coating of engine oil to the friction areas during assembly in order to protect and lubricate the surfaces on initial operation. Throughout this section, practice proper cleaning and protection procedures to the machined surfaces and to the friction areas.

**NOTE: Engine damage may result if an abrasive paper, pad, or motorized wire brush is used to clean any engine gasket surfaces.**

Whenever you remove the valve train components, keep the components in order. Follow this procedure in order to install the components in the same locations and with the same mating surfaces as when removed.

**CAUTION: Refer to Battery Disconnect Caution in Cautions and Notices.**

Disconnect the negative battery cables before you perform any major work on the engine. For more information on the disconnection of the battery, refer to Engine Electrical.

**SEPARATING PARTS**

In addition to the room temperature vulcanizing (RTV) sealant's sealing capabilities, the RTV sealants may form an adhesive bond between the components. This may make the components difficult to remove or to separate. If possible, bump the components sideways rather than using prying tools in order to remove the components. This technique prevents damage when the bonding strength of the RTV sealant is stronger than the component itself. Perform bumping at the bends or at the reinforced areas in order to prevent part distortion.

**REPLACING ENGINE GASKETS**

1. Do not reuse any gasket unless otherwise specified. Reusable gaskets will be identified in the service procedure. Do not apply sealant to any gasket or sealing surface unless called out in the service procedure.
2. Use a rubber mallet in order to separate components. Bump the part sideways in order to loosen the components. Perform the bumping at the bends or at the reinforced areas in order to prevent the distortion of components.

**IMPORTANT: Do not use any other method or technique in order to remove the gasket material from a components.**
**Do not use the following items in order to clean the gasket surfaces:**

- **Abrasive pads**

 © 2011 Mitchell Repair Information Company, LLC.

- **Sand paper**
- **Power tools**

**These methods of cleaning may damage the component.**
**Abrasive pads also produce a fine grit that the oil filter cannot remove from the oil. This grit is abrasive and may cause internal engine damage.**

3. Remove all of the gasket and the sealing material from the component using a plastic or a wood scraper. Do not gouge or scrape the sealing surfaces.

**IMPORTANT: Do not allow the sealant to enter any blind threaded holes. The sealant may cause the following conditions:**

- **Prevent you from properly seating the bolt**
- **Cause damage when you tighten the bolt**

4. When assembling components, use only the sealant specified in the service procedure. Ensure that the sealing surfaces are clean and free of debris or oil. When applying sealant to a component, apply a bead size as specified in the service procedure.
5. Tighten the bolts to the specifications.

## USE OF ROOM TEMPERATURE VULCANIZING (RTV) AND ANAEROBIC SEALER

The following 2 types of sealer are commonly used in engines:

- The RTV sealer
- The anaerobic gasket eliminator sealer

Follow the service procedure instructions. Use the correct sealer in the proper place in order to prevent oil leaks. Do not interchange the 2 types of sealers. Use the sealer recommended in the service procedure.

### Applying RTV Sealer

- Do not use the room temperature vulcanizing (RTV) sealant in areas where extreme temperatures are expected. These areas include the following locations:
  - The exhaust manifold
  - The head gasket
  - The other surfaces where gasket eliminator is specified
- Use a rubber mallet in order to separate the components sealed with RTV sealant. Bump the part sideways in order to shear the RTV sealer. Perform the bumping at the bends or the reinforced areas in order to prevent distortion of the components. The RTV sealant is weaker in shear (lateral) strength than in tensile (vertical) strength.

 © 2011 Mitchell Repair Information Company, LLC.

**IMPORTANT: Do not use any other method or technique in order to remove the gasket material from a component.**

- Do not use the following items in order to clean the gasket surfaces:
  - Abrasive pads
  - Sand Paper
  - Power tools

These methods of cleaning may damage the part.

Abrasive pads also produce a fine grit that the oil filter cannot remove from the oil. This grit is abrasive and may cause internal engine damage.

- Remove all of the gasket material from the component using a plastic or a wood scraper. Use Loctite® brand gasket remover P/N 4MA or the equivalent. Follow all of the safety recommendations and the directions that are on the container.

**IMPORTANT: Do not allow the sealer to enter the blind threaded holes. The sealer may cause the following conditions:**

  - Prevent you from properly seating the bolt
  - Cause damage when you tighten the bolt
- Apply the RTV sealant to a clean surface. Use a bead size as specified in the procedure. Apply the bead to the inside of any bolt holes.
- Assemble the components while the RTV sealant is still wet (within 3 minutes). Do not wait for the RTV sealant to skin over.

**IMPORTANT: Do not overtighten the bolts.**

- Tighten the bolts to specifications.

**Applying Anaerobic Sealer**

The anaerobic gasket eliminator hardens in the absence of air. This type of sealer is used where 2 rigid parts (such as castings) are assembled together. When 2 rigid parts are disassembled and no sealer or gasket is readily noticeable, the parts were probably assembled using a gasket eliminator.

**IMPORTANT: Do not use any other method or technique in order to remove the gasket material from a component.**

Do not use the following items in order to clean the gasket surfaces:

- Abrasive pads
- Sand paper

 © 2011 Mitchell Repair Information Company, LLC.

- Power tools

These methods of cleaning may damage the part.

Abrasive pads also produce a fine grit that the oil filter cannot remove from the oil. This grit is abrasive and may cause internal engine damage.

- Remove all of the gasket material from the component using a plastic or a wood scraper. Use Loctite® brand gasket remover P/N 4MA or the equivalent. Follow all of the safety recommendations and the directions that are on the container.
- Apply a continuous bead of the gasket eliminator to 1 flange. Clean and dry any surfaces that you will reseal.

**IMPORTANT: Anaerobic sealed joints that are partially torqued and allowed to cure more than 5 minutes may result in incorrect shimming and sealing of the joint.**

- Do not allow the sealer to enter the blind threaded holes. The sealer may cause the following conditions:
  - Prevent you from properly seating the bolt
  - Cause damage when you tighten the bolt
- Spread the sealer evenly in order to get a uniform coating on the sealing surface.
- Tighten the bolts to the specifications.
- Remove the excess sealer from the outside of the joint.

### TOOLS AND EQUIPMENT

Work in a clean and well-lit area. Have the following components available before you begin to work:

- A suitable parts cleaning tank
- A compressed air supply
- Trays, in order to keep the parts and the fasteners organized
- An adequate set of hand tools

An approved engine repair stand will prevent personal injury or damage to the engine components. The special tools are designed in order to quickly and safely accomplish the operations for which the tools are intended. Using the tools will minimize possible damage to the engine components. Precision measuring tools are required for the inspection of certain critical components. Torque wrenches are needed for the correct assembly of various parts.

## SPECIAL TOOLS AND EQUIPMENT

### SPECIAL TOOLS

**Special Tools**

 © 2011 Mitchell Repair Information Company, LLC.

| Illustration | Tool Number/Description |
|---|---|
| 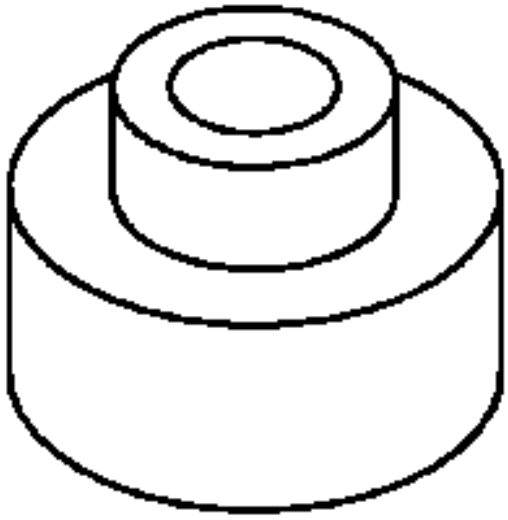 | EN 46359<br>Puller End Protector |
| 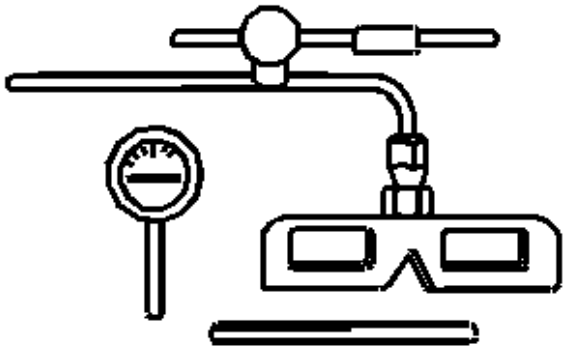 | J 7872<br>Magnetic Base Dial Indicator Set |
| | J 8001<br>Dial Indicator Set |

 © 2011 Mitchell Repair Information Company, LLC.

| | |
|---|---|
| 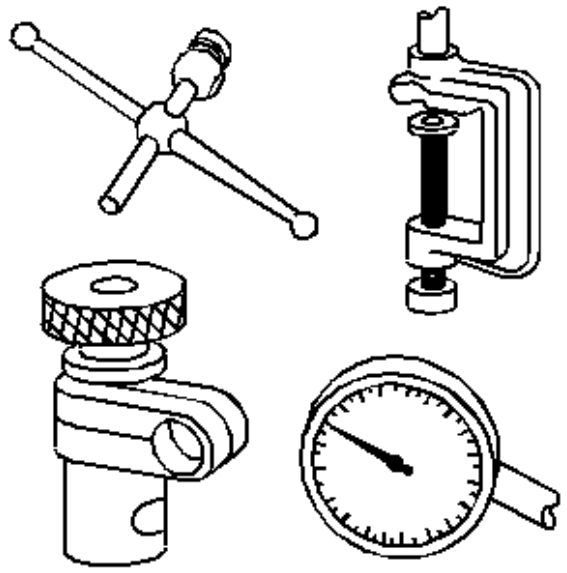 | |
| 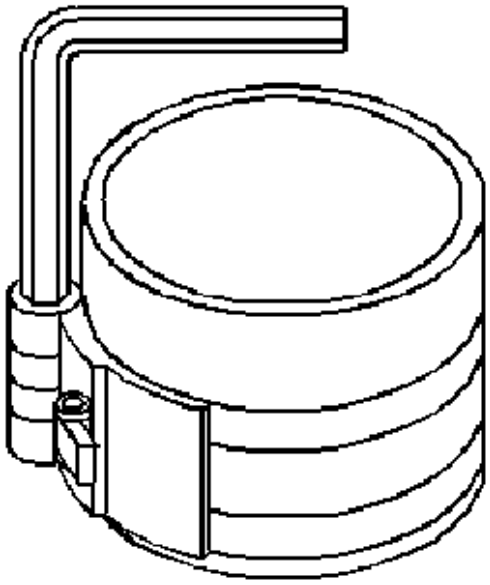 | J 8037<br>Ring Compressor |
| | J 8087<br>Cylinder Bore Gage |

 © 2011 Mitchell Repair Information Company, LLC.

| | |
|---|---|
| 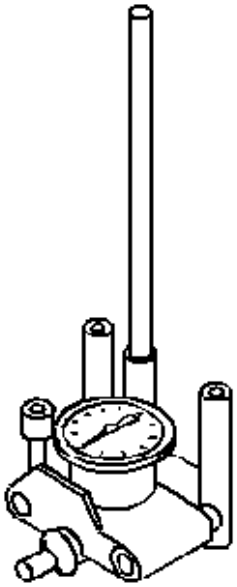 | |
| | J 8089<br>Carbon Removal Brush |
| | J 8520<br>Camshaft Lobe Lift Indicator |

 © 2011 Mitchell Repair Information Company, LLC.

| | |
|---|---|
| 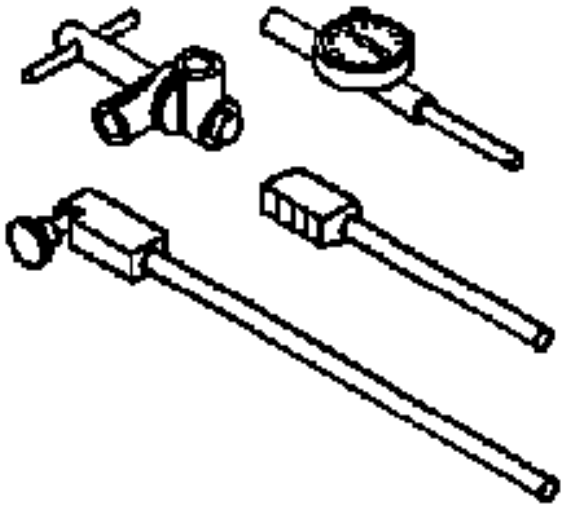 | |
| 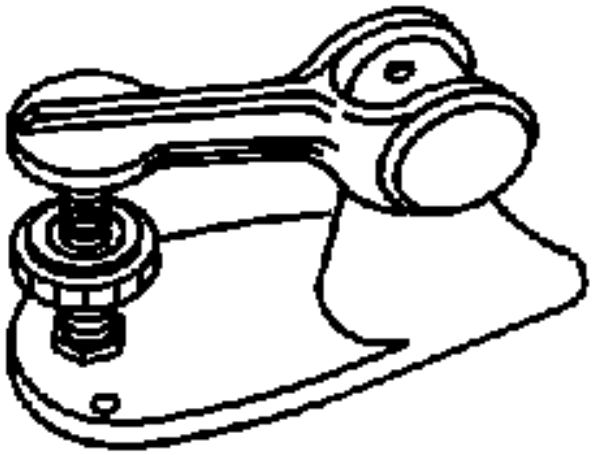 | J 9666<br>Valve Spring Tester |
| | J 22144<br>Oil Suction Pipe Installer |

 © 2011 Mitchell Repair Information Company, LLC.

| | |
|---|---|
| 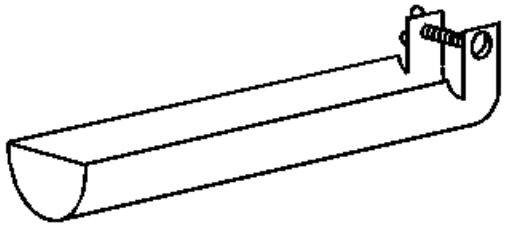 | |
| | J 22794<br>Spark Plug Port Adapter |
| | J 24086-C<br>Piston Pin Remover/Installer Set |

 © 2011 Mitchell Repair Information Company, LLC.

| | |
|---|---|
| 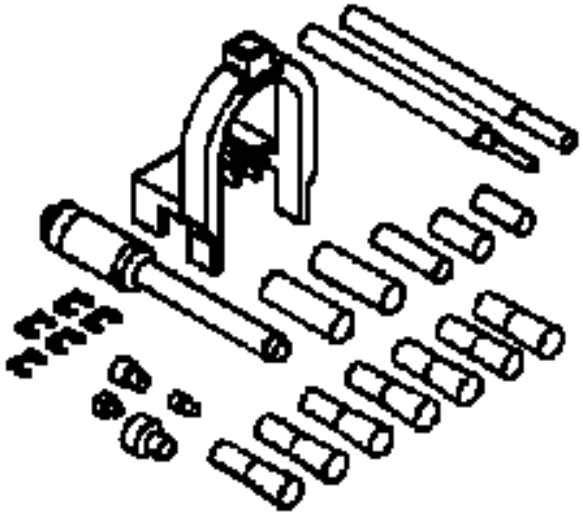 | |
| | J 24270<br>Cylinder Bore Ridge Reamer |
| | J 25087-C |

 © 2011 Mitchell Repair Information Company, LLC.

| | |
|---|---|
| 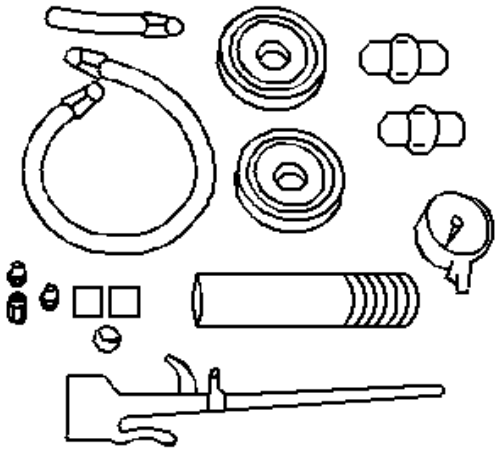 | Oil Pressure Tester and Pump Primer |
| 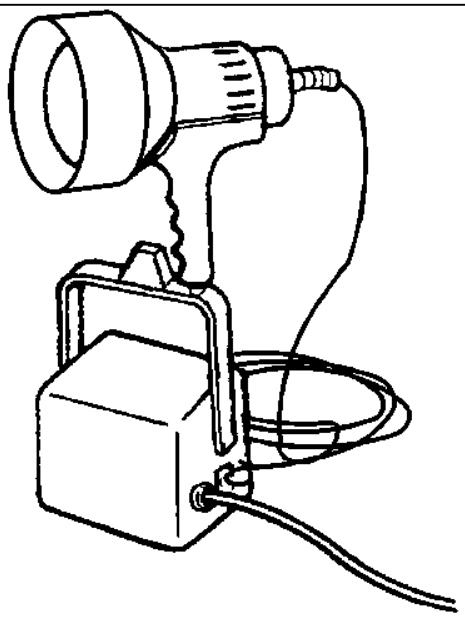 | J 28428-E<br>High Intensity Black Light Kit |
| | J 28467-B<br>Universal Engine Support Fixture |

 © 2011 Mitchell Repair Information Company, LLC.

| | |
|---|---|
| 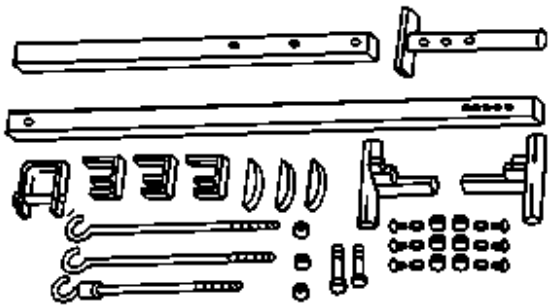 | |
| 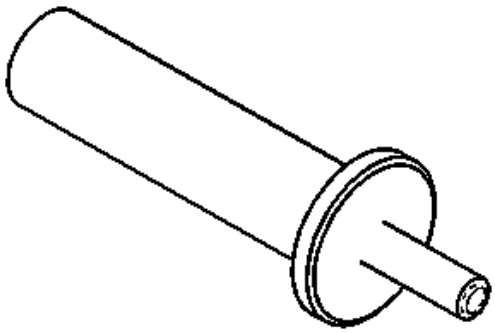 | J 28467-13<br>Engine Support Fixture Adapter |
| | J 29113<br>Balancer and Crank Sprocket Puller |

 © 2011 Mitchell Repair Information Company, LLC.

| | |
|---|---|
| 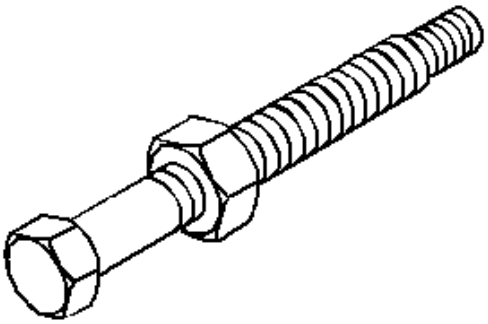 | |
| 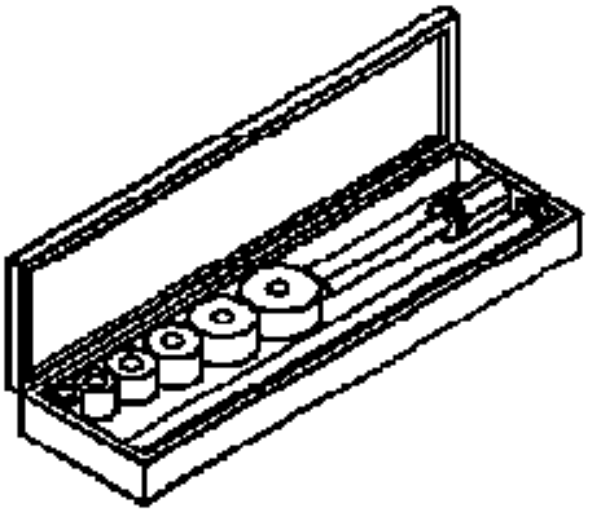 | J 33049<br>Camshaft Bearing Service Set |
| | J 34686<br>Rear Main Seal Installer |

 © 2011 Mitchell Repair Information Company, LLC.

| | |
|---|---|
| 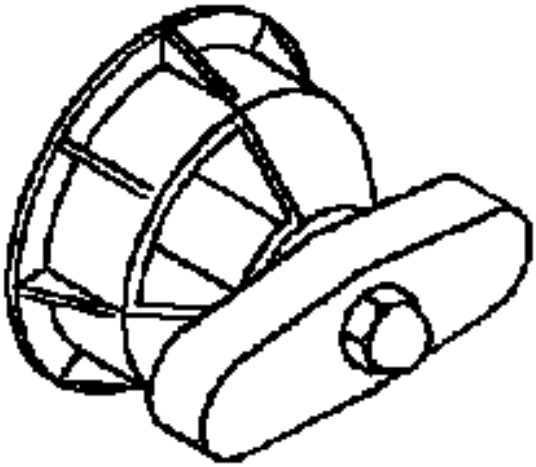 | |
| 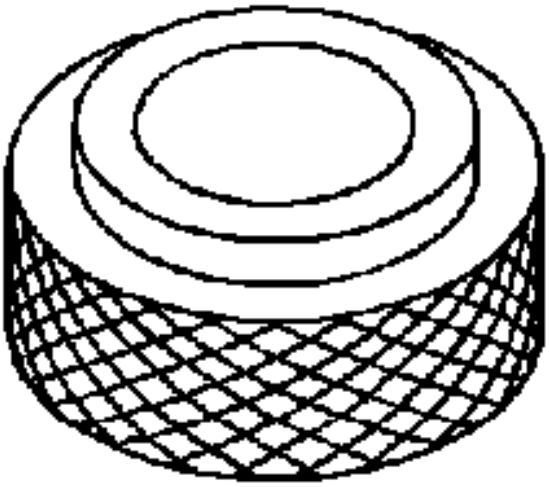 | J 35468<br>Cover Aligner and Seal Installer |
| | J 35667-A<br>Cylinder Head Leakdown Tester |

 © 2011 Mitchell Repair Information Company, LLC.

| | |
|---|---|
| | |
| 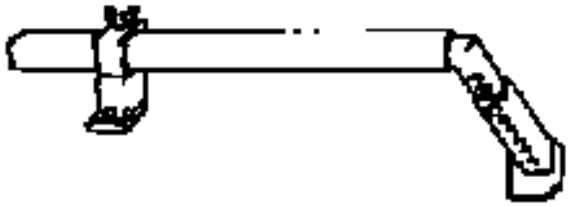 | J 36462-A<br>Engine Support Adapter Leg Set |
| | J 38606<br>Valve Spring Compressor |

 © 2011 Mitchell Repair Information Company, LLC.

| | |
|---|---|
| 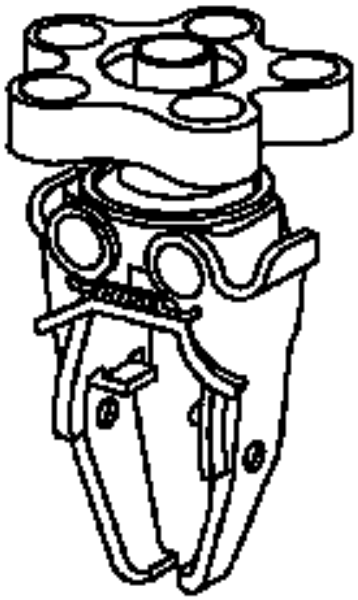 | |
| 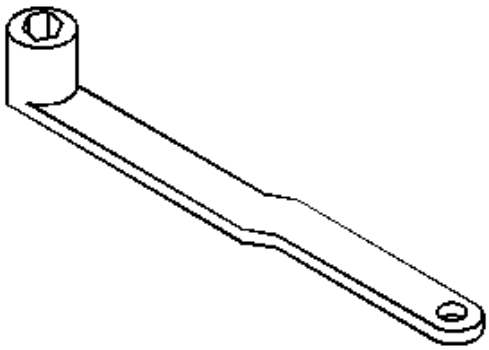 | J 39505<br>Torque Wrench Adapter |
| | J 39914<br>Serpentine Belt Tensioner Unloader |
| | |

 © 2011 Mitchell Repair Information Company, LLC.

| | |
|---|---|
| | J 41556<br>Connecting Rod Guide |
| 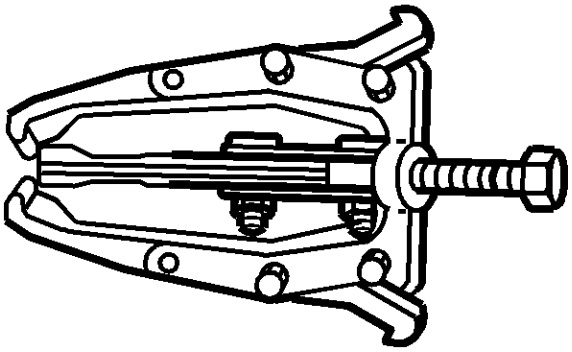 | J 41816-A<br>Crankshaft Balancer Remover |
| | J 45059<br>Angle Meter |

 © 2011 Mitchell Repair Information Company, LLC.

| | |
|---|---|
| 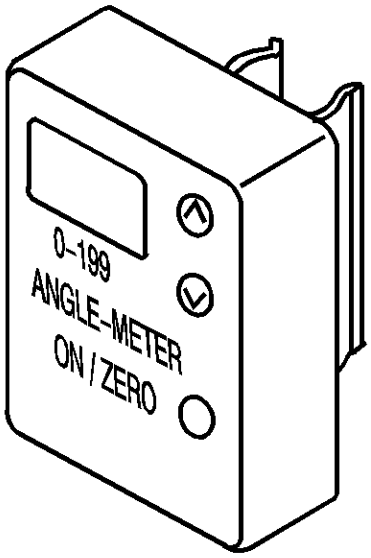 | |
| 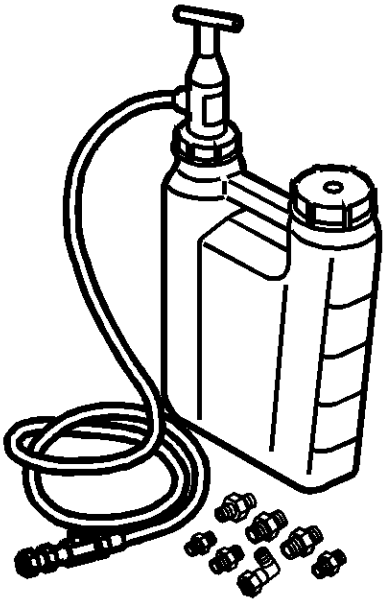 | J 45299<br>Engine Preluber |

 © 2011 Mitchell Repair Information Company, LLC.