2007 ENGINE

Engine - 2.3L - Fusion, Milan & MKZ

SPECIFICATIONS

GENERAL SPECIFICATIONS

GENERAL SPECIFICATIONS

Item	Specification
Displacement	2.3L
No. of cylinders	4
Bore/stroke	87.5/94.0
Firing order	1-3-4-2
Oil pressure (hot @ 2,000 rpm)	29-39 psi 200-268 kPa
Oil capacity	4.1 qts. + 0.4 qt with filter
Cylinder Block	
Cylinder bore diameter	87.5-87.53 mm (3.444-3.445 in)
Cylinder bore maximum out-of-round	0.008 mm (0.0003 in)
Main bearing bore diameter	57.020-57.038 mm (2.244-2.245 in)
Head gasket surface flatness	0.1 mm/general 0.05 mm/200 x 200 (0.004 in/general) (0.0019 in/7.87 x 7.87)
Piston	
Diameter (1)	87.5-87.51 mm (3.444-3.445 in)
Diameter (2)	87.51-87.52 mm (3.4452-3.4456 in)
Diameter (3)	87.52-87.53 mm (3.444-3.446 in)
Piston-to-bore clearance	0.025-0.045 mm (0.0009-0.0017 in)
Ring groove width - top	1.203-1.205 mm (0.0473-0.0474 in)
Ring groove width - 2nd	1.17-1.19 mm (0.0460-0.0468 in)
Ring groove width - oil	2.501-2.503 mm (0.0984-0.0985 in)
Piston skirt coating thickness	0.008-0.020 mm

	(0.0003-0.0007 in)
Piston Pin	
Diameter	20.995-21.0 mm (0.8266-0.8268 in)
Length	59.6-60.4 mm (2.346-2.377 in)
Piston-to-pin clearance	0.008-0.016 mm (0.0003-0.0006 in)
Pin-to-rod clearance	Press fit
Cylinder Head	
Valve lift @ zero lash (exhaust)	7.4 mm (0.29 in)
Valve lift @ zero lash (intake)	7.9 mm (0.31 in)
Valve guide inner diameter	5.509-5.539 mm (0.216-0.218 in)
Valve seat width - intake/exhaust	0.99-1.84 mm (0.038-0.072 in)
Valve seat angle	45 degrees
Valve seat runout	0.075 mm (0.0029 in)
Valve lash adjuster bore diameter	31.00-31.03 mm (1.220-1.221 in)
Cam bore diameter	25.015-25.040 mm (0.984-0.985 in)
Valve	
Valve head diameter - intake	34.85-35.15 mm (1.372-1.383 in)
Valve head diameter - exhaust	29.85-30.15 mm (1.175-1.187 in)
Valve stem diameter - intake	5.470-5.485 mm (0.2153-0.2159 in)
Valve stem diameter - exhaust	5.465-5.480 mm (0.2151-0.2157 in)
Valve stem-to-guide clearance - intake	0.0027 mm (0.0009 in)
Valve stem-to-guide clearance - exhaust	0.0029 mm (0.0011 in)
Valve face runout	0.05 mm (0.001 in)
Valve face angle	45 degrees
Valve Spring - Compression Pressure	
Intake and exhaust (installed)	38.667 lb
Intake (valve open) 8.9 mm (0.35 in.) of lift	97.032 lb
Exhaust (valve open) 7.4 mm of lift	93.338 lb
Free length	44.92 mm (1.768 in)
Assembled height	37.9 mm (1.492 in)
Crankshaft	
	51.980-52.000 mm

Main bearing journal diameter	(2.046-2.047 in)
Production repair	51.730-51.750 mm (2.036-2.037 in)
Main bearing clearance	0.019-0.035 mm (0.0007-0.0013 in)
Connecting rod journal diameter	49.980-50.000 mm (1.967-1.968 in)
Production repair	49.730-49.750 mm (1.957-1.958 in)
End play	0.22-0.43 mm (0.008-0.016 in)
Rings	
Width - top	1.17-1.185 mm (0.0460-0.0466 in)
Width - 2nd	1.197-1.199 mm (0.0471-0.0472 in)
Width - oil	2.38-2.45 mm (0.093-0.096 in)
Ring gap (in bore) - top	0.16-0.31 mm (0.006-0.012 in)
Ring gap (in bore) - 2nd	0.33-0.48 mm (0.012-0.018 in)
Ring gap (in bore) - oil	0.2-0.7 mm (0.007-0.027 in)
Valve Tappet	
Diameter	30.97-30.98 mm (1.2192-1.2196 in)
Tappet-to-valve clearance - intake	0.22-0.28 mm (0.008-0.011 in)
Tappet-to-valve clearance - exhaust	0.27-0.33 mm (0.010-0.013 in)
Tappet-to-bore clearance	0.02-0.06 mm (0.0007-0.0023 in)
Camshaft	
Lobe lift - intake	8.24999 mm (0.324 in)
Lobe lift - exhaust	7.80007 mm (0.307 in)
Runout (1)[a]	0.03 mm (0.001 in)
End play	0.09-0.24 mm (0.003-0.009 in)
Journal diameter	24.96-24.98 mm (0.982-0.983 in)
Journal-to-bore clearance	0.035-0.080 mm (0.001-0.003 in)
Connecting Rod	
Bearing clearance	0.027-0.052

	(0.001-0.002 in)
Bearing thickness	1.496-1.520 mm (0.058-0.059 in)
Crank bore diameter	53.025-53.045 mm (2.087-2.088 in)
Pin bore diameter	20.965-20.985 mm (0.825-0.826 in)
Length (center-to-center)	154.8 mm (6.094 in)
Side clearance	1.95-3.05 mm (0.076-0.120 in)
Axial clearance	0.14-0.36 mm (0.005-0.014 in)

[a] No. 3 Journal - Supported by No. 1 and No. 5 journals.

GENERAL SPECIFICATIONS

GENERAL SPECIFICATIONS

Item	Specification
Motorcraft Metal Surface Cleaner ZC-21	WSE-M5B392-A
Silicone Gasket Remover ZC-30	-
Motorcraft Metal Surface Prep ZC-31	-
Silicone Gasket and Sealant TA-30	WSE-M4G323-A4
High Temperature 4x4 Front Axle and Wheel Bearing Grease E8TZ-19590-A	ESA-M1C198-A
Silicone Brake Caliper Grease and Dielectric Compound XG-3-A	ESE-M1C171-A
Motorcraft SAE 5W-20 Premium Synthetic Blend Motor Oil XO-5W20-QSP (US); Motorcraft SAE 5W-20 Super Premium Motor Oil CXO-5W20-LSP12 (Canada); or equivalent	WSS-M2C930-A
Motorcraft Premium Gold Engine Coolant with Bittering Agent (US only) VC-7-B (US); CVC-7-A (Canada) or equivalent (yellow color)	WSS-M97B51-A1
Multi-Purpose Grease XG-4 and/or XL-5	ESB-M1C93-B
Thread Sealant with PTFE TA-24	WSK-M2G350-A2

TORQUE SPECIFICATIONS

TORQUE SPECIFICATIONS

Description	Nm	lb-ft	lb-in
A/C compressor mounting bolts	25	18	-
A/C manifold tube bolt	25	18	-
A/C tube bracket bolts	10	-	89

A/C tube connection nut	8	-	71
A/C tube-to-condenser nut	8	-	71
Accessory drive belt tensioner bolts	25	18	-
Accessory drive belt idler pulley bolt	25	18	-
Bellhousing-to-engine bolts	48	35	-
Bellhousing-to-engine stud bolt	48	35	-
Bellhousing-to-oil pan bolt[a]	-	-	-
Block heater	21	15	-
Camshaft bearing cap bolts[a]	-	-	-
Camshaft sprocket bolt	72	53	-
Catalytic converter bolts[a]	-	-	-
Catalytic converter bracket bolts[a]	-	-	-
Catalytic converter heat shield screws	10	-	89
Catalytic converter-to-cylinder head studs	17	13	-
Clutch pressure plate	29	21	-
Clutch slave cylinder bolts	22	16	-
Clutch tube bracket bolts	22	16	-
Coil-on-plug bolts	8	-	71
Coolant outlet bolts	10	-	89
Coolant pump bolts	10	-	89
Coolant pump pulley bolts	20	15	-
Coolant vent tube nuts	25	18	-
Crankshaft position (CKP) sensor bolts[a]	-	-	-
Crankshaft pulley bolt[a]	-	-	-
Crankcase rear seal retainer plate bolts[a]	-	-	-
Crankcase vent oil separator bolts	10	-	89
Cylinder head bolts[a]	-	-	-
Cylinder head temperature (CHT) sensor	12	9	-
Engine front cover bolts[a]	-	-	-
Engine front cover timing hole plug (lower)	12	9	-
Engine front cover timing hole plug (upper)	10	-	89
Engine front cover-to-oil pan bolts[a]	-	-	-
Engine mount bolts	55	41	-
Engine mount nut	55	41	-
Engine mount bracket nuts	103	76	-
Engine mount bracket bolt	115	85	-
Engine roll-restrictor bolts	90	66	-
Engine timing plug bolt	20	15	-
Engine-to-bellhousing bolts	48	35	-

Engine-to-bellhousing stud bolt	48	35	-
Engine wiring harness bracket nut	20	15	-
Exhaust gas recirculation (EGR) valve assembly bolts	20	15	-
EGR tube	55	41	-
Flexplate bolts[a]	-	-	-
Flywheel bolts[a]	-	-	-
Fuel rail bolts	23	17	-
Generator air inlet duct nuts	6	-	53
Generator B+ wire nut	6	-	53
Generator mounting bolt	47	35	-
Generator mounting stud bolts	47	35	-
Generator splash shield nuts	25	18	-
Ground wire-to-battery cable nut	10	-	89
Ground wire-to-body bolt	10	-	89
Intake manifold bolts	18	13	-
Intermediate steering shaft bolt	23	17	-
Knock sensor (KS)	20	15	-
Lower ball joint nuts	200	148	-
Lower control arm-to-strut through bolt	103	76	-
Oil filter adapter bolts	25	18	-
Oil filter cover	33	24	-
Oil filter drain plug	10	-	89
Oil pan bolts[a]	-	-	-
Oil pan-to-bellhousing bolts	48	35	-
Oil pressure sender	15	11	-
Oil pan drain plug	36	27	-
Oil pump drive chain guide shoulder bolts (early build)	10	-	89
Oil pump drive chain tensioner shoulder bolt	10	-	89
Oil pump drive chain tensioner spring shoulder bolt	10	-	89
Oil pump screen and pickup tube assembly bolts	10	-	89
Oil pump sprocket bolt	25	18	-
Oil pump-to-engine block bolts[a]	-	-	-
Power steering pump bolts	25	18	-
Power steering pressure (PSP) tube bolt	35	26	-
Radio frequency interference capacitor bolt	10	-	89
Rear crankshaft seal retainer bolts[a]	-	-	-
RH halfshaft carrier bearing bracket bolt.	40	30	-
Secondary air injection (AIR) pump bolts	30	22	-
Secondary AIR valve bracket bolts	10	-	89
Spark plug	12	9	-

Starter motor solenoid nut	5	-	44
Starter motor B+ wire nut	12	9	-
Starter motor mounting bolts	25	18	-
Subframe nuts	150	111	-
Subframe bracket bolts	103	76	-
Sway bar link nuts	40	30	-
Thermostat housing bolts	10	-	89
Throttle body bolts	10	-	89
Tie-rod end nuts	48	35	-
Timing chain guide bolts	10	-	89
Timing chain tensioner bolts	10	-	89
Torque converter-to-flywheel nuts	35	26	-
Transaxle ground wire bolt	10	-	89
Transaxle mount bolt	90	66	-
Valve cover bolts[a]	-	-	-
Variable camshaft timing (VCT) solenoid bolt[a]	10	-	89
VCT system oil filter plug	17	13	-

[a] Refer to procedure for specification.

DESCRIPTION AND OPERATION

ENGINE

The 2.3L engine is a 4 valve-per-cylinder, dual overhead camshaft engine. The engine uses a coil-on-plug ignition system. The cylinder block is made of aluminum and the bearing caps are integrated into the ladder assembly. An aluminum oil pan bolts to the bottom of the lower cylinder block and to the transmission to provide greater strength. The engine is equipped with variable camshaft timing (VCT). The VCT system includes an oil pressure solenoid and intake camshaft actuator/sprocket assembly to control the intake valve timing. The camshafts are mounted in the cylinder head and act against valve tappets to open and close the valves. The camshafts are driven off the front of the cylinder head by one timing chain. The chain is driven by a sprocket that is located on the crankshaft. The piston assembly is an aluminum piston with a powdered metal connecting rod. The oil pump is driven by the crankshaft via a dedicated chain that is driven by the same sprocket that drives the timing chain.

DIAGNOSTIC TESTS

ENGINE

For basic engine mechanical concerns, refer to **ENGINE SYSTEM - GENERAL INFORMATION** . For driveability concerns, refer to the **Introduction - Gasoline Engines** .

GENERAL PROCEDURES

VALVE CLEARANCE CHECK

1. Remove the valve cover. For additional information, refer to **Valve Cover**.

CAUTION: Turn the engine clockwise only, and only use the crankshaft bolt.

NOTE: Before removing the camshafts, measure the clearance of each valve at base circle, with the lobe pointed away from the tappet. Failure to measure all clearances prior to removing the camshafts will necessitate repeated removal and installation and wasted labor time.

2. Use a feeler gauge to measure the clearance of each valve and record its location.

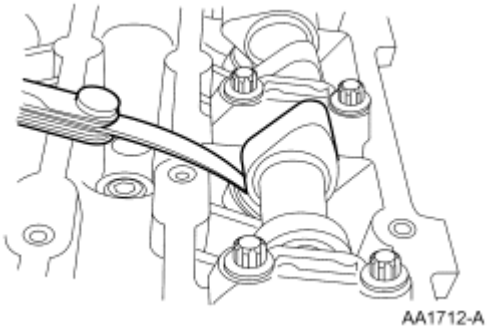

Fig. 1: Measuring Each Valve's Clearance Using A Feeler Gauge
Courtesy of FORD MOTOR CO.

NOTE: The number on the valve tappet only reflects the digits that follow the decimal. For example, a tappet with the number 0.650 has the thickness of 3.650 mm.

NOTE: A midrange clearance is the most desirable:

- **Intake: 0.22-0.28 mm (0.008-0.011 in)**
- **Exhaust: 0.27-0.33 mm (0.010-0.013 in)**

3. Select tappets using this formula: tappet thickness = measured clearance + the base tappet thickness - most desirable thickness.

   Select the tappets and mark the installation location.

4. If any tappets do not measure within specifications, install new tappets in these locations. For additional information, refer to **Valve Train Components - Exploded View** and **Valve Tappets**.

BALANCE SHAFT BACKLASH

Special Tool(s)

SPECIAL TOOLS

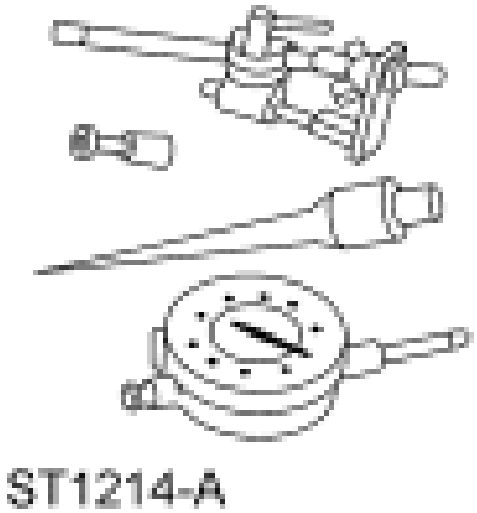 ST1214-A	Dial Indicator Gauge with Holding Fixture 100-002 (TOOL-4201-C)
 ST2636-A	Timing Peg, Crankshaft TDC 303-507

1. Install the Crankshaft **TDC** Timing Peg and rotate the crankshaft slowly clockwise until the crankshaft balance weight is up against the Crankshaft **TDC** Timing Peg. The engine is now at Top Dead Center (TDC).

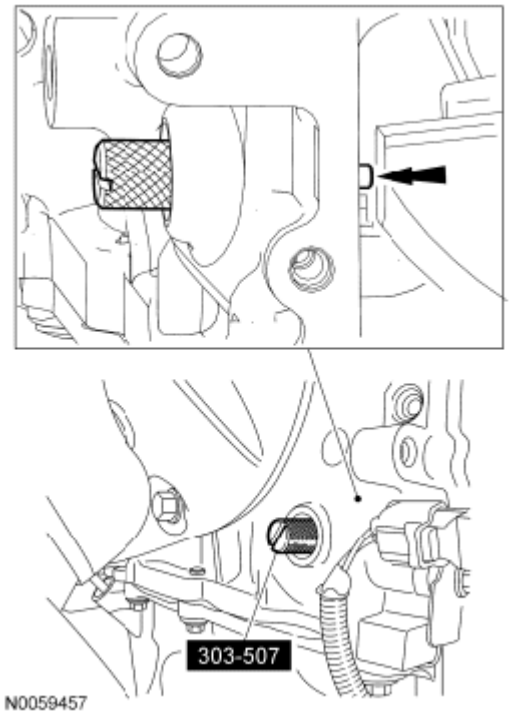

Fig. 2: Installing Crankshaft TDC Timing Peg

2. Mark the balancer unit and shafts on the top for reference that the balancer unit is at **TDC** .

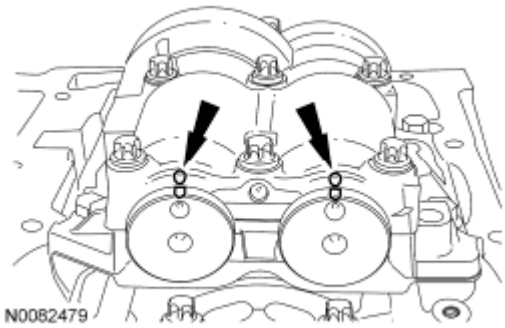

Fig. 3: Locating Balancer Unit And Shafts Mark

NOTE: Due to the precision interior construction of the balancer unit, it should not be disassembled.

3. Remove the 4 bolts and the balancer unit.

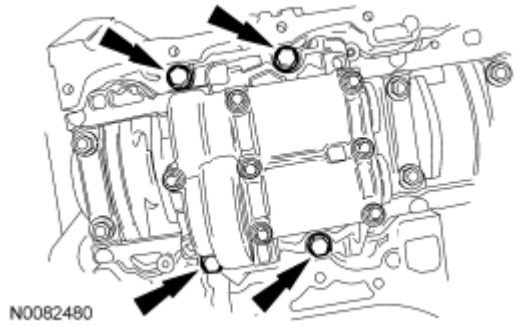

Fig. 4: Locating Balancer Unit Bolts

4. Remove the adjustment shims from the seat faces of the balancer unit.

NOTE: **Visually inspect the balancer unit gear for damage and verify that the shaft turns smoothly. If there is any damage or malfunction, replace the balancer unit.**

5. Install the master adjustment shims (No. 50) on the seat faces of the balancer unit.

6. With the balancer unit shaft marks at the **TDC** position, slowly install the balancer unit to the cylinder block to avoid interference between the crankshaft drive gear and the balancer unit driven gear.

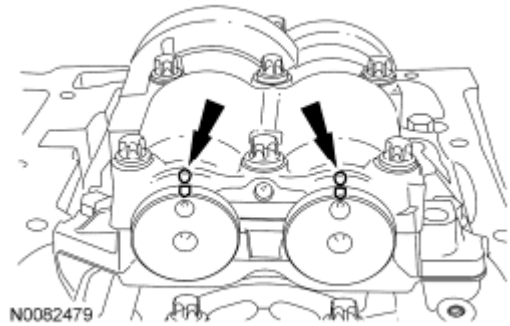

Fig. 5: Locating Balancer Unit And Shafts Reference Mark

7. Install the balancer unit bolts.
   - Tighten in the sequence shown in 2 stages.
     - Stage 1: Tighten to 25 Nm (18 lb-ft).
     - Stage 2: Tighten to 50 Nm (37 lb-ft).

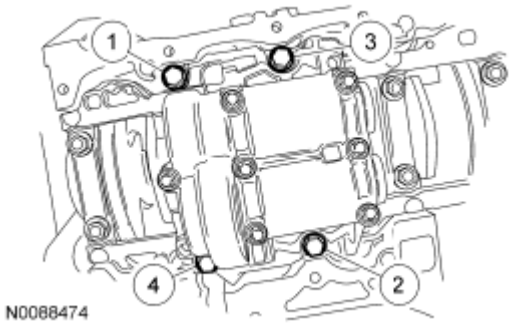

Fig. 6: Identifying Balancer Unit Bolts Tightening Sequence

8. Remove the Crankshaft **TDC** Timing Peg.
   - Rotate the crankshaft to confirm that there are no meshing problems between the balancer unit gear and the crankshaft gear.

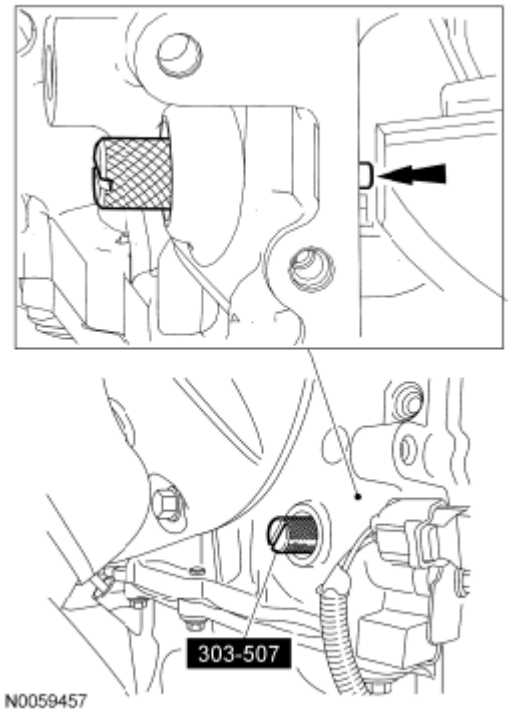

Fig. 7: Installing Crankshaft TDC Timing Peg

9. Install the Crankshaft **TDC** Timing Peg and rotate the crankshaft slowly clockwise until the crankshaft balance weight is up against the Crankshaft **TDC** Timing Peg.
   - Remove the Crankshaft **TDC** Timing Peg.

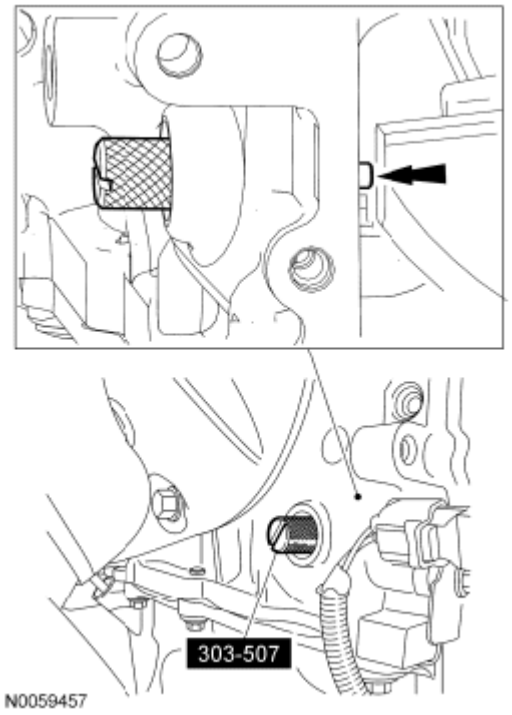

Fig. 8: Installing Crankshaft TDC Timing Peg

10.

NOTE: **Measure the backlash and verify that it is within specified range at all of the following 6 positions: 10 degrees, 30 degrees, 100 degrees, 190 degrees, 210 degrees and 280 degrees. It will be necessary to reset the measuring equipment between measurements.**

NOTE: **The measurement must be taken with the Dial Indicator Gauge with Holding Fixture, a 5-mm Allen wrench and worm clamp set up as shown. Mark the Allen wrench with a file 80 mm (3.149 in) above the driven gear shaft center. Make sure the worm clamp and Allen wrench are not touching the balance shaft housing.**

NOTE: **For an accurate measurement while measuring the gear backlash, insert a screwdriver as shown into the crankshaft No. 1 crankweight area and set both the rotation and the thrust direction with the screwdriver, using a prying action as shown.**

Position the Dial Indicator Gauge with Holding Fixture as shown. Measure the gear backlash.

- Position the Dial Indicator Gauge with Holding Fixture (1) on the Allen wrench 80 mm (3.149 in) above the driven gear shaft center (2) on the balancer unit.
- Rotate the crankshaft clockwise and measure the backlash at all of the following 6 positions: 10 degrees, 30 degrees, 100 degrees, 190 degrees, 210 degrees and 280 degrees.

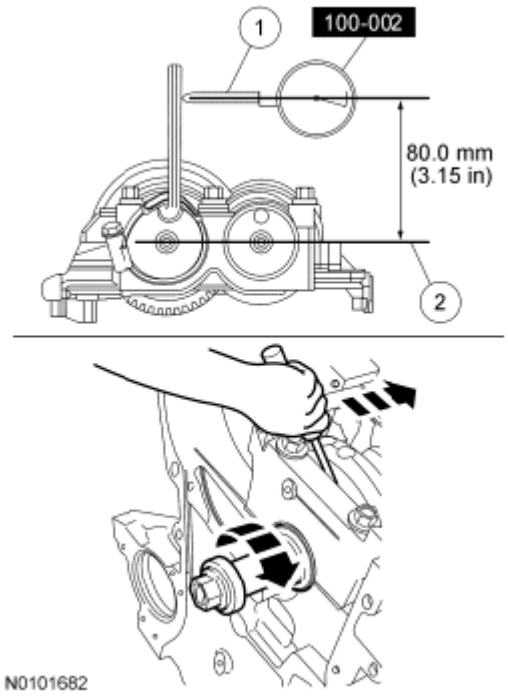

Fig. 9: Measuring Gear Backlash

11. **NOTE: If maximum backlash exceeds 0.101 mm (0.003 in), install a new balancer unit.**

Using the backlash measurement, select the proper shims from the Adjustment Shim Selection Table.

- Remove the balancer unit from the cylinder block.
- Install the selected adjustment shims on the seat faces of the balancer unit.

ADJUSTMENT SHIM SELECTION TABLE

Backlash mm (in)	Selection shim (No.)	Shim thicness mm (in)
0.516-0.528 (0.0203-0.0207)	15	1.15 (0.0452)
0.502-0.514 (0.0197-0.0202)	16	1.16 (0.0456)
0.489-0.500 (0.0192-0.0196)	17	1.17 (0.0460)
0.475-0.487 (0.0187-0.0191)	18	1.18 (0.0464)
0.462-0.473 (0.0181-0.0186)	19	1.19 (0.0468)
0.448-0.460 (0.0176-0.0181)	20	1.20 (0.0472)
0.435-0.446 (0.0171-0.0175)	21	1.21 (0.0476)
0.421-0.433 (0.0165-0.0170)	22	1.22 (0.0480)
0.408-0.419 (0.0160-0.0164)	23	1.23 (0.0484)
0.394-0.406 (0.0155-0.0159)	24	1.24 (0.0488)
0.381-0.392 (0.0150-0.0154)	25	1.25 (0.492)
0.367-0.379 (0.0144-0.0149)	26	1.26 (0.0496)
0.354-0.365 (0.0139-0.0143)	27	1.27 (0.0499)
0.340-0.352 (0.0133-0.0138)	28	1.28 (0.0503)
0.327-0.338 (0.0128-0.0133)	29	1.29 (0.0507)
0.313-0.325 (0.0123-0.0127)	30	1.30 (0.0511)
0.300-0.311 (0.0118-0.0122)	31	1.31 (0.0515)
0.286-0.298 (0.0112-0.0117)	32	1.32 (0.0519)
0.272-0.284 (0.0107-0.0111)	33	1.33 (0.0523)
0.259-0.271 (0.0101-0.0106)	34	1.34 (0.0527)

Backlash mm (in)	Selection shim (No.)	Shim thicness mm (in)
0.245-0.257 (0.0096-0.0101)	35	1.35 (0.0531)
0.232-.0243 (0.0091-0.0095)	36	1.36 (0.535)
0.218-0.230 (0.0085-0.0090)	37	1.37 (0.539)
0.205-.0216 (0.0080-0.0085)	38	1.38 (0.0543)
0.191-0.203 (0.0075-0.0079)	39	1.39 (0.0547)
0.178-0.189 (0.0070-0.0074)	40	1.40 (0.0551)
0.164-0.176 (0.0064-0.0069)	41	1.41 (0.0555)
0.151-0.162 (0.0059-0.0063)	42	1.42 (0.0559)
0.137-0.149 (0.0053-0.0058)	43	1.43 (0.0562)
0.124-0.135 (0.0048-0.0053)	44	1.44 (0.0566)
0.110-0.122 (0.0043-0.0048)	45	1.45 (0.0570)
0.097-0.108 (0.0038-0.0042)	46	1.46 (0.0574)
0.083-0.095 (0.0032-0.0037)	47	1.47 (0.0578)
0.070-0.081 (0.0027-0.0031)	48	1.48 (0.0582)
0.056-0.068 (0.0022-0.0026)	49	1.49 (0.0586)
0.043-0.054 (0.0016-0.0021)	50 (master)	1.50 (0.0590)
0.029-0.041 (0.0011-0.0016)	51	1.51 (0.0594)
0.015-0.027 (0.0005-0.0010)	52	1.52 (0.0598)
0.002-0.014 (0.00007-0.0005)	53	1.53 (0.0602)
0.000-0.000 (0.0000-0.0000)	54	1.54 (0.0606)

N0101731

Fig. 10: Adjustment Shim Selection Chart

12. Install the Crankshaft **TDC** Timing Peg and rotate the crankshaft slowly clockwise until the crankshaft balance weight is up against the Crankshaft **TDC** Timing Peg. The engine is now at **TDC** .

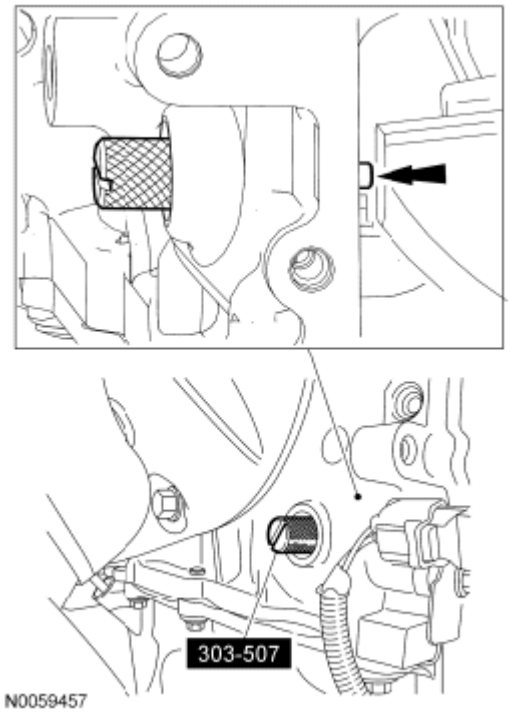

Fig. 11: Installing Crankshaft TDC Timing Peg

13. With the balancer unit shaft marks in the **TDC** position, slowly install the balancer unit to the cylinder block to avoid interference between the crankshaft drive gear and the balancer unit driven gear.

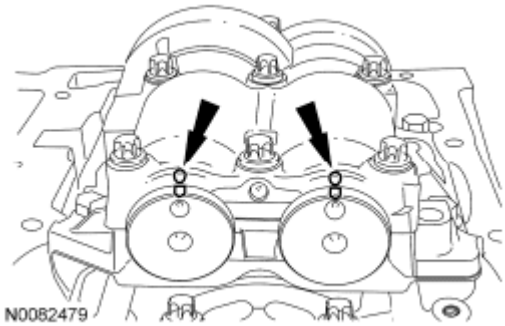

Fig. 12: Locating Balancer Unit And Shafts Reference Mark

14. Install the balancer unit bolts.
    - Tighten in the sequence shown in 2 stages.
        - Stage 1: Tighten to 25 Nm (18 lb-ft).
        - Stage 2: Tighten to 50 Nm (37 lb-ft).

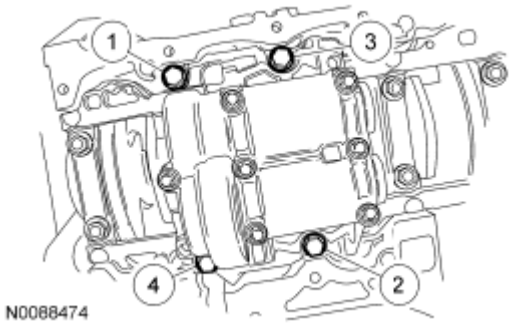

Fig. 13: Identifying Balancer Unit Bolts Tightening Sequence

15.

NOTE: **Remeasure the backlash and verify that it is within specified range at all of the following 6 positions: 10 degrees, 30 degrees, 100 degrees, 190 degrees, 210 degrees and 280 degrees. It will be necessary to reset the measuring equipment between measurements.**

NOTE: **The measurement must be taken with the Dial Indicator Gauge with Holding Fixture, a 5-mm Allen wrench and worm clamp set up as shown. Mark the Allen wrench with a file 80 mm (3.149 in) above the driven gear shaft center. Make sure the worm clamp and Allen wrench are not touching the balance shaft housing.**

NOTE: **For an accurate measurement while measuring the gear backlash, insert a screwdriver as shown into the crankshaft No. 1 crankweight area and set both the rotation and the thrust direction with the screwdriver, using a prying action as shown.**

Position the Dial Indicator Gauge with Holding Fixture as shown. Measure the gear backlash.

- Position the Dial Indicator Gauge with Holding Fixture (1) on the Allen wrench 80 mm (3.149 in) above the driven gear shaft center (2) on the balancer unit.
- Rotate the crankshaft clockwise and measure the backlash at all of the following 6 positions: 10 degrees, 30 degrees, 100 degrees, 190 degrees, 210 degrees and 280 degrees.
- If the backlash exceeds the specified range of 0.005 to 0.101 mm (0.00019 to 0.0039 in), install a new balancer unit and repeat the procedure.

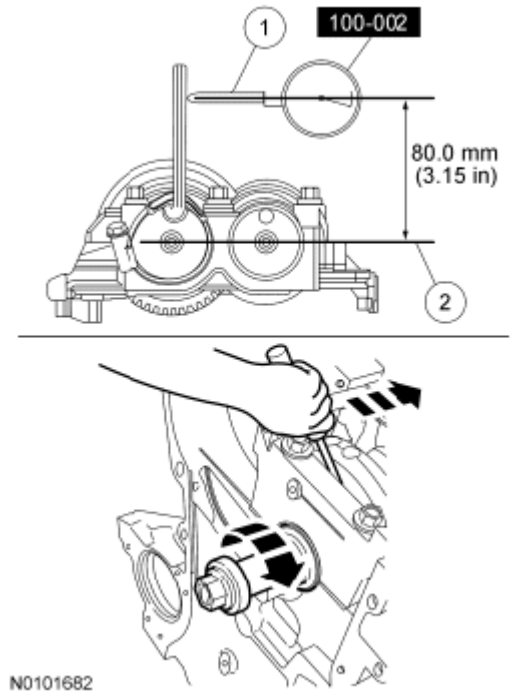

Fig. 14: Measuring Gear Backlash

IN-VEHICLE SERVICING

INTAKE MANIFOLD

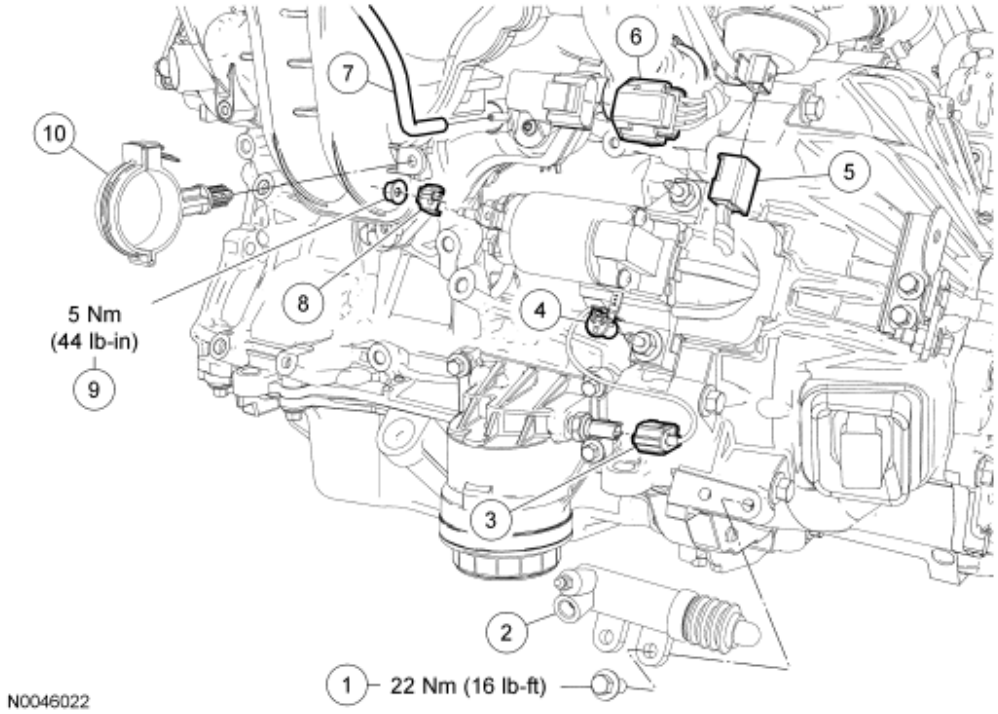

Fig. 15: Exploded View Of Intake Manifold With Torque Specifications (1 Of 4)
Courtesy of FORD MOTOR CO.

Item	Part Number	Description
1	7A508	Clutch slave cylinder bolt (2 required)
2	W706360	Clutch slave cylinder
3	14A464	Oil pressure sender electrical connector (part of 12B637)
4	14A169	Wiring harness retainer (part of 12B637)
5	14A464	Intake manifold runner control (IMRC) actuator electrical connector.
6	14A464	Manifold absolute pressure (MAP) sensor electrical connector (part of 12B637)
7	9D430	Secondary air injection (AIR) vacuum tube (part of 9G442)
8	N805320	Starter S-terminal nut
9	14463	Starter S-terminal wire
10	-	Radiator hose retainer clip

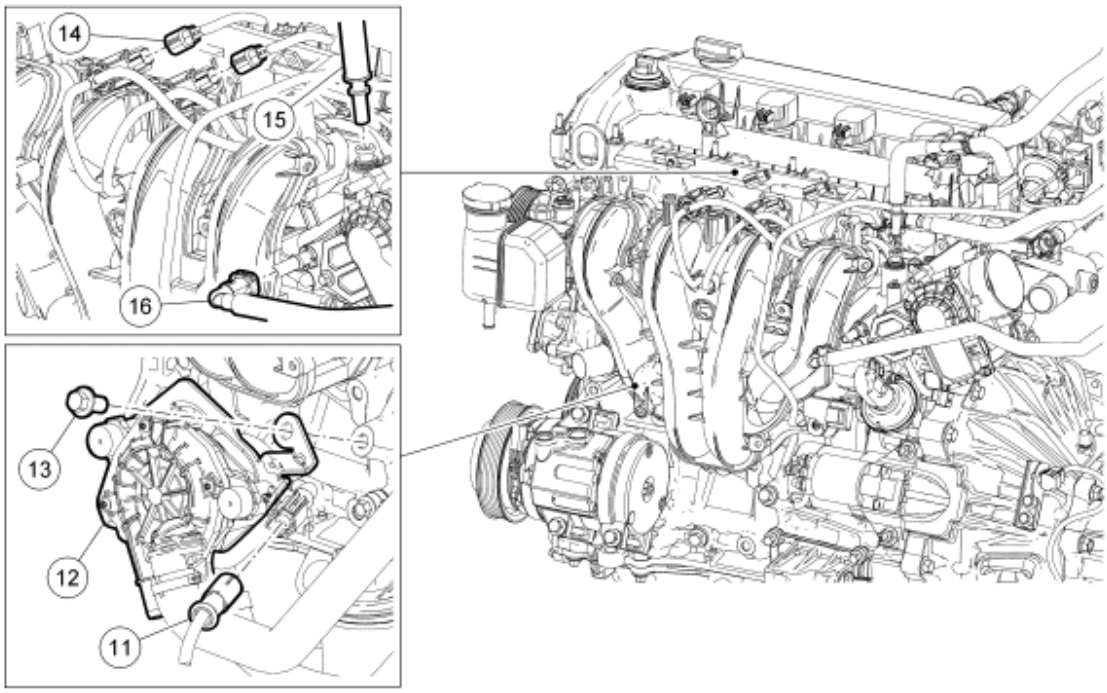

N0046023

Fig. 16: Exploded View Of Intake Manifold (2 Of 4)
Courtesy of FORD MOTOR CO.

Item	Part Number	Description
		Secondary air injection (AIR) pump

11	14A464	electrical connector (part of 12B637)
12	9A486A	AIR pump
13	W500032	AIR pump bolt (3 required)
14	14A464	Swirl control valve electrical connector (2 required) (part of 12B637)
15	19D848	Brake booster vacuum supply tube
16	9D289	Evaporative emissions (EVAP) tube

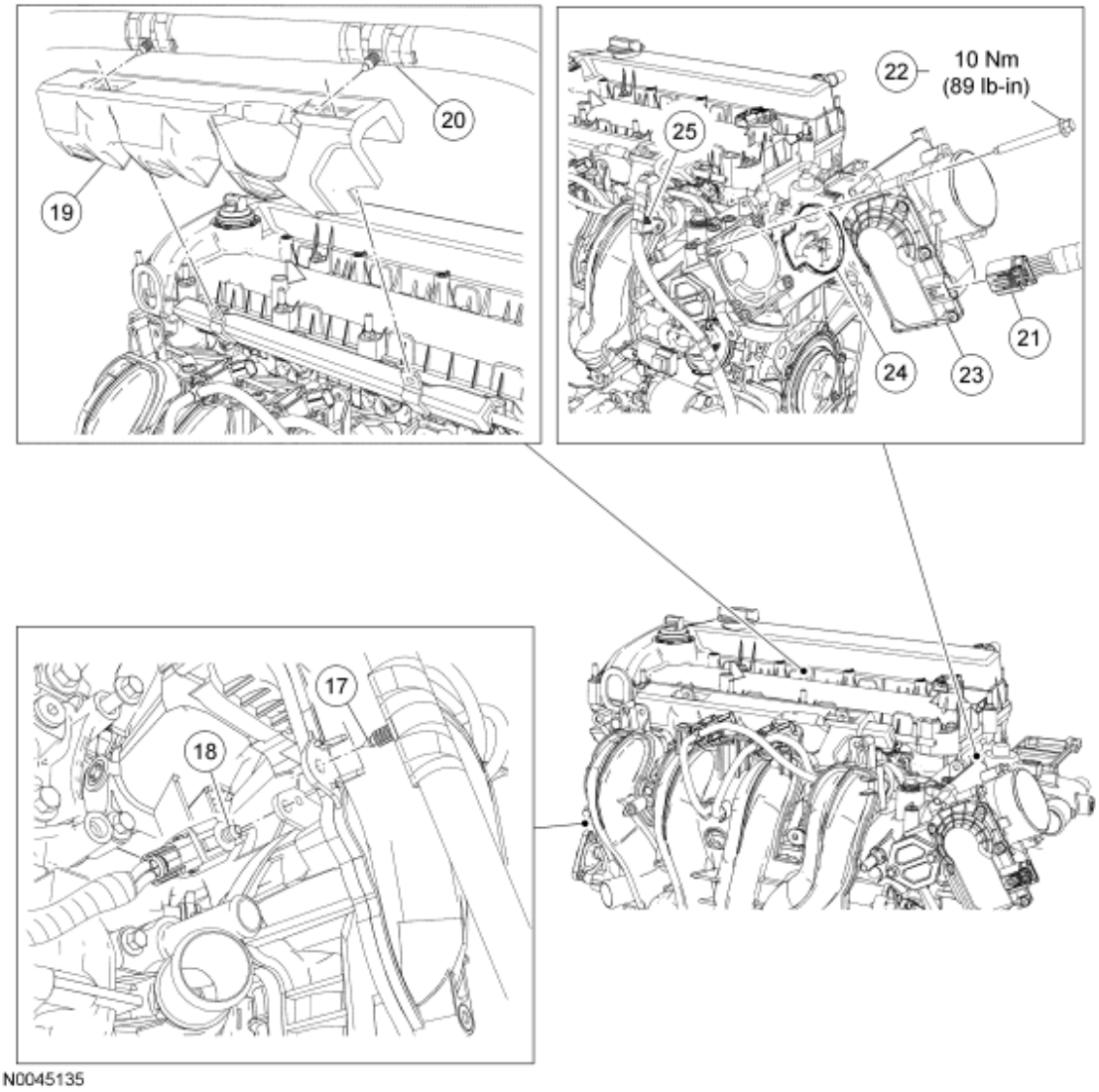

Fig. 17: Exploded View Of Intake Manifold With Torque Specification (3 Of 4)
Courtesy of FORD MOTOR CO.

Item	Part Number	Description
17	-	Pin-type retainer (part of 12B637)
18	-	Pin-type retainer (part of 12B637)

19	9U550	Fuel rail insulator
20	-	Pin-type retainer (part of 12B637)
21	14A464	Throttle body electrical connector (part of 12B637)
22	W500305	Throttle body bolt (4 required)
23	9F991	Throttle body
24	-	Throttle body gasket
25	-	Pin-type retainer (part of 12B637)

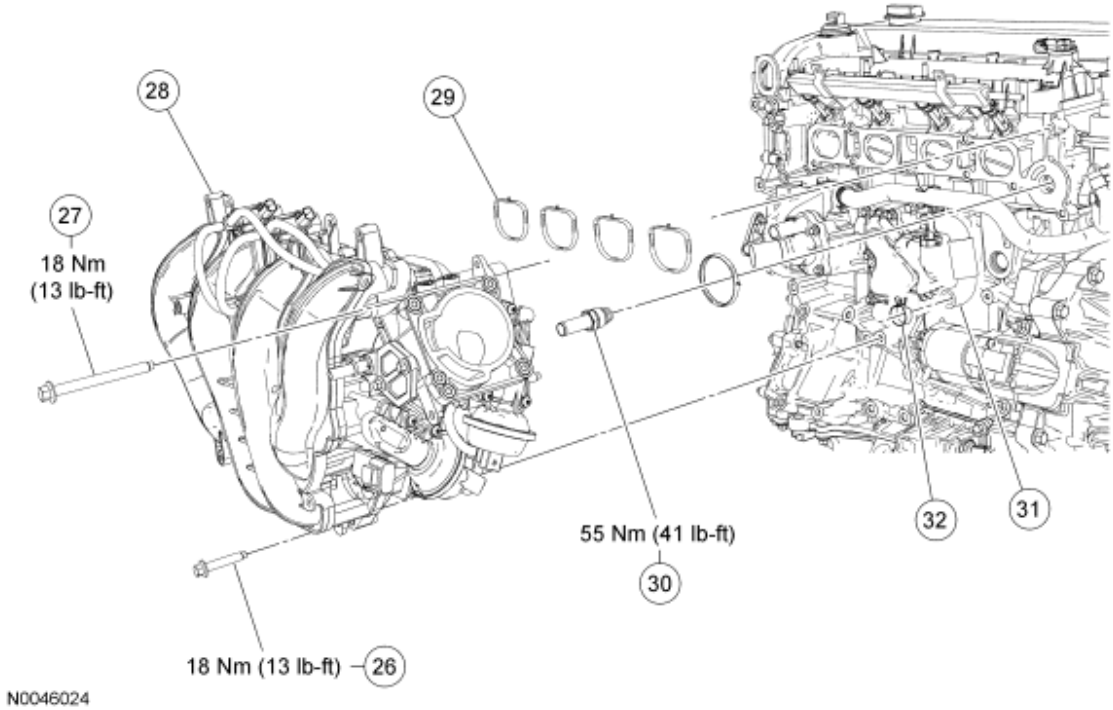

Fig. 18: Exploded View Of Intake Manifold With Torque Specifications (4 Of 4)
Courtesy of FORD MOTOR CO.

Item	Part Number	Description
26	W500311	Intake manifold bolt (6 required)
27	W500319	Intake manifold bolt (2 required)
28	9424	Intake manifold
29	9461	Intake manifold gasket
30	9E470	Exhaust gas recirculation (EGR) tube
31	6758	Crankcase vent hose
32	-	Crankcase vent hose clamp (part of 6758)

REMOVAL AND INSTALLATION

All vehicles

1. With vehicle in NEUTRAL, position it on a hoist. For additional information, refer to **JACKING AND LIFTING** .
2. Disconnect the battery ground cable. For additional information, refer to **BATTERY, MOUNTING AND CABLES** .
3. Remove the air cleaner outlet pipe. For additional information, refer to **INTAKE AIR DISTRIBUTION AND FILTERING - 2.3L** .
4. Remove the bolt, 2 nuts and the generator air inlet duct.
   - To install, tighten to 6 Nm (53 lb-in).

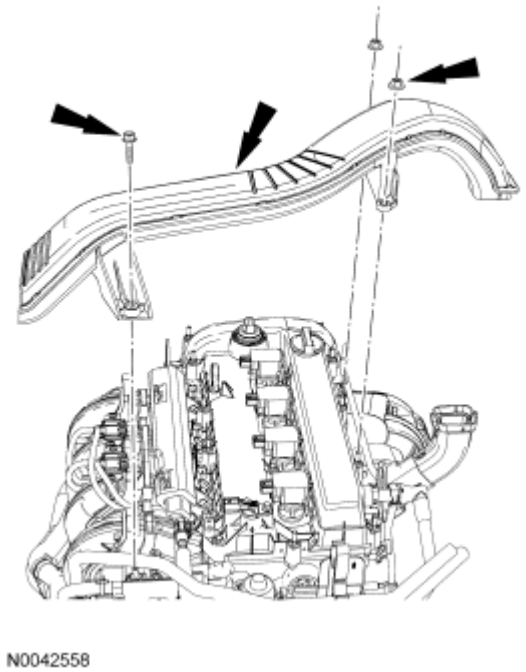

Fig. 19: Locating Generator Air Inlet Duct, Bolt And Nuts
Courtesy of FORD MOTOR CO.

5. Depress the locking ring and disconnect the brake booster vacuum supply tube from the intake manifold.

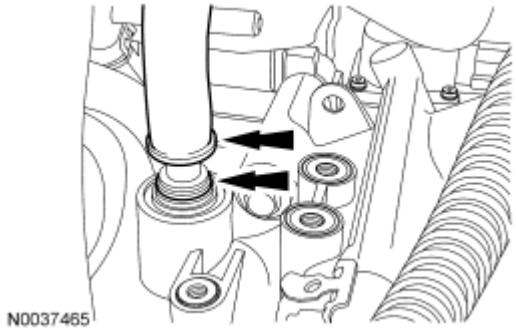

Fig. 20: Locating Locking Ring And Brake Booster Vacuum Supply Tube
Courtesy of FORD MOTOR CO.

6. Disconnect the evaporative emissions (EVAP) tube from the intake manifold.
7. Disconnect the 2 swirl control valve electrical connectors.
8. Detach the 2 wiring harness pin-type retainers and remove the fuel rail insulator.

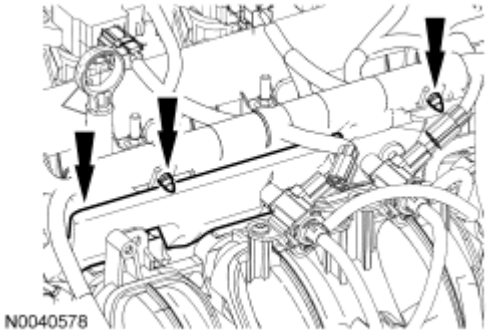

Fig. 21: Locating Fuel Rail Insulator Retainers
Courtesy of FORD MOTOR CO.

9. Detach the electrical connector pin-type retainer.

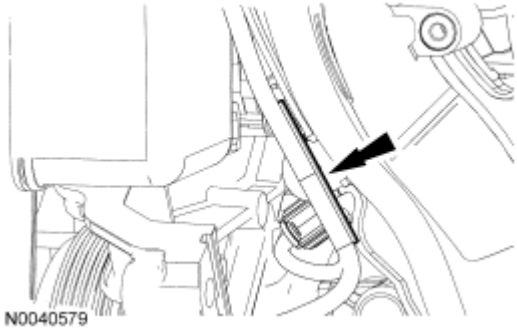

Fig. 22: Locating Electrical Connector Pin-Type Retainer
Courtesy of FORD MOTOR CO.

10. If equipped, remove the 7 screws and the underbody cover.

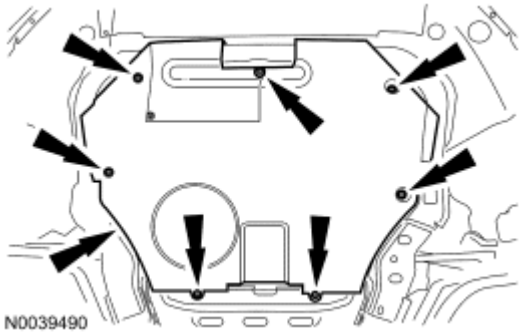

Fig. 23: Locating Underbody Cover Screws
Courtesy of FORD MOTOR CO.

Vehicles equipped with manual transaxle

11. Remove the 2 bolts and position the clutch slave cylinder aside.
    - To install, tighten to 22 Nm (16 lb-ft).

Vehicles with secondary air injection (AIR)

12. Disconnect the AIR pump electrical connector.
13. Remove the 3 bolts and position the AIR pump aside.
    - To install, tighten to 30 Nm (22 lb-ft).
14. Disconnect the vacuum hose from the intake manifold.

All vehicles

15. Detach the radiator hose retaining clip from the intake manifold.
16. Remove the intake manifold lower bolt.
    - To install, tighten to 18 Nm (13 lb-ft).

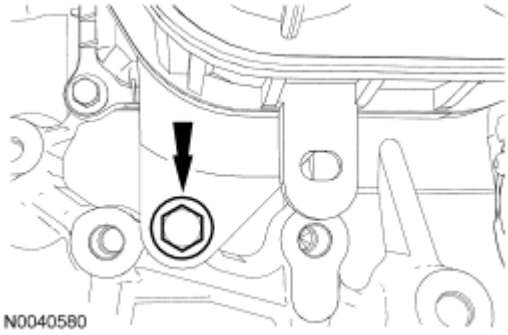

Fig. 24: Locating Intake Manifold Lower Bolt
Courtesy of FORD MOTOR CO.

17. Disconnect the manifold absolute pressure (MAP) sensor electrical connector.
18. Disconnect the intake manifold runner control (IMRC) actuator electrical connector.
19. Disconnect the oil pressure sender electrical connector.
    - Detach the wiring harness pin-type retainer and position the wiring harness aside.
20. Remove the nut and the S-terminal wire from the starter.
    - To install, tighten to 12 Nm (9 lb-ft).
21. Disconnect the throttle body electrical connector.

NOTE: Discard the throttle body gasket.

22. Remove the 4 bolts and position the throttle body aside.
    - To install, tighten to 10 Nm (89 lb-in).

23. Detach the 2 pin-type retainers from the intake manifold.

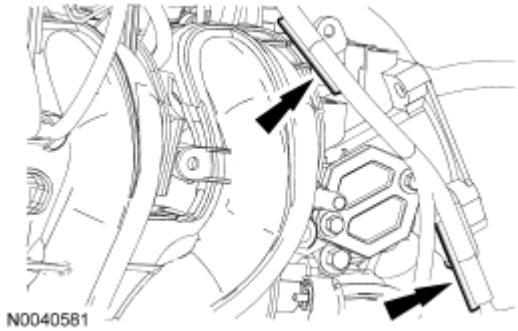

Fig. 25: Locating Pin-Type Retainers
Courtesy of FORD MOTOR CO.

NOTE: There are 2 different size bolts used. Mark the location of the bolts to make sure they are installed in their original locations.

24. Remove the 7 bolts and position the intake manifold aside to access the crankcase vent hose clamp and the EGR tube.
    - To install, tighten to 18 Nm (13 lb-ft).
25. Release the clamp and disconnect the crankcase vent hose.
26. Detach the knock sensor (KS) electrical connector pin-type retainer.
27. Remove the exhaust gas recirculation (EGR) tube.
    - To install, tighten to 55 Nm (41 lb-ft).
28. Remove the intake manifold and discard the gaskets.
    - To install, tighten to 18 Nm (13 lb-ft).
29. To install, reverse the removal procedure.
    - Install new throttle body and intake manifold gaskets.

VALVE COVER

Material

Item	Specification
Silicone Gasket and Sealant TA-30	WSE-M4G323-A4

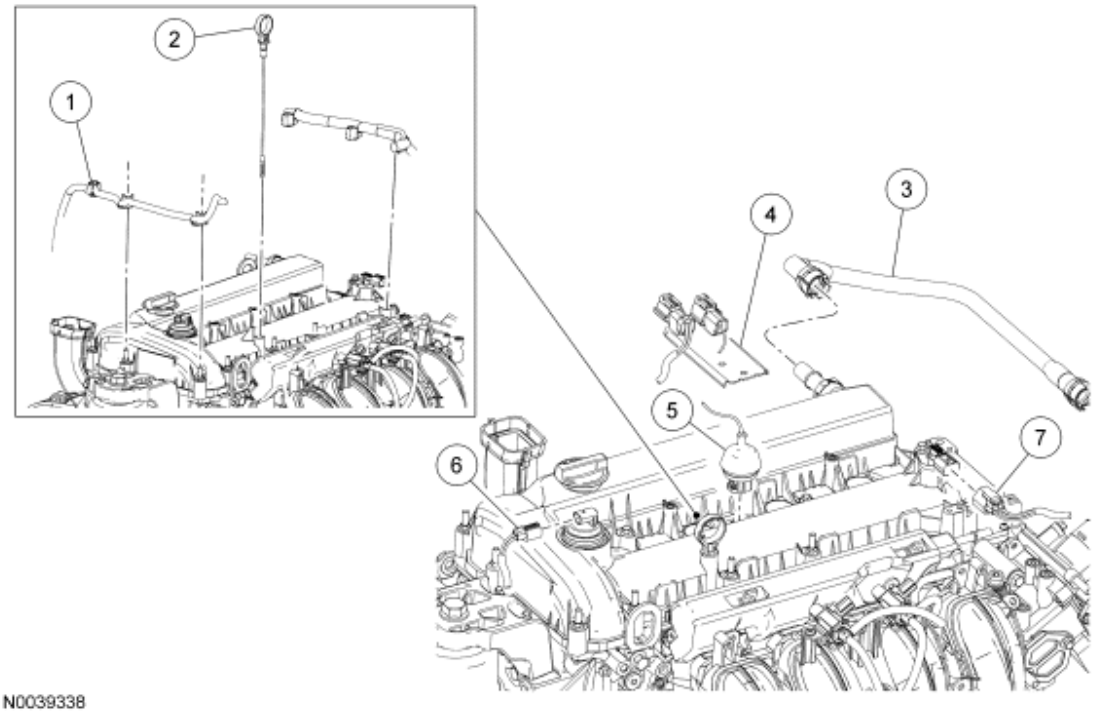

Fig. 26: Exploded View Of Valve Cover (1 Of 2)
Courtesy of FORD MOTOR CO.

Item	Part Number	Description
1	95318	Engine wiring harness retainers (part of 12B637)
2	6750	Oil level indicator
3	6853	Crankcase vent hose
4	14W163	Engine wiring harness bracket
5	14A464	Cylinder head temperature (CHT) sensor electrical connector (part of 12B637)
6	14A464	Variable camshaft timing (VCT) sensor electrical connector (part of 12B637)
7	14A464	Camshaft position (CMP) sensor electrical connector (part of 12B637)

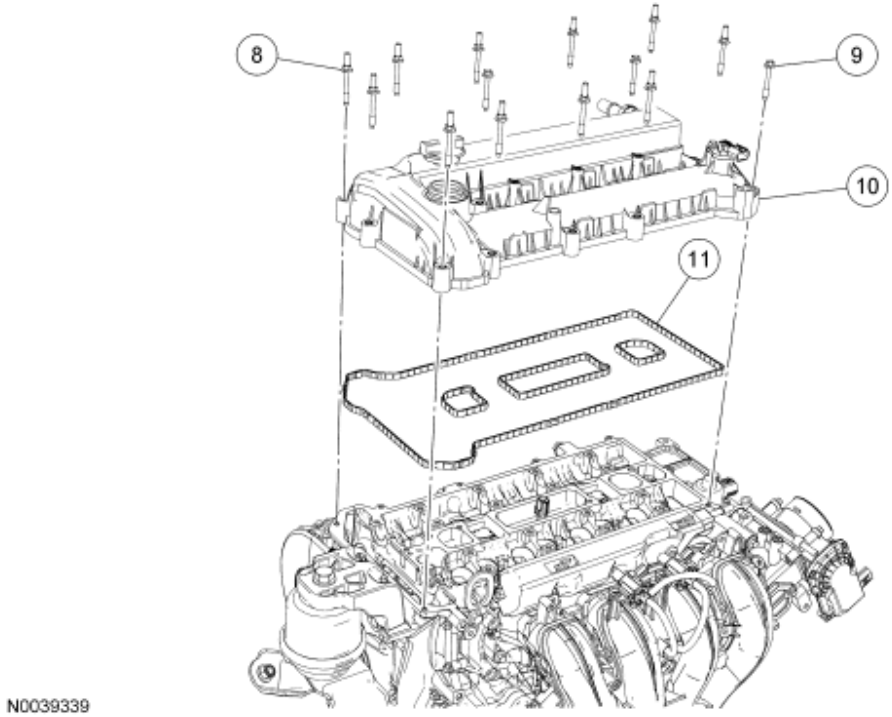

Fig. 27: Exploded View Of Valve Cover (2 Of 2)
Courtesy of FORD MOTOR CO.

Item	Part Number	Description
8	6C293	Valve cover stud bolt (11 required)
9	W500215	Valve cover bolt (3 required)
10	6K271	Valve cover
11	6K260	Valve cover gasket

REMOVAL

CAUTION: During engine repair procedures, cleanliness is extremely important. Any foreign material, including any material created while cleaning gasket surfaces, that enters the oil passages, coolant passages or the oil pan can cause engine failure.

1. Remove the ignition coil-on-plugs. For additional information, refer to **ENGINE IGNITION - 2.3L** .
2. Remove the engine wiring harness bracket from the valve cover stud.
3. Remove the oil level indicator.
4. Disconnect the crankcase vent hose.
5. Disconnect the variable camshaft timing (VCT) solenoid electrical connector.
6. Disconnect the cylinder head temperature (CHT) sensor electrical connector.
7. Disconnect the camshaft position (CMP) sensor electrical connector.
8. Detach all of the wiring harness retainers from the valve cover and the valve cover studs.

9. Remove the 14 valve cover retainers and the valve cover.
   - Discard the gasket.

INSTALLATION

CAUTION: Do not use metal scrapers, wire brushes, power abrasive discs or other abrasive means to clean the sealing surfaces. These tools cause scratches and gouges which make leak paths.

1. Clean and inspect the sealing surfaces.

NOTE: The valve cover must be secured within 4 minutes of silicone gasket application. If the valve cover is not secured within 4 minutes, the sealant must be removed and the sealing area cleaned with metal surface cleaner.

2. Apply silicone gasket and sealant to the locations shown.

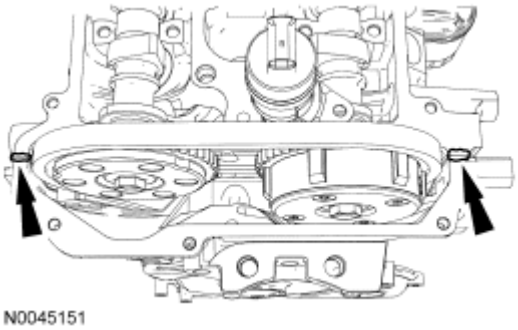

Fig. 28: Applying Silicone Gasket And Sealant
Courtesy of FORD MOTOR CO.

3. Install the valve cover, new gasket and retainers.
   - Tighten in the sequence shown to 10 Nm (89 lb-in).

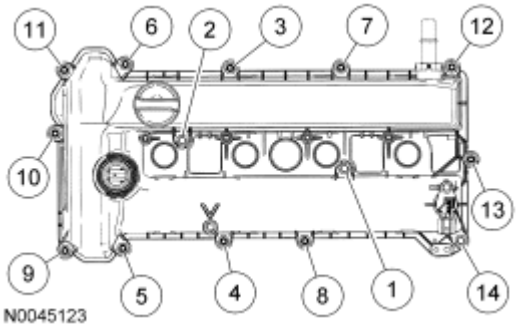

Fig. 29: Identifying Valve Cover Bolts Tightening Sequence
Courtesy of FORD MOTOR CO.

4. Position the wiring harness and attach all of the wiring harness retainers to the valve cover and the valve cover studs.
5. Connect the CMP sensor electrical connector.
6. Connect the CHT sensor electrical connector.
7. Connect the VCT solenoid electrical connector.
8. Connect the crankcase vent hose.

NOTE: Make sure the notch on the oil level indicator is aligned with the V-shaped boss on the valve cover and fully engaged into the valve cover.

9. Install the oil level indicator.

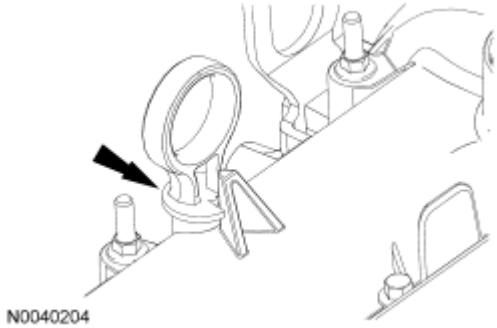

Fig. 30: Locating Oil Level Indicator
Courtesy of FORD MOTOR CO.

10. Position the engine wiring harness bracket on the valve cover stud.
11. Install the ignition coil-on-plugs. For additional information, refer to **ENGINE IGNITION - 2.3L** .

LOWER END COMPONENTS - EXPLODED VIEW, CRANKSHAFT PULLEY AND CRANKSHAFT FRONT SEAL

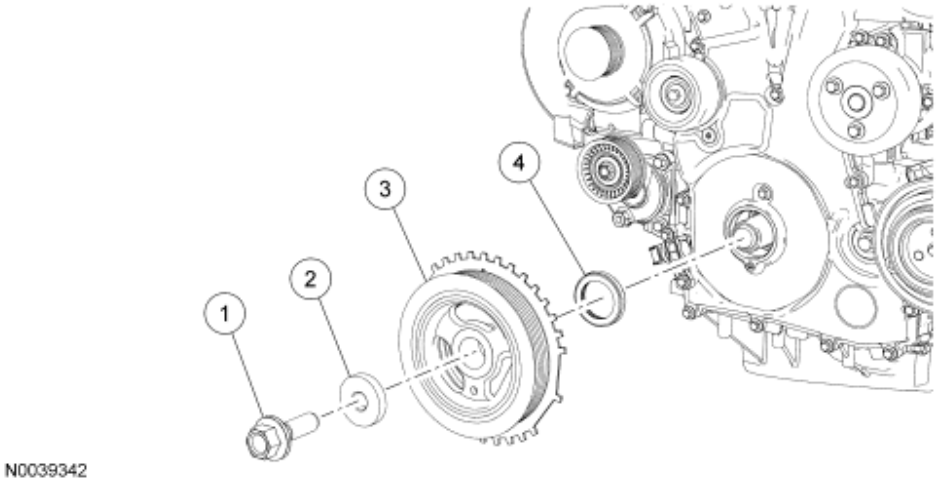

Fig. 31: Exploded View Of Lower End Components - Crankshaft Pulley and Crankshaft Front Seal
Courtesy of FORD MOTOR CO.

Item	Part Number	Description
1	6K340	Crankshaft pulley bolt
2	-	Crankshaft pulley washer (part of 6K340)
3	6316	Crankshaft pulley
4	6700	Crankshaft front seal

CAUTION: Do not loosen or remove the crankshaft pulley bolt without first installing the special tools as instructed in this procedure. The crankshaft pulley and the crankshaft timing sprocket are not keyed to the crankshaft. The crankshaft, the crankshaft sprocket and the pulley are fitted together by friction, using diamond washers between the flange faces on each part. For that reason, the crankshaft sprocket is also unfastened if you loosen the pulley bolt. Before any repair requiring loosening or removal of the crankshaft pulley bolt, the crankshaft and camshafts must be locked in place by the special service tools, otherwise severe engine damage can occur.

1. For additional information, refer to the appropriate procedures.

CRANKSHAFT PULLEY

Special Tools

Illustration	Tool Name	Tool Number
 ST2645-A	Alignment Plate, Camshaft	303-465 (T94P-6256-CH)
 ST2638-A	Timing Peg, Crankshaft	303-507
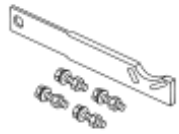 ST2647-A	Holding Fixture, Drive Pinion Flange	205-126 (T78P-4851-A)

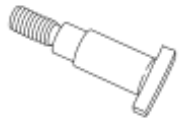 ST2639-A	Adapter for 205-126	(205-072-02)

Material

Item	Specification
Motorcraft SAE 5W-20 Premium Synthetic Blend Motor Oil XO-5W20-QSP (US); Motorcraft SAE 5W-20 Super Premium Motor Oil CXO-5W20-LSP12 (Canada); or equivalent	WSS-M2C930-A

REMOVAL

CAUTION: Do not loosen or remove the crankshaft pulley bolt without first installing the special tools as instructed in this procedure. The crankshaft pulley and the crankshaft timing sprocket are not keyed to the crankshaft. The crankshaft, the crankshaft sprocket and the pulley are fitted together by friction, using diamond washers between the flange faces on each part. For that reason, the crankshaft sprocket is also unfastened if you loosen the pulley bolt. Before any repair requiring loosening or removal of the crankshaft pulley bolt, the crankshaft and camshafts must be locked in place by the special service tools, otherwise severe engine damage can occur.

CAUTION: During engine repair procedures, cleanliness is extremely important. Any foreign material, including any material created while cleaning gasket surfaces, that enters the oil passages, coolant passages or the oil pan can cause engine failure.

All vehicles

1. With the vehicle in NEUTRAL, position it on a hoist. For additional information, refer to **JACKING AND LIFTING** .
2. Remove the accessory drive belt. For additional information, refer to **ACCESSORY DRIVE - 2.3L** .
3. If equipped, remove the 7 screws and the underbody cover.

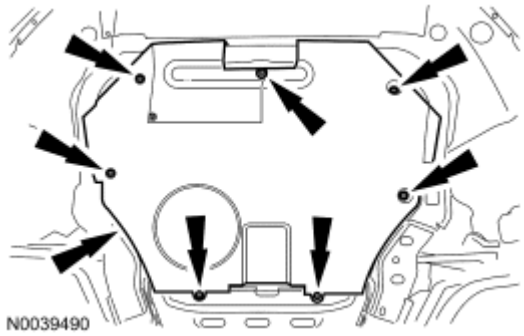

Fig. 32: Locating Underbody Cover Screws
Courtesy of FORD MOTOR CO.

4. Remove the valve cover. For additional information, refer to **Valve Cover**.

CAUTION: Failure to position the No. 1 piston at top dead center (TDC) can result in damage to the engine. Turn the engine in the normal direction of rotation only.

5. Using the crankshaft pulley bolt, turn the crankshaft clockwise to position the No. 1 piston at TDC.
   - The hole in the crankshaft pulley should be in the 6 o'clock position.

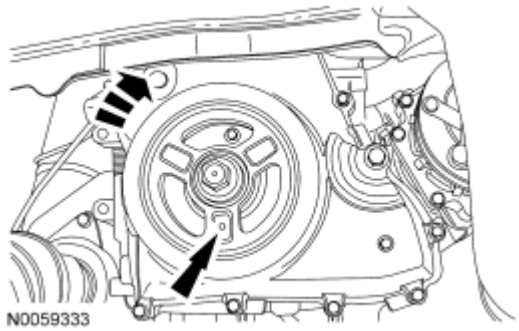

Fig. 33: Locating Hole On Crankshaft Pulley And Turning Crankshaft Clockwise
Courtesy of FORD MOTOR CO.

CAUTION: The special tool 303-465 is for camshaft alignment only. Using this tool to prevent engine rotation can result in engine damage.

NOTE: The camshaft timing slots are offset. If the special tool cannot be installed, rotate the crankshaft one complete revolution clockwise to correctly position the camshafts.

6. Install the special tool in the slots on the rear of both camshafts.

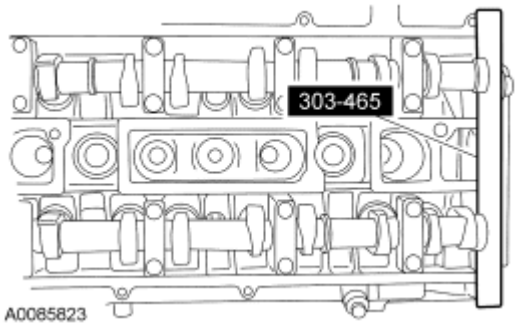

Fig. 34: Identifying Special Camshaft Tool (303-465)
Courtesy of FORD MOTOR CO.

Automatic transaxle vehicles

7. Remove the 2 halfshaft carrier bracket bolts and slide the RH halfshaft 12 mm (0.47 in) out of the transaxle.

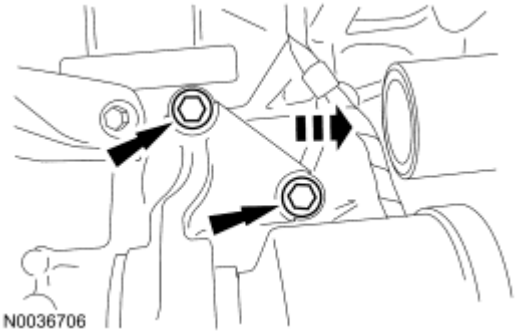

Fig. 35: Locating Half Shaft Carrier Bracket Bolts And Sliding Rh Halfshaft Out Of Transaxle
Courtesy of FORD MOTOR CO.

All vehicles

8. Remove the engine plug bolt.

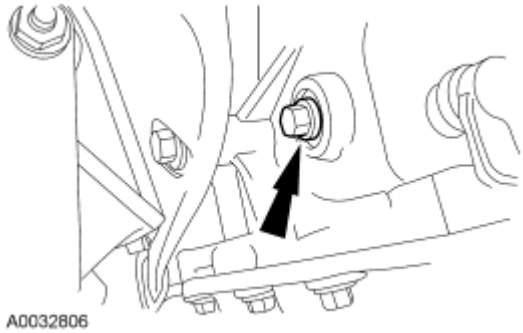

Fig. 36: Locating Engine Plug Bolt
Courtesy of FORD MOTOR CO.

NOTE: **The special tool will contact the crankshaft and prevent it from turning past TDC. However, the crankshaft can still be rotated in the counterclockwise direction. The crankshaft must remain at the TDC position during the crankshaft pulley removal and installation.**

9. Install the special tool.

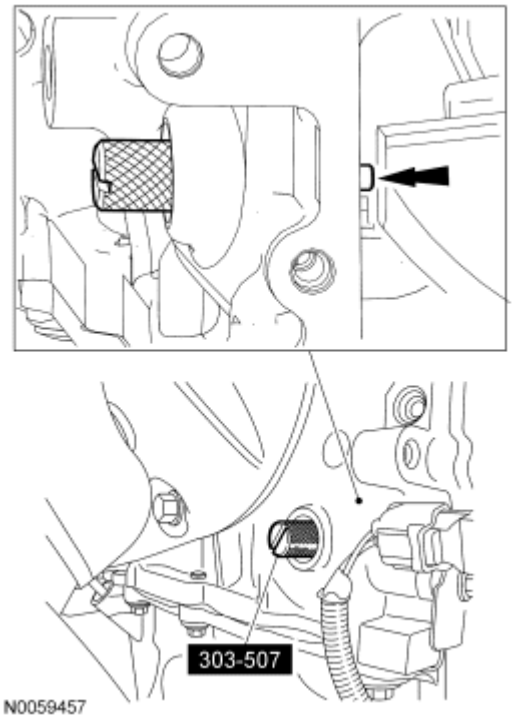

Fig. 37: Identifying Special Tool (303-507)
Courtesy of FORD MOTOR CO.

10. Assemble the special tools using 4 hardened washers in the locations shown.

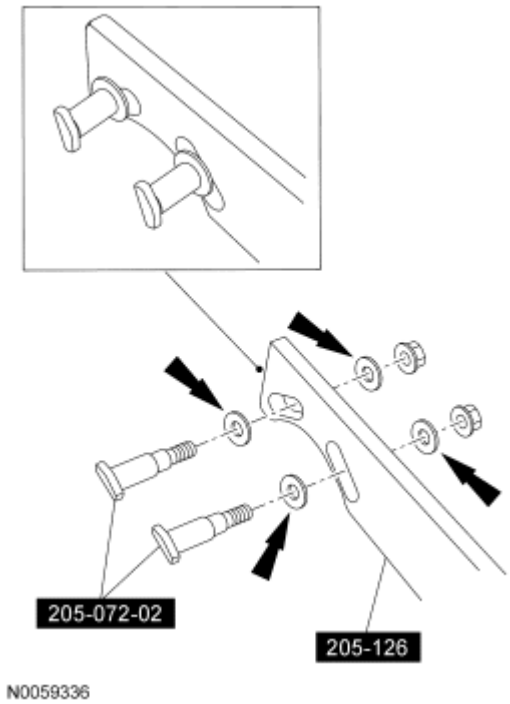

Fig. 38: Assembling Special Tools (205-126 And 205-072-02)
Courtesy of FORD MOTOR CO.

CAUTION: The crankshaft must remain in the TDC position during removal of the pulley bolt or damage to the engine can occur. Therefore, the crankshaft pulley must be held in place with the special tool and the bolt should be removed using an air impact wrench (1/2-in drive minimum).

CAUTION: If the crankshaft sprocket diamond washer comes off with the crankshaft pulley, it must be installed back onto the crankshaft.

11. Using the special tools and an air impact wrench, remove the crankshaft pulley.
    - Remove and discard the crankshaft pulley bolt and washer.
    - Remove the crankshaft pulley.

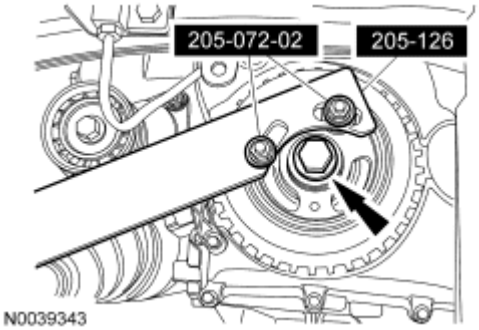

Fig. 39: Locating Crankshaft Pulley Bolt And Special Tools (205-126, 205-072-02)
Courtesy of FORD MOTOR CO.

INSTALLATION

All vehicles

CAUTION: Do not install the crankshaft pulley bolt at this time.

NOTE: Apply clean engine oil on the seal area before installing.

1. Position the crankshaft pulley onto the crankshaft with the hole in the pulley at the 6 o'clock position.

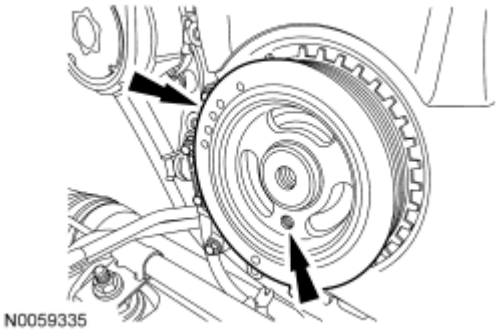

Fig. 40: Locating Crankshaft Pulley & Hole
Courtesy of FORD MOTOR CO.

CAUTION: Only hand-tighten the 6 mm (0.23 in) bolt or damage to the front cover can occur.

NOTE: This step will correctly align the crankshaft pulley to the crankshaft.

2. Install a standard 6 mm (0.23 in) x 18 mm (0.7 in) bolt through the crankshaft pulley and thread it into the front cover.

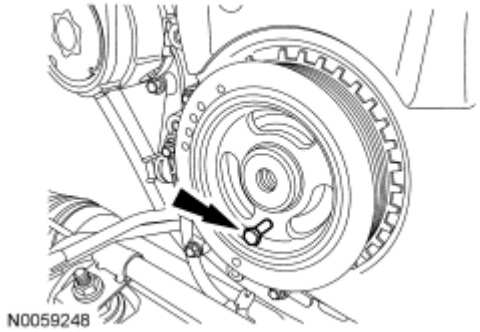

Fig. 41: Locating Crankshaft Pulley Bolt
Courtesy of FORD MOTOR CO.

3. Assemble the special tools using 4 hardened washers in the locations shown.

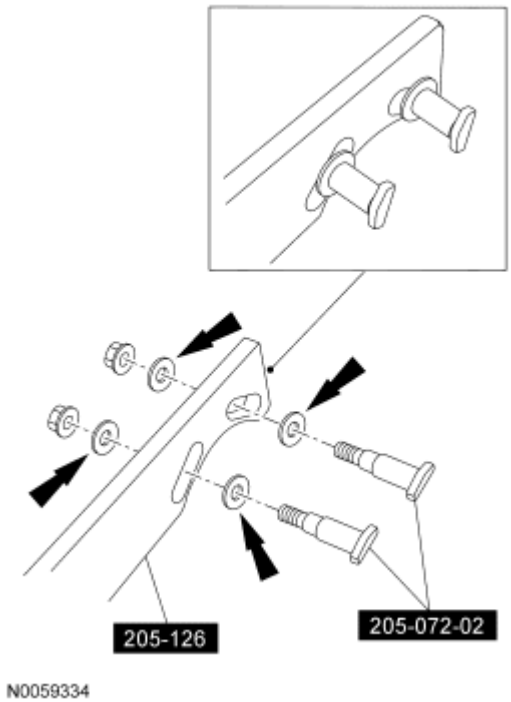

Fig. 42: Assembling Special Tools (205-126 And 205-072-02) And Hardened Washers
Courtesy of FORD MOTOR CO.

CAUTION: The crankshaft must remain in the TDC position during installation of the pulley bolt or damage to the engine can occur. Therefore, the crankshaft pulley must be held in place with the special tool and the bolt should be installed using hand tools only.

CAUTION: Do not reuse the crankshaft pulley bolt.

4.
   - Install a new crankshaft pulley bolt. Using the special tools to hold the crankshaft pulley in place, tighten the crankshaft pulley bolt in 2 stages:
   - Stage 1: Tighten to 100 Nm (74 lb-ft).
   - Stage 2: Tighten an additional 90 degrees (1/4 turn).

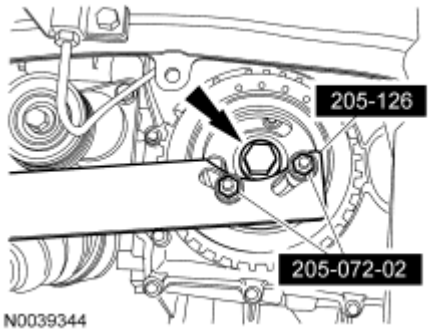

Fig. 43: Identifying Special Tools (205-126 And 205-072-02) & Crankshaft Pulley Bolt
Courtesy of FORD MOTOR CO.

5. Remove the 6 mm (0.23 in) x 18 mm (0.7 in) bolt.

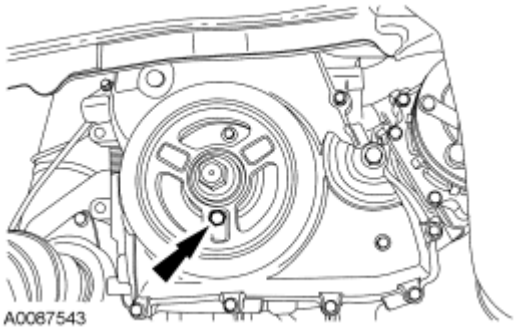

Fig. 44: Aligning Crankshaft Pulley Bolt Holes
Courtesy of FORD MOTOR CO.

6. Remove the special tool.

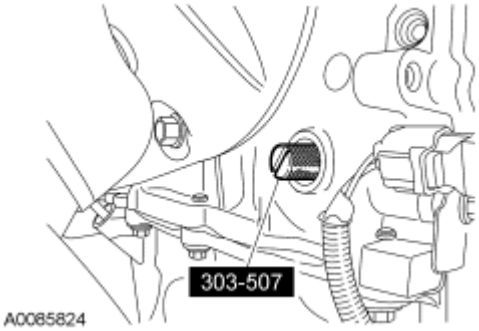

Fig. 45: Identifying Special Tool

Courtesy of FORD MOTOR CO.

7. Remove the special tool.

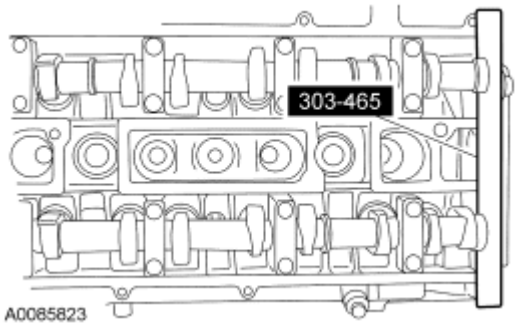

Fig. 46: Identifying Special Camshaft Tool (303-465)
Courtesy of FORD MOTOR CO.

NOTE: Only turn the engine in the normal direction of rotation.

8. Turn the crankshaft clockwise 1 and 3/4 turns.
9. Install the special tool.

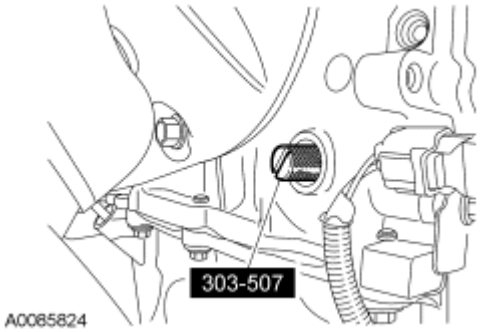

Fig. 47: Identifying Special Tool
Courtesy of FORD MOTOR CO.

NOTE: Only turn the engine in the normal direction of rotation.

10. Turn the crankshaft clockwise until the crankshaft contacts the special tool.

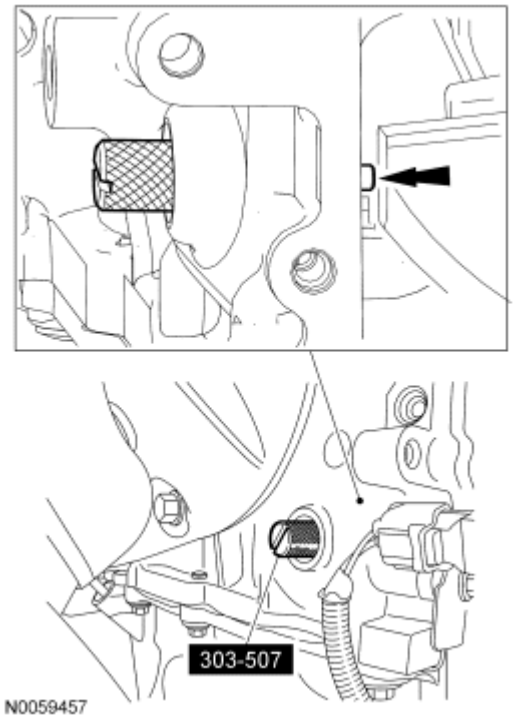

Fig. 48: Identifying Special Tool (303-507)
Courtesy of FORD MOTOR CO.

CAUTION: Only hand-tighten the bolt or damage to the front cover can occur.

11. Using the 6 mm (0.23 in) x 18 mm (0.7 in) bolt, check the position of the crankshaft pulley.
    - If it is not possible to install the bolt, the engine valve timing must be corrected by repeating this procedure.

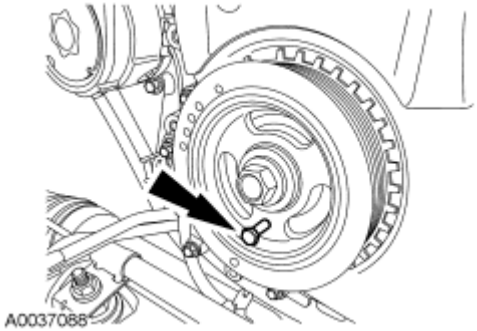

Fig. 49: Installing Bolt Through Crankshaft Pulley And Thread It Into Front Cover
Courtesy of FORD MOTOR CO.

12. Using the special tool, check the position of the camshafts.
    - If it is not possible to install the special tool, the engine valve timing must be corrected by repeating this procedure.

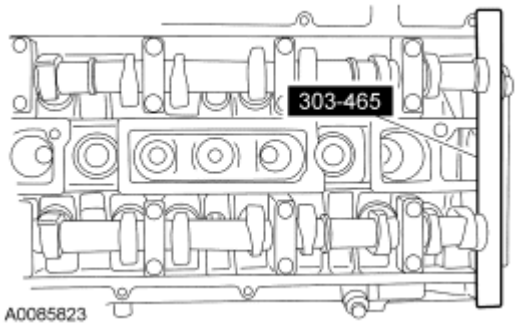

Fig. 50: Identifying Special Camshaft Tool (303-465)
Courtesy of FORD MOTOR CO.

13. Remove the special tool.

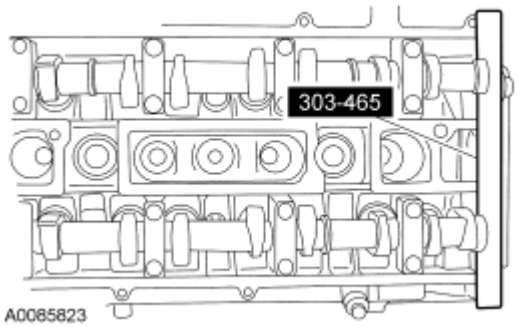

Fig. 51: Identifying Special Camshaft Tool (303-465)
Courtesy of FORD MOTOR CO.

14. Remove the 6 mm (0.23 in) x 18 mm (0.7 in) bolt.

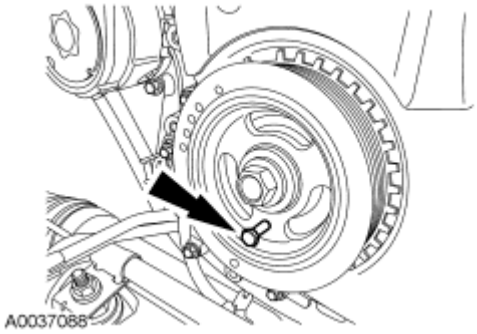

Fig. 52: Installing Bolt Through Crankshaft Pulley And Thread It Into Front Cover
Courtesy of FORD MOTOR CO.

15. Remove the special tool.

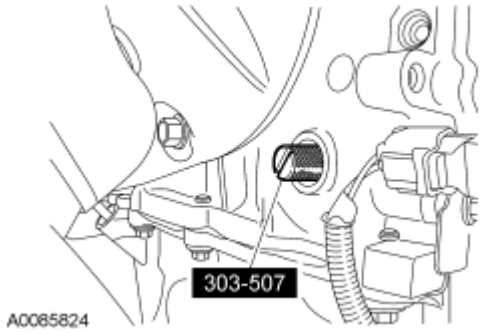

Fig. 53: Identifying Special Tool
Courtesy of FORD MOTOR CO.

16. Install the engine plug bolt.
    - To install, tighten to 20 Nm (15 lb-ft).

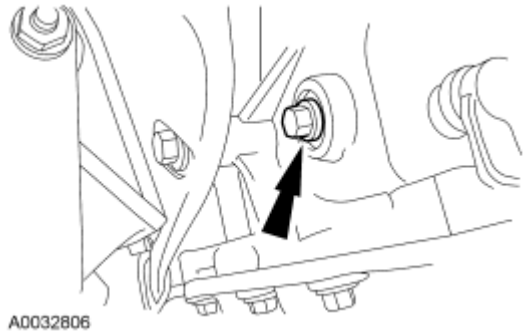

Fig. 54: Locating Engine Plug Bolt
Courtesy of FORD MOTOR CO.

Automatic transaxle vehicles

17. Install the RH halfshaft and the 2 halfshaft carrier bearing bracket bolts.
    - Tighten to 40 Nm (30 lb-ft).

All vehicles

18. If equipped, install the underbody cover and the 7 screws.

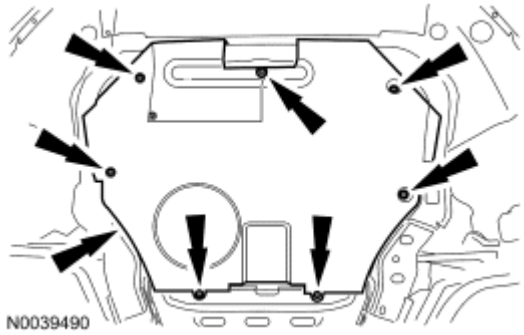

Fig. 55: Locating Underbody Cover Screws
Courtesy of FORD MOTOR CO.

19. Install the accessory drive belt. For additional information, refer to **ACCESSORY DRIVE - 2.3L** .
20. Install the valve cover. For additional information, refer to **Valve Cover**.

CRANKSHAFT FRONT SEAL

Special Tools

Illustration	Tool Name	Tool Number
 ST1385-A	Remover, Oil Seal	303-409 (T92C-6700-CH)
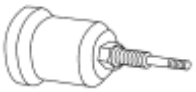 ST1917-A	Installer, Front Oil Seal	303-096 (T74P-6150-A)

Material

Item	Specification
Motorcraft SAE 5W-20 Premium Synthetic Blend Motor Oil XO-5W20-QSP (US); Motorcraft SAE 5W-20 Super Premium Motor Oil CXO-5W20-LSP12 (Canada); or equivalent	WSS-M2C930-A

REMOVAL

CAUTION: Do not loosen or remove the crankshaft pulley bolt without first installing the special tools as instructed in this procedure. The crankshaft pulley and the crankshaft timing sprocket are not keyed to the crankshaft. The crankshaft, the crankshaft sprocket and the pulley are fitted together by

friction, using diamond washers between the flange faces on each part. For that reason, the crankshaft sprocket is also unfastened if you loosen the pulley bolt. Before any repair requiring loosening or removal of the crankshaft pulley bolt, the crankshaft and camshafts must be locked in place by the special service tools, otherwise severe engine damage can occur.

CAUTION: During engine repair procedures, cleanliness is extremely important. Any foreign material, including any material created while cleaning gasket surfaces, that enters the oil passages, coolant passages or the oil pan can cause engine failure.

1. Remove the crankshaft pulley. For additional information, refer to **Crankshaft Pulley**.

CAUTION: Use care not to damage the engine front cover or the crankshaft when removing the seal.

2. Using the special tool, remove the crankshaft front oil seal.

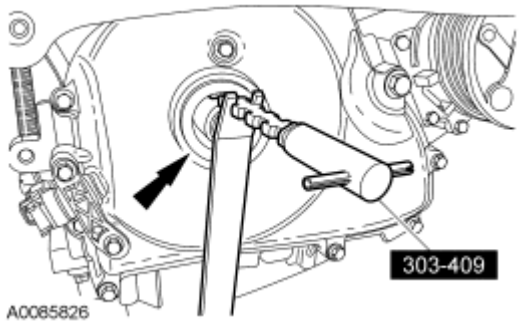

Fig. 56: Locating Crankshaft Front Oil Seal And Special Tool (303-409)
Courtesy of FORD MOTOR CO.

INSTALLATION

NOTE: Remove the through-bolt from the special tool.

NOTE: Lubricate the oil seal with clean engine oil.

1. Using the special tool, install the crankshaft front oil seal.

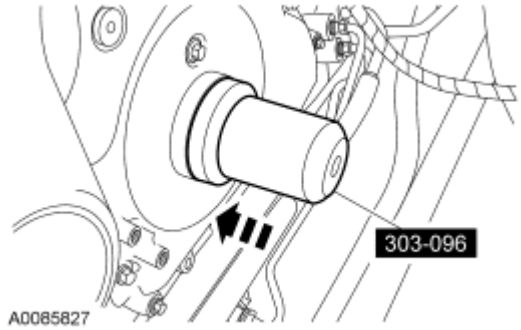

Fig. 57: Installing Crankshaft Front Oil Seal Using Special Tool
Courtesy of FORD MOTOR CO.

2. Install the crankshaft pulley. For additional information, refer to **Crankshaft Pulley**.

LOWER END COMPONENTS - EXPLODED VIEW, FLEXPLATE, FLYWHEEL AND CRANKSHAFT REAR SEAL

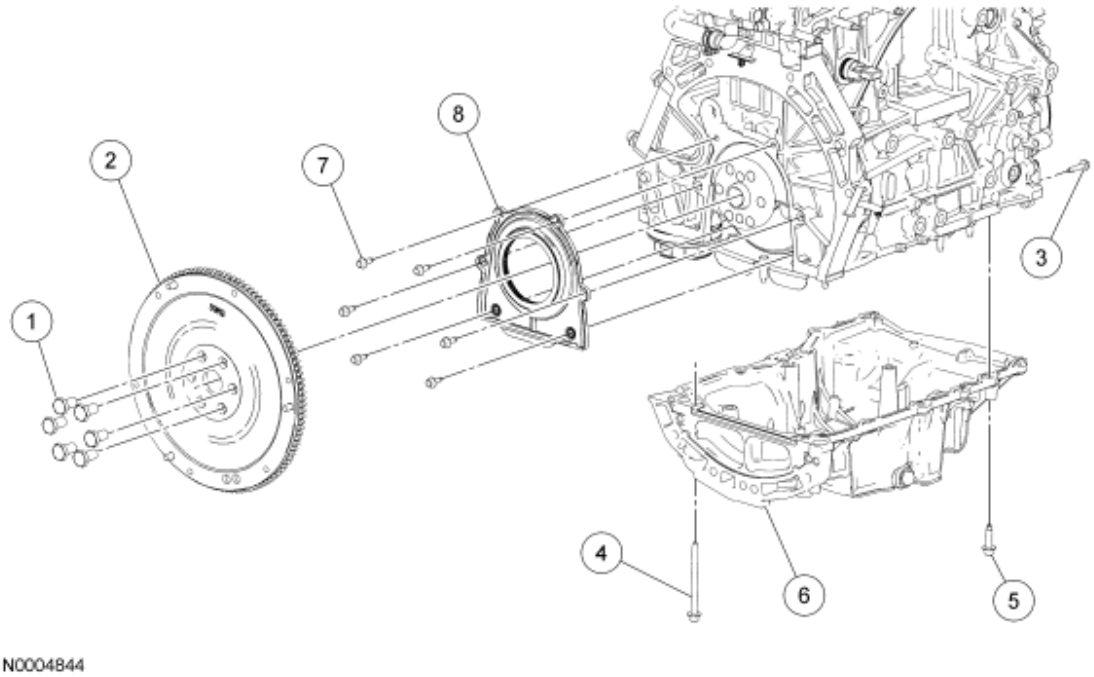

Fig. 58: Exploded View Of Lower End Components - Flywheel & Crankshaft Rear Seal
Courtesy of FORD MOTOR CO.

Item	Part Number	Description
1	6379	Flexplate or flywheel bolt (6 required)
2	6K375/6K390	Flexplate or flywheel
3	W500215	Engine front cover bolt (4 required)
4	W706284	Oil pan bolt (2 required)

5	W500224	Oil pan bolt (11 required)
6	6675	Oil pan
7	W500212	Crankshaft rear oil seal with retainer plate bolt (6 required)
8	6K318	Crankshaft rear oil seal with retainer plate

1. For additional information, refer to the appropriate procedures.

FLEXPLATE

REMOVAL

1. With the vehicle in NEUTRAL, position it on a hoist. For additional information, refer to **JACKING AND LIFTING** .
2. Remove the automatic transaxle. For additional information, refer to the appropriate **AUTOMATIC TRANSAXLE/TRANSMISSION - 6 SPEED** or **AUTOMATIC TRANSAXLE/TRANSMISSION - FNR5** .
3. Remove the 6 bolts and the flexplate.

INSTALLATION

NOTE: Special bolts are used for installation. Do not use standard bolts.

1. Install the flexplate and tighten the bolts in the sequence shown in 3 stages.
   - Stage 1: Tighten to 50 Nm (37 lb-ft).
   - Stage 2: Tighten to 80 Nm (59 lb-ft).
   - Stage 3: Tighten to 112 Nm (83 lb-ft).

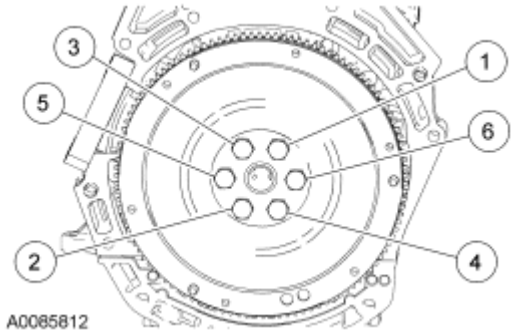

Fig. 59: Identifying Flexplate Bolts Tightening Sequence
Courtesy of FORD MOTOR CO.

2. Install the automatic transaxle. For additional information, refer to the appropriate **AUTOMATIC TRANSAXLE/TRANSMISSION - 6 SPEED** or **AUTOMATIC TRANSAXLE/TRANSMISSION - FNR5** .

FLYWHEEL

REMOVAL

1. With the vehicle in NEUTRAL, position it on a hoist. For additional information, refer to **JACKING AND LIFTING** .
2. Remove the clutch. For additional information, refer to **CLUTCH** .
3. Remove the 6 bolts and the flywheel.

INSTALLATION

NOTE: Special bolts are used for installation. Do not use standard bolts.

1. Install the flywheel and tighten the bolts in the sequence shown in 3 stages.
   - Stage 1: Tighten to 50 Nm (37 lb-ft).
   - Stage 2: Tighten to 80 Nm (59 lb-ft).
   - Stage 3: Tighten to 112 Nm (83 lb-ft).

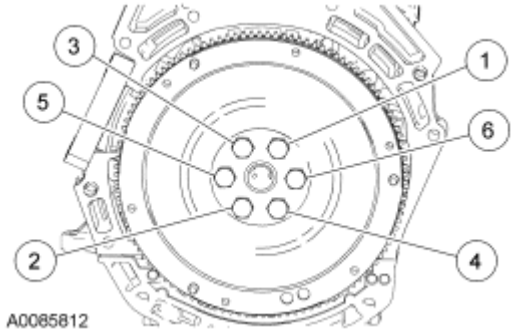

Fig. 60: Identifying Flexplate Bolts Tightening Sequence
Courtesy of FORD MOTOR CO.

2. Install the clutch and manual transaxle. For additional information, refer to **CLUTCH** .

CRANKSHAFT REAR SEAL

Special Tools

Illustration	Tool Name	Tool Number
 ST1506-A	Installer, Crankshaft Rear Main Oil Seal	303-328 (T88P-6701-B1)

Material

Item	Specification

Motorcraft Metal Surface Cleaner ZC-21	WSE-M5B392-A
Silicone Gasket and Sealant TA-30	WSE-M4G323-A4
Motorcraft SAE 5W-20 Premium Synthetic Blend Motor Oil XO-5W20-QSP (US); Motorcraft SAE 5W-20 Super Premium Motor Oil CXO-5W20-LSP12 (Canada); or equivalent	WSS-M2C930-A

REMOVAL

1. With the vehicle in NEUTRAL, position it on a hoist. For additional information, refer to **JACKING AND LIFTING** .
2. Remove the flexplate or flywheel. For additional information, refer to **Flexplate** or **Flywheel**.

CAUTION: If the oil pan is not removed, damage to the rear oil seal retainer joint can occur.

3. Remove the 17 bolts and the oil pan.
4. Remove the 6 bolts and the crankshaft rear oil seal with retainer plate.

INSTALLATION

1. Using the special tool, position the crankshaft rear oil seal with retainer plate onto the crankshaft.

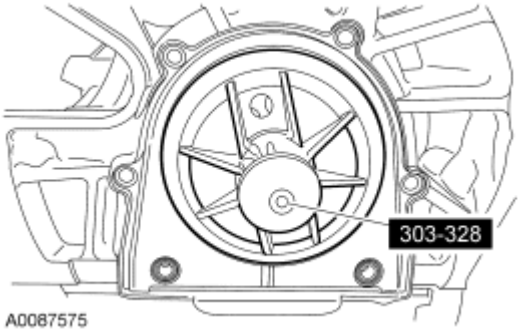

Fig. 61: Positioning Crankshaft Rear Oil Seal Using Special Tool (303-328)
Courtesy of FORD MOTOR CO.

2. Install the crankshaft rear oil seal with retainer plate and bolts.
   - To install, tighten in the sequence shown to 10 Nm (89 lb-in).

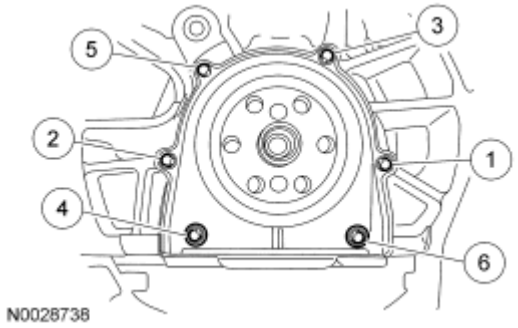

Fig. 62: Identifying Tightening Sequence Of Crankshaft Rear Main Oil Seal Bolts
Courtesy of FORD MOTOR CO.

CAUTION: Do not use metal scrapers, wire brushes, power abrasive discs or other abrasive means to clean the sealing surfaces. These tools cause scratches and gouges, which make leak paths. Use a plastic scraping tool to remove traces of sealant.

3. Clean and inspect all the oil pan, engine front cover and cylinder block mating surfaces.

NOTE: If the oil pan is not secured within 4 minutes of sealant application, the sealant must be removed and the sealing area cleaned with metal surface cleaner. Allow to dry until there is no sign of wetness, or 4 minutes, whichever is longer. Failure to follow this procedure can cause future oil leakage.

NOTE: The oil pan must be installed and the bolts tightened within 4 minutes of applying the silicone gasket and sealant.

4. Apply a 2.5 mm (0.09 in) bead of silicone gasket and sealant to the oil pan. Install the oil pan. Install the 2 oil pan bolts finger-tight.

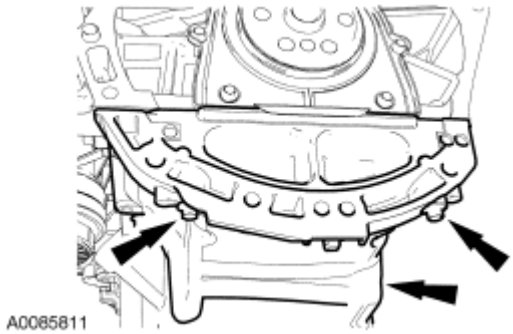

Fig. 63: Identifying Rear Oil Pan Bolts
Courtesy of FORD MOTOR CO.

5. Install the 4 bolts.

- To install, tighten to 10 Nm (89 lb-in).

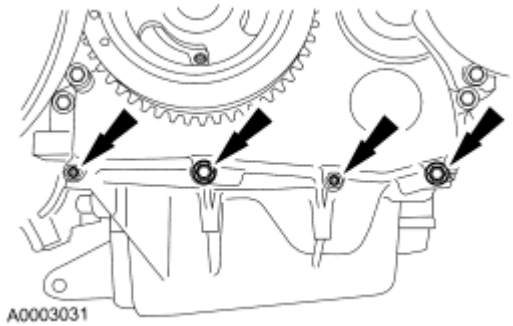

Fig. 64: Locating Engine Front Cover-To-Oil Pan Bolts
Courtesy of FORD MOTOR CO.

6. Install the remaining oil pan bolts and tighten the oil pan bolts in the sequence shown to 20 Nm (15 lb-ft).

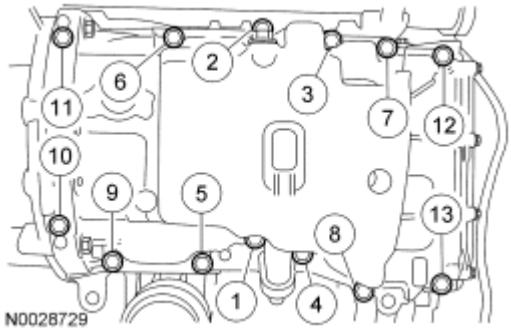

Fig. 65: Identifying Tightening Sequence Of Oil Pan Bolts
Courtesy of FORD MOTOR CO.

7. Install the flexplate or flywheel. For additional information, refer to **Flexplate** or **Flywheel**.

ENGINE FRONT COVER

Special Tools

Illustration	Tool Name	Tool Number
 ST1385-A	Remover, Oil Seal	303-409 (T92C-6700-CH)
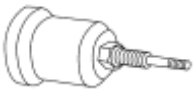 ST1917-A	Installer, Front Oil Seal	303-096 (T74P-6150-A)

Material

Item	Specification
Motorcraft SAE 5W-20 Premium Synthetic Blend Motor Oil XO-5W20-QSP (US); Motorcraft SAE 5W-20 Super Premium Motor Oil CXO-5W20-LSP12 (Canada); or equivalent	WSS-M2C930-A
Silicone Gasket and Sealant TA-30	WSE-M4G323-A4

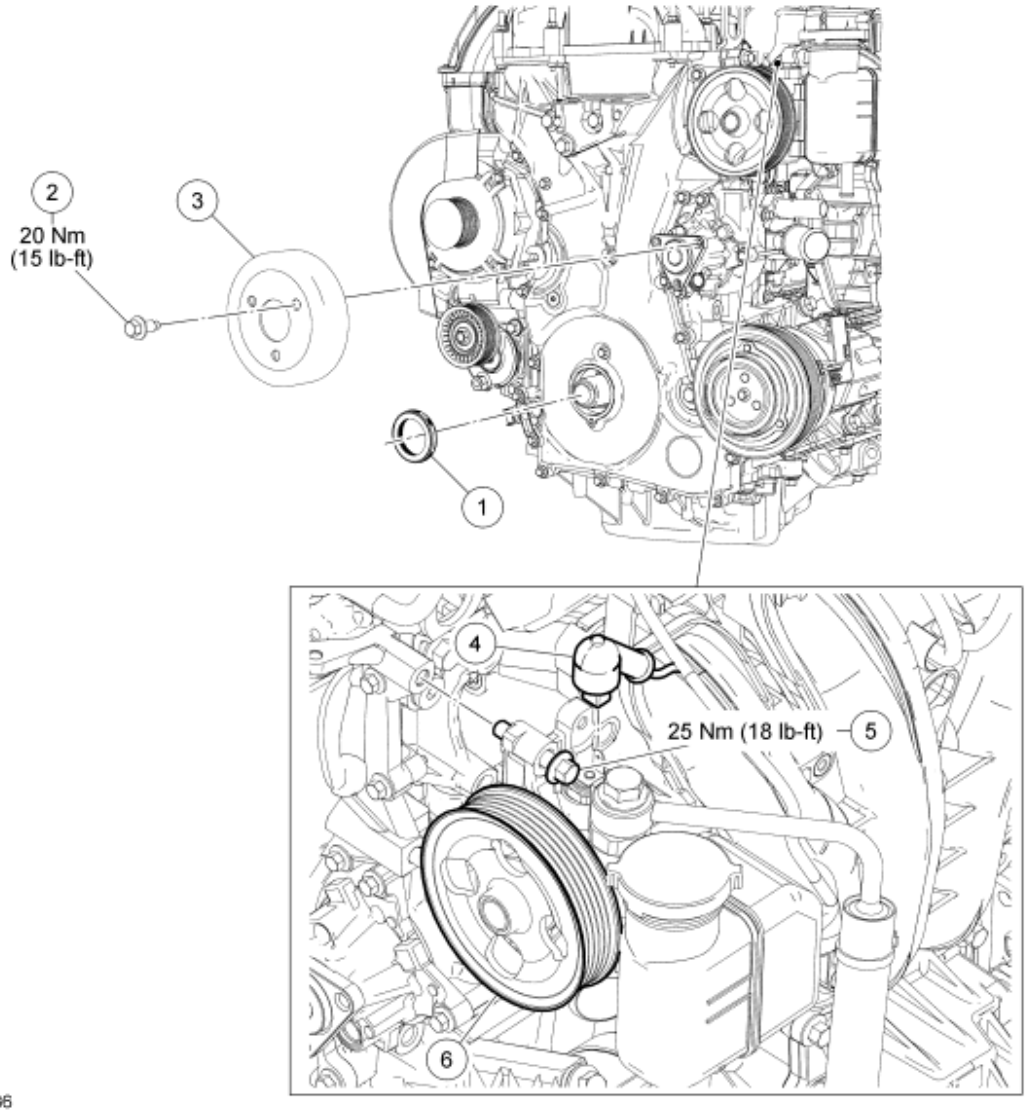

Fig. 66: Exploded View Of Engine Front Cover With Torque Specifications (1 Of 2)
Courtesy of FORD MOTOR CO.

Item	Part Number	Description
1	6700	Crankshaft front seal

2	W500221	Coolant pump pulley bolt (3 required)
3	8509	Coolant pump pulley
4	-	Power steering pressure (PSP) switch electrical connector (part of 12B637)
5	W500315	Power steering pump bolt (3 required)
6	3A696	Power steering pump

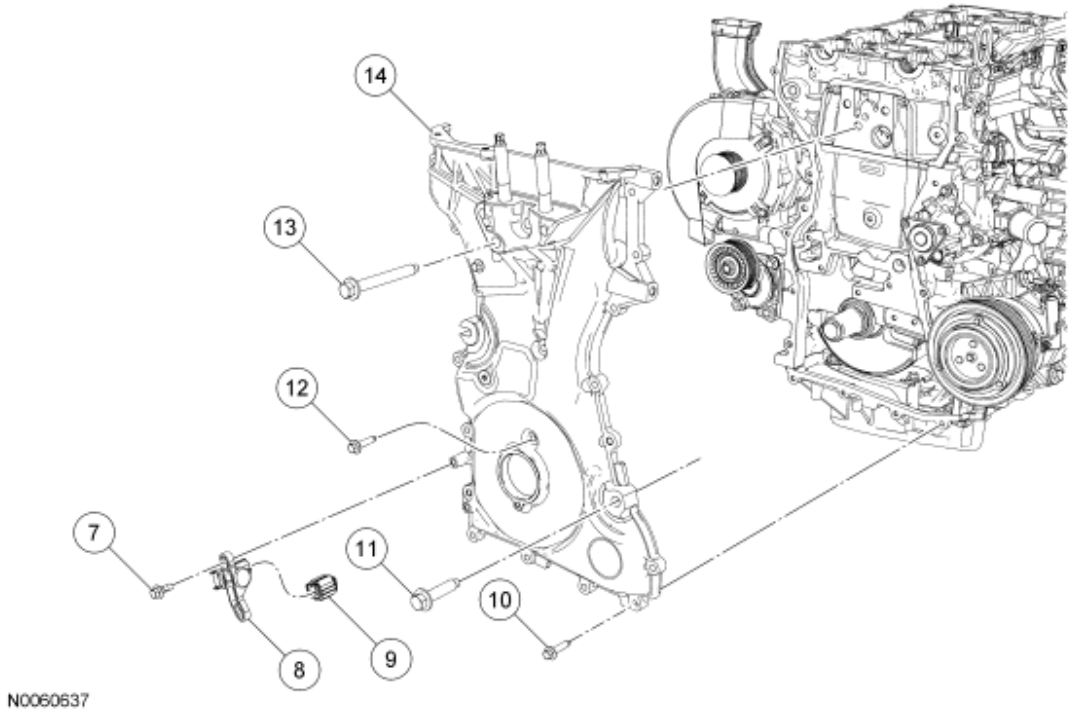

Fig. 67: Exploded View Of Engine Front Cover (2 Of 2)
Courtesy of FORD MOTOR CO.

Item	Part Number	Description
7	W701219-S	Crankshaft position (CKP) sensor bolt (2 required)
8	6C315	CKP sensor
9	14A464	CKP sensor electrical connector (part of 12B637)
10	W500215	Engine front cover bolt (17 required)
11	W500320	Engine front cover bolt
12	W500300	Engine front cover bolt
13	W500328	Engine front cover bolt
14	6019	Engine front cover

REMOVAL

CAUTION: Do not loosen or remove the crankshaft pulley bolt without first installing the special tools as instructed in this procedure. The crankshaft pulley and the crankshaft timing sprocket are not keyed to the crankshaft. The crankshaft, the crankshaft sprocket and the pulley are fitted together by friction, using diamond washers between the flange faces on each part. For that reason, the crankshaft sprocket is also unfastened if you loosen the pulley bolt. Before any repair requiring loosening or removal of the crankshaft pulley bolt, the crankshaft and camshafts must be locked in place by the special service tools, otherwise severe engine damage can occur.

CAUTION: During engine repair procedures, cleanliness is extremely important. Any foreign material, including any material created while cleaning gasket surfaces, that enters the oil passages, coolant passages or the oil pan can cause engine failure.

1. With the vehicle in NEUTRAL, position it on a hoist. For additional information, refer to **JACKING AND LIFTING** .
2. Loosen the 3 coolant pump pulley bolts.
3. Remove the accessory drive belt and idler pulley. For additional information, refer to **ACCESSORY DRIVE - 2.3L** .
4. Remove the crankshaft pulley. For additional information, refer to **Crankshaft Pulley**.
5. If equipped, remove the 7 screws and the underbody cover.

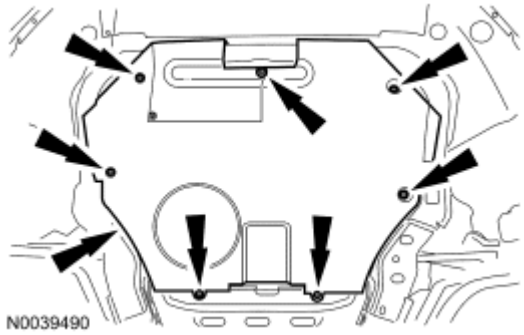

Fig. 68: Locating Underbody Cover Screws
Courtesy of FORD MOTOR CO.

6. Remove the engine mount. For additional information, refer to **Engine Mount**.

CAUTION: Use care not to damage the engine front cover or the crankshaft when removing the seal.

7. Using the special tool, remove and discard the crankshaft front oil seal.

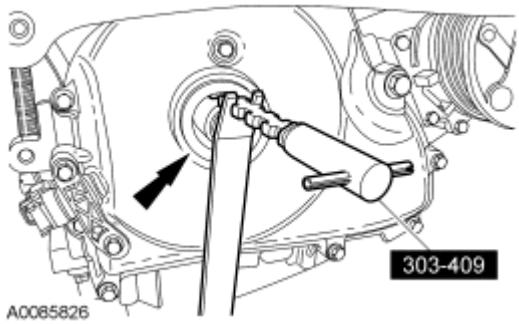

Fig. 69: Locating Crankshaft Front Oil Seal And Special Tool (303-409)
Courtesy of FORD MOTOR CO.

8. Remove the 3 bolts and the coolant pump pulley.
9. Disconnect the power steering pressure (PSP) switch electrical connector.

NOTE: The bolt that is positioned under the power steering pressure tube fitting will remain with the pump.

10. Remove the 3 power steering pump bolts and position the power steering pump aside.
11. Disconnect the crankshaft position (CKP) sensor electrical connector.

NOTE: Whenever the CKP sensor is removed, a new one must be installed, using the alignment tool supplied with the new part.

12. Remove the 2 bolts and the CKP sensor.
    - Discard the CKP sensor.
13. Remove the 22 bolts and the engine front cover.

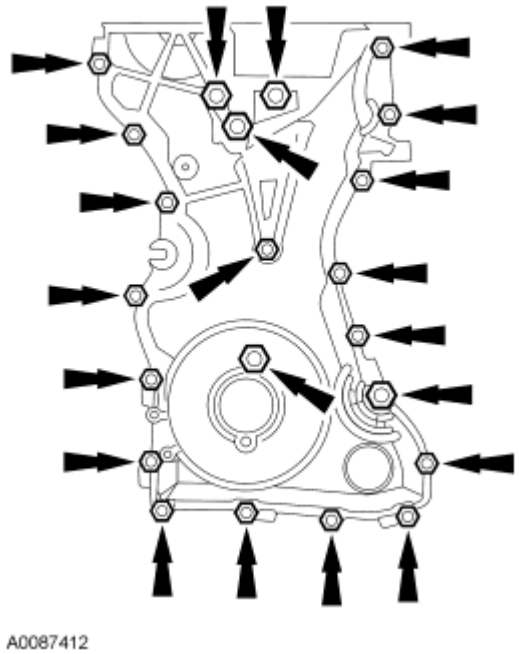

Fig. 70: Locating Engine Front Cover Bolts
Courtesy of FORD MOTOR CO.

INSTALLATION

CAUTION: Do not use metal scrapers, wire brushes, power abrasive discs or other abrasive means to clean sealing surfaces. These tools cause scratches and gouges which make leak paths.

1. Clean and inspect the mounting surfaces of the engine and the front cover.

NOTE: The engine front cover must be installed and the bolts tightened within 4 minutes of applying the silicone gasket and sealant.

2. Apply a 2.5 mm (0.09 in) bead of silicone gasket and sealant to the cylinder head and oil pan joint areas. Apply a 2.5 mm (0.09 in) bead of silicone gasket and sealant to the front cover.

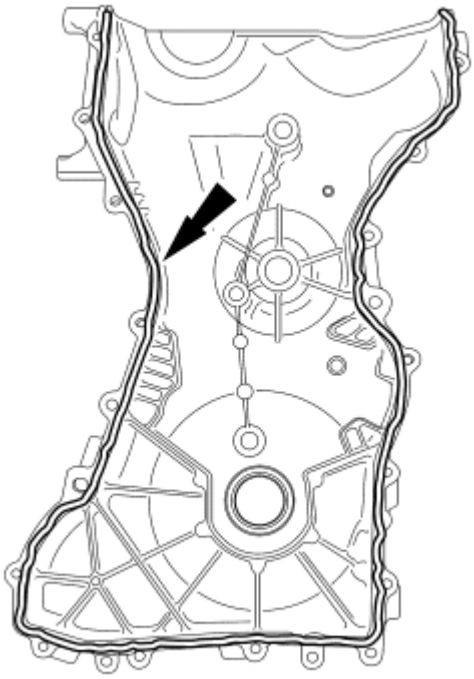

Fig. 71: Locating Silicone Gasket
Courtesy of FORD MOTOR CO.

3. Install the engine front cover. Tighten the bolts in the sequence shown, to the following specifications:
   - Tighten the 8-mm bolts to 10 Nm (89 lb-in).
   - Tighten the 13-mm bolts to 48 Nm (35 lb-ft).

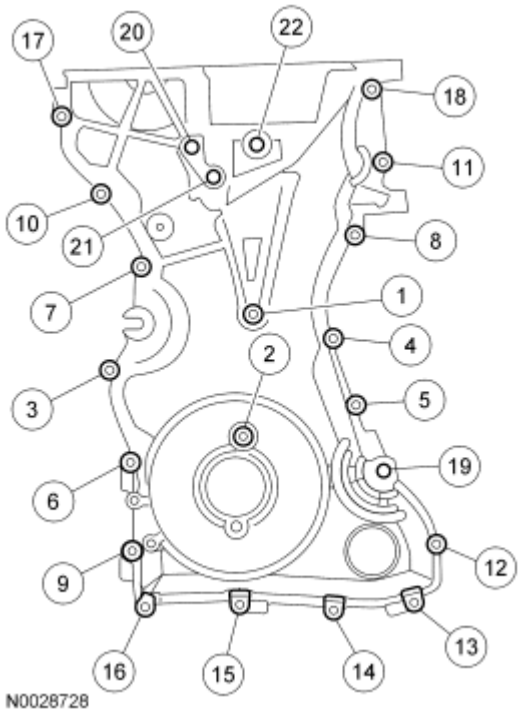

Fig. 72: Identifying Engine Front Cover Bolts Tightening Sequence
Courtesy of FORD MOTOR CO.

4. Position the power steering pump and install the 3 bolts.

NOTE: The coolant pump pulley bolts should be tightened after the accessory drive belt is installed.

5. Install the coolant pump pulley and bolts.
   - Tighten to 20 Nm (15 lb-ft).

NOTE: Remove the through-bolt from the special tool.

NOTE: Lubricate the oil seal with clean engine oil.

6. Using the special tool, install the crankshaft front oil seal.

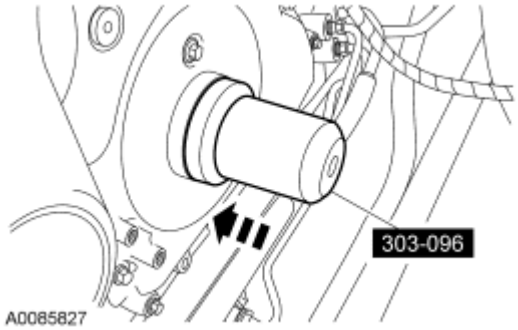

Fig. 73: Installing Crankshaft Front Oil Seal Using Special Tool
Courtesy of FORD MOTOR CO.

7. Install the engine mount. For additional information, refer to **Engine Mount**.
8. Install the crankshaft pulley. For additional information, refer to **Crankshaft Pulley**.

CAUTION: Only hand-tighten the bolt or damage to the front cover can occur.

9. Install a standard 6 mm (0.23 in) x 18 mm (0.7 in) bolt through the crankshaft pulley and thread it into the front cover.

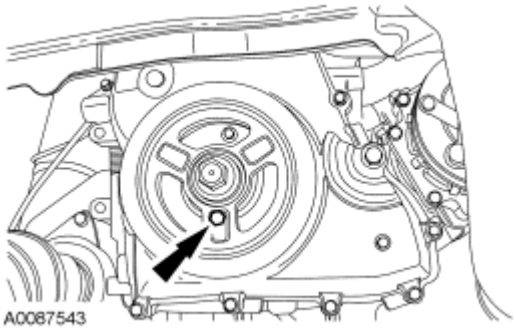

Fig. 74: Aligning Crankshaft Pulley Bolt Holes
Courtesy of FORD MOTOR CO.

NOTE: Whenever the crankshaft position (CKP) sensor is removed, a new one must be installed using the alignment tool supplied with the new part.

10. Install a new CKP sensor.
    - Do not tighten the bolts at this time.

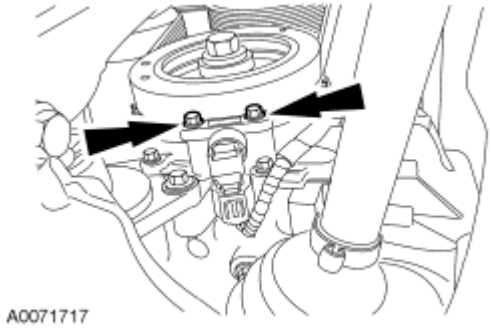

Fig. 75: Locating CKP Sensor Bolts
Courtesy of FORD MOTOR CO.

NOTE: The CKP sensor alignment tool is supplied with the new sensor and is not available separately.

11. Adjust the new CKP sensor with the alignment tool.
    - Tighten the bolts to 7 Nm (62 lb-in).

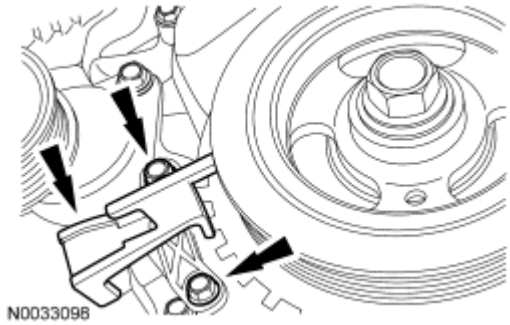

Fig. 76: Locating CKP Sensor Alignment Tool And Bolts
Courtesy of FORD MOTOR CO.

12. Connect the CKP sensor electrical connector.
13. Remove the 6 mm (0.23 in) x 18 mm (0.7 in) bolt.

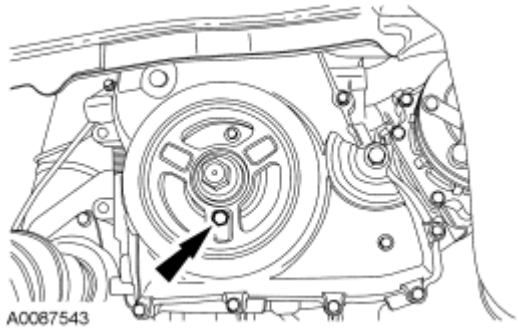

Fig. 77: Aligning Crankshaft Pulley Bolt Holes
Courtesy of FORD MOTOR CO.

14. If equipped, install the underbody cover and the 7 screws.

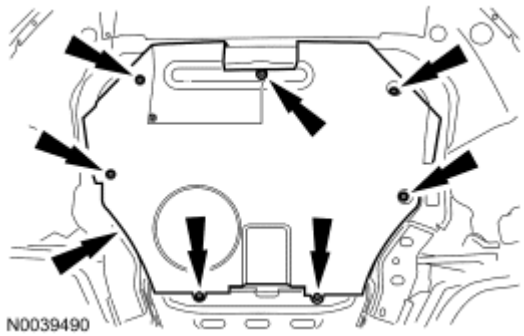

Fig. 78: Locating Underbody Cover Screws
Courtesy of FORD MOTOR CO.

15. Install the accessory drive belt and idler pulley. For additional information, refer to **ACCESSORY DRIVE - 2.3L** .
16. Tighten the 3 coolant pump pulley bolts to 20 Nm (15 lb-ft).

TIMING DRIVE COMPONENTS

Special Tools

Illustration	Tool Name	Tool Number
 ST2645-A	Alignment Plate, Camshaft	303-465 (T94P-6256-CH)

REMOVAL

CAUTION: Do not loosen or remove the crankshaft pulley bolt without first installing the special tools as instructed in this procedure. The crankshaft pulley and the crankshaft timing sprocket are not keyed to the crankshaft. The crankshaft, the crankshaft sprocket and the pulley are fitted together by friction, using diamond washers between the flange faces on each part. For that reason, the crankshaft sprocket is also unfastened if you loosen the pulley bolt. Before any repair requiring loosening or removal of the crankshaft pulley bolt, the crankshaft and camshafts must be locked in place by the special service tools, otherwise severe engine damage can occur.

CAUTION: During engine repair procedures, cleanliness is extremely important. Any foreign material, including any material created while cleaning gasket surfaces, that enters the oil passages, coolant passages or the oil pan can

cause engine failure.

1. With the vehicle in NEUTRAL, position it on a hoist. For additional information, refer to **JACKING AND LIFTING** .
2. Remove the engine front cover. For additional information, refer to **Engine Front Cover**.
3. Remove the timing chain tensioner.
   1. Compress the timing chain tensioner and insert a paper clip into the hole to retain the tensioner.
   2. Remove the 2 bolts and timing chain tensioner.

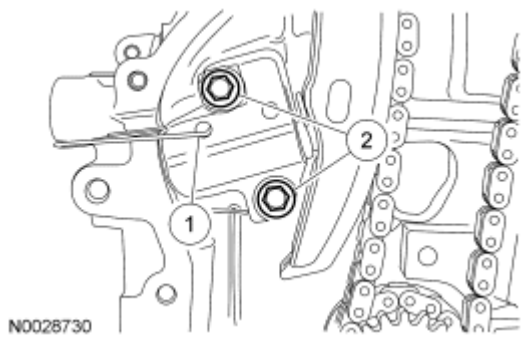

Fig. 79: Locating Timing Chain Tensioner Bolt
Courtesy of FORD MOTOR CO.

4. Remove the timing chain tensioner arm.

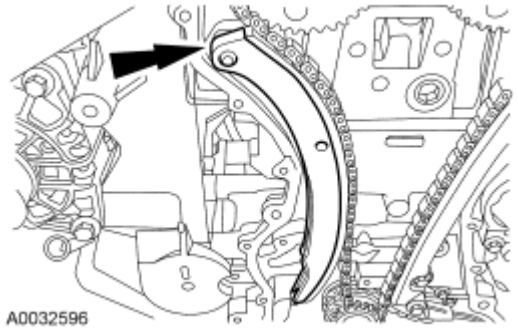

Fig. 80: Locating RH Timing Chain Guide
Courtesy of FORD MOTOR CO.

5. Remove the timing chain.

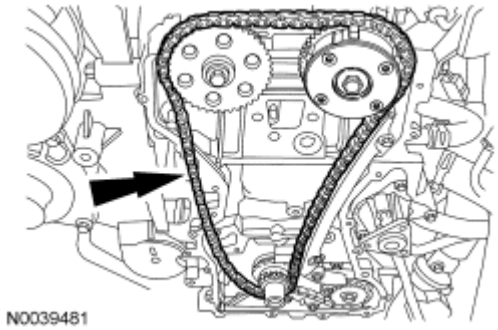

Fig. 81: Locating Timing Chain
Courtesy of FORD MOTOR CO.

6. Remove the 2 bolts and the timing chain guide.

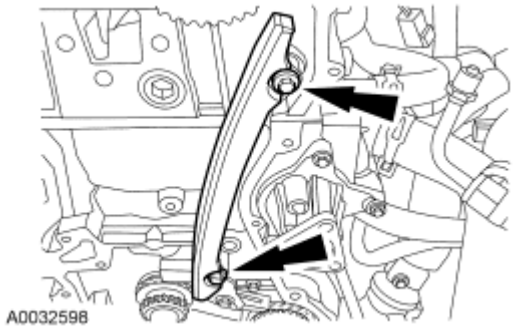

Fig. 82: Identifying Bolts And LH Timing Chain Guide
Courtesy of FORD MOTOR CO.

CAUTION: The special tool 303-465 is for camshaft alignment only. Using this tool to prevent engine rotation can result in engine damage.

7. Using the flats on the camshaft to prevent camshaft rotation, remove the bolt and the exhaust camshaft sprocket.

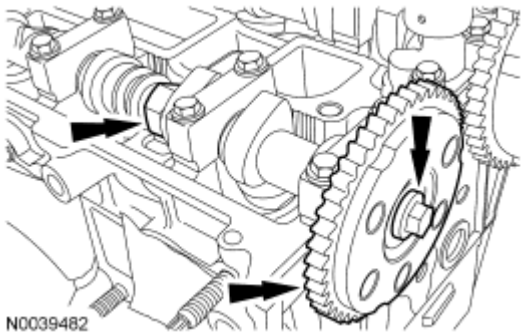

Fig. 83: Locating Bolt And Exhaust Camshaft Sprocket
Courtesy of FORD MOTOR CO.

CAUTION: The special tool 303-465 is for camshaft alignment only. Using this tool to prevent engine rotation can result in engine damage.

8. Using the flats on the camshaft to prevent camshaft rotation, remove the bolt and the camshaft phaser and sprocket.

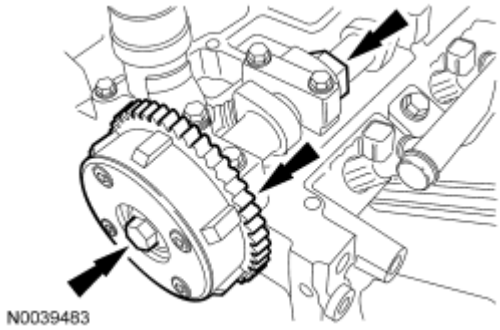

Fig. 84: Locating Intake Camshaft Phaser And Sprocket Bolt
Courtesy of FORD MOTOR CO.

INSTALLATION

1. Install the camshaft sprockets and the bolts. Do not tighten the bolts at this time.

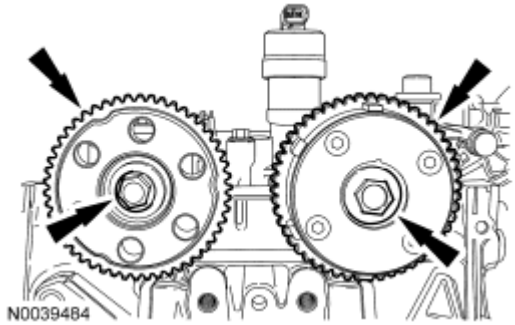

Fig. 85: Locating Camshaft Sprockets And Bolts
Courtesy of FORD MOTOR CO.

2. Install the timing chain guide and the 2 bolts.
   - To install, tighten to 10 Nm (89 lb-in).

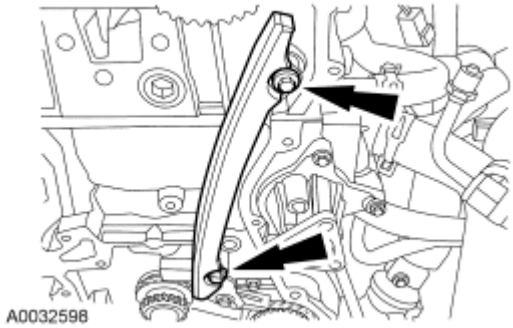

Fig. 86: Identifying Bolts And LH Timing Chain Guide
Courtesy of FORD MOTOR CO.

3. Install the timing chain.

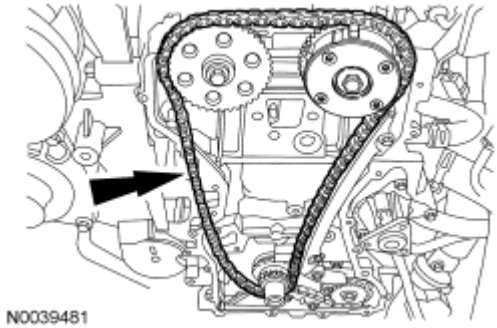

Fig. 87: Locating Timing Chain
Courtesy of FORD MOTOR CO.

4. Install the timing chain tensioner arm.

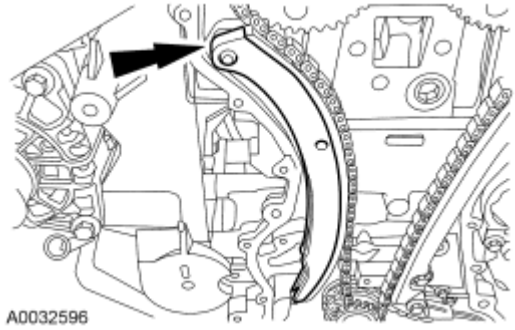

Fig. 88: Locating RH Timing Chain Guide
Courtesy of FORD MOTOR CO.

5. Install the timing chain tensioner and the 2 bolts. Remove the paper clip to release the piston.
   - Tighten to 10 Nm (89 lb-in).

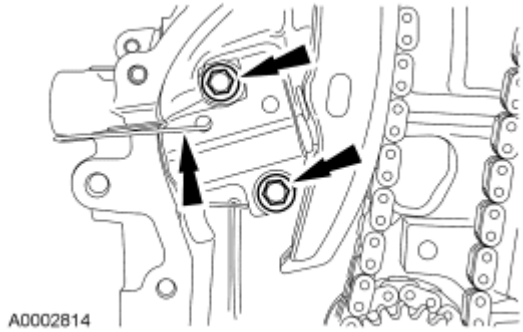

Fig. 89: Locating Timing Chain Tensioner Bolts And Paper Clip
Courtesy of FORD MOTOR CO.

CAUTION: The special tool 303-465 is for camshaft alignment only. Using this tool to prevent engine rotation can result in engine damage.

6. Using the flats on the camshafts to prevent camshaft rotation, tighten the bolts.
   - Tighten to 72 Nm (53 lb-ft).

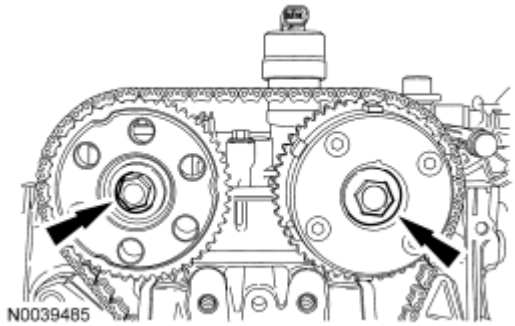

Fig. 90: Identifying Camshafts Sprocket Bolts
Courtesy of FORD MOTOR CO.

7. Install the engine front cover. For additional information, refer to **Engine Front Cover**.

VARIABLE CAMSHAFT TIMING (VCT) SYSTEM OIL FILTER

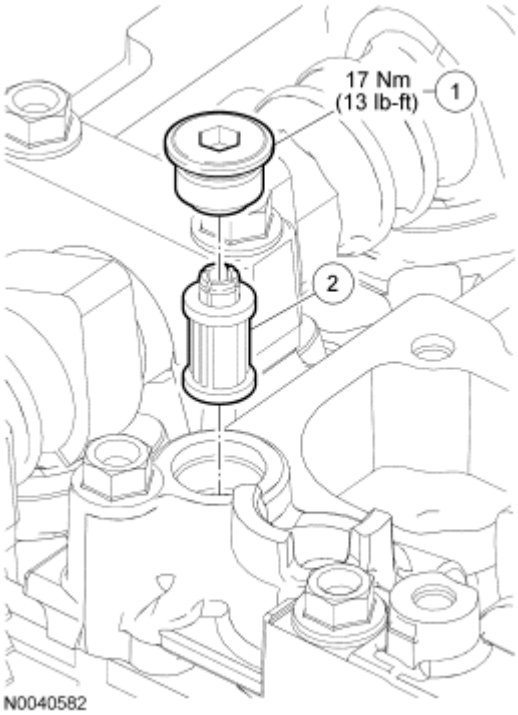

Fig. 91: Exploded View Of Variable Camshaft Timing (VCT) System Oil Filter With Torque Specification
Courtesy of FORD MOTOR CO.

Item	Part Number	Description
1	W710451	Plug
2	6C683	Variable camshaft timing (VCT) system oil filter

REMOVAL AND INSTALLATION

1. Remove the variable camshaft timing (VCT) solenoid. For additional information, refer to **ELECTRONIC ENGINE CONTROLS - 2.3L** .
2. Remove the plug and the VCT system oil filter from the intake camshaft thrust cap.
   - To install, tighten to 17 Nm (13 lb-ft).
3. To install, reverse the removal procedure.

CAMSHAFTS

Special Tools

Illustration	Tool Name	Tool Number
	Alignment Plate, Camshaft	303-465 (T94P-6256-CH)

 ST2645-A		
 ST2638-A	Timing Peg, Crankshaft	303-507

Material

Item	Specification
Silicone Gasket and Sealant TA-30	WSE-M4G323-A4
Motorcraft SAE 5W-20 Premium Synthetic Blend Motor Oil XO-5W20-QSP (US); Motorcraft SAE 5W-20 Super Premium Motor Oil CXO-5W20-LSP12 (Canada); or equivalent	WSS-M2C930-A

REMOVAL

CAUTION: During engine repair procedures, cleanliness is extremely important. Any foreign material, including any material created while cleaning gasket surfaces, that enters the oil passages, coolant passages or the oil pan can cause engine failure.

CAUTION: Do not rotate the camshafts or crankshaft unless instructed to do so in this procedure. Rotating the camshafts or crankshaft with timing components loosened or removed can cause serious damage to the valves or pistons.

All vehicles

1. With the vehicle in NEUTRAL, position it on a hoist. For additional information, refer to **JACKING AND LIFTING** .
2. Remove the accessory drive belt. For additional information, refer to **ACCESSORY DRIVE - 2.3L** .
3. If equipped, remove the 7 screws and the underbody cover.

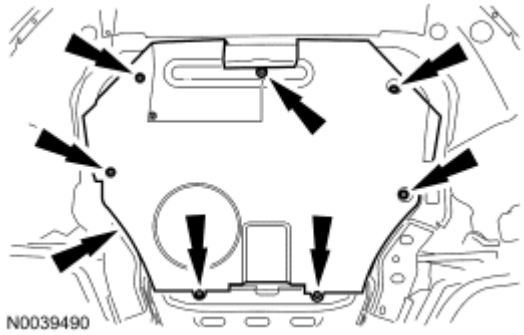

Fig. 92: Locating Underbody Cover Screws
Courtesy of FORD MOTOR CO.

4. Remove the variable camshaft timing (VCT) solenoid. For additional information, refer to **ELECTRONIC ENGINE CONTROLS - 2.3L** .
5. Check the valve clearance. For additional information, refer to **Valve Clearance Check**.

CAUTION: Failure to position the No. 1 piston at top dead center (TDC) can result in damage to the engine. Turn the engine in the normal direction of rotation only.

6. Using the crankshaft pulley bolt, turn the crankshaft clockwise to position the No. 1 piston at TDC.
   - The hole in the crankshaft pulley should be in the 6 o'clock position.

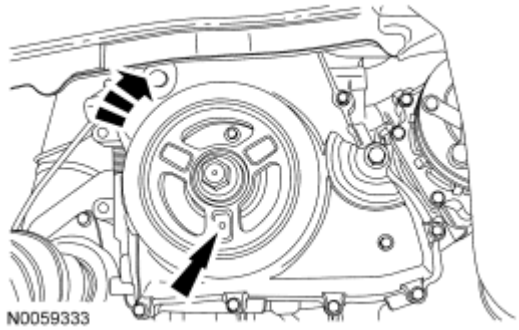

Fig. 93: Locating Hole On Crankshaft Pulley And Turning Crankshaft Clockwise
Courtesy of FORD MOTOR CO.

CAUTION: The special tool 303-465 is for camshaft alignment only. Using this tool to prevent engine rotation can result in engine damage.

NOTE: The camshaft timing slots are offset. If the special tool cannot be installed, rotate the crankshaft one complete revolution clockwise to correctly position the camshafts.

7. Install the special tool in the slots on the rear of both camshafts.

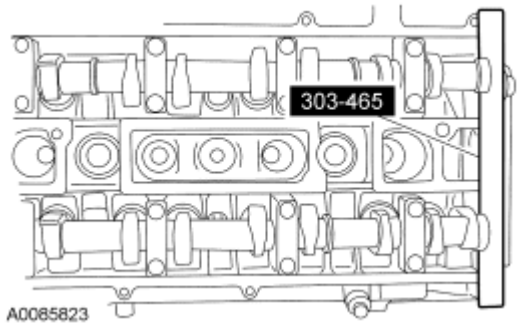

Fig. 94: Identifying Special Camshaft Tool (303-465)
Courtesy of FORD MOTOR CO.

Automatic transaxle vehicles

8. Remove the 2 halfshaft carrier bracket bolts and slide the RH halfshaft 12 mm (0.47 in) out of the transaxle.

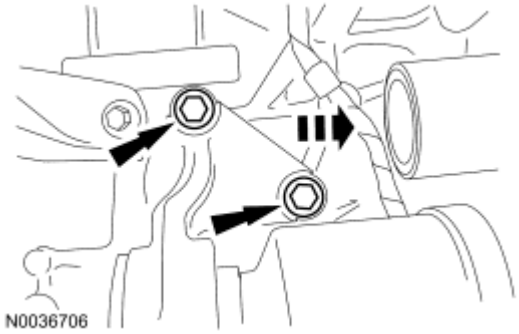

Fig. 95: Locating Half Shaft Carrier Bracket Bolts And Sliding Rh Halfshaft Out Of Transaxle
Courtesy of FORD MOTOR CO.

All vehicles

9. Remove the engine plug bolt.

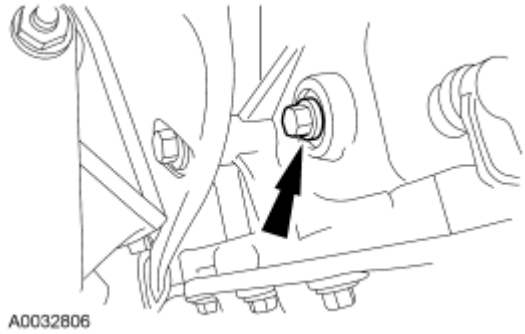

Fig. 96: Locating Engine Plug Bolt
Courtesy of FORD MOTOR CO.

NOTE: **The special tool will contact the crankshaft and prevent it from turning past TDC. However, the crankshaft can still be rotated in the counterclockwise direction. The crankshaft must remain at the TDC position during the camshaft removal and installation.**

10. Install the special tool.

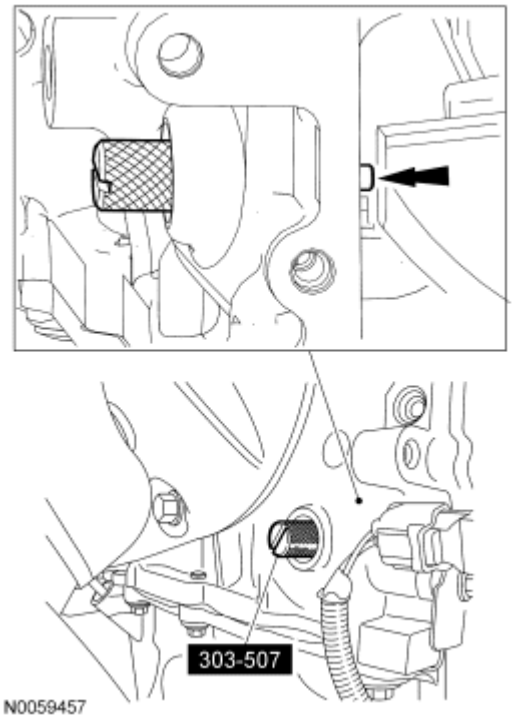

Fig. 97: Identifying Special Tool (303-507)
Courtesy of FORD MOTOR CO.

CAUTION: Only hand-tighten the bolt or damage to the front cover can occur.

11. Install a standard 6 mm (0.23 in) x 18 mm (0.7 in) bolt through the crankshaft pulley and thread it into the front cover.

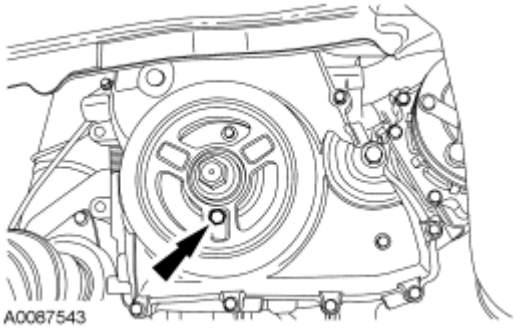

Fig. 98: Aligning Crankshaft Pulley Bolt Holes
Courtesy of FORD MOTOR CO.

12. Remove the lower timing hole plug from the engine front cover.

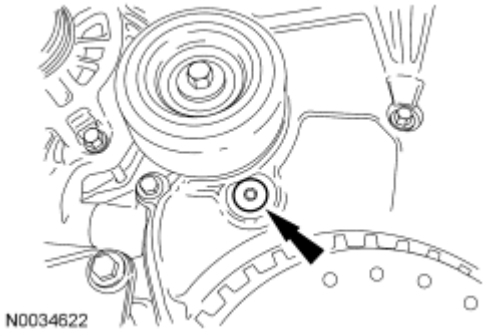

Fig. 99: Locating Lower Front Cover Timing Hole Plug
Courtesy of FORD MOTOR CO.

13. Remove the upper timing hole plug from the engine front cover.

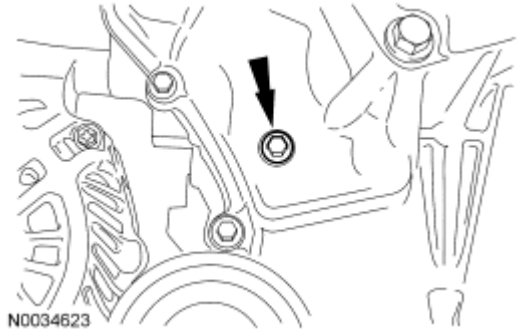

Fig. 100: Locating Upper Front Cover Timing Hole Plug
Courtesy of FORD MOTOR CO.

14. Reposition the special tool to the slot on the rear of the intake camshaft only.

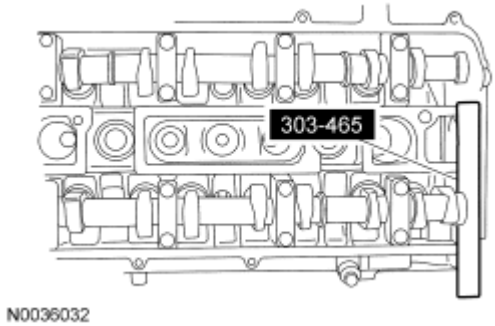

Fig. 101: Identifying Special Tool (303-465) In Slots On Rear Of Camshafts
Courtesy of FORD MOTOR CO.

NOTE: **Releasing the ratcheting mechanism in the timing chain tensioner allows the plunger to collapse and create slack in the timing chain. Installing the M6 x 30 mm (1.18 in) bolt into the upper front cover timing hole will lock the tensioner arm in a retracted position and allow enough slack in the timing chain for removal of the exhaust camshaft gear.**

15. Using a small pick tool, release the timing chain tensioner ratchet through the lower front cover timing hole.
    - Have an assistant rotate (using the flats of the camshaft) the exhaust camshaft clockwise to collapse the timing chain tensioner plunger.
    - Insert the M6 x 30 mm (1.18 in) bolt into the upper front cover timing hole to hold the tensioner arm in the retracted position.

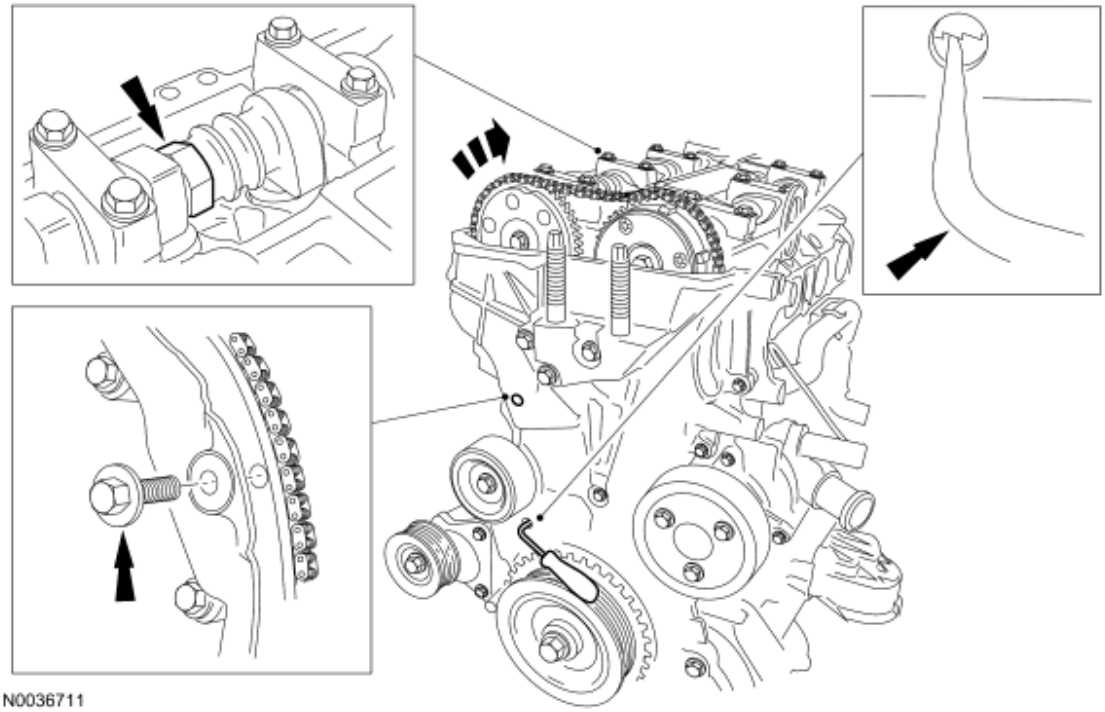

Fig. 102: Using Small Pick Tool To Release Timing Chain Tensioner Ratchet Through Lower Front Cover Timing Hole
Courtesy of FORD MOTOR CO.

16. Using the flats on the camshaft to prevent camshaft rotation, remove the bolt and the exhaust camshaft drive gear.

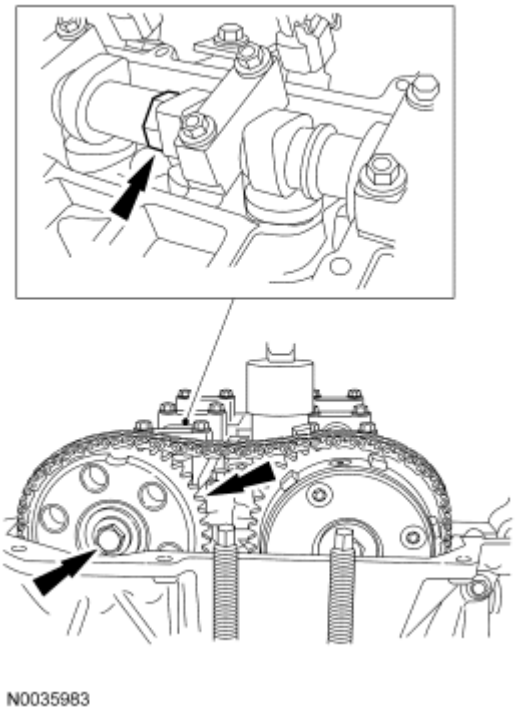

Fig. 103: Identifying Exhaust Camshaft Drive Gear Bolt
Courtesy of FORD MOTOR CO.

17. Remove the special tool.

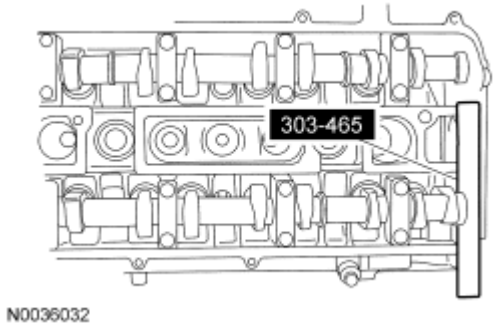

Fig. 104: Identifying Special Tool (303-465) In Slots On Rear Of Camshafts
Courtesy of FORD MOTOR CO.

18. Remove the timing chain from the intake camshaft drive gear.

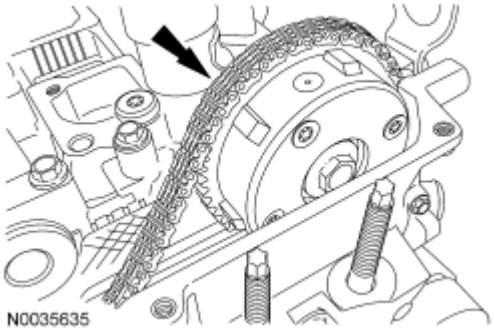

Fig. 105: Locating Timing Chain On Intake Camshaft Drive Gear
Courtesy of FORD MOTOR CO.

19. Mark the position of the camshaft lobes on the No. 1 cylinder for installation reference.

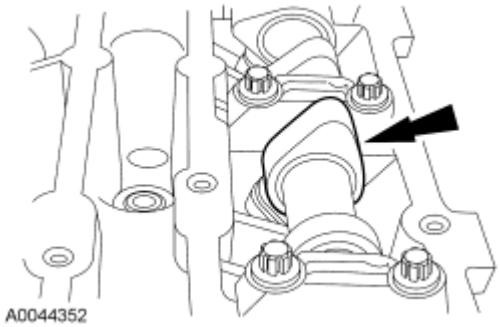

Fig. 106: Locating Camshaft Lobe
Courtesy of FORD MOTOR CO.

CAUTION: Failure to follow the camshaft loosening procedure can result in damage to the camshafts.

20. Remove the camshafts from the engine.
    - Loosen the camshaft bearing cap bolts, in the sequence shown, one turn at a time until all tension is released from the camshaft bearing caps.
    - Remove the bolts and the camshaft bearing caps.
    - Remove the camshafts.

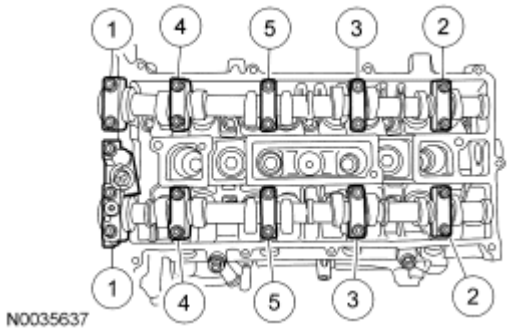

Fig. 107: Identifying Loosening Sequence Of Camshaft Bearing Cap Bolts
Courtesy of FORD MOTOR CO.

21. If removal of the camshaft phaser and sprocket is necessary, mark the sprocket and camshaft for reference during installation.
    - If necessary, place the camshaft in a soft-jawed vise. Remove the bolt and the camshaft phaser and sprocket.

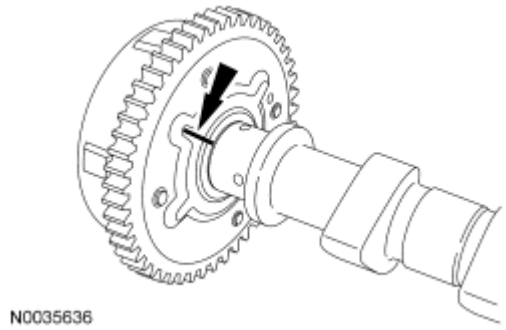

Fig. 108: Locating Marks On Camshaft Phaser
Courtesy of FORD MOTOR CO.

INSTALLATION

All vehicles

NOTE: If new parts are installed, transfer the reference marks made during disassembly to the new parts.

1. If necessary, position the camshaft in a soft-jawed vise and install the camshaft phaser and sprocket and the bolt.
    - Align the reference marks on the camshaft phaser and sprocket and the camshaft. Tighten the bolt to 72 Nm (53 lb-ft).

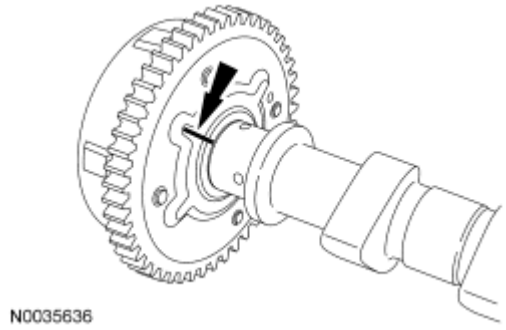

Fig. 109: Locating Marks On Camshaft Phaser
Courtesy of FORD MOTOR CO.

CAUTION: Install the camshafts with the alignment slots in the camshafts lined up so the Camshaft Alignment Plate can be installed without rotating the camshafts. Make sure the lobes on the No. 1 cylinder are in the same position as noted in the removal procedure. Rotating the camshafts when the timing chain is removed, or installing the camshafts 180 degrees out of position can cause severe damage to the valves and pistons.

NOTE: Lubricate the camshaft journals and bearing caps with clean engine oil.

2. Install the camshafts and bearing caps. Tighten the camshaft bearing caps in the sequence shown in 3 stages:
   - Stage 1: Tighten the camshaft bearing cap bolts until finger tight.
   - Stage 2: Tighten to 7 Nm (62 lb-in).
   - Stage 3: Tighten to 16 Nm (12 lb-ft).

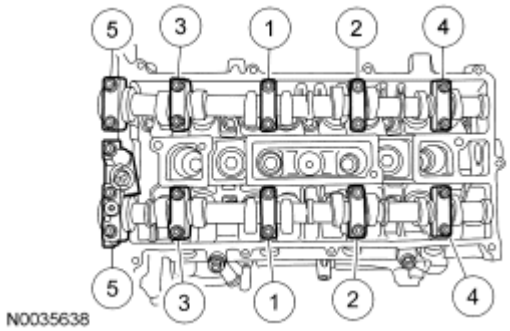

Fig. 110: Identifying Tightening Sequence Of Camshaft Bearing Cap Bolts
Courtesy of FORD MOTOR CO.

3. Install the special tool.

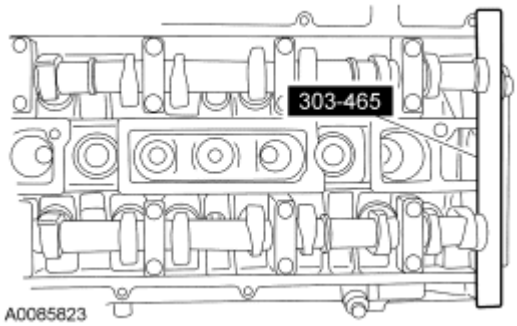

Fig. 111: Identifying Special Camshaft Tool (303-465)
Courtesy of FORD MOTOR CO.

4. Install the timing chain on the intake camshaft drive gear.

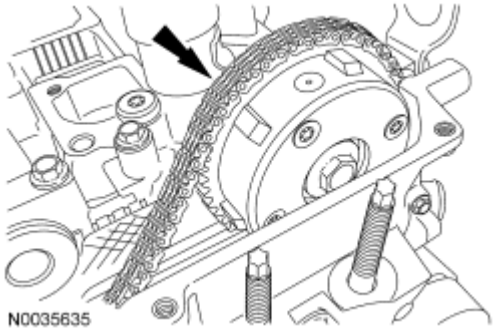

Fig. 112: Locating Timing Chain On Intake Camshaft Drive Gear
Courtesy of FORD MOTOR CO.

NOTE: The timing chain must be correctly engaged on the teeth of the crankshaft timing sprocket and the intake camshaft drive gear in order to install the exhaust camshaft drive gear onto the exhaust camshaft.

5. Position the exhaust camshaft drive gear in the timing chain and install the gear and bolt on the exhaust camshaft.
   - Hand-tighten the bolt.

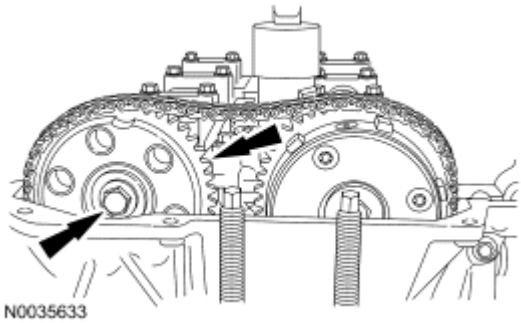

Fig. 113: Locating Exhaust Camshaft Drive Gear Bolt

Courtesy of FORD MOTOR CO.

NOTE: Releasing the tensioner arm will remove the slack from the timing chain.

6. Remove the M6 x 30 mm (1.18 in) bolt from the upper front cover timing hole to release the tensioner arm.

CAUTION: The special tool 303-465 is for camshaft alignment only. Using this tool to prevent engine rotation can result in engine damage.

7. Using the flats on the camshaft to prevent camshaft rotation, tighten the exhaust camshaft drive gear bolt to 72 Nm (53 lb-ft).

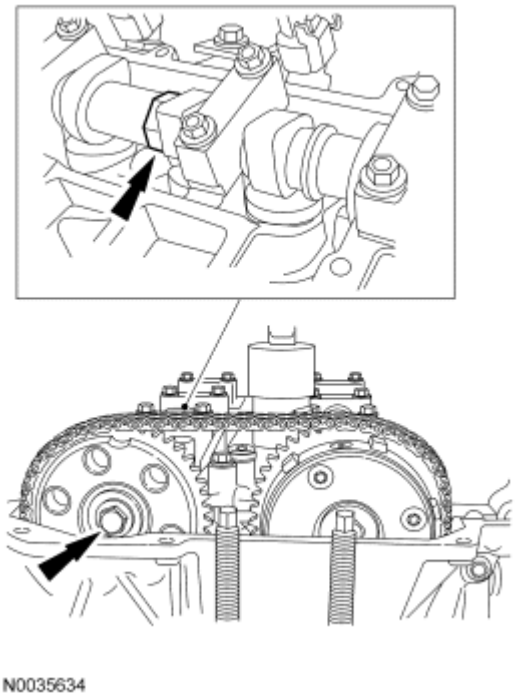

Fig. 114: Locating Camshaft Drive Gear Bolt
Courtesy of FORD MOTOR CO.

8. Remove the special tool.

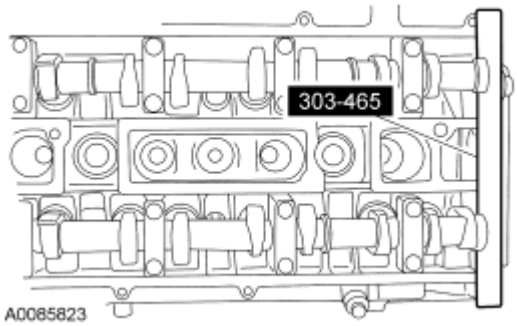

Fig. 115: Identifying Special Camshaft Tool (303-465)
Courtesy of FORD MOTOR CO.

9. Remove the 6 mm (0.23 in) x 18 mm (0.7 in) bolt.

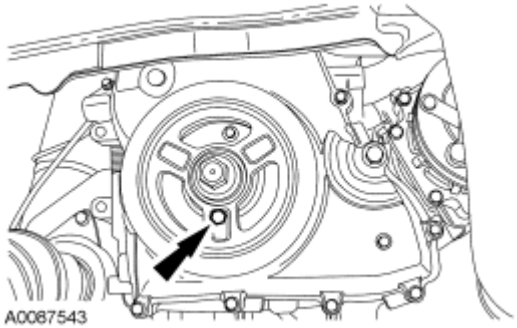

Fig. 116: Aligning Crankshaft Pulley Bolt Holes
Courtesy of FORD MOTOR CO.

10. Remove the special tool.

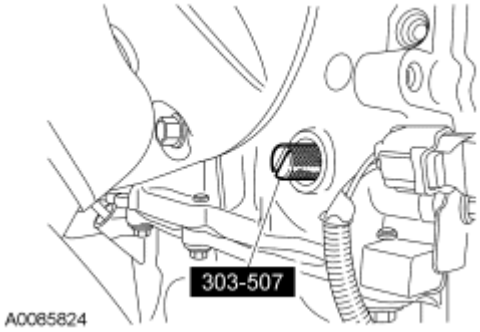

Fig. 117: Identifying Special Tool
Courtesy of FORD MOTOR CO.

11. Install the upper timing hole plug in the engine front cover.
    - Tighten to 10 Nm (89 lb-in).

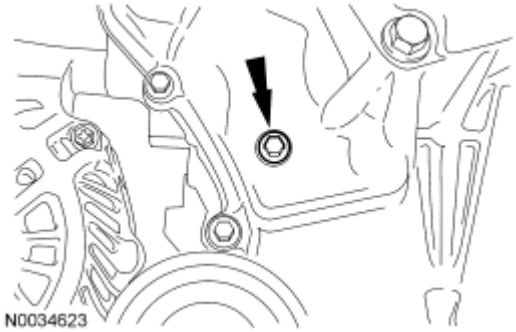

Fig. 118: Locating Upper Front Cover Timing Hole Plug
Courtesy of FORD MOTOR CO.

12. Apply silicone gasket and sealant to the threads of the lower timing hole plug.
    - Install the lower timing hole plug in the engine front cover.
        - Tighten to 12 Nm (9 lb-ft).

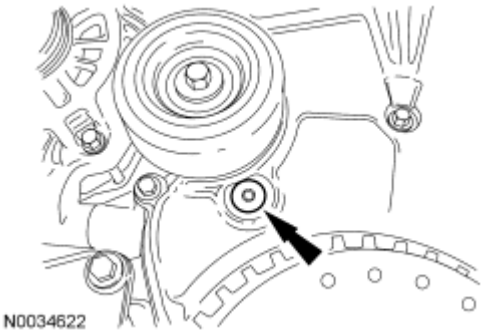

Fig. 119: Locating Lower Front Cover Timing Hole Plug
Courtesy of FORD MOTOR CO.

13. Install the engine plug bolt.
    - Tighten to 20 Nm (15 lb-ft).

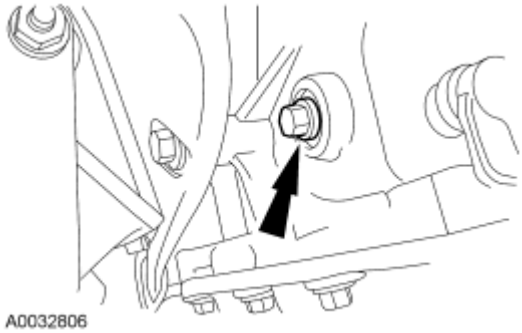

Fig. 120: Locating Engine Plug Bolt
Courtesy of FORD MOTOR CO.

Automatic transaxle vehicles

14. Install the RH halfshaft and the 2 halfshaft carrier bearing bracket bolts.
    - Tighten to 40 Nm (30 lb-ft).

All vehicles

15. If equipped, install the underbody cover and the 7 screws.

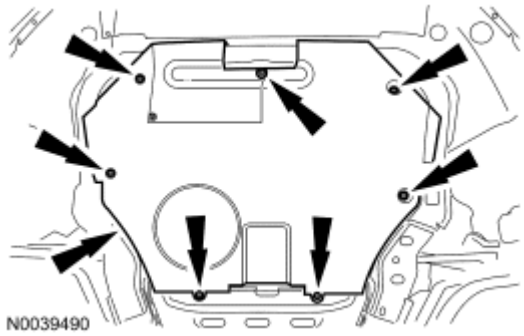

Fig. 121: Locating Underbody Cover Screws
Courtesy of FORD MOTOR CO.

16. Install the accessory drive belt. For additional information, refer to **ACCESSORY DRIVE - 2.3L** .
17. Install the variable camshaft timing (VCT) solenoid. For additional information, refer to **ELECTRONIC ENGINE CONTROLS - 2.3L** .

CAMSHAFT PHASER AND SPROCKET

Special Tools

Illustration	Tool Name	Tool Number
 ST2645-A	Alignment Plate, Camshaft	303-465 (T94P-6256-CH)
 ST2638-A	Timing Peg, Crankshaft	303-507

Material

Item	Specification
Silicone Gasket and Sealant TA-30	WSE-M4G323-A4
Motorcraft SAE 5W-20 Premium Synthetic Blend	

Motor Oil XO-5W20-QSP (US); Motorcraft SAE 5W-20 Super Premium Motor Oil CXO-5W20-LSP12 (Canada); or equivalent	WSS-M2C930-A

REMOVAL

CAUTION: During engine repair procedures, cleanliness is extremely important. Any foreign material, including any material created while cleaning gasket surfaces, that enters the oil passages, coolant passages or the oil pan can cause engine failure.

CAUTION: Do not rotate the camshafts or crankshaft unless instructed to do so in this procedure. Rotating the camshafts or crankshaft with timing components loosened or removed can cause serious damage to the valves or pistons.

All vehicles

1. With the vehicle in NEUTRAL, position it on a hoist. For additional information, refer to **JACKING AND LIFTING** .
2. Remove the accessory drive belt. For additional information, refer to **ACCESSORY DRIVE - 2.3L** .
3. If equipped, remove the 7 screws and the underbody cover.

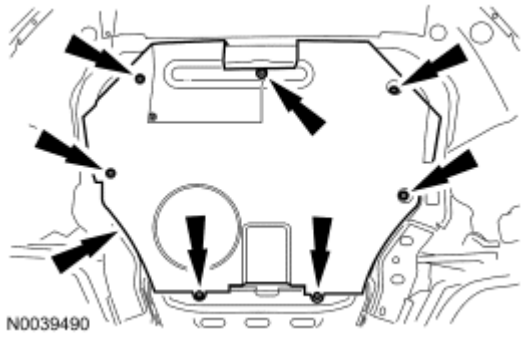

Fig. 122: Locating Underbody Cover Screws
Courtesy of FORD MOTOR CO.

4. Remove the variable camshaft timing (VCT) solenoid. For additional information, refer to **ELECTRONIC ENGINE CONTROLS - 2.3L** .
5. Check the valve clearance. For additional information, refer to **Valve Clearance Check**.

CAUTION: Failure to position the No. 1 piston at top dead center (TDC) can result in damage to the engine. Turn the engine in the normal direction of rotation only.

6. Using the crankshaft pulley bolt, turn the crankshaft clockwise to position the No. 1 piston at TDC.

- The hole in the crankshaft pulley should be in the 6 o'clock position.

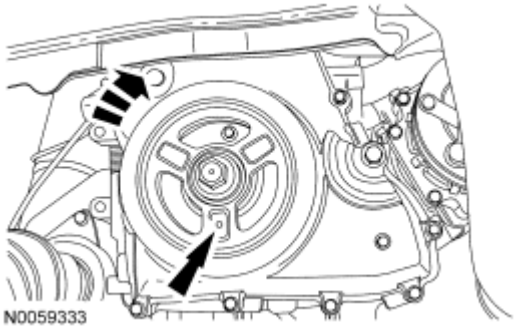

Fig. 123: Locating Hole On Crankshaft Pulley And Turning Crankshaft Clockwise
Courtesy of FORD MOTOR CO.

CAUTION: The special tool 303-465 is for camshaft alignment only. Using this tool to prevent engine rotation can result in engine damage.

NOTE: The camshaft timing slots are offset. If the special tool cannot be installed, rotate the crankshaft one complete revolution clockwise to correctly position the camshafts.

7. Install the special tool in the slots on the rear of both camshafts.

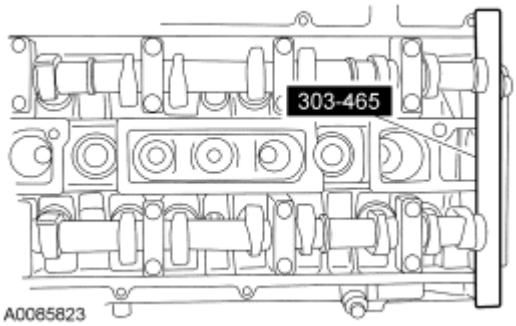

Fig. 124: Identifying Special Camshaft Tool (303-465)
Courtesy of FORD MOTOR CO.

Automatic transaxle vehicles

8. Remove the 2 halfshaft carrier bracket bolts and slide the RH halfshaft 12 mm (0.47 in) out of the transaxle.

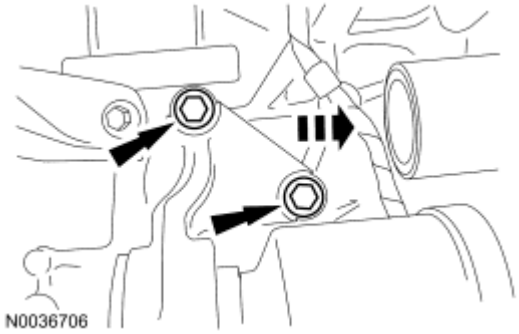

Fig. 125: Locating Half Shaft Carrier Bracket Bolts And Sliding Rh Halfshaft Out Of Transaxle
Courtesy of FORD MOTOR CO.

All vehicles

9. Remove the engine plug bolt.

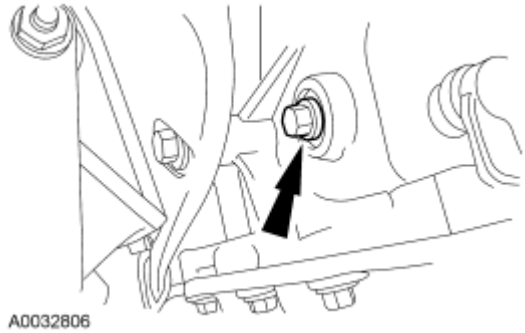

Fig. 126: Locating Engine Plug Bolt
Courtesy of FORD MOTOR CO.

NOTE: **The special tool will contact the crankshaft and prevent it from turning past TDC. However, the crankshaft can still be rotated in the counterclockwise direction. The crankshaft must remain at the TDC position during the camshaft removal and installation.**

10. Install the special tool.

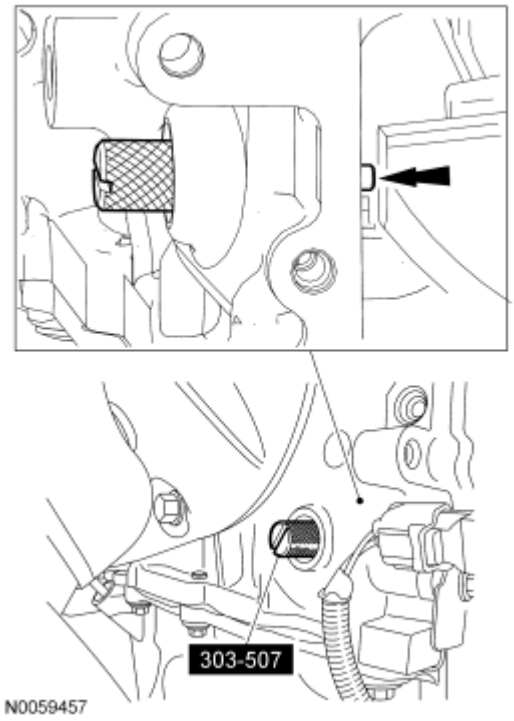

Fig. 127: Identifying Special Tool (303-507)
Courtesy of FORD MOTOR CO.

CAUTION: Only hand-tighten the bolt or damage to the front cover can occur.

11. Install a standard 6 mm (0.23 in) x 18 mm (0.7 in) bolt through the crankshaft pulley and thread it into the front cover.

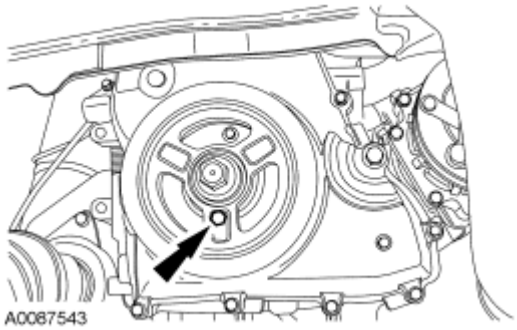

Fig. 128: Aligning Crankshaft Pulley Bolt Holes
Courtesy of FORD MOTOR CO.

12. Remove the lower timing hole plug from the engine front cover.

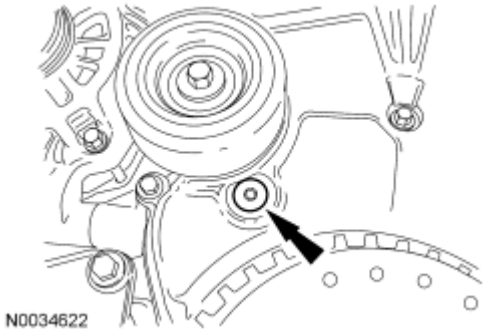

Fig. 129: Locating Lower Front Cover Timing Hole Plug
Courtesy of FORD MOTOR CO.

13. Remove the upper timing hole plug from the engine front cover.

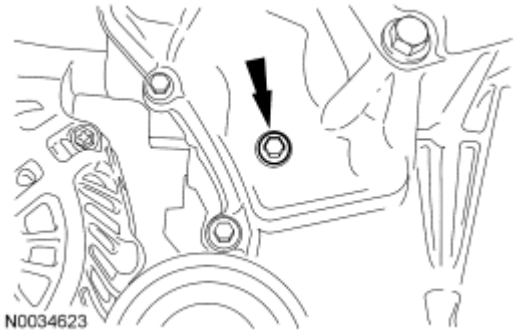

Fig. 130: Locating Upper Front Cover Timing Hole Plug
Courtesy of FORD MOTOR CO.

14. Reposition the special tool to the slot on the rear of the intake camshaft only.

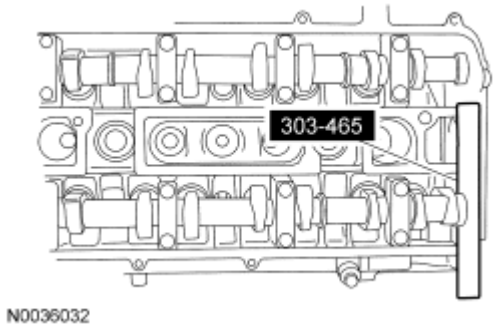

Fig. 131: Identifying Special Tool (303-465) In Slots On Rear Of Camshafts
Courtesy of FORD MOTOR CO.

NOTE: **Releasing the ratcheting mechanism in the timing chain tensioner allows the plunger to collapse and create slack in the timing chain. Installing the M6 x 30 mm (1.18 in) bolt into the upper front cover timing hole will lock the tensioner arm in a retracted position and allow enough slack in the**

timing chain for removal of the exhaust camshaft gear.

15. Using a small pick tool, release the timing chain tensioner ratchet through the lower front cover timing hole.
    - Have an assistant rotate (using the flats of the camshaft) the exhaust camshaft clockwise to collapse the timing chain tensioner plunger.
    - Insert the M6 x 30 mm (1.18 in) bolt into the upper front cover timing hole to hold the tensioner arm in the retracted position.

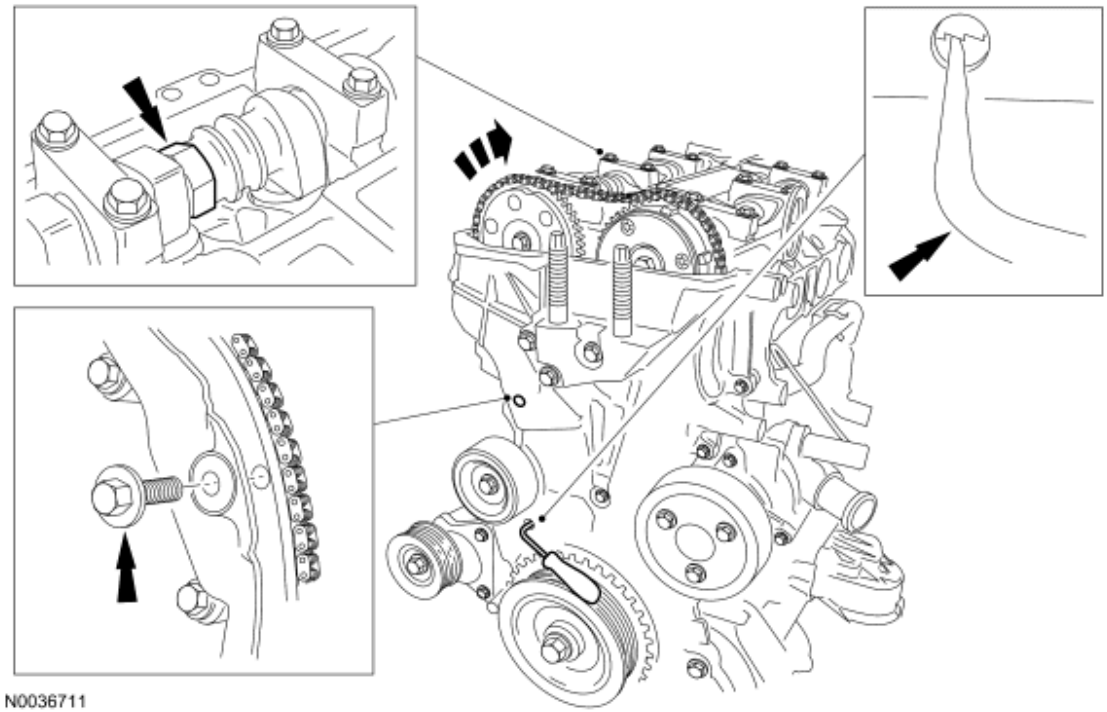

Fig. 132: Using Small Pick Tool To Release Timing Chain Tensioner Ratchet Through Lower Front Cover Timing Hole
Courtesy of FORD MOTOR CO.

16. Using the flats on the camshaft to prevent camshaft rotation, remove the bolt and the exhaust camshaft drive gear.

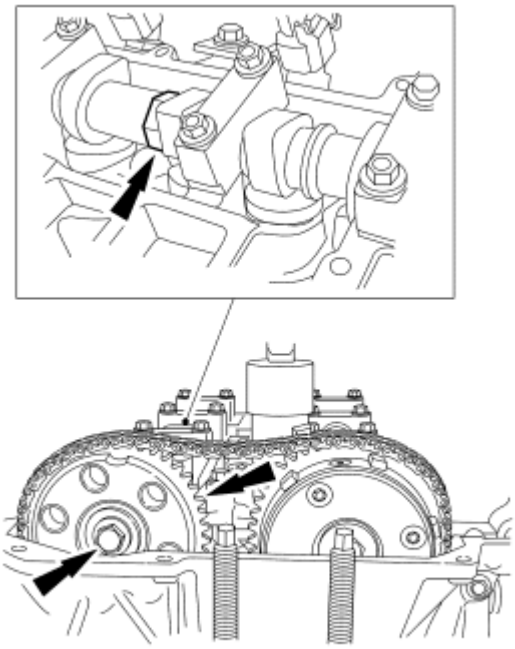

N0035983

Fig. 133: Identifying Exhaust Camshaft Drive Gear Bolt
Courtesy of FORD MOTOR CO.

17. Remove the special tool.

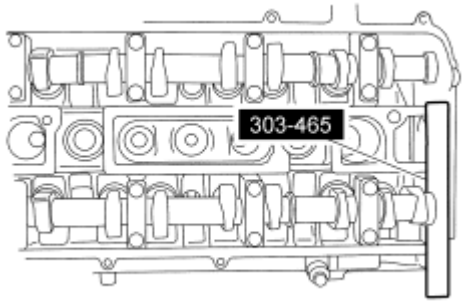

N0036032

Fig. 134: Identifying Special Tool (303-465) In Slots On Rear Of Camshafts
Courtesy of FORD MOTOR CO.

18. Remove the timing chain from the intake camshaft drive gear.

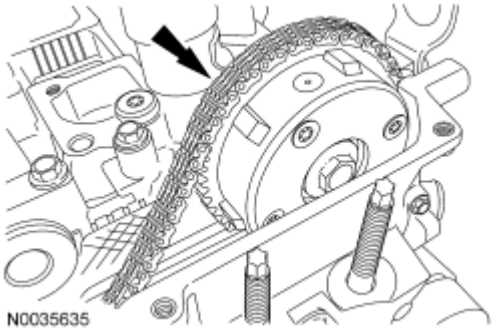

Fig. 135: Locating Timing Chain On Intake Camshaft Drive Gear
Courtesy of FORD MOTOR CO.

19. Mark the position of the camshaft lobes on the No. 1 cylinder for installation reference.

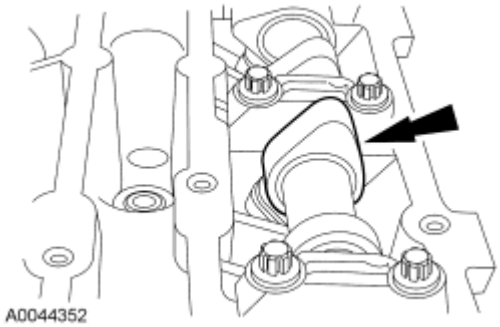

Fig. 136: Locating Camshaft Lobe
Courtesy of FORD MOTOR CO.

CAUTION: Failure to follow the camshaft loosening procedure can result in damage to the intake camshaft.

20. Remove the intake camshaft from the engine.
    - Loosen the intake camshaft bearing cap bolts, in the sequence shown, one turn at a time until all tension is released from the camshaft bearing caps.
    - Remove the bolts and the camshaft bearing caps.
    - Remove the intake camshaft.

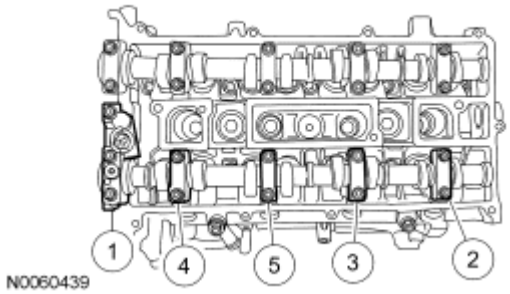

Fig. 137: Identifying Loosening Sequence Of Intake Camshaft Bearing Cap Bolts
Courtesy of FORD MOTOR CO.

21. Mark the camshaft phaser and sprocket and the camshaft for reference during installation.

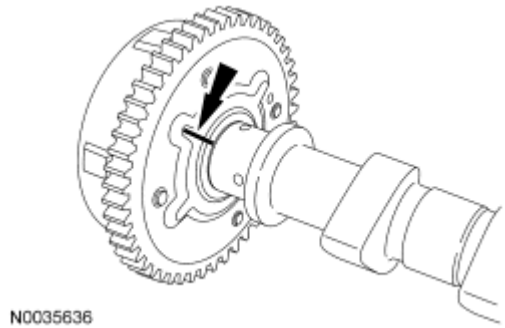

Fig. 138: Locating Marks On Camshaft Phaser
Courtesy of FORD MOTOR CO.

22. Place the camshaft in a soft-jawed vise. Remove the bolt and the camshaft phaser and sprocket.

INSTALLATION

All vehicles

NOTE: If new parts are installed, transfer the reference marks made during disassembly to the new parts.

1. Position the camshaft in a soft-jawed vise. Install the camshaft phaser and sprocket and the bolt.
   - Align the reference marks on the camshaft phaser and sprocket and the camshaft. Tighten the bolt to 72 Nm (53 lb-ft).

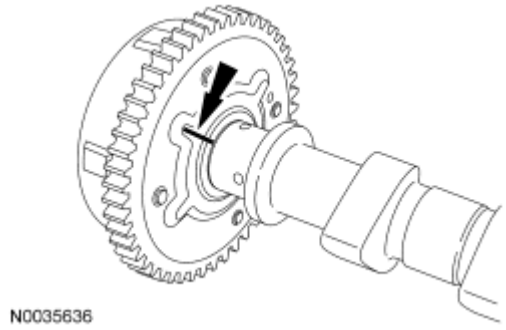

Fig. 139: Locating Marks On Camshaft Phaser
Courtesy of FORD MOTOR CO.

CAUTION: Install the intake camshaft with the alignment slots in the camshafts lined up so the Camshaft Alignment Plate can be installed without rotating the camshafts. Make sure the lobes on the No. 1 cylinder are in the same position as noted in the removal procedure. Rotating the camshafts when the timing chain is removed, or installing the camshafts 180 degrees out of position can cause severe damage to the valves and pistons.

NOTE: Lubricate the intake camshaft journals and bearing caps with clean engine oil.

2. Install the intake camshafts and bearing caps. Tighten the intake camshaft bearing caps in the sequence shown in 3 stages:
   - Stage 1: Tighten the intake camshaft bearing cap bolts until finger tight.
   - Stage 2: Tighten to 7 Nm (62 lb-in).
   - Stage 3: Tighten to 16 Nm (12 lb-ft).

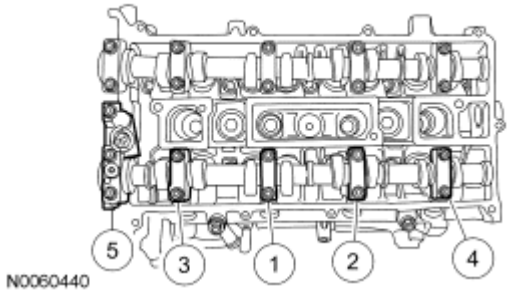

Fig. 140: Identifying Tightening Sequence Of Intake Camshaft Bearing Caps Bolts
Courtesy of FORD MOTOR CO.

3. Install the special tool.

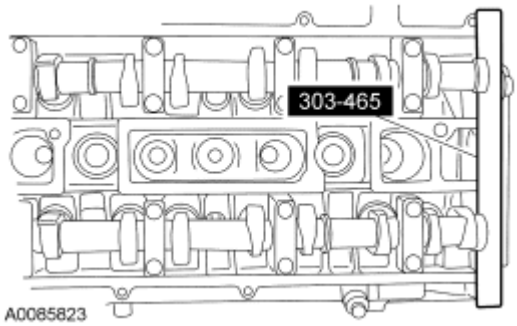

Fig. 141: Identifying Special Camshaft Tool (303-465)
Courtesy of FORD MOTOR CO.

4. Install the timing chain on the intake camshaft drive gear.

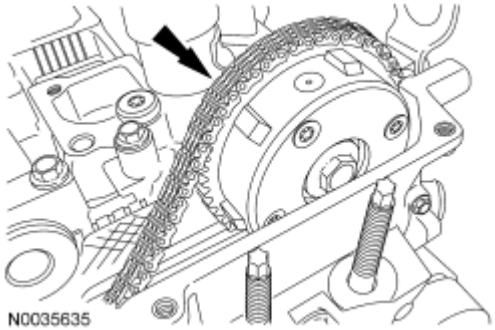

Fig. 142: Locating Timing Chain On Intake Camshaft Drive Gear
Courtesy of FORD MOTOR CO.

NOTE: The timing chain must be correctly engaged on the teeth of the crankshaft timing sprocket and the intake camshaft drive gear in order to install the exhaust camshaft drive gear onto the exhaust camshaft.

5. Position the exhaust camshaft drive gear in the timing chain and install the gear and bolt on the exhaust camshaft.
   - Hand-tighten the bolt.

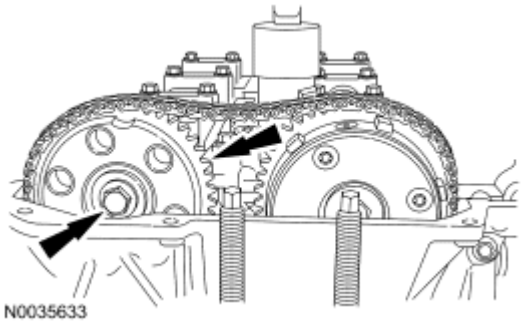

Fig. 143: Locating Exhaust Camshaft Drive Gear Bolt

Courtesy of FORD MOTOR CO.

NOTE: Releasing the tensioner arm will remove the slack from the timing chain.

6. Remove the M6 x 30 mm (1.18 in) bolt from the upper front cover timing hole to release the tensioner arm.

CAUTION: The special tool 303-465 is for camshaft alignment only. Using this tool to prevent engine rotation can result in engine damage.

7. Using the flats on the camshaft to prevent camshaft rotation, tighten the exhaust camshaft drive gear bolt to 72 Nm (53 lb-ft).

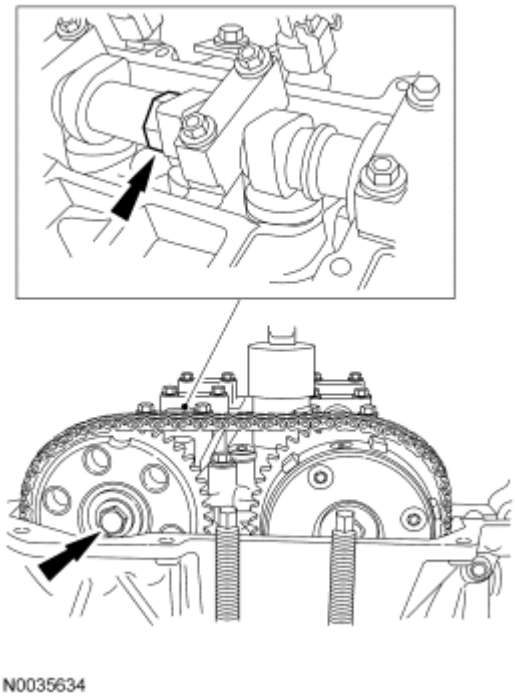

Fig. 144: Locating Camshaft Drive Gear Bolt
Courtesy of FORD MOTOR CO.

8. Remove the special tool.

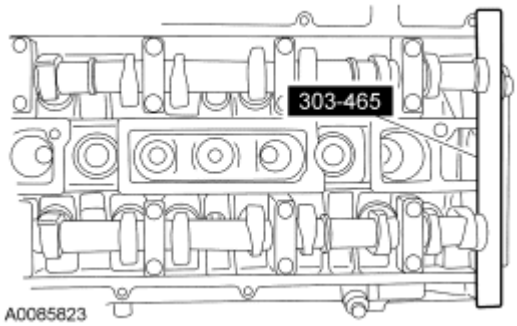

Fig. 145: Identifying Special Camshaft Tool (303-465)
Courtesy of FORD MOTOR CO.

9. Remove the 6 mm (0.23 in) x 18 mm (0.7 in) bolt.

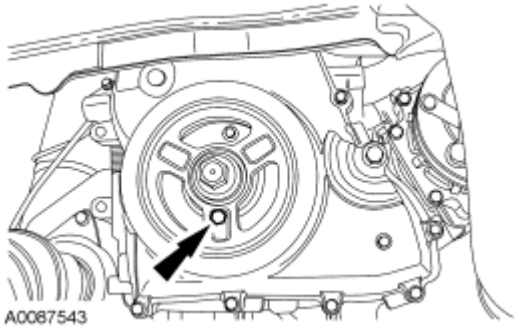

Fig. 146: Aligning Crankshaft Pulley Bolt Holes
Courtesy of FORD MOTOR CO.

10. Remove the special tool.

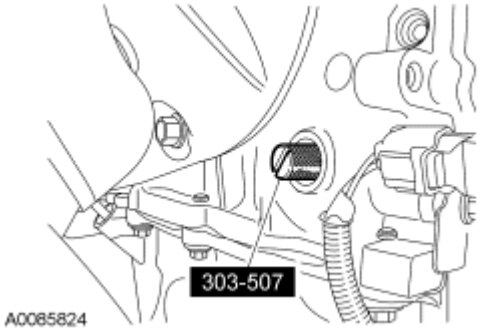

Fig. 147: Identifying Special Tool
Courtesy of FORD MOTOR CO.

11. Install the upper timing hole plug in the engine front cover.
    - Tighten to 10 Nm (89 lb-in).

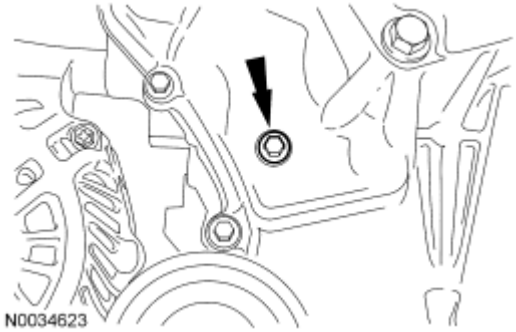

Fig. 148: Locating Upper Front Cover Timing Hole Plug
Courtesy of FORD MOTOR CO.

12. Apply silicone gasket and sealant to the threads of the lower timing hole plug.
    - Install the lower timing hole plug in the engine front cover.
        - Tighten to 12 Nm (9 lb-ft).

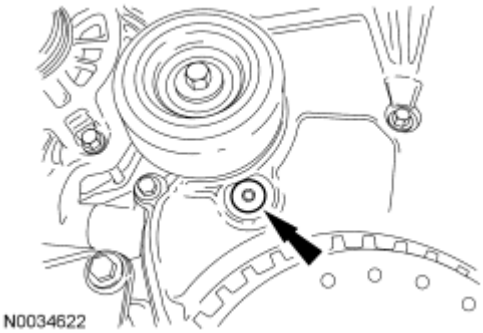

Fig. 149: Locating Lower Front Cover Timing Hole Plug
Courtesy of FORD MOTOR CO.

13. Install the engine plug bolt.
    - Tighten to 20 Nm (15 lb-ft).

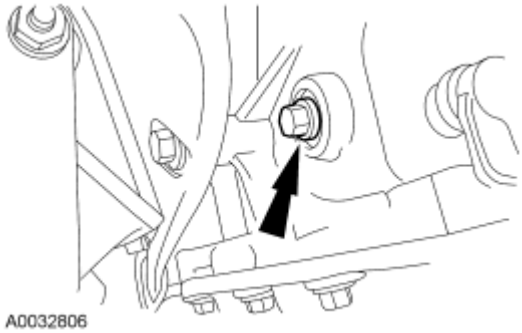

Fig. 150: Locating Engine Plug Bolt
Courtesy of FORD MOTOR CO.

Automatic transaxle vehicles

14. Install the RH halfshaft and the 2 halfshaft carrier bearing bracket bolts.
    - Tighten to 40 Nm (30 lb-ft).

All vehicles

15. If equipped, install the underbody cover and the 7 screws.

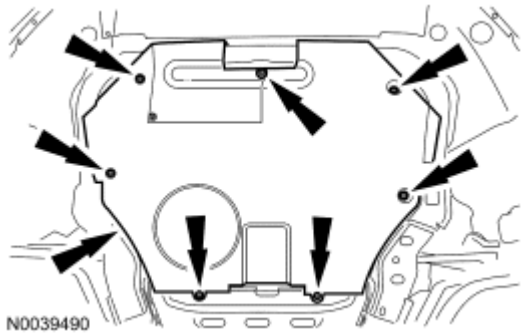

Fig. 151: Locating Underbody Cover Screws
Courtesy of FORD MOTOR CO.

16. Install the accessory drive belt. For additional information, refer to **ACCESSORY DRIVE - 2.3L** .
17. Install the variable camshaft timing (VCT) solenoid. For additional information, refer to **ELECTRONIC ENGINE CONTROLS - 2.3L** .

VALVE TRAIN COMPONENTS - EXPLODED VIEW

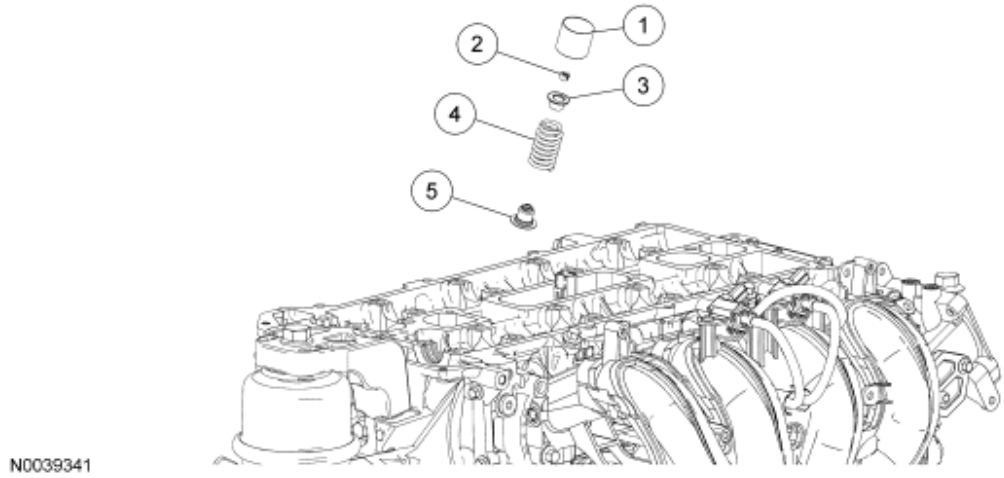

Fig. 152: Exploded View Of Valve Train Components
Courtesy of FORD MOTOR CO.

Item	Part Number	Description
1	6500	Valve tappet (16 required)
2	6518	Valve collet (16 required)

3	6514	Valve spring retainer (16 required)
4	6513	Valve spring (16 required)
5	6517	Valve seal (16 required)

1. For additional information, refer to the appropriate procedures.

VALVE SPRINGS

Special Tools

Illustration	Tool Name	Tool Number
 ST1907-A	Compressor, Valve Spring	303-350 (T89P-6565-A)
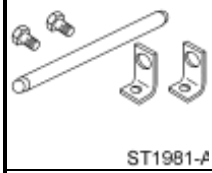 ST1981-A	Compressor, Valve Spring	303-300 (T87C-6565-A)
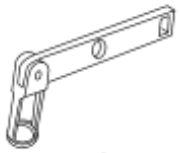 ST1902-A	Compressor, Valve Spring	303-472 (T94P-6565-AH)

Material

Item	Specification
Motorcraft SAE 5W-20 Premium Synthetic Blend Motor Oil XO-5W20-QSP (US); Motorcraft SAE 5W-20 Super Premium Motor Oil CXO-5W20-LSP12 (Canada); or equivalent	WSS-M2C930-A
Multi-Purpose Grease XG-4 and/or XL-5	ESB-M1C93-B

REMOVAL

CAUTION: During engine repair procedures, cleanliness is extremely important. Any foreign material, including any material created while cleaning gasket surfaces, that enters the oil passages, coolant passages or the oil pan can cause engine failure.

1. With the vehicle in NEUTRAL, position it on a hoist. For additional information, refer to **JACKING**

AND LIFTING .

2. Remove the camshafts. For additional information, refer to **Camshafts**.

CAUTION: If the camshafts and valve tappets are to be reused, mark the location of the valve tappets to make sure they are assembled in their original positions.

NOTE: The number on the valve tappets only reflects the digits that follow the decimal. For example, a tappet with the number 0.650 has the thickness of 3.650 mm.

3. Remove and inspect the valve tappets. For additional information, refer to **ENGINE SYSTEM - GENERAL INFORMATION** .
4. Remove the spark plugs. For additional information, refer to **ENGINE IGNITION - 2.3L** .

WARNING: Always wear protective goggles when working with compressed air. This can prevent injury. Failure to follow these instructions can result in personal injury.

CAUTION: Use compressed air at 7 to 10 bars (100-150 psi). Do not disconnect the compressed air from the cylinder until the valve spring, valve spring retainer and valve collet is installed.

5. Connect compressed air supply to the No. 1 cylinder.

NOTE: Place all parts in order to one side.

6. Apply compressed air to the cylinder and remove the valve spring.
   - Using the special tools, compress the valve spring and remove the valve collet, using some grease and a small screwdriver.
   - Remove the valve spring retainer and the valve spring.

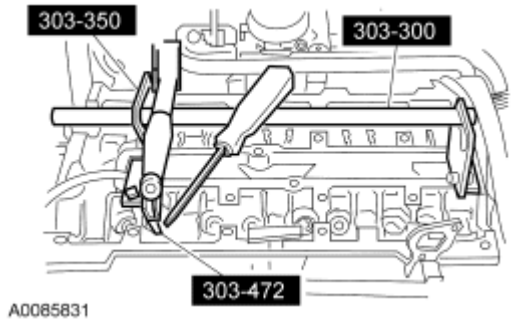

Fig. 153: Identifying Special Tools (303-300, 303-350, 303-472)
Courtesy of FORD MOTOR CO.

INSTALLATION

NOTE: Check the seating of the valve collet.

1. Using the special tools, install the valve spring.
   - Insert the valve spring and the valve spring retainer.
   - Compress the valve spring and install the valve collet using some grease and a small screwdriver.

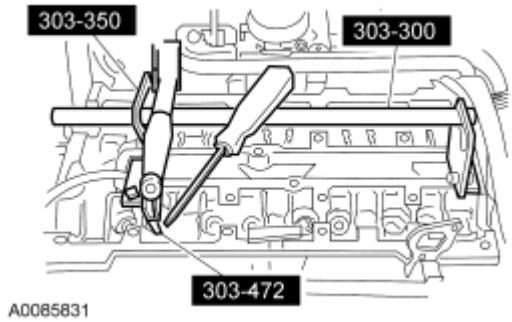

Fig. 154: Identifying Special Tools (303-300, 303-350, 303-472)
Courtesy of FORD MOTOR CO.

2. Disconnect the compressed air supply.
3. Repeat the appropriate removal and installation steps for all of the other cylinders.
4. Install the spark plugs. For additional information, refer to **ENGINE IGNITION - 2.3L** .
5. Coat the valve tappets with clean engine oil and insert them.
6. Install the camshafts. For additional information, refer to **Camshafts**.

VALVE SEALS

Special Tools

Illustration	Tool Name	Tool Number
 ST1907-A	Compressor, Valve Spring	303-350 (T89P-6565-A)
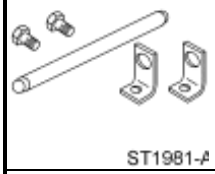 ST1981-A	Compressor, Valve Spring	303-300 (T87C-6565-A)
	Compressor, Valve Spring	303-472 (T94P-6565-AH)

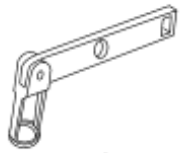 ST1902-A		
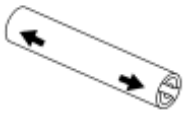 ST1904-A	Remover, Valve Stem Oil Seal	303-468 (T94P-6510-AH)
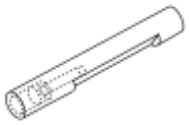 ST1906-A	Installer, Valve Stem Oil Seal	303-470 (T94P-6510-CH)
 ST1187-A	Slide Hammer	307-005 (T59L-100-B)

Material

Item	Specification
Motorcraft SAE 5W-20 Premium Synthetic Blend Motor Oil XO-5W20-QSP (US); Motorcraft SAE 5W-20 Super Premium Motor Oil CXO-5W20-LSP12 (Canada); or equivalent	WSS-M2C930-A
Multi-Purpose Grease XG-4 and/or XL-5	ESB-M1C93-B

REMOVAL

CAUTION: During engine repair procedures, cleanliness is extremely important. Any foreign material, including any material created while cleaning gasket surfaces, that enters the oil passages, coolant passages or the oil pan can cause engine failure.

1. With the vehicle in NEUTRAL, position it on a hoist. For additional information, refer to **JACKING AND LIFTING** .
2. Remove the camshafts. For additional information, refer to **Camshafts**.

CAUTION: If the camshafts and valve tappets are to be reused, mark the location

of the valve tappets to make sure they are assembled in their original positions.

NOTE: The number on the valve tappets only reflects the digits that follow the decimal. For example, a tappet with the number 0.650 has the thickness of 3.650 mm.

3. Remove and inspect the valve tappets. For additional information, refer to **ENGINE SYSTEM - GENERAL INFORMATION** .
4. Remove the spark plugs. For additional information, refer to **ENGINE IGNITION - 2.3L** .

WARNING: Always wear protective goggles when working with compressed air. This can prevent injury. Failure to follow these instructions can result in personal injury.

CAUTION: Use compressed air at 7 to 10 bars (100-150 psi). Do not disconnect the compressed air from the cylinder until the valve spring, valve spring retainer and valve collet is installed.

5. Connect compressed air supply to the No. 1 cylinder.

NOTE: Place all parts in order to one side.

6. Apply compressed air to the cylinder and remove the valve spring.
   - Using the special tools, compress the valve spring and remove the valve collet, using some grease and a small screwdriver.
   - Remove the valve spring retainer and the valve spring.

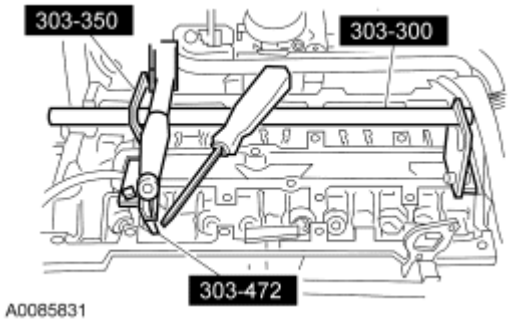

Fig. 155: Identifying Special Tools (303-300, 303-350, 303-472)
Courtesy of FORD MOTOR CO.

7. Using the special tools, remove and discard the valve seal.

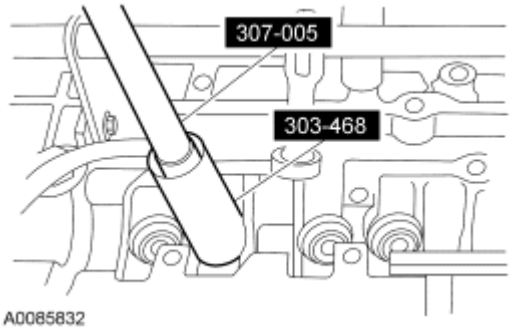

Fig. 156: Removing Valve Seal Using Special Tools (307-005, 303-468)
Courtesy of FORD MOTOR CO.

INSTALLATION

1. Install the valve stem seal installation sleeve.

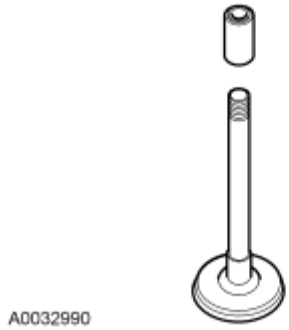

Fig. 157: Identifying Valve Stem Seal Installation Sleeve
Courtesy of FORD MOTOR CO.

2. Using the special tool, install the valve seal.

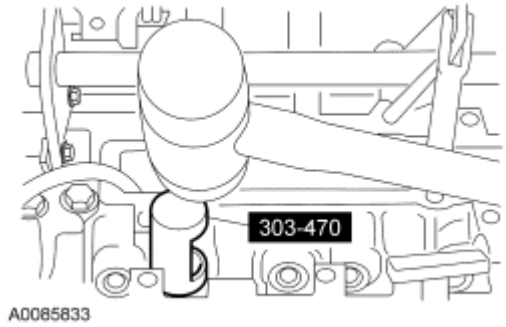

Fig. 158: Installing Valve Seal Using Special Tool (303-470)
Courtesy of FORD MOTOR CO.

NOTE: Check the seating of the valve collet.

3. Using the special tools, install the valve spring.

- Insert the valve spring and the valve spring retainer.
- Compress the valve spring and install the valve collet using some grease and a small screwdriver.

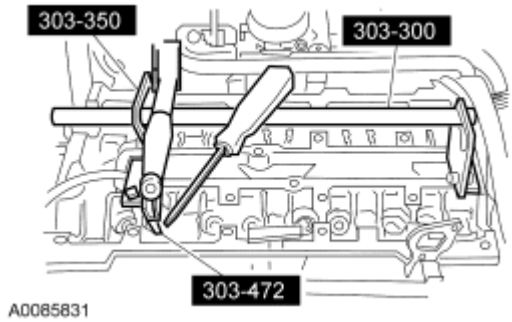

Fig. 159: Identifying Special Tools (303-300, 303-350, 303-472)
Courtesy of FORD MOTOR CO.

4. Disconnect the compressed air supply.
5. Repeat the appropriate removal and installation steps for all of the other cylinders.
6. Install the spark plugs. For additional information, refer to **ENGINE IGNITION - 2.3L** .
7. Coat the valve tappets with clean engine oil and insert them.
8. Install the camshafts. For additional information, refer to **Camshafts**.

VALVE TAPPETS

Material

Item	Specification
Motorcraft SAE 5W-20 Premium Synthetic Blend Motor Oil XO-5W20-QSP (US); Motorcraft SAE 5W-20 Super Premium Motor Oil CXO-5W20-LSP12 (Canada); or equivalent	WSS-M2C930-A

REMOVAL AND INSTALLATION

CAUTION: During engine repair procedures, cleanliness is extremely important. Any foreign material, including any material created while cleaning gasket surfaces, that enters the oil passages, coolant passages or the oil pan can cause engine failure.

1. With the vehicle in NEUTRAL, position it on a hoist. For additional information, refer to **JACKING AND LIFTING** .
2. Remove the camshafts. For additional information, refer to **Camshafts**.

CAUTION: If the camshafts and valve tappets are to be reused, mark the location of the valve tappets to make sure they are assembled in their original

positions.

NOTE: The number on the valve tappets only reflects the digits that follow the decimal. For example, a tappet with the number 0.650 has the thickness of 3.650 mm.

3. Remove and inspect the valve tappets. For additional information refer to **ENGINE SYSTEM - GENERAL INFORMATION** .
4. To install, reverse the removal procedure.
   - Coat the valve tappets with clean engine oil prior to installation.

CYLINDER HEAD

Special Tools

Illustration	Tool Name	Tool Number
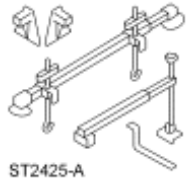 ST2425-A	3-Bar Engine Support Kit	303-F072
 ST1595-A	Lifting Brackets, Engine	303-050 (T70P-6000)

Material

Item	Specification
Motorcraft SAE 5W-20 Premium Synthetic Blend Motor Oil XO-5W20-QSP (US); Motorcraft SAE 5W-20 Super Premium Motor Oil CXO-5W20-LSP12 (Canada); or equivalent	WSS-M2C930-A
Silicone Gasket Remover ZC-30	-
Motorcraft Metal Surface Prep ZC-31	-
Silicone Gasket and Sealant TA-30	WSE-M4G323-A4

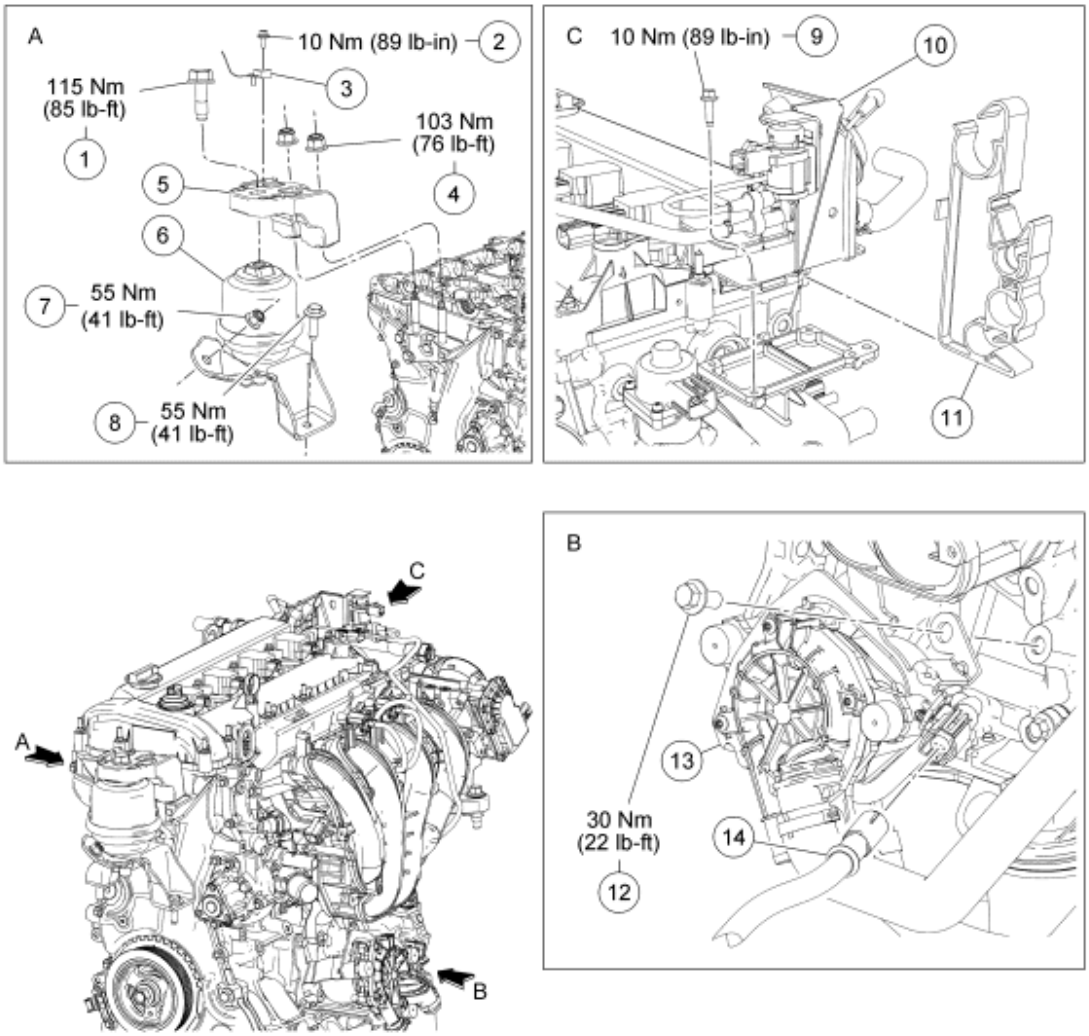

N0060793

Fig. 160: Exploded View Of Cylinder Head Components With Torque Specifications (1 Of 3)
Courtesy of FORD MOTOR CO.

Item	Part Number	Description
1	W711684	Engine mount bracket bolt
2	W705936	Radio frequency interference capacitor bolt
3	19A095	Radio frequency interference capacitor
4	W520214	Engine mount bracket nut (2 required)
5	6A094	Engine mount bracket
6	6F012	Engine mount
7	W711578	Engine mount nut
8	W706496	Engine mount bolt (2 required)
9	-	Secondary air injection (AIR) valve

		bracket bolt (2 required)
10	-	AIR valve bracket
11	-	Evaporative emissions tube bundle clip
12	W500032	AIR pump bolt (3 required)
13	9A486A	AIR pump
14	14A464	AIR pump electrical connector (part of 12B637)

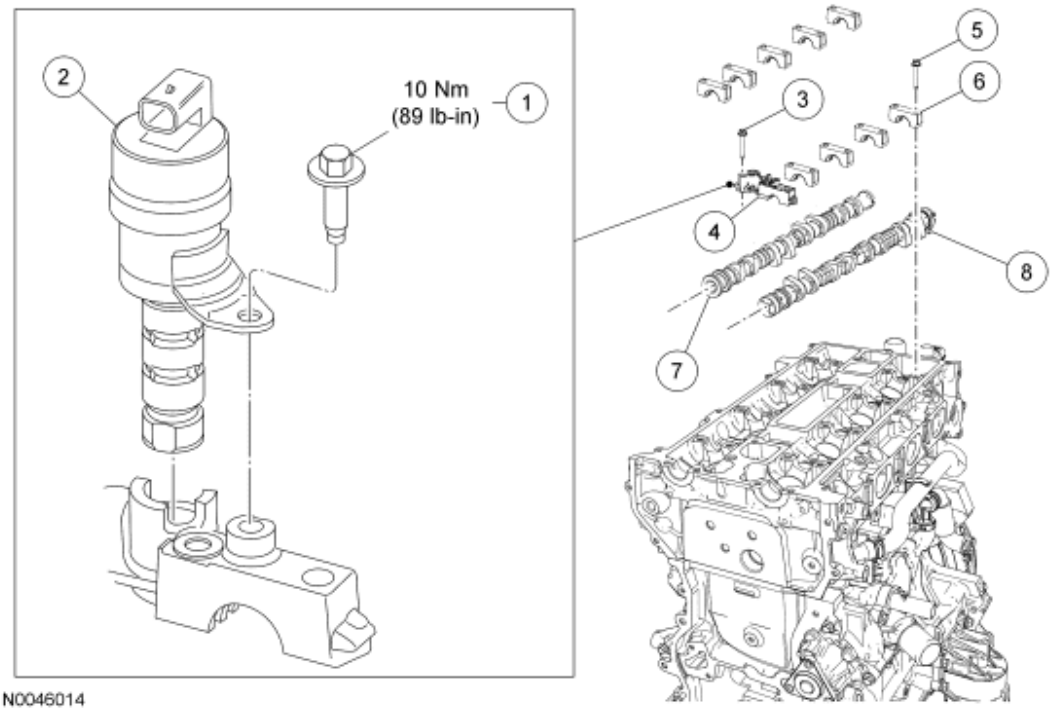

Fig. 161: Exploded View Of Cylinder Head Components With Torque Specifications (2 Of 3)
Courtesy of FORD MOTOR CO.

Item	Part Number	Description
1	W500211	Variable camshaft timing (VCT) oil control solenoid bolt
2	6M280	VCT oil control solenoid
3	W500301	Intake camshaft bearing cap bolt
4	6A258	Intake camshaft bearing cap
5	W703383	Camshaft bearing cap bolt (20 required)
6	6A284	Camshaft bearing cap (9 required)
7	6A272	Exhaust camshaft
8	6A267	Intake camshaft

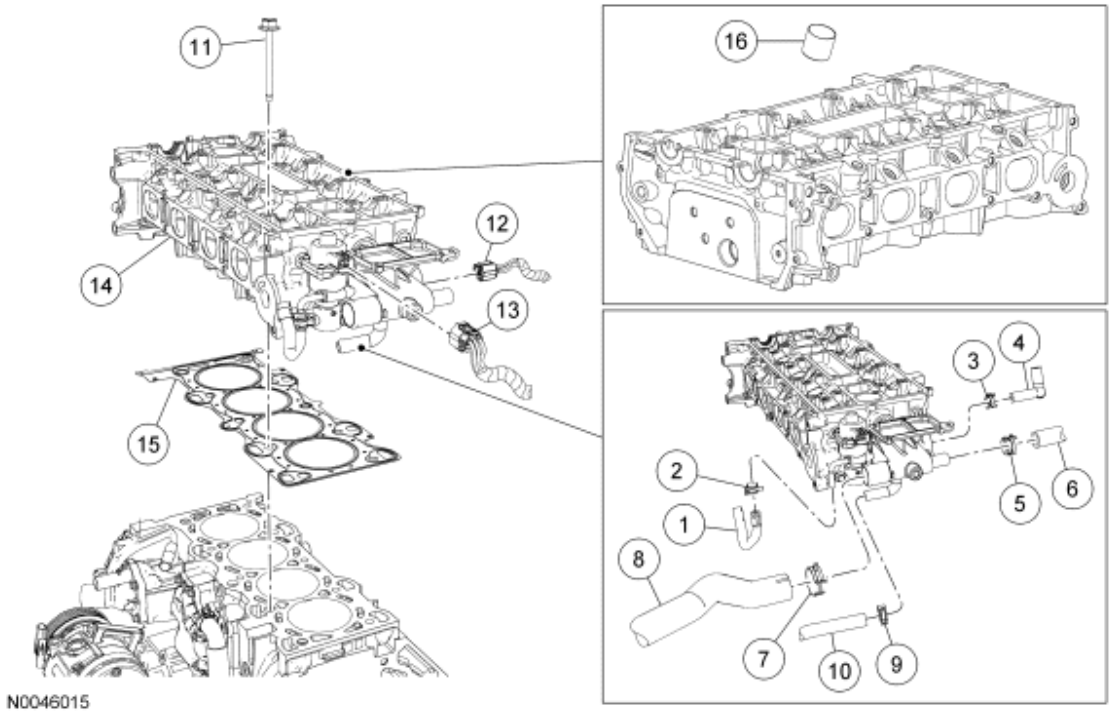

Fig. 162: Exploded View Of Cylinder Head Components With Torque Specifications (3 Of 3)
Courtesy of FORD MOTOR CO.

Item	Part Number	Description
1	W52592	Exhaust gas recirculation (EGR) coolant tube clamp
2	18K580	EGR coolant hose
3	-	Engine coolant vent hose clamp
4	8W005	Engine coolant vent hose
5	-	Heater hose clamp
6	18K580	Heater hose
7	8287	Upper radiator hose clamp
8	8260	Upper radiator hose
9	W525958	Bypass hose clamp
10	8548	Bypass hose
11	6065	Cylinder head bolt (10 required)
12	14A464	Engine coolant temperature (ECT) sensor electrical connector (part of 12B637)
13	14A464	EGR valve electrical connector (part of 12B637)
14	6050	Cylinder head
15	6051	Cylinder head gasket
16	6500	Valve tappet (16 required)

REMOVAL

CAUTION: Do not loosen or remove the crankshaft pulley bolt without first installing the special tools as instructed in this procedure. The crankshaft pulley and the crankshaft timing sprocket are not keyed to the crankshaft. The crankshaft, the crankshaft sprocket and the pulley are fitted together by friction, using diamond washers between the flange faces on each part. For that reason, the crankshaft sprocket is also unfastened if you loosen the pulley bolt. Before any repair requiring loosening or removal of the crankshaft pulley bolt, the crankshaft and camshafts must be locked in place by the special service tools, otherwise severe engine damage can occur.

CAUTION: During engine repair procedures, cleanliness is extremely important. Any foreign material, including any material created while cleaning gasket surfaces, that enters the oil passages, coolant passages or the oil pan can cause engine failure.

All vehicles

1. With the vehicle in NEUTRAL, position it on a hoist. For additional information, refer to **JACKING AND LIFTING** .
2. Release the fuel system pressure. For additional information, refer to **FUEL SYSTEM - GENERAL INFORMATION** .
3. Check the valve clearance. For additional information, refer to **Valve Clearance Check**.
4. Remove the degas bottle. For additional information, refer to **ENGINE COOLING** .
5. Remove the catalytic converter. For additional information, refer to **EXHAUST SYSTEM** .
6. Remove the generator. For additional information, refer to **GENERATOR AND REGULATOR** .
7. Remove the fuel supply rail. For additional information, refer to **FUEL CHARGING AND CONTROLS - 2.3L** .
8. Remove the intake manifold. For additional information, refer to **Intake Manifold**.

Vehicles with secondary air injection (AIR)

9. Disconnect the secondary air injection (AIR) pump electrical connector.
10. Remove the 3 bolts and position the AIR pump aside.

All vehicles

11. Remove the bolt and the radio frequency interference capacitor from the engine mount bracket.
12. Remove the engine mount bracket bolt.
13. Install the special tool and a suitable length of chain to the threaded hole in the LH side of the engine block.

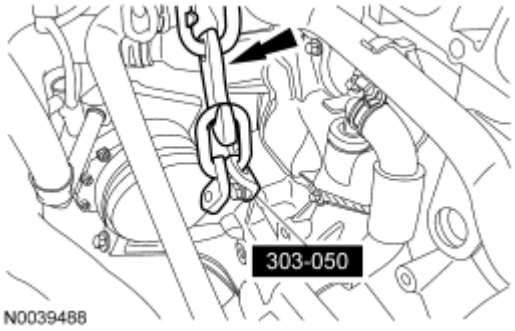

Fig. 163: Identifying Special Tool (303-050)
Courtesy of FORD MOTOR CO.

14. Install the special.
    - Using the special tool, lift the engine 25 mm (0.98 in).

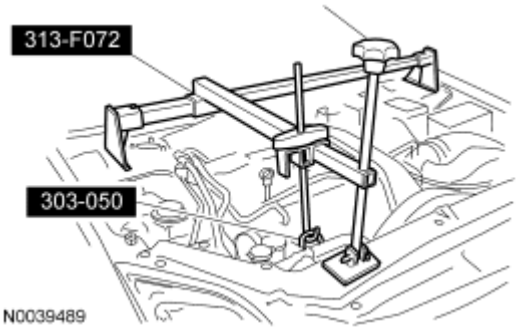

Fig. 164: Lifting Engine Using Special Tool (303-050, 313-F072)
Courtesy of FORD MOTOR CO.

15. Remove the nut, 2 bolts and the engine mount.
16. Lower the engine 25 mm (0.98 in).
17. Remove the 2 nuts and the engine mount bracket.
18. Remove the timing drive components. For additional information, refer to **Timing Drive Components**.
19. Remove the special tool.

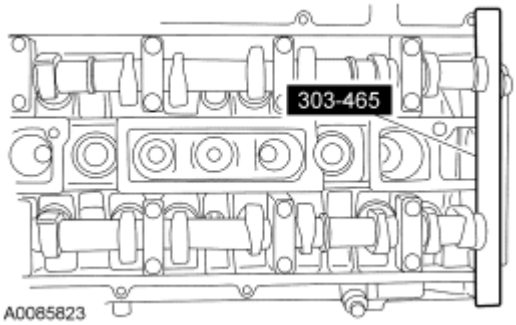

Fig. 165: Identifying Special Camshaft Tool (303-465)
Courtesy of FORD MOTOR CO.

20. Mark the position of the camshaft lobes on the No. 1 cylinder for installation reference.

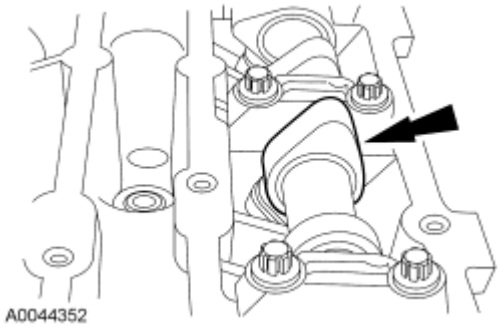

Fig. 166: Locating Camshaft Lobe
Courtesy of FORD MOTOR CO.

21. Remove the bolt and the variable camshaft timing (VCT) solenoid.

CAUTION: Failure to follow the camshaft loosening procedure can result in damage to the camshafts.

22. Remove the camshafts from the engine.
    - Loosen the camshaft bearing cap bolts, in the sequence shown, one turn at a time until all tension is released from the camshaft bearing caps.
    - Remove the bolts and the camshaft bearing caps.
    - Remove the camshafts.

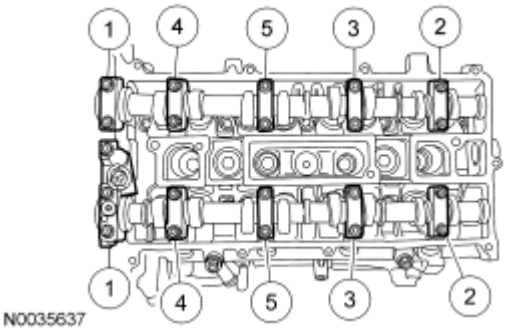

Fig. 167: Identifying Loosening Sequence Of Camshaft Bearing Cap Bolts
Courtesy of FORD MOTOR CO.

CAUTION: If the camshafts and valve tappets are to be reused, mark the location of the valve tappets to make sure they are assembled in their original positions.

NOTE: The number on the valve tappets only reflects the digits that follow the decimal. For example, a tappet with the number 0.650 has the thickness of

3.650 mm.

23. Remove and inspect the valve tappets. For additional information, refer to **ENGINE SYSTEM - GENERAL INFORMATION** .
24. Detach the retaining clip and position the evaporative emissions (EVAP) tube bundle aside.

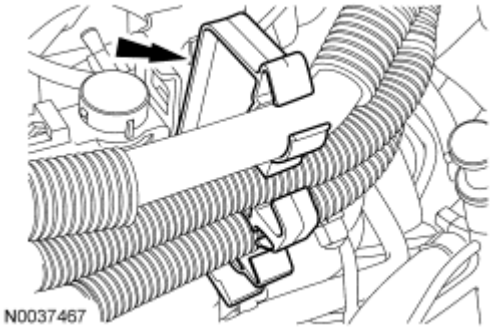

Fig. 168: Locating Evaporative Emissions (EVAP) Tube Bundle Retaining Clip
Courtesy of FORD MOTOR CO.

25. Disconnect the upper radiator hose, coolant bypass hose, heater hose and coolant vent hose from the engine coolant outlet.
26. Disconnect the engine coolant temperature sensor (ECT) electrical connector.
27. Disconnect the exhaust gas recirculation (EGR) valve electrical connector.
28. Disconnect the coolant hose from the EGR valve.

Vehicles with secondary air injection (AIR)

29. Remove the 2 bolts and position AIR valve bracket aside.

All vehicles

30. Remove the 10 bolts and the cylinder head.
    - Discard the bolts.

INSTALLATION

All vehicles

CAUTION: Do not use metal scrapers, wire brushes, power abrasive discs or other abrasive means to clean the sealing surfaces. These tools cause scratches and gouges that make leak paths. Use a plastic scraping tool to remove all traces of the head gasket.

CAUTION: Observe all warnings or cautions and follow all application directions contained on the packaging of the silicone gasket remover and the

metal surface prep.

NOTE: If there is no residual gasket material present, metal surface prep can be used to clean and prepare the surfaces.

1. Clean the cylinder head-to-cylinder block mating surface of both the cylinder head and the cylinder block.
   1. Remove any large deposits of silicone or gasket material with a plastic scraper.
   2. Apply silicone gasket remover, following package directions, and allow to set for several minutes.
   3. Remove the silicone gasket remover with a plastic scraper. A second application of silicone gasket remover may be required if residual traces of silicone or gasket material remain.
   4. Apply metal surface prep, following package directions, to remove any traces of oil or coolant, and to prepare the surfaces to bond with the new gasket. Do not attempt to make the metal shiny. Some staining of the metal surfaces is normal.
2. Clean the cylinder head bolt holes in the cylinder block. Make sure all coolant, oil or other foreign material is removed.
3. Inspect the cylinder head for distortion. For additional information, refer to **ENGINE SYSTEM - GENERAL INFORMATION** .
4. Apply silicone gasket and sealant to the locations shown.

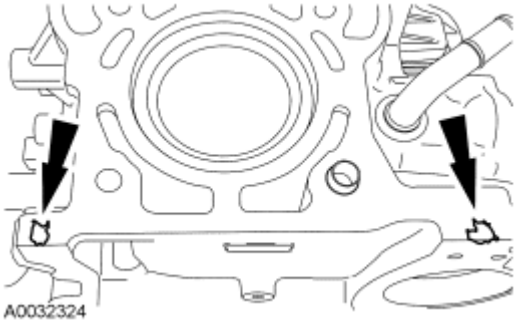

Fig. 169: Identifying Silicone Gasket And Sealant Location
Courtesy of FORD MOTOR CO.

5. Install a new head gasket.

NOTE: The cylinder head bolts are torque-to-yield and must not be reused. New cylinder head bolts must be installed.

NOTE: Lubricate the bolts with clean engine oil prior to installation.

6. Install 10 new cylinder head bolts. Tighten the bolts in the sequence shown in 5 stages:
   - Stage 1: Tighten to 7 Nm (62 lb-in).
   - Stage 2: Tighten to 15 Nm (11 lb-ft).
   - Stage 3: Tighten to 45 Nm (33 lb-ft).

- Stage 4: Turn 90 degrees.
- Stage 5: Turn an additional 90 degrees.

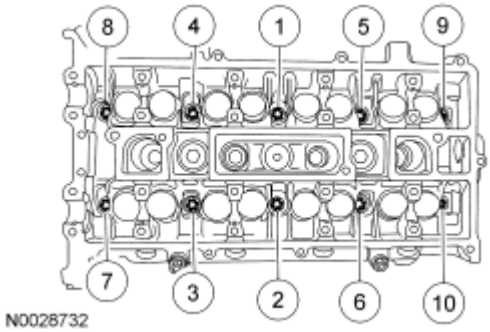

Fig. 170: Identifying Tightening Sequence Of Cylinder Head Bolts
Courtesy of FORD MOTOR CO.

Vehicles with secondary air injection (AIR)

7. Position AIR valve bracket and install the 2 bolts.
   - Tighten to 10 Nm (89 lb-in).

All vehicles

8. Connect the coolant hose to the EGR valve.
9. Connect the EGR valve electrical connector.
10. Connect the ECT electrical connector.
11. Connect the upper radiator hose, coolant bypass hose, heater hose and coolant vent hose to the engine coolant outlet.
12. Attach the EVAP tube bundle retaining clip retaining clip.

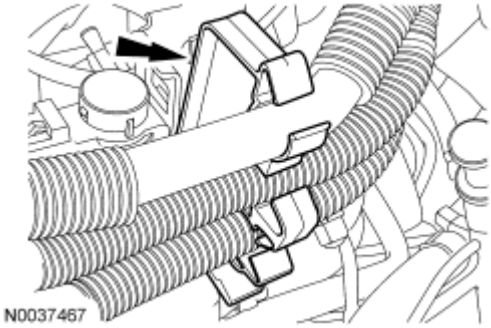

Fig. 171: Locating Evaporative Emissions (EVAP) Tube Bundle Retaining Clip
Courtesy of FORD MOTOR CO.

NOTE: Coat the valve tappets with clean engine oil prior to installation.

13. Install the valve tappets.

CAUTION: Install the camshafts with the alignment slots in the camshafts lined up so the Camshaft Alignment Plate can be installed without rotating the camshafts. Make sure the lobes on the No. 1 cylinder are in the same position as noted in the removal procedure. Rotating the camshafts when the timing chain is removed, or installing the camshafts 180 degrees out of position can cause severe damage to the valves and pistons.

NOTE: Lubricate the camshaft journals and bearing caps with clean engine oil.

14. Install the camshafts and bearing caps. Tighten the camshaft bearing caps in the sequence shown in 3 stages:
    - Stages 1: Tighten the camshaft bearing cap bolts until finger tight.
    - Stages 2: Tighten to 7 Nm (62 lb-in).
    - Stages 3: Tighten to 16 Nm (12 lb-ft).

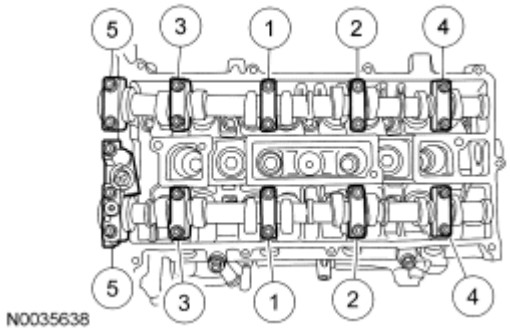

Fig. 172: Identifying Tightening Sequence Of Camshaft Bearing Cap Bolts
Courtesy of FORD MOTOR CO.

15. Install the special tool.

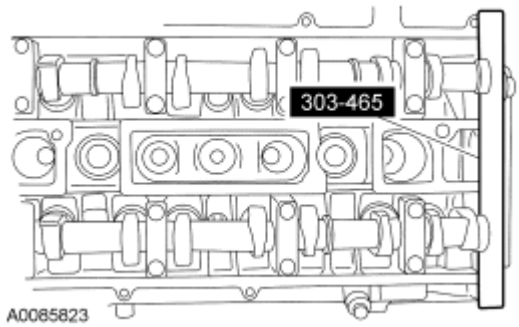

Fig. 173: Identifying Special Camshaft Tool (303-465)
Courtesy of FORD MOTOR CO.

16. Install the VCT solenoid and bolt.
    - Tighten to 10 Nm (89 lb-in).
17. Install the timing drive components. For additional information, refer to **Timing Drive Components**.
18. Install the engine mount bracket and the 2 nuts.
    - Tighten to 103 Nm (76 lb-ft).
19. Using the special too, lift the engine 25 mm (0.98 in).

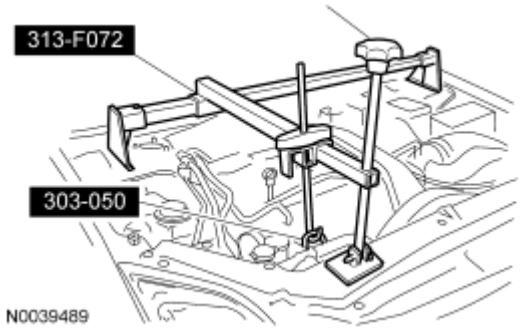

Fig. 174: Lifting Engine Using Special Tool (303-050, 313-F072)
Courtesy of FORD MOTOR CO.

20. Install the engine mount, nut and 2 bolts.
    - Tighten to 55 Nm (41 lb-ft).
21. Lower the engine 25 mm (0.98 in).
22. Install the engine mount bracket bolt.
    - Tighten to 115 Nm (85 lb-ft).
23. Install the radio frequency interference capacitor and bolt to the engine mount bracket.
    - Tighten to 10 Nm (89 lb-in).

Vehicles with secondary air injection (AIR)

24. Install the AIR pump and the 3 bolts.
    - Tighten to 30 Nm (22 lb-ft).
25. Connect the AIR pump electrical connector.

All vehicles

26. Install the intake manifold. For additional information, refer to **Intake Manifold**.
27. Install the fuel supply rail. For additional information, refer to **FUEL CHARGING AND CONTROLS - 2.3L** .
28. Install the generator. For additional information, refer to **GENERATOR AND REGULATOR** .
29. Install the catalytic converter. For additional information, refer to **EXHAUST SYSTEM** .
30. Install the degas bottle. For additional information, refer to **ENGINE COOLING** .
31. Fill and bleed the engine cooling system. For additional information, refer to **ENGINE COOLING** .

ENGINE LUBRICATION COMPONENTS - EXPLODED VIEW

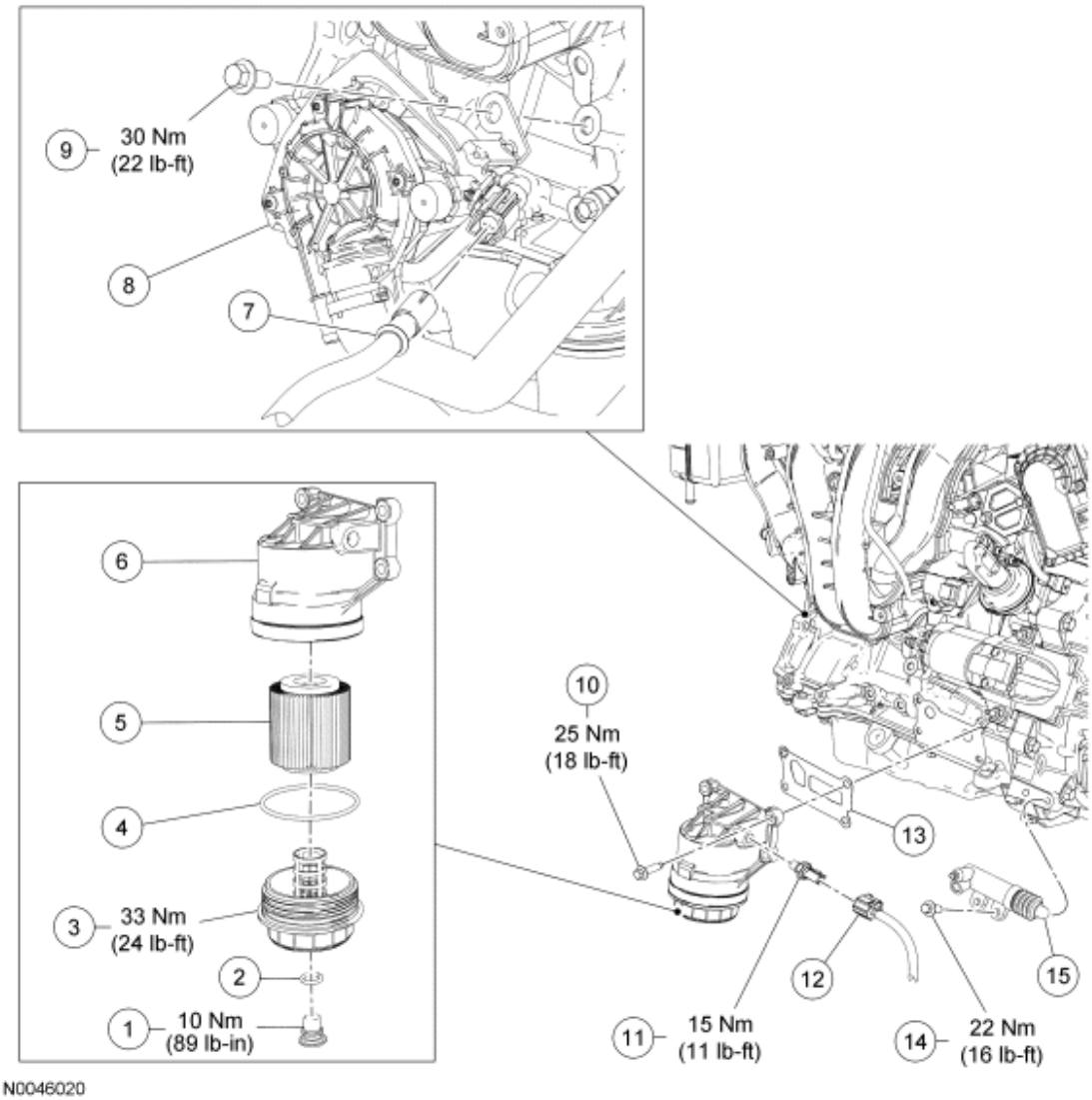

Fig. 175: Exploded View Of Oil Filter Element, Oil Filter Adapter & Oil Pressure Sender With Torque Specifications
Courtesy of FORD MOTOR CO.

Item	Part Number	Description
1	6C684	Oil filter drain plug
2	W707718	Oil filter drain plug O-ring seal
3	6A832	Oil filter cover
4	6885	Oil filter cover O-ring seal
5	6744	Oil filter element
6	6884	Oil filter adapter
7	14A464	Secondary air injection (AIR) pump electrical connector (part of 12B637)

8	9A486A	AIR pump
9	W500032	AIR pump bolt (3 required)
10	W500225	Oil filter adapter bolt (4 required)
11	9278	Oil pressure sender
12	14A464	Oil pressure sender electrical connector (part of 12B637)
13	6A636	Oil filter adapter gasket
14	7A508	Clutch slave cylinder bolt (2 required)
15	W706360	Clutch slave cylinder

NOTE: Automatic transmission shown, manual transmission similar.

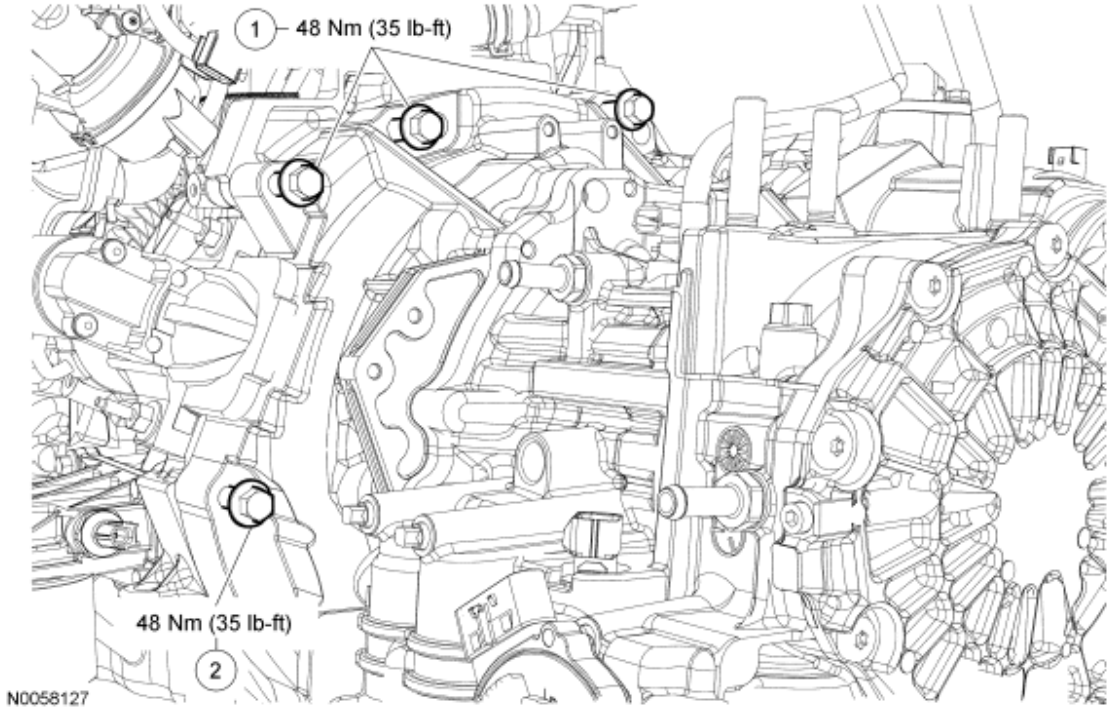

Fig. 176: Exploded View Of Oil Pan, Oil Pump Screen & Pickup Tube With Torque Specifications
Courtesy of FORD MOTOR CO.

Item	Part Number	Description
1	W706215	Upper bellhousing-to-engine bolts
2	W500125	Front lower bellhousing-to-engine bolt (1 required for automatic transmission) (2 required for manual transmission)

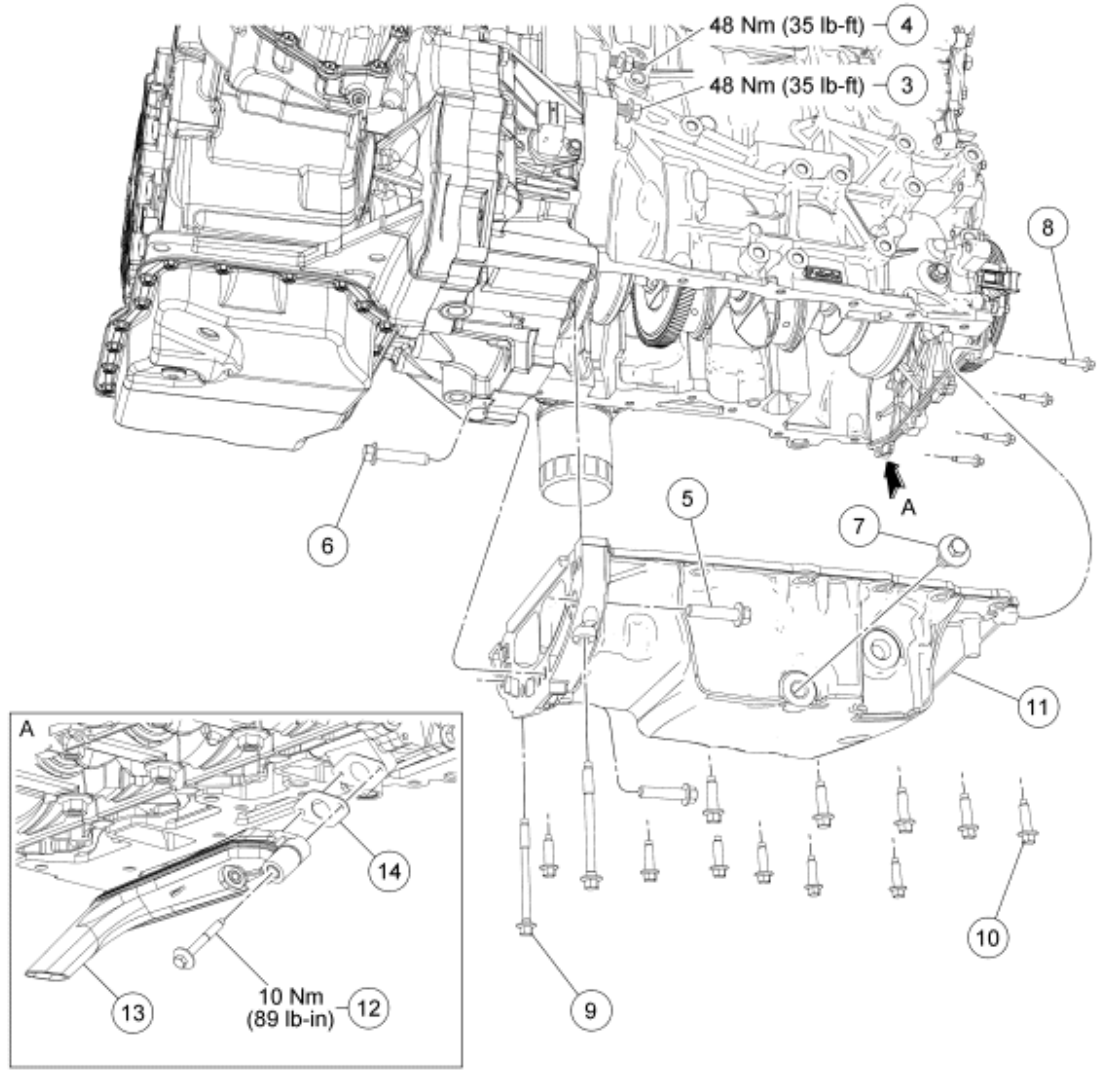

Fig. 177: Exploded View Of Engine Lubrication Components With Torque Specifications
Courtesy of FORD MOTOR CO.

Item	Part Number	Description
3	W500120	Rear lower engine-to-bellhousing bolt
4	W500124	Rear lower engine-to-bellhousing stud bolt
5	W500122	Oil pan-to-bellhousing bolt (2 required)
6	W500122	Bellhousing-to-oil pan bolt
7	6730	Oil pan drain plug
8	W500215	Engine front cover-to-oil pan bolt (4 required)
9	W706284	Oil pan bolt (2 required)
10	W500224	Oil pan bolt (11 required)

11	6675	Oil pan
12	W706282	Oil pump screen and pickup tube bolt (2 required)
13	6622	Oil pump screen and pickup tube
14	6625	Oil pump screen and pickup tube gasket

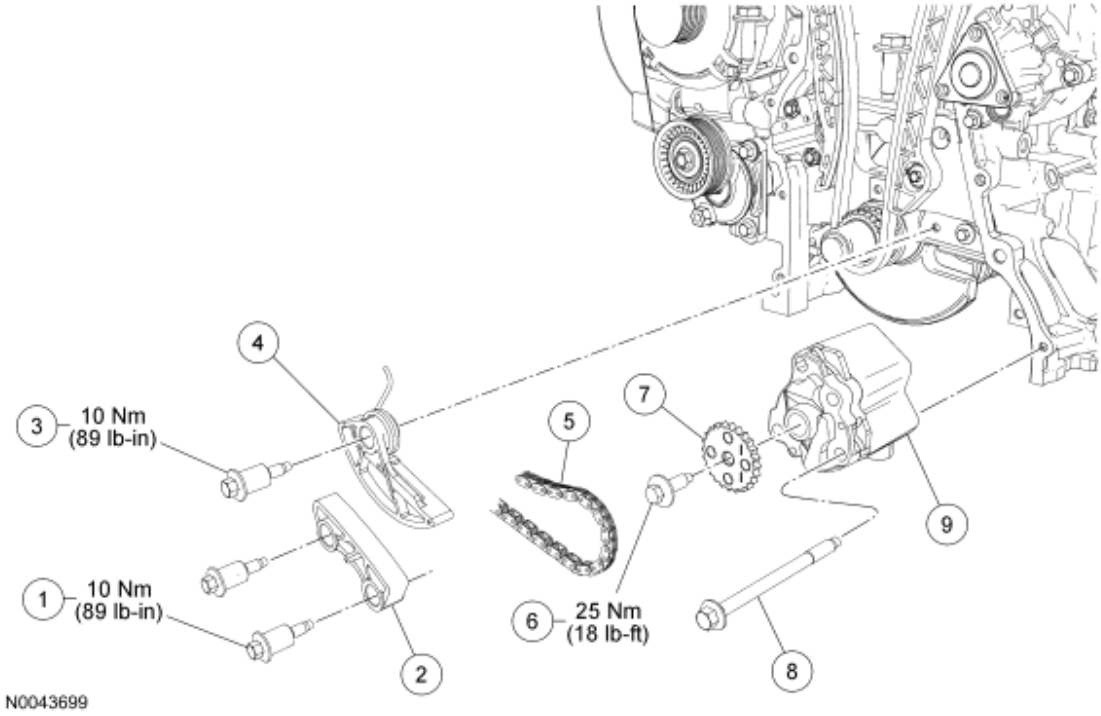

Fig. 178: Exploded View Of Oil Pump With Torque Specifications
Courtesy of FORD MOTOR CO.

Item	Part Number	Description
1	W703651	Oil pump chain guide shoulder bolt (2 required) (early build)
2	6M256	Oil pump chain guide (early build)
3	W703651	Oil pump drive chain tensioner shoulder bolt
4	6C271	Oil pump drive chain tensioner
5	6A895	Oil pump drive chain
6	W704397	Oil pump sprocket bolt
7	6652	Oil pump sprocket
8	W703647	Oil pump bolt (4 required)
9	6600	Oil pump

1. For additional information, refer to the appropriate procedures.

OIL FILTER ELEMENT

Material

Item	Specification
Motorcraft SAE 5W-20 Premium Synthetic Blend Motor Oil XO-5W20-QSP (US); Motorcraft SAE 5W-20 Super Premium Motor Oil CXO-5W20-LSP12 (Canada); or equivalent	WSS-M2C930-A

REMOVAL

1. With the vehicle in NEUTRAL, position it on a hoist. For additional information, refer to **JACKING AND LIFTING** .
2. If equipped, remove the 2 screws and the oil filter access cover.

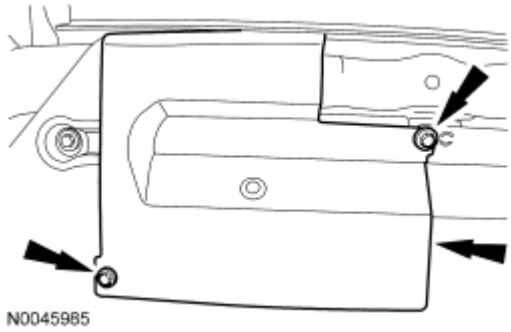

Fig. 179: Locating Oil Filter Access Cover And Screws
Courtesy of FORD MOTOR CO.

3. Loosen the oil filter drain plug.
4. Using a cup-style oil filter wrench, loosen the oil filter cover one turn.
5. Remove the oil filter drain plug and drain the engine oil from the oil filter and adapter.
   - Remove and discard the oil filter drain plug O-ring seal.
6. Remove the oil filter cover and oil filter element.
   - Discard the oil filter element.
   - Remove and discard the oil filter cover O-ring seal.

INSTALLATION

1. Wipe clean the oil filter cover and mounting surface on the oil filter adapter.

NOTE: Lubricate the oil filter cover O-ring seal with clean engine oil.

2. Install a new oil filter cover O-ring seal.

CAUTION: Do not over tighten the oil filter cover. Over tightening the oil filter cover may damage the cover or O-ring seal and result in an oil leak.

3. Install a new oil filter element and the oil filter cover.
   - Using a cup-style oil filter wrench, tighten to 33 Nm (24 lb-ft).

NOTE: Lubricate the oil filter drain plug O-ring seal with clean engine oil.

4. Install a new oil filter drain plug O-ring seal.

CAUTION: Do not over tighten the oil filter drain plug. Over tightening the oil filter drain plug may damage the drain plug, O-ring seal or cover and result in an oil leak.

5. Install the oil filter drain plug.
   - Tighten to 10 Nm (89 lb-in).
6. If equipped, install the oil filter access cover and the 2 screws.

OIL FILTER ADAPTER

REMOVAL AND INSTALLATION

All vehicles

1. With the vehicle in NEUTRAL, position it on a hoist. For additional information, refer to **JACKING AND LIFTING** .
2. If equipped, remove the 7 screws and the underbody cover.

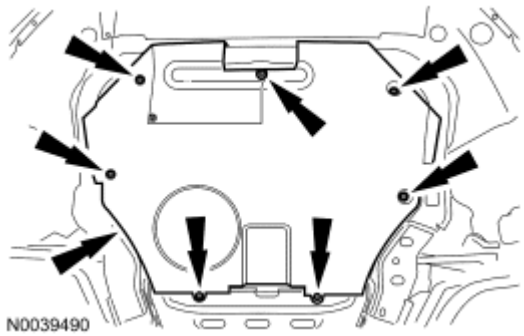

Fig. 180: Locating Underbody Cover Screws
Courtesy of FORD MOTOR CO.

3. Remove the oil filter element. For additional information, refer to **Oil Filter Element**.

Vehicles equipped with manual transaxle

4. Remove the 2 bolts and position the clutch slave cylinder aside.
   - To install, tighten to 22 Nm (16 lb-ft).

Vehicles equipped secondary air injection (AIR)

5. Disconnect the AIR pump electrical connector.
6. Remove the 3 bolts and position the AIR pump aside.
   - To install, tighten to 30 Nm (22 lb-ft).

All vehicles

7. Disconnect the oil pressure sender electrical connector.

NOTE: Discard the gasket.

8. Remove the 4 bolts and the oil filter adapter.
   - To install, tighten to 25 Nm (18 lb-ft).
9. To install, reverse the removal procedure.

ENGINE OIL PRESSURE (EOP) SWITCH

Material

Item	Specification
Thread Sealant with PTFE TA-24	WSK-M2G350-A2

REMOVAL AND INSTALLATION

All vehicles

1. With the vehicle in NEUTRAL, position it on a hoist. For additional information, refer to **JACKING AND LIFTING** .
2. If equipped, remove the 7 screws and the underbody cover.

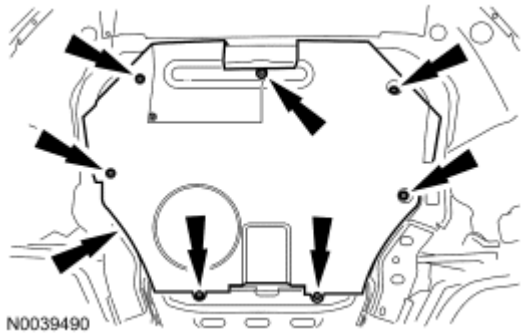

Fig. 181: Locating Underbody Cover Screws

Courtesy of FORD MOTOR CO.

Vehicles equipped with manual transaxle

3. Remove the 2 bolts and position the clutch slave cylinder aside.
   - To install, tighten to 22 Nm (16 lb-ft).

All vehicles

4. Disconnect the oil pressure sender electrical connector.
5. Remove the oil pressure sender.
   - To install, tighten to 15 Nm (11 lb-ft).
6. To install, reverse the removal procedure.
   - Apply pipe sealant with Teflon® to the oil pressure sender threads.

OIL PAN

Material

Item	Specification
Motorcraft SAE 5W-20 Premium Synthetic Blend Motor Oil XO-5W20-QSP (US); Motorcraft SAE 5W-20 Super Premium Motor Oil CXO-5W20-LSP12 (Canada); or equivalent	WSS-M2C930-A
Motorcraft Metal Surface Cleaner ZC-21	WSE-M5B392-A
Silicone Gasket and Sealant TA-30	WSE-M4G323-A4

REMOVAL

All vehicles

1. With the vehicle in NEUTRAL, position it on a hoist. For additional information, refer to **JACKING AND LIFTING** .
2. Remove the air cleaner. For additional information, refer to **INTAKE AIR DISTRIBUTION AND FILTERING - 2.3L** .

   Automatic transmission

3. Remove the battery tray. For additional information, refer to **BATTERY, MOUNTING AND CABLES** .

   All vehicles

CAUTION: To prevent damage to the transmission, do not loosen the transmission-to-engine bolts more than 5 mm (0.19 in).

4. Loosen the 3 upper transaxle-to-engine bolts 5 mm (0.19 in).
5. If equipped, remove the 7 screws and the underbody cover.

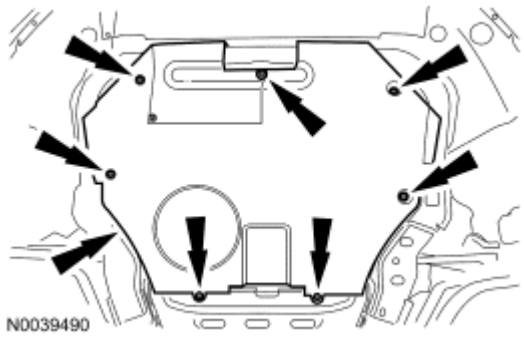

Fig. 182: Locating Underbody Cover Screws
Courtesy of FORD MOTOR CO.

6. Loosen the 1 (automatic transmission) or 2 (manual transmission) front lower bellhousing-to-engine bolt (s) 5 mm (0.19 in).
7. Loosen the rear lower engine-to-bellhousing bolt and stud bolt 5 mm (0.19 in).
8. Remove the 2 oil pan-to-bellhousing bolts.
9. Remove the bellhousing-to-oil pan bolt.
10. Slide the transmission rearward 5 mm (0.19 in).
11. Drain the engine oil.
    - Install the drain plug.
    - To install, tighten to 28 Nm (21 lb-ft).
12. Remove the 4 engine front cover-to-oil pan bolts.
13. Remove the 13 bolts and the oil pan.

INSTALLATION

All vehicles

CAUTION: Do not use metal scrapers, wire brushes, power abrasive discs or other abrasive means to clean the sealing surfaces. These tools cause scratches and gouges, which make leak paths. Use a plastic scraping tool to remove traces of sealant.

1. Clean and inspect all mating surfaces.

NOTE: If the oil pan is not secured within 10 minutes of sealant application, the sealant must be removed and the sealing area cleaned with metal surface

cleaner. Allow to dry until there is no sign of wetness, or 10 minutes, whichever is longer. Failure to follow this procedure can cause future oil leakage.

2. Apply a 2.5 mm (0.09 in) bead of silicone gasket and sealant to the oil pan-to-engine block and to the oil pan-to-engine front cover mating surface.

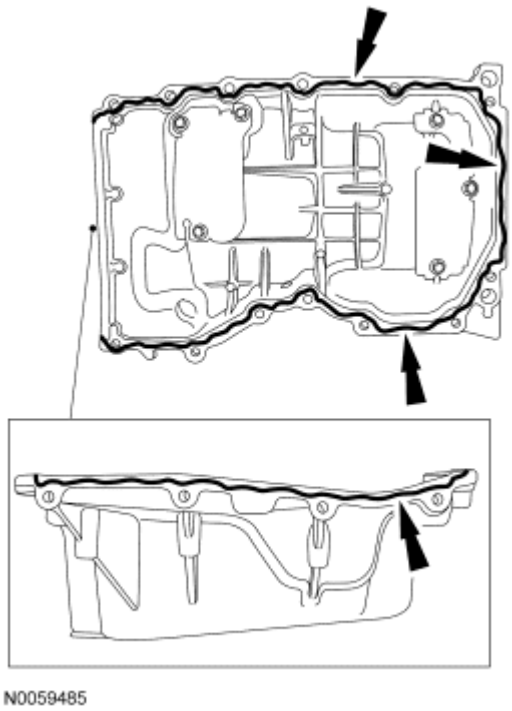

Fig. 183: Identifying Silicone Gasket And Sealant
Courtesy of FORD MOTOR CO.

3. Position the oil pan onto the engine and install the oil pan bolts finger-tight.
4. Install the 4 engine front cover-to-oil pan bolts.
   - Tighten to 10 Nm (89 lb-in).

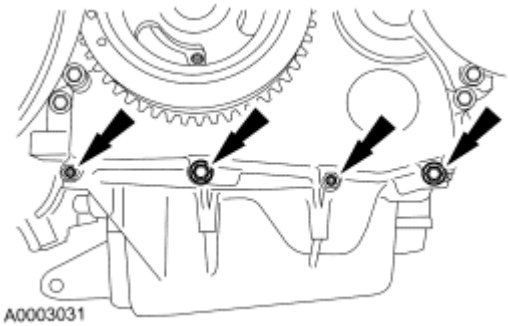

Fig. 184: Locating Engine Front Cover-To-Oil Pan Bolts
Courtesy of FORD MOTOR CO.

5. Tighten the oil pan bolts in the sequence shown.
    - Tighten to 25 Nm (18 lb-ft).

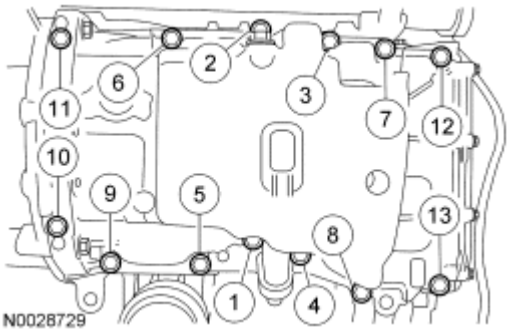

Fig. 185: Identifying Tightening Sequence Of Oil Pan Bolts
Courtesy of FORD MOTOR CO.

6. Alternate tightening the 1 front and 1 rear lower bolts to slide the transmission and engine together.
    - Tighten to 48 Nm (35 lb-ft).
7. Tighten the remaining front lower bolt (manual transmission) and rear lower stud bolt.
    - Tighten to 48 Nm (35 lb-ft).
8. Install the bellhousing-to-oil pan bolt.
    - Tighten to 48 Nm (35 lb-ft).
9. Install the 2 oil pan-to-bellhousing bolts.
    - Tighten to 48 Nm (35 lb-ft).
10. If equipped, install the underbody cover and the 7 screws.

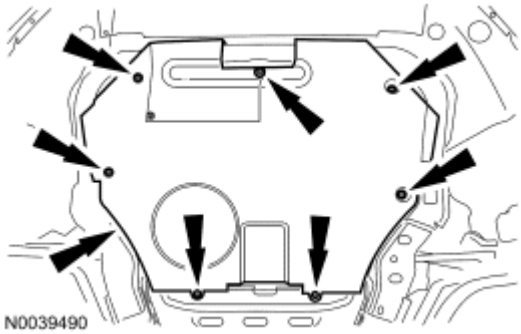

Fig. 186: Locating Underbody Cover Screws
Courtesy of FORD MOTOR CO.

11. Tighten the 3 top bellhousing-to-engine bolts.
    - Tighten to 48 Nm (35 lb-ft).

Automatic transmission

12. Install the battery tray. For additional information, refer to **BATTERY, MOUNTING AND CABLES** .

All vehicles

13. Install the air cleaner assembly. For additional information, refer to **INTAKE AIR DISTRIBUTION AND FILTERING - 2.3L** .
14. Fill the engine with clean engine oil.

OIL PUMP SCREEN AND PICKUP TUBE

REMOVAL AND INSTALLATION

1. With the vehicle in NEUTRAL, position it on a hoist. For additional information, refer to **JACKING AND LIFTING** .
2. Remove the oil pan. For additional information, refer to **Engine Lubrication Components - Exploded View** and **Oil Pan**.

NOTE: Discard the gasket and clean and inspect the gasket mating surfaces.

3. Remove the 2 bolts and the oil pump screen and pickup tube.
   - To install, tighten to 10 Nm (89 lb-in).
4. To install, reverse the removal procedure.

OIL PUMP

Material

Item	Specification
Motorcraft SAE 5W-20 Premium Synthetic Blend Motor Oil XO-5W20-QSP (US); Motorcraft SAE 5W-20 Super Premium Motor Oil CXO-5W20-LSP12 (Canada); or equivalent	WSS-M2C930-A
Silicone Gasket and Sealant TA-30	WSE-M4G323-A4
Motorcraft Metal Surface Cleaner ZC-21	WSE-M5B392-A

REMOVAL

NOTE: Early build engines are equipped with an oil pump drive chain guide. Late build engines do not have an oil pump drive chain guide. Also, late build engines use an updated design for the oil pump drive chain and tensioner. Therefore, the oil pump drive components are not interchangeable between early build and late build engines.

All vehicles

1. With the engine in NEUTRAL, position it on a hoist. For additional information, refer to **JACKING AND LIFTING** .
2. Remove the engine front cover. For additional information, refer to **Engine Front Cover**.
3. Drain the engine oil, then install the drain plug.
   - To install, tighten to 28 Nm (21 lb-ft).
4. Remove the 3 oil pan-to-bellhousing bolts.
5. Remove the 13 bolts and the oil pan.

NOTE: Discard the gasket and clean and inspect the gasket mating surfaces.

6. Remove the 2 bolts and the oil pump screen and pickup tube.
   - To install, tighten to 10 Nm (89 lb-in).

Early build vehicles

7. Remove the oil pump drive chain tensioner and guide.
   1. Release the tension on the tensioner spring.
   2. Remove the 2 shoulder bolts and the tensioner.
   3. Remove the 2 shoulder bolts and the guide.

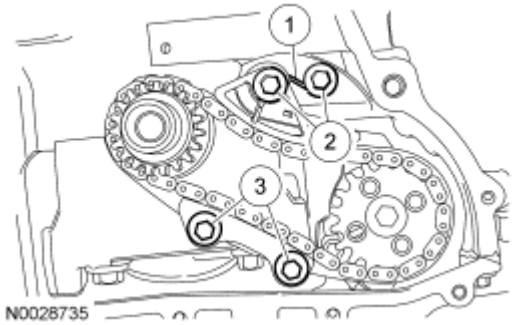

Fig. 187: Locating Tensioner Shoulder Bolts, Tensioner Spring And Guide
Courtesy of FORD MOTOR CO.

Late build vehicles

8. Remove the oil pump drive chain tensioner.
   1. Release the tension on the tensioner spring.
   2. Remove the tensioner and the 2 shoulder bolts.

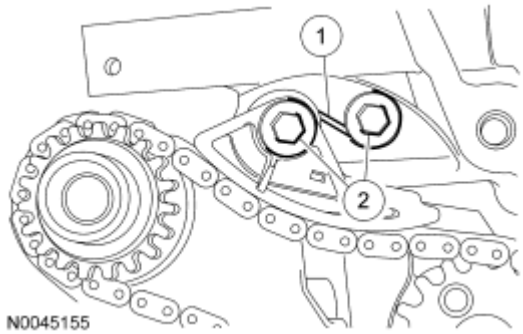

Fig. 188: Locating Shoulder Bolts & Tensioner
Courtesy of FORD MOTOR CO.

All vehicles

9. Remove the chain from the oil pump sprocket.
10. Remove the bolt and oil pump sprocket.
11. Remove the 4 bolts and the oil pump.

INSTALLATION

All vehicles

NOTE: Clean the oil pump and cylinder block mating surfaces with metal surface cleaner.

1. Install the oil pump assembly. Tighten the 4 bolts in the sequence shown in 2 stages:
   - Stage 1: Tighten to 10 Nm (89 lb-in).
   - Stage 2: Tighten to 20 Nm (15 lb-ft).

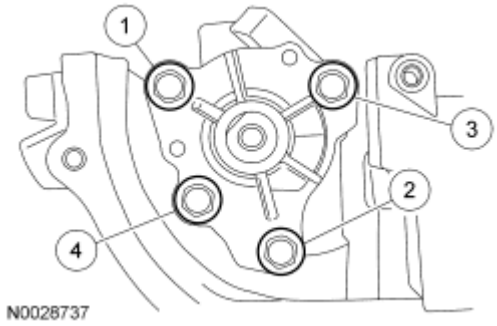

Fig. 189: Identifying Oil Pump Bolts Tightening Sequence
Courtesy of FORD MOTOR CO.

2. Install the oil pump sprocket and bolt.
   - Tighten to 25 Nm (18 lb-ft).
3. Install the chain onto the oil pump sprocket.

Late build vehicles

4. Install the oil pump drive chain tensioner shoulder bolt.
   - Tighten to 10 Nm (89 lb-in).

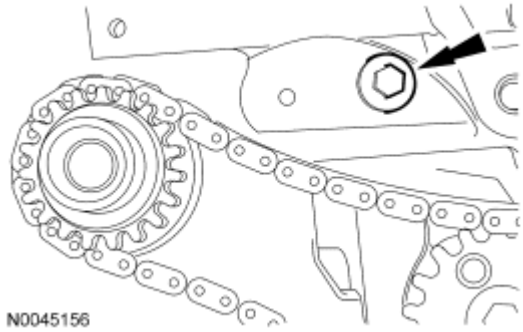

Fig. 190: Locating Oil Pump Chain Drive Tensioner Shoulder Bolt
Courtesy of FORD MOTOR CO.

Early build vehicles

5. Install the oil pump drive chain guide and the shoulder bolts.
   - Tighten to 10 Nm (89 lb-in).

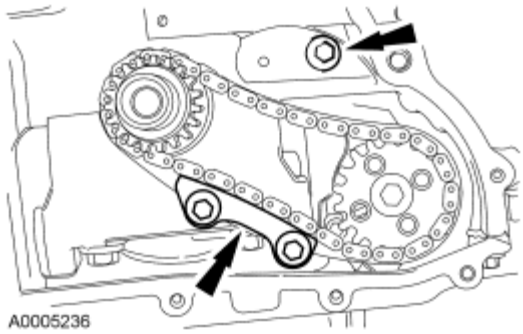

Fig. 191: Locating Oil Pump Chain Guide & Shoulder Bolts
Courtesy of FORD MOTOR CO.

All vehicles

6. Install the oil pump chain tensioner and bolt. Hook the tensioner spring around the shoulder bolt.
   - Tighten to 10 Nm (89 lb-in).

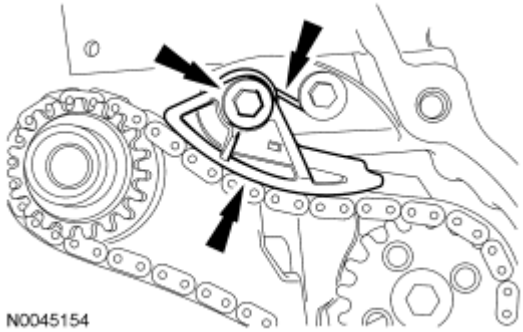

Fig. 192: Locating Oil Pump Chain Tensioner And Bolt
Courtesy of FORD MOTOR CO.

7. Install the oil pump screen and pickup tube and the 2 bolts.
   - Tighten to 10 Nm (89 lb-in).

CAUTION: Do not use metal scrapers, wire brushes, power abrasive discs or other abrasive means to clean the sealing surfaces. These tools cause scratches and gouges, which make leak paths. Use a plastic scraping tool to remove traces to sealant.

8. Clean all mating surfaces with metal surface cleaner.

NOTE: If the oil pan is not secured within 10 minutes of sealant application, the sealant must be removed and the sealing area cleaned with metal surface cleaner. Allow to dry until there is no sign of wetness, or 10 minutes, whichever is longer. Failure to follow this procedure can cause future oil leakage.

9. Apply a 2.5 mm (0.09 in) bead of sealant gasket and sealant to the oil pan.
   - Position the oil pan onto the engine and install the 2 rear oil pan bolts finger-tight.

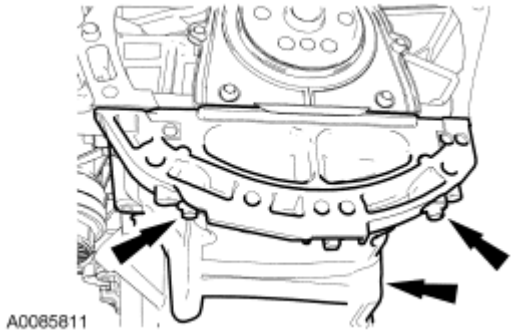

Fig. 193: Identifying Rear Oil Pan Bolts
Courtesy of FORD MOTOR CO.

10. Using a suitable straight edge, align the front surface of the oil pan flush with the front surface of the

engine block.

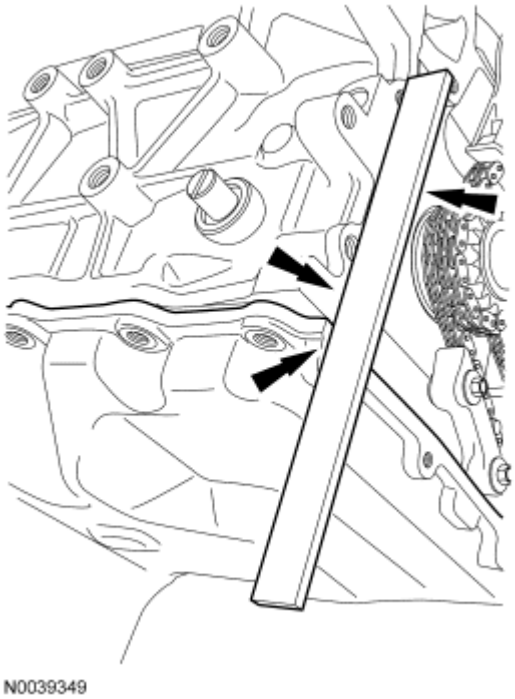

Fig. 194: Aligning Front Surface Of Oil Pan Flush With Front Surface Of Engine Block Using Suitable Straightedge
Courtesy of FORD MOTOR CO.

11. Install the remaining oil pan bolts.
    - Tighten in the sequence shown to 25 Nm (18 lb-ft).

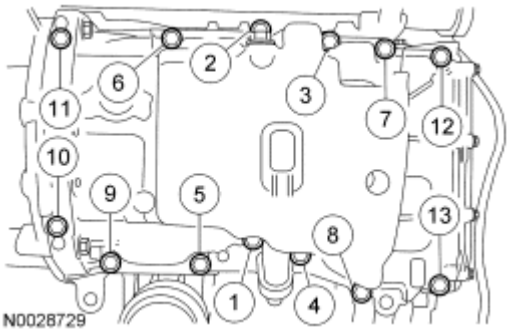

Fig. 195: Identifying Tightening Sequence Of Oil Pan Bolts
Courtesy of FORD MOTOR CO.

12. Install the 3 oil pan-to-bellhousing bolts.
    - Tighten to 48 Nm (35 lb-ft).
13. Install the engine front cover. For additional information, refer to **Engine Front Cover**.
14. Fill the engine with clean engine oil.

ENGINE MOUNT

Special Tools

Illustration	Tool Name	Tool Number
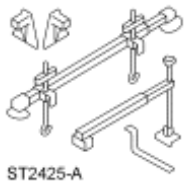 ST2425-A	3-Bar Engine Support Kit	303-F072

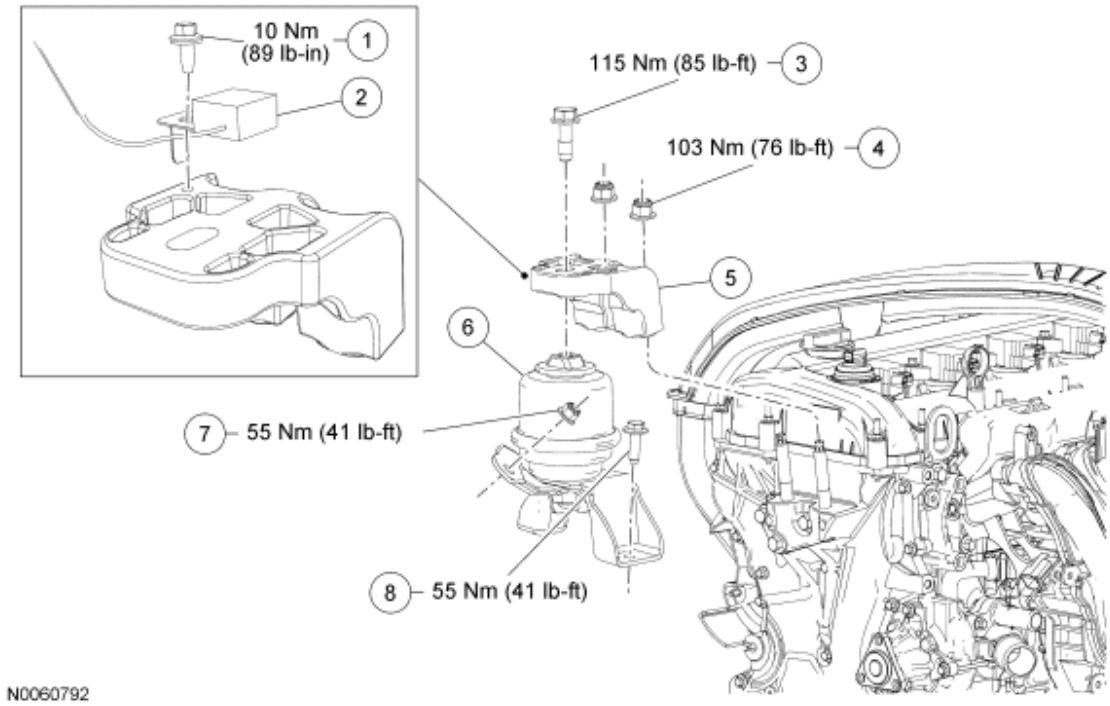

Fig. 196: Exploded View Of Engine Mount With Torque Specifications
Courtesy of FORD MOTOR CO.

Item	Part Number	Description
1	W705936	Radio interference capacitor bolt
2	19A095	Radio frequency interference capacitor
3	W711684	Engine mount bracket bolt
4	W520214	Engine mount bracket nut (2 required)
5	6A094	Engine mount bracket
6	6F012	Engine mount
7	W711578	Engine mount nut
8	W706496	Engine mount bolt (2 required)

REMOVAL AND INSTALLATION

1. With the vehicle in NEUTRAL, position it on a hoist. For additional information, refer to **JACKING AND LIFTING** .
2. Remove the engine coolant degas bottle. For additional information, refer to **ENGINE COOLING** .
3. Install the special tool.
   - Attach the special tool to the front and rear engine lifting eyes.

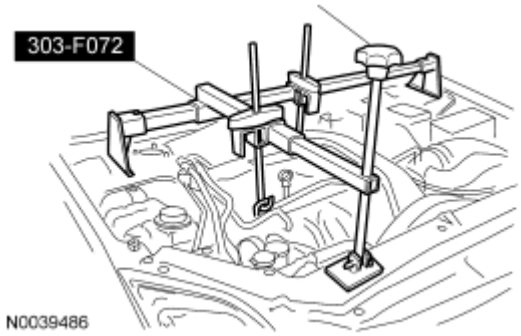

Fig. 197: Identifying Special Tool (303-F072)
Courtesy of FORD MOTOR CO.

4. Remove the bolt and the radio frequency interference capacitor.
   - To install, tighten to 10 Nm (89 lb-in).
5. Remove the engine mount bracket bolt.
   - To install, tighten to 115 Nm (85 lb-ft).
6. Use the special tool to raise the engine 25 mm (0.98 in).

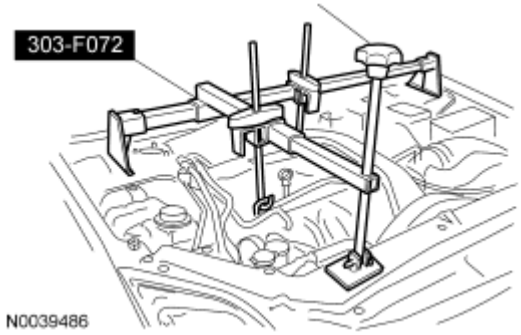

Fig. 198: Identifying Special Tool (303-F072)
Courtesy of FORD MOTOR CO.

7. Remove the 2 engine mount bracket nuts.
   - To install, tighten to 103 Nm (76 lb-ft).
8. Remove the nut, 2 bolts and the engine mount.
   - To install, tighten to 55 Nm (41 lb-ft).

NOTE: If the engine mount bracket is to be removed, the engine must be lowered

to avoid contact between the A/C tubes and the engine mount bracket.

9. Use the special tool to lower the engine 25 mm (0.98 in).
    - Remove the engine mount bracket.
10. To install, reverse the removal procedure.

REMOVAL

ENGINE - AUTOMATIC TRANSAXLE

Special Tools

Illustration	Tool Name	Tool Number
 ST2945-A	Separator, Ball joint	205-592
 ST2646-A	Adapter for 204-592	204-592/1
 ST1408-A	Tie-Rod End Remover	211-105
 ST1341-A	Heavy Duty Floor Crane	014-00071 or equivalent
 ST1602-A	Spreader Bar	303-D089 (D93P-6001-A3) or equivalent
 ST1293-A	Powertrain Lift	014-00765

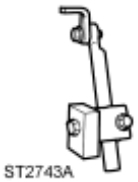 ST2743A	Universal Adapter Brackets	014-0001
Lifting Bracket Set, Engine		303-D095 (D94L-6001-A) or equivalent

WARNING: Do not smoke or carry lighted tobacco or open flame of any type when working on or near any fuel-related components. Highly flammable mixtures are always present and may be ignited. Failure to follow these instructions may result in personal injury.

All vehicles

1. With the vehicle in NEUTRAL, position it on a hoist. For additional information, refer to **JACKING AND LIFTING** .
2. Release the fuel system pressure. For additional information, refer to **FUEL SYSTEM - GENERAL INFORMATION** .
3. Disconnect the battery ground cable. For additional information, refer to **BATTERY, MOUNTING AND CABLES** .
4. Recover the air conditioning system. For additional information, refer to **CLIMATE CONTROL SYSTEM - GENERAL INFORMATION AND DIAGNOSTICS**
5. Place the steering wheel in the straight ahead position and the ignition key in the OFF position.
6. Remove the 2 nuts and the steering joint cover.

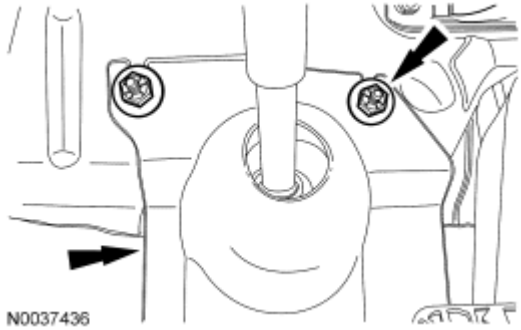

Fig. 199: Locating Steering Joint Cover And Nuts
Courtesy of FORD MOTOR CO.

CAUTION: Do not allow the intermediate shaft to rotate while it is disconnected from the gear or damage to the clockspring can occur. If there is evidence that the intermediate shaft has rotated, the clockspring must be removed and recentered. For additional information, refer to SUPPLEMENTAL RESTRAINT SYSTEM .

NOTE: Index the steering column shaft position to the steering gear for reference during installation.

7. Remove the bolt and disconnect the steering column shaft from the steering gear.

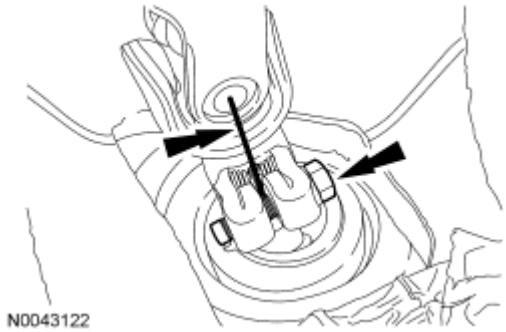

Fig. 200: Locating Steering Column Shaft Index Mark And Bolt
Courtesy of FORD MOTOR CO.

8. Remove the bolt and disconnect the power steering pressure (PSP) tube from the power steering pump.
   - Route the PSP tube out the bottom of the engine compartment.

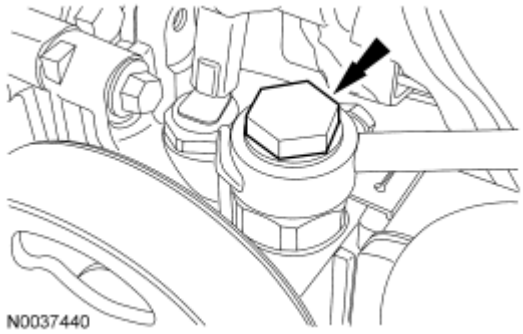

Fig. 201: Locating Power Steering Pressure (PSP) Tube Bolt
Courtesy of FORD MOTOR CO.

9. Drain the cooling system. For additional information, refer to **ENGINE COOLING** .
10. If equipped, remove the 7 screws and the underbody cover.

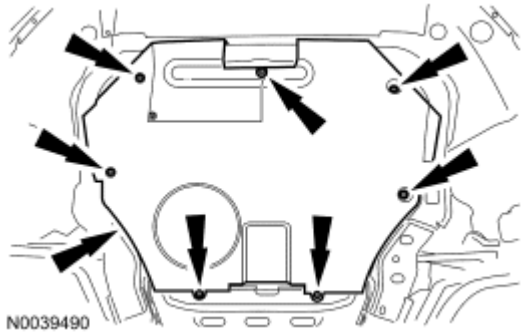

Fig. 202: Locating Underbody Cover Screws
Courtesy of FORD MOTOR CO.

11. Remove the exhaust flexible pipe. For additional information, refer to **EXHAUST SYSTEM** .

CAUTION: The steering gear-to-dash seal must be removed or it will be damaged when lowering the subframe.

12. Release the 4 clips and slide the steering gear-to-dash seal off of the steering gear and into the passenger compartment.

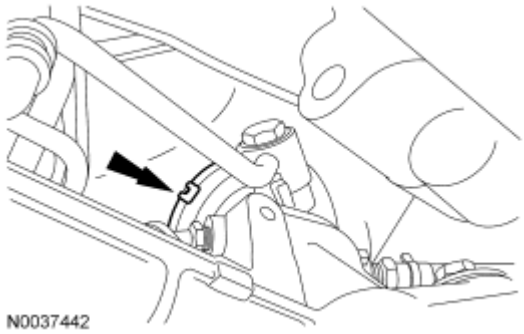

Fig. 203: Locating Steering Gear-To-Dash Seal Clips
Courtesy of FORD MOTOR CO.

13. Remove the engine roll restrictor bolt.

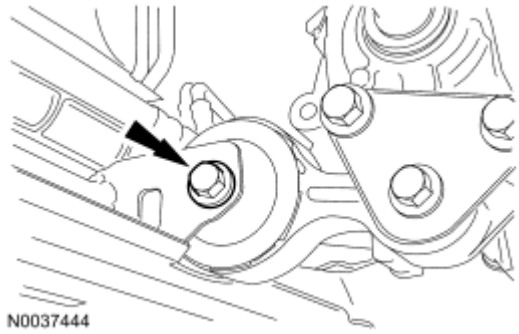

Fig. 204: Locating Engine Roll Restrictor Bolt
Courtesy of FORD MOTOR CO.

14. Remove the 4 screws and position the RH fender splash shield aside.

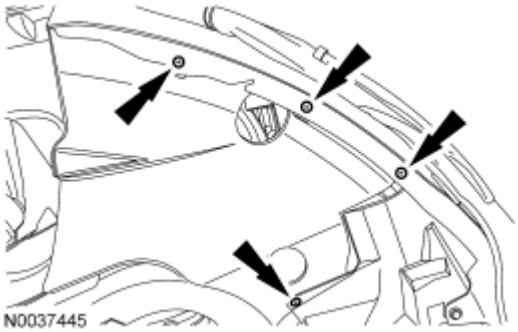

Fig. 205: Locating RH Fender Splash Shield Screws
Courtesy of FORD MOTOR CO.

15. Remove the 6 pin-type retainers (4 shown) and the RH splash shield.

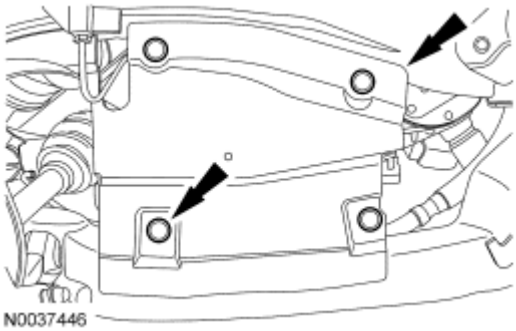

Fig. 206: Locating Splash Shield Pin-Type Retainers
Courtesy of FORD MOTOR CO.

16. Remove the 4 screws and position the LH fender splash shield aside.

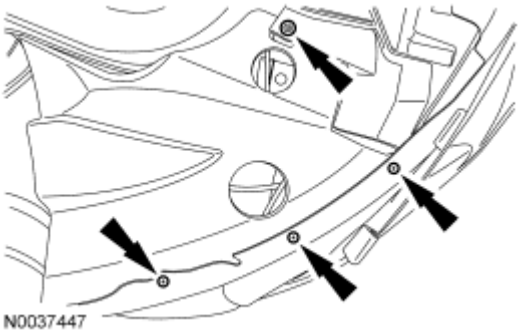

Fig. 207: Locating LH Fender Splash Shield Screws
Courtesy of FORD MOTOR CO.

17. Remove the 6 pin-type retainers (4 shown) and the LH splash shield.

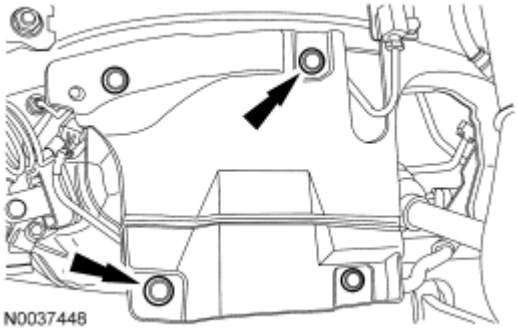

Fig. 208: Locating LH Splash Shield Pin-Type Retainers
Courtesy of FORD MOTOR CO.

NOTE: LH shown, RH similar.

18. Remove the cotter pins and nuts from the tie-rod ends.

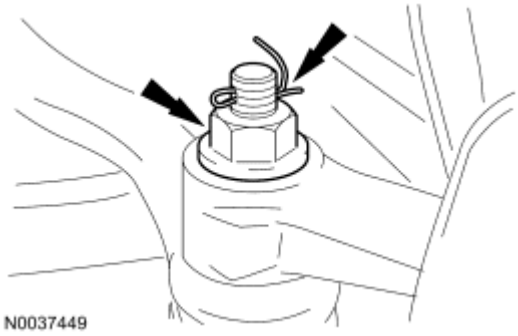

Fig. 209: Locating Tie-Rod Ends Nuts And Cotter Pin
Courtesy of FORD MOTOR CO.

NOTE: LH shown, RH similar.

19. Using the special tool, separate the tie-rod ends from the steering knuckles.

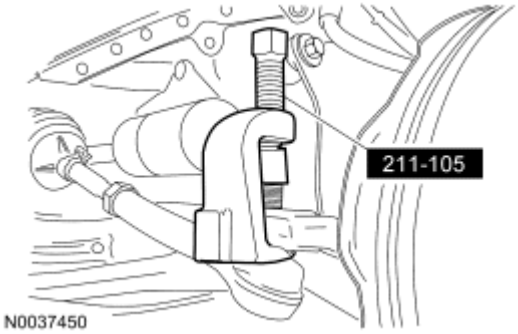

Fig. 210: Separating Tie-Rod Ends From Wheel Knuckles Using Special Tool (211-105)
Courtesy of FORD MOTOR CO.

20. Disconnect the power steering cooler tube.

Fig. 211: Locating Power Steering Cooler Tube
Courtesy of FORD MOTOR CO.

NOTE: LH shown, RH similar.

21. Remove the nuts and separate the sway bar links from the struts.

Fig. 212: Locating Sway Bar Links And Nuts
Courtesy of FORD MOTOR CO.

NOTE: LH shown, RH similar.

22. Remove the lower ball joint nuts.

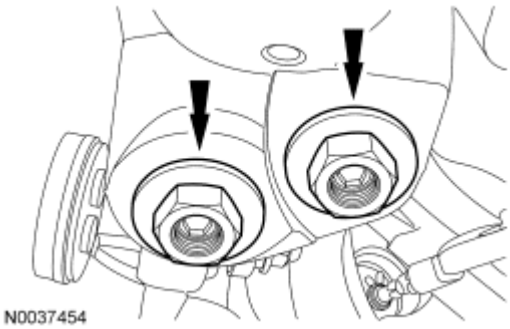

Fig. 213: Locating Lower Ball Joint Nuts

Courtesy of FORD MOTOR CO.

CAUTION: When the lower ball joint is separated from the wheel knuckle, the lower arm may strike the outer constant velocity (CV) joint boot with enough force to damage the boot clamp. This will result in a loss of grease from the outer CV joint. Place a block of wood, or similar item, between the lower arm and the outer CV joint to prevent the lower arm from striking the outer CV joint.

NOTE: Once pressure is applied to the ball joint with the special tool, it may be necessary to tap the wheel knuckle at the ball joint area to separate the ball joint from the wheel knuckle.

NOTE: LH shown, RH similar.

23. Using the special tools, separate the lower ball joints from the lower control arms.

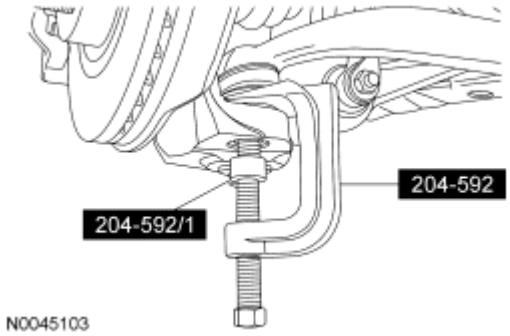

Fig. 214: Identifying Special Tools (204-592/1, 204-592)
Courtesy of FORD MOTOR CO.

NOTE: LH shown, RH similar.

24. Remove the through bolts from the lower control arms.

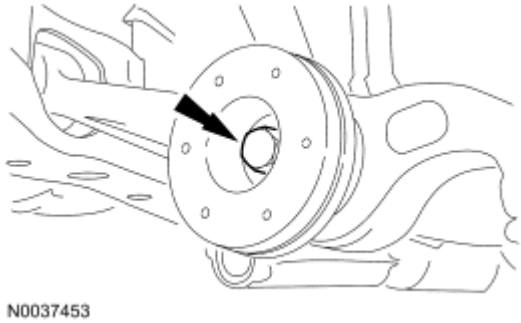

Fig. 215: Locating Lower Control Arms Through Bolt
Courtesy of FORD MOTOR CO.

25. Position the special tool under the subframe assembly.

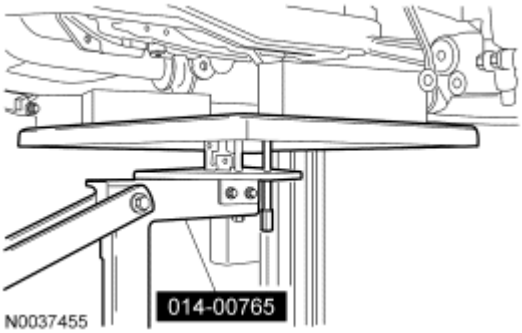

Fig. 216: Positioning Special Tool (014-00765) Under Subframe Assembly
Courtesy of FORD MOTOR CO.

NOTE: LH shown, RH similar.

26. Remove the subframe bracket-to-body bolts.

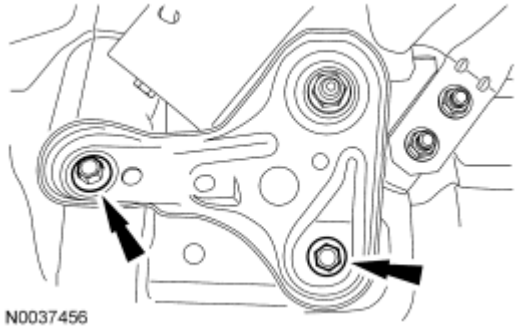

Fig. 217: Locating Subframe Bracket-To-Body Bolts
Courtesy of FORD MOTOR CO.

NOTE: LH shown, RH similar.

27. Remove the subframe nuts and the subframe brackets.

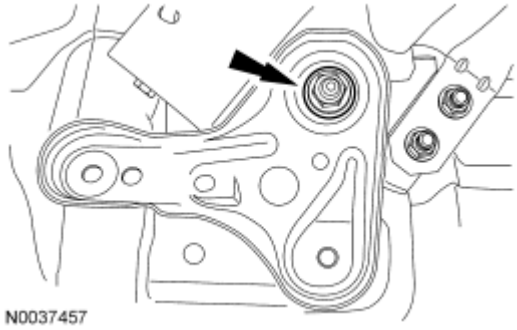

Fig. 218: Locating Subframe Nuts

Courtesy of FORD MOTOR CO.

NOTE: LH shown, RH similar.

28. Remove the front subframe nuts.

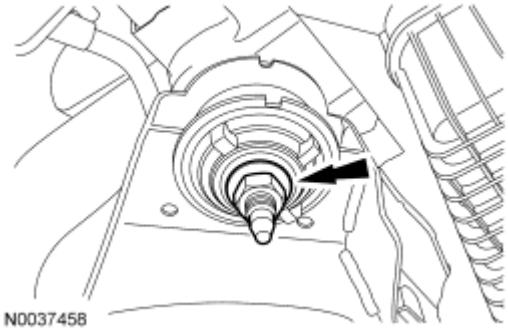

Fig. 219: Locating Front Subframe Nuts
Courtesy of FORD MOTOR CO.

29. Lower the subframe assembly from the vehicle.
30. Remove the engine oil pan drain plug and drain the engine oil.
    - Install the drain plug and tighten to 28 Nm (21 lb-ft).

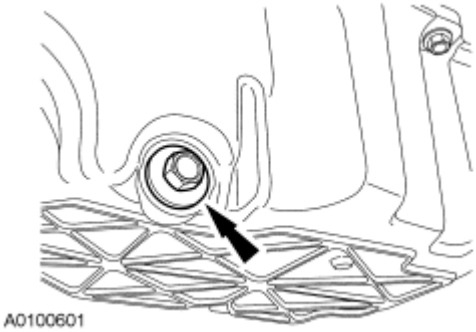

Fig. 220: Locating Engine Oil Pan Drain Plug
Courtesy of FORD MOTOR CO.

31. Remove the oil filter element. For additional information, refer to **Engine Lubrication Components - Exploded View** and **Oil Filter Element**.
32. Remove the bolt, 2 nuts and the generator air inlet duct.

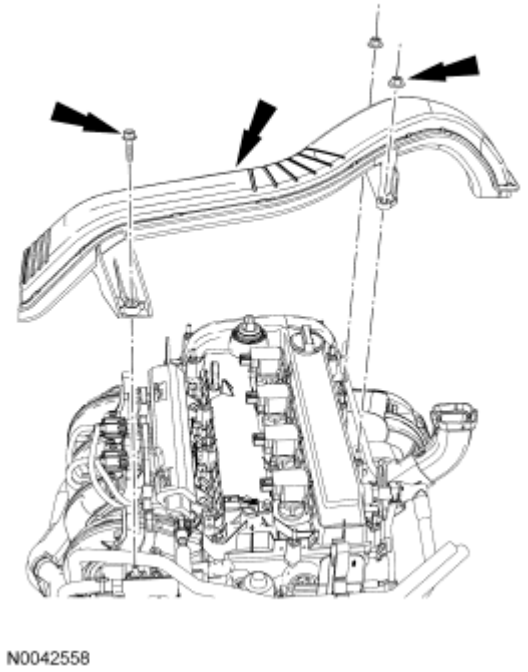

Fig. 221: Locating Generator Air Inlet Duct, Bolt And Nuts
Courtesy of FORD MOTOR CO.

33. Remove the engine air cleaner and air cleaner outlet pipe. For additional information, refer to **INTAKE AIR DISTRIBUTION AND FILTERING - 2.3L** .
34. Remove the battery tray. For additional information, refer to **BATTERY, MOUNTING AND CABLES** .
35. Remove the nut and disconnect the wire from the battery cable.

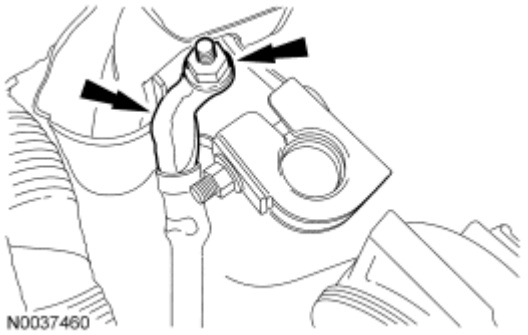

Fig. 222: Locating Battery Cable And Nut
Courtesy of FORD MOTOR CO.

36. Disconnect the 2 engine wiring harness electrical connectors.

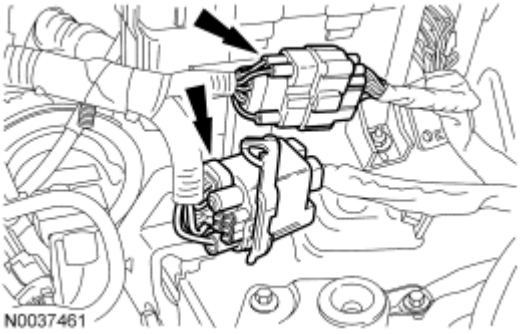

Fig. 223: Locating Engine Wiring Harness Electrical Connectors
Courtesy of FORD MOTOR CO.

37. Remove the bolt and the ground wire.

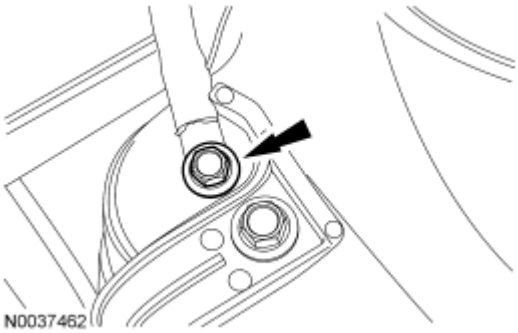

Fig. 224: Locating Ground Wire And Bolt
Courtesy of FORD MOTOR CO.

38. Disconnect the powertrain control module (PCM) electrical connector and the pin-type retainer.

Fig. 225: Locating Powertrain Control Module (PCM) Electrical Connector And Pin-Type Retainer
Courtesy of FORD MOTOR CO.

39. Disconnect the fuel supply tube from the fuel rail. For additional information, refer to **FUEL SYSTEM - GENERAL INFORMATION** .
40. Disconnect the crankcase vent tube from the valve cover.

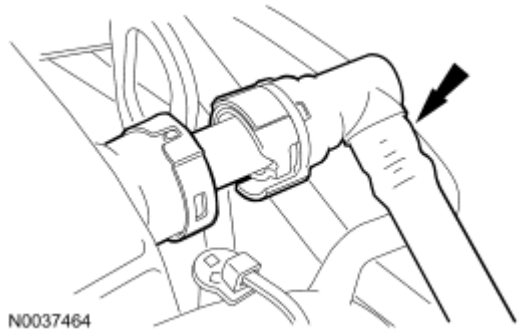

Fig. 226: Locating Crankcase Vent Tube
Courtesy of FORD MOTOR CO.

41. Depress the locking ring and disconnect the brake booster vacuum supply tube from the intake manifold.

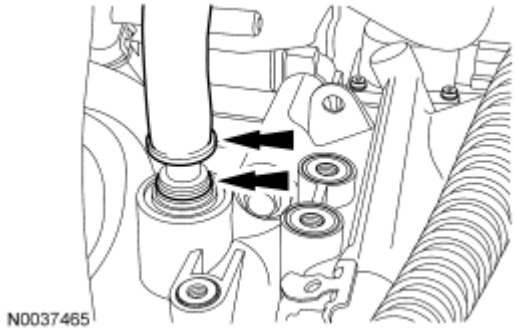

Fig. 227: Locating Locking Ring And Brake Booster Vacuum Supply Tube
Courtesy of FORD MOTOR CO.

42. Disconnect the evaporative emissions (EVAP) tube from the intake manifold.

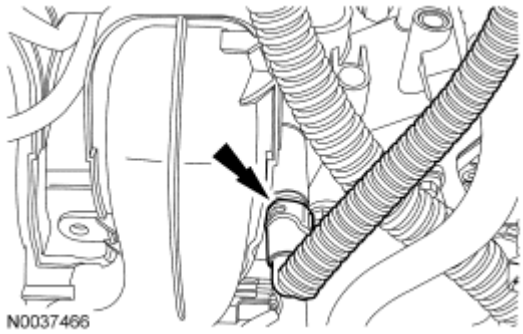

Fig. 228: Locating Evaporative Emissions (EVAP) Tube From Intake Manifold
Courtesy of FORD MOTOR CO.

43. Detach the retaining clip and position the EVAP tube bundle aside.

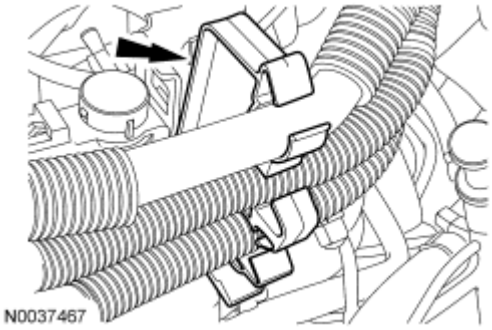

Fig. 229: Locating Evaporative Emissions (EVAP) Tube Bundle Retaining Clip
Courtesy of FORD MOTOR CO.

44. Disconnect the upper radiator and heater hoses from the coolant bypass.

Fig. 230: Locating Upper Radiator And Heater Hoses
Courtesy of FORD MOTOR CO.

45. If equipped, disconnect the block heater electrical connector and detach the harness retaining clips from the heater hose.

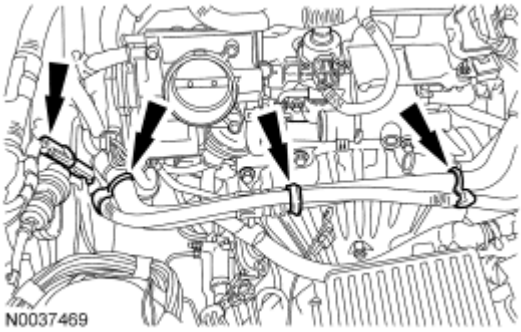

Fig. 231: Locating Block Heater Electrical Connector Harness Retaining Clips
Courtesy of FORD MOTOR CO.

46. Disconnect the heater hose inline connector.

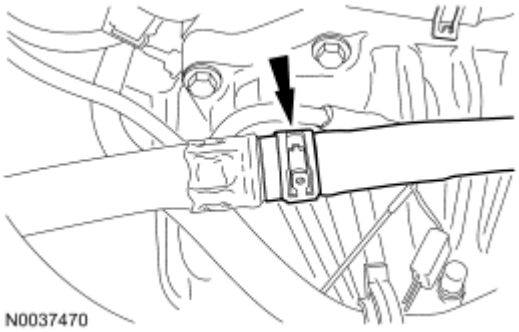

Fig. 232: Locating Heater Hose Inline Connector
Courtesy of FORD MOTOR CO.

47. Disconnect the transaxle control cable from the control lever.
    - Detach the control cable from the bracket.

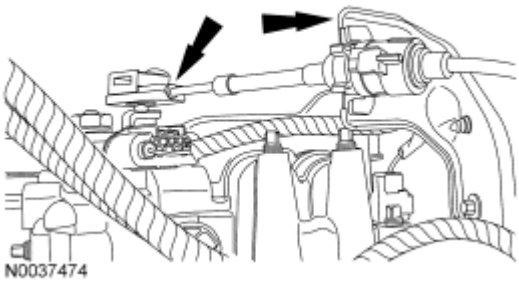

Fig. 233: Locating Transaxle Control Cable From Control Lever
Courtesy of FORD MOTOR CO.

48. Disconnect the transaxle cooler tubes.

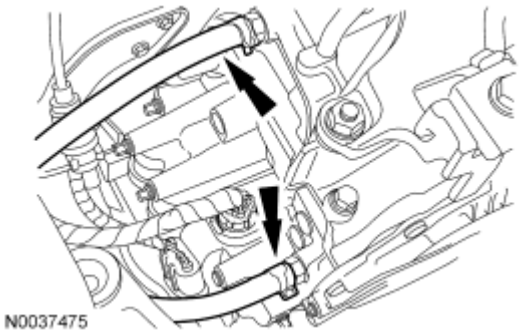

Fig. 234: Locating Transaxle Cooler Tubes
Courtesy of FORD MOTOR CO.

49. Remove the bolt and position the radio frequency interference capacitor and ground wire aside.

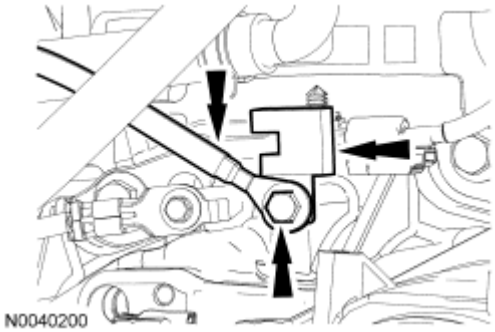

Fig. 235: Locating Radio Frequency Interference Capacitor, Ground Wire And Bolt
Courtesy of FORD MOTOR CO.

50. Detach the coolant vent hose retaining clip from the A/C tube.

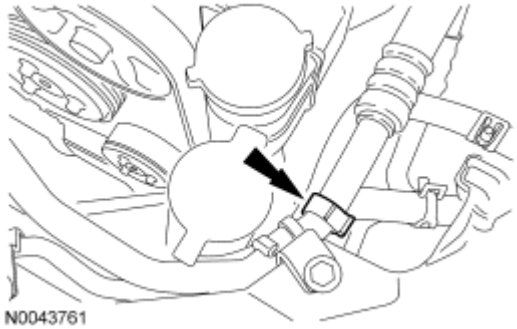

Fig. 236: Locating Coolant Vent Hose Retaining Clip
Courtesy of FORD MOTOR CO.

51. Disconnect the power steering cooler tube.

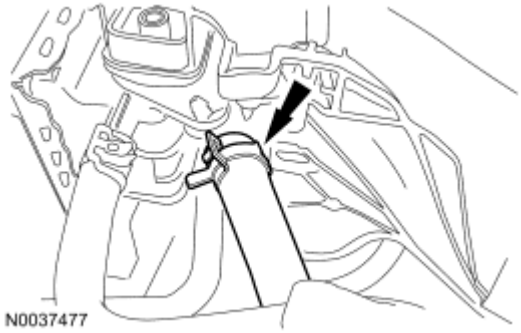

Fig. 237: Locating Power Steering Cooler Tube
Courtesy of FORD MOTOR CO.

52. Remove the 2 A/C tube bracket bolts.

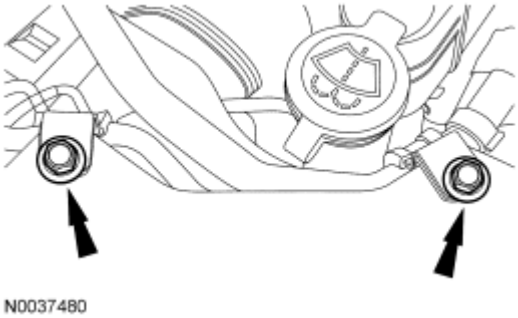

Fig. 238: Locating A/C Tube Bracket Bolts
Courtesy of FORD MOTOR CO.

53. Remove the 2 nuts and disconnect the A/C tubes.

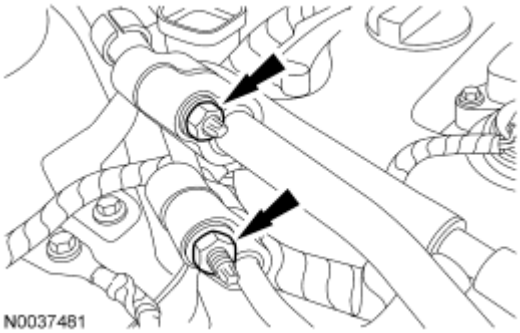

Fig. 239: Locating A/C Tubes Nuts
Courtesy of FORD MOTOR CO.

54. Remove the nut and disconnect the A/C tube from the condenser.

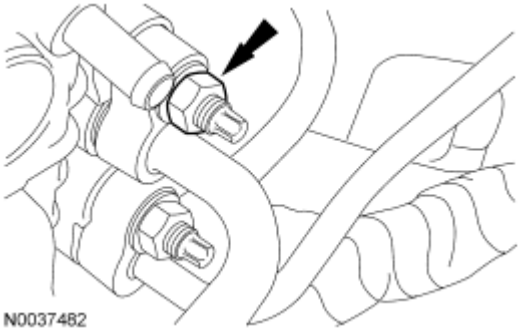

Fig. 240: Locating A/C Tube To Condenser Nut
Courtesy of FORD MOTOR CO.

55. Remove the bolt and the radio frequency interference capacitor from the engine mount bracket.

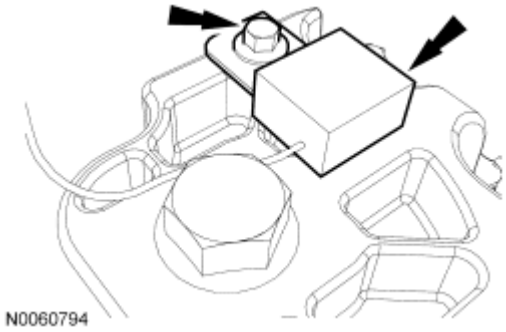

Fig. 241: Locating Radio Frequency Interference Capacitor Bolt
Courtesy of FORD MOTOR CO.

56. Remove the retaining clip and disconnect the lower radiator hose.

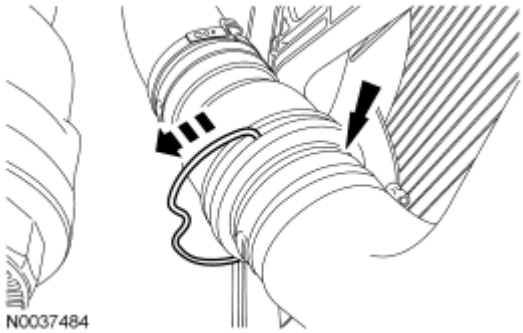

Fig. 242: Removing Retaining Clip And Locating Lower Radiator Hose
Courtesy of FORD MOTOR CO.

57. Using a suitable tool, separate the LH halfshaft from the transaxle and support the halfshaft with a length of mechanic's wire.
58. Remove the 2 RH halfshaft carrier bearing bracket bolts.

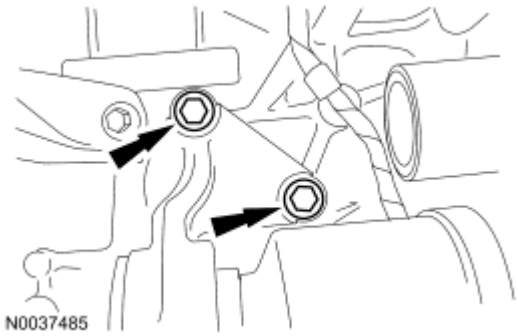

Fig. 243: Locating RH Halfshaft Carrier Bearing Bracket Bolts
Courtesy of FORD MOTOR CO.

59. Separate the RH halfshaft from the transaxle and support the halfshaft with a length of mechanic's wire.

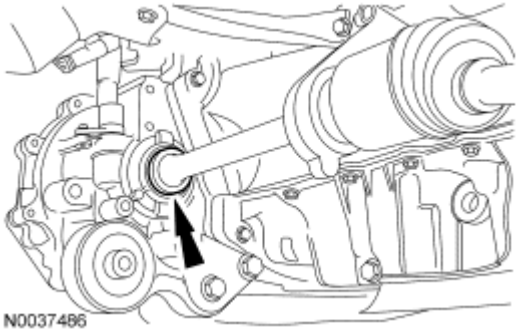

Fig. 244: Locating RH Halfshaft Into Transaxle
Courtesy of FORD MOTOR CO.

60. Remove the bellhousing-to-oil pan bolt.

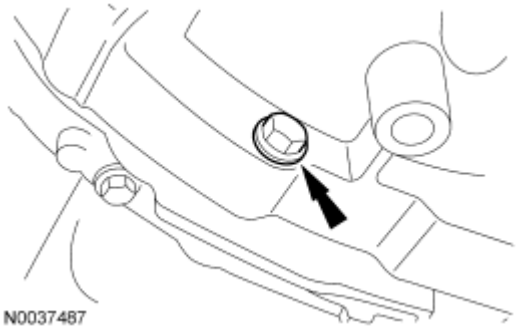

Fig. 245: Locating Bellhousing-To-Oil Pan Bolt
Courtesy of FORD MOTOR CO.

61. Remove the 2 oil pan-to-bellhousing bolts.

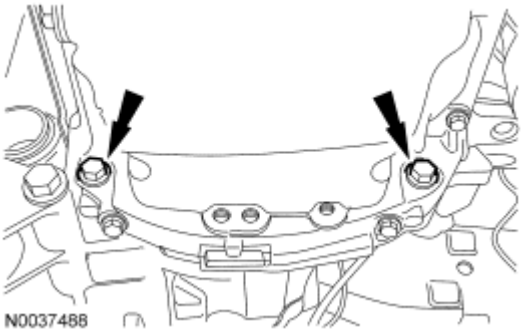

Fig. 246: Locating Oil Pan-To-Bellhousing Bolts
Courtesy of FORD MOTOR CO.

Vehicles with secondary air injection (AIR)

62. Disconnect the AIR pump electrical connector.

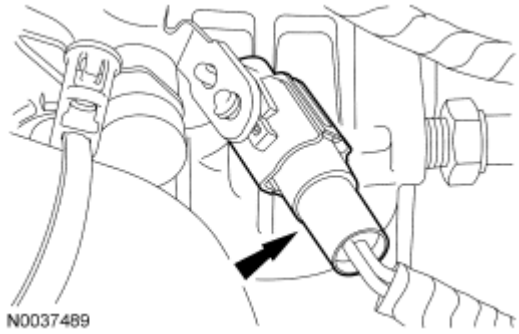

Fig. 247: Locating AIR Pump Electrical Connector
Courtesy of FORD MOTOR CO.

63. Remove the 3 bolts and position the AIR pump aside.

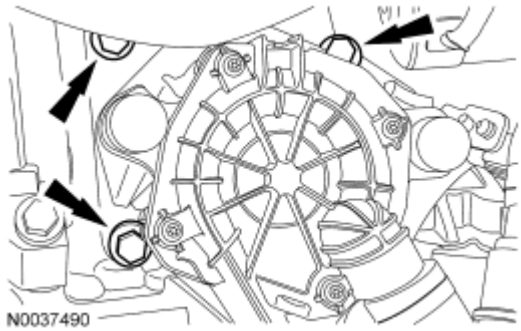

Fig. 248: Locating AIR Pump Bolts
Courtesy of FORD MOTOR CO.

All vehicles

NOTE: Position a suitable block of wood under the transaxle.

64. Install the special tools onto the engine.
    - Raise the engine and transaxle 25.4 mm (1 in) to neutralize the engine and transaxle mounts.

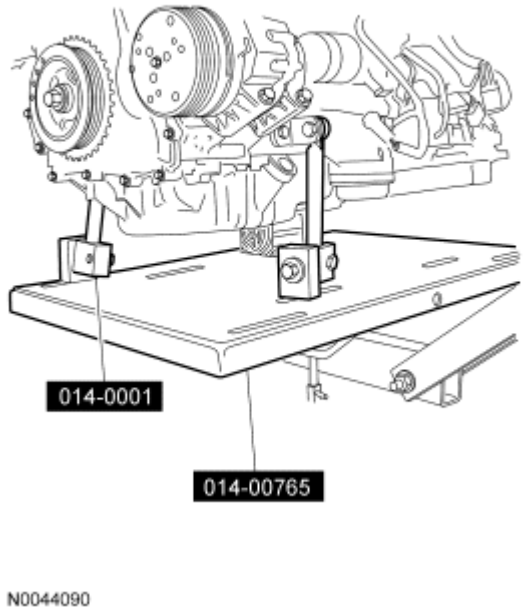

Fig. 249: Identifying Special Tools (014-0001, 014-00765)
Courtesy of FORD MOTOR CO.

65. Remove the 2 transaxle mount bolts.

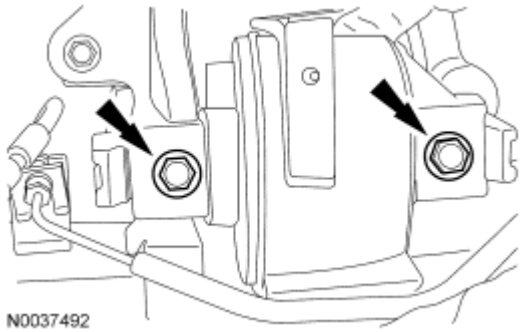

Fig. 250: Locating Transaxle Mount Bolts
Courtesy of FORD MOTOR CO.

66. Remove the bolt, 2 nuts and the engine mount bracket.

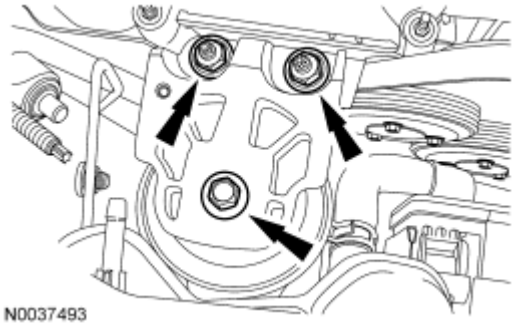

Fig. 251: Locating Engine Mount Bracket Bolt And Nuts
Courtesy of FORD MOTOR CO.

67. Lower the engine and transaxle from the vehicle.
68. Remove the 2 nuts and disconnect the starter wires.

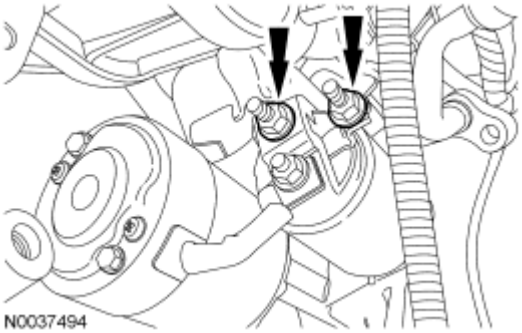

Fig. 252: Locating Starter Wire Nuts
Courtesy of FORD MOTOR CO.

69. Detach the 2 wiring harness retainers from the starter stud bolts.
70. Remove the 2 stud bolts and the starter.

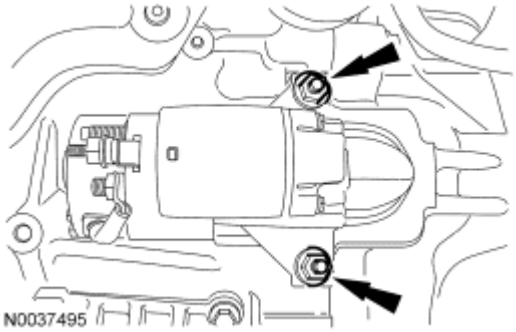

Fig. 253: Locating Starter And Stud Bolts
Courtesy of FORD MOTOR CO.

71. Remove the 4 torque convertor nuts.

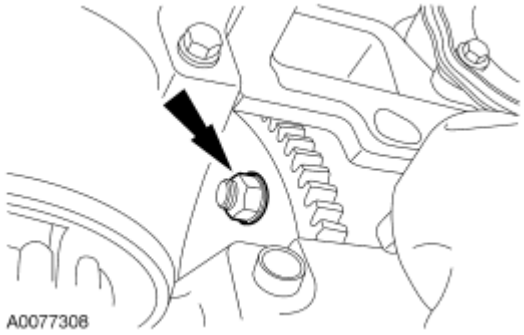

Fig. 254: Locating Torque Converter Nuts
Courtesy of FORD MOTOR CO.

72. Remove the bolt and ground wire.

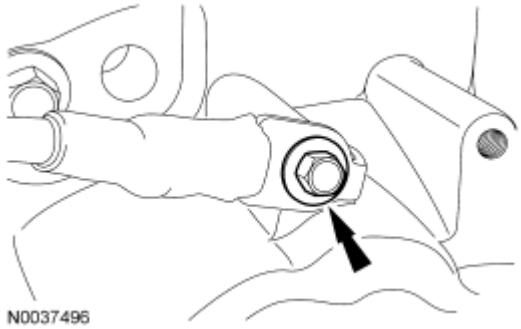

Fig. 255: Locating Ground Wire Bolt
Courtesy of FORD MOTOR CO.

73. Remove the nut and position the engine wiring harness bracket aside.

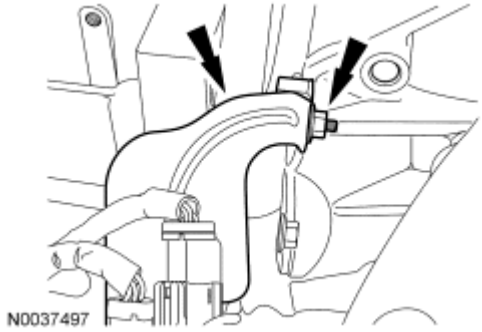

Fig. 256: Locating Engine Wiring Harness Bracket And Nut
Courtesy of FORD MOTOR CO.

74. Disconnect the transmission range (TR) sensor and primary control solenoid electrical connectors.

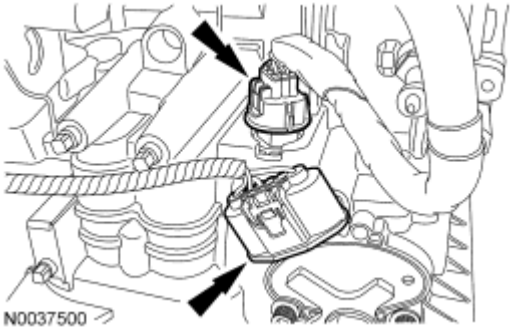

Fig. 257: Locating Transmission Range (TR) Sensor And Primary Control Solenoid Electrical Connectors
Courtesy of FORD MOTOR CO.

75. Disconnect the transaxle control electrical connectors.

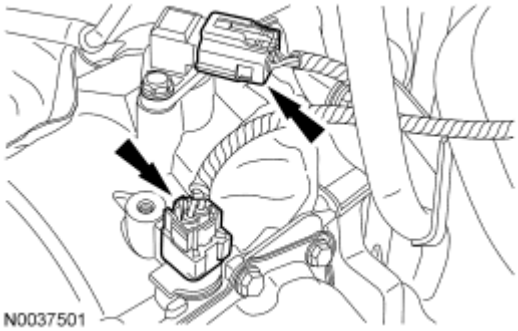

Fig. 258: Locating Transaxle Control Electrical Connectors
Courtesy of FORD MOTOR CO.

76. Disconnect the turbine shaft speed (TSS) sensor electrical connector.

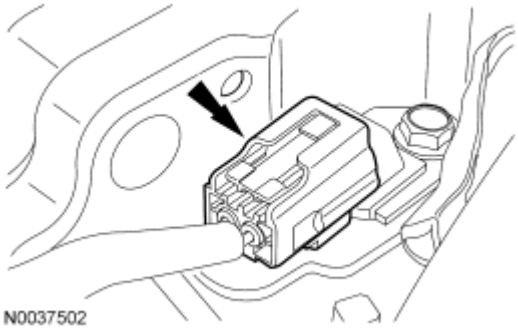

Fig. 259: Locating Turbine Shaft Speed (TSS) Sensor Electrical Connector
Courtesy of FORD MOTOR CO.

77. Disconnect the output shaft speed (OSS) sensor electrical connector.

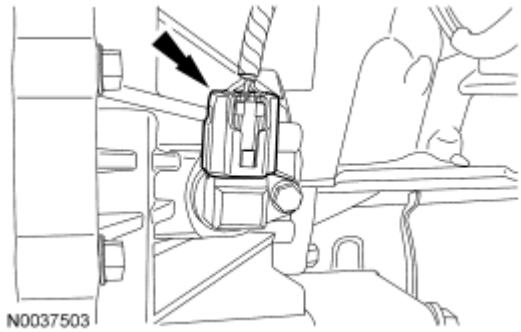

Fig. 260: Locating Output Shaft Speed (OSS) Sensor Electrical Connector
Courtesy of FORD MOTOR CO.

78. Disconnect the transaxle pressure switch electrical connector.

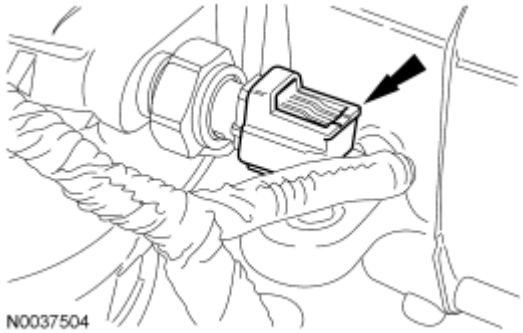

Fig. 261: Locating Transaxle Pressure Switch Electrical Connector
Courtesy of FORD MOTOR CO.

79. Install the special tools and remove the engine and transaxle from the powertrain lift table.

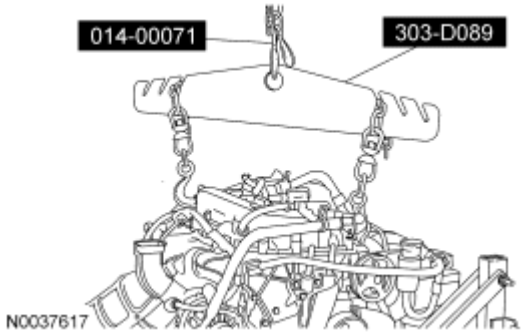

Fig. 262: Identifying Special Tools (014-00071, 303-D089)
Courtesy of FORD MOTOR CO.

80. Remove the bellhousing-to-engine retainers.
    - Separate the engine and transaxle.

ENGINE - MANUAL TRANSAXLE

Special Tools

Illustration	Tool Name	Tool Number
 ST2945-A	Separator, Ball joint	205-592
 ST2646-A	Adapter for 204-592	204-592/1
 ST1408-A	Tie-Rod End Remover	211-105
 ST2934-A	Remover, Halfshaft	205-832
 ST1185-A	Slide Hammer	100-001
 ST2939-A	Remover, Halfshaft	205-243
 ST1341-A	Heavy Duty Floor Crane	014-00071 or equivalent
	Spreader Bar	303-D089 (D93P-6001-A3) or equivalent

 ST1602-A		
 ST1293-A	Powertrain Lift	014-00765
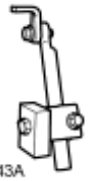 ST2743A	Universal Adapter Brackets	014-0001
Lifting Bracket Set, Engine		303-D095 (D94L-6001-A) or equivalent

WARNING: Do not smoke or carry lighted tobacco or open flame of any type when working on or near any fuel-related components. Highly flammable mixtures are always present and may be ignited. Failure to follow these instructions may result in personal injury.

1. With the vehicle in NEUTRAL, position it on a hoist. For additional information, refer to **JACKING AND LIFTING** .
2. Release the fuel system pressure. For additional information, refer to **FUEL SYSTEM - GENERAL INFORMATION** .
3. Disconnect the battery ground cable. For additional information, refer to **BATTERY, MOUNTING AND CABLES** .
4. Recover the air conditioning system. For additional information, refer to **CLIMATE CONTROL SYSTEM - GENERAL INFORMATION AND DIAGNOSTICS**
5. Place the steering wheel in the straight ahead position and the ignition key in the OFF position.
6. Remove the 2 nuts and the steering joint cover.

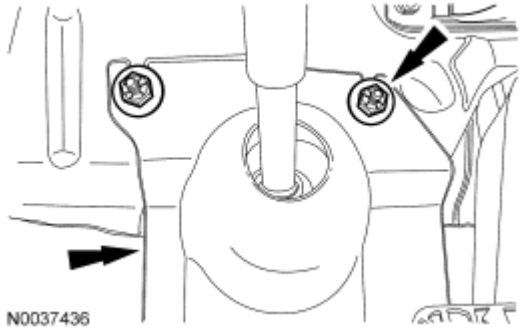

Fig. 263: Locating Steering Joint Cover And Nuts
Courtesy of FORD MOTOR CO.

CAUTION: Do not allow the intermediate shaft to rotate while it is disconnected from the gear or damage to the clockspring can occur. If there is evidence that the intermediate shaft has rotated, the clockspring must be removed and recentered. For additional information, refer to SUPPLEMENTAL RESTRAINT SYSTEM .

NOTE: Index the steering column shaft position to the steering gear for reference during installation.

7. Remove the bolt and disconnect the steering column shaft from the steering gear.

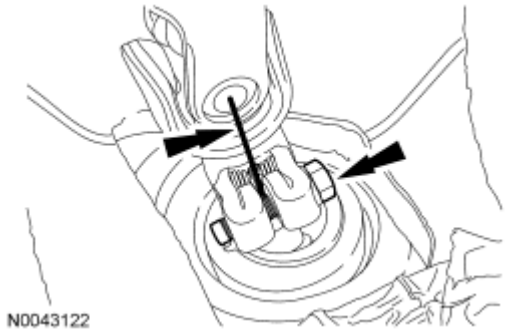

Fig. 264: Locating Steering Column Shaft Index Mark And Bolt
Courtesy of FORD MOTOR CO.

8. Remove the bolt and disconnect the power steering pressure (PSP) tube from the power steering pump.
   - Route the PSP tube out the bottom of the engine compartment.

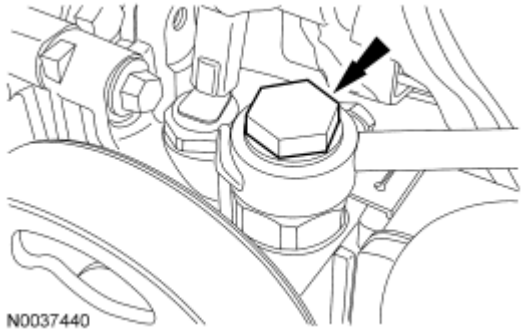

Fig. 265: Locating Power Steering Pressure (PSP) Tube Bolt
Courtesy of FORD MOTOR CO.

9. Drain the cooling system. For additional information, refer to **ENGINE COOLING** .
10. If equipped, remove the 7 screws and the underbody cover.

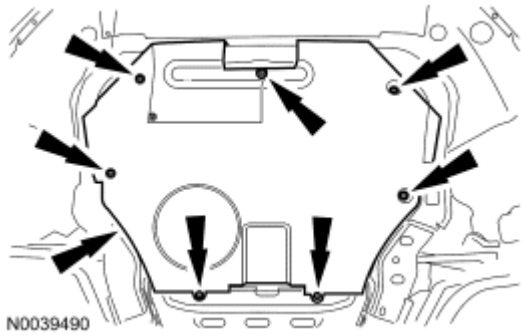

Fig. 266: Locating Underbody Cover Screws
Courtesy of FORD MOTOR CO.

11. Remove the exhaust flexible pipe. For additional information, refer to **EXHAUST SYSTEM** .

CAUTION: The steering gear-to-dash seal must be removed or it will be damaged when lowering the subframe.

12. Release the 4 clips and slide the steering gear-to-dash seal off of the steering gear and into the passenger compartment.

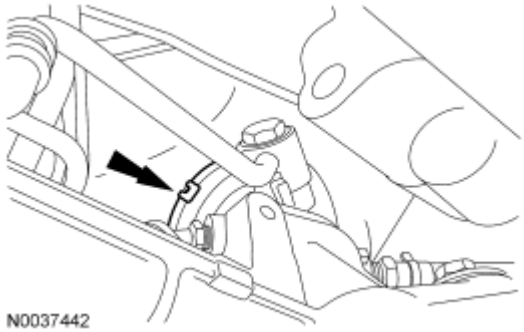

Fig. 267: Locating Steering Gear-To-Dash Seal Clips
Courtesy of FORD MOTOR CO.

13. Remove the engine roll restrictor bolt.

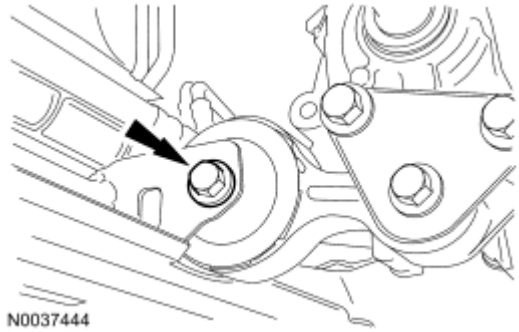

Fig. 268: Locating Engine Roll Restrictor Bolt

Courtesy of FORD MOTOR CO.

14. Remove the 4 screws and position the RH fender splash shield aside.

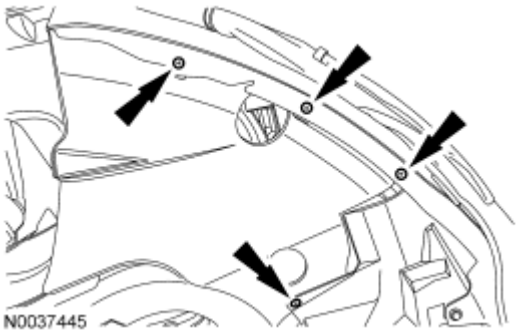

Fig. 269: Locating RH Fender Splash Shield Screws
Courtesy of FORD MOTOR CO.

15. Remove the 6 pin-type retainers (4 shown) and the RH splash shield.

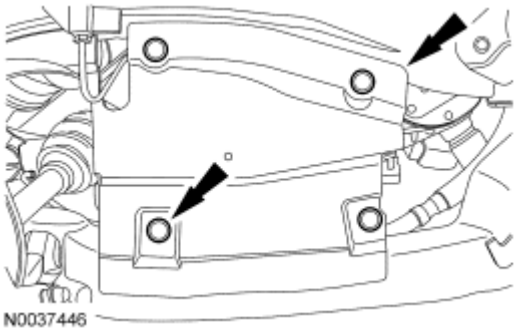

Fig. 270: Locating Splash Shield Pin-Type Retainers
Courtesy of FORD MOTOR CO.

16. Remove the 4 screws and position the LH fender splash shield aside.

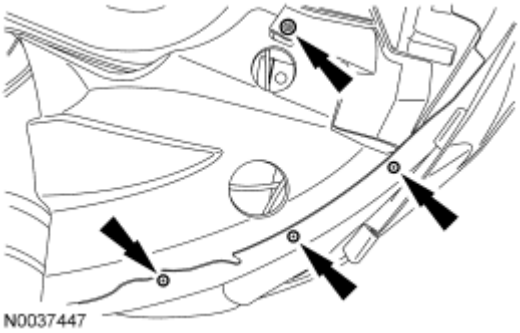

Fig. 271: Locating LH Fender Splash Shield Screws
Courtesy of FORD MOTOR CO.

17. Remove the 6 pin-type retainers (4 shown) and the LH splash shield.

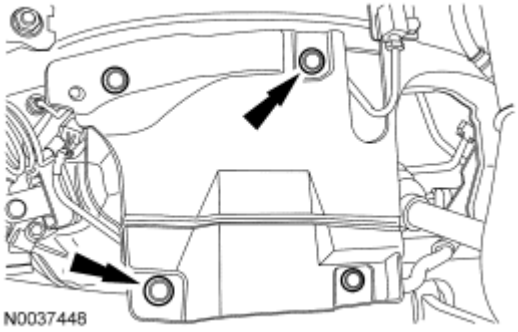

Fig. 272: Locating LH Splash Shield Pin-Type Retainers
Courtesy of FORD MOTOR CO.

NOTE: LH shown, RH similar.

18. Remove the cotter pins and nuts from the tie-rod ends.

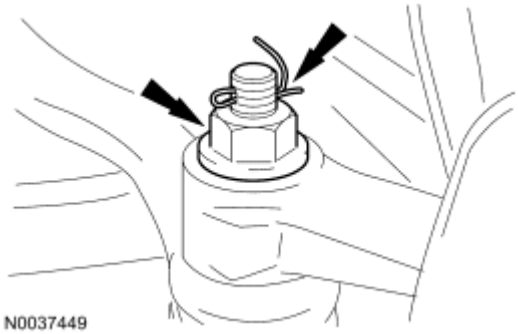

Fig. 273: Locating Tie-Rod Ends Nuts And Cotter Pin
Courtesy of FORD MOTOR CO.

NOTE: LH shown, RH similar.

19. Using the special tool, separate the tie-rod ends from the steering knuckles.

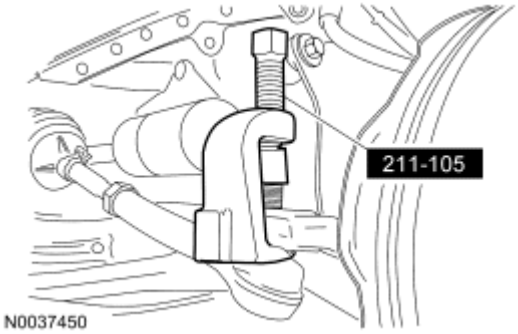

Fig. 274: Separating Tie-Rod Ends From Wheel Knuckles Using Special Tool (211-105)
Courtesy of FORD MOTOR CO.

20. Disconnect the power steering cooler tube.

Fig. 275: Locating Power Steering Cooler Tube
Courtesy of FORD MOTOR CO.

NOTE: LH shown, RH similar.

21. Remove the nuts and separate the sway bar links from the struts.

Fig. 276: Locating Sway Bar Links And Nuts
Courtesy of FORD MOTOR CO.

NOTE: LH shown, RH similar.

22. Remove the lower ball joint nuts.

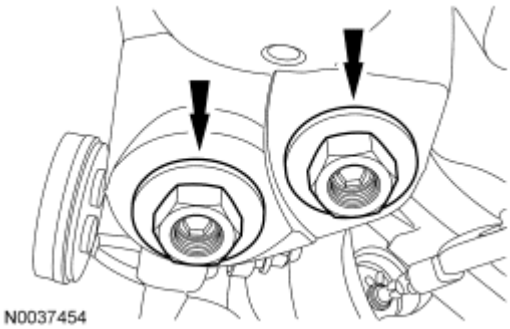

Fig. 277: Locating Lower Ball Joint Nuts

Courtesy of FORD MOTOR CO.

CAUTION: When the lower ball joint is separated from the wheel knuckle, the lower arm may strike the outer constant velocity (CV) joint boot with enough force to damage the boot clamp. This will result in a loss of grease from the outer CV joint. Place a block of wood, or similar item, between the lower arm and the outer CV joint to prevent the lower arm from striking the outer CV joint.

NOTE: Once pressure is applied to the ball joint with the special tool, it may be necessary to tap the wheel knuckle at the ball joint area to separate the ball joint from the wheel knuckle.

NOTE: LH shown, RH similar.

23. Using the special tools, separate the lower ball joints from the lower control arms.

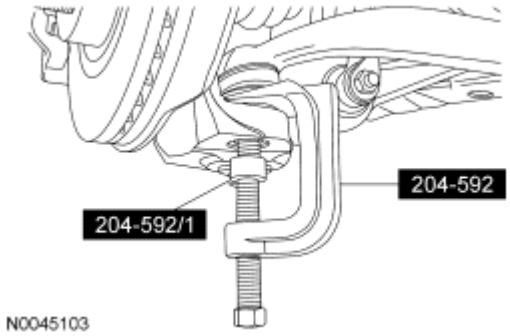

Fig. 278: Identifying Special Tools (204-592/1, 204-592)
Courtesy of FORD MOTOR CO.

NOTE: LH shown, RH similar.

24. Remove the through bolts from the lower control arms.

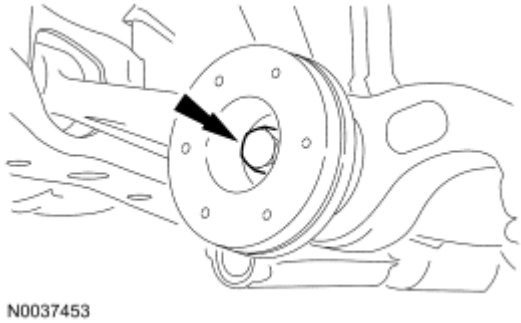

Fig. 279: Locating Lower Control Arms Through Bolt
Courtesy of FORD MOTOR CO.

25. Position the special tool under the subframe assembly.

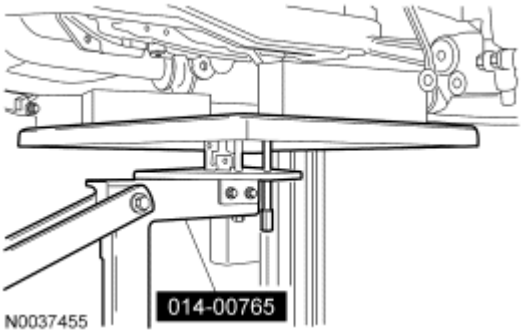

Fig. 280: Positioning Special Tool (014-00765) Under Subframe Assembly
Courtesy of FORD MOTOR CO.

NOTE: LH shown, RH similar.

26. Remove the subframe bracket-to-body bolts.

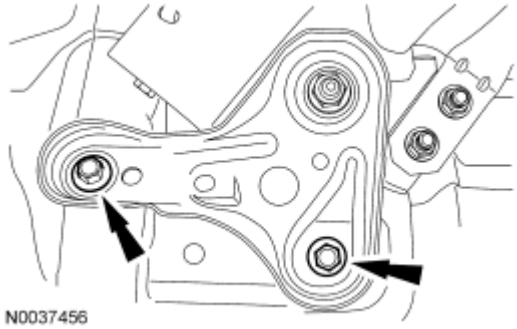

Fig. 281: Locating Subframe Bracket-To-Body Bolts
Courtesy of FORD MOTOR CO.

NOTE: LH shown, RH similar.

27. Remove the rear subframe nuts and the subframe brackets.

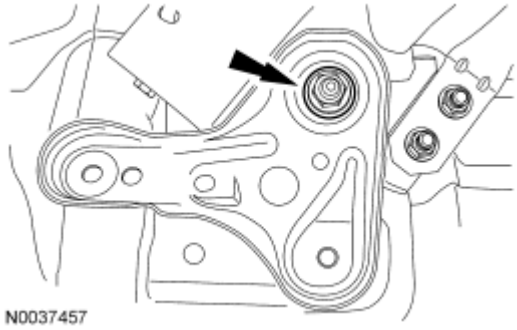

Fig. 282: Locating Subframe Nuts

Courtesy of FORD MOTOR CO.

NOTE: LH shown, RH similar.

28. Remove the front subframe nuts.

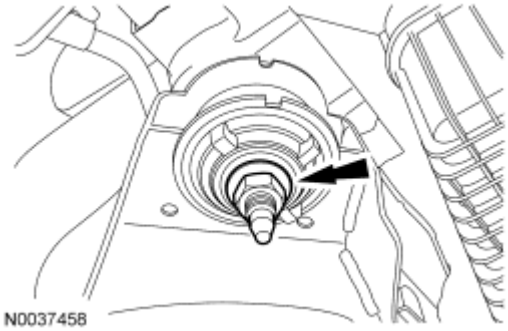

Fig. 283: Locating Front Subframe Nuts
Courtesy of FORD MOTOR CO.

29. Lower the subframe assembly from the vehicle.
30. Remove the engine oil pan drain plug and drain the engine oil.
    - Install the drain plug and tighten to 26 Nm (19 lb-ft).

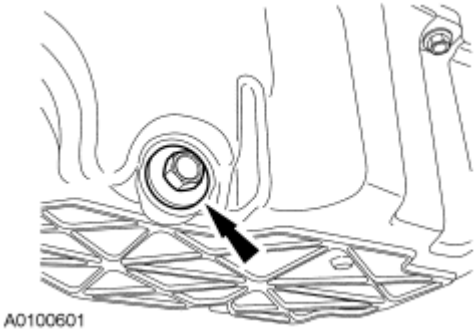

Fig. 284: Locating Engine Oil Pan Drain Plug
Courtesy of FORD MOTOR CO.

31. Remove the oil filter element. For additional information, refer to **Engine Lubrication Components - Exploded View** and **Oil Filter Element**.
32. Remove the bolt, 2 nuts and the generator air inlet duct.

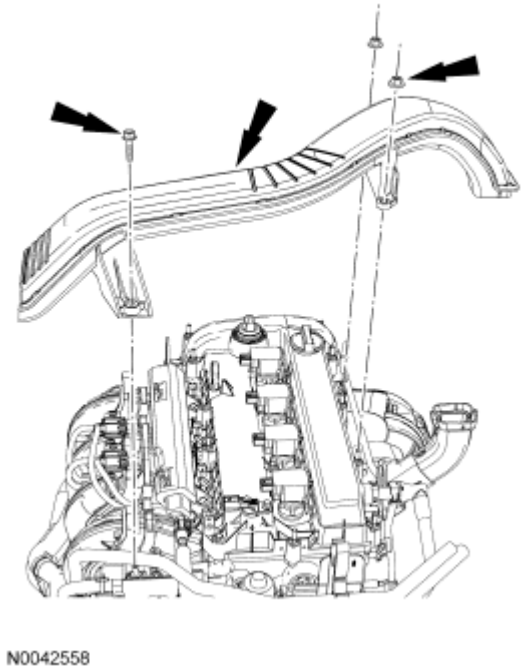

Fig. 285: Locating Generator Air Inlet Duct, Bolt And Nuts
Courtesy of FORD MOTOR CO.

33. Remove the engine air cleaner and air cleaner outlet pipe. For additional information, refer to **INTAKE AIR DISTRIBUTION AND FILTERING - 2.3L** .
34. Remove the battery tray. For additional information, refer to **BATTERY, MOUNTING AND CABLES** .
35. Remove the nut and disconnect the wire from the battery cable.

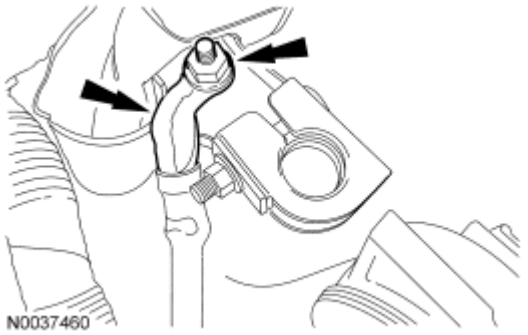

Fig. 286: Locating Battery Cable And Nut
Courtesy of FORD MOTOR CO.

36. Disconnect the 2 engine wiring harness electrical connectors.

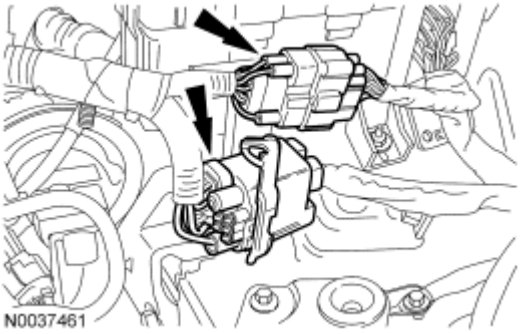

Fig. 287: Locating Engine Wiring Harness Electrical Connectors
Courtesy of FORD MOTOR CO.

37. Remove the bolt and the ground wire.

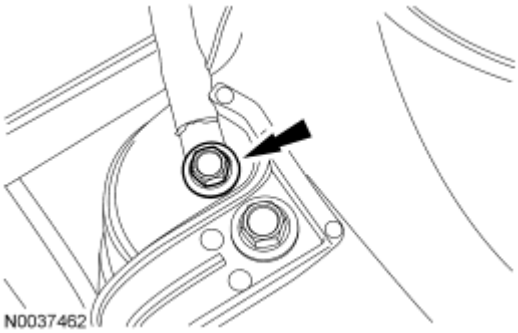

Fig. 288: Locating Ground Wire And Bolt
Courtesy of FORD MOTOR CO.

38. Disconnect the powertrain control module (PCM) electrical connector and pin-type retainer.

Fig. 289: Locating Powertrain Control Module (PCM) Electrical Connector And Pin-Type Retainer
Courtesy of FORD MOTOR CO.

39. Disconnect the fuel supply tube from the fuel rail. For additional information, refer to **FUEL SYSTEM - GENERAL INFORMATION** .
40. Disconnect the crankcase vent tube from the valve cover.

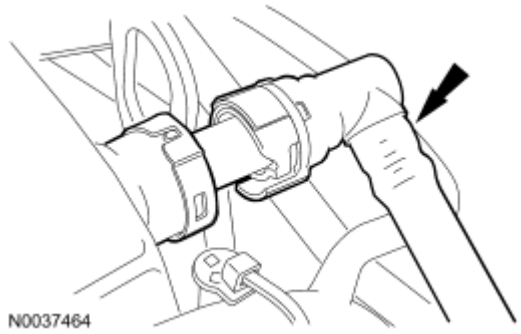

Fig. 290: Locating Crankcase Vent Tube
Courtesy of FORD MOTOR CO.

41. Depress the locking ring and disconnect the brake booster vacuum supply tube from the intake manifold.

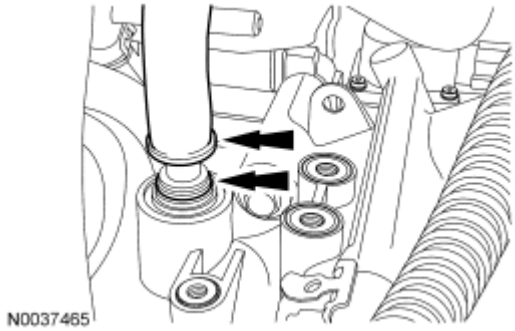

Fig. 291: Locating Locking Ring And Brake Booster Vacuum Supply Tube
Courtesy of FORD MOTOR CO.

42. Disconnect the evaporative emissions (EVAP) tube from the intake manifold.

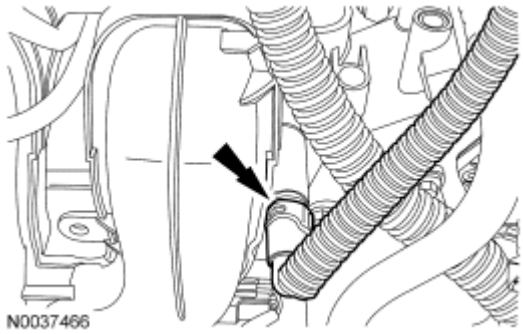

Fig. 292: Locating Evaporative Emissions (EVAP) Tube From Intake Manifold
Courtesy of FORD MOTOR CO.

43. Detach the retaining clip and position the EVAP tube bundle aside.

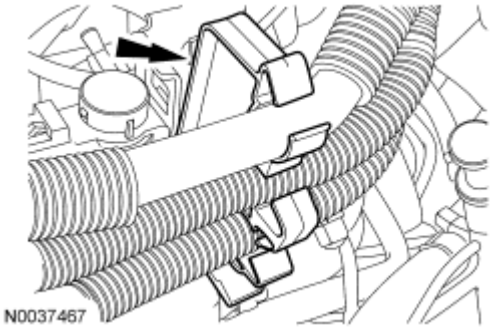

Fig. 293: Locating Evaporative Emissions (EVAP) Tube Bundle Retaining Clip
Courtesy of FORD MOTOR CO.

44. Disconnect the upper radiator and heater hoses from the coolant bypass.

Fig. 294: Locating Upper Radiator And Heater Hoses
Courtesy of FORD MOTOR CO.

45. If equipped, disconnect the block heater electrical connector and detach the harness retaining clips from the heater hose.

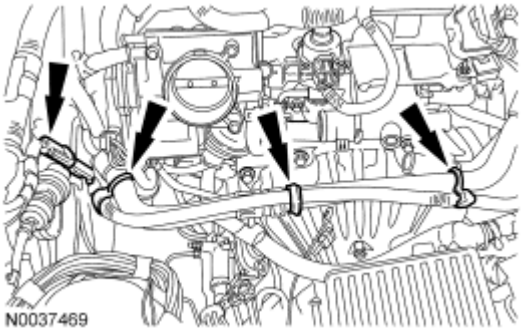

Fig. 295: Locating Block Heater Electrical Connector Harness Retaining Clips
Courtesy of FORD MOTOR CO.

46. Disconnect the heater hose inline connector.

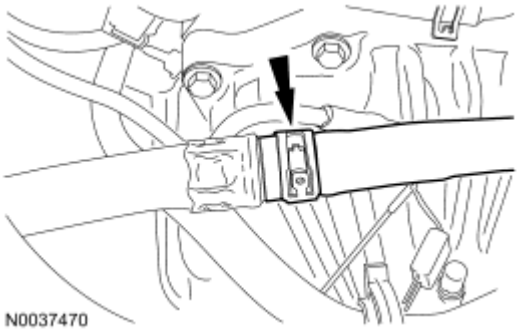

Fig. 296: Locating Heater Hose Inline Connector
Courtesy of FORD MOTOR CO.

47. Remove the 2 clutch tube bracket bolts.

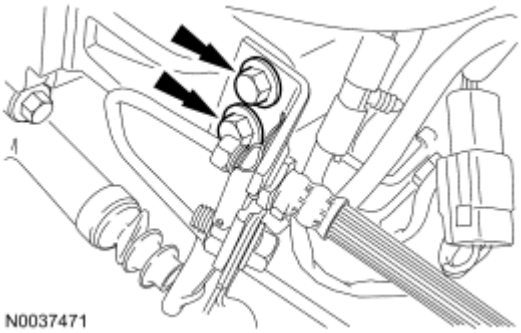

Fig. 297: Locating Clutch Tube Bracket Bolts
Courtesy of FORD MOTOR CO.

48. Remove the 2 bolts and position the clutch slave cylinder aside.

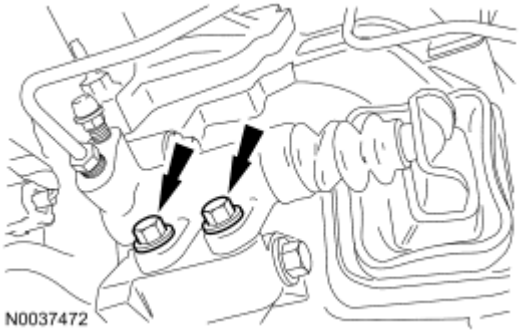

Fig. 298: Locating Clutch Slave Cylinder Bolts
Courtesy of FORD MOTOR CO.

49. Disconnect the transaxle control cables from the control levers.
    - Detach the control cables from the bracket.

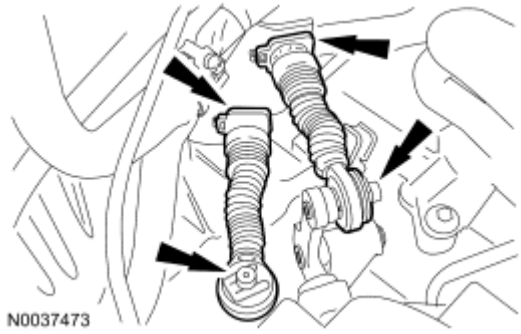

Fig. 299: Locating Control Cables
Courtesy of FORD MOTOR CO.

50. Disconnect the power steering cooler tube.

Fig. 300: Locating Power Steering Cooler Tube
Courtesy of FORD MOTOR CO.

51. Remove the bolt and position the radio frequency interference capacitor and ground wire aside.

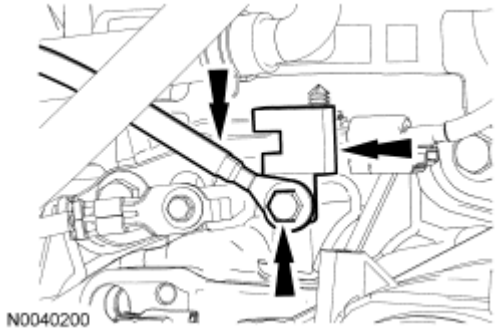

Fig. 301: Locating Radio Frequency Interference Capacitor, Ground Wire And Bolt
Courtesy of FORD MOTOR CO.

52. Detach the coolant vent hose retaining clip from the A/C tube.

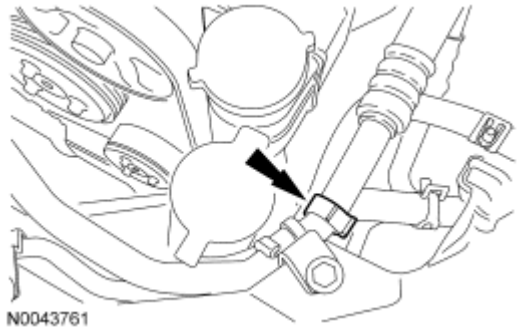

Fig. 302: Locating Coolant Vent Hose Retaining Clip
Courtesy of FORD MOTOR CO.

53. Remove the 2 A/C tube bracket bolts.

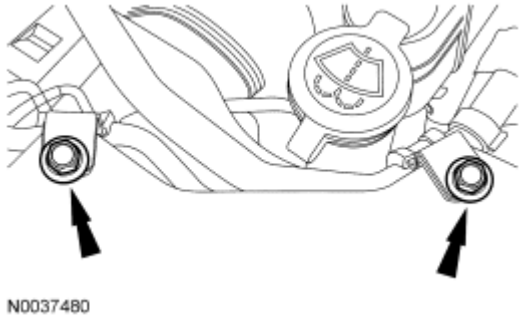

Fig. 303: Locating A/C Tube Bracket Bolts
Courtesy of FORD MOTOR CO.

54. Remove the 2 nuts and disconnect the A/C tubes.

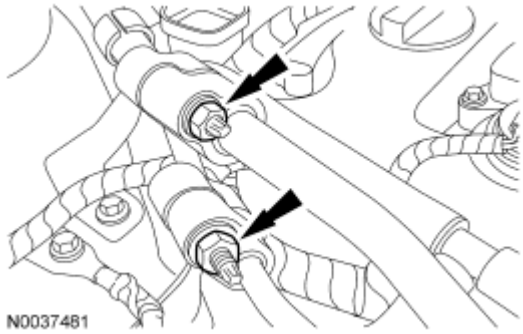

Fig. 304: Locating A/C Tubes Nuts
Courtesy of FORD MOTOR CO.

55. Remove the nut and disconnect the A/C tube from the condenser.

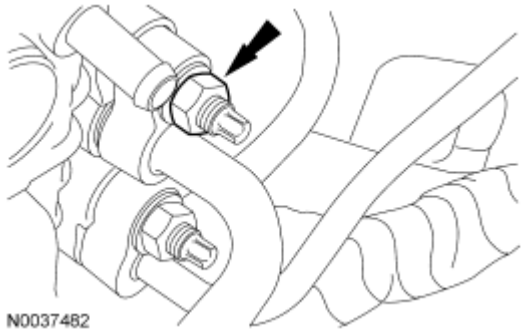

Fig. 305: Locating A/C Tube To Condenser Nut
Courtesy of FORD MOTOR CO.

56. Remove the bolt and the radio frequency interference capacitor from the engine mount bracket.

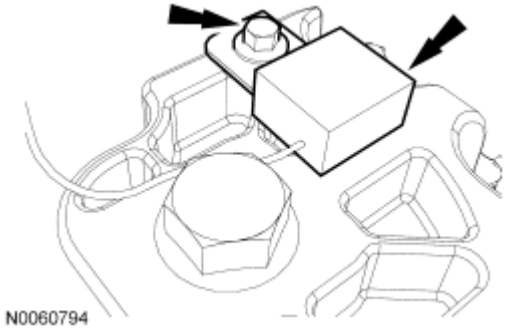

Fig. 306: Locating Radio Frequency Interference Capacitor Bolt
Courtesy of FORD MOTOR CO.

57. Remove the retaining clip and disconnect the lower radiator hose.

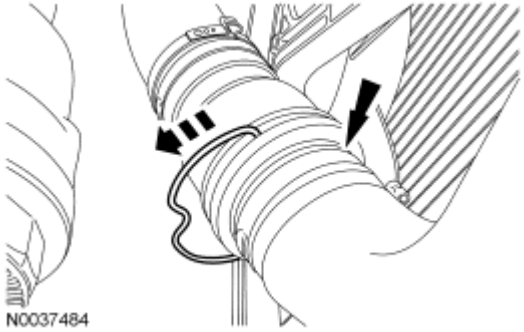

Fig. 307: Removing Retaining Clip And Locating Lower Radiator Hose
Courtesy of FORD MOTOR CO.

58. Using the special tools, separate the LH halfshaft from the transaxle and support the halfshaft with a length of mechanic's wire.

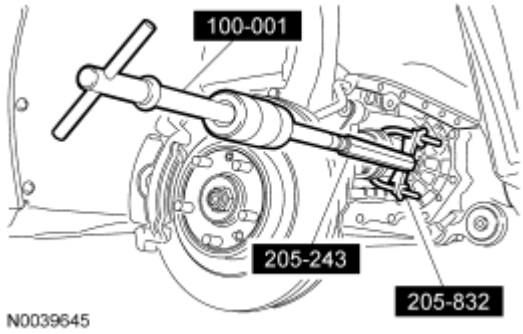

Fig. 308: Identifying Special Tools (100-001, 205-243 And 205-832)
Courtesy of FORD MOTOR CO.

59. Remove the 2 RH halfshaft carrier bearing bracket bolts.

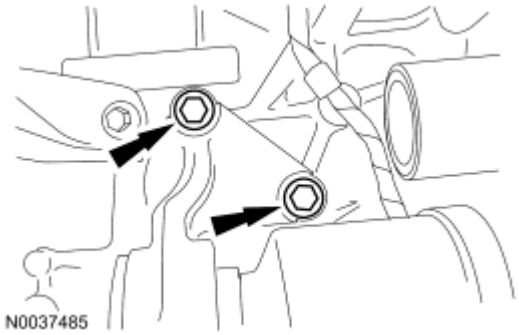

Fig. 309: Locating RH Halfshaft Carrier Bearing Bracket Bolts
Courtesy of FORD MOTOR CO.

60. Separate the RH halfshaft from the transaxle and support the halfshaft with a length of mechanic's wire.

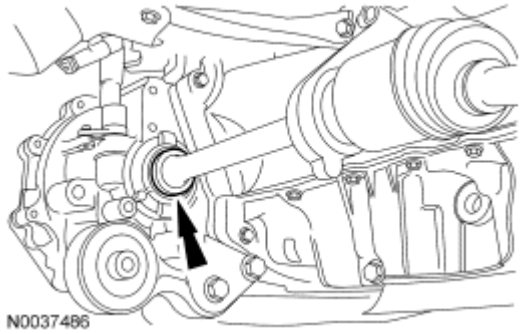

Fig. 310: Locating RH Halfshaft Into Transaxle
Courtesy of FORD MOTOR CO.

61. Remove the bellhousing-to-oil pan bolt.

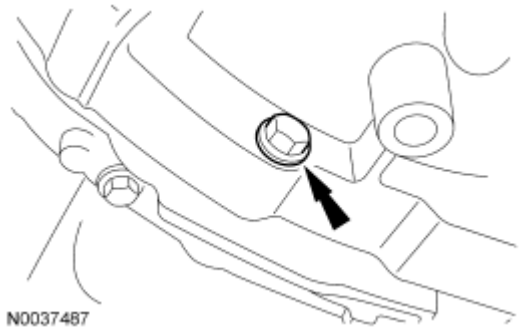

Fig. 311: Locating Bellhousing-To-Oil Pan Bolt
Courtesy of FORD MOTOR CO.

62. Remove the 2 oil pan-to-bellhousing bolts.

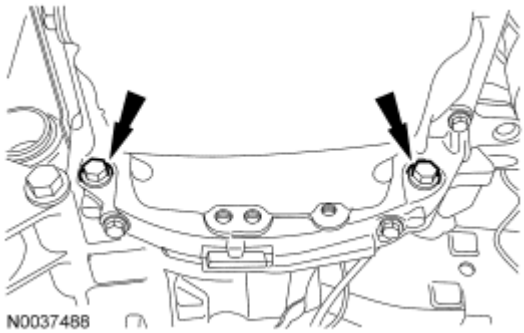

Fig. 312: Locating Oil Pan-To-Bellhousing Bolts
Courtesy of FORD MOTOR CO.

NOTE: Position a suitable block of wood under the transaxle.

63. Install the special tools onto the engine.
    - Raise the engine and transaxle 25.4 mm (1 in) to neutralize the engine and transaxle mounts.

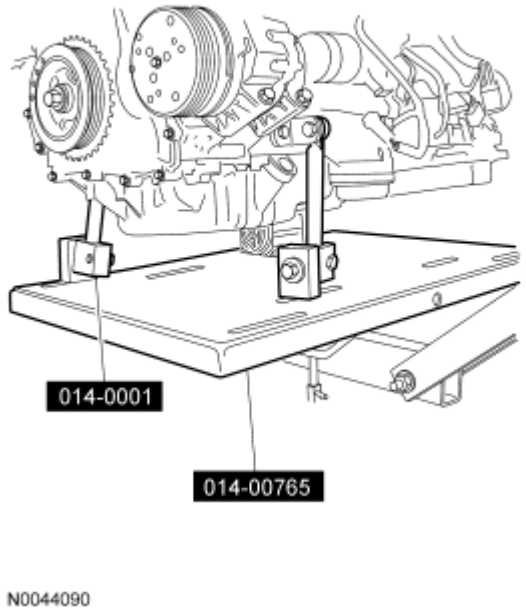

Fig. 313: Identifying Special Tools (014-0001, 014-00765)
Courtesy of FORD MOTOR CO.

64. Remove the 2 transaxle mount bolts.

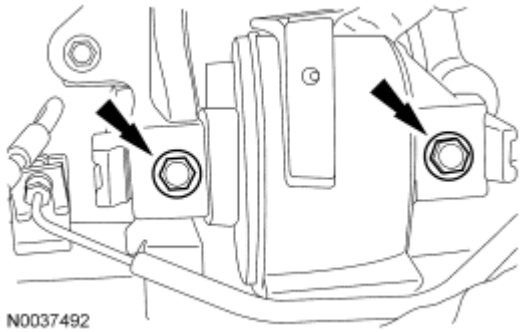

Fig. 314: Locating Transaxle Mount Bolts
Courtesy of FORD MOTOR CO.

65. Remove the bolt, 2 nuts and the motor mount bracket.

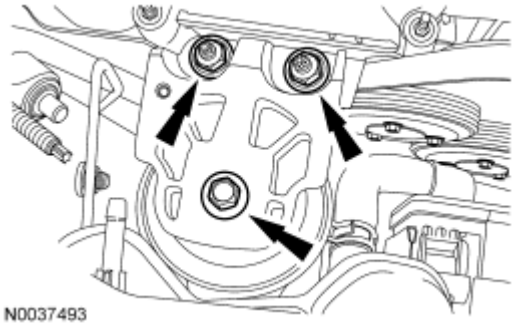

Fig. 315: Locating Engine Mount Bracket Bolt And Nuts
Courtesy of FORD MOTOR CO.

66. Lower the engine and transaxle from the vehicle.
67. Remove the 2 nuts and disconnect the starter wires.

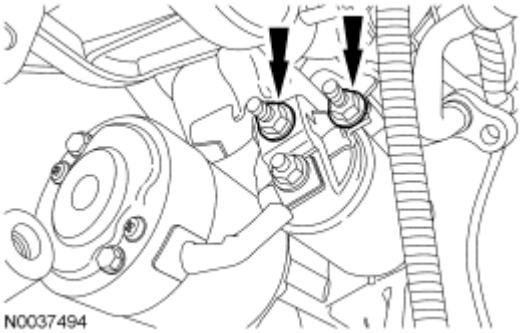

Fig. 316: Locating Starter Wire Nuts
Courtesy of FORD MOTOR CO.

68. Detach the 2 wiring harness retainers from the starter stud bolts.
69. Remove the 2 bolts and the starter.

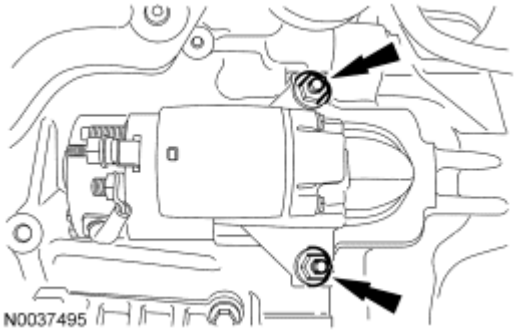

Fig. 317: Locating Starter And Stud Bolts
Courtesy of FORD MOTOR CO.

70. Remove the bolt and ground wire.

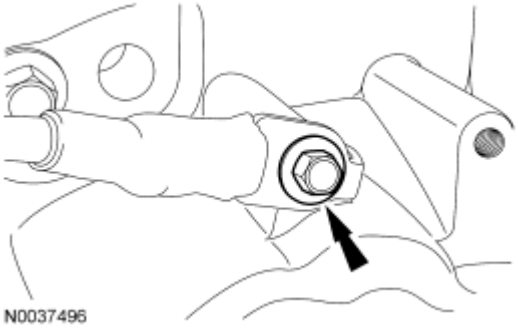

Fig. 318: Locating Ground Wire Bolt
Courtesy of FORD MOTOR CO.

71. Remove the nut and position the engine wiring harness bracket aside.

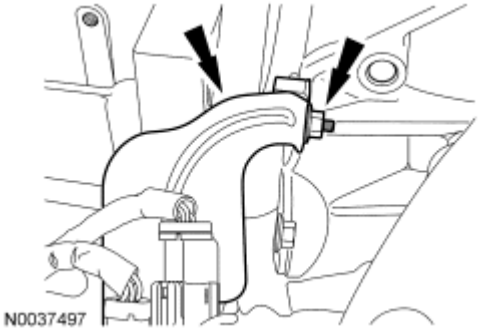

Fig. 319: Locating Engine Wiring Harness Bracket And Nut
Courtesy of FORD MOTOR CO.

72. Disconnect the backup lamp electrical connector.

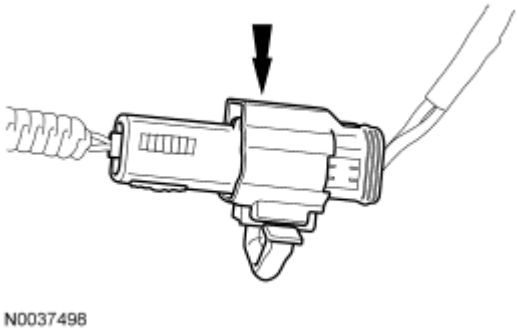

Fig. 320: Locating Backup Lamp Electrical Connector
Courtesy of FORD MOTOR CO.

73. Disconnect the vehicle speed sensor (VSS) electrical connector.

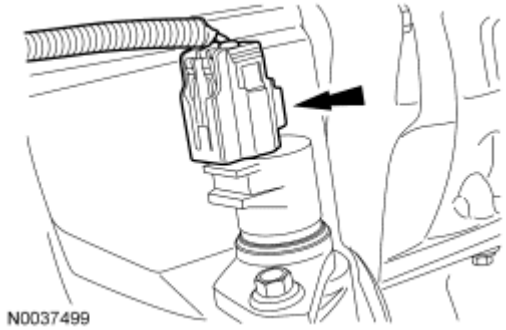

Fig. 321: Locating Vehicle Speed Sensor (VSS) Electrical Connector
Courtesy of FORD MOTOR CO.

74. Install the special tools and remove the engine and transaxle from the powertrain lift table.

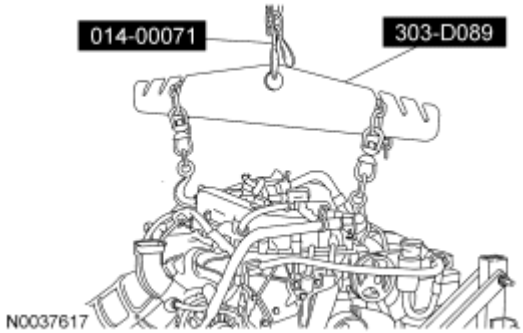

Fig. 322: Identifying Special Tools (014-00071, 303-D089)
Courtesy of FORD MOTOR CO.

75. Remove the bellhousing-to-engine retainers.
    - Separate the engine and transaxle.

DISASSEMBLY

ENGINE

Special Tools

Illustration	Tool Name	Tool Number
	Engine Stand	014-00232 or equivalent
	Alignment Plate, Camshaft	303-465 (T94P-6256-CH)

ST2645-A		
ST2638-A	Timing Peg, Crankshaft	303-507
ST2647-A	Holding Fixture, Drive Pinion Flange	205-126 (T78P-4851-A)
ST2639-A	Adapter for 205-126	(205-072-02)
ST1385-A	Remover, Oil Seal	303-409 (T92C-6700-CH)

CAUTION: Do not loosen or remove the crankshaft pulley bolt without first installing the special tools as instructed in this procedure. The crankshaft pulley and the crankshaft timing sprocket are not keyed to the crankshaft. The crankshaft, the crankshaft sprocket and the pulley are fitted together by friction, using diamond washers between the flange faces on each part. For that reason, the crankshaft sprocket is also unfastened if you loosen the pulley bolt. Before any repair requiring loosening or removal of the crankshaft pulley bolt, the crankshaft and camshafts must be locked in place by the special service tools, otherwise severe engine damage can occur.

CAUTION: During engine repair procedures, cleanliness is extremely important. Any foreign material, including any material created while cleaning gasket surfaces that enters the oil passages, coolant passages or the oil pan, can cause engine failure.

CAUTION: Due to the precision fit and timing of the balancer shaft assembly, it

cannot be removed from the engine block.

NOTE: **For additional information, refer to the exploded views under the Engine.**

NOTE: **Early build engines are equipped with an oil pump drive chain guide. Late build engines do not have an oil pump drive chain guide. Also, late build engines use an updated design for the oil pump drive chain and tensioner. Therefore, the oil pump drive components are not interchangeable between early build and late build engines.**

Vehicles with manual transaxle

WARNING: **The clutch disc and clutch pressure plate are heavy and may fall if not held when the bolts are removed. Failure to follow these instructions may result in personal injury.**

CAUTION: **Loosen the 6 bolts evenly to prevent pressure plate damage.**

1. Remove the 6 bolts, clutch pressure plate and clutch disc.

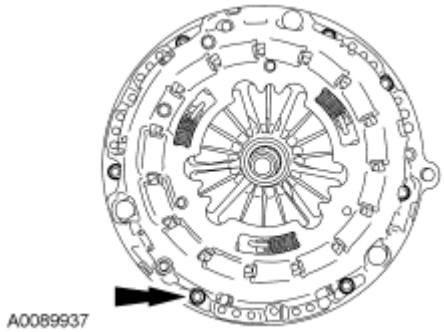

Fig. 323: Locating Clutch Pressure Plate Bolts
Courtesy of FORD MOTOR CO.

2. Remove the starter motor isolator.

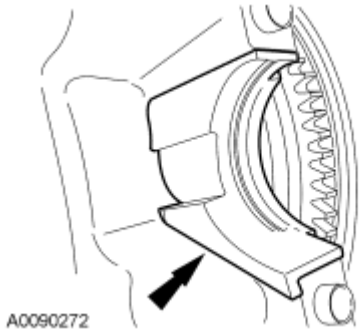

Fig. 324: Locating Starter Motor Isolator
Courtesy of FORD MOTOR CO.

3. Remove the 6 bolts and the flywheel.

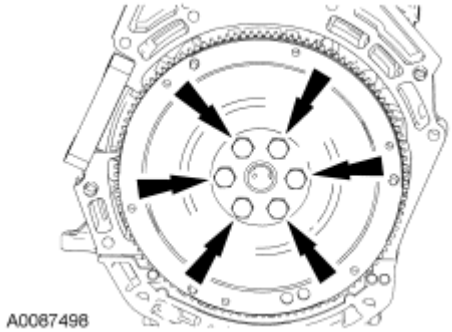

Fig. 325: Locating Flywheel Bolts
Courtesy of FORD MOTOR CO.

Vehicles with automatic transaxle

4. Remove the 6 bolts and the flexplate.

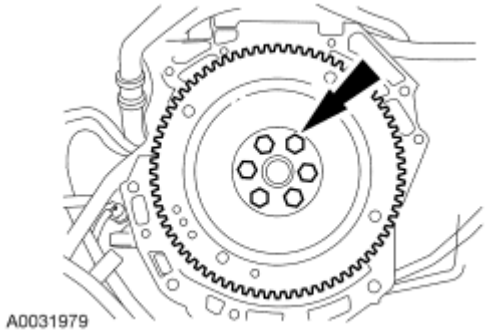

Fig. 326: Locating Flexplate Bolts
Courtesy of FORD MOTOR CO.

All vehicles

5. Mount the engine on a suitable stand.
6. Using the hex feature, rotate the accessory drive belt tensioner clockwise and remove the accessory drive belt from the coolant pump pulley.

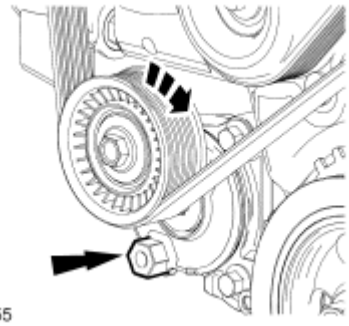

Fig. 327: Rotating Accessory Drive Belt Tensioner Clockwise
Courtesy of FORD MOTOR CO.

7. Remove the accessory drive belt from the engine.
8. Remove the 2 bolts and the tensioner.

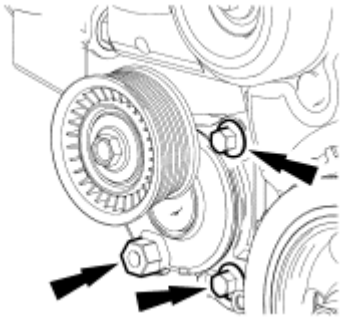

Fig. 328: Locating Accessory Drive Belt Tensioner Bolts
Courtesy of FORD MOTOR CO.

9. Disconnect the power steering pressure (PSP) switch electrical connector.

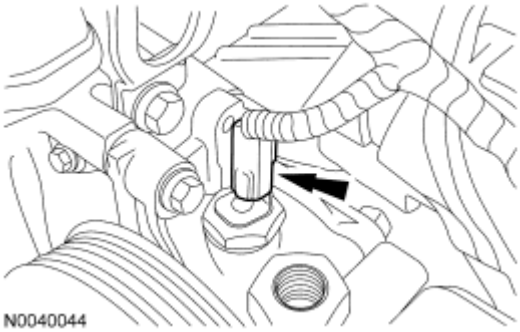

Fig. 329: Locating Power Steering Pressure (PSP) Switch Electrical Connector
Courtesy of FORD MOTOR CO.

10. Remove the 2 upper power steering pump bolts.

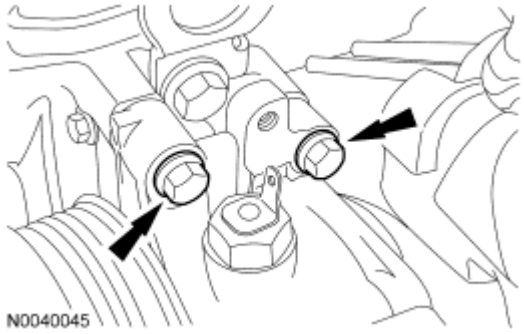

Fig. 330: Locating Upper Power Steering Pump Bolts
Courtesy of FORD MOTOR CO.

11. Remove the lower bolt and the power steering pump.

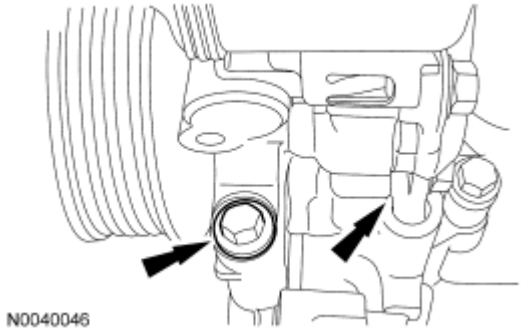

Fig. 331: Locating Power Steering Pump And Lower Bolt
Courtesy of FORD MOTOR CO.

12. Disconnect the knock sensor (KS) electrical connector and the 2 harness pin-type retainers.

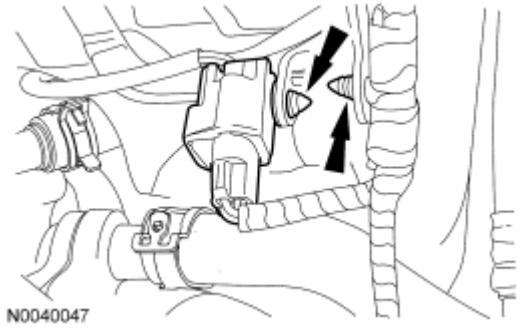

Fig. 332: Locating Knock Sensor (KS) Electrical Connector And Harness Pin-Type Retainers
Courtesy of FORD MOTOR CO.

13. Disconnect the lower radiator and heater hoses from the thermostat housing.
    - Detach the radiator hose retainer clip from the intake manifold.

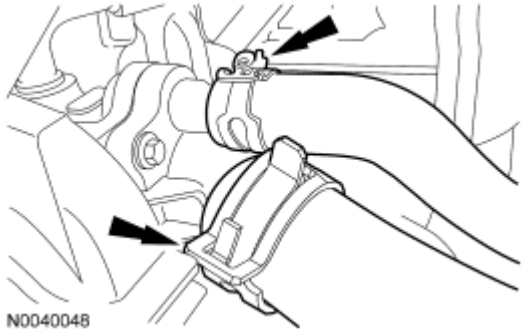

Fig. 333: Locating Lower Radiator And Heater Hoses From Thermostat Housing
Courtesy of FORD MOTOR CO.

14. Disconnect the coolant hose from the throttle body and remove the hose from the engine.

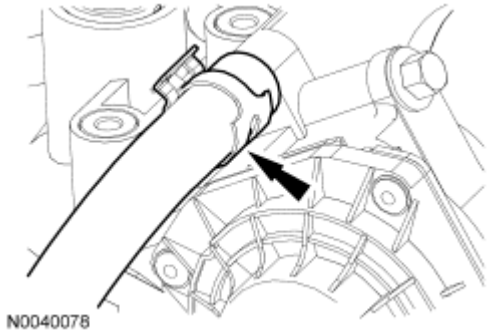

Fig. 334: Locating Coolant Hose
Courtesy of FORD MOTOR CO.

15. Disconnect the A/C compressor electrical connector.

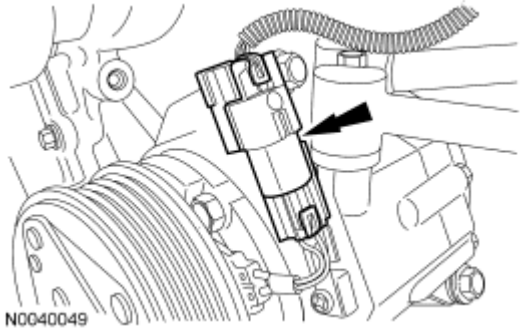

Fig. 335: Locating A/C Compressor Electrical Connector
Courtesy of FORD MOTOR CO.

16. Remove the bolt and the A/C manifold.

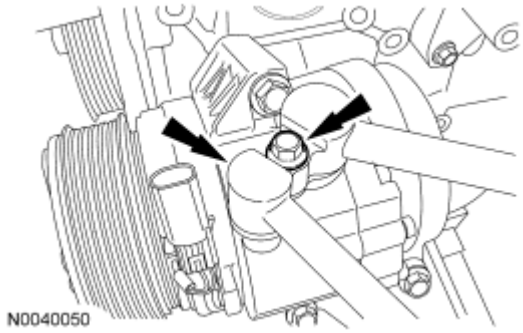

Fig. 336: Locating A/C Manifold And Bolt
Courtesy of FORD MOTOR CO.

17. Remove the 3 bolts and the A/C compressor.

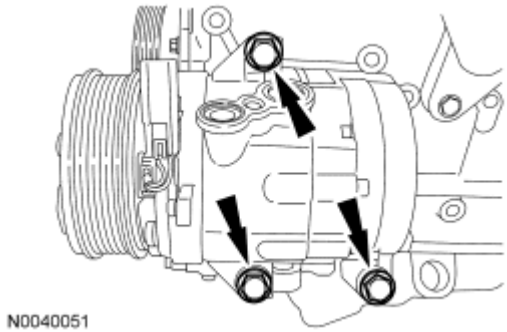

Fig. 337: Locating A/C Compressor Bolts
Courtesy of FORD MOTOR CO.

18. Remove the 3 bolts and the coolant pump pulley.

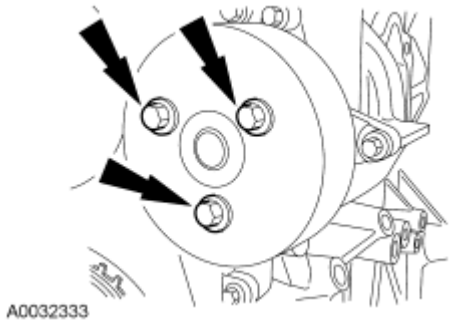

Fig. 338: Locating Coolant Pump Pulley Bolts
Courtesy of FORD MOTOR CO.

19. Remove the 3 bolts and the coolant pump.
    - Remove and discard the O-ring seal.

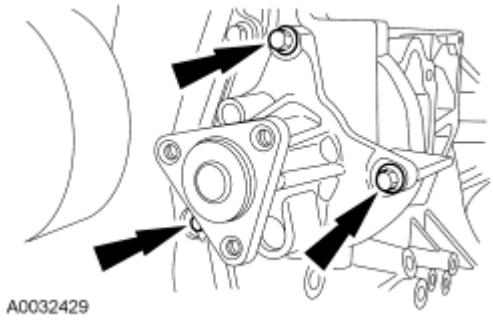

Fig. 339: Locating Coolant Pump Bolts
Courtesy of FORD MOTOR CO.

20. Remove the bolt and the accessory drive belt idler pulley.

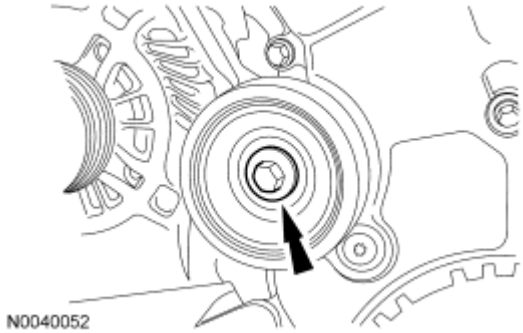

Fig. 340: Locating Accessory Drive Belt Idler Pulley Bolt
Courtesy of FORD MOTOR CO.

21. Disconnect the crankshaft position (CKP) sensor electrical connector and harness pin-type retainer.

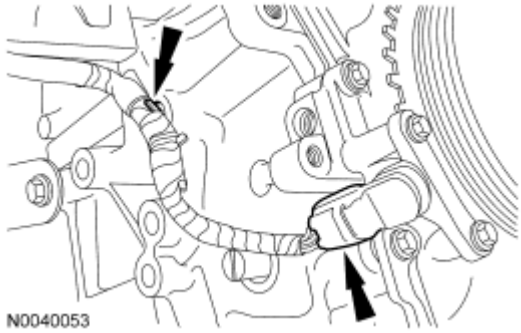

Fig. 341: Locating Crankshaft Position (CKP) Sensor Electrical Connector And Harness Pin-Type Retainer
Courtesy of FORD MOTOR CO.

NOTE: **Whenever the CKP sensor is removed, a new one must be installed, using the alignment tool supplied with the new part.**

22. Remove the 2 bolts and the CKP sensor.
    - Discard the CKP sensor.

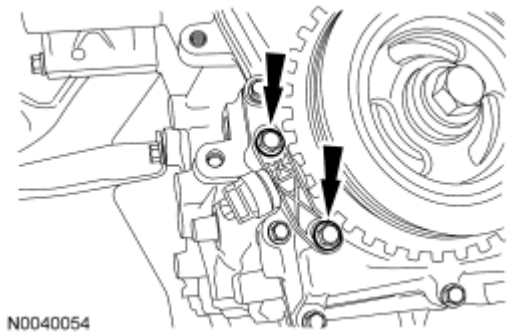

Fig. 342: Locating CKP Sensor Bolts
Courtesy of FORD MOTOR CO.

23. Remove the 2 nuts and the generator splash shield.

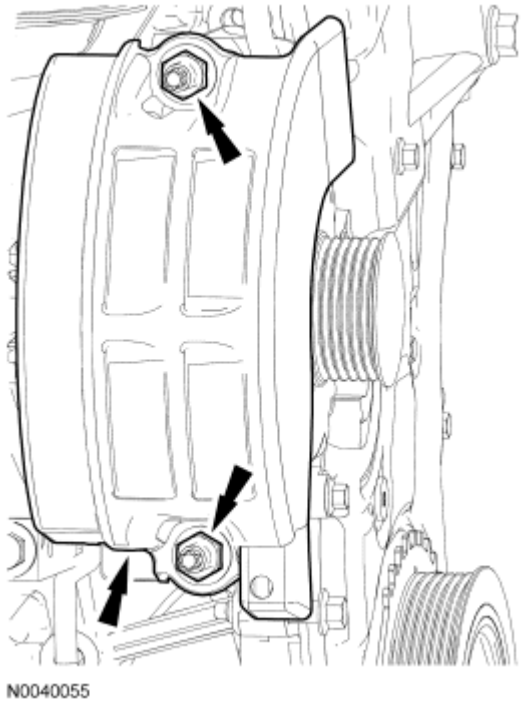

Fig. 343: Locating Generator Splash Shield And Nuts
Courtesy of FORD MOTOR CO.

24. Pull back the rubber boot and remove the nut.
    - Disconnect the generator electrical connections and pin-type retainer.

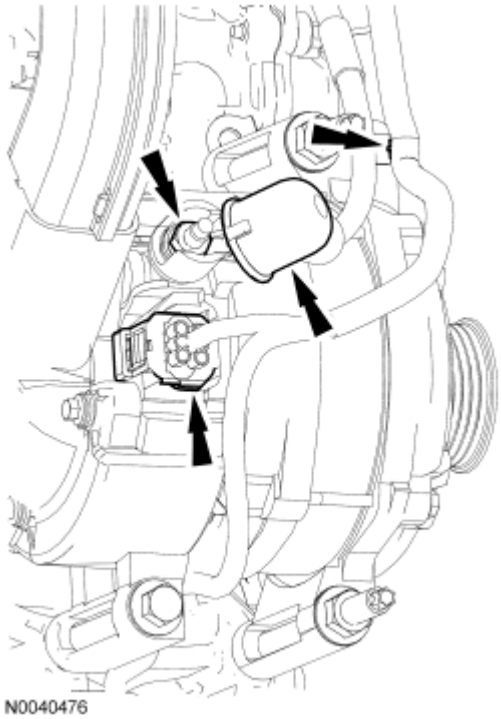

Fig. 344: Locating Pin-Type Retainer And Generator Electrical Connections
Courtesy of FORD MOTOR CO.

25. Remove the bolt, 2 stud bolts and the generator.

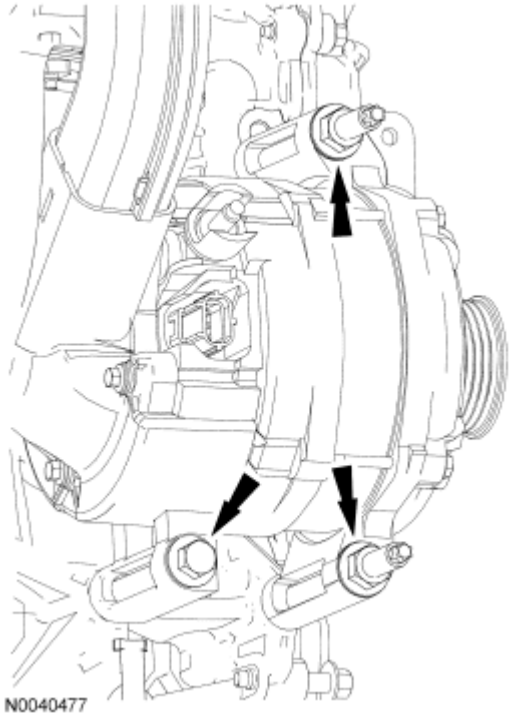

Fig. 345: Locating Generator Bolt And Stud Bolts

Courtesy of FORD MOTOR CO.

Vehicles with secondary air injection (AIR)

26. Disconnect the secondary air injection (AIR) hose from the catalytic converter.

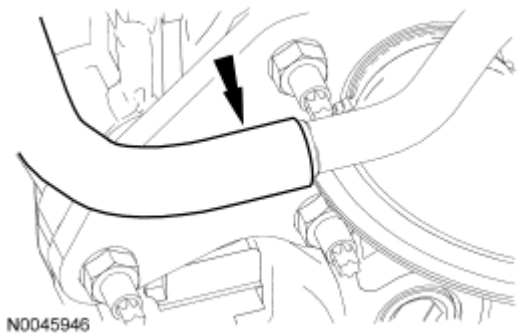

Fig. 346: Locating Secondary AIR Injection (AIR) Hose
Courtesy of FORD MOTOR CO.

27. Disconnect the AIR valve vacuum supply tube from the intake manifold.

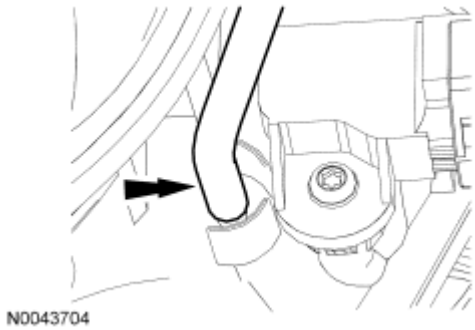

Fig. 347: Locating AIR Valve Vacuum Supply Tube
Courtesy of FORD MOTOR CO.

28. Disconnect the AIR valve electrical connector.

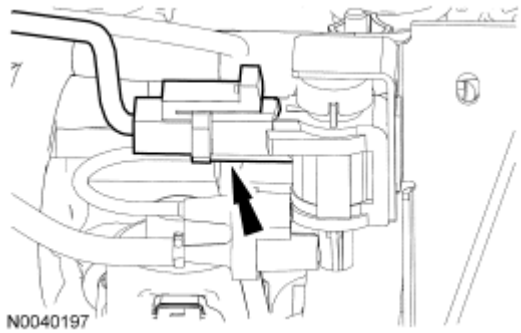

Fig. 348: Locating AIR Valve Electrical Connector
Courtesy of FORD MOTOR CO.

29. Remove the 2 bolts and the AIR valve, hoses and pump assembly from the engine.

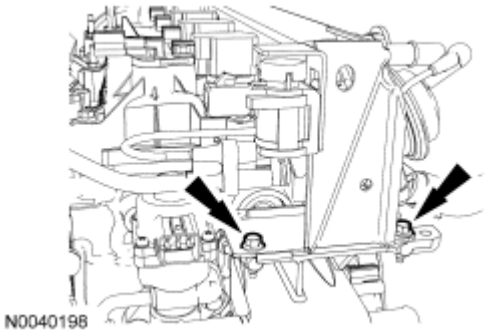

Fig. 349: Locating Pump Assembly Bolts
Courtesy of FORD MOTOR CO.

All vehicles

NOTE: Vehicles equipped with AIR have 2 catalyst monitor sensors (CMS).

30. Disconnect the CMS electrical connector(s).

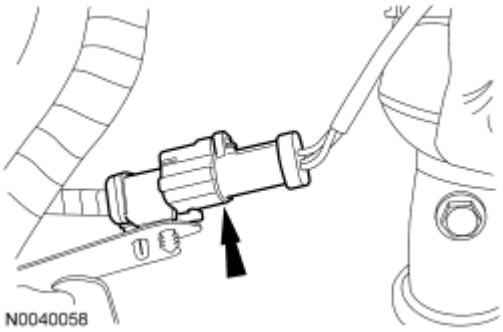

Fig. 350: Locating CMS Electrical Connector
Courtesy of FORD MOTOR CO.

31. Disconnect the heated oxygen sensor (HO2S) electrical connector.

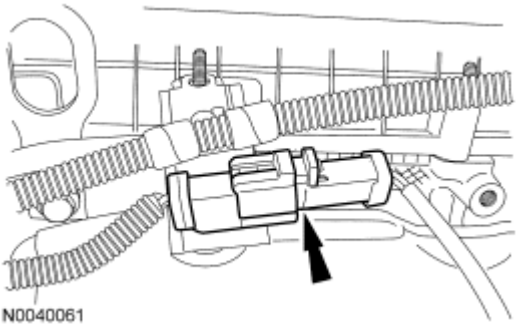

Fig. 351: Locating Heated Oxygen Sensor (HO2S) Electrical Connector

Courtesy of FORD MOTOR CO.

32. Remove the wiring harness bracket from the valve cover stud.

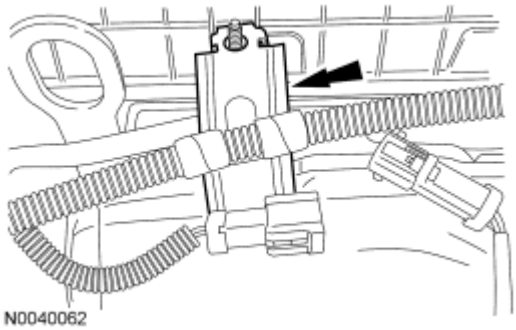

Fig. 352: Locating Wiring Harness Bracket
Courtesy of FORD MOTOR CO.

33. Detach the wiring harness retainer from the valve cover stud.

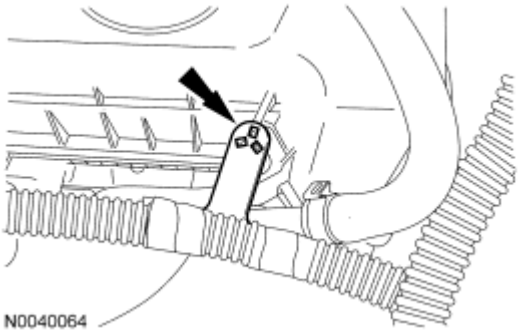

Fig. 353: Locating Wiring Harness Retainer
Courtesy of FORD MOTOR CO.

NOTE: Vehicles equipped with AIR do not require removal of the heat shield.

34. Remove the 6 screws and the heat shield.

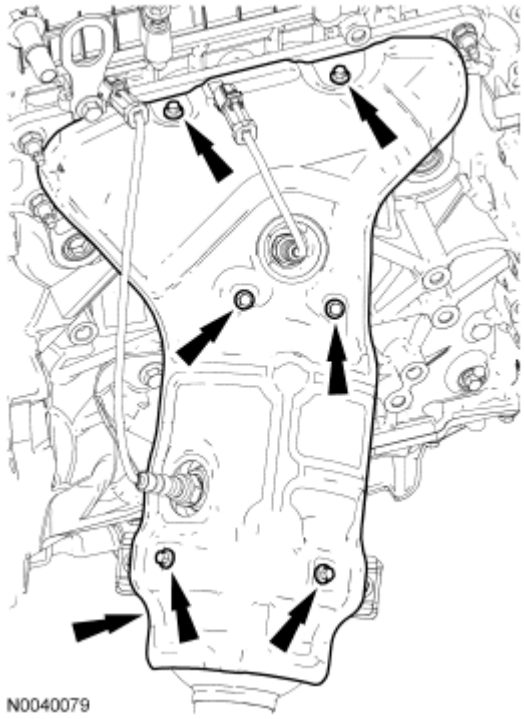

Fig. 354: Locating Heat Shield Screws
Courtesy of FORD MOTOR CO.

35. Remove the 2 catalytic converter bracket bolts.

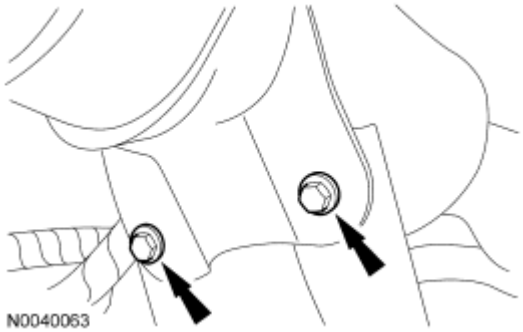

Fig. 355: Locating Catalytic Converter Bracket Bolts
Courtesy of FORD MOTOR CO.

36. Remove the 7 nuts, catalytic converter, gasket and the 7 studs.
    - Discard the nuts, gasket and the studs.

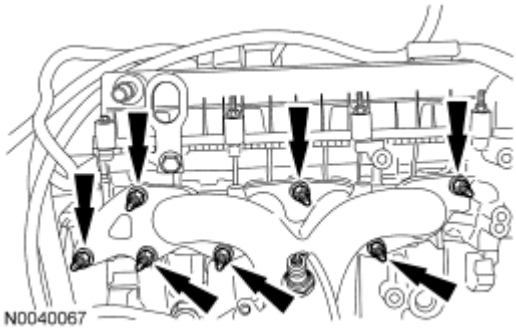

Fig. 356: Locating Nuts, Catalytic Converter, Gasket And Studs
Courtesy of FORD MOTOR CO.

37. If equipped, disconnect the block heater electrical connector.

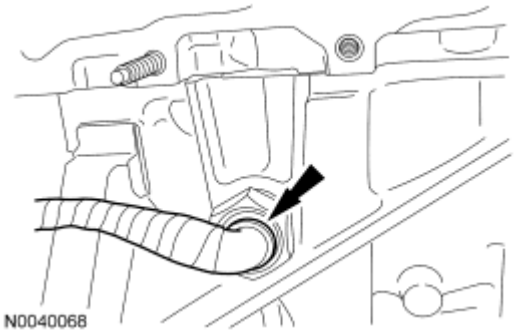

Fig. 357: Locating Block Heater Electrical Connector
Courtesy of FORD MOTOR CO.

38. If equipped, remove the block heater.

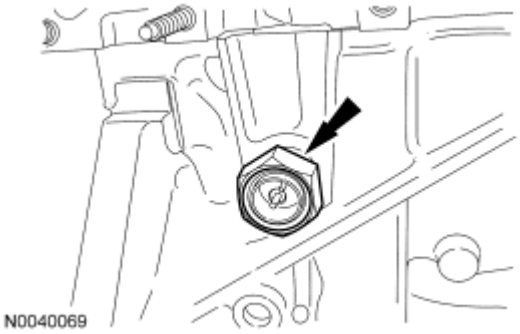

Fig. 358: Locating Block Heater
Courtesy of FORD MOTOR CO.

39. Remove the 2 bolts and the catalytic converter bracket.

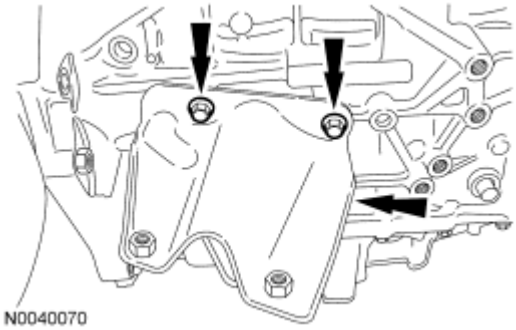

Fig. 359: Locating Catalytic Converter Bracket Bolts
Courtesy of FORD MOTOR CO.

40. Disconnect the coolant temperature sender electrical connector.

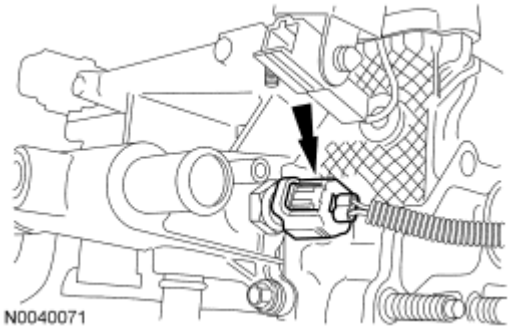

Fig. 360: Locating Coolant Temperature Sender Electrical Connector
Courtesy of FORD MOTOR CO.

41. Disconnect the exhaust gas recirculation (EGR) coolant hose and electrical connector.

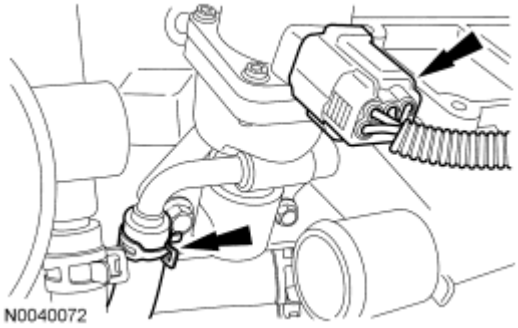

Fig. 361: Locating Exhaust Gas Recirculation (EGR) Coolant Hose And Electrical Connector
Courtesy of FORD MOTOR CO.

42. Disconnect the oil pressure sender electrical connector.

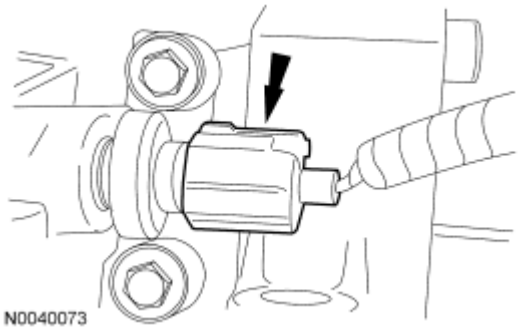

Fig. 362: Locating Oil Pressure Sender Electrical Connector
Courtesy of FORD MOTOR CO.

43. Disconnect the manifold actual pressure (MAP) sensor electrical connector.

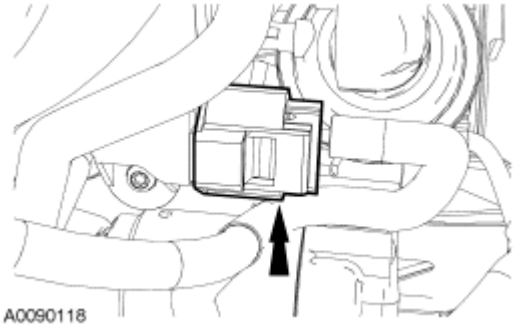

Fig. 363: Locating Manifold Actual Pressure (MAP) Sensor Electrical Connector
Courtesy of FORD MOTOR CO.

44. Disconnect the intake manifold runner control (IMRC) actuator electrical connector.

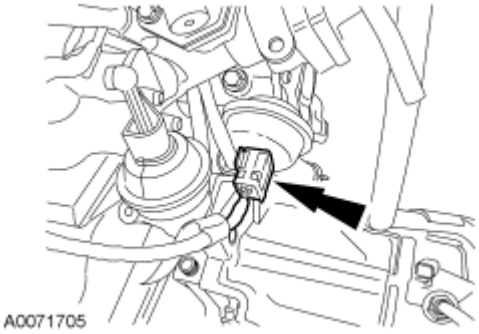

Fig. 364: Locating Intake Manifold Runner Control (IMRC) Actuator Electrical Connector
Courtesy of FORD MOTOR CO.

45. Disconnect the 2 swirl control valve electrical connectors.

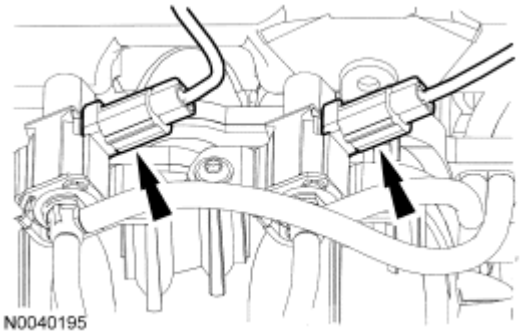

Fig. 365: Locating Swirl Control Valve Electrical Connectors
Courtesy of FORD MOTOR CO.

46. Detach the 2 wiring harness pin-type retainers from the intake manifold.

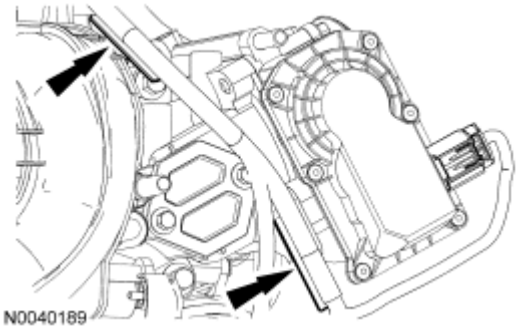

Fig. 366: Locating Wiring Harness Pin-Type Retainers From Intake Manifold
Courtesy of FORD MOTOR CO.

47. Disconnect the electronic throttle body electrical connector.

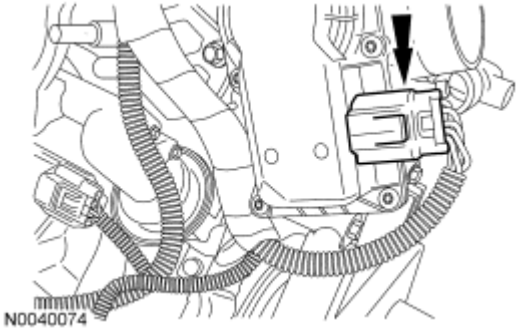

Fig. 367: Locating Electronic Throttle Body Electrical Connector
Courtesy of FORD MOTOR CO.

48. Remove the 8 bolts and position the intake manifold aside to access the crankcase vent hose clamp and the EGR tube.
    - Discard the gaskets.

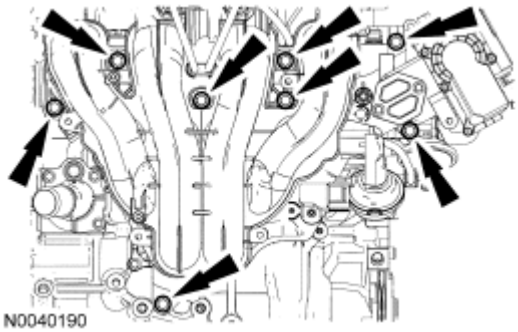

Fig. 368: Locating Intake Manifold Bolts
Courtesy of FORD MOTOR CO.

49. Disconnect the positive crankcase ventilation (PCV) hose and remove the intake manifold.

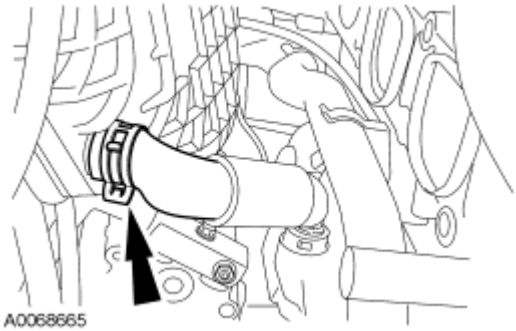

Fig. 369: Locating Positive Crankcase Ventilation (PCV) Hose
Courtesy of FORD MOTOR CO.

50. Remove the EGR tube.

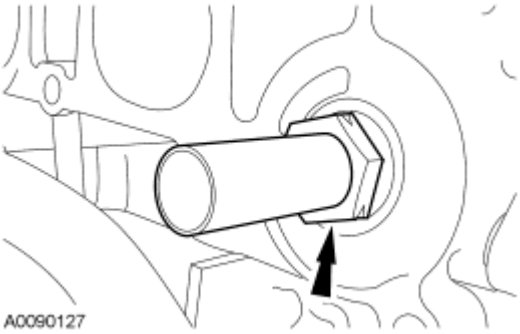

Fig. 370: Locating Exhaust Gas Recirculation (EGR) Tube
Courtesy of FORD MOTOR CO.

51. Remove the 3 bolts and the thermostat housing.

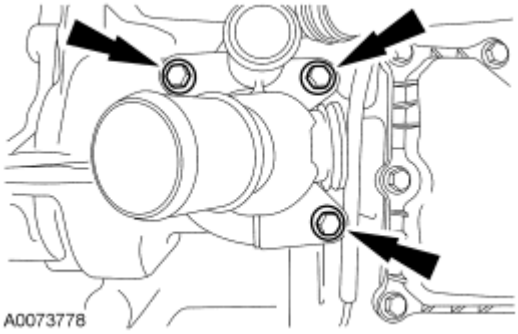

Fig. 371: Locating Thermostat Housing Bolts
Courtesy of FORD MOTOR CO.

52. Disconnect the bypass hose from the cylinder block nipple.

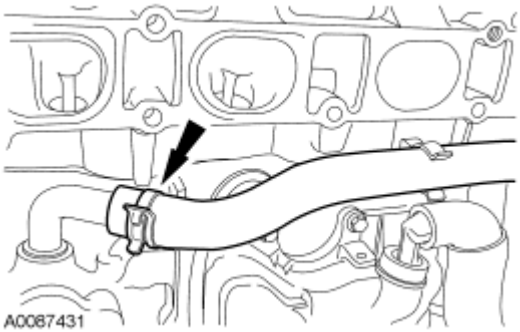

Fig. 372: Locating Bypass Hose From Cylinder Block Nipple
Courtesy of FORD MOTOR CO.

53. Disconnect the bypass hose from the coolant outlet and remove the bypass hose from the engine.

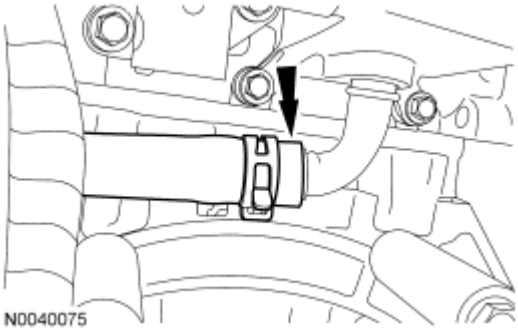

Fig. 373: Locating Bypass Hose To Coolant Outlet
Courtesy of FORD MOTOR CO.

54. Remove the bolt and the KS.

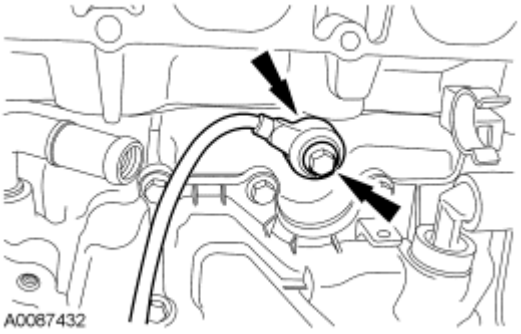

Fig. 374: Locating Knock Sensor Bolt
Courtesy of FORD MOTOR CO.

55. Remove the 8 bolts and the crankcase vent oil separator.
    - Discard the gasket.

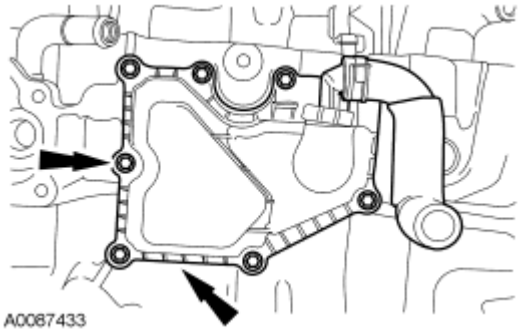

Fig. 375: Locating Crankcase Vent Oil Separator And Bolts
Courtesy of FORD MOTOR CO.

56. Remove and discard the engine oil filter.
57. Remove the 4 bolts and the oil filter adapter.
    - Discard the gasket.

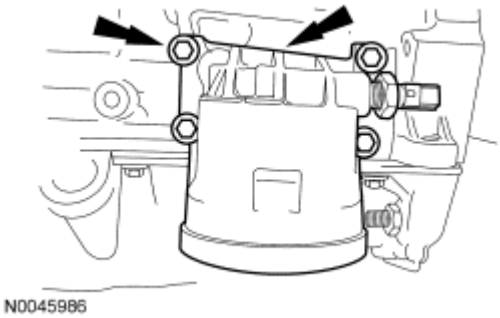

Fig. 376: Locating Oil Filter Adapter And Bolts
Courtesy of FORD MOTOR CO.

58. Disconnect the camshaft position (CMP) sensor electrical connector.

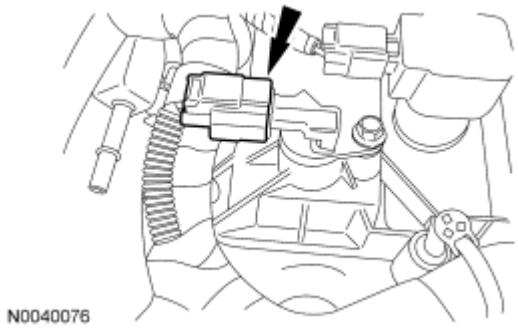

Fig. 377: Locating Camshaft Position (CMP) Sensor Electrical Connector
Courtesy of FORD MOTOR CO.

59. Disconnect the variable camshaft timing (VCT) solenoid electrical connector.

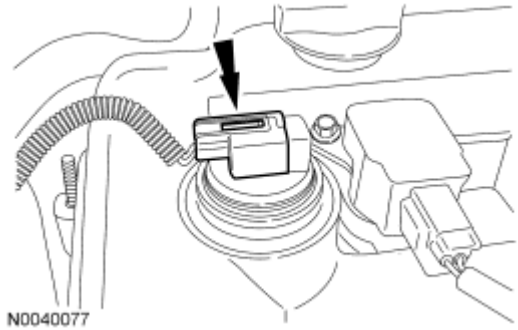

Fig. 378: Locating Variable Camshaft Timing (VCT) Solenoid Electrical Connector
Courtesy of FORD MOTOR CO.

60. Disconnect the 4 coil-on-plug electrical connectors.

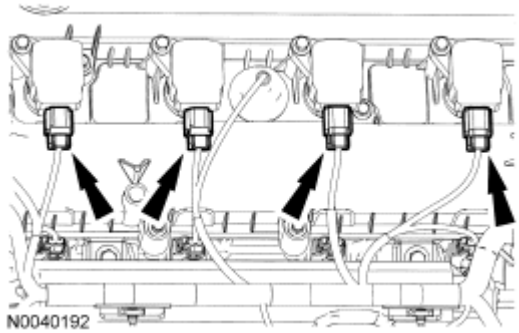

Fig. 379: Locating Coil-On-Plug Electrical Connectors
Courtesy of FORD MOTOR CO.

61. Pull back the boot and disconnect the cylinder head temperature (CHT) sensor electrical connector.

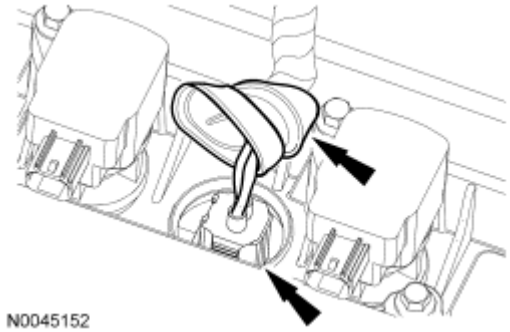

Fig. 380: Locating Cylinder Head Temperature (CHT) Sensor Electrical Connector And Boot
Courtesy of FORD MOTOR CO.

62. Detach the 2 pin-type harness retainers and remove the fuel supply rail insulator.

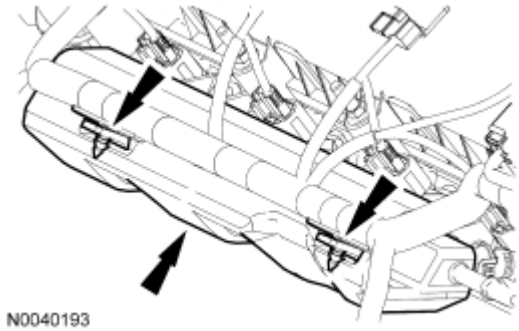

Fig. 381: Locating Pin-Type Harness Retainers And Remove Fuel Supply Rail Insulator
Courtesy of FORD MOTOR CO.

63. Disconnect the 4 fuel injector electrical connectors.

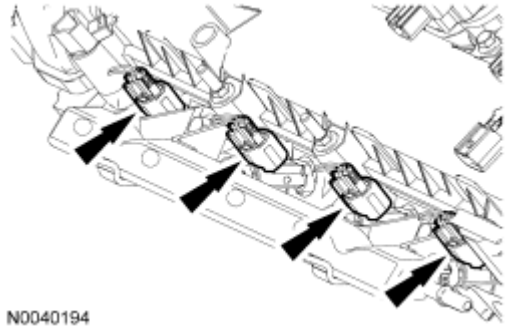

Fig. 382: Locating Fuel Injector Electrical Connectors
Courtesy of FORD MOTOR CO.

NOTE: Typical wiring harness retainers shown.

64. Detach the remaining wiring harness retainers and remove the wiring harness from the engine.

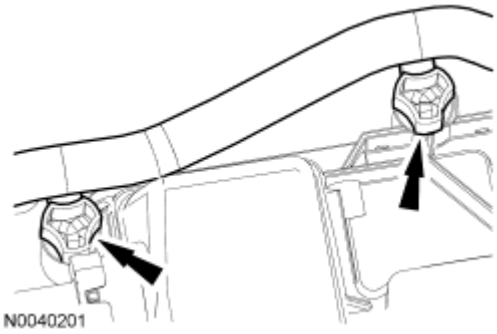

Fig. 383: Locating Wiring Harness Retainers
Courtesy of FORD MOTOR CO.

65. Remove the 2 bolts and the fuel rail and injector assembly.

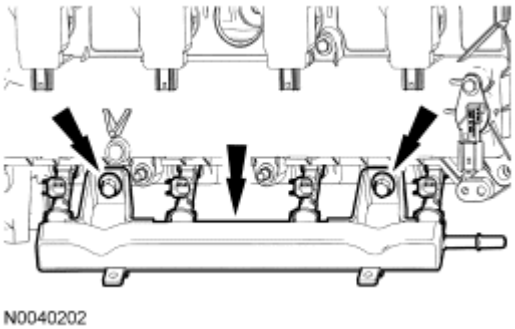

Fig. 384: Locating Fuel Rail And Injector Assembly Bolts
Courtesy of FORD MOTOR CO.

66. Remove the 4 bolts and the 4 coil-on-plug assemblies.

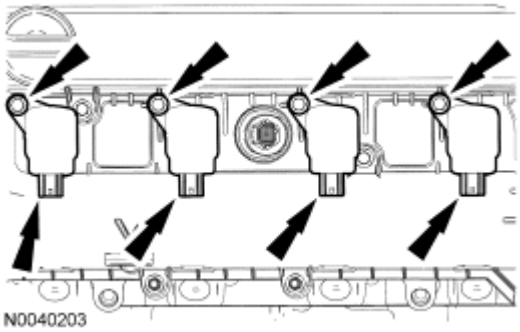

Fig. 385: Locating Coil-On-Plug Assemblies And Bolts
Courtesy of FORD MOTOR CO.

67. Remove the oil level indicator.

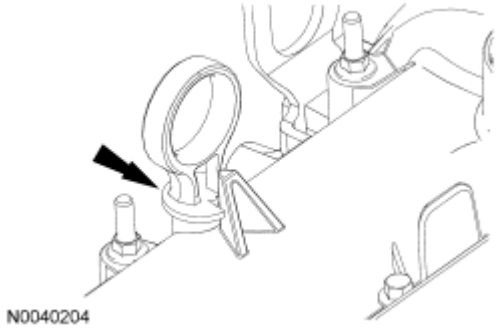

Fig. 386: Locating Oil Level Indicator
Courtesy of FORD MOTOR CO.

68. Loosen the 14 retainers and remove the valve cover.
    - Discard the gaskets.

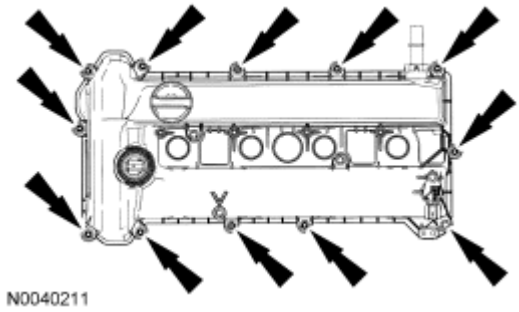

Fig. 387: Locating Valve Cover Retainers
Courtesy of FORD MOTOR CO.

CAUTION: Failure to position the No. 1 position at top dead center (TDC) can result in damage to the engine. Turn the engine in the normal direction of rotation only.

69. Using the crankshaft pulley bolt, turn the crankshaft clockwise to position the No. 1 piston at TDC.
    - The hole in the crankshaft pulley should be in the 6 o'clock position.

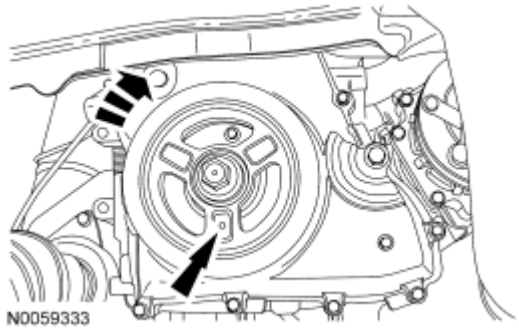

Fig. 388: Locating Hole On Crankshaft Pulley And Turning Crankshaft Clockwise

Courtesy of FORD MOTOR CO.

CAUTION: The special tool 303-465 is for camshaft alignment only. Using this to prevent engine rotation can result in engine damage.

NOTE: The camshaft timing slots are offset. If the special tool cannot be installed, rotate the crankshaft one complete revolution clockwise to correctly position the camshafts.

70. Install the special tool in the slots on the rear of both camshafts.

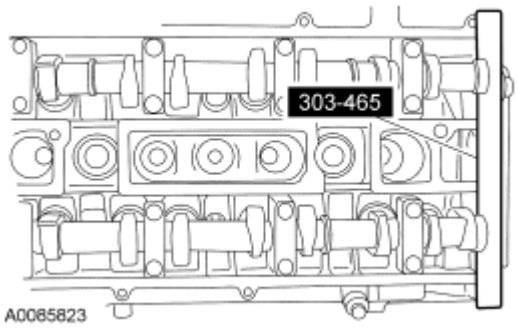

Fig. 389: Identifying Special Camshaft Tool (303-465)
Courtesy of FORD MOTOR CO.

71. Remove the engine plug bolt.

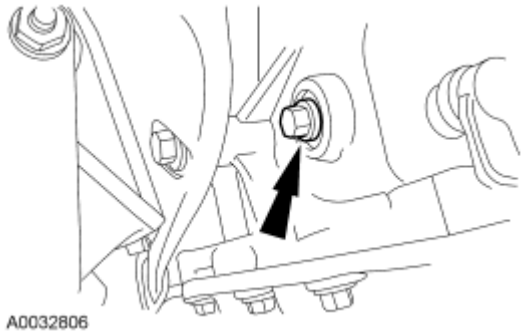

Fig. 390: Locating Engine Plug Bolt
Courtesy of FORD MOTOR CO.

NOTE: The special tool will contact the crankshaft and prevent it from turning past TDC. However, the crankshaft can still be rotated in the counterclockwise direction. The crankshaft must remain at the TDC position during disassembly.

72. Install the special tool.

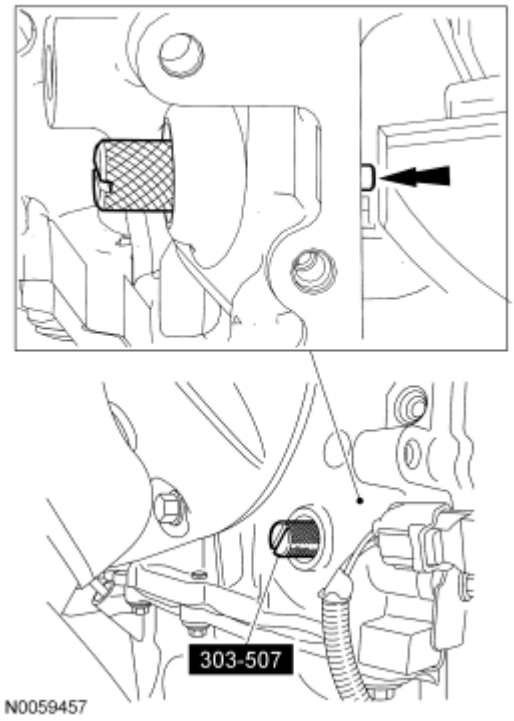

Fig. 391: Identifying Special Tool (303-507)
Courtesy of FORD MOTOR CO.

73. Assemble the special tools using 4 hardened washers in the locations shown.

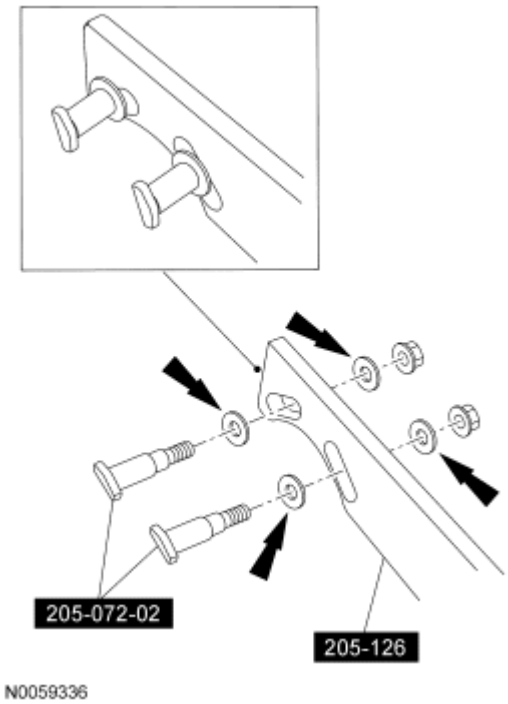

Fig. 392: Assembling Special Tools (205-126 And 205-072-02)

Courtesy of FORD MOTOR CO.

CAUTION: The crankshaft must remain in the TDC position during removal of the pulley bolt or damage to the engine can occur. Therefore, the crankshaft pulley must be held in place with the special tool and the bolt should be removed using an air impact wrench (1/2-in drive minimum).

CAUTION: If the crankshaft sprocket diamond washer comes off with the crankshaft pulley, it must be installed back onto the crankshaft.

74. Using the special tools and an air impact wrench, remove the crankshaft pulley.
    - Remove and discard the crankshaft pulley bolt and washer.
    - Remove the crankshaft pulley.

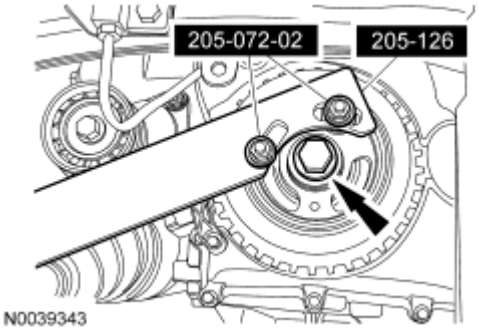

Fig. 393: Locating Crankshaft Pulley Bolt And Special Tools (205-126, 205-072-02)
Courtesy of FORD MOTOR CO.

CAUTION: Use care not to damage the engine front cover or the crankshaft when removing the seal.

75. Using the special tool, remove the crankshaft front oil seal.

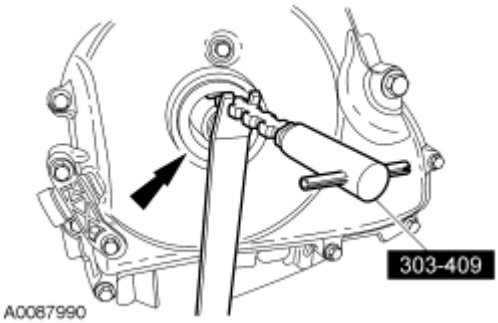

Fig. 394: Removing Crankshaft Front Oil Seal Using Special Tool (303-409)
Courtesy of FORD MOTOR CO.

76. Remove the 22 bolts and the engine front cover.

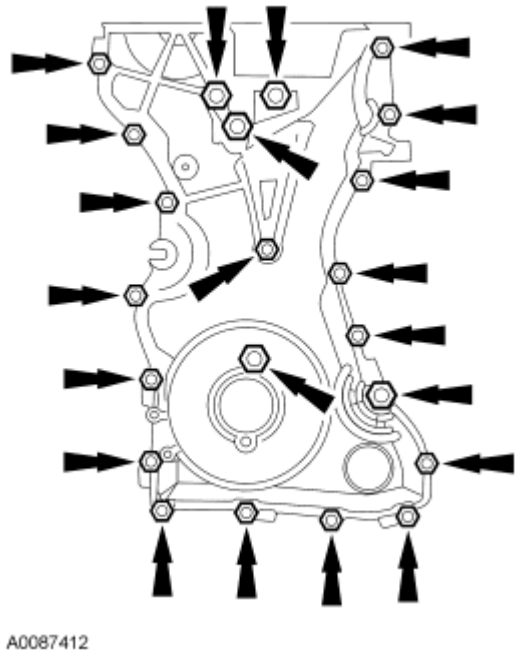

Fig. 395: Locating Engine Front Cover Bolts
Courtesy of FORD MOTOR CO.

77. Remove the timing chain tensioner.
    1. Compress the timing chain tensioner and insert a paper clip into the hole to retain the tensioner.
    2. Remove the 2 bolts and timing chain tensioner.

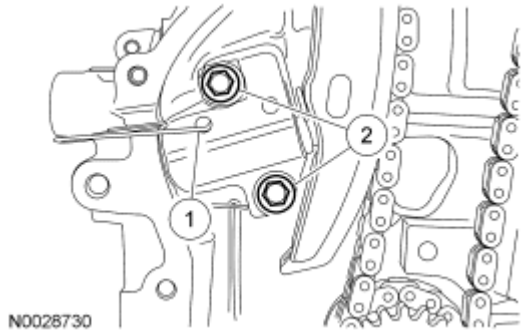

Fig. 396: Locating Timing Chain Tensioner Bolt
Courtesy of FORD MOTOR CO.

78. Remove the RH timing chain guide.

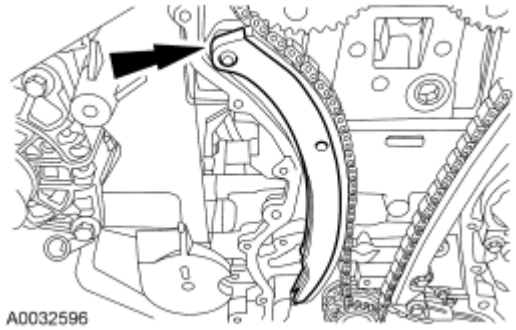

Fig. 397: Locating RH Timing Chain Guide
Courtesy of FORD MOTOR CO.

79. Remove the timing chain.

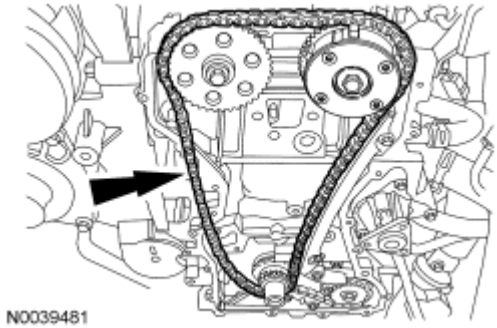

Fig. 398: Locating Timing Chain
Courtesy of FORD MOTOR CO.

80. Remove the 2 bolts and the LH timing chain guide.

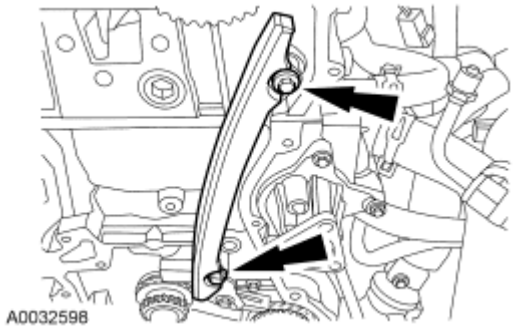

Fig. 399: Identifying Bolts And LH Timing Chain Guide
Courtesy of FORD MOTOR CO.

CAUTION: The special tool 303-465 is for camshaft alignment only. Using this tool to prevent engine rotation can result in engine damage.

81. Using the flats on the camshaft to prevent camshaft rotation, remove the bolt and the exhaust camshaft

sprocket.

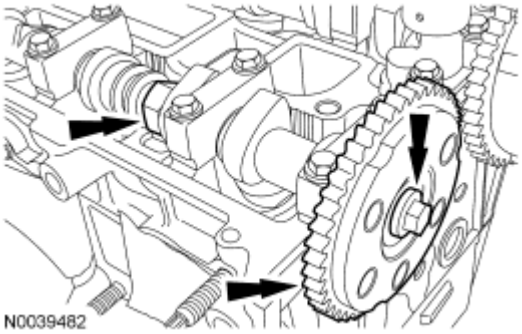

Fig. 400: Locating Bolt And Exhaust Camshaft Sprocket
Courtesy of FORD MOTOR CO.

CAUTION: The special tool 303-465 is for camshaft alignment only. Using this tool to prevent engine rotation can result in engine damage.

82. Using the flats on the camshaft to prevent camshaft rotation, remove the bolt and the intake camshaft sprocket.

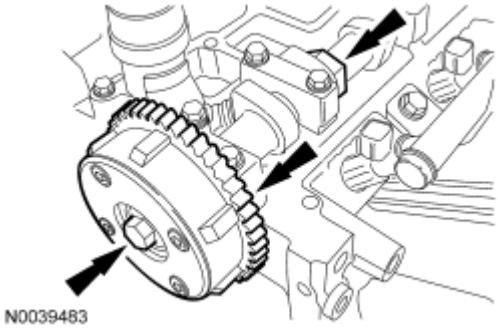

Fig. 401: Locating Intake Camshaft Phaser And Sprocket Bolt
Courtesy of FORD MOTOR CO.

Early build vehicles

83. Remove the oil pump drive chain tensioner and guide.
    1. Release the tension on the tensioner spring.
    2. Remove the 2 shoulder bolts and the tensioner.
    3. Remove the 2 shoulder bolts and the guide.

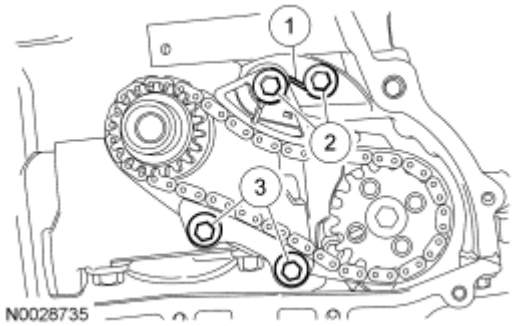

Fig. 402: Locating Tensioner Shoulder Bolts, Tensioner Spring And Guide
Courtesy of FORD MOTOR CO.

Late build vehicles

84. Remove the oil pump drive chain tensioner.
    1. Release the tension on the tensioner spring.
    2. Remove the tensioner and the 2 shoulder bolts.

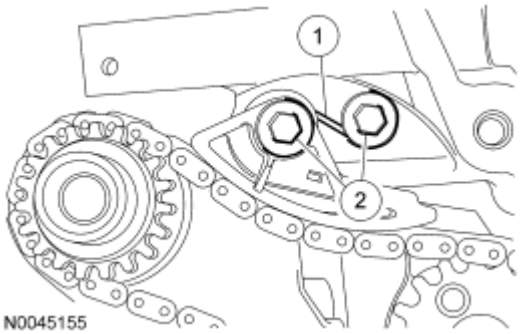

Fig. 403: Locating Shoulder Bolts & Tensioner
Courtesy of FORD MOTOR CO.

All vehicles

NOTE: Remove the crankshaft sprocket diamond washers located in front of and behind the crankshaft sprocket.

NOTE: The oil pump chain sprocket must be held in place.

85. Remove the oil pump chain and sprockets.
    1. Remove the bolt.
    2. Remove the chain and sprockets.

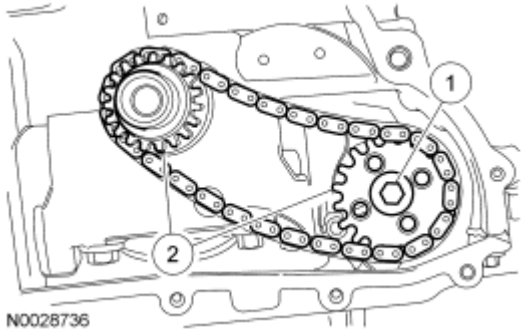

Fig. 404: Identifying Chain & Sprockets
Courtesy of FORD MOTOR CO.

86. Mark the position of the camshaft lobes on the No. 1 cylinder for assembly reference.

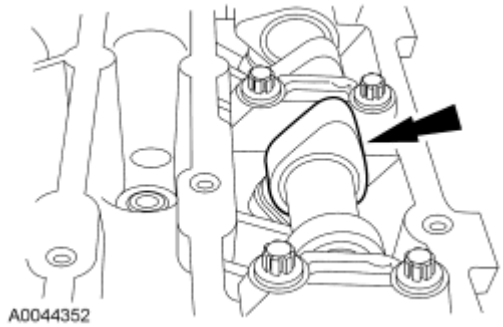

Fig. 405: Locating Camshaft Lobe
Courtesy of FORD MOTOR CO.

87. Remove the bolt and the VCT solenoid.

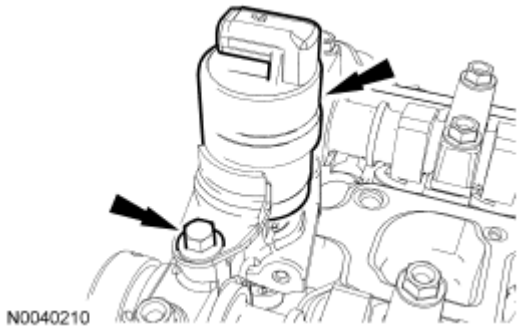

Fig. 406: Locating Variable Camshaft Timing (VCT) Solenoid And Bolt
Courtesy of FORD MOTOR CO.

CAUTION: Failure to follow the camshaft loosening procedure can result in damage to the camshafts.

88. Remove the camshafts from the engine.

- Loosen the camshaft bearing cap bolts, in the sequence shown, one turn at a time until all tension is released from the camshaft bearing caps.
- Remove the bolts and the camshaft bearing caps.
- Remove the camshafts.

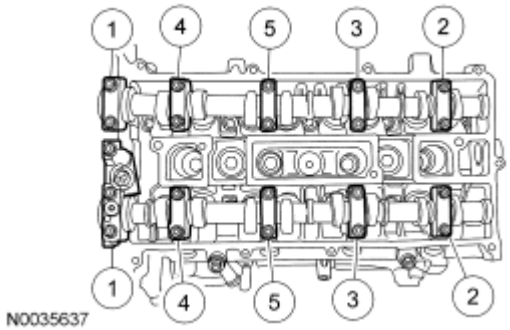

Fig. 407: Identifying Loosening Sequence Of Camshaft Bearing Cap Bolts
Courtesy of FORD MOTOR CO.

CAUTION: If the camshafts and valve tappets are to be reused, mark the location of the valve tappets to make sure they are assembled in their original positions.

NOTE: The number on the valve tappets only reflects the digits that follow the decimal. For example, a tappet with the number 0.650 has the thickness of 3.650 mm.

89. Remove and inspect the valve tappets. For additional information, refer to **ENGINE SYSTEM - GENERAL INFORMATION** .
90. Remove the cylinder head.
    - Remove and discard the 10 cylinder head bolts.
    - Remove the cylinder head.
    - Remove and discard the cylinder head gasket.

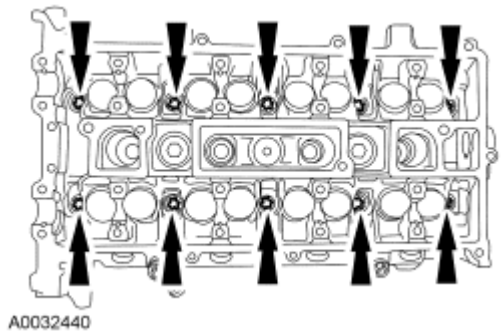

Fig. 408: Locating Cylinder Head Bolts
Courtesy of FORD MOTOR CO.

91. Remove the 2 cylinder head alignment dowels.

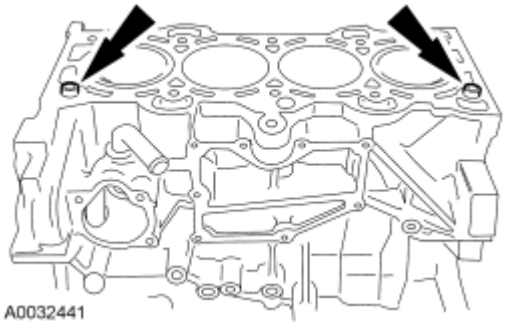

Fig. 409: Identifying Cylinder Head Alignment Dowels
Courtesy of FORD MOTOR CO.

92. Remove the 13 bolts and the oil pan.

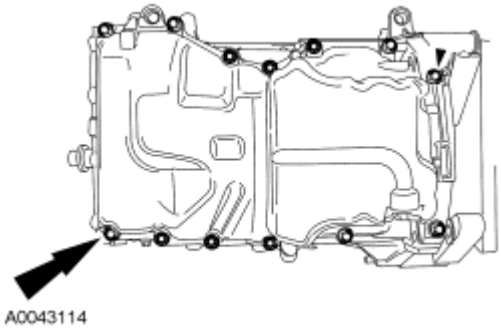

Fig. 410: Locating Oil Pan Bolts
Courtesy of FORD MOTOR CO.

93. Remove the 6 bolts and the rear crankshaft seal.

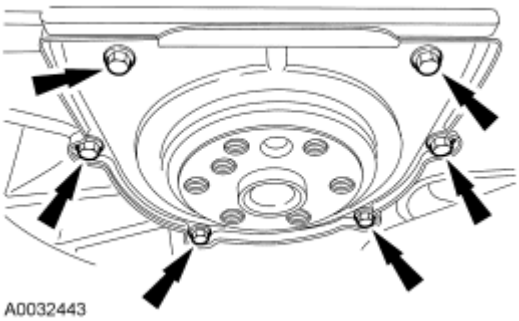

Fig. 411: Locating Rear Crankshaft Seal Bolts
Courtesy of FORD MOTOR CO.

94. Remove the 2 bolts, oil pump pickup tube and gasket.

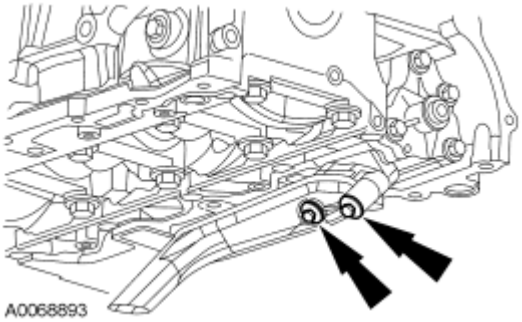

Fig. 412: Locating Oil Pump Pickup Tube Bolts
Courtesy of FORD MOTOR CO.

95. Remove the 4 bolts and the oil pump.

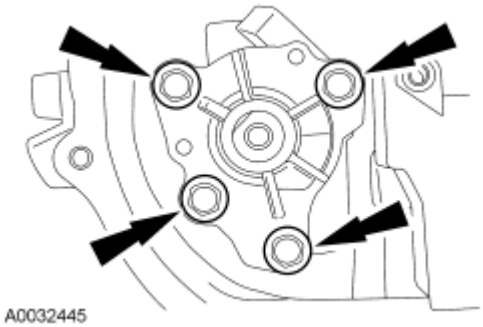

Fig. 413: Locating Oil Pump Bolts
Courtesy of FORD MOTOR CO.

96. Make sure the Crankshaft **TDC** Timing Peg is still installed and the engine is still at Top Dead Center (TDC).
    - Rotate the crankshaft slowly clockwise until the crankshaft balance weight is up against the Crankshaft **TDC** Timing Peg.

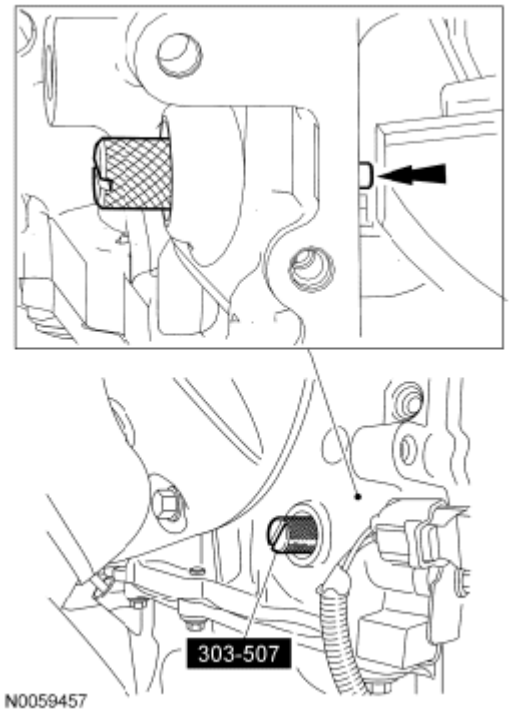

Fig. 414: Installing Crankshaft TDC Timing Peg

97. Mark the balancer unit and shafts on the top for reference that the balancer unit is at **TDC** .

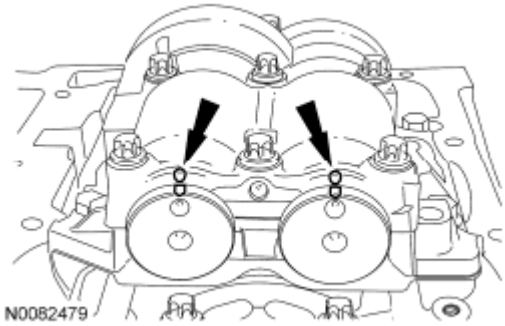

Fig. 415: Locating Balancer Unit And Shafts Reference Mark

NOTE: Due to the precision interior construction of the balancer unit, it should not be disassembled.

98. Remove the 4 bolts and the balancer unit.

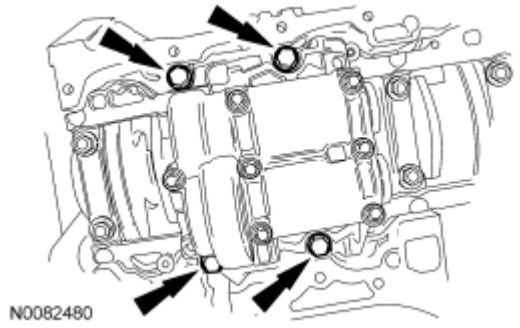

Fig. 416: Locating Balancer Unit Bolts

99. Remove the Crankshaft **TDC** Timing Peg.

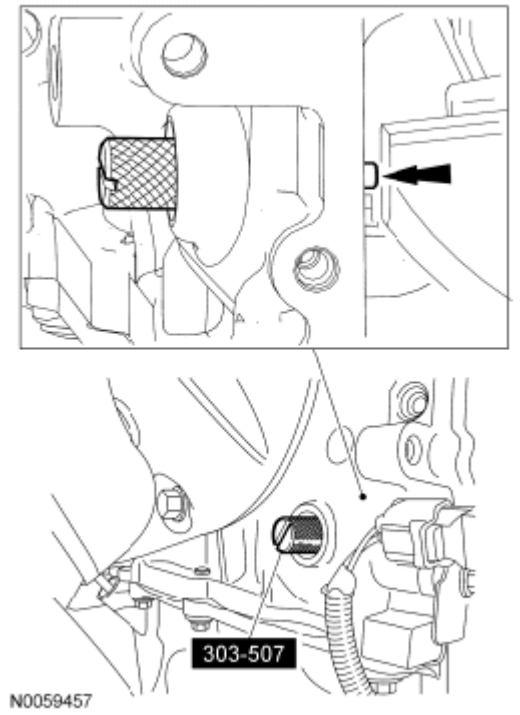

Fig. 417: Installing Crankshaft TDC Timing Peg

100. Before removing the pistons, inspect the top of the cylinder bores. If necessary, remove the ridge or carbon deposits from each cylinder using an abrasive pad or equivalent, following manufacturer's instructions.

NOTE: Clearly mark the connecting rods, connecting rod caps and connecting rod bearings in numerical order for correct orientation for reassembly.

101. Remove the connecting rod cap bolts and cap.

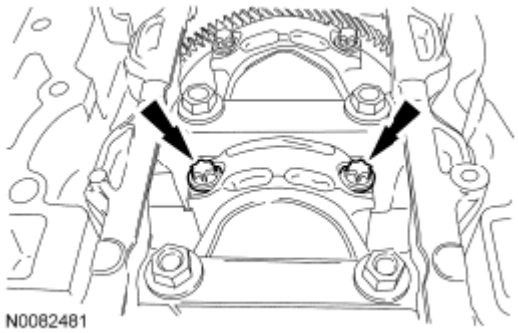

Fig. 418: Locating Connecting Rod Cap Bolts

102. **NOTE: Do not scratch the cylinder walls or crankshaft journals with the connecting rod.**

Using the Connecting Rod Installer, remove the piston/rod assembly from the engine block.

- Repeat the previous 2 steps until all the piston/rod assemblies are removed from the engine block.

Fig. 419: Identifying Connecting Rod Installer

103. Remove the bolts in the sequence shown.
    - Remove the main bearing beam.
    - Discard the bolts.

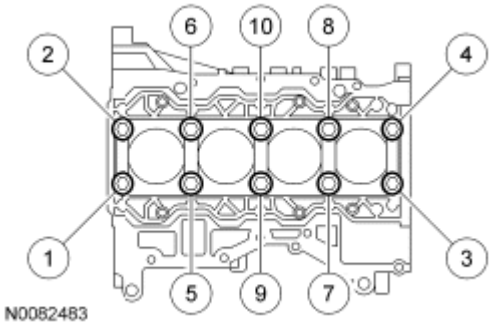

Fig. 420: Identifying Crankshaft Cap Bolts Removing Sequence

104. Remove the crankshaft from the engine block.

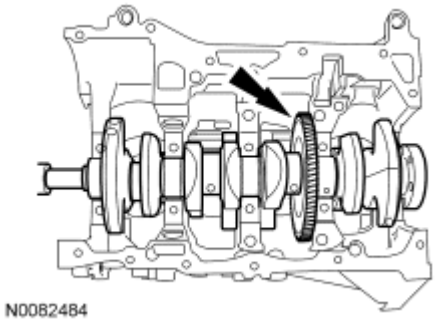

Fig. 421: Locating Crankshaft

105. **NOTE: If the main bearings are being reused, mark them in order for correct orientation and reassembly.**

Remove the main bearings from the main bearing beam.

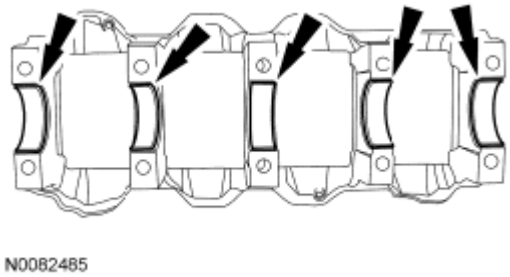

Fig. 422: Locating Main Bearings

106. **NOTE: If the main bearings are being reused, mark them in order for correct orientation and reassembly.**

NOTE: The center bulkhead has the thrust bearing.

Remove the main bearings from the cylinder block.

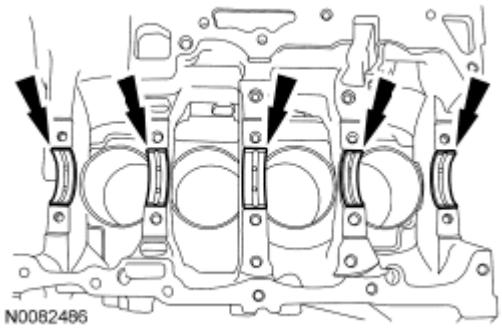

Fig. 423: Locating Main Bearings

107. **NOTE: If the oil squirters are being reused, mark them in order for correct location during reassembly.**

NOTE: The front bulkhead does not have an oil squirter.

Remove the 4 oil squirters.

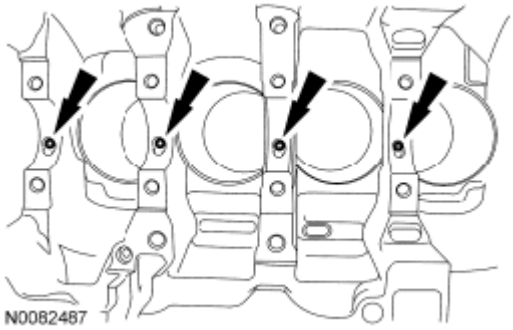

Fig. 424: Locating Oil Squirters

108. Inspect the cylinder block, main bearing beam, pistons and connecting rods. For additional information, refer to **ENGINE SYSTEM - GENERAL INFORMATION** .

DISASSEMBLY AND ASSEMBLY OF SUBASSEMBLIES

CYLINDER HEAD

Special Tools

Illustration	Tool Name	Tool Number
	Compressor, Valve Spring	303-350 (T89P-6565-A)

 ST1907-A		
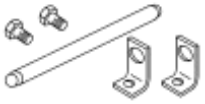 ST1981-A	Compressor, Valve Spring	303-300 (T87C-6565-A)
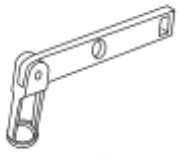 ST1902-A	Compressor, Valve Spring	303-472 (T94P-6565-AH)
 ST1904-A	Remover, Valve Stem Oil Seal	303-468 (T94P-6510-AH)
 ST1906-A	Installer, Valve Stem Oil Seal	303-470 (T94P-6510-CH)
 ST1187-A	Slide Hammer	307-005 (T59L-100-B)

Material

Item	Specification
Motorcraft SAE 5W-20 Premium Synthetic Blend Motor Oil XO-5W20-QSP (US); Motorcraft SAE 5W-20 Super Premium Motor Oil CXO-5W20-LSP12 (Canada); or equivalent	WSS-M2C930-A
Multi-Purpose Grease XG-4 and/or XL-5	ESB-M1C93-B

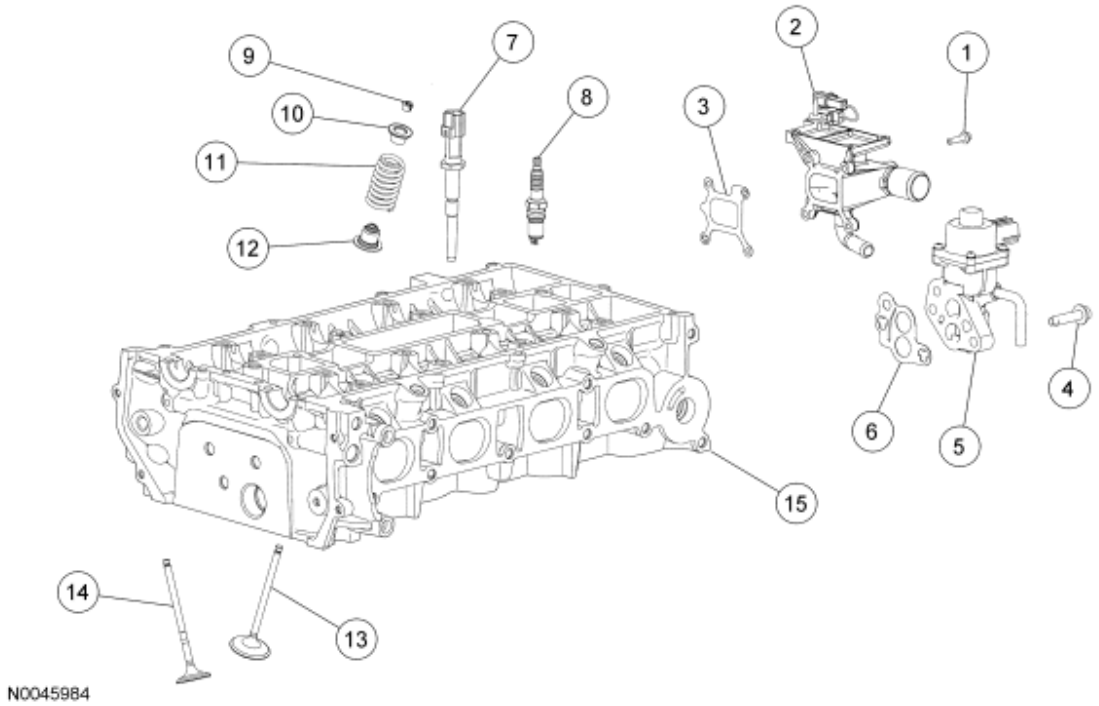

Fig. 425: Exploded View Of Cylinder Head
Courtesy of FORD MOTOR CO.

Item	Part Number	Description
1	W500015	Coolant outlet bolt (4 required)
2	8K556	Coolant outlet
3	8255	Coolant outlet gasket
4	W500225	Exhaust gas recirculation (EGR) valve bolt (2 required)
5	9D475	EGR valve
6	9D476	EGR valve gasket
7	6G004	Cylinder head temperature (CHT) sensor
8	12405	Spark plug (4 required)
9	6518	Valve collet (16 required)
10	6514	Valve spring retainer (16 required)
11	6513	Valve spring (16 required)
12	6517	Valve seal (16 required)
13	6505	Intake valve (8 required)
14	6507	Exhaust valve (8 required)
15	6049	Cylinder head

DISASSEMBLY

CAUTION: If the components are to be reinstalled, they must be installed in the same

positions. Mark the components removed for locations.

1. Remove the 4 bolts and the coolant outlet.
   - Discard the gasket.
2. Remove the 2 bolts and the exhaust gas recirculation (EGR) valve.
   - Discard the gasket.
3. Remove and discard the cylinder head temperature (CHT) sensor.

CAUTION: Only use hand tools when removing or installing the spark plugs, damage can occur to the cylinder head or spark plug.

4. Remove the spark plugs.

NOTE: Use a small screwdriver and grease to remove the valve collets.

5. Using the special tools, compress the valve springs and remove the valve collets, valve spring retainers and the valve springs.

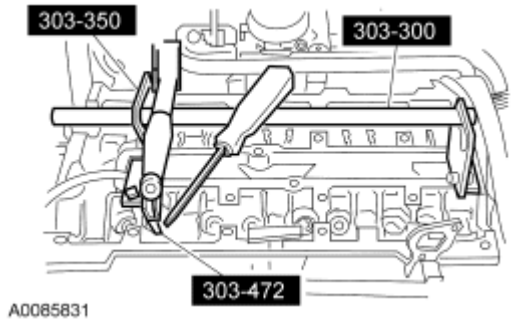

Fig. 426: Identifying Special Tools (303-300, 303-350, 303-472)
Courtesy of FORD MOTOR CO.

6. Inspect the components, if necessary. For additional information, refer to **ENGINE SYSTEM - GENERAL INFORMATION** .
7. Remove the valves.
8. Using the special tools, remove and discard the valve seals.

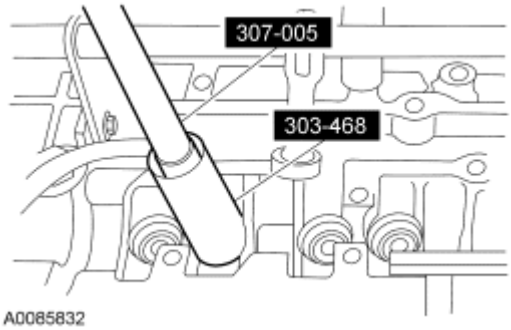

Fig. 427: Removing Valve Seal Using Special Tools (307-005, 303-468)
Courtesy of FORD MOTOR CO.

9. Inspect the valves. For additional information, refer to **ENGINE SYSTEM - GENERAL INFORMATION** . Install new parts, as necessary.

ASSEMBLY

NOTE: Coat the valve stems with clean engine oil.

1. Install the valves.

NOTE: Use the protector provided with the replacement kit to prevent damage to the valve seals. Lubricate the valve stems and guides with clean engine oil.

2. Using the special tool, install the valve seals.

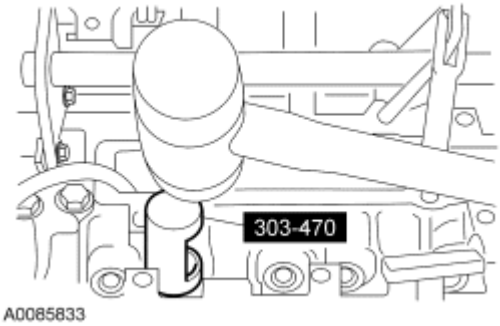

Fig. 428: Installing Valve Seal Using Special Tool (303-470)
Courtesy of FORD MOTOR CO.

NOTE: Check the seating of the valve collets.

3. Using the special tools, install the valve springs.
   - Insert the valve springs and the valve spring retainers.
   - Compress the valve springs and install the valve collets, using grease and a small screwdriver.

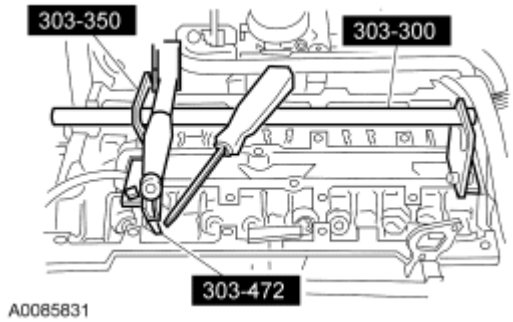

Fig. 429: Identifying Special Tools (303-300, 303-350, 303-472)
Courtesy of FORD MOTOR CO.

CAUTION: Only use hand tools when removing or installing the spark plugs, damage can occur to the cylinder head or spark plug.

4. Install the spark plugs.
   - Tighten to 12 Nm (9 lb-ft).
5. Install a new CHT sensor.
   - Tighten to 12 Nm (9 lb-ft).
6. Install the EGR valve, using a new gasket.
   - Tighten to 20 Nm (15 lb-ft).
7. Using a new gasket, install the coolant outlet and bolts.
   - Tighten to 10 Nm (89 lb-in).

ASSEMBLY

ENGINE BLOCK

For engine block, crankshaft and piston assembly installation procedures, refer to **ENGINE BLOCK - 2.3L** .

ENGINE (EXCEPT BLOCK)

Special Tools

Illustration	Tool Name	Tool Number
 ST1341-A	Heavy Duty Floor Crane	014-00071 or equivalent
	Spreader Bar	303-D089 (D93P-6001-A3) or equivalent

 ST1602-A		
 ST2645-A	Alignment Plate, Camshaft	303-465 (T94P-6256-CH)
 ST2638-A	Timing Peg, Crankshaft	303-507
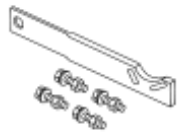 ST2647-A	Holding Fixture, Drive Pinion Flange	205-126 (T78P-4851-A)
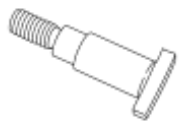 ST2639-A	Adapter for 205-126	(205-072-02)
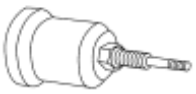 ST1917-A	Installer, Front Oil Seal	303-096 (T74P-6150-A)
 ST1506-A	Installer, Crankshaft Rear Main Oil Seal	303-328 (T88P-6701-B1)
 ST1751-A	Aligner, Clutch Disc	308-006 (T71P-7137-H)

Material

Item	Specification
Motorcraft SAE 5W-20 Premium Synthetic Blend Motor Oil XO-5W20-QSP (US); Motorcraft SAE 5W-20 Super Premium Motor Oil CXO-5W20-LSP12 (Canada); or equivalent	WSS-M2C930-A
Motorcraft Metal Surface Cleaner ZC-21	WSE-M5B392-A
Silicone Gasket and Sealant TA-30	WSE-M4G323-A4
Silicone Gasket Remover ZC-30	-
Motorcraft Metal Surface Prep ZC-31	-
Silicone Brake Caliper Grease and Dielectric Compound XG-3-A	ESE-M1C171-A
Motorcraft Premium Engine Coolant with Bittering Agent (US); Motorcraft Premium Quality Antifreeze/Coolant (Canada) VC-5 (US); CXC-10 (Canada); or equivalent (green color)	ESE-M97B44-A
High Temperature 4x4 Front Axle and Wheel Bearing Grease E8TZ-19590-A	ESA-M1C198-A

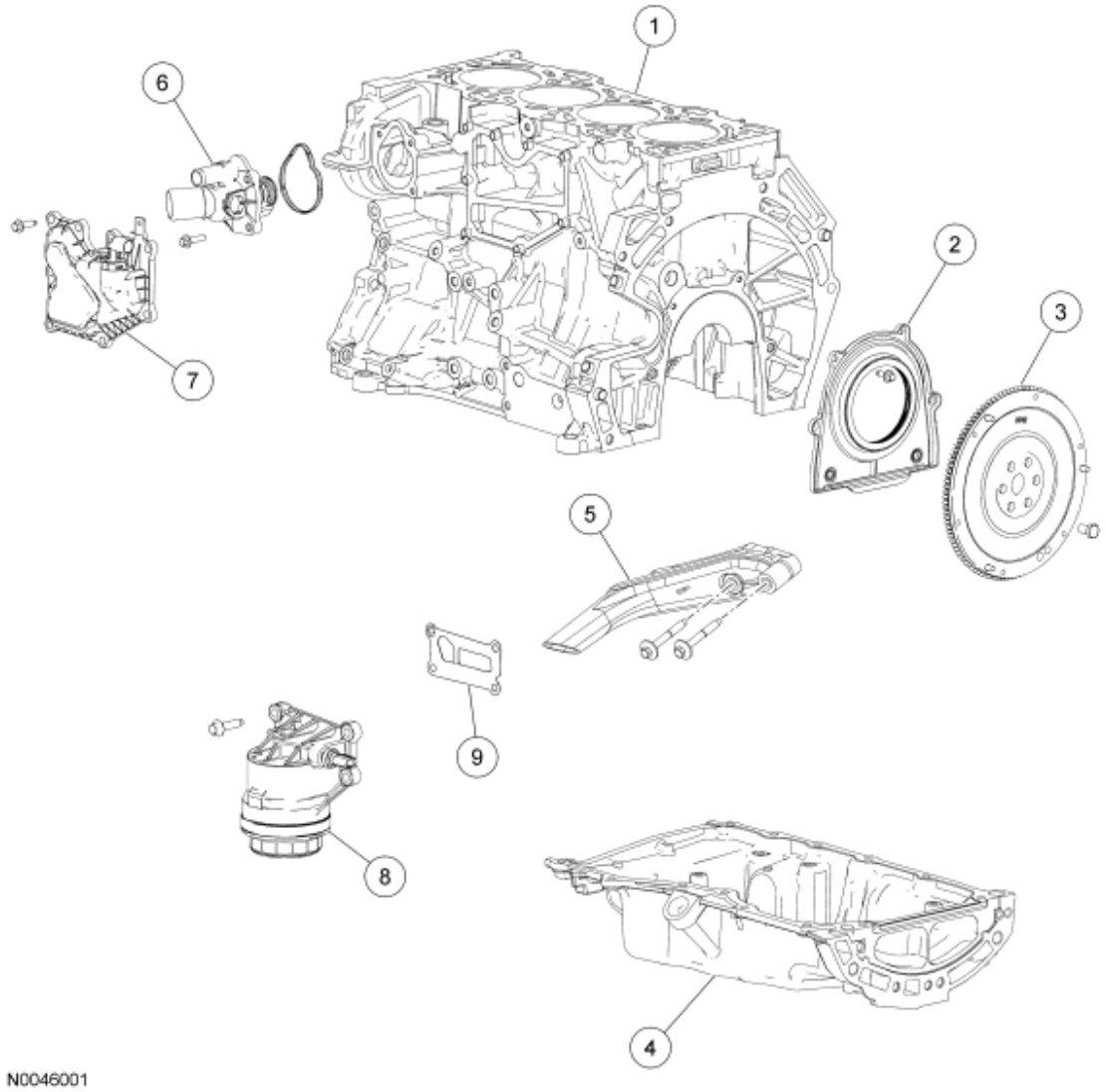

Fig. 430: Exploded View Of Lower Engine Block (View 1)
Courtesy of FORD MOTOR CO.

Item	Part Number	Description
1	6010	Cylinder block
2	6K318	Crankshaft rear oil seal and retainer
3	6477	Flywheel
4	6675	Oil pan
5	6622	Oil pump screen and pickup tube
6	8575	Thermostat assembly
7	6A785	Crankcase vent oil separator
8	6884	Oil filter adapter
9	6A636	Oil filter adapter gasket

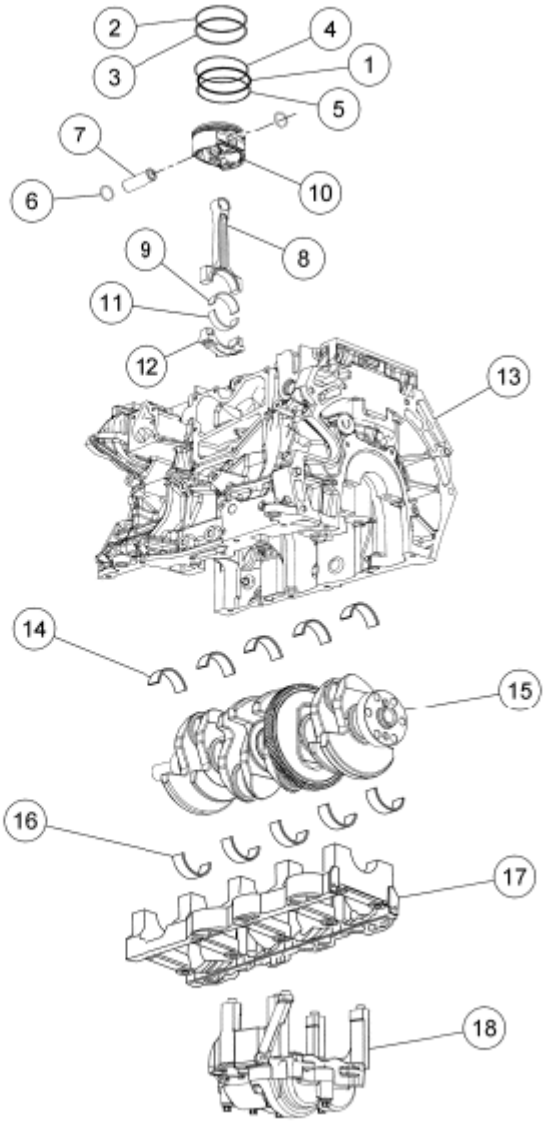

Fig. 431: Identifying Lower Engine Block Components (View 2)

ITEM DESCRIPTION

Item	Part Number	Description
1	6161	Piston oil control spacer (4 required)
2	6150	Piston compression upper ring (4 required)
3	6152	Piston compression lower ring (4 required)
4	6159	Piston oil control upper segment ring (4 required)
5	6159	Piston oil control lower segment ring (4 required)

6	6140	Piston pin retainer (8 required)
7	6135	Piston pin (4 required)
8	6200	Connecting rod (4 required)
9	6211	Connecting rod upper bearing (4 required)
10	6110	Piston (4 required)
11	6211	Connecting rod lower bearing (4 required)
12	6210	Connecting rod cap (4 required)
13	6010	Cylinder block
14	6333	Cylinder block crankshaft main bearing (5 required)
15	6303	Crankshaft
16	6333	Crankshaft main bearing beam bearing (5 required)
17	6F098	Main bearing beam
18	6K360	Balance shaft assembly

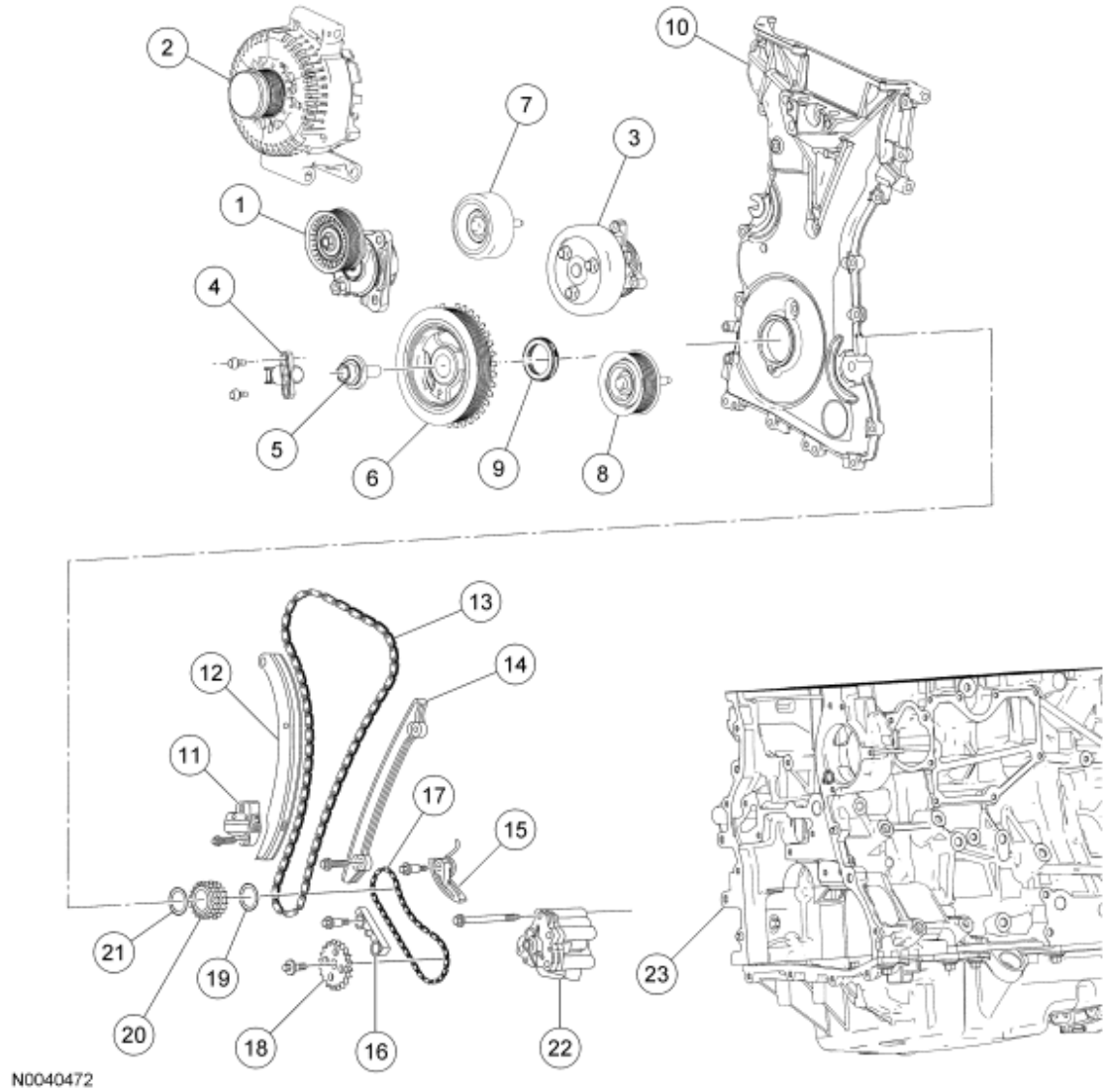

Fig. 432: Exploded View Of Front Engine Block
Courtesy of FORD MOTOR CO.

Item	Part Number	Description
1	6B209	Accessory drive belt tensioner
2	10300	Generator
3	8501	Coolant pump and pulley
4	6C315	Crankshaft position (CKP) sensor
5	6A340	Crankshaft pulley bolt
6	6316	Crankshaft pulley
7	6C348	Idler pulley
8	6C348	Idler pulley (without A/C only)
9	6700	Crankshaft front seal
10	6019	Engine front cover

11	6K254	Timing chain tensioner
12	6K255	Timing chain tensioner arm
13	6268	Timing chain
14	6K297	Timing chain guide
15	6C271	Oil pump chain tensioner
16	6M256	Oil pump chain guide (early build)
17	6A895	Oil pump chain
18	6652	Oil pump drive gear
19	6378	Diamond washer
20	6306	Crankshaft sprocket
21	6378	Diamond washer
22	6600	Oil pump
23	6010	Cylinder block

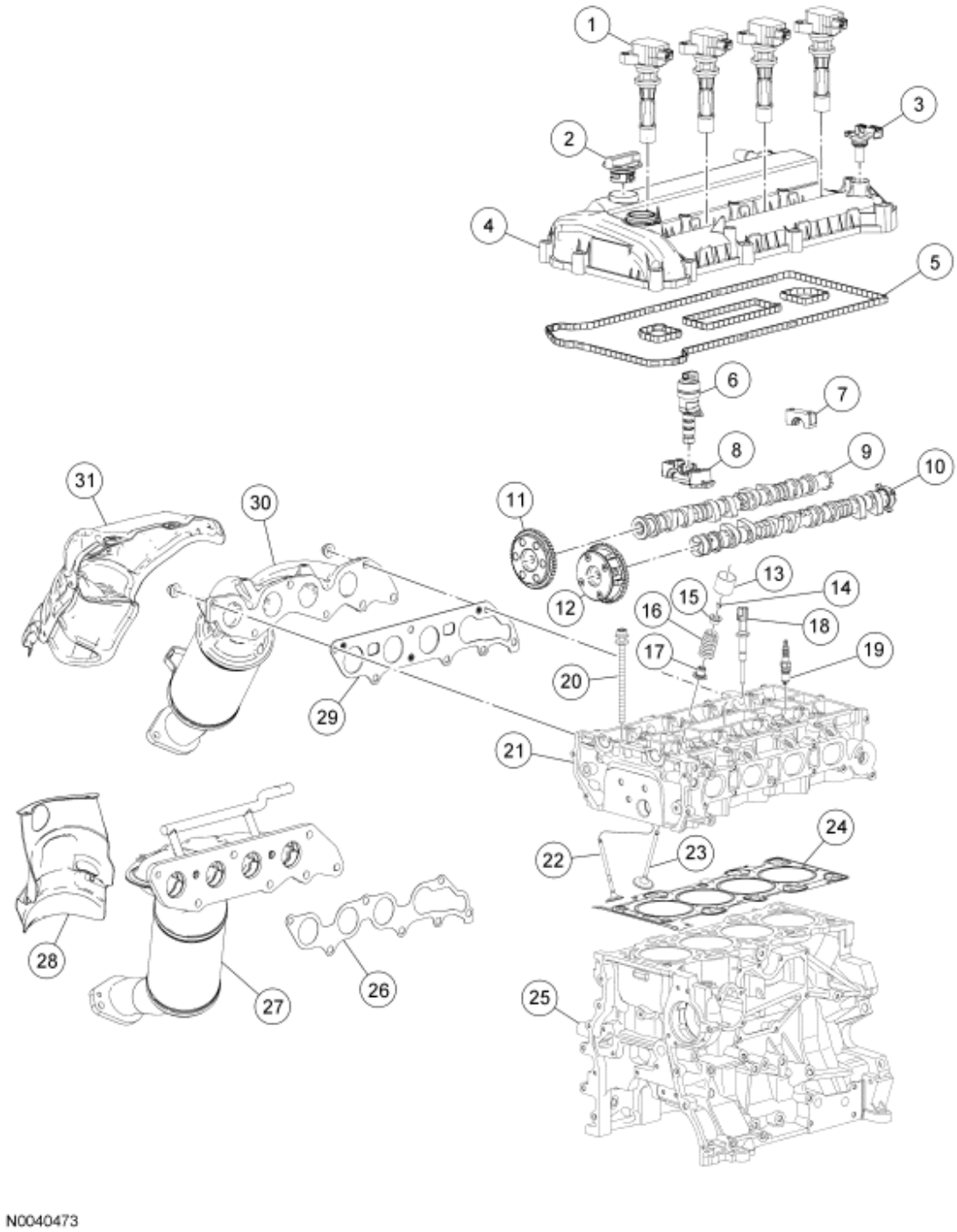

Fig. 433: Exploded View Of Cylinder Head
Courtesy of FORD MOTOR CO.

Item	Part Number	Description
1	12A366	Coil-on-plug assembly (4 required)
2	6766	Oil filler cap
3	12K073	Camshaft position (CMP) sensor

4	6M293	Valve cover
5	6M293	Valve cover gasket
6	6M280	Variable camshaft timing (VCT) solenoid
7	6A284	Camshaft bearing caps (9 required)
8	6A258	Camshaft bearing cap
9	6A272	Camshaft (exhaust)
10	6A271	Camshaft (intake)
11	6C251	Camshaft sprocket
12	6C525	VCT actuator
13	6500	Valve tappet (16 required)
14	6518	Valve collet (16 required)
15	6514	Valve spring retainer (16 required)
16	6513	Valve spring (16 required)
17	6A517	Valve stem seal (16 required)
18	6G004	Cylinder head temperature (CHT) sensor
19	12405	Spark plug (4 required)
20	6065	Cylinder head bolt (10 required)
21	6049	Cylinder head
22	6505	Exhaust valve (8 required)
23	6507	Intake valve (8 required)
24	6051	Head gasket
25	6010	Cylinder block
26	9448	Catalytic converter gasket (with secondary air injection)
27	5E211	Catalytic converter (with secondary air injection)
28	-	Heat shield (with secondary air injection)
29	9448	Catalytic converter gasket (without secondary air injection)
30	5E211	Catalytic converter (without secondary air injection)
31	-	Heat shield (without secondary air injection)

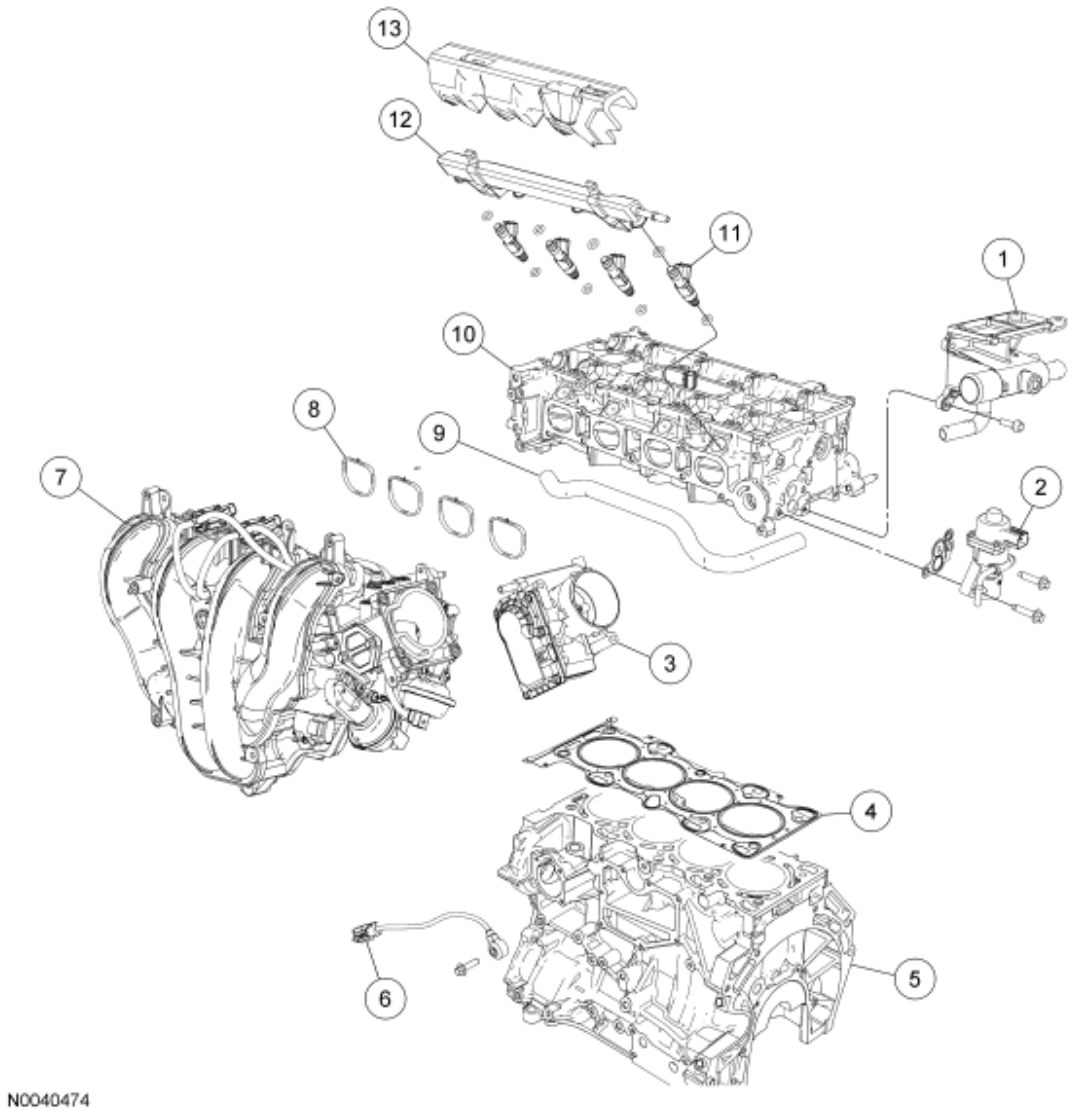

Fig. 434: Exploded View Of Intake Manifold
Courtesy of FORD MOTOR CO.

Item	Part Number	Description
1	8K556	Coolant outlet
2	9D475	Exhaust gas recirculation (EGR) valve
3	9F991	Throttle body
4	6051	Cylinder head gasket
5	6010	Cylinder block
6	12A699	Knock sensor (KS)
7	9424	Intake manifold
8	9439	Intake manifold gasket
9	8A582	Coolant hose
10	6049	Cylinder head

11	9F593	Fuel injector (4 required)
12	9H487	Fuel rail
13	-	Fuel rail insulator

CAUTION: Do not loosen or remove the crankshaft pulley bolt without first installing the special tools as instructed in this procedure. The crankshaft pulley and the crankshaft timing sprocket are not keyed to the crankshaft. The crankshaft, the crankshaft sprocket and the pulley are fitted together by friction, using diamond washers between the flange faces on each part. For that reason, the crankshaft sprocket is also unfastened if you loosen the pulley bolt. Before any repair requiring loosening or removal of the crankshaft pulley bolt, the crankshaft and camshafts must be locked in place by the special service tools, otherwise severe engine damage can occur.

CAUTION: During engine repair procedures, cleanliness is extremely important. Any foreign material, including any material created while cleaning gasket surfaces that enters the oil passages, coolant passages or the oil pan, can cause engine failure.

NOTE: Early build engines are equipped with an oil pump drive chain guide. Late build engines do not have an oil pump drive chain guide. Also, late build engines use an updated design for the oil pump drive chain and tensioner. Therefore, the oil pump drive components are not interchangeable between early build and late build engines.

All vehicles

1. **NOTE: If the oil squirters are being reused, they must be installed in the same location as marked during disassembly.**

   NOTE: The front bulkhead does not have an oil squirter.

   Install the 4 oil squirters.

   - Tighten to 4 Nm (35 lb-in).

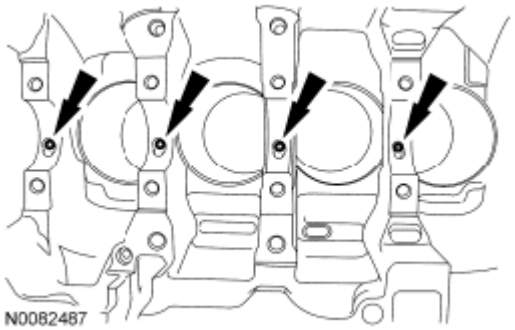

Fig. 435: Locating Oil Squirters

2. Measure each of the crankshaft main bearing journal diameters in at least 2 directions and record the smallest diameter for each journal.

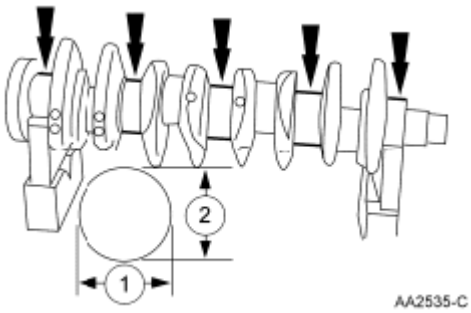

Fig. 436: Identifying Measuring Directions Of Crankshaft Main Bearing Journal Diameter

3. Position the main bearing beam in the engine block with the main bearing beam mounted flush with the rear face of the engine block.

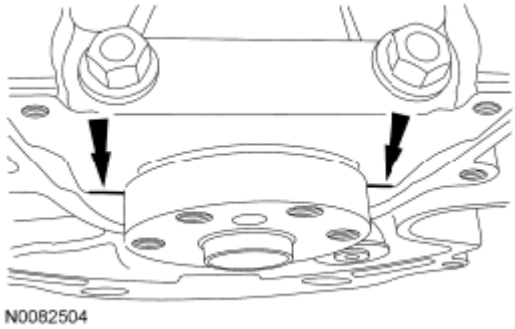

Fig. 437: Locating Main Bearing Beam

4. Using the original main bearing beam bolts, install and tighten the 10 main bearing beam bolts.
   - Tighten the bolts in the sequence shown in 3 stages.
   - Stage 1: Tighten to 5 Nm (44 lb-in).

- Stage 2: Tighten to 25 Nm (18 lb-ft).
- Stage 3: Tighten an additional 90 degrees.

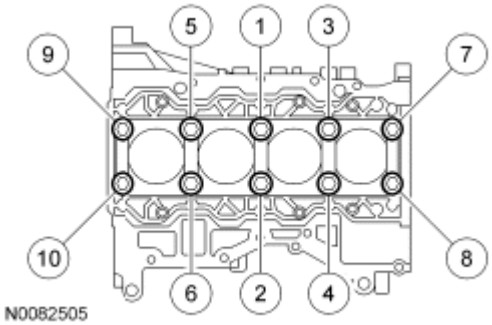

Fig. 438: Identifying Main Bearing Beam Bolts Tightening Sequence

5. Measure each crankshaft block main bearing bore diameter.
   - Remove the bolts and the main bearing beam.
   - Discard the main bearing beam bolts.

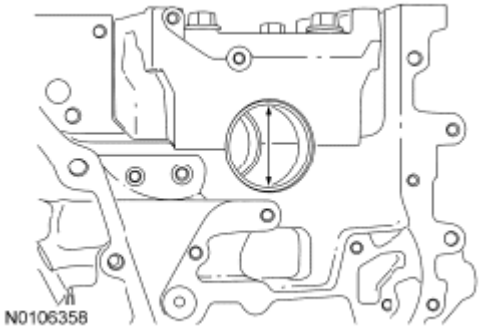

Fig. 439: Identifying Crankshaft Block Main Bearing Bore Diameter

6. Using the chart, select the crankshaft main bearings.

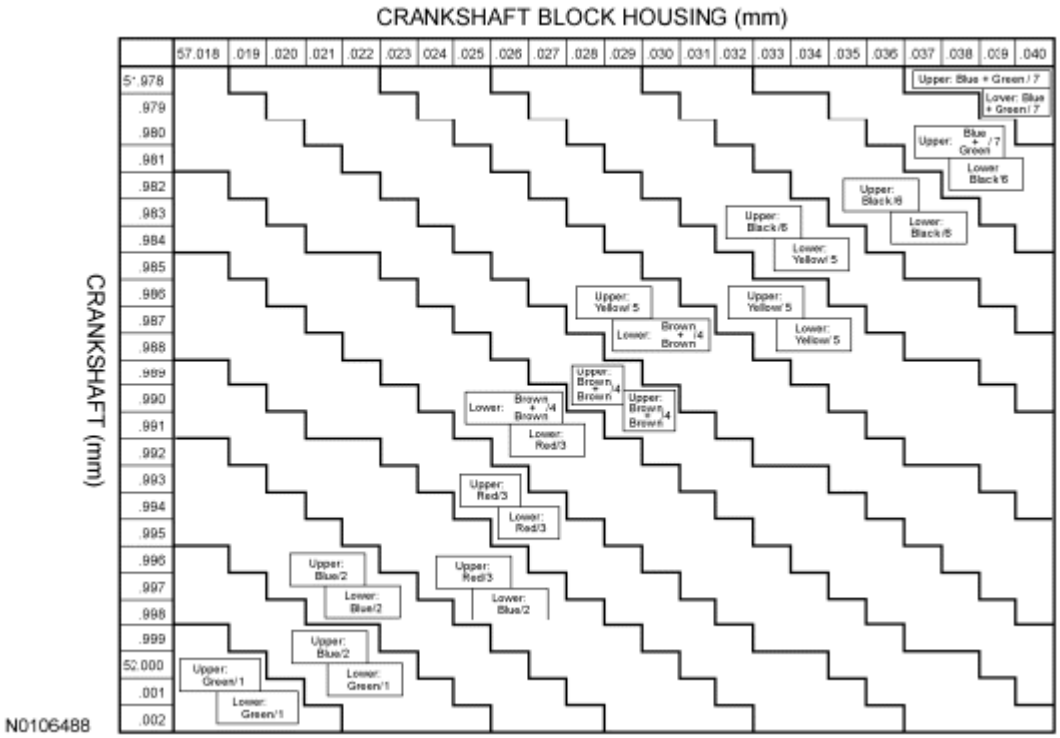

Fig. 440: Crankshaft Main Bearings Chart

7. **NOTE: The rod cap installation must keep the same orientation as marked during disassembly or engine damage may occur.**

Using the original connecting rod cap bolts, install the connecting caps and bolts.

- Tighten the bolts in 2 stages.
- Stage 1: Tighten to 29 Nm (21 lb-ft).
- Stage 2: Tighten an additional 90 degrees.

8. Measure the connecting rod large end bore in 2 directions. Record the smallest measurement for each connecting rod.
   - Remove the bolts and the connecting rod cap.
   - Discard the connecting rod cap bolts.

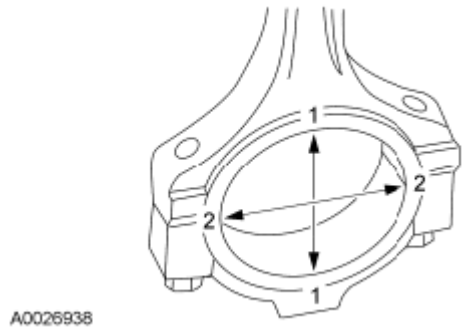

Fig. 441: Identifying Connecting Rod Large End Bore Measuring Directions

9. Measure each of the crankshaft connecting rod bearing journal diameters in at least 2 directions. Record the smallest measurement for each connecting rod journal.

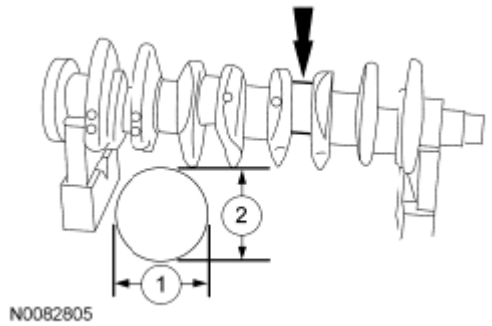

Fig. 442: Identifying Measuring Directions Of Crankshaft Connecting Rod Bearing Journal Diameters

10. Using the chart, select the correct connecting rod bearings for each crankshaft connecting rod journal.

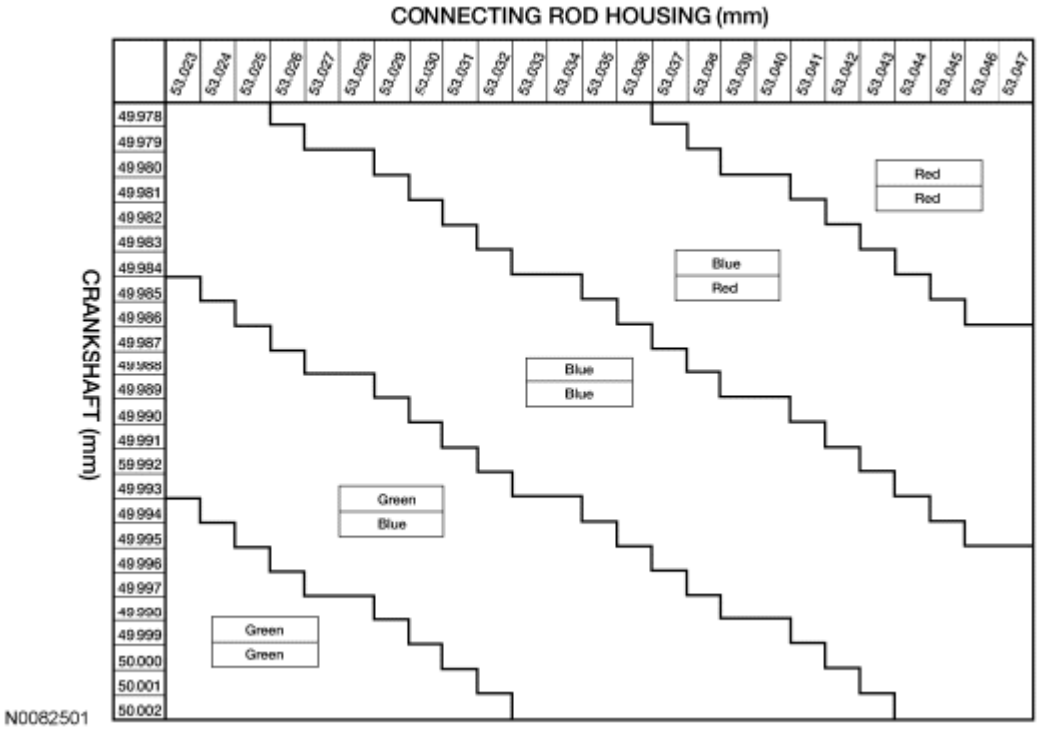

Fig. 443: Connecting Rod Bearings Chart

11.

NOTE: **Before assembling the cylinder block, all sealing surfaces must be free of chips, dirt, paint and foreign material. Also, make sure the coolant and oil passages are clear.**

NOTE: **If reusing the crankshaft main bearings, install them in their original positions and orientation as noted during disassembly.**

NOTE: **The center bulkhead is the thrust bearing.**

Lubricate the upper crankshaft main bearings with clean engine oil and install the 5 crankshaft main bearings in the cylinder block.

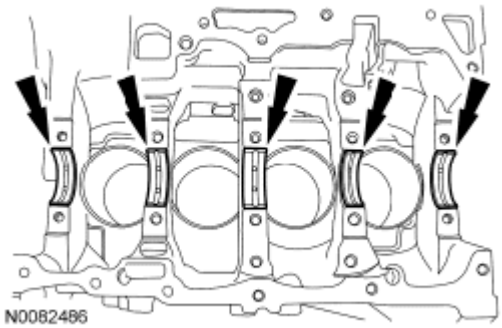

Fig. 444: Locating Upper Crankshaft Main Bearings

12. **NOTE: If reusing the crankshaft main bearings, install them in their original positions and orientation as noted during disassembly.**

Lubricate the crankshaft main bearings with clean engine oil and install the 5 crankshaft main bearings in the main bearing beam.

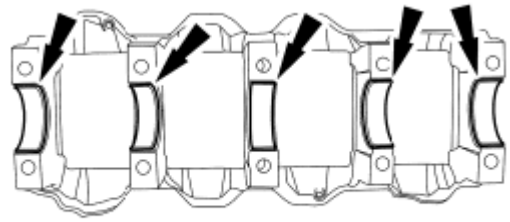

Fig. 445: Locating Crankshaft Main Bearings

13. Lubricate journals on the crankshaft with clean engine oil.
14. Position the crankshaft in the cylinder block.

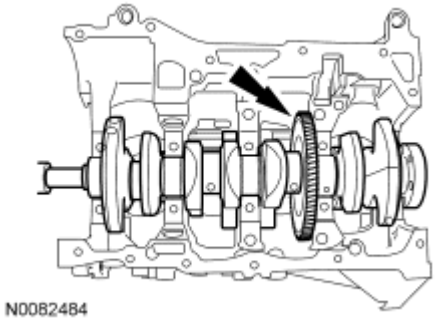

Fig. 446: Locating Crankshaft

15. Lubricate the 10 main bearing beam side fit surfaces (front 2 shown) with clean engine oil.

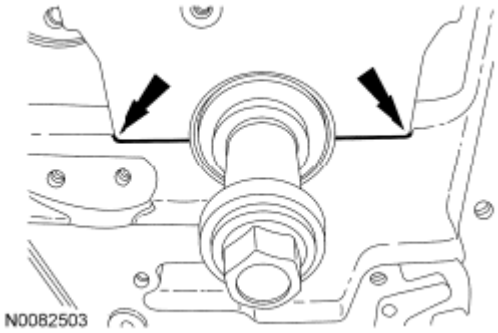

Fig. 447: Locating Main Bearing Beam Side Fit Surfaces

16. Lubricate the crankshaft bearing journals on the main bearing beam with clean engine oil. Then position the main bearing beam in the engine block with the main bearing beam mounted flush with the rear face of the engine block.

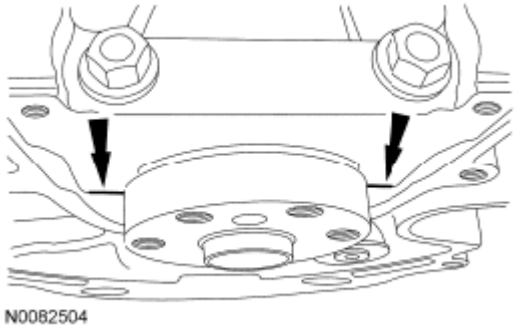

Fig. 448: Locating Main Bearing Beam

17. **NOTE: Lubricate the main bearing beam bolts threads and under the bolt heads with clean engine oil.**

NOTE: Position the crankshaft to the rear of the cylinder block, then position the crankshaft to the front of the cylinder block before tightening the main bearing beam bolts.

Install and tighten the 10 new main bearing beam bolts.

- Tighten the bolts in the sequence shown in 3 stages.
- Stage 1: Tighten to 5 Nm (44 lb-in).
- Stage 2: Tighten to 25 Nm (18 lb-ft).
- Stage 3: Tighten an additional 90 degrees.

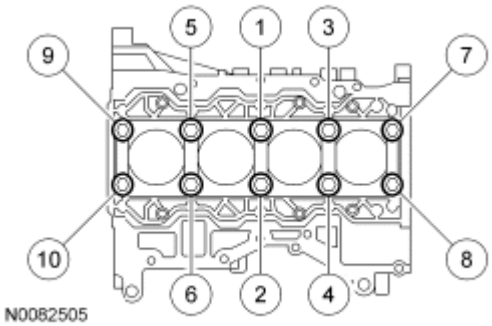

Fig. 449: Identifying Main Bearing Beam Bolts Tightening Sequence

18. Using the Dial Indicator Gauge with Holding Fixture, measure crankshaft end play.
    - Position the crankshaft to the rear of the cylinder block.
    - Zero the Dial Indicator Gauge with Holding Fixture.
    - Move the crankshaft to the front of the cylinder block. Note and record the crankshaft end play.
    - Acceptable crankshaft end play is 0.22-0.43 mm (0.008-0.016 in). If the crankshaft end play exceeds the specified range, install new parts as necessary.

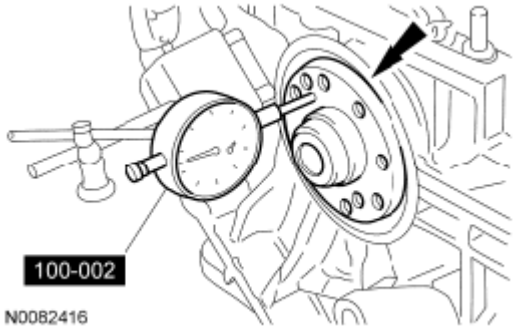

Fig. 450: Measuring Crankshaft End Play

19.

NOTE: **Be sure not to scratch the cylinder wall or crankshaft journal with the connecting rod. Push the piston down until the connecting rod bearing seats on the crankshaft journal.**

NOTE: **Lubricate the pistons, piston rings, connecting rod bearings and the entire cylinder bores with clean engine oil.**

NOTE: **Make sure the piston arrow on top is facing toward the front of the engine.**

Using the Piston Ring Compressor and the Connecting Rod Installer, install the piston and connecting rod assemblies.

- When installing the pistons and connecting rod assemblies, the oil ring gaps must be positioned 60

degrees apart from each other and a minimum of 90 degrees from the expander gap.

- The position of the upper and lower compression ring gaps are not controlled for installation.

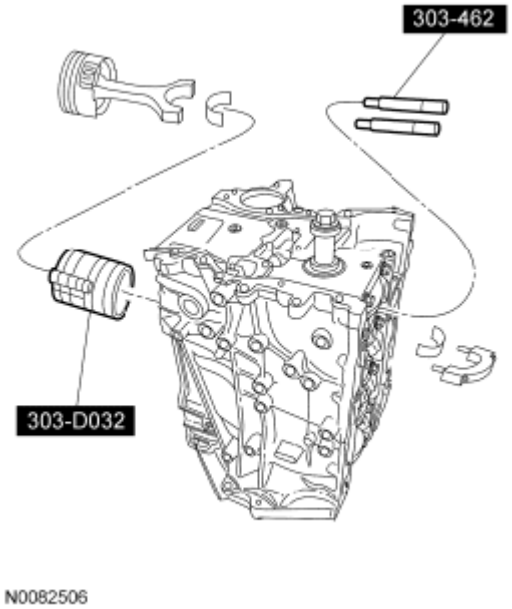

Fig. 451: Identifying Piston Ring Compressor And Connecting Rod Installer

20.

NOTE: **The rod cap installation must keep the same orientation as marked during disassembly or engine damage may occur.**

NOTE: **Install connecting rod caps and bolts on the connecting rods for cylinders 1 and 4 first and tighten. Then rotate crankshaft 180 degrees and install connecting rod caps and bolts on connecting rods for cylinders 2 and 3 and tighten.**

NOTE: **After installation of each connecting rod cap, rotate the crankshaft to verify smooth operation.**

Install the connecting rod caps and the new bolts.

- Tighten the bolts in 2 stages.
- Stage 1: Tighten to 29 Nm (21 lb-ft).
- Stage 2: Tighten an additional 90 degrees.

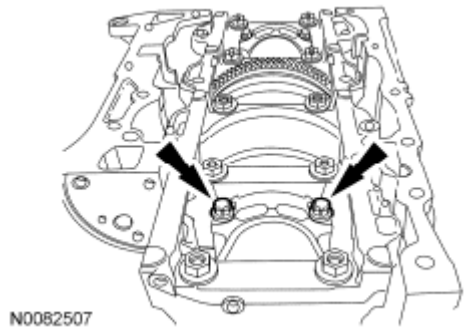

Fig. 452: Locating Connecting Rod Cap Bolts

21. Install the Crankshaft **TDC** Timing Peg and rotate the crankshaft slowly clockwise until the crankshaft balance weight is up against the Crankshaft **TDC** Timing Peg. The engine is now at Top Dead Center (TDC).

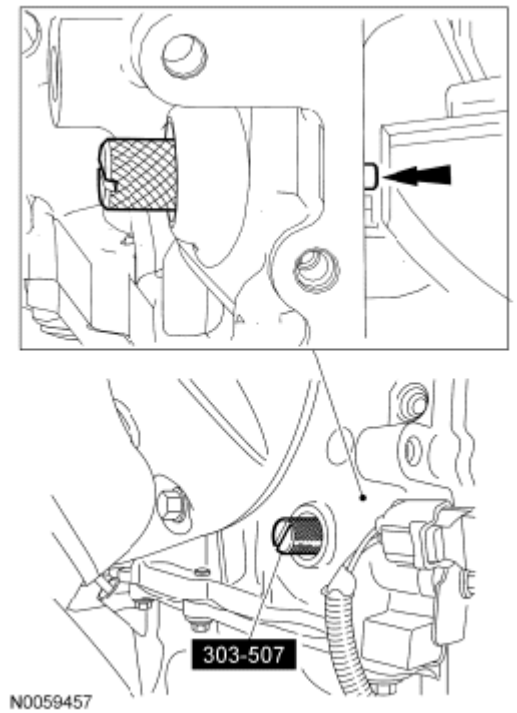

Fig. 453: Installing Crankshaft TDC Timing Peg

22.

NOTE: **Due to the precision interior construction of the balancer unit, it should not be disassembled.**

NOTE: **The original adjustment shims must be installed in their original position.**

NOTE: **Confirm by visual inspection that there is no damage to the balancer unit**

gear and verify that the shaft turns smoothly. If there is any damage or malfunction, replace the balancer unit.

Install the adjustment shims in their original position on the seat faces of the balancer unit.

23. With the balancer unit shaft marks in the **TDC** position, slowly install the balancer unit to the cylinder block to avoid interference between the crankshaft drive gear and the balancer unit driven gear.

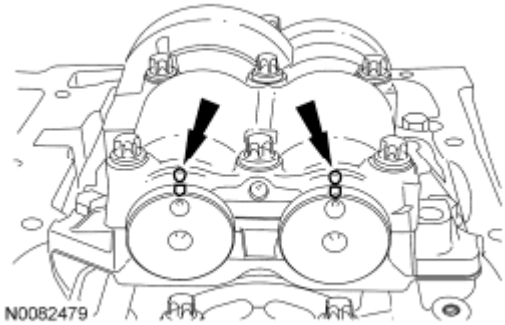

Fig. 454: Locating Balancer Unit And Shafts Reference Mark

24. Install the balancer unit bolts.
    - Tighten in the sequence shown in 2 stages.
    - Stage 1: Tighten to 25 Nm (18 lb-ft).
    - Stage 2: Tighten to 50 Nm (37 lb-ft).

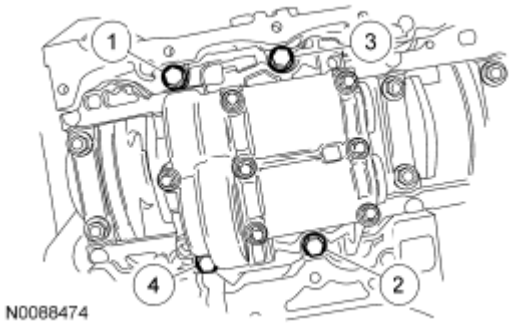

Fig. 455: Identifying Balancer Unit Bolts Tightening Sequence

25. Remove the Crankshaft **TDC** Timing Peg.

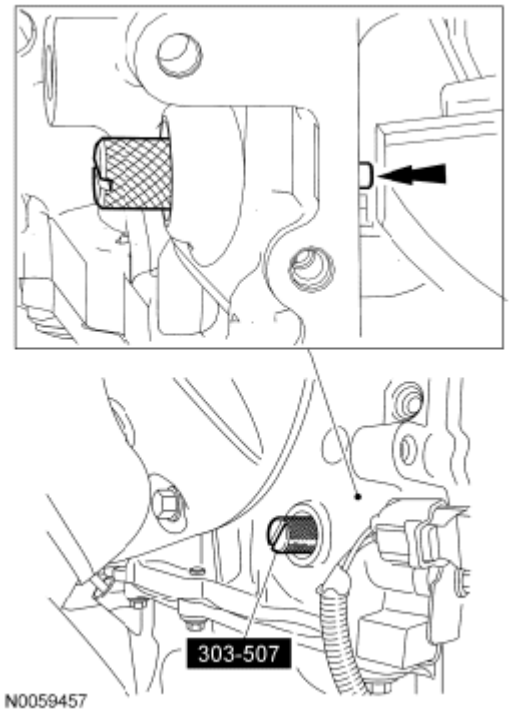

Fig. 456: Installing Crankshaft TDC Timing Peg

26. Rotate the crankshaft to confirm that there are no meshing problems between the balancer unit gear and the crankshaft gear.
27. Install the Crankshaft **TDC** Timing Peg and rotate the crankshaft slowly clockwise until the crankshaft balance weight is up against the Crankshaft **TDC** Timing Peg.
    - Remove the Crankshaft **TDC** Timing Peg.

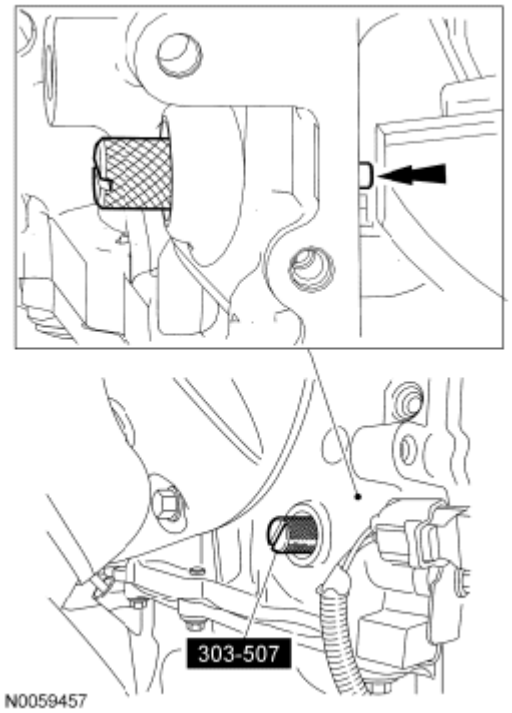

Fig. 457: Installing Crankshaft TDC Timing Peg

28.

NOTE: **Measure the backlash and verify that it is within specified range at all of the following 6 positions: 10 degrees, 30 degrees, 100 degrees, 190 degrees, 210 degrees and 280 degrees. It will be necessary to reset the measuring equipment between measurements.**

NOTE: **The measurement must be taken with the Dial Indicator Gauge with Holding Fixture, a 5-mm Allen wrench and worm clamp set up as shown. Mark the Allen wrench with a file 80 mm (3.149 in) above the driven gear shaft center. Make sure the worm clamp and Allen wrench are not touching the balance shaft housing.**

NOTE: **For an accurate measurement while measuring the gear backlash, insert a screwdriver as shown into the crankshaft No. 1 crankweight area and set both the rotation and the thrust direction with the screwdriver, using a prying action as shown.**

Position the Dial Indicator Gauge with Holding Fixture as shown. Measure the gear backlash.

- Position the Dial Indicator Gauge with Holding Fixture (1) on the Allen wrench 80 mm (3.149 in) above the driven gear shaft center (2) on the balancer unit.
- Rotate the crankshaft clockwise and measure the backlash at all of the following 6 positions: 10 degrees, 30 degrees, 100 degrees, 190 degrees, 210 degrees and 280 degrees.

- Backlash specifications are 0.005 to 0.101 mm (0.00019 to 0.0039 in).
- If the backlash exceeds the specified range, carry out the balance shaft backlash procedure. For additional information, refer to the **Balance Shaft Backlash** procedure in this section.

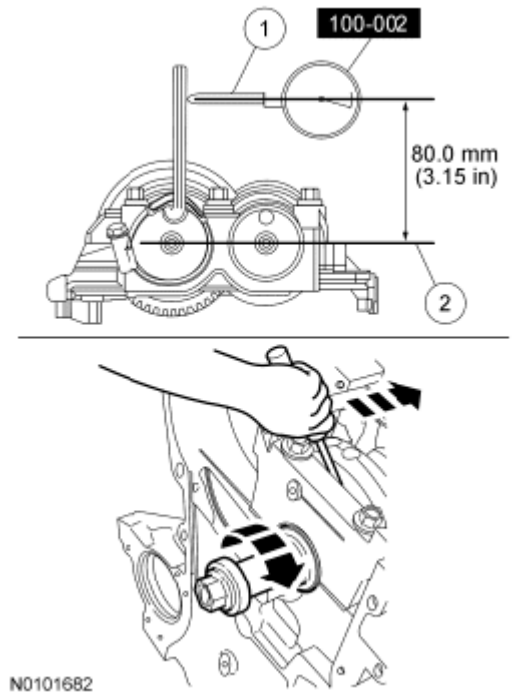

Fig. 458: Measuring Gear Backlash

WARNING: Failure to position the No. 1 piston at top dead center (TDC) can result in damage to the engine. Turn the engine in the normal direction of rotation only.

29. Turn the crankshaft clockwise to position the No. 1 piston at TDC.
30. Remove the engine plug bolt.

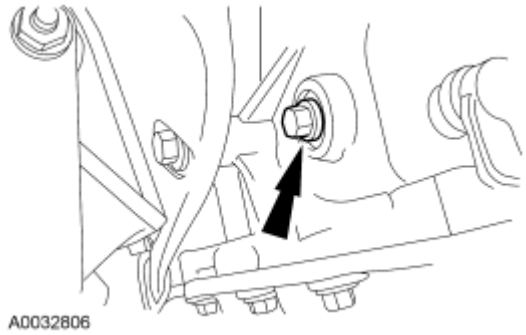

Fig. 459: Locating Engine Plug Bolt
Courtesy of FORD MOTOR CO.

NOTE: **The special tool will contact the crankshaft and prevent it from turning past TDC. However, the crankshaft can still be rotated in the counterclockwise direction. The crankshaft must remain at the TDC position until the timing drive components and crankshaft pulley are installed.**

31. Install the special tool.

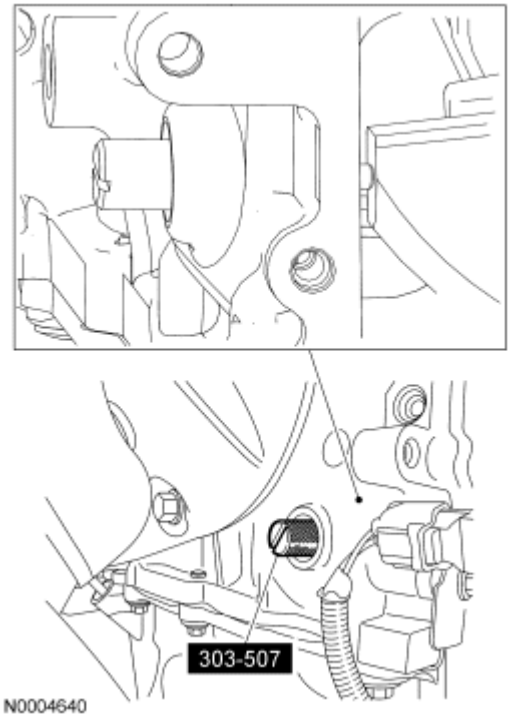

Fig. 460: Identifying Special Tool (303-507)
Courtesy of FORD MOTOR CO.

NOTE: **Clean the oil pump and cylinder block mating surfaces with metal surface cleaner.**

32. Install the oil pump assembly. Tighten the 4 bolts in the sequence shown in 2 stages:
    - Stage 1: Tighten to 10 Nm (89 lb-in).
    - Stage 2: Tighten to 20 Nm (15 lb-ft).

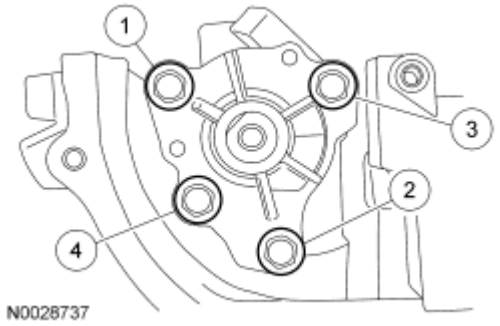

Fig. 461: Identifying Oil Pump Bolts Tightening Sequence
Courtesy of FORD MOTOR CO.

33. Install a new gasket, oil pump pickup tube and the 2 bolts.
    - Tighten to 10 Nm (89 lb-in).

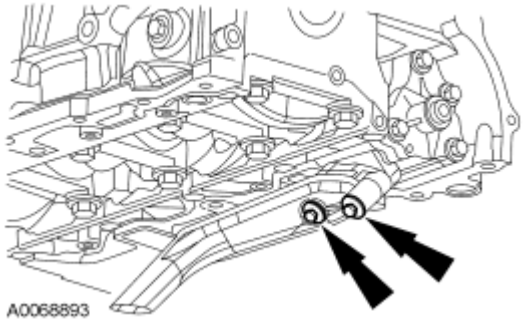

Fig. 462: Locating Oil Pump Pickup Tube Bolts
Courtesy of FORD MOTOR CO.

34. Using the special tool, install the crankshaft rear main oil seal.

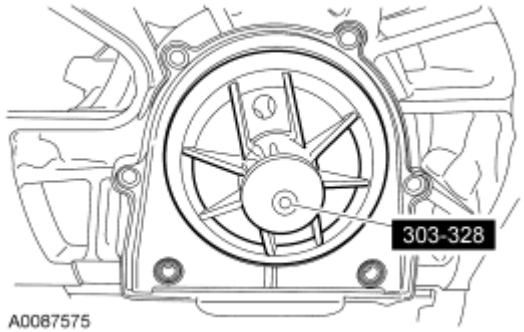

Fig. 463: Positioning Crankshaft Rear Oil Seal Using Special Tool (303-328)
Courtesy of FORD MOTOR CO.

35. Tighten the 6 crankshaft rear main oil seal bolts in the sequence shown.
    - To install, tighten to 10 Nm (89 lb-in).

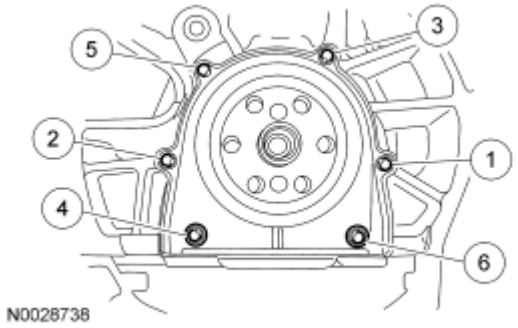

Fig. 464: Identifying Tightening Sequence Of Crankshaft Rear Main Oil Seal Bolts
Courtesy of FORD MOTOR CO.

CAUTION: Do not use metal scrapers, wire brushes, power abrasive discs or other abrasive means to clean the sealing surfaces. These tools cause scratches and gouges, which make leak paths. Use a plastic scraping tool to remove traces of sealant.

36. Clean and inspect all mating surfaces.

NOTE: If the oil pan is not secured within 4 minutes of sealant application, the sealant must be removed and the sealing area cleaned with metal surface cleaner. Allow to dry until there is no sign of wetness, or 4 minutes, whichever is longer. Failure to follow this procedure can cause future oil leakage.

37. Apply a 2.5 mm (0.09 in) bead of silicone gasket and sealant to the oil pan.
    - Position the oil pan onto the engine and install the 2 rear oil pan bolts finger-tight.

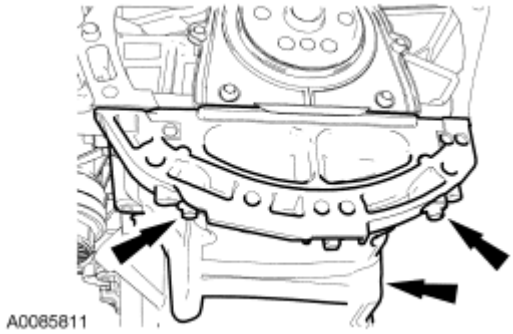

Fig. 465: Identifying Rear Oil Pan Bolts
Courtesy of FORD MOTOR CO.

38. Using a suitable straight edge, align the front surface of the oil pan flush with the front surface of the engine block.

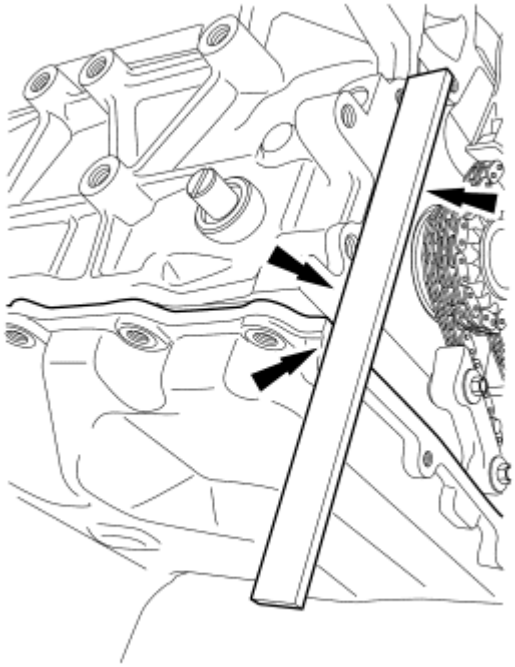

Fig. 466: Aligning Front Surface Of Oil Pan Flush With Front Surface Of Engine Block Using Suitable Straightedge
Courtesy of FORD MOTOR CO.

39. Install the remaining oil pan bolts.
    - Tighten in the sequence shown to 20 Nm (15 lb-ft).

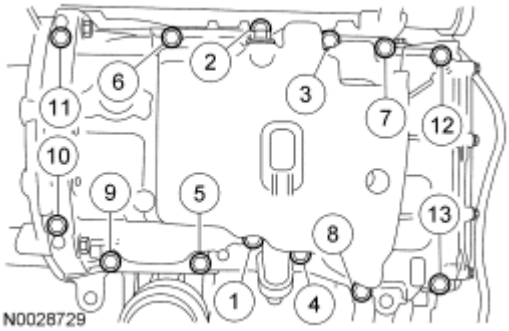

Fig. 467: Identifying Tightening Sequence Of Oil Pan Bolts
Courtesy of FORD MOTOR CO.

40. Install the 2 cylinder head alignment dowels. Dowels must be fully seated in the cylinder block.

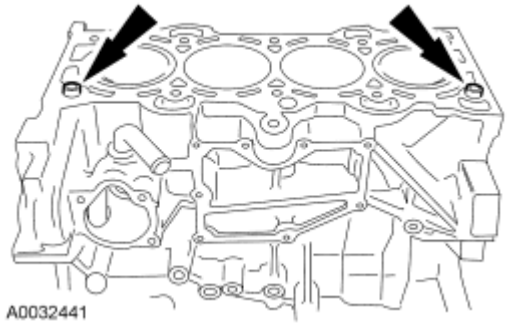

Fig. 468: Identifying Cylinder Head Alignment Dowels
Courtesy of FORD MOTOR CO.

CAUTION: Do not use metal scrapers, wire brushes, power abrasive discs or other abrasive means to clean the sealing surfaces. These tools cause scratches and gouges that make leak paths. Use a plastic scraping tool to remove all traces of the head gasket.

CAUTION: Observe all warnings and cautions and follow all application directions contained on the packaging of the silicone gasket remover and the metal surface prep.

NOTE: If there is no residual gasket material present, metal surface prep can be used to clean and prepare the surfaces.

41. Clean the cylinder head-to-cylinder block mating surface of both the cylinder head and the cylinder block.
    1. Remove any large deposits of silicone or gasket material with a plastic scraper.
    2. Apply silicone gasket remover, following package directions, and allow to set for several minutes.
    3. Remove the silicone gasket remover with a plastic scraper. A second application of silicone gasket remover may be required if residual traces of silicone or gasket material remain.
    4. Apply metal surface prep, following package directions, to remove any traces of oil or coolant, and to prepare the surfaces to bond with the new gasket. Do not attempt to make the metal shiny. Some staining of the metal surfaces is normal.
42. Apply silicone gasket and sealant to the locations shown.

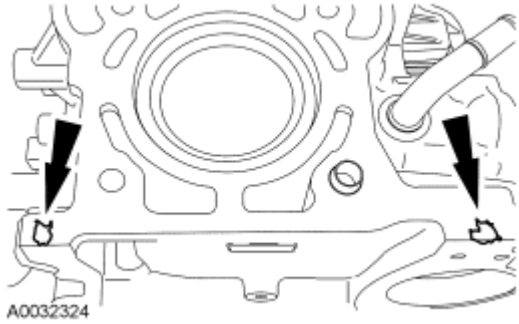

Fig. 469: Identifying Silicone Gasket And Sealant Location
Courtesy of FORD MOTOR CO.

43. Install a new head gasket.

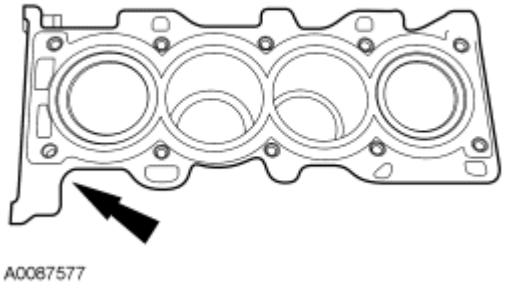

Fig. 470: Identifying Head Gasket
Courtesy of FORD MOTOR CO.

NOTE: The cylinder head bolts are torque-to-yield and must not be reused. New cylinder head bolts must be installed.

NOTE: Lubricate the bolts with clean engine oil prior to installation.

44. Install 10 new cylinder head bolts. Tighten the bolts in the sequence shown in 5 stages:
    - Stage 1: Tighten to 7 Nm (62 lb-in).
    - Stage 2: Tighten to 15 Nm (11 lb-ft).
    - Stage 3: Tighten to 45 Nm (33 lb-ft).
    - Stage 4: Turn 90 degrees.
    - Stage 5: Turn an additional 90 degrees.

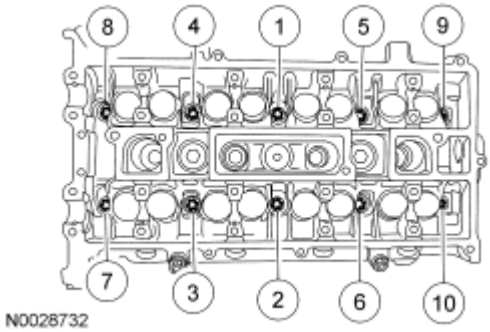

Fig. 471: Identifying Tightening Sequence Of Cylinder Head Bolts
Courtesy of FORD MOTOR CO.

NOTE: Coat the valve tappets with clean engine oil prior to installation.

45. Install the valve tappets,

CAUTION: Install the camshafts with the alignment slots in the camshafts lined up so the Camshaft Alignment Plate can be installed without rotating the camshafts. Make sure the lobes on the No. 1 cylinder are in the same position as noted in the removal procedure. Rotating the camshafts when the timing chain is removed, or installing the camshafts 180 degrees out of position can cause severe damage to the valves and pistons.

NOTE: Lubricate the camshaft journals and bearing caps with clean engine oil.

46. Install the camshafts and bearing caps. Tighten the camshaft bearing caps in the sequence shown in 3 stages:
    - Stage 1: Tighten the camshaft bearing cap bolts until finger tight.
    - Stage 2: Tighten to 7 Nm (62 lb-in).
    - Stage 3: Tighten to 16 Nm (12 lb-ft).

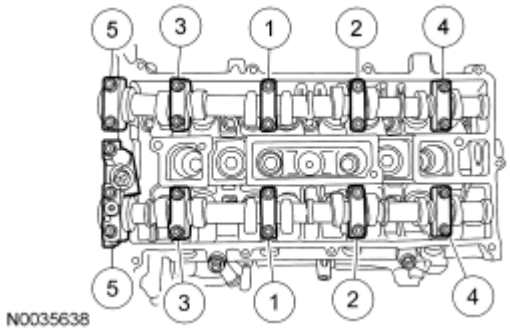

Fig. 472: Identifying Tightening Sequence Of Camshaft Bearing Cap Bolts
Courtesy of FORD MOTOR CO.

47. Install the variable camshaft timing (VCT) solenoid and the bolt.
    - Tighten to 10 Nm (89 lb-in).

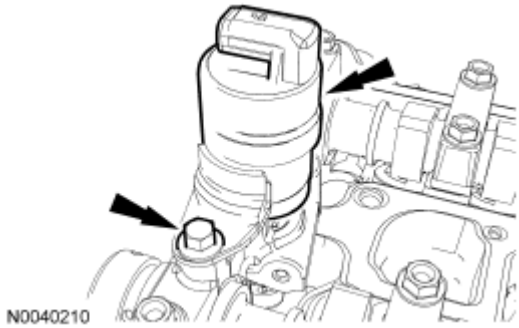

Fig. 473: Locating Variable Camshaft Timing (VCT) Solenoid And Bolt
Courtesy of FORD MOTOR CO.

NOTE: Install a crankshaft sprocket diamond washer on both sides of the crankshaft sprocket.

48. Install the crankshaft sprocket and crankshaft sprocket diamond washers.
    - The crankshaft sprocket flange must be facing away from the engine block.

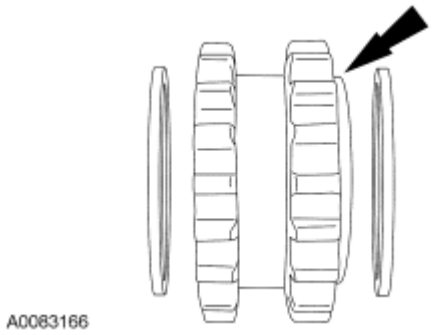

Fig. 474: Locating Washers, Oil Pump Chain & Sprockets
Courtesy of FORD MOTOR CO.

49. Install the oil pump drive chain, sprocket and bolt.
    - Tighten to 25 Nm (18 lb-ft).

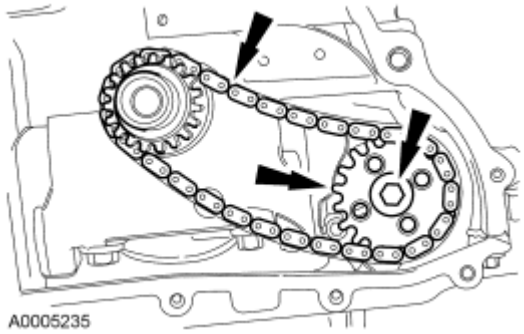

Fig. 475: Locating Oil Pump Chain, Sprocket & Bolt
Courtesy of FORD MOTOR CO.

Late build vehicles

50. Install the oil pump drive chain tensioner shoulder bolt.
    - Tighten to 10 Nm (89 lb-in).

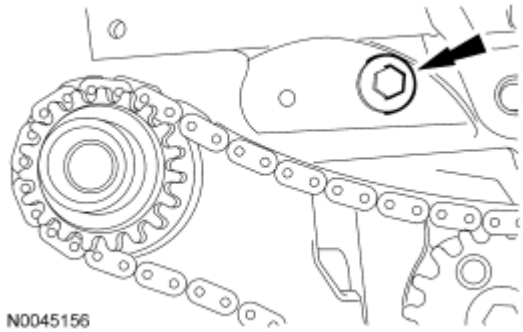

Fig. 476: Locating Oil Pump Chain Drive Tensioner Shoulder Bolt
Courtesy of FORD MOTOR CO.

Early build vehicles

51. Install the oil pump drive chain guide and the shoulder bolts.
    - Tighten to 10 Nm (89 lb-in).

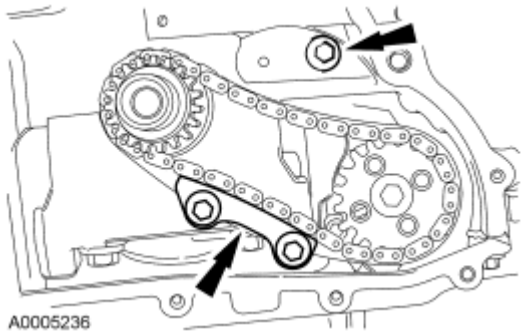

Fig. 477: Locating Oil Pump Chain Guide & Shoulder Bolts
Courtesy of FORD MOTOR CO.

All vehicles

52. Install the oil pump drive chain tensioner and bolt. Hook the tensioner spring around the shoulder bolt.
    - Tighten to 10 Nm (89 lb-in).

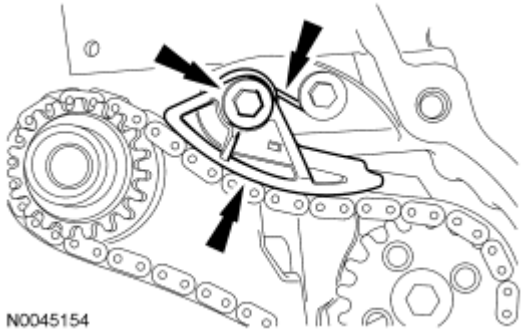

Fig. 478: Locating Oil Pump Chain Tensioner And Bolt

Courtesy of FORD MOTOR CO.

CAUTION: The special tool 303-465 is for camshaft alignment only. Using this tool to prevent engine rotation can result in engine damage.

53. Install the special tool in the slots on the rear of both camshafts.

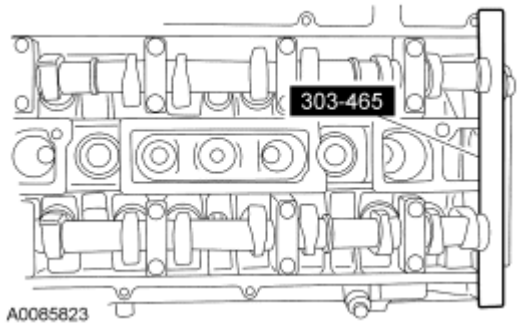

Fig. 479: Identifying Special Camshaft Tool (303-465)
Courtesy of FORD MOTOR CO.

54. Install the camshaft sprockets and the bolts. Do not tighten the bolts at this time.

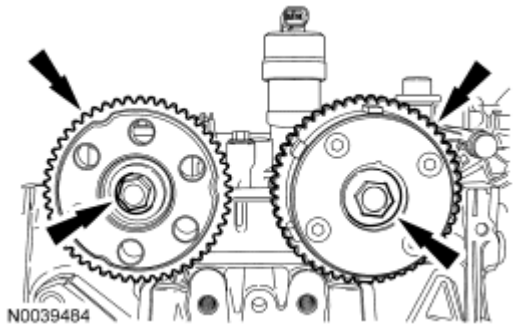

Fig. 480: Locating Camshaft Sprockets And Bolts
Courtesy of FORD MOTOR CO.

55. Install the timing chain guide and the 2 bolts.
    - Tighten to 10 Nm (89 lb-in).

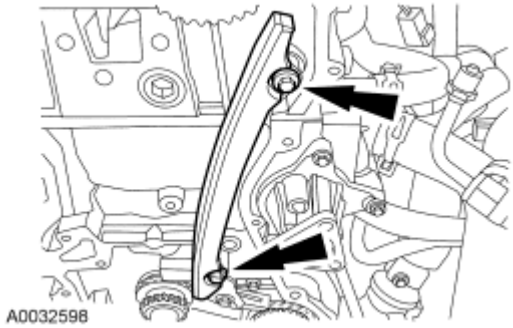

Fig. 481: Identifying Bolts And LH Timing Chain Guide
Courtesy of FORD MOTOR CO.

56. Install the timing chain.

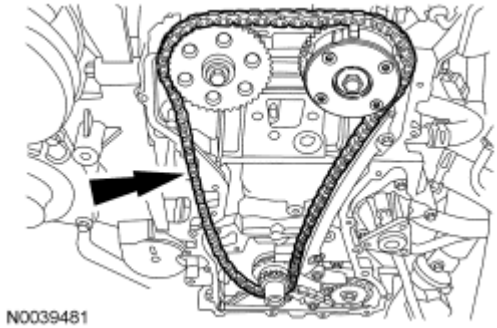

Fig. 482: Locating Timing Chain
Courtesy of FORD MOTOR CO.

57. Install the timing chain tensioner arm.

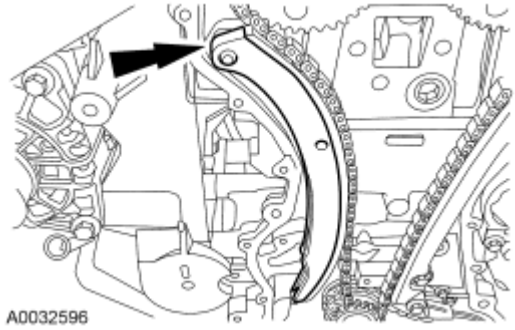

Fig. 483: Locating RH Timing Chain Guide
Courtesy of FORD MOTOR CO.

CAUTION: Do not compress the ratchet assembly. This will damage the ratchet assembly.

58. Using the edge of a vise, compress the timing chain tensioner plunger.

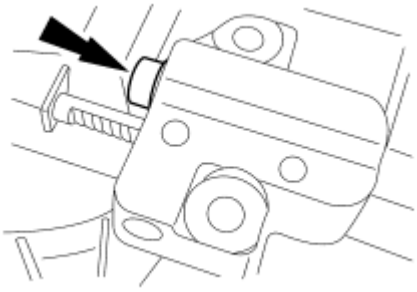

Fig. 484: Using Edge Of A Vise To Compress Timing Chain Tensioner Plunger
Courtesy of FORD MOTOR CO.

59. Using a small pick, push back and hold the ratchet mechanism.

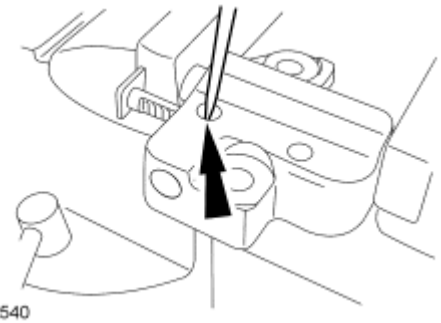

Fig. 485: Using A Small Pick To Push Back And Hold Ratchet Mechanism
Courtesy of FORD MOTOR CO.

60. While holding the ratchet mechanism, push the ratchet arm back into the tensioner housing.

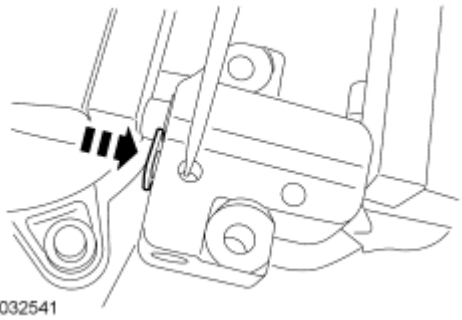

Fig. 486: Pushing Ratchet Arm Back Into Tensioner Housing
Courtesy of FORD MOTOR CO.

61. Install a paper clip into the hole in the tensioner housing to hold the ratchet assembly and the plunger in during installation.

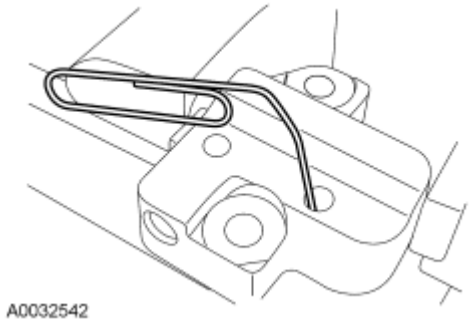

Fig. 487: Installing Paper Clip Into Hole In Tensioner Housing To Hold Ratchet Assembly And Plunger
Courtesy of FORD MOTOR CO.

62. Install the timing chain tensioner and the 2 bolts. Remove the paper clip to release the piston.
    - Tighten to 10 Nm (89 lb-in).

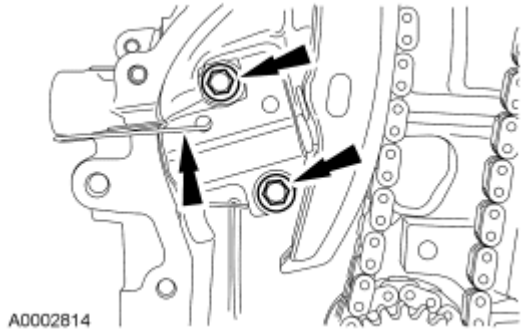

Fig. 488: Locating Timing Chain Tensioner Bolts And Paper Clip
Courtesy of FORD MOTOR CO.

CAUTION: The special tool 303-465 is for camshaft alignment only. Using this tool to prevent engine rotation can result in engine damage.

63. Using the flats on the camshafts to prevent camshaft rotation, tighten the bolts.
    - Tighten to 72 Nm (53 lb-ft).

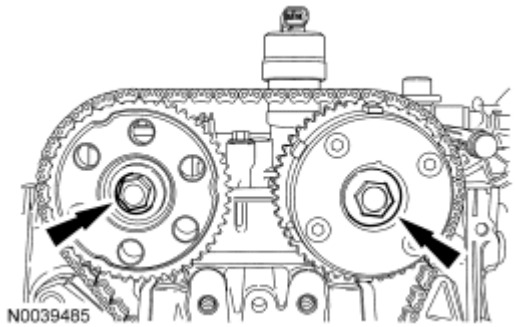

Fig. 489: Identifying Camshafts Sprocket Bolts

Courtesy of FORD MOTOR CO.

CAUTION: Do not use metal scrapers, wire brushes, power abrasive discs or other abrasive means to clean sealing surfaces. These tools cause scratches and gouges which make leak paths.

64. Clean and inspect the mounting surfaces of the engine and the front cover.

NOTE: The engine front cover must be installed and the bolts tightened within 4 minutes of applying the silicone gasket and sealant.

65. Apply a 2.5 mm (0.09 in) bead of silicone gasket and sealant to the cylinder head and oil pan joint areas. Apply a 2.5 mm (0.09 in) bead of silicone gasket and sealant to the front cover.

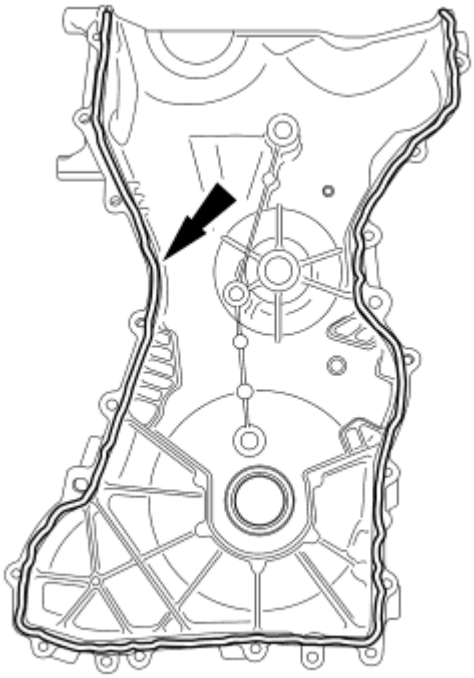

Fig. 490: Locating Silicone Gasket
Courtesy of FORD MOTOR CO.

66. Install the engine front cover. Tighten the 22 bolts in the sequence shown, to the following specifications:
    - Tighten the 8-mm bolts to 10 Nm (89 lb-in).
    - Tighten the 13-mm bolts to 48 Nm (35 lb-ft).

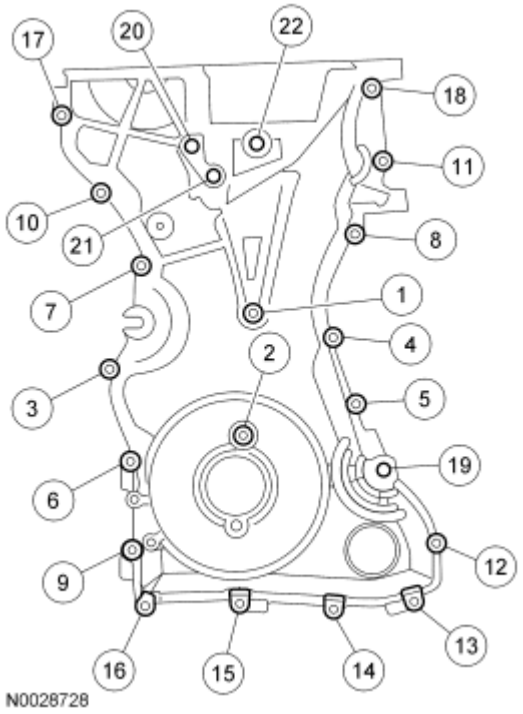

Fig. 491: Identifying Engine Front Cover Bolts Tightening Sequence
Courtesy of FORD MOTOR CO.

NOTE: Remove the through-bolt from the special tool.

NOTE: Lubricate the oil seal with clean engine oil.

67. Using the special tool, install a new crankshaft front oil seal.

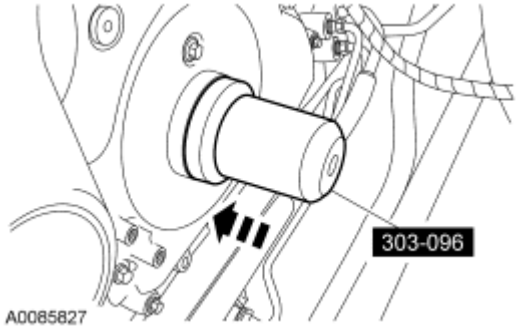

Fig. 492: Installing Crankshaft Front Oil Seal Using Special Tool
Courtesy of FORD MOTOR CO.

CAUTION: Do not install the crankshaft pulley bolt at this time.

NOTE: Apply clean engine oil on the seal area before installing.

68. Position the crankshaft pulley onto the crankshaft with the hole in the pulley at the 6 o'clock position.

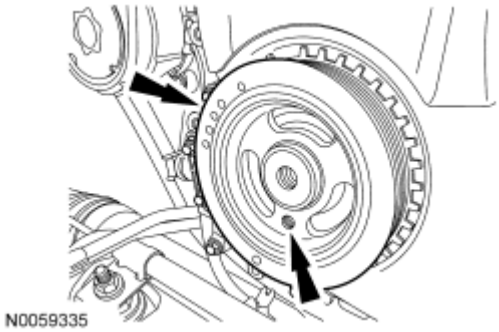

Fig. 493: Locating Crankshaft Pulley & Hole
Courtesy of FORD MOTOR CO.

CAUTION: Only hand-tighten the 6 mm (0.23 in) bolt or damage to the front cover can occur.

NOTE: This step will correctly align the crankshaft pulley to the crankshaft.

69. Install a standard 6 mm (0.23 in) x 18 mm (0.7 in) bolt through the crankshaft pulley and thread it into the front cover.

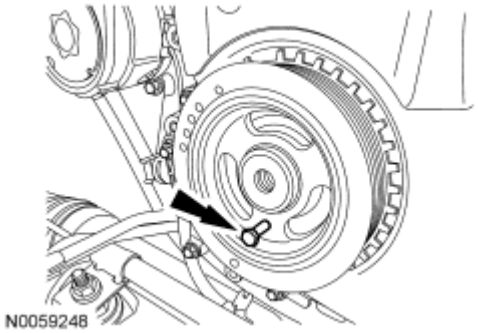

Fig. 494: Locating Crankshaft Pulley Bolt
Courtesy of FORD MOTOR CO.

70. Assemble the special tools using 4 hardened washers in the locations shown.

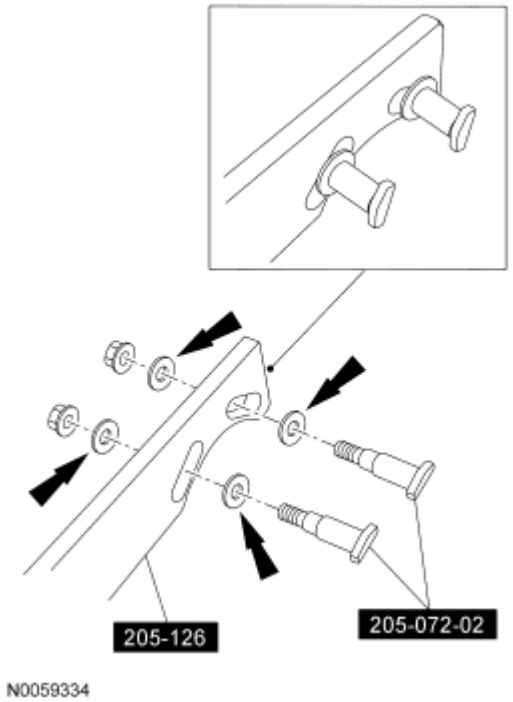

Fig. 495: Assembling Special Tools (205-126 And 205-072-02) And Hardened Washers
Courtesy of FORD MOTOR CO.

CAUTION: The crankshaft must remain in the TDC position during installation of the pulley bolt or damage to the engine can occur. Therefore, the crankshaft pulley must be held in place with the special tool and the bolt should be installed using hand tools only.

CAUTION: Do not reuse the crankshaft pulley bolt.

71. Install a new crankshaft pulley bolt. Using the special tools to hold the crankshaft pulley in place, tighten the crankshaft pulley bolt in 2 stages:
    - Stage 1: Tighten to 100 Nm (74 lb-ft).
    - Stage 2: Tighten an additional 90 degrees (1/4 turn).

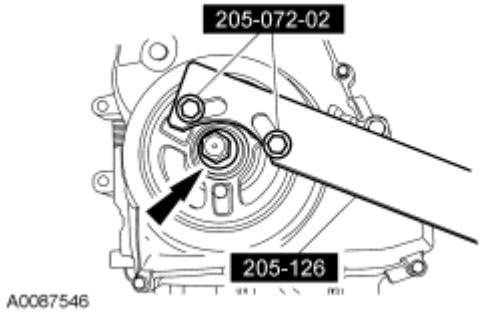

Fig. 496: Using Special Tools (205-126, 205-072-02) To Hold Crankshaft Pulley In Place
Courtesy of FORD MOTOR CO.

72. Remove the 6 mm (0.23 in) x 18 mm (0.7 in) bolt.

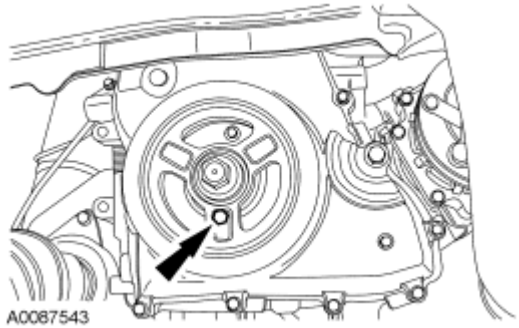

Fig. 497: Aligning Crankshaft Pulley Bolt Holes
Courtesy of FORD MOTOR CO.

73. Remove the special tool.

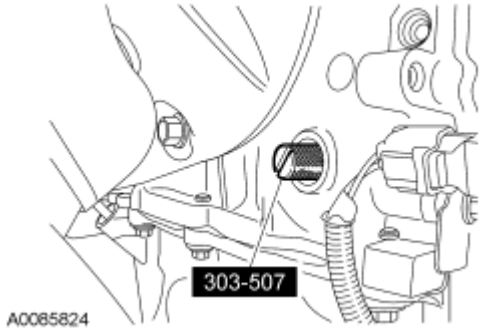

Fig. 498: Identifying Special Tool
Courtesy of FORD MOTOR CO.

74. Remove the special tool.

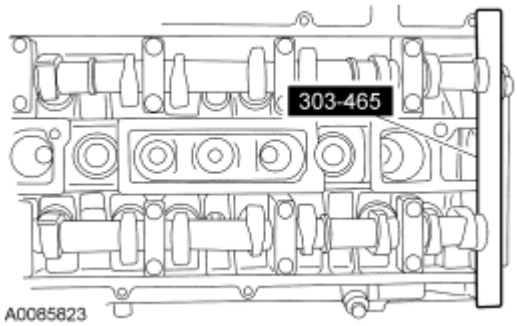

Fig. 499: Identifying Special Camshaft Tool (303-465)
Courtesy of FORD MOTOR CO.

NOTE: Only turn the engine in the normal direction of rotation.

75. Turn the crankshaft clockwise 1 and 3/4 turns.
76. Install the special tool.

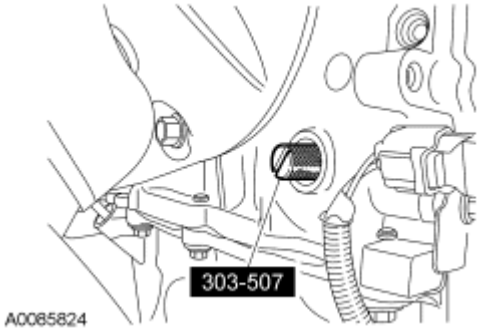

Fig. 500: Identifying Special Tool
Courtesy of FORD MOTOR CO.

NOTE: Only turn the engine in the normal direction of rotation.

77. Turn the crankshaft clockwise until the crankshaft contacts the special tool.

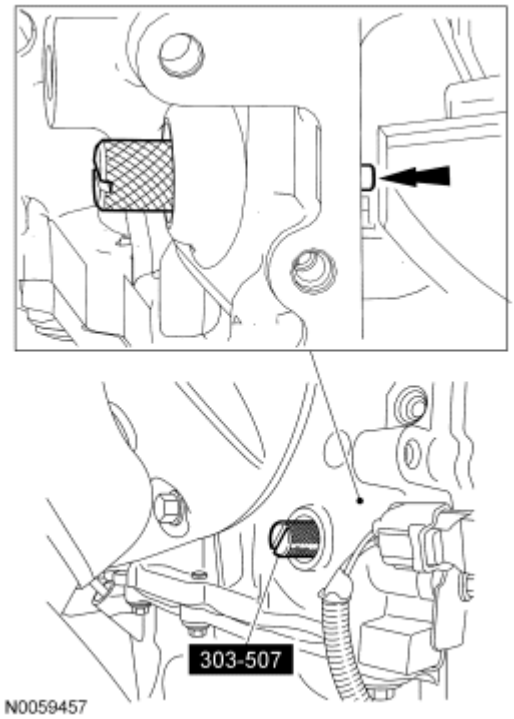

Fig. 501: Identifying Special Tool (303-507)
Courtesy of FORD MOTOR CO.

CAUTION: Only hand-tighten the bolt or damage to the front cover can occur.

78. Using the 6 mm (0.23 in) x 18 mm (0.7 in) bolt, check the position of the crankshaft pulley.
    - If it is not possible to install the bolt, the engine valve timing must be corrected.

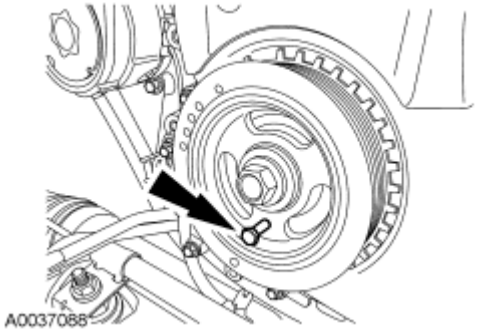

Fig. 502: Installing Bolt Through Crankshaft Pulley And Thread It Into Front Cover
Courtesy of FORD MOTOR CO.

79. Using the special tool, check the position of the camshafts.
    - If it is not possible to install the special tool, the engine valve timing must be corrected.

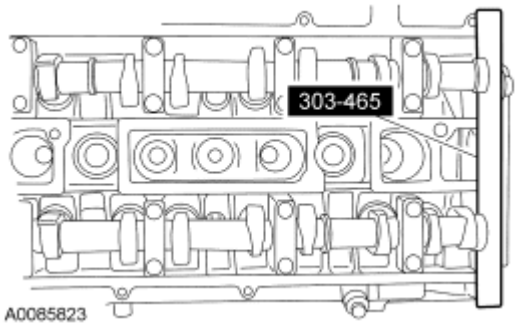

Fig. 503: Identifying Special Camshaft Tool (303-465)
Courtesy of FORD MOTOR CO.

80. Remove the special tool.

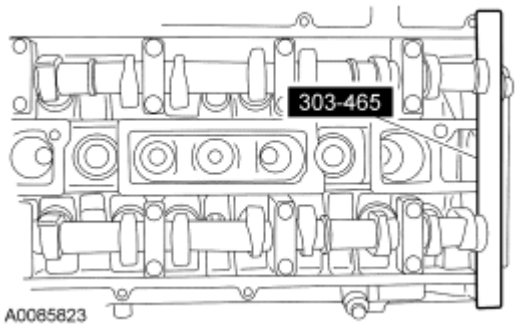

Fig. 504: Identifying Special Camshaft Tool (303-465)
Courtesy of FORD MOTOR CO.

NOTE: Whenever the crankshaft position (CKP) sensor is removed, a new one must be installed using the alignment tool supplied with the new part.

81. Install a new CKP sensor and the 2 bolts.
    - Do not tighten the bolts at this time.

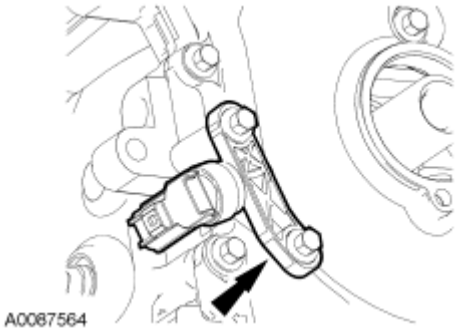

Fig. 505: Locating CKP Sensor
Courtesy of FORD MOTOR CO.

NOTE: **The CKP sensor alignment tool is supplied with the new sensor and is not available separately.**

82. Adjust the CKP sensor with the alignment tool.
    - Tighten the 2 CKP bolts to 7 Nm (62 lb-in).

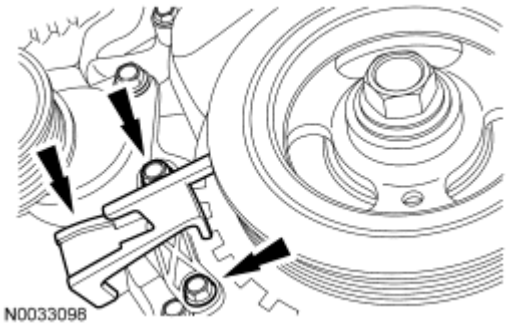

Fig. 506: Locating CKP Sensor Alignment Tool And Bolts
Courtesy of FORD MOTOR CO.

83. Remove the 6 mm (0.23 in) x 18 mm (0.7 in) bolt.

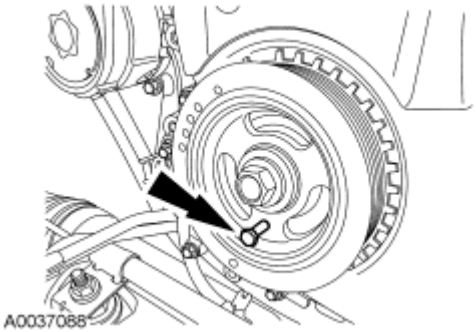

Fig. 507: Installing Bolt Through Crankshaft Pulley And Thread It Into Front Cover
Courtesy of FORD MOTOR CO.

84. Remove the special tool.

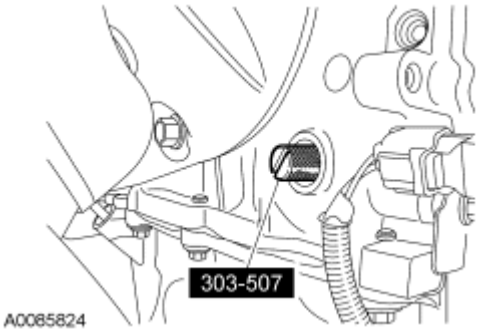

Fig. 508: Identifying Special Tool

Courtesy of FORD MOTOR CO.

85. Install the engine plug bolt.
    - Tighten to 20 Nm (15 lb-ft).

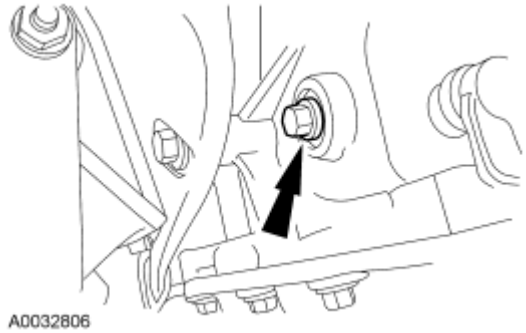

Fig. 509: Locating Engine Plug Bolt
Courtesy of FORD MOTOR CO.

CAUTION: Do not use metal scrapers, wire brushes, power abrasive discs or other abrasive means to clean the sealing surfaces. These tools cause scratches and gouges which make leak paths.

86. Clean the valve cover gasket surface with metal surface cleaner.

NOTE: The valve cover must be secured within 4 minutes of silicone gasket application. If the valve cover is not secured within 4 minutes, the sealant must be removed and the sealing area cleaned with metal surface cleaner.

87. Apply silicone gasket and sealant to the locations shown.

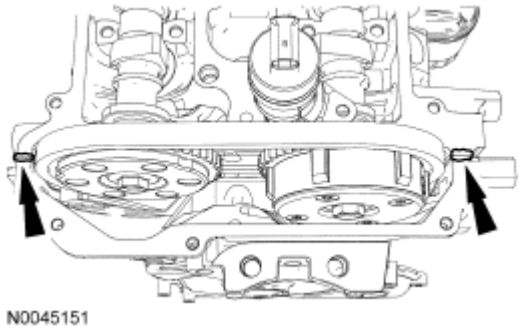

Fig. 510: Applying Silicone Gasket And Sealant
Courtesy of FORD MOTOR CO.

88. Install the valve cover.
    - Tighten the bolts in the sequence shown to 10 Nm (89 lb-in).

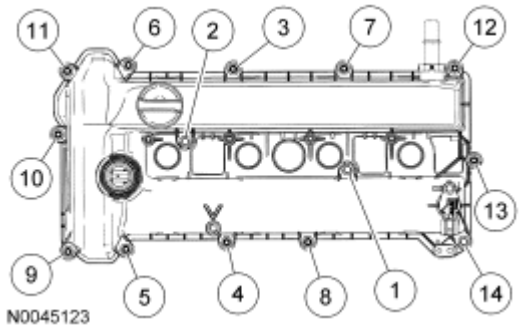

Fig. 511: Identifying Valve Cover Bolts Tightening Sequence
Courtesy of FORD MOTOR CO.

NOTE: Make sure the notch on the oil level indicator is aligned with the V-shaped boss on the valve cover and fully engaged into the valve cover.

89. Install the oil level indicator.

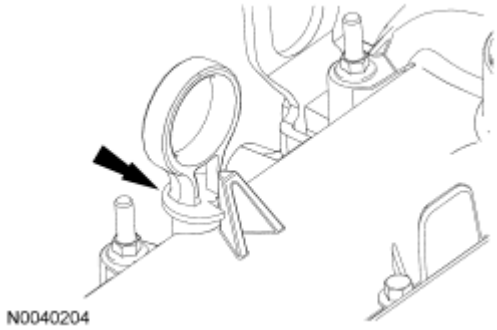

Fig. 512: Locating Oil Level Indicator
Courtesy of FORD MOTOR CO.

NOTE: Apply dielectric compound to the inside of the coil-on-plug boots.

90. Install the 4 coil-on-plug assemblies 4 bolts.
    - Tighten to 8 Nm (71 lb-in).

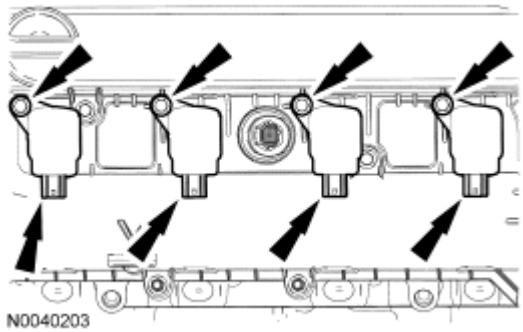

Fig. 513: Locating Coil-On-Plug Assemblies And Bolts

Courtesy of FORD MOTOR CO.

CAUTION: Use O-ring seals that are made of special fuel-resistant material. Use of ordinary O-rings can cause the fuel system to leak. Do not reuse the O-ring seals.

91. Install new fuel injector O-rings.
    - Separate the fuel injectors from the fuel rail.
    - Remove and discard the fuel injector O-rings.
    - Install new O-rings and lubricate with clean engine oil.
    - Install the fuel injectors onto the fuel rail.

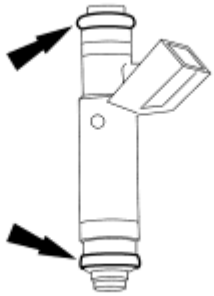

Fig. 514: Identifying Fuel Injector O-Ring Seals
Courtesy of FORD MOTOR CO.

92. Install the fuel rail and injector assembly and the 2 bolts.
    - Tighten to 23 Nm (17 lb-ft).

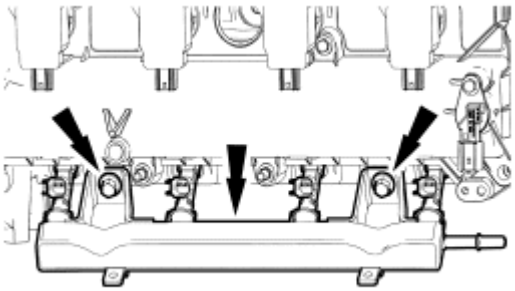

Fig. 515: Locating Fuel Rail And Injector Assembly Bolts
Courtesy of FORD MOTOR CO.

NOTE: Typical wiring harness retainers shown.

93. Position the wiring harness on the engine and attach the wiring harness retainers.

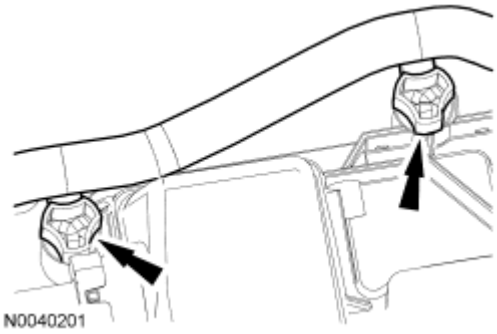

Fig. 516: Locating Wiring Harness Retainers
Courtesy of FORD MOTOR CO.

94. Connect the 4 fuel injector electrical connectors.

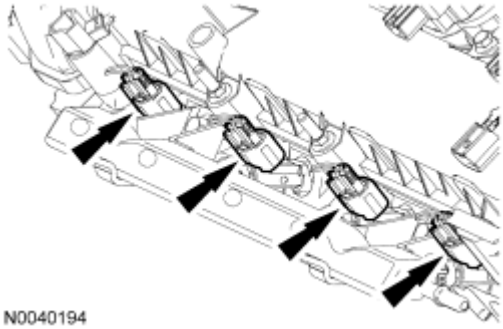

Fig. 517: Locating Fuel Injector Electrical Connectors
Courtesy of FORD MOTOR CO.

95. Install the fuel supply rail insulator and attach the 2 pin-type harness retainers.

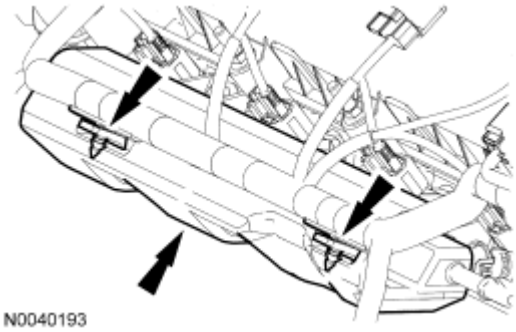

Fig. 518: Locating Pin-Type Harness Retainers And Remove Fuel Supply Rail Insulator
Courtesy of FORD MOTOR CO.

96. Connect the cylinder head temperature (CHT) sensor electrical connector and install the boot.

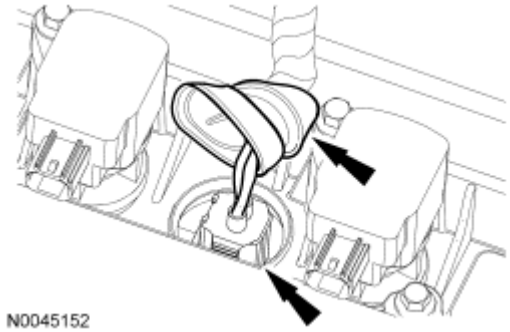

Fig. 519: Locating Cylinder Head Temperature (CHT) Sensor Electrical Connector And Boot
Courtesy of FORD MOTOR CO.

97. Connect the 4 coil-on-plug electrical connectors.

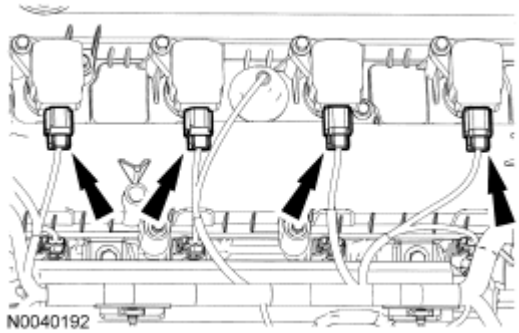

Fig. 520: Locating Coil-On-Plug Electrical Connectors
Courtesy of FORD MOTOR CO.

98. Connect the VCT solenoid electrical connector.

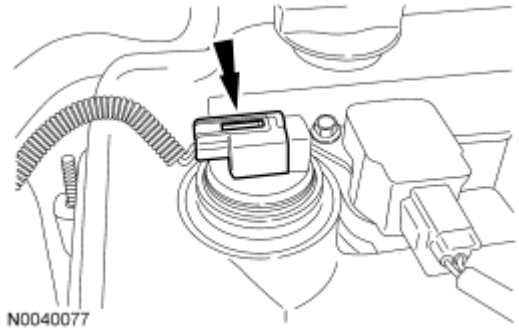

Fig. 521: Locating Variable Camshaft Timing (VCT) Solenoid Electrical Connector
Courtesy of FORD MOTOR CO.

99. Connect the camshaft position (CMP) sensor electrical connector.

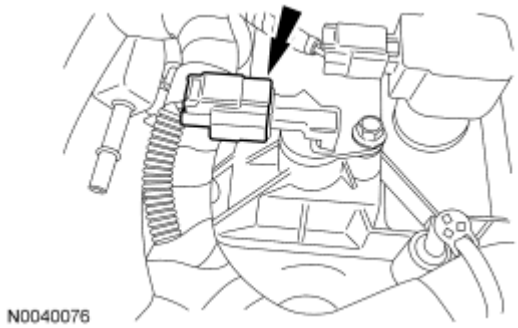

Fig. 522: Locating Camshaft Position (CMP) Sensor Electrical Connector
Courtesy of FORD MOTOR CO.

100. Install a new gasket, the oil filter adapter and the 4 bolts.
    - Tighten to 25 Nm (18 lb-ft).

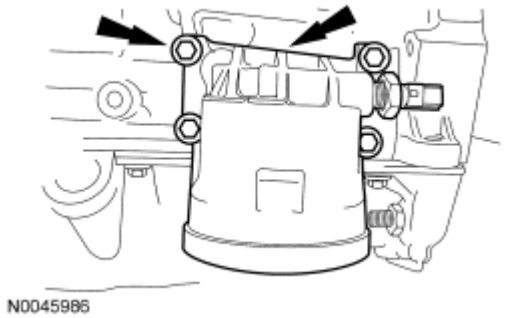

Fig. 523: Locating Oil Filter Adapter And Bolts
Courtesy of FORD MOTOR CO.

NOTE: Lubricate the oil filter seal (spin on filter type) or oil filter cup O-ring seal (replaceable filter element type) with clean engine oil.

101. Install a new engine oil filter.
    - Tighten the oil filter (spin on filter type) to 18 Nm (13 lb-ft).
    - Tighten the oil filter cup (replaceable filter element type) to 33 Nm (24 lb-ft).
102. Using a new gasket, install the crankcase vent oil separator and the bolts.
    - Tighten to 10 Nm (89 lb-in).

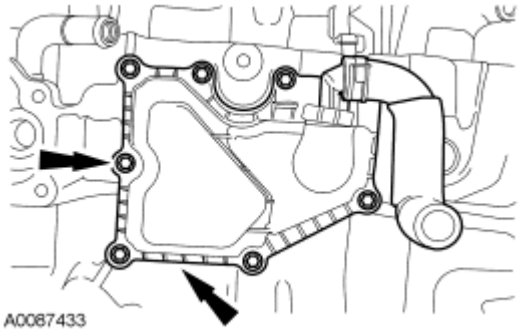

Fig. 524: Locating Crankcase Vent Oil Separator And Bolts
Courtesy of FORD MOTOR CO.

NOTE: The knock sensor (KS) must not touch the crankcase vent oil separator.

103. Install the KS and the bolt.
    - Tighten to 20 Nm (15 lb-ft).

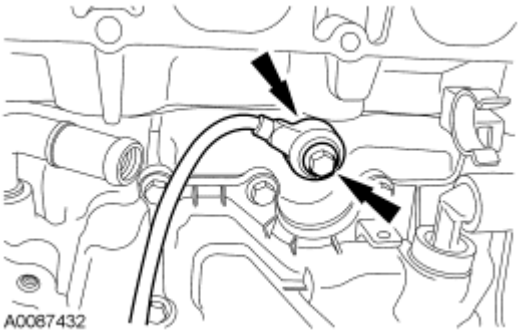

Fig. 525: Locating Knock Sensor Bolt
Courtesy of FORD MOTOR CO.

104. Position the bypass hose on the engine and connect the bypass hose to the coolant outlet.

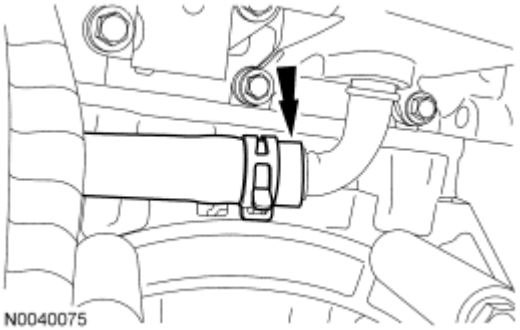

Fig. 526: Locating Bypass Hose To Coolant Outlet
Courtesy of FORD MOTOR CO.

105. Connect the bypass hose to the cylinder block nipple.

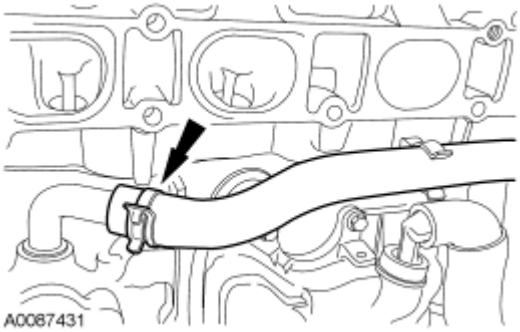

Fig. 527: Locating Bypass Hose From Cylinder Block Nipple
Courtesy of FORD MOTOR CO.

NOTE: Clean and inspect the thermostat housing gasket. Install a new gasket, if necessary.

106. Install the thermostat housing and the 3 bolts.
    - Tighten to 10 Nm (89 lb-in).

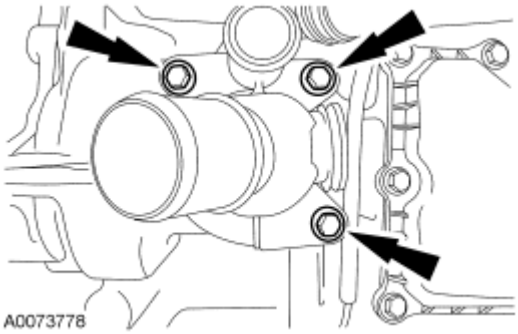

Fig. 528: Locating Thermostat Housing Bolts
Courtesy of FORD MOTOR CO.

107. Install the EGR tube.
    - Tighten to 55 Nm (41 lb-ft).

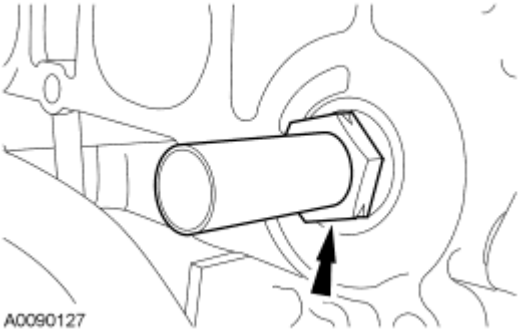

Fig. 529: Locating Exhaust Gas Recirculation (EGR) Tube
Courtesy of FORD MOTOR CO.

108. Position the intake manifold and connect the positive crankcase ventilation hose.

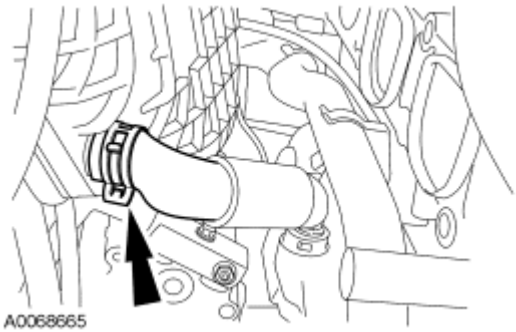

Fig. 530: Locating Positive Crankcase Ventilation (PCV) Hose
Courtesy of FORD MOTOR CO.

109. Install new gaskets, the intake manifold and the 8 bolts.
   - Tighten the bolts to 18 Nm (13 lb-ft).

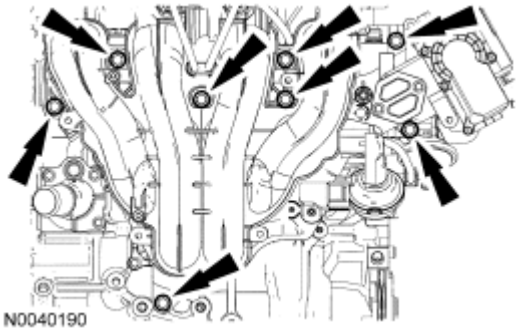

Fig. 531: Locating Intake Manifold Bolts
Courtesy of FORD MOTOR CO.

110. Connect the electronic throttle body electrical connector.

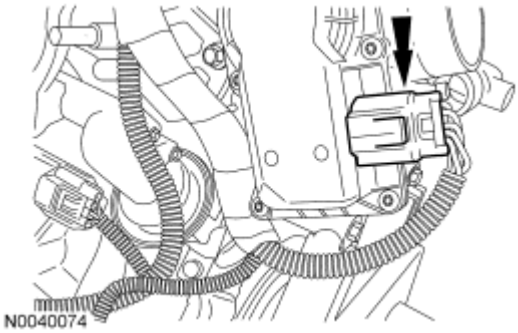

Fig. 532: Locating Electronic Throttle Body Electrical Connector
Courtesy of FORD MOTOR CO.

111. Attach the 2 wiring harness pin-type retainers to the intake manifold.

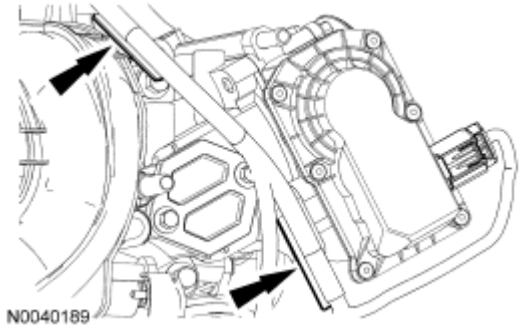

Fig. 533: Locating Wiring Harness Pin-Type Retainers From Intake Manifold
Courtesy of FORD MOTOR CO.

112. Connect the 2 swirl control valve electrical connectors.

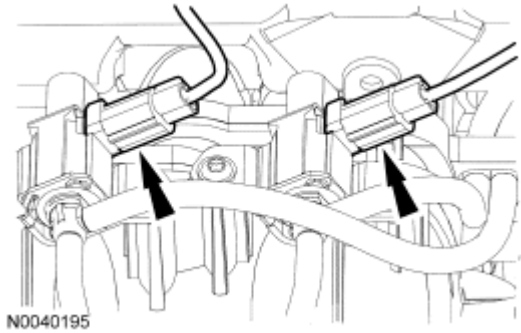

Fig. 534: Locating Swirl Control Valve Electrical Connectors
Courtesy of FORD MOTOR CO.

113. Connect the intake manifold runner control (IMRC) actuator electrical connector.

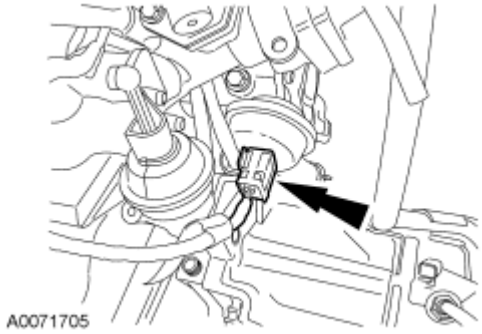

Fig. 535: Locating Intake Manifold Runner Control (IMRC) Actuator Electrical Connector
Courtesy of FORD MOTOR CO.

114. Connect the temperature manifold actual pressure (MAP) sensor electrical connector.

Fig. 536: Locating Manifold Actual Pressure (MAP) Sensor Electrical Connector
Courtesy of FORD MOTOR CO.

115. Connect the oil pressure sender electrical connector.

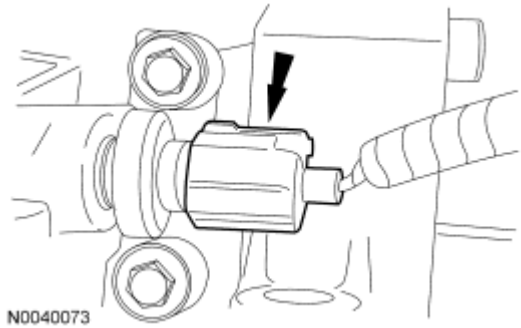

Fig. 537: Locating Oil Pressure Sender Electrical Connector
Courtesy of FORD MOTOR CO.

116. Connect the exhaust gas recirculation (EGR) coolant hose and electrical connector.

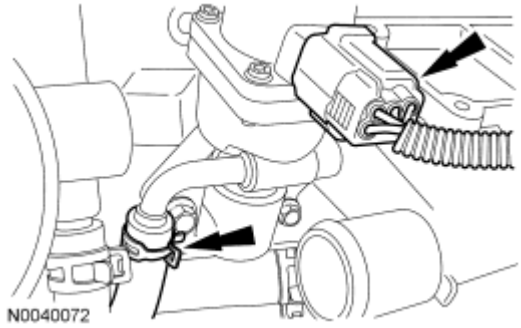

Fig. 538: Locating Exhaust Gas Recirculation (EGR) Coolant Hose And Electrical Connector
Courtesy of FORD MOTOR CO.

117. Connect the coolant temperature sender electrical connector.

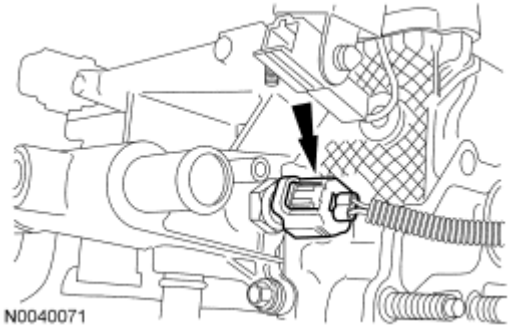

Fig. 539: Locating Coolant Temperature Sender Electrical Connector
Courtesy of FORD MOTOR CO.

118. Install the catalytic converter bracket and the 2 bolts.
    - Tighten to 35 Nm (26 lb-ft).

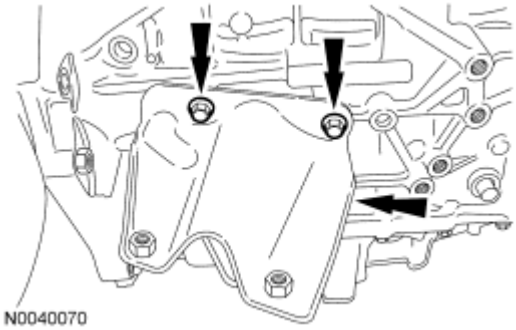

Fig. 540: Locating Catalytic Converter Bracket Bolts
Courtesy of FORD MOTOR CO.

119. If equipped, install the block heater.
    - Tighten to 21 Nm (15 lb-ft).

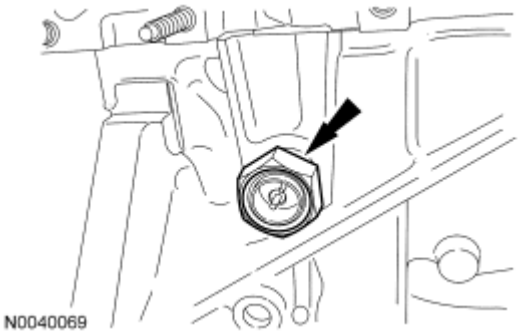

Fig. 541: Locating Block Heater
Courtesy of FORD MOTOR CO.

120. If equipped, connect the block heater electrical connector.

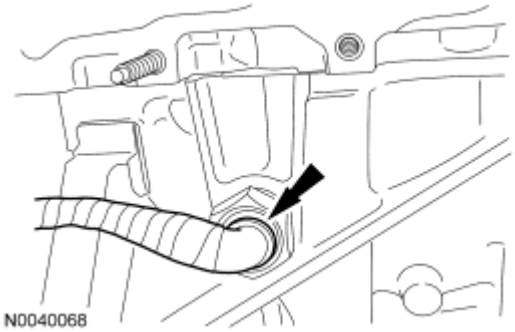

Fig. 542: Locating Block Heater Electrical Connector
Courtesy of FORD MOTOR CO.

121. Install 7 new catalytic converter studs in the cylinder head.
    - Tighten to 17 Nm (13 lb-ft).

CAUTION: Failure to tighten the catalytic converter nuts to specification before installing the converter bracket bolts will cause the converter to develop an exhaust leak.

CAUTION: Failure to tighten the catalytic converter nuts to specification a second time will cause the converter to develop an exhaust leak.

NOTE: Make sure to tighten the nuts in the sequence in 2 stages.

122. Install a new gasket, the catalytic converter and 7 new nuts. Tighten the nuts in 2 stages in the sequence shown.
    - Stage 1: Tighten to 55 Nm (41 lb-ft).
    - Stage 2: Tighten to 55 Nm (41 lb-ft).

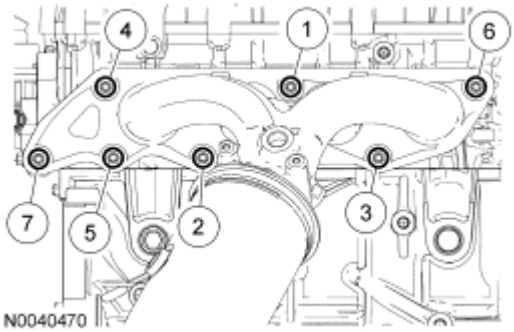

Fig. 543: Identifying Catalytic Converter Manifold Nuts Tightening Sequence
Courtesy of FORD MOTOR CO.

123. Install the 2 catalytic converter bracket bolts.
    - Tighten to 20 Nm (15 lb-ft).

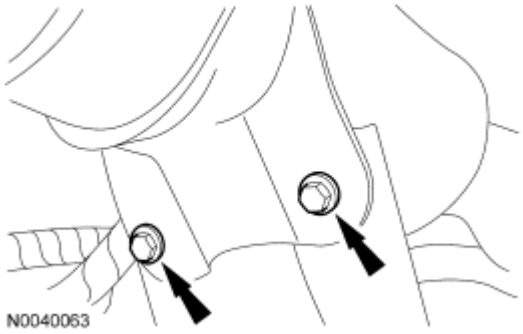

Fig. 544: Locating Catalytic Converter Bracket Bolts
Courtesy of FORD MOTOR CO.

NOTE: Vehicles equipped with AIR did not require removal of the heat shield.

124. Install the heat shield and the 6 screws.
    - Tighten to 10 Nm (89 lb-in).

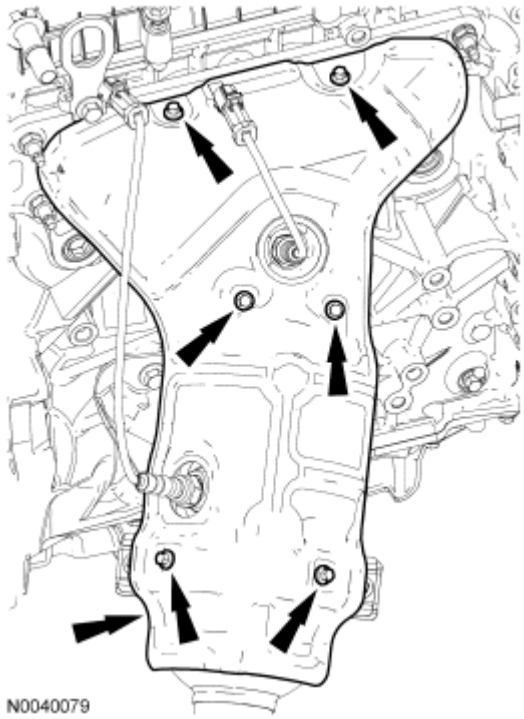

Fig. 545: Locating Heat Shield Screws
Courtesy of FORD MOTOR CO.

125. Attach the wiring harness retainer to the valve cover stud.

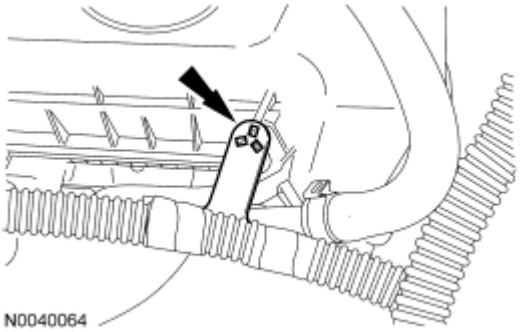

Fig. 546: Locating Wiring Harness Retainer
Courtesy of FORD MOTOR CO.

126. Attach the wiring harness bracket to the valve cover stud.

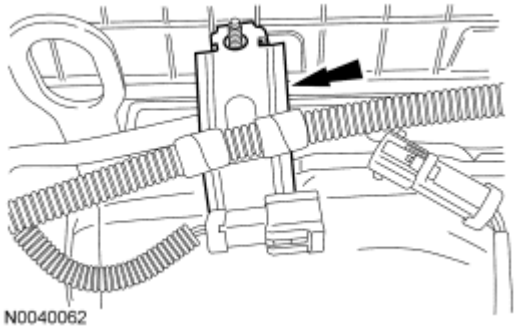

Fig. 547: Locating Wiring Harness Bracket
Courtesy of FORD MOTOR CO.

127. Connect the heated oxygen sensor (HO2S) electrical connector.

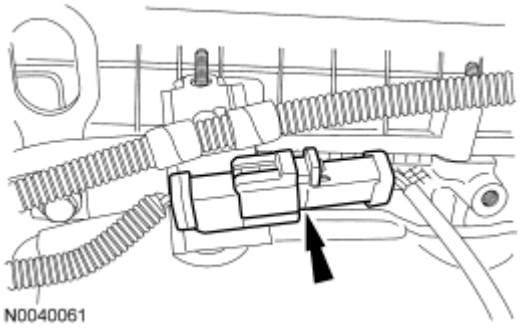

Fig. 548: Locating Heated Oxygen Sensor (HO2S) Electrical Connector
Courtesy of FORD MOTOR CO.

NOTE: Vehicles equipped with secondary air injection (AIR) have 2 catalyst monitor sensors (CMS).

128. Connect the CMS electrical connector(s).

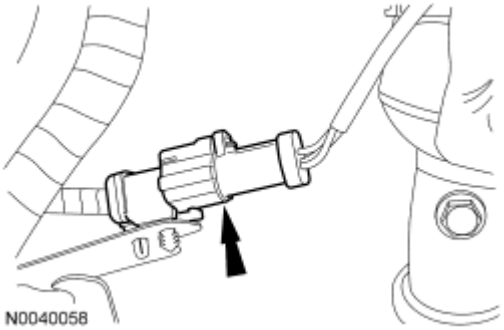

Fig. 549: Locating CMS Electrical Connector
Courtesy of FORD MOTOR CO.

Vehicles with secondary air injection (AIR)

129. Position the AIR valve, hoses and pump assembly onto the engine and install the 2 bolts.
    - Tighten to 10 Nm (89 lb-in).

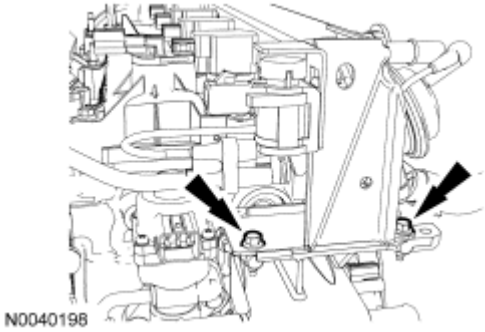

Fig. 550: Locating Pump Assembly Bolts
Courtesy of FORD MOTOR CO.

130. Connect the AIR valve electrical connector.

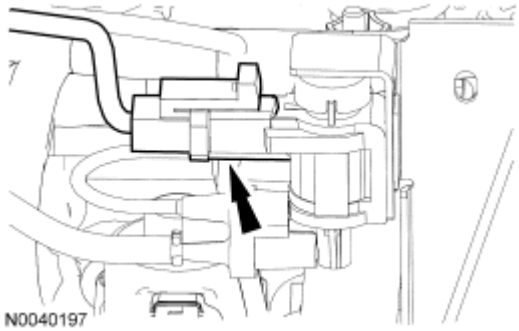

Fig. 551: Locating AIR Valve Electrical Connector
Courtesy of FORD MOTOR CO.

131. Connect the AIR valve vacuum supply tube to the intake manifold.

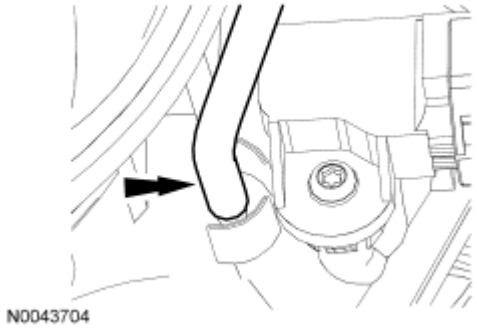

Fig. 552: Locating AIR Valve Vacuum Supply Tube
Courtesy of FORD MOTOR CO.

132. Connect the AIR hose to the catalytic converter.

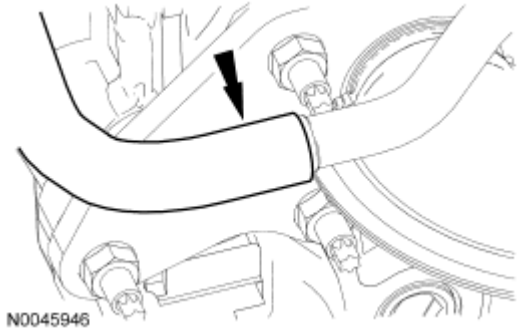

Fig. 553: Locating Secondary AIR Injection (AIR) Hose
Courtesy of FORD MOTOR CO.

All vehicles

133. Install the generator, bolt and 2 stud bolts.
    - Tighten to 47 Nm (35 lb-ft).

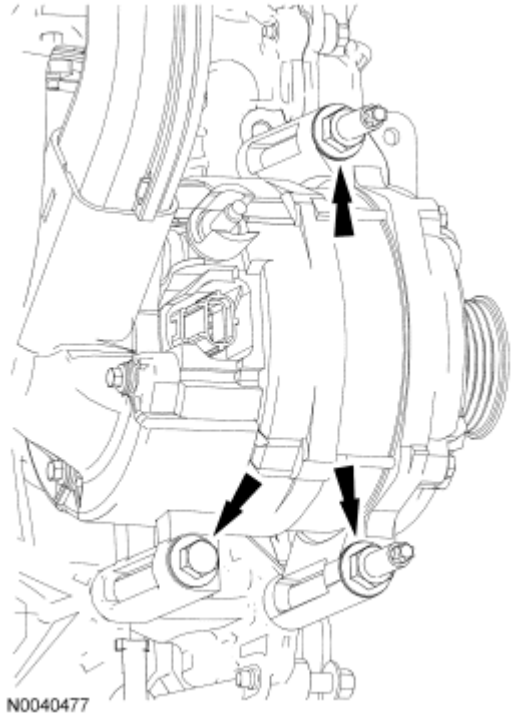

Fig. 554: Locating Generator Bolt And Stud Bolts
Courtesy of FORD MOTOR CO.

134. Connect the pin-type retainer, generator electrical connections and install the nut.
    - Tighten to 6 Nm (53 lb-in).
    - Install the rubber boot.

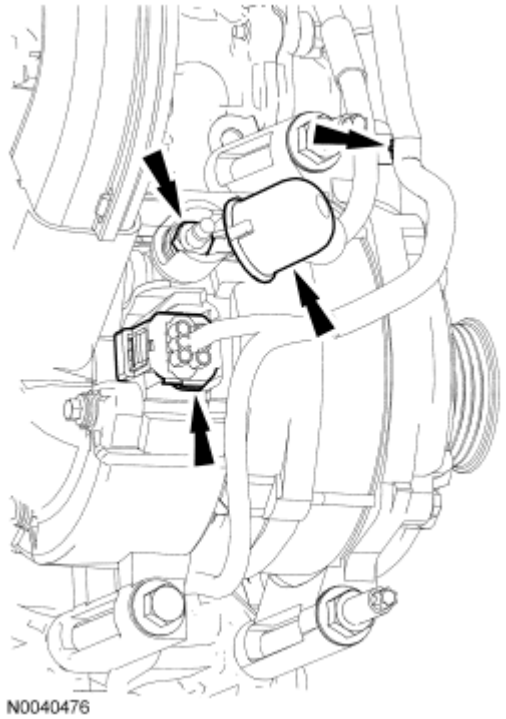

Fig. 555: Locating Pin-Type Retainer And Generator Electrical Connections
Courtesy of FORD MOTOR CO.

135. Install the generator splash shield and the 2 nuts.
    - Tighten to 25 Nm (18 lb-ft).

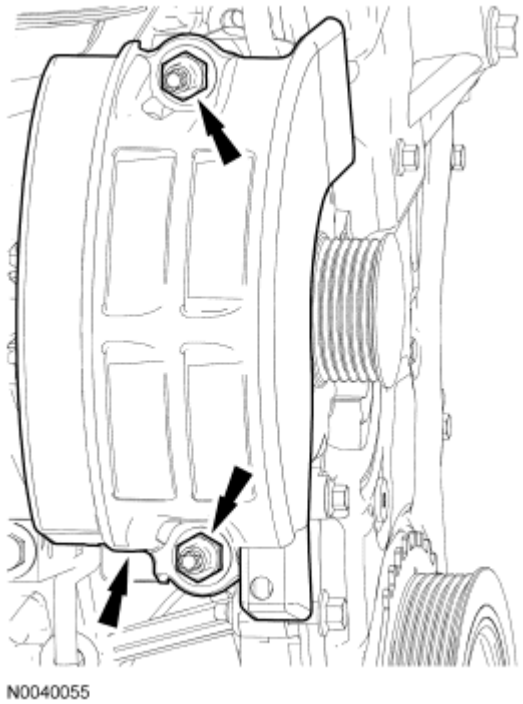

Fig. 556: Locating Generator Splash Shield And Nuts
Courtesy of FORD MOTOR CO.

136. Connect the CKP sensor electrical connector and harness pin-type retainer.

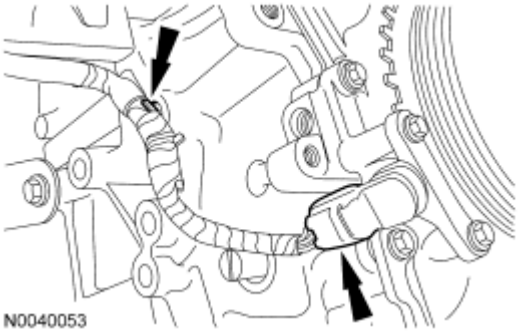

Fig. 557: Locating Crankshaft Position (CKP) Sensor Electrical Connector And Harness Pin-Type Retainer
Courtesy of FORD MOTOR CO.

137. Install the accessory drive belt idler pulley.
    - Tighten to 25 Nm (18 lb-ft).

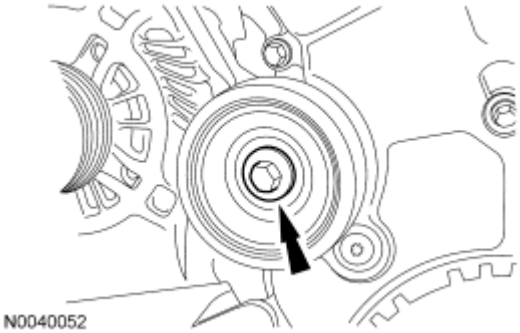

Fig. 558: Locating Accessory Drive Belt Idler Pulley Bolt
Courtesy of FORD MOTOR CO.

NOTE: Clean the coolant pump mating surface with metal surface cleaner.

NOTE: Lubricate the new coolant pump O-ring with clean engine coolant.

138. Install the new O-ring, coolant pump and the 3 bolts.
    - Tighten to 10 Nm (89 lb-in).

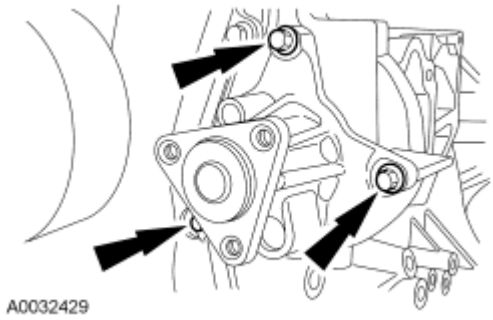

Fig. 559: Locating Coolant Pump Bolts
Courtesy of FORD MOTOR CO.

139. Install the coolant pump pulley and the 3 bolts.
    - Tighten to 20 Nm (15 lb-ft).

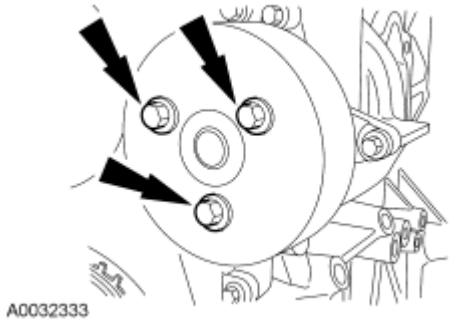

Fig. 560: Locating Coolant Pump Pulley Bolts
Courtesy of FORD MOTOR CO.

140. Install the A/C compressor and the 3 bolts.
    - Tighten to 25 Nm (18 lb-ft).

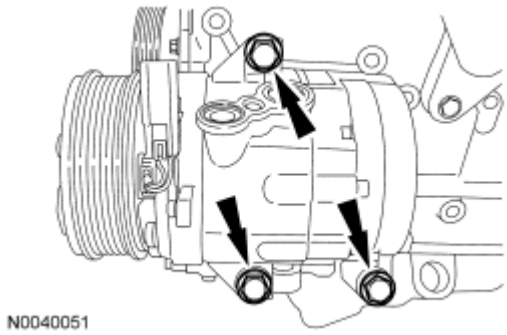

Fig. 561: Locating A/C Compressor Bolts
Courtesy of FORD MOTOR CO.

141. Install the A/C manifold and the bolt.
    - Tighten to 25 Nm (18 lb-ft).

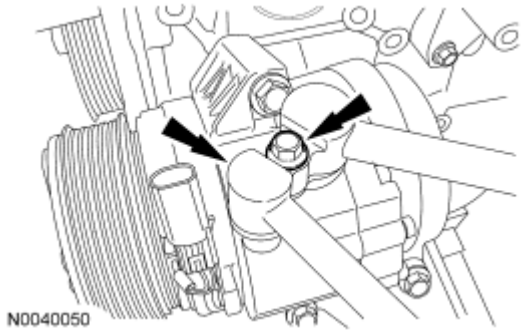

Fig. 562: Locating A/C Manifold And Bolt
Courtesy of FORD MOTOR CO.

142. Connect the A/C compressor electrical connector.

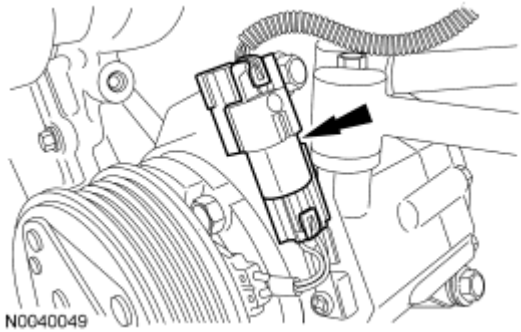

Fig. 563: Locating A/C Compressor Electrical Connector
Courtesy of FORD MOTOR CO.

143. Position the coolant hose on the engine and connect the coolant hose to the throttle body.

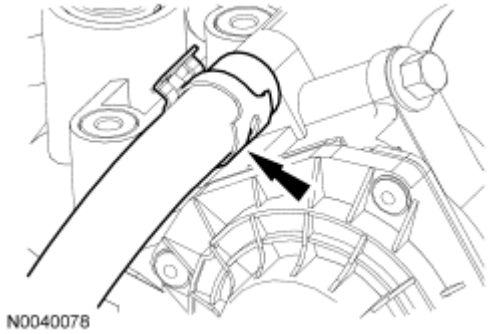

Fig. 564: Locating Coolant Hose
Courtesy of FORD MOTOR CO.

144. Connect the lower radiator and heater hoses to the thermostat housing.

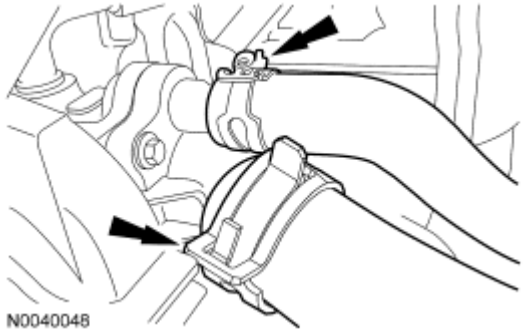

Fig. 565: Locating Lower Radiator And Heater Hoses From Thermostat Housing
Courtesy of FORD MOTOR CO.

145. Connect the KS electrical connector and the 2 harness pin-type retainers.

Fig. 566: Locating Knock Sensor (KS) Electrical Connector And Harness Pin-Type Retainers
Courtesy of FORD MOTOR CO.

146. Install the power steering pump and the lower bolt.
    - Finger tighten the bolt.

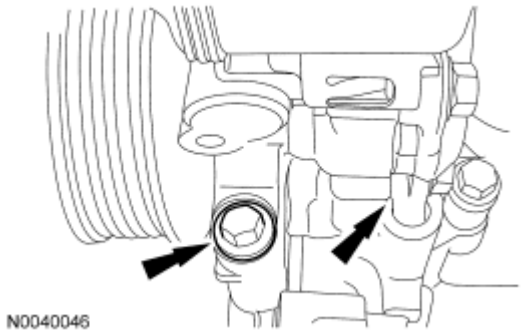

Fig. 567: Locating Power Steering Pump And Lower Bolt
Courtesy of FORD MOTOR CO.

147. Install the 2 upper power steering pump bolts.
    - Tighten all 3 power steering bolts to 25 Nm (18 lb-ft).

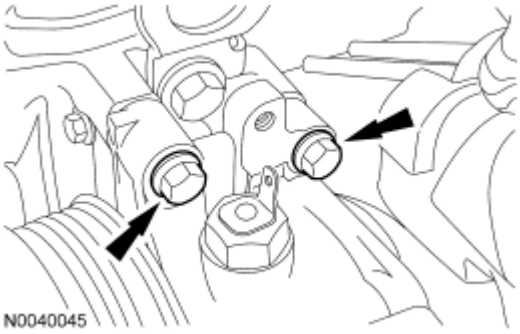

Fig. 568: Locating Upper Power Steering Pump Bolts
Courtesy of FORD MOTOR CO.

148. Connect the power steering pressure (PSP) switch electrical connector.

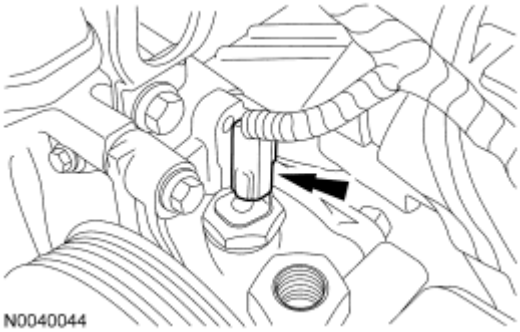

Fig. 569: Locating Power Steering Pressure (PSP) Switch Electrical Connector
Courtesy of FORD MOTOR CO.

149. Install the accessory drive belt tensioner and the 2 bolts.
    - Tighten to 25 Nm (18 lb-ft).

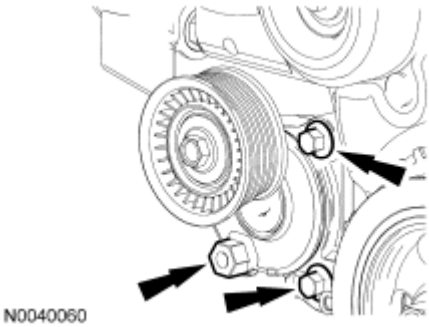

Fig. 570: Locating Accessory Drive Belt Tensioner Bolts
Courtesy of FORD MOTOR CO.

150. Position the accessory drive belt onto the tensioner and all of the accessory drive pulleys except the coolant pump pulley.
151. Using the hex feature, rotate the accessory drive belt tensioner clockwise and install the accessory drive

belt onto the coolant pump pulley.

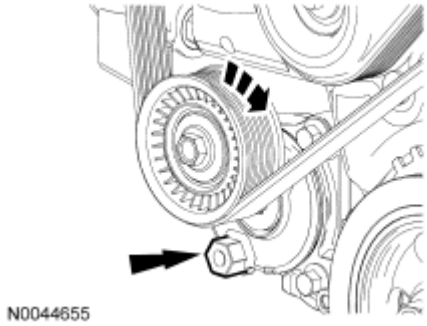

Fig. 571: Rotating Accessory Drive Belt Tensioner Clockwise
Courtesy of FORD MOTOR CO.

152. Using the Heavy Duty Floor Crane and Spreader Bar, remove the engine from the engine stand.

Vehicles with automatic transaxle

153. Install the flexplate and the 6 bolts. Tighten the 6 bolts in the sequence shown in 3 stages:
    - Stage 1: Tighten to 50 Nm (37 lb-ft).
    - Stage 2: Tighten to 80 Nm (59 lb-ft).
    - Stage 3: Tighten to 112 Nm (83 lb-ft).

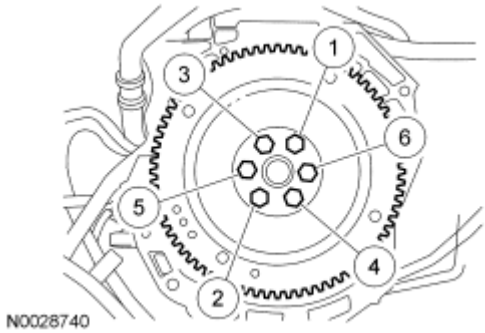

Fig. 572: Identifying Flexplate Bolts Tightening Sequence
Courtesy of FORD MOTOR CO.

Vehicles with manual transaxle

154. Install the flywheel and the 6 bolts. Tighten the 6 bolts in the sequence shown in 3 stages:
    - Stage 1: Tighten to 50 Nm (37 lb-ft).
    - Stage 2: Tighten to 80 Nm (59 lb-ft).
    - Stage 3: Tighten to 112 Nm (83 lb-ft).

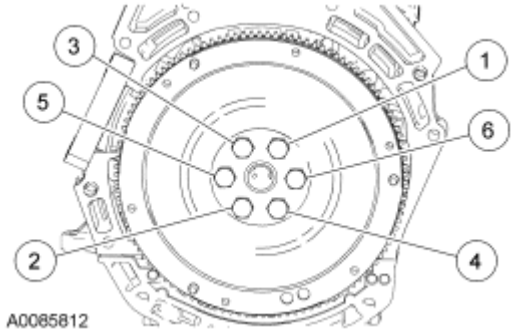

Fig. 573: Identifying Flexplate Bolts Tightening Sequence
Courtesy of FORD MOTOR CO.

155. Install the starter motor isolator.

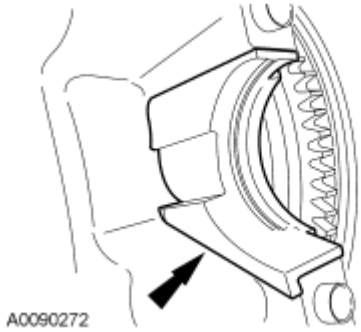

Fig. 574: Locating Starter Motor Isolator
Courtesy of FORD MOTOR CO.

156. Lubricate the transaxle input shaft pilot bearing with front axle grease.

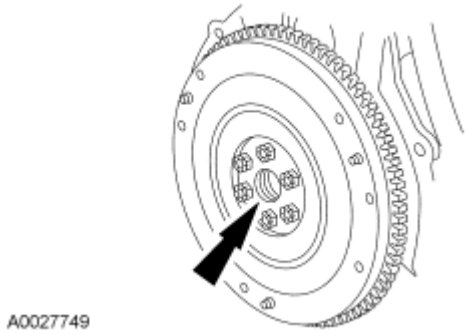

Fig. 575: Lubricating Transaxle Input Shaft Pilot Bearing With Front Axle Grease
Courtesy of FORD MOTOR CO.

157. Using the special tool, position the clutch disc on the flywheel.

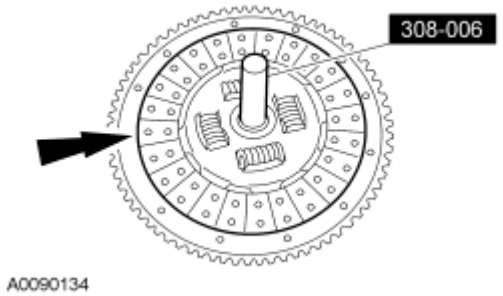

Fig. 576: Positioning Clutch Disc On Flywheel Using Special Tool (308-006)
Courtesy of FORD MOTOR CO.

NOTE: **If reusing the clutch pressure plate and flywheel, align the marks made during removal.**

158. Position the clutch pressure plate and install the 6 bolts.
    - Tighten to 29 Nm (21 lb-ft) in a star pattern sequence.

INSTALLATION

ENGINE - AUTOMATIC TRANSAXLE

Special Tools

Illustration	Tool Name	Tool Number
ST1341-A	Heavy Duty Floor Crane	014-00071 or equivalent
ST1602-A	Spreader Bar	303-D089 (D93P-6001-A3) or equivalent
ST1293-A	Powertrain Lift	014-00765
	Universal Adapter Brackets	014-0001

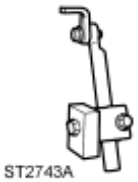 ST2743A		
Lifting Bracket Set, Engine		303-D095 (D94L-6001-A) or equivalent

Material

Item	Specification
Motorcraft SAE 5W-20 Premium Synthetic Blend Motor Oil XO-5W20-QSP (US); Motorcraft SAE 5W-20 Super Premium Motor Oil CXO-5W20-LSP12 (Canada); or equivalent	WSS-M2C930-A

WARNING: Do not smoke or carry lighted tobacco or open flame of any type when working on or near any fuel-related components. Highly flammable mixtures are always present and may be ignited. Failure to follow these instructions may result in personal injury.

All vehicles

1. Using the engine crane and spreader bar, position the engine and transaxle together. Install the engine-to-transaxle bolts.
   - Tighten to 48 Nm (35 lb-ft).
2. Using the engine crane and spreader bar, position the engine and transaxle onto the lift table.

NOTE: Position a suitable block of wood under the transaxle.

3. Install the special tools onto the engine.

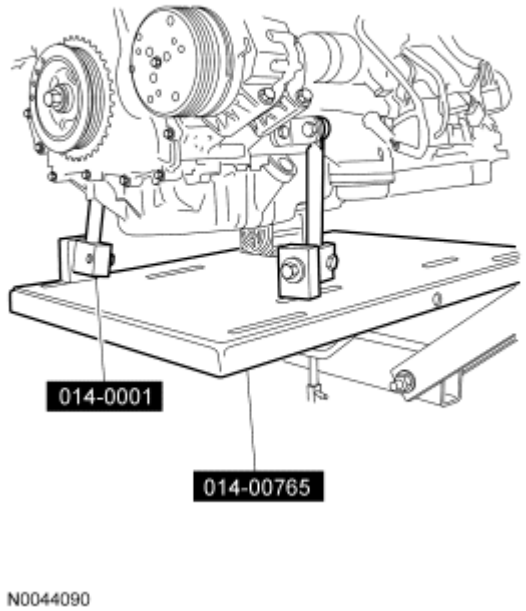

Fig. 577: Identifying Special Tools (014-0001, 014-00765)
Courtesy of FORD MOTOR CO.

4. Connect the transaxle pressure switch electrical connector.

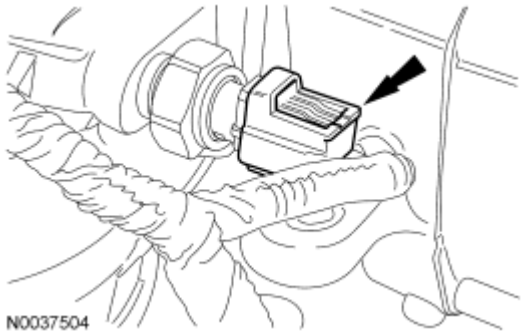

Fig. 578: Locating Transaxle Pressure Switch Electrical Connector
Courtesy of FORD MOTOR CO.

5. Connect the output shaft speed (OSS) sensor electrical connector.

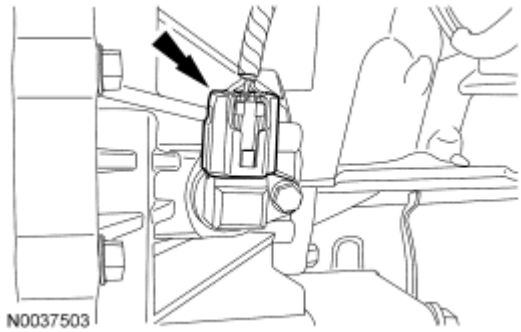

Fig. 579: Locating Output Shaft Speed (OSS) Sensor Electrical Connector
Courtesy of FORD MOTOR CO.

6. Connect the turbine shaft speed (TSS) sensor electrical connector.

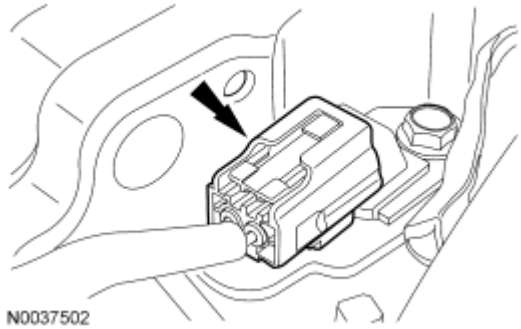

Fig. 580: Locating Turbine Shaft Speed (TSS) Sensor Electrical Connector
Courtesy of FORD MOTOR CO.

7. Connect the transaxle control electrical connectors.

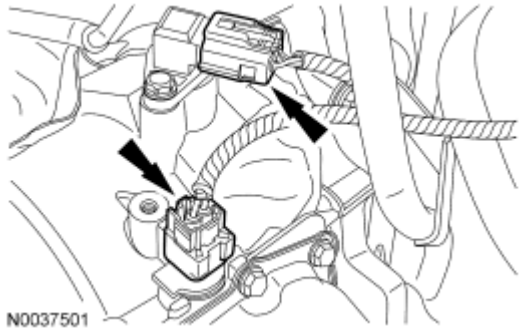

Fig. 581: Locating Transaxle Control Electrical Connectors
Courtesy of FORD MOTOR CO.

8. Connect the transmission range (TR) sensor and primary control solenoid electrical connectors.

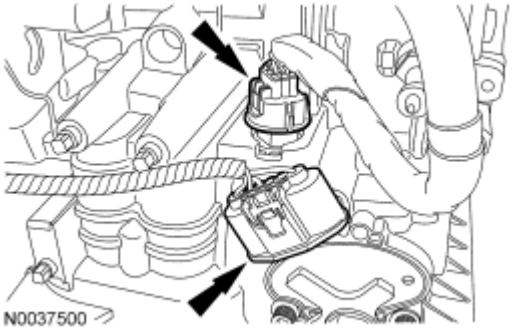

Fig. 582: Locating Transmission Range (TR) Sensor And Primary Control Solenoid Electrical Connectors
Courtesy of FORD MOTOR CO.

9. Install the engine wiring harness bracket and nut.
   - Tighten to 20 Nm (15 lb-ft).

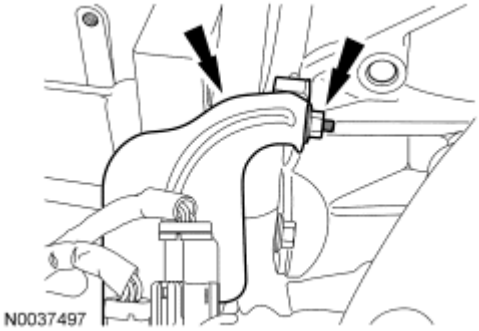

Fig. 583: Locating Engine Wiring Harness Bracket And Nut
Courtesy of FORD MOTOR CO.

10. Install the ground wire and bolt.
    - Tighten to 10 Nm (89 lb-in).

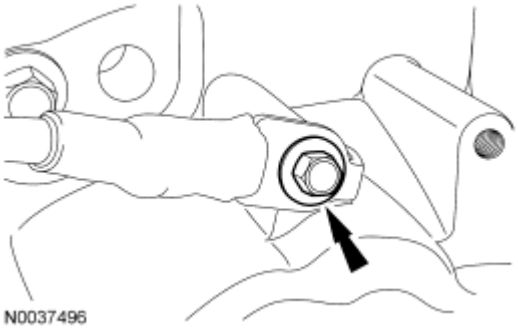

Fig. 584: Locating Ground Wire Bolt
Courtesy of FORD MOTOR CO.

11. Install new torque converter nuts.

- Tighten to 35 Nm (26 lb-ft).

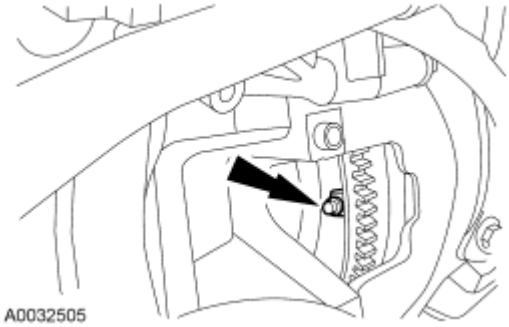

Fig. 585: Locating Torque Converter Nut
Courtesy of FORD MOTOR CO.

12. Install the starter and the 2 stud bolts.
    - Tighten to 25 Nm (18 lb-ft).

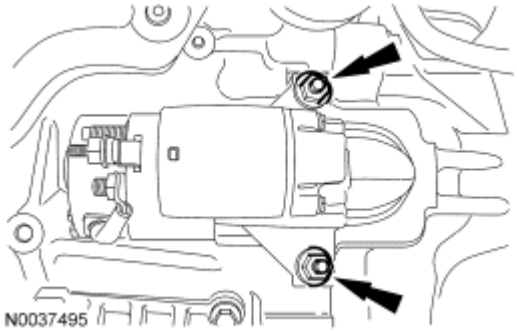

Fig. 586: Locating Starter And Stud Bolts
Courtesy of FORD MOTOR CO.

13. Connect the starter wires and install the 2 nuts.
    - Tighten the large nut to 12 Nm (9 lb-ft).
    - Tighten the small nut to 5 Nm (44 lb-in).

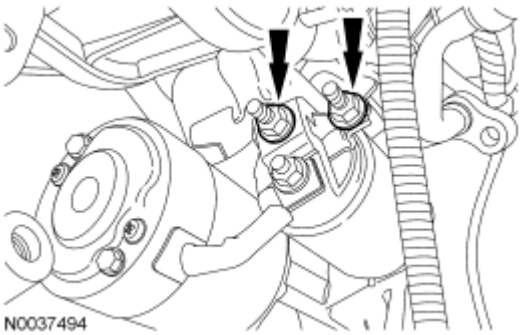

Fig. 587: Locating Starter Wire Nuts
Courtesy of FORD MOTOR CO.

14. Attach the 2 wiring harness retainers to the starter stud bolts.
15. Raise the engine and transaxle into the vehicle.
16. Install the 2 transaxle mount bolts.
    - Tighten to 90 Nm (66 lb-ft).

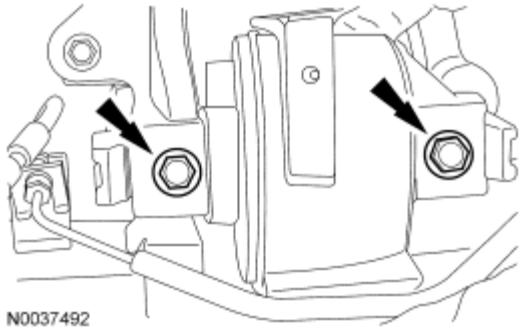

Fig. 588: Locating Transaxle Mount Bolts
Courtesy of FORD MOTOR CO.

17. Install the engine mount bracket, 2 nuts and the bolt.
    - Tighten the nuts to 103 Nm (76 lb-ft).
    - Tighten the bolt to 115 Nm (85 lb-ft).

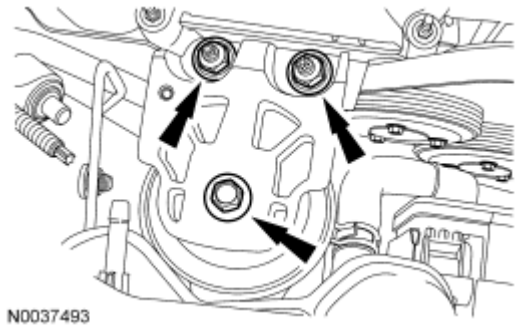

Fig. 589: Locating Engine Mount Bracket Bolt And Nuts
Courtesy of FORD MOTOR CO.

Vehicles with secondary air injection (AIR)

18. Install the AIR pump and the 3 bolts.
    - Tighten to 30 Nm (22 lb-ft).

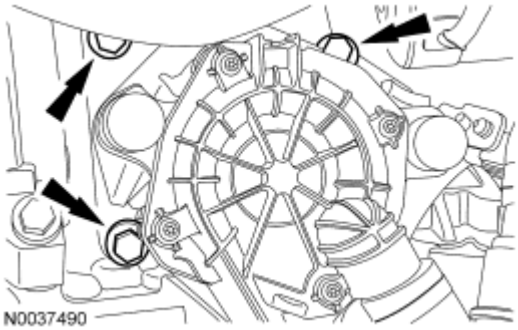

Fig. 590: Locating AIR Pump Bolts
Courtesy of FORD MOTOR CO.

19. Connect the AIR pump electrical connector.

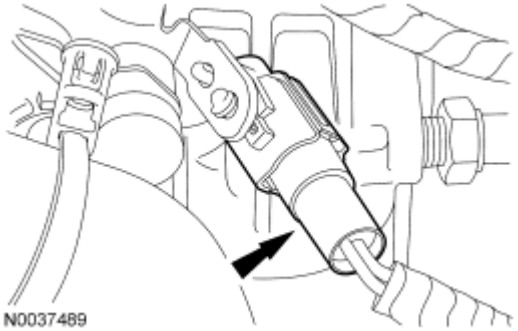

Fig. 591: Locating AIR Pump Electrical Connector
Courtesy of FORD MOTOR CO.

All vehicles

20. Install the 2 oil pan-to-bellhousing bolts.
    - Tighten to 48 Nm (35 lb-ft).

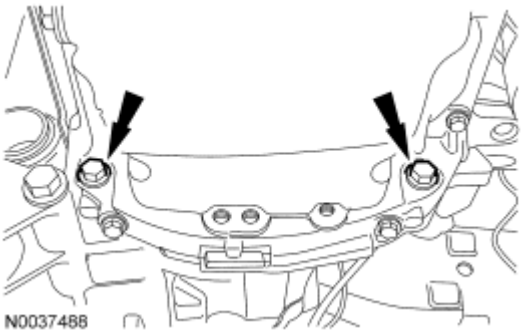

Fig. 592: Locating Oil Pan-To-Bellhousing Bolts
Courtesy of FORD MOTOR CO.

21. Install the bellhousing-to-oil pan bolt.

- Tighten to 48 Nm (35 lb-ft).

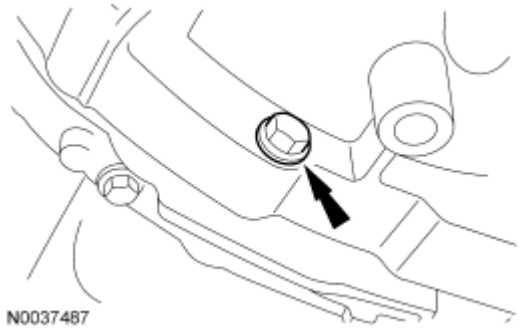

Fig. 593: Locating Bellhousing-To-Oil Pan Bolt
Courtesy of FORD MOTOR CO.

22. Install the RH halfshaft into the transaxle.

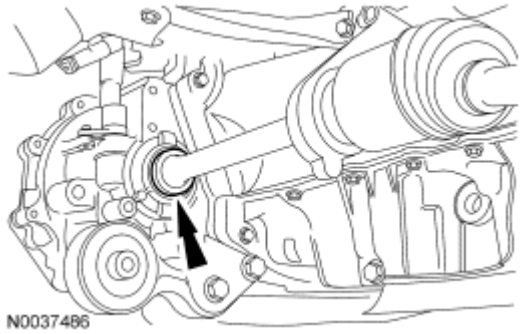

Fig. 594: Locating RH Halfshaft Into Transaxle
Courtesy of FORD MOTOR CO.

23. Install the 2 RH halfshaft carrier bearing bracket bolts.
    - Tighten to 40 Nm (30 lb-ft).

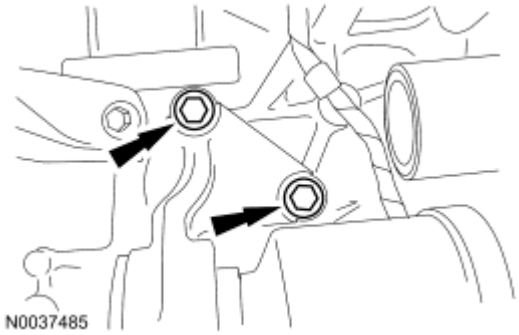

Fig. 595: Locating RH Halfshaft Carrier Bearing Bracket Bolts
Courtesy of FORD MOTOR CO.

NOTE: Start one end of the circlip in the groove and work the circlip over the

halfshaft and into the groove to prevent the circlip from overexpanding.

24. Install a new circlip in the groove on the LH halfshaft.

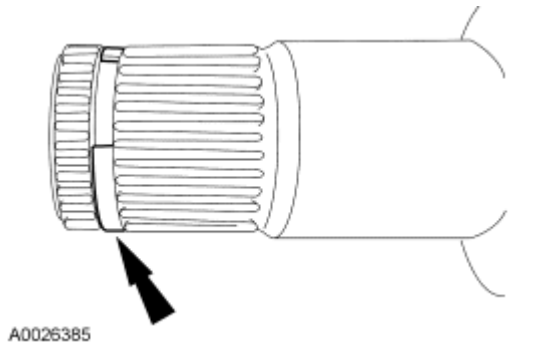

Fig. 596: Locating Halfshaft Circlip
Courtesy of FORD MOTOR CO.

25. Install LH halfshaft into the transaxle.
26. Connect the lower radiator hose and install the retaining clip.

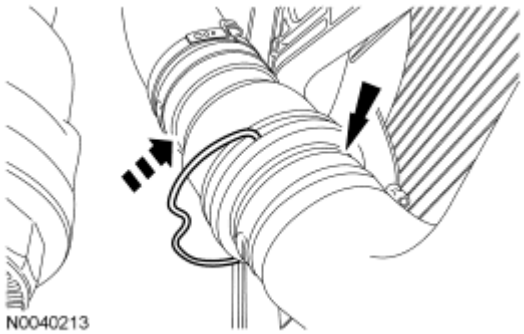

Fig. 597: Identifying Lower Radiator Hose And Installing Retaining Clip
Courtesy of FORD MOTOR CO.

27. Install the radio frequency interference capacitor and the bolt on the engine mount bracket.
    - Tighten to 10 Nm (89 lb-in).

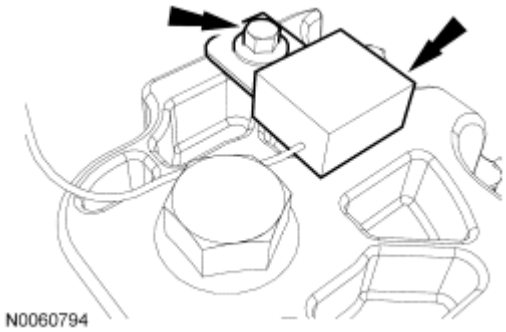

Fig. 598: Locating Radio Frequency Interference Capacitor Bolt

Courtesy of FORD MOTOR CO.

28. Connect the A/C tube to the condenser and install the nut.
    - Tighten to 8 Nm (71 lb-in).

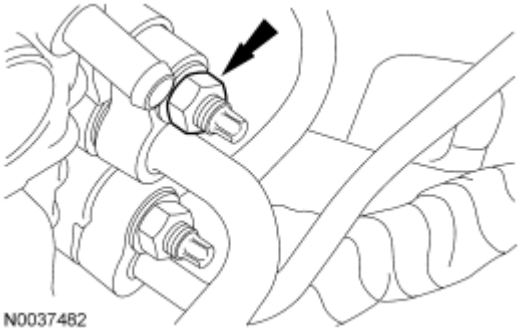

Fig. 599: Locating A/C Tube To Condenser Nut
Courtesy of FORD MOTOR CO.

29. Connect the A/C tubes and install the 2 nuts.
    - Tighten to 8 Nm (71 lb-in).

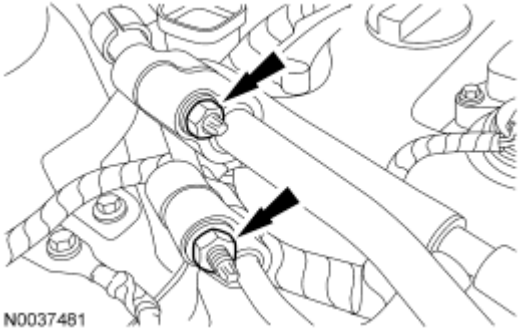

Fig. 600: Locating A/C Tubes Nuts
Courtesy of FORD MOTOR CO.

30. Install the 2 A/C tube bracket bolts.
    - Tighten to 10 Nm (89 lb-in).

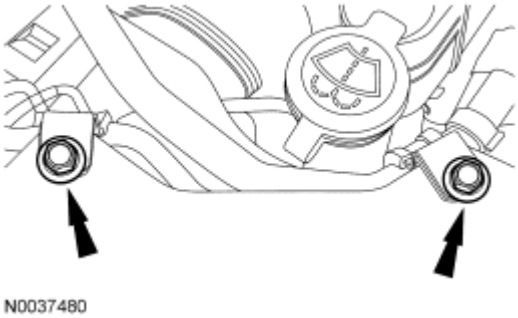

Fig. 601: Locating A/C Tube Bracket Bolts
Courtesy of FORD MOTOR CO.

31. Attach the coolant vent hose retaining clip to the A/C tube.

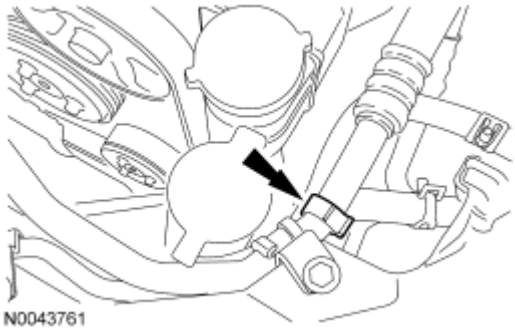

Fig. 602: Locating Coolant Vent Hose Retaining Clip
Courtesy of FORD MOTOR CO.

32. Install the radio frequency interference capacitor, ground wire and the bolt.
    - Tighten to 10 Nm (89 lb-in).

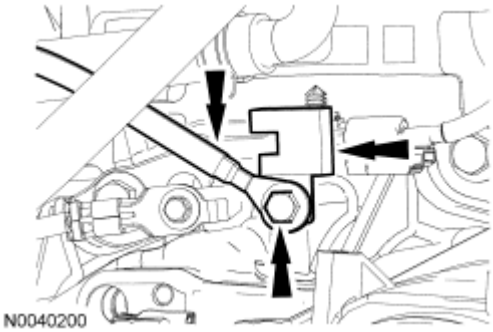

Fig. 603: Locating Radio Frequency Interference Capacitor, Ground Wire And Bolt
Courtesy of FORD MOTOR CO.

33. Connect the power steering cooler tube.

Fig. 604: Locating Power Steering Cooler Tube
Courtesy of FORD MOTOR CO.

34. Connect the transaxle cooler tubes.

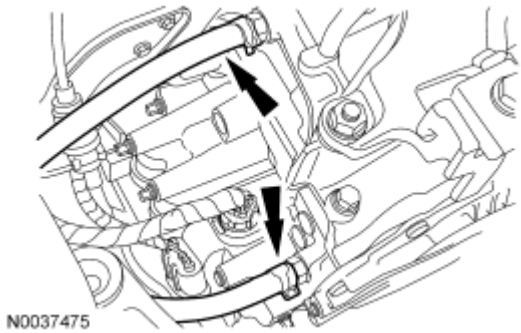

Fig. 605: Locating Transaxle Cooler Tubes
Courtesy of FORD MOTOR CO.

35. Connect the transaxle control cable to the bracket.
    - Attach the control cable to the control lever.

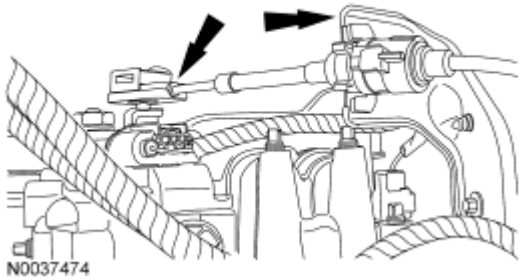

Fig. 606: Locating Transaxle Control Cable From Control Lever
Courtesy of FORD MOTOR CO.

36. Connect the heater hose inline connector.

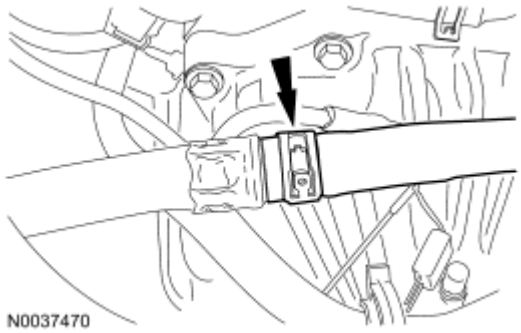

Fig. 607: Locating Heater Hose Inline Connector
Courtesy of FORD MOTOR CO.

37. If equipped, connect the block heater electrical connector and attach the harness retaining clips to the

heater hose.

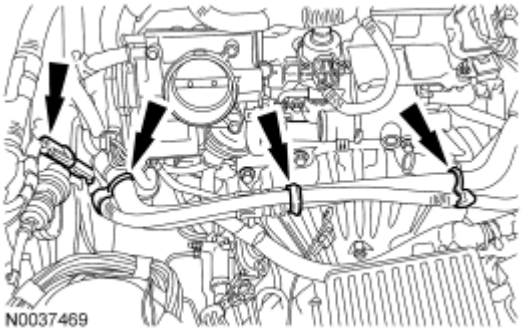

Fig. 608: Locating Block Heater Electrical Connector Harness Retaining Clips
Courtesy of FORD MOTOR CO.

38. Connect the upper radiator and heater hoses to the coolant bypass.

Fig. 609: Locating Upper Radiator And Heater Hoses
Courtesy of FORD MOTOR CO.

39. Attach the evaporative emissions (EVAP) tube bundle retaining clip to the bracket.

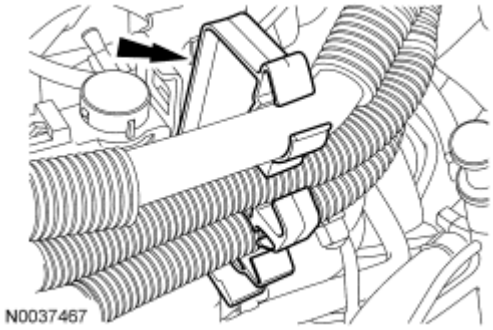

Fig. 610: Locating Evaporative Emissions (EVAP) Tube Bundle Retaining Clip
Courtesy of FORD MOTOR CO.

40. Connect the EVAP tube to the intake manifold.

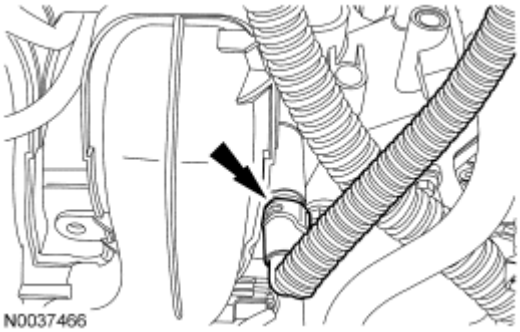

Fig. 611: Locating Evaporative Emissions (EVAP) Tube From Intake Manifold
Courtesy of FORD MOTOR CO.

41. Insert the brake booster vacuum supply tube into the locking ring on the intake manifold.

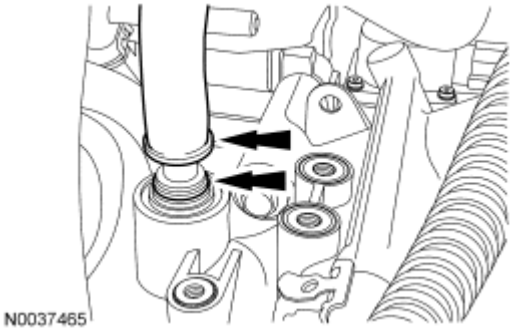

Fig. 612: Locating Locking Ring And Brake Booster Vacuum Supply Tube
Courtesy of FORD MOTOR CO.

42. Connect the crankcase vent tube to the valve cover.

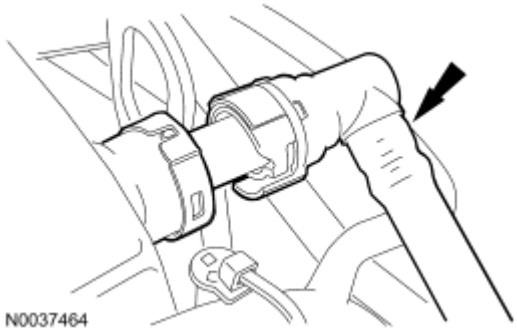

Fig. 613: Locating Crankcase Vent Tube
Courtesy of FORD MOTOR CO.

43. Connect the fuel supply tube to the fuel rail. For additional information, refer to **FUEL SYSTEM - GENERAL INFORMATION** .
44. Connect the powertrain control module (PCM) electrical connector and the pin-type retainer.

Fig. 614: Locating Powertrain Control Module (PCM) Electrical Connector And Pin-Type Retainer
Courtesy of FORD MOTOR CO.

45. Install the ground wire and the bolt.
    - Tighten to 10 Nm (89 lb-in).

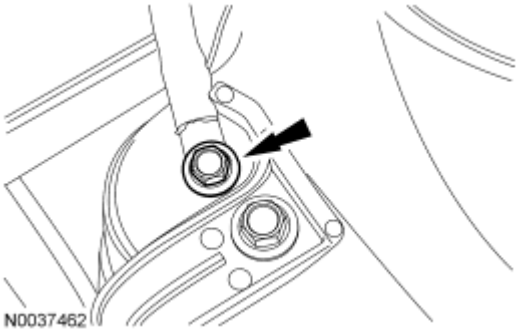

Fig. 615: Locating Ground Wire And Bolt
Courtesy of FORD MOTOR CO.

46. Connect the 2 engine wiring harness electrical connectors.

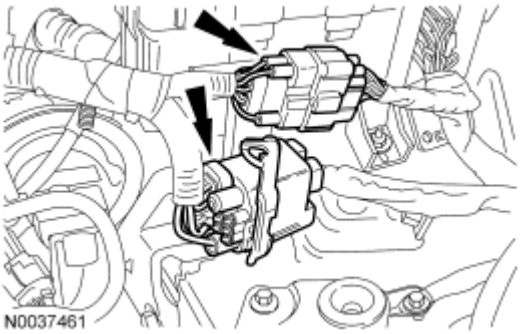

Fig. 616: Locating Engine Wiring Harness Electrical Connectors
Courtesy of FORD MOTOR CO.

47. Connect the wire and install the nut on the battery cable.
    - Tighten to 10 Nm (89 lb-in).

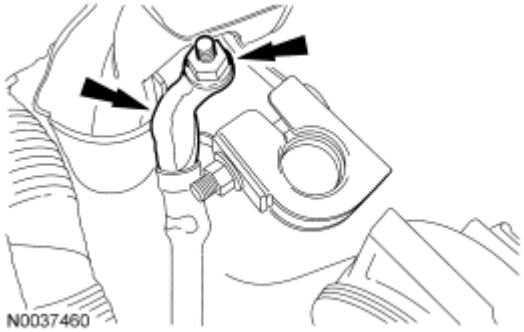

Fig. 617: Locating Battery Cable And Nut
Courtesy of FORD MOTOR CO.

48. Install the battery tray. For additional information, refer to **BATTERY, MOUNTING AND CABLES** .
49. Install the engine air cleaner and air cleaner outlet pipe. For additional information, refer to **INTAKE AIR DISTRIBUTION AND FILTERING - 2.3L** .
50. Install the generator air inlet duct, bolt and the 2 nuts.
    - Tighten to 6 Nm (53 lb-in).

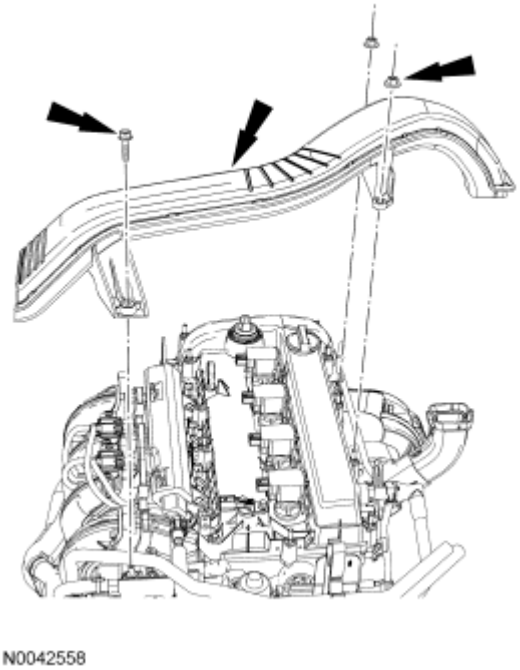

Fig. 618: Locating Generator Air Inlet Duct, Bolt And Nuts
Courtesy of FORD MOTOR CO.

51. Place the subframe assembly on the special tool and raise the subframe into the installed position.

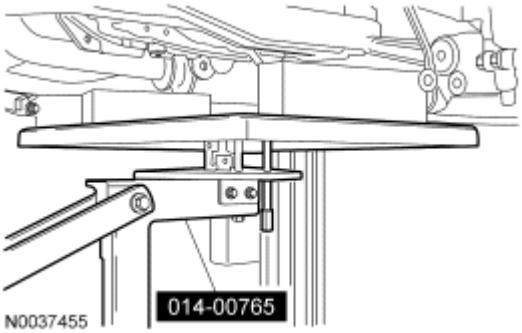

Fig. 619: Positioning Special Tool (014-00765) Under Subframe Assembly
Courtesy of FORD MOTOR CO.

NOTE: LH shown, RH similar.

52. Install the front subframe nuts.
    - Tighten to 150 Nm (111 lb-ft).

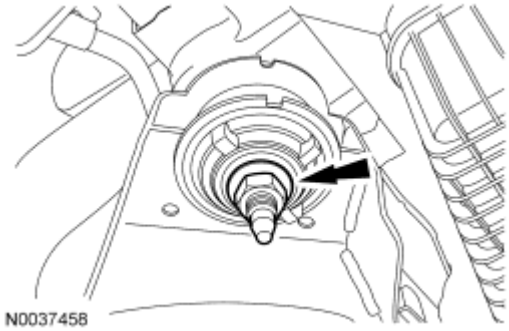

Fig. 620: Locating Front Subframe Nuts
Courtesy of FORD MOTOR CO.

NOTE: LH shown, RH similar.

53. Position the subframe brackets and install the bolts finger-tight.

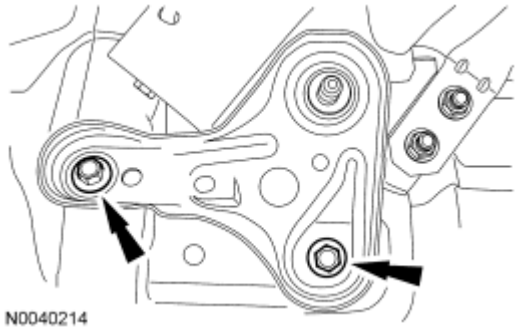

Fig. 621: Locating Subframe Brackets Bolts
Courtesy of FORD MOTOR CO.

NOTE: LH shown, RH similar.

54. Install the subframe nuts.
    - Tighten to 150 Nm (111 lb-ft).

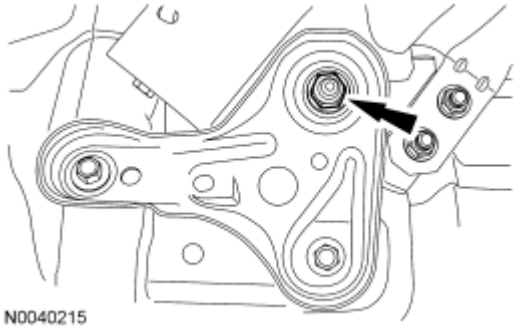

Fig. 622: Locating Subframe Nuts
Courtesy of FORD MOTOR CO.

NOTE: LH shown, RH similar.

55. Tighten the subframe bracket-to-body bolts to 103 Nm (76 lb-ft).

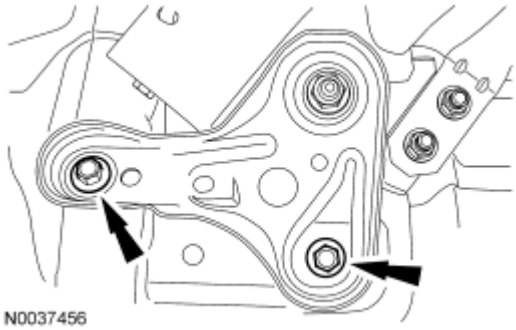

Fig. 623: Locating Subframe Bracket-To-Body Bolts
Courtesy of FORD MOTOR CO.

NOTE: LH shown, RH similar.

56. Install the through bolts into the lower control arms.
    - Tighten to 103 Nm (76 lb-ft).

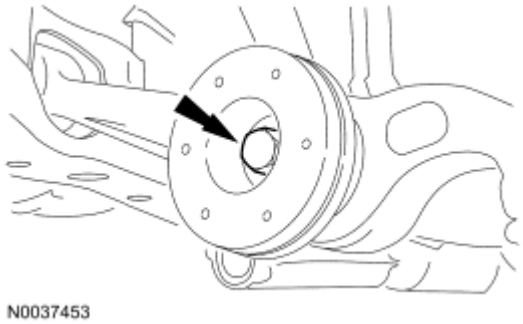

Fig. 624: Locating Lower Control Arms Through Bolt
Courtesy of FORD MOTOR CO.

NOTE: LH shown, RH similar.

57. Install the lower ball joint nuts.
    - Tighten to 200 Nm (148 lb-ft).

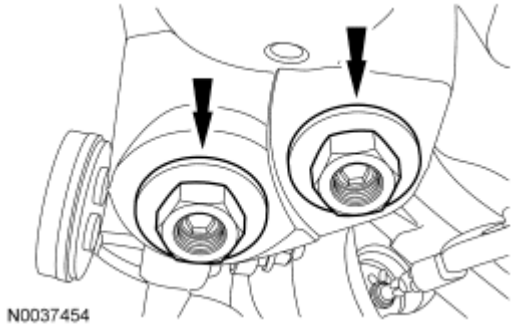

Fig. 625: Locating Lower Ball Joint Nuts
Courtesy of FORD MOTOR CO.

NOTE: LH shown, RH similar.

58. Install the sway bar links and nuts to the struts.
    - Tighten to 40 Nm (30 lb-ft).

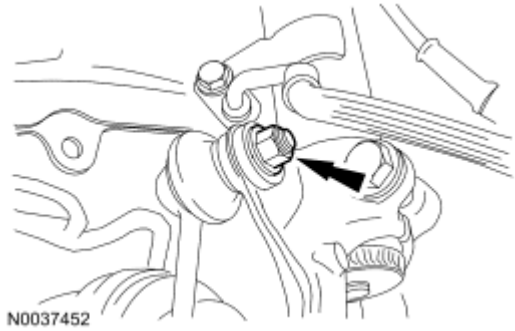

Fig. 626: Locating Sway Bar Links And Nuts

Courtesy of FORD MOTOR CO.

59. Connect the power steering cooler tube.

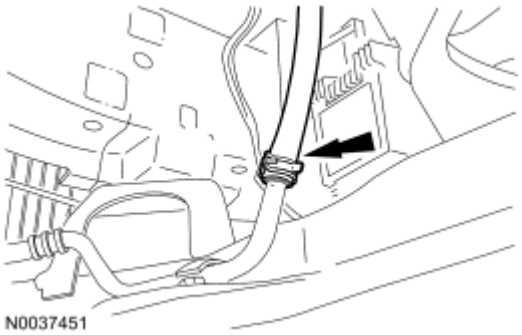

Fig. 627: Locating Power Steering Cooler Tube
Courtesy of FORD MOTOR CO.

NOTE: LH shown, RH similar.

60. Install tie-rod ends and nuts.
    - Tighten to 48 Nm (35 lb-ft).
    - Install the cotter pin.

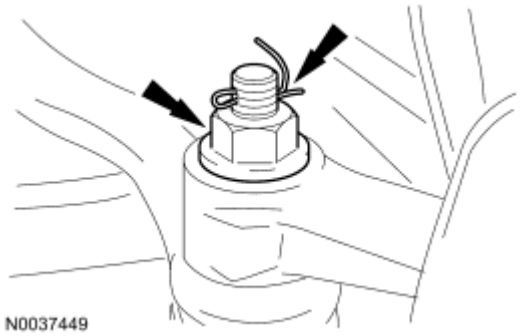

Fig. 628: Locating Tie-Rod Ends Nuts And Cotter Pin
Courtesy of FORD MOTOR CO.

61. Install the LH splash shield and the 6 pin-type retainers (4 shown).

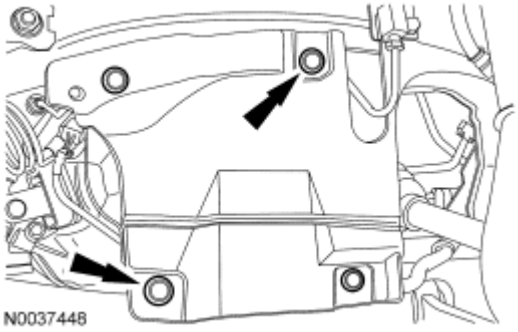

Fig. 629: Locating LH Splash Shield Pin-Type Retainers
Courtesy of FORD MOTOR CO.

62. Position the LH fender splash shield and install the 4 screws.

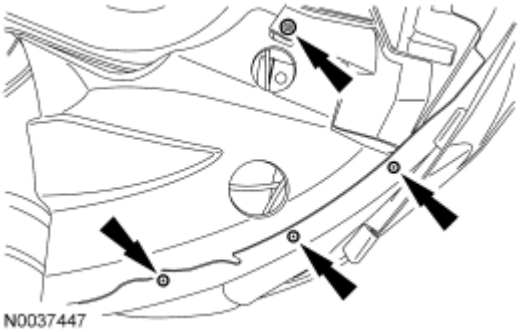

Fig. 630: Locating LH Fender Splash Shield Screws
Courtesy of FORD MOTOR CO.

63. Install the RH splash shield and the 6 pin-type retainers (4 shown).

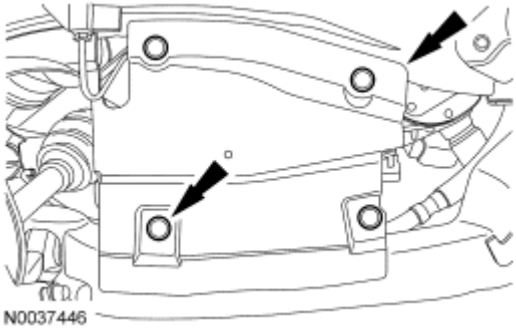

Fig. 631: Locating Splash Shield Pin-Type Retainers
Courtesy of FORD MOTOR CO.

64. Position the RH fender splash shield and install the 4 screws.

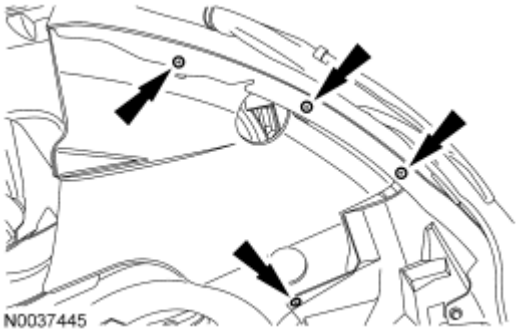

Fig. 632: Locating RH Fender Splash Shield Screws
Courtesy of FORD MOTOR CO.

65. Install the engine roll restrictor bolt.
    - Tighten to 90 Nm (66 lb-ft).

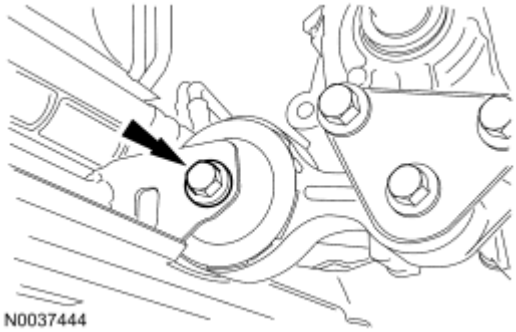

Fig. 633: Locating Engine Roll Restrictor Bolt
Courtesy of FORD MOTOR CO.

66. Route the power steering pressure (PSP) tube up into the engine compartment.

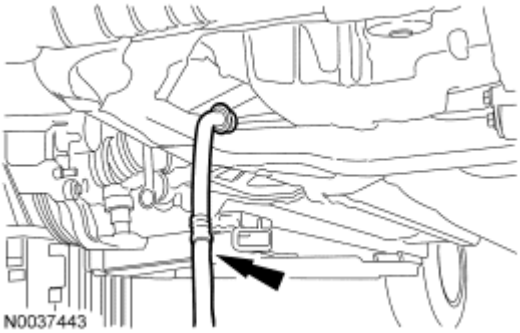

Fig. 634: Locating Power Steering Pressure (PSP) Tube
Courtesy of FORD MOTOR CO.

67. Slide the steering gear-to-dash seal onto the steering gear and engage the 4 retaining clips into the body.
    - From under the vehicle, verify that the seal is properly installed on the steering gear and the retaining clips are fully engaged into the dash.

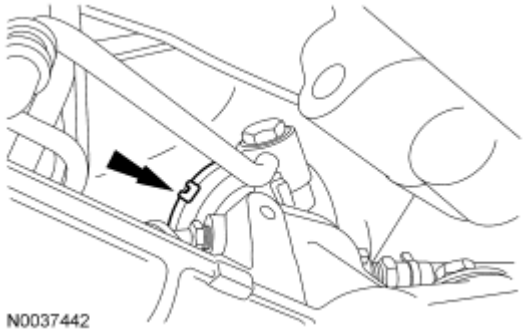

Fig. 635: Locating Steering Gear-To-Dash Seal Clips
Courtesy of FORD MOTOR CO.

68. Install the oil filter element. For additional information, refer to **Engine Lubrication Components - Exploded View** and **Oil Filter Element**.
69. Install the exhaust flexible pipe. For additional information, refer to **EXHAUST SYSTEM** .
70. If equipped, install the underbody cover and the 7 screws.

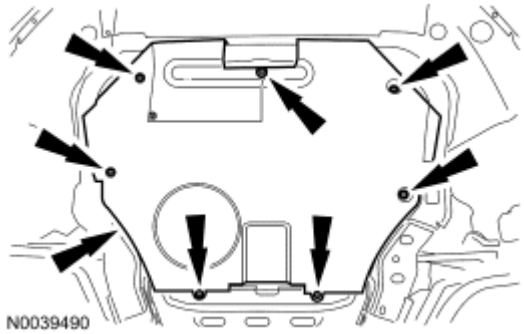

Fig. 636: Locating Underbody Cover Screws
Courtesy of FORD MOTOR CO.

71. Connect the PSP tube to the power steering pump and install the bolt.
    - Tighten to 35 Nm (26 lb-ft).

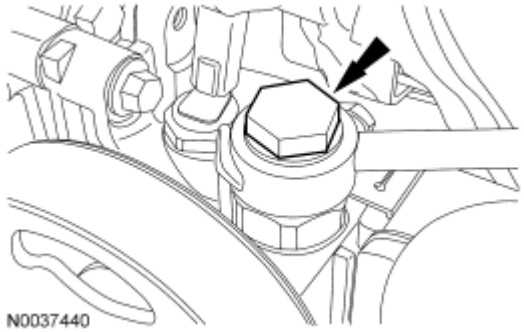

Fig. 637: Locating Power Steering Pressure (PSP) Tube Bolt
Courtesy of FORD MOTOR CO.

NOTE: Align the index marks made during removal.

72. Install the steering intermediate shaft onto the steering gear and install the bolt.
    - Tighten to 23 Nm (17 lb-ft).

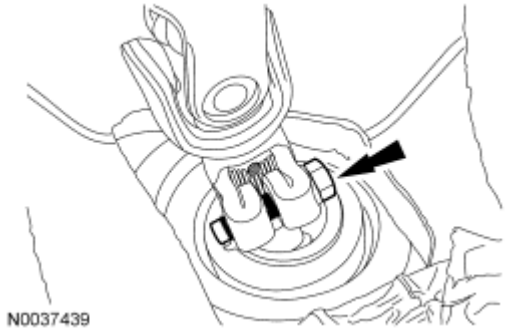

Fig. 638: Locating Steering Intermediate Shaft Bolt
Courtesy of FORD MOTOR CO.

73. Install the steering joint cover and the 2 nuts.

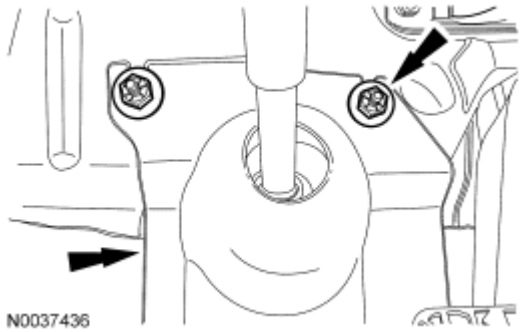

Fig. 639: Locating Steering Joint Cover And Nuts
Courtesy of FORD MOTOR CO.

74. Fill the engine with clean engine oil.
75. Connect the battery ground cable. For additional information, refer to **BATTERY, MOUNTING AND CABLES** .
76. Fill and bleed the cooling system. For additional information, refer to **ENGINE COOLING** .
77. Fill the power steering system. For additional information, refer to **STEERING SYSTEM - GENERAL INFORMATION** .
78. Recharge the air conditioning system. For additional information, refer to **CLIMATE CONTROL SYSTEM - GENERAL INFORMATION AND DIAGNOSTICS**

ENGINE - MANUAL TRANSAXLE

Special Tools

Illustration	Tool Name	Tool Number

 ST1341-A	Heavy Duty Floor Crane	014-00071 or equivalent
 ST1602-A	Spreader Bar	303-D089 (D93P-6001-A3) or equivalent
 ST1293-A	Powertrain Lift	014-00765
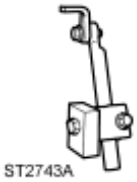 ST2743A	Universal Adapter Brackets	014-0001
Lifting Bracket Set, Engine		303-D095 (D94L-6001-A) or equivalent

Material

Item	Specification
Motorcraft SAE 5W-20 Premium Synthetic Blend Motor Oil XO-5W20-QSP (US); Motorcraft SAE 5W-20 Super Premium Motor Oil CXO-5W20-LSP12 (Canada); or equivalent	WSS-M2C930-A

WARNING: Do not smoke or carry lighted tobacco or open flame of any type when working on or near any fuel-related components. Highly flammable mixtures are always present and may be ignited. Failure to follow these instructions may result in personal injury.

1. Using the engine crane and spreader bar, position the engine and transaxle together. Install the transaxle-to-engine bolts.
   - Tighten to 48 Nm (35 lb-ft).
2. Using the engine crane and spreader bar, position the engine and transaxle onto the lift table.

NOTE: Position a suitable block of wood under the transaxle.

3. Install the special tools onto the engine.

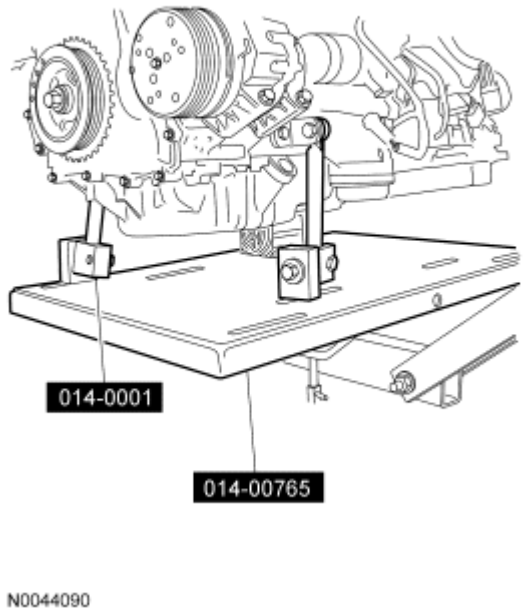

Fig. 640: Identifying Special Tools (014-0001, 014-00765)
Courtesy of FORD MOTOR CO.

4. Connect the vehicle speed sensor (VSS) electrical connector.

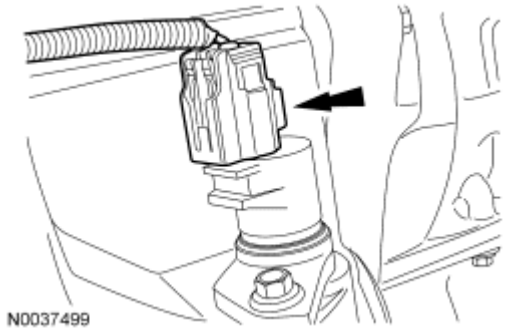

Fig. 641: Locating Vehicle Speed Sensor (VSS) Electrical Connector
Courtesy of FORD MOTOR CO.

5. Connect the backup lamp electrical connector.

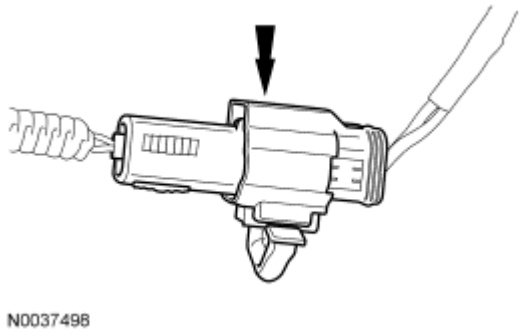

Fig. 642: Locating Backup Lamp Electrical Connector
Courtesy of FORD MOTOR CO.

6. Install the engine wiring harness bracket and nut.
   - Tighten to 20 Nm (15 lb-ft).

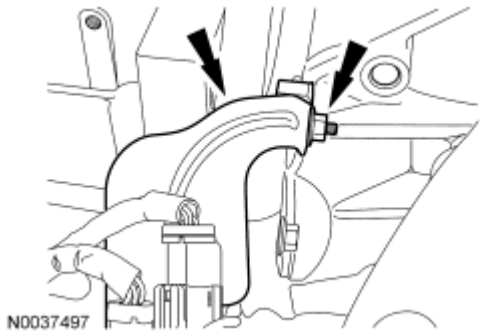

Fig. 643: Locating Engine Wiring Harness Bracket And Nut
Courtesy of FORD MOTOR CO.

7. Install the ground wire and bolt.
   - Tighten to 10 Nm (89 lb-in).

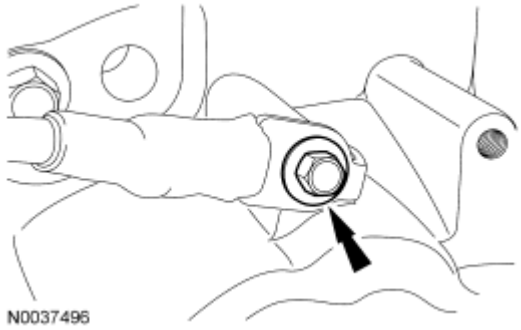

Fig. 644: Locating Ground Wire Bolt
Courtesy of FORD MOTOR CO.

8. Install the starter and the 2 stud bolts.
   - Tighten to 25 Nm (18 lb-ft).

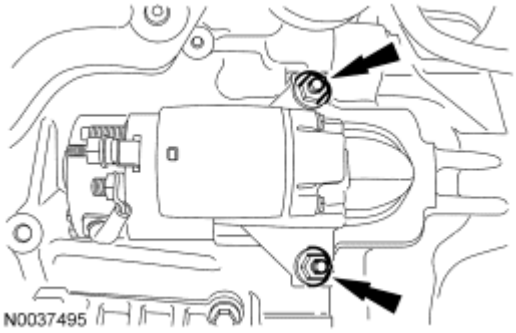

Fig. 645: Locating Starter And Stud Bolts
Courtesy of FORD MOTOR CO.

9. Connect the starter wires and install the 2 nuts.
    - Tighten the large nut to 12 Nm (9 lb-ft).
    - Tighten the small nut to 5 Nm (44 lb-in).

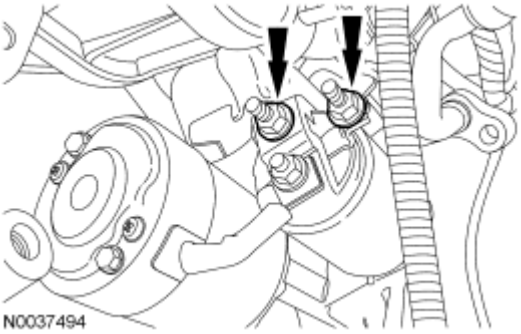

Fig. 646: Locating Starter Wire Nuts
Courtesy of FORD MOTOR CO.

10. Attach the 2 wiring harness retainers to the starter stud bolts.
11. Raise the engine and transaxle into the vehicle.
12. Install the 2 transaxle mount bolts.
    - Tighten to 90 Nm (66 lb-ft).

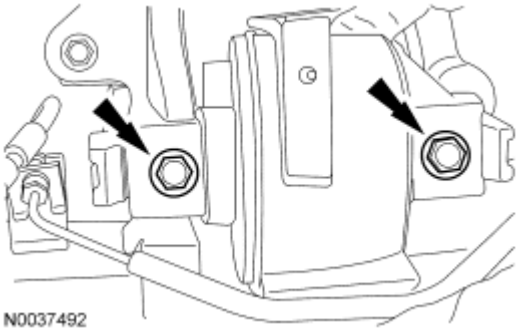

Fig. 647: Locating Transaxle Mount Bolts
Courtesy of FORD MOTOR CO.

13. Install the engine mount bracket, 2 nuts and the bolt.
    - Tighten the nuts to 103 Nm (76 lb-ft).
    - Tighten the bolt to 115 Nm (85 lb-ft).

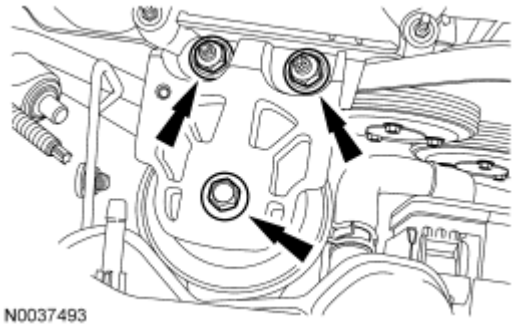

Fig. 648: Locating Engine Mount Bracket Bolt And Nuts
Courtesy of FORD MOTOR CO.

14. Install the 2 oil pan-to-bellhousing bolts.
    - Tighten to 48 Nm (35 lb-ft).

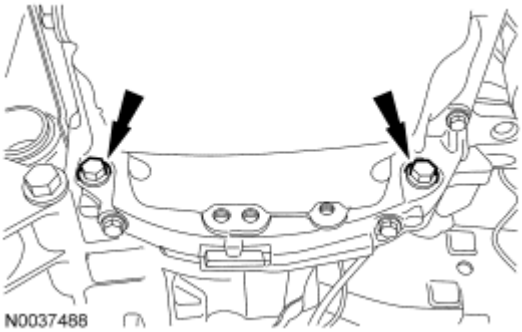

Fig. 649: Locating Oil Pan-To-Bellhousing Bolts
Courtesy of FORD MOTOR CO.

15. Install the bellhousing-to-oil pan bolt.
    - Tighten to 48 Nm (35 lb-ft).

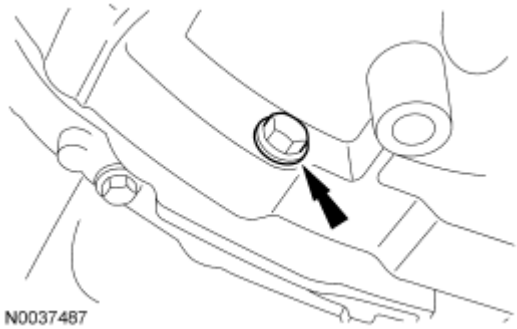

Fig. 650: Locating Bellhousing-To-Oil Pan Bolt
Courtesy of FORD MOTOR CO.

16. Install the RH halfshaft into the transaxle.

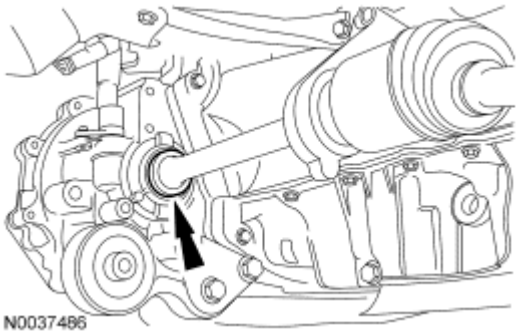

Fig. 651: Locating RH Halfshaft Into Transaxle
Courtesy of FORD MOTOR CO.

17. Install the 2 RH halfshaft carrier bearing bracket bolts.
    - Tighten to 40 Nm (30 lb-ft).

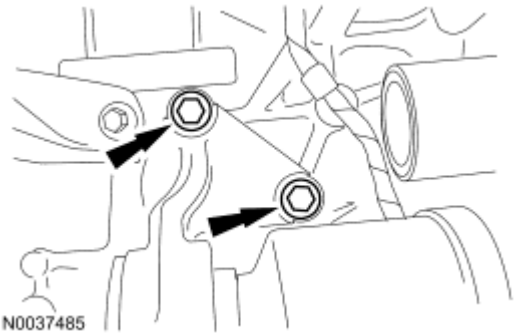

Fig. 652: Locating RH Halfshaft Carrier Bearing Bracket Bolts
Courtesy of FORD MOTOR CO.

NOTE: **Start one end of the circlip in the groove and work the circlip over the halfshaft and into the groove to prevent the circlip from overexpanding.**

18. Install a new circlip in the groove on the LH halfshaft.

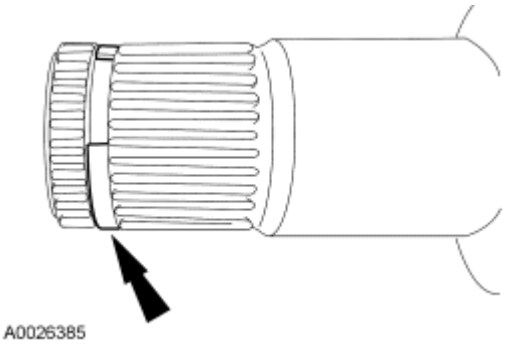

Fig. 653: Locating Halfshaft Circlip
Courtesy of FORD MOTOR CO.

19. Install LH halfshaft into the transaxle.
20. Connect the lower radiator hose and install the retaining clip.

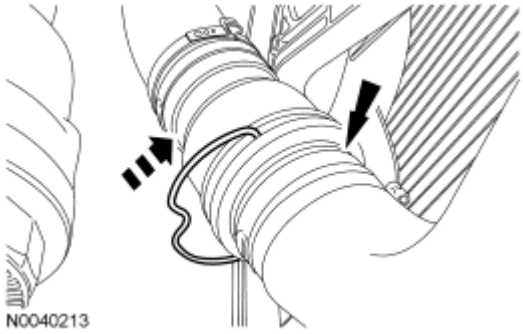

Fig. 654: Identifying Lower Radiator Hose And Installing Retaining Clip
Courtesy of FORD MOTOR CO.

21. Install the radio frequency interference capacitor and the bolt on the engine mount bracket.
    - Tighten to 10 Nm (89 lb-in).

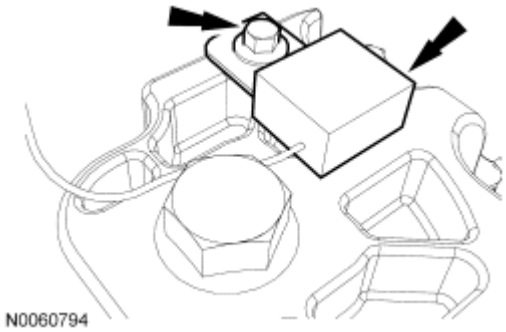

Fig. 655: Locating Radio Frequency Interference Capacitor Bolt
Courtesy of FORD MOTOR CO.

22. Connect the A/C tube to the condenser and install the nut.
    - Tighten to 8 Nm (71 lb-in).

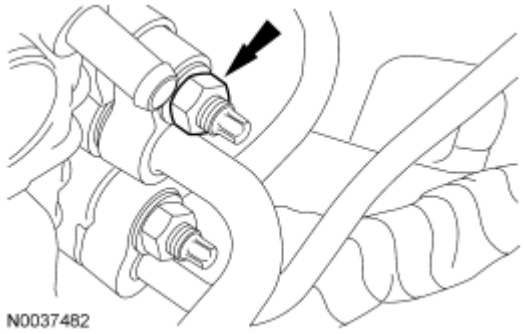

Fig. 656: Locating A/C Tube To Condenser Nut
Courtesy of FORD MOTOR CO.

23. Connect the A/C tubes and install the 2 nuts.
    - Tighten to 8 Nm (71 lb-in).

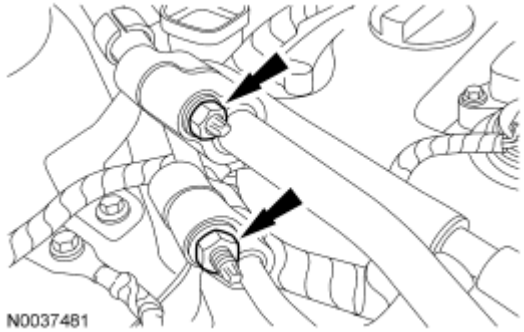

Fig. 657: Locating A/C Tubes Nuts
Courtesy of FORD MOTOR CO.

24. Install the 2 A/C tube bracket bolts.
    - Tighten to 10 Nm (89 lb-in).

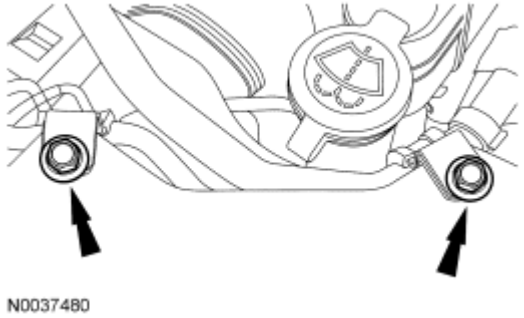

Fig. 658: Locating A/C Tube Bracket Bolts
Courtesy of FORD MOTOR CO.

25. Attach the coolant vent hose retaining clip to the A/C tube.

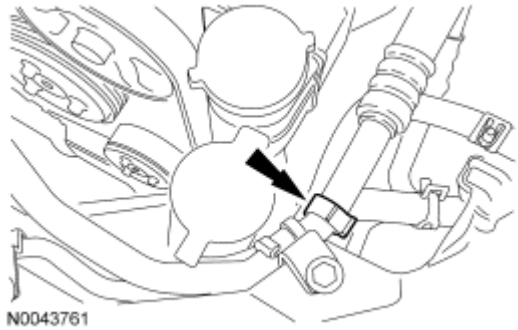

Fig. 659: Locating Coolant Vent Hose Retaining Clip
Courtesy of FORD MOTOR CO.

26. Install the radio frequency interference capacitor, ground wire and the bolt.
    - Tighten to 10 Nm (89 lb-in).

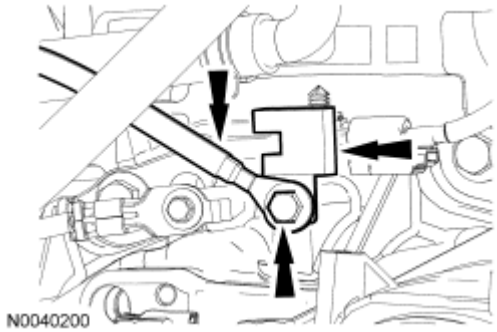

Fig. 660: Locating Radio Frequency Interference Capacitor, Ground Wire And Bolt
Courtesy of FORD MOTOR CO.

27. Connect the power steering cooler tube.

Fig. 661: Locating Power Steering Cooler Tube
Courtesy of FORD MOTOR CO.

28. Attach the transaxle control cables to the bracket.
    - Connect the control cables to the control levers.

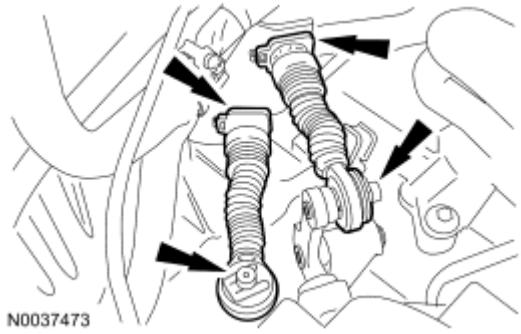

Fig. 662: Locating Control Cables
Courtesy of FORD MOTOR CO.

29. Install the clutch slave cylinder and the 2 bolts.
    - Tighten to 22 Nm (16 lb-ft).

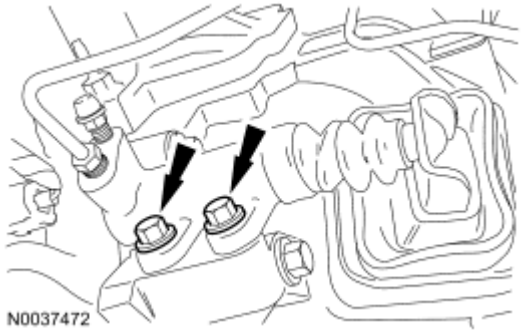

Fig. 663: Locating Clutch Slave Cylinder Bolts
Courtesy of FORD MOTOR CO.

30. Install the 2 clutch tube bracket bolts.
    - Tighten to 22 Nm (16 lb-ft).

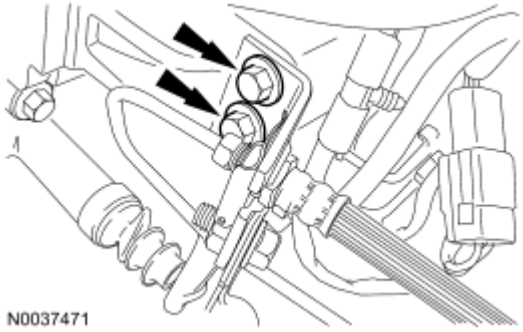

Fig. 664: Locating Clutch Tube Bracket Bolts
Courtesy of FORD MOTOR CO.

31. Connect the heater hose inline connector.

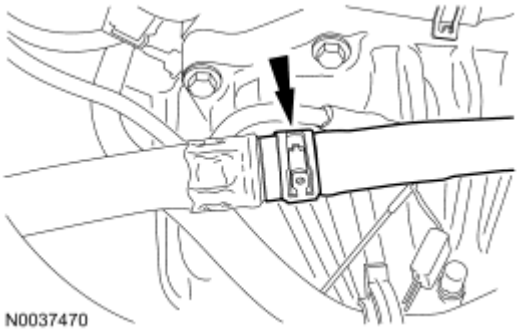

Fig. 665: Locating Heater Hose Inline Connector
Courtesy of FORD MOTOR CO.

32. If equipped, connect the block heater electrical connector and attach the harness retaining clips to the heater hose.

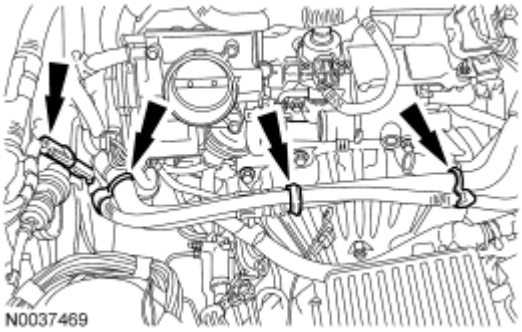

Fig. 666: Locating Block Heater Electrical Connector Harness Retaining Clips
Courtesy of FORD MOTOR CO.

33. Connect the upper radiator and heater hoses to the coolant bypass.

Fig. 667: Locating Upper Radiator And Heater Hoses
Courtesy of FORD MOTOR CO.

34. Attach the evaporative emissions (EVAP) tube bundle retaining clip to the bracket.

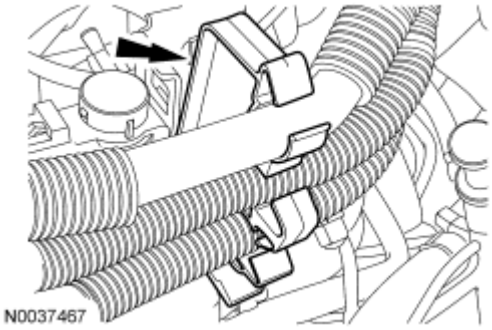

Fig. 668: Locating Evaporative Emissions (EVAP) Tube Bundle Retaining Clip
Courtesy of FORD MOTOR CO.

35. Connect the EVAP tube to the intake manifold.

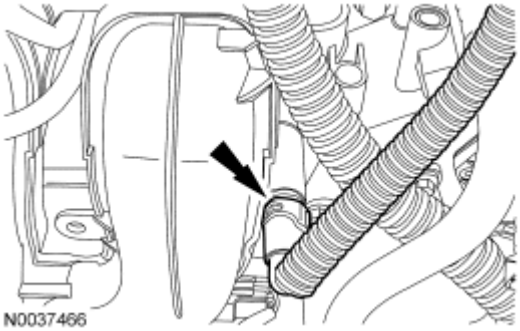

Fig. 669: Locating Evaporative Emissions (EVAP) Tube From Intake Manifold
Courtesy of FORD MOTOR CO.

36. Insert the brake booster vacuum supply tube into the locking ring on the intake manifold.

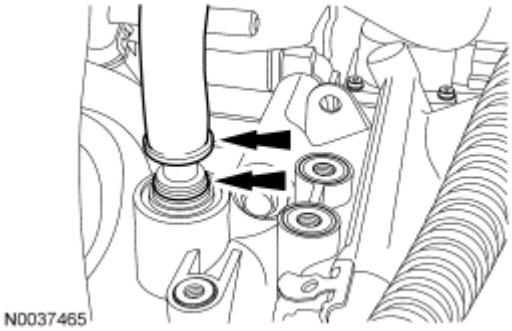

Fig. 670: Locating Locking Ring And Brake Booster Vacuum Supply Tube
Courtesy of FORD MOTOR CO.

37. Connect the crankcase vent tube to the valve cover.

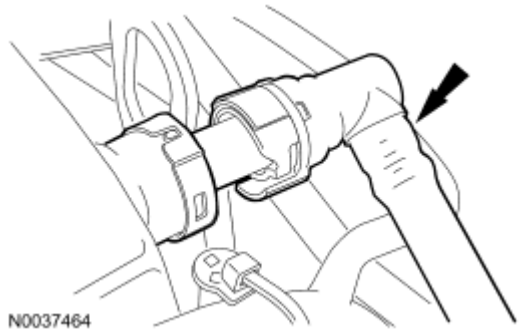

Fig. 671: Locating Crankcase Vent Tube
Courtesy of FORD MOTOR CO.

38. Connect the fuel supply tube to the fuel rail. For additional information, refer to **FUEL SYSTEM - GENERAL INFORMATION** .
39. Connect the powertrain control module (PCM) electrical connector and the pin-type retainer.

Fig. 672: Locating Powertrain Control Module (PCM) Electrical Connector And Pin-Type Retainer
Courtesy of FORD MOTOR CO.

40. Install the ground wire and the bolt.
    - Tighten to 10 Nm (89 lb-in).

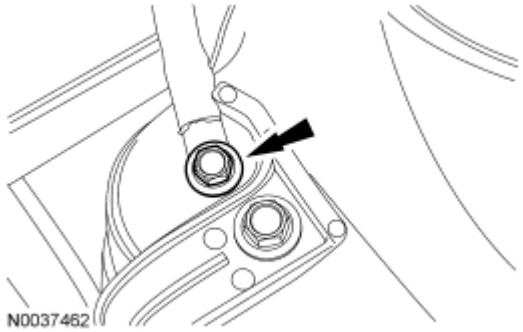

Fig. 673: Locating Ground Wire And Bolt
Courtesy of FORD MOTOR CO.

41. Connect the 2 engine wiring harness electrical connectors.

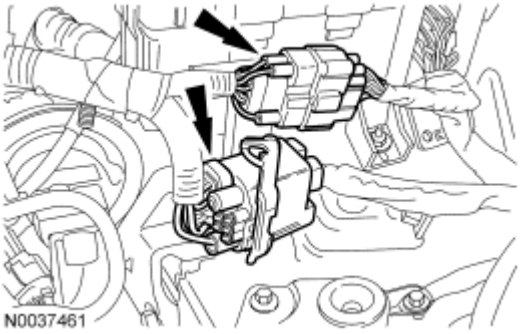

Fig. 674: Locating Engine Wiring Harness Electrical Connectors
Courtesy of FORD MOTOR CO.

42. Connect the wire and install the nut on the battery cable.
    - Tighten to 10 Nm (89 lb-in).

Fig. 675: Locating Battery Cable And Nut
Courtesy of FORD MOTOR CO.

43. Install the battery tray. For additional information, refer to **BATTERY, MOUNTING AND CABLES** .
44. Install the engine air cleaner and air cleaner outlet pipe. For additional information, refer to **INTAKE AIR DISTRIBUTION AND FILTERING - 2.3L** .
45. Install the generator air inlet duct, bolt and the 2 nuts.
    - Tighten to 6 Nm (53 lb-in).

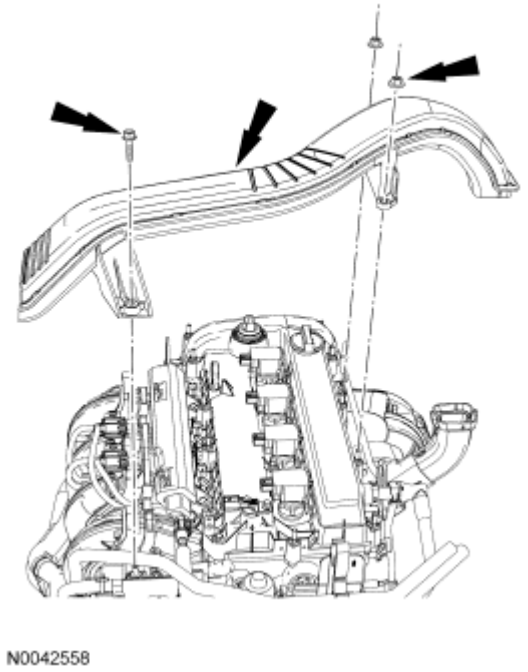

Fig. 676: Locating Generator Air Inlet Duct, Bolt And Nuts
Courtesy of FORD MOTOR CO.

46. Place the subframe assembly on the special tool and raise the subframe into the installed position.

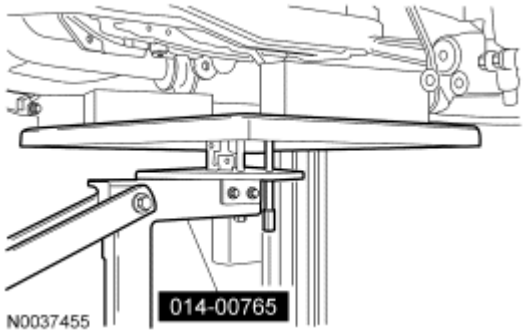

Fig. 677: Positioning Special Tool (014-00765) Under Subframe Assembly
Courtesy of FORD MOTOR CO.

NOTE: LH shown, RH similar.

47. Install the front subframe nuts.
    - Tighten to 150 Nm (111 lb-ft).

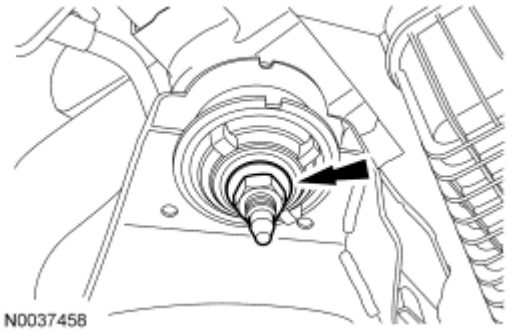

Fig. 678: Locating Front Subframe Nuts
Courtesy of FORD MOTOR CO.

NOTE: LH shown, RH similar.

48. Position the subframe brackets and install the bolts finger-tight.

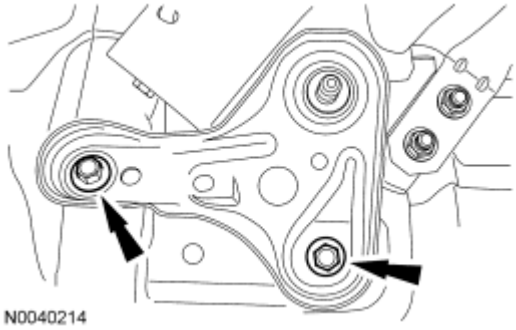

Fig. 679: Locating Subframe Brackets Bolts
Courtesy of FORD MOTOR CO.

NOTE: LH shown, RH similar.

49. Install the subframe nuts.
    - Tighten to 150 Nm (111 lb-ft).

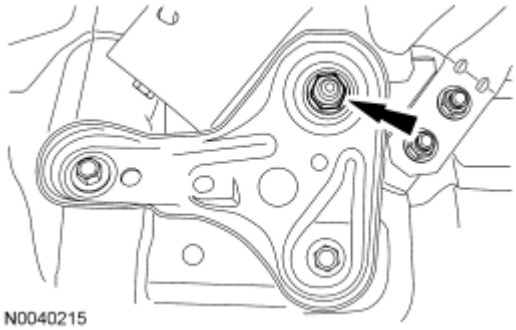

Fig. 680: Locating Subframe Nuts
Courtesy of FORD MOTOR CO.

NOTE: LH shown, RH similar.

50. Tighten the subframe bracket-to-body bolts to 103 Nm (76 lb-ft).

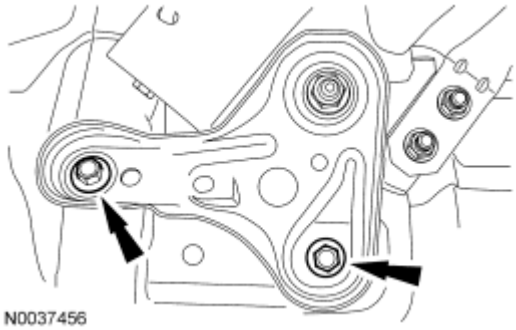

Fig. 681: Locating Subframe Bracket-To-Body Bolts
Courtesy of FORD MOTOR CO.

NOTE: LH shown, RH similar.

51. Install the through bolts into the lower control arms.
    - Tighten to 103 Nm (76 lb-ft).

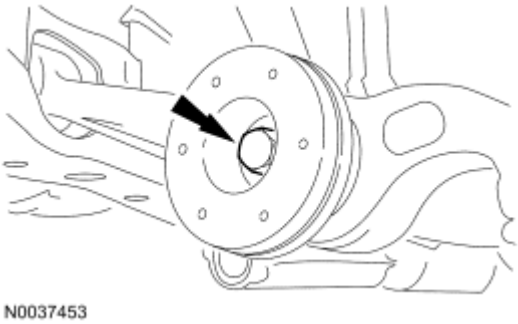

Fig. 682: Locating Lower Control Arms Through Bolt
Courtesy of FORD MOTOR CO.

NOTE: LH shown, RH similar.

52. Install the lower ball joint nuts.
    - Tighten to 200 Nm (148 lb-ft).

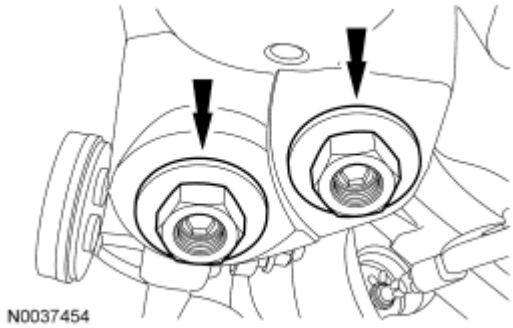

Fig. 683: Locating Lower Ball Joint Nuts
Courtesy of FORD MOTOR CO.

NOTE: LH shown, RH similar.

53. Install the sway bar links and nuts to the struts.
    - Tighten to 40 Nm (30 lb-ft).

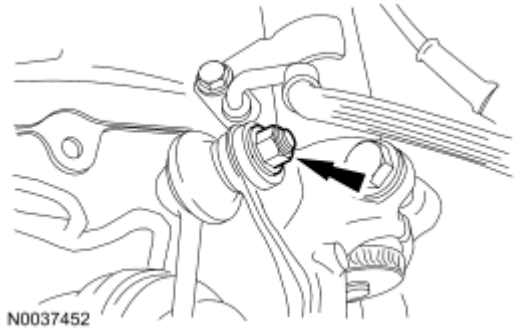

Fig. 684: Locating Sway Bar Links And Nuts
Courtesy of FORD MOTOR CO.

54. Connect the power steering cooler tube.

Fig. 685: Locating Power Steering Cooler Tube
Courtesy of FORD MOTOR CO.

NOTE: LH shown, RH similar.

55. Install tie-rod ends and nuts.
    - Tighten to 48 Nm (35 lb-ft).
    - Install the cotter pin.

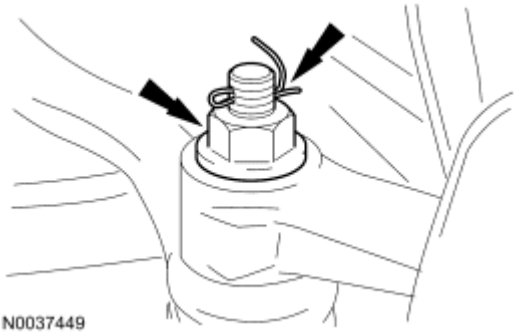

Fig. 686: Locating Tie-Rod Ends Nuts And Cotter Pin
Courtesy of FORD MOTOR CO.

56. Install the LH splash shield and the 6 pin-type retainers (4 shown).

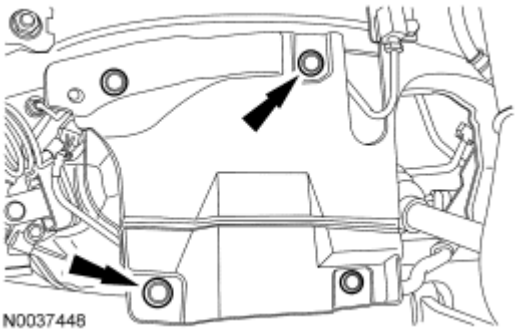

Fig. 687: Locating LH Splash Shield Pin-Type Retainers
Courtesy of FORD MOTOR CO.

57. Position the LH fender splash shield and install the 4 screws.

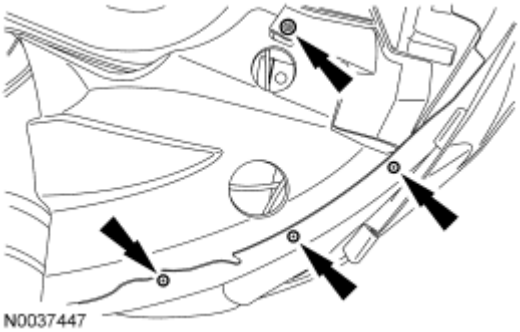

Fig. 688: Locating LH Fender Splash Shield Screws
Courtesy of FORD MOTOR CO.

58. Install the RH splash shield and the 6 pin-type retainers (4 shown).

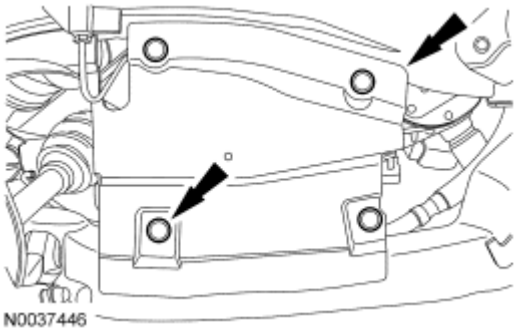

Fig. 689: Locating Splash Shield Pin-Type Retainers
Courtesy of FORD MOTOR CO.

59. Position the RH fender splash shield and install the 4 screws.

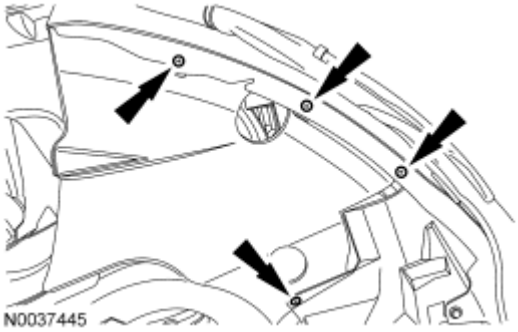

Fig. 690: Locating RH Fender Splash Shield Screws
Courtesy of FORD MOTOR CO.

60. Install the engine roll restrictor bolt.
    - Tighten to 90 Nm (66 lb-ft).

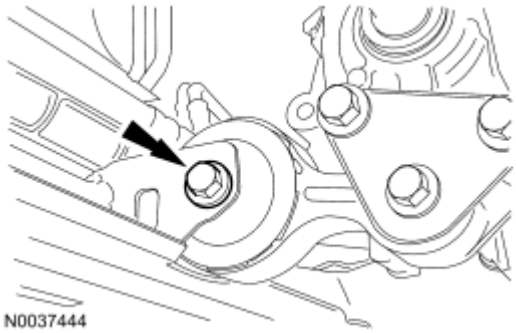

Fig. 691: Locating Engine Roll Restrictor Bolt
Courtesy of FORD MOTOR CO.

61. Route the power steering pressure (PSP) tube up into the engine compartment.

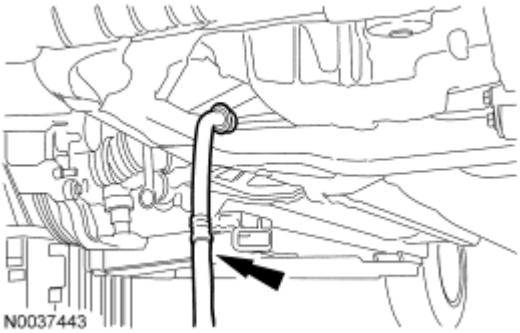

Fig. 692: Locating Power Steering Pressure (PSP) Tube
Courtesy of FORD MOTOR CO.

62. Slide the steering gear-to-dash seal onto the steering gear and engage the 4 retaining clips into the body.
    - From under the vehicle, verify that the seal is properly installed on the steering gear and the retaining clips are fully engaged into the dash.

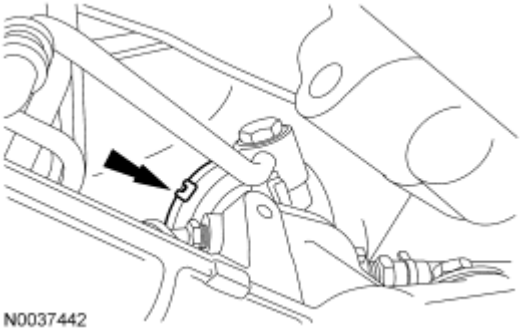

Fig. 693: Locating Steering Gear-To-Dash Seal Clips
Courtesy of FORD MOTOR CO.

63. Install the oil filter element. For additional information, refer to **Engine Lubrication Components - Exploded View** and **Oil Filter Element**.
64. Install the exhaust flexible pipe. For additional information, refer to **EXHAUST SYSTEM** .
65. If equipped, install the underbody cover and the 7 screws.

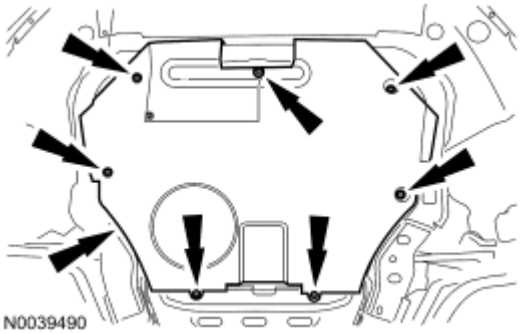

Fig. 694: Locating Underbody Cover Screws
Courtesy of FORD MOTOR CO.

66. Connect the PSP tube to the power steering pump and install the bolt.
    - Tighten to 35 Nm (26 lb-ft).

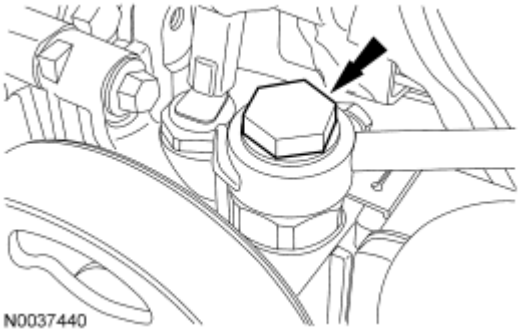

Fig. 695: Locating Power Steering Pressure (PSP) Tube Bolt
Courtesy of FORD MOTOR CO.

NOTE: Align the index marks made during removal.

67. Install the steering intermediate shaft onto the steering gear and install the bolt.
    - Tighten to 23 Nm (17 lb-ft).

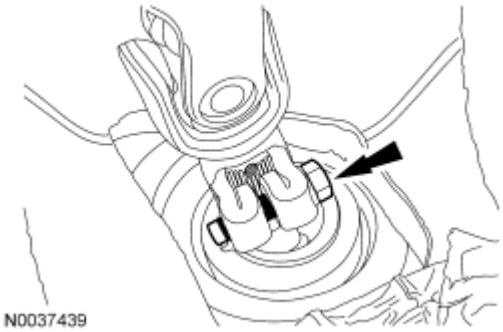

Fig. 696: Locating Steering Intermediate Shaft Bolt
Courtesy of FORD MOTOR CO.

68. Install the steering joint cover and the 2 nuts.

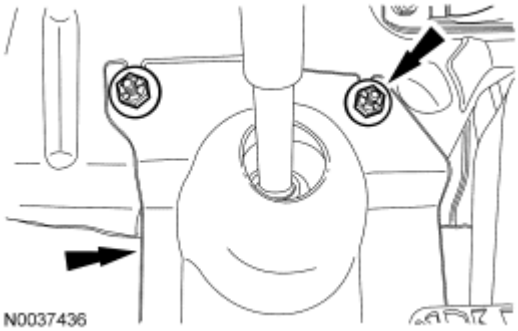

Fig. 697: Locating Steering Joint Cover And Nuts

Courtesy of FORD MOTOR CO.

69. Fill the engine with clean engine oil.
70. Connect the battery ground cable. For additional information, refer to **BATTERY, MOUNTING AND CABLES** .
71. Fill and bleed the cooling system. For additional information, refer to **ENGINE COOLING** .
72. Fill the power steering system. For additional information, refer to **STEERING SYSTEM - GENERAL INFORMATION** .
73. Recharge the air conditioning system. For additional information, refer to **CLIMATE CONTROL SYSTEM - GENERAL INFORMATION AND DIAGNOSTICS**

