2011 ENGINE

Engine Mechanical - 2.5L Escape Hybrid & Mariner Hybrid

SPECIFICATIONS

MATERIAL SPECIFICATIONS

MATERIAL SPECIFICATIONS

Item	Specification	Fill Capacity
Motorcraft® Metal Surface Prep ZC-31-A	-	-
Motorcraft® Premium Gold Engine Coolant VC-7-B (US); CVC-7-B (Canada)	WSS-M97B51-A1	-
Motorcraft® SAE 5W-20 Premium Synthetic Blend Motor Oil (US); Motorcraft® SAE 5W-20 Super Premium Motor Oil (Canada) XO-5W20-QSP (US); CXO-5W20-LSP12 (Canada)	WSS-M2C945-A	5.0L (5.3 qt) includes filter change
Multi-Purpose Grease XG-4 and/or XL-5	ESB-M1C93-B	-
Silicone Brake Caliper Grease and Dielectric Compound XG-3-A	ESE-M1C171-A	-
Silicone Gasket and Sealant TA-30	WSE-M4G323-A4	-
Motorcraft® Silicone Gasket Remover ZC-30	-	-
Thread Sealant with PTFE TA-24	WSK-M2G350-A2	-

GENERAL SPECIFICATIONS

GENERAL SPECIFICATIONS

Item	Specification
Displacement	2.5L
No. of cylinders	4
Bore/stroke	89/100L
Firing order	1-3-4-2
Oil pressure (hot @ 2,000 rpm)	29-39 psi 200-268 kPa
Compression ratio	12.3:1
Engine weight (without accessory drive components)	121.3 kg (267.5 lb)

Engine and transaxle weight (without accessory drive components)	251.3 kg (554 lb)
Cylinder Block	
Cylinder bore diameter	89-89.3 mm (3.503-3.517 in)
Cylinder bore maximum out-of-round	0.008 mm (0.0003 in)
Main bearing bore diameter	57.018-57.040 mm (2.244-2.245 in)
Head gasket surface flatness	0.1 mm/general 0.05 mm/200 x 200 (0.003 in/general) (0.0019 in/7.87 x 7.87)
Piston	
Diameter (1)	88.965-88.975 mm (3.5025-3.5026 in)
Diameter (2)	88.975-88.985 mm (3.5026-3.5033 in)
Diameter (3)	88.985-88.995 mm (3.5033-3.5037 in)
Piston-to-bore clearance	0.025-0.045 mm (0.0009-0.0017 in)
Ring groove width - top	1.203-1.205 mm (0.0473-0.0474 in)
Ring groove width - 2nd	1.202-1.204 mm (0.0473-0.0474 in)
Ring groove width - oil	2.501-2.503 mm (0.0984-0.0985 in)
Piston skirt coating thickness	0.008-0.016 mm (0.0003-0.0006 in)
Piston Pin	
Diameter	19.995-20 mm (0.7872-0.7874 in)
Length	54.7-55 mm (2.153-2.165 in)
Piston-to-pin clearance	Floating Pin
Pin-to-rod clearance	Clips
Cylinder Head	
Cylinder head flatness	0.08 mm (0.0031 in) maximum overall, a maximum of 0.05 mm (0.0019 in) within 150 mm (5.9 in)
Valve lift @ zero lash (exhaust)	7.7 mm (0.30 in)
Valve lift @ zero lash (intake)	8.8 mm (0.35 in)
Valve guide diameter	5.509-5.539 mm (0.216-0.218 in)

Valve seat width - intake/exhaust	0.99-1.84 mm (0.038-0.072 in)
Valve seat angle	45 degrees
Valve seat runout	0.075 mm (0.0029 in)
Valve lash adjuster bore diameter	31.00-31.03 mm (1.220-1.221 in)
Cam bore diameter	25.015-25.040 mm (0.984-0.985 in)
Valve	
Valve head diameter - intake	34.85-35.15 mm (1.372-1.383 in)
Valve head diameter - exhaust	29.85-30.15 mm (1.175-1.187 in)
Valve stem diameter - intake	5.470-5.485 mm (0.2153-0.2159 in)
Valve stem diameter - exhaust	5.465-5.480 mm (0.2151-0.2157 in)
Valve stem-to-guide clearance - intake	0.0027 mm (0.00010 in)
Valve stem-to-guide clearance - exhaust	0.0029 mm (0.00011 in)
Valve face runout (maximum)	0.075 mm (0.0029 in)
Valve face angle	45 degrees
Valve Spring - Compression Pressure	
Intake and exhaust (installed)	38.667 lb
Intake (valve open) 8.9 mm (0.35 in) of lift	97.032 lb
Exhaust (valve open)	7.4 mm of lift 93.338 lb
Free length	44.92 mm (1.768 in)
Assembled height	37.9 mm (1.492 in)
Crankshaft	
Main bearing journal diameter	51.978-52.002 mm (2.046-2.047 in)
Production repair	51.730-51.750 mm (2.036-2.037 in)
Main bearing clearance	0.016-0.047 mm (0.0006-0.0015 in)
Connecting rod journal diameter	51.978-52.002 mm (2.0463-2.0473 in)
Production repair	51.730-51.750 mm (2.0366-2.0374 in)
End play	0.22-0.43 mm (0.008-0.016 in)
Rings	
Width - top	1.17-1.185 mm (0.0460-0.0466 in)

Width - 2nd	1.197-1.199 mm (0.0471-0.0472 in)
Width - oil	2.38-2.45 mm (0.093-0.096 in)
Ring gap (in bore) - top	0.16-0.26 mm (0.006-0.010 in)
Ring gap (in bore) - 2nd	0.31-0.46 mm (0.012-0.018 in)
Ring gap (in bore) - oil	0.2-0.7 mm (0.007-0.027 in)
Valve Tappet	
Diameter	30.97-30.98 mm (1.2192-1.2196 in)
Tappet-to-valve clearance - intake	0.22-0.28 mm (0.008-0.011 in)
Tappet-to-valve clearance - exhaust	0.27-0.33 mm (0.010-0.013 in)
Tappet-to-bore clearance	0.02-0.06 mm (0.0007-0.0023 in)
Camshaft	
Lobe lift - intake	8.24999 mm (0.324 in)
Lobe lift - exhaust	7.80007 mm (0.307 in)
Runout (1)[(1)]	0.03 mm (0.001 in)
Thrust clearance	0.09-0.24 mm (0.003-0.009 in)
Journal diameter	24.96-24.98 mm (0.982-0.983 in)
Journal-to-bore clearance	0.035-0.080 mm (0.001-0.003 in)
Connecting Rod	
Bearing clearance	0.027-0.052 mm (0.001-0.002 in)
Bearing thickness	1.496-1.520 mm (0.058-0.059 in)
Crank bore diameter	55.023-55.047 mm (2.166-2.167 in)
Pin bore diameter	20.965-20.985 mm (0.825-0.826 in)
Length (center to center)	151.8 mm (5.976 in)
Side clearance	1.95-3.05 mm (0.076-0.120 in)

Axial clearance	0.14-0.36 mm (0.005-0.014 in)
(1) No. 3 Journal - Supported by No. 1 and No. 5 journals.	

TORQUE SPECIFICATIONS

TORQUE SPECIFICATIONS

Description	Nm	lb-ft	lb-in
ABS sensor bolt	15	-	133
A/C compressor bracket bolts	48	35	-
A/C compressor mounting bolts	25	18	-
A/C manifold tube-to-A/C compressor nut	15	-	133
A/C tube bracket nut	10	-	89
Accessory drive belt tensioner	25	18	-
Auxiliary coolant pump bolts	10	-	89
Balance shaft bolts(1)	-	-	-
Block heater (if equipped)	40	30	-
Block-off plate bolts	25	18	-
Camshaft bearing caps(1)	-	-	-
Camshaft sprocket bolt	72	53	-
Catalytic converter-to-cylinder head nuts (1)	-	-	-
Coil-on-plug retaining stud bolts	8	-	71
Connecting rod cap bolts(1)	-	-	-
Coolant outlet bolts	10	-	89
Coolant pump bolts	10	-	89
Coolant pump pulley bolts	20	-	177
Crankcase vent oil separator bolts	10	-	89
Crankshaft Position (CKP) sensor	7	-	62
Crankshaft pulley bolt(1)	-	-	-
Cylinder head bolts(1)	-	-	-
Cylinder Head Temperature (CHT) sensor	12	-	106
DC-to-DC converter nuts	12	-	106
EGR tube	55	41	-
EGR valve assembly bolts	20	-	177
Engine front cover bolts(1)	-	-	-
Engine Oil Pressure (EOP) switch	15	-	133
Engine mount bolts	48	35	-

Engine mount bracket-to-engine nuts	115	85	-
Engine mount bracket-to-mount bolt	115	85	-
Engine plug bolt	20	-	177
Engine support crossmember bolts	90	66	-
Engine support crossmember nut	175	129	-
Engine timing plug bolt	20	-	177
Engine wiring harness connector bracket	15	-	133
Exhaust bracket bolts	25	18	-
Exhaust manifold studs	17	-	150
Flywheel bolt(1)	-	-	-
Fuel rail bolts	23	17	-
Intake manifold bolts	18	-	159
Intermediate shaft bearing retainer nuts	27	20	-
Knock Sensor (KS)	20	-	177
Lateral support crossmember bolts	115	85	-
Lower front cover timing hole plug	12	-	106
Lower insulator through bolt	115	85	-
Main bearing beam bolts(1)	-	-	-
Motor Electronics Cooling System (MECS) pump bolts	20	-	177
Oil drain plug	28	21	-
Oil filter adapter bolts	25	18	-
Oil filter(2)	-	-	-
Oil pan bolts(1)	-	-	-
Oil pan-to-bellhousing bolts	48	35	-
Oil pump drive chain tensioner shoulder bolts	10	-	89
Oil pump screen and pickup tube	10	-	89
Oil pump sprocket bolt	25	18	-
Oil pump-to-engine block bolts(1)	-	-	-
Oil squirters	4	-	35
Power Transfer Unit (PTU) bolts	45	33	-
PTU heat shield bolts	11	-	97
PTU-to-engine support bracket bolts	40	30	-
Radio capacitor nut	10	-	89
Rear crankshaft oil seal retainer(1)	-	-	-
Rear insulator through bolt	115	85	-
Rear roll restrictor bracket bolts	90	66	-
Rear roll restrictor-to-crossmember through bolt	90	66	-

Spark plug	12	-	106
Splash shield bolts	9	-	80
Stabilizer bar link nuts	63	46	-
Steering column coupling-to-steering gear pinch bolt	63	46	-
Subframe bolts	175	129	-
Subframe nuts	150	111	-
Thermostat housing bolts	10	-	89
Tie-rod end nuts	55	41	-
Timing chain guide bolts	10	-	89
Timing chain tensioner bolts	10	-	89
Transaxle control cable bracket nuts	22	16	-
Transaxle control snow shield bolts	22	16	-
Transaxle damper bolts	29	21	-
Transaxle harness electrical connector bolt	10	-	89
Transaxle-to-engine bolts	48	35	-
Upper transaxle insulator bracket	25	18	-
Upper transaxle insulator nuts	90	66	-
Upper transaxle insulator through bolt	103	76	-
Upper front cover timing hole plug	10	-	89
Vacuum pump assembly bolts	25	18	-
Vacuum pump assembly nut	25	18	-
Valve cover bolts(1)	-	-	-
Variable Camshaft Timing (VCT) plug	17	-	150
VCT solenoid bolt	10	-	89
Wiring harness ground cable nut	20	-	177

(1) Refer to the appropriate procedure in this service information.

(2) Tighten the spin-on oil filter three-fourths of a turn after the oil filter gasket makes contact with the oil filter adapter.

DESCRIPTION AND OPERATION

ENGINE

The 2.5L (153 CID) 4-cylinder engine has the following features:

- Dual overhead camshaft
- Four valves per cylinder
- Sequential Multi-Port Fuel Injection (SFI)
- Aluminum cylinder head

- Aluminum cylinder block
- Electronic ignition system with 4 coil-on-plug ignition coils

The 2.5L engine is a 4 valve-per-cylinder, dual overhead camshaft engine. The engine uses a coil-on-plug ignition system. The cylinder block is made of aluminum and the bearing caps are integrated into the ladder assembly. An aluminum oil pan bolts to the bottom of the lower cylinder block and to the transmission to provide greater strength. The camshafts are mounted in the cylinder heads and act against valve tappets to open and close the valves. The camshafts are driven off the front of the cylinder head by one timing chain. The chain is driven by a sprocket that is located on the crankshaft. The piston assembly is an aluminum piston with a cast iron connecting rod. The oil pump is driven by the crankshaft via a dedicated chain that is driven by the same sprocket that drives the timing chain.

Engine Identification

Always refer to these labels when installation of new parts is necessary or when checking engine calibrations. The engine parts often differ within a CID family. Verification of the identification codes will make sure the correct parts are obtained. These codes contain all the pertinent information relating to the dates, optional equipment and revisions. The Ford Catalog Advantage™ or equivalent contains a complete listing of the codes and their applications.

Engine Code Information Label

The engine code information label, located on the front side of the valve cover, contains the following:

Fig. 1: Identifying Engine Code Information Label
Courtesy of FORD MOTOR CO.

ITEM DESCRIPTION

Item	Description
1	Engine part number
2	Chihuahua engine plant
3	Engine displacement
4	Bar code

5	Running number
6	Engine build date (DDMMYY)
7	Plant shift line
8	Bar code

Engine Cylinder Identification

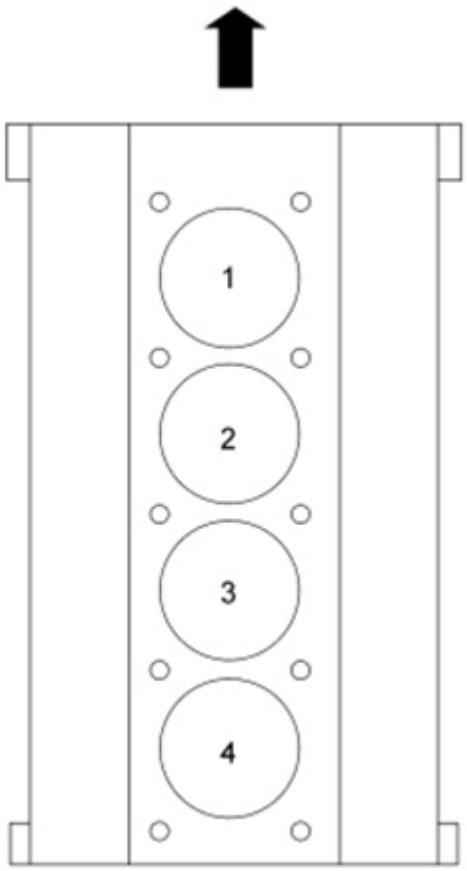

N0070002

Fig. 2: Identifying Engine Cylinder Identification
Courtesy of FORD MOTOR CO.

Exhaust Emission Control System

Operation and necessary maintenance of the exhaust emission control devices used on this engine are covered in the **INTRODUCTION** article.

Induction System

The **SFI** provides the fuel/air mixture needed for combustion in the cylinders. The 4 solenoid-operated fuel injectors:

- are mounted in the intake manifold.
- meter fuel into the air intake stream in accordance with engine demand.
- are positioned so that their tips direct fuel just ahead of the engine intake valves.
- are connected in series with the fuel pressure sensor.
- supply fuel from the fuel tank with a fuel pump mounted in the fuel tank.

A constant fuel pressure is maintained across the fuel injectors by the fuel pressure sensor. The fuel pressure sensor:

- is positioned upstream from the fuel injectors on the fuel injection supply manifold.

Lubrication System

The engine lubrication system operates as follows:

- Oil is drawn into the oil pump through the oil pump screen cover and tube in the sump of the oil pan.
- Oil is pumped through the oil filter on the left front side of the cylinder block.
- Oil enters the main galley where it is distributed to the crankshaft main journals and to the cylinder head.
- From the main journals, the oil is routed through cross-drilled passages in the crankshaft to lubricate the connecting rod bearings. Controlled leakage through the crankshaft main bearings and connecting rod bearings is slung radially outward to cool and lubricate the cylinder walls, as well as the entire connecting rod, piston and piston ring assembly.

DIAGNOSIS AND TESTING

ENGINE

Refer to **ENGINE MECHANICAL SYSTEM - GENERAL INFORMATION** article for basic mechanical concerns or refer to the **INTRODUCTION** article for driveability concerns.

GENERAL PROCEDURES

VALVE CLEARANCE CHECK

1. Remove the valve cover. For additional information, refer to **VALVE COVER** in this service information.
2. Remove the 5 bolts, the pin-type retainer (not shown in illustration) and the RH splash shield.
    - To install, tighten to 9 Nm (80 lb-in).

Fig. 3: Locating RH Splash Shield And Retainers
Courtesy of FORD MOTOR CO.

NOTE: **Turn the engine clockwise only, and only use the crankshaft bolt.**

NOTE: **Before removing the camshafts, measure the clearance of each valve at base circle, with the lobe pointed away from the tappet. Failure to measure all clearances prior to removing the camshafts will necessitate repeated removal and installation and wasted labor time.**

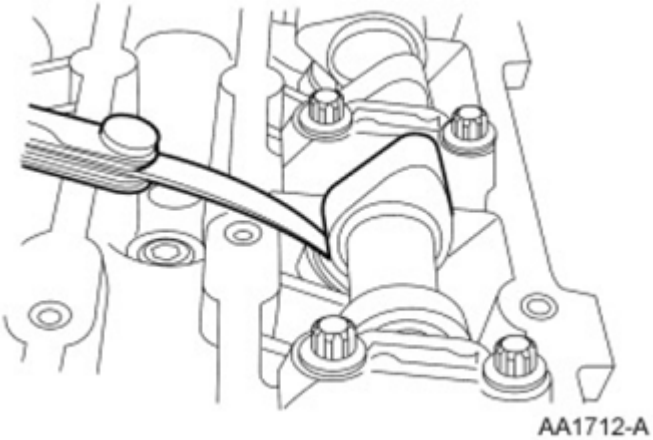

Fig. 4: Measuring Valve Clearance Before Removing The Camshafts
Courtesy of FORD MOTOR CO.

3. Use a feeler gauge to measure the clearance of each valve and record its location.

NOTE: **The number on the valve tappet only reflects the digits that follow the decimal. For example, a tappet with the number 0.650 has the thickness of 3.650 mm.**

NOTE: The nominal clearance is:

- **intake: 0.25 mm (0.0095 in).**
- **exhaust: 0.30 mm (0.0115 in).**

4. The acceptable clearances after being fully installed are:
   - intake: 0.22-0.28 mm (0.008-0.011 in).
   - exhaust: 0.27-0.33 mm (0.010-0.013 in).

   Select tappets using this formula: tappet thickness = measured clearance + the existing tappet thickness - nominal clearance.

   Select the closest tappet size to the ideal tappet thickness available and mark the installation location.

5. If any tappets do not measure within specifications, install new tappets in these locations. For additional information, refer to **VALVE TRAIN COMPONENTS - EXPLODED VIEW** and **VALVE TAPPETS** in this service information.

BALANCE SHAFT BACKLASH

Special Tool(s)

SPECIAL TOOLS

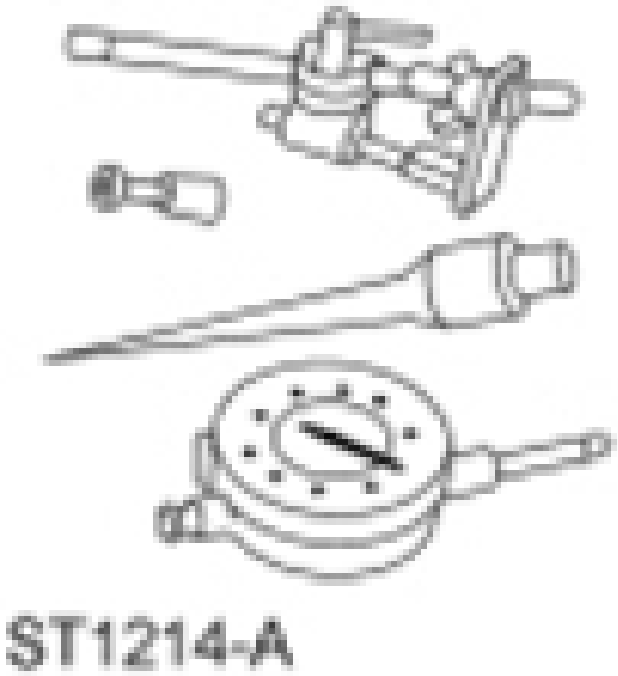	Dial Indicator Gauge with Holding Fixture 100-002 (TOOL-4201-C)
	Timing Peg, Crankshaft TDC

	303-507

1. Install the Crankshaft **TDC** Timing Peg and rotate the crankshaft slowly clockwise until the crankshaft balance weight is up against the Crankshaft **TDC** Timing Peg. The engine is now at Top Dead Center (TDC).

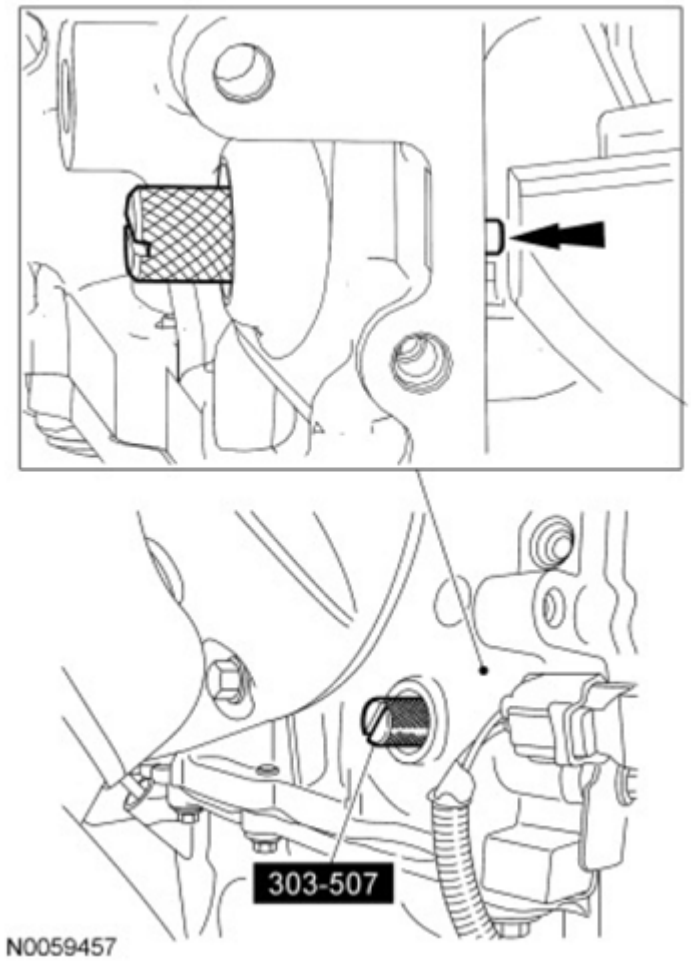

Fig. 5: Remove/Install Crankshaft TDC Timing Peg
Courtesy of FORD MOTOR CO.

2. Mark the balancer unit and shafts on the top for reference that the balancer unit is at **TDC** .

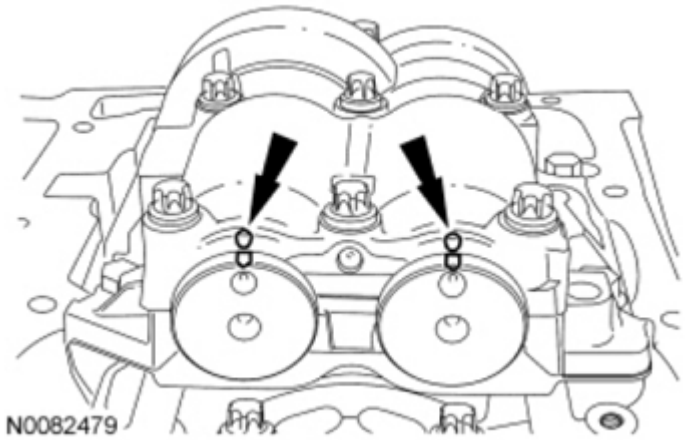

Fig. 6: Locating Balancer Unit And Shafts Reference Mark

Courtesy of FORD MOTOR CO.

NOTE: Due to the precision interior construction of the balancer unit, it should not be disassembled.

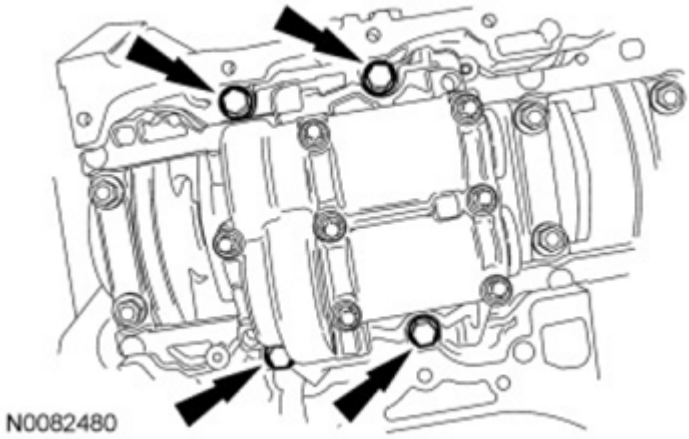

Fig. 7: Locating Balancer Unit Bolts
Courtesy of FORD MOTOR CO.

3. Remove the 4 bolts and the balancer unit.
4. Remove the adjustment shims from the seat faces of the balancer unit.

NOTE: Visually inspect the balancer unit gear for damage and verify that the shaft turns smoothly. If there is any damage or malfunction, replace the balancer unit.

5. Install the master adjustment shims (No. 50) on the seat faces of the balancer unit.
6. With the balancer unit shaft marks at the **TDC** position, slowly install the balancer unit to the cylinder block to avoid interference between the crankshaft drive gear and the balancer unit driven gear.

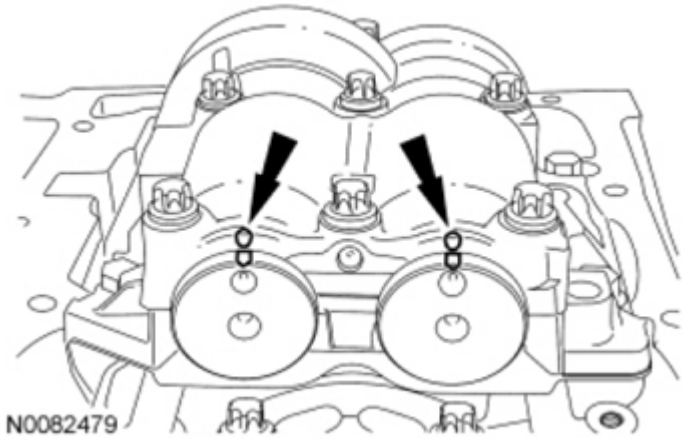

Fig. 8: Locating Balancer Unit And Shafts Reference Mark
Courtesy of FORD MOTOR CO.

7. Install the balancer unit bolts.
   - Tighten in the sequence shown in illustration in 2 stages.
     - Stage 1: Tighten to 25 Nm (18 lb-ft).
     - Stage 2: Tighten to 50 Nm (37 lb-ft).

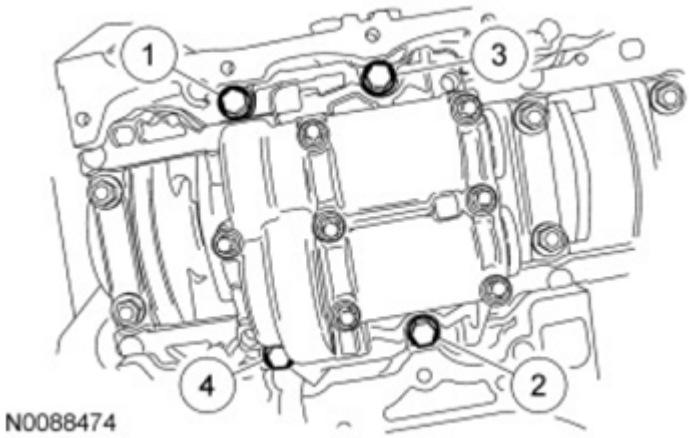

Fig. 9: Identifying Balancer Unit Bolts Tightening Sequence
Courtesy of FORD MOTOR CO.

8. Remove the Crankshaft **TDC** Timing Peg.
   - Rotate the crankshaft to confirm that there are no meshing problems between the balancer unit gear and the crankshaft gear.

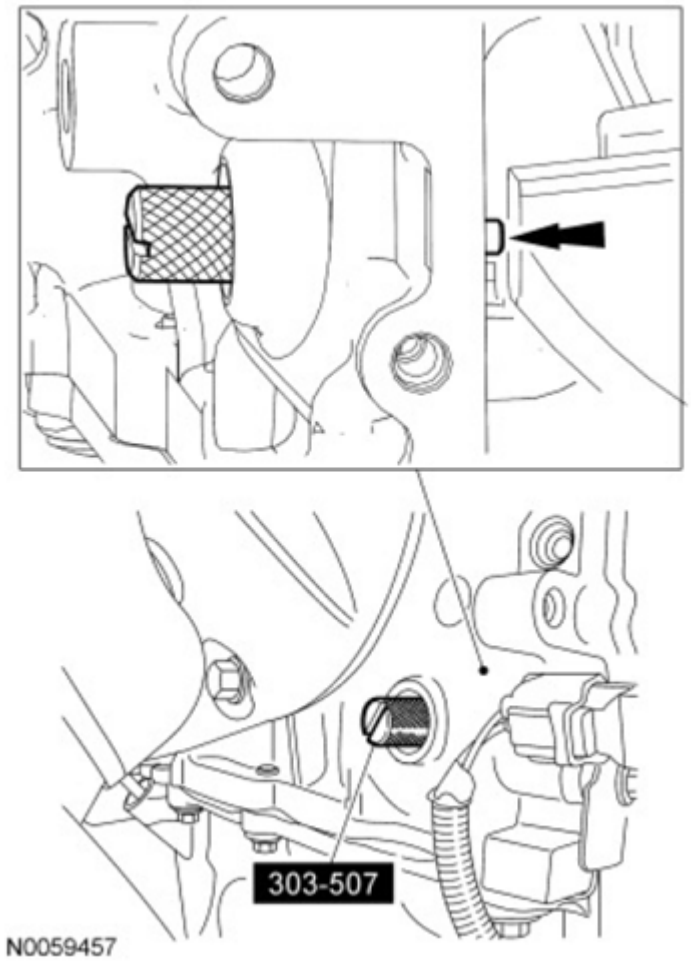

Fig. 10: Remove/Install Crankshaft TDC Timing Peg
Courtesy of FORD MOTOR CO.

9. Install the Crankshaft **TDC** Timing Peg and rotate the crankshaft slowly clockwise until the crankshaft balance weight is up against the Crankshaft **TDC** Timing Peg.
    - Remove the Crankshaft **TDC** Timing Peg.

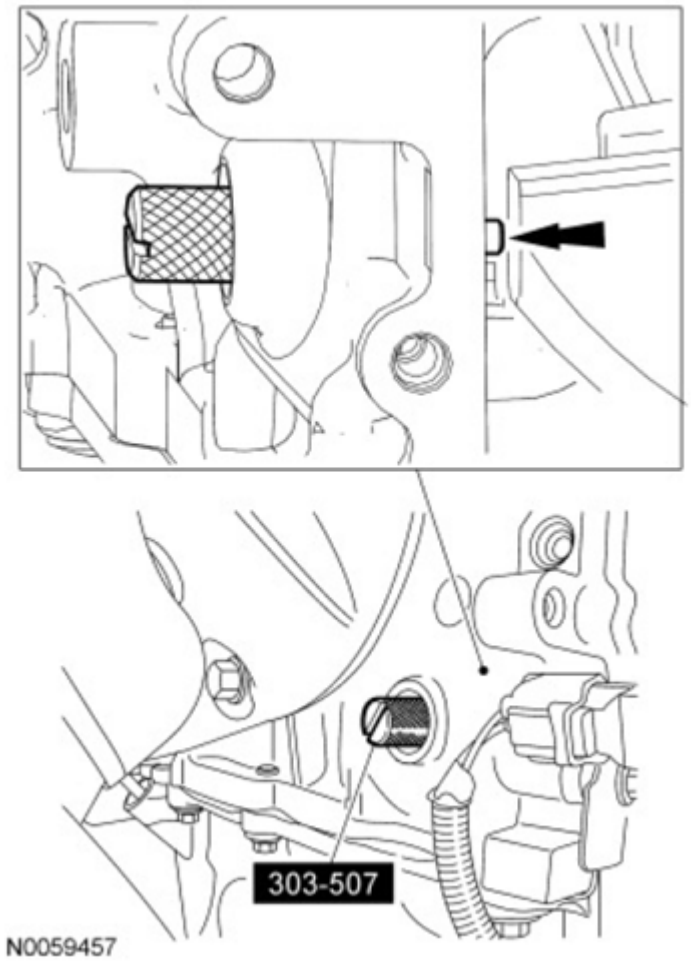

Fig. 11: Remove/Install Crankshaft TDC Timing Peg
Courtesy of FORD MOTOR CO.

NOTE: **Measure the backlash and verify that it is within specified range at all of the following 6 positions: 10 degrees, 30 degrees, 100 degrees, 190 degrees, 210 degrees and 280 degrees. It will be necessary to reset the measuring equipment between measurements.**

NOTE: **The measurement must be taken with the Dial Indicator Gauge with Holding Fixture, a 5-mm Allen wrench and worm clamp set up as shown in illustration. Mark the Allen wrench with a file 80 mm (3.149 in) above the driven gear shaft center. Make sure the worm clamp and Allen wrench are not touching the balance shaft housing.**

NOTE: **For an accurate measurement while measuring the gear backlash, insert a screwdriver as shown in illustration into the crankshaft No. 1 crankweight area and set both the rotation and the thrust direction with the screwdriver, using a prying action as shown in illustration.**

10. Position the Dial Indicator Gauge with Holding Fixture as shown in illustration. Measure the gear backlash.
    - Position the Dial Indicator Gauge with Holding Fixture (1) on the Allen wrench 80 mm (3.149 in) above the driven gear shaft center (2) on the balancer unit.
    - Rotate the crankshaft clockwise and measure the backlash at all of the following 6 positions: 10 degrees, 30 degrees, 100 degrees, 190 degrees, 210 degrees and 280 degrees.

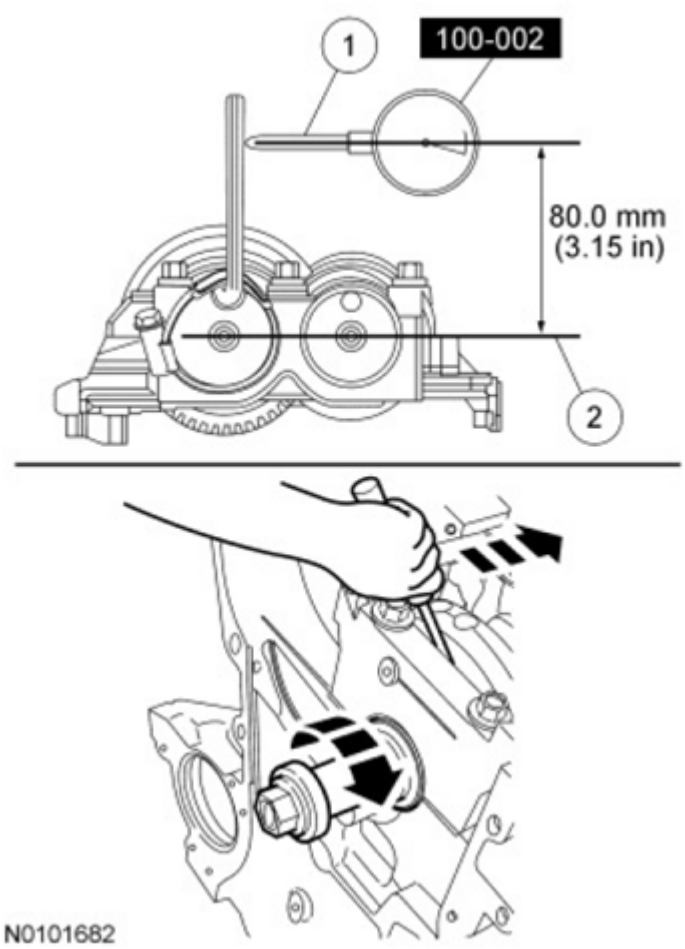

Fig. 12: Measuring Gear Backlash Using Dial Indicator Gauge With Holding Fixture
Courtesy of FORD MOTOR CO.

NOTE: If maximum backlash exceeds 0.101 mm (0.003 in), install a new balancer unit.

11. Using the backlash measurement, select the proper shims from the Adjustment Shim Selection Table.
    - Remove the balancer unit from the cylinder block.
    - Install the selected adjustment shims on the seat faces of the balancer unit.

ADJUSTMENT SHIM SELECTION TABLE

Backlash mm (in)	Selection shim (No.)	Shim thicness mm (in)
0.516-0.528 (0.0203-0.0207)	15	1.15 (0.0452)
0.502-0.514 (0.0197-0.0202)	16	1.16 (0.0456)
0.489-0.500 (0.0192-0.0196)	17	1.17 (0.0460)
0.475-0.487 (0.0187-0.0191)	18	1.18 (0.0464)
0.462-0.473 (0.0181-0.0186)	19	1.19 (0.0468)
0.448-0.460 (0.0176-0.0181)	20	1.20 (0.0472)
0.435-0.446 (0.0171-0.0175)	21	1.21 (0.0476)
0.421-0.433 (0.0165-0.0170)	22	1.22 (0.0480)
0.408-0.419 (0.0160-0.0164)	23	1.23 (0.0484)
0.394-0.406 (0.0155-0.0159)	24	1.24 (0.0488)
0.381-0.392 (0.0150-0.0154)	25	1.25 (0.492)
0.367-0.379 (0.0144-0.0149)	26	1.26 (0.0496)
0.354-0.365 (0.0139-0.0143)	27	1.27 (0.0499)
0.340-0.352 (0.0133-0.0138)	28	1.28 (0.0503)
0.327-0.338 (0.0128-0.0133)	29	1.29 (0.0507)
0.313-0.325 (0.0123-0.0127)	30	1.30 (0.0511)
0.300-0.311 (0.0118-0.0122)	31	1.31 (0.0515)
0.286-0.298 (0.0112-0.0117)	32	1.32 (0.0519)
0.272-0.284 (0.0107-0.0111)	33	1.33 (0.0523)
0.259-0.271 (0.0101-0.0106)	34	1.34 (0.0527)

Backlash mm (in)	Selection shim (No.)	Shim thicness mm (in)
0.245-0.257 (0.0096-0.0101)	35	1.35 (0.0531)
0.232-.0243 (0.0091-0.0095)	36	1.36 (0.535)
0.218-0.230 (0.0085-0.0090)	37	1.37 (0.539)
0.205-.0216 (0.0080-0.0085)	38	1.38 (0.0543)
0.191-0.203 (0.0075-0.0079)	39	1.39 (0.0547)
0.178-0.189 (0.0070-0.0074)	40	1.40 (0.0551)
0.164-0.176 (0.0064-0.0069)	41	1.41 (0.0555)
0.151-0.162 (0.0059-0.0063)	42	1.42 (0.0559)
0.137-0.149 (0.0053-0.0058)	43	1.43 (0.0562)
0.124-0.135 (0.0048-0.0053)	44	1.44 (0.0566)
0.110-0.122 (0.0043-0.0048)	45	1.45 (0.0570)
0.097-0.108 (0.0038-0.0042)	46	1.46 (0.0574)
0.083-0.095 (0.0032-0.0037)	47	1.47 (0.0578)
0.070-0.081 (0.0027-0.0031)	48	1.48 (0.0582)
0.056-0.068 (0.0022-0.0026)	49	1.49 (0.0586)
0.043-0.054 (0.0016-0.0021)	50 (master)	1.50 (0.0590)
0.029-0.041 (0.0011-0.0016)	51	1.51 (0.0594)
0.015-0.027 (0.0005-0.0010)	52	1.52 (0.0598)
0.002-0.014 (0.00007-0.0005)	53	1.53 (0.0602)
0.000-0.000 (0.0000-0.0000)	54	1.54 (0.0606)

N0101731

Fig. 13: View Of Adjustment Shim Selection Chart
Courtesy of FORD MOTOR CO.

12. Install the Crankshaft **TDC** Timing Peg and rotate the crankshaft slowly clockwise until the crankshaft balance weight is up against the Crankshaft **TDC** Timing Peg. The engine is now at **TDC** .

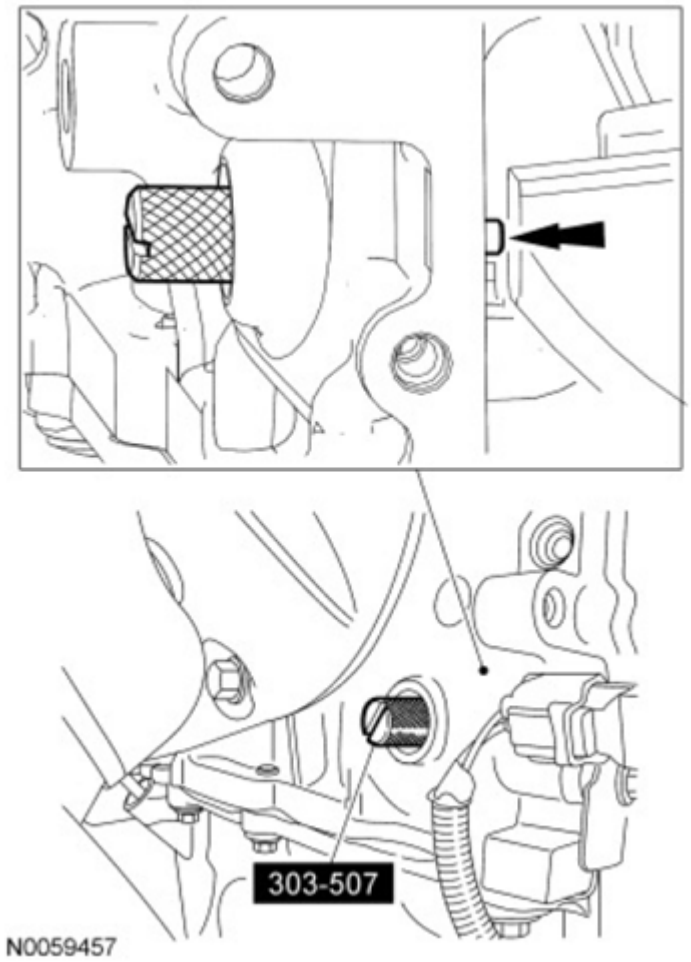

Fig. 14: Remove/Install Crankshaft TDC Timing Peg
Courtesy of FORD MOTOR CO.

13. With the balancer unit shaft marks in the **TDC** position, slowly install the balancer unit to the cylinder block to avoid interference between the crankshaft drive gear and the balancer unit driven gear.

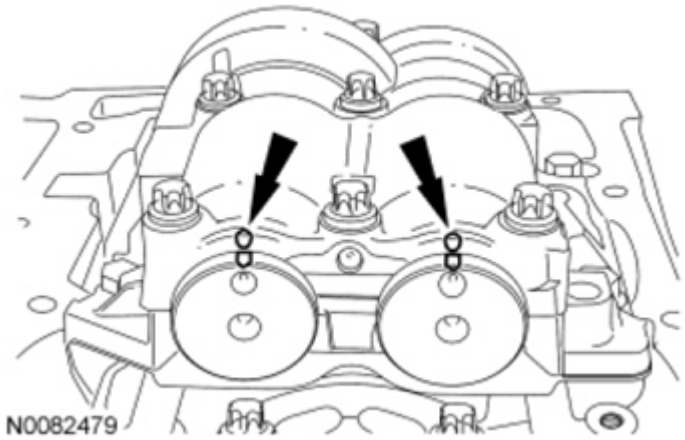

Fig. 15: Locating Balancer Unit And Shafts Reference Mark
Courtesy of FORD MOTOR CO.

14. Install the balancer unit bolts.
    - Tighten in the sequence shown in illustration in 2 stages.
        - Stage 1: Tighten to 25 Nm (18 lb-ft).
        - Stage 2: Tighten to 50 Nm (37 lb-ft).

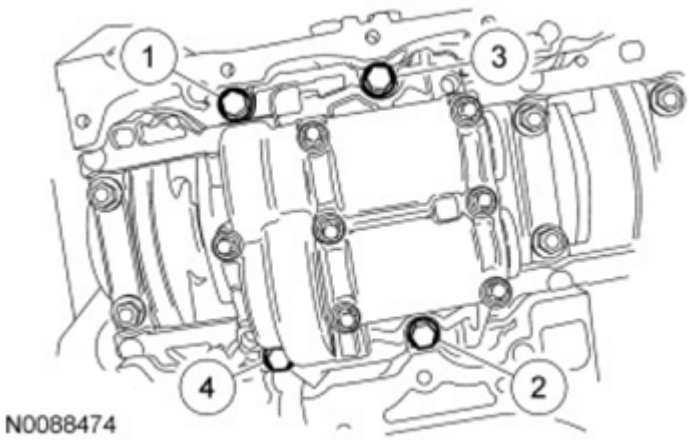

Fig. 16: Identifying Balancer Unit Bolts Tightening Sequence
Courtesy of FORD MOTOR CO.

NOTE: **Remeasure the backlash and verify that it is within specified range at all of the following 6 positions: 10 degrees, 30 degrees, 100 degrees, 190 degrees, 210 degrees and 280 degrees. It will be necessary to reset the measuring equipment between measurements.**

NOTE: **The measurement must be taken with the Dial Indicator Gauge with Holding Fixture, a 5-mm Allen wrench and worm clamp set up as shown in illustration. Mark the Allen wrench with a file 80 mm (3.149 in) above the driven gear shaft center. Make sure the worm clamp and Allen wrench are not touching the balance shaft housing.**

NOTE: **For an accurate measurement while measuring the gear backlash, insert a screwdriver as shown in illustration into the crankshaft No. 1 crankweight area and set both the rotation and the thrust direction with the screwdriver, using a prying action as shown in illustration.**

15. Position the Dial Indicator Gauge with Holding Fixture as shown in illustration. Measure the gear backlash.
    - Position the Dial Indicator Gauge with Holding Fixture (1) on the Allen wrench 80 mm (3.149 in) above the driven gear shaft center (2) on the balancer unit.
    - Rotate the crankshaft clockwise and measure the backlash at all of the following 6 positions: 10

degrees, 30 degrees, 100 degrees, 190 degrees, 210 degrees and 280 degrees.

- If the backlash exceeds the specified range of 0.005 to 0.101 mm (0.00019 to 0.0039 in), install a new balancer unit and repeat the procedure.

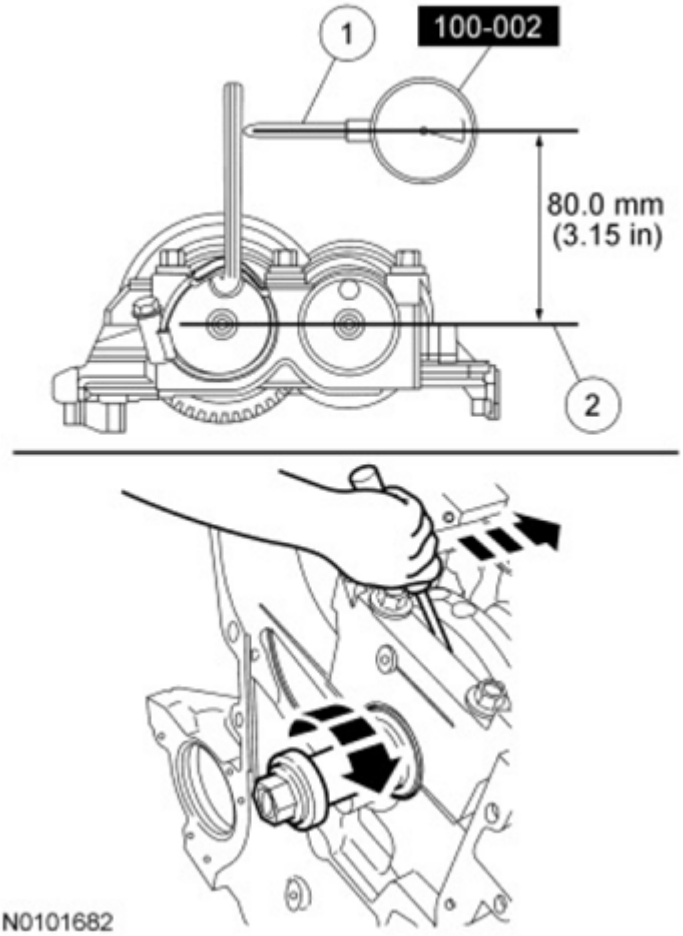

Fig. 17: Measuring Gear Backlash Using Dial Indicator Gauge With Holding Fixture
Courtesy of FORD MOTOR CO.

IN-VEHICLE REPAIR

INTAKE MANIFOLD

Intake Manifold (View 1 of 2)

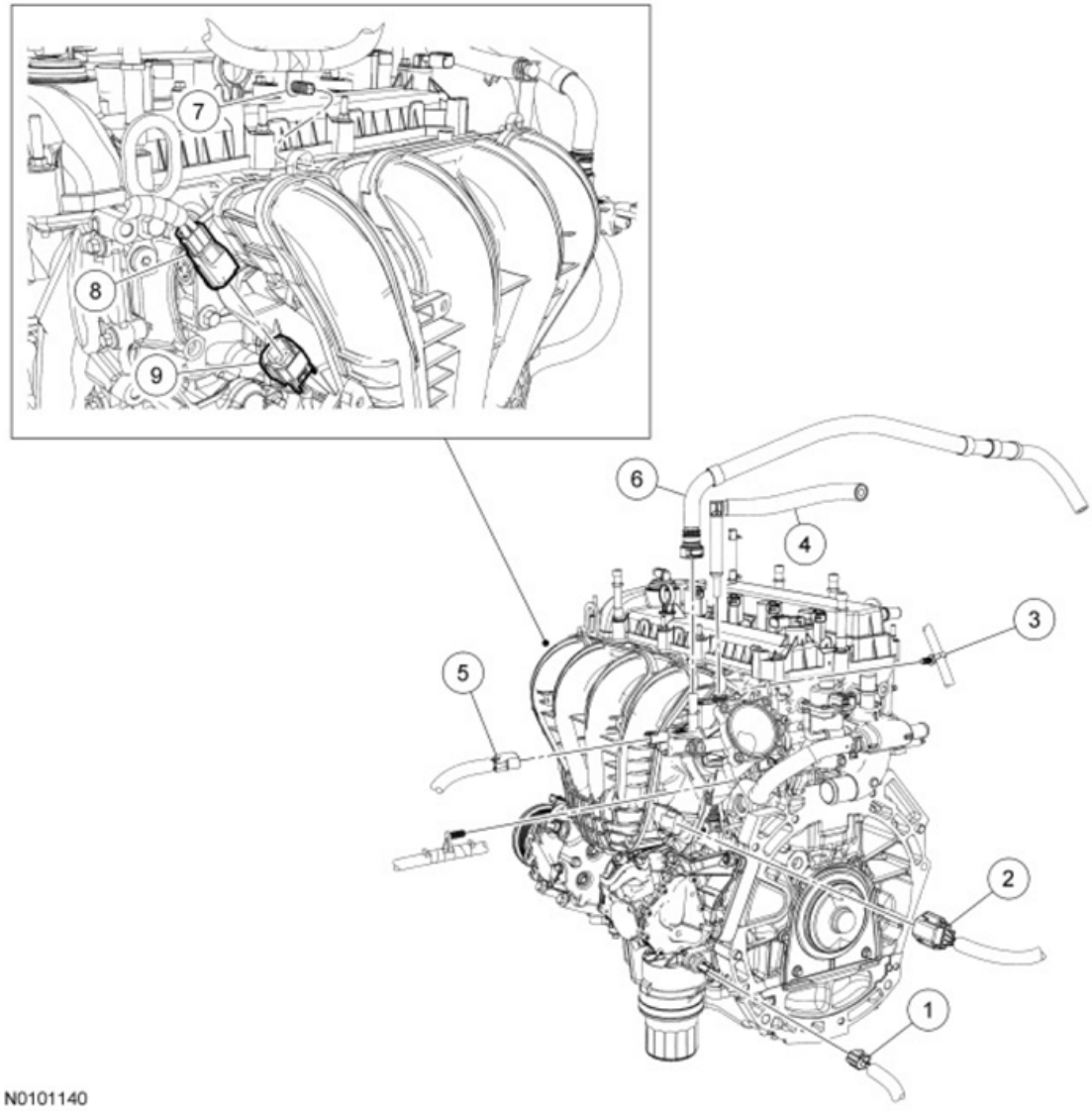

Fig. 18: Identifying Intake Manifold Components (View 1 Of 2)
Courtesy of FORD MOTOR CO.

ITEM DESCRIPTION

Item	Part Number	Description
1	14A464	Engine Oil Pressure (EOP) switch electrical connector (part of 12A581)
2	14A464	Manifold Absolute Pressure (MAP) sensor electrical connector (part of 12A581)
3	-	Wiring harness retainer (2 required)
4	9C482	Brake booster vacuum tube
5	-	Evaporative Emission (EVAP) canister purge valve electrical connector
6	6C324	**EVAP** tube-to-**EVAP** canister purge valve quick connect coupling
7	-	Block heater wiring harness retainer (if equipped)
8	14A464	Knock Sensor (KS) electrical connector (male side, part of 12A581)

9	14A464	**KS** electrical connector (female side, part of 12A581)

Intake Manifold (View 2 of 2)

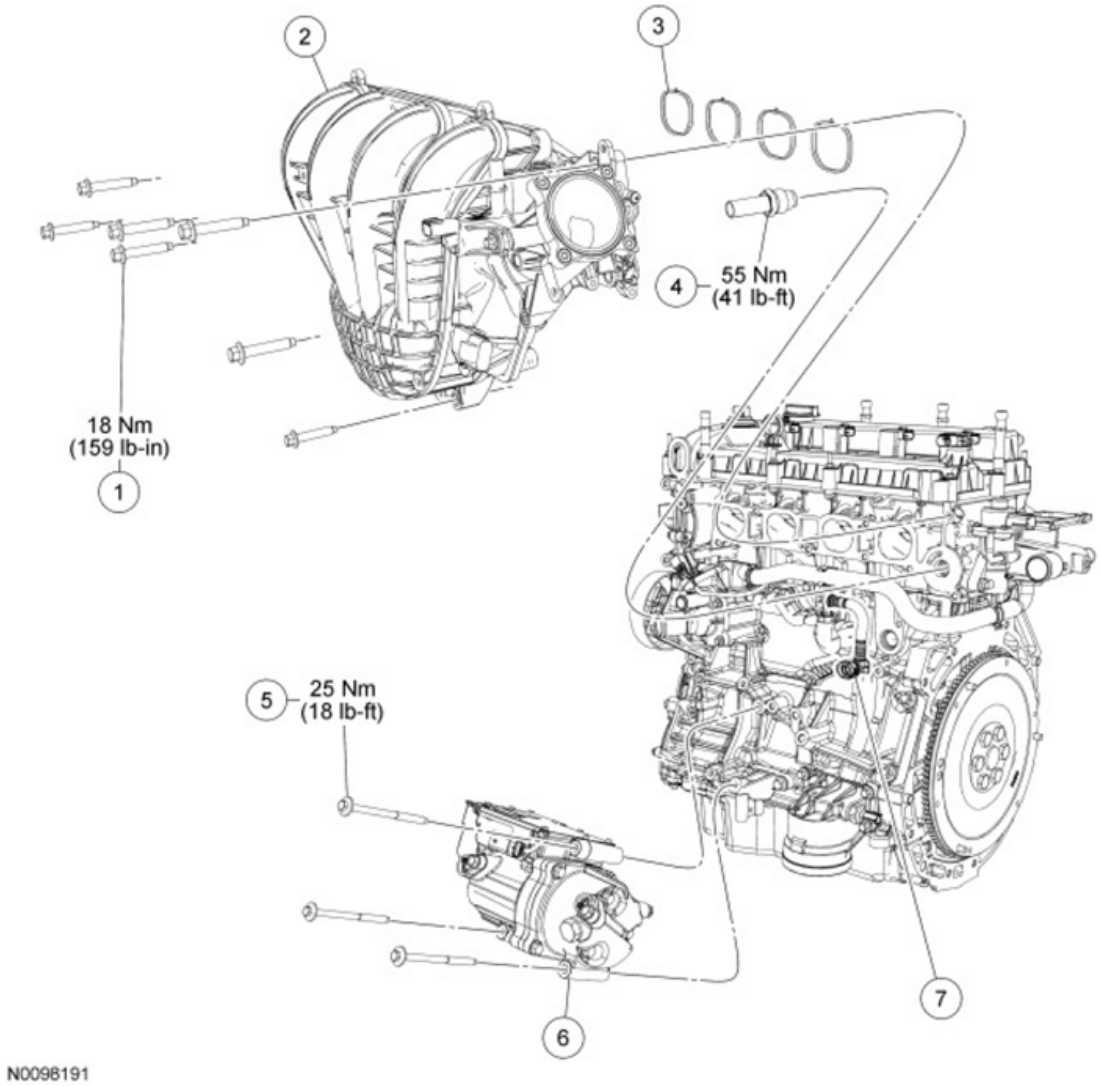

Fig. 19: Identifying Intake Manifold Components With Torque Specifications (View 2 Of 2)
Courtesy of FORD MOTOR CO.

ITEM DESCRIPTION CHART

Item	Part Number	Description
1	W500311	Intake manifold bolt (7 required)
2	9424	Intake manifold
3	9441	Intake manifold gasket (4 required)
4	9E470	EGR tube
5	W500326	A/C compressor bolt (3 required)
6	19703	A/C compressor

7	6758	PCV hose connector

Removal and Installation

1. With vehicle in NEUTRAL, position it on a hoist. For additional information, refer to **JACKING & LIFTING** article.
2. Remove the fuel rail. For additional information, refer to **FUEL CHARGING AND CONTROLS - 2.5L** article.
3. Remove the cooling fan motor and shroud. For additional information, refer to **ENGINE COOLING - HYBRID** article.
4. Remove the Throttle Body (TB). For additional information, refer to **FUEL CHARGING AND CONTROLS - HYBRID** article.
5. Remove the accessory drive belt tensioner. For additional information, refer to **ACCESSORY DRIVE - HYBRID** article.
6. Disconnect the Engine Oil Pressure (EOP) switch electrical connector.
7. Disconnect the Manifold Absolute Pressure (MAP) sensor electrical connector.
8. Disconnect the Evaporative Emission (EVAP) canister purge valve electrical connector.
9. Disconnect the EVAP tube-to-EVAP canister purge valve quick connect coupling and the brake booster vacuum tube from the intake manifold.
10. Disconnect the Knock Sensor (KS) electrical connector and detach the 2 pin-type retainers.

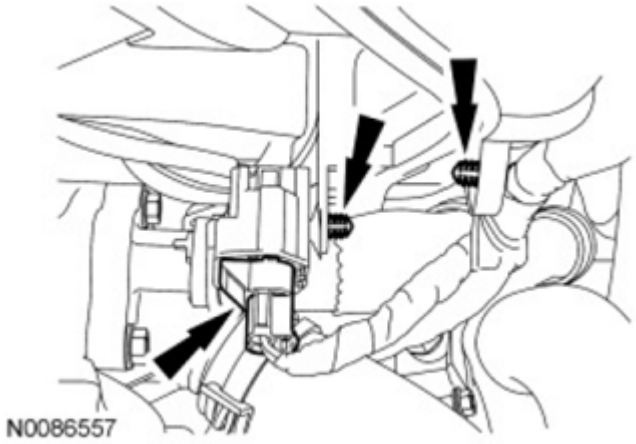

Fig. 20: Locating Knock Sensor Electrical Connector And Pin-Type Retainers
Courtesy of FORD MOTOR CO.

11. Detach the 2 wiring retainers from the intake manifold near the **TB** mounting area.
12. Detach the engine wiring harness retainer from the intake manifold.
13. Remove the 3 electric A/C compressor bolts and position aside.
    - To install, tighten to 25 Nm (18 lb-ft).

NOTE: The cylinder head side of the intake manifold is showing the location of

the 7 bolts.

14. Remove the 7 bolts and position the intake manifold aside to access the PCV hose connector.
    - To install, tighten to 18 Nm (159 lb-in).

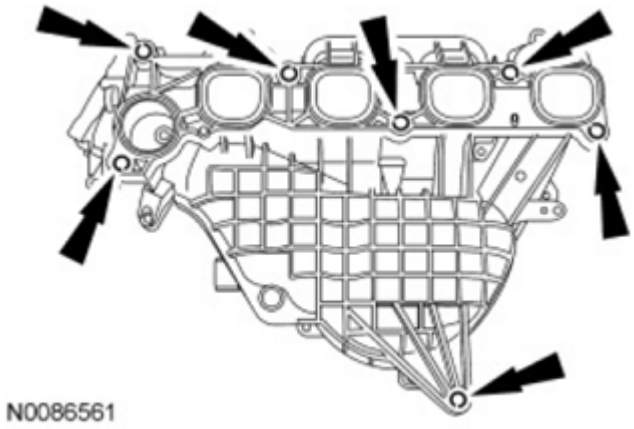

Fig. 21: Locating Intake Manifold Bolts
Courtesy of FORD MOTOR CO.

15. Squeeze the 2 PCV hose connector tabs and disconnect the PCV hose from the intake manifold.

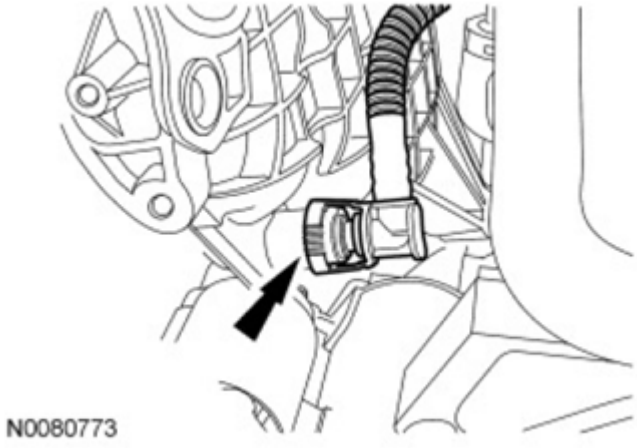

Fig. 22: Locating PCV Hose Connector Tabs
Courtesy of FORD MOTOR CO.

16. Remove the intake manifold and gaskets.

NOTE: **If the engine is repaired or replaced because of upper engine failure, typically including valve or piston damage, check the intake manifold for metal debris. If metal debris is found, install a new intake manifold. Failure to follow these instructions can result in engine damage.**

17. To install, reverse the removal procedure.
    - Inspect and install new intake manifold gaskets if necessary.

VALVE COVER

Material Specifications

MATERIAL SPECIFICATIONS

Item	Specification
Motorcraft® Metal Surface Prep ZC-31-A	-
Silicone Gasket and Sealant TA-30	WSE-M4G323-A4

Valve Cover (View 1 of 2)

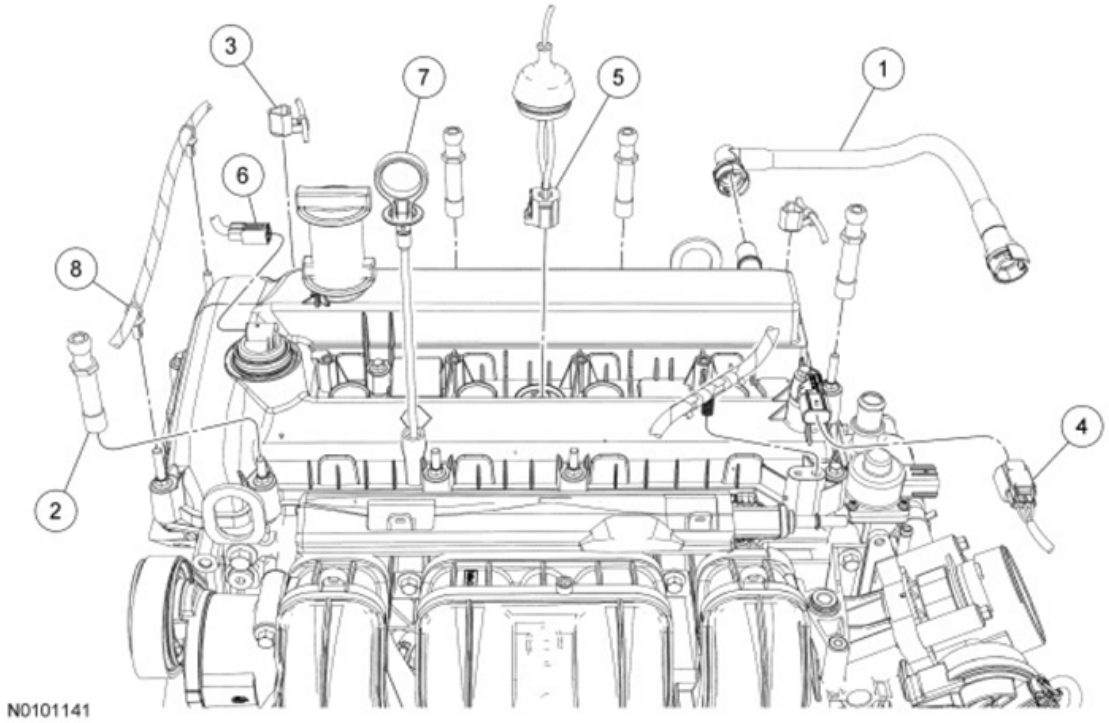

Fig. 23: Identifying Valve Cover Components (View 1 Of 2)
Courtesy of FORD MOTOR CO.

ITEM DESCRIPTION

Item	Part Number	Description
1	6853	Crankcase vent hose
2	6A957	Engine cover stud (4 required)
3	14A163	Wire harness retainer (part of 12A581)

4	14A464	Camshaft Position (CMP) sensor electrical connector (part of 12A581)
5	14A464	Cylinder Head Temperature (CHT) sensor electrical connector (part of 12A581)
6	14A464	Variable Camshaft Timing (VCT) solenoid electrical connector (part of 12A581)
7	6750	Oil level indicator
8	-	High-voltage wiring harness retainer (2 required)

Valve Cover (View 2 of 2)

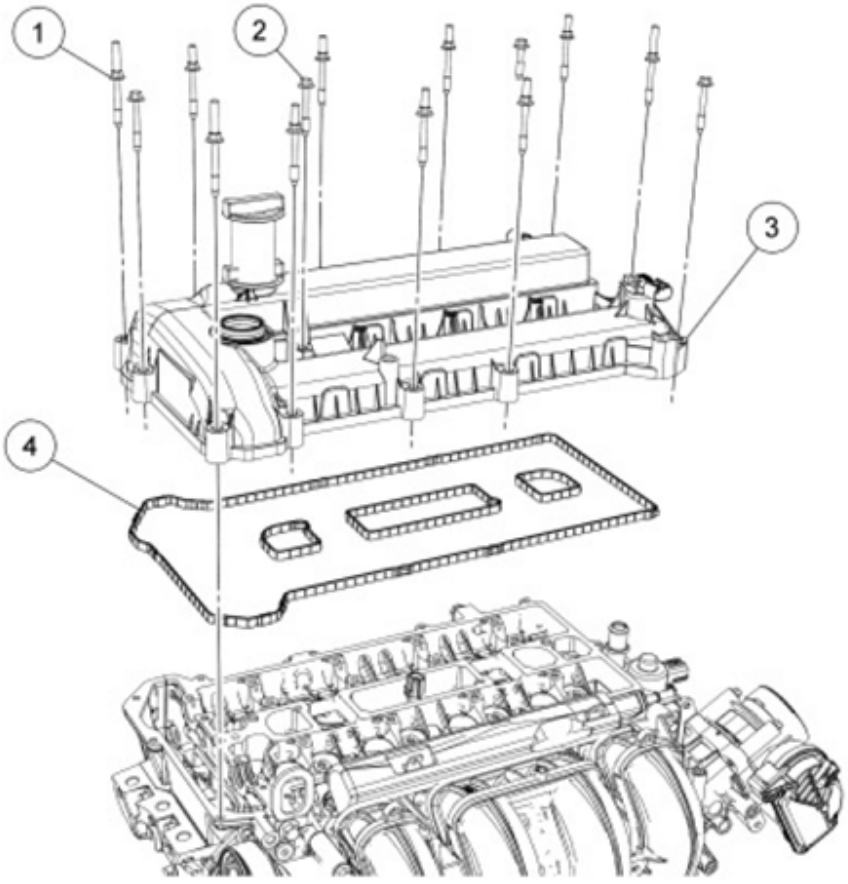

Fig. 24: Identifying Valve Cover Components (View 2 Of 2)
Courtesy of FORD MOTOR CO.

ITEM DESCRIPTION

Item	Part Number	Description
1	6C293	Valve cover retainer (10 required)
2	6C295	Valve cover retainer (4 required)
3	6582	Valve cover
4	6584	Valve cover gasket

Removal

NOTE: During engine repair procedures, cleanliness is extremely important. Any foreign material (including any material created while cleaning gasket surfaces) that enters the oil passages, coolant passages or the oil pan can cause engine failure.

1. With the vehicle in NEUTRAL, position it on a hoist. For additional information, refer to **JACKING & LIFTING** article.
2. Remove the ignition coil-on-plugs. For additional information, refer to **ENGINE IGNITION - 2.5L** article.
3. Disconnect the crankcase vent hose from the valve cover.
4. Remove the 4 engine cover studs.
5. Detach the 3 wire harness retainers from the valve cover stud bolts.
6. Disconnect the Camshaft Position (CMP) sensor electrical connector.
7. Disconnect the Cylinder Head Temperature (CHT) sensor electrical connector.
8. Disconnect the Variable Camshaft Timing (VCT) solenoid electrical connector.
9. Detach the 2 high-voltage wiring harness retainers from the valve cover studs.
10. Remove the oil level indicator.
11. Remove the 14 valve cover retainers, the valve cover and gasket.

Installation

NOTE: Do not use metal scrapers, wire brushes, power abrasive discs or other abrasive means to clean the sealing surfaces. These tools cause scratches and gouges which make leak paths.

1. Clean and inspect the sealing surfaces.

NOTE: The valve cover must be secured within 4 minutes of silicone gasket application. If the valve cover is not secured within 4 minutes, the sealant must be removed and the sealing area cleaned with metal surface prep.

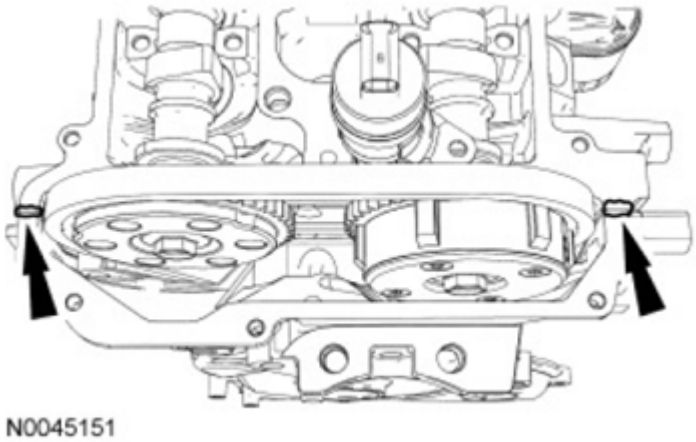

Fig. 25: Locating Silicone Gasket And Sealant Applying Locations
Courtesy of FORD MOTOR CO.

2. Apply silicone gasket and sealant to the locations shown in illustration.

NOTE: Clean and inspect the gasket. Install a new gasket, if necessary.

3. Install the valve cover, gasket and retainers.
   - Tighten in the sequence shown in illustration to 10 Nm (89 lb-in).

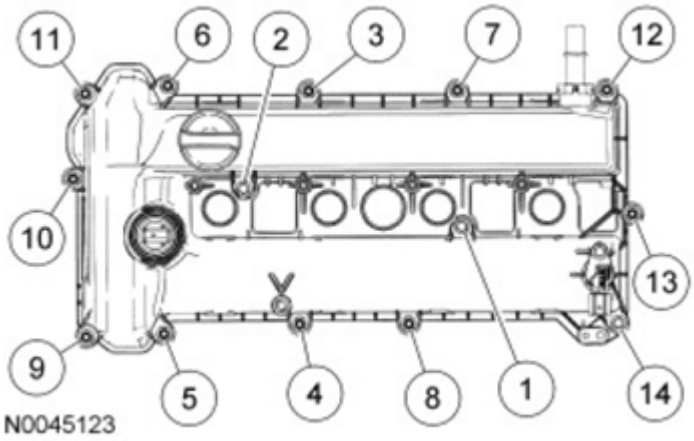

Fig. 26: Identifying Valve Cover Bolts Tightening Sequence
Courtesy of FORD MOTOR CO.

4. Install the oil level indicator.
5. Attach the 2 high-voltage wiring harness retainers to the valve cover studs.
6. Connect the **VCT** solenoid electrical connector.
7. Connect the **CHT** sensor electrical connector.
8. Connect the **CMP** sensor electrical connector.

9. Attach the 3 wire harness retainers to the valve cover stud bolts.
10. Install the 4 engine cover studs.
11. Connect the crankcase vent hose to the valve cover.
12. Install the ignition coil-on-plugs. For additional information, refer to **ENGINE IGNITION - 2.5L** article.

LOWER END COMPONENTS - EXPLODED VIEW

Crankshaft Pulley and Crankshaft Front Oil Seal

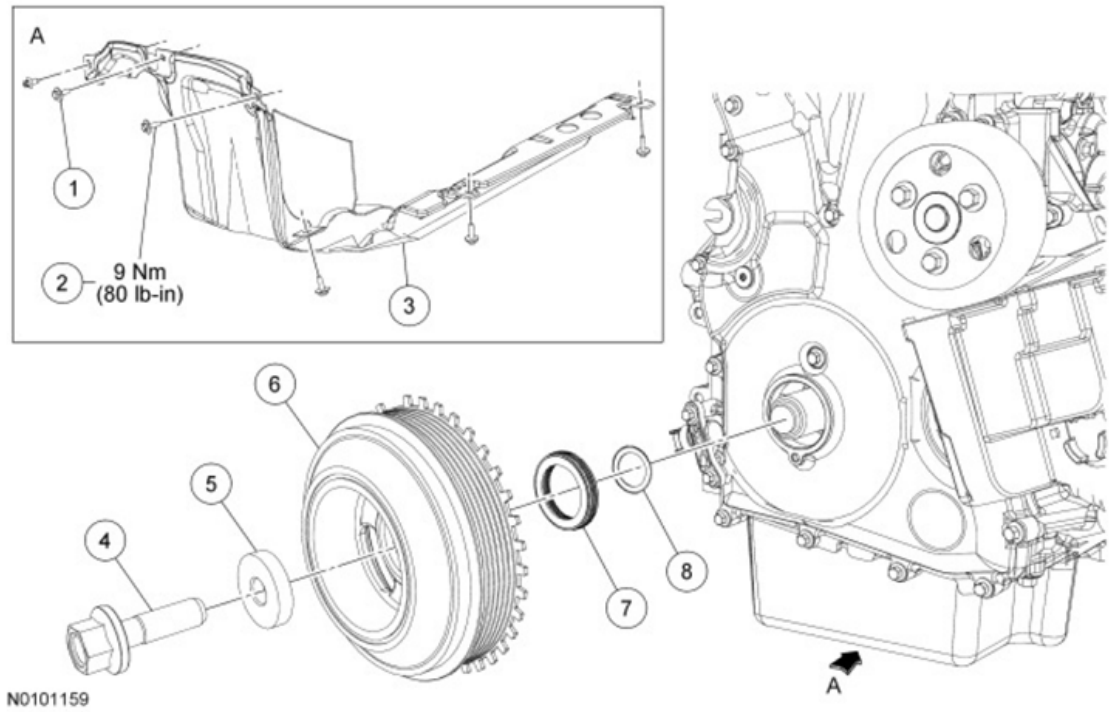

Fig. 27: Exploded View Of Crankshaft Pulley And Crankshaft Front Oil Seal Components With Torque Specifications
Courtesy of FORD MOTOR CO.

ITEM DESCRIPTION

Item	Part Number	Description
1	W706713	RH splash shield pin-type retainer
2	W707257	RH splash shield bolt (5 required)
3	16A573	RH splash shield
4	6K340	Crankshaft pulley bolt
5	-	Crankshaft pulley washer (part of 6K340)
6	6316	Crankshaft pulley
7	6700	Crankshaft front seal
8	6378	Diamond washer

Flywheel and Crankshaft Rear Oil Seal

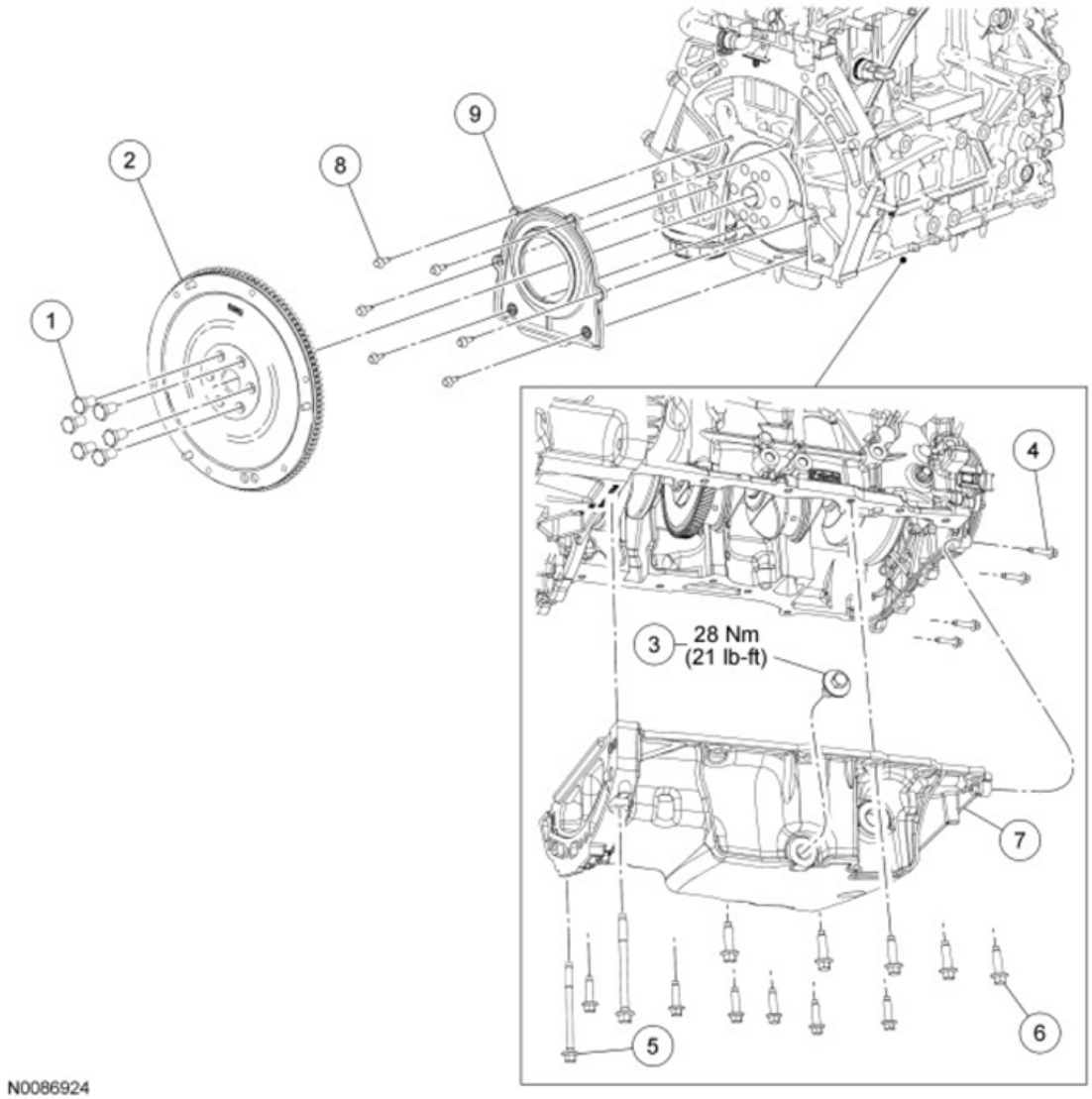

Fig. 28: Identifying Flywheel And Crankshaft Rear Oil Seal Components With Torque Specifications
Courtesy of FORD MOTOR CO.

ITEM DESCRIPTION

Item	Part Number	Description
1	6379	Flywheel bolt (6 required)
2	6477	Flywheel
3	6730	Oil pan drain plug
4	W500215	Engine front cover bolt (4 required)
5	W706284	Oil pan bolt (2 required)
6	W500224	Oil pan bolt (11 required)
7	6675	Oil pan

8	W500212	Crankshaft rear oil seal with retainer plate bolt (6 required)
9	6K318	Crankshaft rear oil seal with retainer plate

1. For additional information, refer to the appropriate procedures in this service information.

CRANKSHAFT PULLEY

Special Tool(s)

SPECIAL TOOLS

	Alignment Plate, Camshaft 303-465 (T94P-6256-CH)
	Holding Tool, Crankshaft Damper 303-1416

	
	Timing Peg, Crankshaft TDC 303-507

General Equipment

GENERAL EQUIPMENT

6 mm x 18 mm bolt

Material Specifications

MATERIAL SPECIFICATIONS

Item	Specification
Motorcraft® SAE 5W-20 Premium Synthetic Blend Motor Oil (US); Motorcraft® SAE 5W-20 Super Premium Motor Oil (Canada) XO-5W20-QSP (US); CXO-5W20-LSP12 (Canada)	WSS-M2C945-A

Removal

NOTE: Do not loosen or remove the crankshaft pulley bolt without first installing the special tools as instructed in this procedure. The crankshaft pulley and the crankshaft timing sprocket are not keyed to the crankshaft. The crankshaft, the crankshaft sprocket and the pulley are fitted together by friction, using diamond washers between the flange faces on each part. For that reason, the crankshaft sprocket is also unfastened if the pulley bolt is loosened. Before any repair requiring loosening or removal of the crankshaft pulley bolt, the crankshaft and camshafts must be locked in place by the special service tools, otherwise severe engine damage can occur.

NOTE: During engine repair procedures, cleanliness is extremely important. Any foreign material (including any material created while cleaning gasket surfaces) that enters the oil passages, coolant passages or the oil pan can cause engine failure.

1. With the vehicle in NEUTRAL, position it on a hoist. For additional information, refer to **JACKING & LIFTING** article.
2. Remove the RF wheel and tire. For additional information, refer to **TIRES & WHEELS** article.
3. Remove the accessory drive belt. For additional information, refer to **ACCESSORY DRIVE - HYBRID** article.
4. Remove the valve cover. For additional information, refer to **VALVE COVER** in this service information.

NOTE: Failure to position the No. 1 piston at Top Dead Center (TDC) can result in damage to the engine. Turn the engine in the normal direction of rotation only.

5. Using the crankshaft pulley bolt, turn the crankshaft clockwise to position the No. 1 piston at Top Dead Center (TDC).
   - The hole in the crankshaft pulley should be in the 6 o'clock position.

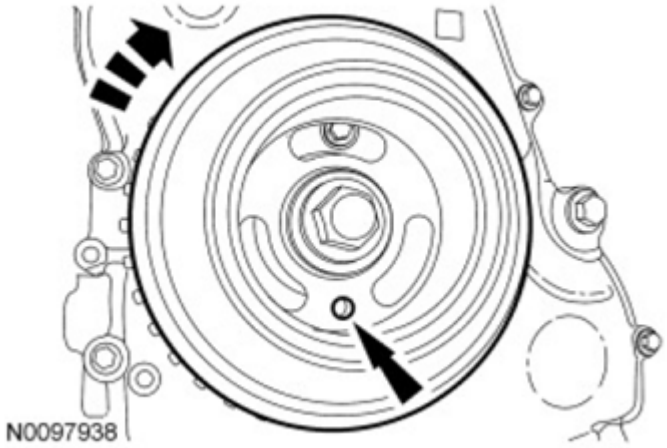

Fig. 29: Locating Crankshaft Pulley Hole
Courtesy of FORD MOTOR CO.

NOTE: **The Camshaft Alignment Plate is for camshaft alignment only. Using this tool to prevent engine rotation can result in engine damage.**

NOTE: **The camshaft timing slots are offset. If the Camshaft Alignment Plate cannot be installed, rotate the crankshaft one complete revolution clockwise to correctly position the camshafts.**

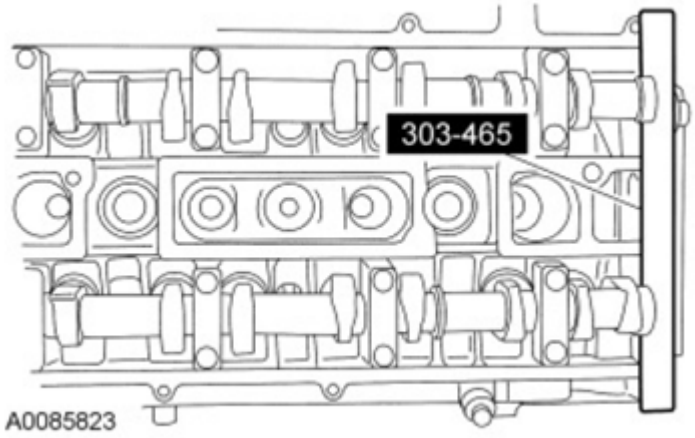

Fig. 30: Identifying Camshaft Alignment Plate
Courtesy of FORD MOTOR CO.

6. Install the Camshaft Alignment Plate in the slots on the rear of both camshafts.
7. Remove the engine plug bolt.

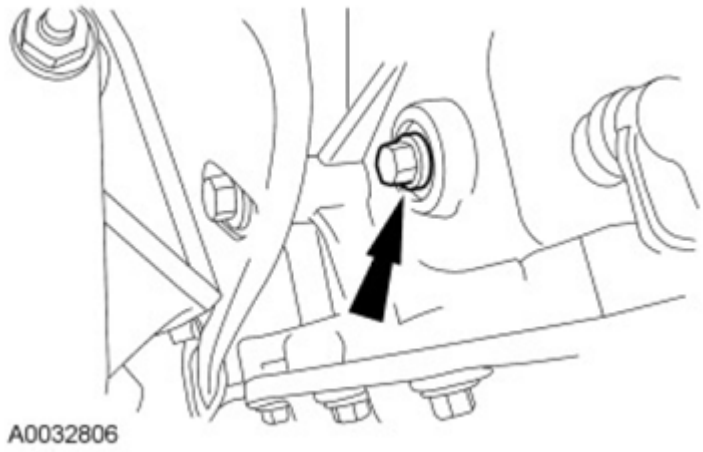

Fig. 31: Locating Engine Plug Bolt
Courtesy of FORD MOTOR CO.

NOTE: **The Crankshaft TDC Timing Peg will contact the crankshaft and prevent it from turning past TDC . However, the crankshaft can still be rotated in the counterclockwise direction. The crankshaft must remain at the TDC position during the crankshaft pulley removal and installation.**

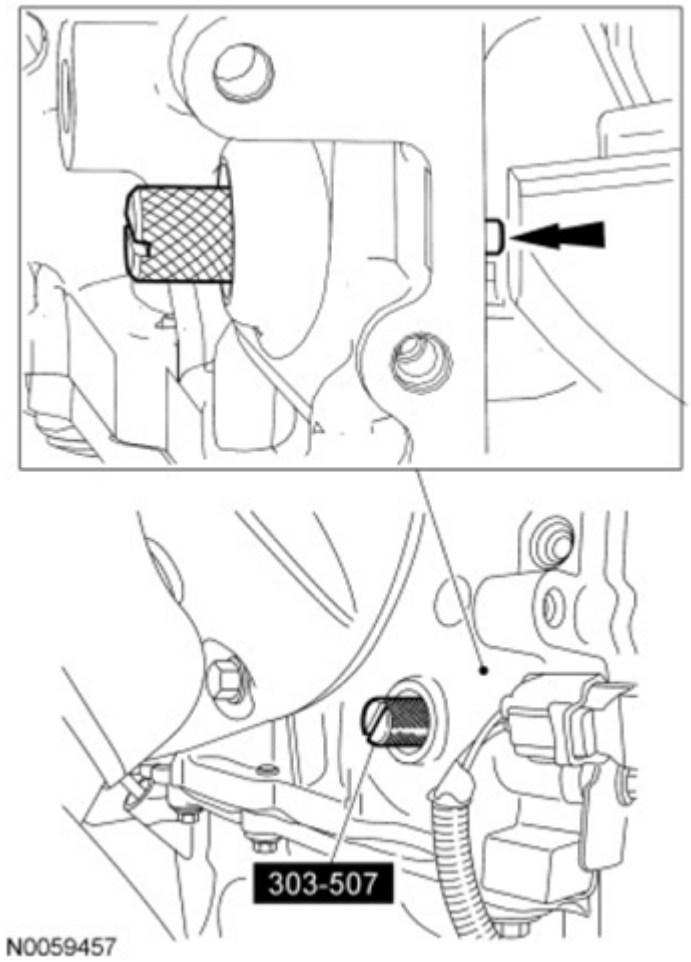

Fig. 32: Remove/Install Crankshaft TDC Timing Peg
Courtesy of FORD MOTOR CO.

8. Install the Crankshaft **TDC** Timing Peg.

NOTE: **The crankshaft must remain in the Top Dead Center (TDC) position during removal of the pulley bolt or damage to the engine can occur. Therefore, the crankshaft pulley must be held in place with the Crankshaft Damper Holding Tool, and the bolt should be removed using an air impact wrench (1/2-in drive minimum).**

NOTE: **The crankshaft sprocket diamond washer may come off with the crankshaft pulley. The diamond washer must be replaced. Remove and discard the diamond washer. If the diamond washer is not installed, engine damage may occur.**

9. Use the Crankshaft Damper Holding Tool and a suitable 1/2-in drive hand tool to hold the crankshaft pulley. Use an air impact wrench to remove the crankshaft pulley bolt.
   - Remove and discard the crankshaft pulley bolt and washer.

- Remove the crankshaft pulley.
- Remove the diamond washer and discard.

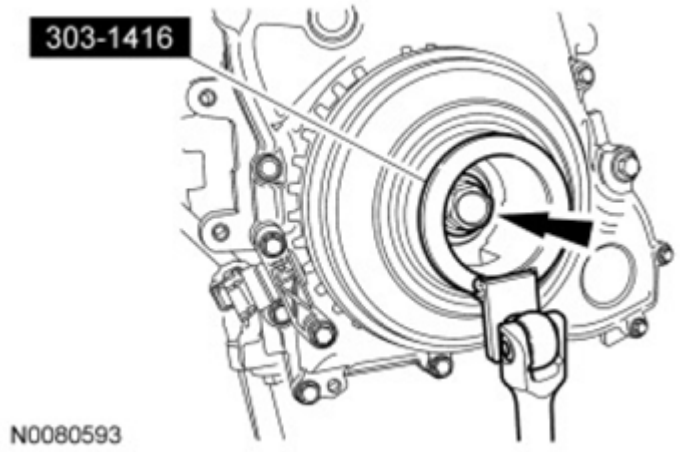

Fig. 33: Remove/Install Crankshaft Pulley Bolt Using Crankshaft Damper Holding Tool
Courtesy of FORD MOTOR CO.

Installation

1. Install a new diamond washer.

NOTE: Do not install the crankshaft pulley bolt at this time.

NOTE: Apply clean engine oil on the seal area before installing.

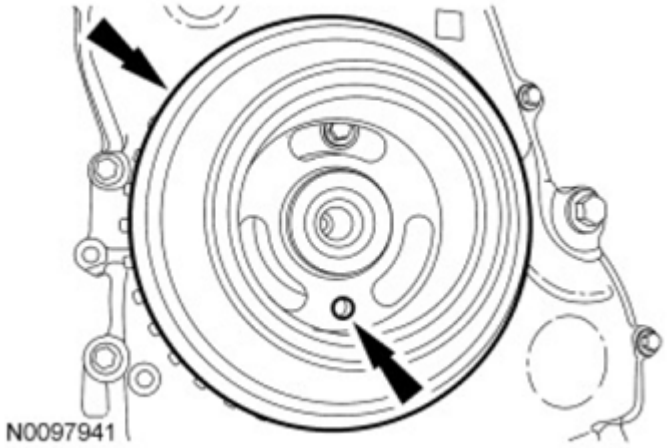

Fig. 34: Locating Crankshaft Pulley Hole
Courtesy of FORD MOTOR CO.

2. Position the crankshaft pulley onto the crankshaft with the hole in the pulley at the 6 o'clock position.

NOTE: Only hand-tighten the 6 mm x 18 mm bolt or damage to the front cover can occur.

NOTE: This step will correctly align the crankshaft pulley to the crankshaft.

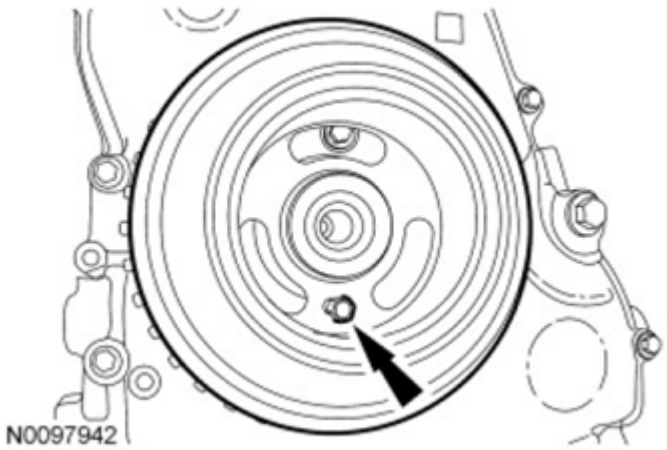

Fig. 35: Locating Bolt Through Crankshaft Pulley
Courtesy of FORD MOTOR CO.

3. Install a 6 mm x 18 mm bolt through the crankshaft pulley and thread it into the front cover.

NOTE: The crankshaft must remain in the TDC position during installation of the pulley bolt or damage to the engine can occur. Therefore, the crankshaft pulley must be held in place with the Crankshaft Damper Holding Tool and the bolt should be installed using hand tools only.

NOTE: Do not reuse the crankshaft pulley bolt.

4. Install a new crankshaft pulley bolt. Use the Crankshaft Damper Holding Tool and a suitable 1/2-in drive hand tool to hold the crankshaft pulley, tighten the crankshaft pulley bolt in 2 stages:
   - Stage 1: Tighten to 100 Nm (74 lb-ft).
   - Stage 2: Tighten an additional 90 degrees.

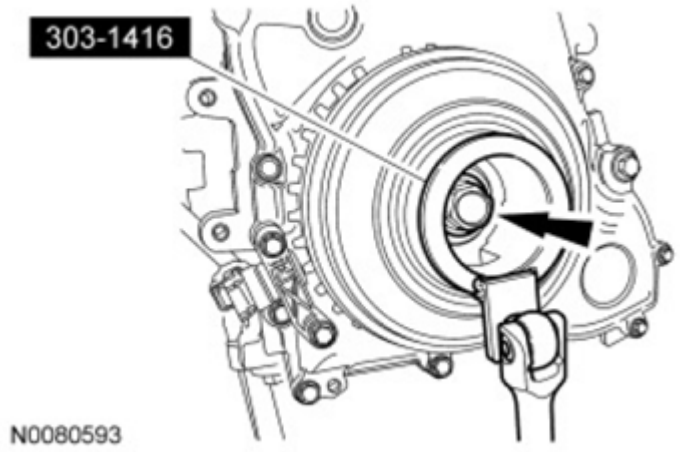

Fig. 36: Remove/Install Crankshaft Pulley Bolt Using Crankshaft Damper Holding Tool
Courtesy of FORD MOTOR CO.

5. Remove the 6 mm x 18 mm bolt.

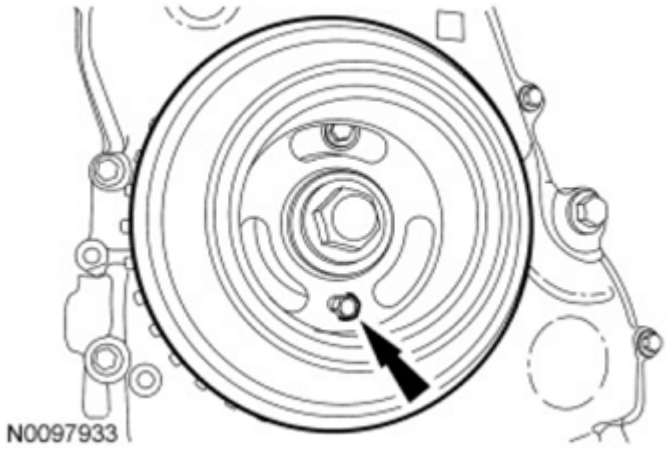

Fig. 37: Locating Crankshaft Pulley Bolt
Courtesy of FORD MOTOR CO.

6. Remove the Crankshaft **TDC** Timing Peg.

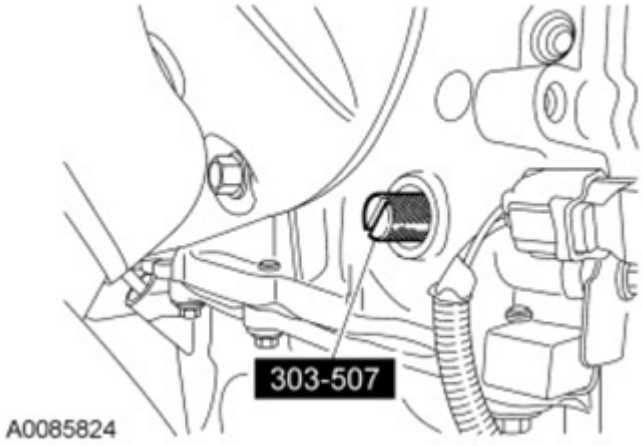

Fig. 38: Locating Crankshaft TDC Timing Peg
Courtesy of FORD MOTOR CO.

7. Remove the Camshaft Alignment Plate.

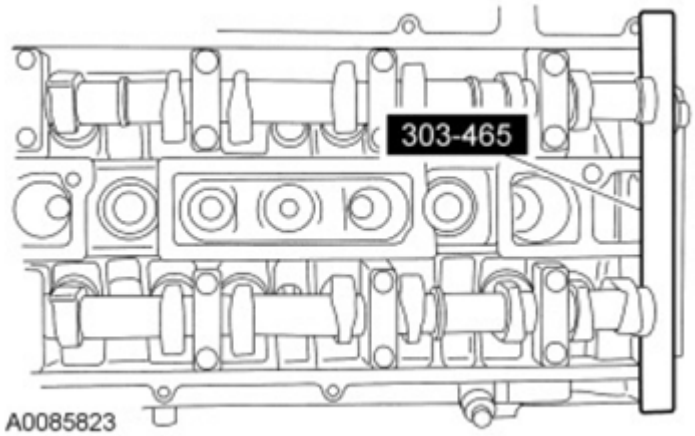

Fig. 39: Identifying Camshaft Alignment Plate
Courtesy of FORD MOTOR CO.

NOTE: Only turn the engine in the normal direction of rotation.

8. Turn the crankshaft clockwise one and three-fourths turns.
9. Install the Crankshaft **TDC** Timing Peg.

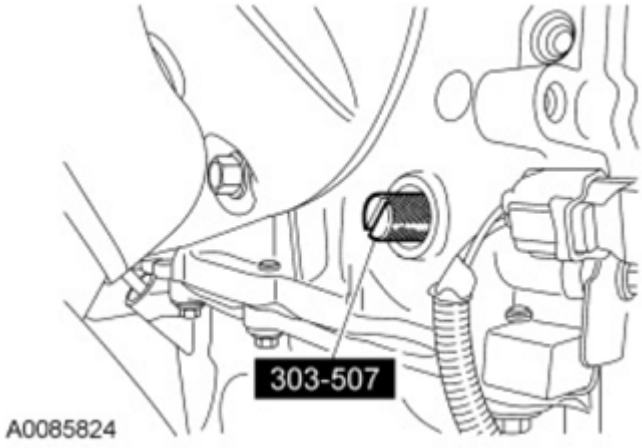

Fig. 40: Locating Crankshaft TDC Timing Peg
Courtesy of FORD MOTOR CO.

NOTE: Only turn the engine in the normal direction of rotation.

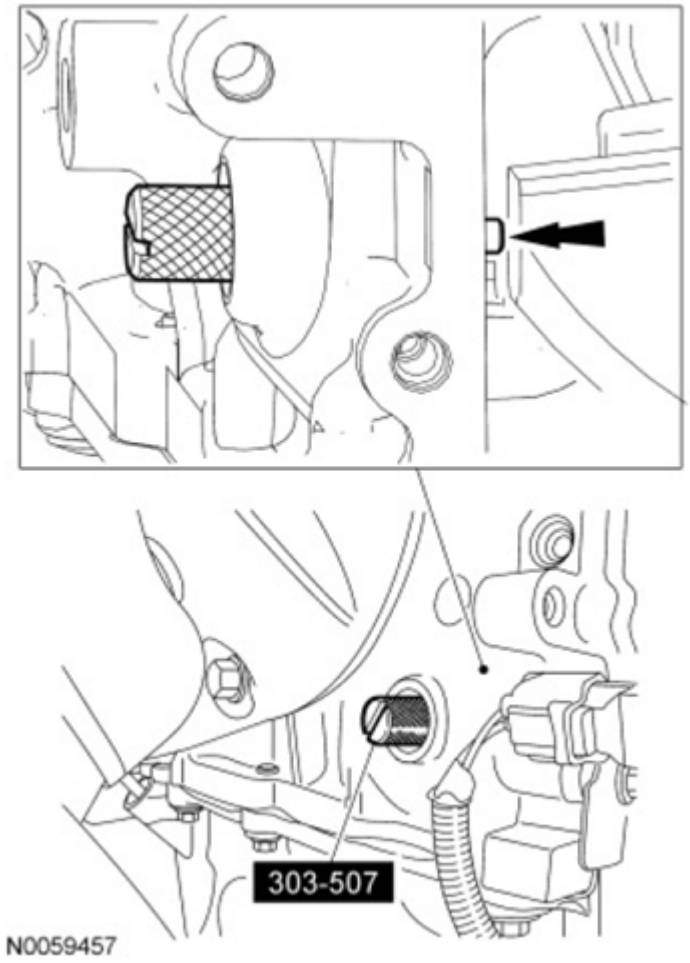

Fig. 41: Remove/Install Crankshaft TDC Timing Peg

Courtesy of FORD MOTOR CO.

10. Turn the crankshaft clockwise until the crankshaft contacts the Crankshaft **TDC** Timing Peg.

NOTE: Only hand-tighten the bolt or damage to the front cover can occur.

11. Using the 6 mm x 18 mm bolt, check the position of the crankshaft pulley.
    - If it is not possible to install the bolt, the engine valve timing must be corrected by repeating this procedure.

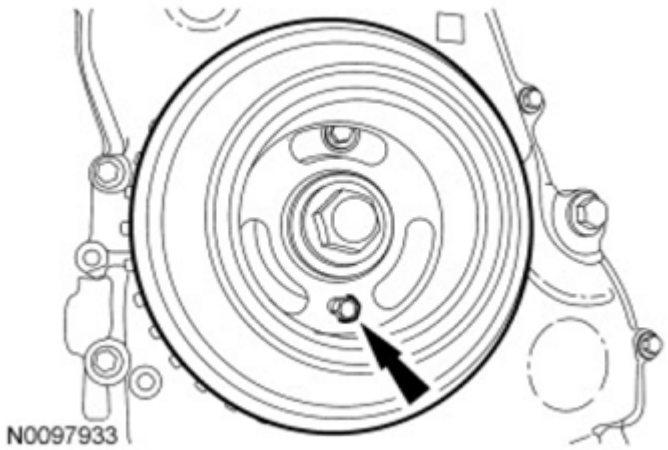

Fig. 42: Locating Crankshaft Pulley Bolt
Courtesy of FORD MOTOR CO.

12. Install the Camshaft Alignment Plate to check the position of the camshafts.
    - If it is not possible to install the Camshaft Alignment Plate, the engine valve timing must be corrected by repeating this procedure.

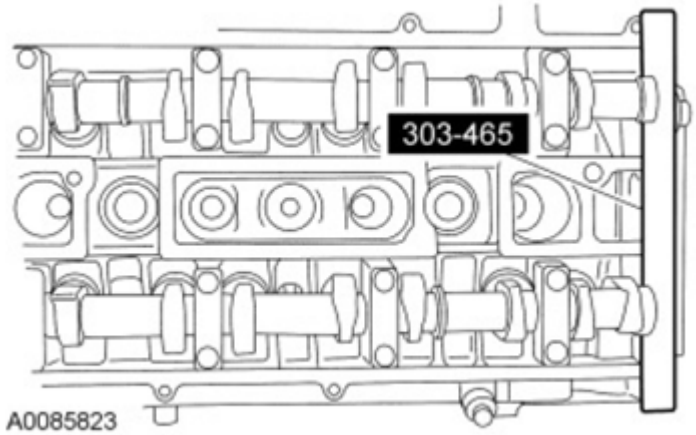

Fig. 43: Identifying Camshaft Alignment Plate
Courtesy of FORD MOTOR CO.

13. Remove the Camshaft Alignment Plate.

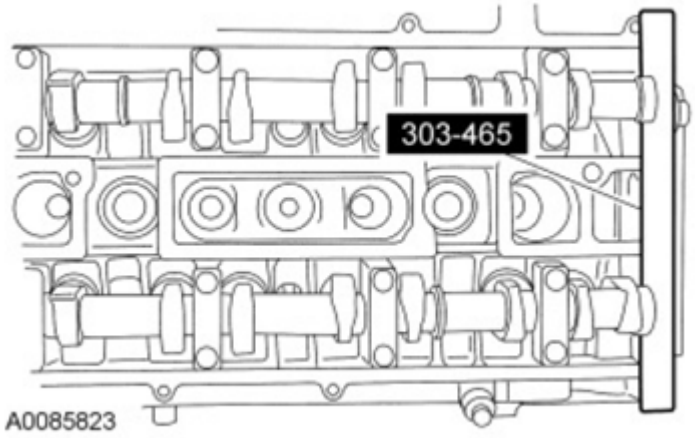

Fig. 44: Identifying Camshaft Alignment Plate
Courtesy of FORD MOTOR CO.

14. Remove the 6 mm x 18 mm bolt.

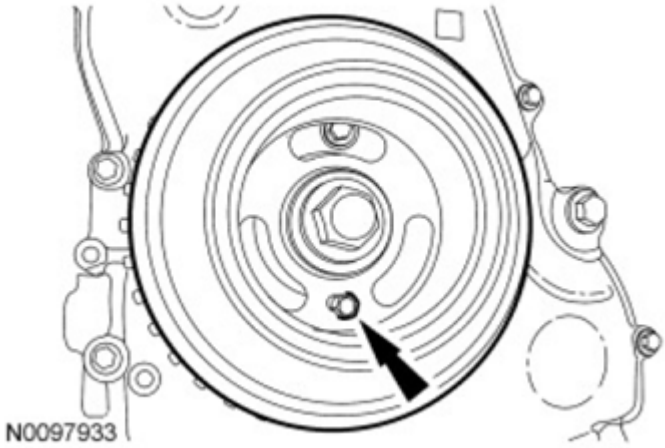

Fig. 45: Locating Crankshaft Pulley Bolt
Courtesy of FORD MOTOR CO.

15. Remove the Crankshaft **TDC** Timing Peg.

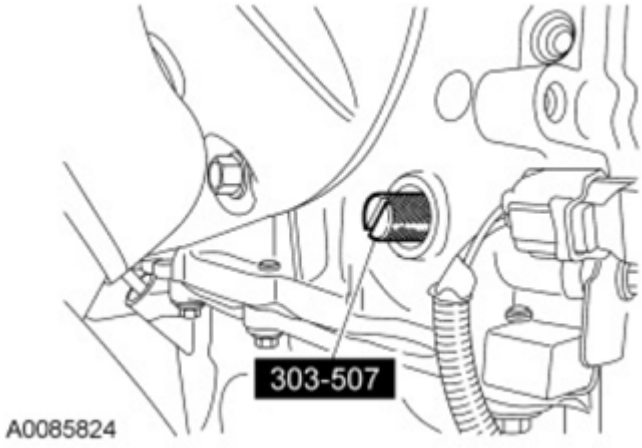

Fig. 46: Locating Crankshaft TDC Timing Peg
Courtesy of FORD MOTOR CO.

16. Install the engine plug bolt.
    - Tighten to 20 Nm (177 lb-in).
17. Install the accessory drive belt. For additional information, refer to **ACCESSORY DRIVE - HYBRID** article.
18. Install the RF wheel and tire. For additional information, refer to **TIRES & WHEELS** article.
19. Install the valve cover. For additional information, refer to **VALVE COVER** in this service information.

CRANKSHAFT FRONT SEAL

Special Tool(s)

SPECIAL TOOLS

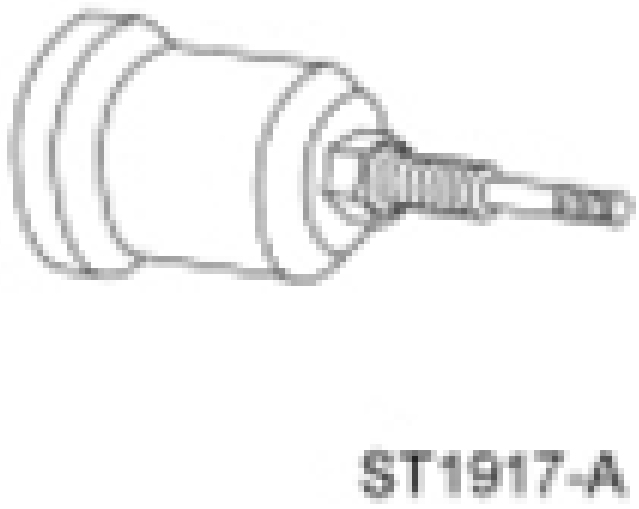	Installer, Camshaft Front Oil Seal 303-096 (T74P-6150-A)

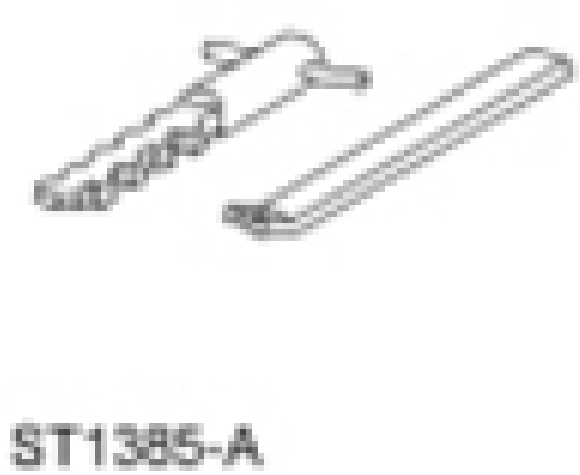	Remover, Oil Seal 303-409 (T92C-6700-CH)

Material Specifications

MATERIAL SPECIFICATIONS

Item	Specification
Motorcraft® SAE 5W-20 Premium Synthetic Blend Motor Oil (US); Motorcraft® SAE 5W-20 Super Premium Motor Oil (Canada) XO-5W20-QSP (US); CXO-5W20-LSP12 (Canada)	WSS-M2C945-A

Removal

NOTE: **Do not loosen or remove the crankshaft pulley bolt without first installing the special tools as instructed in this procedure. The crankshaft pulley and the crankshaft timing sprocket are not keyed to the crankshaft. The crankshaft, the crankshaft sprocket and the pulley are fitted together by friction, using diamond washers between the flange faces on each part. For that reason, the crankshaft sprocket is also unfastened if the pulley bolt is loosened. Before any repair requiring loosening or removal of the crankshaft pulley bolt, the crankshaft and camshafts must be locked in place by the special service tools or severe engine damage can occur.**

NOTE: **During engine repair procedures, cleanliness is extremely important. Any foreign material (including any material created while cleaning gasket surfaces) that enters the oil passages, coolant passages or the oil pan can cause engine failure.**

1. Remove the crankshaft pulley. For additional information, refer to **LOWER END COMPONENTS - EXPLODED VIEW** and **CRANKSHAFT PULLEY** in this service information.

NOTE: Use care not to damage the engine front cover or the crankshaft when removing the seal.

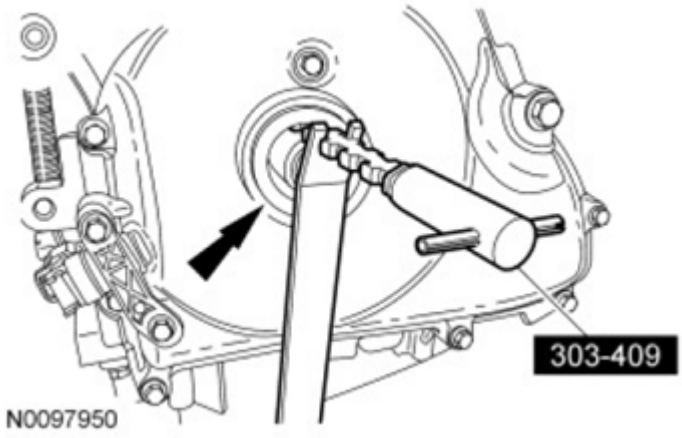

Fig. 47: Removing Crankshaft Front Seal
Courtesy of FORD MOTOR CO.

2. Using the Oil Seal Remover, remove the crankshaft front seal.

Installation

NOTE: Remove the through bolt from the Camshaft Front Oil Seal Installer.

NOTE: Lubricate the oil seal with clean engine oil.

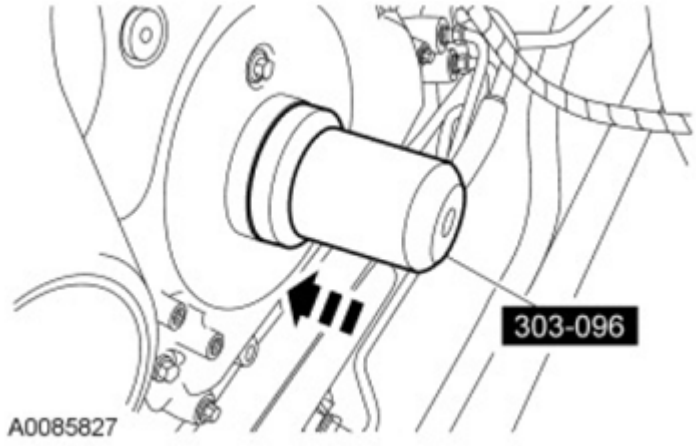

Fig. 48: Installing Crankshaft Front Oil Seal
Courtesy of FORD MOTOR CO.

1. Using the Camshaft Front Oil Seal Installer, install the crankshaft front oil seal.
2. Install the crankshaft pulley. For additional information, refer to **LOWER END COMPONENTS -**

EXPLODED VIEW and **CRANKSHAFT PULLEY** in this service information.

FLYWHEEL

Removal

1. With the vehicle in NEUTRAL, position it on a hoist. For additional information, refer to **JACKING & LIFTING** article.
2. Remove the engine. For additional information, refer to **ENGINE** in this service information.
3. Remove the 6 bolts and the flywheel.

Installation

NOTE: Special bolts are used for installation. Do not use standard bolts.

1. Install the flywheel and tighten the bolts in the sequence shown in illustration in the following 3 stages:
   - Stage 1: Tighten to 50 Nm (37 lb-ft).
   - Stage 2: Tighten to 80 Nm (59 lb-ft).
   - Stage 3: Tighten to 112 Nm (83 lb-ft).

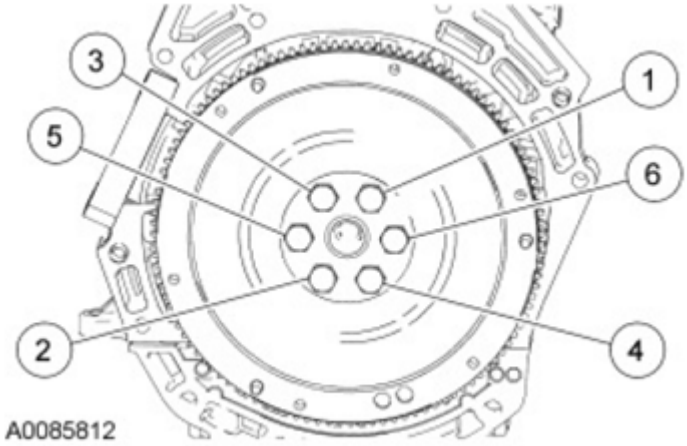

Fig. 49: Identifying Flywheel Bolts Tightening Sequence
Courtesy of FORD MOTOR CO.

2. Install the engine. For additional information, refer to **ENGINE** in this service information.

CRANKSHAFT REAR SEAL

Special Tool(s)

SPECIAL TOOLS

	Installer, Crankshaft Rear Main Oil Seal 303-328 (T88P-6701-B1)

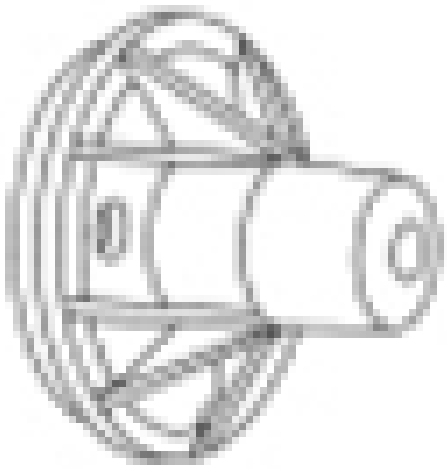 ST1506-A	

Material Specifications

MATERIAL SPECIFICATIONS

Item	Specification
Motorcraft® Metal Surface Prep ZC-31-A	-
Motorcraft® SAE 5W-20 Premium Synthetic Blend Motor Oil (US); Motorcraft® SAE 5W-20 Super Premium Motor Oil (Canada) XO-5W20-QSP (US); CXO-5W20-LSP12 (Canada)	WSS-M2C945-A
Silicone Gasket and Sealant TA-30	WSE-M4G323-A4

Removal

1. With the vehicle in NEUTRAL, position it on a hoist. For additional information, refer to **JACKING & LIFTING** article.
2. Remove the flywheel. For additional information, refer to **FLYWHEEL** in this service information.
3. Drain the engine oil.
    - Install the drain plug.
    - Tighten to 28 Nm (21 lb-ft).

NOTE: **If the oil pan is not removed, damage to the rear oil seal retainer joint can occur.**

4. Remove the 17 bolts and the oil pan.
5. Remove the 6 bolts and the crankshaft rear oil seal with retainer plate.

Installation

1. Using the Crankshaft Rear Main Oil Seal Installer, position the crankshaft rear oil seal with retainer plate onto the crankshaft.

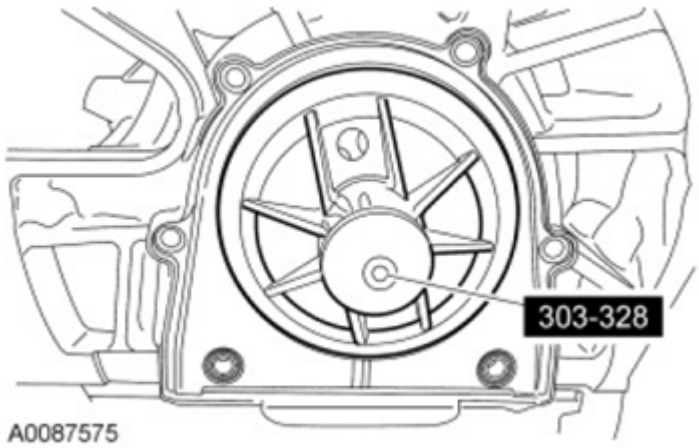

Fig. 50: Identifying Crankshaft Rear Main Oil Seal Installer
Courtesy of FORD MOTOR CO.

2. Install the crankshaft rear oil seal with retainer plate and bolts.
   - Tighten in the sequence shown in illustration to 10 Nm (89 lb-in).

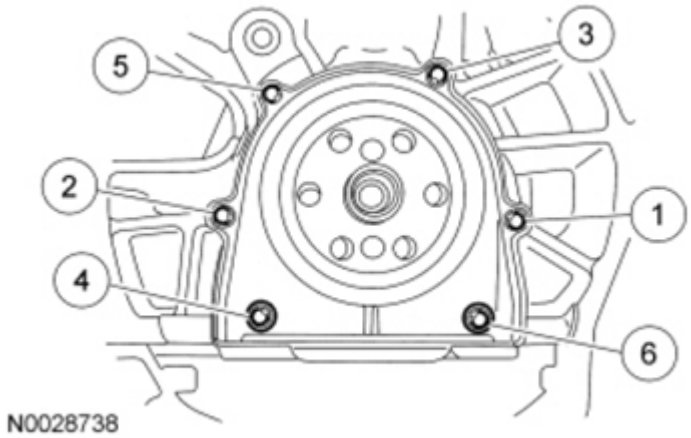

Fig. 51: Identifying Crankshaft Rear Oil Seal Retainer Plate Bolts Tightening Sequence
Courtesy of FORD MOTOR CO.

NOTE: **Do not use metal scrapers, wire brushes, power abrasive discs or other abrasive means to clean the sealing surfaces. These tools cause scratches and gouges, which make leak paths. Use a plastic scraping tool and metal surface cleaner to remove traces of sealant.**

3. Clean and inspect all the oil pan and cylinder block mating surfaces.

NOTE: **If the oil pan is not secured within 4 minutes of sealant application, the sealant must be removed and the sealing area cleaned with metal surface prep. Allow to dry until there is no sign of wetness, or 4 minutes, whichever is longer. Failure to follow this procedure can cause future oil leakage.**

NOTE: **The oil pan must be installed and the bolts tightened within 4 minutes of applying the silicone gasket and sealant.**

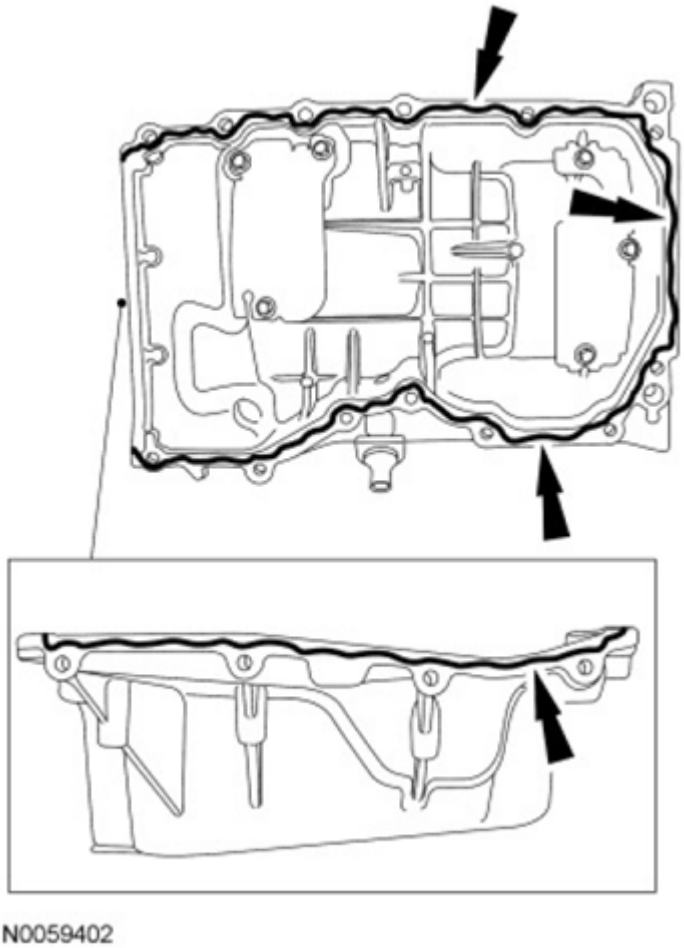

Fig. 52: Locating Oil Pan Silicone Gasket And Sealant Bead Applying Areas
Courtesy of FORD MOTOR CO.

4. Apply a 2.5 mm (0.09 in) bead of silicone gasket and sealant to the oil pan.
5. Install the oil pan. Install the 2 oil pan bolts finger-tight.
6. Install the 4 bolts.
   - Tighten to 10 Nm (89 lb-in).

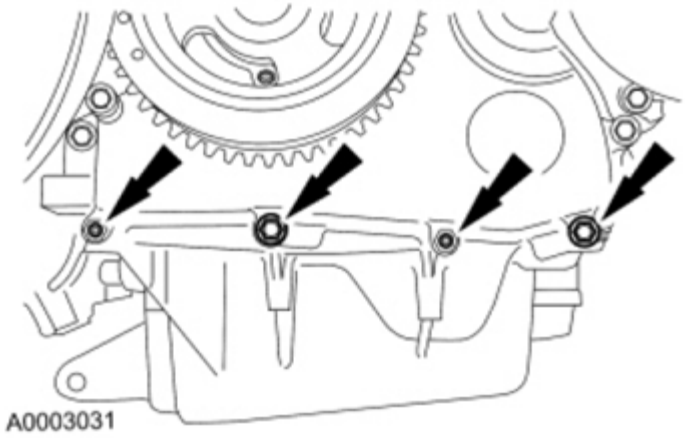

Fig. 53: Locating Oil Pan Bolts
Courtesy of FORD MOTOR CO.

7. Install the remaining oil pan bolts and tighten the oil pan bolts in the sequence shown in illustration to 25 Nm (18 lb-ft).

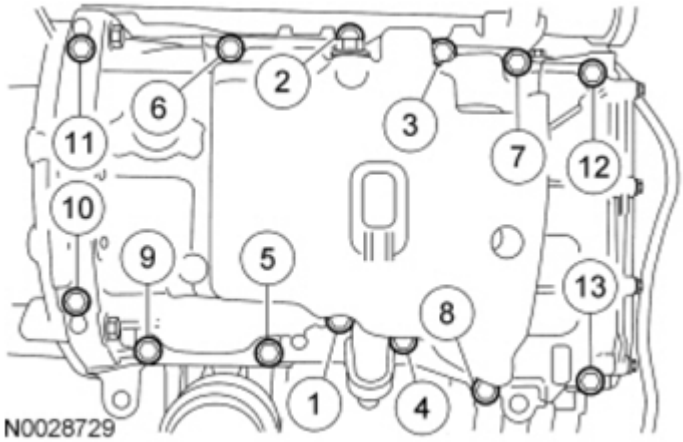

Fig. 54: Identifying Oil Pan Bolts Tightening Sequence
Courtesy of FORD MOTOR CO.

8. Install the flywheel. For additional information, refer to **FLYWHEEL** in this service information.
9. Fill the engine with clean engine oil.

ENGINE FRONT COVER

Special Tool(s)

SPECIAL TOOLS

	Aligner, Crankshaft Sensor 303-1417
	Installer, Camshaft Front Oil Seal 303-096 (T74P-6150-A)
	Remover, Oil Seal 303-409 (T92C-6700-CH)

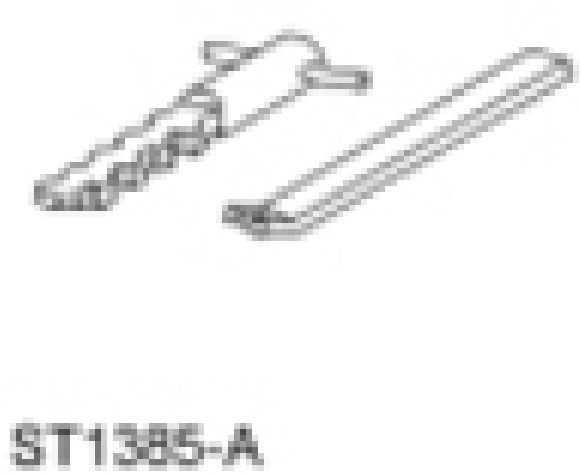	

General Equipment

GENERAL EQUIPMENT

6 mm x 18 mm bolt

Material Specifications

MATERIAL SPECIFICATIONS

Item	Specification
Motorcraft® SAE 5W-20 Premium Synthetic Blend Motor Oil (US); Motorcraft® SAE 5W-20 Super Premium Motor Oil (Canada) XO-5W20-QSP (US); CXO-5W20-LSP12 (Canada)	WSS-M2C945-A
Silicone Gasket and Sealant TA-30	WSE-M4G323-A4

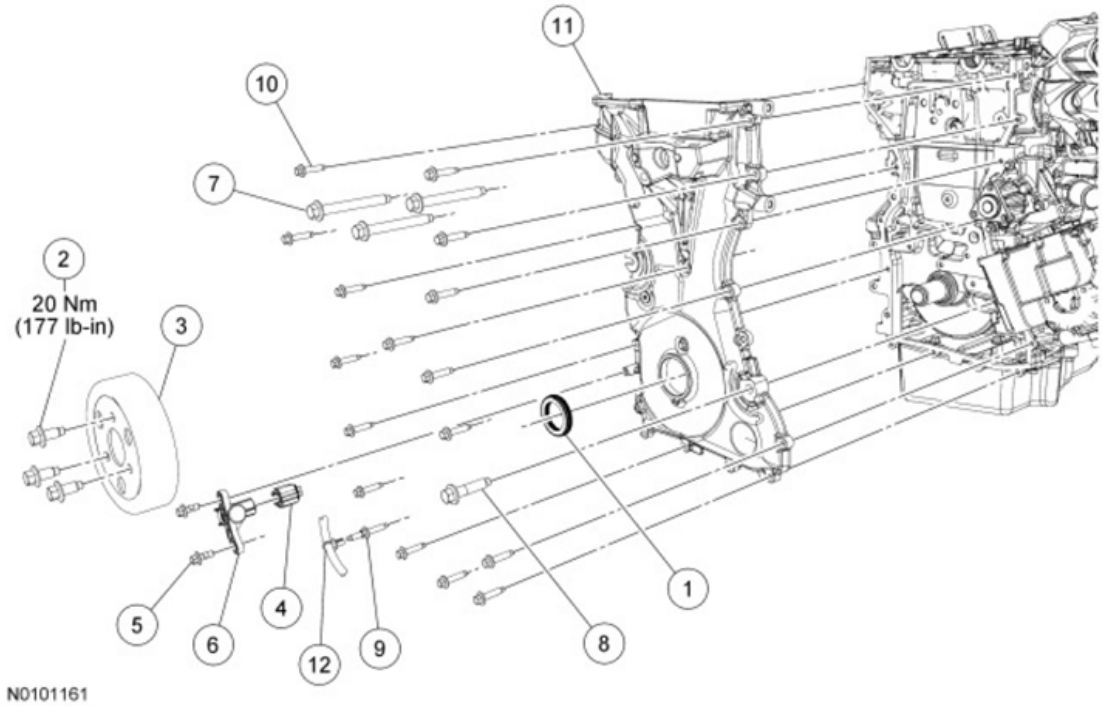

Fig. 55: Exploded View Of Engine Front Cover With Torque Specifications
Courtesy of FORD MOTOR CO.

ITEM DESCRIPTION

Item	Part Number	Description
1	6700	Crankshaft front seal
2	W500221	Coolant pump pulley bolt (3 required)
3	8509	Coolant pump pulley
4	14A464	Crankshaft Position (CKP) sensor electrical connector (part of 12B637)
5	W701219	**CKP** sensor bolt (2 required)
6	6C315	**CKP** sensor
7	W500328	Engine front cover bolt (3 required)
8	W500320	Engine front cover bolt
9	W705310	Engine front cover stud bolt
10	W500215	Engine front cover bolt (16 required)
11	6019	Engine front cover
12	14A163	Transaxle shift cable routing retainer (part of 7E395)

Removal

NOTE: **Do not loosen or remove the crankshaft pulley bolt without first installing the special tools as instructed in this procedure. The crankshaft pulley and the crankshaft timing sprocket are not keyed to the crankshaft. The crankshaft, the**

crankshaft sprocket and the pulley are fitted together by friction, using diamond washers between the flange faces on each part. For that reason, the crankshaft sprocket is also unfastened if the pulley bolt is loosened. Before any repair requiring loosening or removal of the crankshaft pulley bolt, the crankshaft and camshafts must be locked in place by the special service tools, otherwise severe engine damage can occur.

NOTE: **During engine repair procedures, cleanliness is extremely important. Any foreign material (including any material created while cleaning gasket surfaces) that enters the oil passages, coolant passages or the oil pan can cause engine failure.**

1. With the vehicle in NEUTRAL, position it on a hoist. For additional information, refer to **JACKING & LIFTING** article.
2. Remove the accessory drive belt and tensioner. For additional information, refer to **ACCESSORY DRIVE - HYBRID** article.
3. Remove the crankshaft pulley. For additional information refer to **CRANKSHAFT PULLEY** in this service information.
4. Remove the engine mount. For additional information, refer to **ENGINE MOUNT** in this service information.
5. Detach the transaxle selector lever cable fastener from the engine front cover stud bolt.

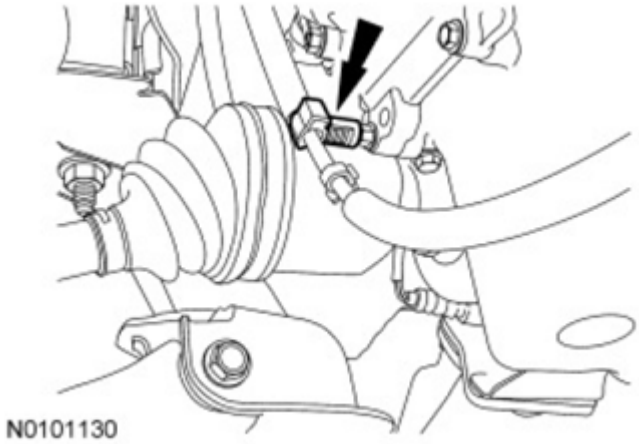

Fig. 56: Locating Transaxle Selector Lever Cable Fastener
Courtesy of FORD MOTOR CO.

NOTE: **Use care not to damage the engine front cover or the crankshaft when removing the seal.**

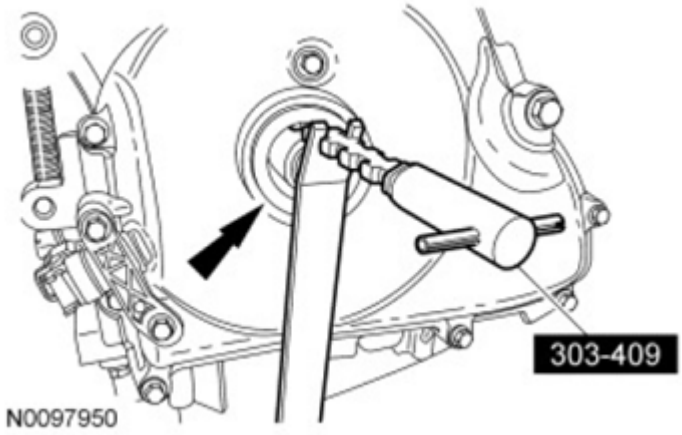

Fig. 57: Removing Crankshaft Front Seal
Courtesy of FORD MOTOR CO.

6. Using the Oil Seal Remover, remove the crankshaft front seal.
7. Remove the 3 bolts and the coolant pump pulley.
8. Disconnect the Crankshaft Position (CKP) sensor electrical connector.
9. Remove the 2 bolts and the **CKP** sensor.

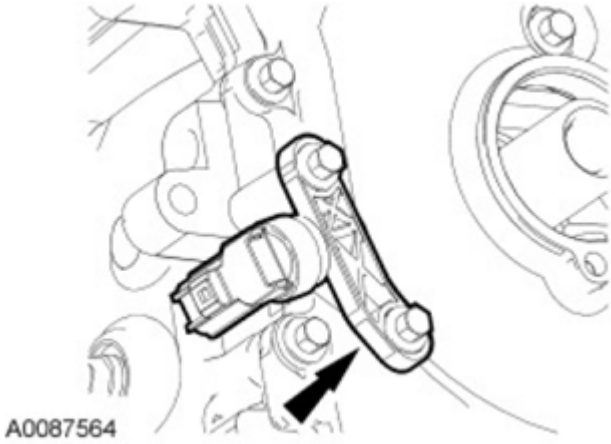

Fig. 58: Locating Bolts And CKP Sensor
Courtesy of FORD MOTOR CO.

10. Remove the bolts and the engine front cover.

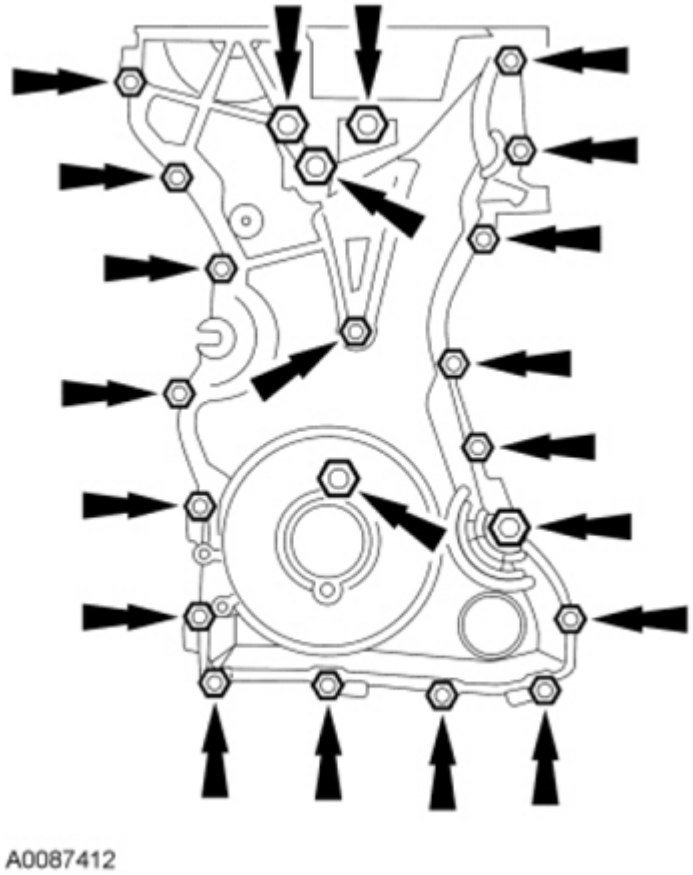

Fig. 59: Locating Engine Front Cover Bolts
Courtesy of FORD MOTOR CO.

Installation

NOTE: **Do not use metal scrapers, wire brushes, power abrasive disks or other abrasive means to clean sealing surfaces. These tools cause scratches and gouges which make leak paths.**

1. Clean and inspect the mounting surfaces of the engine and the front cover.

NOTE: **The engine front cover must be installed and the bolts tightened within 4 minutes of applying the silicone gasket and sealant.**

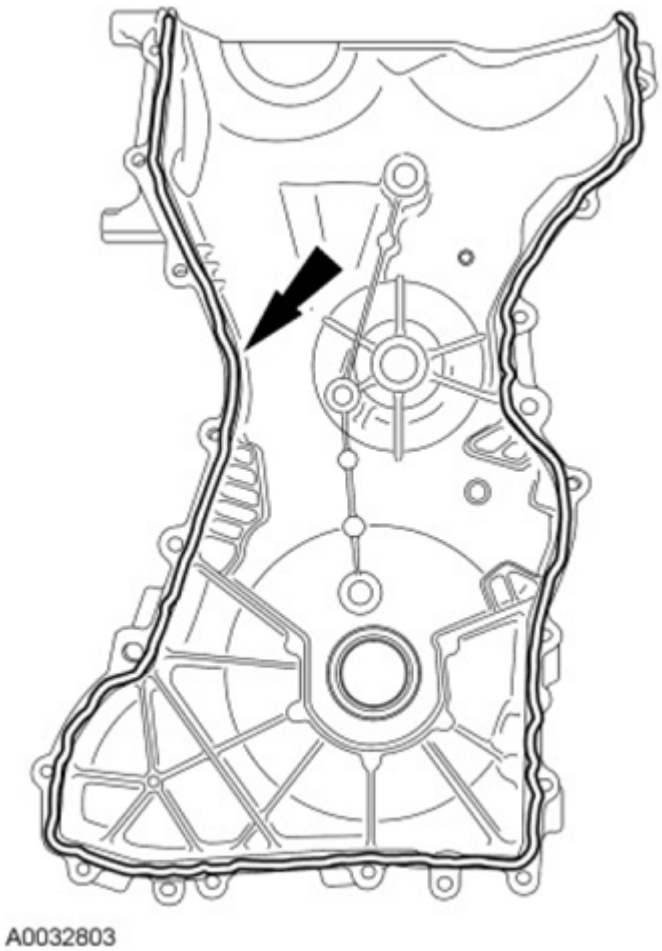

Fig. 60: Applying Silicone Gasket And Sealant On Engine Front Cover
Courtesy of FORD MOTOR CO.

2. Apply a 2.5 mm (0.09 in) bead of silicone gasket and sealant to the cylinder head and oil pan joint areas. Apply a 2.5 mm (0.09 in) bead of silicone gasket and sealant to the front cover.
3. Install the engine front cover. Tighten the bolts in the sequence shown in illustration, to the following specifications:
   - Tighten the 8-mm bolts to 10 Nm (89 lb-in).
   - Tighten the 13-mm bolts to 48 Nm (35 lb-ft).

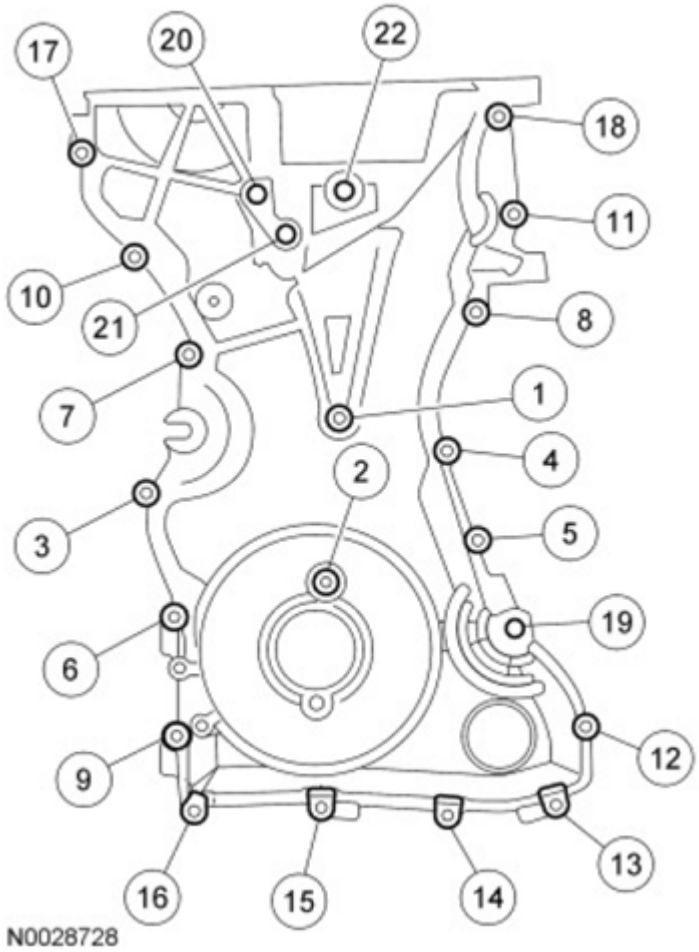

Fig. 61: Identifying Engine Front Cover Bolts Tightening Sequence
Courtesy of FORD MOTOR CO.

NOTE: **Remove the through bolt from the Camshaft Front Oil Seal Installer.**

NOTE: **Lubricate the oil seal with clean engine oil.**

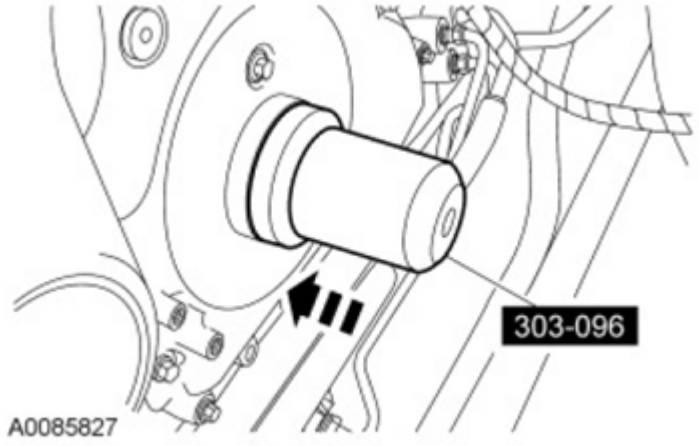

Fig. 62: Installing Crankshaft Front Oil Seal
Courtesy of FORD MOTOR CO.

4. Using the Camshaft Front Oil Seal Installer, install the crankshaft front seal.
5. Install the coolant pump pulley and the 3 bolts.
   - Tighten to 20 Nm (177 lb-in).
6. Attach the transaxle selector lever cable fastener to the engine front cover stud bolt.

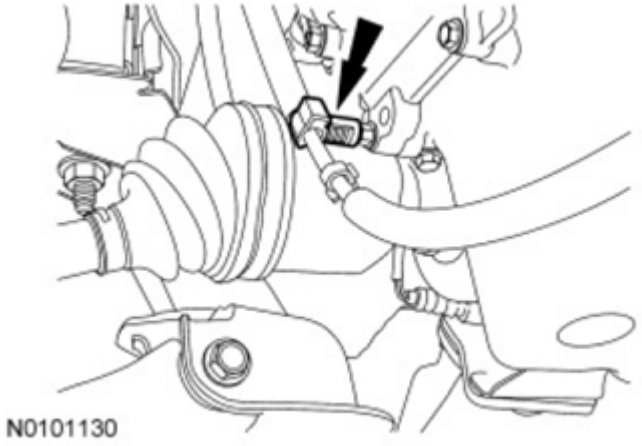

Fig. 63: Locating Transaxle Selector Lever Cable Fastener
Courtesy of FORD MOTOR CO.

7. Install the engine mount. For additional information, refer to **ENGINE MOUNT** in this service information.
8. Install the crankshaft pulley. For additional information, refer to **CRANKSHAFT PULLEY** in this service information.

NOTE: Only hand-tighten the bolt or damage to the front cover can occur.

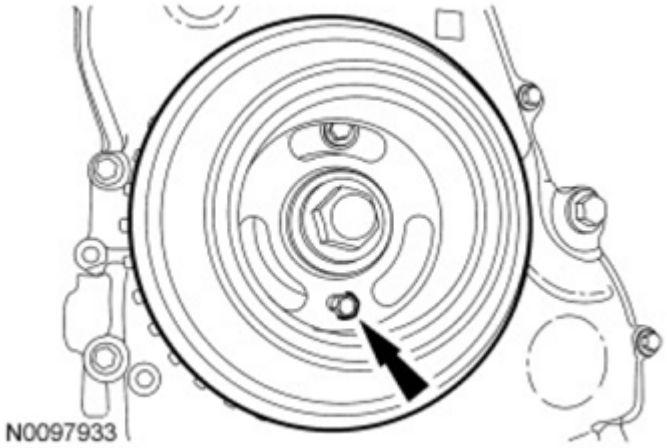

Fig. 64: Locating Crankshaft Pulley Bolt
Courtesy of FORD MOTOR CO.

9. Install a standard 6 mm (0.23 in) x 18 mm (0.7 in) bolt through the crankshaft pulley and thread it into the front cover.
10. Install the **CKP** sensor and the 2 bolts.
    - Do not tighten the bolts at this time.

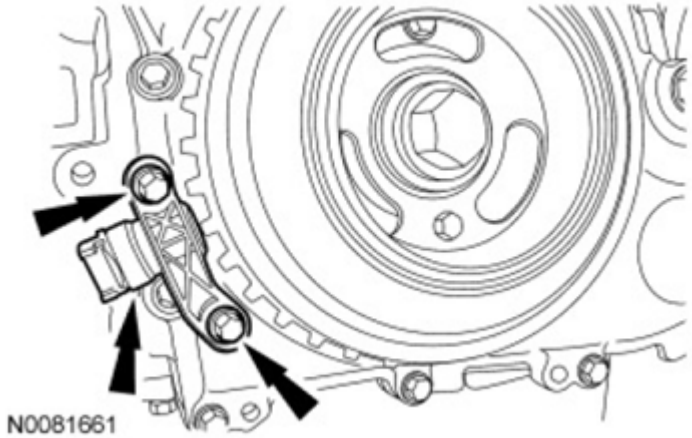

Fig. 65: Locating CKP Sensor And Bolts
Courtesy of FORD MOTOR CO.

11. Using the Crankshaft Sensor Aligner, adjust the **CKP** sensor.
    - Tighten the 2 **CKP** bolts to 7 Nm (62 lb-in).

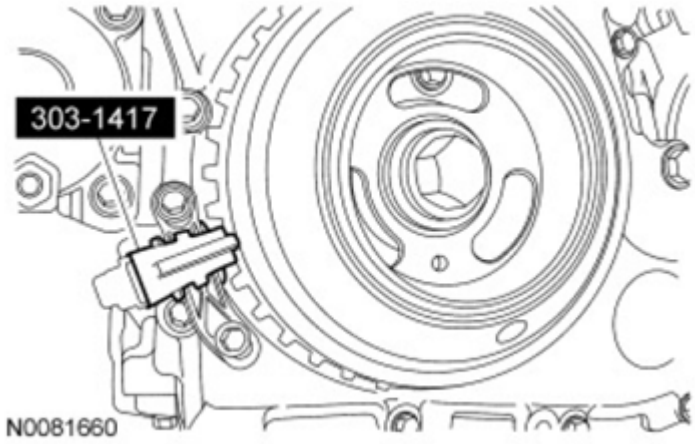

Fig. 66: Identifying Crankshaft Sensor Aligner
Courtesy of FORD MOTOR CO.

12. Connect the **CKP** sensor electrical connector.
13. Remove the 6 mm x 18 mm bolt.

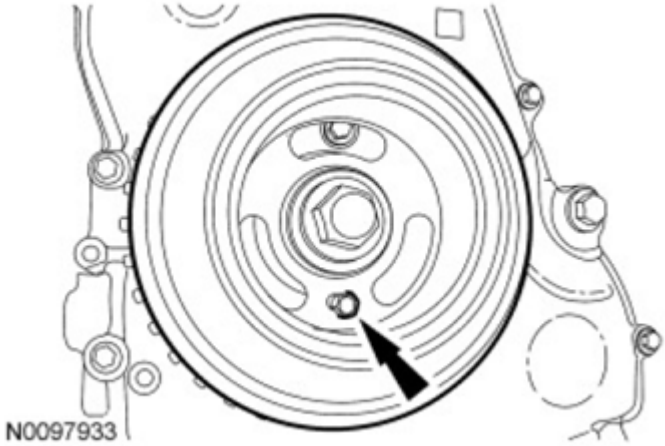

Fig. 67: Locating Crankshaft Pulley Bolt
Courtesy of FORD MOTOR CO.

14. Install the accessory drive belt and tensioner. For additional information, refer to **ACCESSORY DRIVE - HYBRID** article.

TIMING DRIVE COMPONENTS

Removal

NOTE: **Do not loosen or remove the crankshaft pulley bolt without first installing the special tools as instructed in this procedure. The crankshaft pulley and the crankshaft timing sprocket are not keyed to the crankshaft. The crankshaft, the**

crankshaft sprocket and the pulley are fitted together by friction, using diamond washers between the flange faces on each part. For that reason, the crankshaft sprocket is also unfastened if the pulley bolt is loosened. Before any repair requiring loosening or removal of the crankshaft pulley bolt, the crankshaft and camshafts must be locked in place by the special service tools or severe engine damage can occur.

NOTE: **During engine repair procedures, cleanliness is extremely important. Any foreign material, including any material created while cleaning gasket surfaces, that enters the oil passages, coolant passages or the oil pan can cause engine failure.**

1. With the vehicle in NEUTRAL, position it on a hoist. For additional information, refer to **JACKING & LIFTING** article.
2. Remove the engine front cover. For additional information, refer to **ENGINE FRONT COVER** in this service information.
3. Compress the timing chain tensioner in the following sequence.
   1. Using a small pick, release and hold the ratchet mechanism.
   2. While holding the ratchet mechanism in the released position, compress the tensioner by pushing the timing chain arm toward the tensioner.
   3. Insert a paper clip into the hole to retain the tensioner.

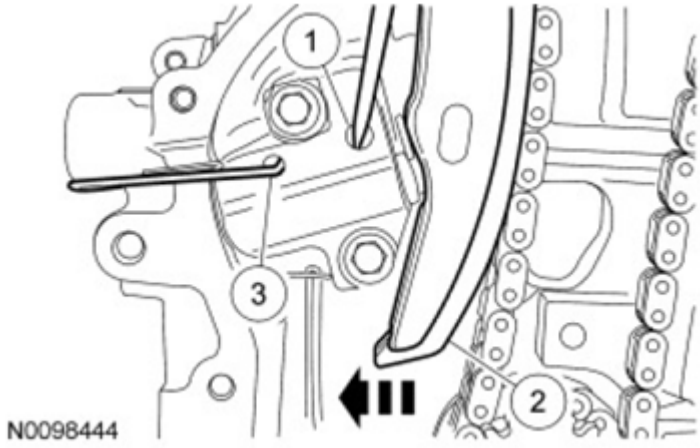

Fig. 68: Compressing Timing Chain Tensioner Sequence
Courtesy of FORD MOTOR CO.

4. Remove the 2 bolts and timing chain tensioner.

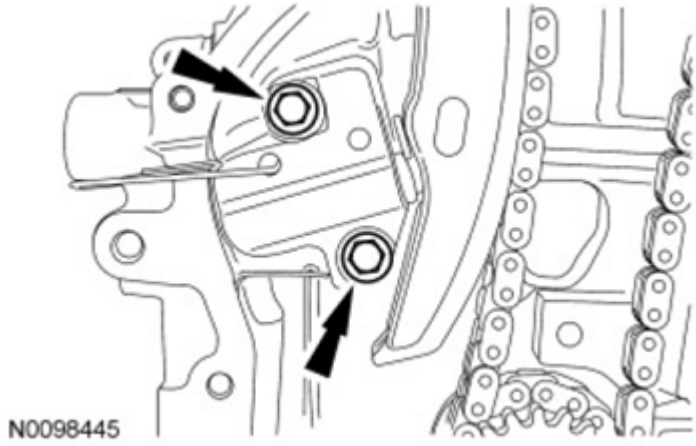

Fig. 69: Locating Timing Chain Tensioner Bolts
Courtesy of FORD MOTOR CO.

5. Remove the timing chain tensioner arm.

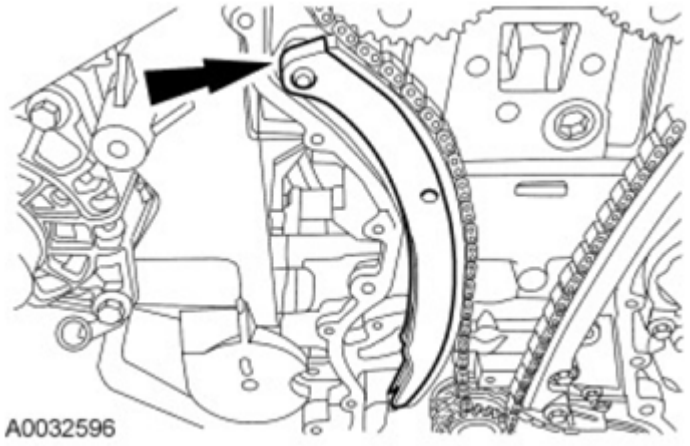

Fig. 70: Locating Timing Chain Tensioner Arm
Courtesy of FORD MOTOR CO.

6. Remove the timing chain.

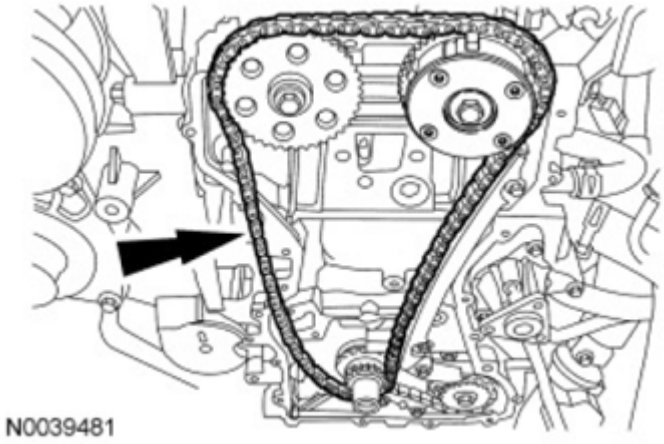

Fig. 71: Locating Timing Chain
Courtesy of FORD MOTOR CO.

7. Remove the 2 bolts and the timing chain guide.

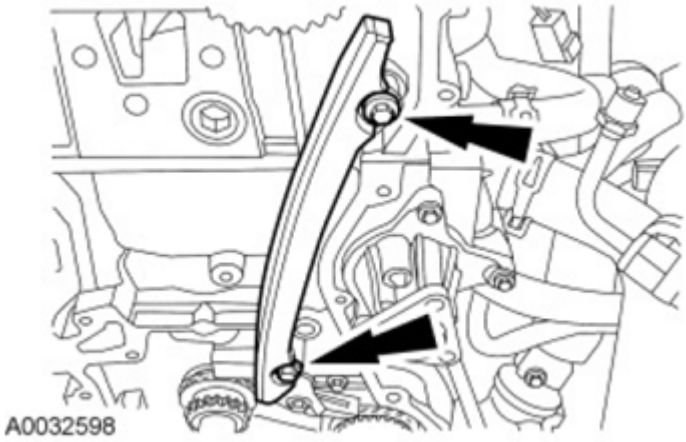

Fig. 72: Locating Timing Chain Guide Bolts
Courtesy of FORD MOTOR CO.

NOTE: **The Camshaft Alignment Plate is for camshaft alignment only. Using this tool to prevent engine rotation can result in engine damage.**

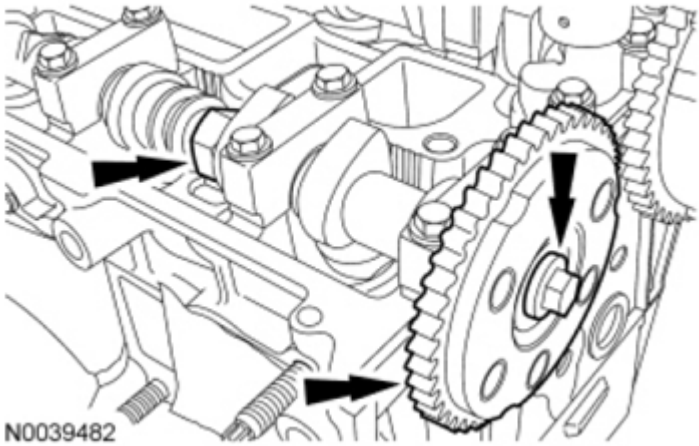

Fig. 73: Locating Bolt And Exhaust Camshaft Sprocket
Courtesy of FORD MOTOR CO.

8. Using the flats on the camshaft to prevent camshaft rotation, remove the bolt and the exhaust camshaft sprocket.

NOTE: The Camshaft Alignment Plate is for camshaft alignment only. Using this tool to prevent engine rotation can result in engine damage.

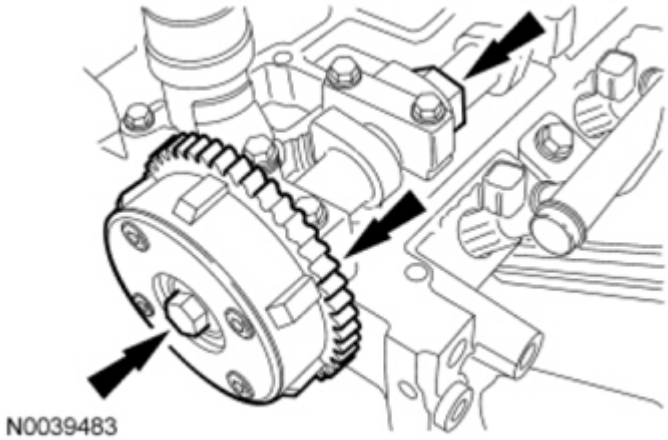

Fig. 74: Locating Bolt And Camshaft Phaser And Sprocket
Courtesy of FORD MOTOR CO.

9. Using the flats on the camshaft to prevent camshaft rotation, remove the bolt and the camshaft phaser and sprocket.

Installation

1. Install the camshaft sprockets and the bolts. Do not tighten the bolts at this time.

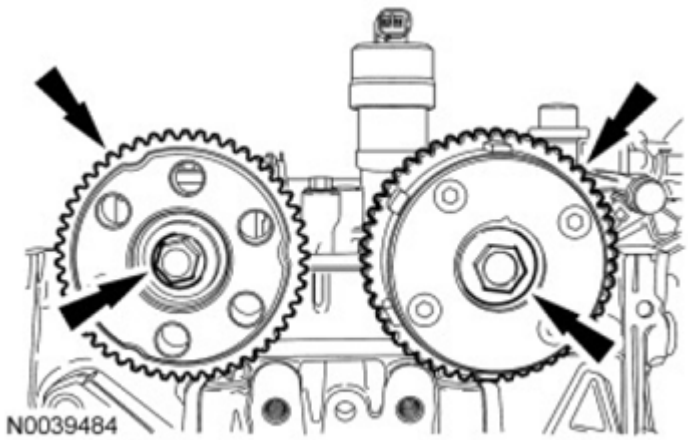

Fig. 75: Locating Camshaft Sprockets And Bolts
Courtesy of FORD MOTOR CO.

2. Install the timing chain guide and the 2 bolts.
   - To install, tighten to 10 Nm (89 lb-in).

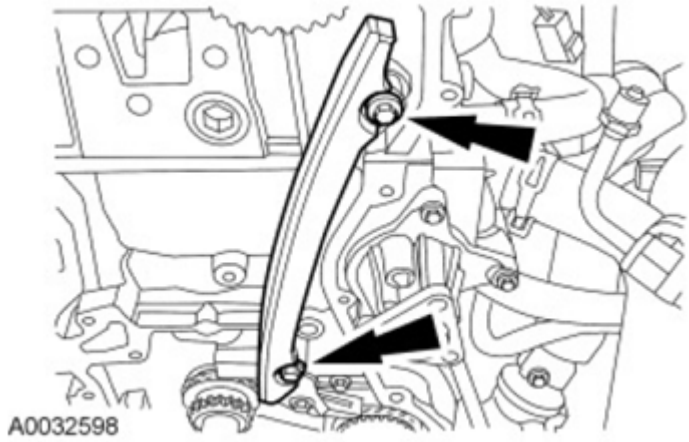

Fig. 76: Locating Timing Chain Guide Bolts
Courtesy of FORD MOTOR CO.

3. Install the timing chain.

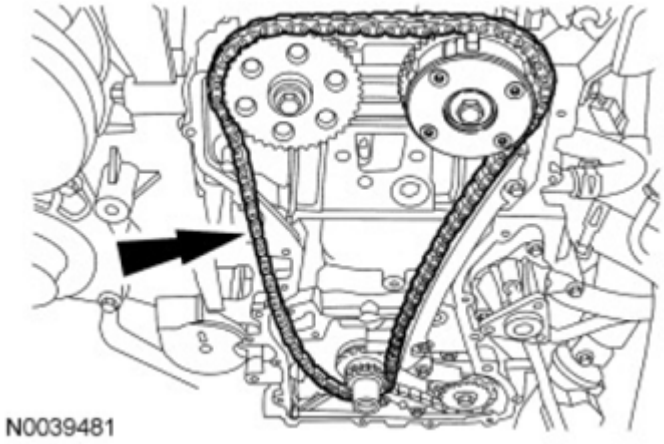

Fig. 77: Locating Timing Chain
Courtesy of FORD MOTOR CO.

4. Install the timing chain tensioner arm.

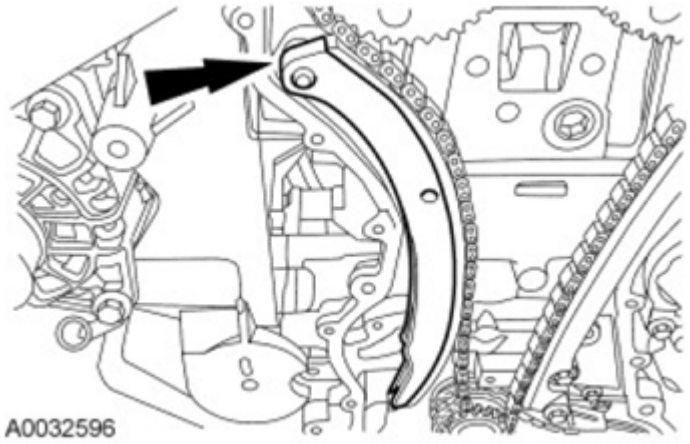

Fig. 78: Locating Timing Chain Tensioner Arm
Courtesy of FORD MOTOR CO.

NOTE: **If the timing chain tensioner plunger and ratchet assembly are not pinned in the compressed position, follow the next 4 steps.**

NOTE: **Do not compress the ratchet assembly. This will damage the ratchet assembly.**

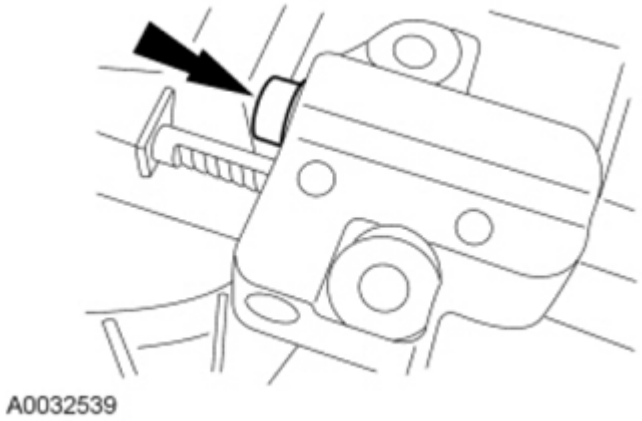

Fig. 79: Compressing Timing Chain Tensioner Plunger
Courtesy of FORD MOTOR CO.

5. Using the edge of a vise, compress the timing chain tensioner plunger.
6. Using a small pick, push back and hold the ratchet mechanism.

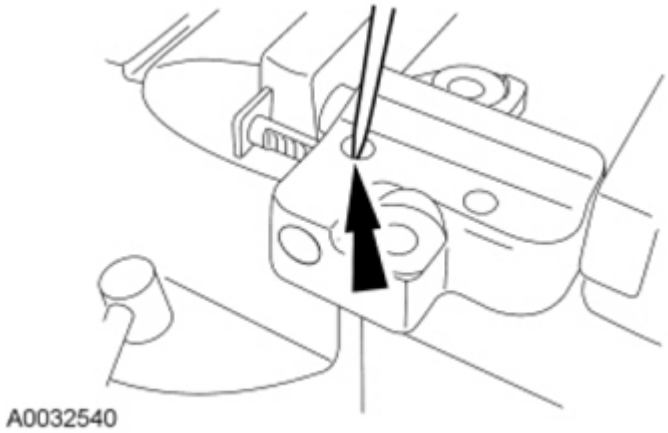

Fig. 80: Holding Ratchet Mechanism Using Small Pick
Courtesy of FORD MOTOR CO.

7. While holding the ratchet mechanism, push the ratchet arm back into the tensioner housing.

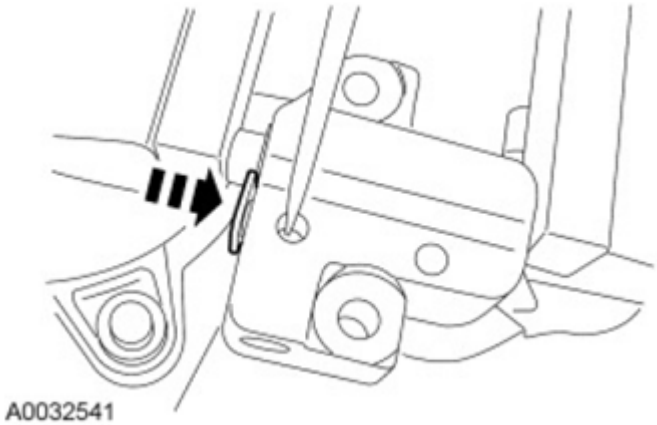

Fig. 81: Pushing Ratchet Arm Back Into Tensioner Housing
Courtesy of FORD MOTOR CO.

8. Install a paper clip into the hole in the tensioner housing to hold the ratchet assembly and the plunger in during installation.

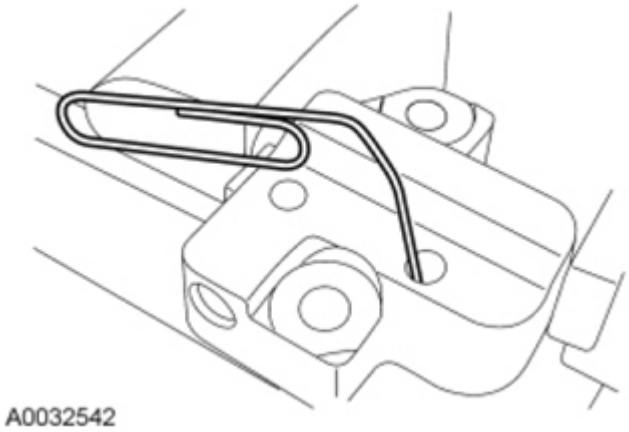

Fig. 82: Installing Paper Clip Into Hole In Tensioner Housing
Courtesy of FORD MOTOR CO.

9. Install the timing chain tensioner and the 2 bolts. Remove the paper clip to release the piston.
   - Tighten to 10 Nm (89 lb-in).

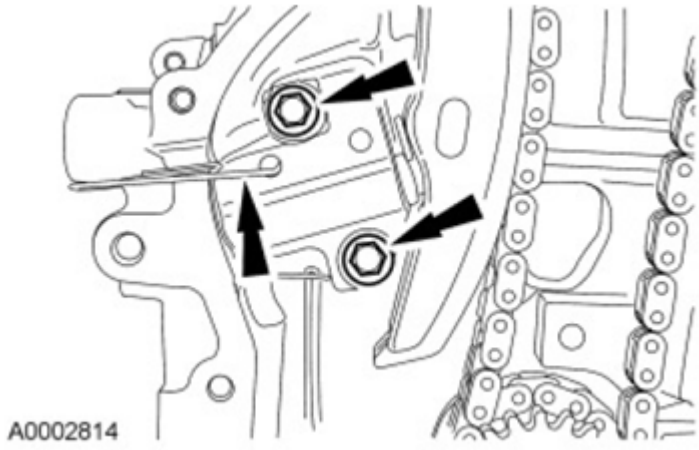

Fig. 83: Locating Timing Chain Tensioner And Bolts
Courtesy of FORD MOTOR CO.

NOTE: The Camshaft Alignment Plate is for camshaft alignment only. Using this tool to prevent engine rotation can result in engine damage.

10. Using the flats on the camshafts to prevent camshaft rotation, tighten the bolts.
    - Tighten to 72 Nm (53 lb-ft).

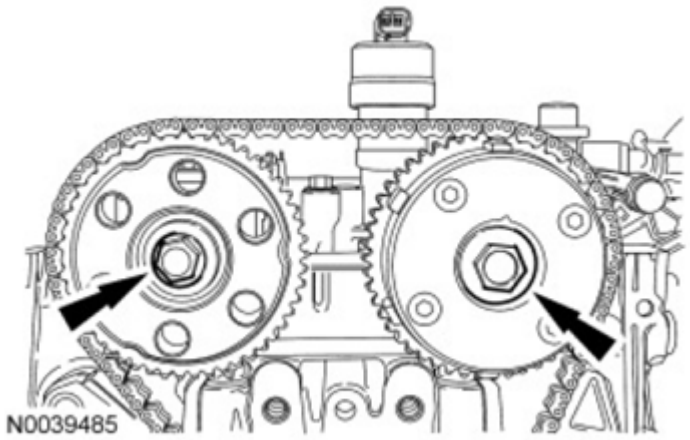

Fig. 84: Locating Camshaft Bolts
Courtesy of FORD MOTOR CO.

11. Install the engine front cover. For additional information, refer to **ENGINE FRONT COVER** in this service information.

VARIABLE CAMSHAFT TIMING (VCT) SYSTEM OIL FILTER

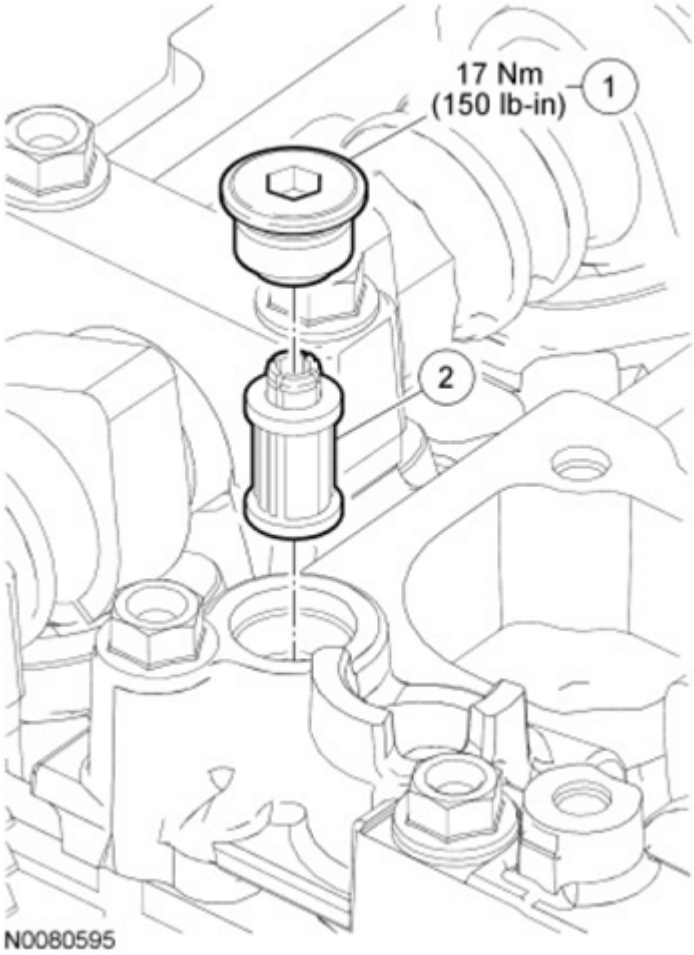

Fig. 85: Identifying Variable Camshaft Timing System Oil Filter With Torque Specifications
Courtesy of FORD MOTOR CO.

ITEM DESCRIPTION

Item	Part Number	Description
1	W710451	Plug
2	6731	Variable Camshaft Timing (VCT) system oil filter

Removal and Installation

1. Remove the Variable Camshaft Timing (VCT) solenoid. For additional information, refer to **ELECTRONIC ENGINE CONTROLS - HYBRID** article.
2. Remove the plug and the **VCT** system oil filter from the intake camshaft thrust cap.
   - To install, tighten to 17 Nm (150 lb-in).
3. To install, reverse the removal procedure.

CAMSHAFTS

Special Tool(s)

SPECIAL TOOLS

	Alignment Plate, Camshaft 303-465 (T94P-6256-CH)
	Timing Peg, Crankshaft TDC 303-507

Material Specifications

MATERIAL SPECIFICATIONS

Item	Specification
Motorcraft® SAE 5W-20 Premium Synthetic Blend Motor Oil (US); Motorcraft® SAE 5W-20 Super Premium Motor Oil (Canada)	WSS-M2C945-A

XO-5W20-QSP (US); CXO-5W20-LSP12 (Canada)	
Silicone Gasket and Sealant TA-30	WSE-M4G323-A4

Removal

NOTE: During engine repair procedures, cleanliness is extremely important. Any foreign material (including any material created while cleaning gasket surfaces) that enters the oil passages, coolant passages or the oil pan can cause engine failure.

NOTE: Do not rotate the camshafts unless instructed to in this procedure. Rotating the camshafts or crankshaft with timing components loosened or removed can cause serious damage to the valves and pistons.

1. With the vehicle in NEUTRAL, position it on a hoist. For additional information, refer to **JACKING & LIFTING** article.
2. Disconnect the battery ground cable. For additional information, refer to **BATTERY, BATTERY MOUNTING SYSTEM & BATTERY CABLES** article.

   NOTE: Before removing the high voltage cables, the vehicle electrical system must be completely shut down for at least 5 minutes to allow for the high voltage capacitors to discharge.

3. Depower the vehicle High Voltage Traction Battery (HVTB) electrical system. For additional information, refer to **HIGH VOLTAGE TRACTION BATTERY** article.
4. Remove the degas bottle. For additional information, refer to **ENGINE COOLING - HYBRID** article.
5. Remove the DC/DC converter. For additional information, refer to **HIGH VOLTAGE CONVERTER/INVERTER** article.
6. Remove the Variable Camshaft Timing (VCT) oil control solenoid. For additional information, refer to **ELECTRONIC ENGINE CONTROLS - HYBRID** article.
7. Check the valve clearance. For additional information, refer to **VALVE CLEARANCE CHECK** in this service information.
8. Remove the RF wheel and tire. For additional information, refer to **TIRES & WHEELS** article.
9. Remove the accessory drive belt. For additional information, refer to **ACCESSORY DRIVE - HYBRID** article.

   NOTE: Failure to position the No. 1 piston at Top Dead Center (TDC) can result in damage to the engine. Turn the engine in the normal direction of rotation only.

10. Using the crankshaft pulley bolt, turn the crankshaft clockwise to position the No. 1 piston at Top Dead Center (TDC).
    - The hole in the crankshaft pulley should be in the 6 o'clock position.

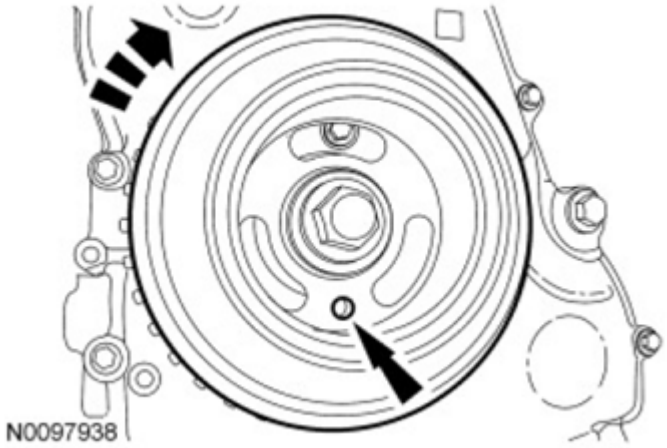

Fig. 86: Locating Crankshaft Pulley Hole
Courtesy of FORD MOTOR CO.

NOTE: **The Camshaft Alignment Plate 303-465 is for camshaft alignment only. Using this tool to prevent engine rotation can result in engine damage.**

NOTE: **The camshaft timing slots are offset. If the Camshaft Alignment Plate cannot be installed, rotate the crankshaft one complete revolution clockwise to correctly position the camshafts.**

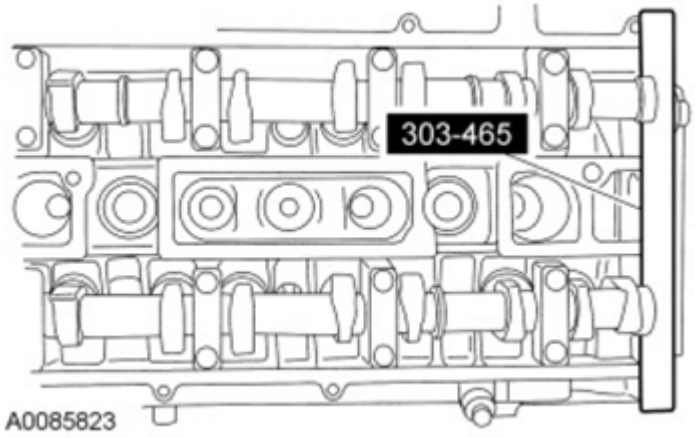

Fig. 87: Identifying Camshaft Alignment Plate
Courtesy of FORD MOTOR CO.

11. Install the Camshaft Alignment Plate in the slots on the rear of both camshafts.
12. Remove the engine plug bolt.

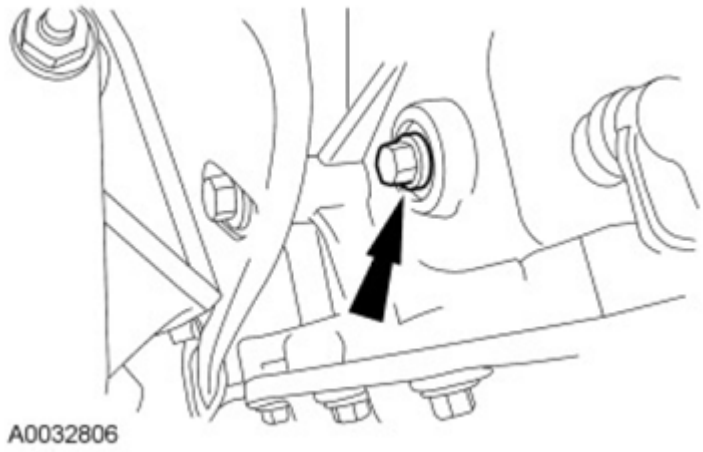

Fig. 88: Locating Engine Plug Bolt
Courtesy of FORD MOTOR CO.

NOTE: **The Crankshaft TDC Timing Peg will contact the crankshaft and prevent it from turning past TDC . However, the crankshaft can still be rotated in the counterclockwise direction. The crankshaft must remain at the TDC position during the camshaft removal and installation.**

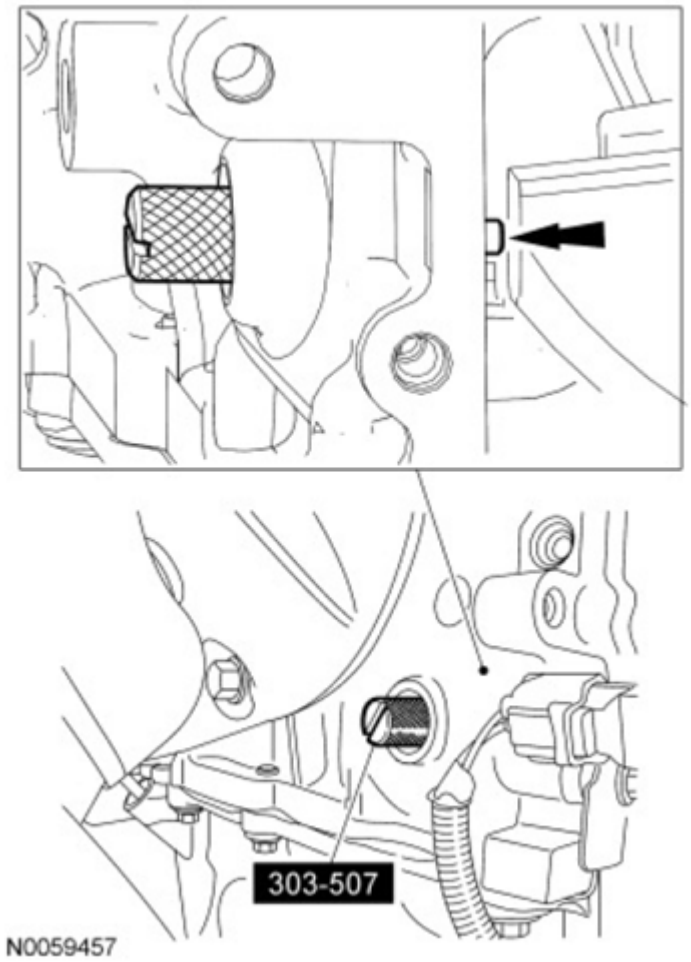

Fig. 89: Remove/Install Crankshaft TDC Timing Peg
Courtesy of FORD MOTOR CO.

13. Install the Crankshaft **TDC** Timing Peg and turn the crankshaft clockwise until the crankshaft contacts the Crankshaft **TDC** Timing Peg.

NOTE: Only hand-tighten the bolt or damage to the front cover can occur.

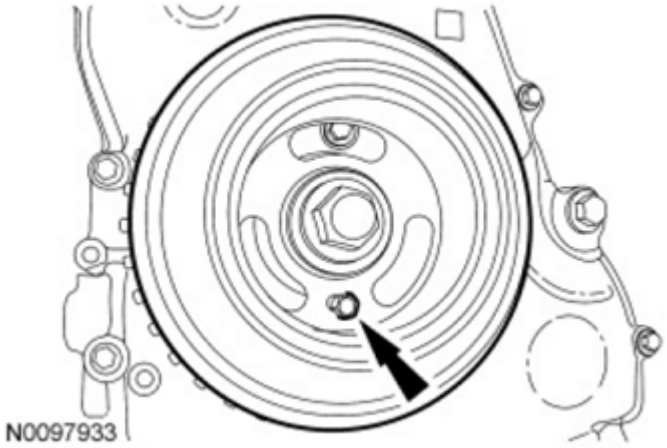

Fig. 90: Locating Crankshaft Pulley Bolt
Courtesy of FORD MOTOR CO.

14. Install a standard 6 mm x 18 mm bolt through the crankshaft pulley and thread it into the front cover.
15. Remove the lower front cover timing hole plug from the engine front cover.

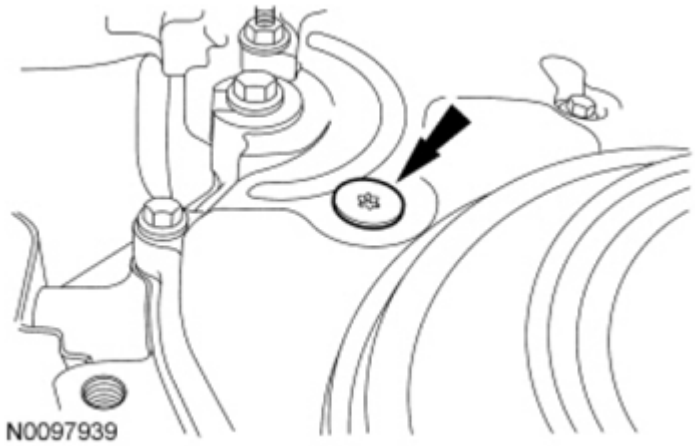

Fig. 91: Locating Lower Front Cover Timing Hole Plug
Courtesy of FORD MOTOR CO.

16. Remove the upper front cover timing hole plug from the engine front cover.

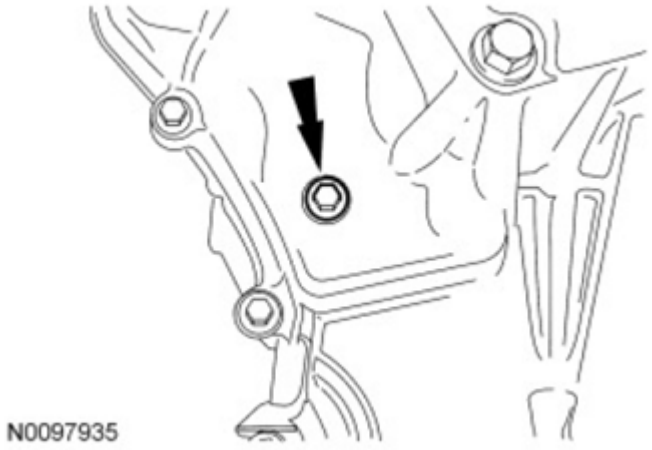

Fig. 92: Locating Upper Front Cover Timing Hole Plug
Courtesy of FORD MOTOR CO.

17. Reposition the Camshaft Alignment Plate to the slot on the rear of the intake camshaft only.

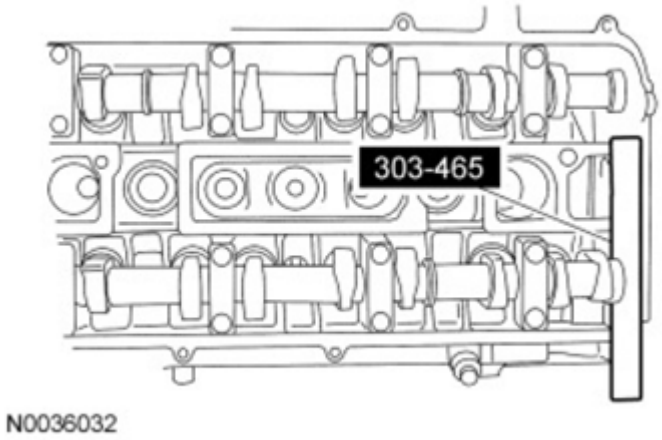

Fig. 93: Identifying Camshaft Alignment Plate
Courtesy of FORD MOTOR CO.

NOTE: **Releasing the ratcheting mechanism in the timing chain tensioner allows the plunger to collapse and create slack in the timing chain. Installing an M6 x 30 mm (1.18 in) bolt into the upper front cover timing hole will hold the tensioner arm in a retracted position and allow enough slack in the timing chain for removal of the exhaust camshaft gear.**

18. Using a small pick tool, unlock the chain tensioner ratchet through the lower front cover timing hole.
    - Using the flats of the camshaft, have an assistant rotate the exhaust camshaft clockwise to collapse the timing chain tensioner plunger.
    - Insert an M6 x 30 mm (1.18 in) bolt into the upper front cover timing hole to hold the tensioner arm in the retracted position.

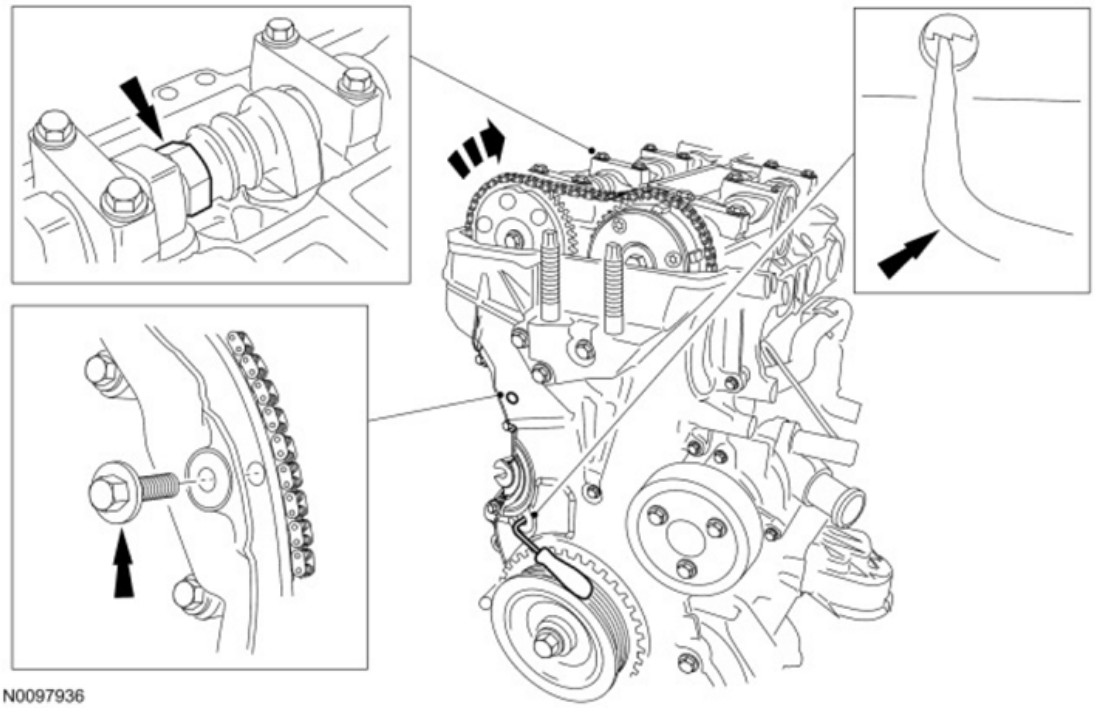

Fig. 94: Rotating Exhaust Camshaft Clockwise To Collapse Timing Chain Tensioner Plunger
Courtesy of FORD MOTOR CO.

19. Remove the Camshaft Alignment Plate.

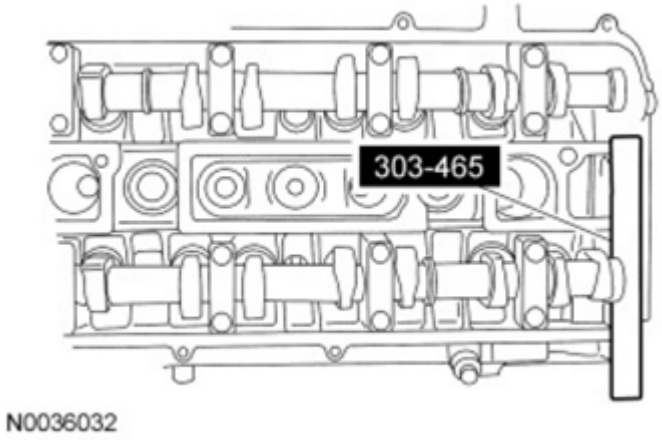

Fig. 95: Identifying Camshaft Alignment Plate
Courtesy of FORD MOTOR CO.

20. Using the flats on the camshaft to prevent camshaft rotation, remove the bolt and exhaust camshaft drive gear.

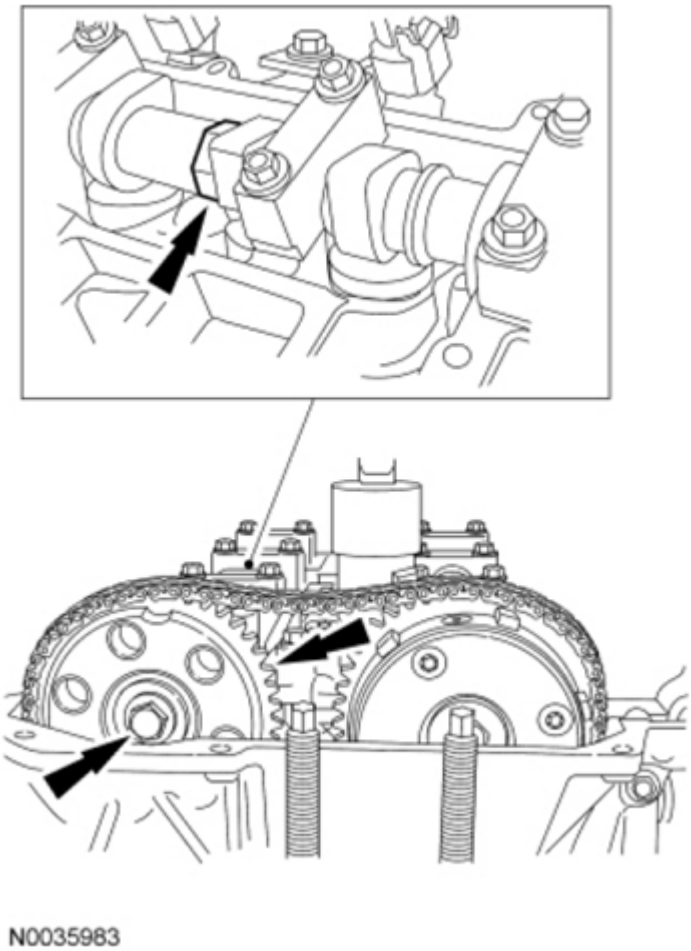

Fig. 96: Locating Flats On Camshaft To Prevent Camshaft Rotation
Courtesy of FORD MOTOR CO.

21. Remove the timing chain from the camshaft phaser and sprocket.

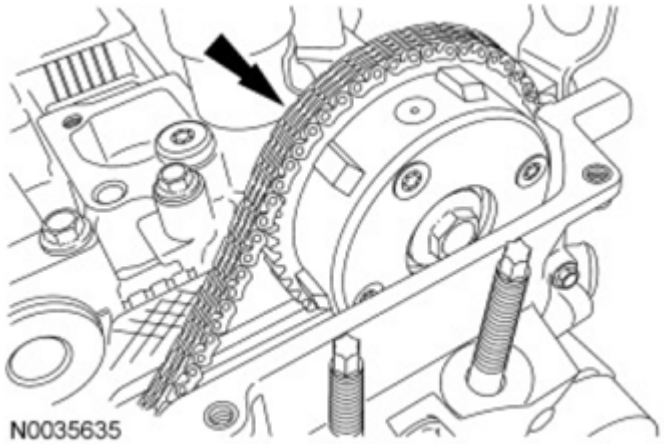

Fig. 97: Locating Timing Chain On Camshaft Phaser And Sprocket

Courtesy of FORD MOTOR CO.

22. Mark the position of the camshaft lobes on the No. 1 cylinder for installation reference.

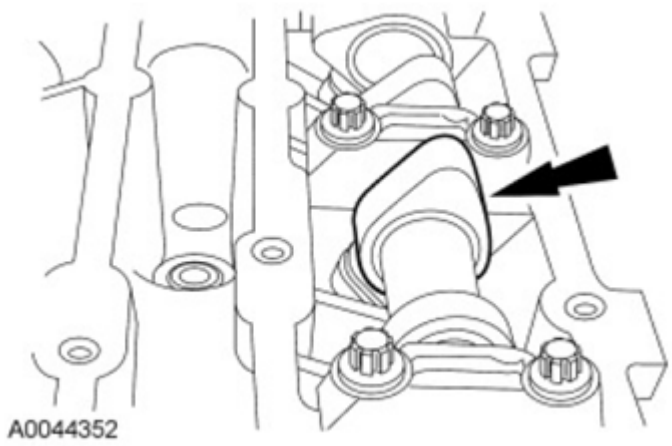

Fig. 98: Locating Camshaft Lobes
Courtesy of FORD MOTOR CO.

NOTE: Failure to follow the camshaft loosening procedure can result in damage to the camshafts.

NOTE: Mark the location and orientation of each camshaft bearing cap.

23. Remove the camshafts from the engine.
    - Loosen the camshaft bearing cap bolts, in sequence, one turn at a time until all tension is released from the camshaft bearing caps.
    - Remove the bolts and the camshaft bearing caps.
    - Remove the camshafts.

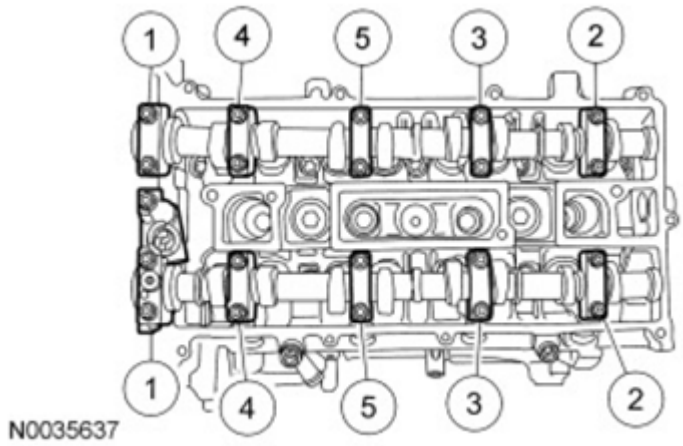

Fig. 99: Identifying Camshaft Bearing Cap Bolts Loosening Sequence

Courtesy of FORD MOTOR CO.

24. If removal of the camshaft phaser and sprocket is necessary, mark the sprocket and camshaft for reference during installation.
    - If necessary, place the camshaft in a soft-jawed vise. Remove the bolt and the camshaft phaser and sprocket.

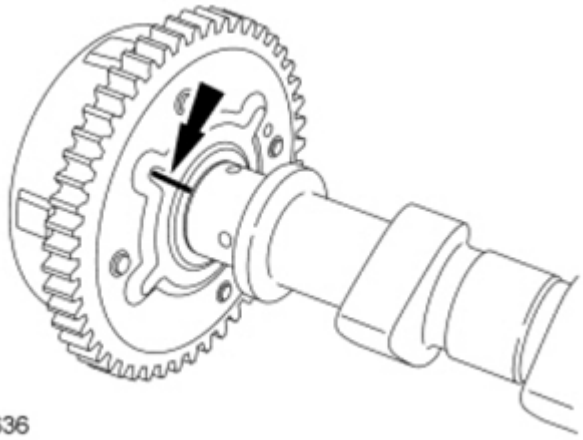

Fig. 100: Locating Sprocket And Camshaft Reference Mark
Courtesy of FORD MOTOR CO.

Installation

NOTE: If new parts are installed, transfer the reference marks made during disassembly to the new parts.

1. If necessary, position the camshaft in a soft-jawed vise and install the camshaft phaser and sprocket and the bolt.
    - Align the reference marks on the camshaft phaser and sprocket and the camshaft. Tighten the bolt to 72 Nm (53 lb-ft).

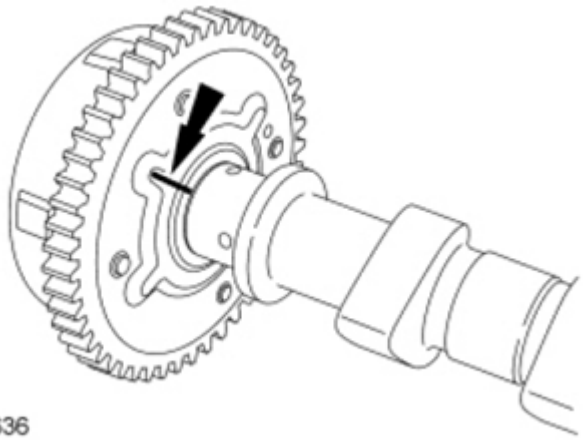

Fig. 101: Locating Sprocket And Camshaft Reference Mark
Courtesy of FORD MOTOR CO.

NOTE: Install the camshafts with the alignment slots in the camshafts lined up so the Camshaft Alignment Plate can be installed without rotating the camshafts. Make sure the lobes on the No. 1 cylinder are in the same position as noted in the removal procedure. Rotating the camshafts when the timing chain is removed, or installing the camshafts 180 degrees out of position can cause severe damage to the valves and pistons.

NOTE: Lubricate the camshaft journals and bearing caps with clean engine oil.

2. Install the camshafts and bearing caps in their original location and orientation. Tighten the bearing caps in the sequence shown in 3 stages:
   - Stage 1: Tighten the camshaft bearing cap bolts one turn at a time, until finger-tight.
   - Stage 2: Tighten to 7 Nm (62 lb-in).
   - Stage 3: Tighten to 16 Nm (142 lb-in).

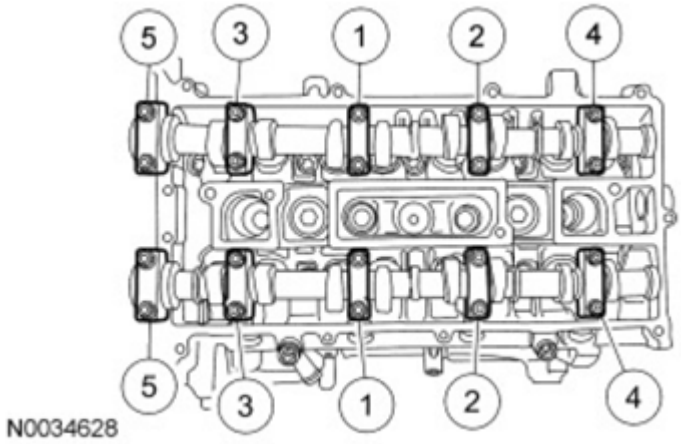

Fig. 102: Identifying Camshaft Bearing Cap Bolts Tightening Sequence
Courtesy of FORD MOTOR CO.

3. Install the Camshaft Alignment Plate.

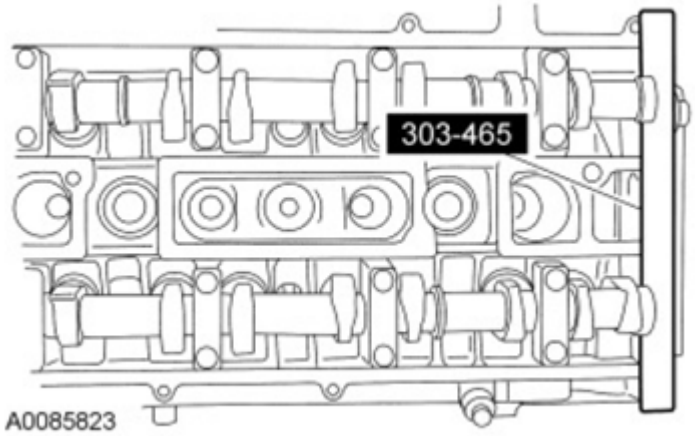

Fig. 103: Identifying Camshaft Alignment Plate
Courtesy of FORD MOTOR CO.

4. Install the timing chain on the camshaft phaser and sprocket.

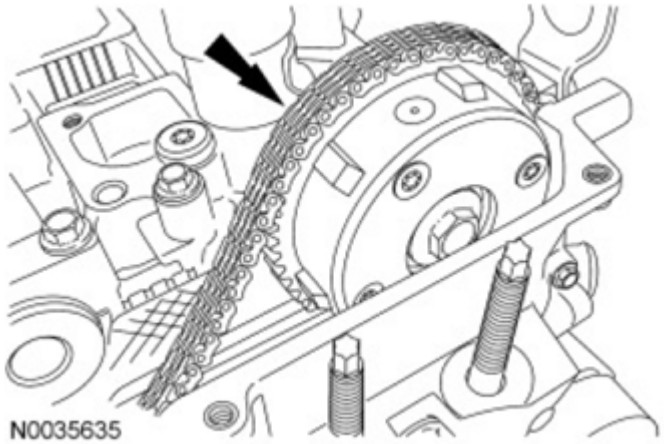

Fig. 104: Locating Timing Chain On Camshaft Phaser And Sprocket
Courtesy of FORD MOTOR CO.

NOTE: The timing chain must be correctly engaged on the teeth of the crankshaft timing sprocket and the intake camshaft drive gear in order to install the exhaust camshaft drive gear onto the exhaust camshaft.

5. Position the exhaust camshaft drive gear in the timing chain and install the gear and bolt on the exhaust camshaft.
   - Hand-tighten the bolt.

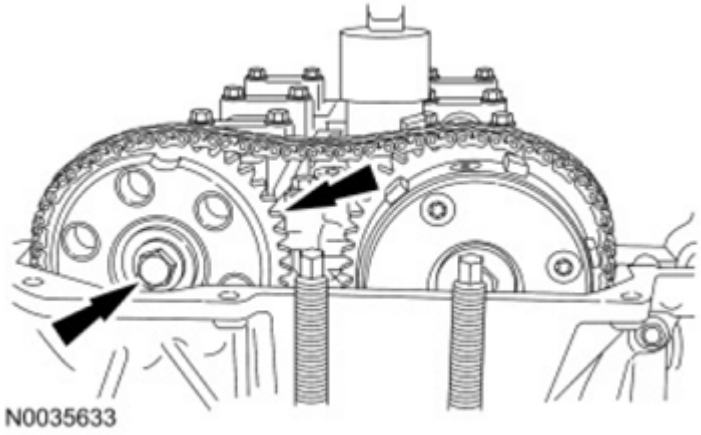

Fig. 105: Locating Exhaust Camshaft Drive Gear And Bolt
Courtesy of FORD MOTOR CO.

NOTE: Releasing the tensioner arm will remove the slack from the timing chain release.

6. Remove the M6 x 30 mm bolt from the upper front cover timing hole to release the tensioner arm.

NOTE: The Camshaft Alignment Plate 303-465 is for camshaft alignment only. Using this tool to prevent engine rotation can result in engine damage.

7. Using the flats on the camshaft to prevent camshaft rotation, tighten the bolt.
   - Tighten to 72 Nm (53 lb-ft).

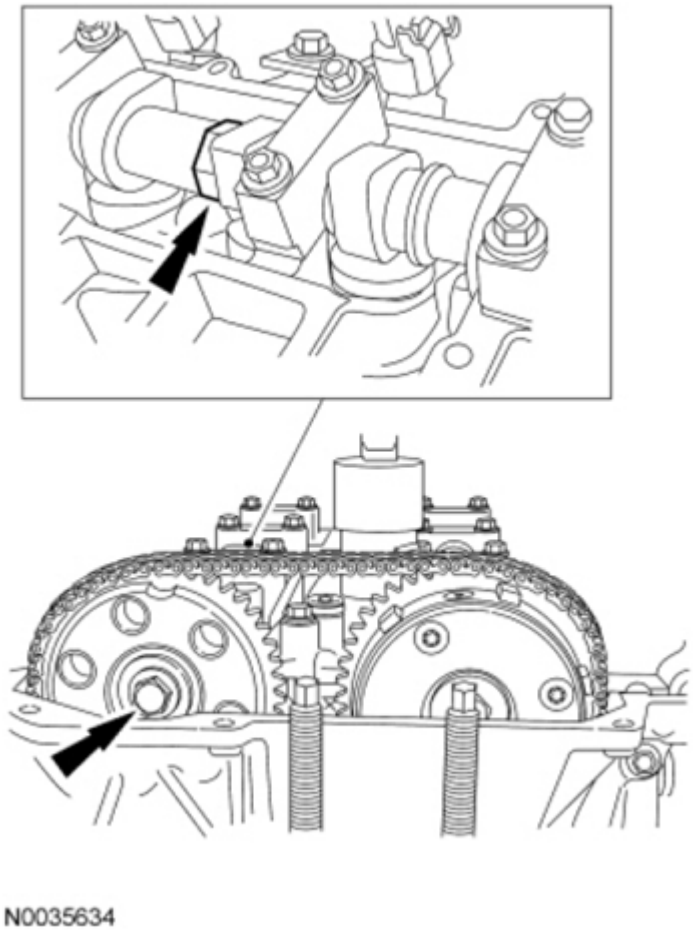

Fig. 106: Locating Flats On Camshaft And Bolt
Courtesy of FORD MOTOR CO.

8. Remove the Camshaft Alignment Plate.

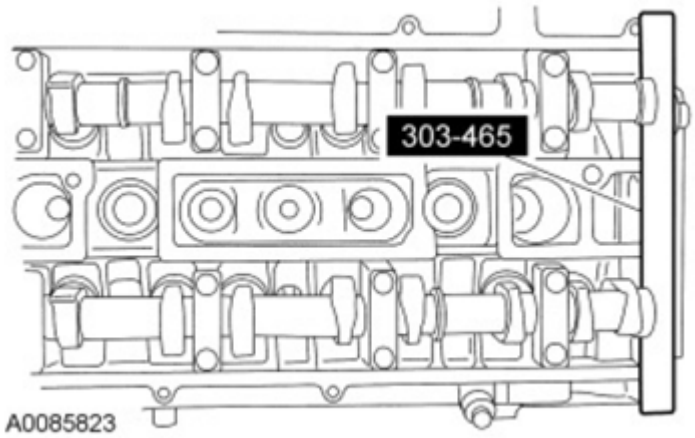

Fig. 107: Identifying Camshaft Alignment Plate
Courtesy of FORD MOTOR CO.

9. Remove the 6 mm x 18 mm bolt.

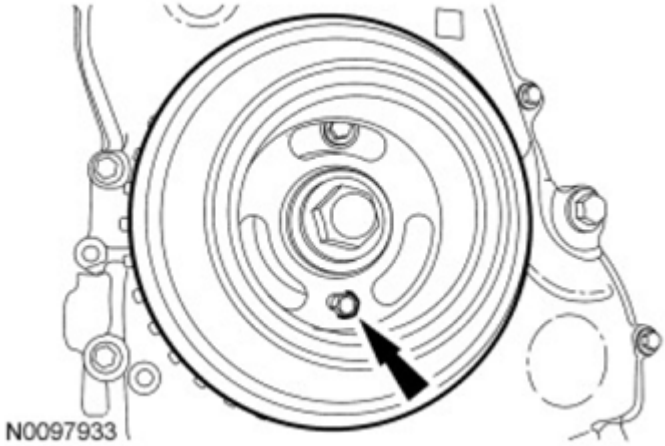

Fig. 108: Locating Crankshaft Pulley Bolt
Courtesy of FORD MOTOR CO.

10. Remove the Crankshaft **TDC** Timing Peg.

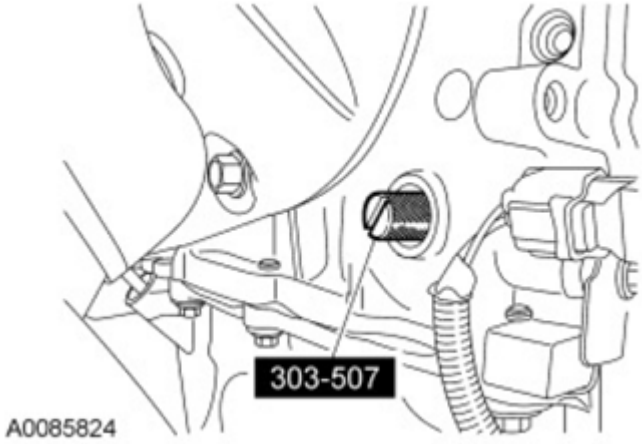

Fig. 109: Locating Crankshaft TDC Timing Peg
Courtesy of FORD MOTOR CO.

11. Install the upper front cover timing hole plug.
    - Tighten to 10 Nm (89 lb-in).

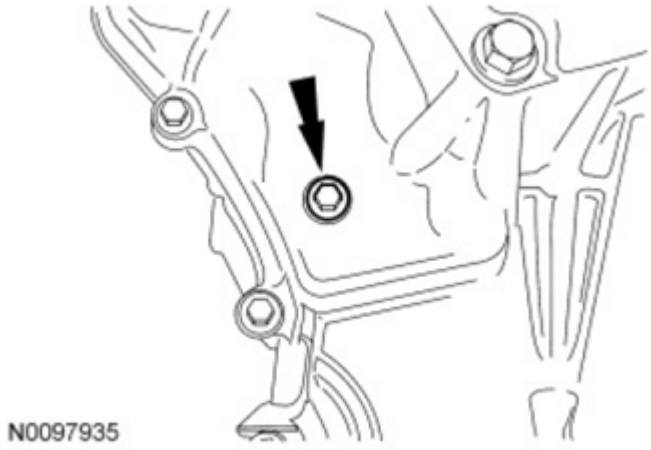

Fig. 110: Locating Upper Front Cover Timing Hole Plug
Courtesy of FORD MOTOR CO.

12. Apply silicone gasket and sealant to the threads of the lower front cover timing hole plug.
    - Install the plug and tighten to 12 Nm (106 lb-in).

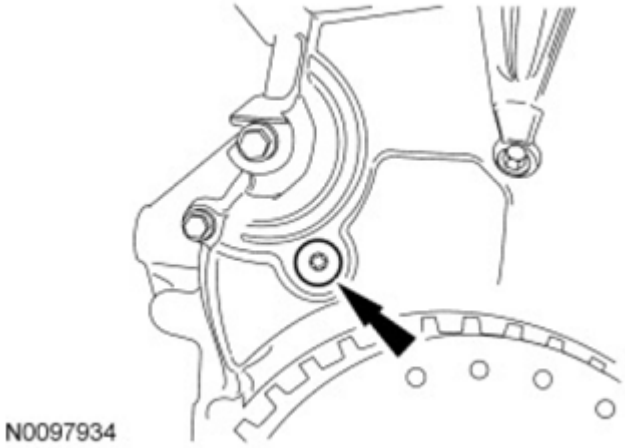

Fig. 111: Locating Lower Front Cover Timing Hole Plug
Courtesy of FORD MOTOR CO.

13. Install the engine plug bolt.
    - Tighten to 20 Nm (177 lb-in).

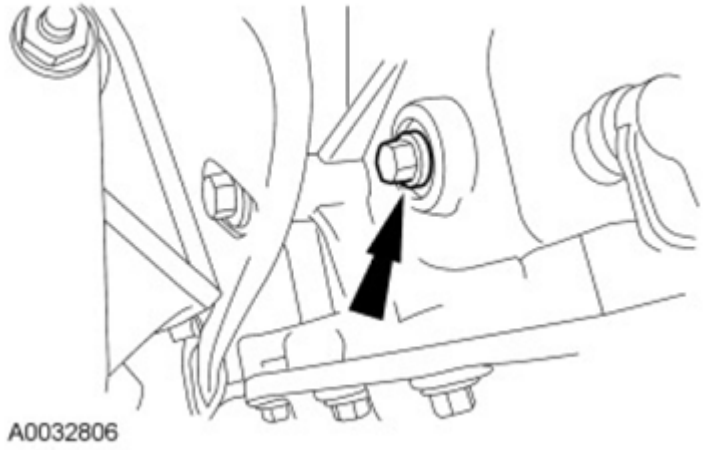

Fig. 112: Locating Engine Plug Bolt
Courtesy of FORD MOTOR CO.

14. Install the accessory drivebelt. For additional information, refer to **ACCESSORY DRIVE - HYBRID** article.
15. Install the RF wheel and tire. For additional information, refer to **TIRES & WHEELS** article.
16. Install the VCT oil control solenoid. For additional information, refer to **ELECTRONIC ENGINE CONTROLS - HYBRID** article.
17. Install the valve cover. For additional information, refer to **VALVE COVER** in this service information.
18. Install the DC/DC converter. For additional information, refer to **HIGH VOLTAGE CONVERTER/INVERTER** article.
19. Install the degas bottle. For additional information, refer to **ENGINE COOLING - HYBRID** article.
20. Repower the vehicle HVTB electrical system. For additional information, refer to **HIGH VOLTAGE TRACTION BATTERY** article.
21. Connect the battery ground cable. For additional information, refer to **BATTERY, BATTERY MOUNTING SYSTEM & BATTERY CABLES** article.

CAMSHAFT PHASER AND SPROCKET

Special Tool(s)

SPECIAL TOOLS

	Alignment Plate, Camshaft 303-465 (T94P-6256-CH)

	
	Timing Peg, Crankshaft TDC 303-507

General Equipment

GENERAL EQUIPMENT

6 mm (0.23 in) x 18 mm (0.7 in)
M6 x 30 mm (1.18 in)

Material Specifications

MATERIAL SPECIFICATIONS

Item	Specification
Motorcraft® SAE 5W-20 Premium Synthetic Blend Motor Oil (US); Motorcraft® SAE 5W-20 Super Premium Motor Oil (Canada) XO-5W20-QSP (US); CXO-5W20-LSP12 (Canada)	WSS-M2C945-A
Silicone Gasket and Sealant TA-30	WSE-M4G323-A4

Removal

NOTE: During engine repair procedures, cleanliness is extremely important. Any foreign material, including any material created while cleaning gasket surfaces, that enters the oil passages, coolant passages or the oil pan can cause engine failure.

NOTE: Do not rotate the camshafts or crankshaft unless instructed to do so in this procedure. Rotating the camshafts or crankshaft with timing components loosened or removed can cause serious damage to the valves or pistons.

1. With the vehicle in NEUTRAL, position it on a hoist. For additional information, refer to **JACKING & LIFTING** article.
2. Remove the accessory drive belt. For additional information, refer to **ACCESSORY DRIVE - HYBRID** article.
3. Remove the Variable Camshaft Timing (VCT) solenoid. For additional information, refer to **ELECTRONIC ENGINE CONTROLS - 2.5L** article.
4. Check the valve clearance. For additional information, refer to **VALVE CLEARANCE CHECK** in this service information.

NOTE: Failure to position the No. 1 piston at Top Dead Center (TDC) can result in damage to the engine. Turn the engine in the normal direction of rotation only.

5. Using the crankshaft pulley bolt, turn the crankshaft clockwise to position the No. 1 piston at Top Dead Center (TDC).
   - The hole in the crankshaft pulley should be in the 6 o'clock position.

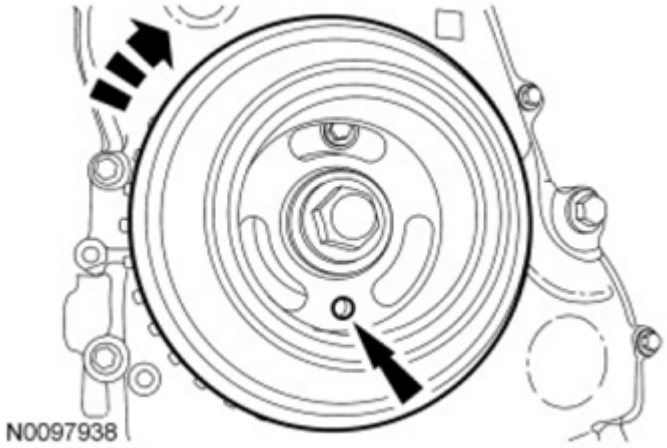

Fig. 113: Locating Crankshaft Pulley Hole
Courtesy of FORD MOTOR CO.

NOTE: **The Camshaft Alignment Plate is for camshaft alignment only. Using this tool to prevent engine rotation can result in engine damage.**

NOTE: **The camshaft timing slots are offset. If the Camshaft Alignment Plate cannot be installed, rotate the crankshaft one complete revolution clockwise to correctly position the camshafts.**

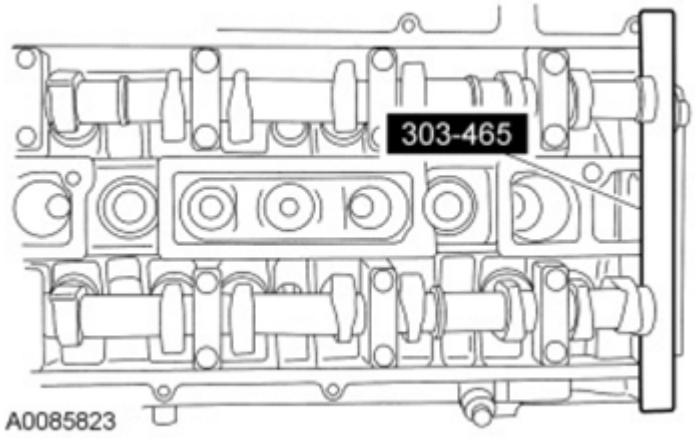

Fig. 114: Identifying Camshaft Alignment Plate
Courtesy of FORD MOTOR CO.

6. Install the Camshaft Alignment Plate in the slots on the rear of both camshafts.
7. Remove the engine plug bolt.

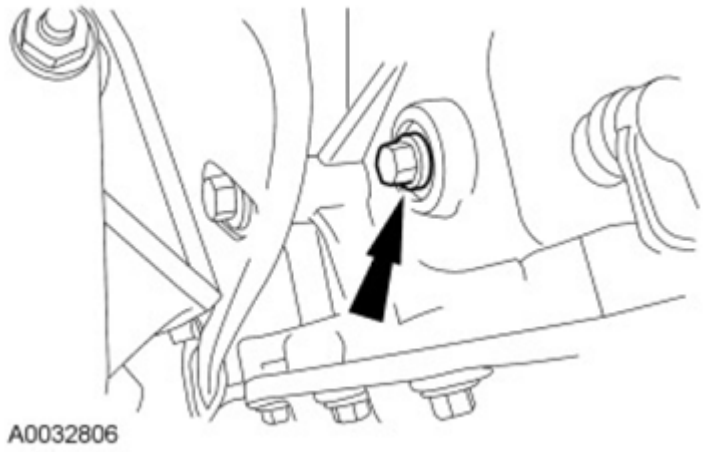

Fig. 115: Locating Engine Plug Bolt
Courtesy of FORD MOTOR CO.

NOTE: **The Crankshaft TDC Timing Peg will contact the crankshaft and prevent it from turning past TDC . However, the crankshaft can still be rotated in the counterclockwise direction. The crankshaft must remain at the TDC position during the camshaft removal and installation.**

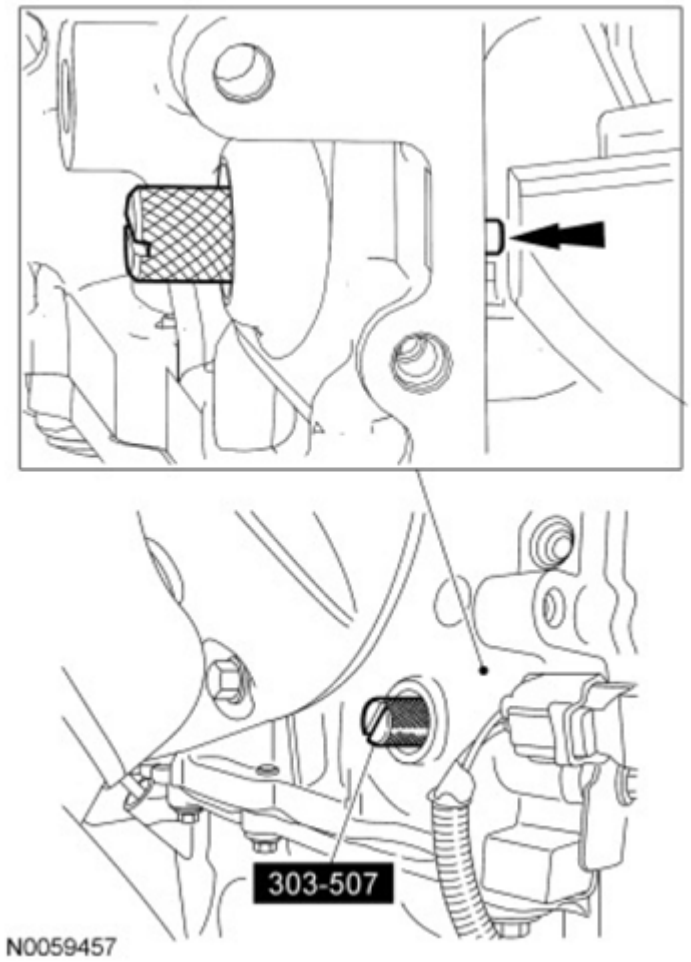

Fig. 116: Remove/Install Crankshaft TDC Timing Peg
Courtesy of FORD MOTOR CO.

8. Install the Crankshaft **TDC** Timing Peg.

NOTE: Only hand-tighten the bolt or damage to the front cover can occur.

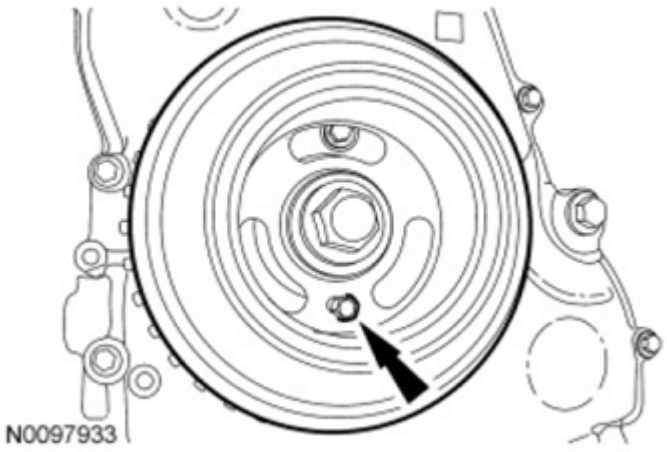

Fig. 117: Locating Crankshaft Pulley Bolt
Courtesy of FORD MOTOR CO.

9. Install a standard 6 mm x 18 mm bolt through the crankshaft pulley and thread it into the front cover.
10. Remove the lower timing hole plug from the engine front cover.

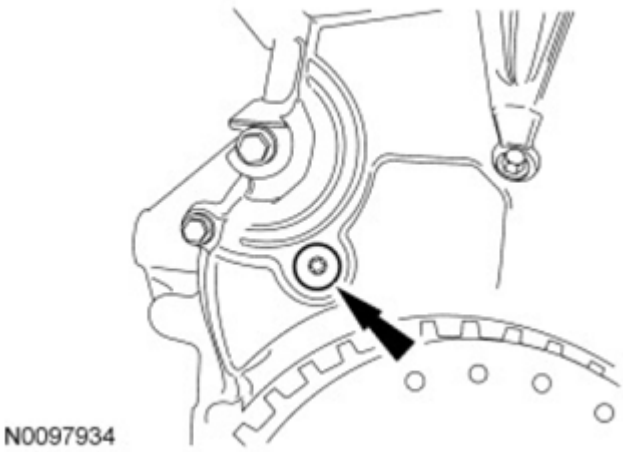

Fig. 118: Locating Lower Front Cover Timing Hole Plug
Courtesy of FORD MOTOR CO.

11. Remove the upper timing hole plug from the engine front cover.

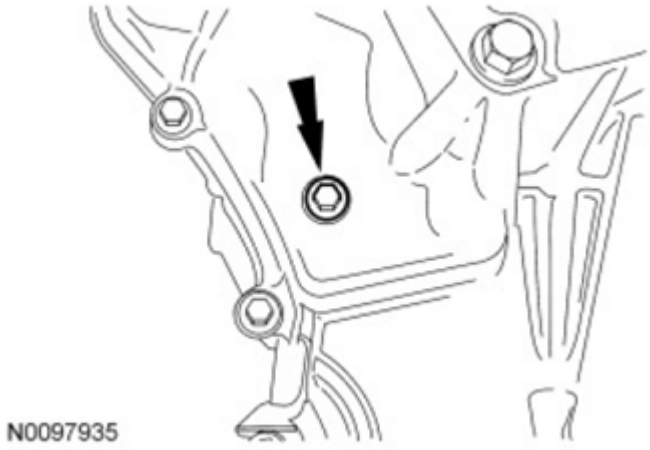

Fig. 119: Locating Upper Front Cover Timing Hole Plug
Courtesy of FORD MOTOR CO.

12. Reposition the Camshaft Alignment Plate to the slot on the rear of the intake camshaft only.

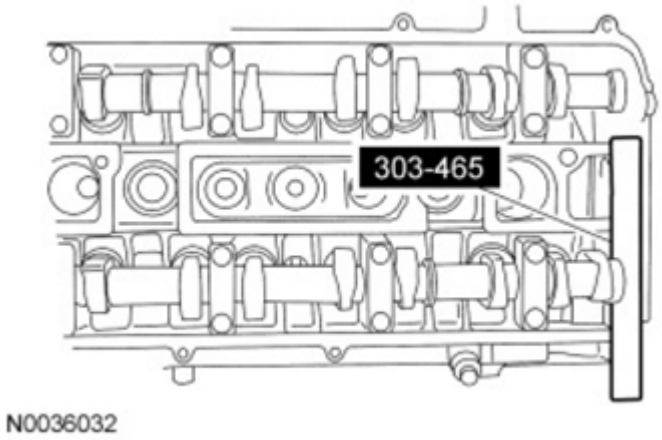

Fig. 120: Identifying Camshaft Alignment Plate
Courtesy of FORD MOTOR CO.

NOTE: **Releasing the ratcheting mechanism in the timing chain tensioner allows the plunger to collapse and create slack in the timing chain. Installing the M6 x 30 mm (1.18 in) bolt into the upper front cover timing hole will lock the tensioner arm in a retracted position and allow enough slack in the timing chain for removal of the exhaust camshaft gear.**

13. Using a small pick tool, release the timing chain tensioner ratchet through the lower front cover timing hole.
    - Have an assistant rotate (using the flats of the camshaft) the exhaust camshaft clockwise to collapse the timing chain tensioner plunger.
    - Insert the M6 x 30 mm (1.18 in) bolt into the upper front cover timing hole to hold the tensioner

arm in the retracted position.

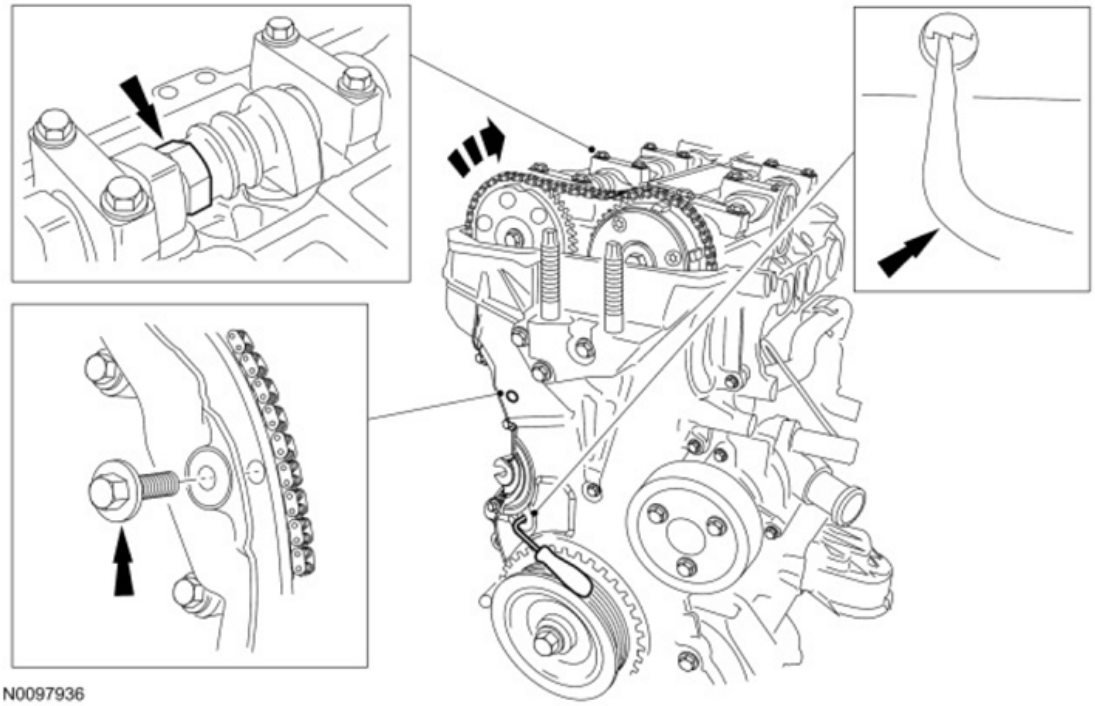

Fig. 121: Rotating Exhaust Camshaft Clockwise To Collapse Timing Chain Tensioner Plunger
Courtesy of FORD MOTOR CO.

14. Using the flats on the camshaft to prevent camshaft rotation, remove the bolt and the exhaust camshaft drive gear.

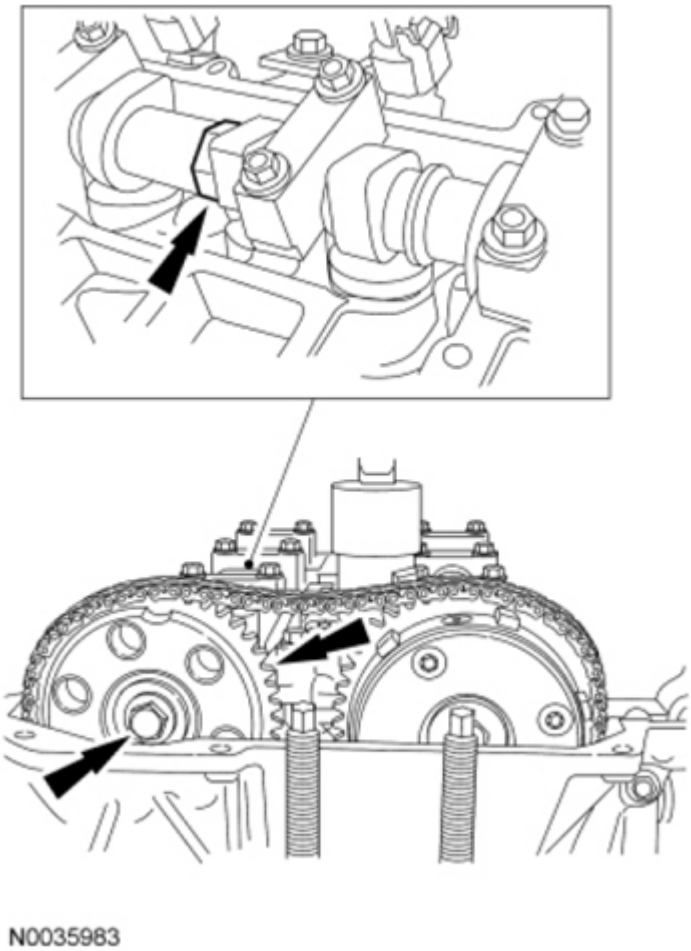

Fig. 122: Locating Flats On Camshaft To Prevent Camshaft Rotation
Courtesy of FORD MOTOR CO.

15. Remove the Camshaft Alignment Plate.

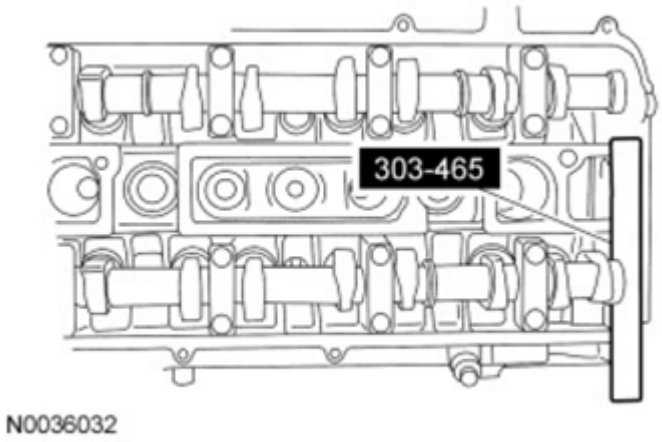

Fig. 123: Identifying Camshaft Alignment Plate

Courtesy of FORD MOTOR CO.

16. Remove the timing chain from the camshaft phaser and sprocket.

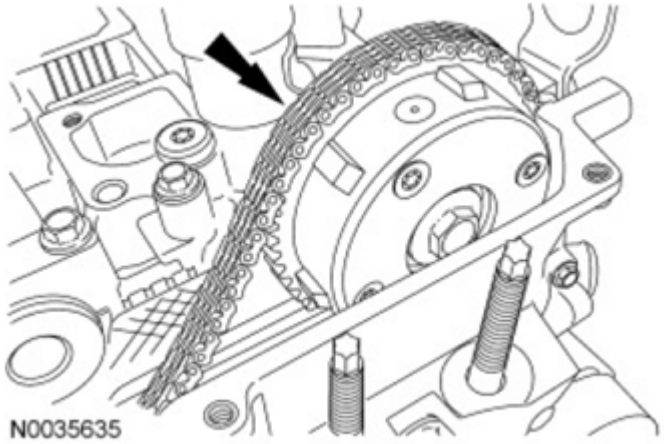

Fig. 124: Locating Timing Chain On Camshaft Phaser And Sprocket
Courtesy of FORD MOTOR CO.

17. Mark the position of the camshaft lobes on the No. 1 cylinder for installation reference.

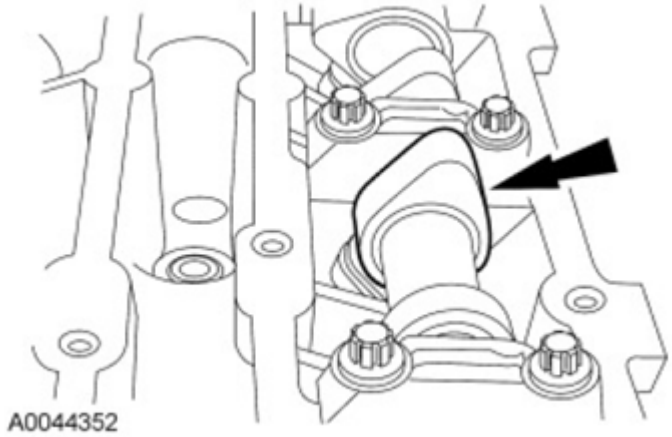

Fig. 125: Locating Camshaft Lobes
Courtesy of FORD MOTOR CO.

NOTE: Failure to follow the camshaft loosening procedure can result in damage to the intake camshaft.

18. Remove the intake camshaft from the engine.
    - Loosen the intake camshaft bearing cap bolts, in the sequence shown in illustration, one turn at a time until all tension is released from the camshaft bearing caps.
    - Remove the bolts and the camshaft bearing caps.

- Remove the intake camshaft.

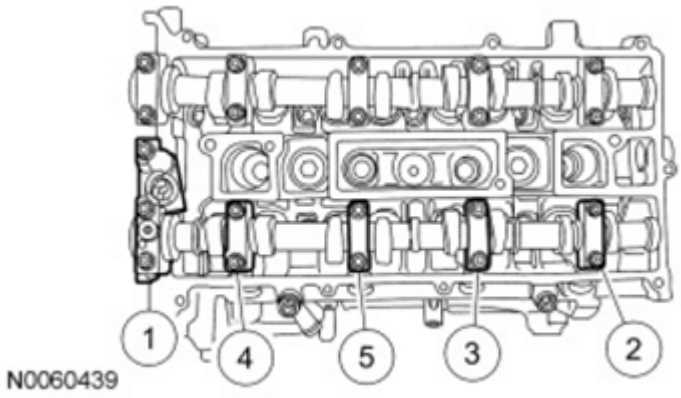

Fig. 126: Identifying Camshaft Bearing Cap Bolts Loosening Sequence
Courtesy of FORD MOTOR CO.

19. Mark the camshaft phaser and sprocket and the camshaft for reference during installation.

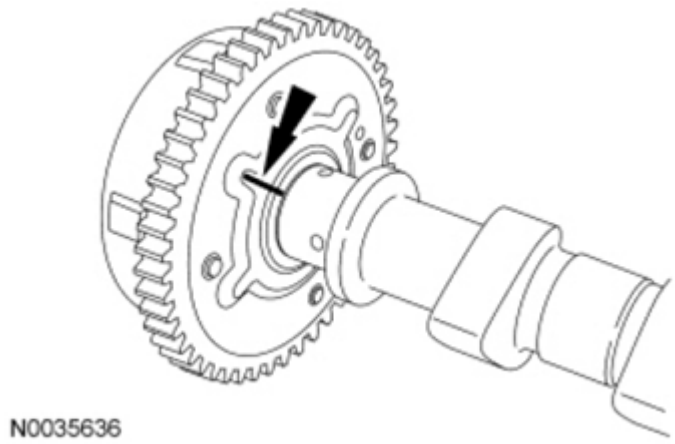

Fig. 127: Locating Sprocket And Camshaft Reference Mark
Courtesy of FORD MOTOR CO.

20. Place the camshaft in a soft-jawed vise. Remove the bolt and the camshaft phaser and sprocket.

Installation

NOTE: If new parts are installed, transfer the reference marks made during disassembly to the new parts.

1. Position the camshaft in a soft-jawed vise. Install the camshaft phaser and sprocket and the bolt.
   - Align the reference marks on the camshaft phaser and sprocket and the camshaft. Tighten the bolt to 72 Nm (53 lb-ft).

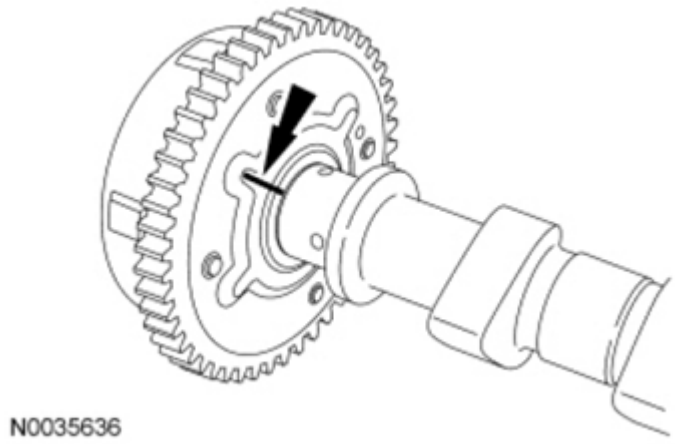

Fig. 128: Locating Sprocket And Camshaft Reference Mark
Courtesy of FORD MOTOR CO.

NOTE: **Install the intake camshaft with the alignment slots in the camshafts lined up so the Camshaft Alignment Plate can be installed without rotating the camshafts. Make sure the lobes on the No. 1 cylinder are in the same position as noted in the removal procedure. Rotating the camshafts when the timing chain is removed, or installing the camshafts 180 degrees out of position can cause severe damage to the valves and pistons.**

NOTE: **Lubricate the intake camshaft journals and bearing caps with clean engine oil.**

2. Install the intake camshafts and bearing caps. Tighten the intake camshaft bearing caps in the sequence shown in illustration in 3 stages:
   - Stage 1: Tighten the intake camshaft bearing cap bolts until finger-tight.
   - Stage 2: Tighten to 7 Nm (62 lb-in).
   - Stage 3: Tighten to 16 Nm (142 lb-in).

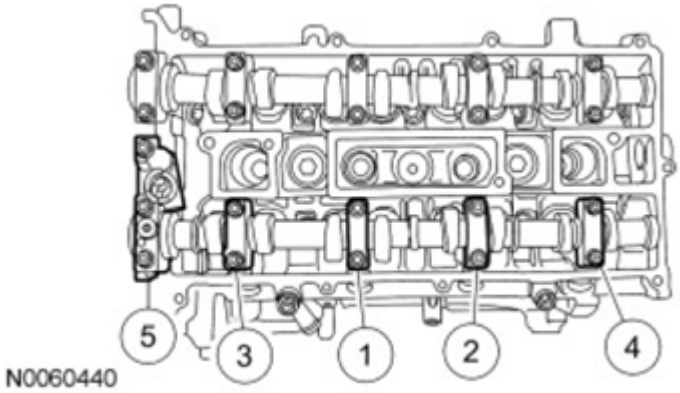

Fig. 129: Identifying Camshaft Bearing Cap Bolts Tightening Sequence

Courtesy of FORD MOTOR CO.

3. Install the Camshaft Alignment Plate.

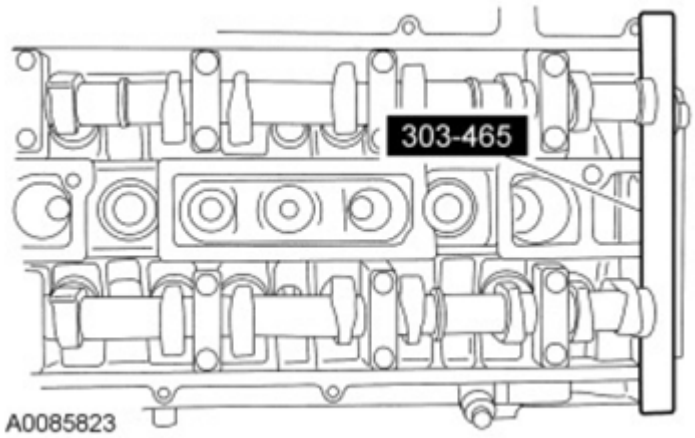

Fig. 130: Identifying Camshaft Alignment Plate
Courtesy of FORD MOTOR CO.

4. Install the timing chain on the camshaft phaser and sprocket.

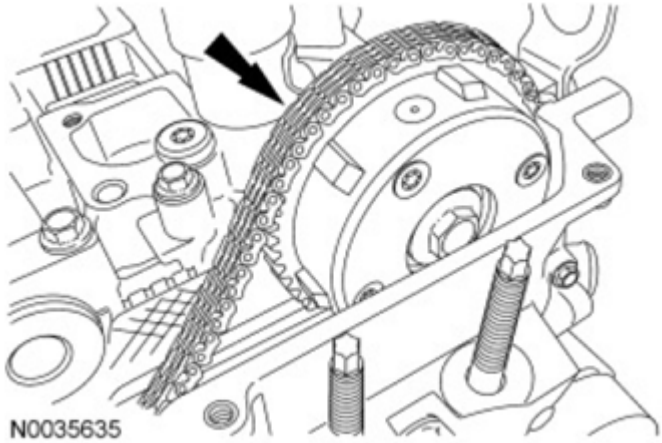

Fig. 131: Locating Timing Chain On Camshaft Phaser And Sprocket
Courtesy of FORD MOTOR CO.

NOTE: The timing chain must be correctly engaged on the teeth of the crankshaft timing sprocket and the intake camshaft drive gear in order to install the exhaust camshaft drive gear onto the exhaust camshaft.

5. Position the exhaust camshaft drive gear in the timing chain and install the gear and bolt on the exhaust camshaft.
   - Hand-tighten the bolt.

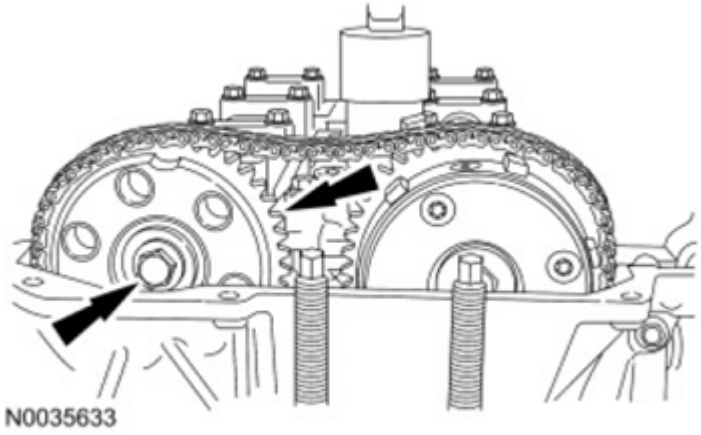

Fig. 132: Locating Exhaust Camshaft Drive Gear And Bolt
Courtesy of FORD MOTOR CO.

NOTE: Releasing the tensioner arm will remove the slack from the timing chain.

6. Remove the M6 x 30 mm (1.18 in) bolt from the upper front cover timing hole to release the tensioner arm.

NOTE: The Camshaft Alignment Plate is for camshaft alignment only. Using this tool to prevent engine rotation can result in engine damage.

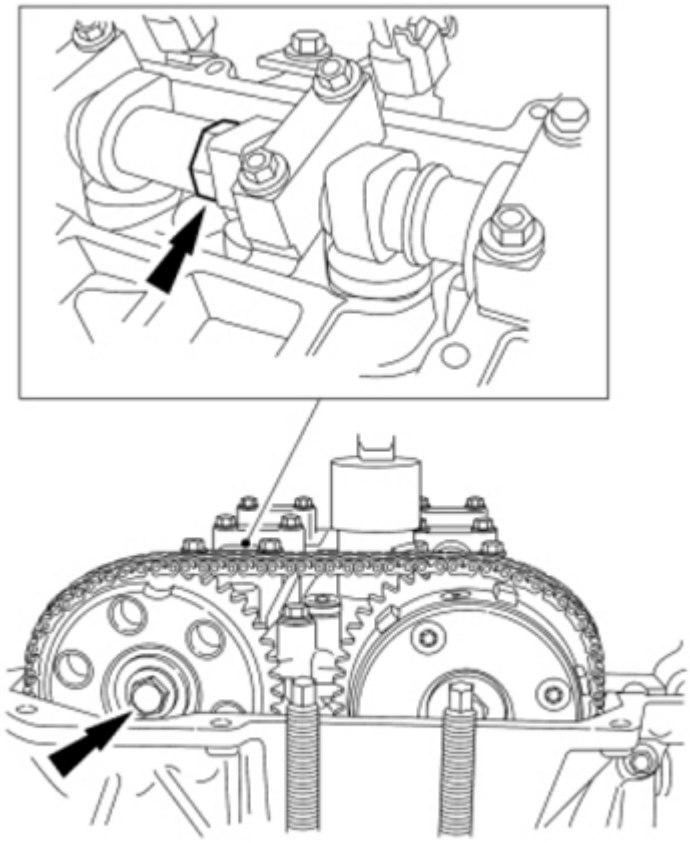

N0035634

Fig. 133: Locating Flats On Camshaft And Bolt
Courtesy of FORD MOTOR CO.

7. Using the flats on the camshaft to prevent camshaft rotation, tighten the exhaust camshaft drive gear bolt to 72 Nm (53 lb-ft).
8. Remove the Camshaft Alignment Plate.

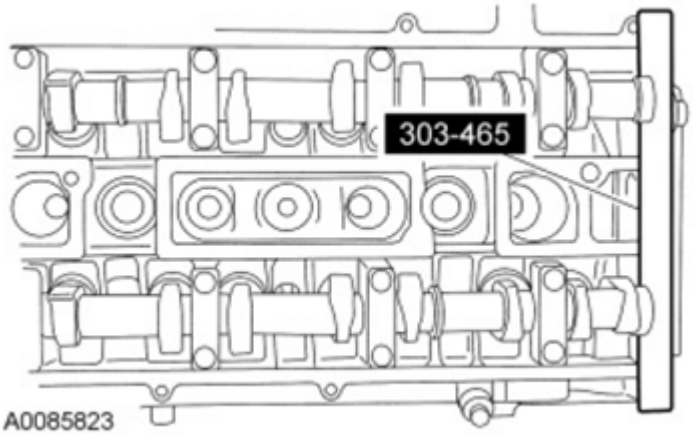

A0085823

Fig. 134: Identifying Camshaft Alignment Plate
Courtesy of FORD MOTOR CO.

9. Remove the 6 mm x 18 mm bolt.

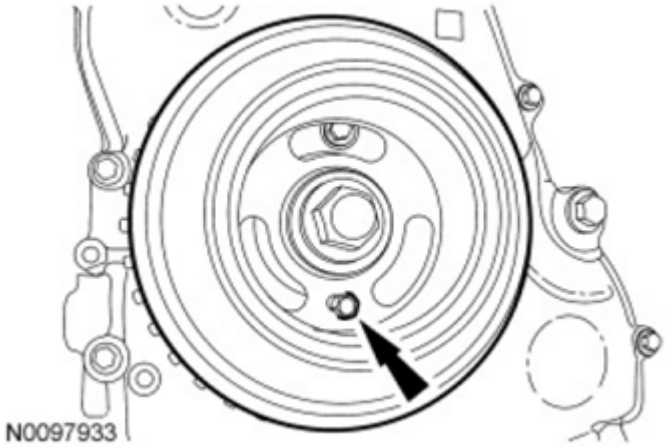

Fig. 135: Locating Crankshaft Pulley Bolt
Courtesy of FORD MOTOR CO.

10. Remove the Crankshaft **TDC** Timing Peg.

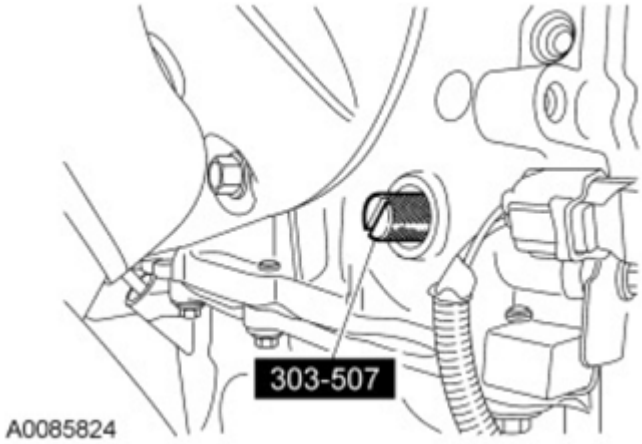

Fig. 136: Locating Crankshaft TDC Timing Peg
Courtesy of FORD MOTOR CO.

11. Install the upper timing hole plug in the engine front cover.
    - Tighten to 10 Nm (89 lb-in).

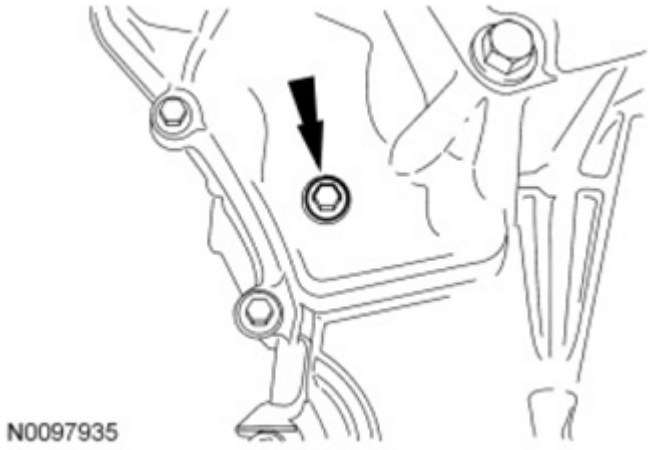

Fig. 137: Locating Upper Front Cover Timing Hole Plug
Courtesy of FORD MOTOR CO.

12. Apply silicone gasket and sealant to the threads of the lower timing hole plug.
    - Install the lower timing hole plug in the engine front cover.
        - Tighten to 12 Nm (106 lb-in).

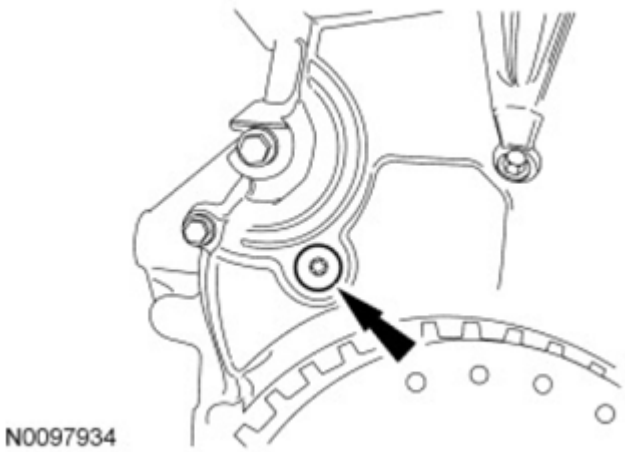

Fig. 138: Locating Lower Front Cover Timing Hole Plug
Courtesy of FORD MOTOR CO.

13. Install the engine plug bolt.
    - Tighten to 20 Nm (177 lb-in).

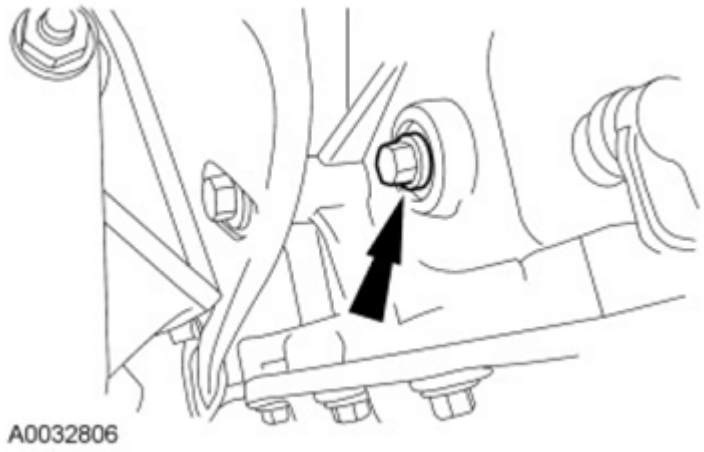

Fig. 139: Locating Engine Plug Bolt
Courtesy of FORD MOTOR CO.

14. Install the accessory drive belt. For additional information, refer to **ACCESSORY DRIVE - HYBRID** article.
15. Install the VCT solenoid. For additional information, refer to **ELECTRONIC ENGINE CONTROLS - 2.5L** article.

VALVE TRAIN COMPONENTS - EXPLODED VIEW

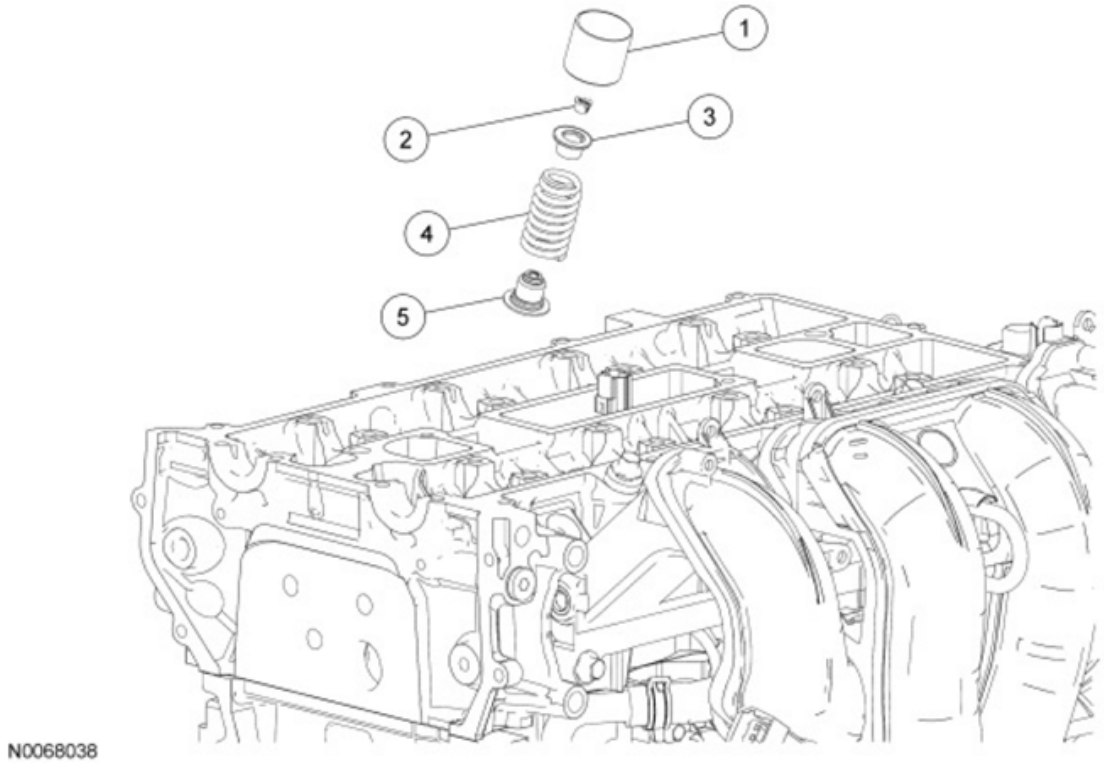

Fig. 140: Exploded View Of Valve Train Components

Courtesy of FORD MOTOR CO.

ITEM DESCRIPTION

Item	Part Number	Description
1	6500	Valve tappet (16 required)
2	6518	Valve collet (16 required)
3	6514	Valve spring retainer (16 required)
4	6513	Valve spring (16 required)
5	6517	Valve seal (16 required)

1. For additional information, refer to the appropriate procedures in this service information.

VALVE SPRINGS

Special Tool(s)

SPECIAL TOOLS

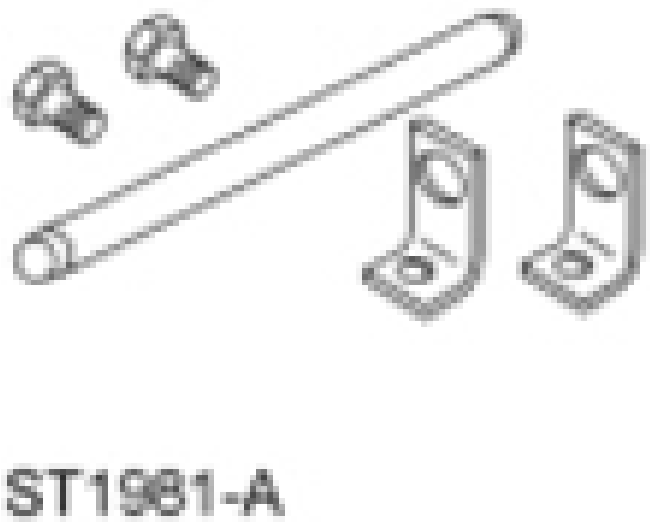	Compressor, Valve Spring 303-300 (T87C-6565-A)
	Compressor, Valve Spring 303-350 (T89P-6565-A)

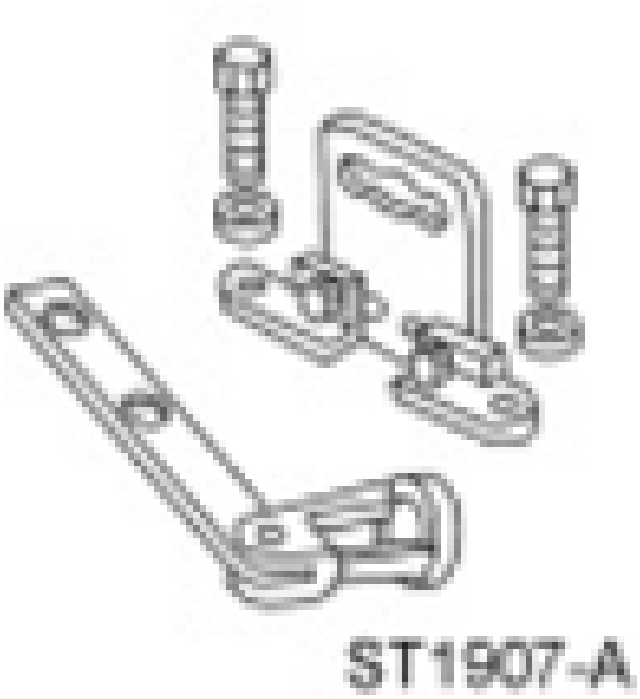	
	Compressor, Valve Spring 303-472 (T94P-6565-AH)

Material Specifications

MATERIAL SPECIFICATIONS

Item	Specification
Motorcraft® SAE 5W-20 Premium Synthetic Blend Motor Oil (US); Motorcraft® SAE 5W-20 Super Premium Motor Oil (Canada) XO-5W20-QSP (US); CXO-5W20-LSP12 (Canada)	WSS-M2C945-A
Multi-Purpose Grease XG-4 and/or XL-5	ESB-M1C93-B

Removal

NOTE: During engine repair procedures, cleanliness is extremely important. Any foreign material (including any material created while cleaning gasket surfaces) that enters the oil passages, coolant passages or the oil pan can cause engine failure.

1. With the vehicle in NEUTRAL, position it on a hoist. For additional information, refer to **JACKING & LIFTING** article.
2. Remove the camshafts. For additional information, refer to **CAMSHAFTS** in this service information.

NOTE: If the camshafts and valve tappets are to be reused, mark the location of the valve tappets to make sure they are assembled in their original positions.

NOTE: The number on the valve tappets only reflects the digits that follow the decimal. For example, a tappet with the number 0.650 has the thickness of 3.650 mm.

3. Remove and inspect the valve tappets. For additional information, refer to **ENGINE MECHANICAL SYSTEM - GENERAL INFORMATION** article.
4. Remove the spark plugs. For additional information, refer to **ENGINE IGNITION - 2.5L** article.

NOTE: Use compressed air at 7 to 10 bars (100-150 psi). Do not disconnect the compressed air from the cylinder until the valve spring, valve spring retainer and valve collet is installed. Any loss of air pressure will allow the valve to fall into the cylinder.

5. Connect the compressed air supply to the No. 1 cylinder.

NOTE: Place all parts in order to one side.

6. Apply compressed air to the cylinder and remove the valve spring.
   - Using the Valve Spring Compressors, compress the valve spring and remove the valve collet, using some grease and a small screwdriver.

- Remove the valve spring retainer and the valve spring.

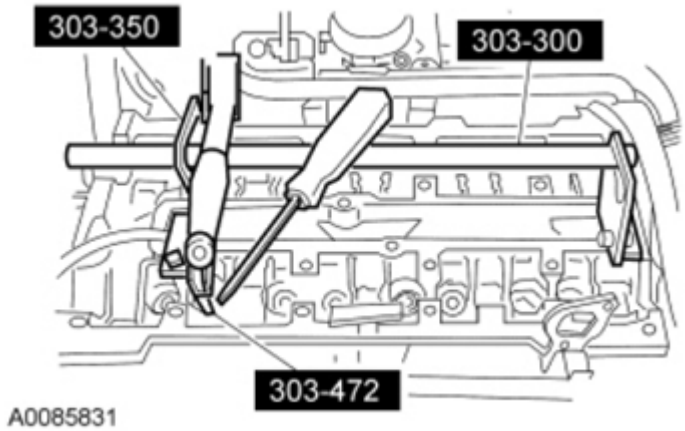

Fig. 141: Remove/Install Valve Spring And Valve Spring Retainer Using Valve Spring Compressors
Courtesy of FORD MOTOR CO.

Installation

NOTE: Check the seating of the valve collet.

1. Using the Valve Spring Compressors, install the valve spring.
   - Insert the valve spring and the valve spring retainer.
   - Compress the valve spring and install the valve collet using some grease and a small screwdriver.

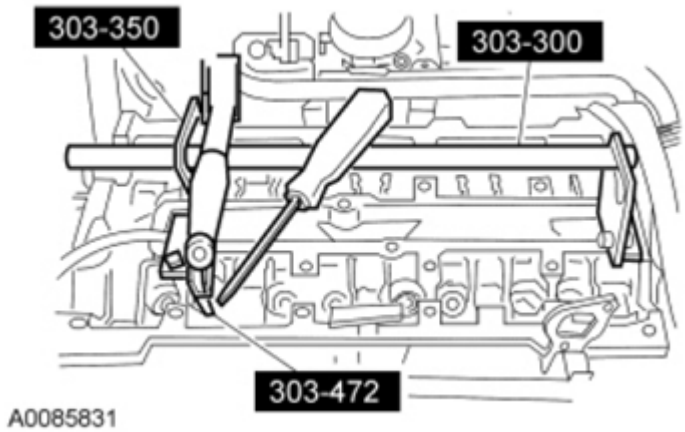

Fig. 142: Remove/Install Valve Spring And Valve Spring Retainer Using Valve Spring Compressors
Courtesy of FORD MOTOR CO.

2. Disconnect the compressed air supply.

3. Repeat the appropriate removal and installation steps for all of the other cylinders.
4. Install the spark plugs. For additional information, refer to **ENGINE IGNITION - 2.5L** article.
5. Coat the valve tappets with clean engine oil and insert them.
6. Install the camshafts. For additional information, refer to **CAMSHAFTS** in this service information.

VALVE SEALS

Special Tool(s)

SPECIAL TOOLS

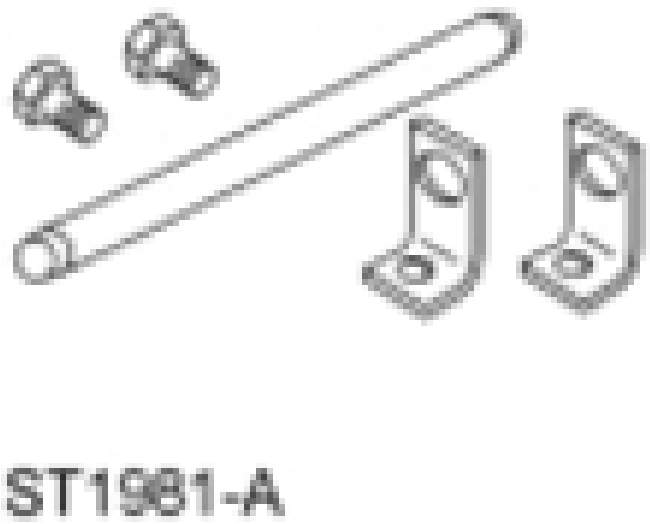	Compressor, Valve Spring 303-300 (T87C-6565-A)
	Compressor, Valve Spring 303-350 (T89P-6565-A)

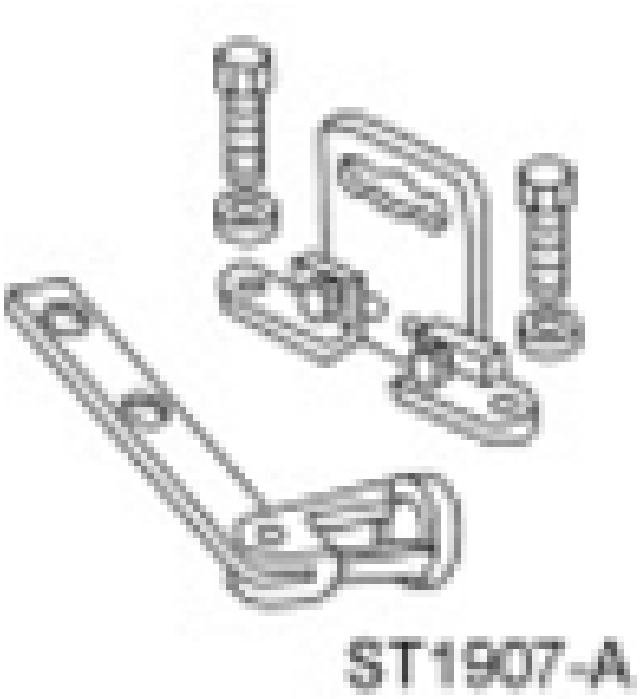	
	Compressor, Valve Spring 303-472 (T94P-6565-AH)
	Installer, Valve Stem Oil Seal 303-470 (T94P-6510-CH)

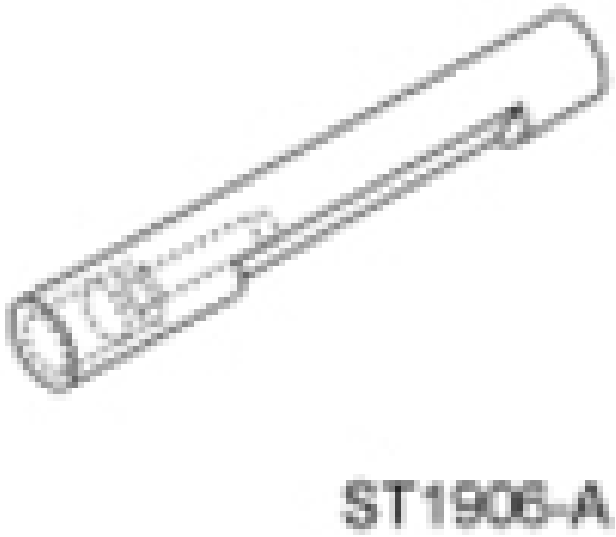	
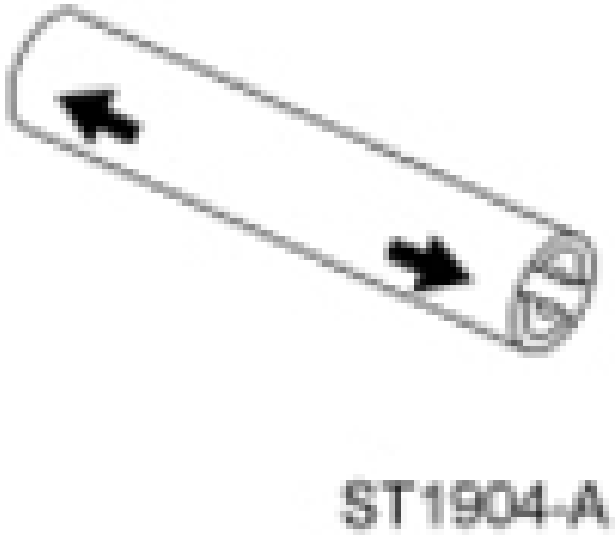	Remover, Valve Stem Oil Seal 303-468 (T94P-6510-AH)
	Slide Hammer 307-005 (T59L-100-B)

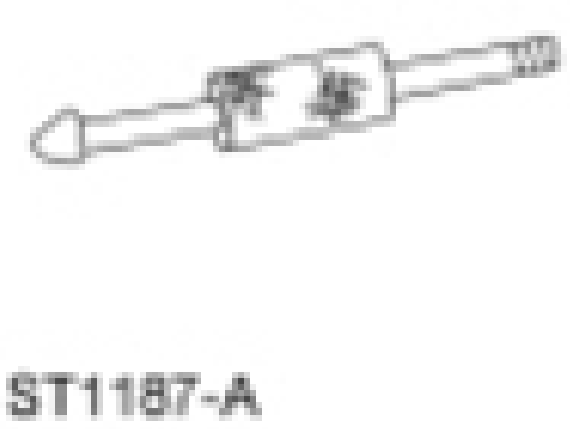	

Material Specifications

MATERIAL SPECIFICATIONS

Item	Specification
Motorcraft® SAE 5W-20 Premium Synthetic Blend Motor Oil (US); Motorcraft® SAE 5W-20 Super Premium Motor Oil (Canada) XO-5W20-QSP (US); CXO-5W20-LSP12 (Canada)	WSS-M2C945-A
Multi-Purpose Grease XG-4 and/or XL-5	ESB-M1C93-B

Removal

NOTE: During engine repair procedures, cleanliness is extremely important. Any foreign material (including any material created while cleaning gasket surfaces) that enters the oil passages, coolant passages or the oil pan can cause engine failure.

1. With the vehicle in NEUTRAL, position it on a hoist. For additional information, refer to **JACKING & LIFTING** article.
2. Remove the camshafts. For additional information, refer to **CAMSHAFTS** in this service information.

NOTE: If the camshafts and valve tappets are to be reused, mark the location of the valve tappets to make sure they are assembled in their original positions.

NOTE: The number on the valve tappets only reflects the digits that follow the decimal. For example, a tappet with the number 0.650 has the thickness of 3.650 mm.

3. Remove and inspect the valve tappets. For additional information, refer to **ENGINE MECHANICAL SYSTEM - GENERAL INFORMATION** article.
4. Remove the spark plugs. For additional information, refer to **ENGINE IGNITION - 2.5L** article.

NOTE: Use compressed air at 7 to 10 bars (100-150 psi). Do not disconnect the compressed air from the cylinder until the valve spring, valve spring retainer and valve collet is installed. Any loss of air pressure will allow the valve to fall into the cylinder.

5. Connect the compressed air supply to the No. 1 cylinder.

NOTE: Place all parts in order to one side.

6. Apply compressed air to the cylinder and remove the valve spring.
   - Using the Valve Spring Compressors, compress the valve spring and remove the valve collet, using some grease and a small screwdriver.
   - Remove the valve spring retainer and the valve spring.

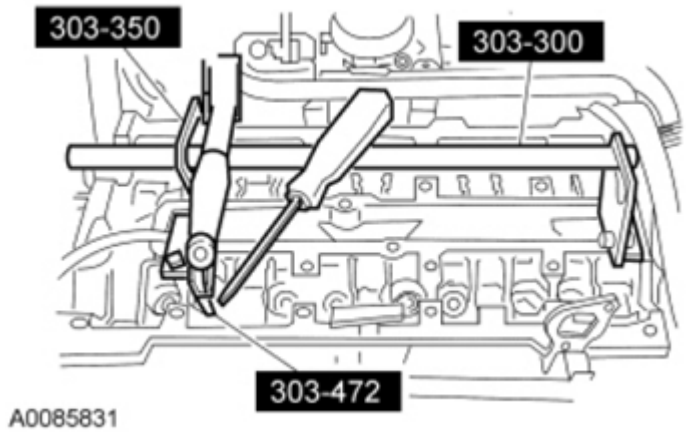

Fig. 143: Remove/Install Valve Spring And Valve Spring Retainer Using Valve Spring Compressors
Courtesy of FORD MOTOR CO.

7. Using the Slide Hammer and the Valve Stem Oil Seal Remover, remove and discard the valve seal.

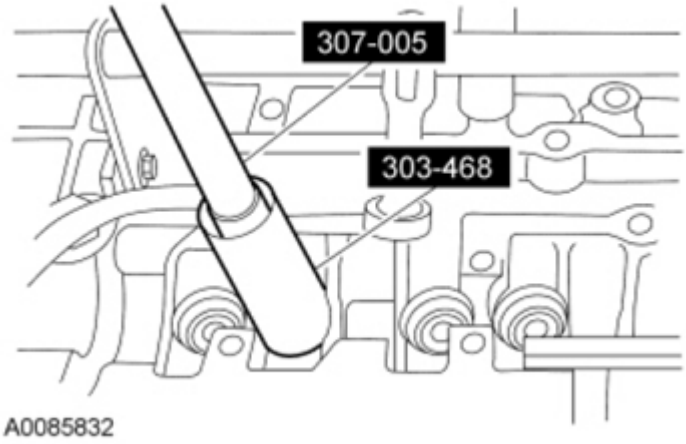

Fig. 144: Removing Valve Seal Using Slide Hammer And Valve Stem Oil Seal Remover
Courtesy of FORD MOTOR CO.

Installation

1. Install the valve stem seal installation sleeve.

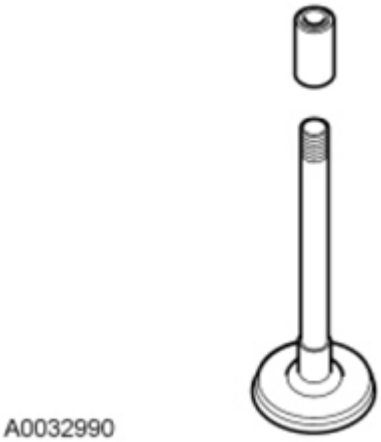

Fig. 145: Identifying Valve Stem Seal Installation Sleeve
Courtesy of FORD MOTOR CO.

2. Using the Valve Stem Oil Seal Installer, install the valve seal.

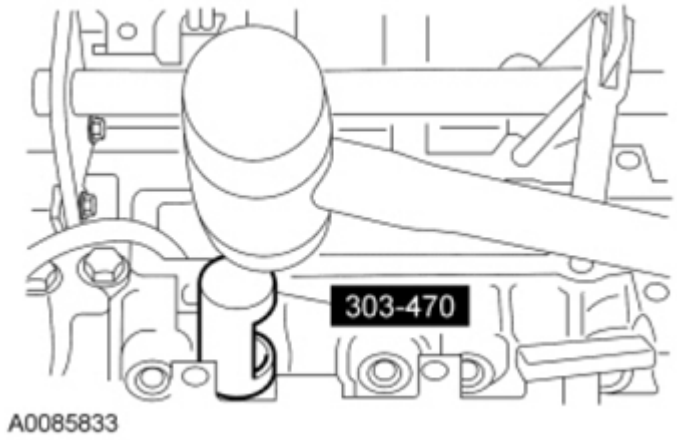

Fig. 146: Installing Valve Seal Using The Valve Stem Oil Seal Installer
Courtesy of FORD MOTOR CO.

NOTE: Check the seating of the valve collet.

3. Using the Valve Spring Compressors, install the valve spring.
   - Insert the valve spring and the valve spring retainer.
   - Compress the valve spring and install the valve collet using some grease and a small screwdriver.

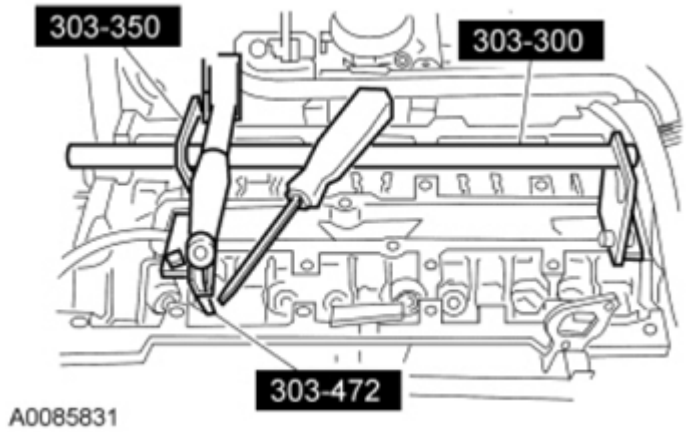

Fig. 147: Remove/Install Valve Spring And Valve Spring Retainer Using Valve Spring Compressors
Courtesy of FORD MOTOR CO.

4. Disconnect the compressed air supply.
5. Install the spark plugs. For additional information, refer to **ENGINE IGNITION - 2.5L** article.
6. Repeat the appropriate removal and installation steps for all of the other cylinders.
7. Coat the valve tappets with clean engine oil and insert them.
8. Install the camshafts. For additional information, refer to **CAMSHAFTS** in this service information.

VALVE TAPPETS

Material Specifications

MATERIAL SPECIFICATIONS

Item	Specification
Motorcraft® SAE 5W-20 Premium Synthetic Blend Motor Oil (US); Motorcraft® SAE 5W-20 Super Premium Motor Oil (Canada) XO-5W20-QSP (US); CXO-5W20-LSP12 (Canada)	WSS-M2C945-A

Removal and Installation

NOTE: During engine repair procedures, cleanliness is extremely important. Any foreign material (including any material created while cleaning gasket surfaces) that enters the oil passages, coolant passages or the oil pan can cause engine failure.

1. With the vehicle in NEUTRAL, position it on a hoist. For additional information, refer to **JACKING & LIFTING** article.
2. Remove the camshafts. For additional information, refer to **CAMSHAFTS** in this service information.

   NOTE: If the camshafts and valve tappets are to be reused, mark the location of the valve tappets to make sure they are assembled in their original positions.

   NOTE: The number on the valve tappets only reflects the digits that follow the decimal. For example, a tappet with the number 0.650 has the thickness of 3.650 mm.

3. Remove and inspect the valve tappets. For additional information, refer to **ENGINE MECHANICAL SYSTEM - GENERAL INFORMATION** article.
4. To install, reverse the removal procedure.
   - Coat the valve tappets with clean engine oil prior to installation.

CYLINDER HEAD

Special Tool(s)

SPECIAL TOOLS

	Alignment Plate, Camshaft 303-465 (T94P-6256-CH)

	

Material Specifications

MATERIAL SPECIFICATIONS

Item	Specification
Motorcraft® Metal Surface Prep ZC-31-A	-
Motorcraft® SAE 5W-20 Premium Synthetic Blend Motor Oil (US); Motorcraft® SAE 5W-20 Super Premium Motor Oil (Canada) XO-5W20-QSP (US); CXO-5W20-LSP12 (Canada)	WSS-M2C945-A
Silicone Gasket and Sealant TA-30	WSE-M4G323-A4
Motorcraft® Silicone Gasket Remover ZC-30	-

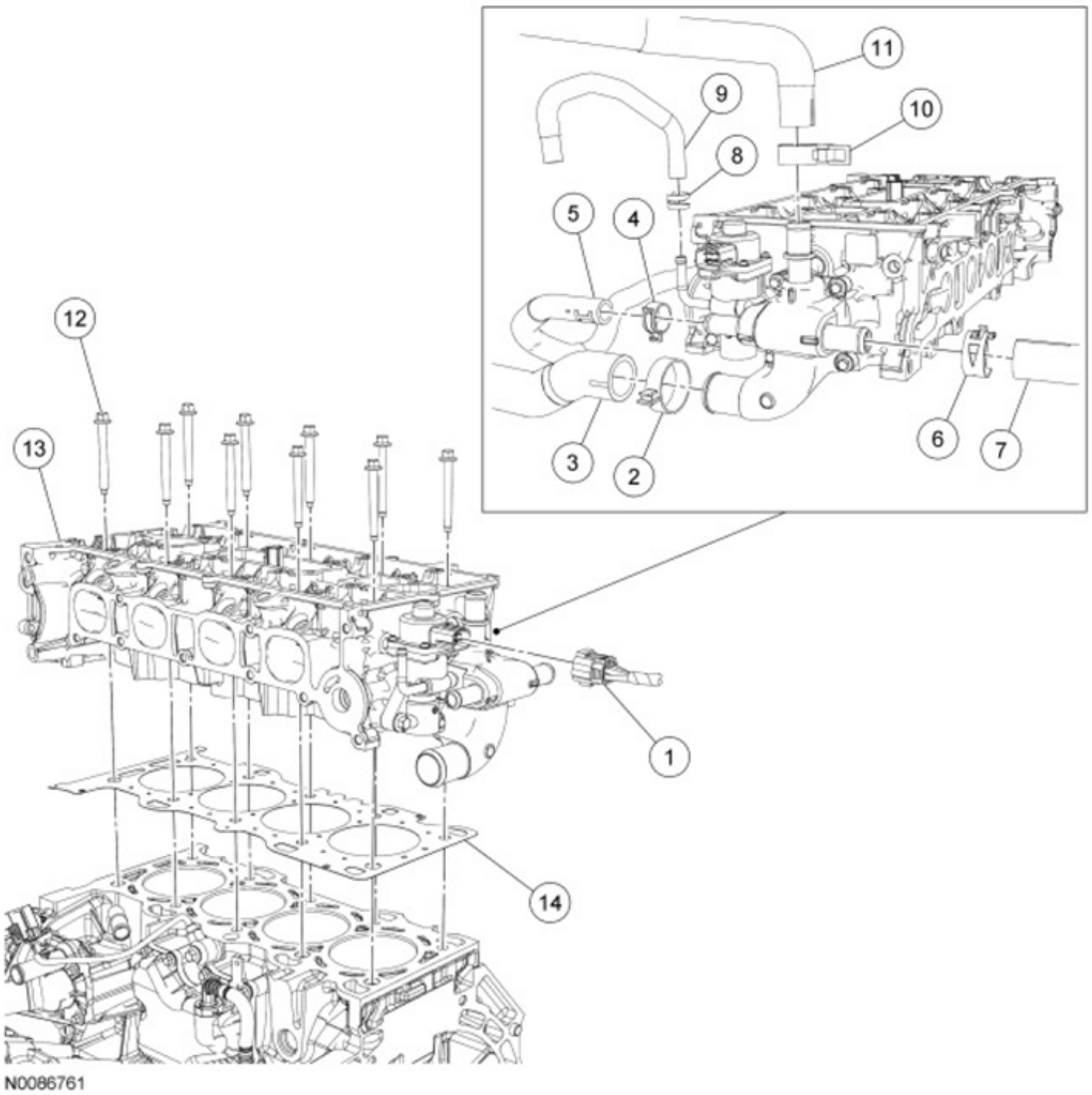

Fig. 148: Identifying Cylinder Head Components
Courtesy of FORD MOTOR CO.

ITEM DESCRIPTION

Item	Part Number	Description
1	14A464	EGR valve electrical connector (part of 12A581)
2	W527372	Upper radiator hose clamp
3	8260	Upper radiator hose
4	W527212	Coolant bypass hose clamp
5	8075	Coolant bypass hose
6	W527362	Heater hose clamp
7	18472	Heater hose
8	W527302	EGR coolant hose clamp
9	18472	EGR coolant hose

10	W527362	Coolant vent hose clamp
11	18472	Coolant vent hose
12	6065	Cylinder head bolt (10 required)
13	6049	Cylinder head
14	6051	Cylinder head gasket

Removal

NOTE: Do not loosen or remove the crankshaft pulley bolt without first installing the special tools as instructed in this procedure. The crankshaft pulley and the crankshaft timing sprocket are not keyed to the crankshaft. The crankshaft, the crankshaft sprocket and the pulley are fitted together by friction, using diamond washers between the flange faces on each part. For that reason, the crankshaft sprocket is also unfastened if the pulley bolt is loosened. Before any repair requiring loosening or removal of the crankshaft pulley bolt, the crankshaft and camshafts must be locked in place by the special service tools or severe engine damage can occur.

NOTE: During engine repair procedures, cleanliness is extremely important. Any foreign material (including any material created while cleaning gasket surfaces) that enters the oil passages, coolant passages or the oil pan can cause engine failure.

1. With the vehicle in NEUTRAL, position it on a hoist. For additional information, refer to **JACKING & LIFTING** article.
2. Release the fuel system pressure. For additional information, refer to **FUEL SYSTEM - GENERAL INFORMATION** article.
3. Drain the engine cooling system. For additional information, refer to **ENGINE COOLING - HYBRID** article.
4. Remove the Variable Camshaft Timing (VCT) oil control solenoid. For additional information, refer to **ELECTRONIC ENGINE CONTROLS - HYBRID** article.
5. Remove the timing drive components. For additional information, refer to **TIMING DRIVE COMPONENTS** in this service information.
6. Remove the Camshaft Alignment Plate.

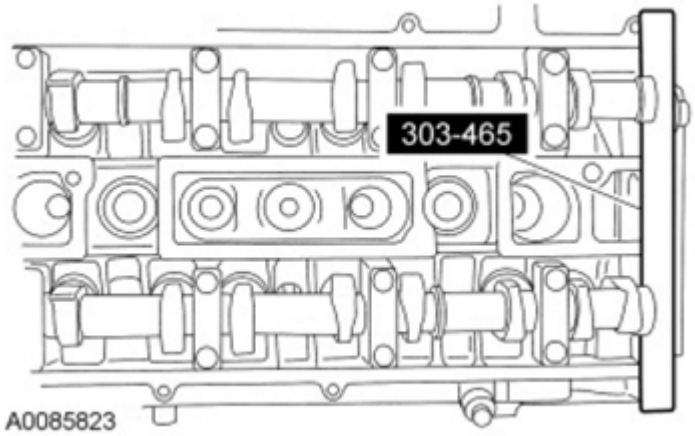

Fig. 149: Identifying Camshaft Alignment Plate
Courtesy of FORD MOTOR CO.

7. Mark the position of the camshaft lobes on the No. 1 cylinder for installation reference.

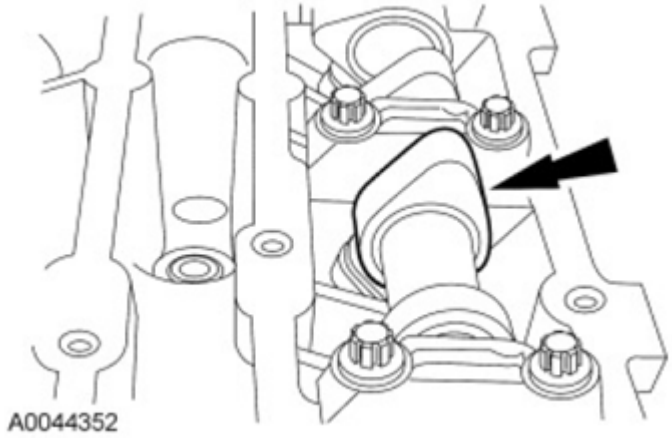

Fig. 150: Locating Camshaft Lobes
Courtesy of FORD MOTOR CO.

NOTE: Failure to follow the camshaft loosening procedure can result in damage to the camshafts.

NOTE: Mark the location and orientation of each camshaft bearing cap.

8. Remove the camshafts from the engine.
   - Loosen the camshaft bearing cap bolts, in sequence, one turn at a time until all tension is released from the camshaft bearing caps.
   - Remove the bolts and the camshaft bearing caps.
   - Remove the camshafts.

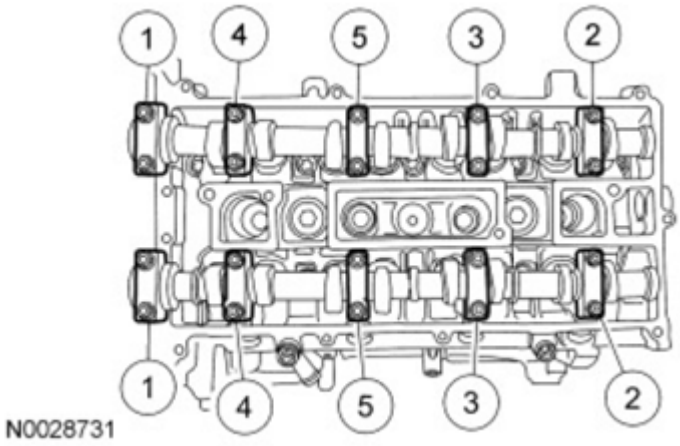

Fig. 151: Identifying Camshaft Bearing Cap Bolts Loosening Sequence
Courtesy of FORD MOTOR CO.

NOTE: If the camshafts and valve tappets are to be reused, mark the location of the valve tappets to make sure they are assembled in their original positions.

9. Remove the valve tappets.
10. Inspect the valve tappets. For additional information, refer to **ENGINE MECHANICAL SYSTEM - GENERAL INFORMATION** article.
11. Remove the intake manifold. For additional information, refer to **INTAKE MANIFOLD** in this service information.
12. Remove the catalytic converter. For additional information, refer to **EXHAUST SYSTEM** article.
13. Disconnect the EGR valve electrical connector.
14. Disconnect the upper radiator hose, coolant bypass hose, EGR coolant hose, heater hose and coolant vent hose from the engine coolant outlet and the EGR valve.
15. Remove the bolts and the cylinder head.
    - Discard the bolts and the cylinder head gasket.

Installation

NOTE: Do not use metal scrapers, wire brushes, power abrasive discs or other abrasive means to clean the sealing surfaces. These tools cause scratches and gouges that make leak paths. Use a plastic scraping tool to remove all traces of the head gasket.

NOTE: Observe all warnings or cautions and follow all application directions contained on the packaging of the silicone gasket remover and the metal surface prep.

NOTE: If there is no residual gasket material present, metal surface prep can be

used to clean and prepare the surfaces.

1. Clean the cylinder head-to-cylinder block mating surface of both the cylinder head and the cylinder block in the following sequence.
    1. Remove any large deposits of silicone or gasket material with a plastic scraper.
    2. Apply silicone gasket remover, following package directions, and allow to set for several minutes.
    3. Remove the silicone gasket remover with a plastic scraper. A second application of silicone gasket remover may be required if residual traces of silicone or gasket material remain.
    4. Apply metal surface prep, following package directions, to remove any traces of oil or coolant, and to prepare the surfaces to bond with the new gasket. Do not attempt to make the metal shiny. Some staining of the metal surfaces is normal.
2. Support the cylinder head on a bench with the head gasket side up. Check the cylinder head distortion and the cylinder block distortion. For additional information, refer to **ENGINE MECHANICAL SYSTEM - GENERAL INFORMATION** article.
3. Clean the cylinder head bolt holes in the cylinder block. Make sure all coolant, oil or other foreign material is removed.
4. Apply silicone gasket and sealant to the locations shown in illustration.

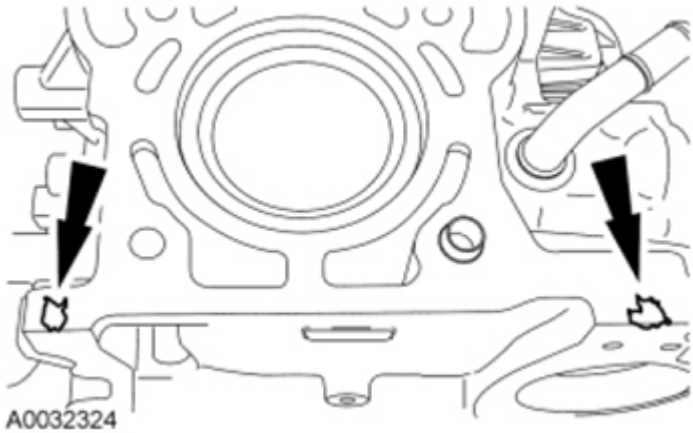

Fig. 152: Locating Silicone Gasket And Sealant Apply Locations
Courtesy of FORD MOTOR CO.

5. Install a new cylinder head gasket.

NOTE: The cylinder head bolts are torque-to-yield and must not be reused. New cylinder head bolts must be installed.

6. Install the cylinder head and 10 new bolts. Tighten the bolts in the sequence shown in illustration in the following 5 stages:
    - Stage 1: Tighten to 5 Nm (44 lb-in).
    - Stage 2: Tighten to 15 Nm (133 lb-in).
    - Stage 3: Tighten to 45 Nm (33 lb-ft).

- Stage 4: Turn 90 degrees.
- Stage 5: Turn an additional 90 degrees.

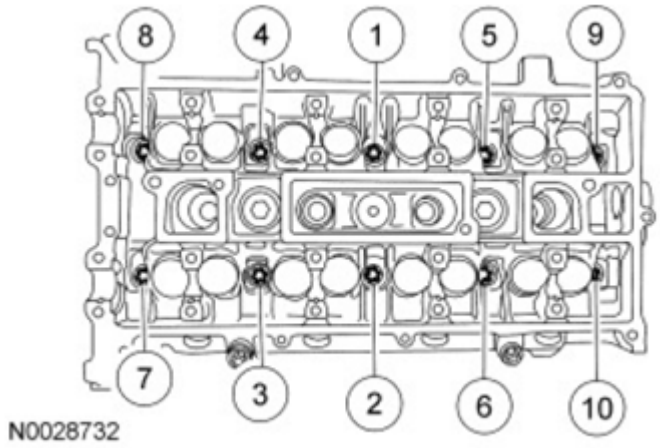

Fig. 153: Identifying Cylinder Head Bolts Tightening Sequence
Courtesy of FORD MOTOR CO.

7. Connect the upper radiator hose, coolant bypass hose, EGR coolant hose, heater hose and coolant vent hose to the engine coolant outlet and the EGR valve.
8. Connect the EGR valve electrical connector.
9. Install the catalytic converter. For additional information, refer to **EXHAUST SYSTEM** .
10. Install the intake manifold. For additional information, refer to **INTAKE MANIFOLD** in this service information.

NOTE: Lubricate the valve tappets with clean engine oil.

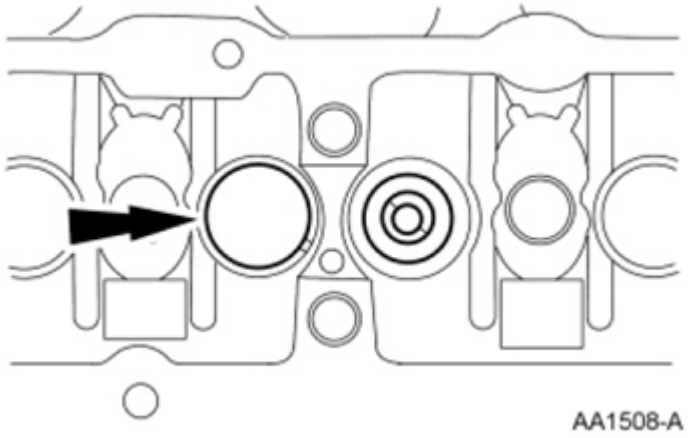

Fig. 154: Locating Valve Tappets
Courtesy of FORD MOTOR CO.

11. Install the valve tappets in their original positions.

NOTE: **Install the camshafts with the alignment notches in the camshafts lined up so the camshaft alignment plate can be installed. Make sure the lobes on the No. 1 cylinder are in the same position as noted in the removal procedure. Failure to follow this procedure can cause severe damage to the valves and pistons.**

NOTE: **Lubricate the camshaft journals and bearing caps with clean engine oil.**

12. Install the camshafts and bearing caps in their original location and orientation. Tighten the bearing caps in the sequence shown in illustration in 3 stages:
    - Stage 1: Tighten the camshaft bearing cap bolts, one turn at a time, until finger-tight.
    - Stage 2: Tighten the bolts to 7 Nm (62 lb-in).
    - Stage 3: Tighten the bolts to 16 Nm (142 lb-in).

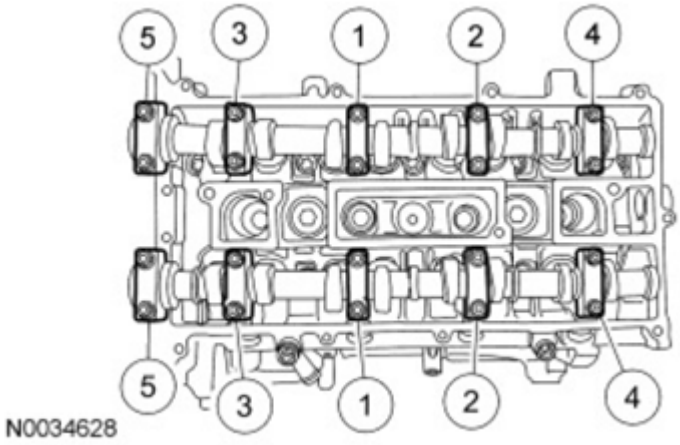

Fig. 155: Identifying Camshaft Bearing Cap Bolts Tightening Sequence
Courtesy of FORD MOTOR CO.

13. Install the Camshaft Alignment Plate.

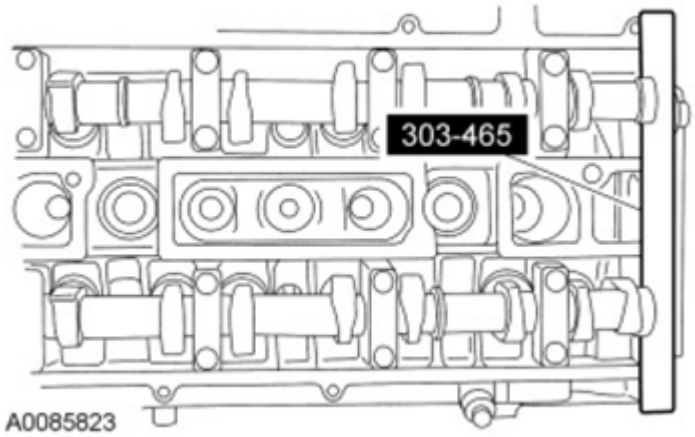

Fig. 156: Identifying Camshaft Alignment Plate
Courtesy of FORD MOTOR CO.

14. Install the **VCT** oil control solenoid. For additional information, refer to **ELECTRONIC ENGINE CONTROLS - HYBRID** article.
15. Install the timing drive components. For additional information, refer to **TIMING DRIVE COMPONENTS** in this service information.
16. Fill and bleed the engine cooling system. For additional information, refer to **ENGINE COOLING - HYBRID** article.

ENGINE LUBRICATION COMPONENTS - EXPLODED VIEW

Oil Filter Adapter, Oil Filter and Engine Oil Pressure (EOP) Switch

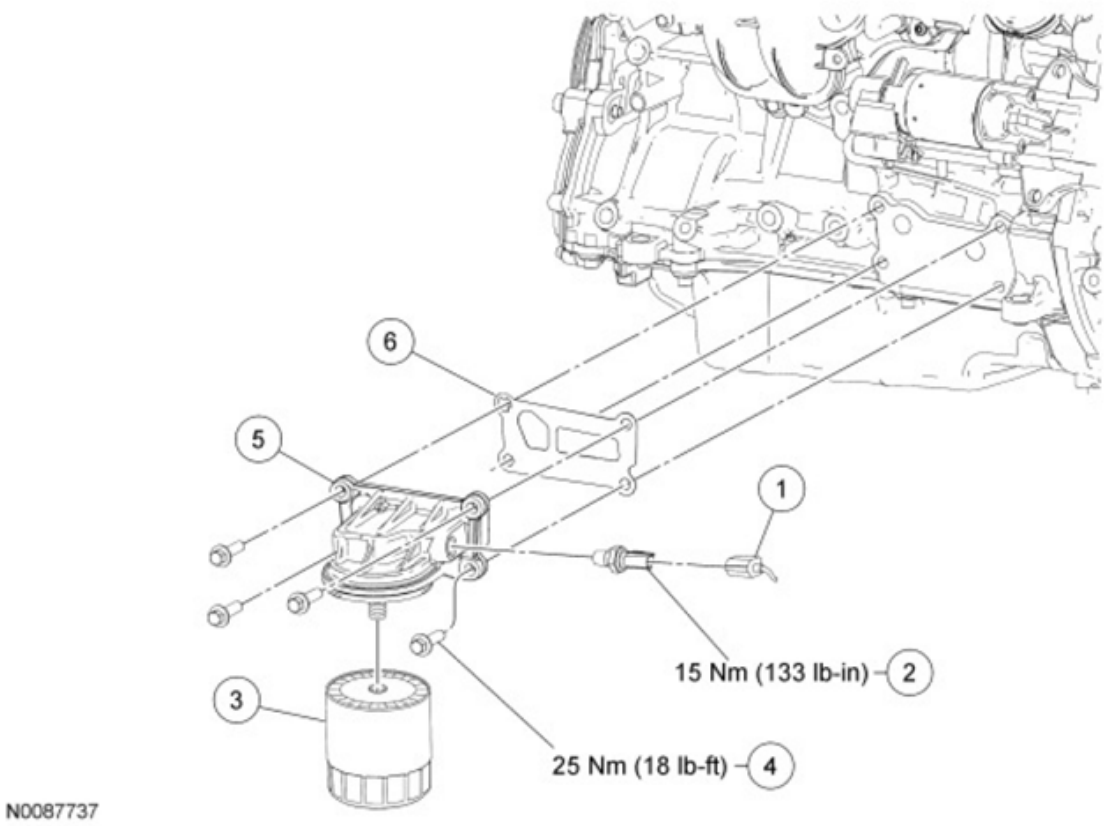

Fig. 157: Identifying Engine Lubrication Components With Torque Specifications
Courtesy of FORD MOTOR CO.

ITEM DESCRIPTION

Item	Part Number	Description
1	14A464	Engine Oil Pressure (EOP) switch electrical connector (part of 12C508)
2	9278	**EOP** switch
3	6731	Oil filter

4	W500225	Oil filter adapter bolt (4 required)
5	6884	Oil filter adapter
6	6A636	Oil filter adapter gasket

Oil Pan, Oil Pump Screen and Pickup Tube

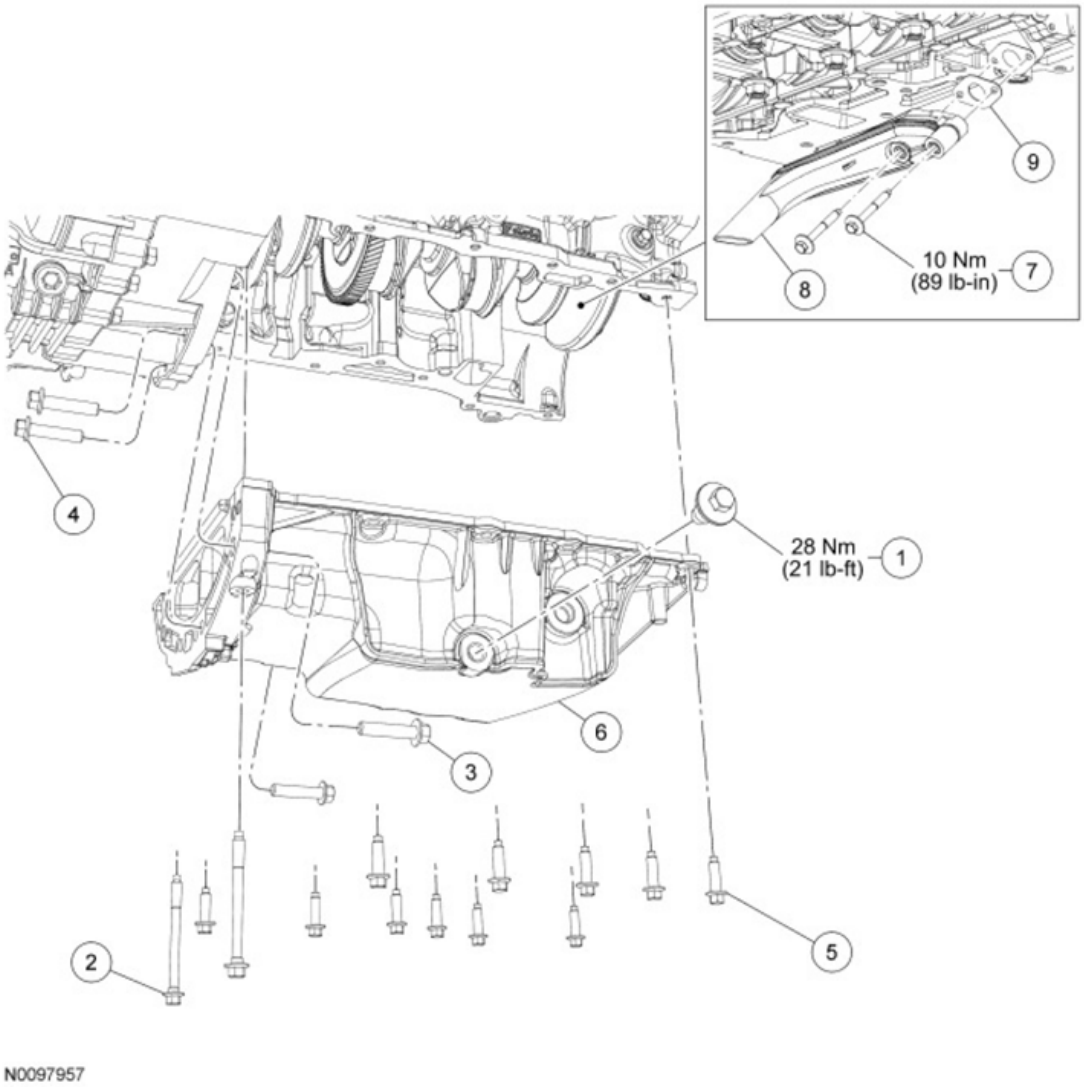

Fig. 158: Identifying Oil Pan, Oil Pump Screen And Pickup Tube Components With Torque Specifications
Courtesy of FORD MOTOR CO.

ITEM DESCRIPTION CHART

Item	Part Number	Description
1	6730	Drain plug
2	W706284	Oil pan bolt (2 required)
3	W500122	Oil pan-to-bellhousing bolt (2 required)

4	W500122	Bellhousing-to-oil pan bolt (2 required)
5	W500224	Oil pan bolt (11 required)
6	6675	Oil pan
7	W706282	Oil pump screen and pickup tube bolt (2 required)
8	6622	Oil pump screen and pickup tube
9	6625	Oil pump screen and pickup tube gasket

Oil Pump

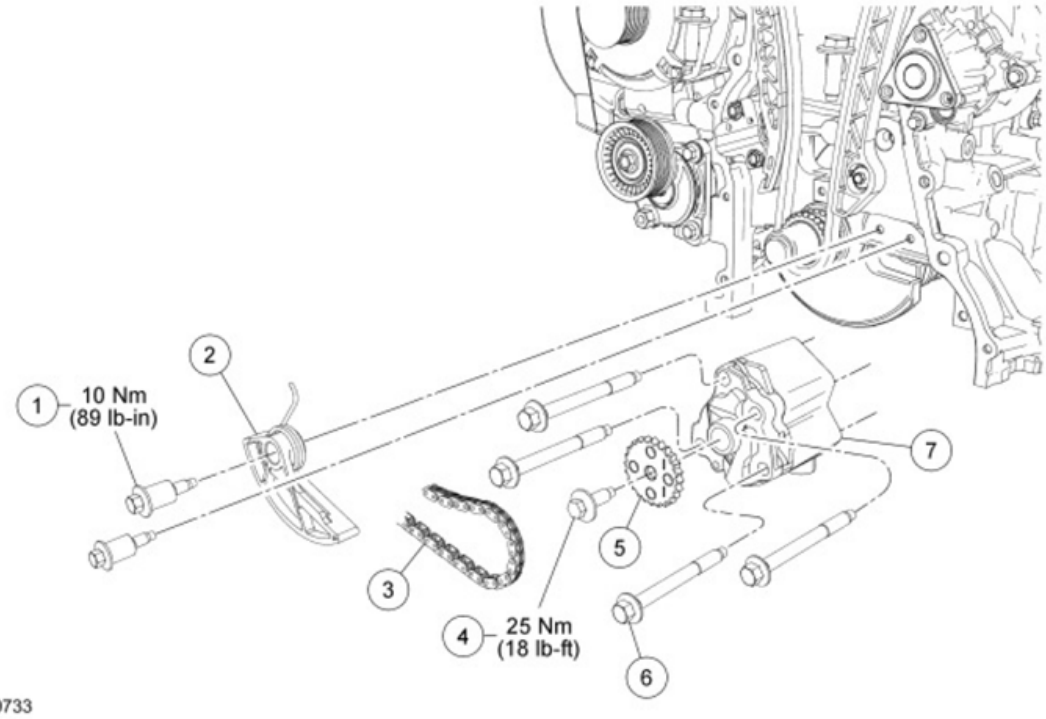

Fig. 159: Identifying Oil Pump Components With Torque Specifications
Courtesy of FORD MOTOR CO.

ITEM DESCRIPTION

Item	Part Number	Description
1	W703651	Oil pump drive chain tensioner shoulder bolt (2 required)
2	6C271	Oil pump drive chain tensioner
3	6A895	Oil pump drive chain
4	W704397	Oil pump sprocket bolt
5	6652	Oil pump sprocket
6	W703647	Oil pump bolt (4 required)
7	6600	Oil pump

1. For additional information, refer to the appropriate procedures in this service information.

OIL FILTER ADAPTER

Removal and Installation

1. With the vehicle in NEUTRAL, position it on a hoist. For additional information, refer to **JACKING & LIFTING** article.
2. Remove the pin-type retainer (not shown in illustration), 5 bolts and the RH splash shield.
   - To install, tighten to 9 Nm (80 lb-in).

Fig. 160: Locating RH Splash Shield And Retainers
Courtesy of FORD MOTOR CO.

3. Disconnect the Engine Oil Pressure (EOP) switch electrical connector.
4. Remove the oil filter.
   - To install, lubricate the oil filter O-ring with clean engine oil and then tighten the oil filter three-fourths turn after the oil filter gasket makes contact with the oil filter adapter.

NOTE: Discard the gasket.

5. Remove the 4 bolts and the oil filter adapter.
   - To install, tighten to 25 Nm (18 lb-ft).
6. To install, reverse the removal procedure.

ENGINE OIL PRESSURE (EOP) SWITCH

Material Specifications

MATERIAL SPECIFICATIONS

Item	Specification
Thread Sealant with PTFE TA-24	WSK-M2G350-A2

Removal and Installation

1. With the vehicle in NEUTRAL, position it on a hoist. For additional information, refer to **JACKING & LIFTING** article.
2. Remove the pin-type retainer, the 5 bolts and the RH splash shield.
   - To install, tighten to 9 Nm (80 lb-in).
3. Disconnect the Engine Oil Pressure (EOP) switch electrical connector.
4. Remove the **EOP** switch.
   - To install, tighten to 15 Nm (133 lb-in).
5. To install, reverse the removal procedure.
   - Apply thread sealant with PTFE to the **EOP** switch threads.

OIL PAN

Material Specifications

MATERIAL SPECIFICATIONS

Item	Specification
Motorcraft® Metal Surface Prep ZC-31-A	-
Motorcraft® SAE 5W-20 Premium Synthetic Blend Motor Oil (US); Motorcraft® SAE 5W-20 Super Premium Motor Oil (Canada) XO-5W20-QSP (US); CXO-5W20-LSP12 (Canada)	WSS-M2C945-A
Silicone Gasket and Sealant TA-30	WSE-M4G323-A4

Removal

1. With the vehicle in NEUTRAL, position it on a hoist. For additional information, refer to **JACKING & LIFTING** article.
2. Drain the engine oil, then install the drain plug.
   - Tighten to 28 Nm (21 lb-ft).
3. Remove the engine front cover. For additional information, refer to **ENGINE FRONT COVER** in this service information.
4. Remove the 4 oil pan-to-bellhousing bolts.
5. Remove the 13 bolts and the oil pan.

Installation

NOTE: **Do not use metal scrapers, wire brushes, power abrasive discs or other abrasive means to clean the sealing surfaces. These tools cause scratches and gouges, which make leak paths. Use a plastic scraping tool to remove traces of sealant.**

1. Clean and inspect all mating surfaces.

NOTE: **If the oil pan is not secured within 4 minutes of sealant application, the sealant must be removed and the sealing area cleaned with metal surface prep. Allow to dry until there is no sign of wetness, or 4 minutes, whichever is longer. Failure to follow this procedure can cause future oil leakage.**

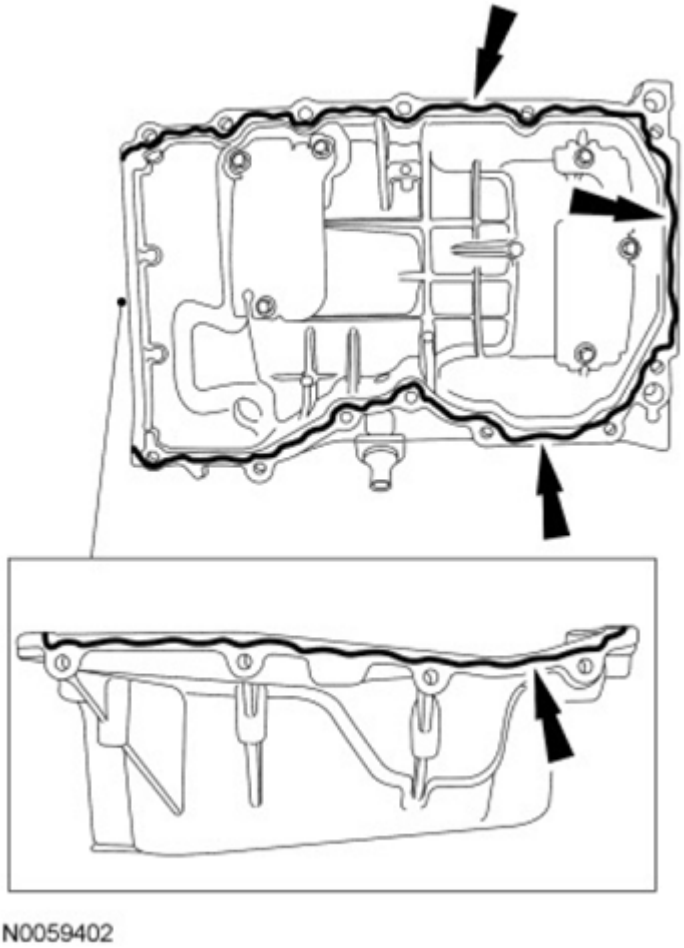

Fig. 161: Locating Oil Pan Silicone Gasket And Sealant Bead Applying Areas
Courtesy of FORD MOTOR CO.

2. Apply a 2.5 mm (0.09 in) bead of silicone gasket and sealant to the oil pan.
3. Position the oil pan and install the 2 rear oil pan bolts finger-tight.
4. Using a suitable straightedge, align the front surface of the oil pan flush with the front surface of the engine block.

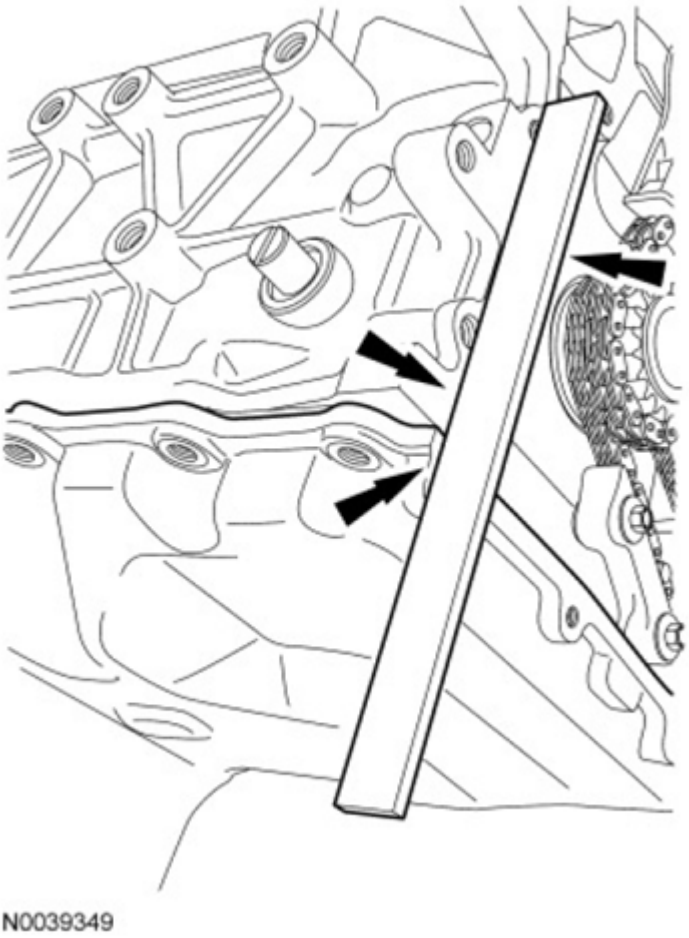

Fig. 162: Aligning Front Surface Using Suitable Straightedge
Courtesy of FORD MOTOR CO.

5. Install the remaining oil pan bolts.
    - Tighten in the sequence shown in illustration to 25 Nm (18 lb-ft).

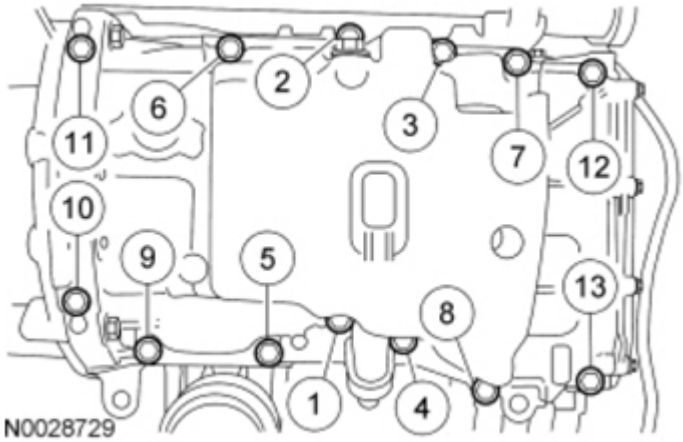

Fig. 163: Identifying Oil Pan Bolts Tightening Sequence
Courtesy of FORD MOTOR CO.

6. Install the 4 oil pan-to-bellhousing bolts.
   - Tighten to 48 Nm (35 lb-ft).
7. Install the engine front cover. For additional information, refer to **ENGINE FRONT COVER** in this service information.
8. Fill the engine with clean engine oil.

OIL PUMP SCREEN AND PICKUP TUBE

Removal and Installation

1. With the vehicle in NEUTRAL, position it on a hoist. For additional information, refer to **JACKING & LIFTING** article.
2. Remove the oil pan. For additional information, refer to **ENGINE LUBRICATION COMPONENTS - EXPLODED VIEW** and **OIL PAN** in this service information.

NOTE: Discard the gasket and clean and inspect the gasket mating surfaces.

3. Remove the 2 bolts and the oil pump screen and pickup tube.
   - To install, tighten to 10 Nm (89 lb-in).
4. To install, reverse the removal procedure.

OIL PUMP

Material Specifications

MATERIAL SPECIFICATIONS

Item	Specification
Motorcraft® Metal Surface Prep ZC-31-A	-
Motorcraft® SAE 5W-20 Premium Synthetic Blend Motor Oil (US); Motorcraft® SAE 5W-20 Super Premium Motor Oil (Canada) XO-5W20-QSP (US); CXO-5W20-LSP12 (Canada)	WSS-M2C945-A
Silicone Gasket and Sealant TA-30	WSE-M4G323-A4

Removal

1. With the engine in NEUTRAL, position it on a hoist. For additional information, refer to **JACKING & LIFTING** article.
2. Remove the engine front cover. For additional information, refer to **ENGINE FRONT COVER** in this service information.
3. Drain the engine oil, then install the drain plug.

- To install, tighten to 28 Nm (21 lb-ft).

4. Remove the 4 oil pan-to-bellhousing bolts.
5. Remove the 13 bolts and the oil pan.

NOTE: Discard the gasket and clean and inspect the gasket mating surfaces.

6. Remove the 2 bolts and the oil pump screen and pickup tube.
7. Remove the oil pump drive chain tensioner.
   1. Release the tension on the tensioner spring.
   2. Remove the 2 shoulder bolts and the tensioner.

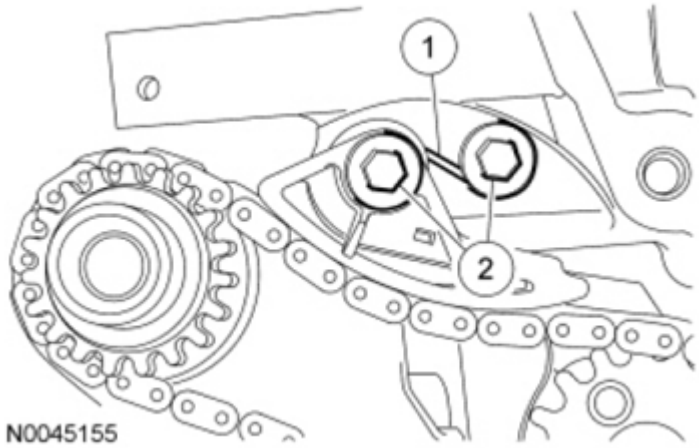

Fig. 164: Locating Shoulder Bolts And Tensioner
Courtesy of FORD MOTOR CO.

8. Remove the chain from the oil pump sprocket.
9. Remove the bolt and oil pump sprocket.
10. Remove the 4 bolts and the oil pump.

Installation

NOTE: Clean the oil pump and cylinder block mating surfaces with metal surface prep.

1. Install the oil pump assembly. Tighten the 4 bolts in the sequence shown in illustration in 2 stages:
   - Stage 1: Tighten to 10 Nm (89 lb-in).
   - Stage 2: Tighten to 20 Nm (177 lb-in).

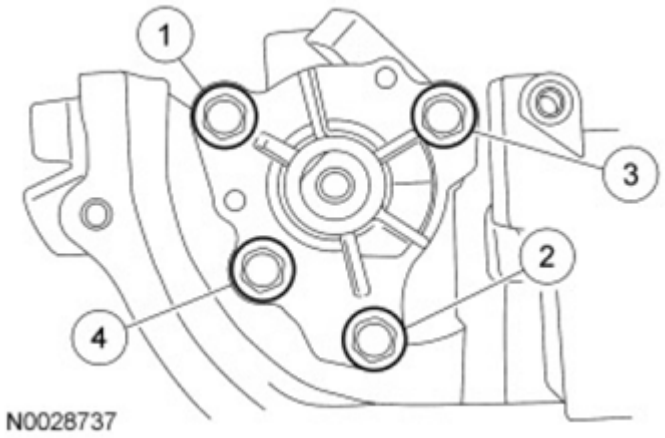

Fig. 165: Identifying Oil Pump Assembly Bolts Tightening Sequence
Courtesy of FORD MOTOR CO.

2. Install the oil pump sprocket and bolt.
   - Tighten to 25 Nm (18 lb-ft).
3. Install the chain onto the oil pump sprocket.
4. Install the oil pump drive chain tensioner shoulder bolt.
   - Tighten to 10 Nm (89 lb-in).

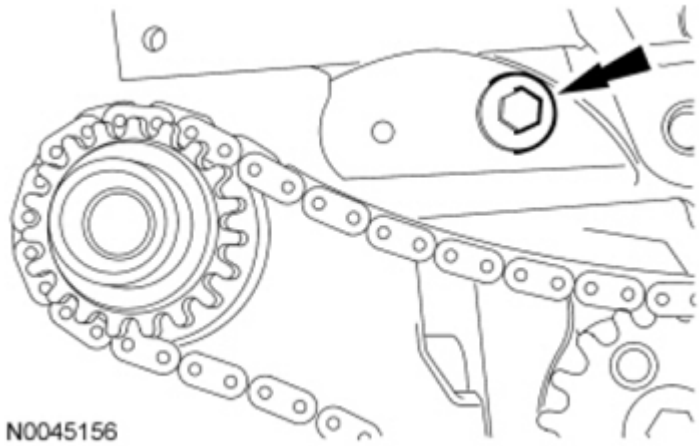

Fig. 166: Locating Oil Pump Chain Drive Tensioner Shoulder Bolt
Courtesy of FORD MOTOR CO.

5. Install the oil pump drive chain tensioner and bolt. Hook the tensioner spring around the shoulder bolt.
   - Tighten to 10 Nm (89 lb-in).

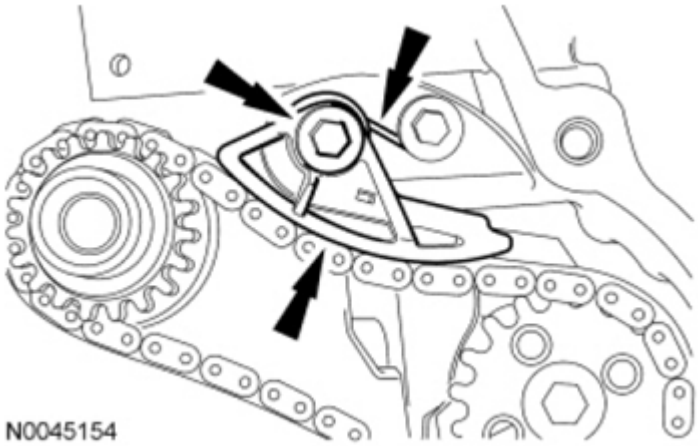

Fig. 167: Locating Oil Pump Drive Chain Tensioner, Bolt And Tensioner Spring
Courtesy of FORD MOTOR CO.

6. Install the oil pump screen and pickup tube and the 2 bolts.
   - Tighten to 10 Nm (89 lb-in).

NOTE: **Do not use metal scrapers, wire brushes, power abrasive discs or other abrasive means to clean the sealing surfaces. These tools cause scratches and gouges, which make leak paths. Use a plastic scraping tool to remove traces to sealant.**

7. Clean all mating surfaces with metal surface prep.

NOTE: **If the oil pan is not secured within 4 minutes of sealant application, the sealant must be removed and the sealing area cleaned with metal surface prep. Allow to dry until there is no sign of wetness, or 4 minutes, whichever is longer. Failure to follow this procedure can cause future oil leakage.**

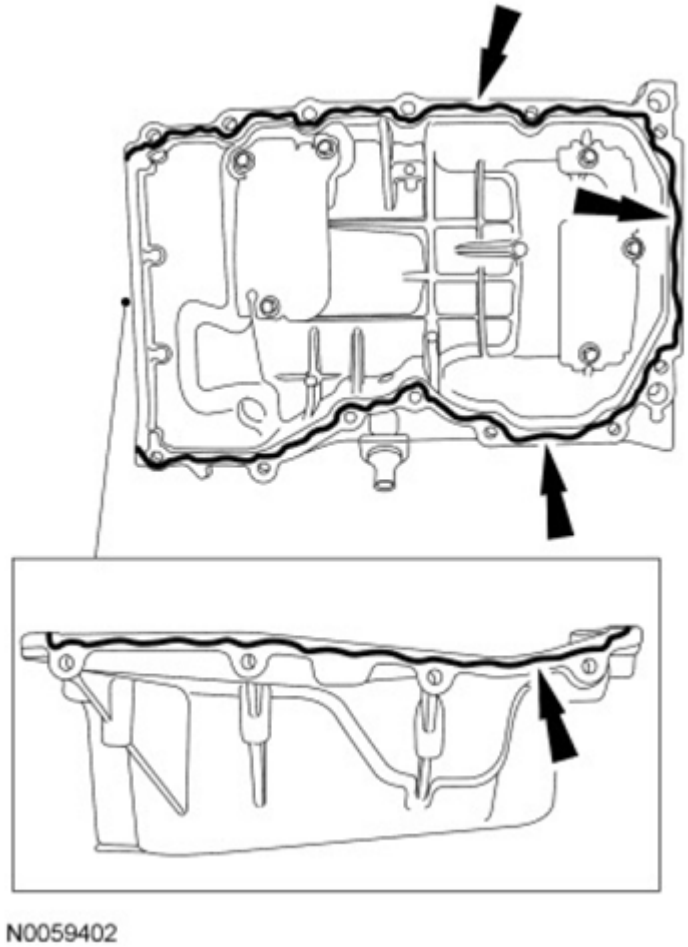

Fig. 168: Locating Oil Pan Silicone Gasket And Sealant Bead Applying Areas
Courtesy of FORD MOTOR CO.

8. Apply a 2.5 mm (0.09 in) bead of sealant gasket and sealant to the oil pan.
9. Position the oil pan onto the engine and install the 2 rear oil pan bolts finger-tight.
10. Using a suitable straight edge, align the front surface of the oil pan flush with the front surface of the engine block.

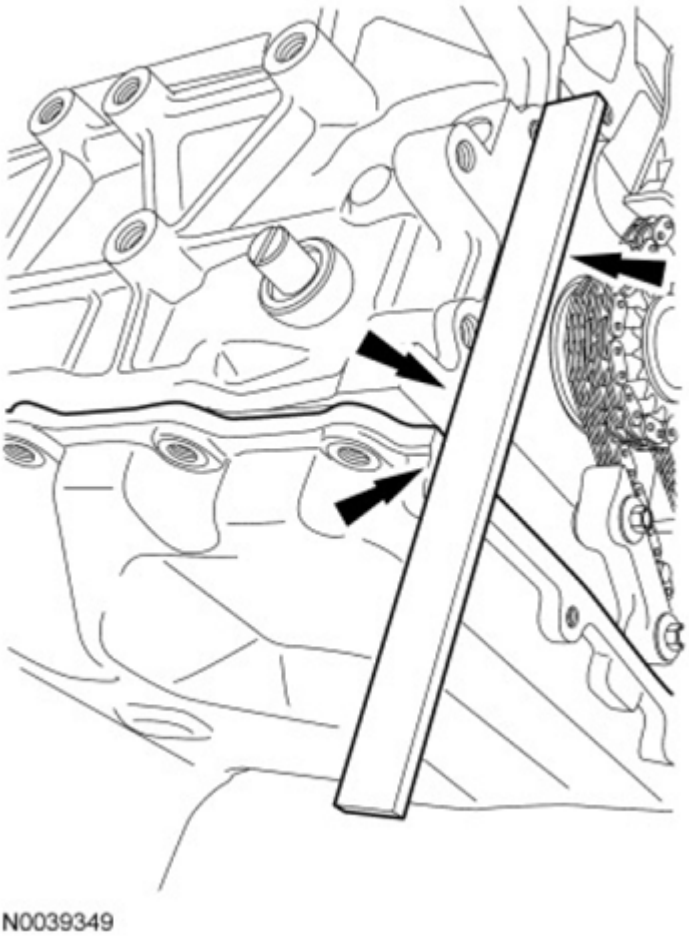

Fig. 169: Aligning Front Surface Using Suitable Straightedge
Courtesy of FORD MOTOR CO.

11. Install the remaining oil pan bolts.
    - Tighten in the sequence shown in illustration to 25 Nm (18 lb-ft).

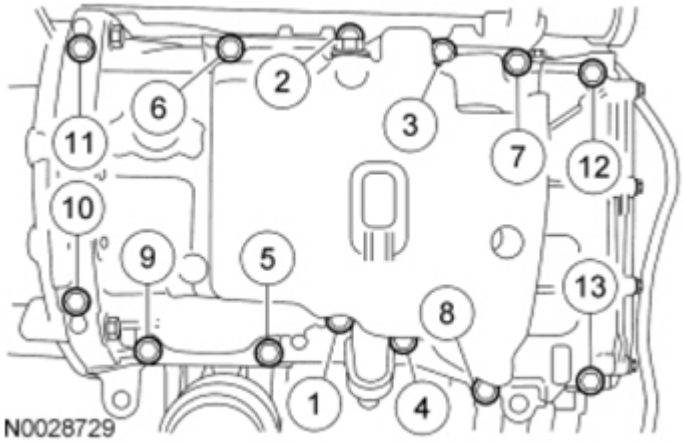

Fig. 170: Identifying Oil Pan Bolts Tightening Sequence
Courtesy of FORD MOTOR CO.

12. Install the 4 oil pan-to-bellhousing bolts.
    - Tighten to 48 Nm (35 lb-ft).
13. Install the engine front cover. For additional information, refer to **ENGINE FRONT COVER** in this service information.
14. Fill the engine with clean engine oil.

ENGINE MOUNT

Special Tool(s)

SPECIAL TOOLS

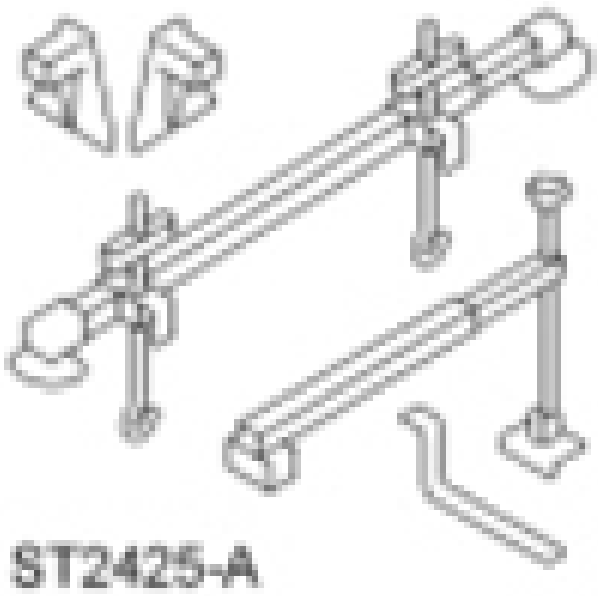	Support Bar, Engine 303-F072

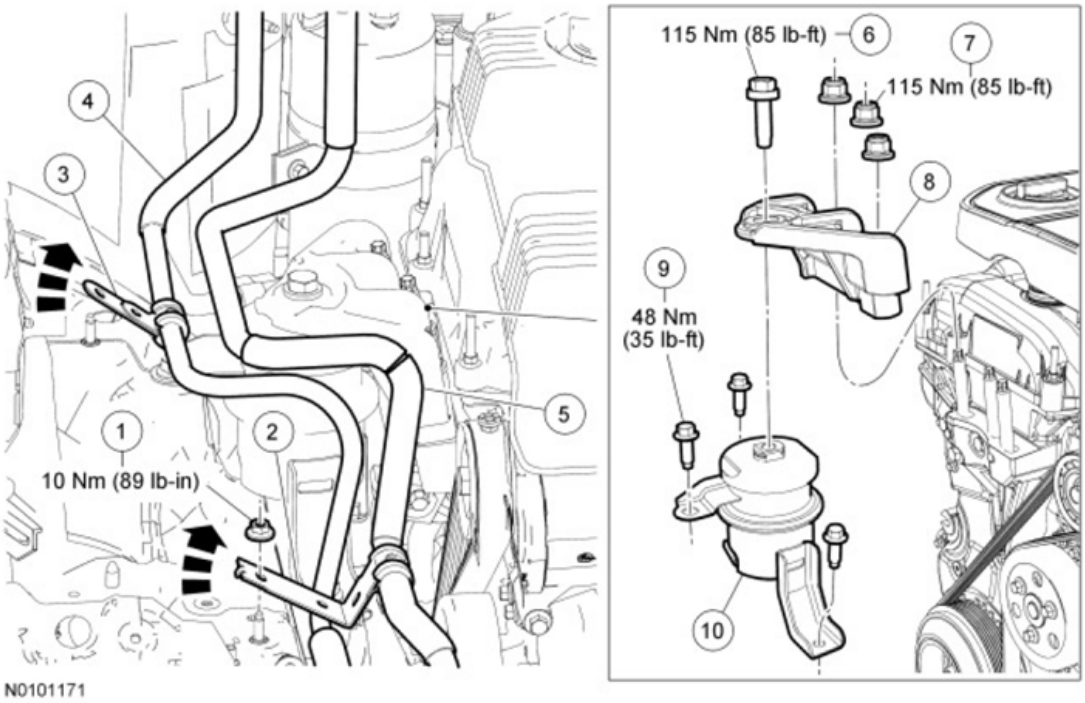

Fig. 171: Identifying Engine Mount Components With Torque Specifications
Courtesy of FORD MOTOR CO.

ITEM DESCRIPTION

Item	Part Number	Description
1	W520413	A/C tube bracket nut
2	19A579	A/C tube bracket
3	19A579	A/C tube bracket
4	19835	A/C tube
5	12D305	A/C tube
6	W714723	Engine mount bracket bolt
7	N807144	Engine mount bracket nut (3 required)
8	6A094	Engine mount bracket
9	W500233	Engine mount bolt (3 required)
10	6068	Engine mount

Removal and Installation

1. With the vehicle in NEUTRAL, position it on a hoist. For additional information, refer to **JACKING & LIFTING** article.
2. Remove the engine coolant degas bottle. For additional information, refer to **ENGINE COOLING - HYBRID** article.
3. Remove the DC/DC converter. For additional information, refer to **HIGH VOLTAGE CONVERTER/INVERTER** article.
4. Install the Engine Support Bar.

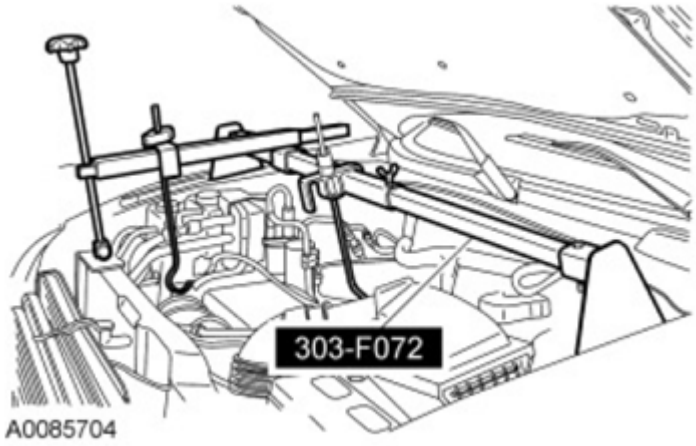

Fig. 172: Installing Engine Support Bar
Courtesy of FORD MOTOR CO.

5. Remove the engine mount bracket bolt.
    - To install, tighten to 115 Nm (85 lb-ft).
6. Use the Engine Support Bar to raise the engine 25 mm (0.98 in).

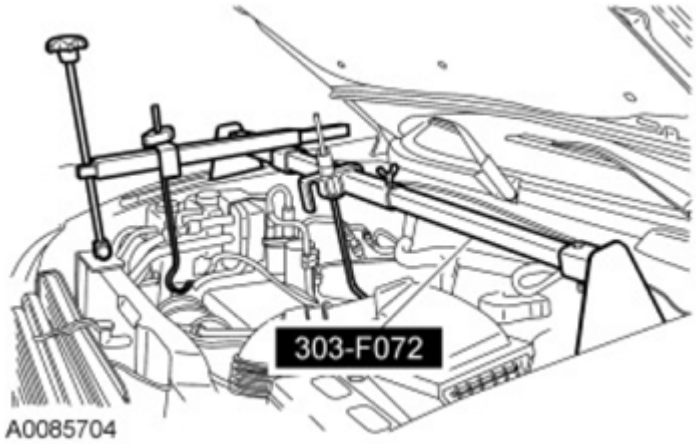

Fig. 173: Installing Engine Support Bar
Courtesy of FORD MOTOR CO.

7. Remove the 3 nuts and the engine mount bracket.
    - To install, tighten to 115 Nm (85 lb-ft).
8. Remove the A/C tube bracket nut.
    - To install, tighten to 10 Nm (89 lb-in).
9. Rotate the A/C tube brackets off of the studs.
    - Reposition the A/C tubes to access the engine mount bolt.
10. Remove the 3 bolts and the engine mount.
    - To install, tighten to 48 Nm (35 lb-ft).

11. To install, reverse the removal procedure.

REMOVAL

ENGINE

Special Tool(s)

SPECIAL TOOLS

	2,200# Floor Crane, Fold Away 300-OTC1819E or equivalent
	Powertrain Lift 014-00765 or equivalent

	
	Remover, Halfshaft Oil Seal 308-428
	Remover, Tie-Rod End 211-105 (T85M-3395-A)

 ST1408-A	
 ST1605-A	Slide Hammer 100-001 (T50T-100-A)

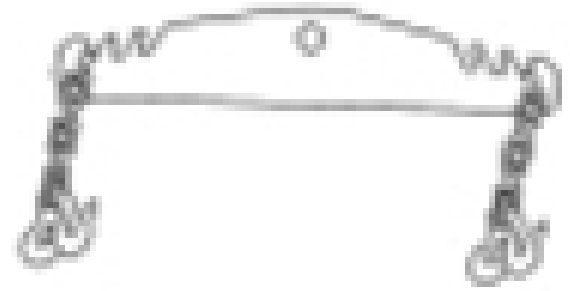 ST1602-A	Spreader Bar 303-D089 (D93P-6001-A3) (part of 303-DS086) or equivalent
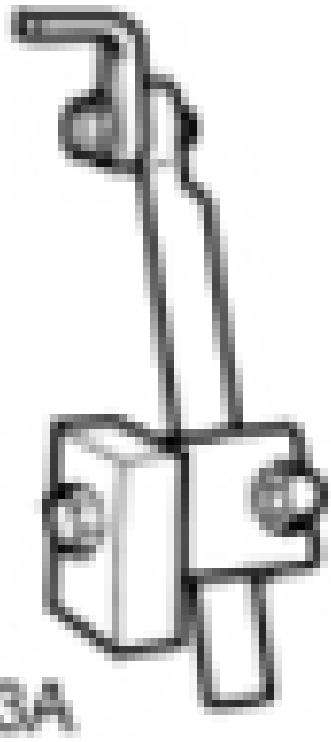 ST2743A	Adjustable Grip Arm, 1735A 014-00001 or equivalent

WARNING: Do not smoke, carry lighted tobacco or have an open flame of any type when working on or near any fuel-related component. Highly flammable mixtures are always present and may be ignited. Failure to follow these

instructions may result in serious personal injury.

All vehicles

1. With the vehicle in NEUTRAL, position it on a hoist. For additional information, refer to **JACKING & LIFTING** article.
2. Release the fuel system pressure. For additional information, refer to **FUEL SYSTEM - GENERAL INFORMATION** article.
3. Remove the battery tray. For additional information, refer to **BATTERY, BATTERY MOUNTING SYSTEM & BATTERY CABLES** . article

NOTE: Use a steering wheel holding device (such as Hunter® 28-75-1 or equivalent).

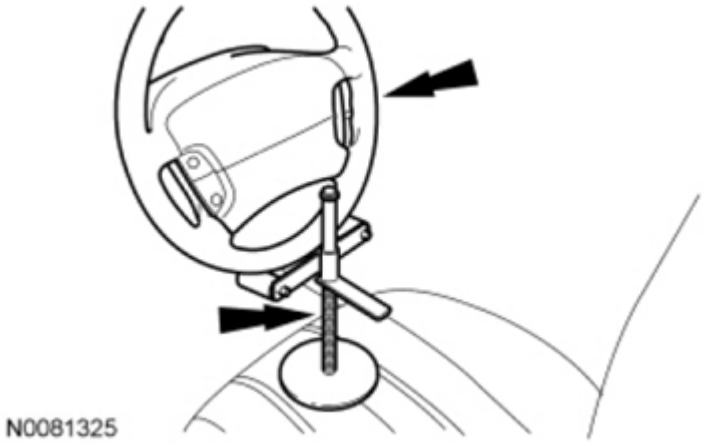

Fig. 174: Holding Steering Wheel Using A Steering Wheel Holding Device
Courtesy of FORD MOTOR CO.

4. Place the steering wheel in the straight-ahead position and the ignition key in the OFF position.
5. Disable the vehicle high-voltage electrical system. For additional information, refer to **HIGH VOLTAGE TRACTION BATTERY** article.
6. Recover the A/C system. For additional information, refer to **CLIMATE CONTROL SYSTEM - GENERAL INFORMATION AND DIAGNOSTICS - HYBRID** article.
7. Drain the cooling system. For additional information, refer to **ENGINE COOLING - HYBRID** article.
8. Drain the Motor Electronics Cooling System (MECS). For additional information, refer to **TRANSAXLE/TRANSMISSION COOLING - HYBRID** . article
9. Remove the engine coolant degas bottle. For additional information, refer to **ENGINE COOLING - HYBRID** article.
10. Remove the engine Air Cleaner (ACL). For additional information, refer to **INTAKE AIR DISTRIBUTION AND FILTERING - HYBRID** article.
11. Disconnect the fuel supply tube. For additional information, refer to **FUEL SYSTEM - GENERAL INFORMATION** article.

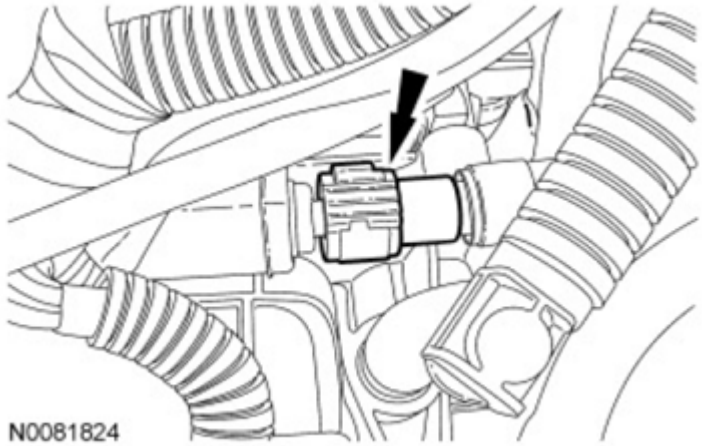

Fig. 175: Locating Fuel Supply Tube
Courtesy of FORD MOTOR CO.

12. Remove the front wheels and tires. For additional information, refer to **TIRES & WHEELS** article.
13. Remove the bolts and the lateral support crossmember.

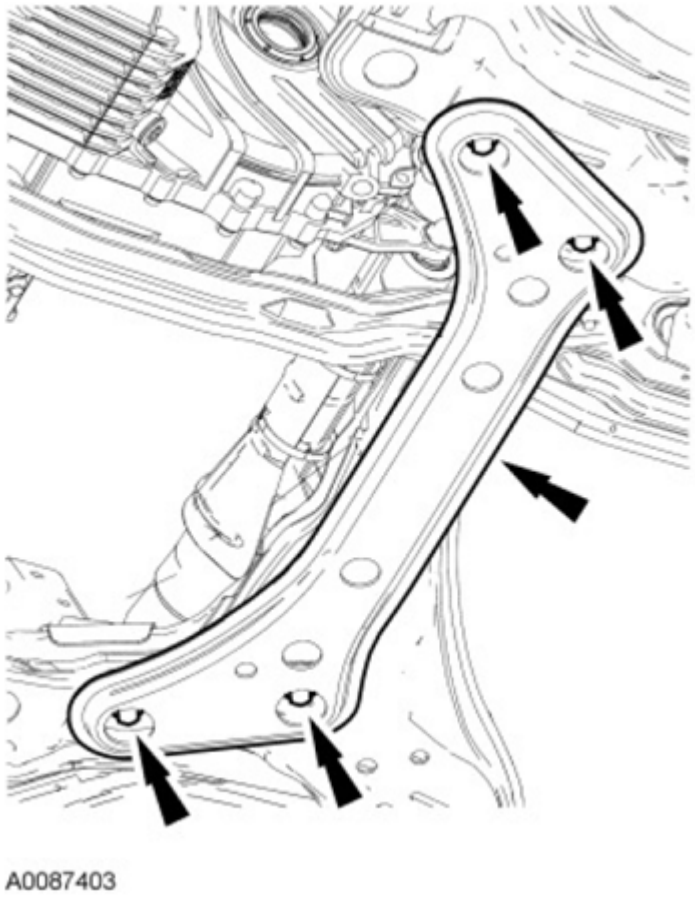

Fig. 176: Locating Lateral Support Crossmember And Bolts

Courtesy of FORD MOTOR CO.

14. Remove the exhaust intermediate pipe. For additional information, refer to **EXHAUST SYSTEM** article.
15. Remove the brake hose retainer and the ABS sensor retaining bolt from the LH strut.

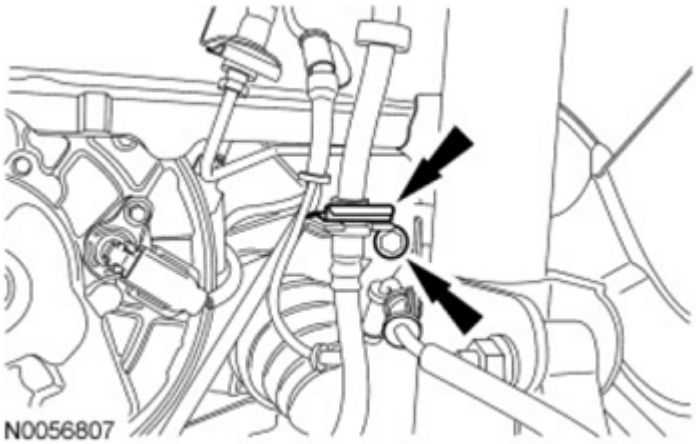

Fig. 177: Locating Brake Hose Retainer And ABS Sensor Retaining Bolt
Courtesy of FORD MOTOR CO.

16. Disconnect the LH suspension.
    1. Remove the nut and disconnect the stabilizer bar link.
    2. Remove and discard the tie-rod end retaining nut.

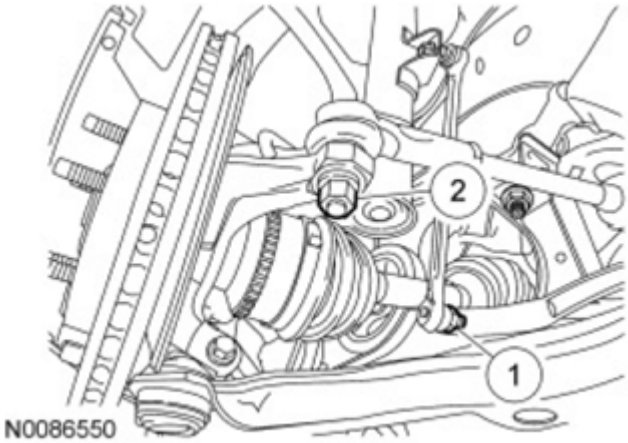

Fig. 178: Identifying Stabilizer Bar Link And Retaining Nut
Courtesy of FORD MOTOR CO.

17. Remove the brake hose retainer and the ABS sensor retaining bolt from the RH strut.

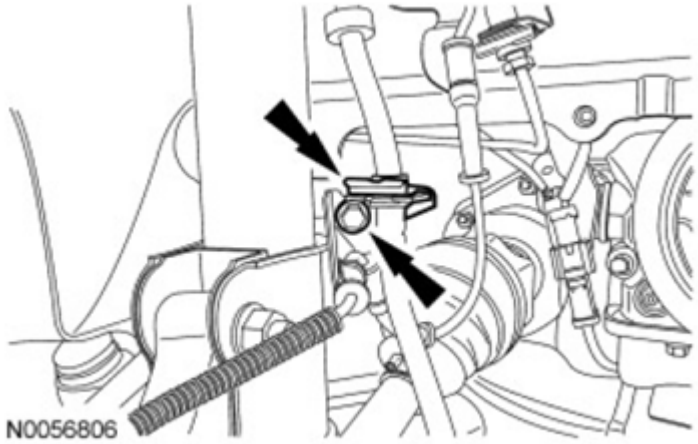

Fig. 179: Locating Brake Hose Retainer And ABS Sensor Retaining Bolt
Courtesy of FORD MOTOR CO.

18. Disconnect the RH suspension.
    1. Remove the nut and disconnect the stabilizer bar link.
    2. Remove and discard the tie-rod end retaining nut.

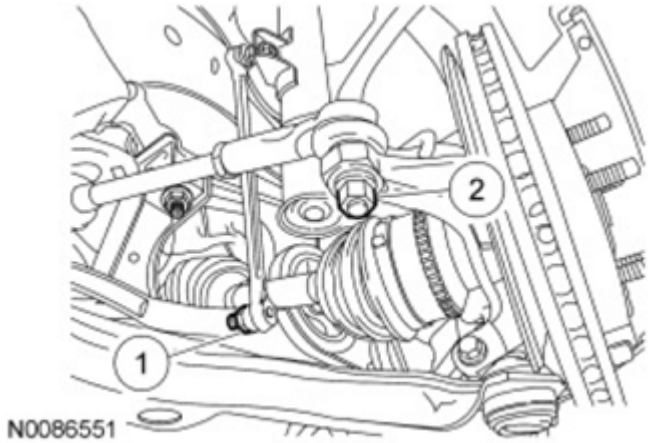

Fig. 180: Disconnecting RH Stabilizer Bar Link
Courtesy of FORD MOTOR CO.

NOTE: LH shown in illustration, RH similar.

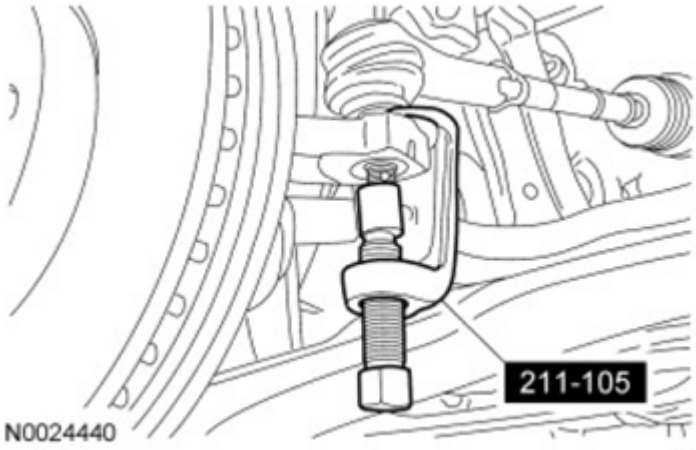

Fig. 181: Disconnecting Tie-Rod End From Steering Knuckle Using The Tie-Rod End Remover
Courtesy of FORD MOTOR CO.

19. Using the Tie-Rod End Remover, disconnect the LH and RH tie-rod end from the steering knuckle.
20. Remove the RH and LH halfshafts. For additional information, refer to **FRONT DRIVE HALFSHAFTS** article.
21. Remove the 2 intermediate shaft bearing retainer nuts.

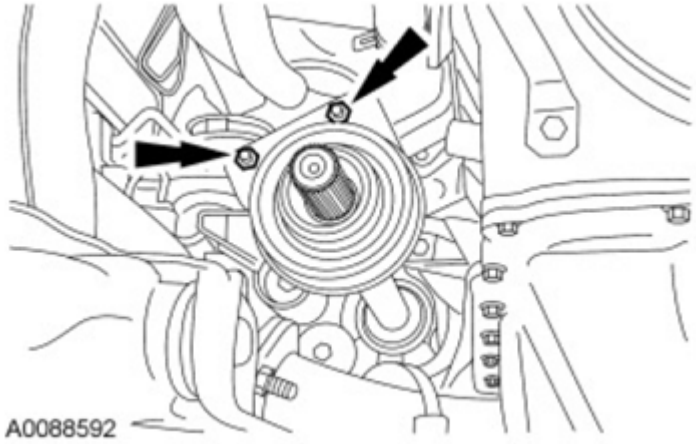

Fig. 182: Locating Intermediate Shaft Bearing Retainer Nuts
Courtesy of FORD MOTOR CO.

NOTE: On All-Wheel Drive (AWD) vehicles, the Power Transfer Unit (PTU) seal must be replaced every time the intermediate shaft is removed.

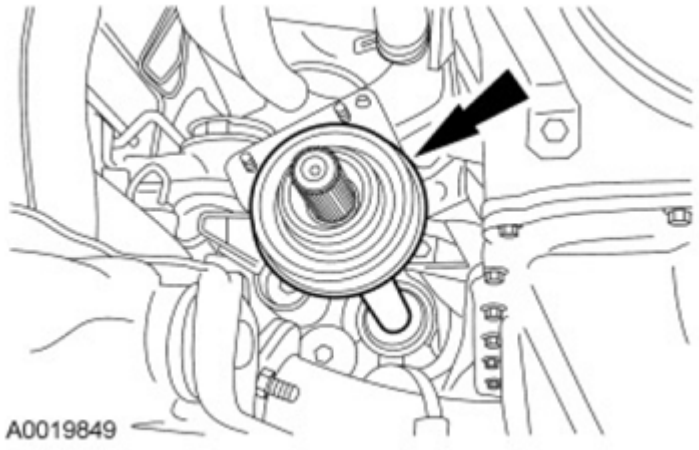

Fig. 183: Locating Intermediate Shaft
Courtesy of FORD MOTOR CO.

22. Remove the intermediate shaft.
23. Drain the transmission fluid. For additional information, refer to **AUTOMATIC TRANSAXLE/TRANSMISSION - ELECTRONICALLY CONTROLLED CONTINUOUSLY VARIABLE TRANSMISSION (ECVT)** article.

All-Wheel Drive (AWD) vehicles

24. Remove the driveshaft. For additional information, refer to **DRIVESHAFT** article.
25. Remove the 2 catalytic converter bracket bolts.

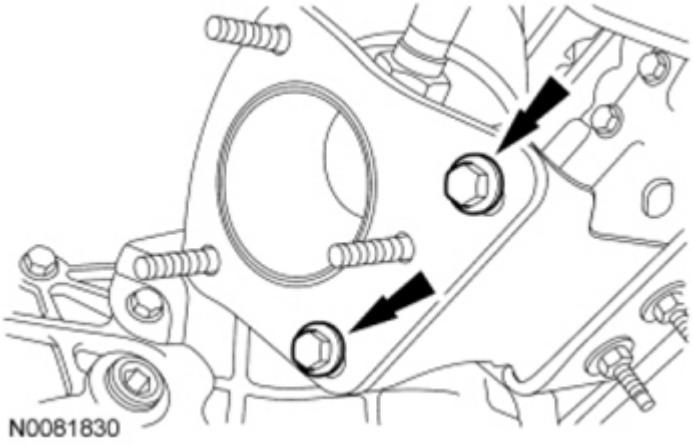

Fig. 184: Locating Catalytic Converter Bracket Bolts
Courtesy of FORD MOTOR CO.

NOTE: Catalytic converter manifold is removed for clarity.

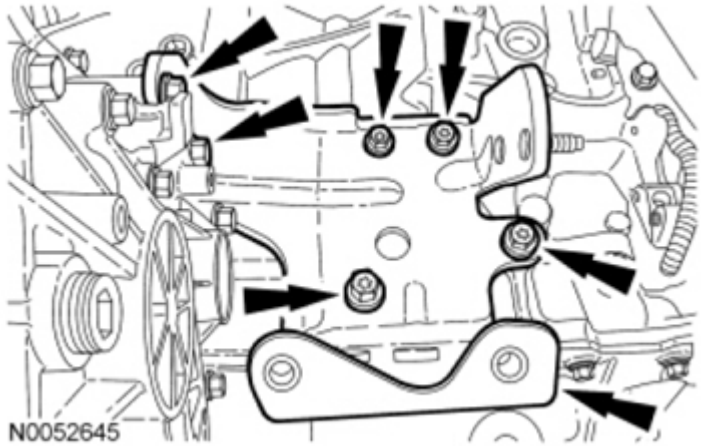

Fig. 185: Locating Bolts And Transfer Case-To-Engine Bracket
Courtesy of FORD MOTOR CO.

26. Remove the 6 bolts and the **PTU** -to-engine bracket.
27. Remove the 3 **PTU** heat shield bolts and the **PTU** heat shield.

Fig. 186: Locating PTU Heat Shield Bolts
Courtesy of FORD MOTOR CO.

28. Disconnect the **PTU** vent hose and position it aside.

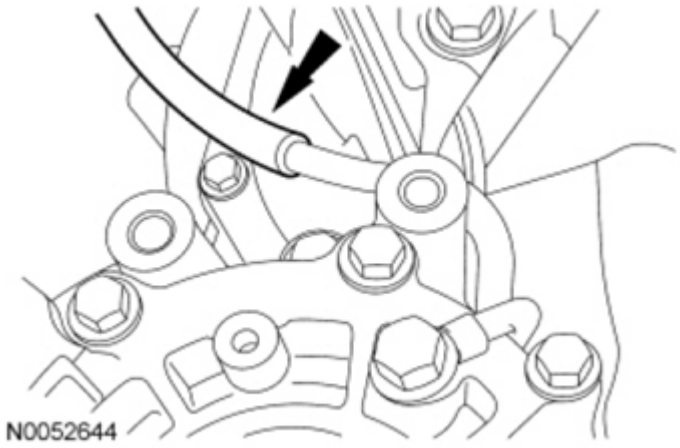

Fig. 187: Locating PTU Vent Hose
Courtesy of FORD MOTOR CO.

NOTE: Catalytic converter manifold removed for clarity.

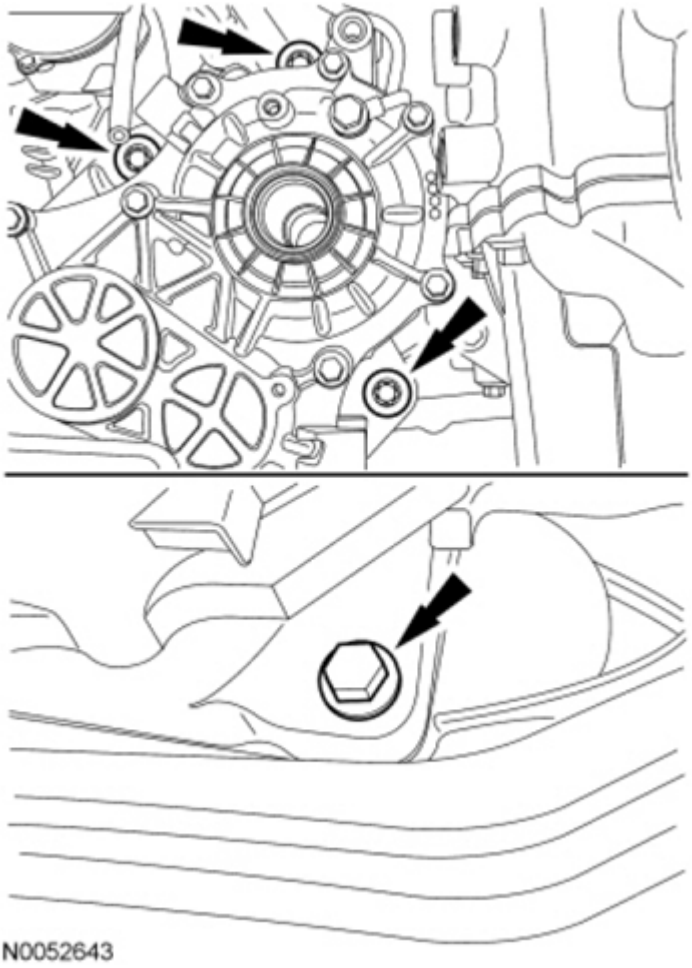

Fig. 188: Locating Transfer Case-To-Transaxle Bolts

Courtesy of FORD MOTOR CO.

29. Remove the 4 **PTU** -to-transaxle bolts and remove the **PTU** .
30. Using the Halfshaft Oil Seal Remover and Slide Hammer, remove the intermediate shaft seal.

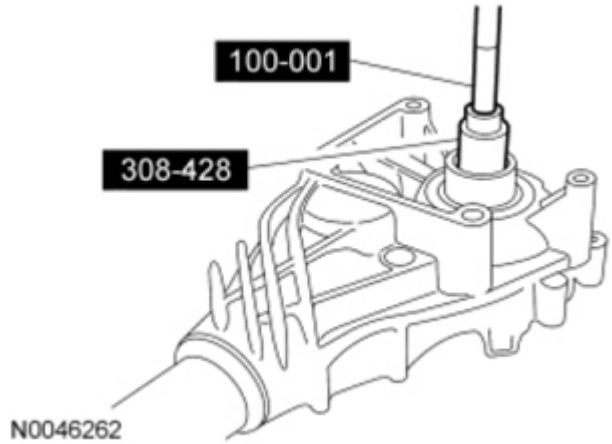

Fig. 189: Removing Intermediate Shaft Seal Using Halfshaft Oil Seal Remover And Slide Hammer
Courtesy of FORD MOTOR CO.

All vehicles

31. Remove the engine oil filter.

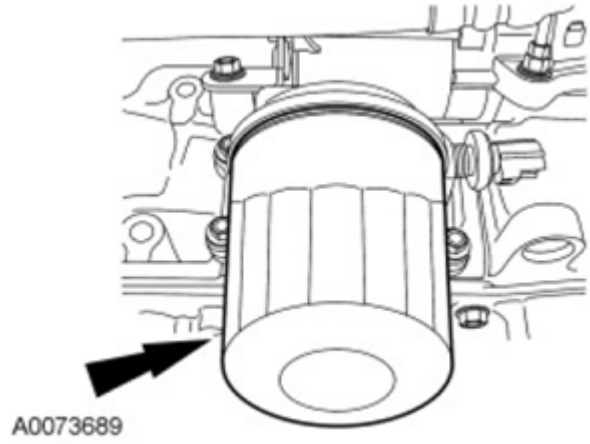

Fig. 190: Locating Engine Oil Filter
Courtesy of FORD MOTOR CO.

32. Drain the engine oil.
    - Install the drain plug.
    - Tighten to 28 Nm (21 lb-ft).
33. Disconnect the heater hoses from the heater core.

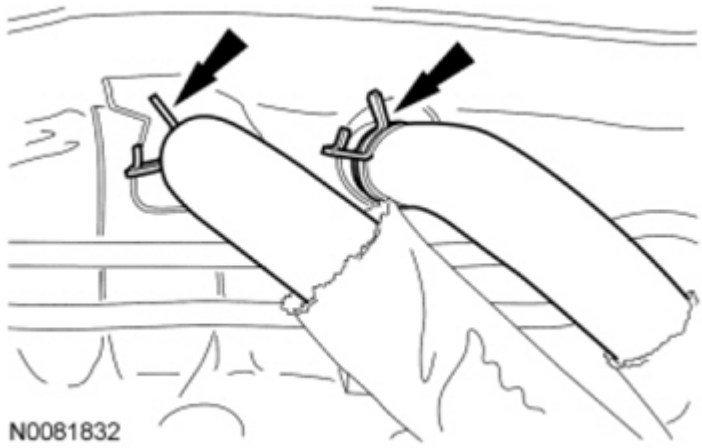

Fig. 191: Locating Heater Hose Clamps
Courtesy of FORD MOTOR CO.

34. Disconnect the upper radiator hose from the radiator.

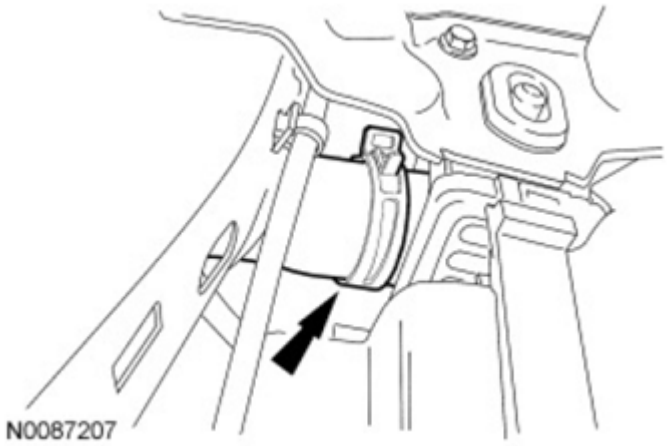

Fig. 192: Locating Upper Radiator Coolant Hose
Courtesy of FORD MOTOR CO.

35. Disconnect the brake booster vacuum tube from the brake booster.

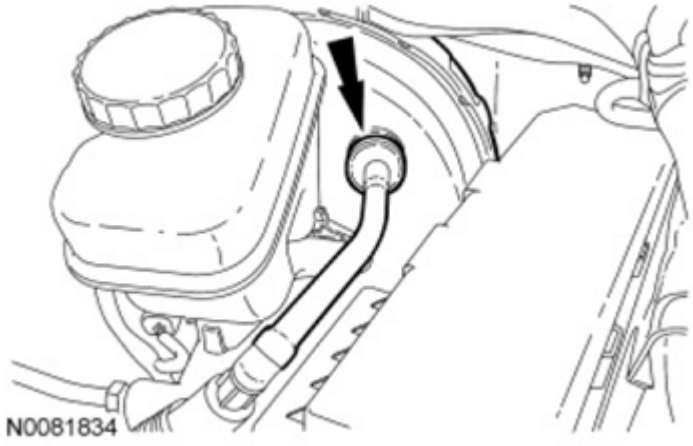

Fig. 193: Locating Brake Booster Vacuum Tube
Courtesy of FORD MOTOR CO.

36. Disconnect the PCM center electrical connector.
    - Remove the wiring harness retainer.

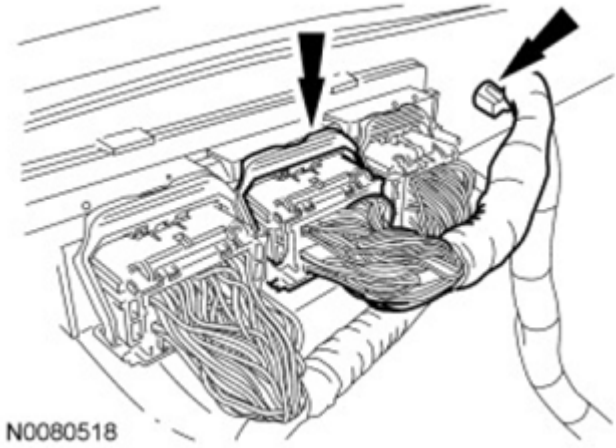

Fig. 194: Locating PCM Center Electrical Connector
Courtesy of FORD MOTOR CO.

37. If equipped, disconnect the block heater electrical connector.
    - Detach the harness retainer clips and position harness aside.

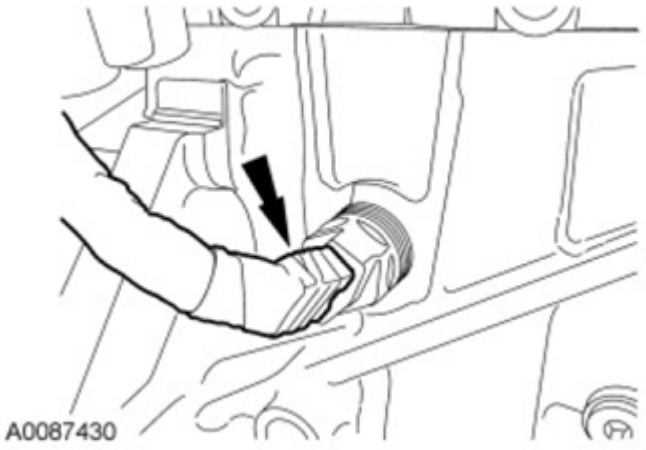

Fig. 195: Locating Block Heater Electrical Connector
Courtesy of FORD MOTOR CO.

38. Disconnect the engine control harness electrical connector.
    - Detach the engine control harness wiring retainer from the intake manifold.

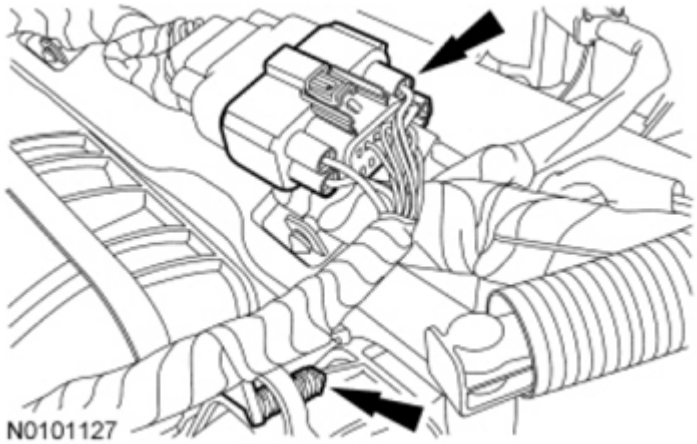

Fig. 196: Locating Engine Control Harness Electrical Connector
Courtesy of FORD MOTOR CO.

39. Disconnect the upper Evaporative Emission (EVAP) tube quick connect coupling from the purge valve. For additional information, refer to **FUEL SYSTEM - GENERAL INFORMATION** article.

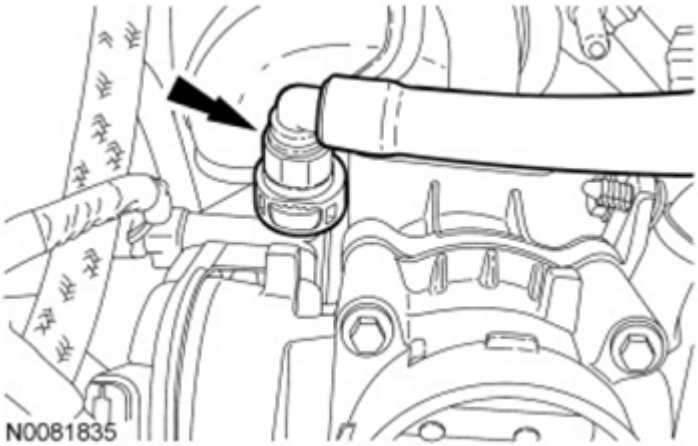

Fig. 197: Locating Upper Evaporative Emission Tube Quick Connect Coupling
Courtesy of FORD MOTOR CO.

40. Remove the stud bolt and disconnect the transaxle harness electrical connector.

Fig. 198: Locating Stud Bolt And Transaxle Harness Electrical Connector
Courtesy of FORD MOTOR CO.

41. Disconnect the 2 low voltage electrical connectors and the engine harness-to-body harness retainer.

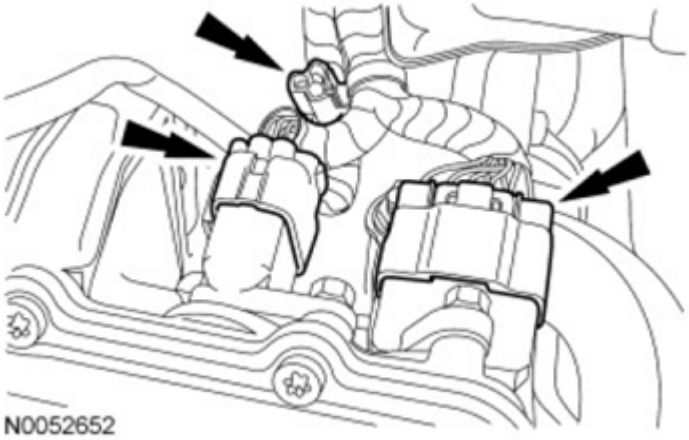

Fig. 199: Locating Low Voltage Electrical Connectors And Engine Harness-To-Body Harness Retainer
Courtesy of FORD MOTOR CO.

42. Disconnect the coolant vent hose.

Fig. 200: Locating Coolant Vent Hose
Courtesy of FORD MOTOR CO.

43. Release the locking tab and disconnect the DC-to-DC converter electrical connector and 2 wire harness retainers.

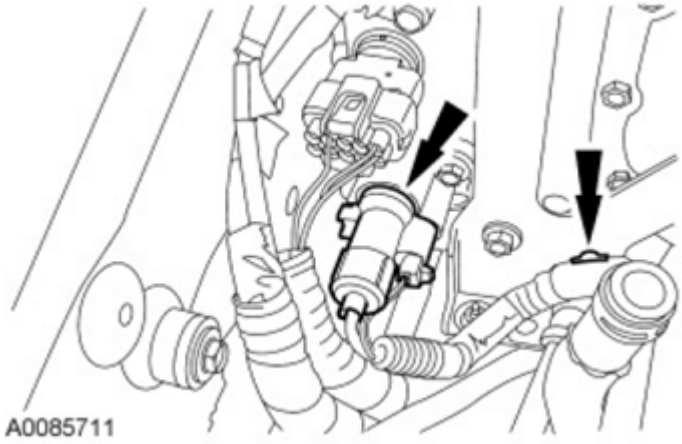

Fig. 201: Locating DC-TO-DC Converter Electrical Connector And Wire Harness Retainers
Courtesy of FORD MOTOR CO.

44. Remove the 3 nuts and position aside the DC-to-DC converter.

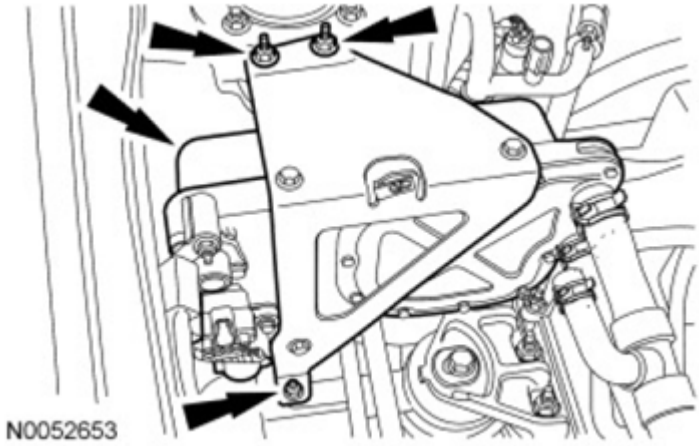

Fig. 202: Locating Nuts And DC-To-DC Converter
Courtesy of FORD MOTOR CO.

45. Disconnect the 2 vehicle high-voltage electrical system electrical connectors.
    - Detach the wiring harness retainer.

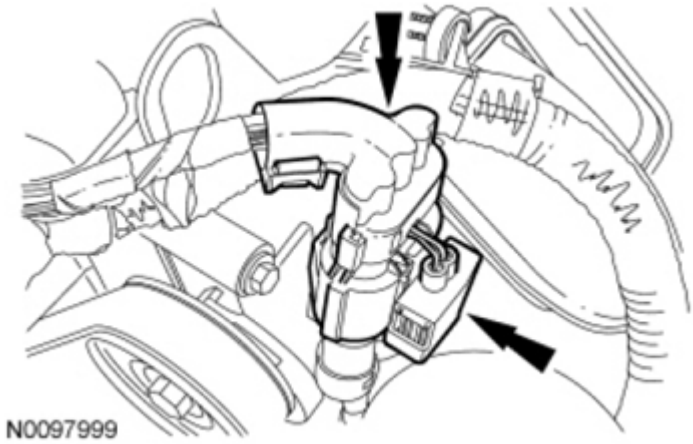

Fig. 203: Locating Vehicle High-Voltage Electrical System Electrical Connectors
Courtesy of FORD MOTOR CO.

46. Detach the 2 high-voltage electrical system wiring retainers from the valve cover stud bolts.
    - Position wiring aside.

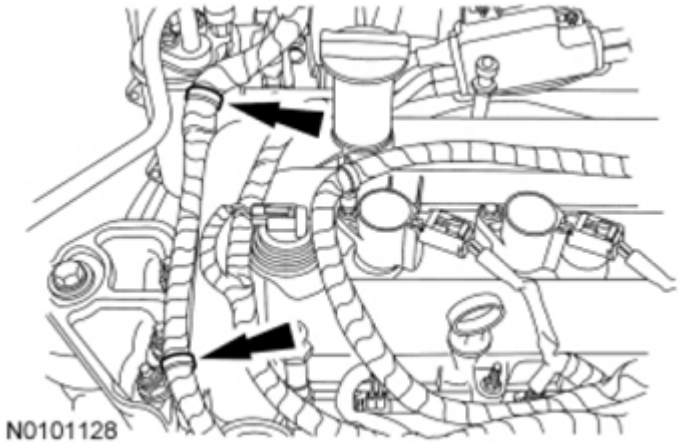

Fig. 204: Locating High-Voltage Electrical System Wiring Retainers
Courtesy of FORD MOTOR CO.

47. Disconnect the transaxle coolant temperature sensor electrical connector.
    - Detach the wiring retainer from the transaxle stud bolt.

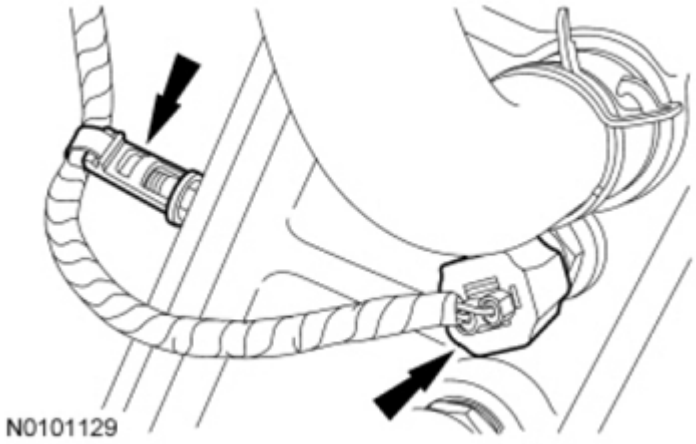

Fig. 205: Locating Transaxle Coolant Temperature Sensor Electrical Connector
Courtesy of FORD MOTOR CO.

48. Disconnect the transaxle coolant hoses.

Fig. 206: Locating Transaxle Coolant Hoses
Courtesy of FORD MOTOR CO.

49. Detach the transaxle selector lever cable fastener from the engine front cover stud bolt.

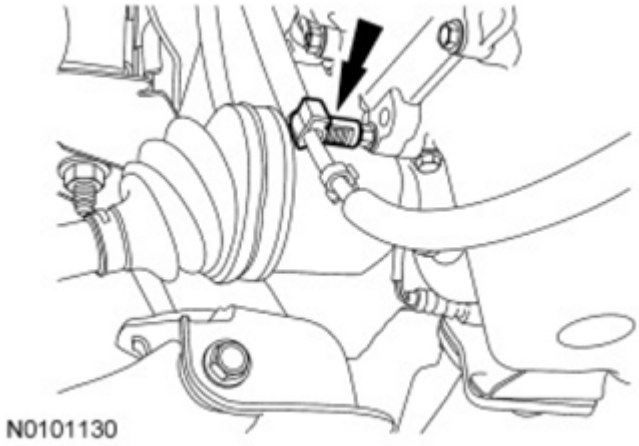

Fig. 207: Locating Transaxle Selector Lever Cable Fastener
Courtesy of FORD MOTOR CO.

50. Detach the transaxle selector lever cable fastener from the A/C compressor mounting bracket.

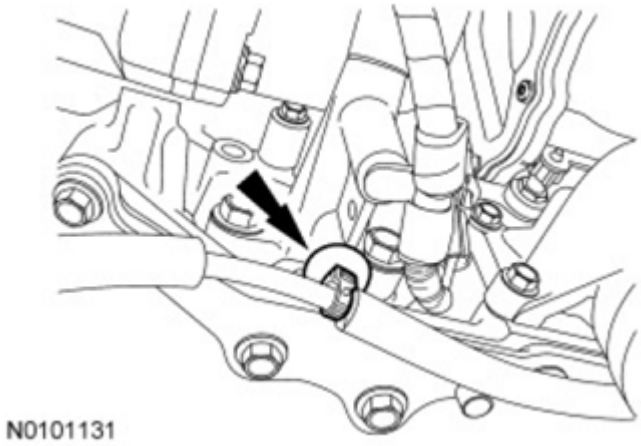

Fig. 208: Locating Transaxle Selector Lever Cable Fastener
Courtesy of FORD MOTOR CO.

51. Remove the 2 bolts and the transaxle control snow shield.

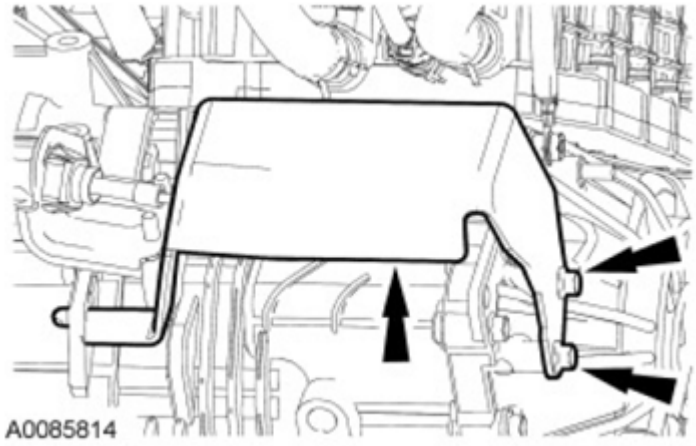

Fig. 209: Locating Bolts And Transaxle Control Snow Shield
Courtesy of FORD MOTOR CO.

52. Disconnect the transaxle control cable.
    - Release the transaxle control cable from the control lever.
    - Remove the nuts from the transaxle control cable bracket.

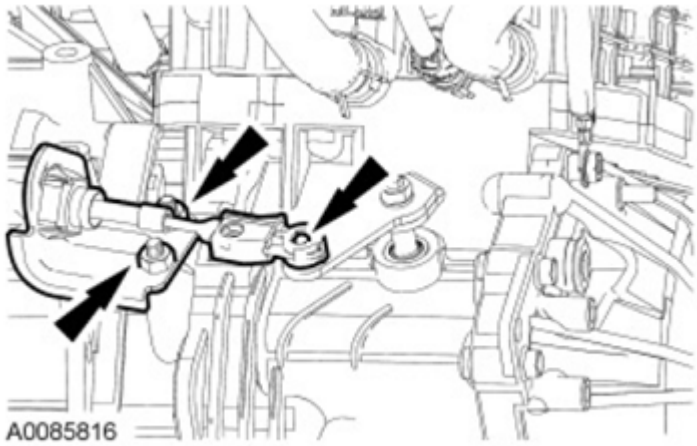

Fig. 210: Locating Transaxle Control Cable And Nuts
Courtesy of FORD MOTOR CO.

53. Remove the 2 harness fasteners, the nut and the ground cable.

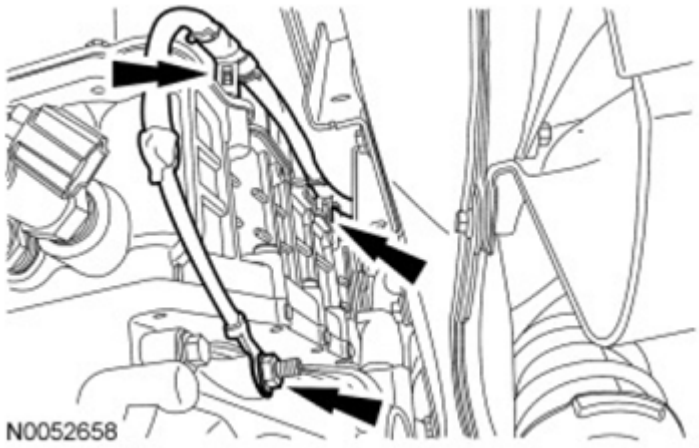

Fig. 211: Locating Harness Fasteners, Nut And Ground Cable
Courtesy of FORD MOTOR CO.

54. Disconnect the vacuum pump assembly electrical connector and detach the harness retainer.

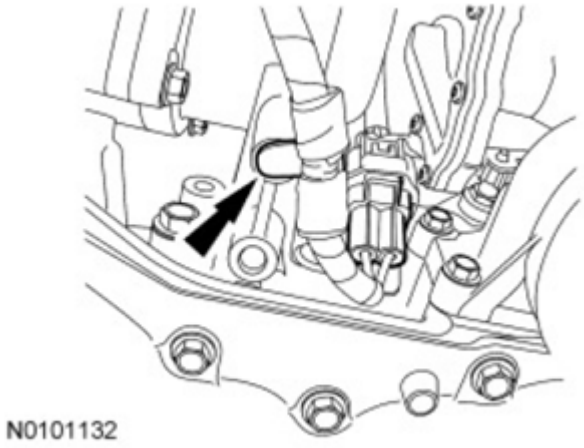

Fig. 212: Locating Vacuum Pump Assembly Electrical Connector
Courtesy of FORD MOTOR CO.

55. Remove the 2 bolts and position the MECS pump aside.

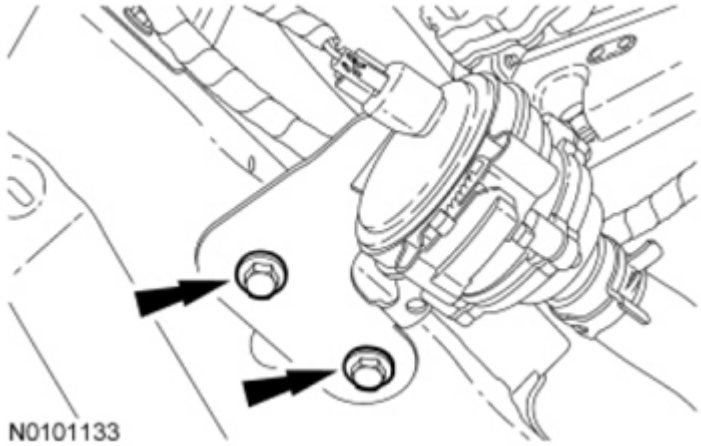

Fig. 213: Locating MECS Pump Bolts
Courtesy of FORD MOTOR CO.

56. Remove the nut and disconnect the A/C tube from the A/C compressor.
    - Discard the gasket.

Fig. 214: Locating Nut And A/C Tube
Courtesy of FORD MOTOR CO.

57. Remove the nut and disconnect the A/C tube from the A/C compressor.
    - Discard the gasket.

Fig. 215: Locating Nut And A/C Tube
Courtesy of FORD MOTOR CO.

58. Remove the 2 bolts and disconnect the auxiliary coolant pump electrical connector.
    - Position the auxiliary coolant pump aside.

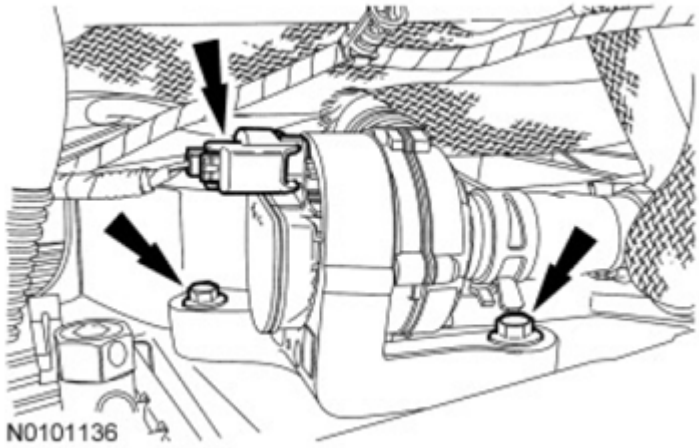

Fig. 216: Locating Bolts And Auxiliary Coolant Pump Electrical Connector
Courtesy of FORD MOTOR CO.

59. Disconnect the lower radiator hose from the radiator.
    - Release the wire clip and disconnect the hose.

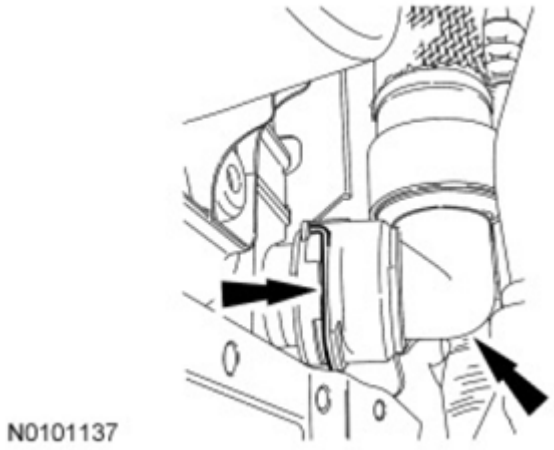

Fig. 217: Locating Lower Radiator Hose
Courtesy of FORD MOTOR CO.

60. Remove the lower transaxle insulator through bolt.

Fig. 218: Locating Lower Transaxle Insulator Through Bolt
Courtesy of FORD MOTOR CO.

61. Remove the rear roll restrictor-to-crossmember through bolt.

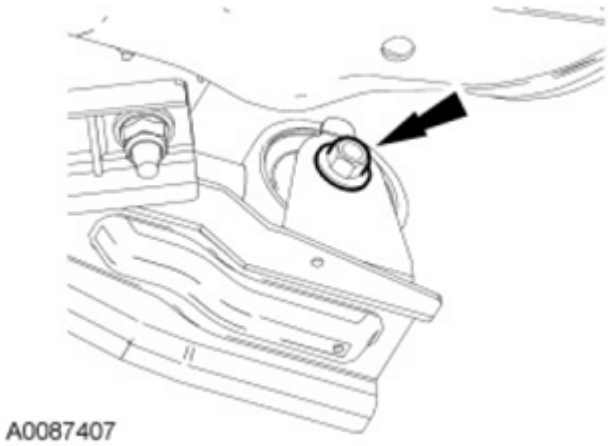

Fig. 219: Locating Rear Roll Restrictor-To-Crossmember Bolt
Courtesy of FORD MOTOR CO.

62. Remove the nut, bolts and the engine support crossmember.
    - Discard the nut.

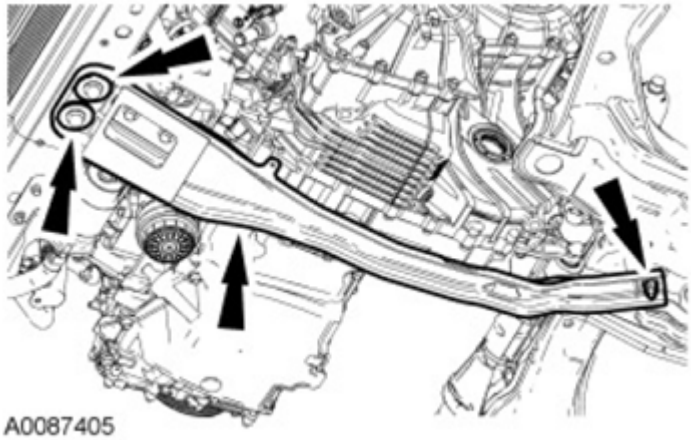

Fig. 220: Locating Engine Support Crossmember Nut And Bolts
Courtesy of FORD MOTOR CO.

NOTE: The transaxle-to-engine bolts differ in length. Mark the bolts for correct installation.

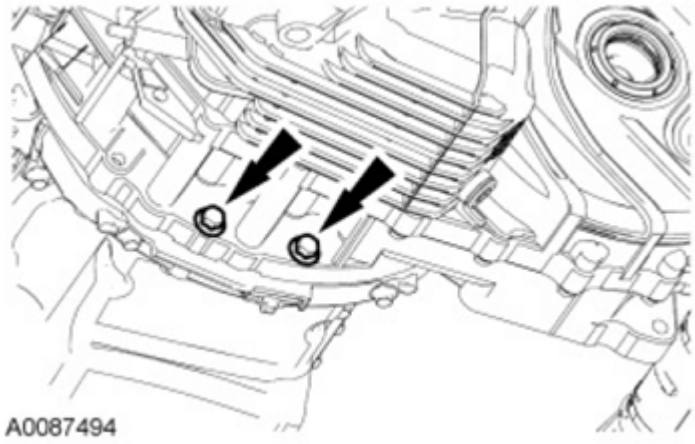

Fig. 221: Locating Transaxle-To-Engine Bolts
Courtesy of FORD MOTOR CO.

63. Remove the 2 transaxle-to-engine bolts.

NOTE: The transaxle-to-engine bolts differ in length, mark the bolts for correct installation.

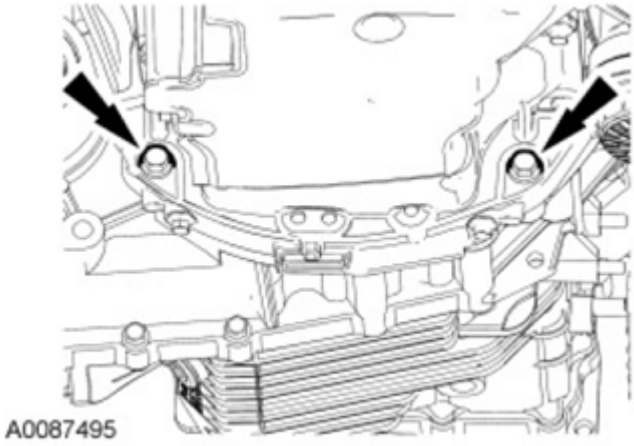

Fig. 222: Locating Transaxle-To-Engine Bolts
Courtesy of FORD MOTOR CO.

64. Remove the 2 transaxle-to-engine bolts.
65. Remove the rear transaxle insulator through bolt.

Fig. 223: Locating Rear Transaxle Insulator Through Bolt
Courtesy of FORD MOTOR CO.

NOTE: **Do not allow the steering wheel to rotate while the intermediate shaft is disconnected or damage to the clockspring can result. If there is evidence that the shaft has rotated, the clockspring must be removed and recentered. For additional information, refer to SUPPLEMENTAL RESTRAINT SYSTEM article.**

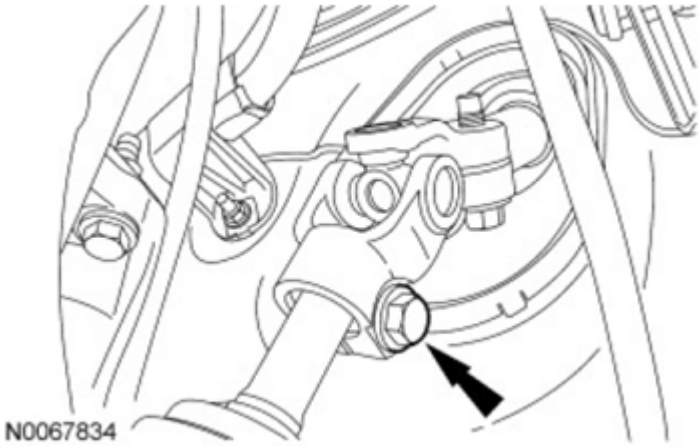

Fig. 224: Locating Steering Column Coupling Pinch Bolt
Courtesy of FORD MOTOR CO.

66. Remove and discard the steering column coupling-to-steering gear pinch bolt and separate coupling from the steering gear.
67. Remove the 2 bolts, and the roll restrictor and bracket.

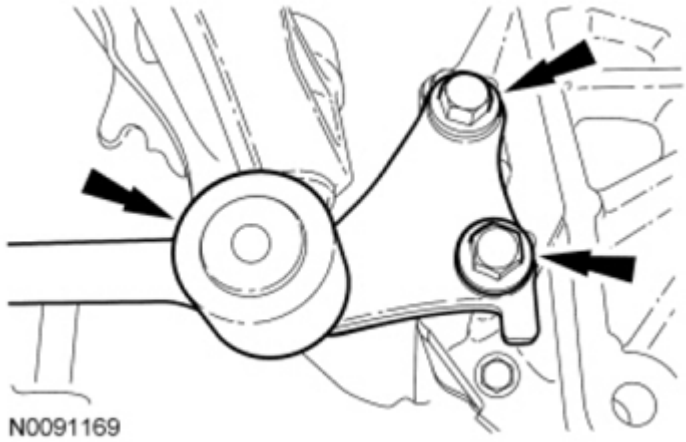

Fig. 225: Locating Bolts, Roll Restrictor And Bracket
Courtesy of FORD MOTOR CO.

68. Using the Powertrain Lift, support the subframe.

NOTE: **Do not allow the subframe bolts to come out of the lower control arm bushing.**

NOTE: **RH shown in illustration, LH similar.**

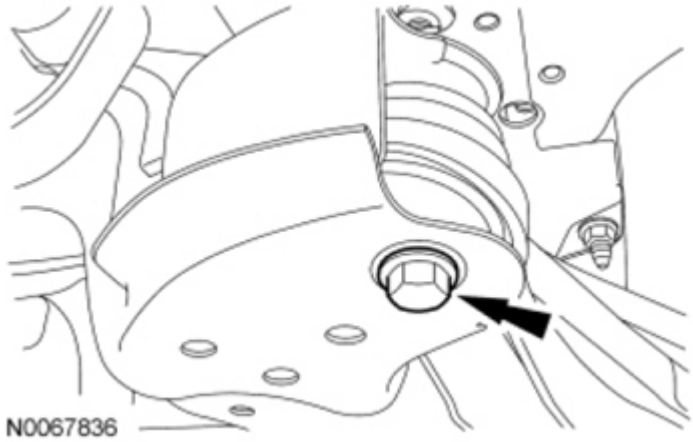

Fig. 226: Locating Subframe Bolts
Courtesy of FORD MOTOR CO.

69. Loosen the 2 subframe bolts.

NOTE: **RH shown in illustration, LH similar.**

70. Remove the 2 subframe nuts and lower the subframe.
    - Remove the subframe from the Powertrain Lift.

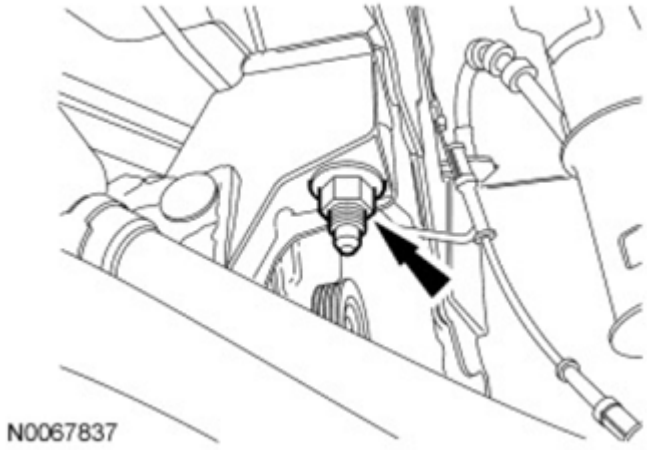

Fig. 227: Locating Lower Subframe Nut
Courtesy of FORD MOTOR CO.

NOTE: Due to the weight of the transaxle, special care should be taken to mount the powertrain securely to the Powertrain Lift.

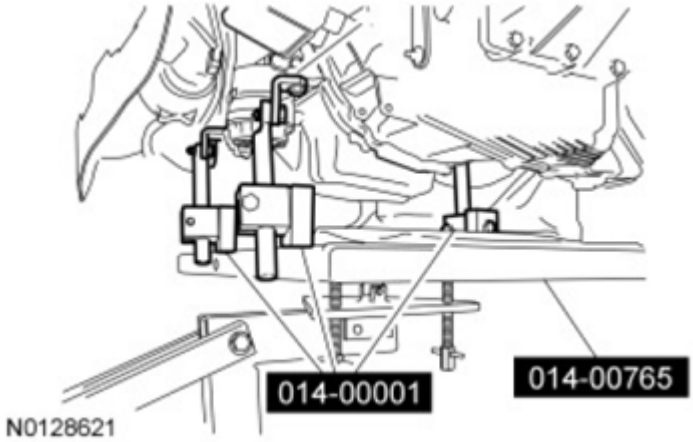

Fig. 228: Lifting Engine To Powertrain Using Powertrain Lift And Adjustable Grip Arm
Courtesy of FORD MOTOR CO.

71. Using the Powertrain Lift and Adjustable Grip Arm, secure the engine to the Powertrain Lift.
72. Remove the engine mount bracket bolt.

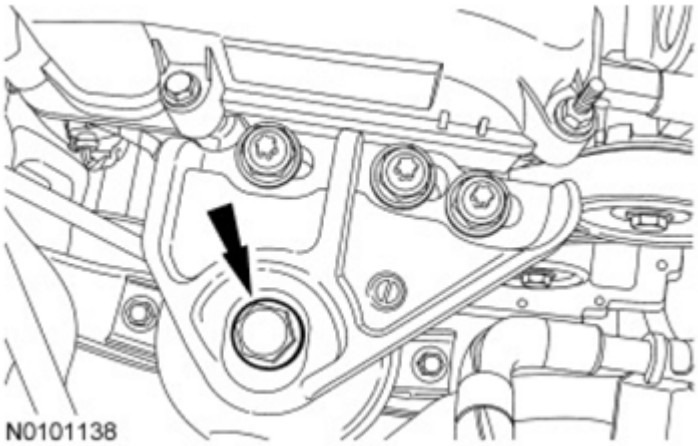

Fig. 229: Locating Engine Mount Bracket Bolt
Courtesy of FORD MOTOR CO.

73. Remove the 3 nuts and the engine mount bracket.

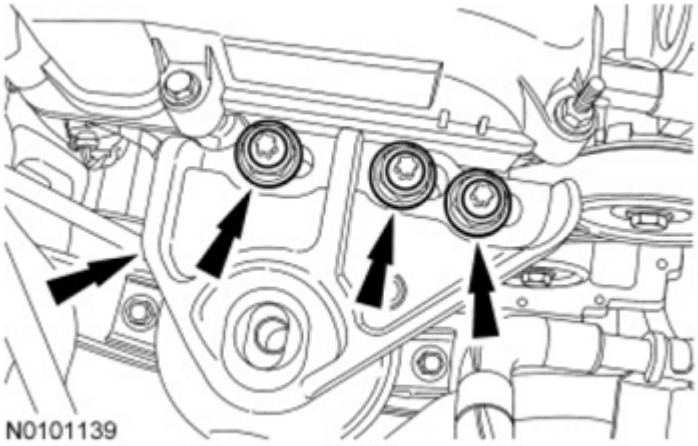

Fig. 230: Locating Nuts And Engine Mount Bracket
Courtesy of FORD MOTOR CO.

74. Remove the upper transaxle insulator bracket bolts and remove the bracket.

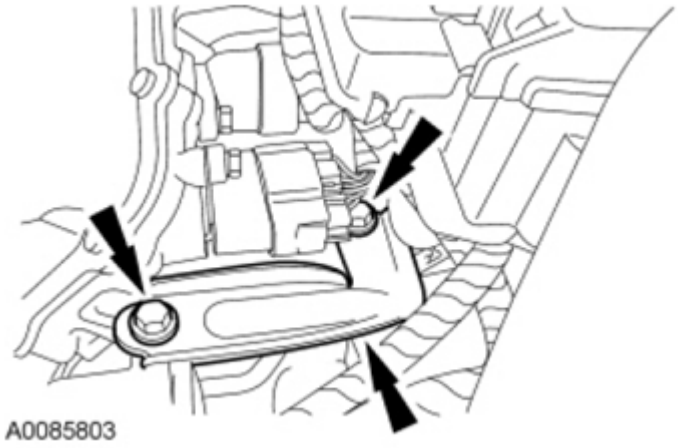

Fig. 231: Locating Upper Transaxle Insulator Bracket Bolts
Courtesy of FORD MOTOR CO.

75. Remove the upper transaxle insulator through bolt.

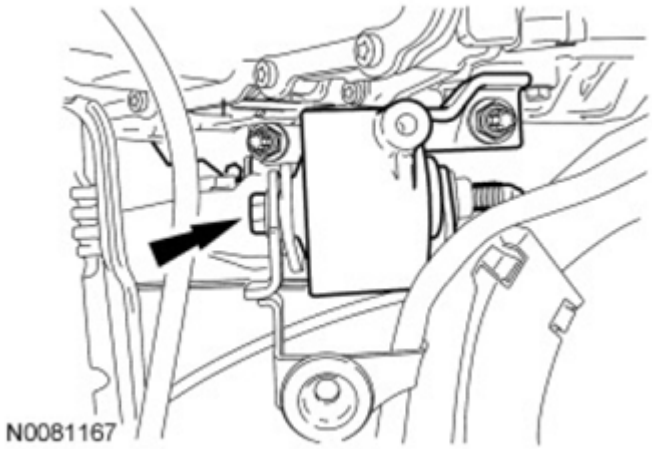

Fig. 232: Locating Upper Insulator Through Bolt
Courtesy of FORD MOTOR CO.

76. Remove the 2 nuts and the upper transaxle insulator.

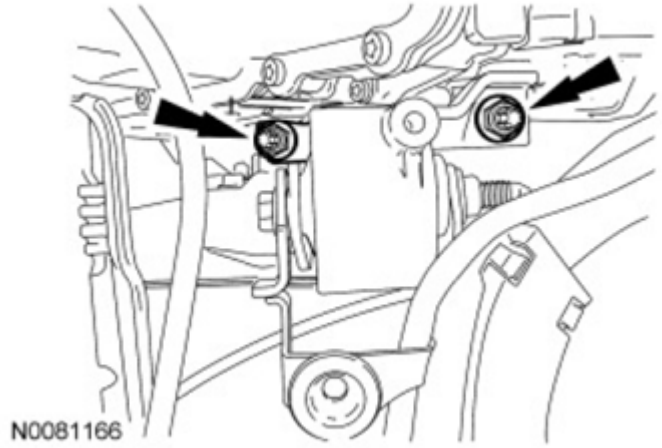

Fig. 233: Locating Upper Insulator Nuts
Courtesy of FORD MOTOR CO.

77. Lower the engine and transaxle from the vehicle.
78. Using the Floor Crane and the Spreader Bar, remove the engine and transaxle from the Powertrain Lift.
79. Release the locking tab and disconnect the high-voltage wiring harness electrical connector.

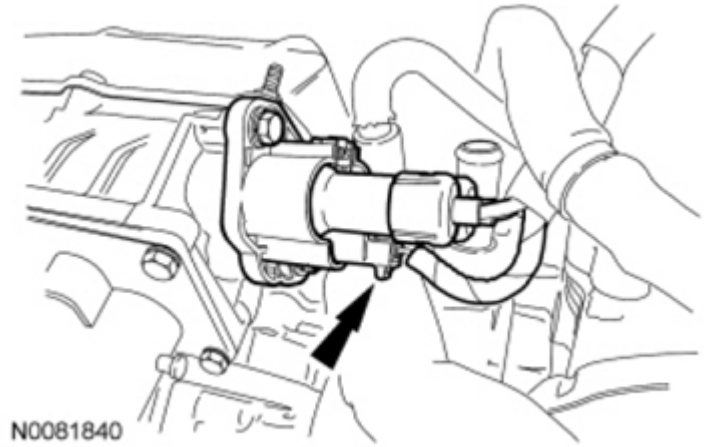

Fig. 234: Locating High Voltage Wiring Harness Electrical Connector
Courtesy of FORD MOTOR CO.

NOTE: The transaxle-to-engine bolts differ in length, mark the bolts for correct installation.

80. Remove the remaining 6 engine-to-transaxle bolts and separate the engine and transaxle.

NOTE: Due to packaging requirements, the correct bolt must be used at the damper locations.

NOTE: **The damper contains a clutch which is designed to slip briefly during vehicle operation. It is essential that no grease, oil or cleaning solvents be allowed to contaminate the slip clutch. Do not use grease on transmission input shaft. Should the damper become contaminated, it must be replaced.**

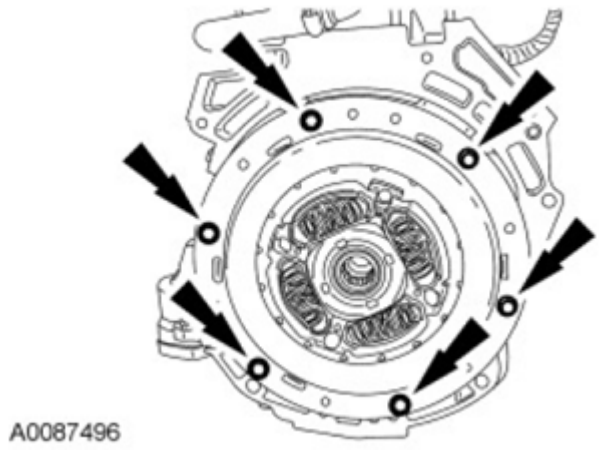

Fig. 235: Locating Transaxle Damper Bolts
Courtesy of FORD MOTOR CO.

81. Remove the bolts and the transaxle damper.

DISASSEMBLY

ENGINE

Special Tool(s)

SPECIAL TOOLS

	Alignment Plate, Camshaft 303-465 (T94P-6256-CH)

	
	Engine Stand 014-00232 or equivalent
	2,200# Floor Crane, Fold Away 300-OTC1819E or equivalent

 ST1341-A	
 ST3054-A	Holding Tool, Crankshaft Damper 303-1416
	Installer, Connecting Rod

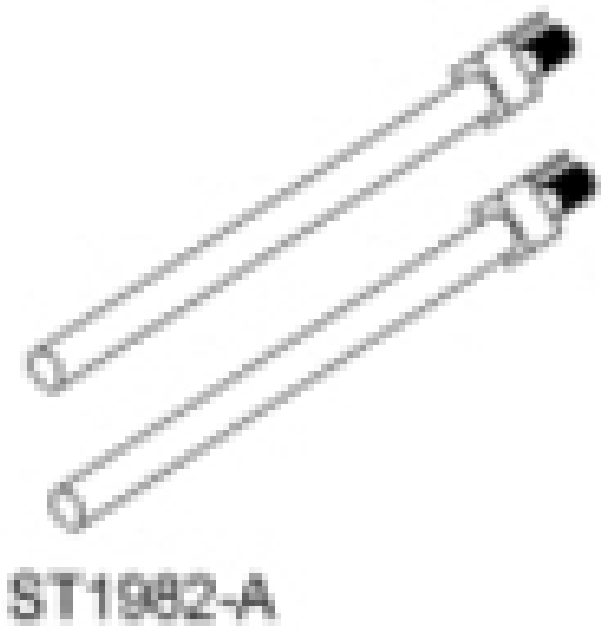	303-462 (T94P-6136-AH)
	Remover, Oil Seal 303-409 (T92C-6700-CH)
	Spreader Bar 303-D089 (D93P-6001-A3) or equivalent

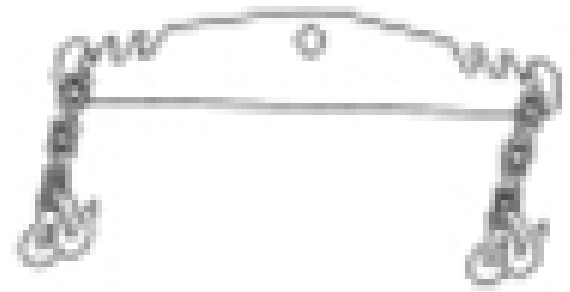 ST1602-A	
 ST2638-A	Timing Peg, Crankshaft TDC 303-507

NOTE: **Do not loosen or remove the crankshaft pulley bolt without first installing the special tools as instructed in this procedure. The crankshaft pulley and the crankshaft timing sprocket are not keyed to the crankshaft. The crankshaft, the crankshaft sprocket and the pulley are fitted together by friction, using diamond washers between the flange faces on each part. For that reason, the crankshaft sprocket is also unfastened if the pulley bolt is loosened. Before any repair requiring loosening or removal of the crankshaft pulley bolt, the crankshaft and camshafts must be locked in place by the special service tools, otherwise**

severe engine damage may occur.

NOTE: During engine repair procedures, cleanliness is extremely important. Any foreign material (including any material created while cleaning gasket surfaces) that enters the oil passages, coolant passages or the oil pan, can cause engine failure.

NOTE: Due to the precision fit and timing of the balancer shaft assembly, it cannot be removed from the engine block.

NOTE: For additional information, refer to the exploded views under engine Assembly in this service information.

1. Remove the 6 bolts and the flywheel.

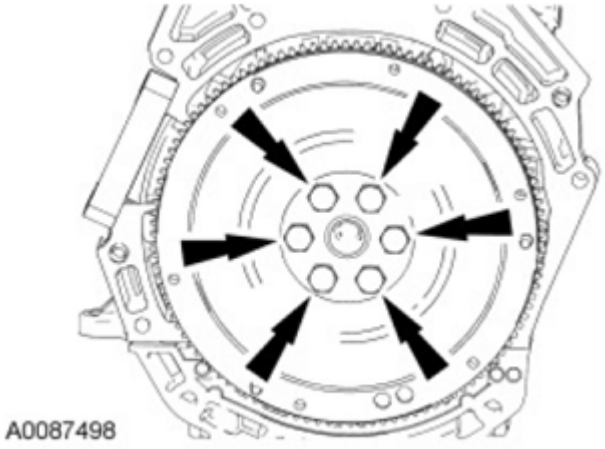

Fig. 236: Locating Flywheel Bolts
Courtesy of FORD MOTOR CO.

2. Mount the engine on a suitable engine stand.
3. Release the locking tab and disconnect the Heated Oxygen Sensor (HO2S) electrical connector.
   - Detach the connector from the engine wiring harness connector bracket.

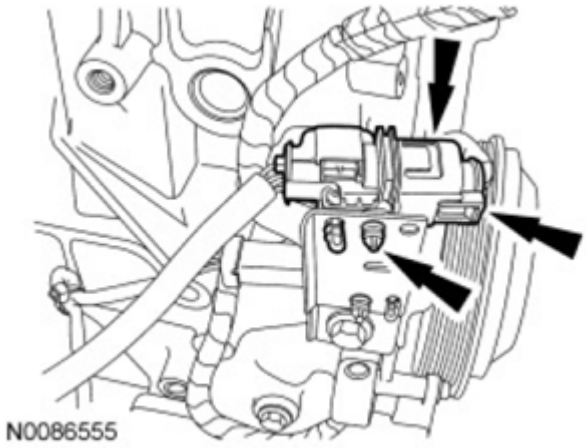

Fig. 237: Locating Locking Tab And Heated Oxygen Sensor Electrical Connector
Courtesy of FORD MOTOR CO.

4. Disconnect the Catalyst Monitor Sensor (CMS) electrical connector.

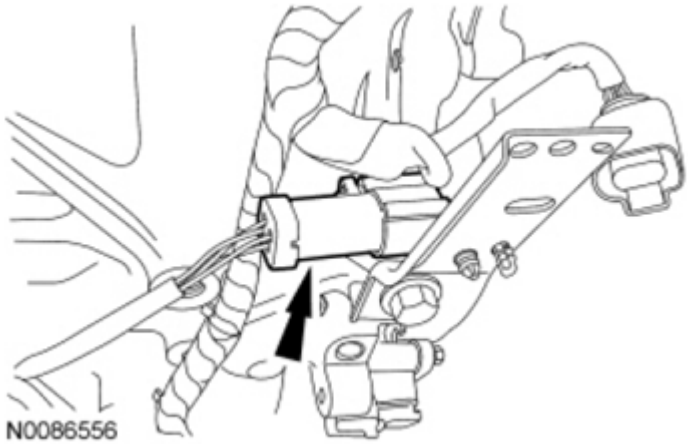

Fig. 238: Locating Catalyst Monitor Sensor Electrical Connector
Courtesy of FORD MOTOR CO.

5. Disconnect the Crankshaft Position (CKP) sensor electrical connector.

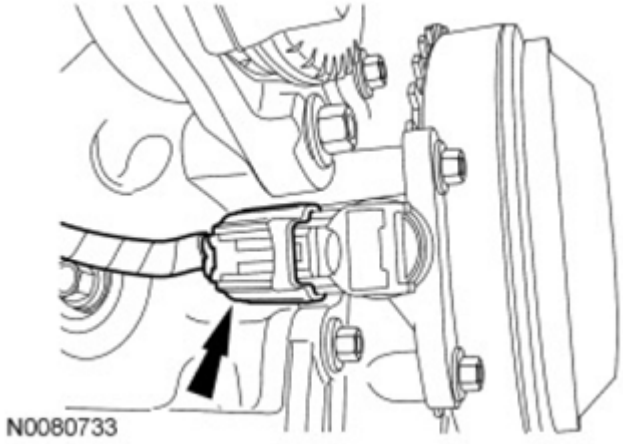

Fig. 239: Locating Crankshaft Position Sensor Electrical Connector
Courtesy of FORD MOTOR CO.

6. Remove the bolt and the engine wiring harness connector bracket.

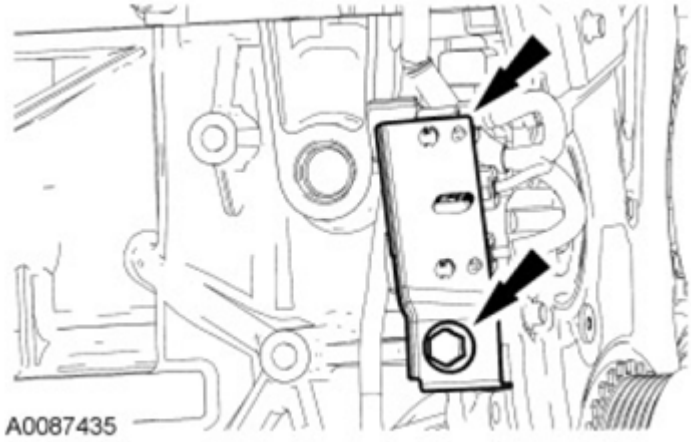

Fig. 240: Locating Bolt And Engine Wiring Harness Connector Bracket
Courtesy of FORD MOTOR CO.

7. Detach the 2 engine wiring harness pin-type retainers.

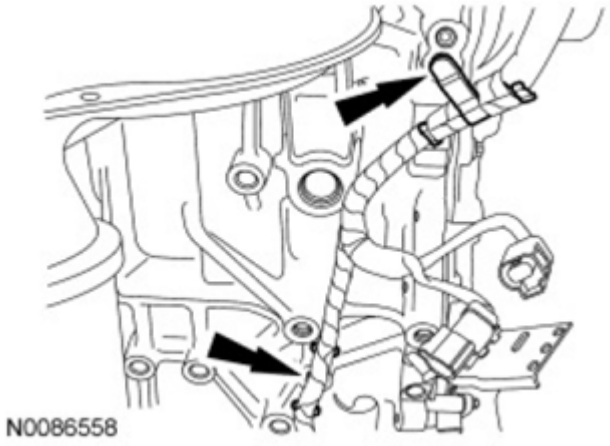

Fig. 241: Locating Engine Wiring Harness Pin-Type Retainers
Courtesy of FORD MOTOR CO.

8. Remove the 7 nuts and the catalytic converter manifold.
    - Discard the nuts and the exhaust manifold gasket.

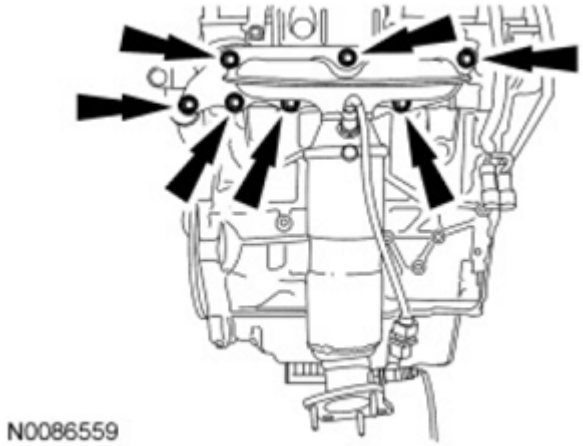

Fig. 242: Locating Catalytic Converter Manifold Nuts
Courtesy of FORD MOTOR CO.

9. Remove and discard the 7 exhaust manifold studs.

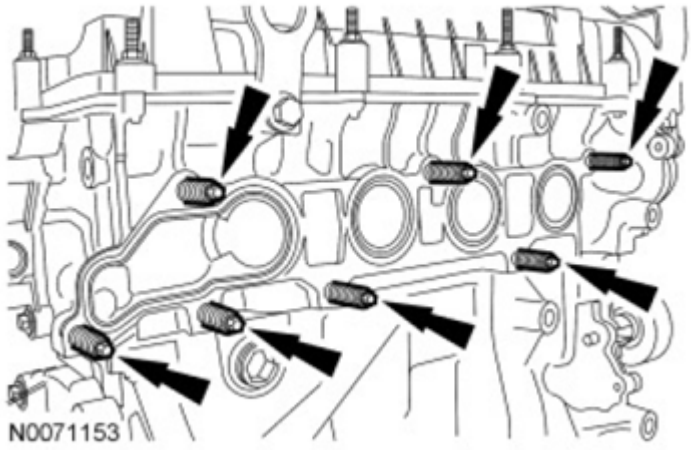

Fig. 243: Locating Exhaust Manifold Studs
Courtesy of FORD MOTOR CO.

10. Rotate the accessory drive belt tensioner counterclockwise and remove the accessory drive belt.

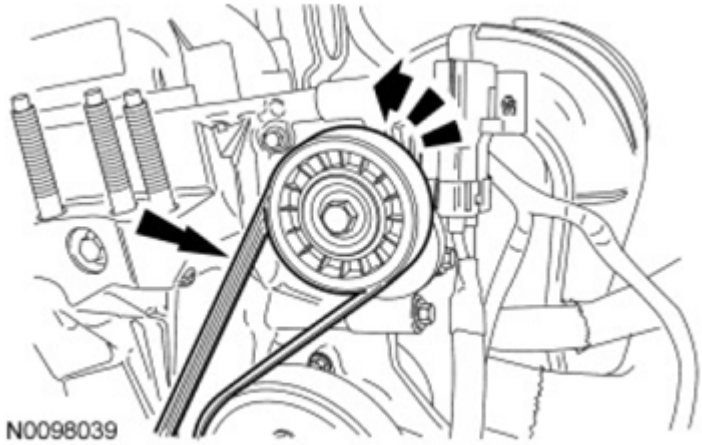

Fig. 244: Rotating Accessory Drive Belt Tensioner Counterclockwise
Courtesy of FORD MOTOR CO.

11. Detach the vehicle high-voltage electrical system electrical connector retainer from the accessory drive belt tensioner.

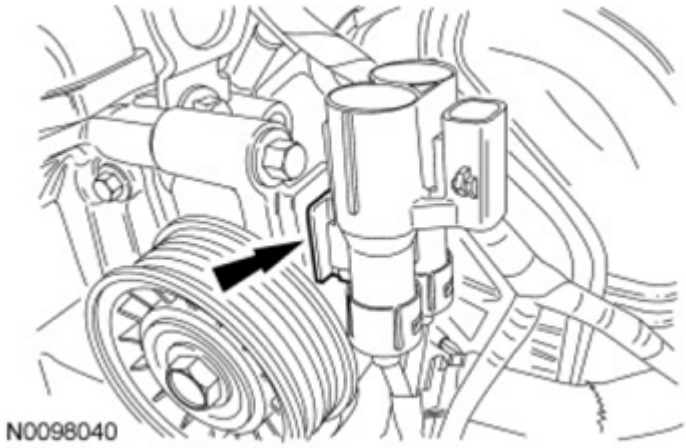

Fig. 245: Locating Vehicle High-Voltage Electrical System Electrical Connector
Courtesy of FORD MOTOR CO.

12. Remove the 3 bolts and the accessory drive belt tensioner.

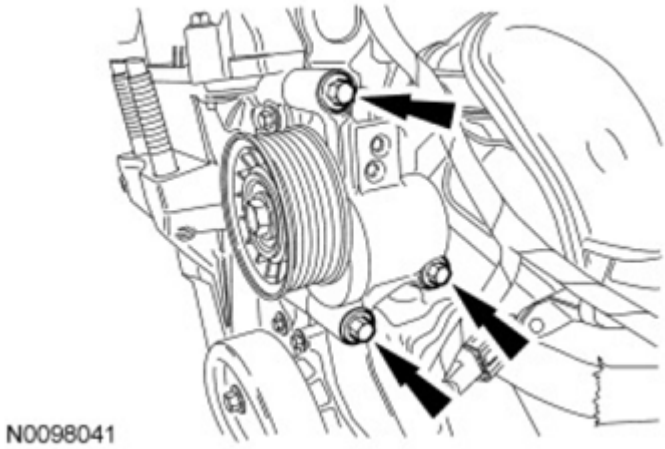

Fig. 246: Locating Bolts And Accessory Drive Belt Tensioner
Courtesy of FORD MOTOR CO.

13. Disconnect the electronic throttle control electrical connector.

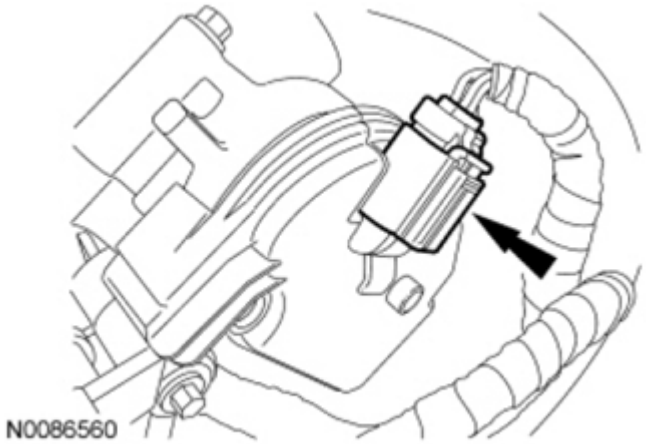

Fig. 247: Locating Electronic Throttle Control Electrical Connector
Courtesy of FORD MOTOR CO.

14. Disconnect the Evaporative Emission (EVAP) canister purge valve electrical connector.

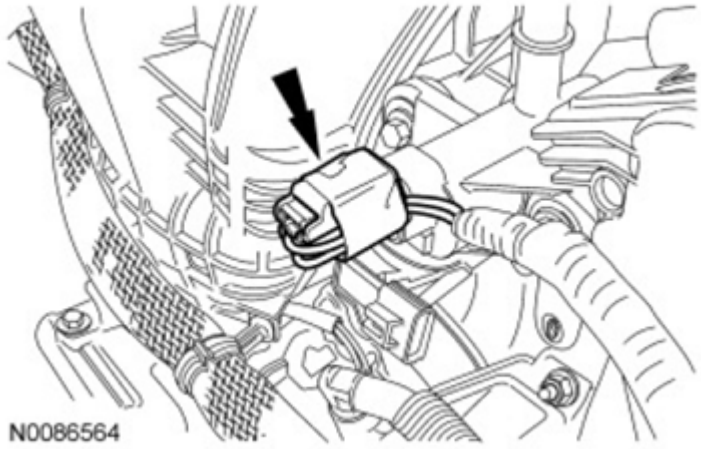

Fig. 248: Locating Evaporative Emission Canister Purge Valve Electrical Connector
Courtesy of FORD MOTOR CO.

15. Disconnect the Engine Oil Pressure (EOP) switch electrical connector.

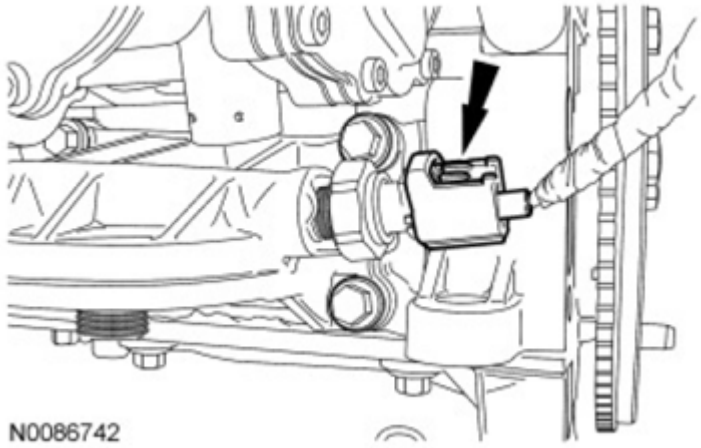

Fig. 249: Locating Engine Oil Pressure (EOP) Switch Electrical Connector
Courtesy of FORD MOTOR CO.

16. Disconnect the Manifold Absolute Pressure (MAP) sensor electrical connector.

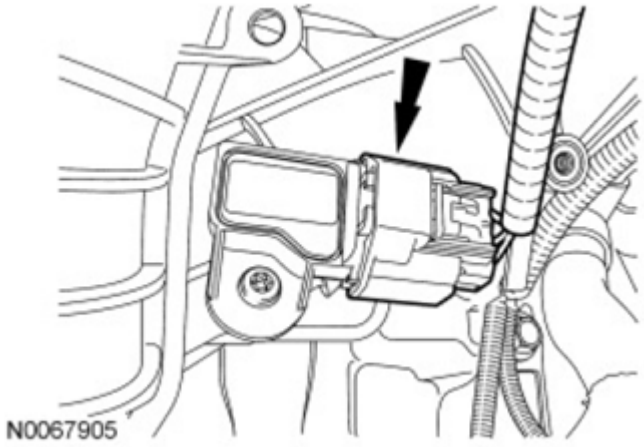

Fig. 250: Locating Manifold Absolute Pressure Sensor Electrical Connector
Courtesy of FORD MOTOR CO.

17. Disconnect the Knock Sensor (KS) electrical connector and detach the electrical connector pin-type retainer from the intake manifold.

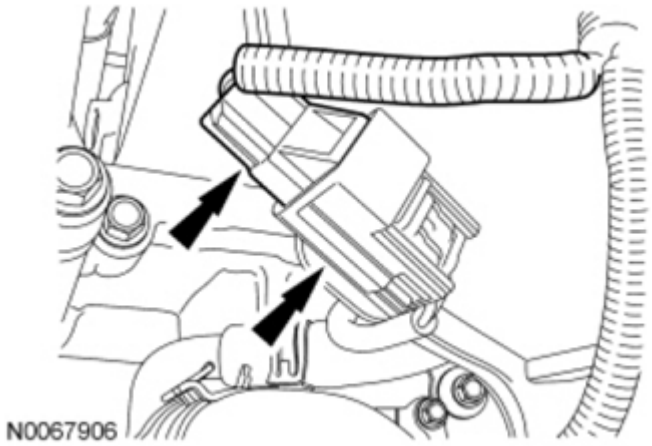

Fig. 251: Locating Knock Sensor Electrical Connector And Electrical Connector Pin-Type Retainer
Courtesy of FORD MOTOR CO.

18. Disconnect the A/C compressor electrical connector.

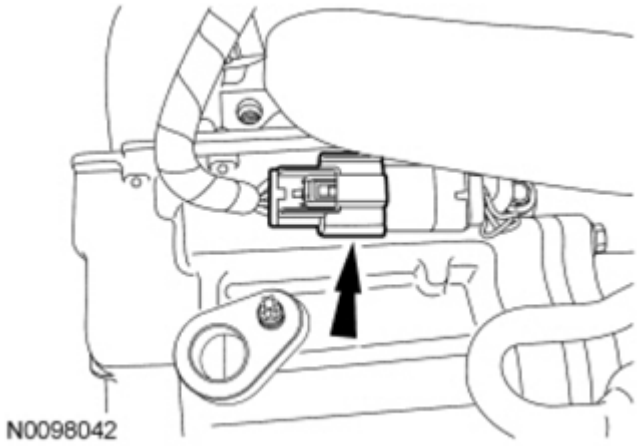

Fig. 252: Locating A/C Compressor Electrical Connector
Courtesy of FORD MOTOR CO.

19. Remove the 3 bolts and the A/C compressor.

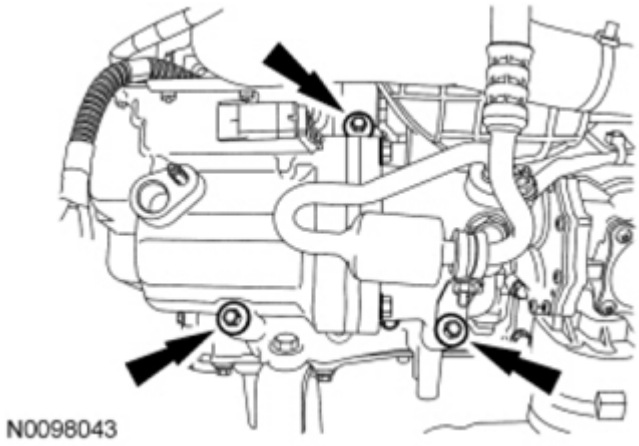

Fig. 253: Locating Bolts And A/C Compressor
Courtesy of FORD MOTOR CO.

20. Remove the 2 bolts and the A/C compressor bracket.

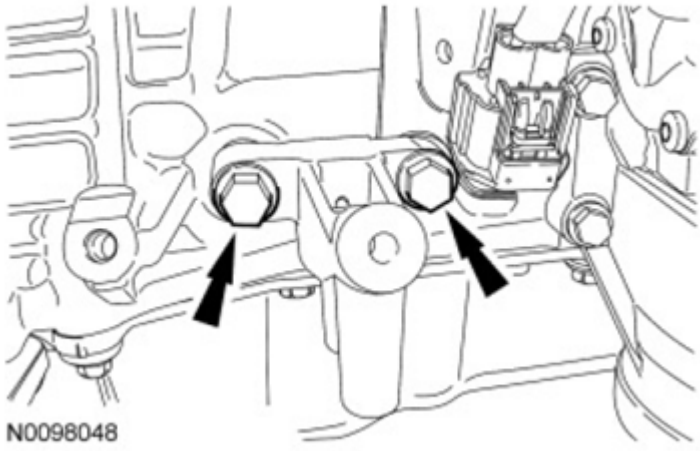

Fig. 254: Locating Bolts And A/C Compressor Bracket
Courtesy of FORD MOTOR CO.

21. Disconnect the Variable Camshaft Timing (VCT) oil control solenoid electrical connector and detach the wiring harness retainer from the valve cover stud bolt.

Fig. 255: Locating VCT Oil Control Solenoid Electrical Connector And Wiring Harness Retainer
Courtesy of FORD MOTOR CO.

22. Detach the 2 wiring harness retainers from the fuel rail and the wiring harness retainer from the valve cover.

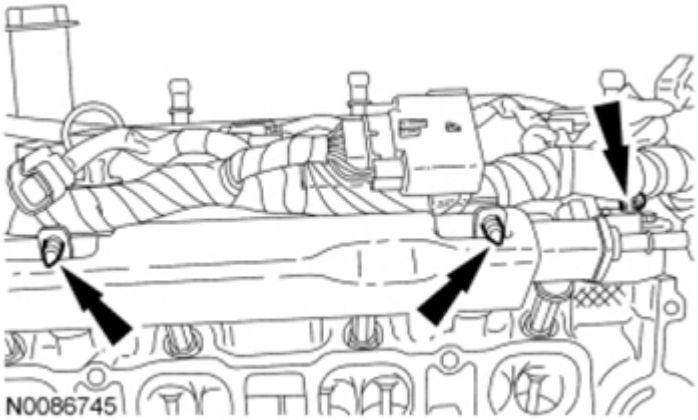

Fig. 256: Locating Wiring Harness Retainers
Courtesy of FORD MOTOR CO.

23. Disconnect the auxiliary coolant pump hose and the upper radiator hose.

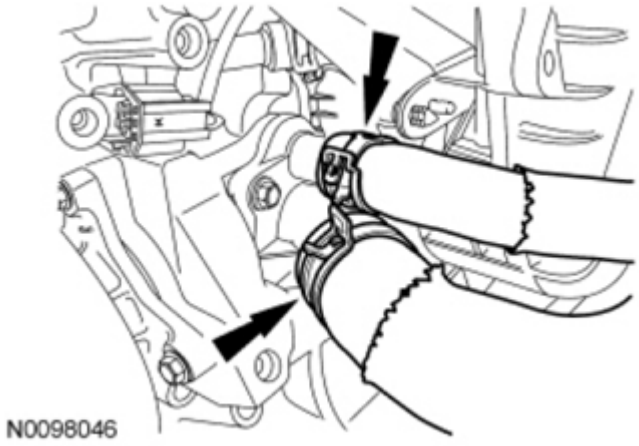

Fig. 257: Locating Auxiliary Coolant Pump Hose And Upper Radiator Hose
Courtesy of FORD MOTOR CO.

24. Disconnect the EGR coolant hose and the auxiliary coolant pump hose.
    - Remove the upper radiator hose and the auxiliary coolant pump as an assembly.

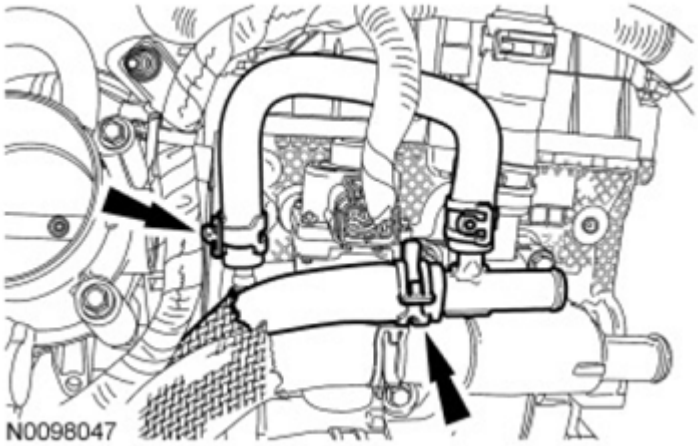

Fig. 258: Locating EGR Coolant Hose And Auxiliary Coolant Pump Hose
Courtesy of FORD MOTOR CO.

25. Disconnect the vacuum hose from the intake manifold.

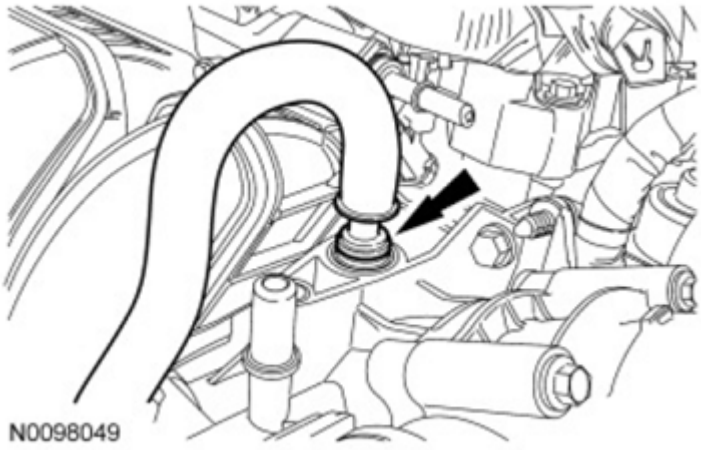

Fig. 259: Locating Vacuum Hose From Intake Manifold
Courtesy of FORD MOTOR CO.

26. Remove the 2 bolts, the nut and the vacuum pump assembly.

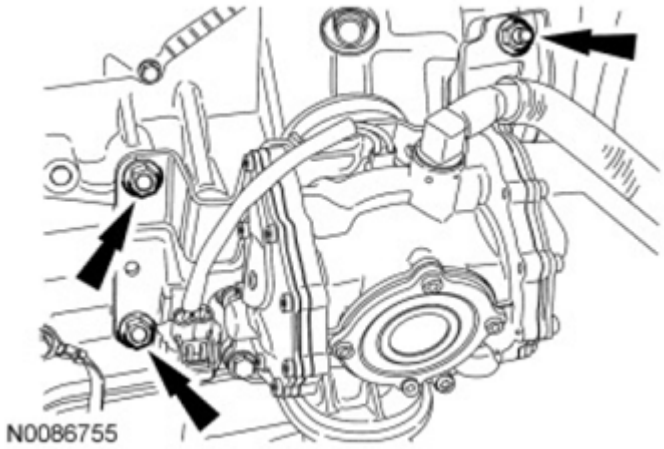

Fig. 260: Locating Bolts, Nut And Vacuum Pump Assembly
Courtesy of FORD MOTOR CO.

27. Detach the 3 wire harness pin-type retainers from the intake manifold.

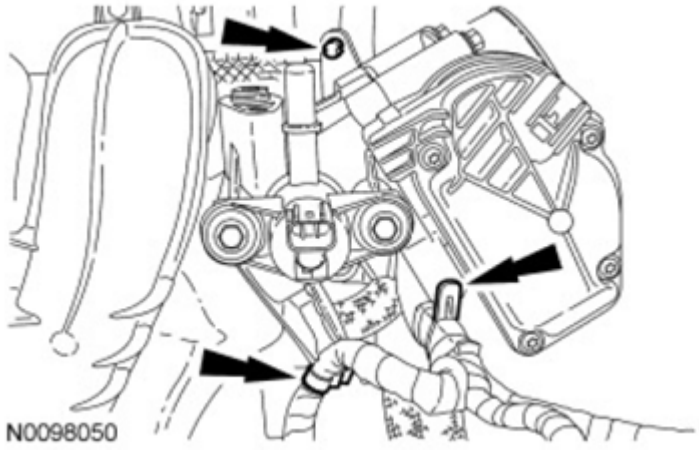

Fig. 261: Locating Wire Harness Pin-Type Retainers
Courtesy of FORD MOTOR CO.

NOTE: **The cylinder head side of the intake manifold is showing the location of the 7 bolts.**

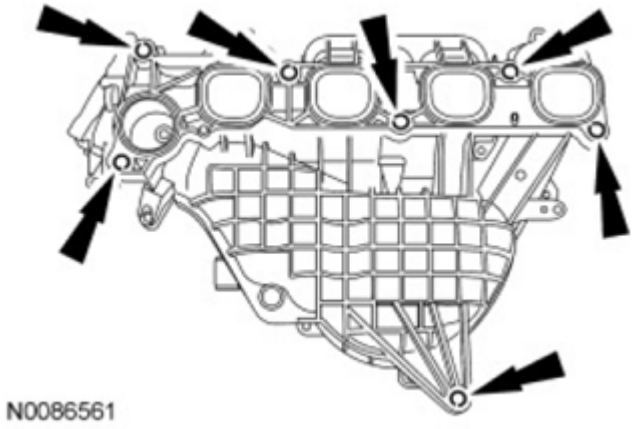

Fig. 262: Locating Intake Manifold Bolts
Courtesy of FORD MOTOR CO.

28. Remove the 7 bolts and position the intake manifold aside to access the PCV hose connector.

NOTE: **If the engine is repaired or replaced because of upper engine failure, typically including valve or piston damage, check the intake manifold for metal debris. If metal debris is found, install a new intake manifold. Failure to follow these instructions can result in engine damage.**

29. Squeeze the 2 PCV hose connector tabs and disconnect the PCV hose from the intake manifold.
    - Remove the intake manifold.

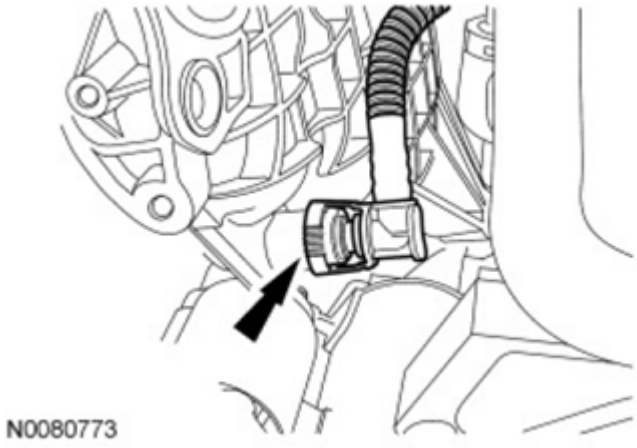

Fig. 263: Locating PCV Hose Connector Tabs
Courtesy of FORD MOTOR CO.

30. Remove the EGR tube.

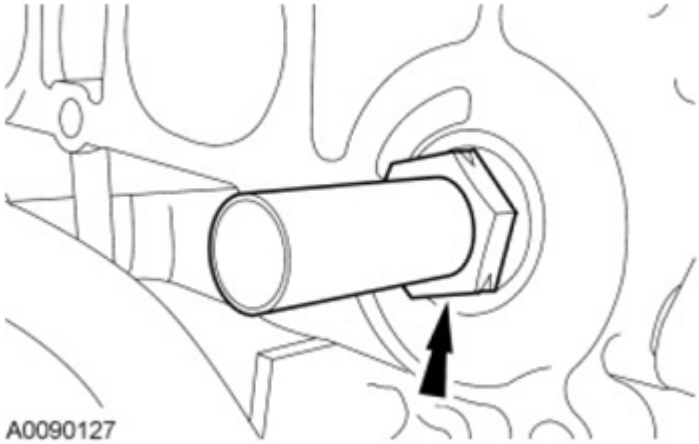

Fig. 264: Locating EGR Tube
Courtesy of FORD MOTOR CO.

31. Disconnect the 4 fuel injector electrical connectors, radio capacitor electrical connector and the Camshaft Position (CMP) sensor electrical connector.

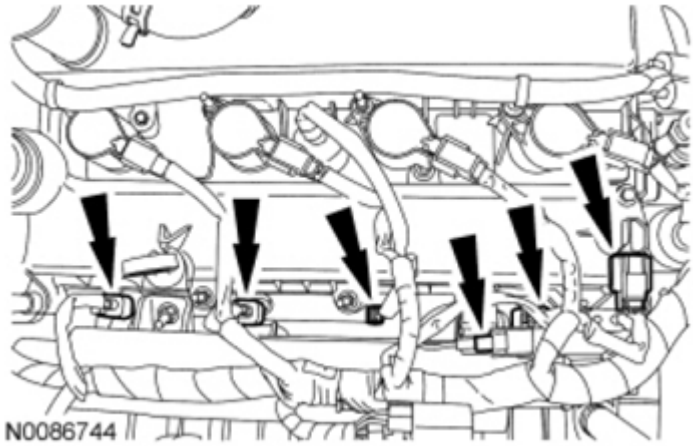

Fig. 265: Locating Fuel Injector Electrical Connectors, Radio Capacitor Electrical Connector And CMP Sensor Electrical Connector
Courtesy of FORD MOTOR CO.

32. Detach the 2 wiring harness retainers from the ignition coil stud bolts.
    - Remove the high-voltage wiring harness.

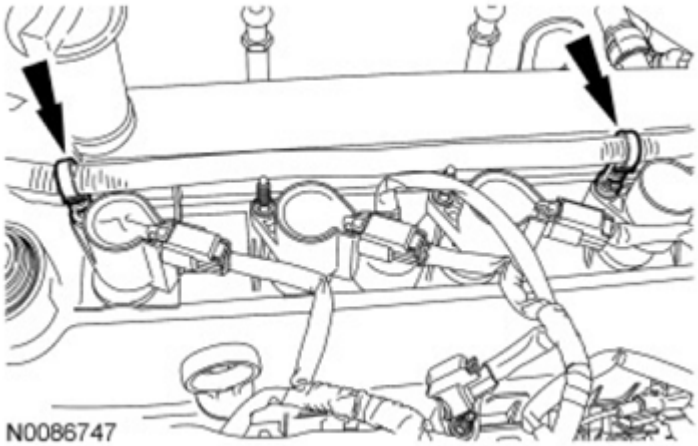

Fig. 266: Locating Wiring Harness Retainers
Courtesy of FORD MOTOR CO.

33. Remove the fuel rail insulator.

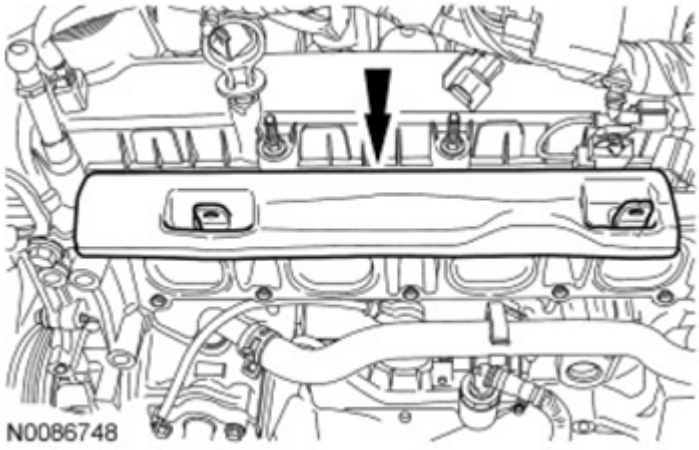

Fig. 267: Locating Fuel Rail Insulator
Courtesy of FORD MOTOR CO.

34. Remove the nut and the radio capacitor.

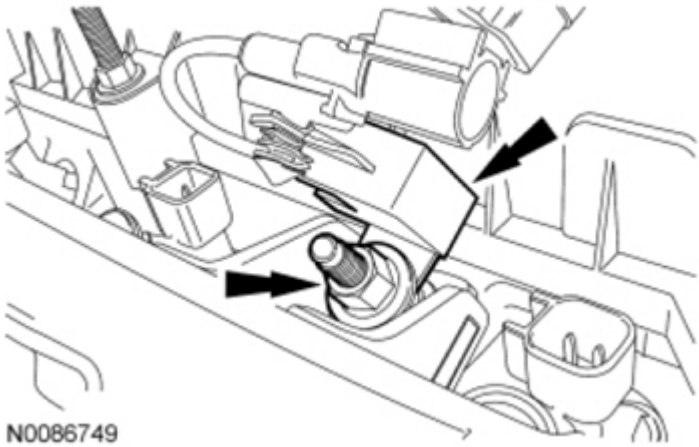

Fig. 268: Locating Nut And Radio Capacitor
Courtesy of FORD MOTOR CO.

35. Remove the 2 stud bolts and the fuel rail with the fuel injectors.

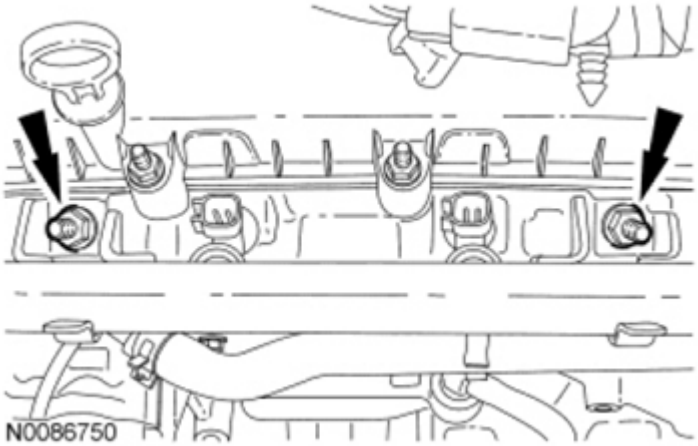

Fig. 269: Locating Stud Bolts And Fuel Rail With Fuel Injectors
Courtesy of FORD MOTOR CO.

36. Disconnect the 4 coil-on-plug electrical connectors.

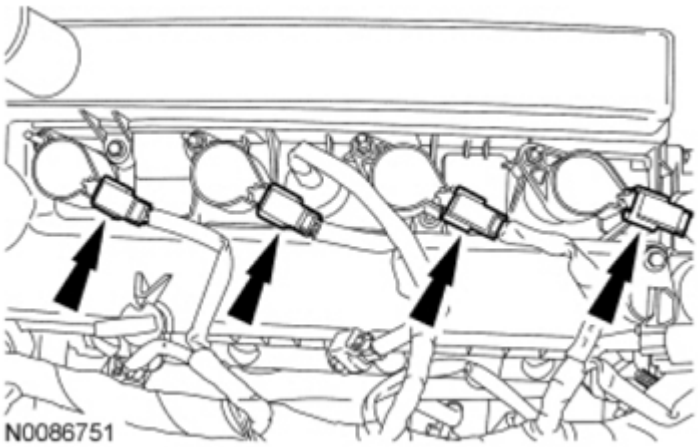

Fig. 270: Locating Coil-On-Plug Electrical Connectors
Courtesy of FORD MOTOR CO.

37. Position the rubber boot aside and disconnect the Cylinder Head Temperature (CHT) sensor electrical connector.

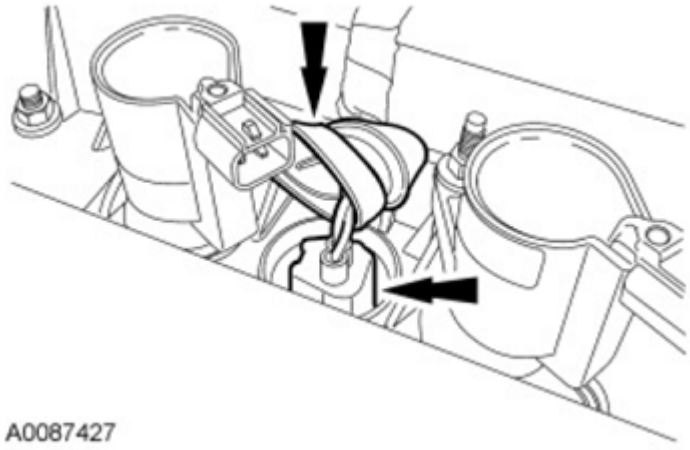

Fig. 271: Locating Rubber Boot And Cylinder Head Temperature Sensor Electrical Connector
Courtesy of FORD MOTOR CO.

38. Disconnect the EGR valve electrical connector and detach the 2 wiring harness retainers from the valve cover and stud bolt.
    - Remove the engine control wiring harness from the engine.

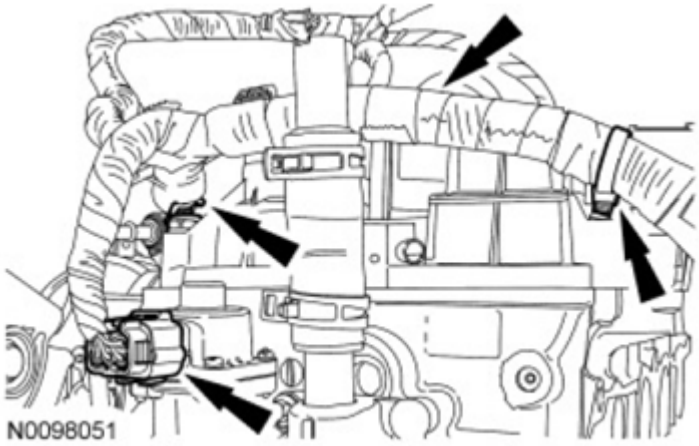

Fig. 272: Locating EGR Valve Electrical Connector And Wiring Harness Retainers
Courtesy of FORD MOTOR CO.

39. Remove the 3 bolts and the coolant pump pulley.

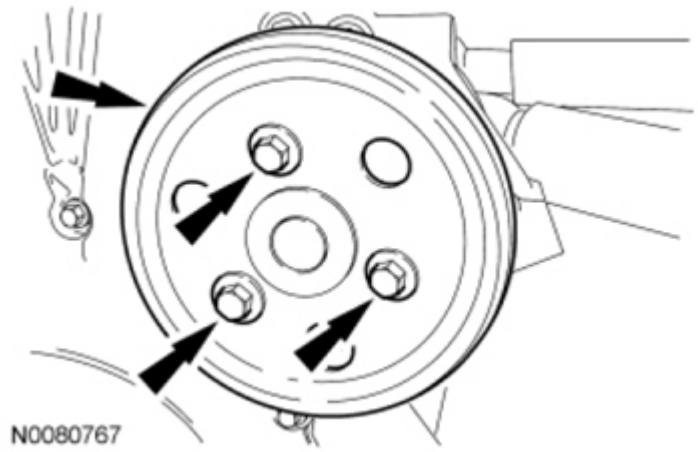

Fig. 273: Locating Bolts And Coolant Pump Pulley
Courtesy of FORD MOTOR CO.

40. Remove the 3 bolts and the coolant pump.

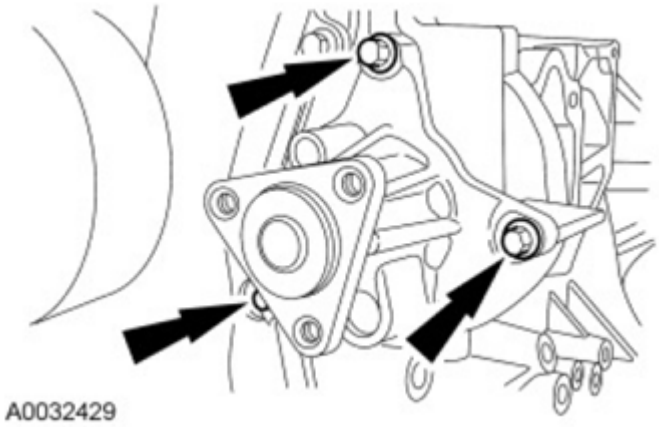

Fig. 274: Locating Coolant Pump And Bolts
Courtesy of FORD MOTOR CO.

41. Remove the 3 bolts and the thermostat housing.

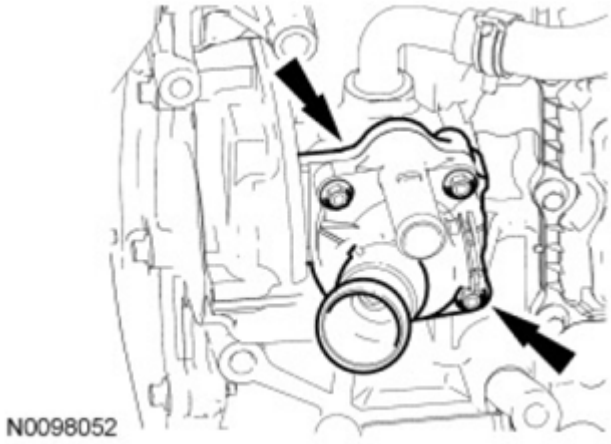

Fig. 275: Locating Bolts And Thermostat Housing
Courtesy of FORD MOTOR CO.

42. Disconnect the coolant hose.

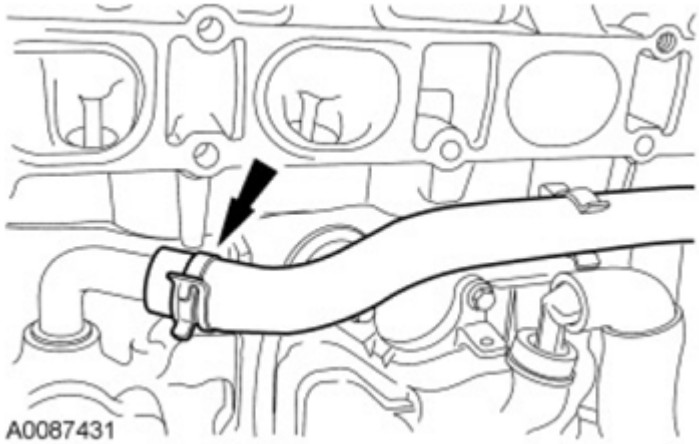

Fig. 276: Locating Coolant Hose
Courtesy of FORD MOTOR CO.

43. Disconnect and remove the coolant hose.

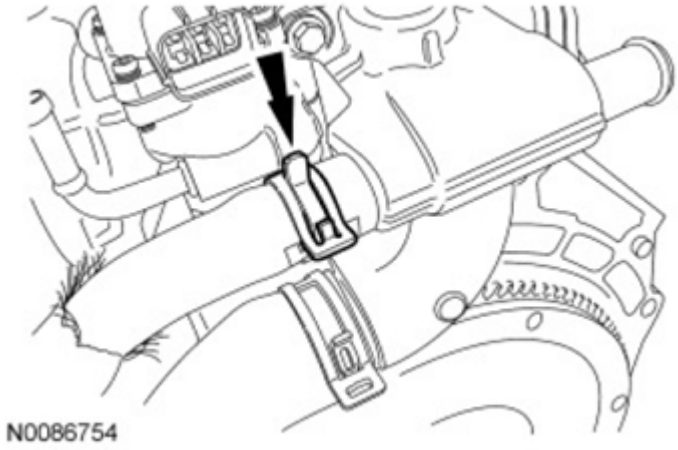

Fig. 277: Locating Coolant Hose
Courtesy of FORD MOTOR CO.

44. Remove the bolt and the KS.

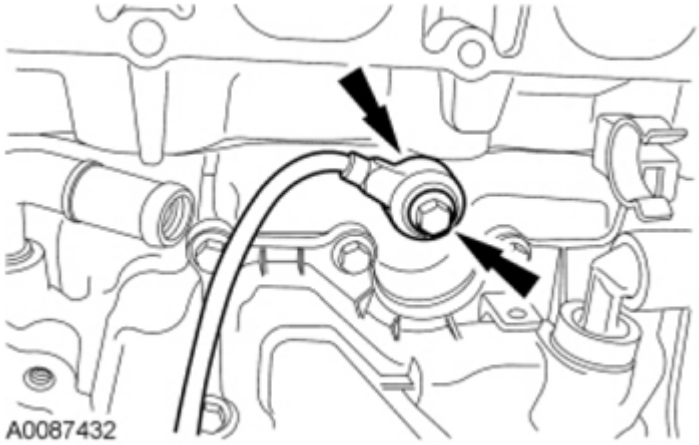

Fig. 278: Identifying Bolt And Knock Sensor
Courtesy of FORD MOTOR CO.

45. Remove the 8 bolts and the crankcase vent oil separator.

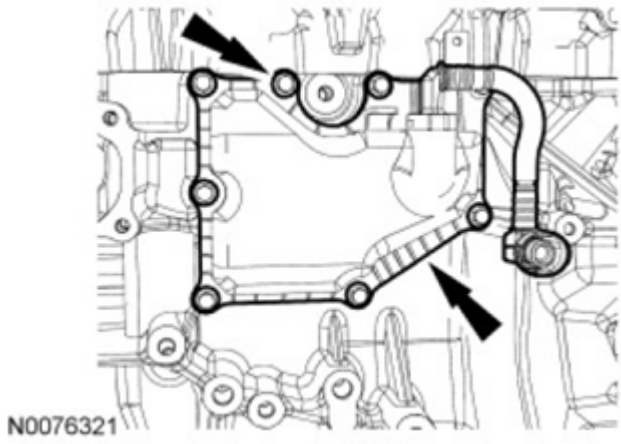

Fig. 279: Locating Bolts And Crankcase Vent Oil Separator
Courtesy of FORD MOTOR CO.

46. Remove the 4 bolts and the oil filter adapter.
    - Discard the gasket.

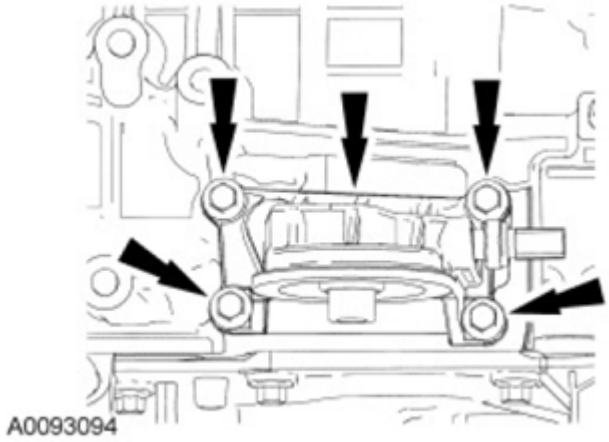

Fig. 280: Locating Bolts And Oil Filter Adapter
Courtesy of FORD MOTOR CO.

47. If equipped, remove the block heater.

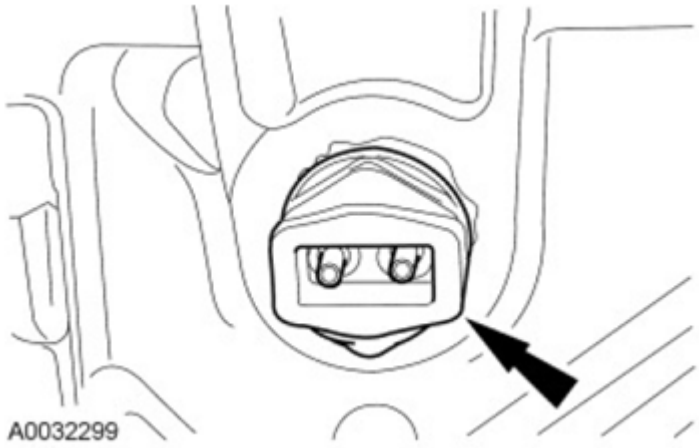

Fig. 281: Locating Block Heater
Courtesy of FORD MOTOR CO.

48. Remove the crankshaft vent tube.

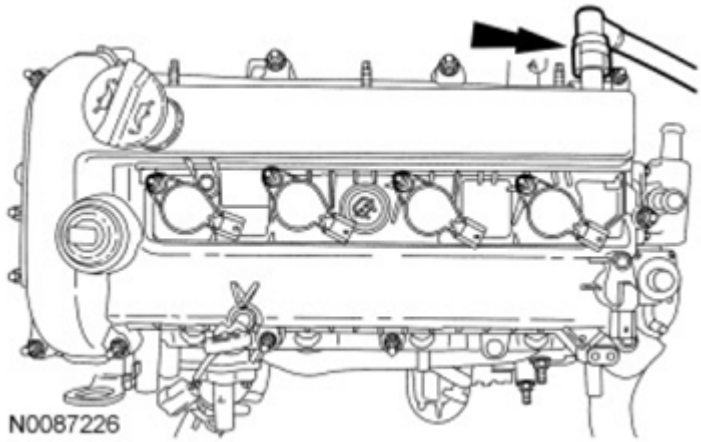

Fig. 282: Locating Crankshaft Vent Tube
Courtesy of FORD MOTOR CO.

49. Remove the engine cover studs.

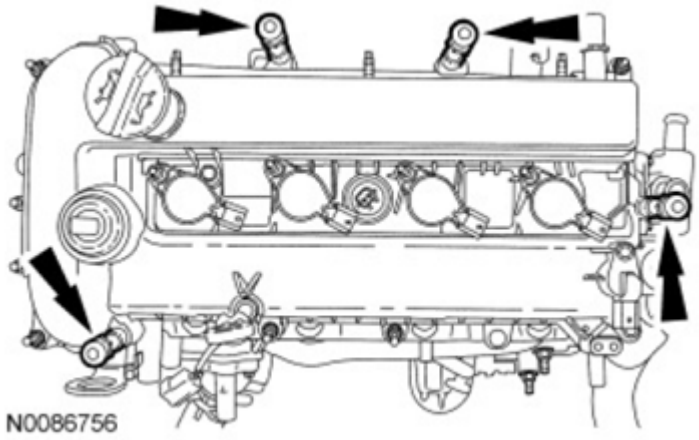

Fig. 283: Locating Engine Cover Studs
Courtesy of FORD MOTOR CO.

50. Remove the 4 stud bolts and the coil-on-plugs from the valve cover.

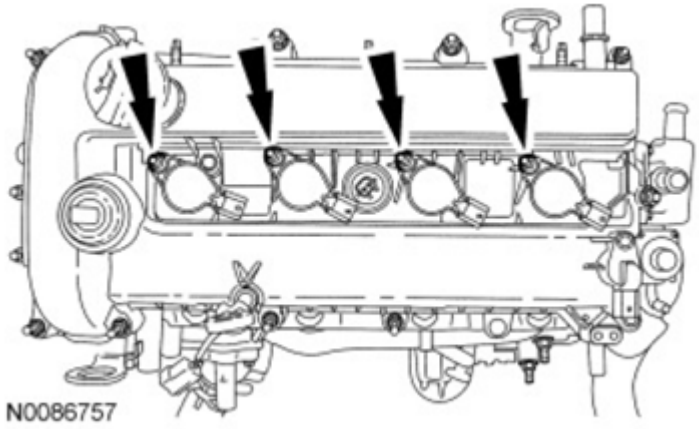

Fig. 284: Locating Coil-On-Plugs Stud Bolts
Courtesy of FORD MOTOR CO.

51. Remove the oil level indicator.

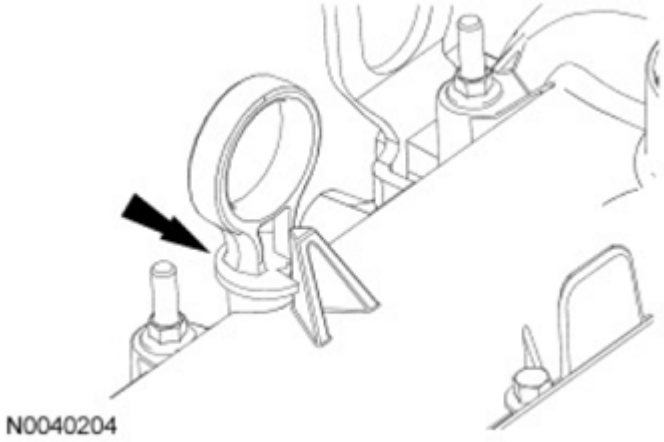

Fig. 285: Locating Oil Level Indicator
Courtesy of FORD MOTOR CO.

NOTE: Only use hand tools when removing or installing the spark plugs or damage can occur to the cylinder head or spark plug.

52. Remove the spark plugs and the **CHT** sensor.
    - Discard the **CHT** sensor.

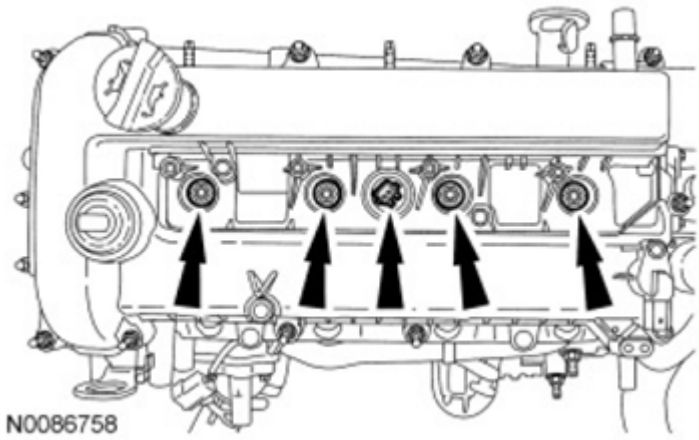

Fig. 286: Locating Spark Plugs And CHT Sensor
Courtesy of FORD MOTOR CO.

53. Remove the bolts and the valve cover.

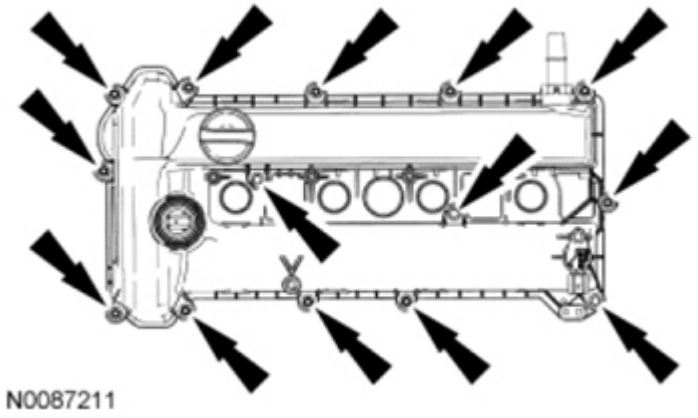

Fig. 287: Locating Bolts And Valve Cover
Courtesy of FORD MOTOR CO.

NOTE: Failure to position the No. 1 piston at Top Dead Center (TDC) can result in damage to the engine. Turn the engine in the normal direction of rotation only.

54. Using the crankshaft pulley bolt, turn the crankshaft clockwise to position the No. 1 piston at Top Dead Center (TDC).
    - The hole in the crankshaft pulley should be in the 6 o'clock position.

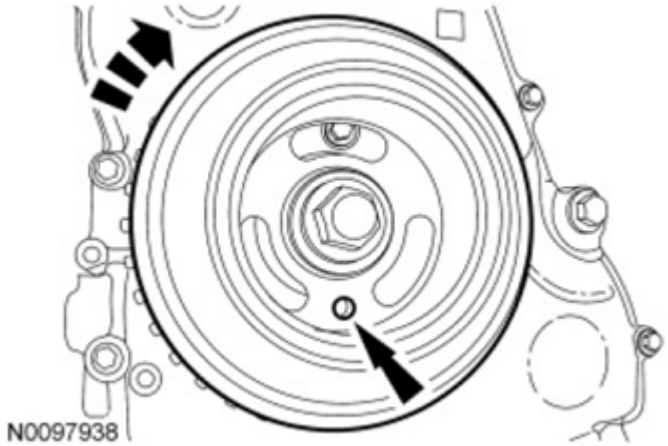

Fig. 288: Locating Crankshaft Pulley Hole
Courtesy of FORD MOTOR CO.

NOTE: The Camshaft Alignment Plate 303-465 is for camshaft alignment only. Using this tool to prevent engine rotation can result in engine damage.

NOTE: The camshaft timing slots are offset. If the Camshaft Alignment Plate cannot be installed, rotate the crankshaft one complete revolution

clockwise to correctly position the camshafts.

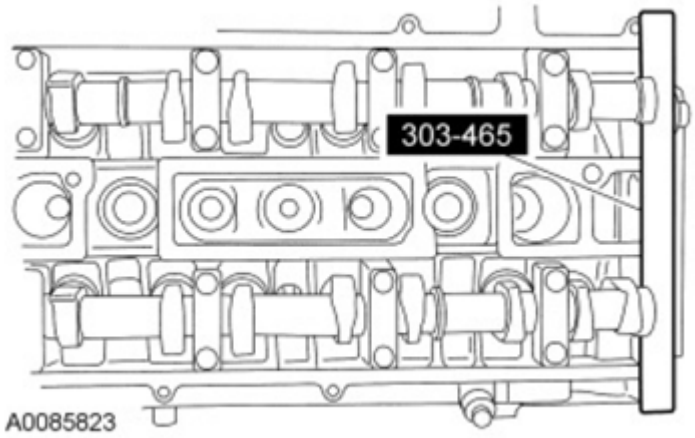

Fig. 289: Identifying Camshaft Alignment Plate
Courtesy of FORD MOTOR CO.

55. Install the Camshaft Alignment Plate in the slots on the rear of both camshafts.
56. Remove the engine plug bolt.

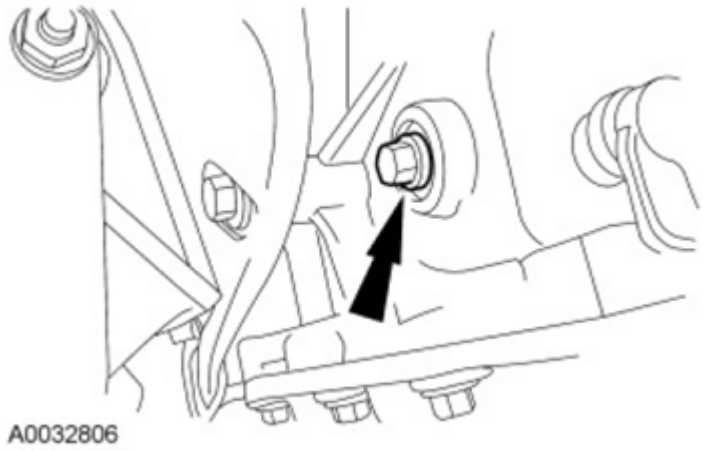

Fig. 290: Locating Engine Plug Bolt
Courtesy of FORD MOTOR CO.

NOTE: **The Crankshaft TDC Timing Peg will contact the crankshaft and prevent it from turning past TDC . However, the crankshaft can still be rotated in the counterclockwise direction. The crankshaft must remain at the TDC position during the crankshaft pulley removal and installation.**

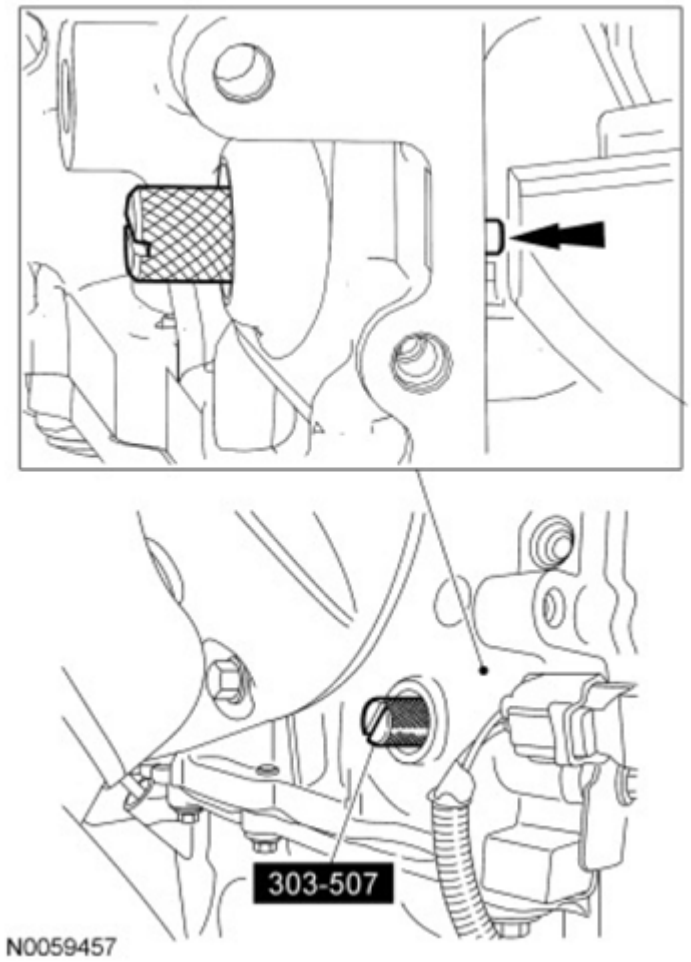

Fig. 291: Remove/Install Crankshaft TDC Timing Peg
Courtesy of FORD MOTOR CO.

57. Install the Crankshaft **TDC** Timing Peg.

NOTE: **The crankshaft must remain in the Top Dead Center (TDC) position during removal of the pulley bolt or damage to the engine can occur. Therefore, the crankshaft pulley must be held in place with the Crankshaft Damper Holding Tool and the bolt should be removed using an air impact wrench (1/2-in drive minimum).**

NOTE: **The crankshaft sprocket diamond washer may come off with the crankshaft pulley. The diamond washer must be replaced; remove and discard the diamond washer. If the diamond washer is not installed, engine damage may occur.**

58. Using the Crankshaft Damper Holding Tool and an air impact wrench, remove the crankshaft pulley.
    - Remove and discard the crankshaft pulley bolt and washer.

- Remove the crankshaft pulley.
- Remove the diamond washer and discard.

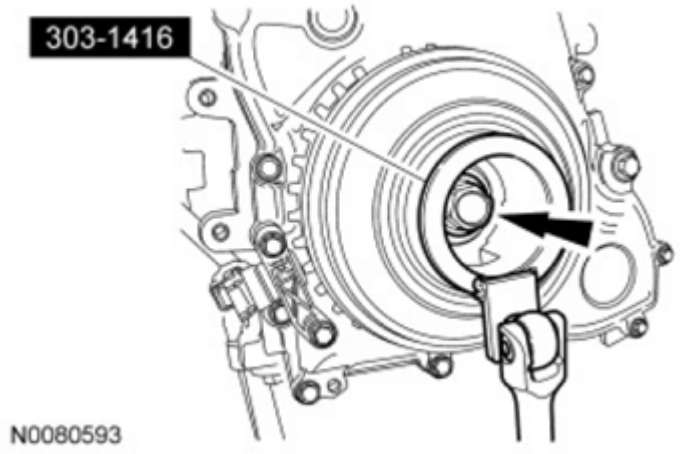

Fig. 292: Locating Crankshaft Pulley Bolt And Washer
Courtesy of FORD MOTOR CO.

NOTE: Use care not to damage the engine front cover or the crankshaft when removing the seal.

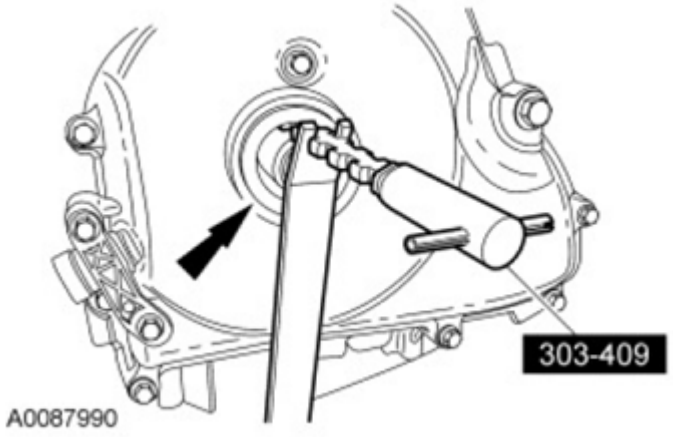

Fig. 293: Removing Crankshaft Front Oil Seal Using The Oil Seal Remover
Courtesy of FORD MOTOR CO.

59. Using the Oil Seal Remover, remove the crankshaft front oil seal.
60. Remove the 2 bolts and the CKP sensor.

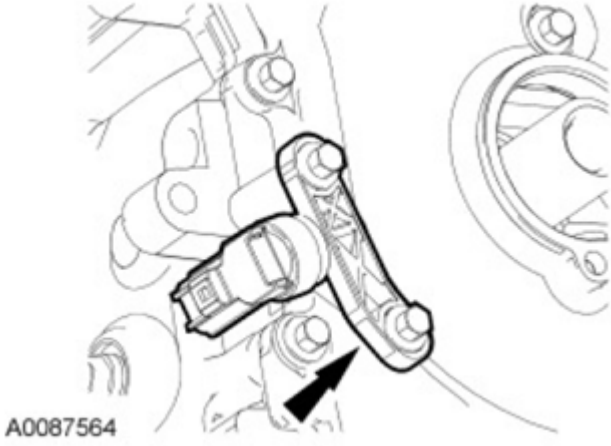

Fig. 294: Locating Bolts And CKP Sensor
Courtesy of FORD MOTOR CO.

61. Remove the bolts and the engine front cover.

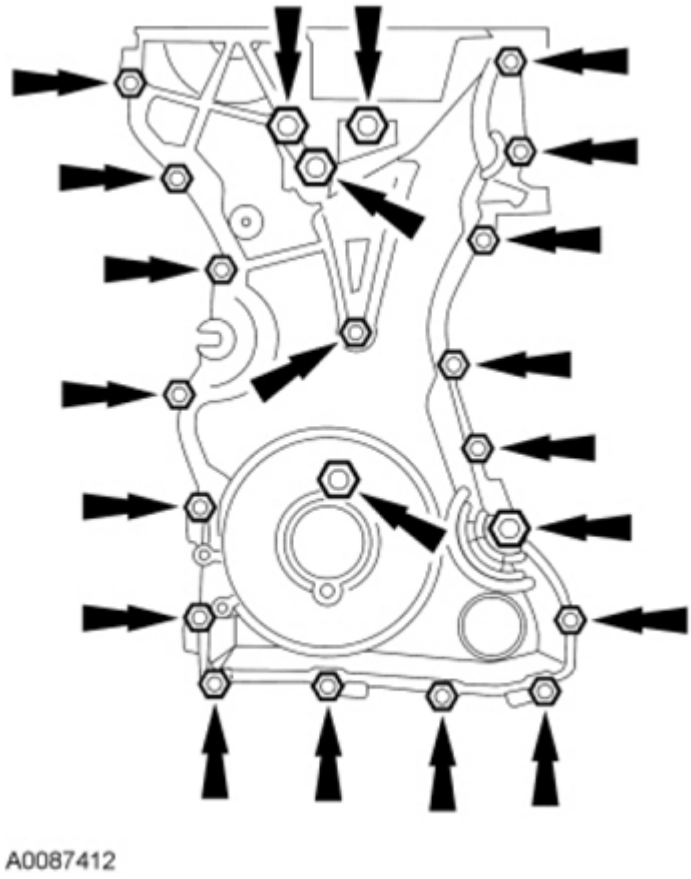

Fig. 295: Locating Engine Front Cover Bolts
Courtesy of FORD MOTOR CO.

62. Compress the timing chain tensioner.
    1. Using a small pick, release and hold the ratchet mechanism.
    2. While holding the ratchet mechanism in the released position, compress the tensioner by pushing the timing chain arm toward the tensioner.
    3. Insert a paper clip into the hole to retain the tensioner.

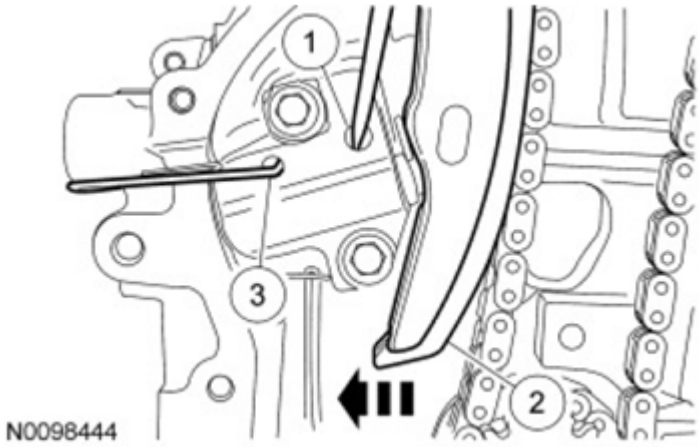

Fig. 296: Compressing Timing Chain Tensioner Sequence
Courtesy of FORD MOTOR CO.

63. Remove the 2 bolts and the timing chain tensioner.

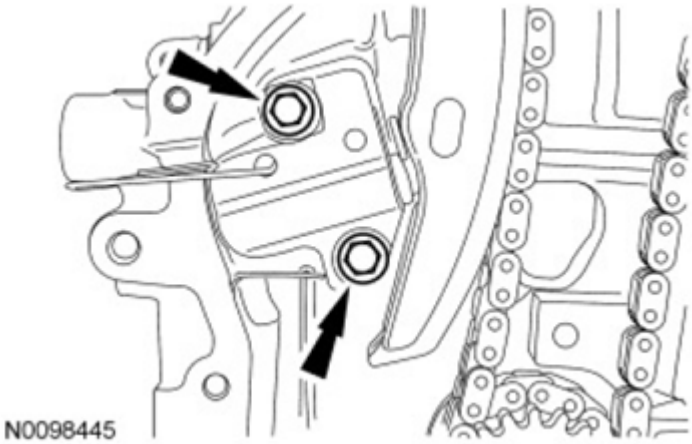

Fig. 297: Locating Timing Chain Tensioner Bolts
Courtesy of FORD MOTOR CO.

64. Remove the RH timing chain guide.

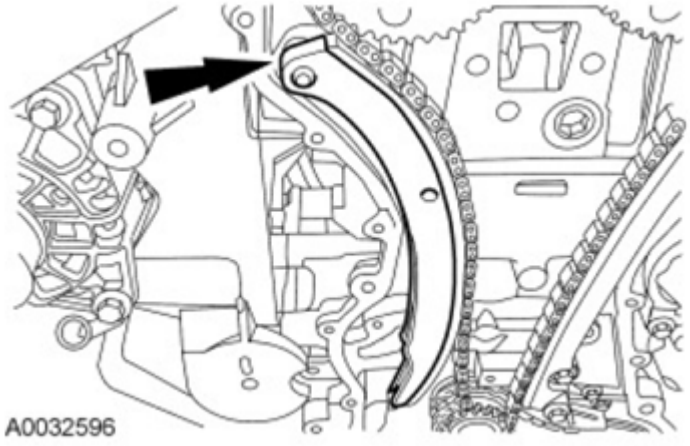

Fig. 298: Locating Timing Chain Tensioner Arm
Courtesy of FORD MOTOR CO.

65. Remove the timing chain.

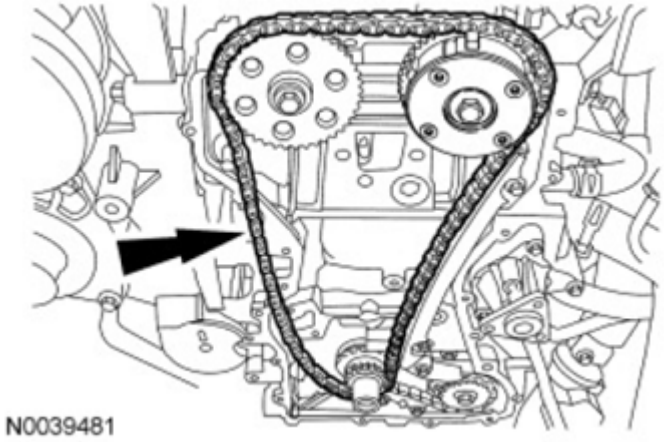

Fig. 299: Locating Timing Chain
Courtesy of FORD MOTOR CO.

66. Remove the bolts and the LH timing chain guide.

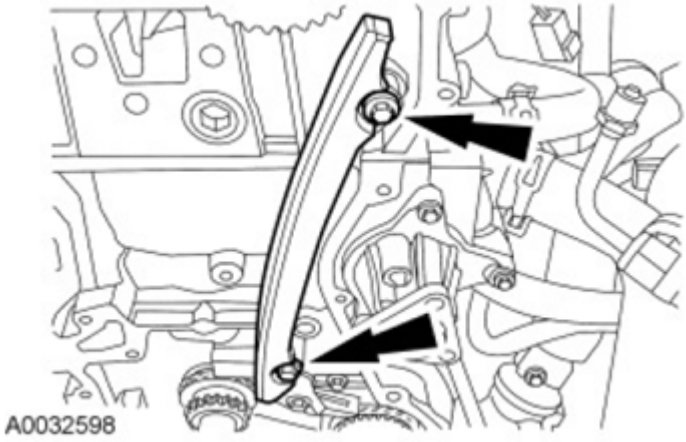

Fig. 300: Locating Timing Chain Guide Bolts
Courtesy of FORD MOTOR CO.

NOTE: Do not rely on the Camshaft Alignment Plate to prevent camshaft rotation. Damage to the tool or the camshaft can occur.

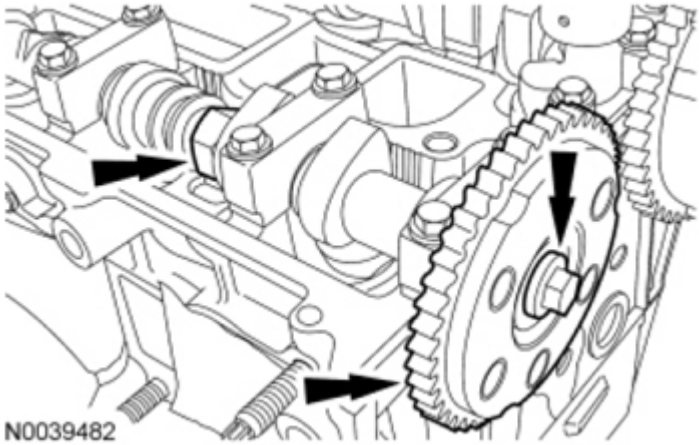

Fig. 301: Locating Bolt And Exhaust Camshaft Sprocket
Courtesy of FORD MOTOR CO.

67. Using the flats on the camshaft to prevent camshaft rotation, remove the bolt and the exhaust camshaft sprocket.

NOTE: The Camshaft Alignment Plate 303-465 is for camshaft alignment only. Using this tool to prevent engine rotation can result in engine damage.

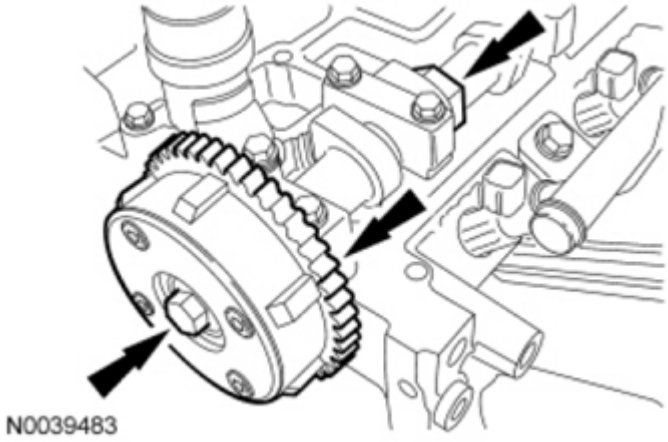

Fig. 302: Locating Bolt And Camshaft Phaser And Sprocket
Courtesy of FORD MOTOR CO.

68. Using the flats on the camshaft to prevent camshaft rotation, remove the bolt and the intake camshaft sprocket.
69. Remove the oil pump chain tensioner.
    1. Release the tension on the tensioner spring.
    2. Remove the tensioner and the shoulder bolts.

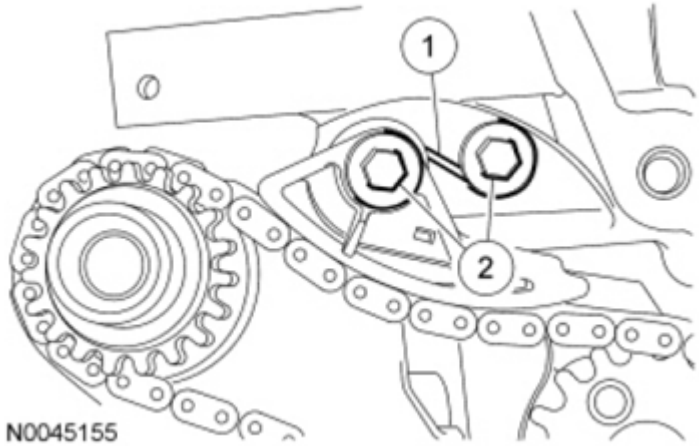

Fig. 303: Locating Shoulder Bolts And Tensioner
Courtesy of FORD MOTOR CO.

NOTE: Remove and discard the crankshaft sprocket diamond washer located behind the crankshaft sprocket.

NOTE: The oil pump chain sprocket must be held in place.

70. Remove the oil pump chain and sprockets.

1. Remove the bolt.
2. Remove the chain and sprockets.

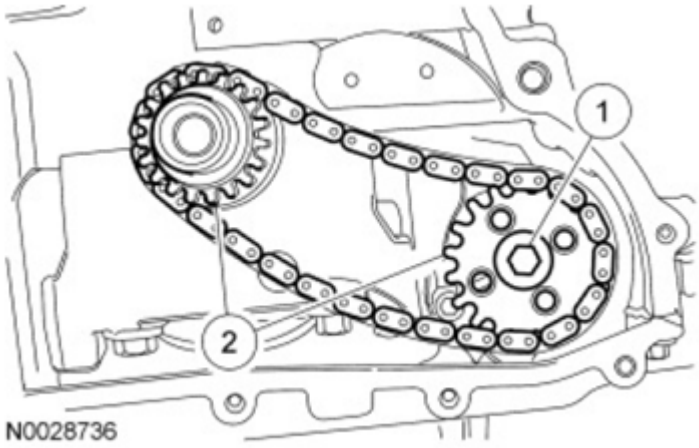

Fig. 304: Identifying Bolt And Sprockets
Courtesy of FORD MOTOR CO.

71. Mark the position of the camshaft lobes on the No. 1 cylinder for assembly reference.

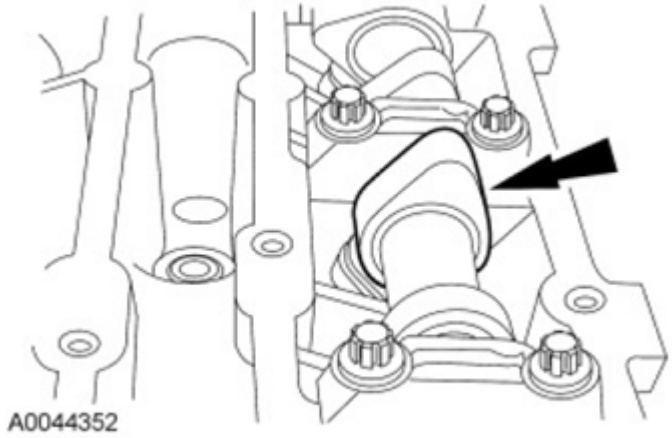

Fig. 305: Locating Camshaft Lobes
Courtesy of FORD MOTOR CO.

72. Remove the bolt and the Variable Camshaft Timing (VCT) solenoid.

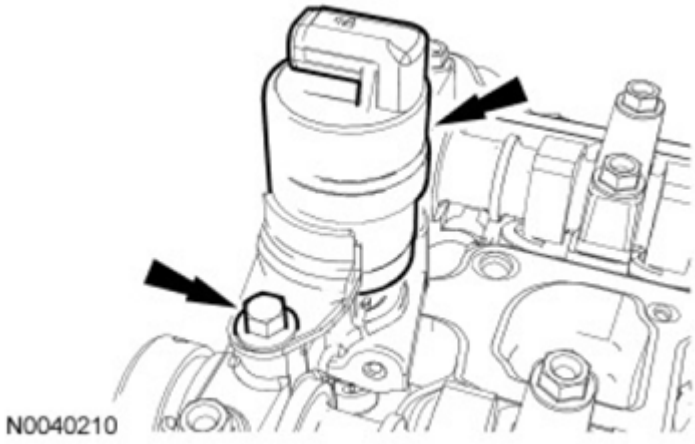

Fig. 306: Locating Bolt And Variable Camshaft Timing Solenoid
Courtesy of FORD MOTOR CO.

73. Remove the plug and the **VCT** system oil filter from the intake camshaft thrust cap.

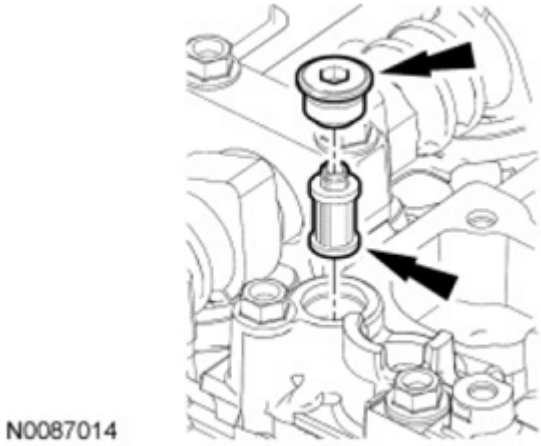

Fig. 307: Locating Plug And VCT System Oil Filter
Courtesy of FORD MOTOR CO.

NOTE: Failure to follow the camshaft loosening procedure can result in damage to the camshafts.

NOTE: Mark the location and orientation of each camshaft bearing cap.

74. Remove the camshafts from the engine.
    - Loosen the camshaft bearing bolts in the sequence shown in illustration, one turn at a time. Repeat until all the tension is released.
    - Remove the camshaft bearing caps.
    - Remove the camshafts.

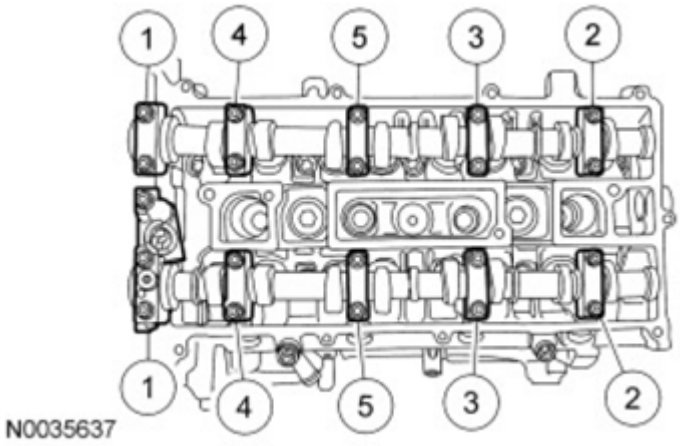

Fig. 308: Identifying Camshaft Bearing Cap Bolts Loosening Sequence
Courtesy of FORD MOTOR CO.

NOTE: **If the camshafts and valve tappets are to be reused, mark the location of the valve tappets to make sure they are assembled in their original positions.**

NOTE: **The number on the valve tappets only reflects the digits that follow the decimal. For example, a tappet with the number 0.650 has the thickness of 3.650 mm.**

75. Remove and inspect the valve tappets. For additional information, refer to **ENGINE MECHANICAL SYSTEM - GENERAL INFORMATION** article.
76. Remove the cylinder head.
    - Remove and discard the cylinder head bolts.
    - Remove the cylinder head.
    - Remove and discard the cylinder head gasket.

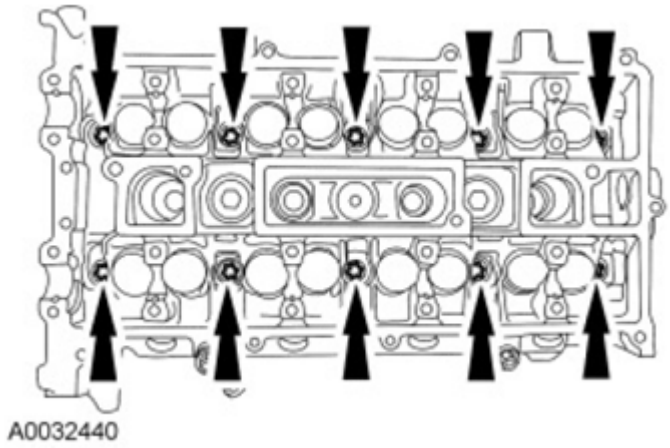

Fig. 309: Locating Cylinder Head Bolts

Courtesy of FORD MOTOR CO.

77. Support the cylinder heads on a bench with the head gasket side up. Check the cylinder head distortion and the cylinder block distortion. For additional information, refer to **ENGINE MECHANICAL SYSTEM - GENERAL INFORMATION** article.
78. Remove the cylinder head alignment dowels.

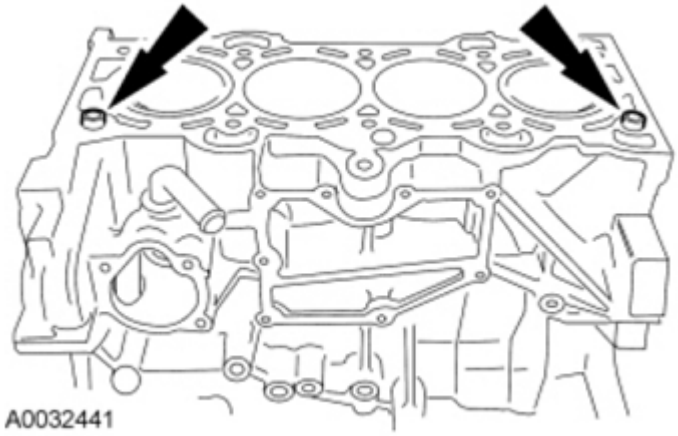

Fig. 310: Locating Cylinder Head Alignment Dowels
Courtesy of FORD MOTOR CO.

79. Remove the bolts and the oil pan.

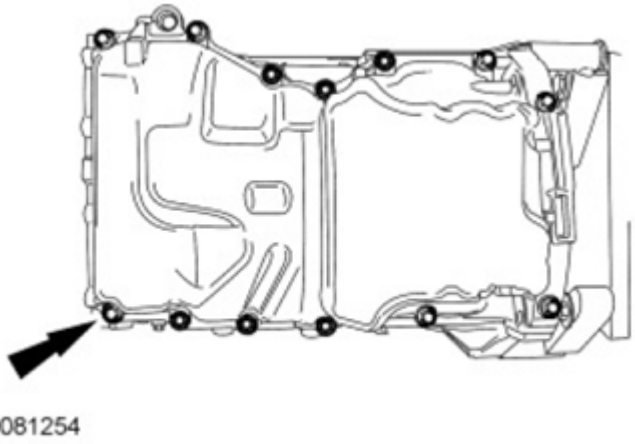

Fig. 311: Locating Oil Pan Bolts
Courtesy of FORD MOTOR CO.

80. Remove the bolts and the rear crankshaft seal.

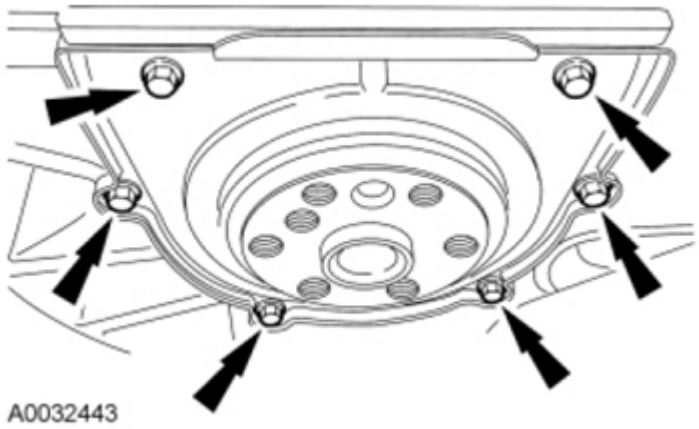

Fig. 312: Locating Bolts And Rear Crankshaft Seal
Courtesy of FORD MOTOR CO.

81. Remove the bolts, oil pump pickup tube and gasket.

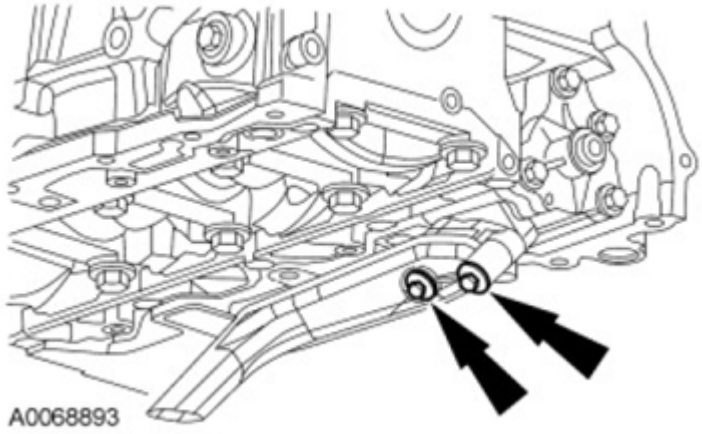

Fig. 313: Locating Bolts, Oil Pump Pickup Tube And Gasket
Courtesy of FORD MOTOR CO.

82. Remove the bolts and the oil pump.

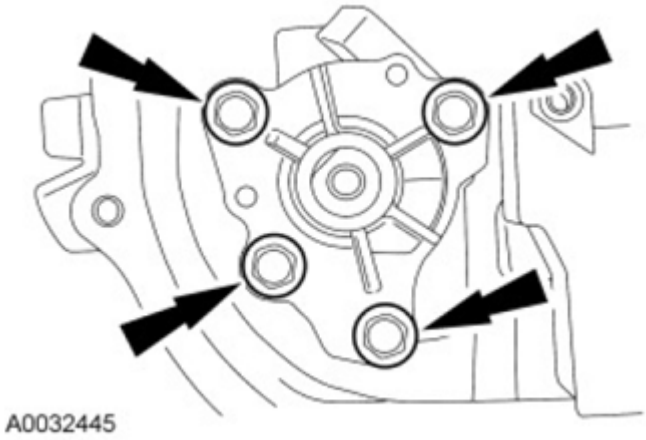

Fig. 314: Locating Oil Pump Assembly Bolts
Courtesy of FORD MOTOR CO.

83. Remove the bolts and the block-off plate.

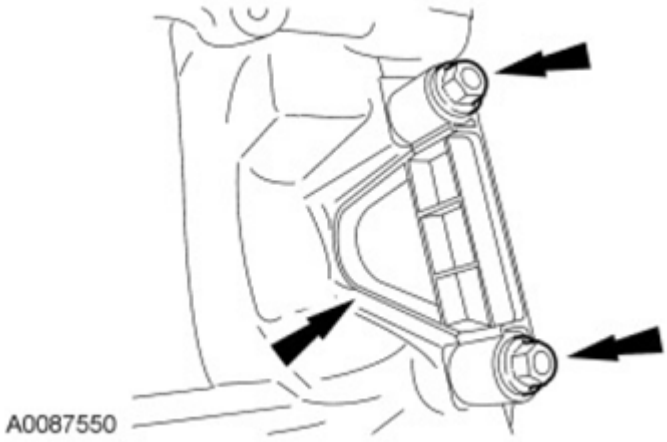

Fig. 315: Locating Block-Off Plate Bolts
Courtesy of FORD MOTOR CO.

84. Make sure the Crankshaft **TDC** Timing Peg is still installed and the engine is still at **TDC** .
    - Rotate the crankshaft slowly clockwise until the crankshaft balance weight is up against the Crankshaft **TDC** Timing Peg.

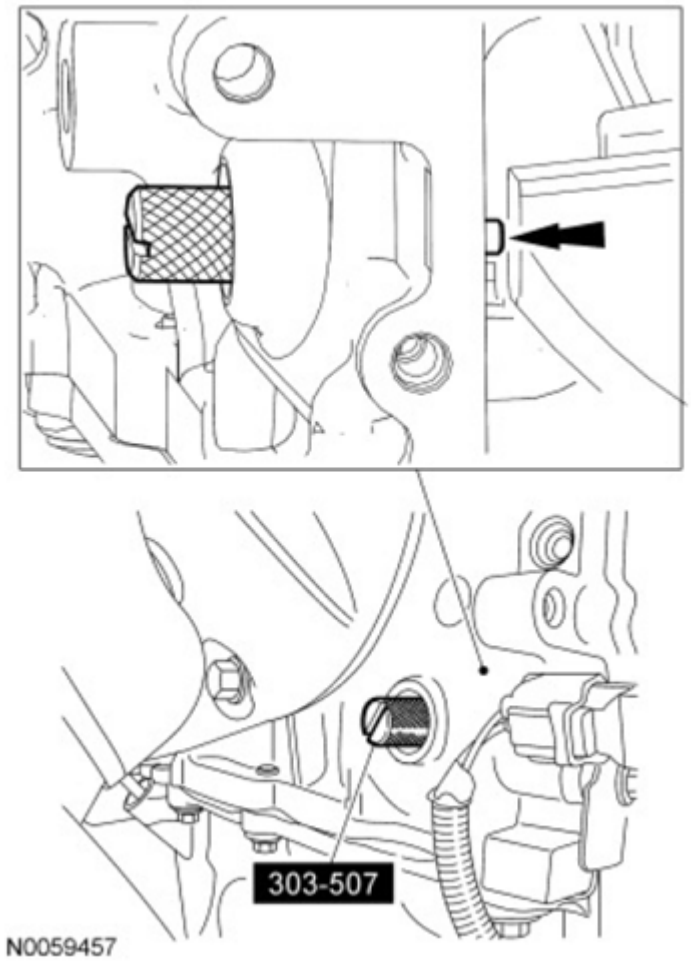

Fig. 316: Remove/Install Crankshaft TDC Timing Peg
Courtesy of FORD MOTOR CO.

85. Mark the balancer unit front shafts on the top for reference that the balancer unit is at **TDC** .

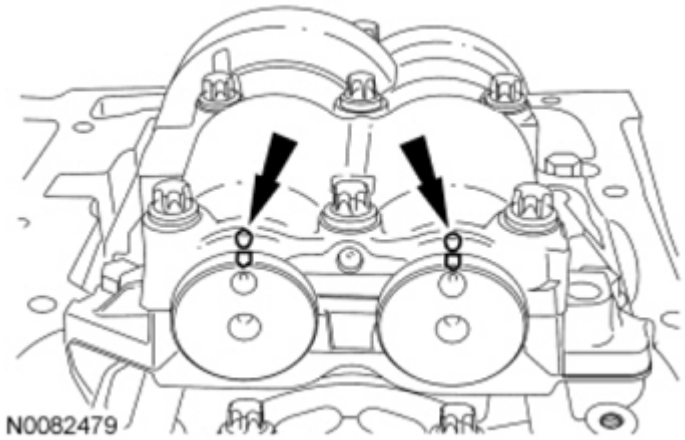

Fig. 317: Locating Balancer Unit And Shafts Reference Mark

Courtesy of FORD MOTOR CO.

NOTE: Due to the precision interior construction of the balancer unit, it should not be disassembled.

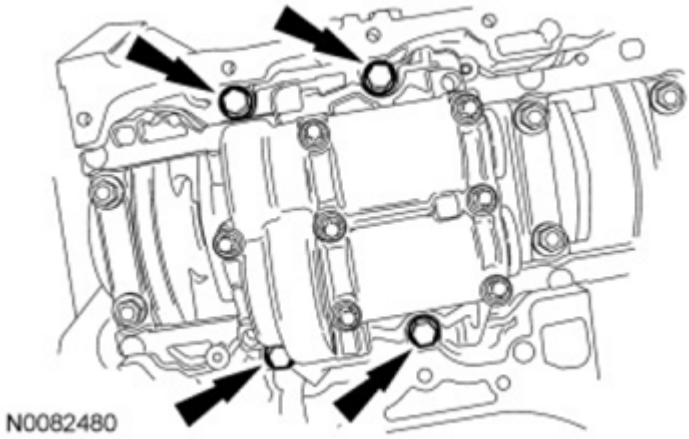

Fig. 318: Locating Balancer Unit Bolts
Courtesy of FORD MOTOR CO.

86. Remove the 4 bolts and the balancer unit.
87. Remove the Crankshaft **TDC** Timing Peg.

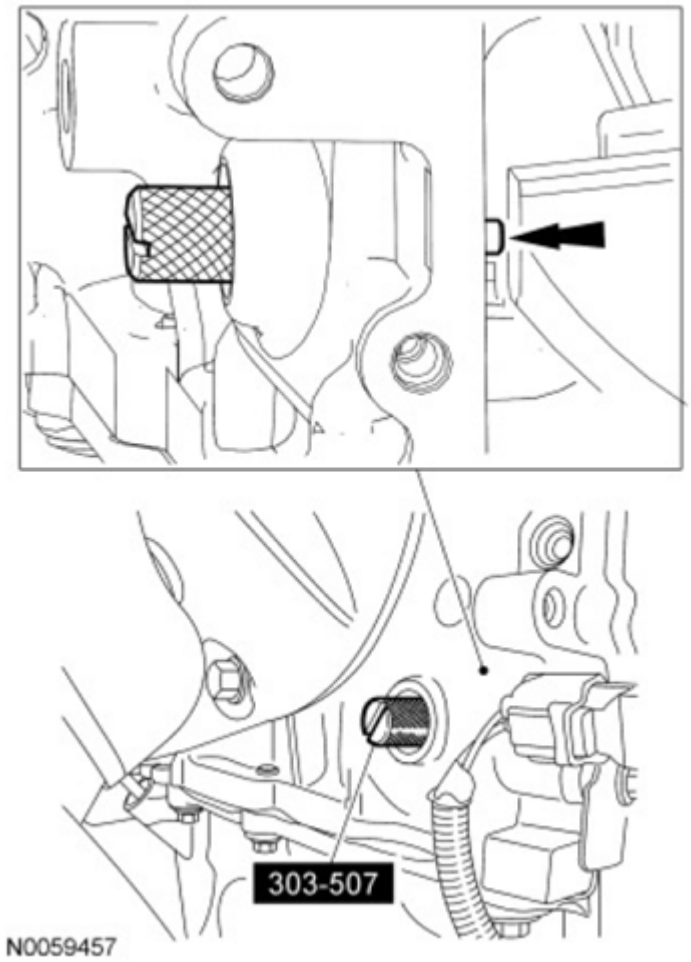

Fig. 319: Remove/Install Crankshaft TDC Timing Peg
Courtesy of FORD MOTOR CO.

88. Before removing the pistons, inspect the top of the cylinder bores. If necessary, remove the ridge or carbon deposits from each cylinder using an abrasive pad or equivalent, following manufacturer's instructions.

NOTE: **Clearly mark the connecting rods, connecting rod caps and connecting rod bearings in numerical order for correct orientation for reassembly.**

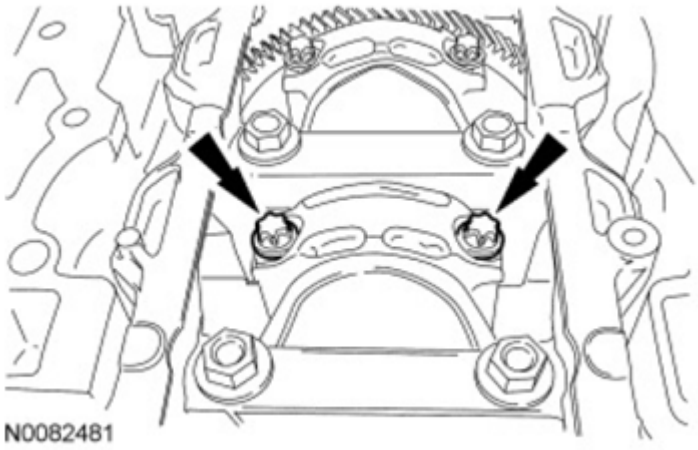

Fig. 320: Locating Connecting Rod Cap Bolts
Courtesy of FORD MOTOR CO.

89. Remove the connecting rod cap bolts and cap.

NOTE: Do not scratch the cylinder walls or crankshaft journals with the connecting rod.

90. Using the Connecting Rod Installer, remove the piston/rod assembly from the engine block.
    - Repeat the previous 2 steps until all the piston/rod assemblies are removed block.

Fig. 321: Identifying Connecting Rod Installer
Courtesy of FORD MOTOR CO.

91. Remove the bolts in the sequence shown in illustration.
    - Remove the main bearing beam.
    - Discard the bolts.

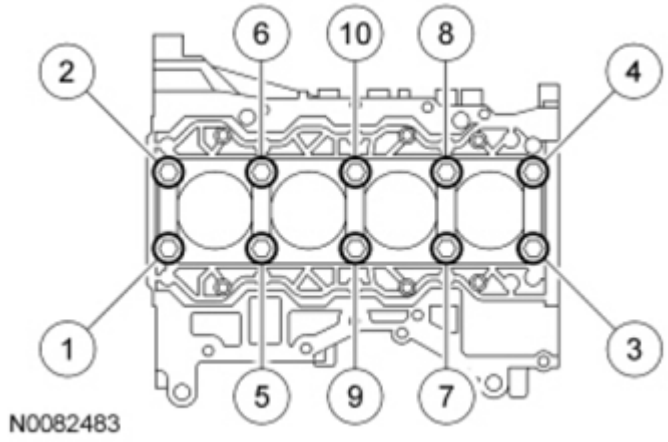

Fig. 322: Identifying Crankshaft Cap Bolts Sequence
Courtesy of FORD MOTOR CO.

92. Remove the crankshaft from the engine block.

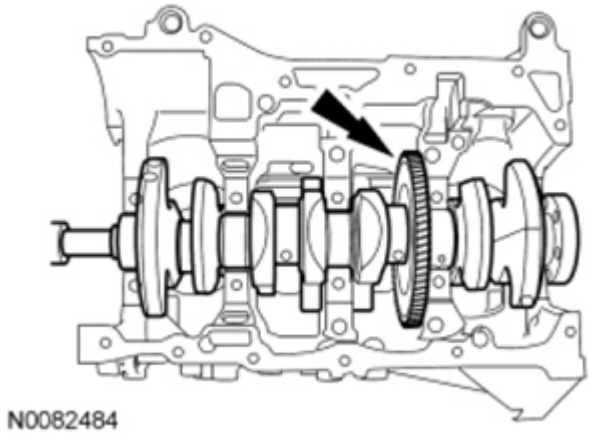

Fig. 323: Locating Crankshaft
Courtesy of FORD MOTOR CO.

NOTE: **If the main bearings are being reused, mark them in order for correct orientation and reassembly.**

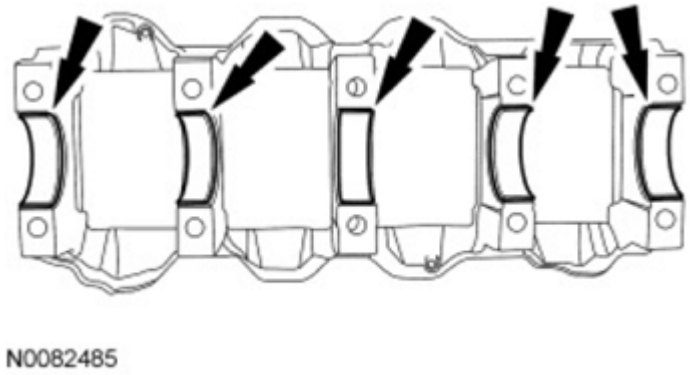

Fig. 324: Locating Main Bearings
Courtesy of FORD MOTOR CO.

93. Remove the main bearings from the main bearing beam.

NOTE: **If the main bearings are being reused, mark them in order for correct orientation and reassembly.**

NOTE: **The center bulkhead has the thrust bearing.**

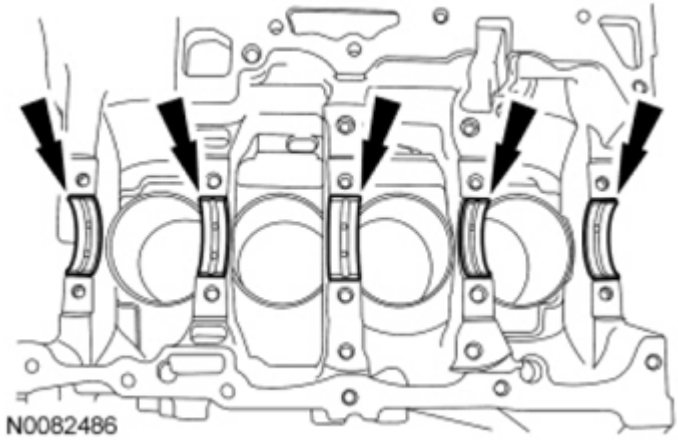

Fig. 325: Locating Main Bearings
Courtesy of FORD MOTOR CO.

94. Remove the main bearings from the cylinder block.

NOTE: **If the oil squirters are being reused, mark them in order for correct location during reassembly.**

NOTE: **The front bulkhead does not have an oil squirter.**

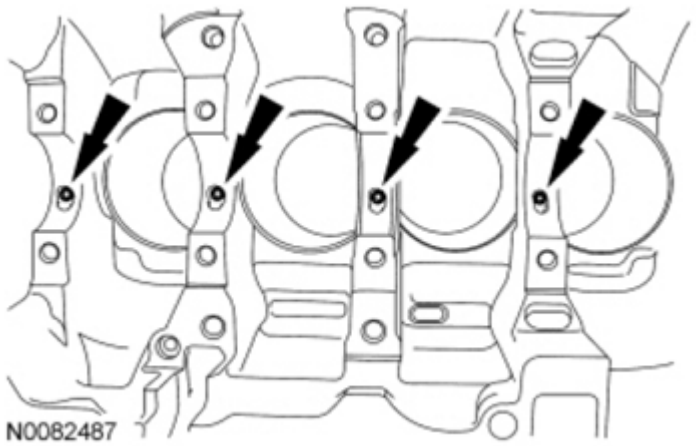

Fig. 326: Locating Oil Squirters
Courtesy of FORD MOTOR CO.

95. Remove the 4 oil squirters.
96. Inspect the cylinder block, main bearing beam, pistons and connecting rods. For additional information, refer to **ENGINE MECHANICAL SYSTEM - GENERAL INFORMATION** article.

DISASSEMBLY AND ASSEMBLY OF SUBASSEMBLIES

CYLINDER HEAD

Special Tool(s)

SPECIAL TOOLS

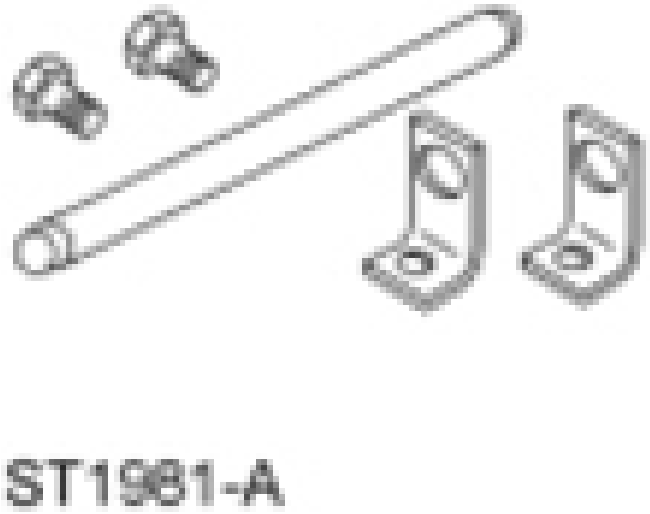	Compressor, Valve Spring 303-300 (T87C-6565-A)
	Compressor, Valve Spring

	303-350 (T89P-6565-A)
	Compressor, Valve Spring 303-472 (T94P-6565-AH)
	Installer, Valve Stem Oil Seal 303-470 (T94P-6510-CH)

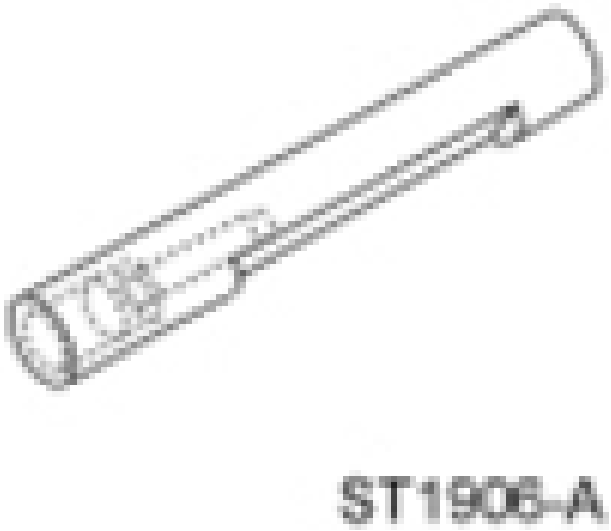	
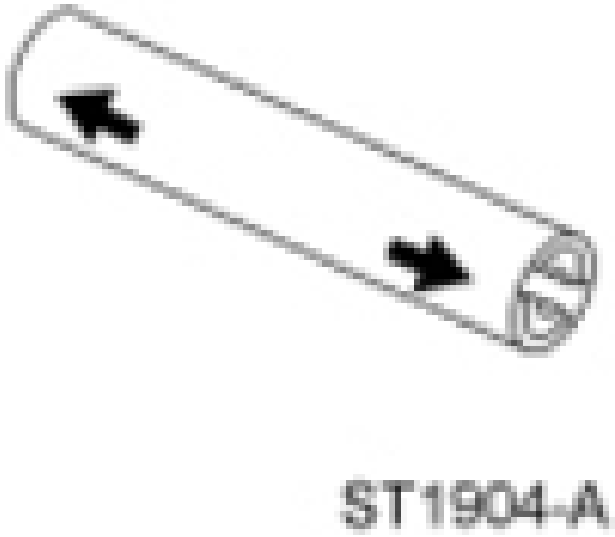	Remover, Valve Stem Oil Seal 303-468 (T94P-6510-AH)
	Slide Hammer 307-005 (T59L-100-B)

 ST1187-A	

Material Specifications

MATERIAL SPECIFICATIONS

Item	Specification
Motorcraft® SAE 5W-20 Premium Synthetic Blend Motor Oil (US); IMotorcraft® SAE 5W-20 Super Premium Motor Oil (Canada) XO-5W20-QSP (US); CXO-5W20-LSP12 (Canada)	WSS-M2C945-A
Multi-Purpose Grease XG-4 and/or XL-5	ESB-M1C93-B

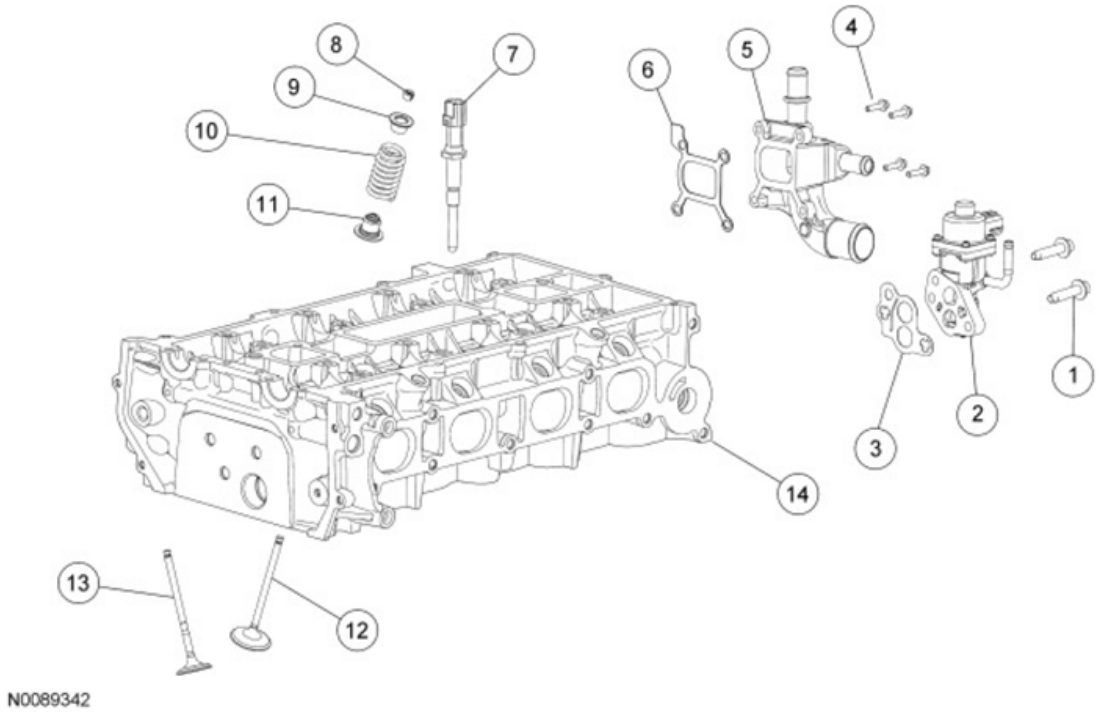

Fig. 327: Identifying Cylinder Head Components
Courtesy of FORD MOTOR CO.

ITEM DESCRIPTION

Item	Part Number	Description
1	W500225	EGR valve bolt (2 required)
2	9D475	EGR valve
3	9D476	EGR valve gasket
4	W500015	Coolant outlet bolt (4 required)
5	8K556	Coolant outlet
6	8255	Coolant outlet gasket
7	6G004	Cylinder Head Temperature (CHT) sensor
8	6518	Valve collet (16 required)
9	6514	Valve spring retainer (16 required)
10	6513	Valve spring (16 required)
11	6A517	Valve seal (16 required)
12	6505	Intake valve (8 required)
13	6507	Exhaust valve (8 required)
14	6049	Cylinder head

Disassembly

NOTE: **If the components are to be reinstalled, mark the location of the components removed, they must be installed in the same location.**

1. Remove the 2 bolts and the EGR valve.
   - Discard the gasket.
2. Remove the 4 bolts and the coolant outlet.
   - Discard the gasket.
3. Remove the Cylinder Head Temperature (CHT) sensor.

NOTE: Only use hand tools when removing or installing the spark plugs or damage can occur to the cylinder head or spark plugs.

4. Remove the spark plugs.
5. Remove the valve tappets.

NOTE: Use a small screwdriver and grease to remove the valve collets.

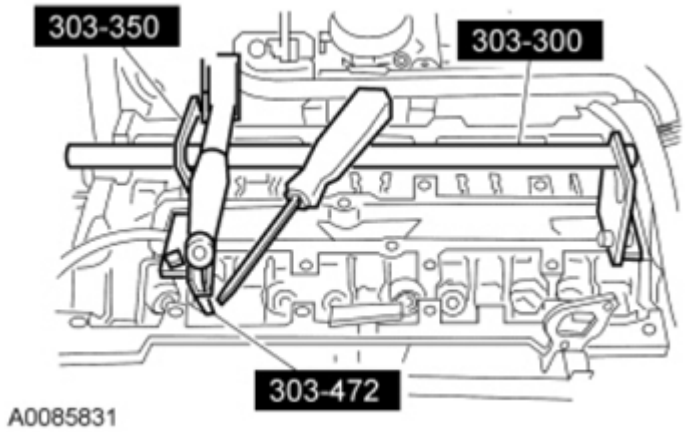

Fig. 328: Remove/Install Valve Spring And Valve Spring Retainer Using Valve Spring Compressors
Courtesy of FORD MOTOR CO.

6. Using the Valve Spring Compressors, compress the valve springs and remove the valve collets, valve spring retainers and the valve springs.
7. Inspect the components, if necessary. For additional information, refer to **ENGINE MECHANICAL SYSTEM - GENERAL INFORMATION** article.
8. Remove the valves.
9. Using the Slide Hammer and the Valve Stem Oil Seal Remover, remove and discard the valve seals.

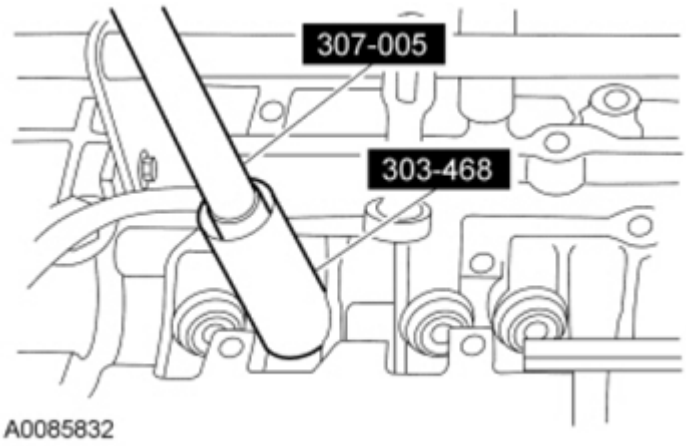

Fig. 329: Removing Valve Seal Using Slide Hammer And Valve Stem Oil Seal Remover
Courtesy of FORD MOTOR CO.

10. Inspect the valves. For additional information, refer to **ENGINE MECHANICAL SYSTEM - GENERAL INFORMATION** . Install new parts, as necessary.

Assembly

NOTE: Coat the valve stems with clean engine oil.

1. Install the valves.

NOTE: Use the protector provided with the replacement kit to prevent damage to the valve seals. Lubricate the valve stems and guides with clean engine oil.

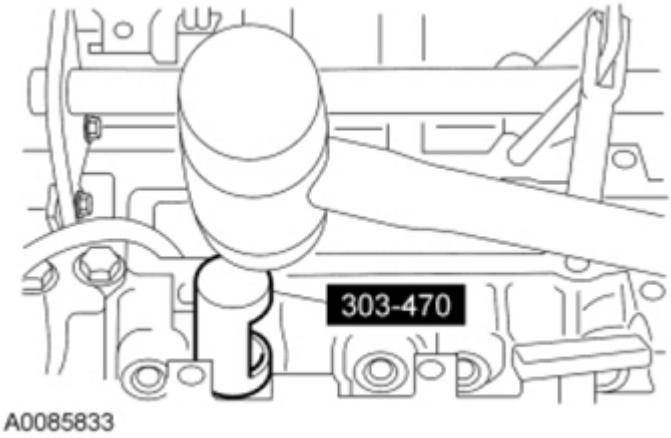

Fig. 330: Installing Valve Seal Using The Valve Stem Oil Seal Installer
Courtesy of FORD MOTOR CO.

2. Using the Valve Stem Oil Seal Installer, install the valve seals.

NOTE: Check the seating of the valve collets.

3. Using the Valve Spring Compressors, install the valve springs.
   - Insert the valve springs and the valve spring retainers.
   - Compress the valve springs and install the valve collets, using grease and a small screwdriver.

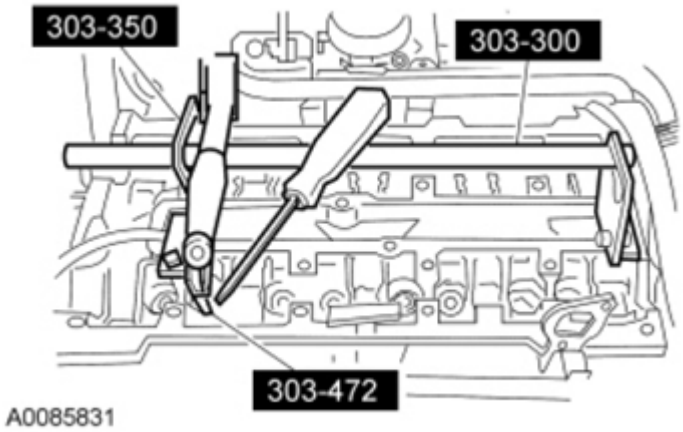

Fig. 331: Remove/Install Valve Spring And Valve Spring Retainer Using Valve Spring Compressors
Courtesy of FORD MOTOR CO.

NOTE: Coat the valve tappets with clean engine oil.

4. Install the valve tappets.

NOTE: Only use hand tools when removing or installing the spark plugs or damage can occur to the cylinder head or spark plugs.

5. Install the spark plugs.
   - Tighten to 12 Nm (106 lb-in).
6. Install the **CHT** sensor.
   - Tighten to 12 Nm (106 lb-in).
7. Using a new gasket, install the coolant outlet and bolts.
   - Tighten to 10 Nm (89 lb-in).
8. Install the EGR valve, using a new gasket.
   - Tighten to 20 Nm (177 lb-in).

PISTON

Material Specifications

MATERIAL SPECIFICATIONS

Item	Specification
Motorcraft® SAE 5W-20 Premium Synthetic Blend Motor Oil (US); Motorcraft® SAE 5W-20 Super Premium Motor Oil (Canada) XO-5W20-QSP (US); CXO-5W20-LSP12 (Canada)	WSS-M2C945-A

N0010114

Fig. 332: Exploded View Of Pistion Components
Courtesy of FORD MOTOR CO.

ITEM DESCRIPTION

Item	Part Number	Description
1	6150	Piston compression upper ring
2	6152	Piston compression lower ring
3	6159	Piston oil control upper segment ring
4	6161	Piston oil control spacer
5	6159	Piston oil control lower segment ring
6	6140	Piston pin retainer
7	6140	Piston pin retainer
8	6135	Piston pin
9	6200	Connecting rod
10	6110	Piston

Disassembly

1. Remove the piston rings from the piston.
   - Discard the piston rings.
2. Remove the 2 piston pin retainers and the piston pin.

NOTE: If the piston and connecting rod are to be reinstalled, they must be assembled in the same orientation. Mark the piston orientation to the connecting rod for reassembly.

3. Separate the piston from the connecting rod.
4. Clean and inspect the piston and connecting rod. For additional information, refer to **ENGINE MECHANICAL SYSTEM - GENERAL INFORMATION** article.

Assembly

NOTE: The arrow on the top of the piston points towards the front of the engine.

1. Align the piston-to-connecting rod orientation marks, and position the connecting rod in the piston.
2. Lubricate the piston pin and pin bore with clean engine oil.
3. Install the piston pin in the piston and connecting rod assembly.
4. Install the piston pin retaining clips in the piston.
5. Lubricate the piston and the new piston rings with clean engine oil.

NOTE: The piston compression upper and lower ring should be installed with the paint mark on the outside diameter circumference of the ring to be positioned on the right side of the ring gap. The lower compression ring needs to be installed with the undercut side downward.

NOTE: The upper and lower compression ring gaps are not controlled for installation.

6. Install the piston rings onto the piston as shown in illustration.
   1. Piston pin
   2. Upper oil control ring gap location
   3. Lower oil control ring gap location
   4. Center line of the piston pin bore and the expander gap

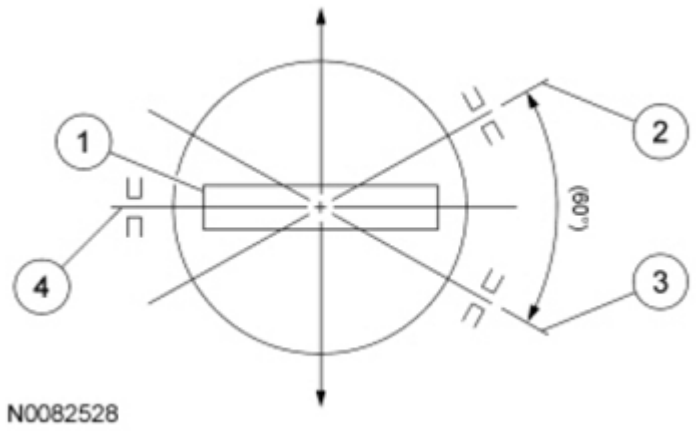

Fig. 333: Identifying Piston Ring Gap Location
Courtesy of FORD MOTOR CO.

ASSEMBLY

ENGINE

Special Tool(s)

SPECIAL TOOLS

	Aligner, Crankshaft Sensor 303-1417
	Alignment Plate, Camshaft 303-465 (T94P-6256-CH)

	
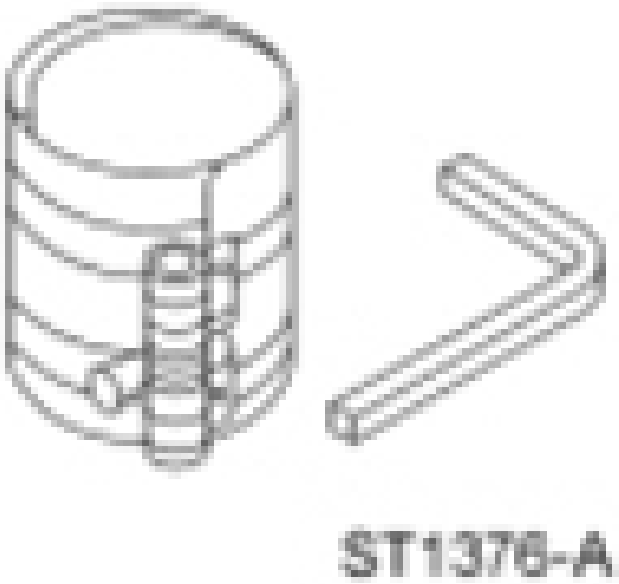	Compressor, Piston Ring 303-D032 (D81L-6002-C)
	Dial Indicator Gauge with Holding Fixture 100-002 (TOOL-4201-C)

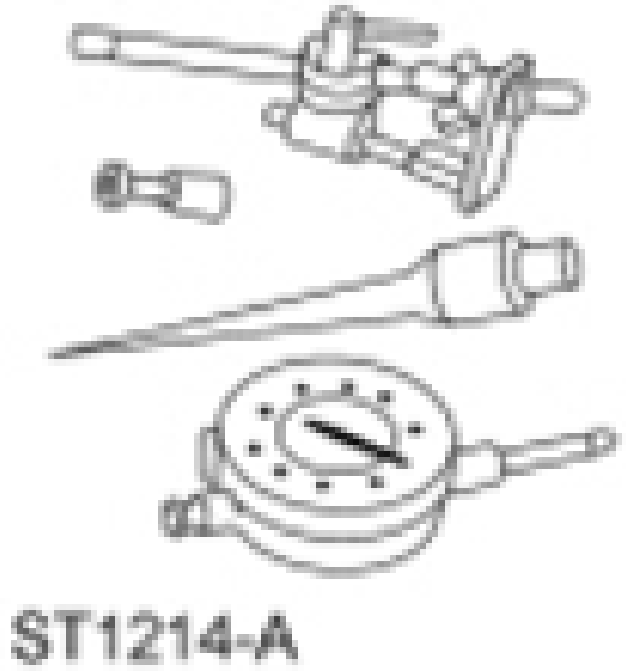	
	2,200# Floor Crane, Fold Away 300-OTC1819E or equivalent
	Holding Tool, Crankshaft Damper 303-1416

	
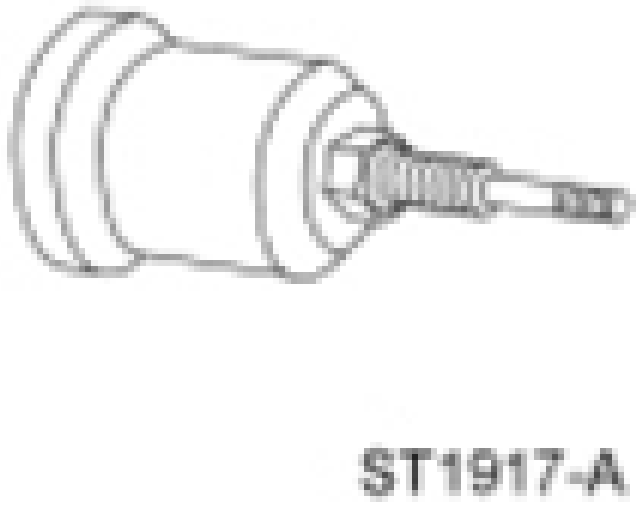	Installer, Camshaft Front Oil Seal 303-096 (T74P-6150-A)
	Installer, Connecting Rod 303-462 (T94P-6136-AH)

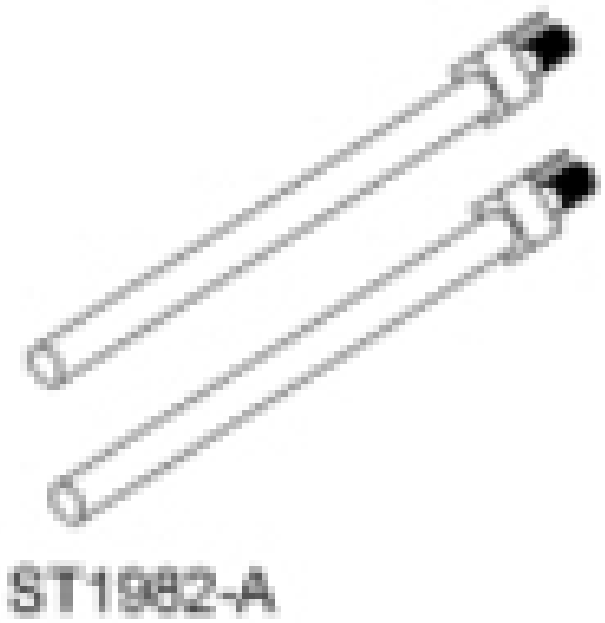	
	Installer, Crankshaft Rear Main Oil Seal 303-328 (T88P-6701-B1)
	Spreader Bar 303-D089 (D93P-6001-A3) or equivalent

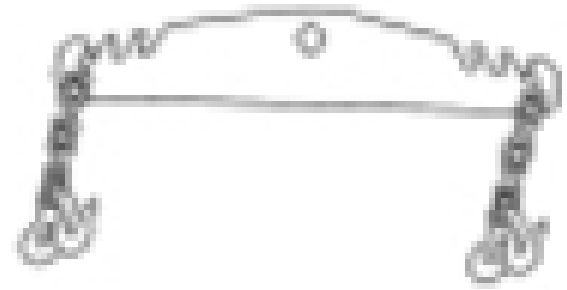 ST1602-A	
 ST2638-A	Timing Peg, Crankshaft TDC 303-507

Material Specifications

MATERIAL SPECIFICATIONS

Item	Specification
Motorcraft® Metal Surface Prep ZC-31-A	-
Motorcraft® Premium Gold Engine Coolant VC-7-B (US); CVC-7-B (Canada)	WSS-M97B51-A1

Motorcraft® SAE 5W-20 Premium Synthetic Blend Motor Oil (US); Motorcraft® SAE 5W-20 Super Premium Motor Oil (Canada) XO-5W20-QSP (US); CXO-5W20-LSP12 (Canada)	WSS-M2C945-A
Silicone Brake Caliper Grease and Dielectric Compound XG-3-A	ESE-M1C171-A
Silicone Gasket and Sealant TA-30	WSE-M4G323-A4
Motorcraft® Silicone Gasket Remover ZC-30	-

Lower Engine Block (View 1)

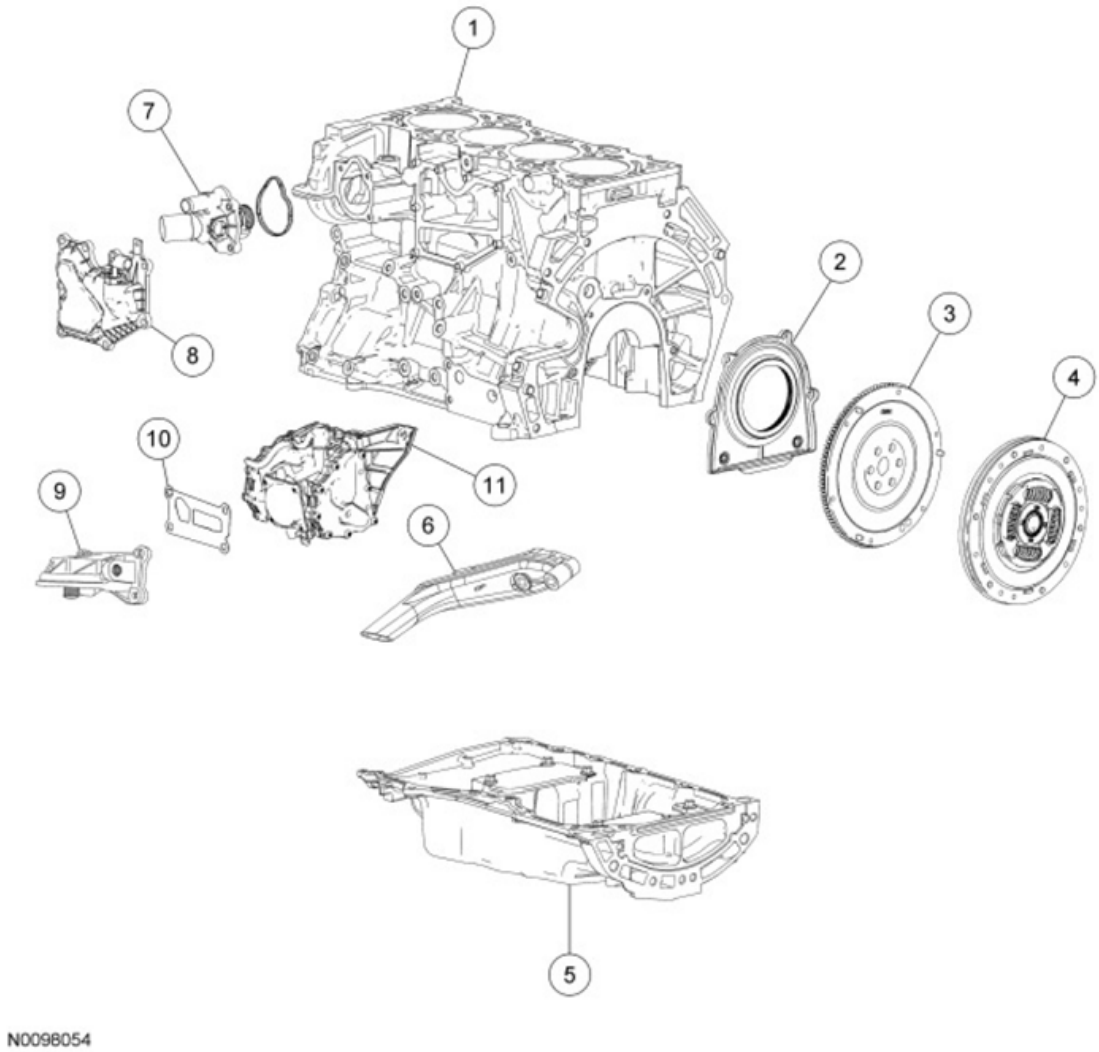

Fig. 334: Exploded View Of Lower Engine Block (View 1)
Courtesy of FORD MOTOR CO.

ITEM DESCRIPTION

Item	Part Number	Description
1	6010	Cylinder block
2	6K318	Crankshaft rear oil seal and retainer
3	6K390	Flywheel
4	7550	Transaxle damper
5	6675	Oil pan
6	6622	Oil pump screen and pickup tube
7	8575	Thermostat assembly
8	6A785	Crankcase vent oil separator
9	6884	Oil filter adapter
10	6A636	Oil filter adapter gasket
11	2A451	Vacuum pump and bracket

Lower Engine Block (View 2)

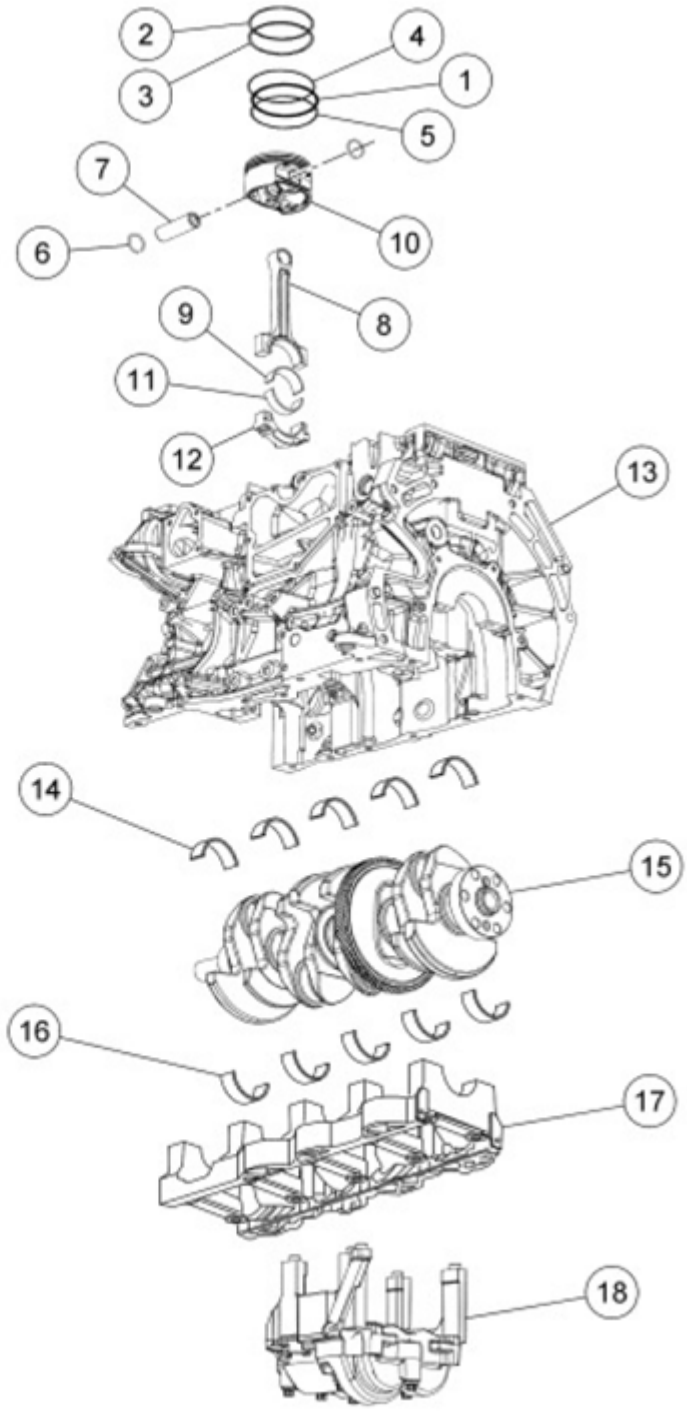

Fig. 335: Exploded View Of Lower Engine Block (View 2)
Courtesy of FORD MOTOR CO.

ITEM DESCRIPTION

Item	Part Number	Description
1	6161	Piston oil control spacer (4 required)

2	6150	Piston compression upper ring (4 required)
3	6152	Piston compression lower ring (4 required)
4	6159	Piston oil control upper segment ring (4 required)
5	6159	Piston oil control lower segment ring (4 required)
6	6140	Piston pin retainer (8 required)
7	6135	Piston pin (4 required)
8	6200	Connecting rod (4 required)
9	6211	Connecting rod upper bearing (4 required)
10	6110	Piston (4 required)
11	6211	Connecting rod lower bearing (4 required)
12	6210	Connecting rod cap (4 required)
13	6010	Cylinder block
14	6333	Cylinder block crankshaft main bearing (5 required)
15	6303	Crankshaft
16	6333	Crankshaft main bearing beam bearing (5 required)
17	6F098	Main bearing beam
18	6K360	Balance shaft assembly

Front Engine Block

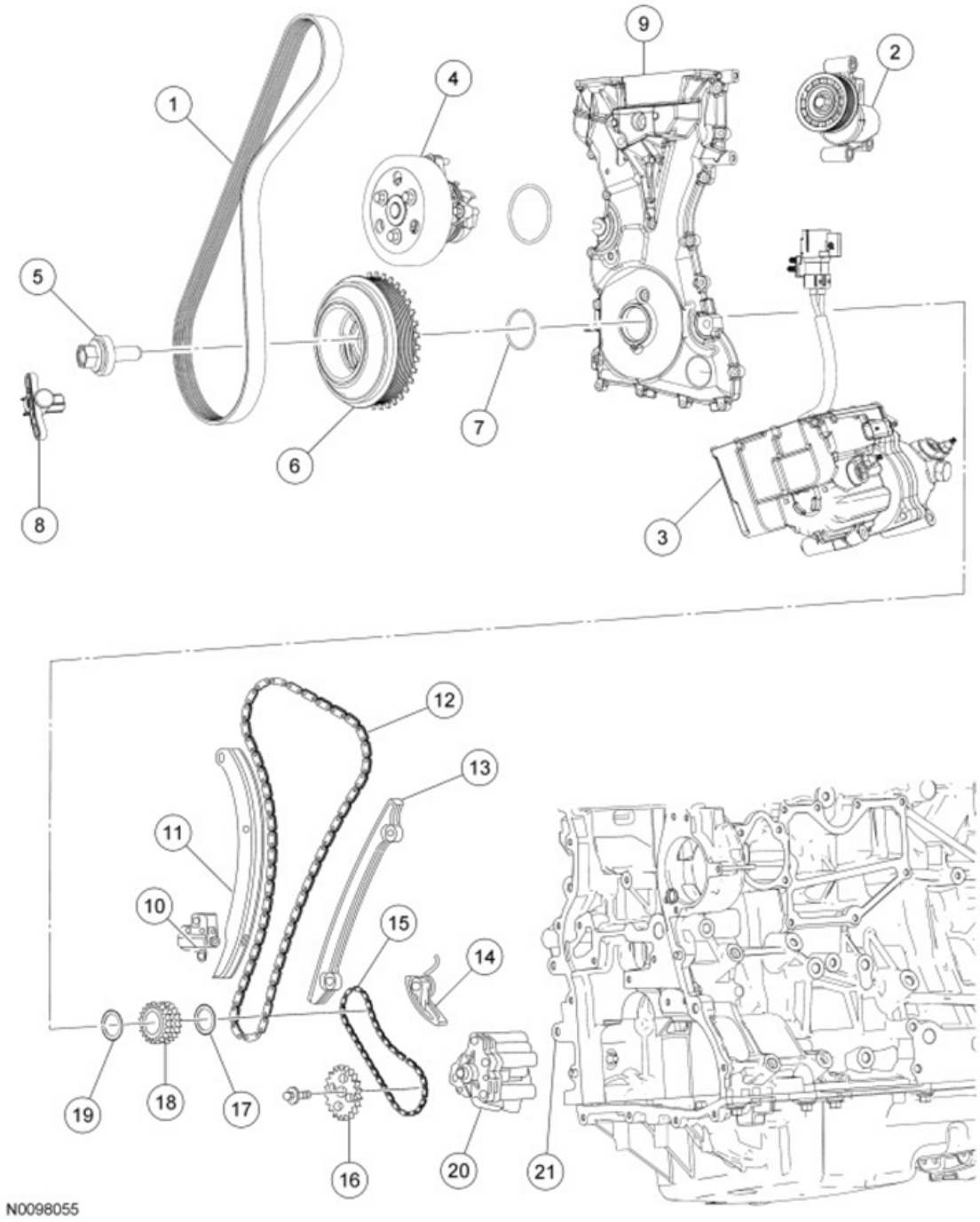

Fig. 336: Exploded View Of Front Engine Block Components
Courtesy of FORD MOTOR CO.

ITEM DESCRIPTION

Item	Part Number	Description
1	6C301	Accessory drive belt
2	6A228	Accessory drive belt tensioner
3	19D629	A/C compressor

4	8501	Coolant pump
5	6K340	Crankshaft pulley bolt
6	6316	Crankshaft pulley
7	6700	Crankshaft front seal
8	6C315	Crankshaft Position (CKP) sensor
9	6019	Engine front cover
10	6K254	Timing chain tensioner
11	6K255	Timing chain tensioner arm
12	6268	Timing chain
13	6K297	Timing chain guide
14	6C271	Oil pump chain tensioner
15	6A895	Oil pump chain
16	6652	Oil pump drive gear
17	6378	Diamond washer
18	6306	Crankshaft sprocket
19	6378	Diamond washer
20	6600	Oil pump
21	6010	Cylinder block

Cylinder Head

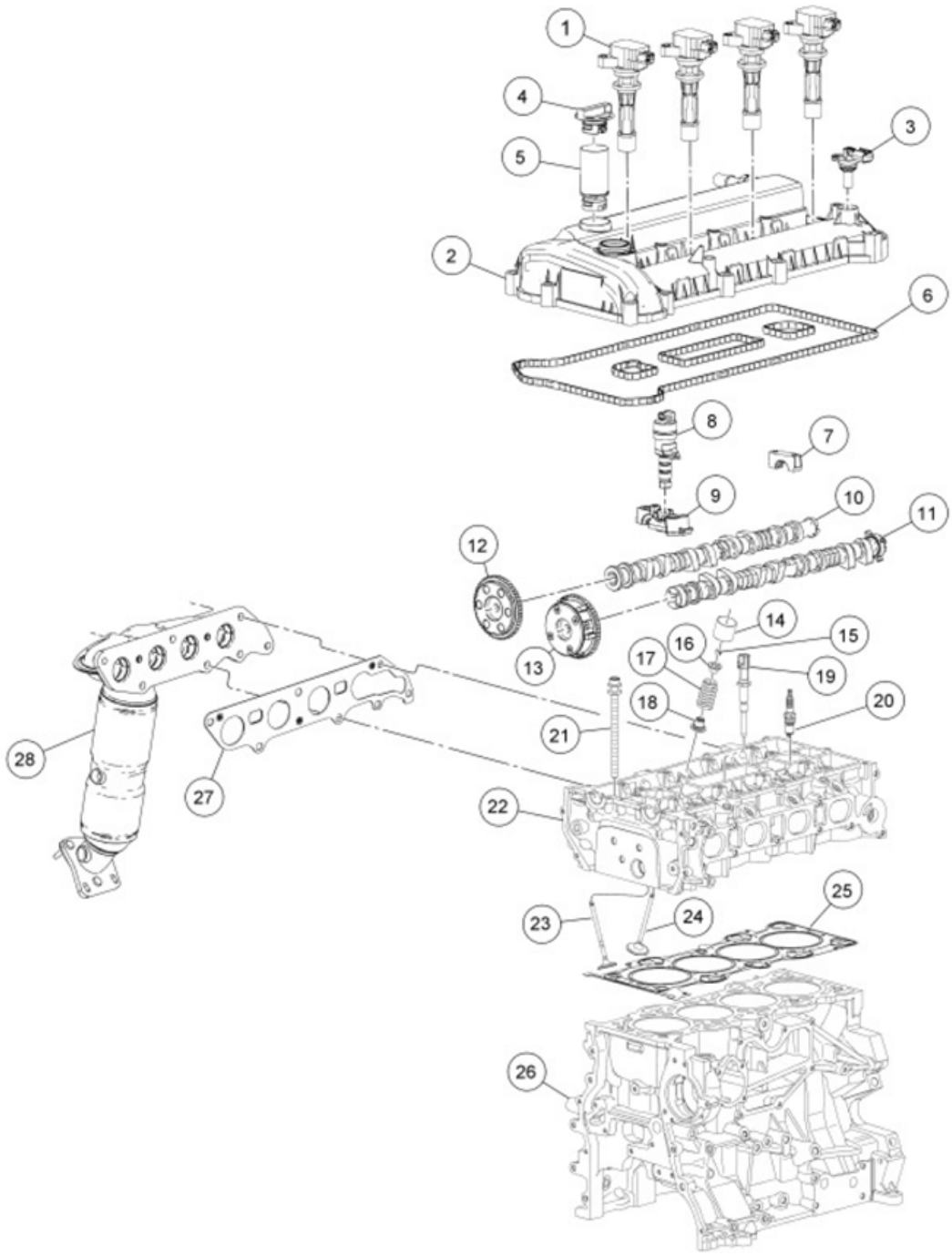

N0086811

Fig. 337: Exploded View Of Cylinder Head Components
Courtesy of FORD MOTOR CO.

ITEM DESCRIPTION CHART

Item	Part Number	Description
1	12A366	Coil-on-plug assembly

2	6M293	Valve cover
3	12K073	Camshaft Position (CMP) sensor
4	6766	Oil filler cap
5	6765	Oil fill extension
6	6M293	Valve cover gasket
7	6A284	Camshaft bearing cap
8	6M280	Variable Camshaft Timing (VCT) solenoid
9	6A258	Camshaft bearing cap
10	6A272	Camshaft (exhaust)
11	6A271	Camshaft (intake)
12	6C251	Camshaft sprocket
13	6C525	VCT actuator
14	6500	Valve tappet (16 required)
15	6518	Valve collet (16 required)
16	6514	Valve spring retainer (16 required)
17	6513	Valve spring (16 required)
18	6A517	Valve stem seal (16 required)
19	6G004	Cylinder Head Temperature (CHT) sensor
20	12405	Spark plug (4 required)
21	6065	Cylinder head bolt (10 required)
22	6049	Cylinder head
23	6505	Exhaust valve (8 required)
24	6507	Intake valve (8 required)
25	6051	Head gasket
26	6010	Cylinder block
27	9448	Catalytic converter gasket
28	5E211	Catalytic converter

Intake Manifold

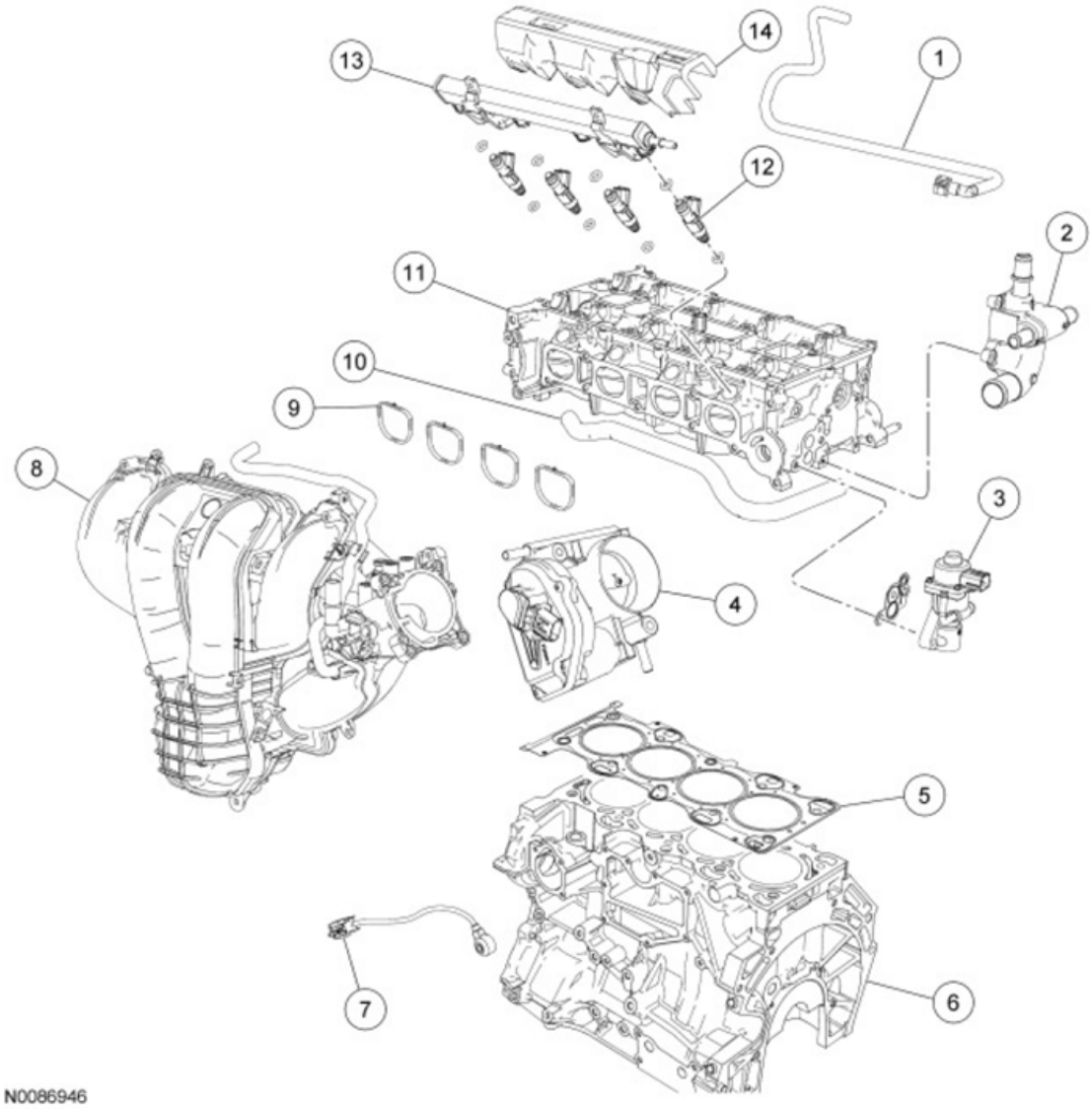

Fig. 338: Exploded View Of Intake Manifold Components
Courtesy of FORD MOTOR CO.

ITEM DESCRIPTION

Item	Part Number	Description
1	9288	Fuel supply tube
2	8K556	Coolant outlet
3	9D475	EGR valve
4	9F991	Electronic Throttle Body (TB)
5	6051	Cylinder head gasket
6	6010	Cylinder block
7	12A699	Knock Sensor (KS)
8	9424	Intake manifold

9	9439	Intake manifold gasket (4 required)
10	8A582	Coolant hose
11	6049	Cylinder head
12	9F593	Fuel injector (4 required)
13	9H487	Fuel rail
14	-	Fuel rail insulator

NOTE: Do not loosen or remove the crankshaft pulley bolt without first installing the special tools as instructed in this procedure. The crankshaft pulley and the crankshaft timing sprocket are not keyed to the crankshaft. The crankshaft, the crankshaft sprocket and the pulley are fitted together by friction, using diamond washers between the flange faces on each part. For that reason, the crankshaft sprocket is also unfastened if the pulley bolt is loosened. Before any repair requiring loosening or removal of the crankshaft pulley bolt, the crankshaft and camshafts must be locked in place by the special service tools, otherwise severe engine damage can occur.

NOTE: During engine repair procedures, cleanliness is extremely important. All parts must be thoroughly cleaned and any foreign material, including any material created while cleaning gasket surfaces, that enters the oil passages, coolant passages or the oil pan, can cause engine failure.

NOTE: Assembly of the engine requires various inspections/measurements of the engine components (engine block, crankshaft, connecting rods, pistons and piston rings). These inspections/measurements will aid in determining if the engine components will require replacement. For additional information, refer to ENGINE MECHANICAL SYSTEM - GENERAL INFORMATION article.

NOTE: If the oil squirters are being reused, they must be installed in the same location as marked during disassembly.

NOTE: The front bulkhead does not have an oil squirter.

1. Install the 4 oil squirters.
   - Tighten to 4 Nm (35 lb-in).

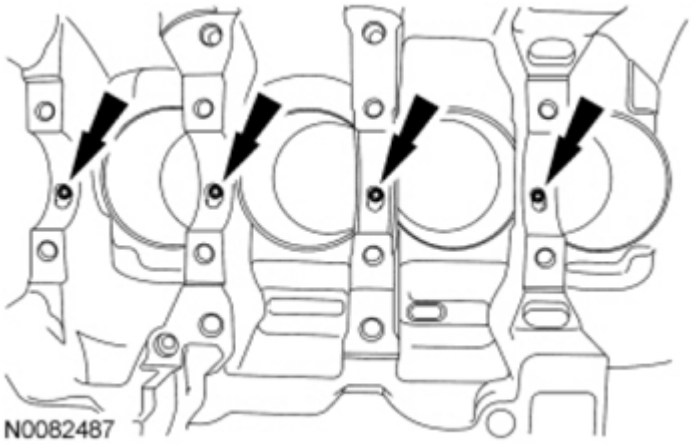

Fig. 339: Locating Oil Squirters
Courtesy of FORD MOTOR CO.

2. Measure each of the crankshaft main bearing journal diameters in at least 2 directions and record the smallest diameter for each journal.

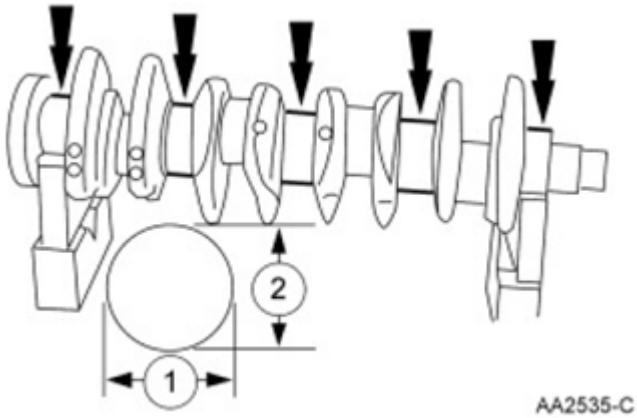

Fig. 340: Measuring Crankshaft Main Bearing Journal Diameters
Courtesy of FORD MOTOR CO.

3. Position the main bearing beam in the engine block with the main bearing beam mounted flush with the rear face of the engine block.

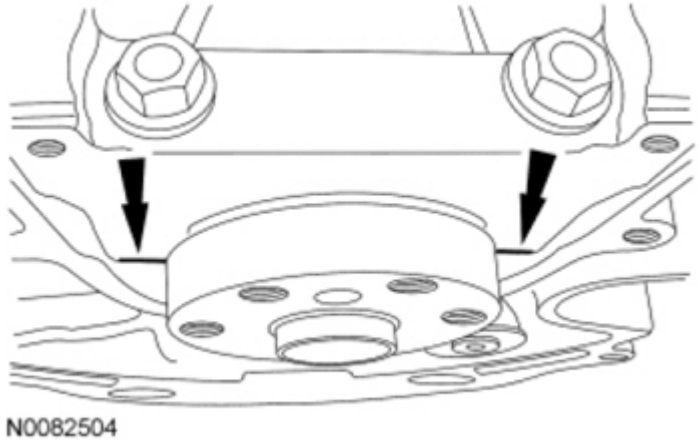

Fig. 341: Locating Main Bearing Beam
Courtesy of FORD MOTOR CO.

4. Using the original main bearing beam bolts, install and tighten the 10 main bearing beam bolts.
   - Tighten the bolts in the sequence shown in illustration in 3 stages.
   - Stage 1: Tighten to 5 Nm (44 lb-in).
   - Stage 2: Tighten to 25 Nm (18 lb-ft).
   - Stage 3: Tighten an additional 90 degrees.

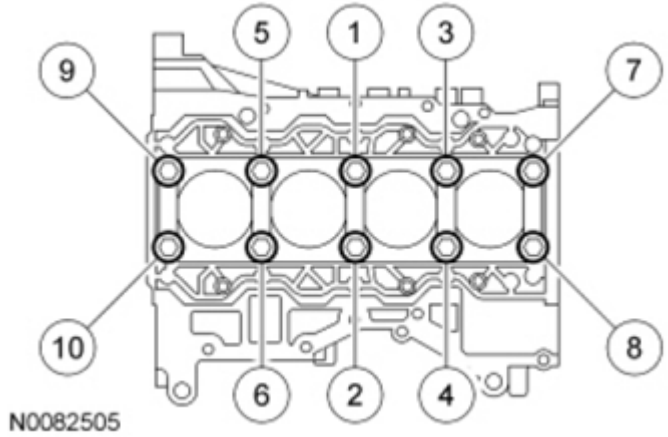

Fig. 342: Identifying Main Bearing Beam Bolts Tightening Sequence
Courtesy of FORD MOTOR CO.

5. Measure each crankshaft block main bearing bore diameter.
   - Remove the bolts and the main bearing beam.
   - Discard the main bearing beam bolts.

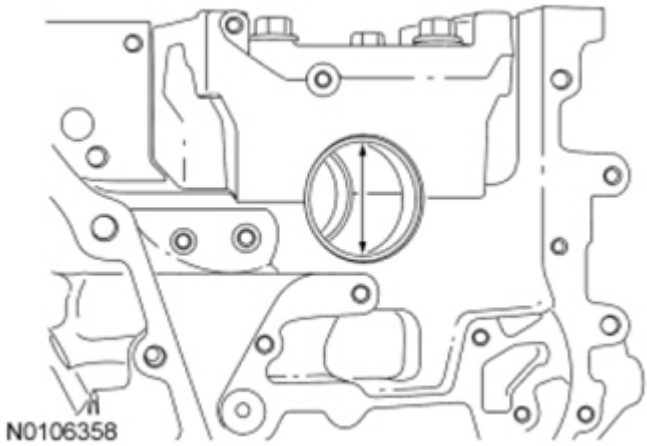

Fig. 343: Identifying Crankshaft Block Main Bearing Bore Diameter
Courtesy of FORD MOTOR CO.

6. Using the chart, select the crankshaft main bearings.

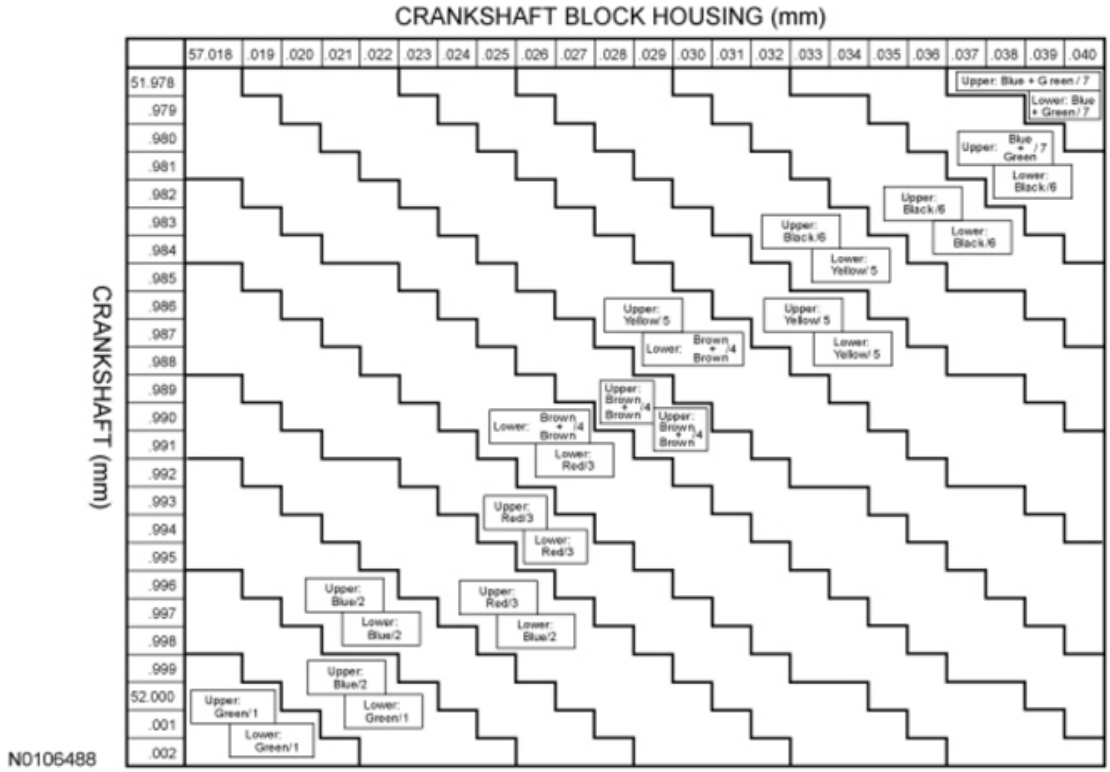

Fig. 344: View Of Crankshaft Main Bearings Chart
Courtesy of FORD MOTOR CO.

NOTE: **The rod cap installation must keep the same orientation as marked during disassembly or engine damage may occur.**

7. Using the original connecting rod cap bolts, install the connecting caps and bolts.
    - Tighten the bolts in 2 stages.
    - Stage 1: Tighten to 29 Nm (21 lb-ft).
    - Stage 2: Tighten an additional 90 degrees.
8. Measure the connecting rod large end bore in 2 directions. Record the smallest measurement for each connecting rod.
    - Remove the bolts and the connecting rod cap.
    - Discard the connecting rod cap bolts.

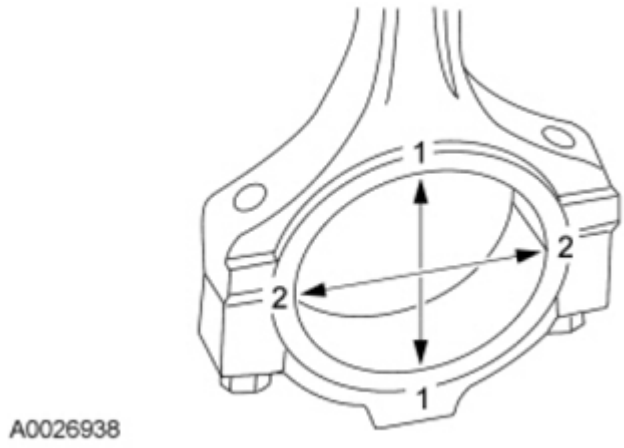

Fig. 345: Measuring Connecting Rod Large End Bore
Courtesy of FORD MOTOR CO.

9. Measure each of the crankshaft connecting rod bearing journal diameters in at least 2 directions. Record the smallest measurement for each connecting rod journal.

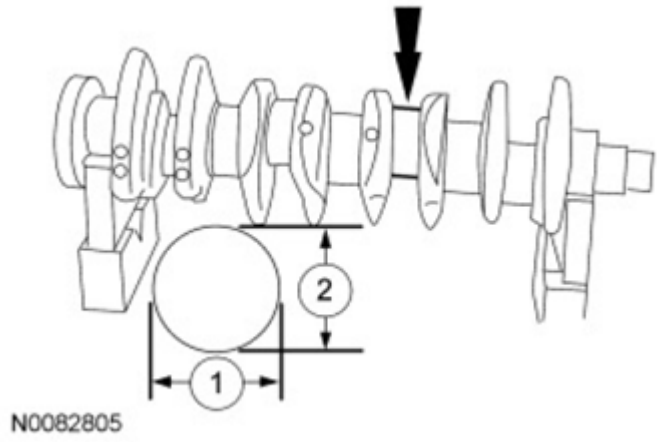

Fig. 346: Measuring Crankshaft Connecting Rod Bearing Journal Diameters
Courtesy of FORD MOTOR CO.

10. Using the chart, select the correct connecting rod bearings for each crankshaft connecting rod journal.

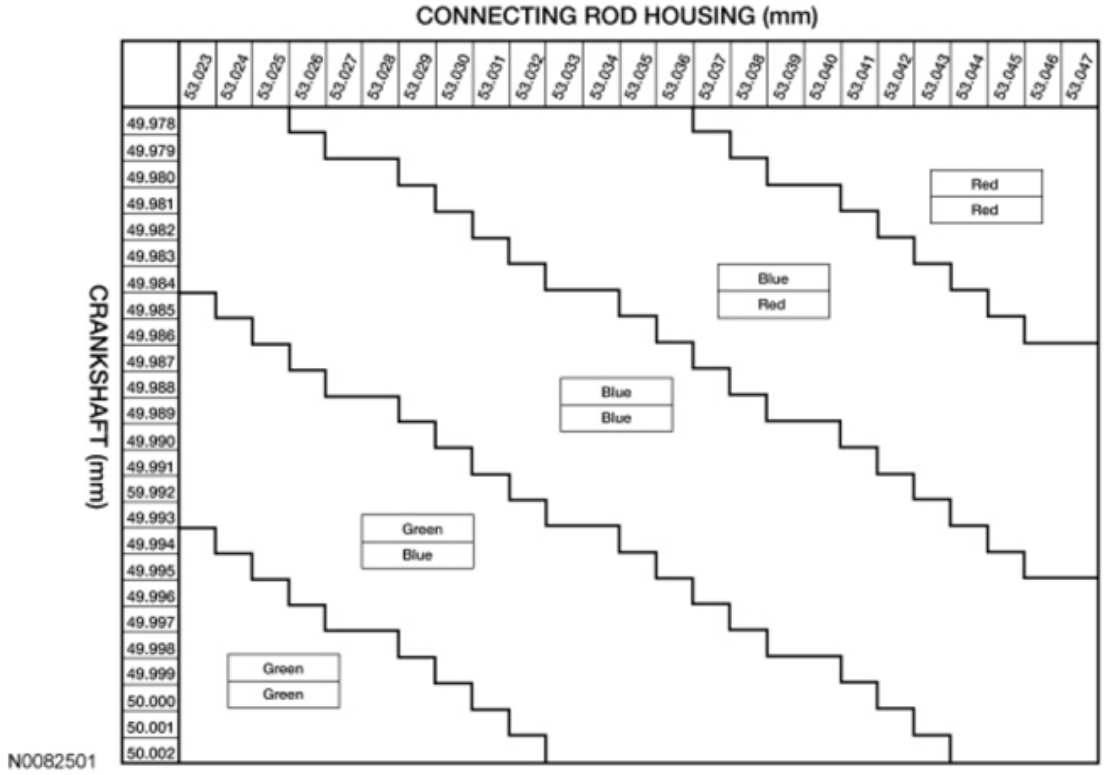

Fig. 347: View Of Connecting Rod Bearings Chart
Courtesy of FORD MOTOR CO.

NOTE: **Before assembling the cylinder block, all sealing surfaces must be free of chips, dirt, paint and foreign material. Also, make sure the coolant and oil passages are clear.**

NOTE: **If reusing the crankshaft main bearings, install them in their original positions and orientation as noted during disassembly.**

NOTE: **The center bulkhead is the thrust bearing.**

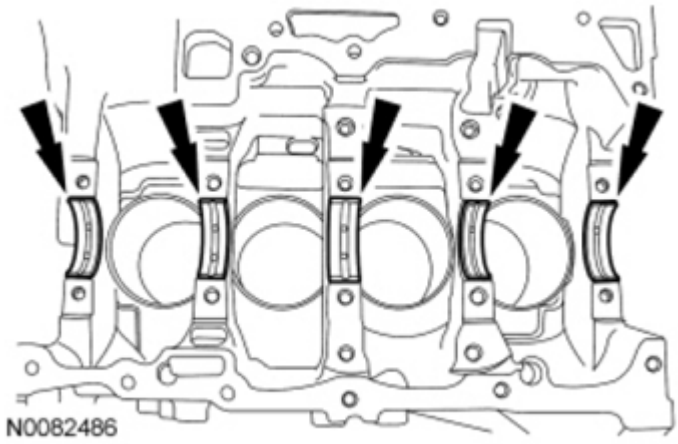

Fig. 348: Locating Main Bearings
Courtesy of FORD MOTOR CO.

11. Lubricate the upper crankshaft main bearings with clean engine oil and install the 5 crankshaft main bearings in the cylinder block.

NOTE: If reusing the crankshaft main bearings, install them in their original positions and orientation as noted during disassembly.

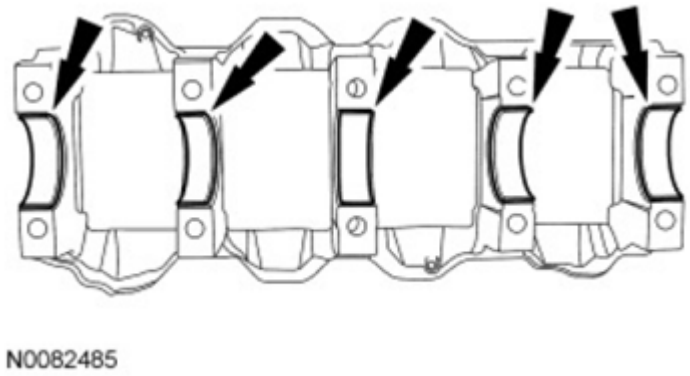

Fig. 349: Locating Main Bearings
Courtesy of FORD MOTOR CO.

12. Lubricate the crankshaft main bearings with clean engine oil and install the 5 crankshaft main bearings in the main bearing beam.
13. Lubricate journals on the crankshaft with clean engine oil.
14. Position the crankshaft in the cylinder block.

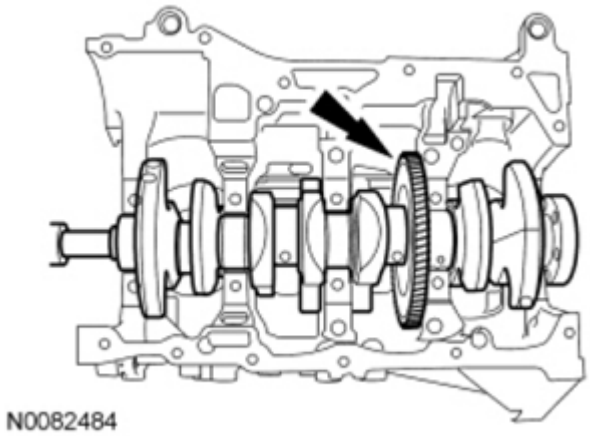

Fig. 350: Locating Crankshaft
Courtesy of FORD MOTOR CO.

15. Lubricate the 10 main bearing beam side fit surfaces (front 2 shown in illustration) with clean engine oil.

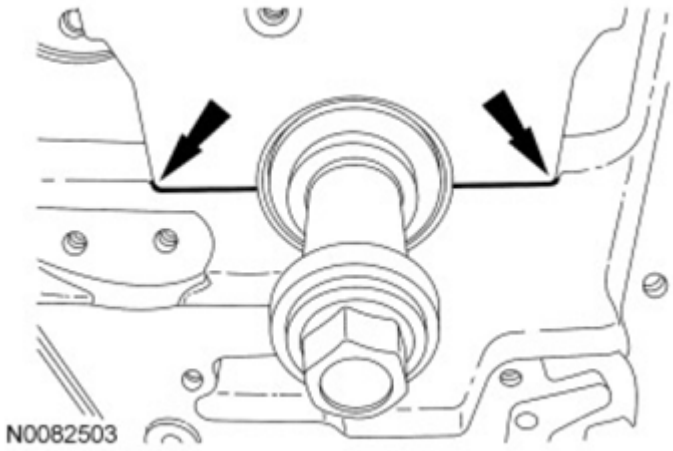

Fig. 351: Locating Main Bearing Beam Side Fit Surfaces
Courtesy of FORD MOTOR CO.

16. Lubricate the crankshaft bearing journals on the main bearing beam with clean engine oil. Then position the main bearing beam in the engine block with the main bearing beam mounted flush with the rear face of the engine block.

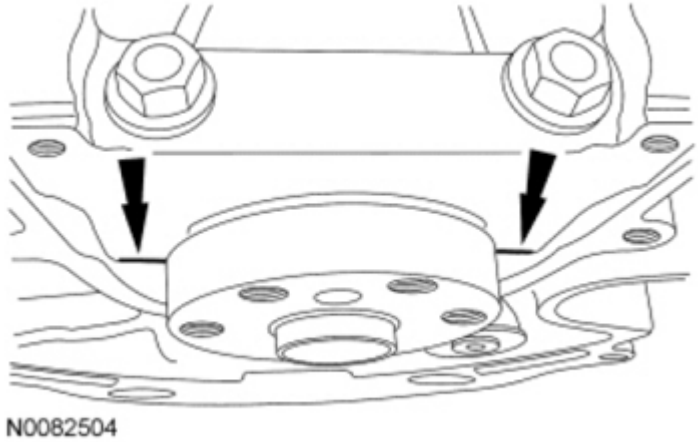

Fig. 352: Locating Main Bearing Beam
Courtesy of FORD MOTOR CO.

NOTE: **Lubricate the main bearing beam bolts threads and under the bolt heads with clean engine oil.**

NOTE: **Position the crankshaft to the rear of the cylinder block, then position the crankshaft to the front of the cylinder block before tightening the main bearing beam bolts.**

17. Install and tighten the 10 new main bearing beam bolts.
    - Tighten the bolts in the sequence shown in illustration in 3 stages.
    - Stage 1: Tighten to 5 Nm (44 lb-in).
    - Stage 2: Tighten to 25 Nm (18 lb-ft).
    - Stage 3: Tighten an additional 90 degrees.

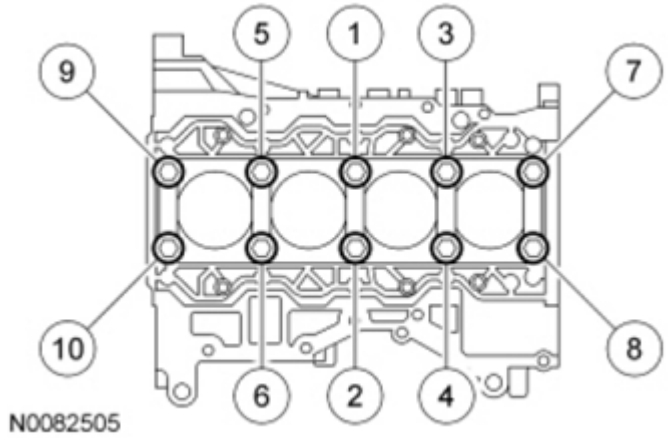

Fig. 353: Identifying Main Bearing Beam Bolts Tightening Sequence
Courtesy of FORD MOTOR CO.

18. Using the Dial Indicator Gauge with Holding Fixture, measure crankshaft end play.
    - Position the crankshaft to the rear of the cylinder block.
    - Zero the Dial Indicator Gauge with Holding Fixture.
    - Move the crankshaft to the front of the cylinder block. Note and record the crankshaft end play.
    - Acceptable crankshaft end play is 0.22-0.43 mm (0.008-0.016 in). If the crankshaft end play exceeds the specified range, install new parts as necessary.

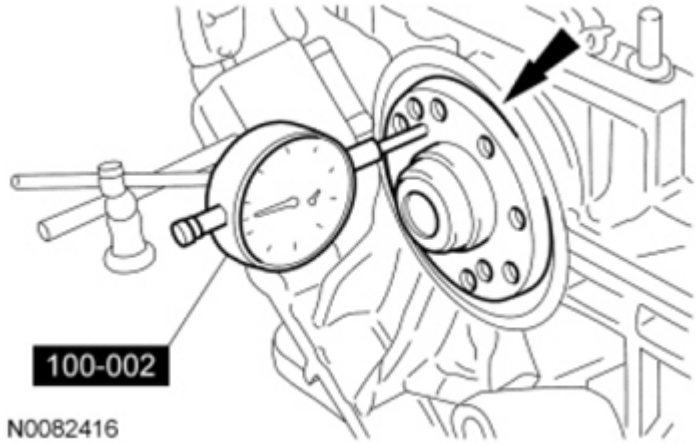

Fig. 354: Measuring Crankshaft End Play Using Dial Indicator Gauge With Holding Fixture
Courtesy of FORD MOTOR CO.

NOTE: Be sure not to scratch the cylinder wall or crankshaft journal with the connecting rod. Push the piston down until the connecting rod bearing seats on the crankshaft journal.

NOTE: Lubricate the pistons, piston rings, connecting rod bearings and the entire cylinder bores with clean engine oil.

NOTE: Make sure the piston arrow on top is facing toward the front of the engine.

19. Using the Piston Ring Compressor and the Connecting Rod Installer, install the piston and connecting rod assemblies.
    - When installing the pistons and connecting rod assemblies, the oil ring gaps must be positioned 60 degrees apart from each other and a minimum of 90 degrees from the expander gap.
    - The position of the upper and lower compression ring gaps are not controlled for installation.

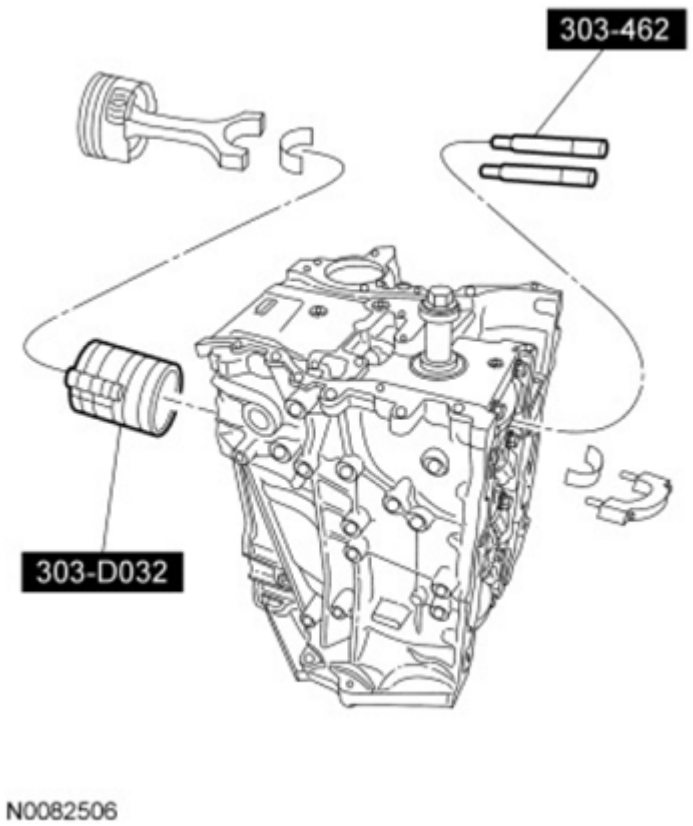

Fig. 355: Identifying Piston Ring Compressor And Connecting Rod Installer
Courtesy of FORD MOTOR CO.

NOTE: **The rod cap installation must keep the same orientation as marked during disassembly or engine damage may occur.**

NOTE: **Install connecting rod caps and bolts on the connecting rods for cylinders 1 and 4 first and tighten. Then rotate crankshaft 180 degrees and install connecting rod caps and bolts on connecting rods for cylinders 2 and 3 and tighten.**

NOTE: **After installation of each connecting rod cap, rotate the crankshaft to verify smooth operation.**

20. Install the connecting rod caps and the new bolts.
    - Tighten the bolts in 2 stages.
    - Stage 1: Tighten to 29 Nm (21 lb-ft).
    - Stage 2: Tighten an additional 90 degrees.

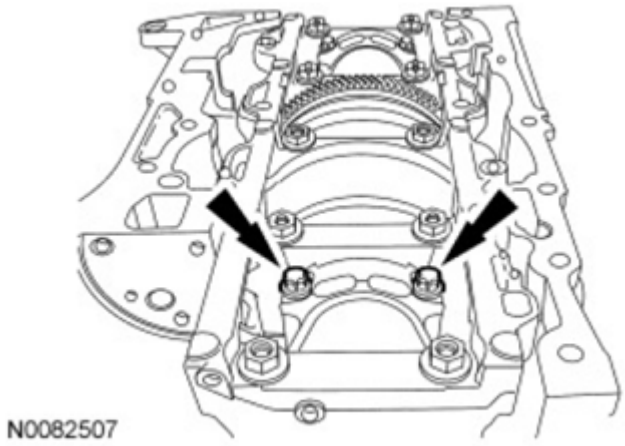

Fig. 356: Identifying Connecting Rod Cap Bolts Tightening Sequence
Courtesy of FORD MOTOR CO.

21. Install the Crankshaft **TDC** Timing Peg and rotate the crankshaft slowly clockwise until the crankshaft balance weight is up against the Crankshaft **TDC** Timing Peg. The engine is now at Top Dead Center (TDC).

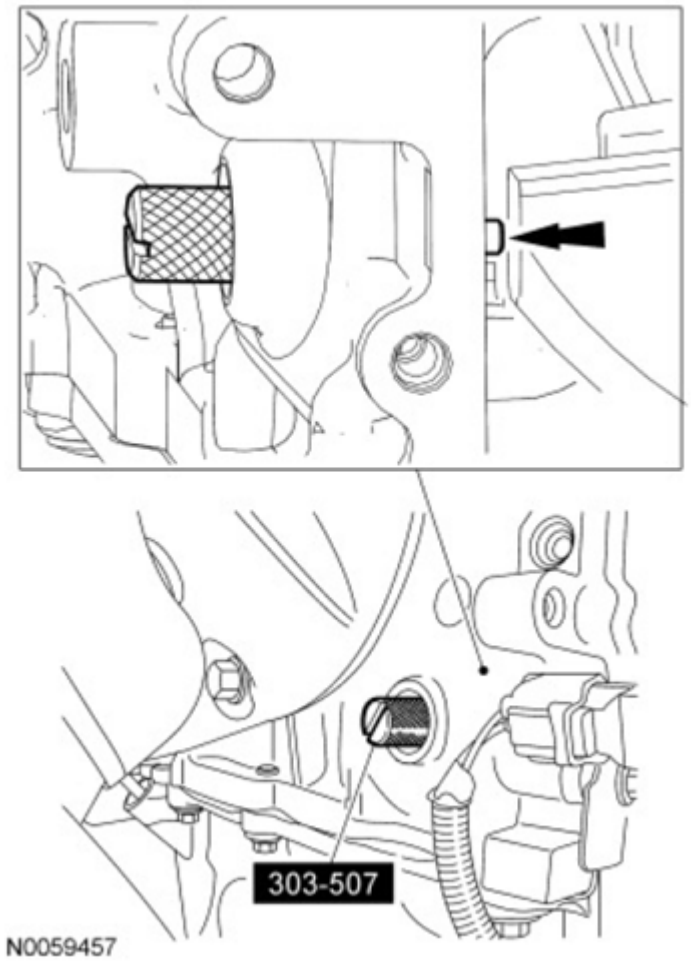

Fig. 357: Remove/Install Crankshaft TDC Timing Peg
Courtesy of FORD MOTOR CO.

NOTE: **Due to the precision interior construction of the balancer unit, it should not be disassembled.**

NOTE: **The original adjustment shims must be installed in their original position.**

NOTE: **Confirm by visual inspection that there is no damage to the balancer unit gear and verify that the shaft turns smoothly. If there is any damage or malfunction, replace the balancer unit.**

22. Install the adjustment shims in their original position on the seat faces of the balancer unit.
23. With the balancer unit shaft marks in the **TDC** position, slowly install the balancer unit to the cylinder block to avoid interference between the crankshaft drive gear and the balancer unit driven gear.

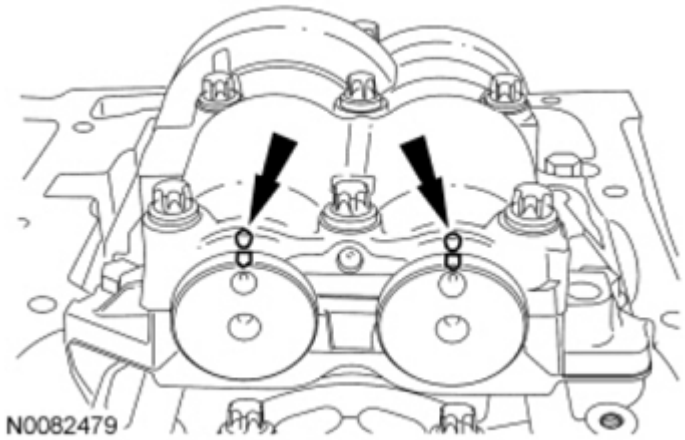

Fig. 358: Locating Balancer Unit And Shafts Reference Mark
Courtesy of FORD MOTOR CO.

24. Install the balancer unit bolts.
    - Tighten in the sequence shown in illustration in 2 stages.
        - Stage 1: Tighten to 25 Nm (18 lb-ft).
        - Stage 2: Tighten to 50 Nm (37 lb-ft).

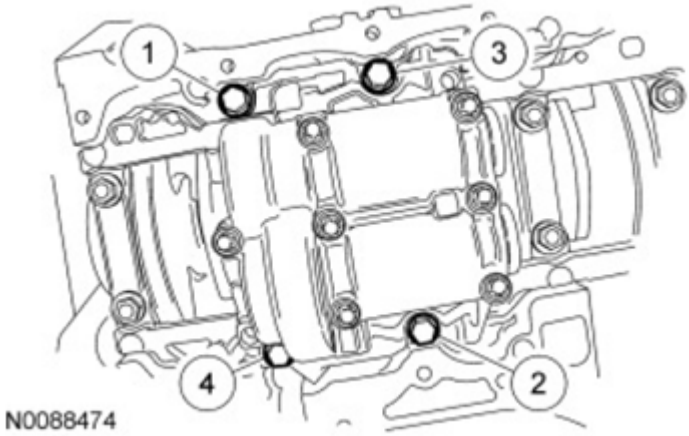

Fig. 359: Identifying Balancer Unit Bolts Tightening Sequence
Courtesy of FORD MOTOR CO.

25. Remove the Crankshaft **TDC** Timing Peg.

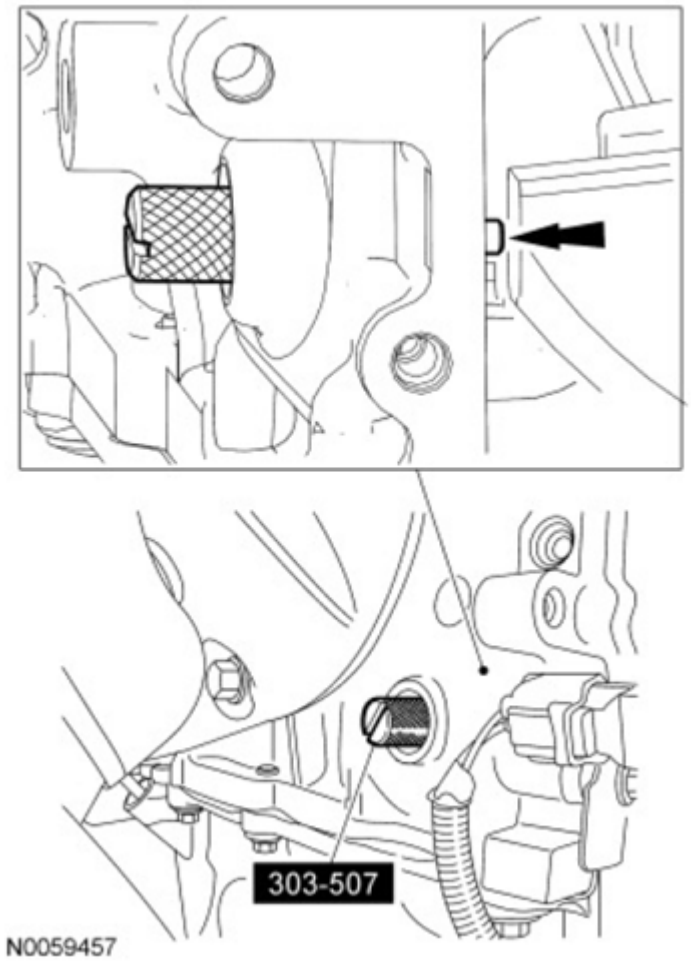

Fig. 360: Remove/Install Crankshaft TDC Timing Peg
Courtesy of FORD MOTOR CO.

26. Rotate the crankshaft to confirm that there are no meshing problems between the balancer unit gear and the crankshaft gear.
27. Install the Crankshaft **TDC** Timing Peg and rotate the crankshaft slowly clockwise until the crankshaft balance weight is up against the Crankshaft **TDC** Timing Peg.
    - Remove the Crankshaft **TDC** Timing Peg.

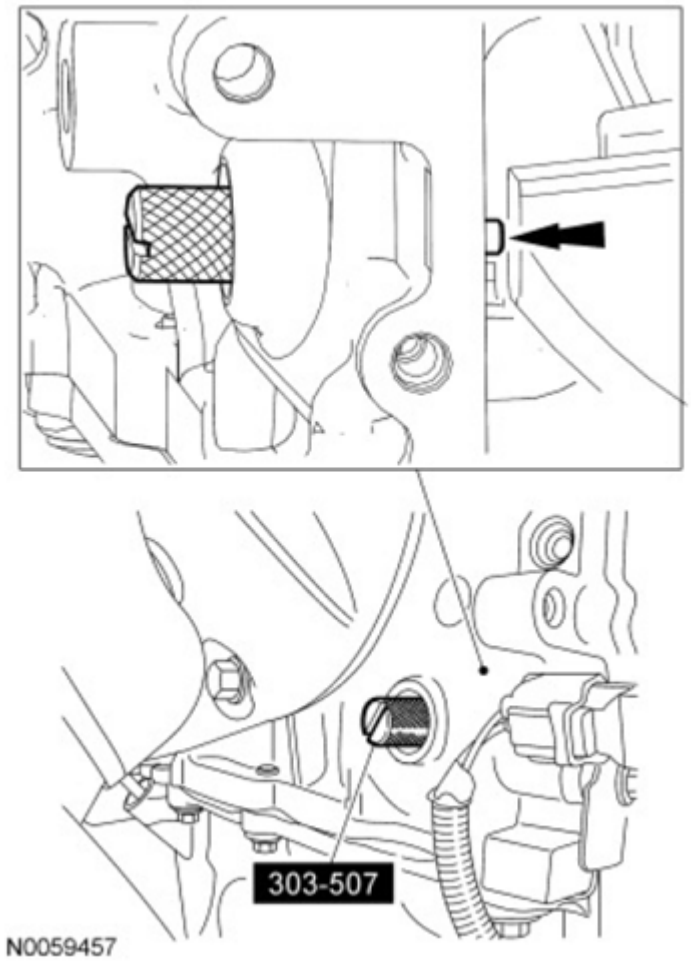

Fig. 361: Remove/Install Crankshaft TDC Timing Peg
Courtesy of FORD MOTOR CO.

NOTE: **Measure the backlash and verify that it is within specified range at all of the following 6 positions: 10 degrees, 30 degrees, 100 degrees, 190 degrees, 210 degrees and 280 degrees. It will be necessary to reset the measuring equipment between measurements.**

NOTE: **The measurement must be taken with the Dial Indicator Gauge with Holding Fixture, a 5-mm Allen wrench and worm clamp set up as shown in illustration. Mark the Allen wrench with a file 80 mm (3.149 in) above the driven gear shaft center. Make sure the worm clamp and Allen wrench are not touching the balance shaft housing.**

NOTE: **For an accurate measurement while measuring the gear backlash, insert a screwdriver as shown in illustration into the crankshaft No. 1 crankweight area and set both the rotation and the thrust direction with the screwdriver, using a prying action as shown in illustration.**

28. Position the Dial Indicator Gauge with Holding Fixture as shown in illustration. Measure the gear backlash.
    - Position the Dial Indicator Gauge with Holding Fixture (1) on the Allen wrench 80 mm (3.149 in) above the driven gear shaft center (2) on the balancer unit.
    - Rotate the crankshaft clockwise and measure the backlash at all of the following 6 positions: 10 degrees, 30 degrees, 100 degrees, 190 degrees, 210 degrees and 280 degrees.
    - Backlash specifications are 0.005 to 0.101 mm (0.00019 to 0.0039 in).
    - If the backlash exceeds the specified range, carry out the Balance Shaft Backlash procedure. For additional information, refer to **BALANCE SHAFT BACKLASH** procedure in this service information.

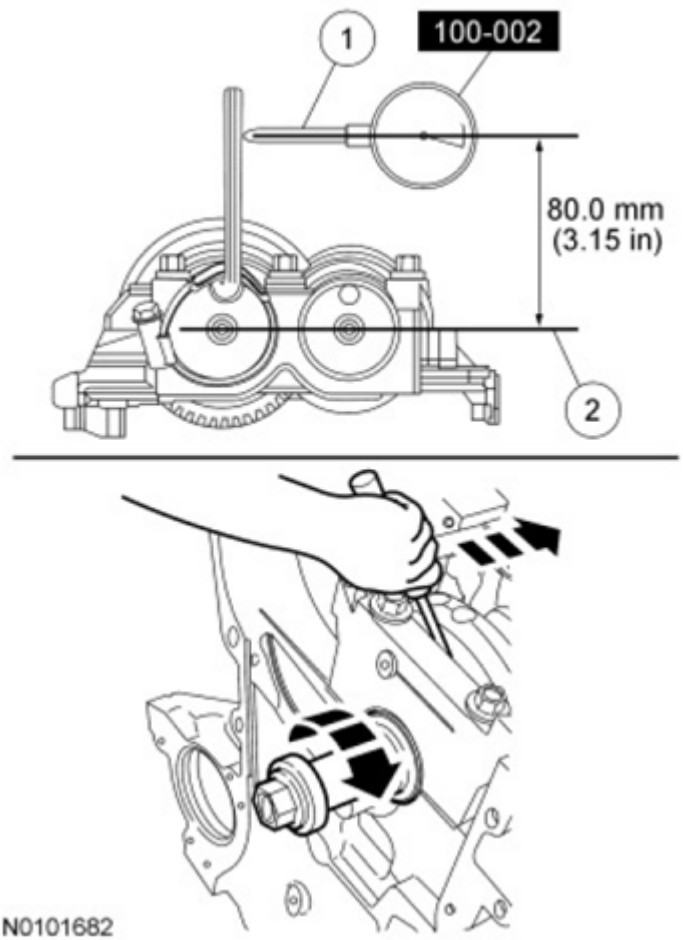

Fig. 362: Measuring Gear Backlash Using Dial Indicator Gauge With Holding Fixture
Courtesy of FORD MOTOR CO.

NOTE: **Failure to position the No. 1 piston at Top Dead Center (TDC) can result in damage to the engine. Turn the engine in the normal direction of rotation only.**

29. Turn the crankshaft clockwise to position the No. 1 piston at Top Dead Center (TDC).

NOTE: **The Crankshaft TDC Timing Peg will contact the crankshaft and prevent it from turning past TDC . However, the crankshaft can still be rotated in the counterclockwise direction. The crankshaft must remain at the TDC position until the timing drive components and crankshaft pulley are installed.**

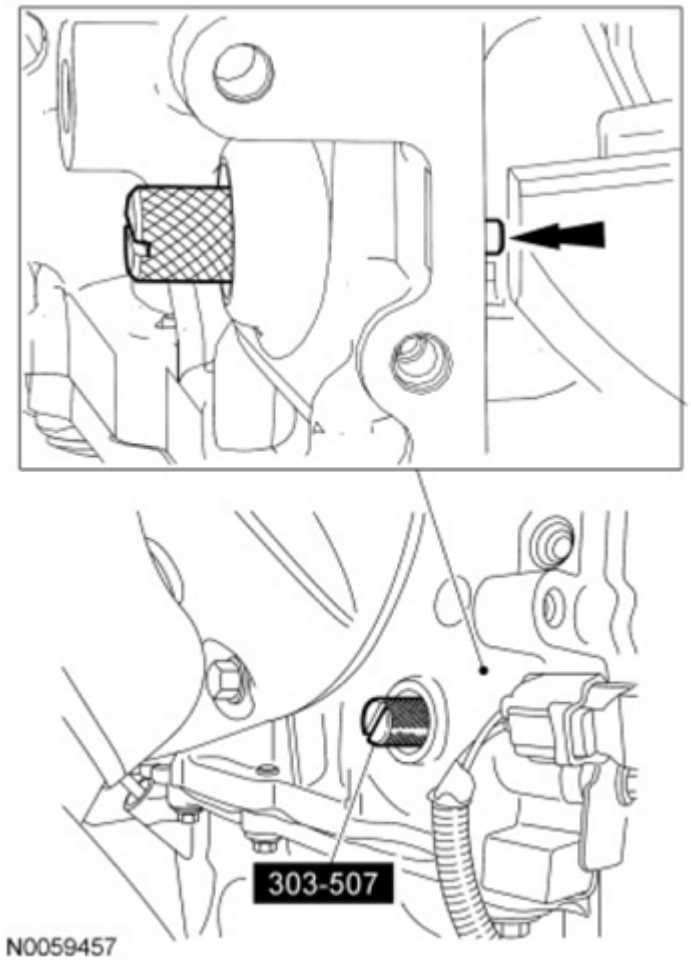

Fig. 363: Remove/Install Crankshaft TDC Timing Peg
Courtesy of FORD MOTOR CO.

30. Install the Crankshaft **TDC** Timing Peg.
31. Install the block-off plate and bolts.
    - Tighten to 25 Nm (18 lb-ft).

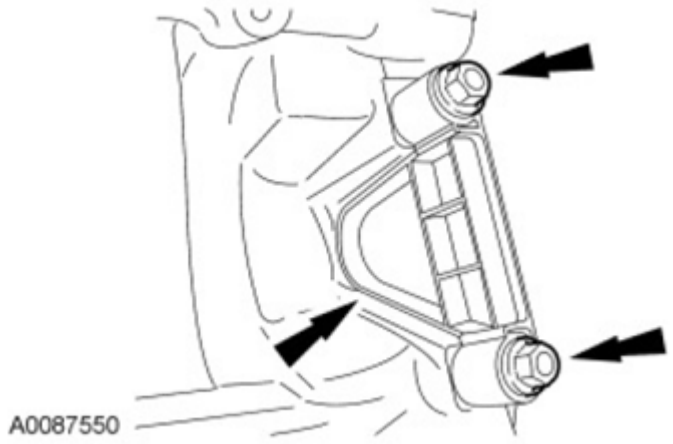

Fig. 364: Locating Block-Off Plate Bolts
Courtesy of FORD MOTOR CO.

NOTE: Clean the oil pump and cylinder block mating surfaces with metal surface prep.

32. Install the oil pump assembly. Tighten the bolts in the sequence shown in illustration in the following 2 stages:
    - Stage 1: Tighten to 10 Nm (89 lb-in).
    - Stage 2: Tighten to 20 Nm (177 lb-in).

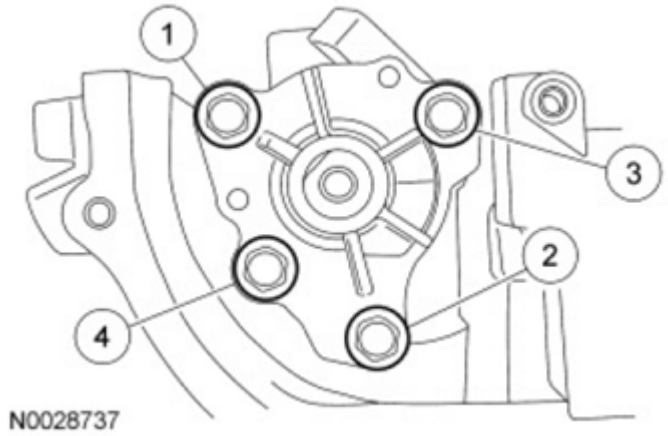

Fig. 365: Identifying Oil Pump Assembly Bolts Tightening Sequence
Courtesy of FORD MOTOR CO.

33. Install a new oil pump pickup tube gasket and the pickup tube.
    - Tighten to 10 Nm (89 lb-in).

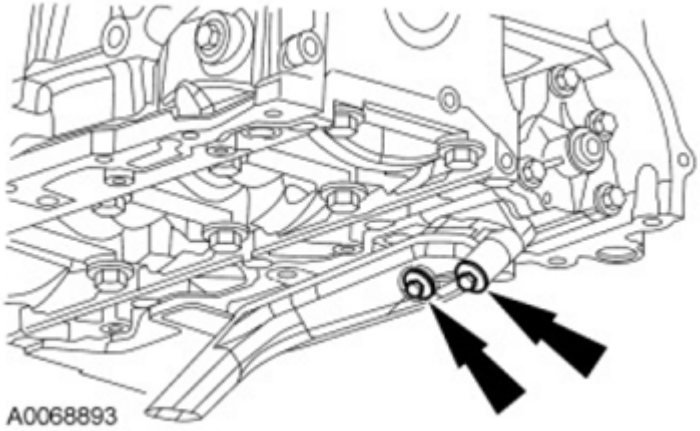

Fig. 366: Locating Bolts, Oil Pump Pickup Tube And Gasket
Courtesy of FORD MOTOR CO.

34. Using the Crankshaft Rear Main Oil Seal Installer, install the crankshaft rear main oil seal.

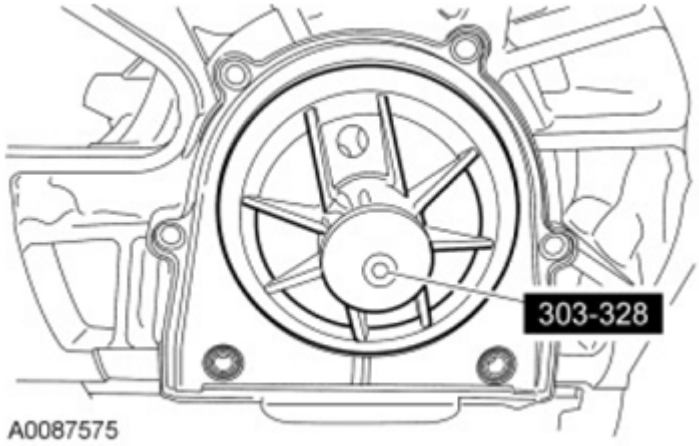

Fig. 367: Identifying Crankshaft Rear Main Oil Seal Installer
Courtesy of FORD MOTOR CO.

35. Tighten the crankshaft rear main oil seal bolts in the sequence shown in illustration.
    - Tighten to 10 Nm (89 lb-in).

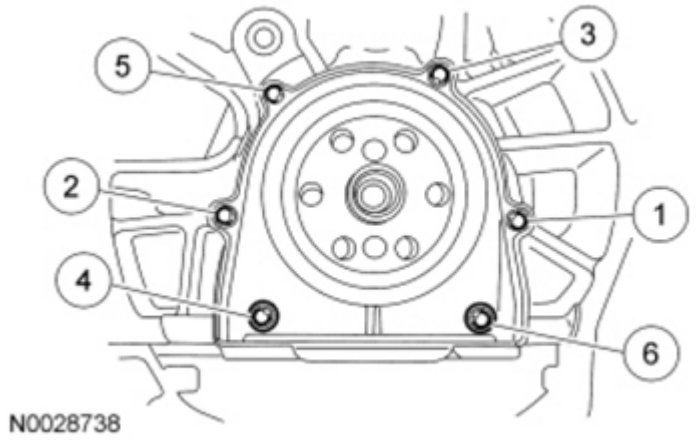

Fig. 368: Identifying Crankshaft Rear Oil Seal Retainer Plate Bolts Tightening Sequence
Courtesy of FORD MOTOR CO.

NOTE: **Do not use metal scrapers, wire brushes, power abrasive discs or other abrasive means to clean the sealing surfaces. These tools cause scratches and gouges, which make leak paths. Use a plastic scraping tool and metal surface cleaner to remove traces of sealant.**

36. Clean and inspect all mating surfaces.

NOTE: **If the oil pan is not secured within 4 minutes of sealant application, the sealant must be removed and the sealing area cleaned with metal surface prep. Allow to dry until there is no sign of wetness, 4 minutes, whichever is longer. Failure to follow this procedure can cause future oil leakage.**

37. Apply a 2.5 mm (0.09 in) bead of silicone gasket and sealant to the oil pan.
38. Install the oil pan and install the 2 oil pan bolts finger-tight.

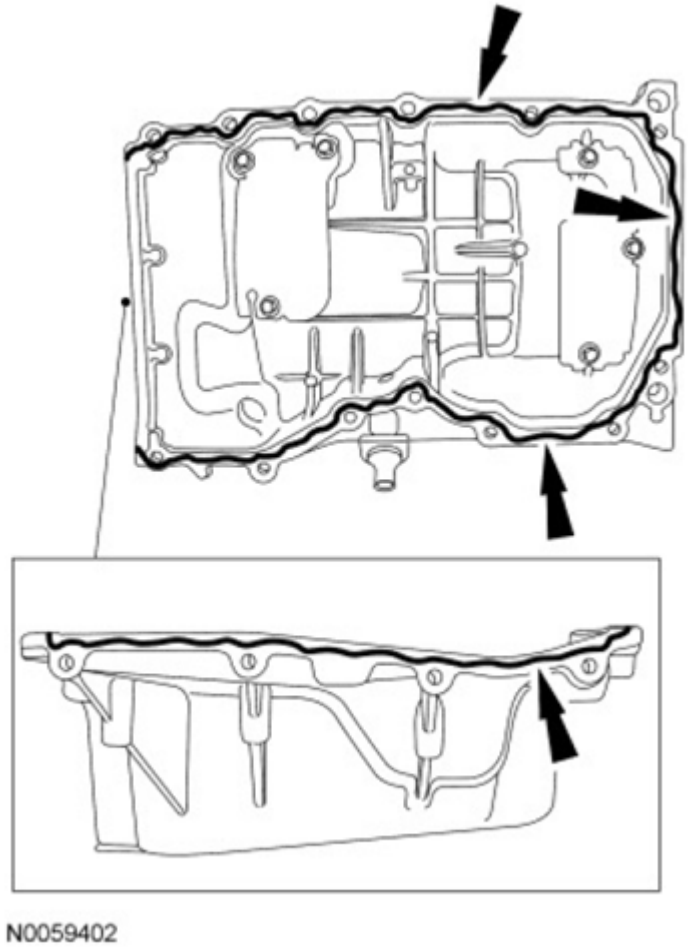

Fig. 369: Locating Oil Pan Silicone Gasket And Sealant Bead Applying Areas
Courtesy of FORD MOTOR CO.

39. Using a suitable straightedge, align the front surface of the oil pan flush with the front surface of the engine block.

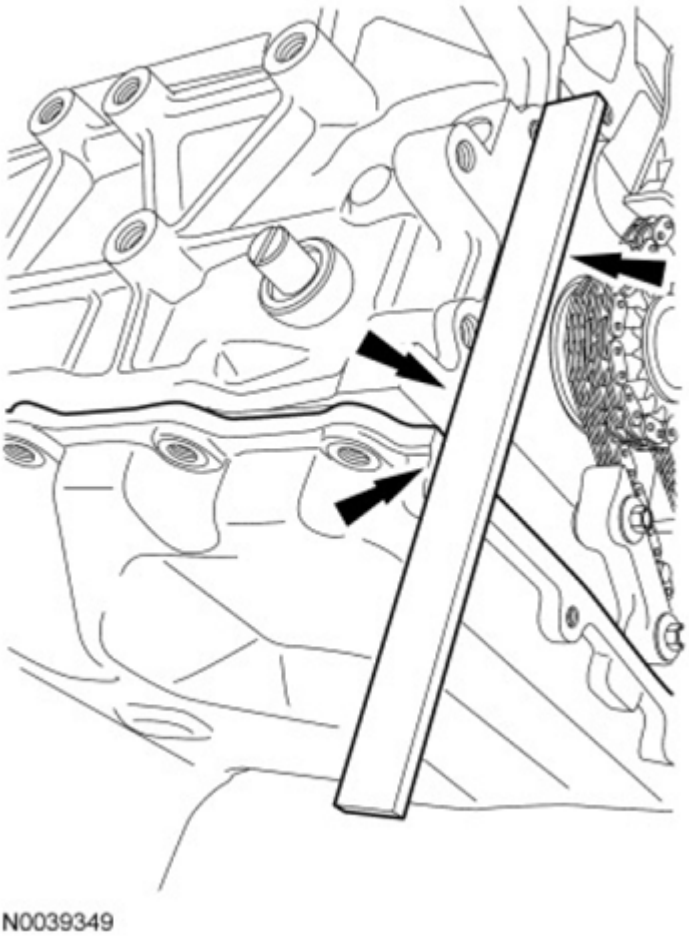

Fig. 370: Aligning Front Surface Using Suitable Straightedge
Courtesy of FORD MOTOR CO.

40. Install the remaining oil pan bolts and tighten the oil pan bolts in the sequence shown in illustration.
    - Tighten to 25 Nm (18 lb-ft).

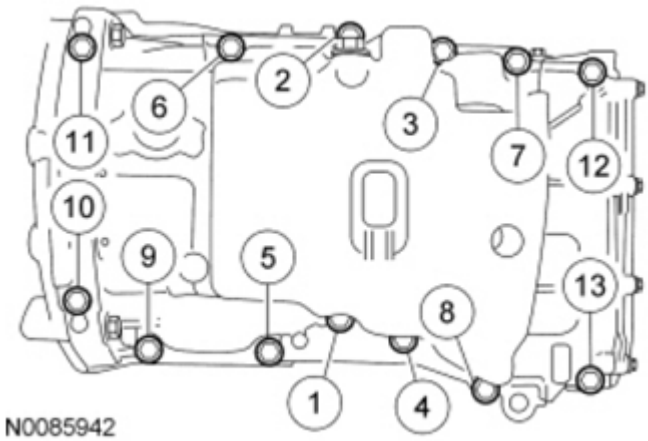

Fig. 371: Identifying Oil Pan Bolts Tightening Sequence
Courtesy of FORD MOTOR CO.

41. Install the cylinder head alignment dowels. Dowels must be fully seated in the cylinder block.

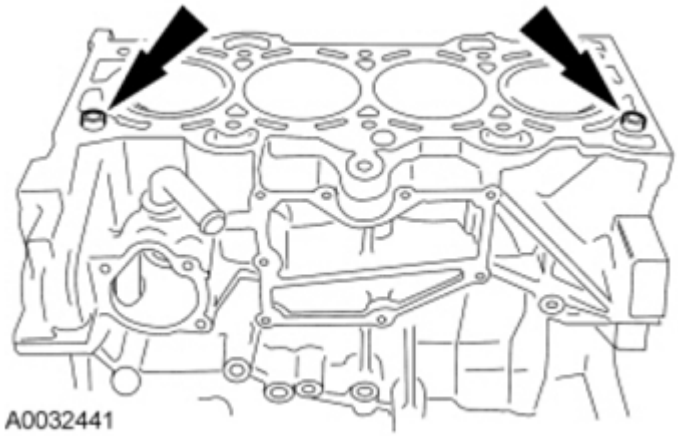

Fig. 372: Locating Cylinder Head Alignment Dowels
Courtesy of FORD MOTOR CO.

NOTE: **Do not use metal scrapers, wire brushes, power abrasive discs or other abrasive means to clean the sealing surfaces. These tools cause scratches and gouges that make leak paths. Use a plastic scraping tool to remove all traces of the head gasket.**

NOTE: **Observe all warnings and cautions and follow all application directions contained on the packaging of the silicone gasket remover and the metal surface prep.**

NOTE: **If there is no residual gasket material present, metal surface prep can be used to clean and prepare the surfaces.**

42. Clean the cylinder head-to-cylinder block mating surface of both the cylinder head and the cylinder block in the following sequence.
    1. Remove any large deposits of silicone or gasket material with a plastic scraper.
    2. Apply silicone gasket remover, following package directions, and allow to set for several minutes.
    3. Remove the silicone gasket remover with a plastic scraper. A second application of silicone gasket remover may be required if residual traces of silicone or gasket material remain.
    4. Apply metal surface prep, following package directions, to remove any traces of oil or coolant, and to prepare the surfaces to bond with the new gasket. Do not attempt to make the metal shiny. Some staining of the metal surfaces is normal.
43. Apply silicone gasket and sealant to the locations shown in illustration.

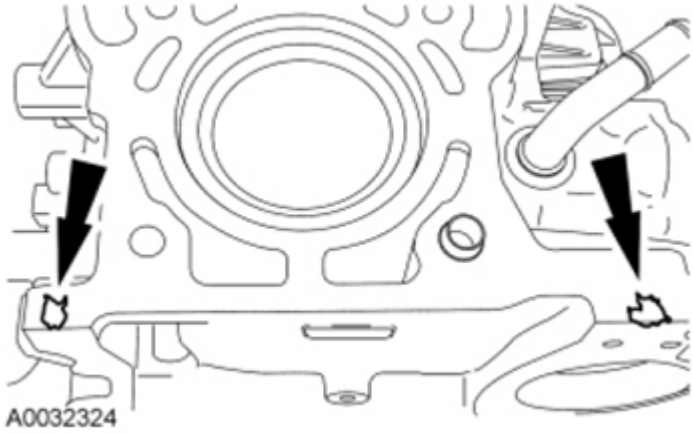

Fig. 373: Locating Silicone Gasket And Sealant Apply Locations
Courtesy of FORD MOTOR CO.

44. Install a new head gasket.

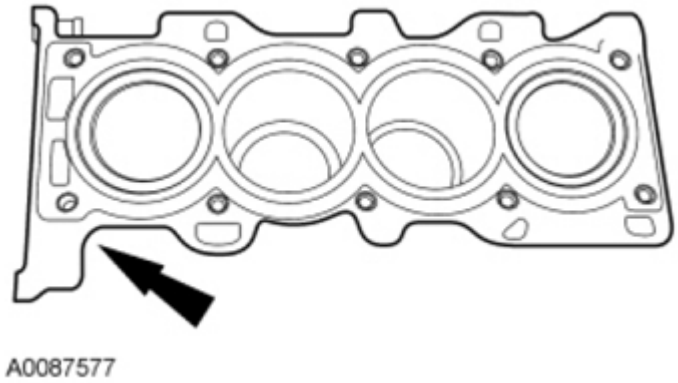

Fig. 374: Locating Head Gasket
Courtesy of FORD MOTOR CO.

NOTE: The cylinder head bolts are torque-to-yield and must not be reused. New cylinder head bolts must be installed.

45. Install the cylinder head and 10 new bolts. Tighten the bolts in the sequence shown in illustration in the following 5 stages:
    - Stage 1: Tighten to 5 Nm (44 lb-in).
    - Stage 2: Tighten to 15 Nm (133 lb-in).
    - Stage 3: Tighten to 45 Nm (33 lb-ft).
    - Stage 4: Turn 90 degrees.
    - Stage 5: Turn an additional 90 degrees.

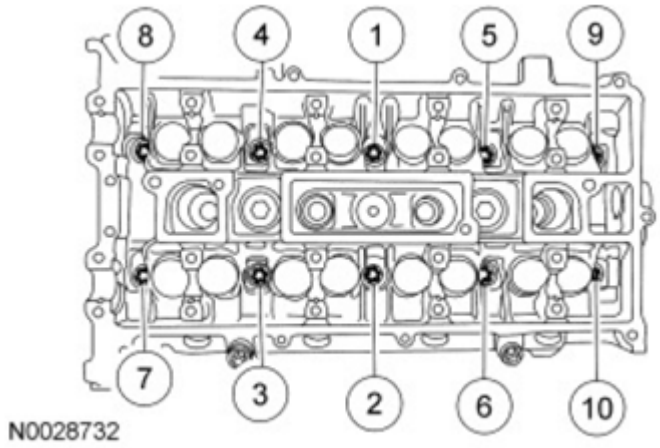

Fig. 375: Identifying Cylinder Head Bolts Tightening Sequence
Courtesy of FORD MOTOR CO.

NOTE: Coat the valve tappets with clean engine oil prior to installation.

46. Install the valve tappets.

NOTE: Install the camshafts with the alignment slots in the camshafts lined up so the Camshaft Alignment Plate can be installed without rotating the camshafts. Make sure the lobes on the No. 1 cylinder are in the same position as noted in the disassembly procedure. Rotating the camshafts when the timing chain is removed, or installing the camshafts 180 degrees out of position, can cause severe damage to the valves and pistons.

NOTE: Lubricate the camshaft journals and bearing caps with clean engine oil.

47. Install the camshafts and bearing caps in their original location and orientation. Tighten the bearing caps in the sequence shown in illustration in 3 stages:
    - Stage 1: Tighten one turn at a time until tight.
    - Stage 2: Tighten to 7 Nm (62 lb-in).
    - Stage 3: Tighten to 16 Nm (142 lb-in).

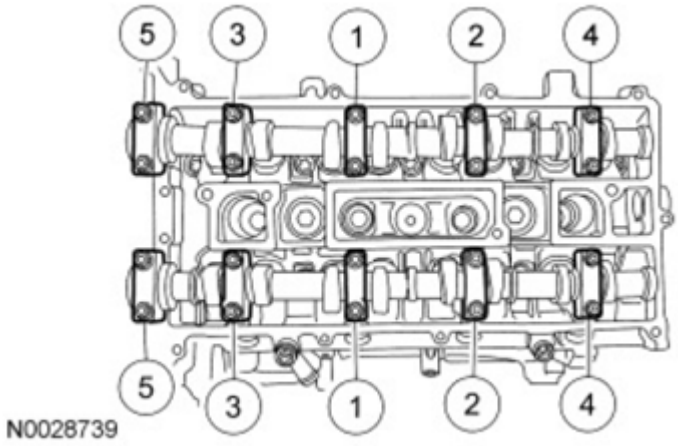

Fig. 376: Identifying Bearing Cap Bolts Tightening Sequence
Courtesy of FORD MOTOR CO.

48. Install the Variable Camshaft Timing (VCT) system oil filter and plug in the intake camshaft thrust cap.
    - Tighten to 17 Nm (150 lb-in).

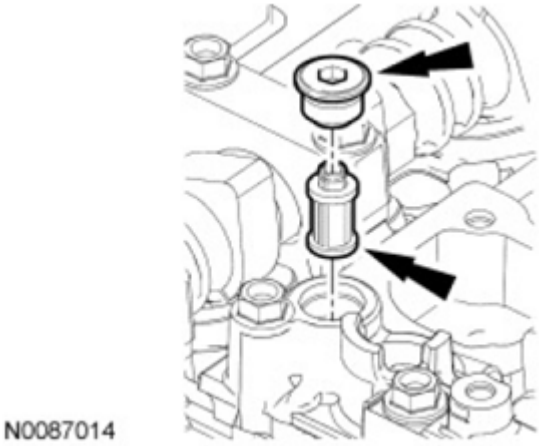

Fig. 377: Locating Plug And VCT System Oil Filter
Courtesy of FORD MOTOR CO.

49. Install the **VCT** solenoid and the bolt.
    - Tighten to 10 Nm (89 lb-in).

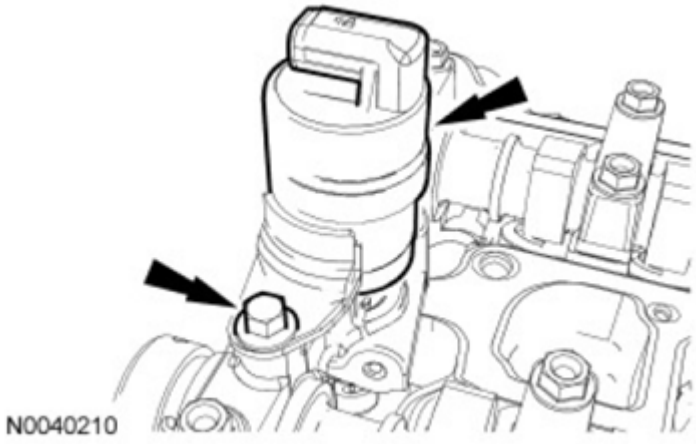

Fig. 378: Locating Bolt And Variable Camshaft Timing Solenoid
Courtesy of FORD MOTOR CO.

NOTE: Install a new crankshaft sprocket diamond washer on both sides of the crankshaft sprocket.

50. Install the crankshaft sprocket, new crankshaft sprocket diamond washers, oil pump chain and oil pump sprocket.
    - The crankshaft sprocket flange must be facing away from the engine block.

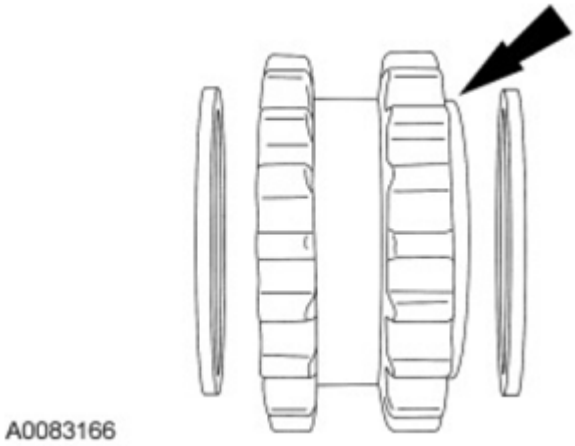

Fig. 379: Identifying Crankshaft Sprocket Flange
Courtesy of FORD MOTOR CO.

51. Install the oil pump chain, sprocket and bolt.
    - Tighten to 25 Nm (18 lb-ft).

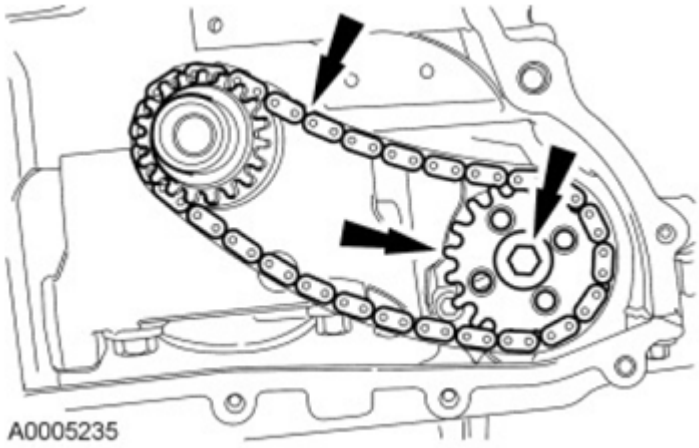

Fig. 380: Locating Oil Pump Chain, Sprocket And Bolt
Courtesy of FORD MOTOR CO.

52. Install the shoulder bolt.
    - Tighten to 10 Nm (89 lb-in).

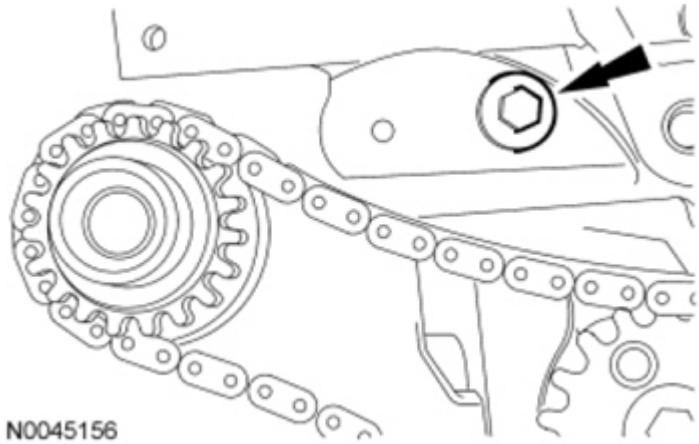

Fig. 381: Locating Oil Pump Chain Drive Tensioner Shoulder Bolt
Courtesy of FORD MOTOR CO.

53. Install the oil pump chain tensioner and bolt. Hook the tensioner spring around the shoulder bolt.
    - Tighten to 10 Nm (89 lb-in).

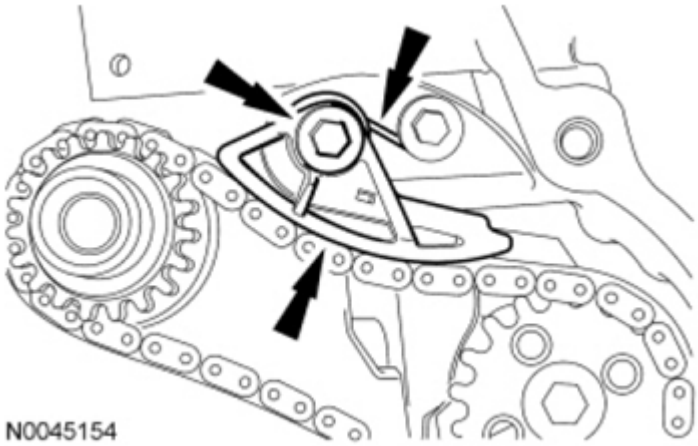

Fig. 382: Locating Oil Pump Drive Chain Tensioner, Bolt And Tensioner Spring
Courtesy of FORD MOTOR CO.

NOTE: The Camshaft Alignment Plate 303-465 is for camshaft alignment only. Using this tool to prevent engine rotation can result in engine damage.

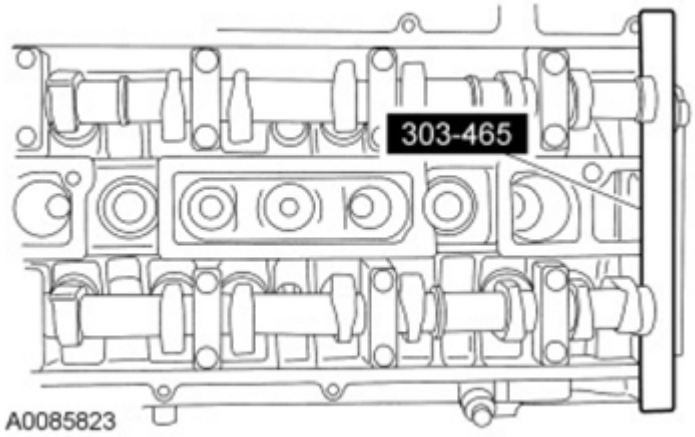

Fig. 383: Identifying Camshaft Alignment Plate
Courtesy of FORD MOTOR CO.

54. Install the Camshaft Alignment Plate in the slots on the rear of both camshafts.
55. Install the camshaft sprockets and the bolts. Do not tighten the bolts at this time.

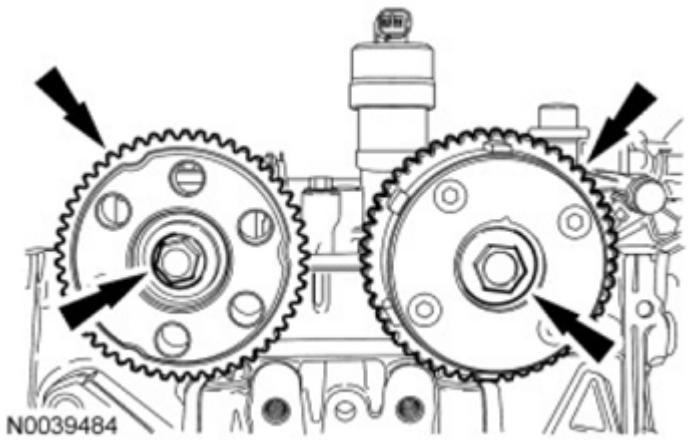

Fig. 384: Locating Camshaft Sprockets And Bolts
Courtesy of FORD MOTOR CO.

56. Install the LH timing chain guide and the bolts.
    - Tighten to 10 Nm (89 lb-in).

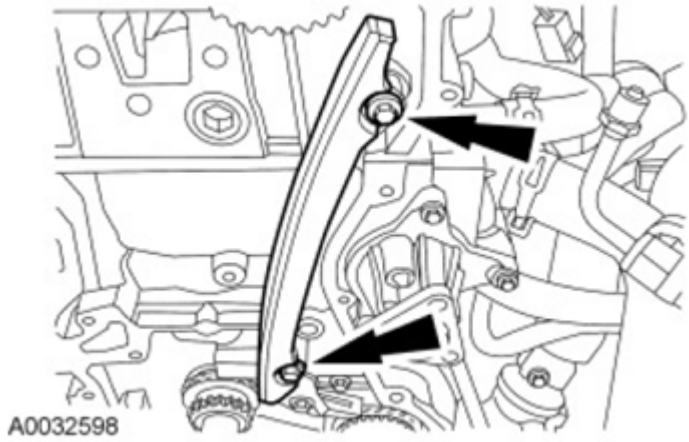

Fig. 385: Locating Timing Chain Guide Bolts
Courtesy of FORD MOTOR CO.

57. Install the timing chain.

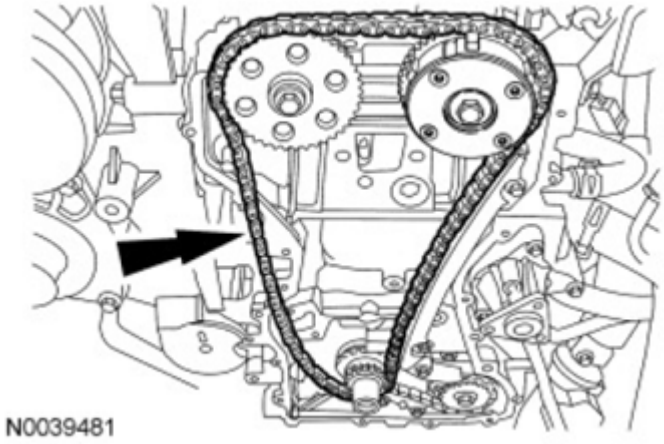

Fig. 386: Locating Timing Chain
Courtesy of FORD MOTOR CO.

58. Install the RH timing chain guide.

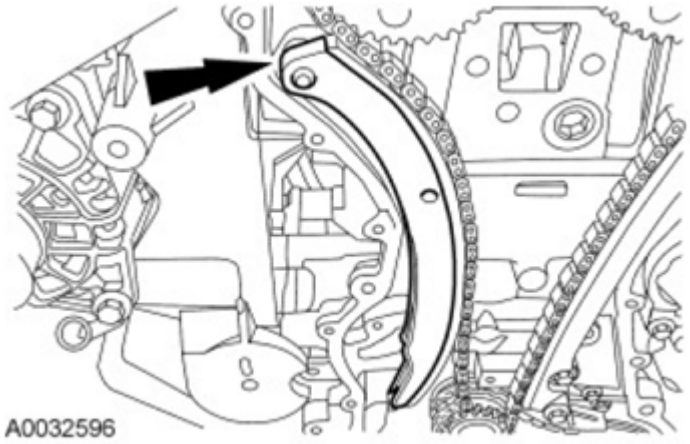

Fig. 387: Locating Timing Chain Tensioner Arm
Courtesy of FORD MOTOR CO.

NOTE: **If the timing chain tensioner plunger and ratchet assembly are not pinned in the compressed position, follow the next 4 steps.**

NOTE: **Do not compress the ratchet assembly. This will damage the ratchet assembly.**

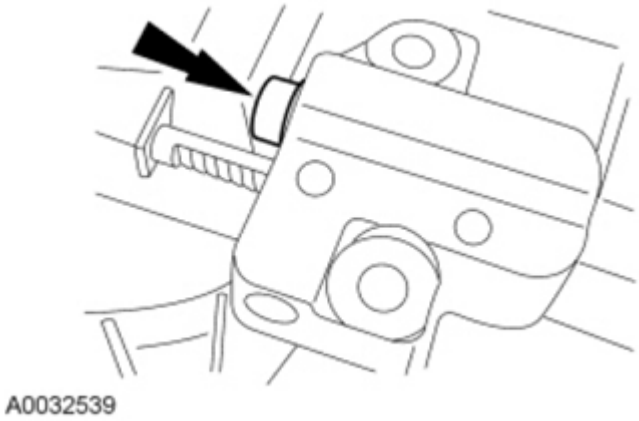

Fig. 388: Compressing Timing Chain Tensioner Plunger
Courtesy of FORD MOTOR CO.

59. Using the edge of a vise, compress the timing chain tensioner plunger.
60. Using a small pick, push back and hold the ratchet mechanism.

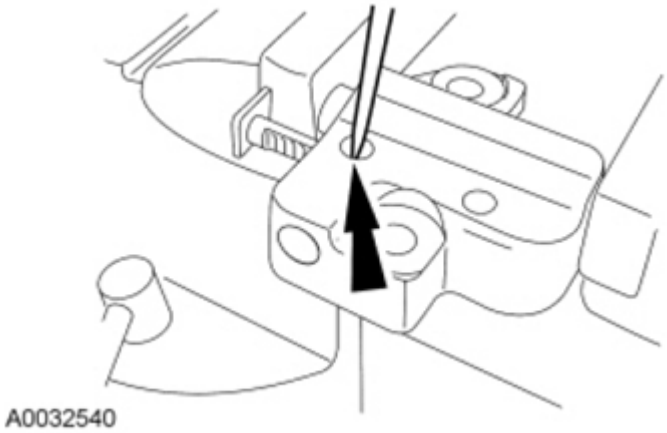

Fig. 389: Holding Ratchet Mechanism Using Small Pick
Courtesy of FORD MOTOR CO.

61. While holding the ratchet mechanism, push the ratchet arm back into the tensioner housing.

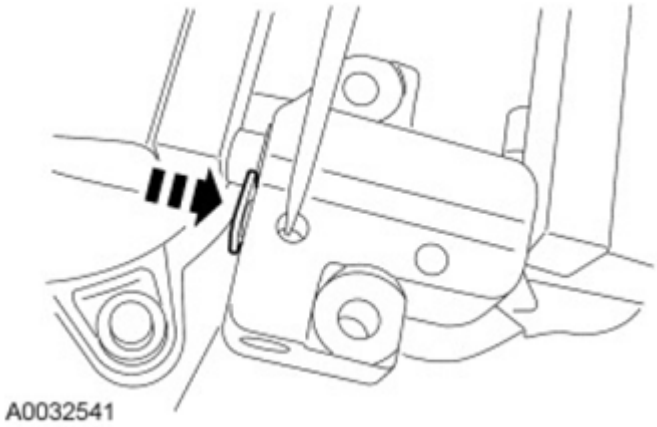

Fig. 390: Pushing Ratchet Arm Back Into Tensioner Housing
Courtesy of FORD MOTOR CO.

62. Install a paper clip into the hole in the tensioner housing to hold the ratchet assembly and the plunger in during installation.

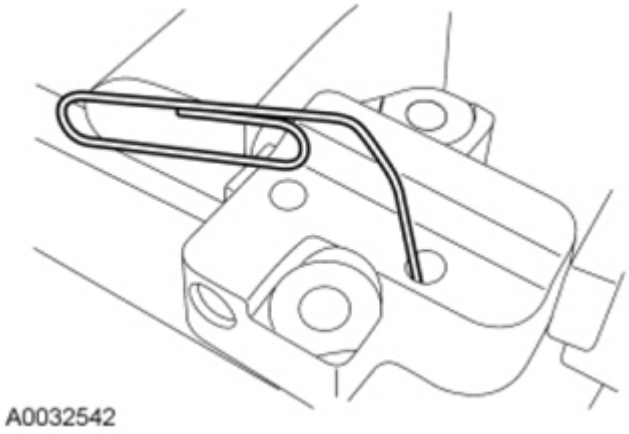

Fig. 391: Installing Paper Clip Into Hole In Tensioner Housing
Courtesy of FORD MOTOR CO.

63. Install the timing chain tensioner and the bolts. Remove the paper clip to release the piston.
    - Tighten to 10 Nm (89 lb-in).

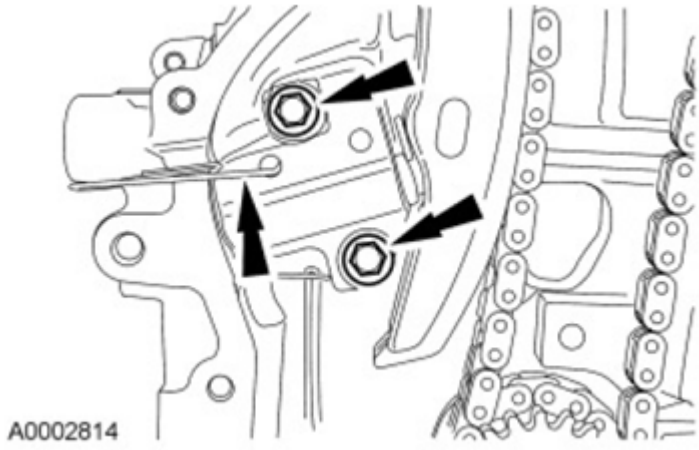

Fig. 392: Locating Timing Chain Tensioner And Bolts
Courtesy of FORD MOTOR CO.

NOTE: The Camshaft Alignment Plate 303-465 is for camshaft alignment only. Using this tool to prevent engine rotation can result in engine damage.

64. Using the flats on the camshafts to prevent camshaft rotation, tighten the bolts.
    - Tighten to 72 Nm (53 lb-ft).

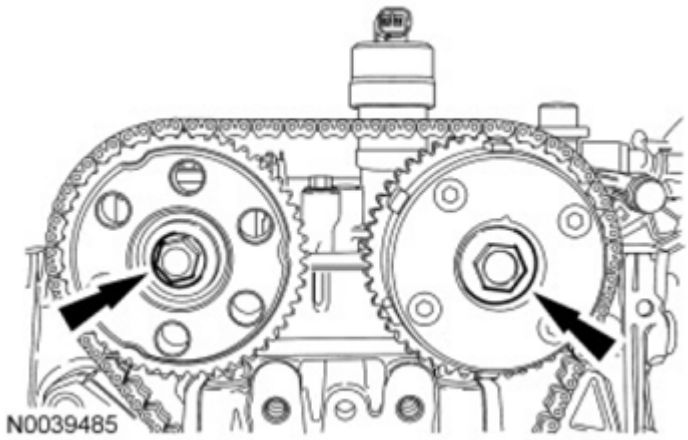

Fig. 393: Locating Camshaft Bolts
Courtesy of FORD MOTOR CO.

NOTE: Do not use metal scrapers, wire brushes, power abrasive disks or other abrasive means to clean sealing surfaces. These tools cause scratches and gouges which make leak paths.

65. Clean and inspect the mounting surfaces of the engine and the front cover.

NOTE: The engine front cover must be installed and the bolts tightened within 4

minutes of applying the silicone gasket and sealant.

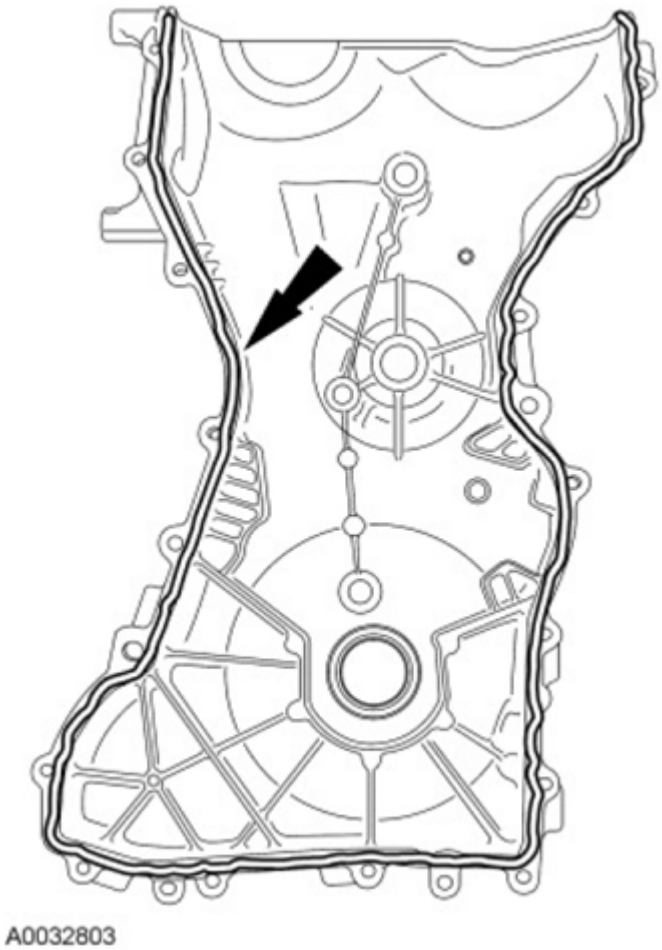

Fig. 394: Applying Silicone Gasket And Sealant On Engine Front Cover
Courtesy of FORD MOTOR CO.

66. Apply a 2.5 mm (0.09 in) bead of silicone gasket and sealant to the cylinder head and oil pan joint areas. Apply a 2.5 mm (0.09 in) bead of silicone gasket and sealant to the front cover.
67. Install the engine front cover. Tighten the bolts in the sequence shown in illustration, to the following specifications:
    - Tighten the 8-mm bolts to 10 Nm (89 lb-in).
    - Tighten the 13-mm bolts to 48 Nm (35 lb-ft).

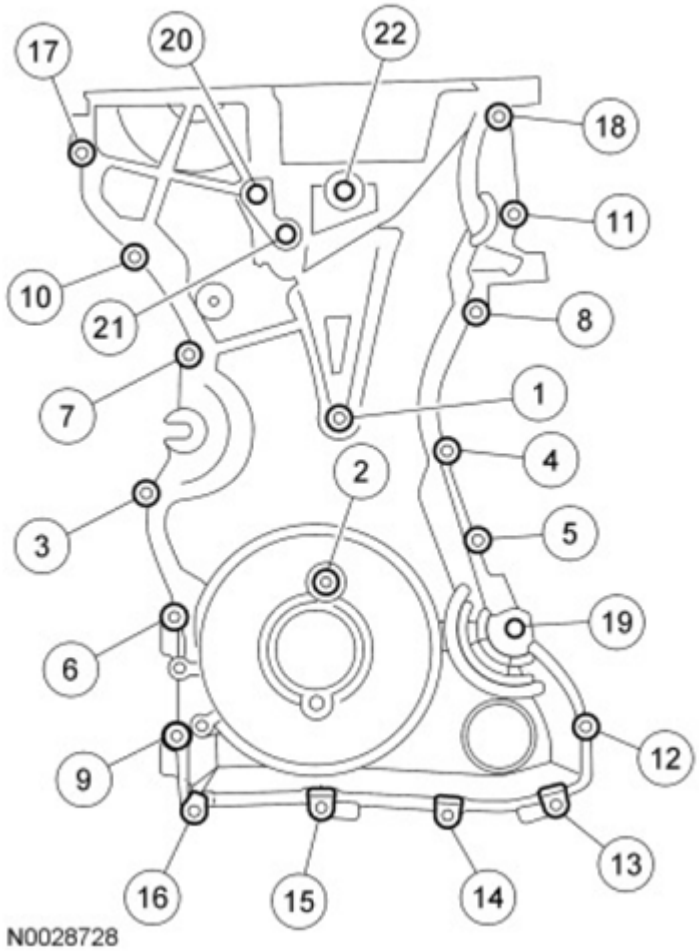

Fig. 395: Identifying Engine Front Cover Bolts Tightening Sequence
Courtesy of FORD MOTOR CO.

NOTE: Remove the through bolt from the Camshaft Front Oil Seal Installer.

NOTE: Lubricate the oil seal with clean engine oil.

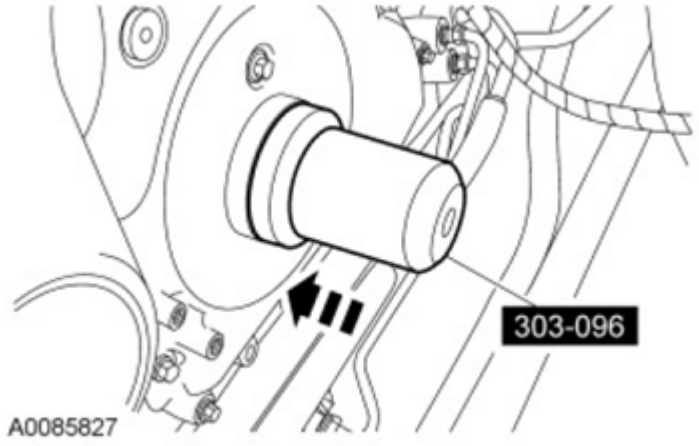

Fig. 396: Installing Crankshaft Front Oil Seal
Courtesy of FORD MOTOR CO.

68. Using the Camshaft Front Oil Seal Installer, install the crankshaft front seal.

NOTE: Do not install the crankshaft pulley bolt at this time.

NOTE: Apply clean engine oil on the seal area before installing.

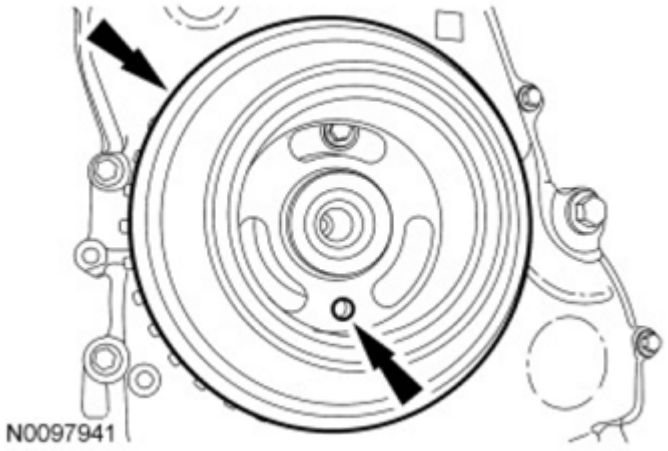

Fig. 397: Locating Crankshaft Pulley Hole
Courtesy of FORD MOTOR CO.

69. Position the crankshaft pulley onto the crankshaft with the hole in the pulley at the 6 o'clock position.

NOTE: Only hand-tighten the 6-mm bolt or damage to the front cover can occur.

NOTE: This step will correctly align the crankshaft pulley to the crankshaft.

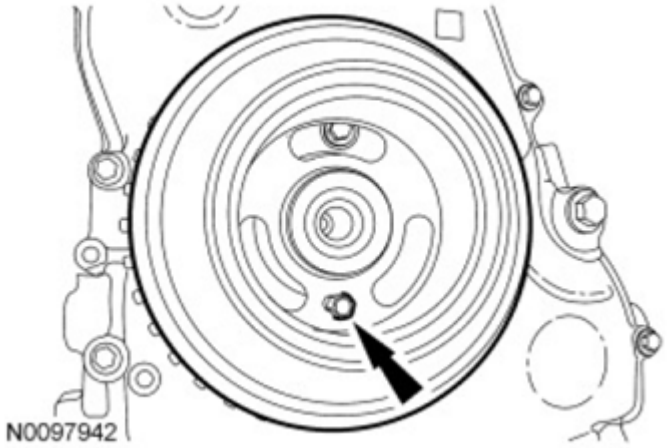

Fig. 398: Locating Bolt Through Crankshaft Pulley
Courtesy of FORD MOTOR CO.

70. Install a standard 6 mm x 18 mm bolt through the crankshaft pulley and thread it into the front cover.

NOTE: **The crankshaft must remain in the Top Dead Center (TDC) position during installation of the pulley bolt or damage to the engine can occur. Therefore, the crankshaft pulley must be held in place with the Crankshaft Damper Holding Tool and the bolt should be installed using hand tools only.**

NOTE: **Do not reuse the crankshaft pulley bolt.**

71. Install a new crankshaft pulley bolt. Using the Crankshaft Damper Holding Tool to hold the crankshaft pulley in place, tighten the crankshaft pulley bolt in 2 stages:
    - Stage 1: Tighten to 100 Nm (74 lb-ft).
    - Stage 2: Tighten an additional 90 degrees (one-fourth turn).

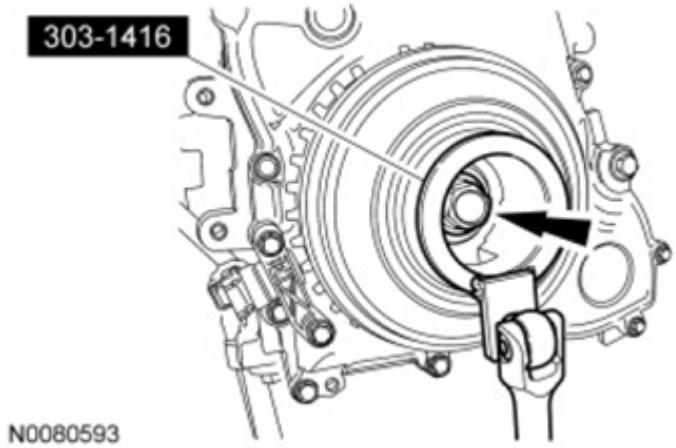

Fig. 399: Remove/Install Crankshaft Pulley Bolt Using Crankshaft Damper Holding Tool
Courtesy of FORD MOTOR CO.

72. Remove the 6 mm x 18 mm bolt.

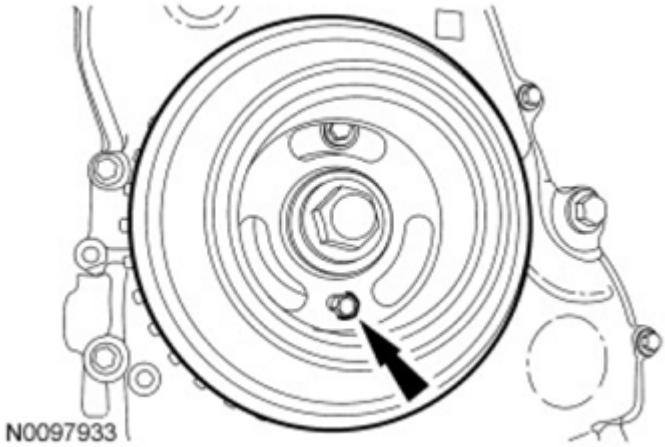

Fig. 400: Locating Crankshaft Pulley Bolt
Courtesy of FORD MOTOR CO.

73. Remove the Crankshaft **TDC** Timing Peg.

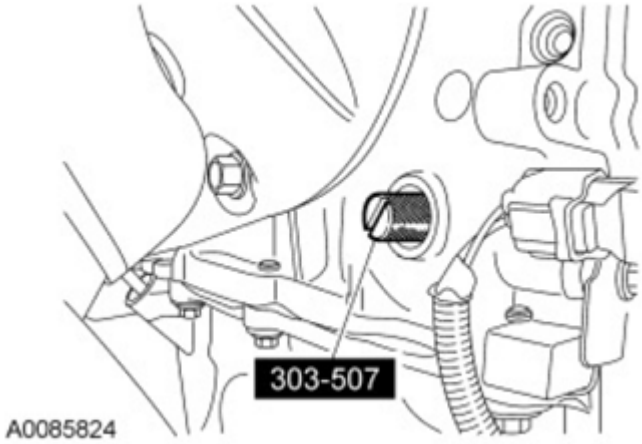

Fig. 401: Locating Crankshaft TDC Timing Peg
Courtesy of FORD MOTOR CO.

74. Remove the Camshaft Alignment Plate.

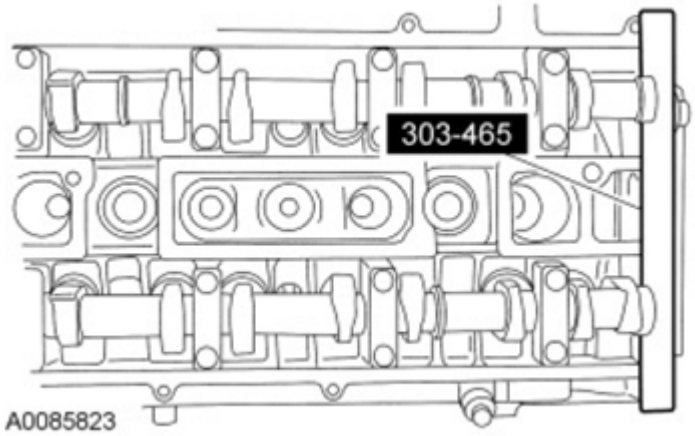

Fig. 402: Identifying Camshaft Alignment Plate
Courtesy of FORD MOTOR CO.

NOTE: Only turn the engine in the normal direction of rotation.

75. Turn the crankshaft clockwise one and three-fourths turns.
76. Install the Crankshaft **TDC** Timing Peg.

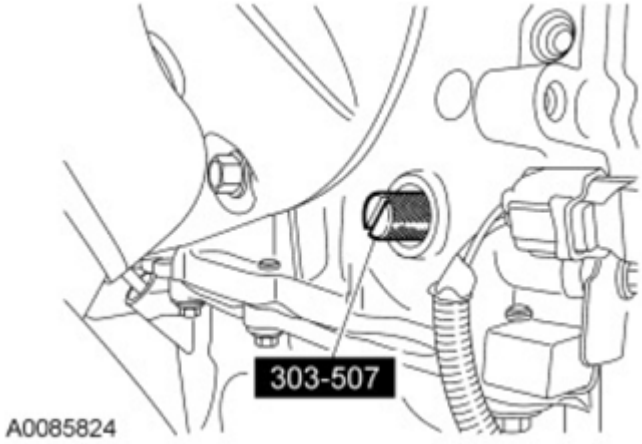

Fig. 403: Locating Crankshaft TDC Timing Peg
Courtesy of FORD MOTOR CO.

NOTE: Only turn the engine in the normal direction of rotation.

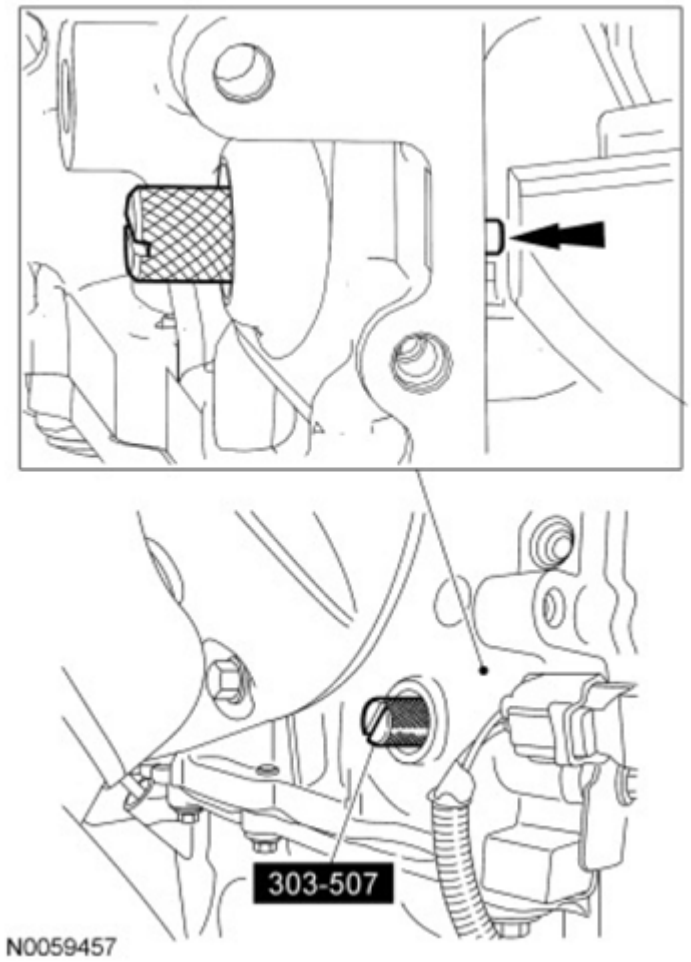

Fig. 404: Remove/Install Crankshaft TDC Timing Peg
Courtesy of FORD MOTOR CO.

77. Turn the crankshaft clockwise until the crankshaft contacts the Crankshaft TDC Timing Peg.

NOTE: Only hand-tighten the bolt or damage to the front cover can occur.

78. Using the 6 mm x 18 mm bolt, check the position of the crankshaft pulley.
    - If it is not possible to install the bolt, the engine valve timing must be corrected.

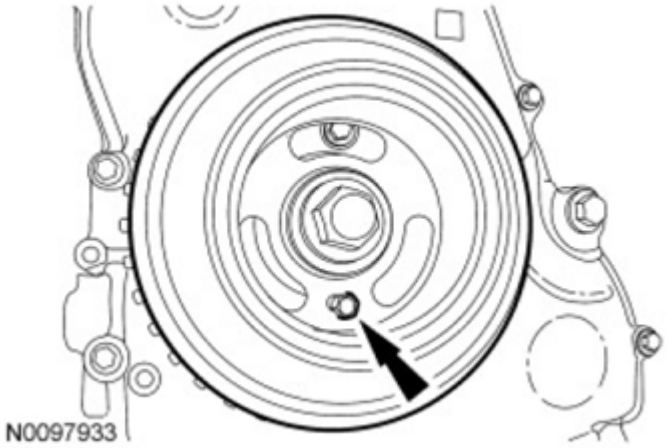

Fig. 405: Locating Crankshaft Pulley Bolt
Courtesy of FORD MOTOR CO.

79. Install the Camshaft Alignment Plate to check the position of the camshafts.
    - If it is not possible to install the Camshaft Alignment Plate, the engine valve timing must be corrected.

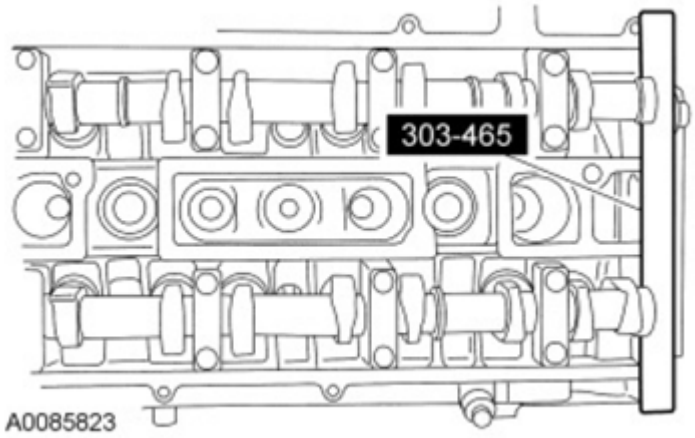

Fig. 406: Identifying Camshaft Alignment Plate
Courtesy of FORD MOTOR CO.

80. Remove the Camshaft Alignment Plate.

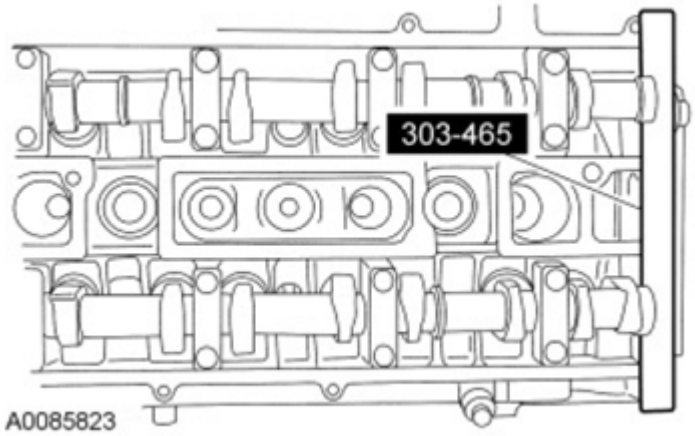

Fig. 407: Identifying Camshaft Alignment Plate
Courtesy of FORD MOTOR CO.

81. Install the Crankshaft Position (CKP) sensor and the 2 bolts.
    - Do not tighten the bolts at this time.

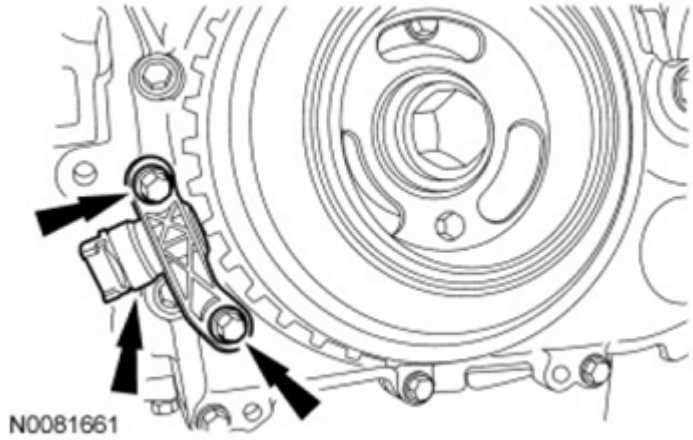

Fig. 408: Locating CKP Sensor And Bolts
Courtesy of FORD MOTOR CO.

82. Using the Crankshaft Sensor Aligner, adjust the CKP sensor.
    - Tighten the 2 **CKP** bolts to 7 Nm (62 lb-in).

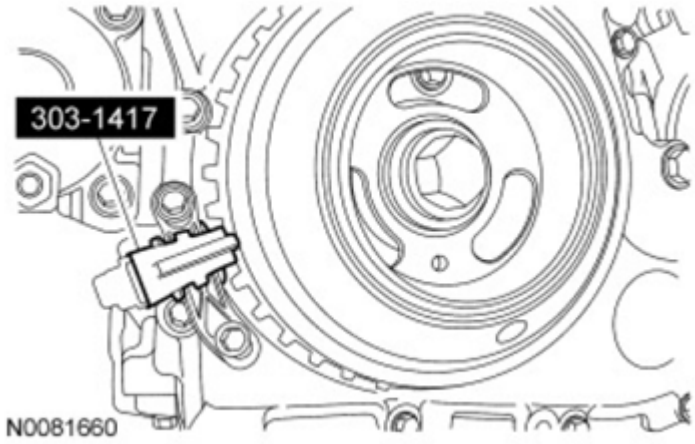

Fig. 409: Identifying Crankshaft Sensor Aligner
Courtesy of FORD MOTOR CO.

83. Remove the 6 mm x 18 mm bolt.

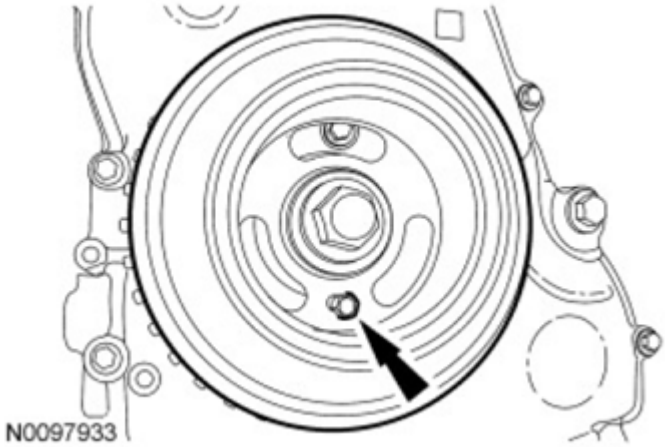

Fig. 410: Locating Crankshaft Pulley Bolt
Courtesy of FORD MOTOR CO.

84. Remove the Crankshaft **TDC** Timing Peg.

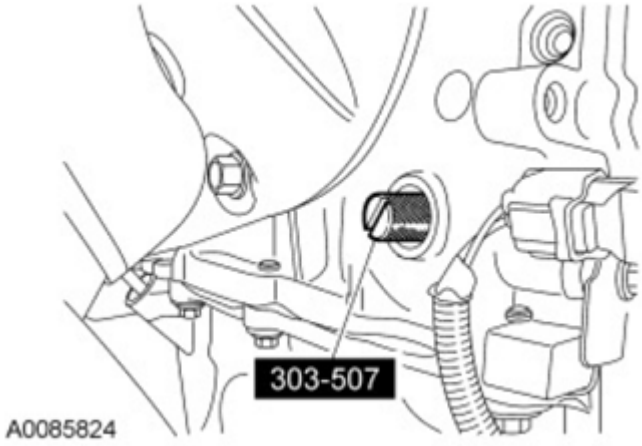

Fig. 411: Locating Crankshaft TDC Timing Peg
Courtesy of FORD MOTOR CO.

85. Install the engine plug bolt.
    - Tighten to 20 Nm (177 lb-in).

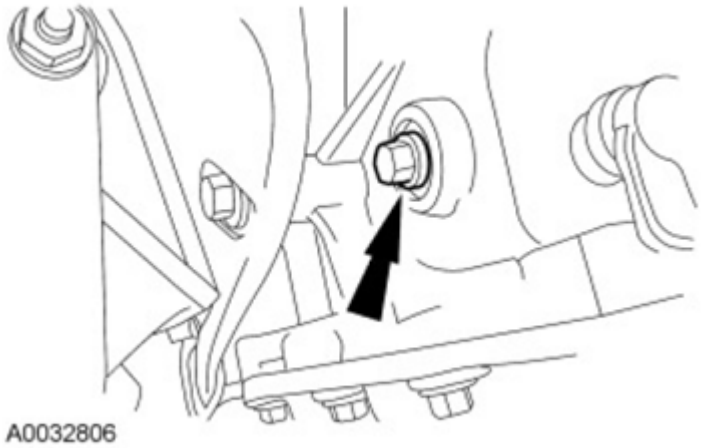

Fig. 412: Locating Engine Plug Bolt
Courtesy of FORD MOTOR CO.

NOTE: **Do not use metal scrapers, wire brushes, power abrasive discs or other abrasive means to clean the sealing surfaces. These tools cause scratches and gouges which make leak paths.**

86. Clean the valve cover gasket surface with metal surface prep.
87. Apply silicone gasket and sealant to the locations shown in illustration.

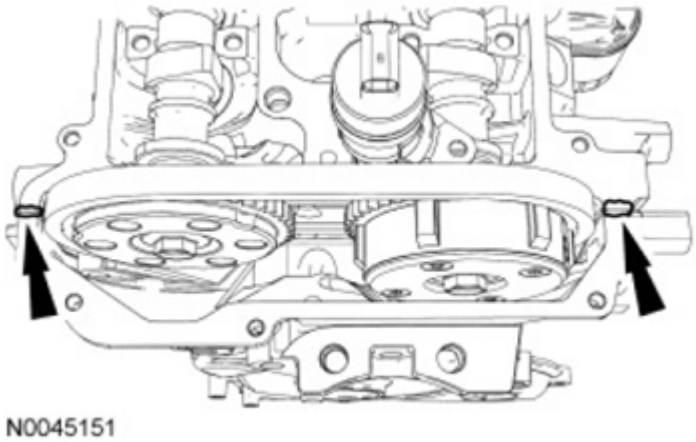

Fig. 413: Locating Silicone Gasket And Sealant Applying Locations
Courtesy of FORD MOTOR CO.

NOTE: The valve cover must be secured within 4 minutes of silicone gasket application. If the valve cover is not secured within 4 minutes, the sealant must be removed and the sealing area cleaned with metal surface cleaner.

88. Install the valve cover.
    - Tighten the bolts in the sequence shown in illustration to 10 Nm (89 lb-in).

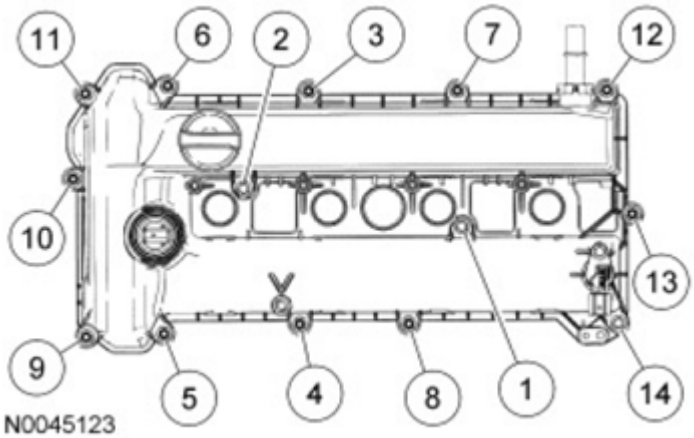

Fig. 414: Identifying Valve Cover Bolts Tightening Sequence
Courtesy of FORD MOTOR CO.

NOTE: Only use hand tools when removing or installing the spark plugs or damage can occur to the cylinder head or spark plug.

89. Install the Cylinder Head Temperature (CHT) sensor and the spark plugs.
    - Tighten the **CHT** sensor to 12 Nm (106 lb-in).
    - Tighten the spark plugs to 12 Nm (106 lb-in).

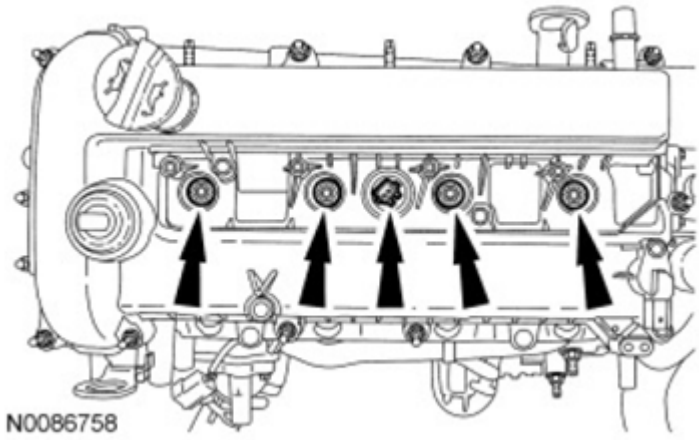

Fig. 415: Locating Spark Plugs And CHT Sensor
Courtesy of FORD MOTOR CO.

NOTE: Make sure the notch on the oil level indicator is aligned with the V-shaped boss on the valve cover and fully engaged into the valve cover.

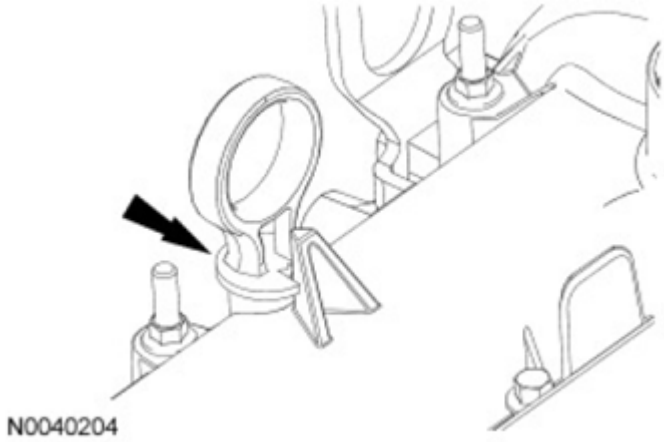

Fig. 416: Locating Oil Level Indicator
Courtesy of FORD MOTOR CO.

90. Install the oil level indicator.

NOTE: Apply dielectric compound to the inside of the coil-on-plug boots.

91. Install the 4 coil-on-plugs and the 4 bolts. Install the crankshaft vent tube.
    - Tighten to 8 Nm (71 lb-in).

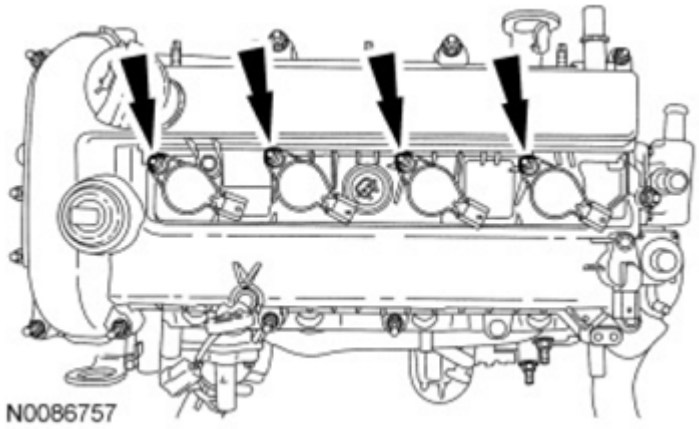

Fig. 417: Locating Coil-On-Plugs Stud Bolts
Courtesy of FORD MOTOR CO.

92. Install the engine cover studs.

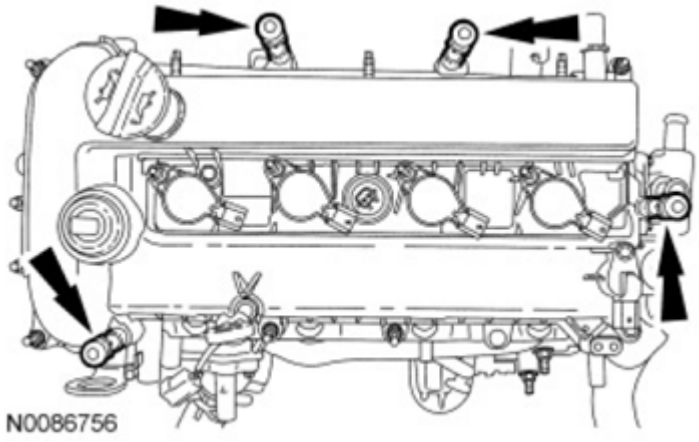

Fig. 418: Locating Engine Cover Studs
Courtesy of FORD MOTOR CO.

93. Install the crankshaft vent tube.

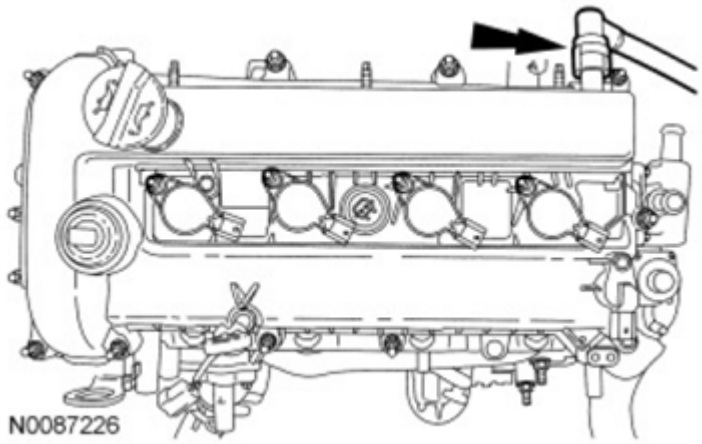

Fig. 419: Locating Crankshaft Vent Tube
Courtesy of FORD MOTOR CO.

94. If equipped, install the block heater.
    - Tighten to 40 Nm (30 lb-ft).

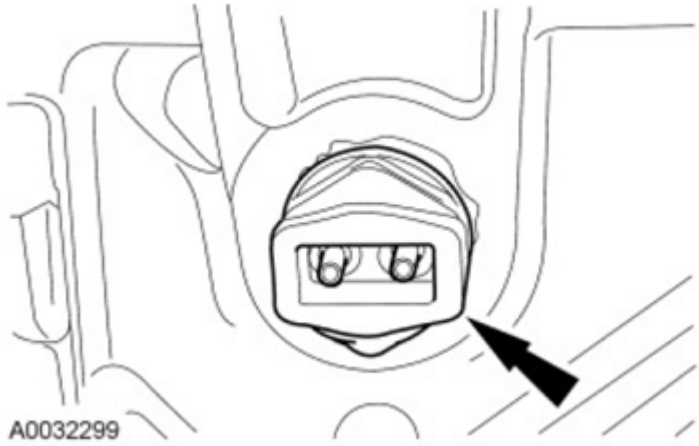

Fig. 420: Locating Block Heater
Courtesy of FORD MOTOR CO.

NOTE: Clean the gasket mating surfaces with metal surface prep.

95. Install the oil filter adapter with a new gasket.
    - Tighten to 25 Nm (18 lb-ft).

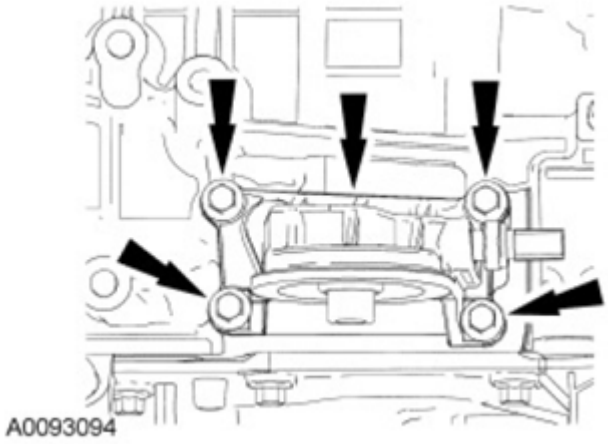

Fig. 421: Locating Bolts And Oil Filter Adapter
Courtesy of FORD MOTOR CO.

96. Install the crankcase vent oil separator and the 8 bolts.
    - Tighten to 10 Nm (89 lb-in).

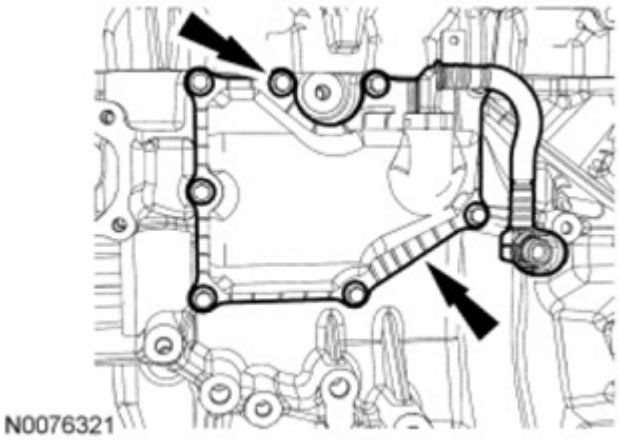

Fig. 422: Locating Bolts And Crankcase Vent Oil Separator
Courtesy of FORD MOTOR CO.

NOTE: The Knock Sensor (KS) must not touch the crankcase vent oil separator.

97. Install the **KS** and the bolt.
    - Tighten to 20 Nm (177 lb-in).

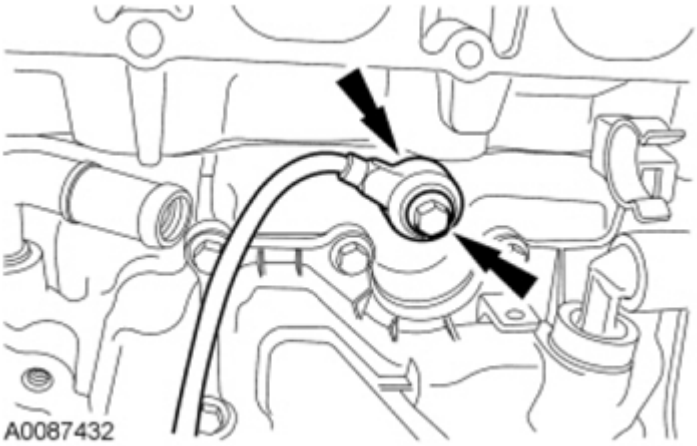

Fig. 423: Identifying Bolt And Knock Sensor
Courtesy of FORD MOTOR CO.

98. Install the coolant hose.

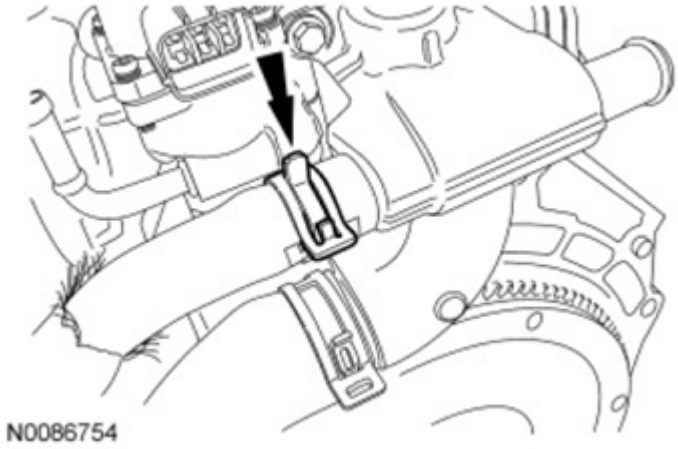

Fig. 424: Locating Coolant Hose
Courtesy of FORD MOTOR CO.

99. Install the coolant hose.

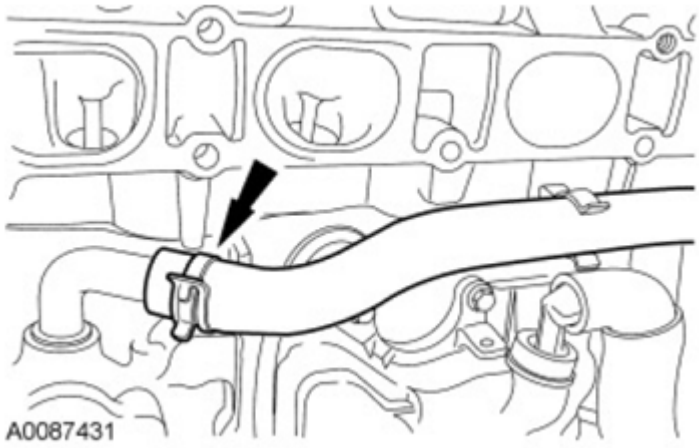

Fig. 425: Locating Coolant Hose
Courtesy of FORD MOTOR CO.

NOTE: Clean and inspect the thermostat housing gasket. Install a new gasket if necessary.

100. Install the thermostat housing.
    - Tighten to 10 Nm (89 lb-in).

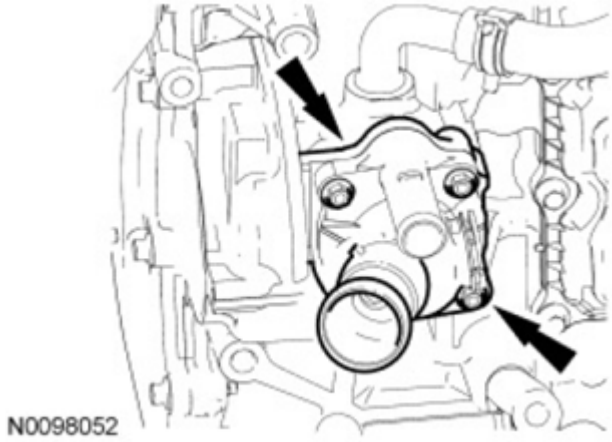

Fig. 426: Locating Thermostat Housing
Courtesy of FORD MOTOR CO.

NOTE: Make sure the coolant pump is correctly seated to the engine block before installing and tightening the fasteners, or damage to the coolant pump may occur.

NOTE: Clean the coolant pump mating surface with metal surface cleaner.

NOTE: Lubricate the coolant pump O-ring with clean engine coolant.

101. Install the new O-ring, coolant pump and the 3 bolts.
    - Tighten to 10 Nm (89 lb-in).

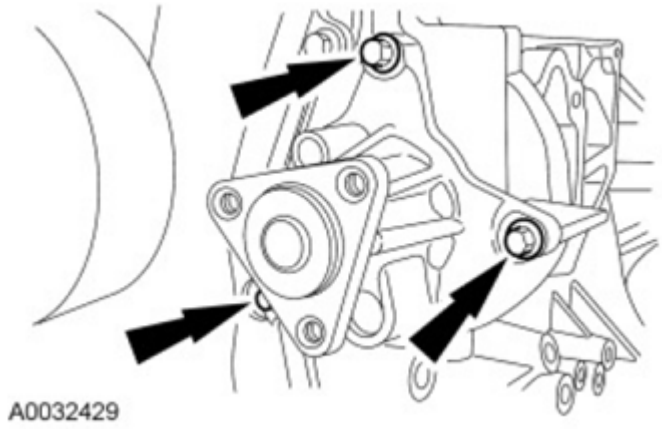

Fig. 427: Locating Coolant Pump And Bolts
Courtesy of FORD MOTOR CO.

102. Install the coolant pump pulley and bolts.
    - Tighten to 20 Nm (177 lb-in).

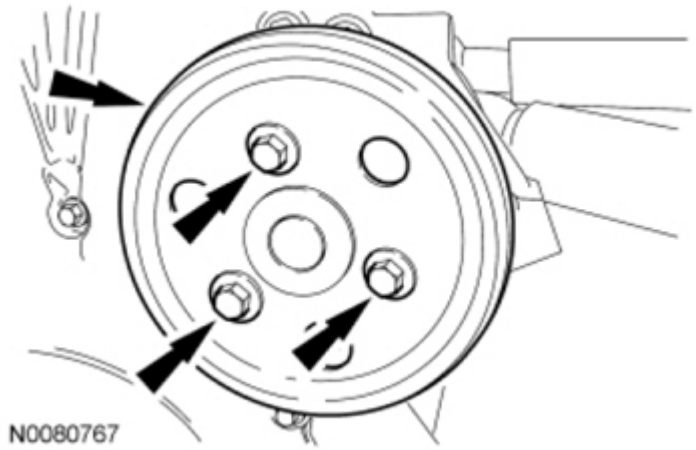

Fig. 428: Locating Bolts And Coolant Pump Pulley
Courtesy of FORD MOTOR CO.

103. Position the engine control wiring harness on the engine.
104. Attach the wiring harness retainer to the valve cover and stud bolt.
    - Connect the EGR valve electrical connector.

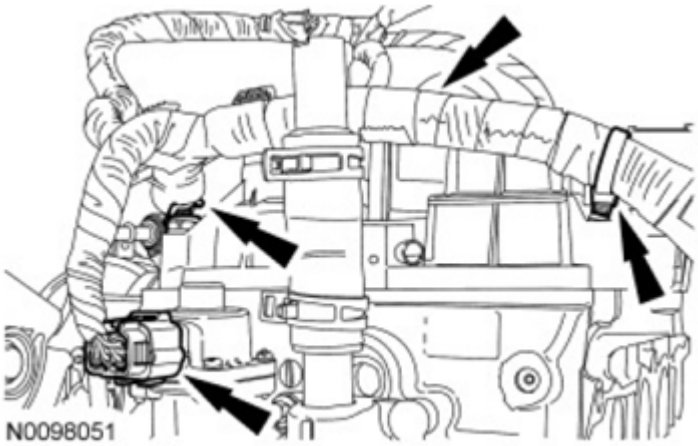

Fig. 429: Locating EGR Valve Electrical Connector And Wiring Harness Retainers
Courtesy of FORD MOTOR CO.

105. Connect the **CHT** sensor and install the rubber boot.

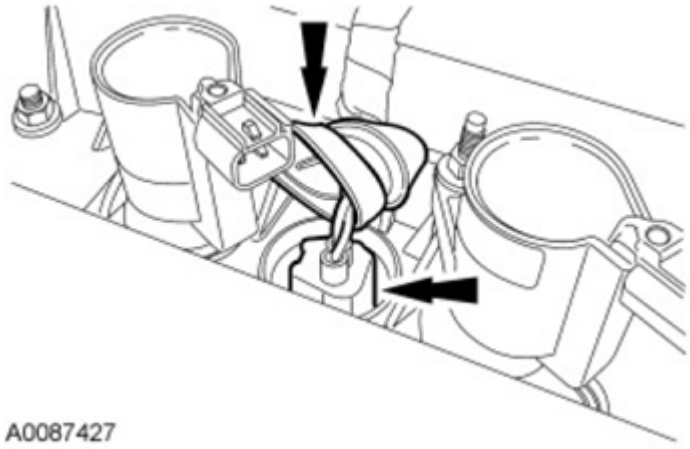

Fig. 430: Locating CHT Sensor And Rubber Boot
Courtesy of FORD MOTOR CO.

106. Connect the 4 coil-on-plug electrical connectors.

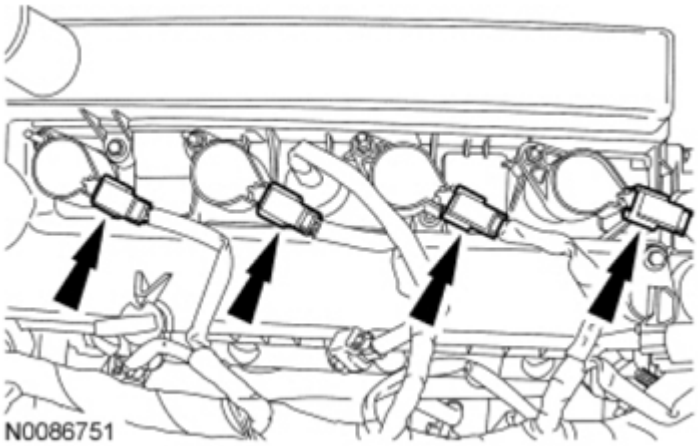

Fig. 431: Locating Coil-On-Plug Electrical Connectors
Courtesy of FORD MOTOR CO.

NOTE: **Use O-ring seals that are made of special fuel-resistant material. Use of ordinary O-rings can cause the fuel system to leak. Do not reuse the O-ring seals.**

107. Install new fuel injector O-rings.
    - Separate the fuel injectors from the fuel rail.
    - Remove and discard the fuel injector O-rings.
    - Install new O-rings and lubricate with clean engine oil.
    - Install the fuel injectors onto the fuel rail.

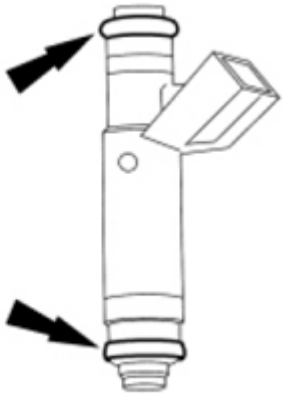

Fig. 432: Locating Fuel Injectors O-Rings
Courtesy of FORD MOTOR CO.

108. Install the fuel rail with the fuel injectors and stud bolts.
    - Tighten to 23 Nm (17 lb-ft).

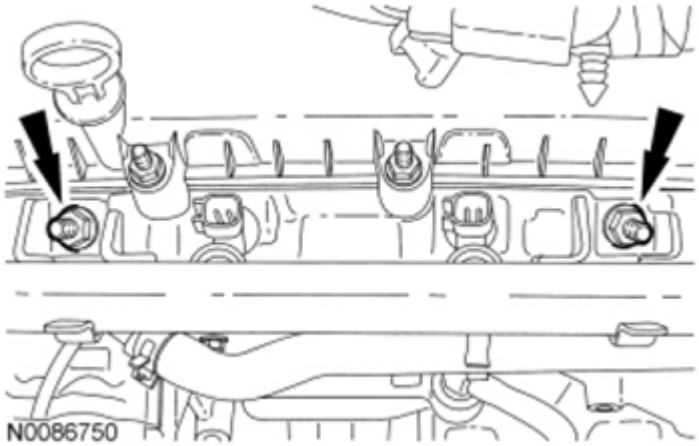

Fig. 433: Locating Fuel Rail Stud Bolts
Courtesy of FORD MOTOR CO.

109. Install the radio capacitor and the nut.
    - Tighten to 10 Nm (89 lb-in).

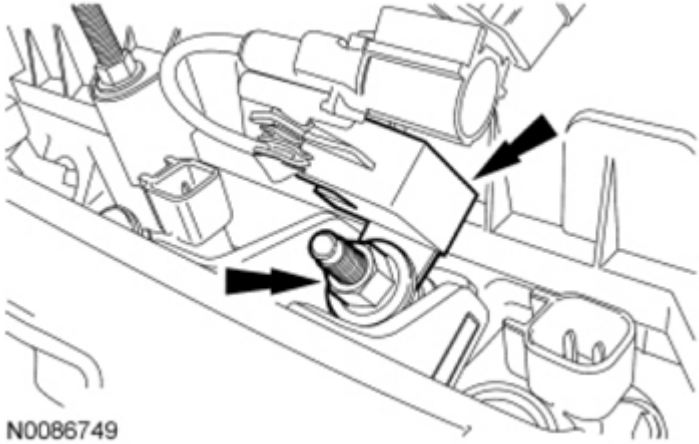

Fig. 434: Locating Radio Capacitor And Nut
Courtesy of FORD MOTOR CO.

110. Install the fuel rail insulator.

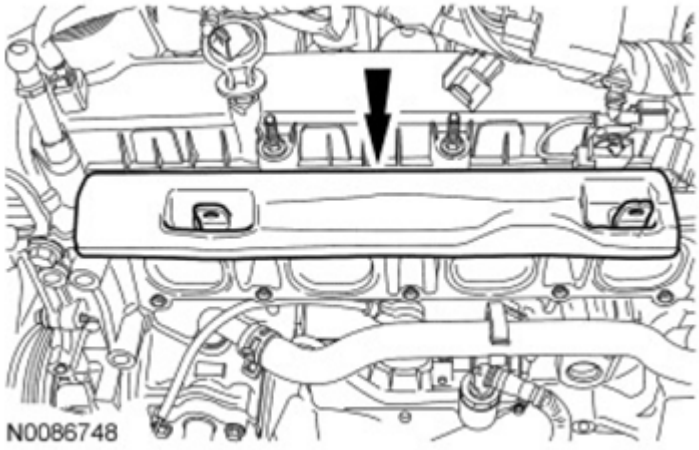

Fig. 435: Locating Fuel Rail Insulator
Courtesy of FORD MOTOR CO.

111. Position the high-voltage wiring harness and attach the 2 wiring harness retainers to the ignition coil stud bolts.

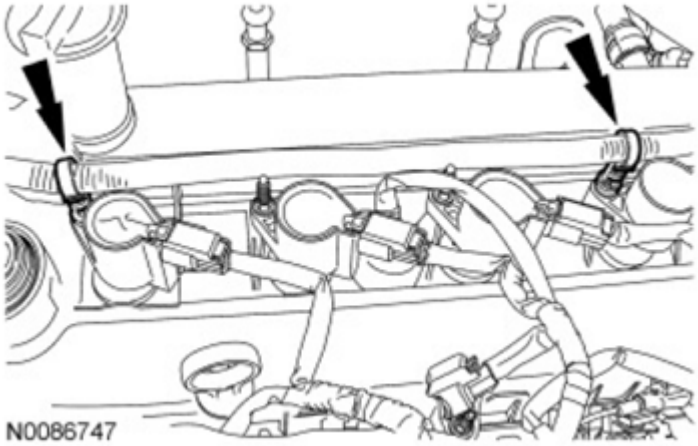

Fig. 436: Locating Wiring Harness Retainers
Courtesy of FORD MOTOR CO.

112. Connect the 4 fuel injector electrical connectors, radio capacitor electrical connector and the Camshaft Position (CMP) sensor electrical connector.

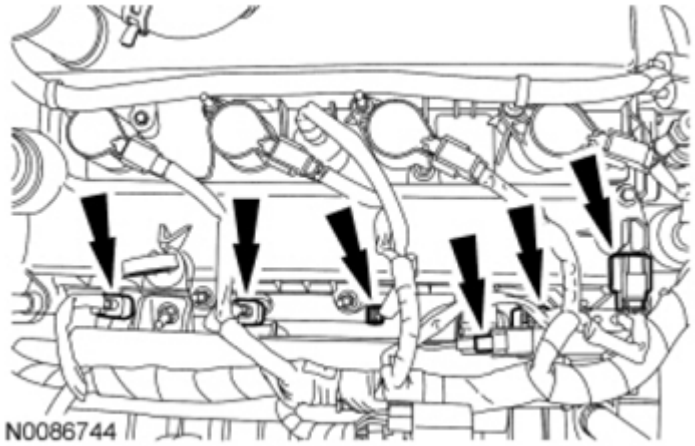

Fig. 437: Locating Fuel Injector Electrical Connectors, Radio Capacitor Electrical Connector And CMP Sensor Electrical Connector
Courtesy of FORD MOTOR CO.

113. Install the EGR tube.
    - Tighten to 55 Nm (41 lb-ft).

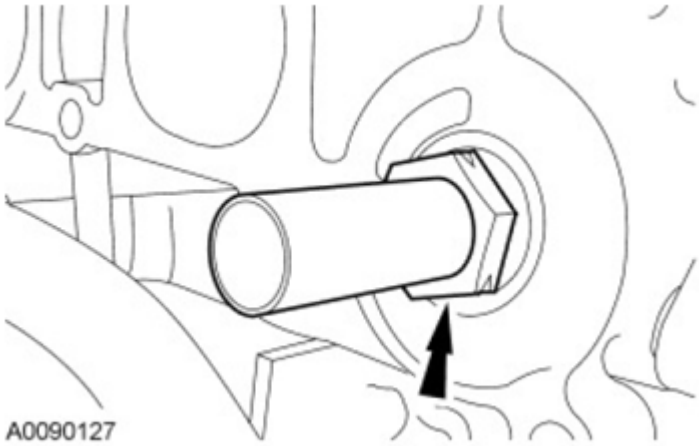

Fig. 438: Locating EGR Tube
Courtesy of FORD MOTOR CO.

NOTE: **If the engine is repaired or replaced because of upper engine failure, typically including valve or piston damage, check the intake manifold for metal debris. If metal debris is found, install a new intake manifold. Failure to follow these instructions can result in engine damage.**

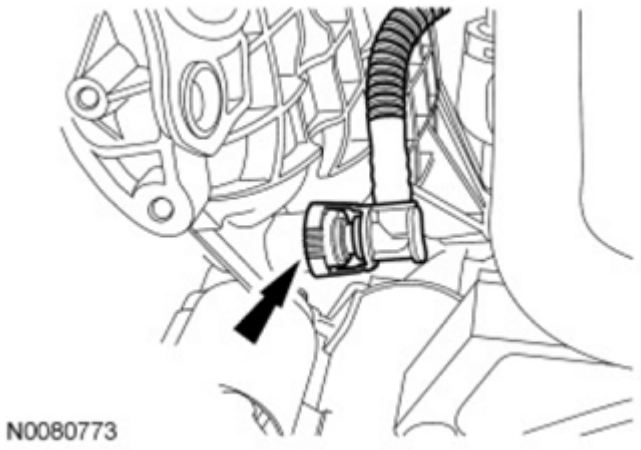

Fig. 439: Locating PCV Hose Connector Tabs
Courtesy of FORD MOTOR CO.

114. Position the intake manifold and connect the PCV hose.

NOTE: Inspect and install new intake manifold gaskets, if necessary.

NOTE: The cylinder head side of the intake manifold is showing bolt location.

115. Install the intake manifold gasket, intake manifold and 7 bolts.
    - Tighten to 18 Nm (159 lb-in).

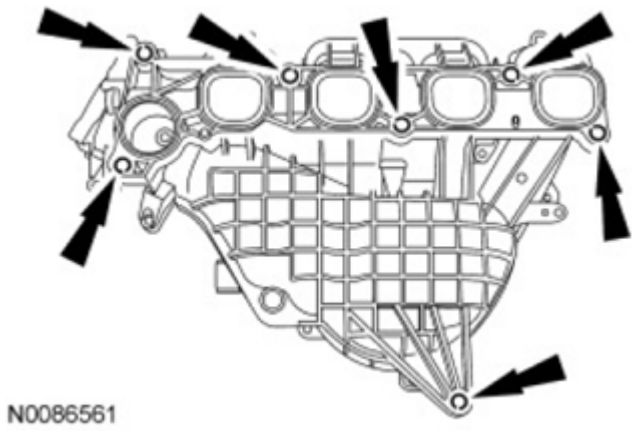

Fig. 440: Locating Intake Manifold Bolts
Courtesy of FORD MOTOR CO.

116. Attach the 3 wire harness pin-type retainers to the intake manifold.

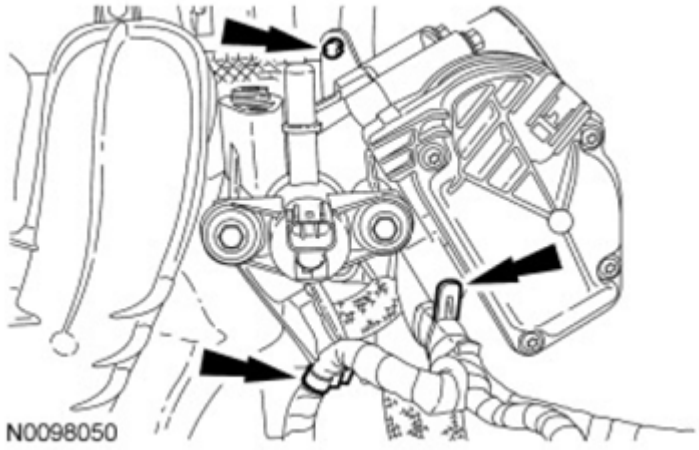

Fig. 441: Locating Wire Harness Pin-Type Retainers
Courtesy of FORD MOTOR CO.

117. Install the vacuum pump assembly, the nut and the 2 bolts.
    - Tighten to 25 Nm (18 lb-ft).

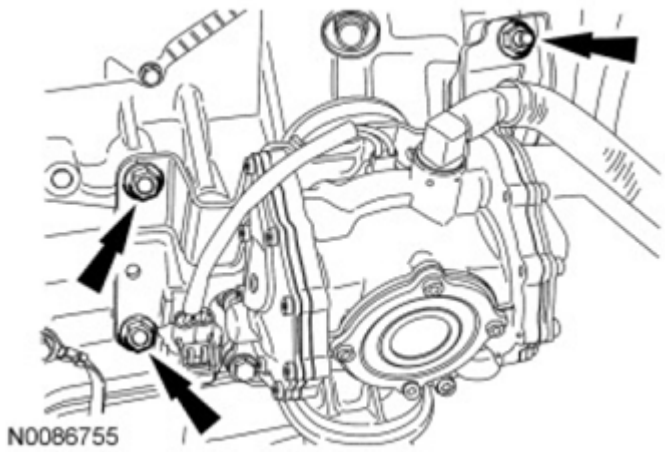

Fig. 442: Locating Bolts, Nut And Vacuum Pump Assembly
Courtesy of FORD MOTOR CO.

118. Connect the vacuum hose to the intake manifold.

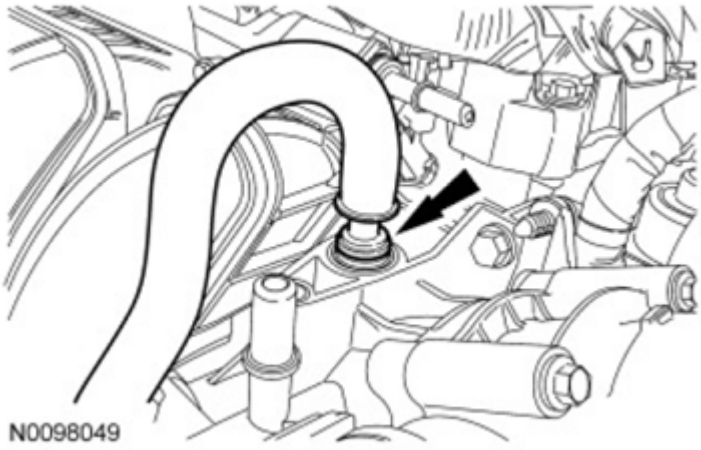

Fig. 443: Locating Vacuum Hose From Intake Manifold
Courtesy of FORD MOTOR CO.

119. Connect the EGR coolant hose and the auxiliary coolant pump hose.

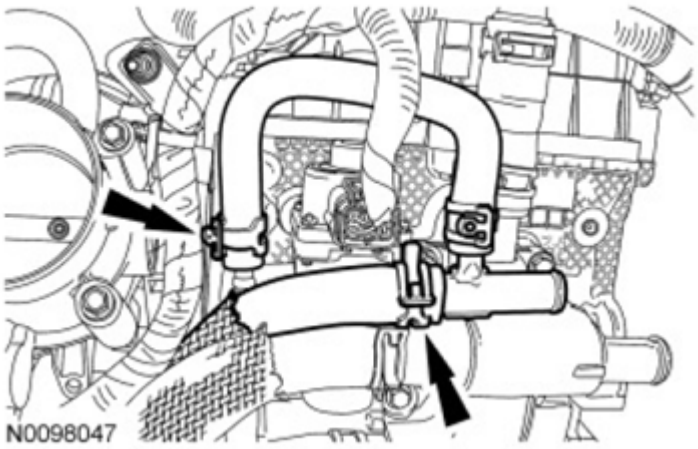

Fig. 444: Locating EGR Coolant Hose And Auxiliary Coolant Pump Hose
Courtesy of FORD MOTOR CO.

120. Connect the auxiliary coolant pump hose and the upper radiator hose.

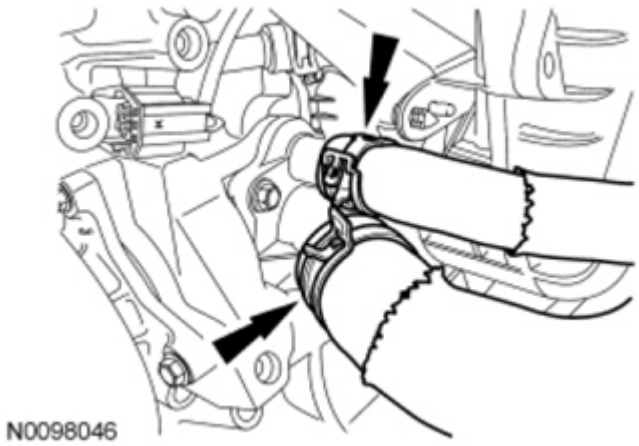

Fig. 445: Locating Auxiliary Coolant Pump Hose And Upper Radiator Hose
Courtesy of FORD MOTOR CO.

121. Attach the 2 wiring harness retainers to the fuel rail and the one to the valve cover.

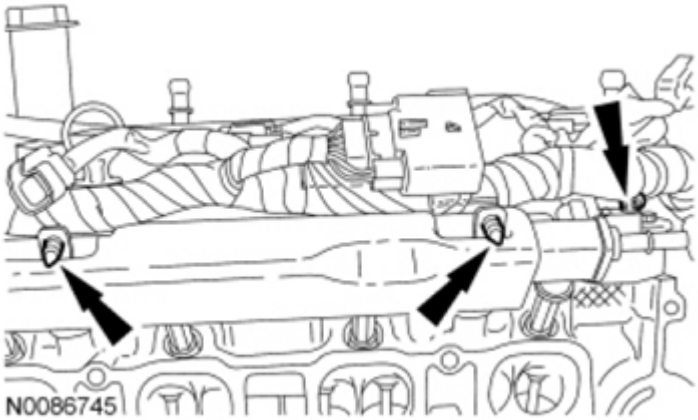

Fig. 446: Locating Wiring Harness Retainers
Courtesy of FORD MOTOR CO.

122. Connect the **VCT** electrical connector and attach the wiring harness retainer to the valve cover stud bolt.

Fig. 447: Locating VCT Oil Control Solenoid Electrical Connector And Wiring Harness Retainer
Courtesy of FORD MOTOR CO.

123. Install the A/C compressor bracket and 2 bolts.
    - Tighten to 48 Nm (35 lb-ft).

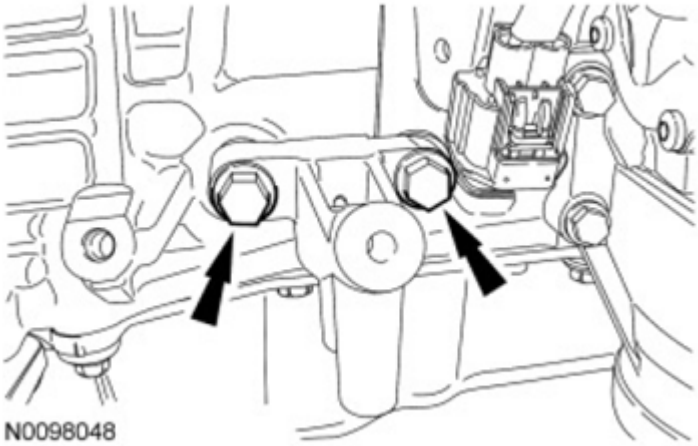

Fig. 448: Locating Bolts And A/C Compressor Bracket
Courtesy of FORD MOTOR CO.

124. Install the A/C compressor and the 3 bolts.
    - Tighten to 25 Nm (18 lb-ft).

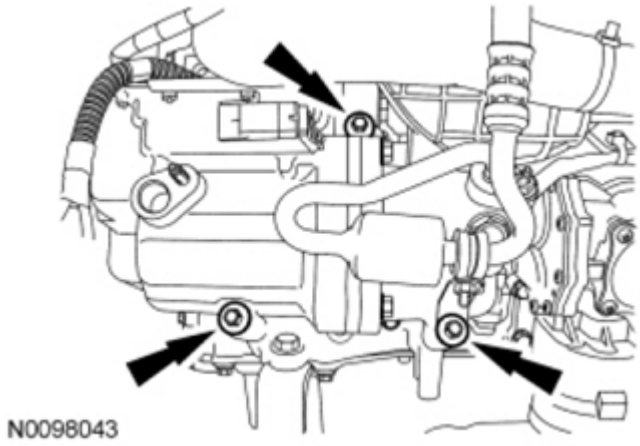

Fig. 449: Locating A/C Compressor Bolts
Courtesy of FORD MOTOR CO.

125. Connect the A/C compressor electrical connector.

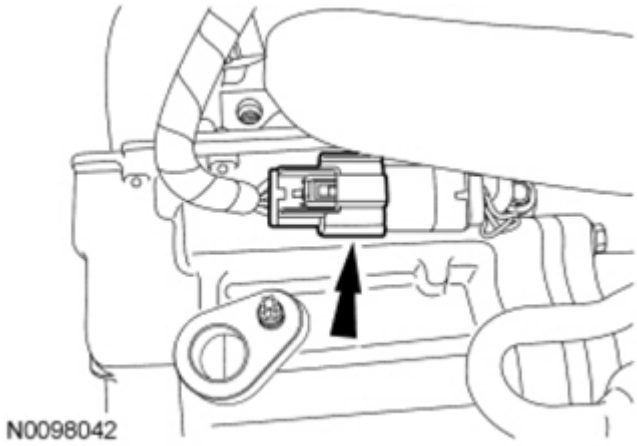

Fig. 450: Locating A/C Compressor Electrical Connector
Courtesy of FORD MOTOR CO.

126. Attach the pin-type retainer to the intake manifold and connect the KS electrical connector.

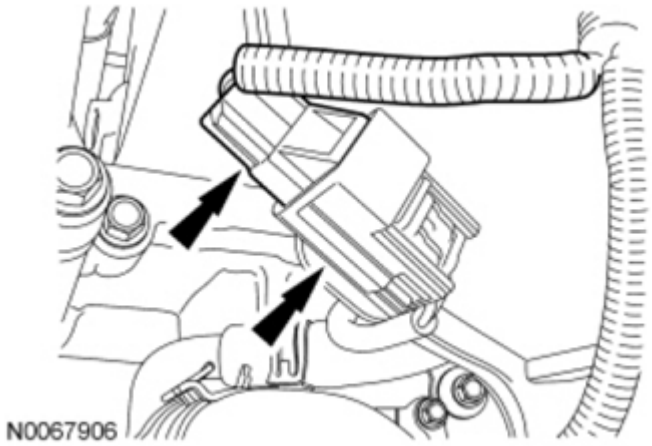

Fig. 451: Locating Knock Sensor Electrical Connector And Electrical Connector Pin-Type Retainer
Courtesy of FORD MOTOR CO.

127. Connect the Manifold Absolute Pressure (MAP) sensor electrical connector.

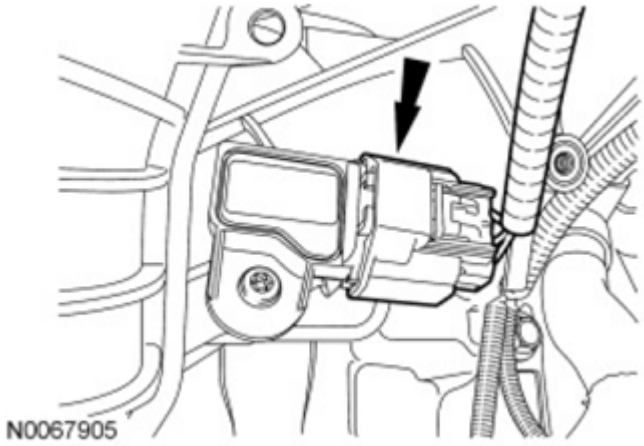

Fig. 452: Locating Manifold Absolute Pressure Sensor Electrical Connector
Courtesy of FORD MOTOR CO.

128. Connect the Engine Oil Pressure (EOP) switch electrical connector.

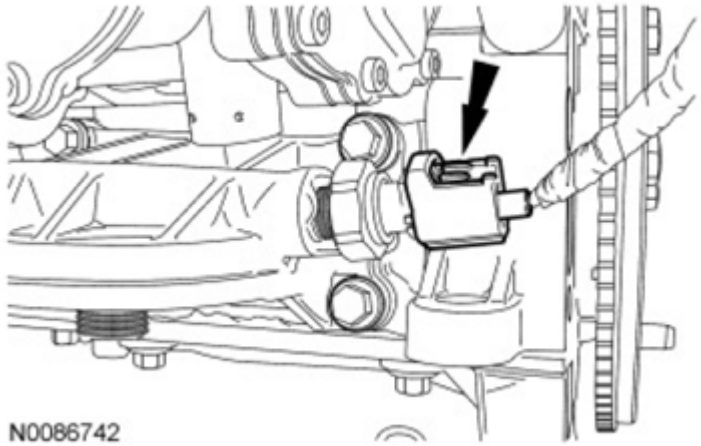

Fig. 453: Locating Engine Oil Pressure (EOP) Switch Electrical Connector
Courtesy of FORD MOTOR CO.

129. Connect the Evaporative Emission (EVAP) canister purge valve electrical connector.

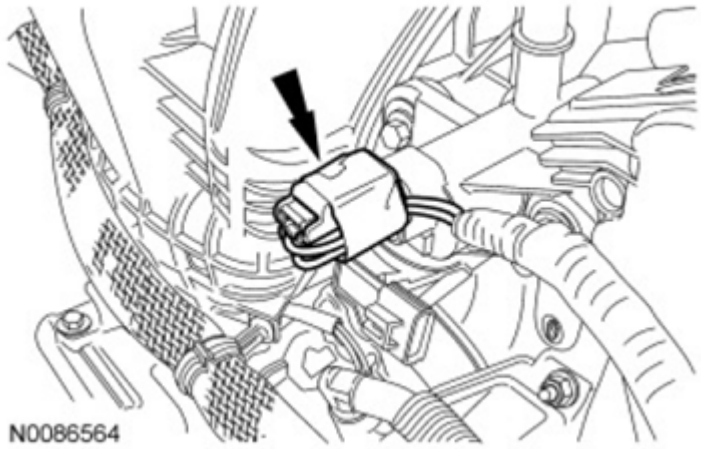

Fig. 454: Locating Evaporative Emission Canister Purge Valve Electrical Connector
Courtesy of FORD MOTOR CO.

130. Connect the electronic throttle control electrical connector.

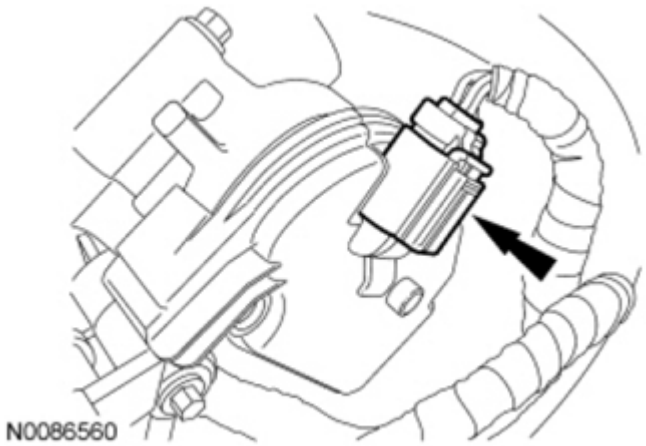

Fig. 455: Locating Electronic Throttle Control Electrical Connector
Courtesy of FORD MOTOR CO.

131. Install the accessory drive belt tensioner.
    - Tighten to 25 Nm (18 lb-ft).

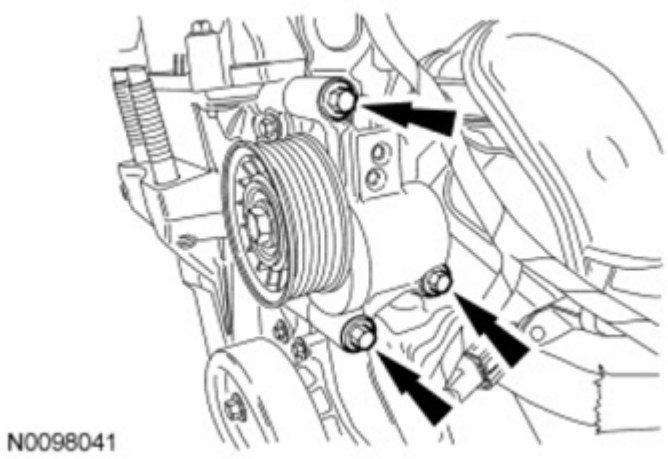

Fig. 456: Locating Bolts And Accessory Drive Belt Tensioner
Courtesy of FORD MOTOR CO.

132. Attach the vehicle high-voltage electrical system electrical connector retainer to the accessory drive belt tensioner.

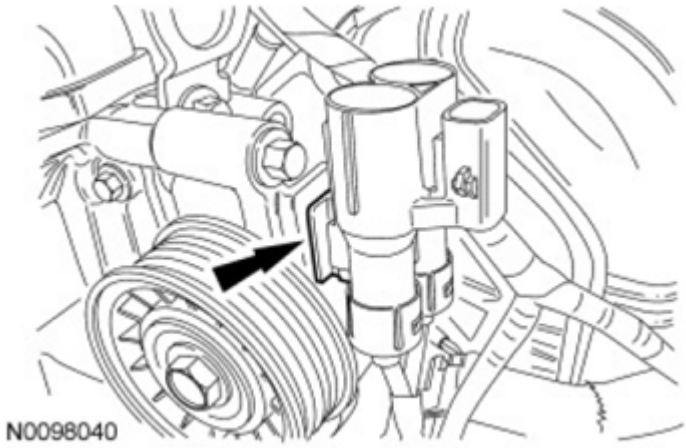

Fig. 457: Locating Vehicle High-Voltage Electrical System Electrical Connector
Courtesy of FORD MOTOR CO.

133. Rotate the accessory drive belt tensioner counterclockwise and install the accessory drive belt.

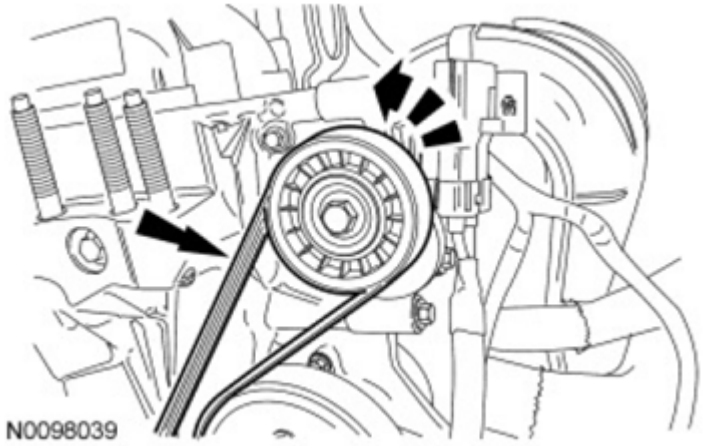

Fig. 458: Rotating Accessory Drive Belt Tensioner Counterclockwise
Courtesy of FORD MOTOR CO.

134. Install 7 new exhaust manifold studs in the cylinder head.
    - Tighten to 17 Nm (150 lb-in).

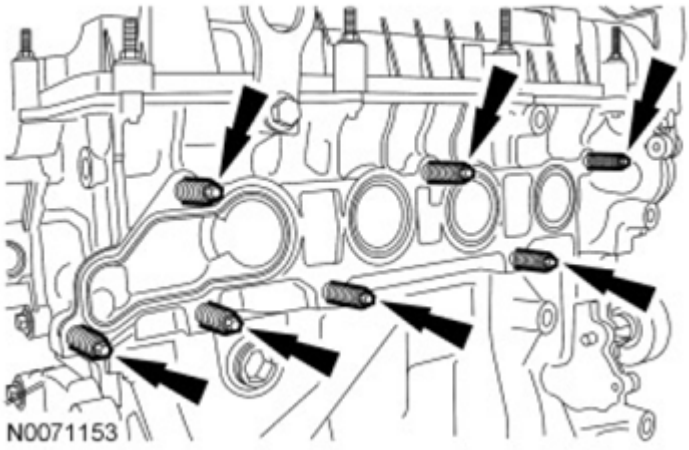

Fig. 459: Locating Exhaust Manifold Studs
Courtesy of FORD MOTOR CO.

135. Install the new exhaust manifold gasket on the engine.

NOTE: **Failure to tighten the catalytic converter nuts to specification before installing the converter bracket bolts will cause the converter to develop an exhaust leak.**

NOTE: **Failure to tighten the catalytic converter nuts to specification a second time will cause the converter to develop an exhaust leak.**

136. Position the catalytic converter and tighten the 7 new nuts in the sequence shown in illustration in 2 stages:
    - Stage 1: Tighten to 48 Nm (35 lb-ft).
    - Stage 2: Tighten to 48 Nm (35 lb-ft).

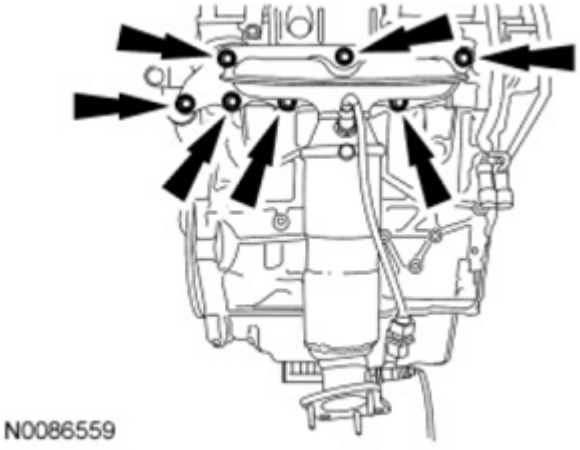

Fig. 460: Locating Catalytic Converter Manifold Nuts

Courtesy of FORD MOTOR CO.

137. Attach the 2 wiring harness pin-type retainers.

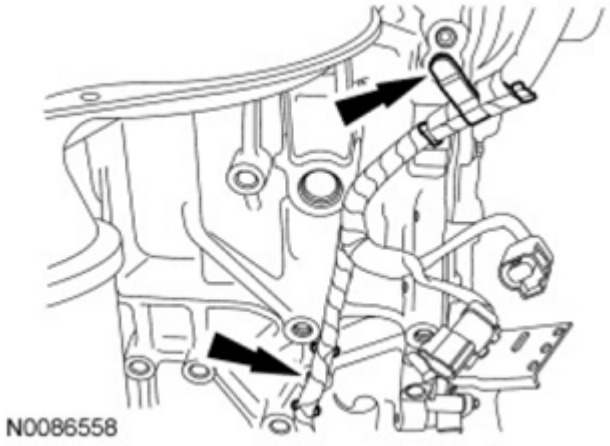

Fig. 461: Locating Engine Wiring Harness Pin-Type Retainers
Courtesy of FORD MOTOR CO.

138. Install the engine wiring harness connector bracket.
    - Tighten to 15 Nm (133 lb-in).

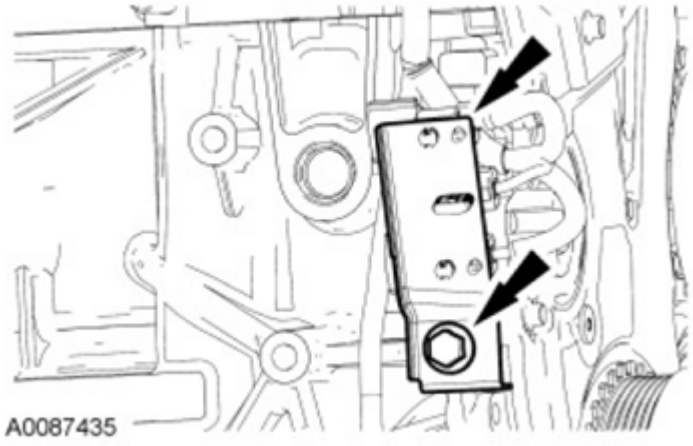

Fig. 462: Locating Bolt And Engine Wiring Harness Connector Bracket
Courtesy of FORD MOTOR CO.

139. Connect the Crankshaft Position (CKP) sensor electrical connector.

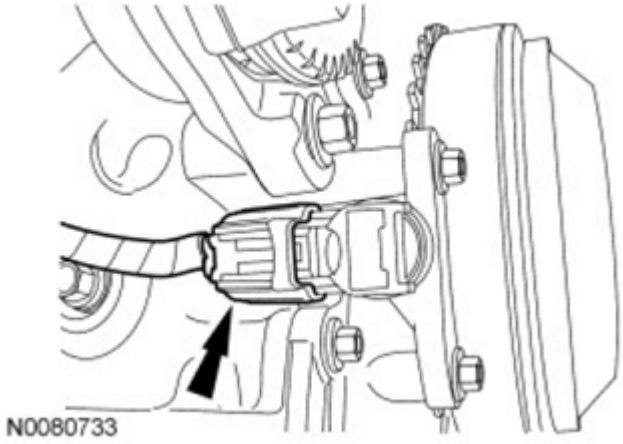

Fig. 463: Locating Crankshaft Position Sensor Electrical Connector
Courtesy of FORD MOTOR CO.

140. Connect the Catalyst Monitor Sensor (CMS) electrical connector.

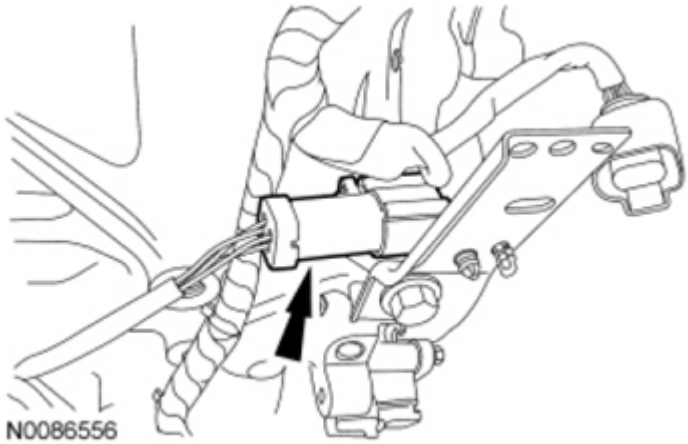

Fig. 464: Locating Catalyst Monitor Sensor Electrical Connector
Courtesy of FORD MOTOR CO.

141. Connect the Heated Oxygen Sensor (HO2S) connector. Attach the connector to the engine wiring harness connector bracket.

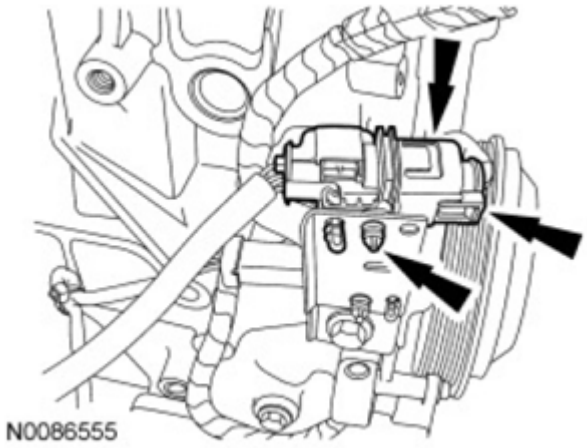

Fig. 465: Locating Locking Tab And Heated Oxygen Sensor Electrical Connector
Courtesy of FORD MOTOR CO.

142. Using the Floor Crane and the Spreader Bar, remove the engine from the engine stand.

NOTE: Special bolts are used for installation. Do not use standard bolts.

143. Install the flywheel and the bolts. Tighten the bolts in the sequence shown in illustration in the following 3 stages:
   - Stage 1: Tighten to 50 Nm (37 lb-ft).
   - Stage 2: Tighten to 80 Nm (59 lb-ft).
   - Stage 3: Tighten to 112 Nm (83 lb-ft).

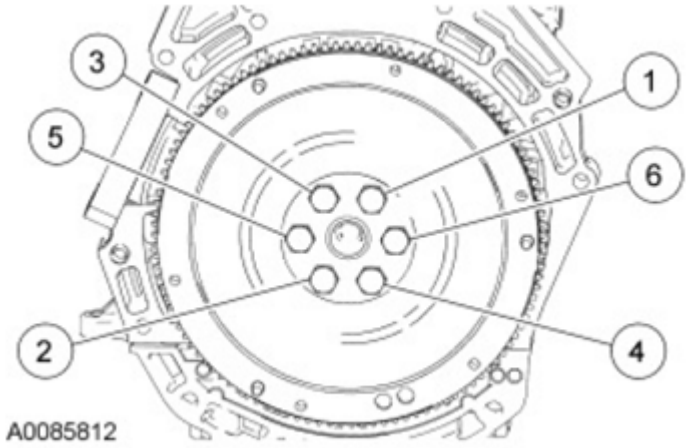

Fig. 466: Identifying Flywheel Bolts Tightening Sequence
Courtesy of FORD MOTOR CO.

INSTALLATION

ENGINE

Special Tool(s)

SPECIAL TOOLS

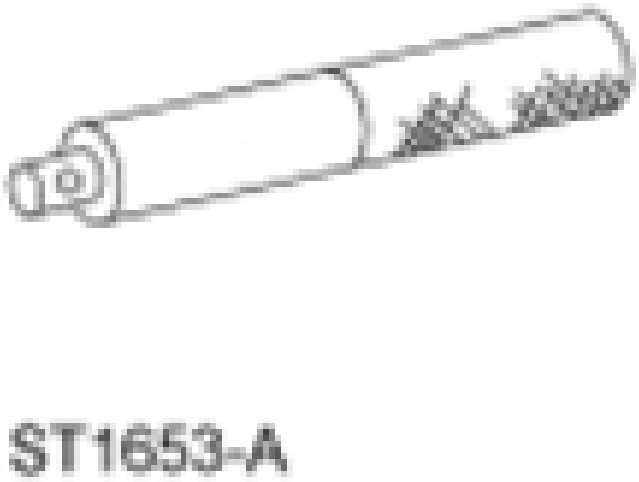	Handle 205-153 (T80T-4000-W)
	2,200# Floor Crane, Fold Away 300-OTC1819E or equivalent
	Installer, PTO Driven Gear Oil Seal 308-429

	
	Powertrain Lift 014-00765 or equivalent
	Spreader Bar 303-D089 (D93P-6001-A3) or equivalent

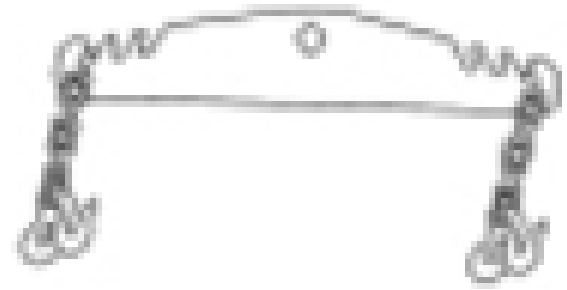 ST1602-A	
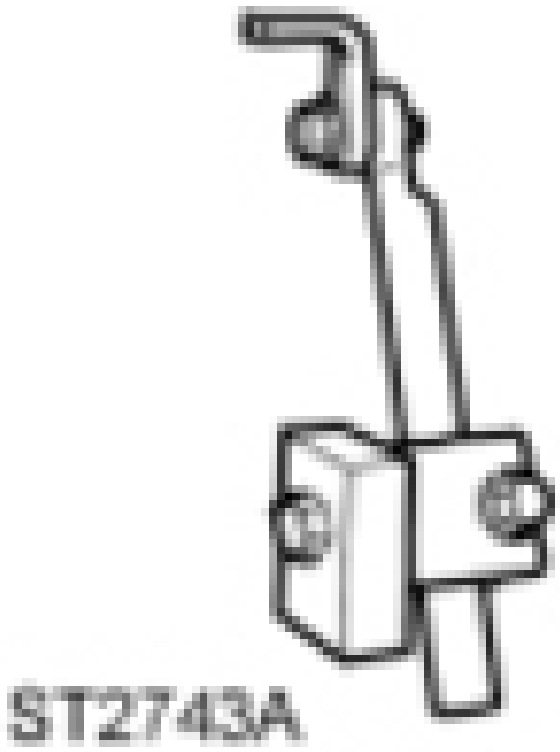 ST2743A	Adjustable Grip Arm, 1735A 014-00001 or equivalent

Material Specifications

MATERIAL SPECIFICATIONS

Item	Specification
Motorcraft® SAE 5W-20 Premium Synthetic Blend Motor Oil (US); Motorcraft® SAE 5W-20 Super Premium Motor Oil (Canada) XO-5W20-QSP (US); CXO-5W20-LSP12 (Canada)	WSS-M2C945-A

WARNING: Do not smoke, carry lighted tobacco or have an open flame of any type when working on or near any fuel-related component. Highly flammable mixtures are always present and may be ignited. Failure to follow these instructions may result in serious personal injury.

All vehicles

NOTE: Due to packaging requirements, the correct bolt must be used at the damper locations.

NOTE: The damper contains a clutch which is designed to slip briefly during vehicle operation. It is essential that no grease, oil or cleaning solvents be allowed to contaminate the slip clutch. Do not use grease on transmission input shaft. Should the damper become contaminated, it must be replaced.

1. Install the transaxle damper.
   - Tighten to 29 Nm (21 lb-ft).

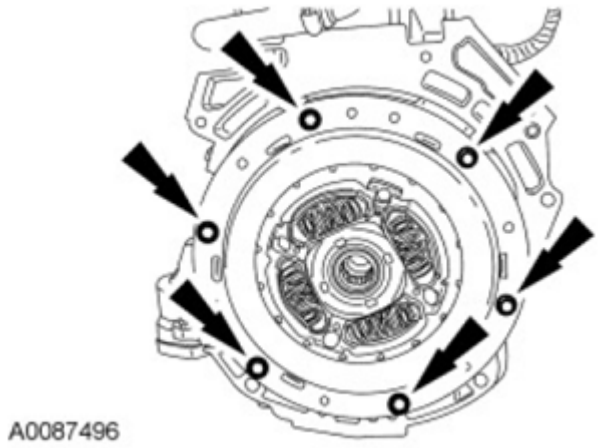

Fig. 467: Locating Transaxle Damper Bolts
Courtesy of FORD MOTOR CO.

NOTE: When positioning the engine to the transaxle, care must be taken to maintain alignment of the damper spline with the transaxle input shaft.

NOTE: Transaxle removed from view for clarity.

2. Using the Floor Crane and Spreader Bar, position the engine and transaxle together. Install the 6 transaxle-to-engine bolts.
   - Tighten to 48 Nm (35 lb-ft).

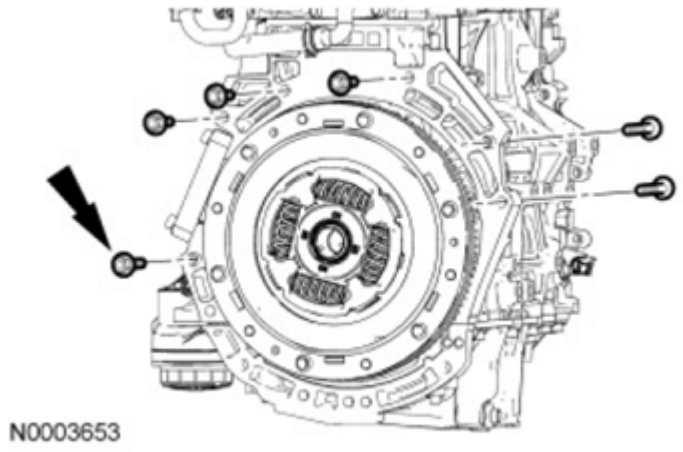

Fig. 468: Locating Engine Transaxle Bolts
Courtesy of FORD MOTOR CO.

3. Connect the high-voltage wiring harness electrical connector.
   - Engage the electrical connector locking tab.

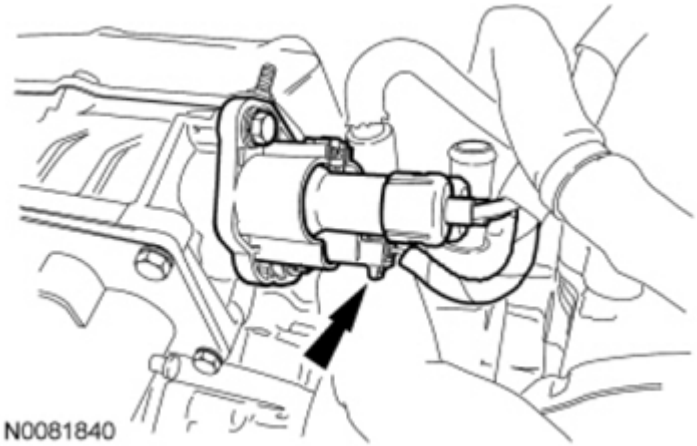

Fig. 469: Locating High Voltage Wiring Harness Electrical Connector
Courtesy of FORD MOTOR CO.

4. Using the Floor Crane and Spreader Bar, position the engine and transaxle onto the Powertrain Lift.

NOTE: **Due to the weight of the transaxle, special care should be taken to mount the powertrain securely to the Powertrain Lift.**

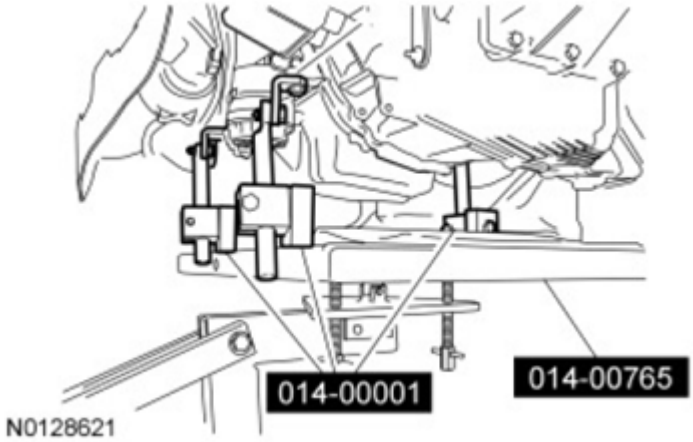

Fig. 470: Lifting Engine To Powertrain Using Powertrain Lift And Adjustable Grip Arm
Courtesy of FORD MOTOR CO.

5. Using the Adjustable Grip Arm, secure the engine to the Powertrain Lift.
6. Raise the engine and transaxle into the vehicle.
7. Install the upper transaxle insulator.
    1. Tighten the nuts to 90 Nm (66 lb-ft).
    2. Tighten the through bolt to 103 Nm (76 lb-ft).

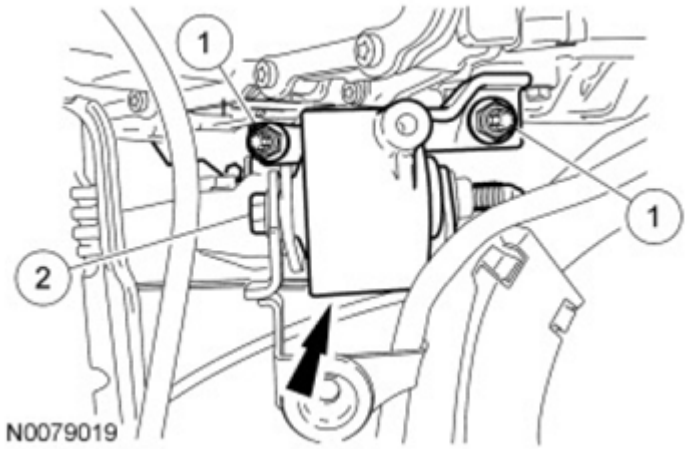

Fig. 471: Locating Upper Insulator Nuts
Courtesy of FORD MOTOR CO.

8. Install the upper transaxle insulator bracket.
    - Tighten to 25 Nm (18 lb-ft).

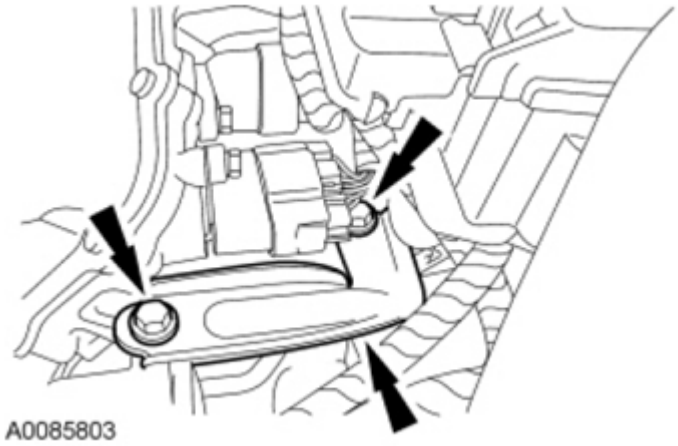

Fig. 472: Locating Upper Transaxle Insulator Bracket Bolts
Courtesy of FORD MOTOR CO.

9. Install the 3 engine mount bracket nuts.
    - Tighten to 115 Nm (85 lb-ft).

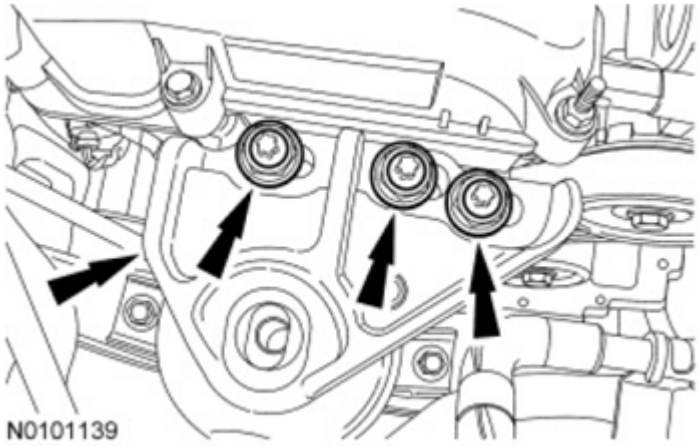

Fig. 473: Locating Nuts And Engine Mount Bracket
Courtesy of FORD MOTOR CO.

10. Install the engine mount bracket bolt.
    - Tighten to 115 Nm (85 lb-ft).

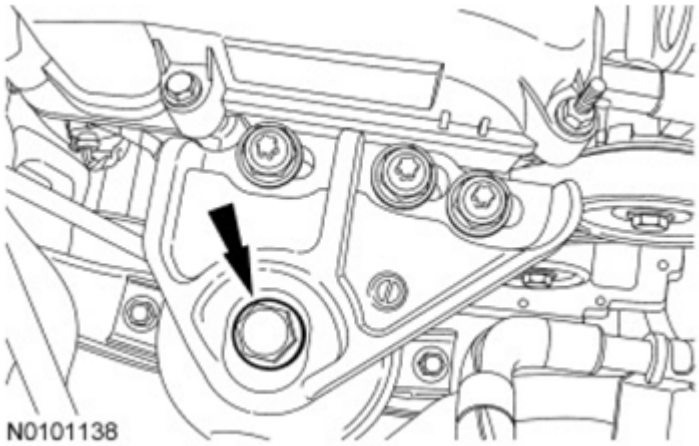

Fig. 474: Locating Engine Mount Bracket Bolt
Courtesy of FORD MOTOR CO.

11. Using the Powertrain Lift, raise the subframe into position.

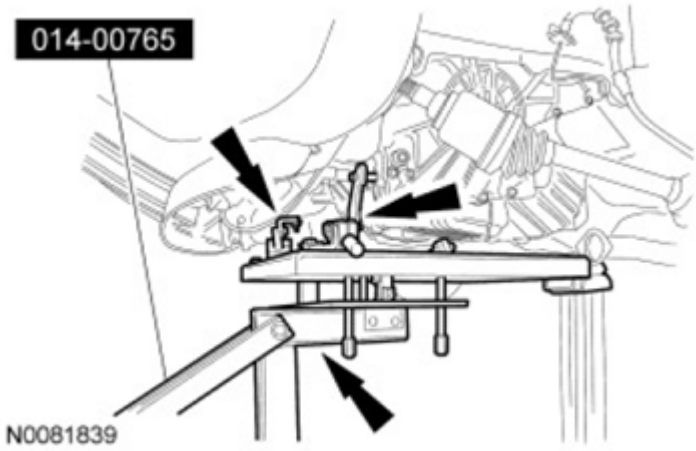

Fig. 475: Raising Subframe Into Position Using The Powertrain Lift
Courtesy of FORD MOTOR CO.

NOTE: RH shown in illustration, LH similar.

12. Install the 2 subframe nuts.
    - Tighten to 150 Nm (111 lb-ft).

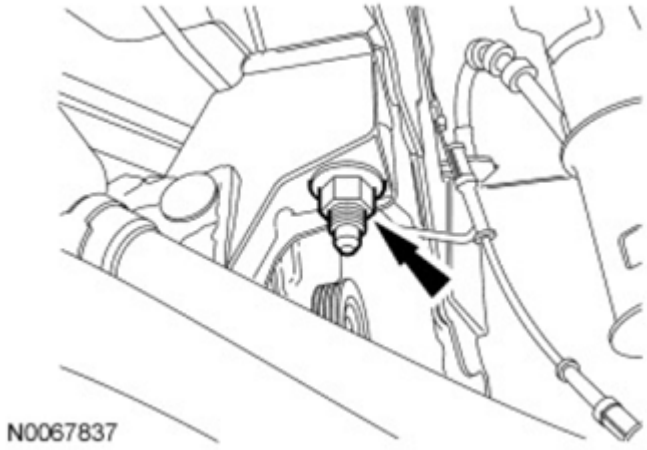

Fig. 476: Locating Lower Subframe Nut
Courtesy of FORD MOTOR CO.

NOTE: When installing the subframe bolts, make sure both of the subframe bolts are fully engaged in their cage nuts before tightening to specification.

NOTE: RH shown in illustration, LH similar.

13. Tighten the 2 subframe bolts.
    - Tighten to 175 Nm (129 lb-ft).

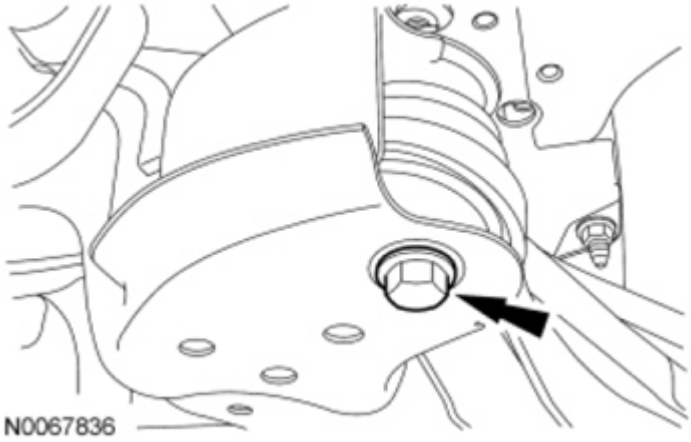

Fig. 477: Locating Subframe Bolts
Courtesy of FORD MOTOR CO.

14. Install the rear roll restrictor, bracket and bolts.
    - Tighten to 90 Nm (66 lb-ft).

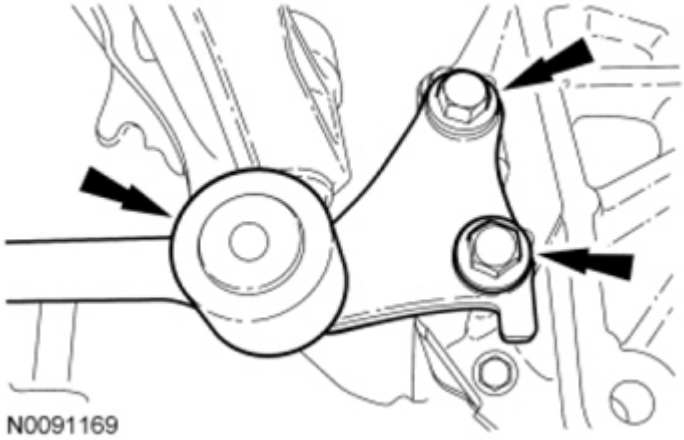

Fig. 478: Locating Bolts, Roll Restrictor And Bracket
Courtesy of FORD MOTOR CO.

15. Connect the steering column coupling to the steering gear and install the new steering column coupling pinch bolt.
    - Tighten to 63 Nm (46 lb-ft).

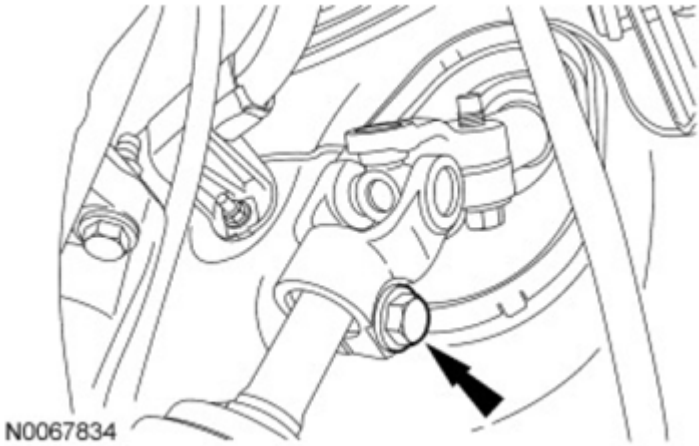

Fig. 479: Locating Steering Column Coupling Pinch Bolt
Courtesy of FORD MOTOR CO.

16. Install the rear transaxle insulator through bolt.
    - Tighten to 115 Nm (85 lb-ft).

Fig. 480: Locating Rear Transaxle Insulator Through Bolt
Courtesy of FORD MOTOR CO.

17. Install the 2 transaxle-to-engine bolts.
    - Tighten to 48 Nm (35 lb-ft).

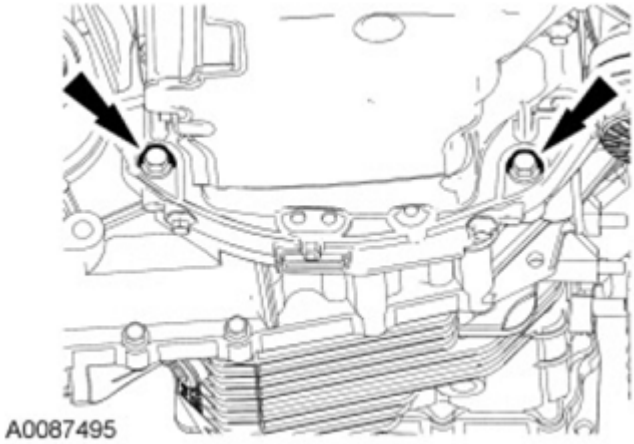

Fig. 481: Locating Transaxle-To-Engine Bolts
Courtesy of FORD MOTOR CO.

18. Install the 2 transaxle-to-engine bolts.
    - Tighten to 48 Nm (35 lb-ft).

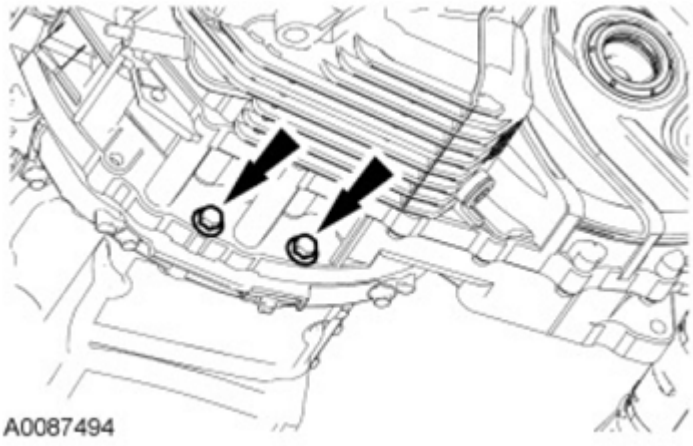

Fig. 482: Locating Transaxle-To-Engine Bolts
Courtesy of FORD MOTOR CO.

19. Install the engine support crossmember.
    - Tighten the bolts to 90 Nm (66 lb-ft).
    - Tighten the new nut to 175 Nm (129 lb-ft).

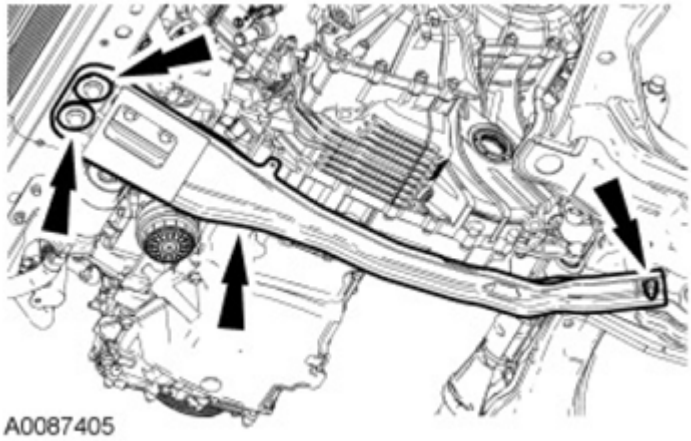

Fig. 483: Locating Engine Support Crossmember Nut And Bolts
Courtesy of FORD MOTOR CO.

20. Install the rear roll restrictor-to-crossmember through bolt.
    - Tighten to 90 Nm (66 lb-ft).

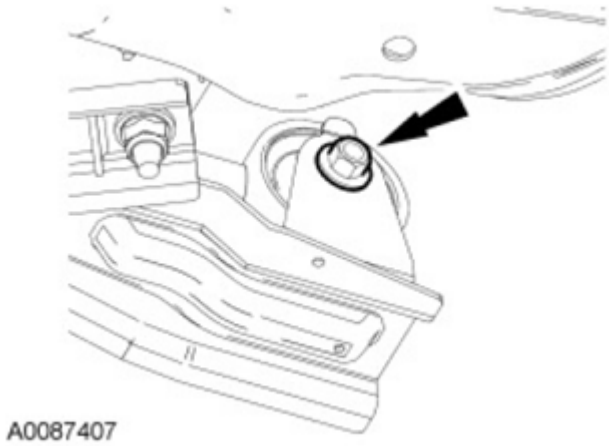

Fig. 484: Locating Rear Roll Restrictor-To-Crossmember Bolt
Courtesy of FORD MOTOR CO.

21. Install the lower transaxle insulator through bolt.
    - Tighten to 115 Nm (85 lb-ft).

Fig. 485: Locating Lower Transaxle Insulator Through Bolt
Courtesy of FORD MOTOR CO.

22. Connect the lower radiator hose to the radiator.
    - Install the retaining clip.

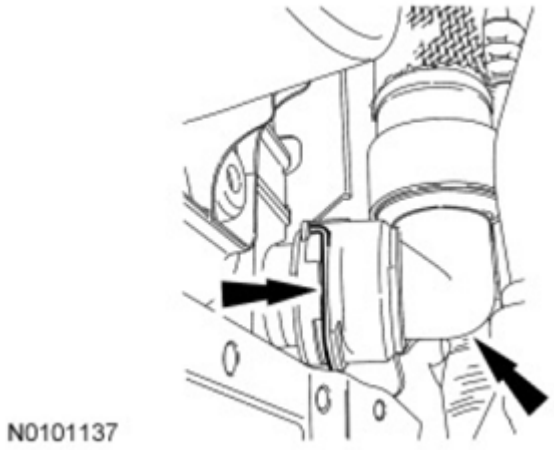

Fig. 486: Locating Lower Radiator Hose
Courtesy of FORD MOTOR CO.

23. Install the auxiliary coolant pump and the 2 bolts.
    - Connect the auxiliary coolant pump electrical connector.
    - Tighten to 10 Nm (89 lb-in).

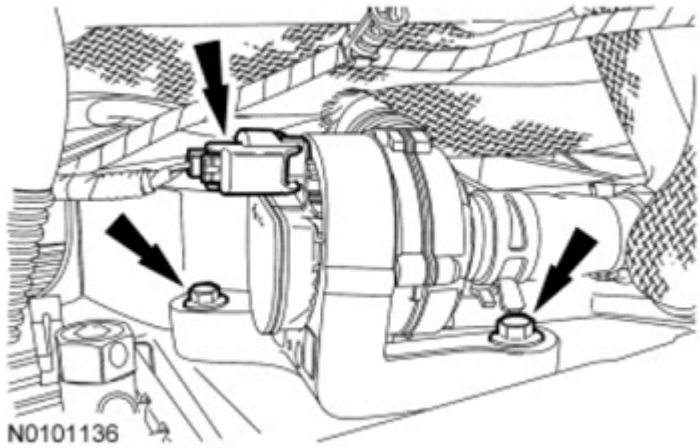

Fig. 487: Locating Bolts And Auxiliary Coolant Pump Electrical Connector
Courtesy of FORD MOTOR CO.

24. Install a new gasket and connect the A/C tube to the A/C compressor.
    - Install the nut.
    - Tighten to 15 Nm (133 lb-in).

Fig. 488: Locating Nut And A/C Tube
Courtesy of FORD MOTOR CO.

25. Install a new gasket and connect the A/C tube to the A/C compressor.
    - Install the nut.
    - Tighten to 15 Nm (133 lb-in).

Fig. 489: Locating Nut And A/C Tube
Courtesy of FORD MOTOR CO.

26. Install the Motor Electronics Cooling System (MECS) pump and the 2 bolts.
    - Tighten to 20 Nm (177 lb-in).

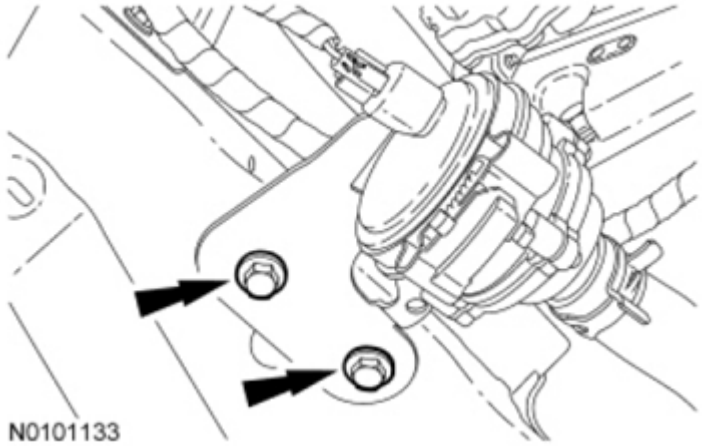

Fig. 490: Locating MECS Pump Bolts
Courtesy of FORD MOTOR CO.

27. Connect the vacuum pump electrical connector and attach the harness retainer.

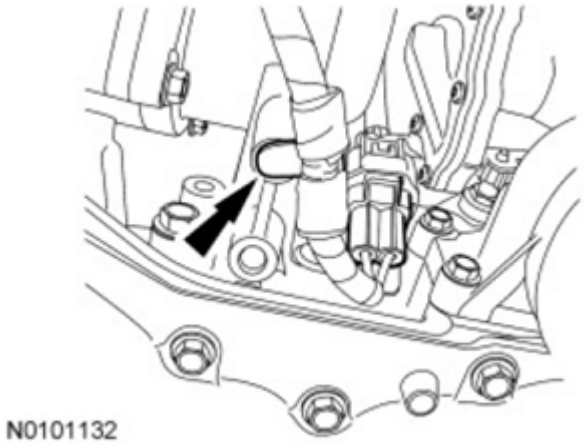

Fig. 491: Locating Vacuum Pump Assembly Electrical Connector
Courtesy of FORD MOTOR CO.

28. Install the wiring harness fasteners, the ground cable and nut.
    - Tighten to 20 Nm (177 lb-in).

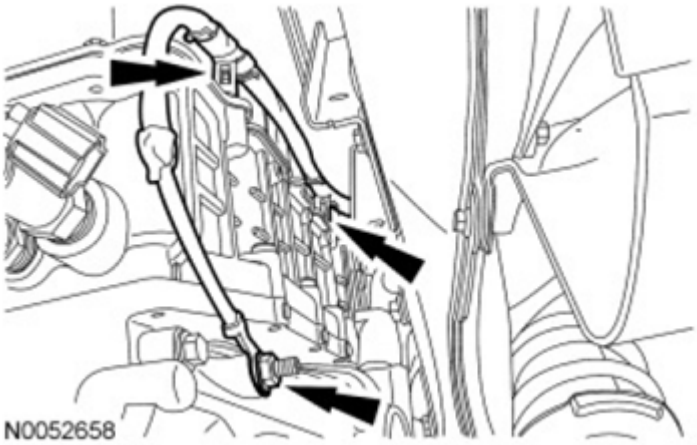

Fig. 492: Locating Harness Fasteners, Nut And Ground Cable
Courtesy of FORD MOTOR CO.

29. Connect the transaxle control cable.
    - Install the transaxle control cable bracket and the 2 nuts finger-tight.
    - Attach the transaxle control cable to the control lever.

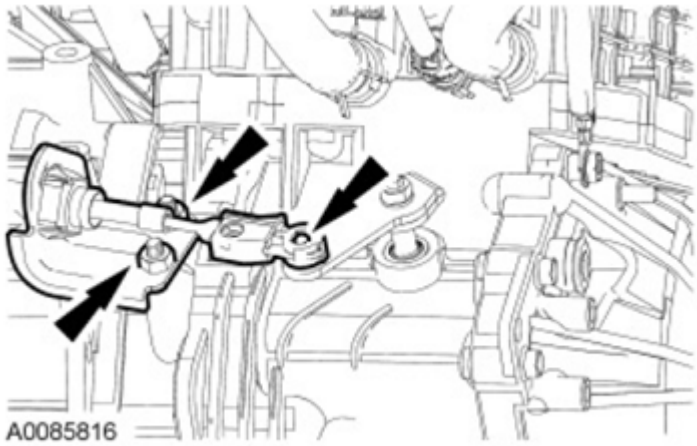

Fig. 493: Locating Transaxle Control Cable And Nuts
Courtesy of FORD MOTOR CO.

30. Position the control lever between the 2 casting ribs on the transaxle case.

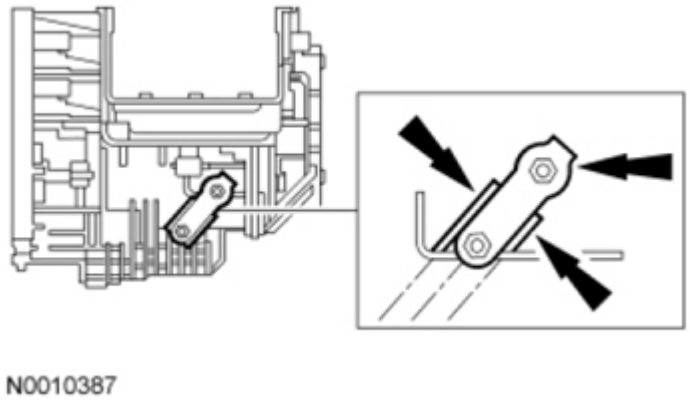

Fig. 494: Locating Control Lever Position
Courtesy of FORD MOTOR CO.

31. Place the gear selector lever in the D position.
32. Tighten the transaxle control cable bracket nuts.
    - Tighten to 22 Nm (16 lb-ft).
33. To verify the correct cable adjustment, observe the control lever on the transaxle while an assistant shifts the gear selector lever to each range position ending in the D position.
34. Install the transaxle control snow shield and the 2 bolts.
    - Tighten to 22 Nm (16 lb-ft).

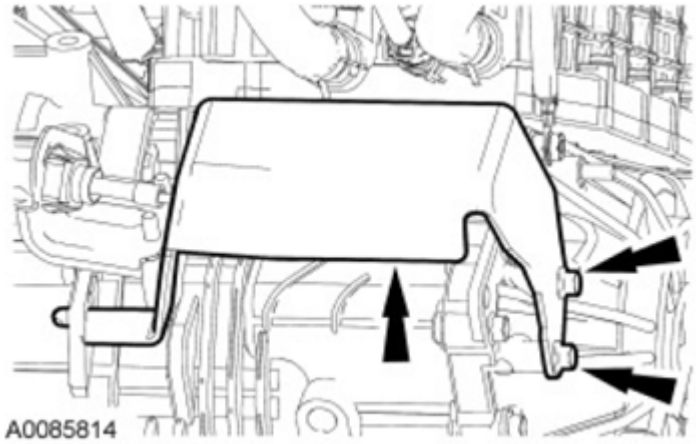

Fig. 495: Locating Bolts And Transaxle Control Snow Shield
Courtesy of FORD MOTOR CO.

35. Attach the transaxle selector lever cable fastener to the A/C compressor mounting bracket.

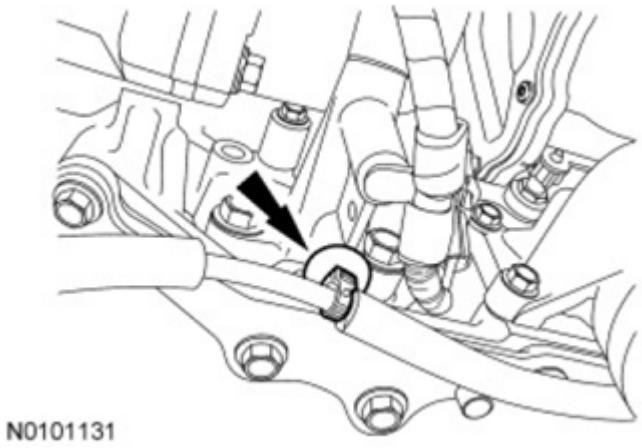

Fig. 496: Locating Transaxle Selector Lever Cable Fastener
Courtesy of FORD MOTOR CO.

36. Attach the transaxle selector lever cable fastener to the engine front cover stud bolt.

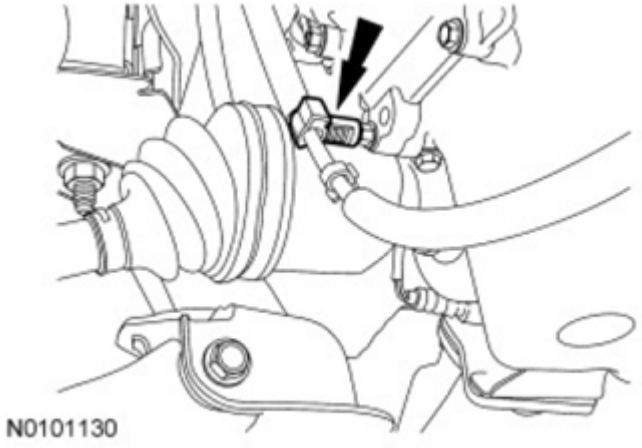

Fig. 497: Locating Transaxle Selector Lever Cable Fastener
Courtesy of FORD MOTOR CO.

37. Connect the transaxle coolant hoses.

Fig. 498: Locating Transaxle Coolant Hoses
Courtesy of FORD MOTOR CO.

38. Connect the transaxle coolant temperature sensor electrical connector.
    - Attach the wiring retainer to the transaxle stud bolt.

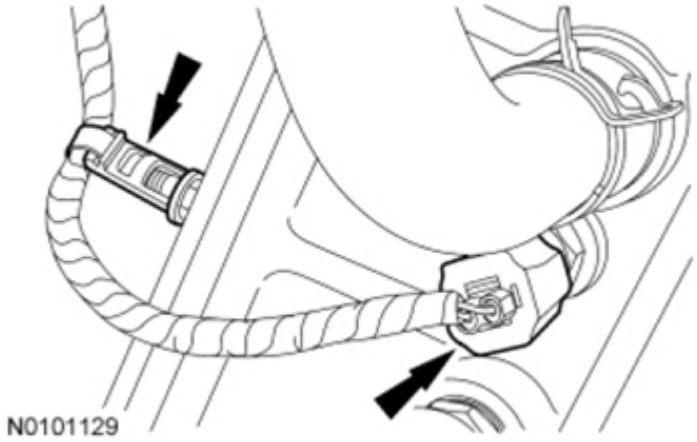

Fig. 499: Locating Transaxle Coolant Temperature Sensor Electrical Connector
Courtesy of FORD MOTOR CO.

39. Attach the 2 high-voltage electrical system wiring retainers to the valve cover stud bolts.

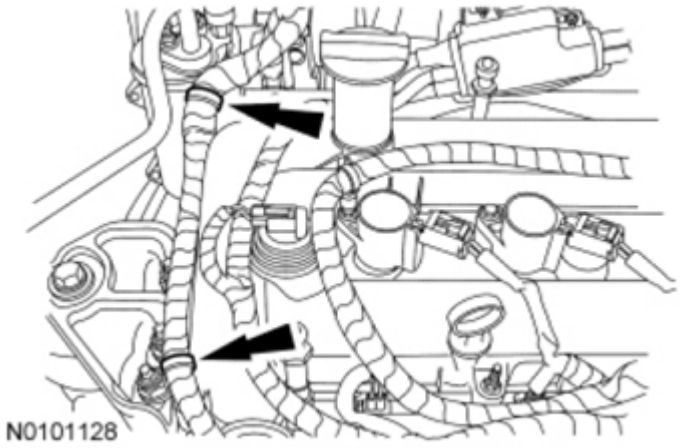

Fig. 500: Locating High-Voltage Electrical System Wiring Retainers
Courtesy of FORD MOTOR CO.

40. Connect the 2 vehicle high-voltage electrical system electrical connectors.
    - Attach the wiring harness retainer.

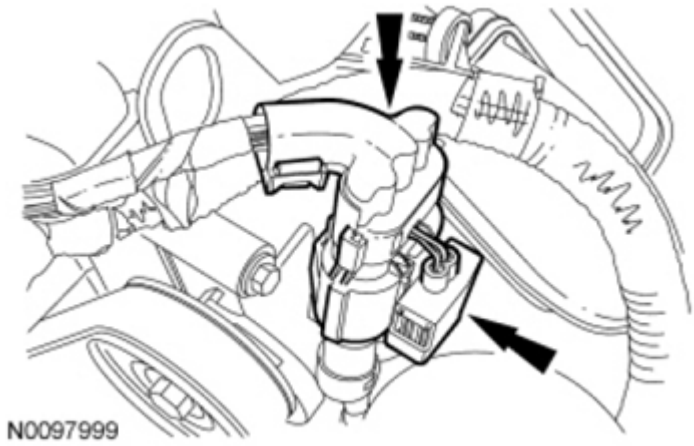

Fig. 501: Locating Vehicle High-Voltage Electrical System Electrical Connectors
Courtesy of FORD MOTOR CO.

41. Position the DC-to-DC converter in place and install the 3 nuts.
    - Tighten to 12 Nm (106 lb-in).

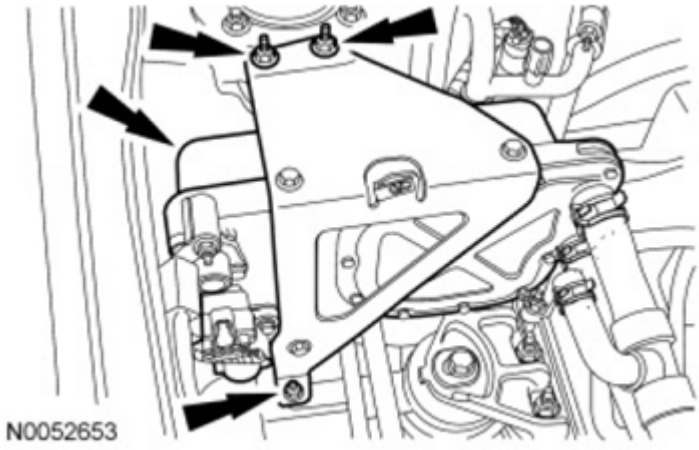

Fig. 502: Locating Nuts And DC-To-DC Converter
Courtesy of FORD MOTOR CO.

42. Connect the DC-to-DC converter electrical connector and 2 wire harness retainers (1 shown in illustration).
    - Engage the electrical connector locking tab.

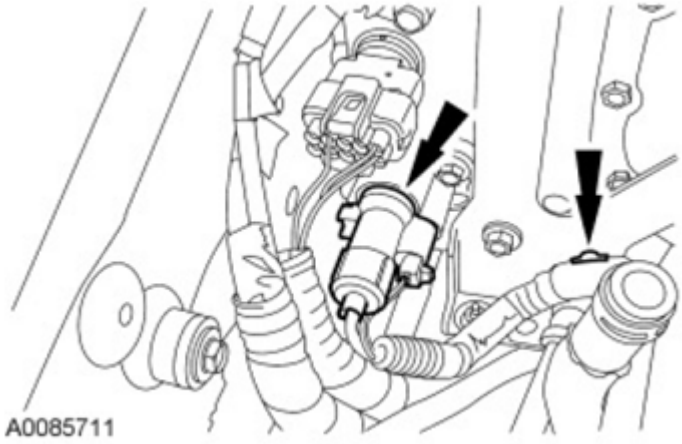

Fig. 503: Locating DC-TO-DC Converter Electrical Connector And Wire Harness Retainers
Courtesy of FORD MOTOR CO.

43. Connect the coolant vent hose.

Fig. 504: Locating Coolant Vent Hose
Courtesy of FORD MOTOR CO.

44. Connect the 2 low-voltage electrical connectors and the engine harness-to-body harness retainer.

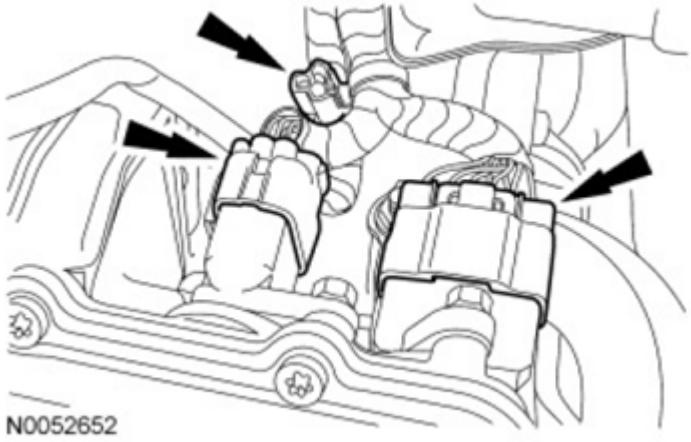

Fig. 505: Locating Low Voltage Electrical Connectors And Engine Harness-To-Body Harness Retainer
Courtesy of FORD MOTOR CO.

45. Connect the transaxle harness electrical connector and install the stud bolt.
    - Tighten to 10 Nm (89 lb-in).

Fig. 506: Locating Stud Bolt And Transaxle Harness Electrical Connector
Courtesy of FORD MOTOR CO.

46. Connect the upper evaporative emissions Evaporative Emission (EVAP) tube quick connect coupling to the purge valve. For additional information, refer to **FUEL SYSTEM - GENERAL INFORMATION** article.

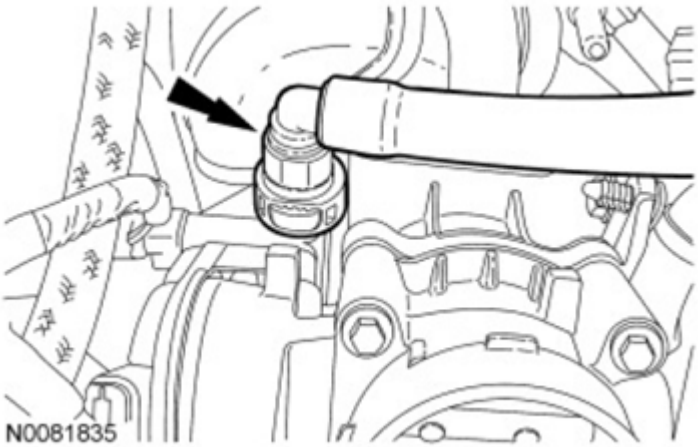

Fig. 507: Locating Heater Hose Clamps
Courtesy of FORD MOTOR CO.

47. Connect the engine control harness electrical connector.
    - Attach the engine control harness wiring retainer to the intake manifold.

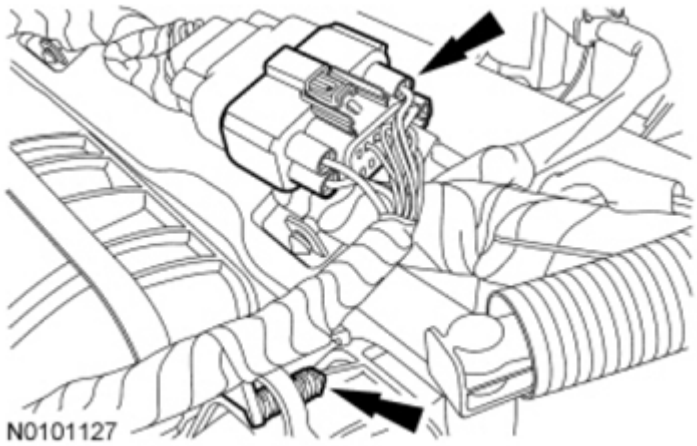

Fig. 508: Locating Engine Control Harness Electrical Connector
Courtesy of FORD MOTOR CO.

48. If equipped, connect the block heater electrical connector.
    - Attach the harness retainer clips.

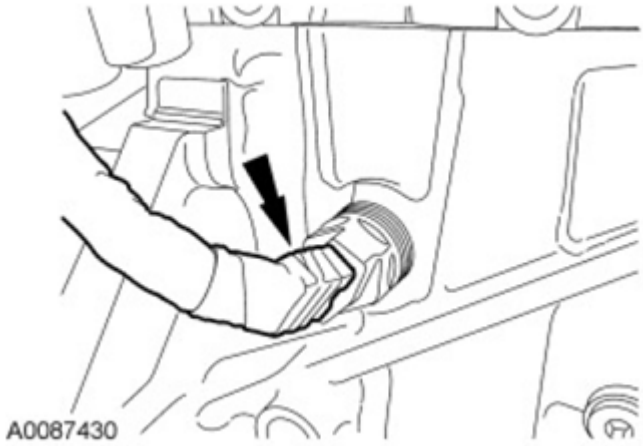

Fig. 509: Locating Block Heater Electrical Connector
Courtesy of FORD MOTOR CO.

49. Connect the PCM electrical connector.
    - Position the harness and install the wiring harness retainer.

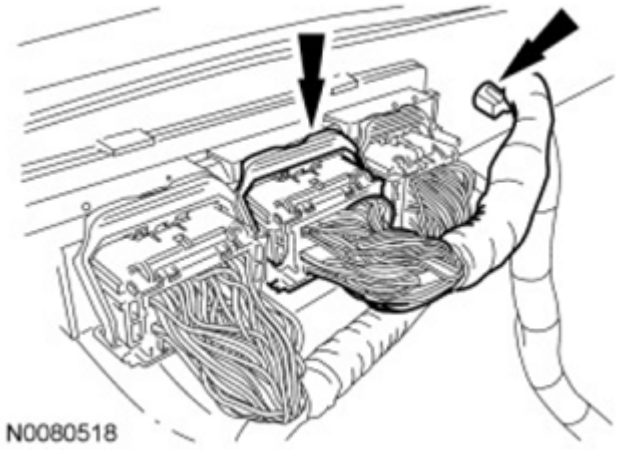

Fig. 510: Locating PCM Center Electrical Connector
Courtesy of FORD MOTOR CO.

50. Connect the brake booster vacuum hose to the brake booster.

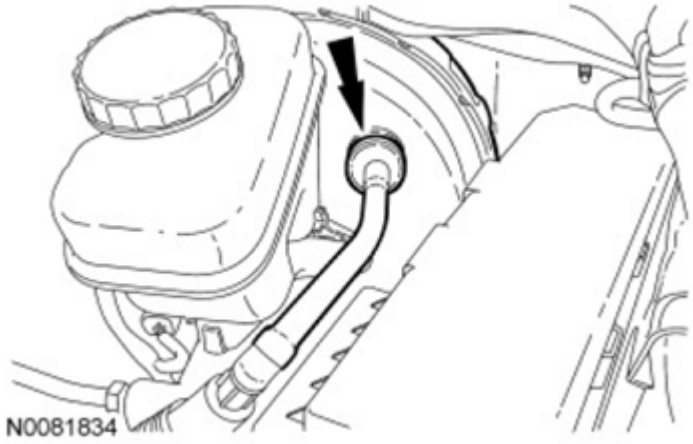

Fig. 511: Locating Brake Booster Vacuum Tube
Courtesy of FORD MOTOR CO.

51. Connect the upper radiator hose to the radiator.

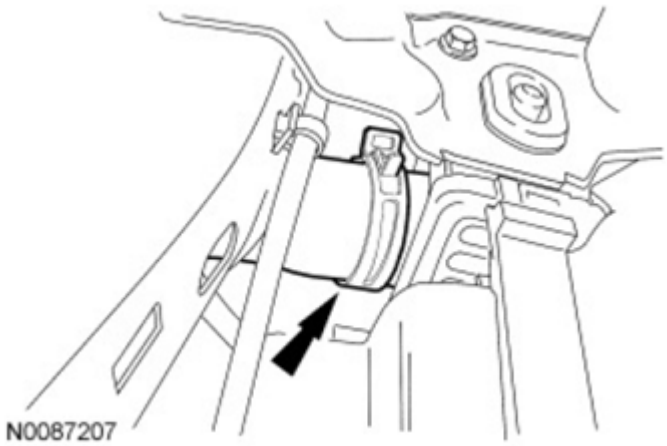

Fig. 512: Locating Upper Radiator Coolant Hose
Courtesy of FORD MOTOR CO.

52. Connect the heater hoses to the heater core.

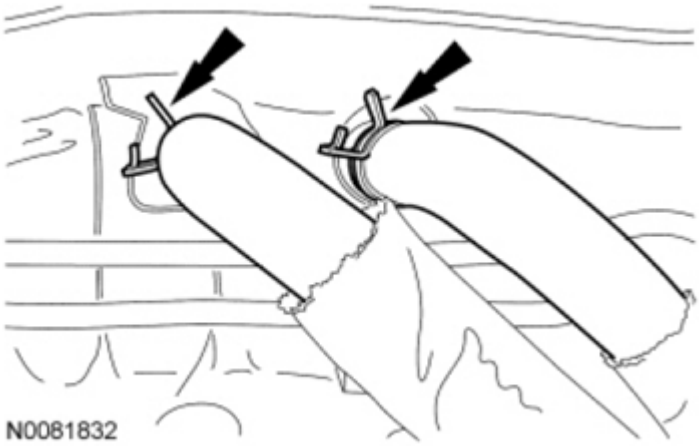

Fig. 513: Locating Heater Hose Clamps
Courtesy of FORD MOTOR CO.

53. Install the spin-on engine oil filter.
    - Tighten the spin-on oil filter three-fourths of a turn after the oil filter gasket makes contact with the oil filter adapter.

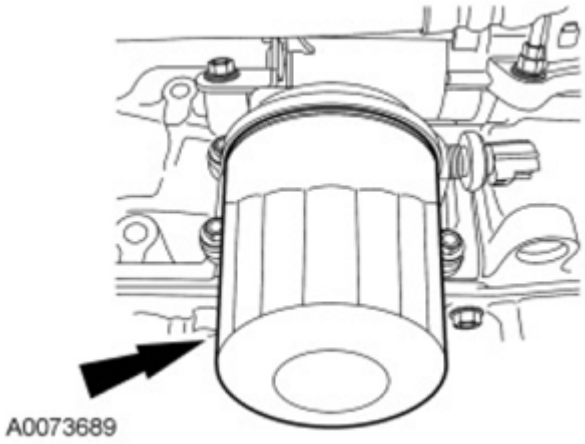

Fig. 514: Locating Engine Oil Filter
Courtesy of FORD MOTOR CO.

All-Wheel Drive (AWD) vehicles

54. Using the Handle and PTO Driven Gear Oil Seal Installer, install the intermediate shaft seal.

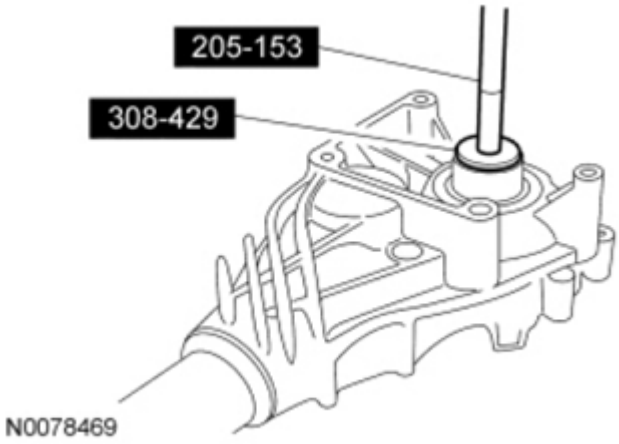

Fig. 515: Installing Intermediate Shaft Seal Using the Handle And PTO Driven Gear Oil Seal Installer
Courtesy of FORD MOTOR CO.

55. Position the Power Transfer Unit (PTU) in place and install the 4 bolts.
    - Tighten to 45 Nm (33 lb-ft).

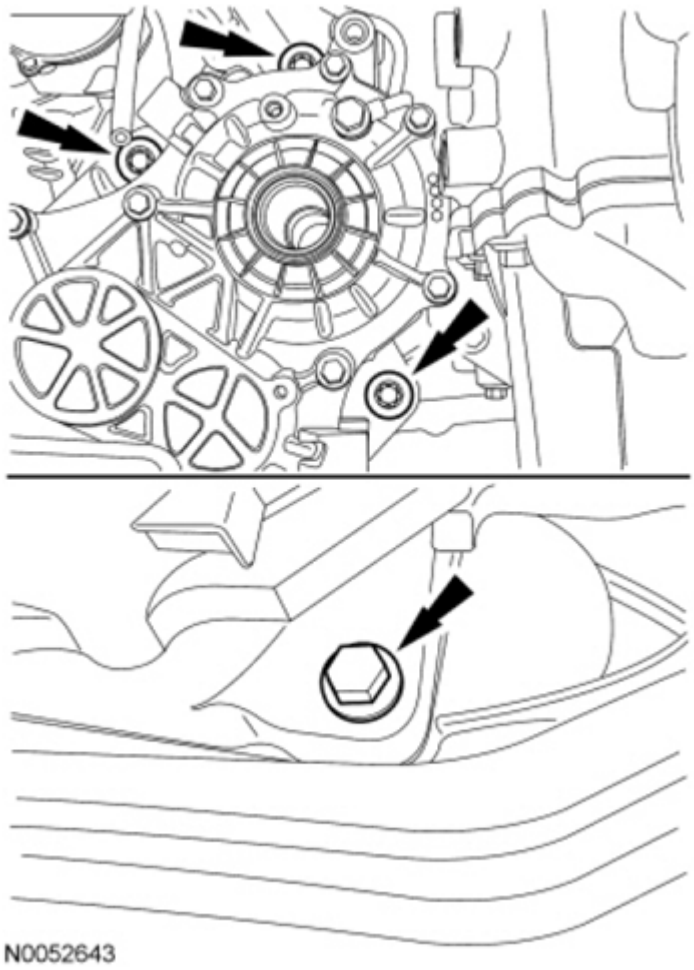

Fig. 516: Locating Transfer Case-To-Transaxle Bolts
Courtesy of FORD MOTOR CO.

56. Connect the **PTU** vent hose.

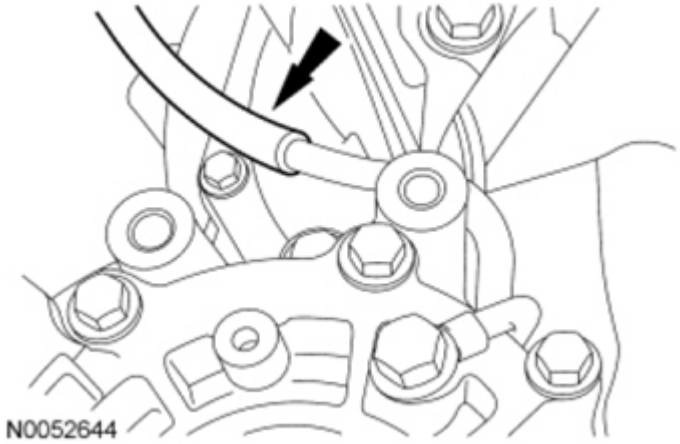

Fig. 517: Locating PTU Vent Hose

Courtesy of FORD MOTOR CO.

57. Install the **PTU** heat shield and the bolts.
    - Tighten to 11 Nm (97 lb-in).

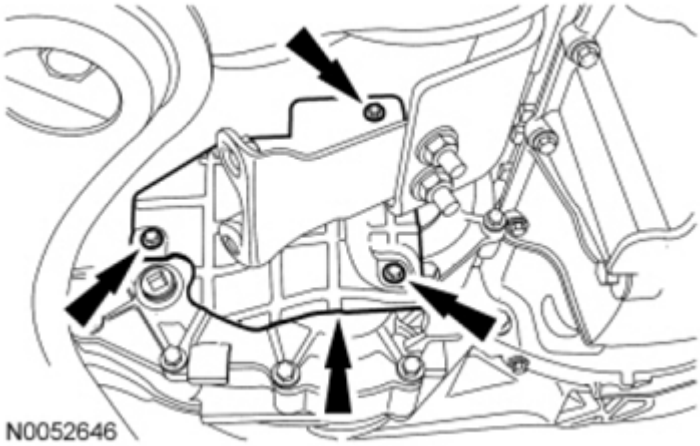

Fig. 518: Locating PTU Heat Shield And Bolts
Courtesy of FORD MOTOR CO.

NOTE: Catalytic converter manifold is removed for clarity.

58. Position the **PTU** -to-engine support bracket and install the bolts.
    - Tighten to 40 Nm (30 lb-ft).

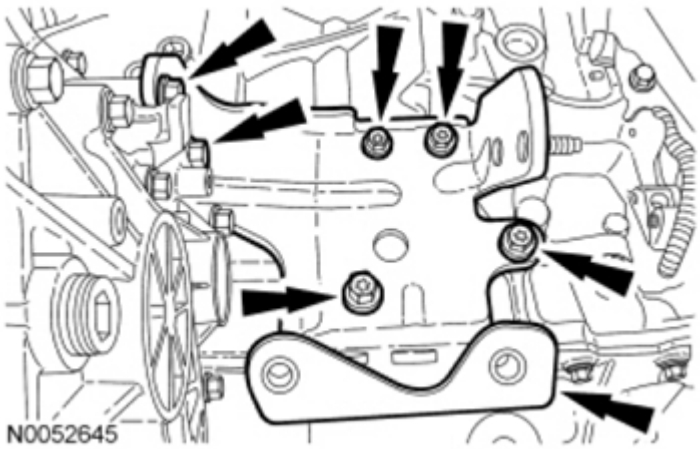

Fig. 519: Locating Bolts And Transfer Case-To-Engine Bracket
Courtesy of FORD MOTOR CO.

59. Install the 2 exhaust bracket bolts.
    - Tighten to 25 Nm (18 lb-ft).

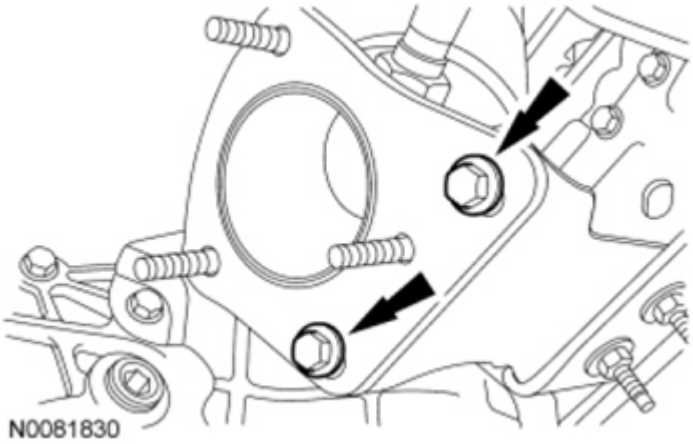

Fig. 520: Locating Catalytic Converter Bracket Bolts
Courtesy of FORD MOTOR CO.

60. Install the driveshaft. For additional information, refer to **DRIVESHAFT** article.

All vehicles

61. Install the intermediate shaft.

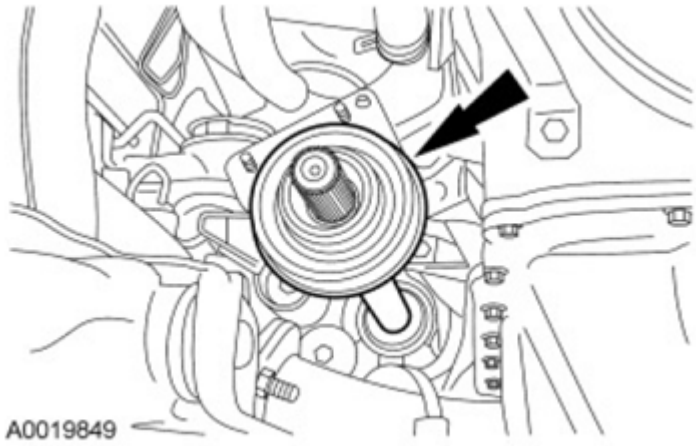

Fig. 521: Locating Intermediate Shaft
Courtesy of FORD MOTOR CO.

62. Install the 2 intermediate shaft bearing retainer nuts.
    - Tighten to 27 Nm (20 lb-ft).

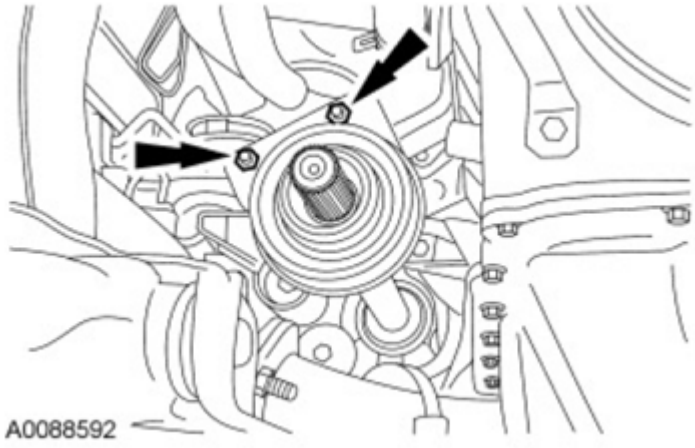

Fig. 522: Locating Intermediate Shaft Bearing Retainer Nuts
Courtesy of FORD MOTOR CO.

63. Install the RH and LH halfshafts. For additional information, refer to **FRONT DRIVE HALFSHAFTS** article.

NOTE: RH side shown in illustration, LH similar.

64. Connect the RH and LH suspension.
    1. Position the tie-rod end and install the retaining nut.
        - Tighten to 55 Nm (41 lb-ft).
    2. Connect the stabilizer bar link and install the nut.
        - Tighten to 63 Nm (46 lb-ft).

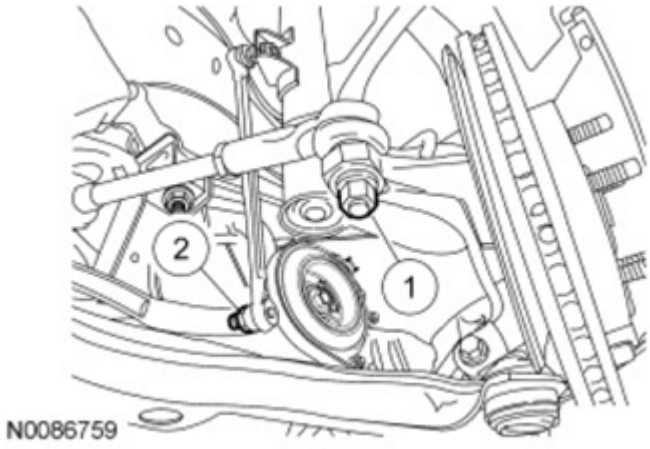

Fig. 523: Identifying Stabilizer Bar Link And Nut
Courtesy of FORD MOTOR CO.

65. Install the RH brake hose retainer and the ABS sensor bolt.
    - Tighten to 15 Nm (133 lb-in).

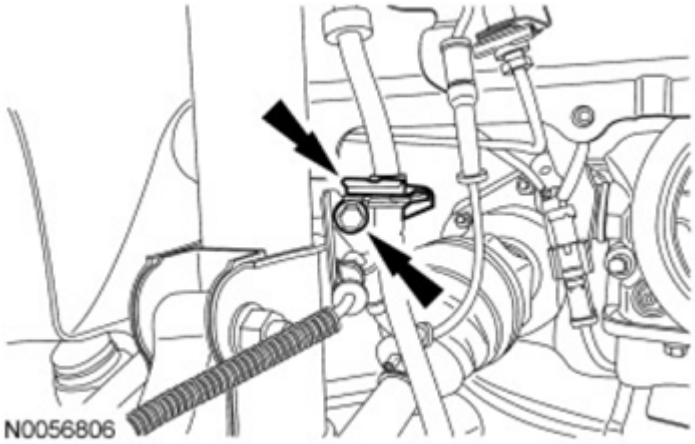

Fig. 524: Locating Brake Hose Retainer And ABS Sensor Retaining Bolt
Courtesy of FORD MOTOR CO.

66. Install the LH brake hose retainer and the ABS sensor bolt.
    - Tighten to 15 Nm (133 lb-in).

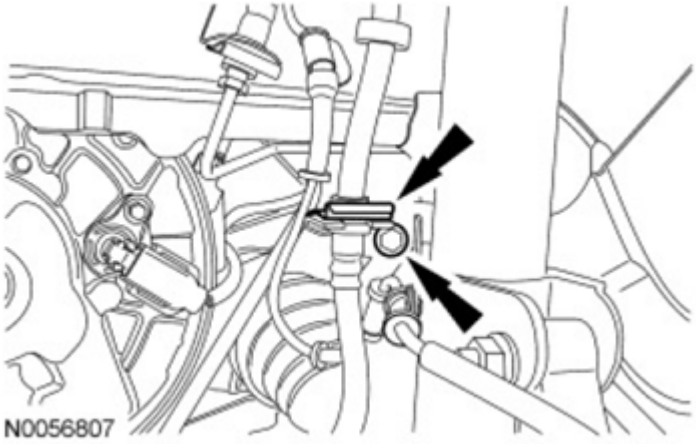

Fig. 525: Locating Brake Hose Retainer And ABS Sensor Retaining Bolt
Courtesy of FORD MOTOR CO.

67. Install the exhaust intermediate pipe. For additional information, refer to **EXHAUST SYSTEM** article.
68. Install the lateral support crossmember and the bolts.
    - Tighten to 115 Nm (85 lb-ft).

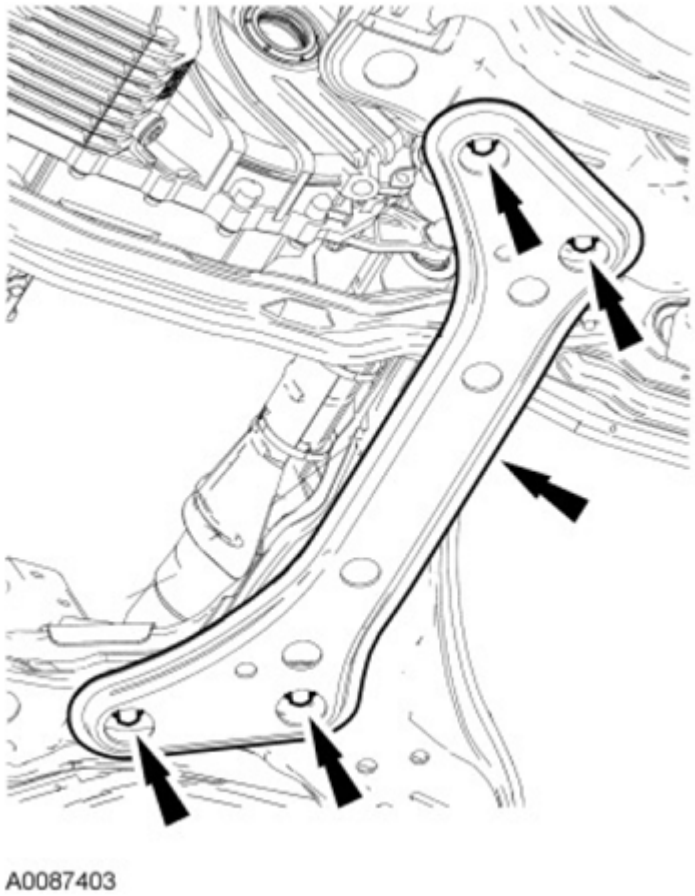

Fig. 526: Locating Lateral Support Crossmember And Bolts
Courtesy of FORD MOTOR CO.

69. Install the front wheels and tires. For additional information, refer to **TIRES & WHEELS** article.
70. Connect the fuel supply tube. For additional information, refer to **FUEL SYSTEM - GENERAL INFORMATION** article.

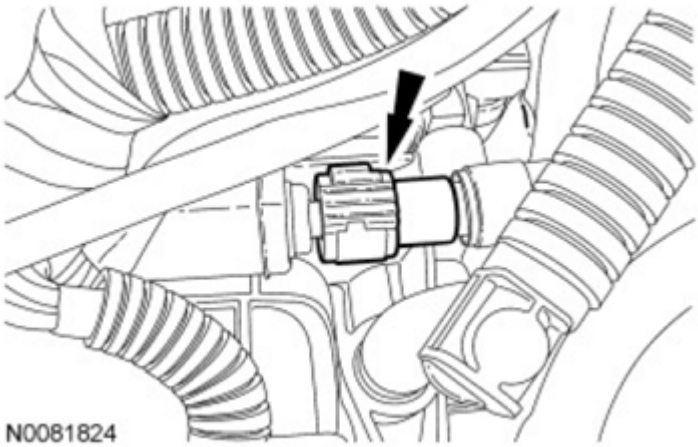

Fig. 527: Locating Fuel Supply Tube
Courtesy of FORD MOTOR CO.

71. Install the engine Air Cleaner (ACL). For additional information, refer to **INTAKE AIR DISTRIBUTION AND FILTERING - HYBRID** article.
72. Install the engine coolant degas bottle. For additional information, refer to **ENGINE COOLING - HYBRID** article.
73. Install the battery and the battery tray. For additional information, refer to **BATTERY, BATTERY MOUNTING SYSTEM & BATTERY CABLES** article.
74. Fill the engine with clean engine oil article.
75. Enable the vehicle high-voltage electrical system. For additional information, refer to **HIGH VOLTAGE TRACTION BATTERY** article.
76. Reset the Passive Anti-Theft System (PATS). For additional information, refer to **ANTI-THEFT - PASSIVE ANTI-THEFT SYSTEM (PATS) - HYBRID** article.
77. Fill and bleed the **MECS** . For additional information, refer to **TRANSAXLE/TRANSMISSION COOLING - HYBRID** article.
78. Fill and bleed the cooling system. For additional information, refer to **ENGINE COOLING - HYBRID** article.
79. Fill the transaxle with fluid. For additional information, refer to **AUTOMATIC TRANSAXLE/TRANSMISSION - ELECTRONICALLY CONTROLLED CONTINUOUSLY VARIABLE TRANSMISSION (ECVT)** article.
80. Recharge the A/C system. For additional information, refer to **CLIMATE CONTROL SYSTEM - GENERAL INFORMATION AND DIAGNOSTICS - HYBRID** article.

