2011 ENGINE

4.0L - Service Information - Nitro

DESCRIPTION

DESCRIPTION

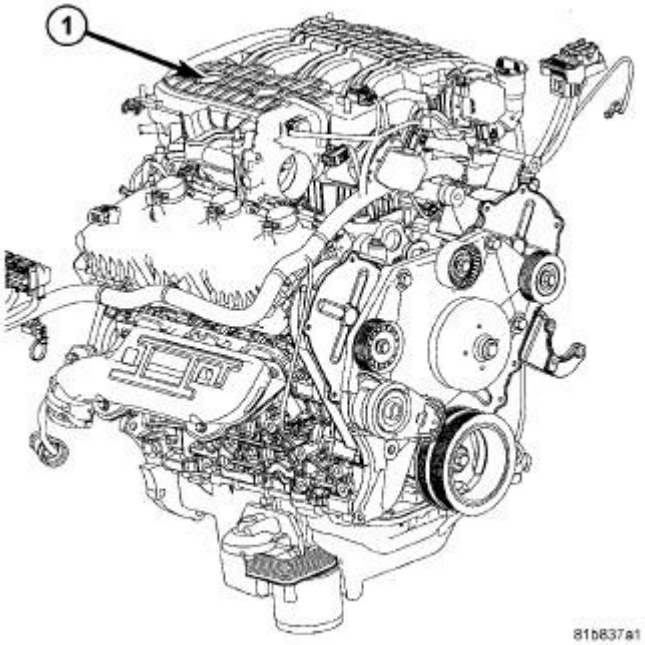

Fig. 1: 4.0L Engine
Courtesy of CHRYSLER LLC

The 4.0L Liter (244 Cubic Inches) 60°V-6 engine is a single overhead camshaft design with hydraulic lifters and four valves per cylinder. The engine does not have provisions for a free wheeling valve train. Refer to Fig. 1.

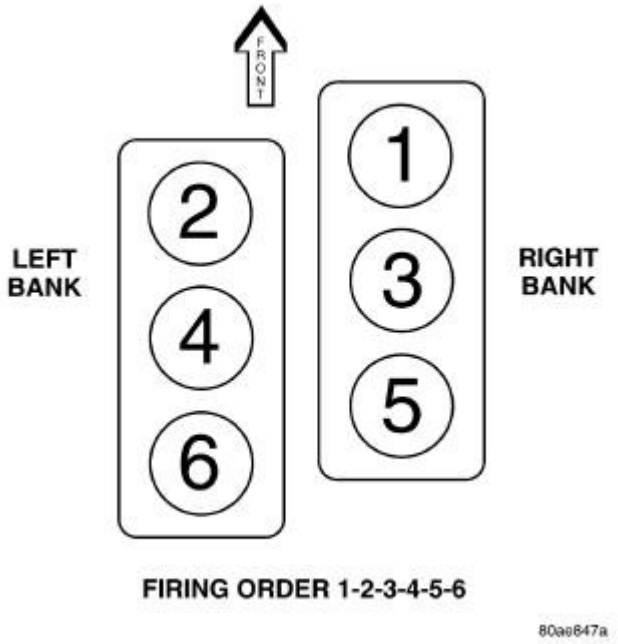

Fig. 2: Cylinder Numbering & Firing Order
Courtesy of CHRYSLER LLC

The cylinders are numbered from front to rear, with the right bank odd numbered, and the left bank even numbered. The firing order is 1-2-3-4-5-6. Refer to **Fig. 2**.

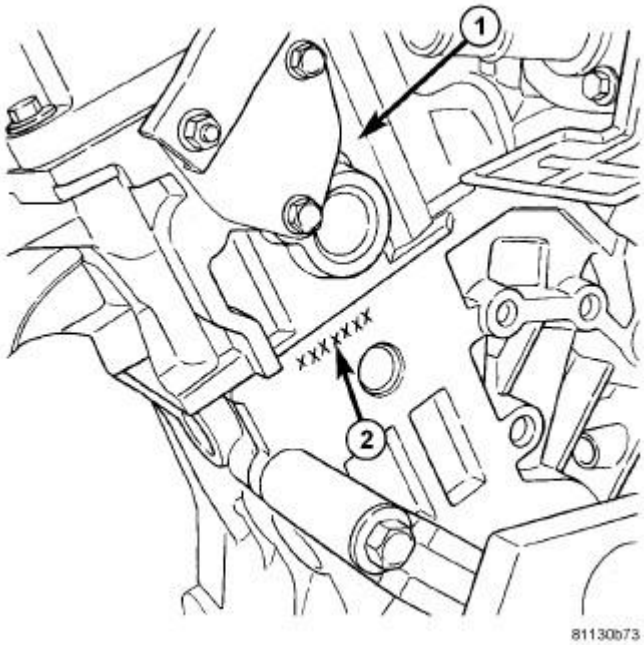

Fig. 3: Engine Identification
Courtesy of CHRYSLER LLC

1 - REAR OF LEFT CYLINDER HEAD
2 - ENGINE IDENTIFICATION NUMBER

The engine identification number (2) is located on the rear of engine block just below the left cylinder head (1). Refer to **Fig. 3**.

DIAGNOSIS AND TESTING

INTRODUCTION

Engine diagnosis is helpful in determining the causes of malfunctions not detected and remedied by routine maintenance.

These malfunctions may be classified as either mechanical (e.g., a strange noise), or performance (e.g., engine idles rough and stalls).

Refer to **ENGINE MECHANICAL** and **ENGINE PERFORMANCE** for possible causes and corrections of malfunctions.

Refer to **FUEL SYSTEM** article for the fuel system diagnosis.

Additional tests and diagnostic procedures may be necessary for specific engine malfunctions that cannot be isolated with the Service Diagnosis charts. Information concerning additional tests and diagnosis is provided within the following:

- Cylinder Compression Pressure Test. Refer to **CYLINDER COMPRESSION PRESSURE TEST**.
- Cylinder Combustion Pressure Leakage Test. Refer to **CYLINDER COMBUSTION PRESSURE LEAKAGE TEST**.
- Cylinder Head Gasket Failure Diagnosis. Refer to **CYLINDER HEAD GASKET**.
- Intake Manifold Leakage Diagnosis. Refer to **MANIFOLD, INTAKE**.
- Lash Adjuster (Tappet) Noise Diagnosis. Refer to **LASH ADJUSTER (TAPPET) NOISE DIAGNOSIS**.
- Engine Oil Leak Inspection. Refer to **ENGINE OIL LEAK INSPECTION**.

ENGINE PERFORMANCE

CONDITION	POSSIBLE CAUSE	CORRECTION
ENGINE WILL NOT START	1. Weak battery.	1. Test battery. Charge or replace as necessary. Refer to **BATTERY, STANDARD PROCEDURE** .
	2. Corroded or loose battery connections.	2. Clean and tighten battery connections. Apply a coat of light mineral grease to terminals.
	3. Faulty starter.	3. Test starting system. Refer to

		DIAGNOSIS AND TESTING .
	4. Faulty coil(s) or control unit.	4. Test and replace as needed. (Refer to Appropriate Diagnostic Information)
	5. Incorrect spark plug gap.	5. Check and adjust gap as needed.
	6. Contamination in fuel system.	6. Clean system and replace fuel filter.
	7. Faulty fuel pump.	7. Test fuel pump and replace as needed. (Refer to Appropriate Diagnostic Information)
	8. Incorrect engine timing.	8. Check for a skipped timing belt or a loose camshaft sprocket.
ENGINE STALLS OR IDLES ROUGH	1. Idle speed too low.	1. Test minimum air flow. (Refer to Appropriate Diagnostic Information)
	2. Incorrect fuel mixture.	2. (Refer to Appropriate Diagnostic Information)
	3. Intake manifold leakage.	3. Inspect intake manifold gasket, manifold, and vacuum hoses.
	4. Faulty coil(s).	4. Test and replace as necessary. (Refer to Appropriate Diagnostic Information)
ENGINE LOSS OF POWER	1. Dirty or incorrectly gapped plugs.	1. Set gap as needed or replace plug(s).
	2. Contamination in fuel system.	2. Clean system and replace fuel filter.
	3. Faulty fuel pump.	3. Test and replace as necessary. (Refer to Appropriate Diagnostic Information)
	4. Incorrect valve timing.	4. Correct valve timing as needed.
	5. Leaking cylinder head gasket.	5. Replace cylinder head gasket.
	6. Low compression.	6. Test compression of each cylinder.
	7. Burned, warped, or pitted valves.	7. Replace valves.
	8. Plugged or restricted exhaust system.	8. Check exhaust system restriction. Replace parts, as necessary.
	9. Faulty coil(s).	9. Test and replace as necessary. (Refer to Appropriate Diagnostic Information)
ENGINE MISSES ON ACCELERATION	1. Dirty or incorrectly gapped spark plugs.	1. Set gap as needed or replace plug(s).
	2. Contamination in Fuel System.	2. Clean fuel system and replace fuel filter.

	3. Burned, warped, or pitted valves.	3. Replace valves.
	4. Faulty coil(s).	4. Test and replace as necessary. (Refer to Appropriate Diagnostic Information)
ENGINE MISSES AT HIGH SPEED	1. Dirty or incorrect spark plug gap.	1. Set gap as needed or replace plug(s).
	2. Faulty coil(s).	2. Test and replace as necessary. (Refer to Appropriate Diagnostic Information)
	3. Dirty fuel injector(s).	3. Test and replace as necessary. (Refer to Appropriate Diagnostic Information)
	4. Contamination in fuel system.	4. Clean system and replace fuel filter.

ENGINE MECHANICAL

CONDITION	POSSIBLE CAUSES	CORRECTION
NOISY VALVES	1. High or low oil level in crankcase.	1. Check and correct engine oil level.
	2. Thin or diluted oil.	2. Change oil to correct viscosity.
	3. Thick oil	3. (a.) Change oil and filter.
		(b.) Run engine to operating temperature.
		(c.) Change oil and filter again.
	4. Low oil pressure.	4. Check and correct engine oil level.
	5. Dirt in tappets/lash adjusters.	5. Replace rocker arm/hydraulic lash adjuster assembly.
	6. Worn rocker arms.	6. Inspect oil supply to rocker arms.
	7. Worn tappets/lash adjusters.	7. Install new rocker arm/hydraulic lash adjuster assembly.
	8. Worn valve guides.	8. Replace cylinder head(s).
	9. Excessive runout of valve seats on valve faces.	9. Grind valve seats and valves.
	10. Missing adjuster pivot.	10. Replace rocker arm/hydraulic lash adjuster assembly.
CONNECTING ROD NOISE	1. Insufficient oil supply.	1. Check engine oil level.
	2. Low oil pressure.	2. Check engine oil level. Inspect oil pump relief valve and spring.
	3. Thick / Thin or diluted oil.	3. Change oil to correct viscosity.

		3. (a.) Change oil and filter.
	(b.) Run engine to operating temperature.	
	(c.) Change oil and filter again.	
	4. Excessive bearing clearance.	4. Measure bearings for correct clearance. Repair as necessary.
	5. Connecting rod journal out-of-round.	5. Replace crankshaft or grind surface.
	6. Misaligned connecting rods.	6. Replace bent connecting rods.
MAIN BEARING NOISE	1. Insufficient oil supply.	1. Check engine oil level.
	2. Low oil pressure.	2. Check engine oil level. Inspect oil pump relief valve and spring.
	3. Thick / Thin or diluted oil.	3. Change oil to correct viscosity.
		3. (a.) Change oil and filter.
	(b.) Run engine to operating temperature.	
	(c.) Change oil and filter again.	
	4. Excessive bearing clearance.	4. Measure bearings for correct clearance. Repair as necessary.
	5. Excessive end play.	5. Check thrust bearing for wear on flanges.
	6. Crankshaft journal out-of-round or worn.	6. Replace crankshaft or grind journals.
	7. Loose flywheel or torque converter.	7. Tighten to correct torque.
OIL PRESSURE DROP	1. Low oil level.	1. Check engine oil level.
	2. Faulty oil pressure sending unit.	2. Install new sending unit.
	3. Low oil pressure.	3. Check sending unit and main bearing oil clearance.
	4. Clogged oil filter.	4. Install new oil filter.
	5. Worn parts in oil pump.	5. Replace worn parts or pump.
	6. Thin or diluted oil.	6. Change oil to correct viscosity.
	7. Oil pump relief valve stuck.	7. Remove valve and inspect, clean, or replace.
	8. Oil pump suction tube loose.	8. Remove oil pan and install new tube or clean, if necessary.
	9. Oil pump cover warped or cracked.	9. Install new oil pump.
	10. Excessive bearing clearance.	10. Measure bearings for correct clearance.
OIL LEAKS	1. Misaligned or deteriorated gaskets.	1. Replace gasket(s).
	2. Loose fastener, broken or	2. Tighten, repair or replace the

	porous metal part.	part.
	3. Misaligned or deteriorated cup or threaded plug.	3. Replace as necessary.
OIL CONSUMPTION OR SPARK PLUGS FOULED	1. PCV system malfunction.	1. Check system and repair as necessary. Refer to **EVAPORATIVE EMISSIONS** .
	2. Worn, scuffed or broken rings.	2. Hone cylinder bores. Install new rings.
	3. Carbon in oil ring slots.	3. Clean pistons and install new rings.
	4. Rings fitted too tightly in grooves.	4. Remove rings and check grooves. If groove is not proper width, replace piston.
	5. Worn valve guide(s).	5. Replace cylinder head(s).
	6. Valve stem seal(s) worn or damaged.	6. Replace seal(s).

CYLINDER COMPRESSION PRESSURE TEST

The results of a cylinder compression pressure test can be utilized to diagnose several engine malfunctions.

Ensure the battery is completely charged and the engine starter motor is in good operating condition. Otherwise the indicated compression pressures may not be valid for diagnosis purposes.

1. Check engine oil level and add oil if necessary.
2. Drive the vehicle until engine reaches normal operating temperature. Select a route free from traffic and other forms of congestion, observe all traffic laws, and accelerate through the gears several times briskly.
3. Remove all spark plugs from engine. As spark plugs are being removed, check electrodes for abnormal firing indicators such as fouled, hot, oily, etc. Record cylinder number of spark plug for future reference.
4. Remove the Auto Shutdown (ASD) relay from the TIPM.
5. Insert compression gauge adaptor Special Tool (special tool #8116, Adapter, Pressure PEP) or the equivalent, into the #1 spark plug hole in cylinder head. Connect the 0-500 psi (Blue) pressure transducer (Special Tool CH7059) with cable adaptors to the scan tool. For Special Tool identification. Refer to **Engine - Special Tools**.
6. Crank engine until maximum pressure is reached on gauge. Record this pressure as #1 cylinder pressure.
7. Repeat the previous step for all remaining cylinders.
8. Compression should not be less than 689 kPa (100 psi) and not vary more than 25 percent from cylinder to cylinder.
9. If one or more cylinders have abnormally low compression pressures, repeat the compression test.
10. If the same cylinder or cylinders repeat an abnormally low reading on the second compression test, it could indicate the existence of a problem in the cylinder in question. **The recommended compression pressures are to be used only as a guide to diagnosing engine problems. An engine should not be disassembled to determine the cause of low compression unless some malfunction is present.**

CYLINDER COMBUSTION PRESSURE LEAKAGE TEST

The combustion pressure leakage test provides an accurate means for determining engine condition.

Combustion pressure leakage testing will detect:

- Exhaust and intake valve leaks (improper seating).
- Leaks between adjacent cylinders or into water jacket.
- Any causes for combustion/compression pressure loss.

WARNING: DO NOT REMOVE THE PRESSURE CAP WITH THE SYSTEM HOT AND UNDER PRESSURE BECAUSE SERIOUS BURNS FROM COOLANT CAN OCCUR.

1. Check the coolant level and fill as required. DO NOT install the pressure cap.
2. Start and operate the engine until it attains normal operating temperature, then turn the engine OFF.
3. Clean spark plug recesses with compressed air.
4. Remove the spark plugs.
5. Remove the oil filler cap.
6. Remove the air cleaner.
7. Calibrate the tester according to the manufacturer's instructions. The shop air source for testing should maintain 483 kPa (70 psi) minimum, 1, 379 kPa (200 psi) maximum, with 552 kPa (80 psi) recommended.
8. Perform the test procedures on each cylinder according to the tester manufacturer's instructions. While testing, listen for pressurized air escaping through the throttle body, tailpipe and oil filler cap opening. Check for bubbles in the coolant.
9. All gauge pressure indications should be equal, with no more than 25% leakage per cylinder.
10. **FOR EXAMPLE:** At 552 kPa (80 psi) input pressure, a minimum of 414 kPa (60 psi) should be maintained in the cylinder.

OIL CONSUMPTION TEST AND DIAGNOSIS

Diagnostic Procedure

The following diagnostic procedures are used to determine the source of excessive internal oil Consumption, these procedures and tests apply to vehicles with 50, 000 miles or less.

NOTE: Engine oil consumption may be greater than normal during engine break-in. Repairs should be delayed until vehicle has been driven at least 7, 500 miles.

Severe service (high ambient temperature, short trips, heavy loading, trailer towing, taxi, off-road, or law enforcement use) may result in greater oil consumption than normal.

Sustained high speed driving and high engine RPM operation may result in increased oil consumption.

Failure to comply with the recommended oil type and viscosity rating, as outlined in the owner's manual, may impact oil economy as well as fuel economy.

Oil consumption may increase with vehicle age and mileage due to normal engine wear.

NOTE: Because a few drops of external oil leakage per mile can quickly account for the loss of one quart of oil in a few hundred miles, ensure no external engine oil leaks are present.

- **Oil leakage is not the same as oil consumption and all external leakage must be eliminated before any action can be taken to verify and/or correct oil consumption complaints.**
- **Verify that the engine has the correct oil level dipstick and dipstick tube installed.**
- **Verify that the engine is not being run in an overfilled condition. Check the oil level 15 minutes after a hot shutdown with the vehicle parked on a level surface. In no case should the level be above MAX or the FULL mark on the dipstick.**

OIL CONSUMPTION TEST

1. Check the oil level at least 15 minutes after a hot shutdown.
2. If the oil level is low, top off with the proper viscosity and API service level engine oil. Add one bottle of MOPAR® 4-In-1 Leak Detection Dye into the engine oil.
3. Tamper proof the oil pan drain plug, oil filter, dipstick and oil fill cap.
4. Record the vehicle mileage.
5. Instruct the customer to drive the vehicle as usual.
6. Ask the customer to return to the servicing dealer after accumulating 500 miles, Check the oil level at least 15 minutes after a hot shutdown. If the oil level is half way between the "FULL" and "ADD" mark continue with the next step.
7. Using a black light, re-check for any external engine oil leaks, repair as necessary, if no external engine oil leaks are present, continue with oil consumption diagnosis.

OIL CONSUMPTION DIAGNOSIS

1. Check the positive crankcase ventilation (PCV) system. Make sure the system is not restricted and the PCV valve has the correct part number and correct vacuum source (18-20 in. Hg at idle below 3000 ft. above sea level is considered normal).
2. Perform a **CYLINDER COMPRESSION PRESSURE TEST** and **CYLINDER-TO-CYLINDER LEAKAGE TEST** using the standard leak down gauge following manufacturers suggested best practices.

   NOTE: Verify the spark plugs are not oil saturated. If the spark plugs are oil saturated and compression is good it can be assumed the valve seals or valve guides are at fault.

3. If one or more cylinders have more than 15% leak down further engine tear down and inspection will be required.

TOP 19 REASONS THAT MAY LEAD TO ENGINE OIL CONSUMPTION

1. **Tapered and Out-of-Round Cylinders**

   The increased piston clearances permit the pistons to rock in the worn cylinders. While tilted momentarily, an abnormally large volume of oil is permitted to enter on one side of the piston. The rings, also tilted in the cylinder, permit oil to enter on one side. Upon reversal of the piston on each stroke, some of this oil is passed into the combustion chamber.

2. **Distorted Cylinders**

   This may be caused by unequal heat distribution or unequal tightening of cylinder head bolts. This condition presents a surface which the rings may not be able to follow completely. In this case, there may be areas where the rings will not remove all of the excess oil. When combustion takes place, this oil will be burned and cause high oil consumption.

3. **Improper operation of "PCV "system**

   The main purpose of the Positive Crankcase Ventilation (PCV) valve is to recirculate blow-by gases back from the crankcase area through the engine to consume unburned hydrocarbons. The PCV system usually has a one way check valve and a make up air source. The system uses rubber hoses that route crankcase blow by gases to the intake manifold. Vacuum within the engine intake manifold pulls the blow by gases out of the crankcase into the combustion chamber along with the regular intake air and fuel mixture.

   The PCV system can become clogged with sludge and varnish deposits and trap blow by gases in the crankcase. This degrades the oil, promoting additional formation of deposit material. If left uncorrected, the result is plugged oil rings, oil consumption, rapid ring wear due to sludge buildup, ruptured gaskets and seals due to crankcase pressurization.

4. **Worn Piston Ring Grooves**

   For piston rings to form a good seal, the sides of the ring grooves must be true and flat - not flared or shouldered. Piston rings in tapered or irregular grooves will not seal properly and, consequently, oil will pass around behind the rings into the combustion chamber.

5. **Worn, Broken or Stuck Piston Rings**

   When piston rings are broken, worn or stuck to such an extent that the correct tension and clearances are not maintained, this will allow oil to be drawn into the combustion chamber on the intake stroke and hot gases of combustion to be blown down the cylinder past the piston on the power stroke. All of these conditions will result in burning and carbon build up of the oil on the cylinders, pistons and rings.

6. **Cracked or Broken Ring Lands**

   Cracked or broken ring lands prevent the rings from seating completely on their sides and cause oil pumping. This condition will lead to serious damage to the cylinders as well as complete destruction of the pistons and rings. Cracked or broken ring lands cannot be corrected by any means other than piston replacement.

7. **Worn Valve Stems and Guides**

   When wear has taken place on valve stems and valve guides, the vacuum in the intake manifold will draw oil and oil vapor between the intake valve stems and guides into the intake manifold and then into the cylinder where it will be burned.

8. **Bent or Misaligned Connecting Rods**

   Bent or misaligned connecting rods will not allow the pistons to ride straight in the cylinders. This will prevent the pistons and rings from forming a proper seal with the cylinder walls and promote oil consumption. In addition, it is possible that a bearing in a bent connect rod will not have uniform clearance on the connecting rod wrist pin. Under these conditions, the bearing will wear rapidly and throw off an excessive amount of oil into the cylinder.

9. **Fuel Dilution**

   If raw fuel is allowed to enter the lubrication system, the oil will become thinner and more volatile and will result in higher oil consumption. The following conditions will lead to higher oil consumption;

   - Excess fuel can enter and mix with the oil via a leaking fuel injector
   - Gasoline contaminated with diesel fuel
   - Restricted air intake
   - Excessive idling

10. **Contaminated Cooling Systems**

    Corrosion, rust, scale, sediment or other formations in the water jacket and radiator will prevent a cooling system from extracting heat efficiently. This is likely to cause cylinder distortion thus leading to higher oil consumption.

11. **Oil Viscosity**

    The use of oil with a viscosity that is too light may result in high oil consumption. Refer to the vehicle owner's manual for the proper oil viscosity to be used under specific driving conditions and/or ambient temperatures.

12. **Dirty Engine Oil**

    Failure to change the oil and filter at proper intervals may cause the oil to be so dirty that it will promote accumulation of sludge and varnish and restrict oil passages in the piston rings and pistons. This will increase oil consumption; dirty oil by nature is also consumed at a higher rate than clean oil.

13. **Crankcase Overfull**

    Due to an error in inserting the oil dip stick so that it does not come to a seat on its shoulder, a low reading may be obtained. Additional oil may be added to make the reading appear normal with the stick in this incorrect position which will actually make the oil level too high. If the oil level is so high that the

lower ends of the connecting rods touch the oil in the oil pan excessive quantities of oil will be thrown on the cylinder walls and some of it will work its way up into the combustion chamber.

14. **Excessively High Oil Pressure**

    A faulty oil pressure relief valve may cause the oil pressure to be too high. The result will be that the engine will be flooded with an abnormally large amount of oil in a manner similar to that which occurs with worn bearings. This condition may also cause the oil filter to burst.

15. **Aftermarket Performance Chips and Modification**

    Increasing performance through the use of performance/power enhancement products to a stock or factory engine will increase the chance of excessive oil consumption.

16. **Lugging Engine**

    Lugging is running the engine at a lower RPM in a condition where a higher RPM (more power/torque) should be implemented. Especially susceptible on vehicles equipped with a manual transmission. This driving habit causes more stress loading on the piston and can lead to increases in engine oil consumption.

17. **Turbocharged Engines**

    There is a possibility for PCV "push-over" due to higher crankcase pressure (as compared to naturally aspirated engines) which is normal for turbocharged engines. This condition causes varying amounts of engine oil to enter the intake manifold, charge air cooler and associated plumbing to and from the charge air cooler, also a leaking turbocharger seal will draw oil into the combustion chamber where it will burn (blue smoke from tail pipe may be present) and form carbon deposits which contribute to further oil consumption as they interfere with proper engine function.

18. **Restricted Air Intake**

    Excessive restriction in the air intake system will increase engine vacuum and can increase oil consumption, an extremely dirty air filter would be one example of this situation.

19. **Intake Manifold port seals**

    Engines that have a "V" configuration and a "wet valley" (3.3/3.8L) could draw oil into the intake ports due to improper sealing between the intake manifold ports and cylinder head. Causes may include improper torque of intake manifold bolts, corrosion (aluminum intake manifold) and or warped sealing surface.

ENGINE OIL LEAK INSPECTION

Begin with a thorough visual inspection of the engine, particularly at the area of the suspected leak. If an oil leak source is not readily identifiable, the following steps should be followed:

1. Do not clean or degrease the engine at this time because some solvents may cause rubber to swell, temporarily stopping the leak.
2. Add an oil soluble dye (use as recommended by manufacturer). Start the engine and let idle for approximately 15 minutes. Check the oil level indicator to make sure the dye is thoroughly mixed as indicated with a bright yellow color under a black light.
3. Using a black light, inspect the entire engine for fluorescent dye, particularly at the suspected area of oil leak. If the oil leak is found and identified, repair as necessary.
4. If dye is not observed, drive the vehicle at various speeds for approximately 24 km (15 miles), and repeat inspection.
5. **If the oil leak source is not positively identified at this time** , proceed with the AIR LEAK DETECTION TEST METHOD as follows:
   - Disconnect the fresh air hose (make-up air) at the cylinder head cover and plug or cap the nipple on the cover.
   - Remove the PCV valve hose from the cylinder head cover. Cap or plug the PCV valve nipple on the cover.
   - Attach an air hose with pressure gauge and regulator to the oil level indicator tube.

     CAUTION: Do not subject the engine assembly to more than 20.6 kpa (3 PSI) of test pressure.

   - Gradually apply air pressure from 1 psi to 2.5 psi maximum while applying soapy water at the suspected source. Adjust the regulator to the suitable test pressure that provides the best bubbles which will pinpoint the leak source. If the oil leak is detected and identified, repair per service information procedures.
   - If the leakage occurs at the crankshaft rear oil seal area, refer to INSPECTION FOR REAR SEAL AREA LEAKS below.
6. If no leaks are detected, turn off the air supply. Remove the air hose, all plugs, and caps. Install the PCV valve and fresh air hose (make-up air). Proceed to next step.
7. Clean the oil off the suspect oil leak area using a suitable solvent. Drive the vehicle at various speeds approximately 24 km (15 miles). Inspect the engine for signs of an oil leak by using a black light.

NOTE: If oil leakage is observed at the oil level indicator tube to block location; remove the tube, clean and reseal using Mopar® Stud AND Bearing Mount (press fit tube applications only), and for O-ring style tubes, remove tube and replace the O-ring seal.

INSPECTION FOR REAR SEAL AREA LEAKS

Since it is sometimes difficult to determine the source of an oil leak in the rear seal area of the engine, a more involved inspection is necessary. The following steps should be followed to help pinpoint the source of the leak.

If the leakage occurs at the crankshaft rear oil seal area:

1. Disconnect the battery.

2. Raise the vehicle.
3. Remove torque converter or clutch housing cover and inspect rear of block for evidence of oil. Use a black light to check for the oil leak. If a leak is present in this area, remove transmission for further inspection.
    1. Circular spray pattern generally indicates seal leakage or crankshaft damage.
    2. Where leakage tends to run straight down, possible causes are a porous block, oil gallery cup plug, bedplate to cylinder block mating surfaces and seal bore. See proper repair procedures for these items.
4. If no leaks are detected, pressurize the crankcase as previously described in step 5 under ENGINE OIL LEAK INSPECTION.

    CAUTION: Do not exceed 20.6 kPa (3 psi).

5. If the leak is not detected, very slowly turn the crankshaft and watch for leakage. If a leak is detected between the crankshaft and seal while slowly turning the crankshaft, it is possible the crankshaft seal surface is damaged. The seal area on the crankshaft could have minor nicks or scratches that can be polished out with emery cloth.

    CAUTION: Use extreme caution when crankshaft polishing is necessary to remove minor nicks and scratches. The crankshaft seal flange is specially machined to complement the function of the rear oil seal.

6. For bubbles that remain steady with shaft rotation, no further inspection can be done until disassembled.
7. After the oil leak root cause and appropriate corrective action have been identified, replace component(s) as necessary.

STANDARD PROCEDURE

DUST COVERS AND CAPS

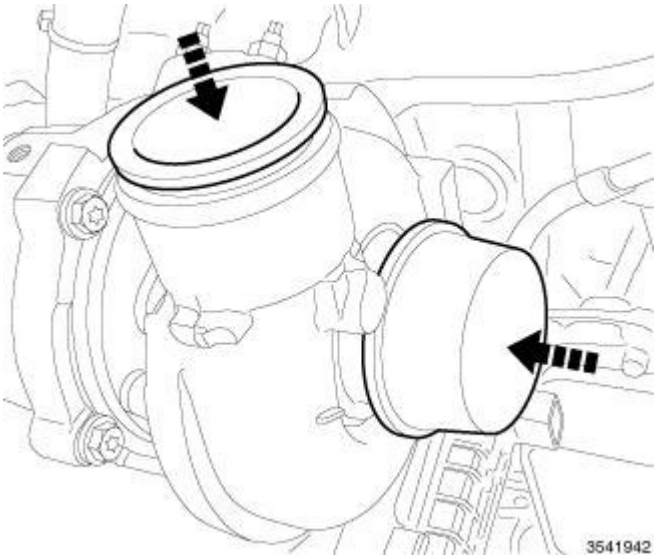

Fig. 4: Covers/Caps
Courtesy of CHRYSLER LLC

Due to the high amounts of failures cased by dust, dirt, moisture and other foreign debris being introduced to the engine during service. Covers or caps are needed to reduce the possible damage that can be caused or created.

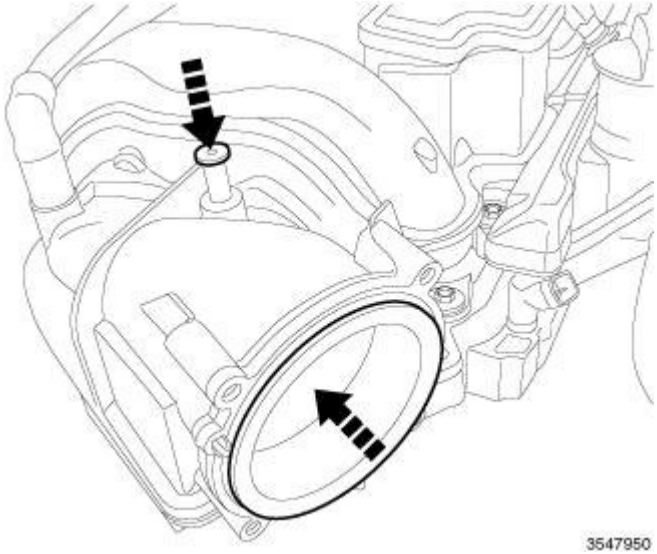

Fig. 5: Opening Cover
Courtesy of CHRYSLER LLC

Covers over openings will reduce any possibilities for foreign materials to enter the engine systems. Using miller tool (special tool #10368, Set, Universal Protective Cap), Select the appropriated cover needed to the procedure.

ENGINE GASKET SURFACE PREPARATION

Fig. 6: Proper Tool Usage For Surface Preparation
Courtesy of CHRYSLER LLC

To ensure engine gasket sealing, proper surface preparation must be performed, especially with the use of aluminum engine components and multi-layer steel cylinder head gaskets.

Never use the following to clean gasket surfaces:

- Metal scraper (1).
- Abrasive pad or paper to clean cylinder block and head.
- High speed power tool with an abrasive pad or a wire brush (2).

Fig. 7: Proper Tool Usage For Surface Preparation
Courtesy of CHRYSLER LLC

NOTE: Multi-Layer Steel (MLS) head gaskets require a scratch free sealing surface.

Only use the following for cleaning gasket surfaces:

- Solvent or a commercially available gasket remover
- Plastic or wood scraper (4).
- High speed power tool with a plastic bristle brush style disc.

Sealing surfaces must be free of grease or oil residue. Clean surfaces with Mopar® brake parts cleaner (or equivalent).

FORM-IN-PLACE GASKETS AND SEALERS

There are numerous places where form-in-place gaskets are used on the engine. Care must be taken when applying form-in-place gaskets to assure obtaining the desired results.**Do not use form-in-place gasket material unless specified.** Bead size, continuity, and location are of great importance. Too thin a bead can result in leakage while too much can result in spill-over which can break off and obstruct fluid feed lines. A continuous bead of the proper width is essential to obtain a leak-free gasket.

There are numerous types of form-in-place gasket materials that are used in the engine area. Mopar® Engine RTV GEN II, Mopar® ATF-RTV, and Mopar® Gasket Maker gasket materials, each have different properties and can not be used in place of the other.

MOPAR® ENGINE RTV GEN II is used to seal components exposed to engine oil. This material is a specially designed black silicone rubber RTV that retains adhesion and sealing properties when exposed to engine oil. Moisture in the air causes the material to cure. This material is available in three ounce tubes and has a shelf life of one year. After one year this material will not properly cure. Always inspect the package for the expiration date before use.

MOPAR® ATF RTV is a specifically designed black silicone rubber RTV that retains adhesion and sealing properties to seal components exposed to automatic transmission fluid, engine coolants, and moisture. This material is available in three ounce tubes and has a shelf life of one year. After one year this material will not properly cure. Always inspect the package for the expiration date before use.

MOPAR® GASKET MAKER is an anaerobic type gasket material. The material cures in the absence of air when squeezed between two metallic surfaces. It will not cure if left in the uncovered tube. The anaerobic material is for use between two machined surfaces. Do not use on flexible metal flanges.

MOPAR® BED PLATE SEALANT is a unique (green-in-color) anaerobic type gasket material that is specially made to seal the area between the bedplate and cylinder block without disturbing the bearing clearance or alignment of these components. The material cures slowly in the absence of air when torqued between two metallic surfaces, and will rapidly cure when heat is applied.

MOPAR® GASKET SEALANT is a slow drying, permanently soft sealer. This material is recommended for sealing threaded fittings and gaskets against leakage of oil and coolant. Can be used on threaded and machined parts under all temperatures. This material is used on engines with multi-layer steel (MLS) cylinder head gaskets. This material also will prevent corrosion. Mopar® Gasket Sealant is available in a 13 oz. aerosol can or 4 oz. / 16 oz. can w/applicator.

SEALER APPLICATION

Mopar® Gasket Maker material should be applied sparingly 1 mm (0.040 in.) diameter or less of sealant to one gasket surface. Be certain the material surrounds each mounting hole. Excess material can easily be wiped off. Components should be torqued in place within 15 minutes. The use of a locating dowel is recommended during assembly to prevent smearing material off the location.

Mopar® Engine RTV GEN II or ATF RTV gasket material should be applied in a continuous bead approximately 3 mm (0.120 in.) in diameter. All mounting holes must be circled. For corner sealing, a 3.17 or 6.35 mm (1/8 or 1/4 in.) drop is placed in the center of the gasket contact area. Uncured sealant may be removed with a shop towel. Components should be torqued in place while the sealant is still wet to the touch (within 10 minutes). The usage of a locating dowel is recommended during assembly to prevent smearing material off the location.

Mopar® Gasket Sealant in an aerosol can should be applied using a thin, even coat sprayed completely over both surfaces to be joined, and both sides of a gasket. Then proceed with assembly. Material in a can w/applicator can be brushed on evenly over the sealing surfaces. Material in an aerosol can should be used on engines with multi-layer steel gaskets.

REPAIR OF DAMAGED OR WORN THREADS

Damaged or worn threads (excluding spark plug and camshaft bearing cap attaching threads) can be repaired. Essentially, this repair consists of drilling out worn or damaged threads, tapping the hole with a special Heli-Coil Tap, (or equivalent) and installing an insert into the tapped hole. This brings the hole back to its original thread size.

CAUTION: Be sure that the tapped holes maintain the original center line.

Heli-Coil tools and inserts are readily available from automotive parts jobbers.

HYDROSTATIC LOCKED ENGINE

When an engine is suspected to be hydrostatically locked, regardless of what caused the problem, the following steps should be used.

CAUTION: DO NOT use starter motor to rotate the engine, severe damage may occur.

1. Inspect air cleaner, induction system and intake manifold to insure system is dry and clear of foreign material.
2. Remove negative battery cable.
3. Place a shop towel around the spark plugs when removing them from the engine. This will catch any fluid that may possibly be in the cylinder under pressure.
4. With all spark plugs removed, rotate engine crankshaft using a breaker bar and socket.

5. Identify the fluid in the cylinder(s) (i.e., coolant, fuel, oil or other).
6. Make sure all fluid has been removed from the cylinders. Inspect engine for damage (i.e., connecting rods, pistons, valves, etc.)
7. Repair engine or components as necessary to prevent this problem from re-occurring.

CAUTION: Squirt approximately one teaspoon of oil into the cylinders, rotate engine to lubricate the cylinder walls to prevent damage on restart.

8. Install new spark plugs.
9. Drain engine oil and remove oil filter.
10. Install a new oil filter.
11. Fill engine with specified amount of approved oil.
12. Connect negative battery cable.
13. Start engine and check for any leaks.

ENGINE CORE AND OIL GALLERY PLUGS

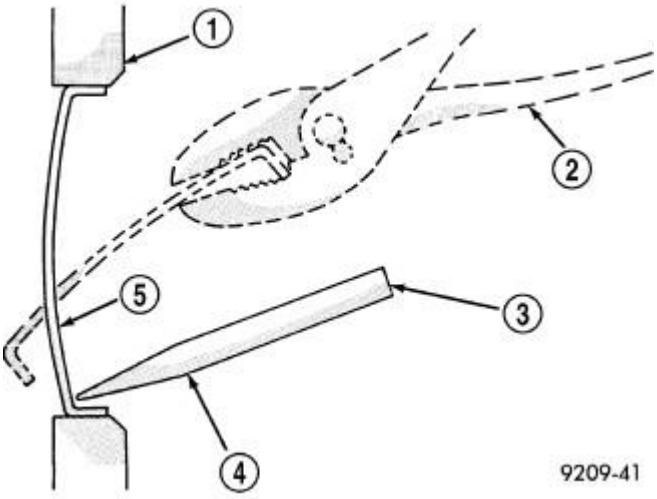

Fig. 8: Core Hole Plug Removal
Courtesy of CHRYSLER LLC

1 - CYLINDER BLOCK
2 - REMOVE PLUG WITH PLIERS
3 - STRIKE HERE WITH HAMMER
4 - DRIFT PUNCH
5 - CUP PLUG

Using a blunt tool such as a drift (3) and a hammer, strike the bottom edge of the cup plug (5). With the cup plug rotated, grasp firmly with pliers (2) or other suitable tool and remove plug (5). Refer to**Fig. 8**.

CAUTION: Do not drive cup plug into the casting as restricted cooling can result and cause serious engine problems.

Thoroughly clean inside of cup plug hole in cylinder block or head. Be sure to remove old sealer. Lightly coat inside of cup plug hole with Mopar® Stud and Bearing Mount. Make certain the new plug is cleaned of all oil or grease. Using proper drive plug, drive plug into hole so that the sharp edge of the plug is at least 0.5 mm (0.020 in.) inside the lead-in chamfer.

It is not necessary to wait for curing of the sealant. The cooling system can be refilled and the vehicle placed in service immediately.

SPECIFICATIONS

4.0L ENGINE

DESCRIPTION	SPECIFICATION	
Type	60° SOHC V-6 24-Valve	
Displacement	4.0L	
Firing Order	1-2-3-4-5-6	
Compression Ratio	10.2:1	
Lead Cylinder	#1 Right Bank	
	Metric	**Standard**
Displacement	4.0L Liters	244 cu. in.
Bore	96.0 mm	3.780 in.
Stroke	91.0 mm	3.583 in.

CYLINDER BLOCK

DESCRIPTION	SPECIFICATIONS	
	Metric	**Standard**
Cylinder Bore Diameter	96.0 mm ± 0.0076	3.780 in. ± 0.0003 in.
Out-of-Round (Max.)	0.006 mm	0.00023 in.
Taper (Max.)	0.051 mm	0.002 in.

PISTONS

DESCRIPTION	SPECIFICATIONS	
	Metric	**Standard**
Material Type	Aluminum (Full Floating Pins)	
Piston Diameter	95.98 mm ± 0.019 mm	3.7788 in. ± 0.0008 in.
Clearance at Size Location	-0.007 to +0.047 mm	-0.003 to +0.0018 in.
Piston Weight - A	374.4-379.4 grams	13.21-13.38 oz.
Piston Weight - B	379.5-384.4 grams	13.38-13.56 oz.
Piston Ring Groove Diameter #1	87.4-87.6 mm	3.441-3.449 in.
Piston Ring Groove Diameter #2	86.3-86.5 mm	3.397-3.4055 in.

Piston Ring Groove Diameter #3	86.5-86.7 mm	3.406-3.413 in.

PISTON PINS

DESCRIPTION	SPECIFICATIONS	
	Metric	**Standard**
Type	Full Floating	
Clearance in Piston	0.005-0.015 mm	0.002-0.0006 in.
Clearance in Rod	0.007-0.018 mm	0.0003-0.007 in.
Diameter	21.997-22.000 mm	0.8662-0.8660 in.

PISTON RINGS

DESCRIPTION	SPECIFICATIONS	
	Metric	**Standard**
Ring Gap-Top Compression Ring	0.20-0.36 mm	0.008-0.014 in.
Ring Gap-2nd Compression Ring (Micro-Napier	0.20-0.40 mm	0.0078-0.0157 in.
Ring Gap-Oil Control (Steel Rails)	0.25-0.76 mm	0.010-0.030 in.

PISTON RING SIDE CLEARANCE

DESCRIPTION	SPECIFICATIONS	
	Metric	**Standard**
Top and Second Compression Ring	0.04-0.08 mm	0.0016-0.0031 in.
Oil Ring (Steel Rails	0.038-0.184 mm	0.0015-0.0073 in.

PISTON RING WIDTH

DESCRIPTION	SPECIFICATIONS	
	Metric	**Standard**
Top Compression Ring	1.17-1.20 mm	0.0461-0.0472 in.
2nd Compression Ring (Micro-Napier)	1.47-1.49 mm	0.058-0.059 in.
Oil Control (Steel Rails)	0.435-0.490 mm	0.0171-0.0193 in.

CONNECTING RODS

DESCRIPTION	SPECIFICATIONS	
	Metric	**Standard**
Piston Pin Bore Diameter	22.005-22.012 mm	0.8663-0.8666 in.
Side Clearance (MAX)	0.39 mm	0.0153 in.
Total Weight (Less Bearing)	693 grams	24.445 oz.
Connecting Rod Bore Diameter	60.994-61.006 mm	2.4013-2.4018 in.

CRANKSHAFT MAIN BEARING JOURNALS

DESCRIPTION	SPECIFICATIONS	
	Metric	Standard
Main Journal Diameter	68.987-69.013 mm	2.717-2.716 in.
Main Bearing Diametrical Clearance	0.032-0.062 mm	0.0013-0.0024 in.
Bearing Clearance (Wear Limit)	0.070 mm	0.0027 in.
DIA Out-of-Round (MAX)	0.007 mm	0.0003 in.
Diametrical Taper (MAX)	0.006 mm	0.00025 in.
End Play	0.048-0.260 mm	0.002-0.010 in.
End Play (MAX)	0.330 mm	0.013 in.

CONNECTING ROD JOURNALS

DESCRIPTION	SPECIFICATIONS	
	Metric	Standard
Rod Journal Diameter	57.982-58.002 mm	2.2828-2.2835 in.
Bearing Diametrical Clearance	0.024-0.054 mm	0.0009-0.0021 in.
Bearing Clearance (Wear Limit)	0.062 mm	0.0024 in.
Out-of-Round (MAX)	0.007 mm	0.0003 in.
Diametrical Taper (MAX)	0.006 mm	0.00025 in.
Polish Microfinish	0.13 mm Ra max	0.000005 in. Ra max

CAMSHAFT

DESCRIPTION	SPECIFICATIONS	
	Metric	Standard
Bore Diameter	43.038-43.059 mm	1.6944-1.6953 in.
Diametrical Clearance	0.078-0.12 mm	0.003-0.0047 in.
Diametrical Clearance (MAX)	0.15 mm	0.0059 in.
Bearing Journal Diameter	42.939-42.960 mm	1.6905-1.6913 in.
End Play	0.05-0.51 mm	0.002-0.020 in.

VALVE TIMING-INTAKE VALVE

DESCRIPTION	SPECIFICATIONS (CRANKSHAFT DEGREES)
Opens	4° BTDC (A) - 1° ATDC (B)
Closes (ABDC)	60° (A) - 65° (B)
Duration	244°
Centerline	118° (A) - 123° (B)

VALVE TIMING-EXHAUST VALVE

DESCRIPTION	SPECIFICATIONS (CRANKSHAFT DEGREES)
Opens (BBDC)	61°

Closes (ATDC)	21°
Duration	262°
Centerline	110°

CYLINDER HEAD

DESCRIPTION	SPECIFICATIONS	
	Metric	**Standard**
Gasket Thickness (Compressed)	1.50 mm	0.059 in.
Valve Seat Angle (From Horizontal)	45-45.5°	
Valve Seat Runout (MAX)	0.051 mm	0.002 in.
Valve Seat Width-Intake	0.8-1.2 mm	0.031-0.067 in.
Valve Seat Width-Exhaust	1.3-1.7 mm	0.05-0.067 in.
Guide Bore Diameter (Std.)	6.975-7.00 mm	0.2746-0.2756 in.
Valve Guide Height *	9.5-10.5 mm	0.3740-0.4134 in.
* Measured from cylinder head surface		

VALVES

DESCRIPTION	SPECIFICATIONS	
	Metric	**Standard**
Face Angle (From Horizontal)	44.5°-45°	
Head Diameter-Intake	36.37-36.63 mm	1.4319-14421 in.
Head Diameter-Exhaust	28.87-29.13 mm	1.1366-1.1469 in.
Length-Intake (Overall)	114.41-114.99 mm	4.5043-4.5272 in.
Length-Exhaust (Overall)	126.17-126.75 mm	4.9673-4.9902 in.
Stem Diameter-Intake	6.935-6.953 mm	0.2730-0.2737 in.
Stem Diameter-Exhaust	6.906-6.924 mm	0.2719-0.2726 in.
Stem-to-Guide Clearance-Intake	0.022-0.065 mm	0.0009-0.0026 in.
Stem-to-Guide Clearance-Intake (MAX.) Rocking Method	0.29 mm	0.0114 in.
Stem-to-Guide Clearance-Exhaust	0.051-0.094 mm	0.002-0.0037 in.
Stem-to-Guide Clearance-Exhaust (MAX.) Rocking Method	0.370 mm	0.0146 in.
Valve Lift-Intake (Zero Lash)	9.00 mm	0.3543 in.
Valve Lift-Exhaust (Zero Lash)	7.00 mm	0.2756 in.
Valve Margin-Intake	0.835-1.165 mm	0.0329-0.0459 in.
Valve Margin-Exhaust	1.44-1.77 mm	0.0567-0.0697 in.
Valve Stem Tip Height-Intake	42.366-43.655 mm	1.6680-1.7187 in.
Valve Stem Tip Height-Exhaust	45.205-46.486 mm	1.780-1.8305 in.

VALVE SPRINGS

DESCRIPTION	SPECIFICATIONS

	Metric	Standard
Free Length-Intake (Approx.)	43.6 mm	1.7165 in.
Free Length-Exhaust- (Approx.)	47.9 mm	1.8858 in.
Spring Force-Intake (Valve Closed)	309-358 N @ 38.0 mm	69.5-80.5 lbs. @ 1.4961 in.
Spring Force-Exhaust (Valve Closed)	355.4-400.8 N @ 38.0 mm	79.9-90.1 lbs. @ 1.496 in.
Spring Force-Exhaust (Valve Open)	646.5-714.5 N @ 31.0 mm	145.3-160.7 lbs. @ 1.2205 in.
Spring Force-Intake (Valve Open)	871.1-943.7 N @ 29.0 mm	195.8-212.2 lbs. @ 1.1417 in.
Number of Coils-Intake	6.5	
Number of Coils-Exhaust	7.5	
Color of Spring (Top of Coils)-Intake-Right Hand Coil Direction	GREY	
Color of Spring (Top of Coils)-Exhaust-Left Hand Coil Direction	BLUE	
Wire Diameter-Intake	4.29-4.35 mm	0.1689-0.1713 in.
Wire Diameter-Exhaust	3.93-3.99 mm	0.1547-0.1570 in.
Spring Installed Height *	38.0 mm	1.4961 in.
* Spring Seat to Bottom Retainer-Intake and Exhaust		

OIL PUMP

DESCRIPTION	SPECIFICATIONS	
	Metric	Standard
Clearance Over Rotors	0.077 mm	0.003 in.
Cover-Out-of-Flat (MAX.)	0.025 mm	0.001 in.
Inner and Outer Rotor Thickness (MIN.)	14.300 mm	0.563 in.
Inner and Outer Rotor Thickness (MAX.)	14.325 mm	0.564 in.
Clearance between Outer Rotor and Body	0.39 mm	0.015 in.
Outer Rotor Diameter (MIN.)	79.997 mm	3.149 in.
Outer Rotor Diameter (MAX.)	80.074 mm	3.153 in.
Tip Clearance Between Rotors (MAX.)	0.20 mm	0.008 in.

OIL PRESSURE

DESCRIPTION	SPECIFICATIONS
NOTE: At Normal Operating Temperatures	
Pressure @ Curb Idle Speed *	34.47 kPa Min. (5 PSI MIN.)
Pressure @ 3000 RPM	300-724 kPa (45-105 PSI.)
*CAUTION: If pressure is zero at curb idle, DO NOT run engine at 3000 RPM.	

TORQUE SPECIFICATIONS

DESCRIPTION	N.m	Ft. Lbs.	In. Lbs.
Camshaft Sprocket Bolt Right Side	102 + 1/4 Turn	75 + 1/4 Turn	-
Camshaft Sprocket Bolt Left Side	102 + 1/4 Turn	75 + 1/4 Turn	-
Camshaft Thrust Plate Bolts	28	-	250
Connecting Rod Cap Bolts	27 + 1/4 Turn	20 + 1/4 Turn	-
Crankshaft Main Bearing Cap			
Inner Main Cap Bolts	20 + 1/4 Turn	15 + 1/4 Turn	-
Outer Main Cap Bolts	27 + 1/4 Turn	20 + 1/4 Turn	-
Tie Bolts (Horizontal)	28	-	250
Crankshaft Damper-Bolt	95	70	-
Cylinder Head Bolts*			
Step 1	61	45	-
Step 2	88	65	-
Step 3	88	65	-
Step 4	+ 1/4 Turn	+ 1/4 Turn	-
*Refer to procedure for tightening sequence. Refer to **CYLINDER HEAD, INSTALLATION**.			
Cylinder Head Cover Bolts	10	-	90
Exhaust Manifold to Cylinder Head Bolts	28	-	250
Exhaust Manifold Heat Shield Bolts	12	-	105
Flex plate to Crankshaft	95	70	-
Flex plate to Torque Converter	75	55	-
Intake Manifold - Lower	28	-	250
Intake Manifold - Upper	12	-	105
Left Engine Mount to Cradle	75	55	-
Oil Cooler Connector Bolt	54	40	-
Oil Pan			
M6 Bolts	12	-	105
M8 Bolts	28	-	250
Oil Pan Drain Plug	27	20	-
Oil Filter	16	12	-
M8 Oil Pump to Block Bolts	28	-	250
M6 Oil Pump Cover Bolts	12	-	105
Oil Pump Pick Up Tube Bolt	28	-	250
Windage Tray	28 + 90°	20 + 90°	-
Crankshaft Rear Seal Retainer	12	-	105

Right Engine Mount to Cradle	75	55	-
Rocker Shaft Pedestal Retaining Bolts	31	-	275
Spark Plugs	28	20	-
Timing Belt Tensioner Bolts	28	-	250
Timing Belt Tensioner Pulley Assembly Bolt	61	45	-
Timing Belt Cover			
M6 Bolts	12	-	105
M8 Bolts	28	-	250
M10 Bolts	54	40	-
Upper Engine Mount to Frame Rail	68	50	-
Upper Engine Mount to timing Cover	54	40	-

REMOVAL

REMOVAL

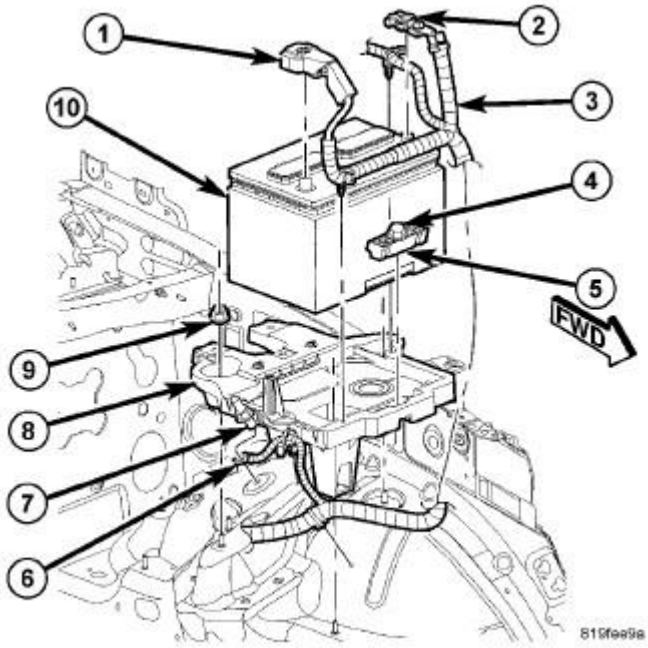

Fig. 9: Battery Cables & Assembly
Courtesy of CHRYSLER LLC

1. Perform the fuel pressure release procedure. Refer to **FUEL DELIVERY, GAS, STANDARD PROCEDURE** .
2. Disconnect and isolate the negative battery cable (2).
3. Evacuate the air conditioning system. Refer to **PLUMBING, STANDARD PROCEDURE** .
4. Remove the hood.

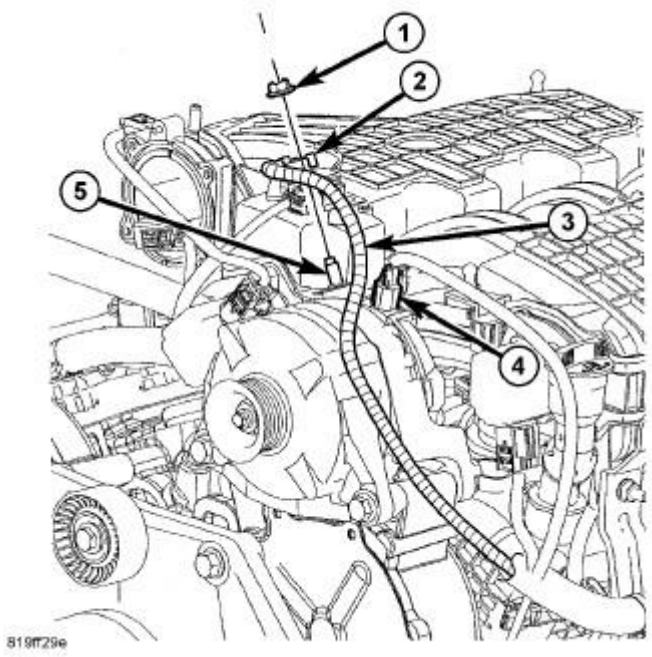

Fig. 10: Generator Electrical Connectors & Battery Cable
Courtesy of CHRYSLER LLC

5. Drain the cooling system. Refer to **COOLING - STANDARD PROCEDURE** .
6. Disconnect the lower radiator hose.
7. Disconnect the generator electrical connectors (2). Refer to **ELECTRICAL/CHARGING/GENERATOR - REMOVAL** .

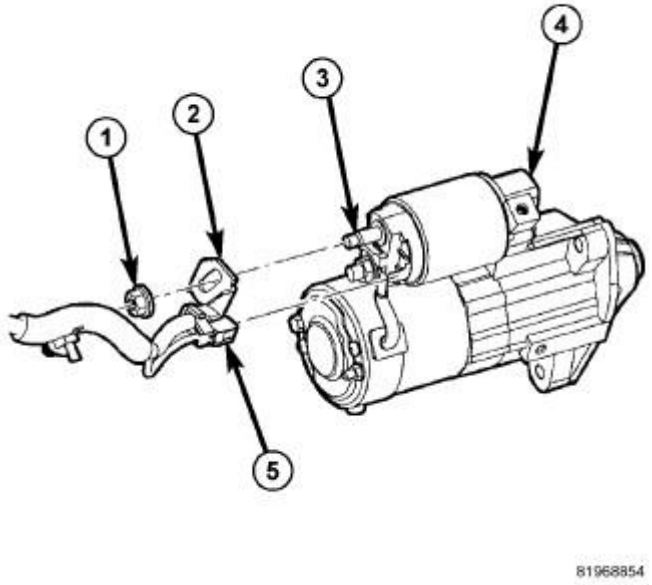

Fig. 11: Solenoid Nut, Mounting Stud, Electrical Connector & Battery Cable Assembly
Courtesy of CHRYSLER LLC

8. Remove the starter wiring (2).

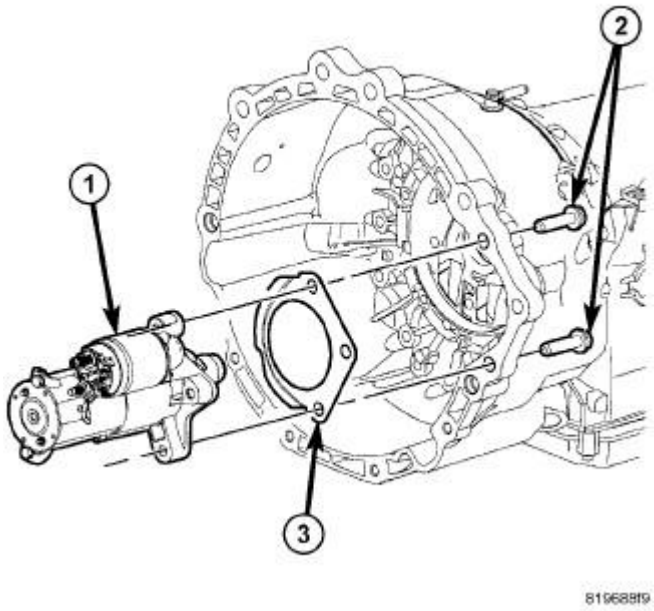

Fig. 12: Starter Motor
Courtesy of CHRYSLER LLC

9. Remove the starter (1) and spacer plate. Refer to **ELECTRICAL/STARTING/STARTER MOTOR - REMOVAL** .

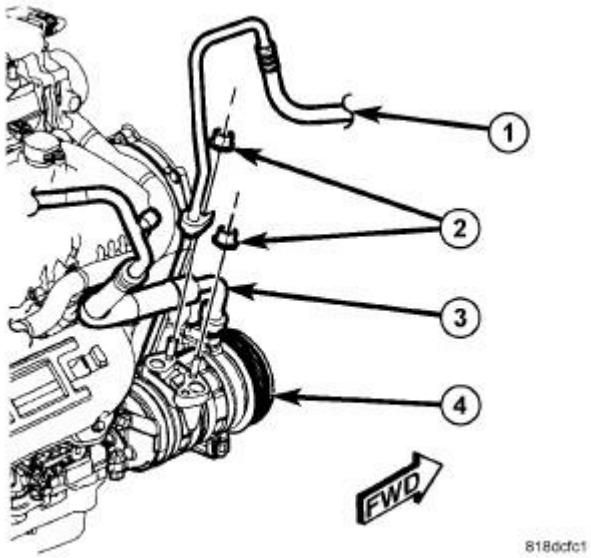

Fig. 13: A/C Lines To Compressor
Courtesy of CHRYSLER LLC

10. Remove the A/C lines (1, 3).

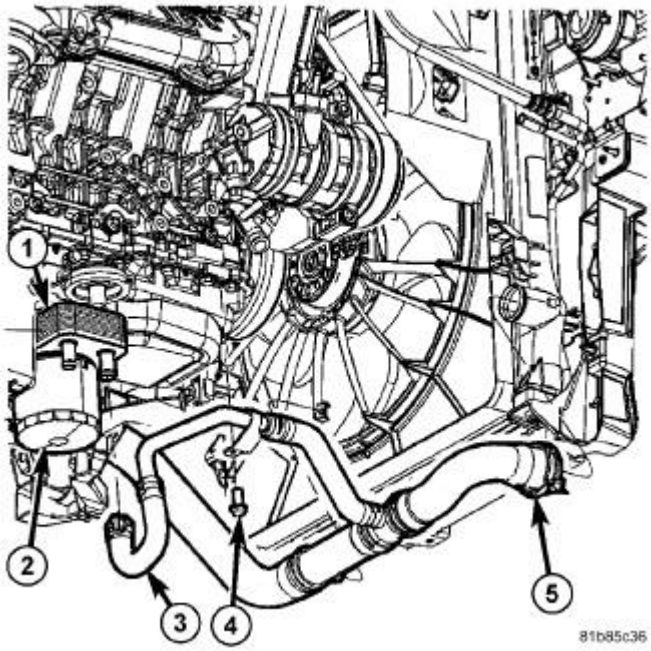

Fig. 14: Engine Oil Cooler, Filter, Coolant Hose, Bolt & Lower Radiator Hose
Courtesy of CHRYSLER LLC

11. Disconnect the oil cooler hose (3) at the oil cooler.

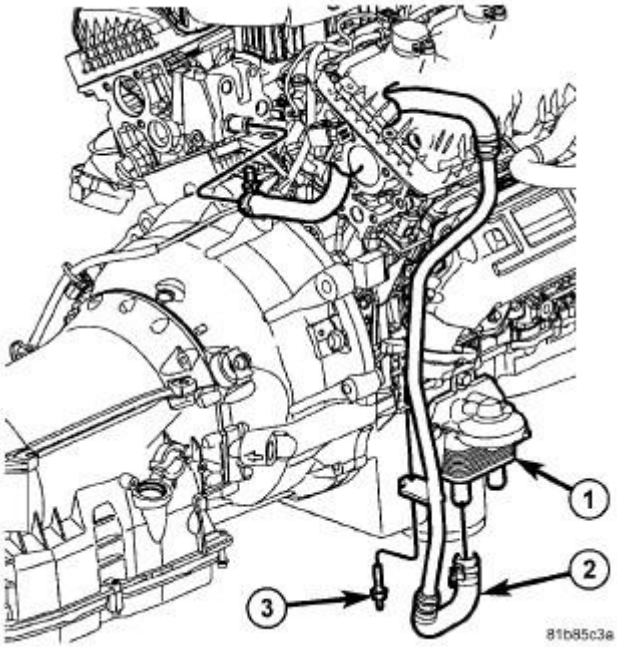

Fig. 15: Oil Cooler, Coolant Hose & Fastener
Courtesy of CHRYSLER LLC

12. Disconnect the oil cooler hose (2) at the oil cooler.

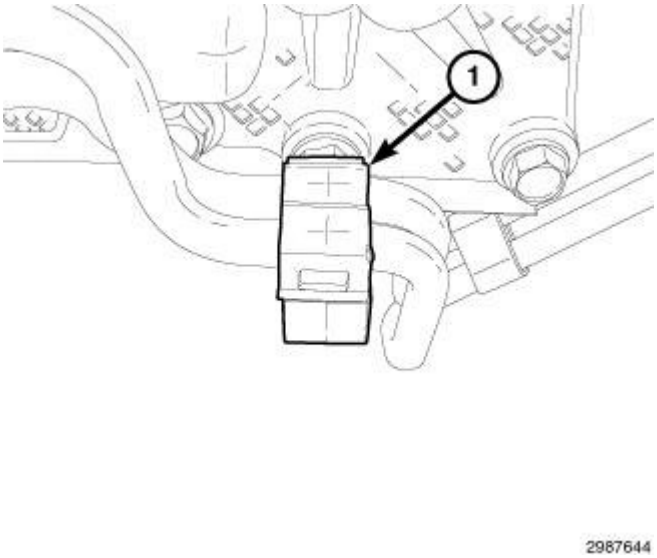

Fig. 16: Transmission Oil Cooling Line Retainer
Courtesy of CHRYSLER LLC

NOTE: The transmission oil cooling line retainer (1) is intended for one-time use only.

13. Disengage the transmission oil cooling line retainer (1) from the oil pan mounting stud and discard the

retainer.

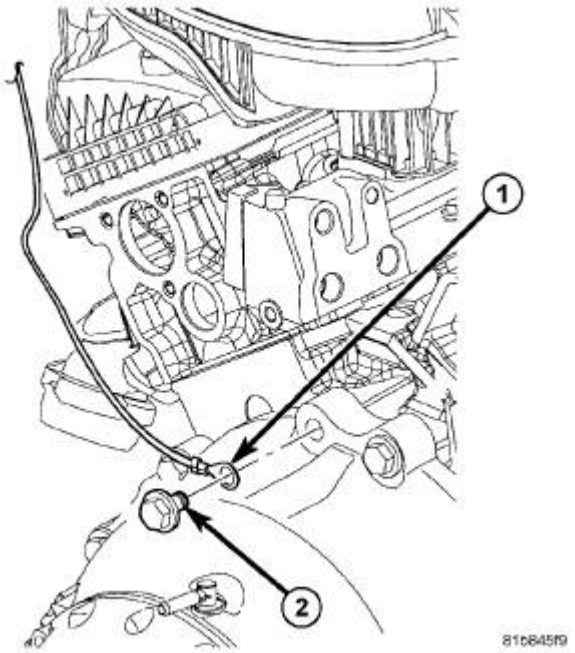

Fig. 17: Ground Strap & Transmission Housing Bolts
Courtesy of CHRYSLER LLC

14. Disconnect the ground strap (1) at the right transmission housing.
15. Disconnect the engine block heater wiring connector and set aside (if equipped).

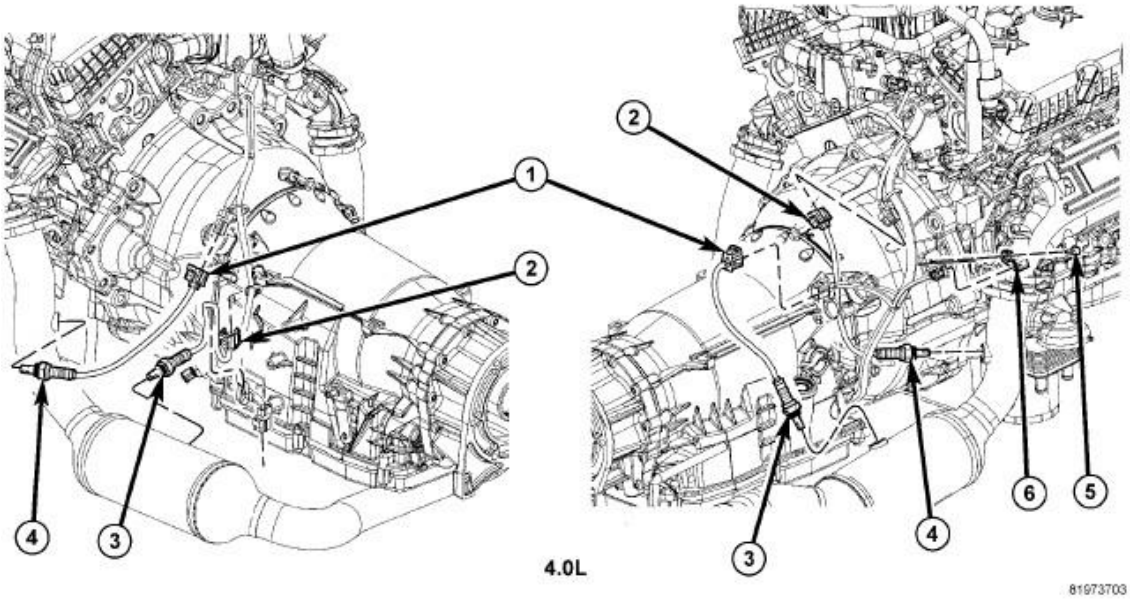

Fig. 18: CKP Sensor & Oxygen Sensors
Courtesy of CHRYSLER LLC

16. Remove the crankshaft position sensor (2). Refer to **FUEL SYSTEM/FUEL INJECTION/CRANKSHAFT POSITION SENSOR - REMOVAL** .

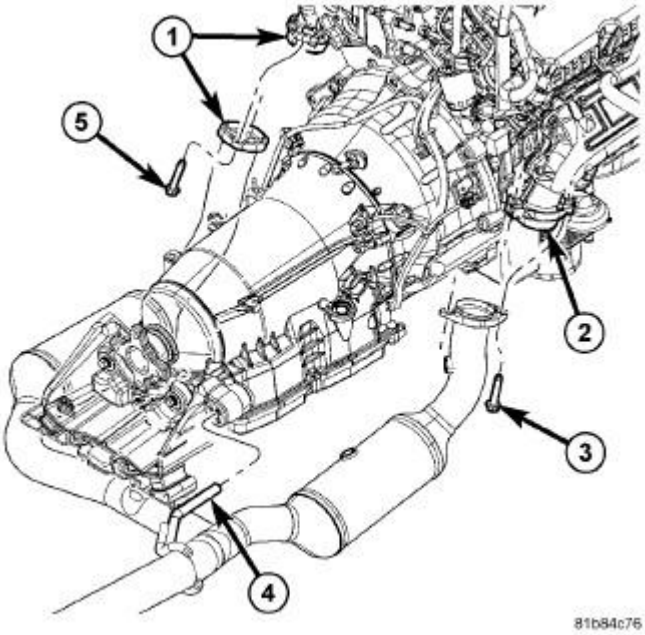

Fig. 19: Exhaust Pipe To Manifold With Fasteners
Courtesy of CHRYSLER LLC

17. Disconnect the left oxygen sensor electrical connector and separate the exhaust manifold from the left exhaust pipe (1).
18. Disconnect the right oxygen senor electrical connector and separate the exhaust manifold from the right exhaust pipe (2).

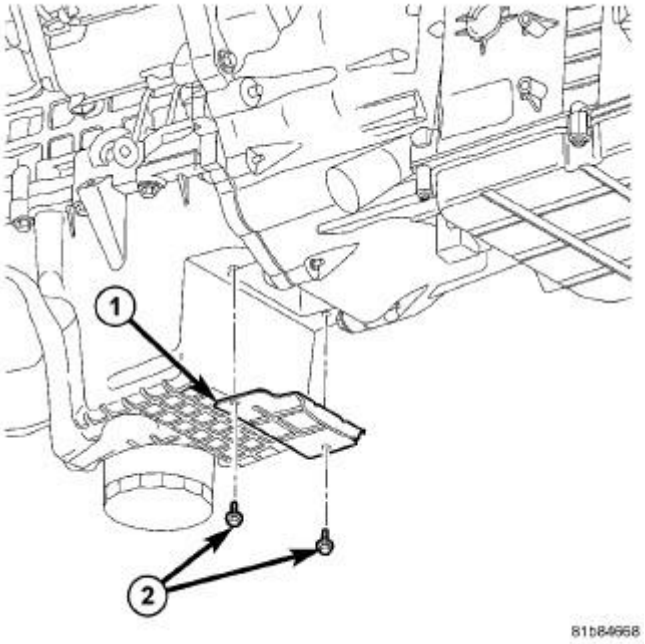

Fig. 20: Flex Plate Inspection Cover & Fasteners
Courtesy of CHRYSLER LLC

19. Remove the flex plate access plate (1).

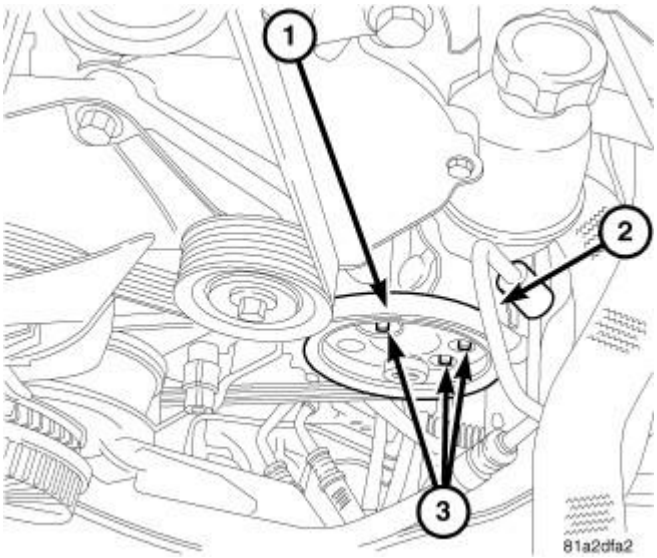

Fig. 21: Power Steering Belt, Pressure Line & Power Steering Pump Mounting Bolts
Courtesy of CHRYSLER LLC

20. Remove the P/S pump (2).

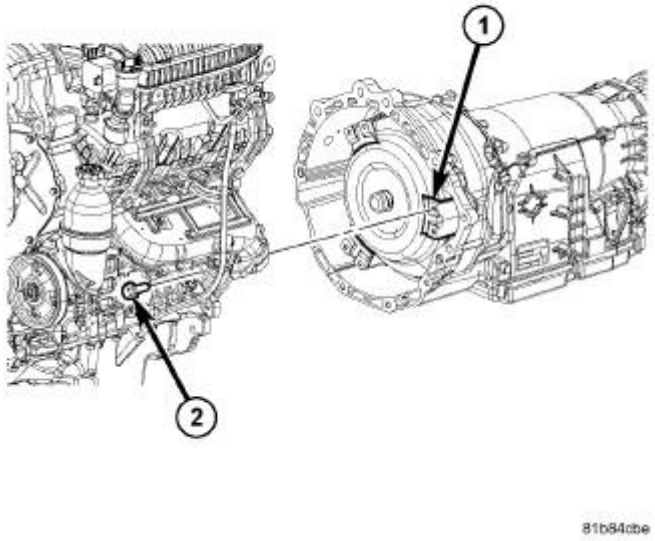

Fig. 22: Torque Converter Bolts
Courtesy of CHRYSLER LLC

21. Remove the torque converter bolts (2).

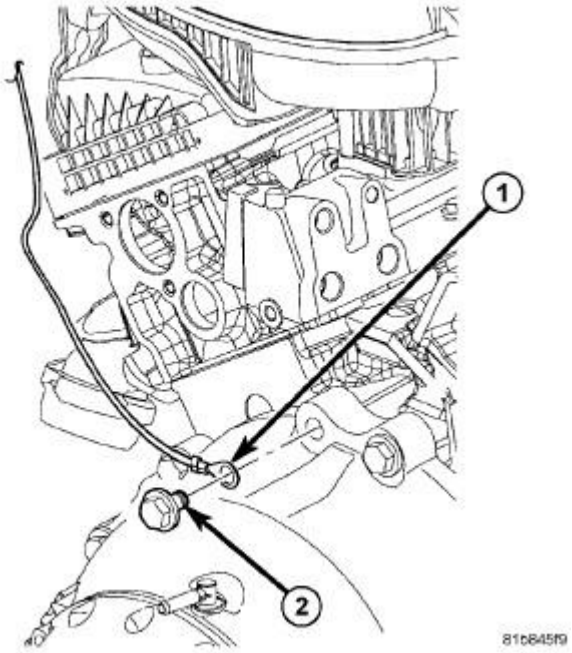

Fig. 23: Ground Strap & Transmission Housing Bolts
Courtesy of CHRYSLER LLC

22. Remove the transmission housing to engine mounting bolts (2).

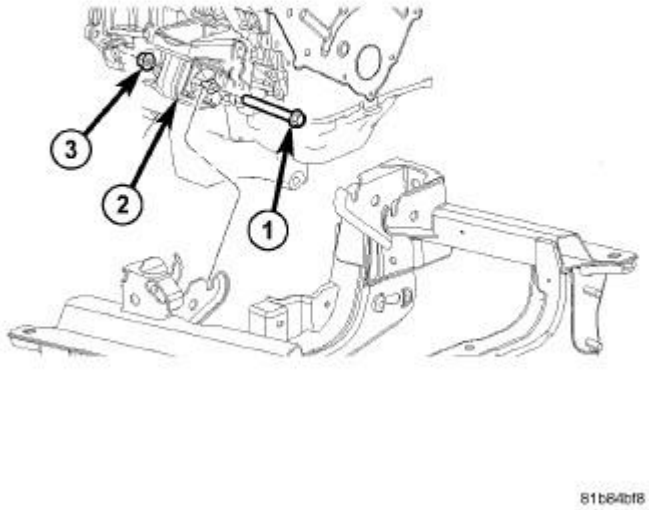

Fig. 24: Right Side Engine Mount, Through Bolt & Nut
Courtesy of CHRYSLER LLC

23. Remove the engine mounting to frame fasteners (1).
24. Remove the upper intake manifold. Refer to **INTAKE MANIFOLD - REMOVAL**.
25. Disconnect the heater hose.

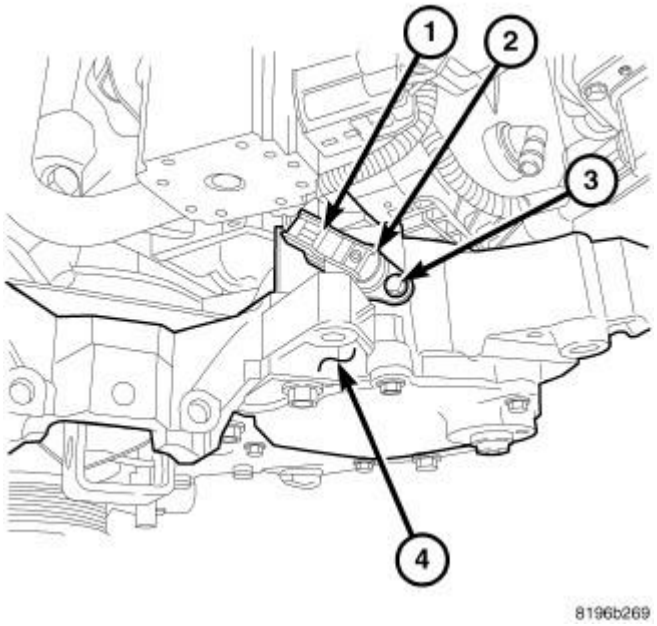

Fig. 25: CMP Sensor Electrical Connector, Twist Sensor & Sensor Mounting Bolt
Courtesy of CHRYSLER LLC

26. Disconnect the coolant temperature, cam position (1), oil pressure sensor electrical connectors.

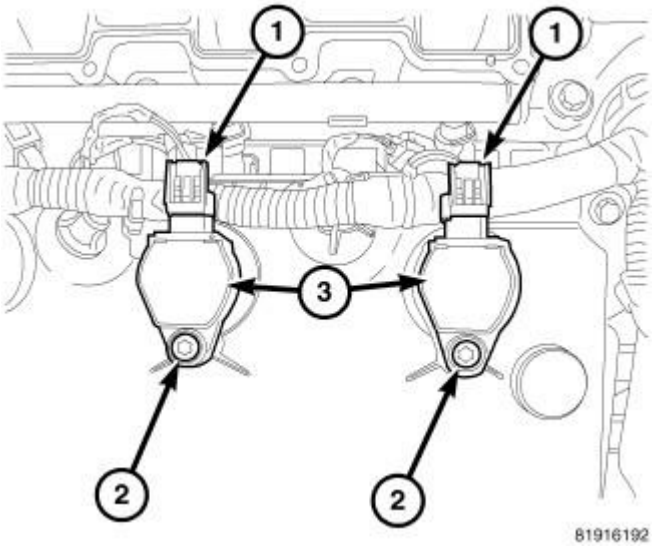

Fig. 26: Ignition Coil Electrical Connectors, Coil Mounting Bolt & Ignition Coils
Courtesy of CHRYSLER LLC

27. Disconnect the left ignition coil (1) and fuel injector harness connectors and position the wiring harness aside.
28. Remove the right intake manifold support braces.
29. Disconnect the capacitor and ground strap from the right cylinder head cover.
30. Disconnect the oxygen sensor, knock, EGR, injector and ignition coil harness connectors (1) and position the wiring harness aside.
31. Disconnect the engine wiring harness from the transmission housing and remove the remaining transmission housing bolts.

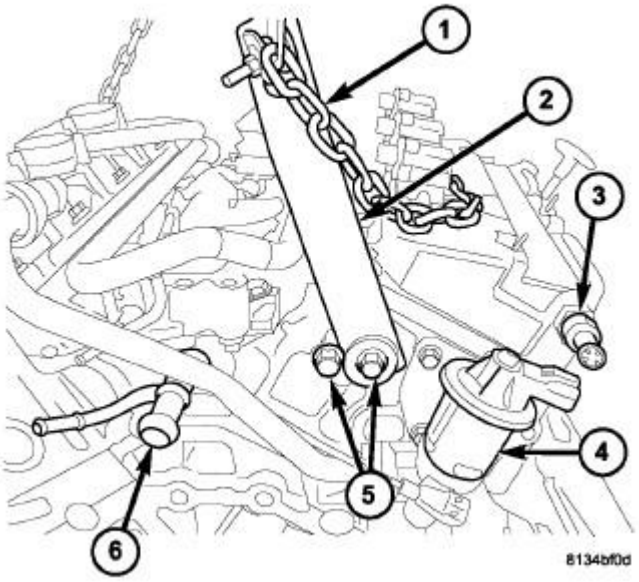

Fig. 27: Engine Lifting Bracket, Chain, CMP Sensor, EGR Valve, Bolts & Coolant Pipe
Courtesy of CHRYSLER LLC

32. Connect the engine lifting bracket (2) from special tool kit (special tool #8534B, Fixture, Driveline Support) to the right rear of the cylinder head outer most bolt access hole (5).
33. Install a bolt into the inner most bolt access hole (5) next to the engine lift bracket to assure lifting bracket positioning.

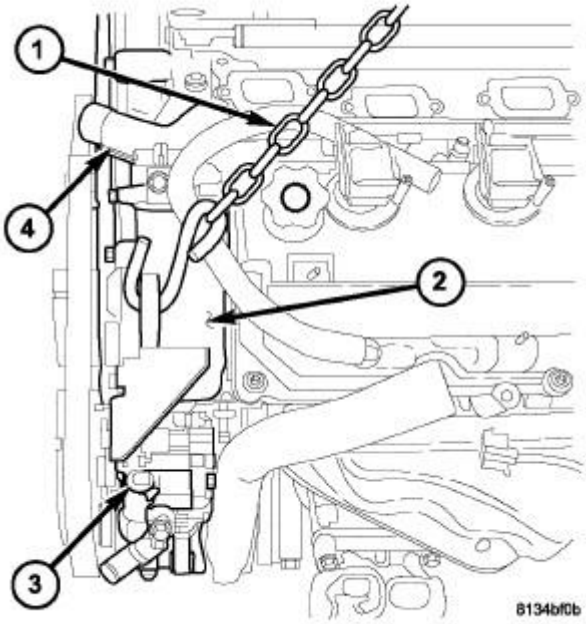

Fig. 28: Engine Lifting Chain, Upper Timing Chain Cover, Power Steering Pump & Thermostat Housing
Courtesy of CHRYSLER LLC

34. Connect a engine hoisting chain (1) to the left timing chain cover (2) engine lifting point and engine lift bracket.

CAUTION: While slowly separating the engine from the vehicle, constant checks must be made to assure proper positioning and that no damage to other components or wiring harnesses occur during separation.

35. Carefully remove the engine from the engine bay area.

INSTALLATION

INSTALLATION

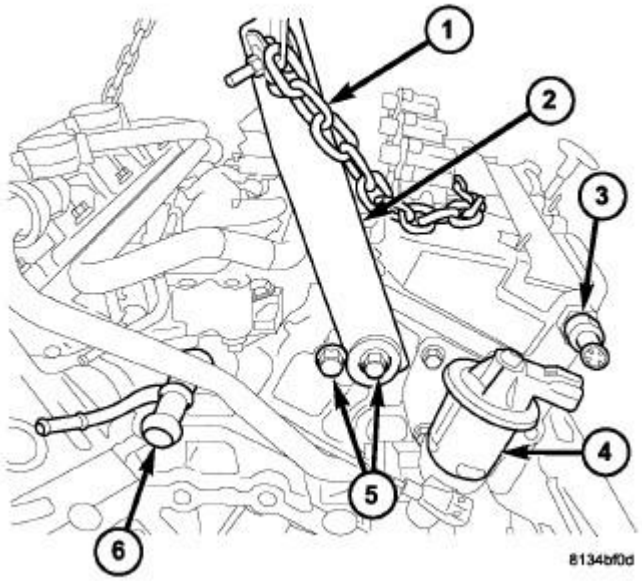

Fig. 29: Engine Lifting Bracket, Chain, CMP Sensor, EGR Valve, Bolts & Coolant Pipe
Courtesy of CHRYSLER LLC

1. Install special tool (special tool #8534B, Fixture, Driveline Support), engine lifting bracket (2) to the right rear of the cylinder head and install a bolt into the inner most bolt hole (5) next to the bracket (5).

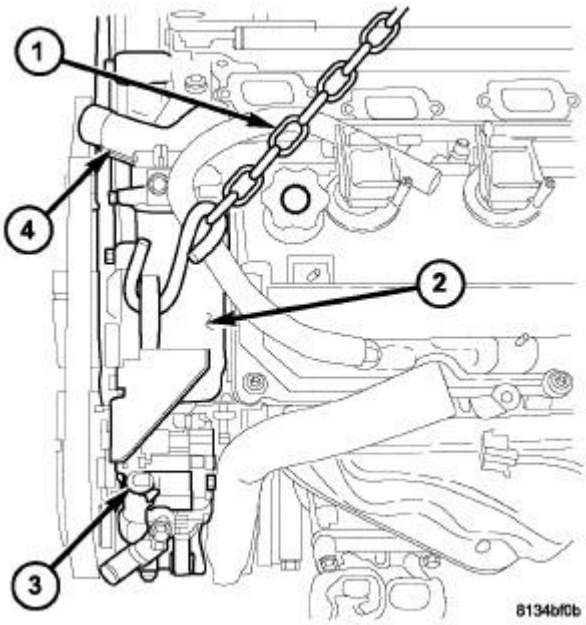

Fig. 30: Engine Lifting Chain, Upper Timing Chain Cover, Power Steering Pump & Thermostat Housing
Courtesy of CHRYSLER LLC

2. Connect a engine hoisting chain (1) to the left timing chain cover (2) lifting point and the engine lifting bracket.
3. Carefully install the engine into the engine bay area and complete the union with the transmission.

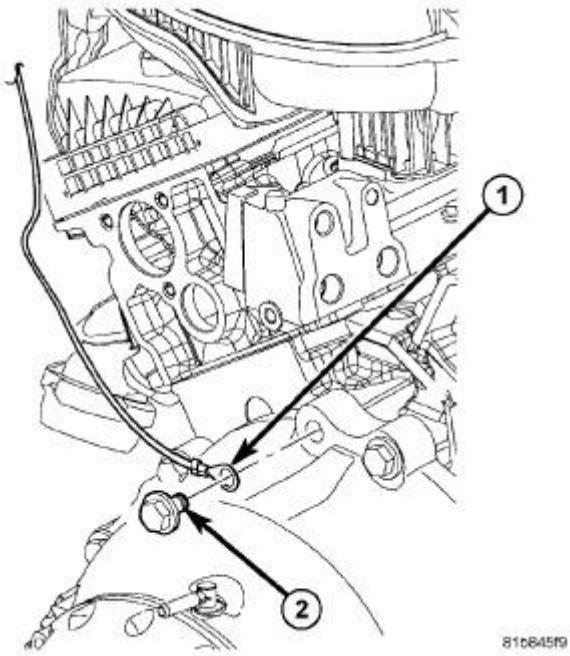

Fig. 31: Ground Strap & Transmission Housing Bolts
Courtesy of CHRYSLER LLC

4. Properly route the engine wiring harness behind the engine and tighten the accessible transmission bolts to 68 N.m (50 ft.lbs.).
5. Connect the ground strap (1) at the transmission housing.
6. Install the remaining transmission housing bolts (2) and tighten to 68 N.m (50 ft.lbs.).

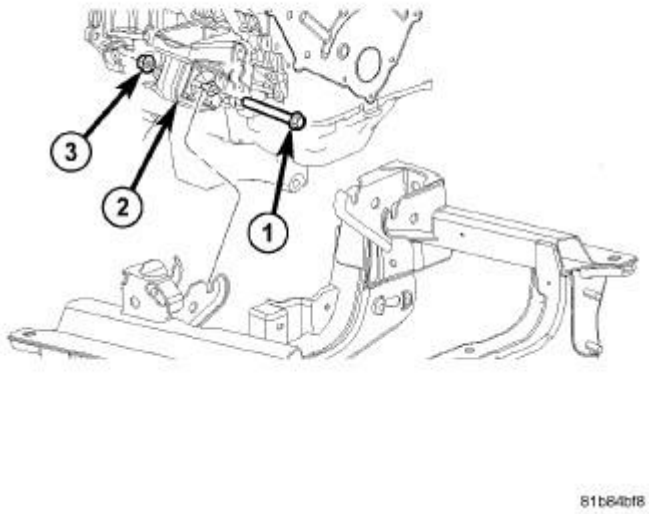

Fig. 32: Right Side Engine Mount, Through Bolt & Nut
Courtesy of CHRYSLER LLC

7. Install the engine mounting fasteners (1) and tighten to 101 N.m (75 ft. lbs.).

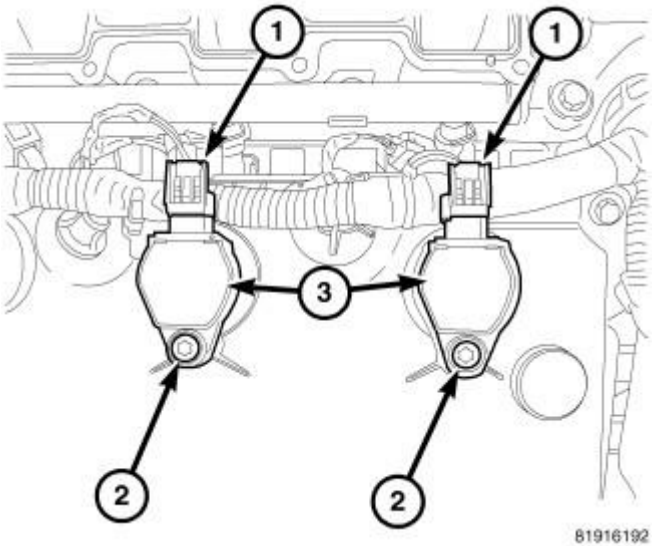

Fig. 33: Ignition Coil Electrical Connectors, Coil Mounting Bolt & Ignition Coils
Courtesy of CHRYSLER LLC

8. Properly position the right engine harness and connect the oxygen sensor, knock sensor, EGR, fuel injector and ignition coil harness connectors (1).
9. Connect the capacitor (3) and ground strap (3) to the right cylinder head cover.
10. Properly position the left engine harness and fuel injector harness connectors.

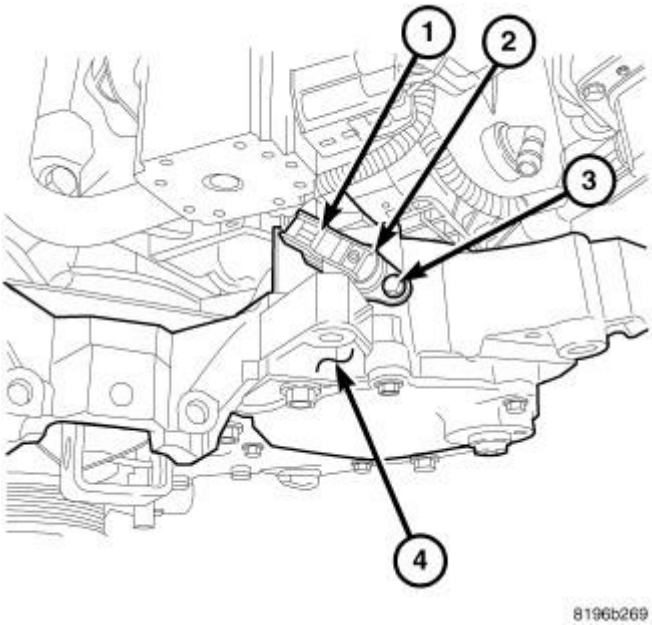

Fig. 34: CMP Sensor Electrical Connector, Twist Sensor & Sensor Mounting Bolt
Courtesy of CHRYSLER LLC

11. Connect the coolant temperature, cam position (1), oil pressure sensor harness connectors.
12. Connect the oxygen sensor, and the ground wire, to the cylinder head cover.

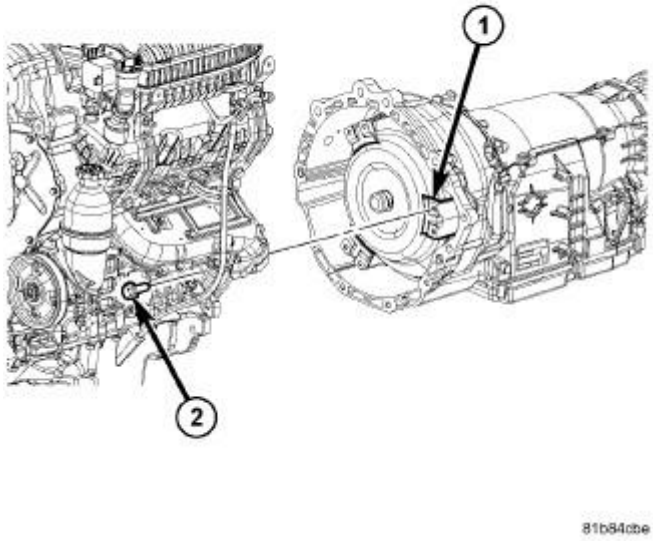

Fig. 35: Torque Converter Bolts
Courtesy of CHRYSLER LLC

13. Install the torque converter bolts (2). Tighten bolts to 75 N.m (55 ft. lbs.).
14. Connect the heater hose.
15. Install the right intake manifold support braces.

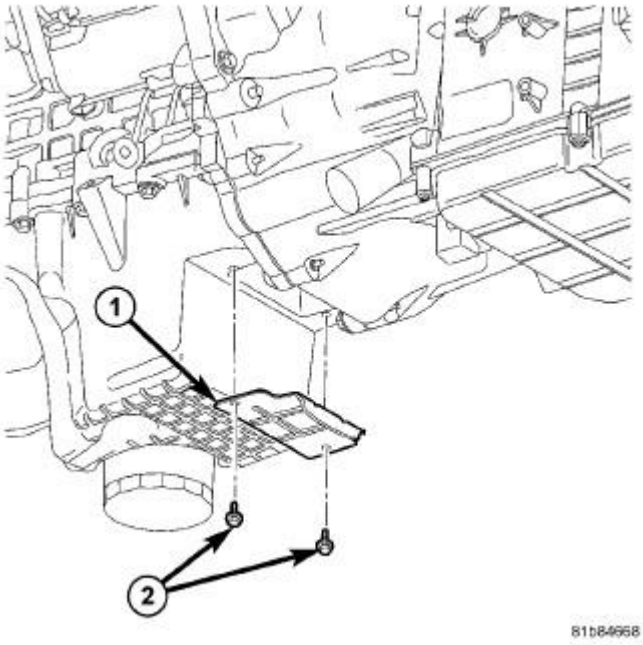

Fig. 36: Flex Plate Inspection Cover & Fasteners

Courtesy of CHRYSLER LLC

16. Install the torque converter inspection plate (1). Tighten bolts to 12 N.m (105 in. lbs.)
17. Install the upper intake manifold. Refer to **INTAKE MANIFOLD - INSTALLATION**.
18. Connect the upper radiator hose.

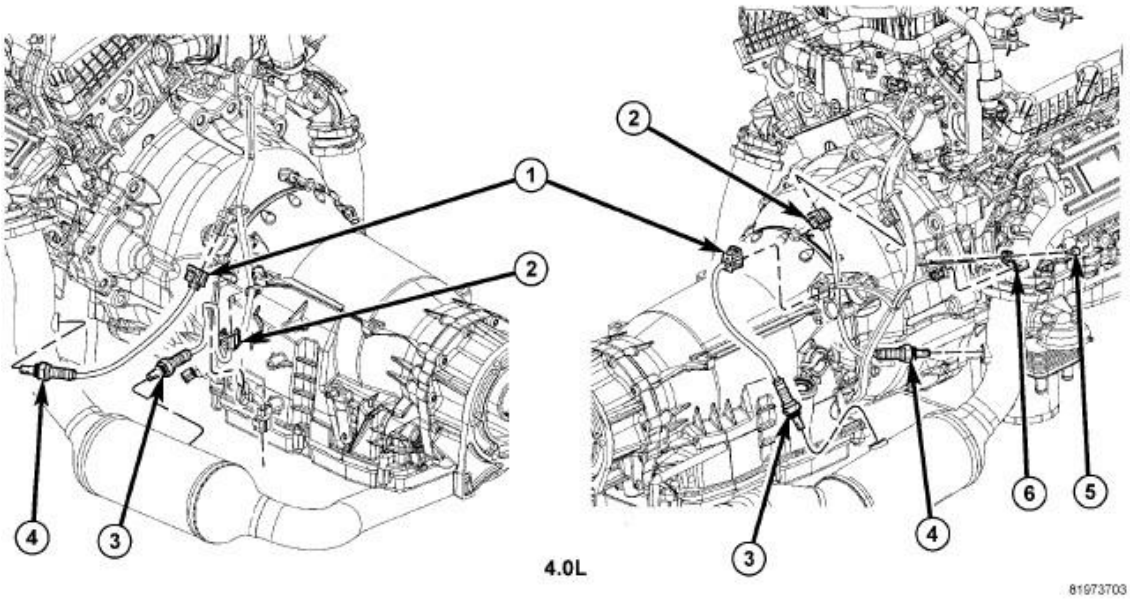

Fig. 37: CKP Sensor & Oxygen Sensors
Courtesy of CHRYSLER LLC

19. Install the crankshaft position sensor (2). Refer to **FUEL SYSTEM/FUEL INJECTION/CRANKSHAFT POSITION SENSOR - INSTALLATION**
20. Connect the engine block heater (if equipped).

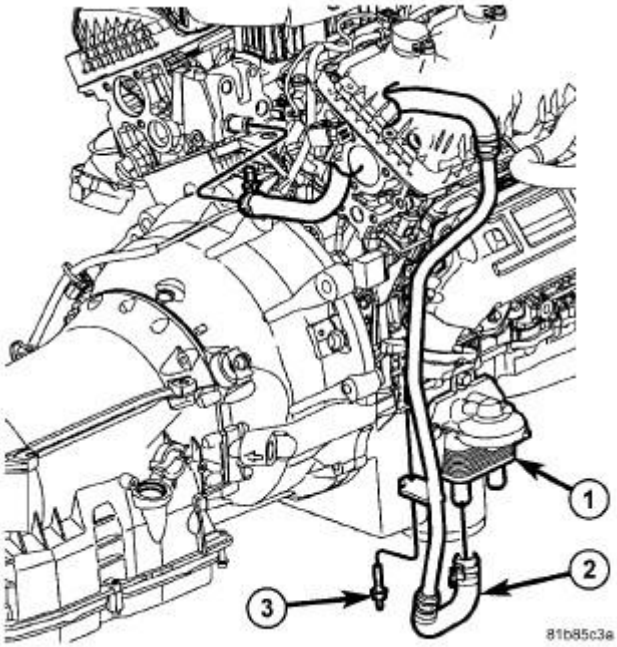

Fig. 38: Oil Cooler, Coolant Hose & Fastener
Courtesy of CHRYSLER LLC

21. Connect the oil cooler hose (2) at the cooler.

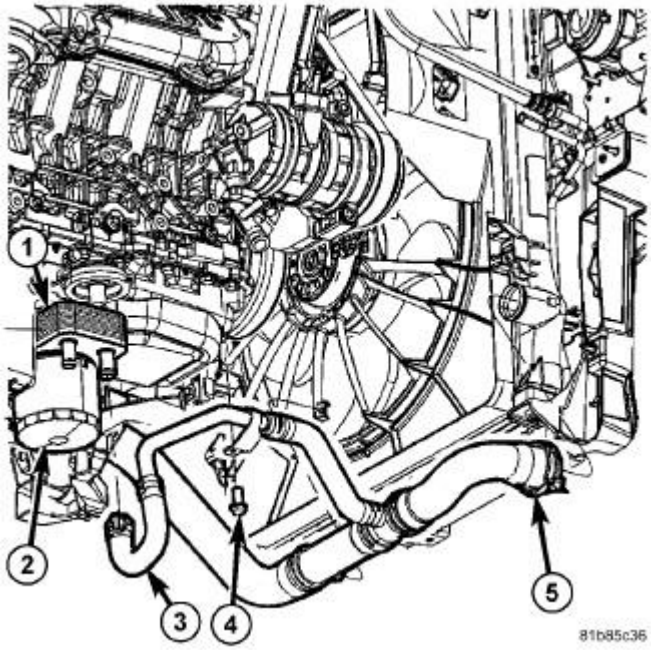

Fig. 39: Engine Oil Cooler, Filter, Coolant Hose, Bolt & Lower Radiator Hose
Courtesy of CHRYSLER LLC

22. Connect the oil cooler hose (3) at the cooler.
23. Connect the lower radiator hose (5).

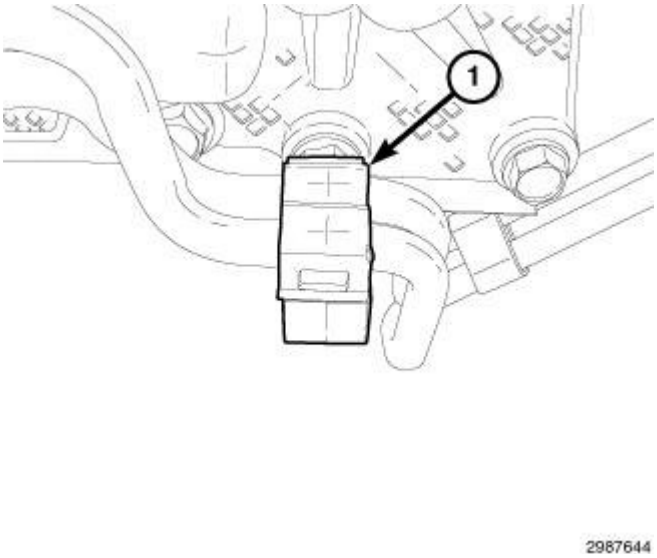

Fig. 40: Transmission Oil Cooling Line Retainer
Courtesy of CHRYSLER LLC

NOTE: The transmission oil cooling line retainer (1) is intended for one-time use only.

24. Install the retainer (1) to the transmission oil cooling lines and engage the retainer to the oil pan mounting stud.

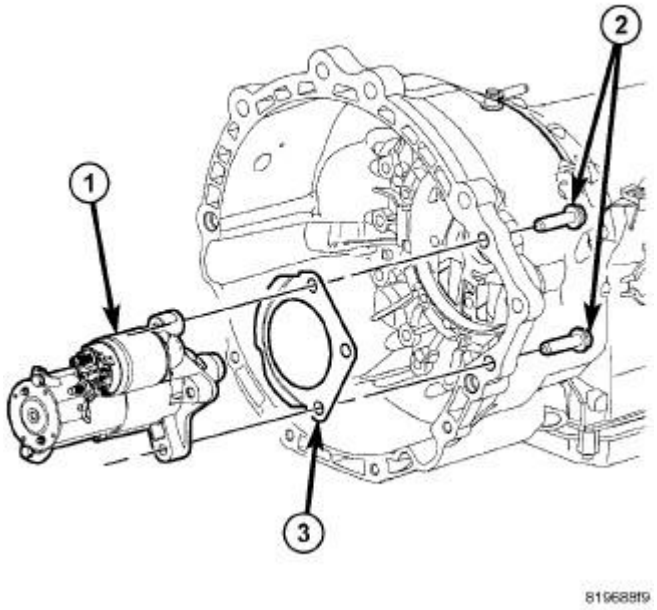

Fig. 41: Starter Motor
Courtesy of CHRYSLER LLC

25. Install new oil filter.
26. Install the starter (1) and spacer plate. Refer to **ELECTRICAL/STARTING/STARTER MOTOR - INSTALLATION** .

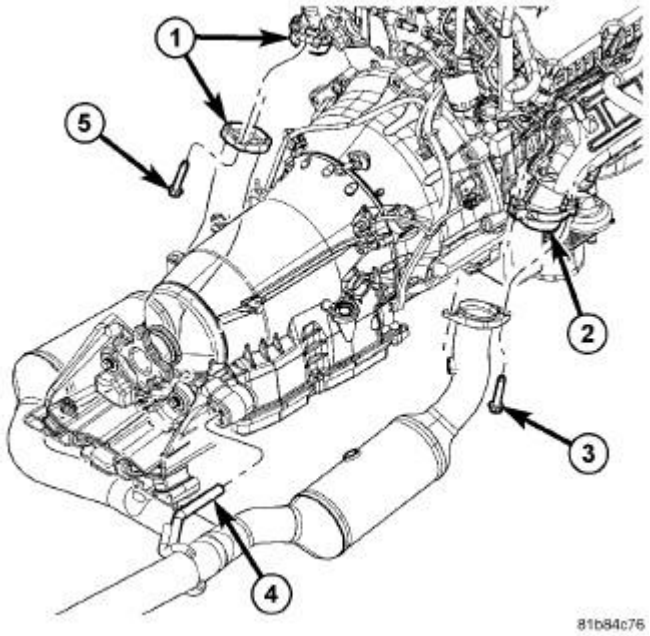

Fig. 42: Exhaust Pipe To Manifold With Fasteners
Courtesy of CHRYSLER LLC

27. Connect the left (1) and right exhaust pipe to the exhaust manifold (2).

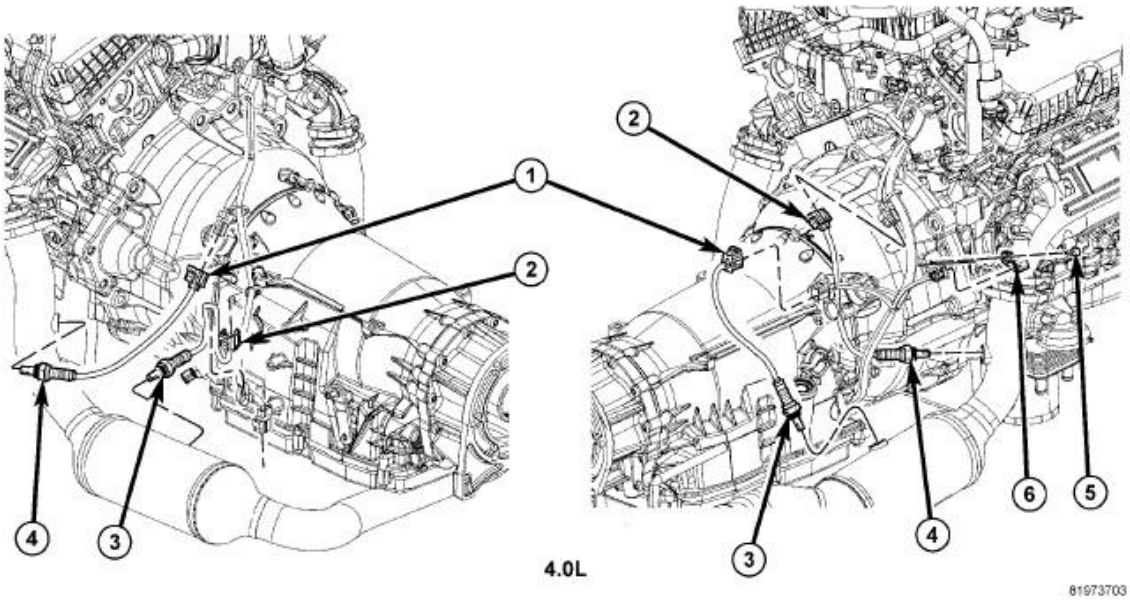

Fig. 43: CKP Sensor & Oxygen Sensors
Courtesy of CHRYSLER LLC

28. Connect the oxygen sensors (1).

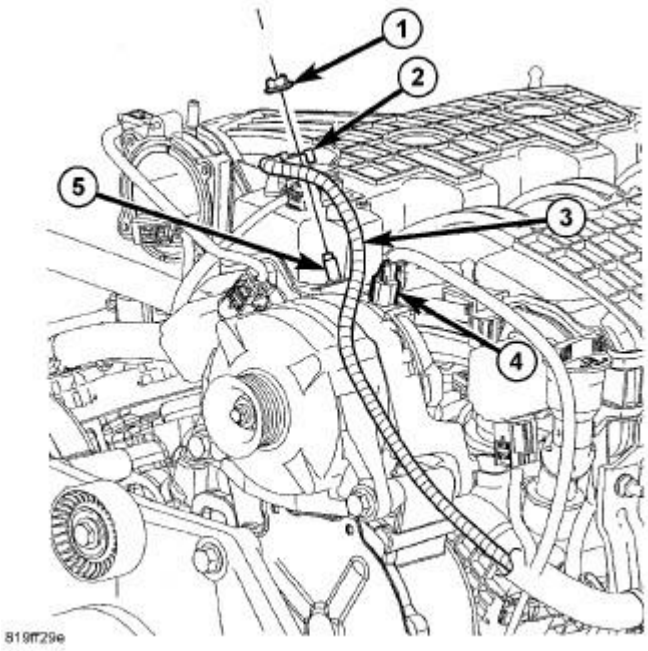

Fig. 44: Generator Electrical Connectors & Battery Cable
Courtesy of CHRYSLER LLC

29. Connect the generator electrical connectors (2). Refer to **ELECTRICAL/CHARGING/GENERATOR - INSTALLATION** .

30. Fill the cooling system to the proper level using the appropriate coolant.
31. Fill engine crankcase with proper oil to correct level. Refer to **SPECIFICATIONS** .

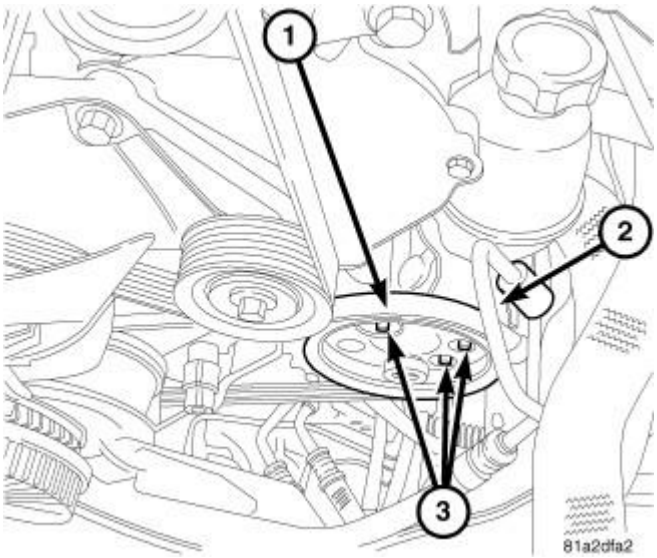

Fig. 45: Power Steering Belt, Pressure Line & Power Steering Pump Mounting Bolts
Courtesy of CHRYSLER LLC

32. Install the P/S pump (2).

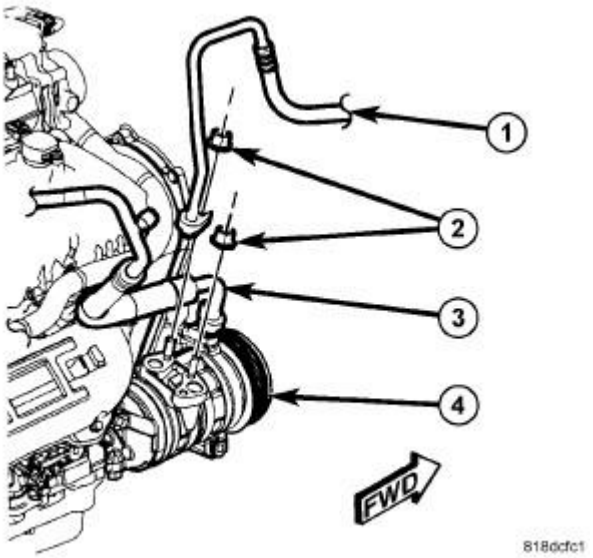

Fig. 46: A/C Lines To Compressor
Courtesy of CHRYSLER LLC

33. Install the A/C lines (1, 3).
34. Evacuate and recharge air conditioning.
35. Install the hood.

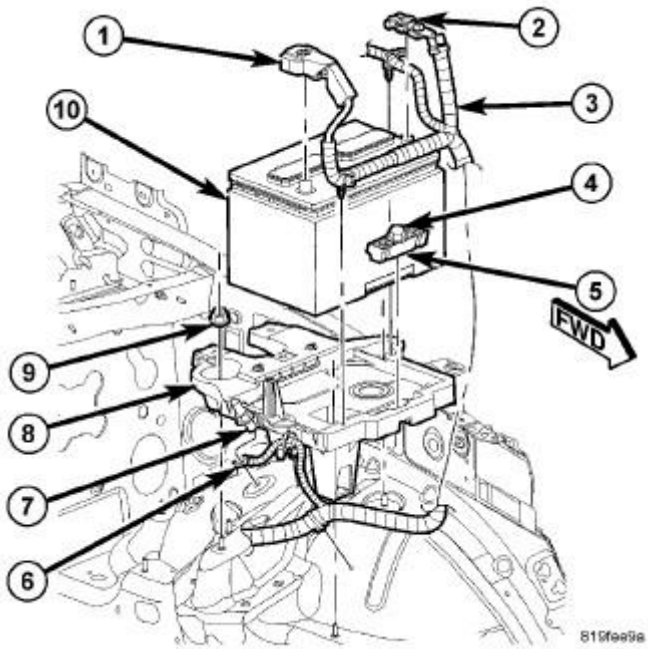

Fig. 47: Battery Cables & Assembly
Courtesy of CHRYSLER LLC

36. Connect the negative battery cable (2).
37. Start engine and run until operating temperature is reached.

NOTE: **The Cam/Crank Variation Relearn procedure must be performed anytime there has been a repair/replacement made to a powertrain system, for example: flywheel, valvetrain, camshaft and/or crankshaft sensors or components. Refer to DTC-Based Diagnostics/MODULE, Powertrain Control (PCM) - Standard Procedure .**

SPECIAL TOOLS

SPECIAL TOOLS

1023 - Puller (Originally Shipped In Kit Number(s) 8678.) 10368 - Set, Universal Protective Cap 6341A - Remover, Seal (Originally Shipped In Kit Number(s) 6671.) 6342 - Installer, Seal (Originally Shipped In Kit Number(s) 6672.) 6526A - Adapter, Valve Spring (Originally Shipped In Kit Number(s) 6546.) 6527 - Adapter

(Originally Shipped In Kit Number(s) 6673.)
6641 - Installer, Sprocket
(Originally Shipped In Kit Number(s) 6671.)
6788 - Protector, Cam Seal
(Originally Shipped In Kit Number(s) 6794, 6795, 6796.)
6792 - Installer, Crank Sprocket
(Originally Shipped In Kit Number(s) 6784, 6809, 6822.)
6792-1 - Cup
(Originally Shipped In Kit Number(s) 6784, 6809, 6822.)
6926 - Installer, Crankshaft Seal
(Originally Shipped In Kit Number(s) 6672, 6945, 6947, 6948, 6949.)
6958 - Wrench, Spanner
(Originally Shipped In Kit Number(s) 6947, 6949, 6966, 8204, 8204CC, 8667.)
7700 - Tester, Cooling System
(Originally Shipped In Kit Number(s) 7700-A.)
8116 - Adapter, Pressure PEP
(Originally Shipped In Kit Number(s) 8201, 8201CC, 8204, 8204CC.)
8189 - Guide Pins
(Originally Shipped In Kit Number(s) 8180, 8180CC, 8263, 8263CC.)
8225 - Alignment Fixture
(Originally Shipped In Kit Number(s) 8180, 8180CC, 8263, 8263CC.)
8346 - Pins, Adapter
(Originally Shipped In Kit Number(s) 8503, 8510, 8520, 8520CC.)
8351 - Release Probe
(Originally Shipped In Kit Number(s) 8283, 8283CC, 8529, 8529CC.)
8406 - Adapter, Oil Pressure
(Originally Shipped In Kit Number(s) 8650, 8652, 8653, 8700, 8700CC.)
8534B - Fixture, Driveline Support
(Originally Shipped In Kit Number(s) 8534, 8534B, 8849, 9565.)
9020 - Insert, Crankshaft
(Originally Shipped In Kit Number(s) 9076, 9090, 9090CC.)
9365 - Holding Fixture, Damper
(Originally Shipped In Kit Number(s) 9329, 9515, 9516, 9516-CAN, 9517, 9517-CAN, 9518, 9519, 9540, 9541.)
C-3059A - Remover/Installer
C-3292A - Gauge, Pressure
C-3339A - Set, Dial Indicator
(Originally Shipped In Kit Number(s) 9202.)
C-3422-D - Compressor, Valve Spring
C-3685-A - Bloc-Chek Kit
C-4685-C1 - Screw, Forcing
(Originally Shipped In Kit Number(s) 6672.)
MD-998306 - Installer, Camshaft
MD998772A - Compressor, Valve Spring
(Originally Shipped In Kit Number(s) 8678, 8853, 8854.)

AIR INTAKE SYSTEM

AIR CLEANER

REMOVAL

REMOVAL

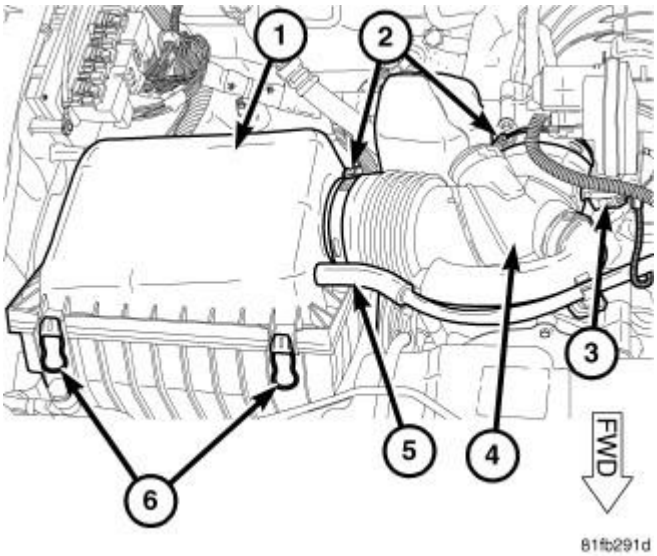

Fig. 48: Air Filter Housing
Courtesy of CHRYSLER LLC

1. Release the housing cover latches (6).

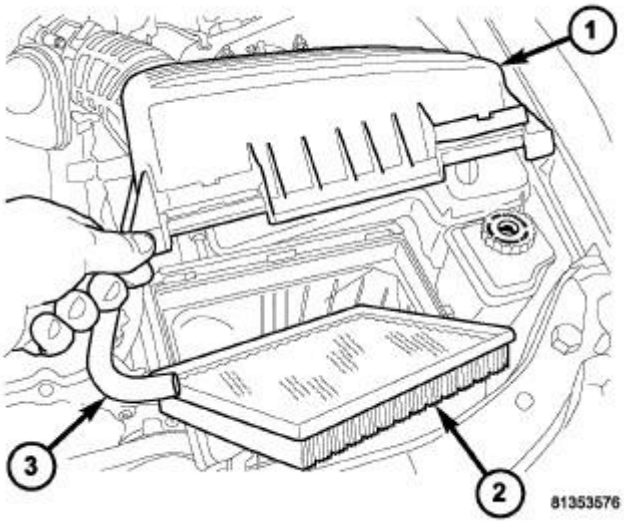

Fig. 49: Air Cleaner Element
Courtesy of CHRYSLER LLC

2. Lift the cover (1) and remove the air filter element.

INSTALLATION

INSTALLATION

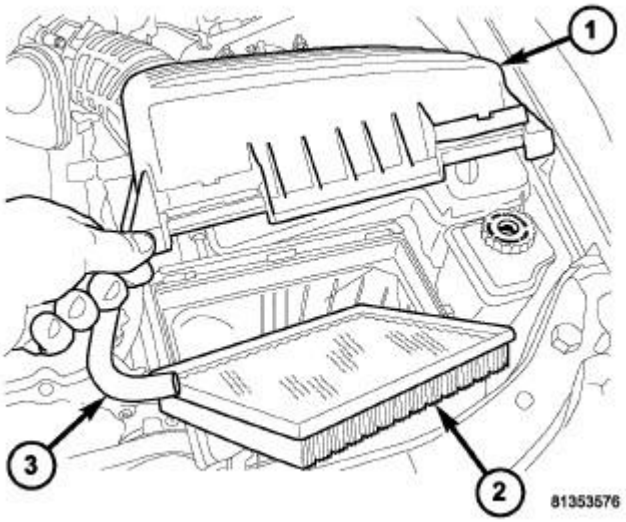

Fig. 50: Air Cleaner Element
Courtesy of CHRYSLER LLC

1. Install the air filter element (2) into air box.

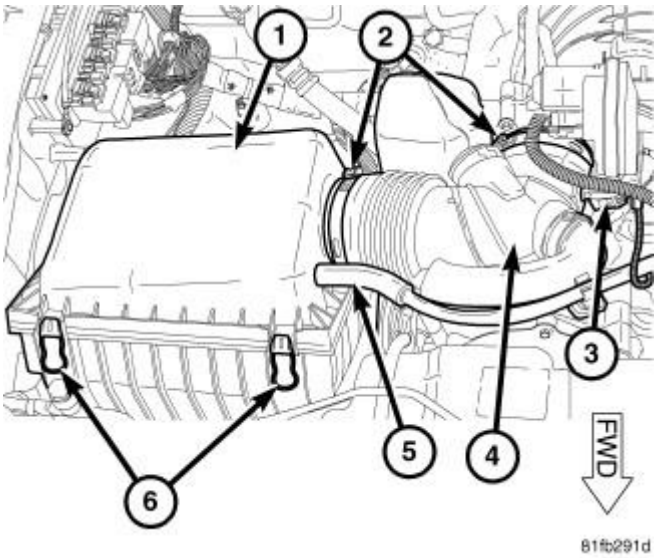

Fig. 51: Air Filter Housing
Courtesy of CHRYSLER LLC

2. Seat cover (1) onto element housing and lock the front latches (6).

BODY, AIR CLEANER

REMOVAL

REMOVAL

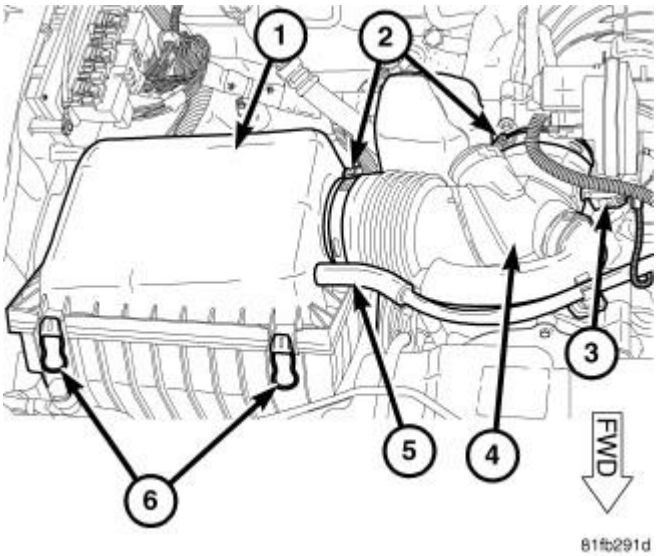

Fig. 52: Air Filter Housing
Courtesy of CHRYSLER LLC

1. Disconnect the CCV hose (5) at the element housing (1).
2. Loosen two clamps (2), disengage and reposition the air inlet hose (4).
3. Pull housing up and off of the three locating grommets.
4. Disengage the air inlet duct and remove housing (1) from vehicle.

INSTALLATION

INSTALLATION

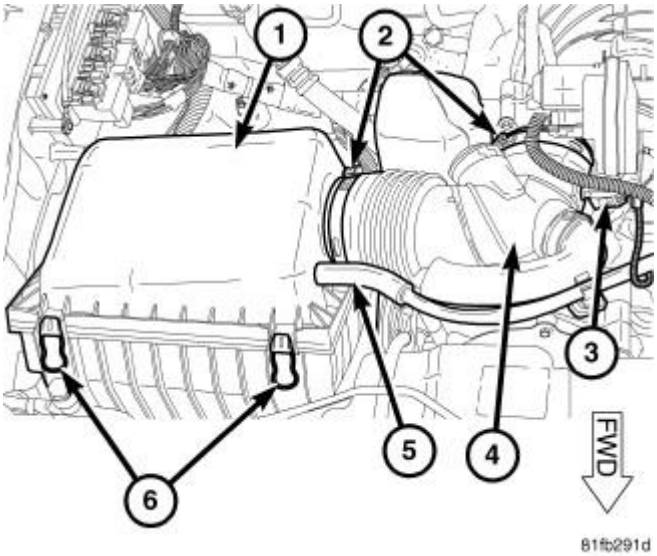

Fig. 53: Air Filter Housing
Courtesy of CHRYSLER LLC

1. Align the housing (1) with the air inlet duct and locating grommets in the wheel housing.
2. Properly fit the housing (1) while engaging the air inlet duct. Lift up on the air inlet duct to engage lock tabs.
3. Install the air inlet hose (4) to the housing (1) and throttle body. Tighten clamps (2).
4. Connect the CCV hose (5) to housing.

CYLINDER HEAD

DESCRIPTION

DESCRIPTION

The aluminum alloy cylinder heads feature cross- flow type intake and exhaust ports. Valve guides and seat inserts are powdered metal. Valves are arranged in a "V", with each camshaft on center. To improve combustion speed the chambers are a compact spherical design with a squish area of approximately 30 percent of the piston top area. The cylinder heads are common to either cylinder bank by reversing the direction of installation.

DIAGNOSIS AND TESTING

DIAGNOSIS AND TESTING - CYLINDER HEAD GASKET

A cylinder head gasket leak can be located between adjacent cylinders or between a cylinder and the adjacent water jacket.

Possible indications of the cylinder head gasket leaking between adjacent cylinders are:

- Loss of engine power

- Engine misfiring
- Poor fuel economy

Possible indications of the cylinder head gasket leaking between a cylinder and an adjacent water jacket are:

- Engine overheating
- Loss of coolant
- Excessive steam (white smoke) emitting from exhaust
- Coolant foaming

CYLINDER-TO-CYLINDER LEAKAGE TEST

To determine if an engine cylinder head gasket is leaking between adjacent cylinders, follow the procedures in Cylinder Compression Pressure Test. Refer to **CYLINDER COMPRESSION PRESSURE TEST**. An engine cylinder head gasket leaking between adjacent cylinders will result in approximately a 50-70% reduction in compression pressure.

CYLINDER-TO-WATER JACKET LEAKAGE TEST

WARNING: USE EXTREME CAUTION WHEN THE ENGINE IS OPERATING WITH COOLANT PRESSURE CAP REMOVED.

VISUAL TEST METHOD

With the engine cool, remove the coolant pressure cap. Start the engine and allow it to warm up until thermostat opens.

If a large combustion/compression pressure leak exists, bubbles will be visible in the coolant.

COOLING SYSTEM TESTER METHOD

WARNING: WITH COOLING SYSTEM TESTER IN PLACE, PRESSURE WILL BUILD UP FAST. EXCESSIVE PRESSURE BUILT UP, BY CONTINUOUS ENGINE OPERATION, MUST BE RELEASED TO A SAFE PRESSURE POINT. NEVER PERMIT PRESSURE TO EXCEED 138 kPa (20 psi).

Install Cooling System Tester (special tool #7700, Tester, Cooling System) or equivalent to pressure cap neck. Start the engine and observe the tester's pressure gauge. If gauge pulsates with every power stroke of a cylinder a combustion pressure leak is evident.

CHEMICAL TEST METHOD

Combustion leaks into the cooling system can also be checked by using Bloc-Chek Kit (special tool #C-3685-A, Bloc-Chek Kit) or equivalent. Perform test following the procedures supplied with the tool kit.

REMOVAL

REMOVAL

RIGHT CYLINDER HEAD

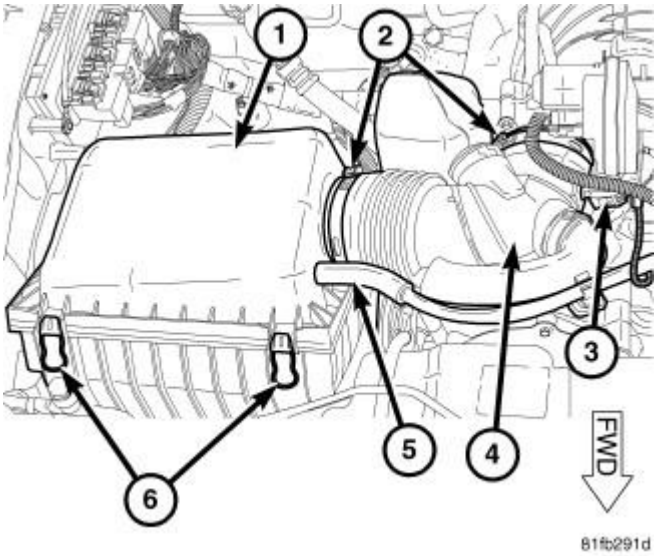

Fig. 54: Air Filter Housing
Courtesy of CHRYSLER LLC

1. Perform the fuel system pressure relief procedure. Refer to **FUEL DELIVERY, GAS, STANDARD PROCEDURE** .
2. Disconnect and isolate the negative battery cable.
3. Drain the cooling system. Refer to **STANDARD PROCEDURE** .
4. Remove the air cleaner element housing. Refer to **BODY, AIR CLEANER, REMOVAL**.

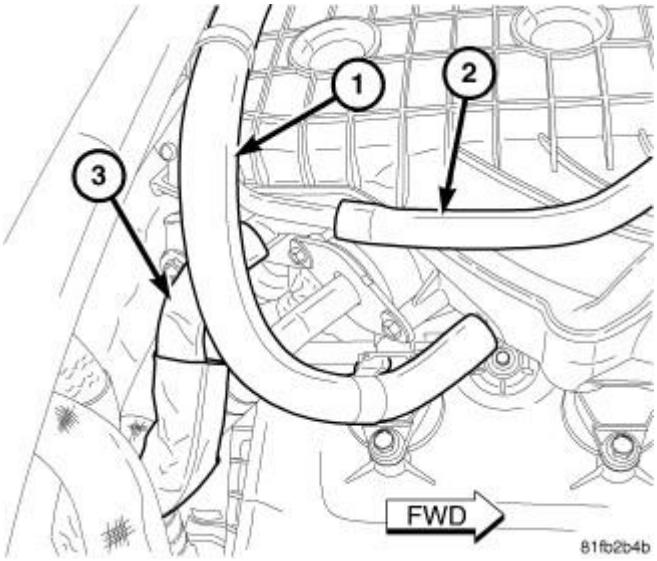

Fig. 55: EGR Tube, PCV & Power Brake Booster Vacuum Hoses
Courtesy of CHRYSLER LLC

5. Remove the upper intake manifold including EGR tube, PCV, purge and power brake booster vacuum hoses. Refer to **MANIFOLD, INTAKE, REMOVAL**.

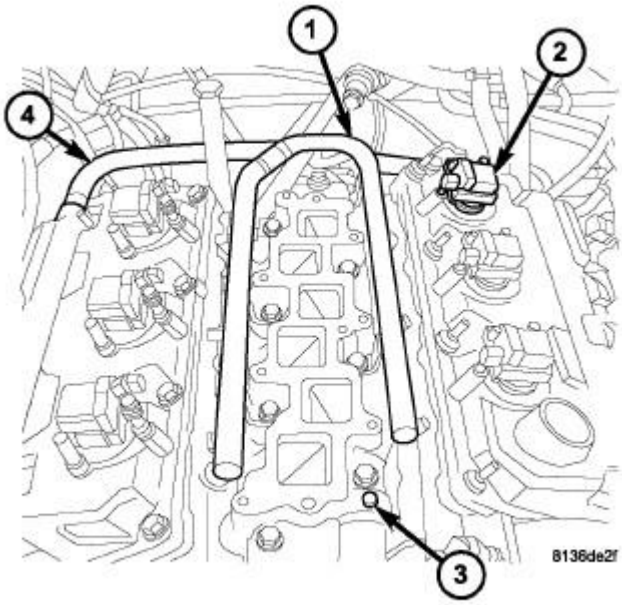

Fig. 56: Fuel Rail, Ignition Coil, Lower Intake Manifold & Hose
Courtesy of CHRYSLER LLC

6. Remove fuel rail and lower intake manifold. Refer to **MANIFOLD, INTAKE, REMOVAL**.

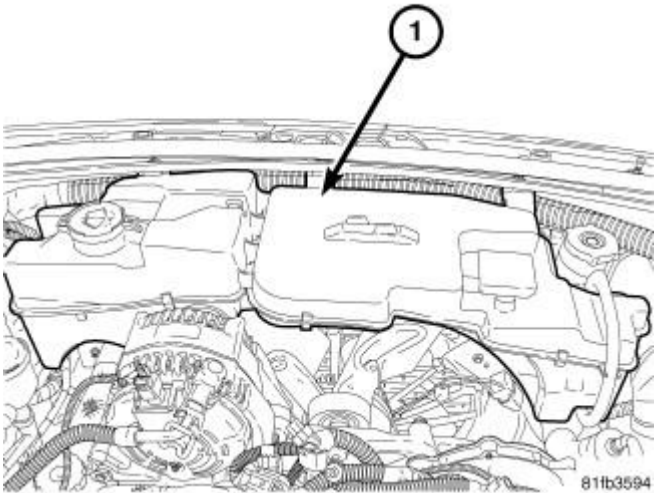

Fig. 57: Coolant Recovery/Washer Fluid Reservoir
Courtesy of CHRYSLER LLC

7. Disconnect two washer pump hoses, coolant recovery hose and washer pump electrical connector from

the coolant recovery/washer fluid reservoir assembly (1).

8. Remove 5 screws and remove the coolant recovery/washer fluid reservoir assembly (1).

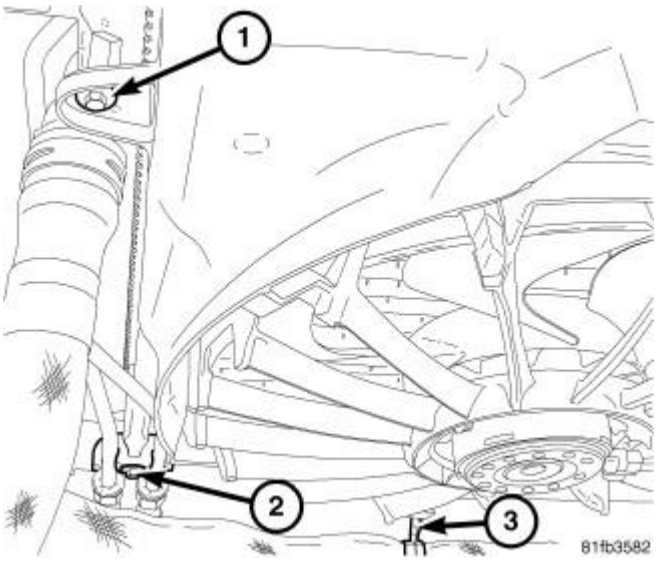

Fig. 58: Radiator Fastener, Transmission Cooling Line Retainer Bolt & Radiator Hose Retainer
Courtesy of CHRYSLER LLC

9. Disengage the radiator hose retainer (3) from the electric fan shroud.
10. Remove transmission cooling line retainer bolt (2) from the electric fan shroud.

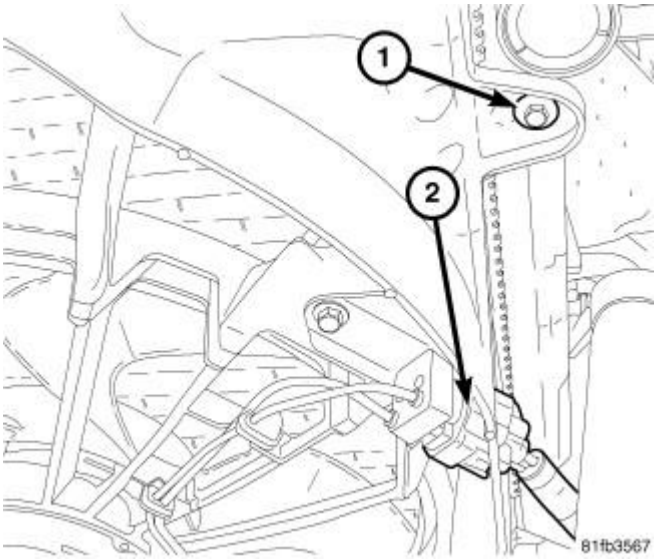

Fig. 59: Electrical Fan Connector & Bolt
Courtesy of CHRYSLER LLC

11. Disconnect the electric fan connector (2) from the electric fan shroud.
12. Remove two bolts (1) and lift the electric fan shroud from vehicle.

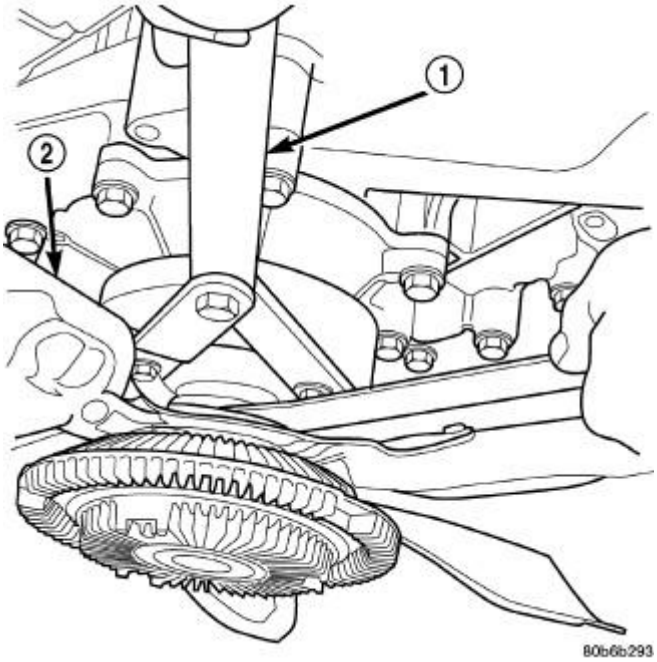

Fig. 60: Using Special Tool 6958 Spanner Wrench & Adapter Pins 8346
Courtesy of CHRYSLER LLC

13. Use Adapter Pins (special tool #8346, Pins, Adapter) in Spanner Wrench (special tool #6958, Wrench, Spanner) (1) to hold the pulley and remove fan/viscous fan drive assembly. Refer to **FAN, COOLING, VISCOUS, REMOVAL** and **FAN, COOLING, ELECTRIC, REMOVAL** .

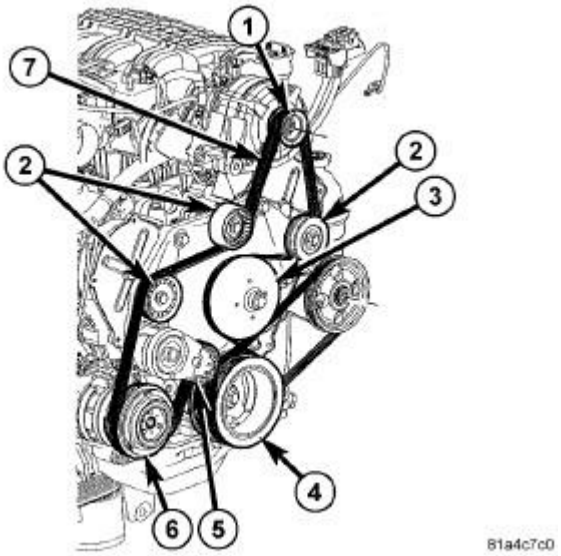

Fig. 61: Accessory Drive Belt Routing - 4.0L
Courtesy of CHRYSLER LLC

14. Remove accessory drive belt (7). Refer to **BELT, SERPENTINE, REMOVAL** and **BELT,**

SERPENTINE, POWER STEERING, REMOVAL .

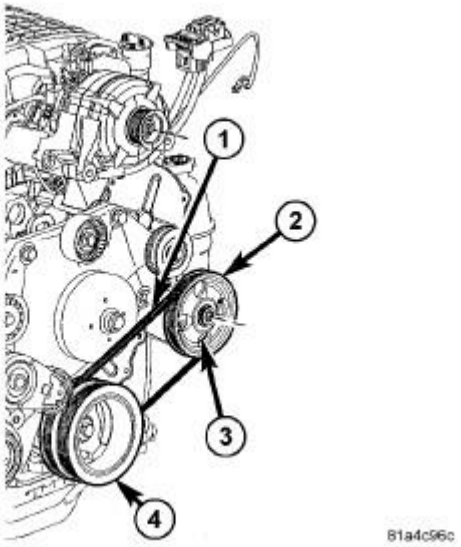

Fig. 62: Power Steering Belt
Courtesy of CHRYSLER LLC

15. Remove the power steering belt (1). Refer to **BELT, SERPENTINE, REMOVAL** and **BELT, SERPENTINE, POWER STEERING, REMOVAL** .

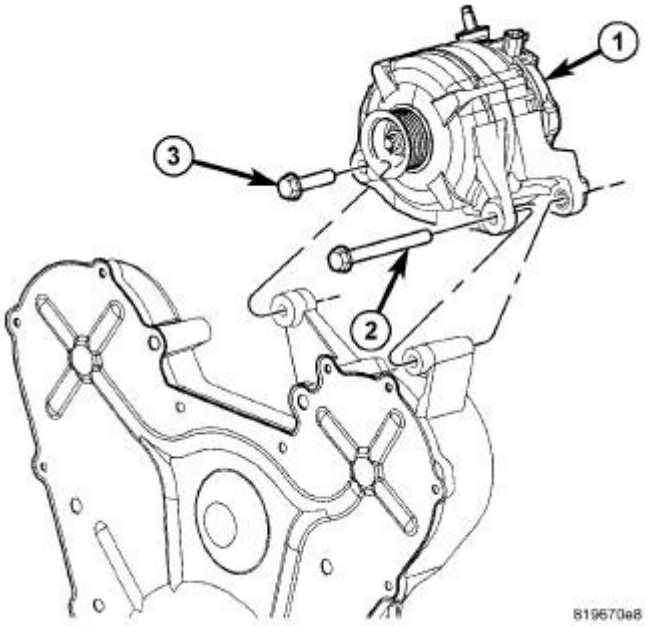

Fig. 63: Generator & Mounting Bolts
Courtesy of CHRYSLER LLC

16. Remove the generator. Refer to **GENERATOR, REMOVAL** .

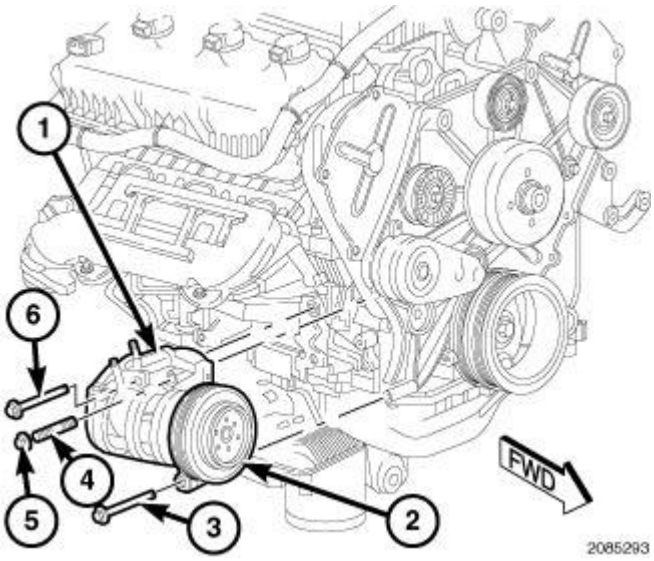

Fig. 64: Removing/Installing A/C Compressor
Courtesy of CHRYSLER LLC

17. Remove the nut (5) that secures the front of the A/C compressor (1).
18. Back out the A/C compressor mounting bolt (3) and stud (4) from the accessory drive bracket.

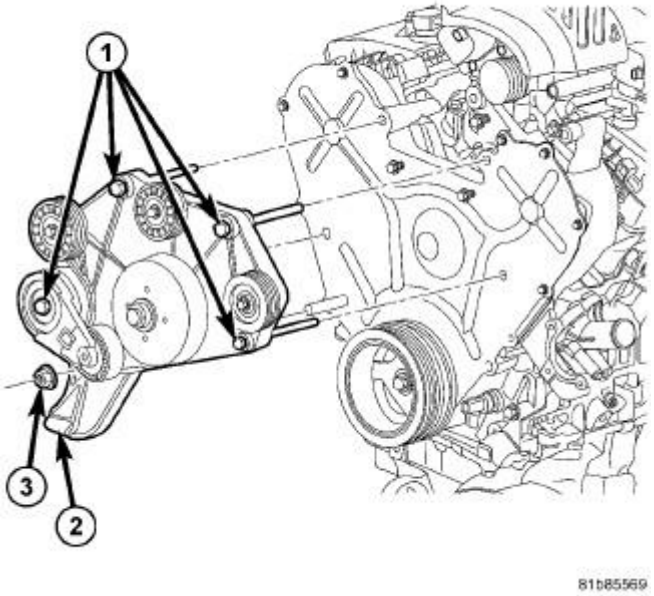

Fig. 65: Accessory Drive Bracket & Fasteners
Courtesy of CHRYSLER LLC

19. Remove four bolts (1) and nut (3) and remove the accessory drive bracket (2).

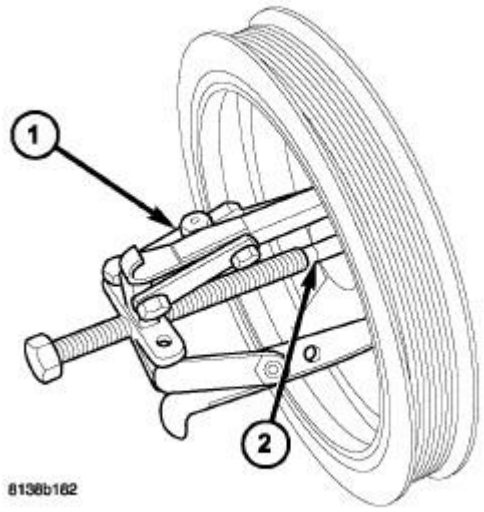

Fig. 66: Removing Crankshaft Damper
Courtesy of CHRYSLER LLC

20. Remove crankshaft damper bolt.
21. Using Puller (special tool #1023, Puller) (1) and Crankshaft Insert (special tool #9020, Insert, Crankshaft) (2), remove crankshaft damper.

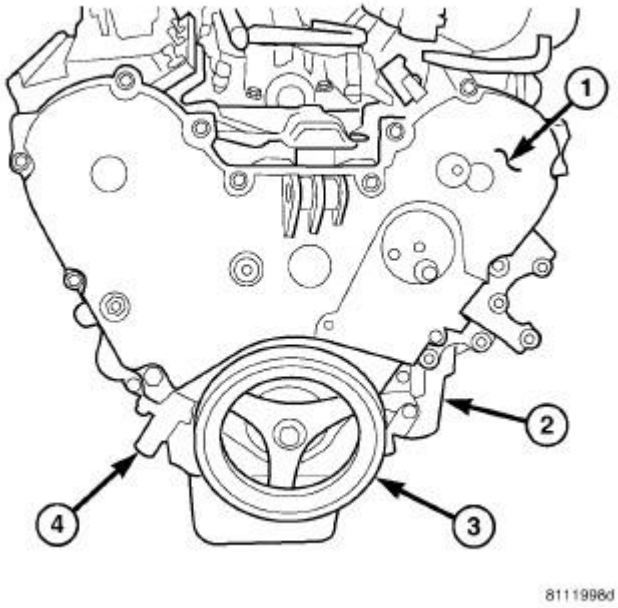

Fig. 67: Front Timing Belt Cover, Engine Oil Filter, Vibration Damper & Timing Belt Tensioner
Courtesy of CHRYSLER LLC

22. Remove the fourteen outer timing belt cover bolts and cover (1).

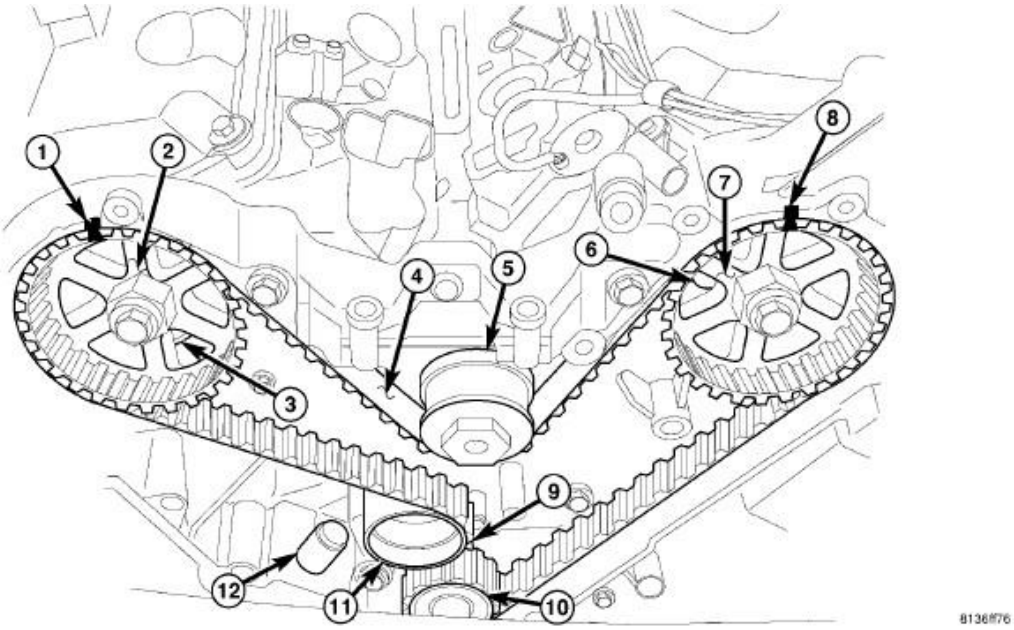

Fig. 68: Timing Gear Components
Courtesy of CHRYSLER LLC

23. Rotate the engine to TDC and align timing belt marks (1, 8, 9).

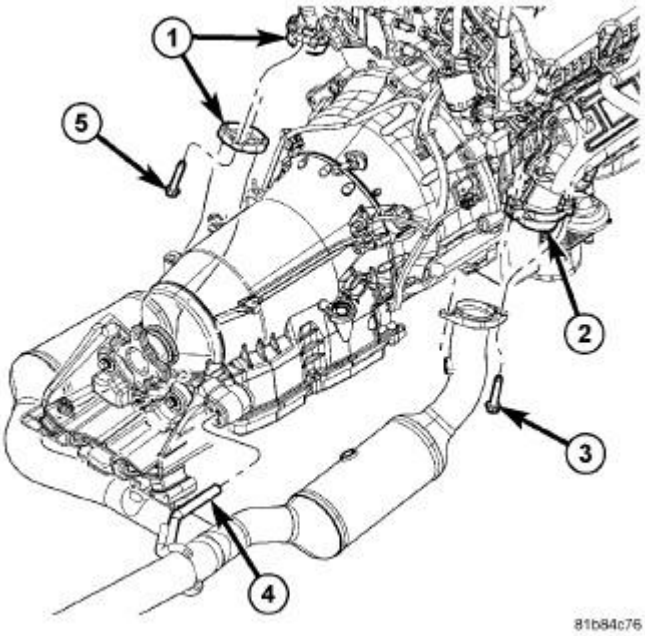

Fig. 69: Exhaust Pipe To Manifold With Fasteners
Courtesy of CHRYSLER LLC

24. Raise and support the vehicle.
25. Remove front exhaust pipe to exhaust manifold mounting bolts (3) and (5).

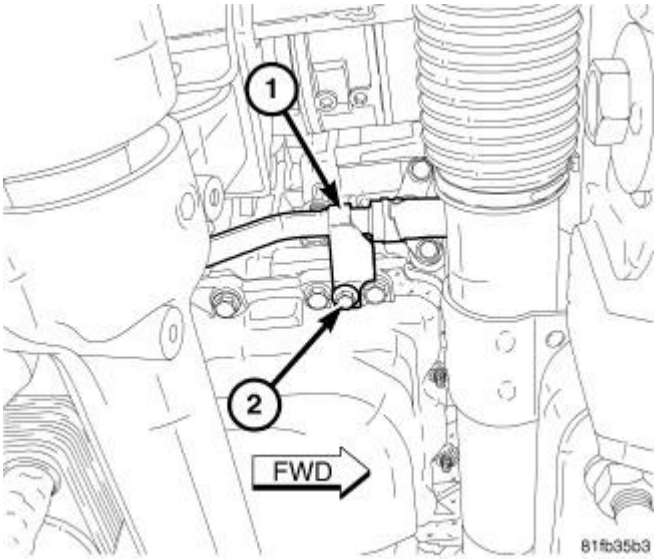

Fig. 70: Oil Cooler Line & Bolt
Courtesy of CHRYSLER LLC

26. Remove bolt (2) and reposition oil cooler hose (1).

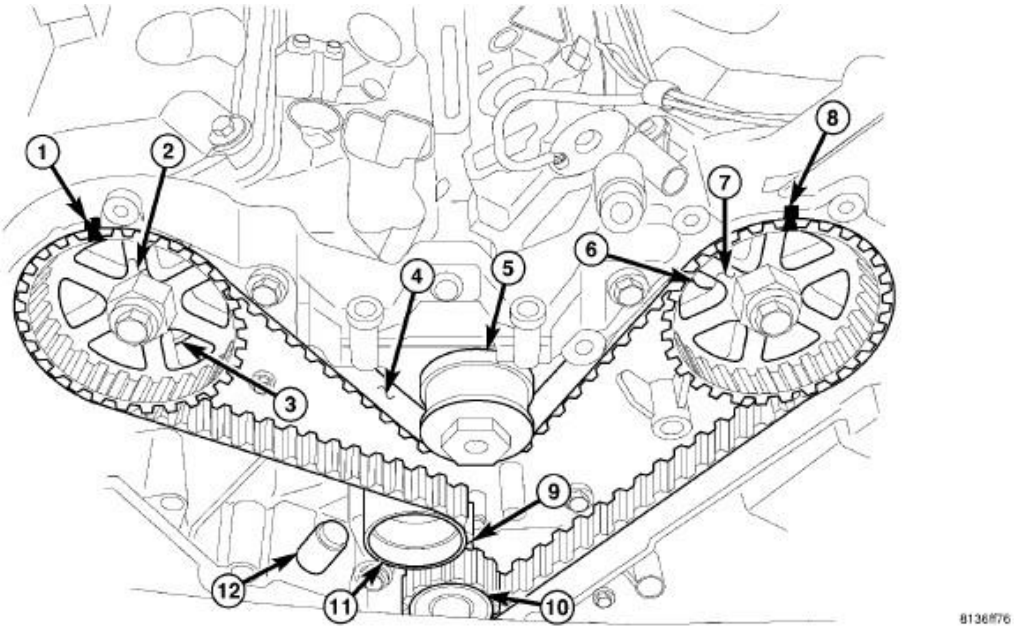

Fig. 71: Timing Gear Components
Courtesy of CHRYSLER LLC

27. Remove the timing belt tensioner (12) and reset the tensioner. Refer to **TENSIONER, ENGINE TIMING, REMOVAL**.
28. Lower vehicle.
29. Remove the timing belt (4).

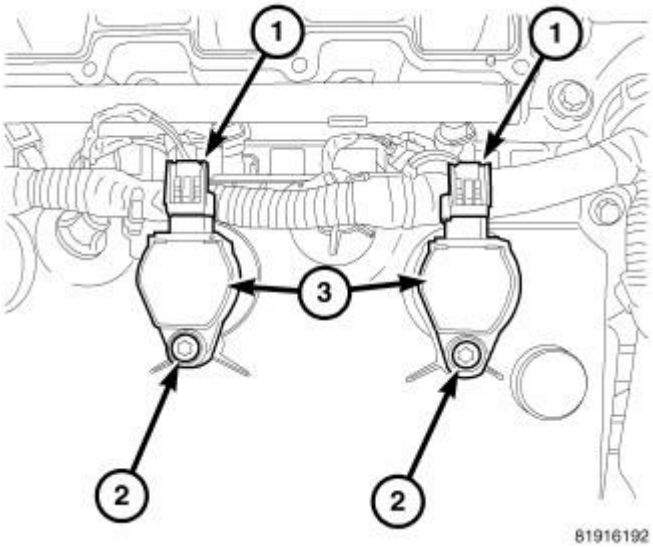

Fig. 72: Ignition Coils, Mounting Bolt & Electrical Connectors
Courtesy of CHRYSLER LLC

30. Disconnect wire harness connectors from EGR valve, capacitor, and ignition coils (1). Release wire harness track retainer tabs from cylinder head cover.

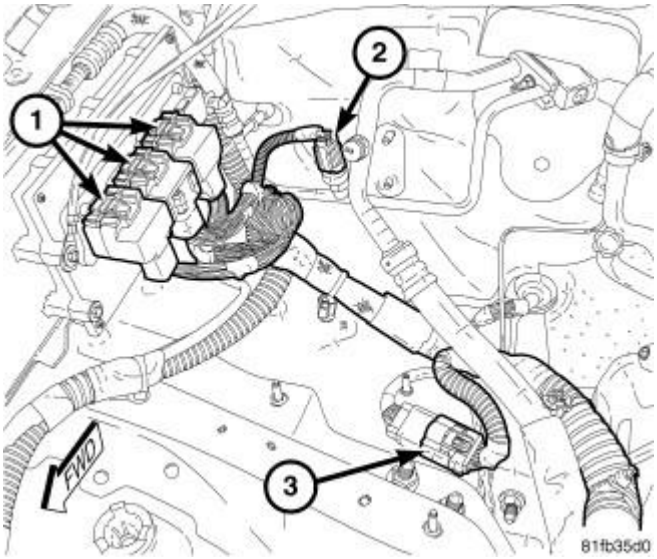

Fig. 73: PCM, A/C High Pressure Switch & Body Harness
Courtesy of CHRYSLER LLC

31. Disconnect electrical connectors from PCM (1), A/C high pressure switch (2), body harness (3), A/C compressor clutch and reposition engine wire harness.

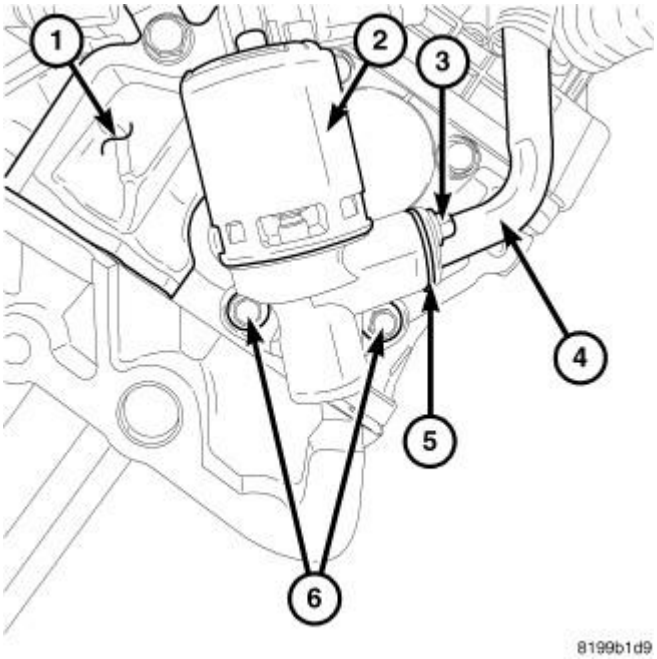

Fig. 74: Cylinder Head, EGR solenoid/Valve, Flange Bolt, Tube, Gasket & Mounting Bolts
Courtesy of CHRYSLER LLC

32. Remove the EGR valve (2) with two bolts (6) and gasket.

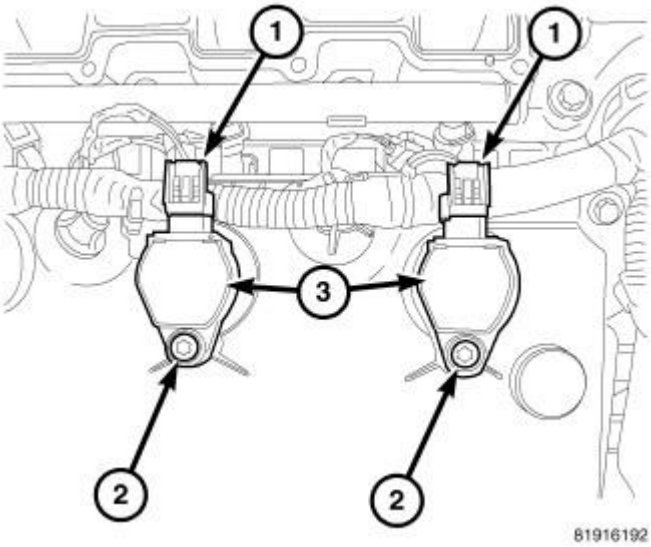

Fig. 75: Ignition Coils, Mounting Bolt & Electrical Connectors
Courtesy of CHRYSLER LLC

33. Remove right ignition coils (3). Refer to **COIL, IGNITION, REMOVAL** .
34. Remove right spark plugs. Refer to **SPARK PLUG, REMOVAL** .

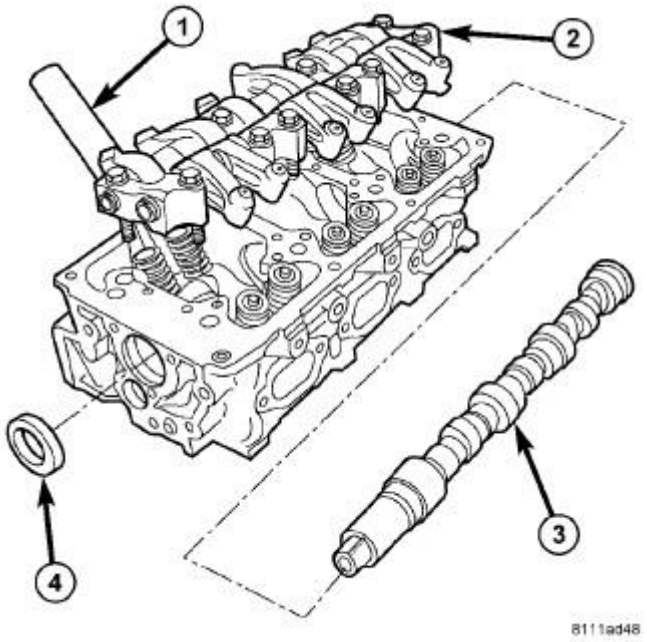

Fig. 76: Camshaft, Rocker Arm Assembly & Cylinder Head
Courtesy of CHRYSLER LLC

35. Remove eight bolts and right cylinder head cover.
36. Remove ten bolts and right rocker arm assembly (2).

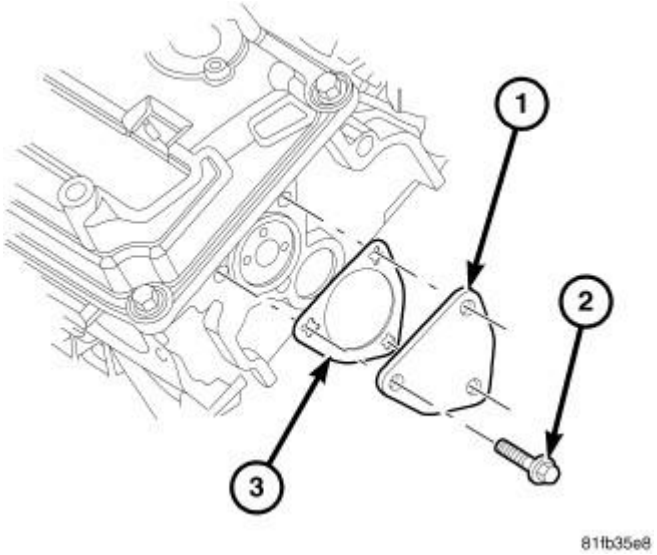

Fig. 77: Cam Thrust Plate, Gasket & Bolts
Courtesy of CHRYSLER LLC

37. Remove three bolts (2) and the right rear camshaft thrust plate (1).

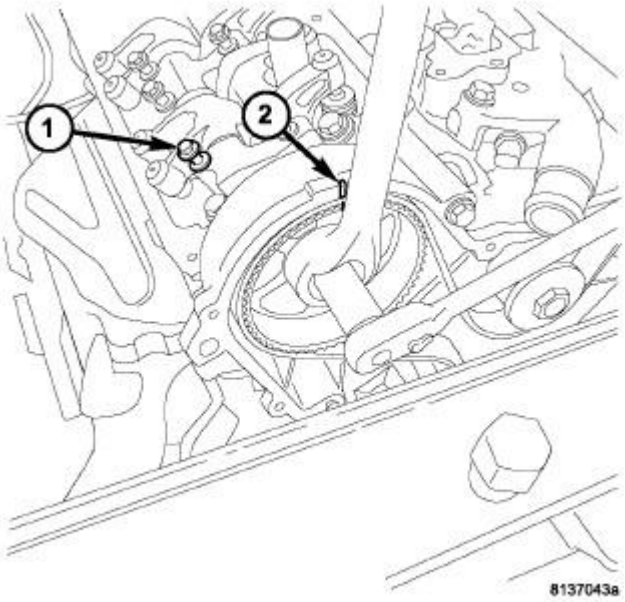

Fig. 78: Right Cam Gear Retainer Bolt & Timing Mark
Courtesy of CHRYSLER LLC

38. Counterhold the cam gear and remove the right cam gear retaining bolt.
39. Remove the right cam gear.

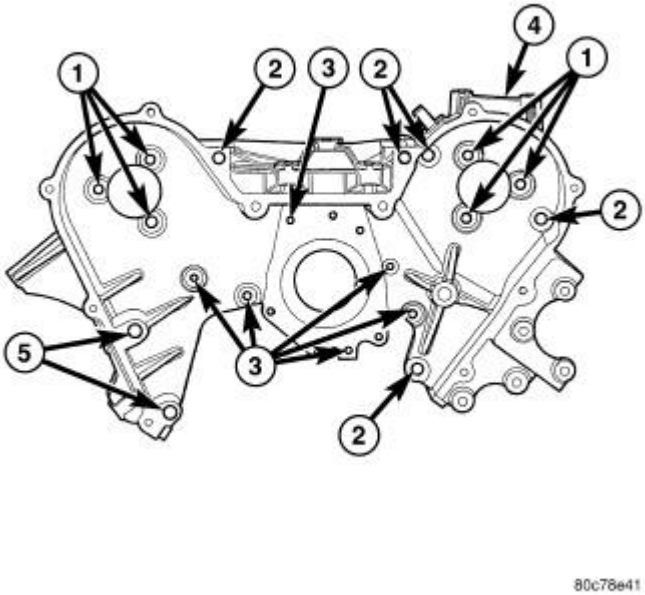

Fig. 79: Inner Timing Belt Cover Fasteners
Courtesy of CHRYSLER LLC

40. Remove the three inner timing cover to right cylinder head retaining bolts (1).

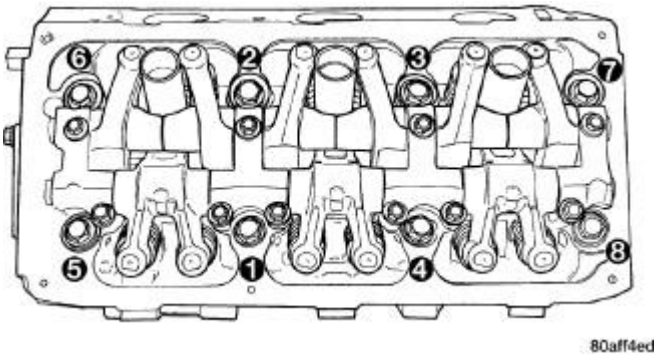

Fig. 80: Cylinder Head Bolt Removal/Tightening Sequence
Courtesy of CHRYSLER LLC

41. Remove the cylinder head bolts in REVERSE of tightening sequence shown in illustration.

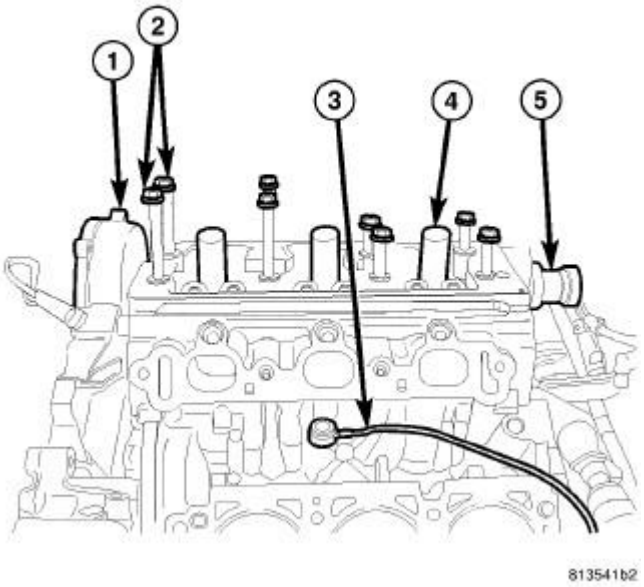

Fig. 81: Right Cylinder Head
Courtesy of CHRYSLER LLC

42. Push the camshaft (5) out of the back of the cylinder head approximately 3.5 inches and remove the cylinder head.
43. Clean and inspect all mating surfaces. If replacing cylinder head assembly, transfer capacitor and exhaust manifold.

LEFT CYLINDER HEAD

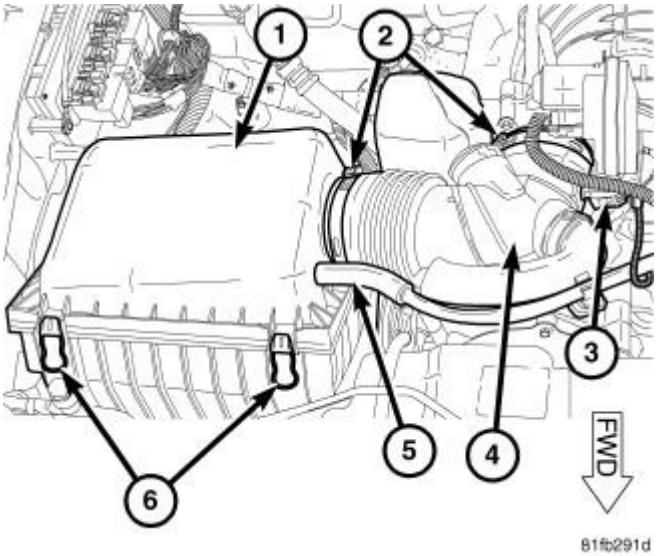

Fig. 82: Air Filter Housing
Courtesy of CHRYSLER LLC

1. Perform the fuel system pressure relief procedure. Refer to **FUEL DELIVERY, GAS, STANDARD PROCEDURE** .
2. Disconnect and isolate the negative battery cable.
3. Drain the cooling system. Refer to **STANDARD PROCEDURE** .
4. Remove the air cleaner element housing. Refer to **BODY, AIR CLEANER, REMOVAL**.

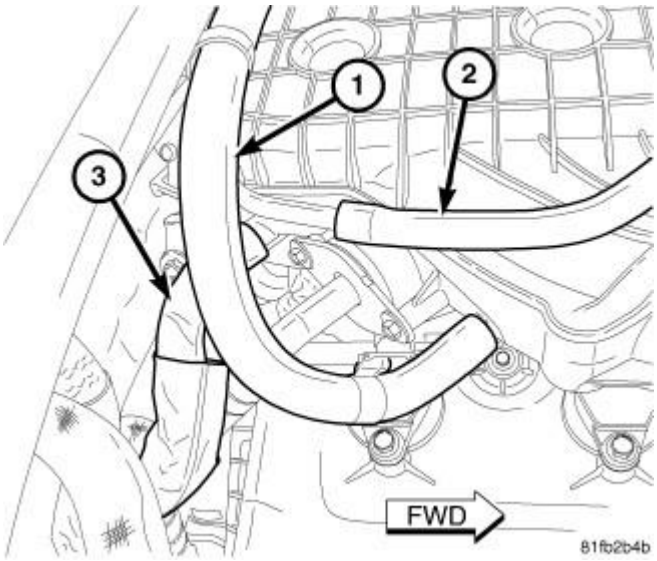

Fig. 83: EGR Tube, PCV & Power Brake Booster Vacuum Hoses
Courtesy of CHRYSLER LLC

5. Remove the upper intake manifold including support brackets, EGR tube, PCV, purge and power brake booster vacuum hoses. Refer to **MANIFOLD, INTAKE, REMOVAL**.

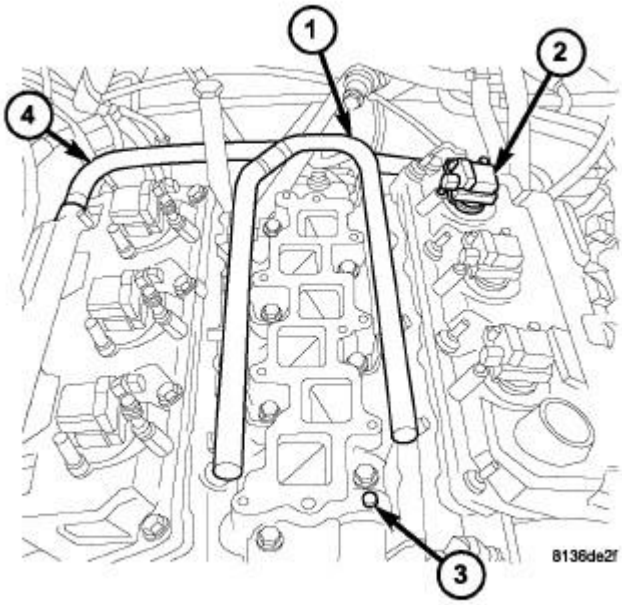

Fig. 84: Fuel Rail, Ignition Coil, Lower Intake Manifold & Hose
Courtesy of CHRYSLER LLC

6. Remove fuel rail and lower intake manifold. Refer to **MANIFOLD, INTAKE, REMOVAL**.

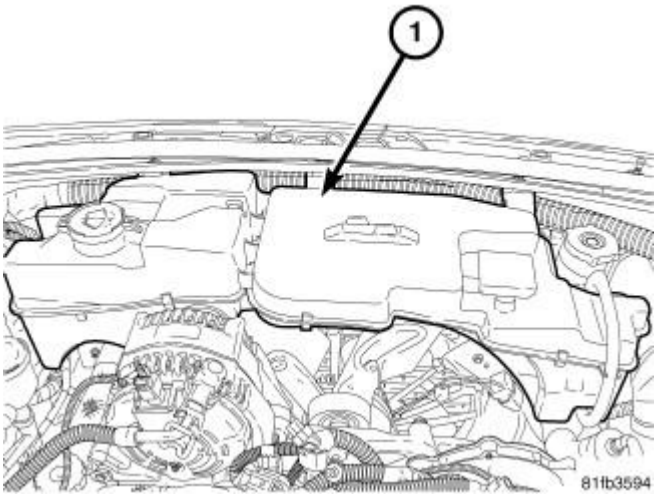

Fig. 85: Coolant Recovery/Washer Fluid Reservoir
Courtesy of CHRYSLER LLC

7. Disconnect two washer pump hoses, coolant recovery hose and washer pump electrical connector from the coolant recovery/washer fluid reservoir assembly (1).
8. Remove 5 screws and remove the coolant recovery/washer fluid reservoir assembly (1).

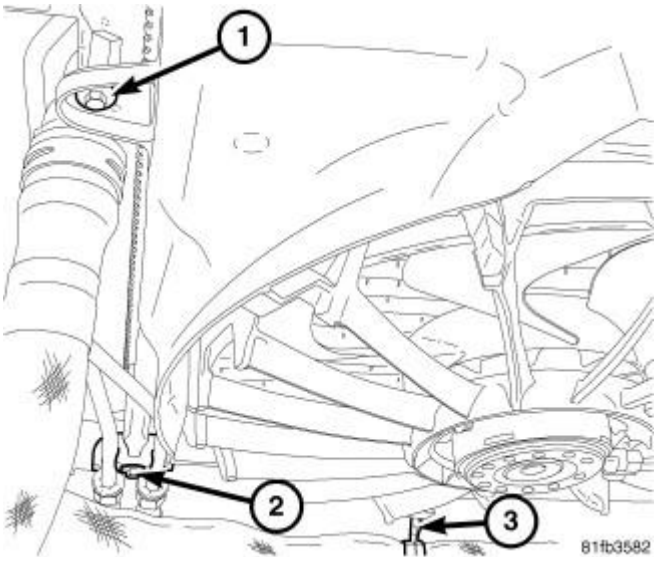

Fig. 86: Radiator Fastener, Transmission Cooling Line Retainer Bolt & Radiator Hose Retainer
Courtesy of CHRYSLER LLC

9. Disengage the radiator hose retainer (3) from the electric fan shroud.
10. Remove transmission cooling line retainer bolt (2) from the electric fan shroud.

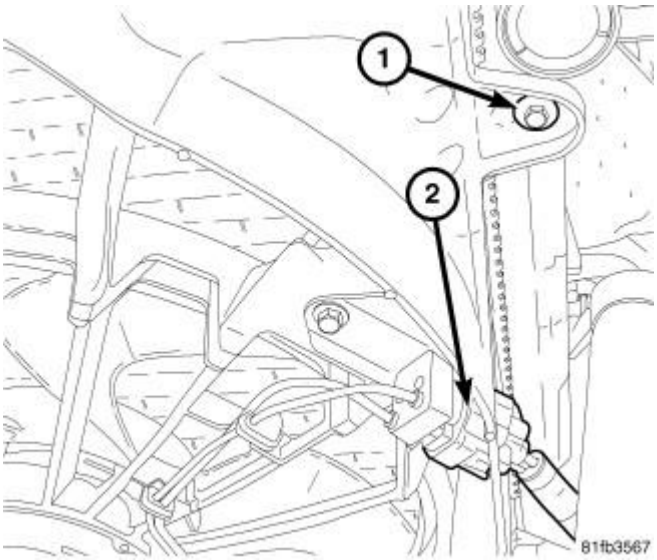

Fig. 87: Electrical Fan Connector & Bolt
Courtesy of CHRYSLER LLC

11. Disconnect the electric fan connector (2) from the electric fan shroud.
12. Remove two bolts (1) and lift the electric fan shroud from vehicle.

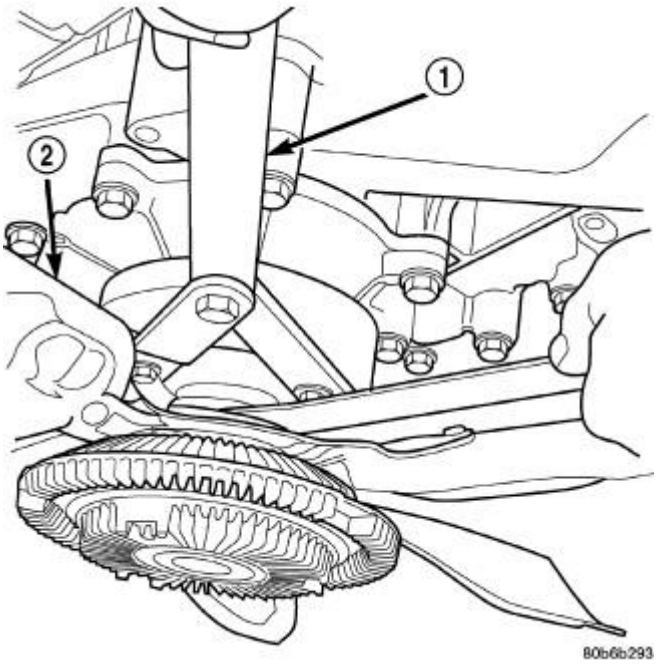

Fig. 88: Using Special Tool 6958 Spanner Wrench & Adapter Pins 8346
Courtesy of CHRYSLER LLC

13. Use Adapter Pins (special tool #8346, Pins, Adapter) in Spanner Wrench (special tool #6958, Wrench, Spanner) (1) to hold the pulley and remove fan/viscous fan drive assembly. Refer to **FAN, COOLING, VISCOUS, REMOVAL** and **FAN, COOLING, ELECTRIC, REMOVAL** .

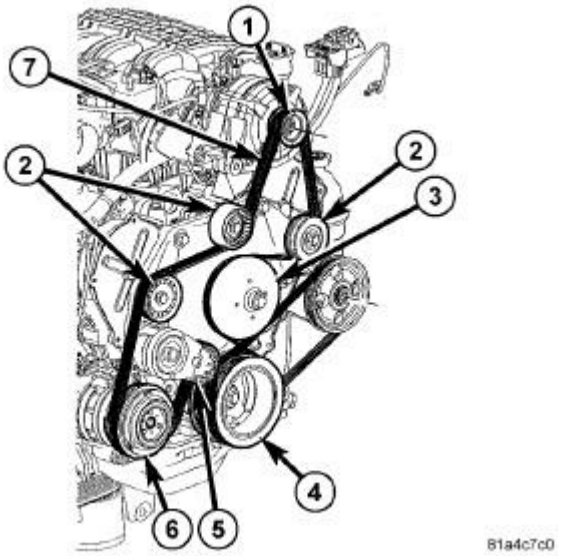

Fig. 89: Accessory Drive Belt Routing - 4.0L
Courtesy of CHRYSLER LLC

14. Remove accessory drive belt (7). Refer to **BELT, SERPENTINE, REMOVAL** and **BELT,**

SERPENTINE, POWER STEERING, REMOVAL .

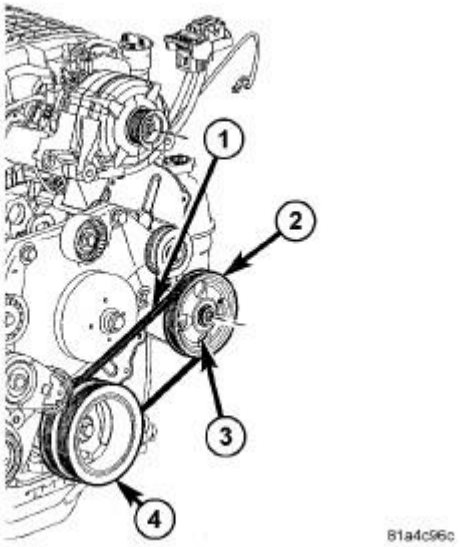

Fig. 90: Power Steering Belt
Courtesy of CHRYSLER LLC

15. Remove the power steering belt (1). Refer to **BELT, SERPENTINE, REMOVAL** and **BELT, SERPENTINE, POWER STEERING, REMOVAL** .

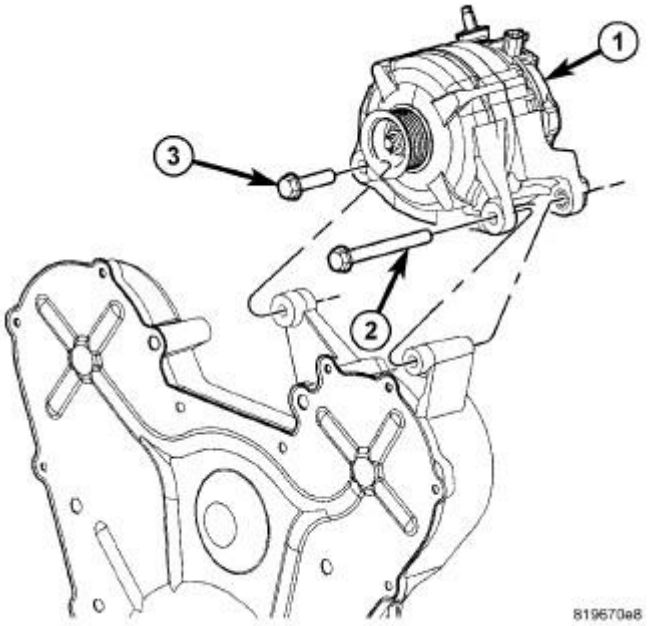

Fig. 91: Generator & Mounting Bolts
Courtesy of CHRYSLER LLC

16. Remove the generator. Refer to **GENERATOR, REMOVAL** .

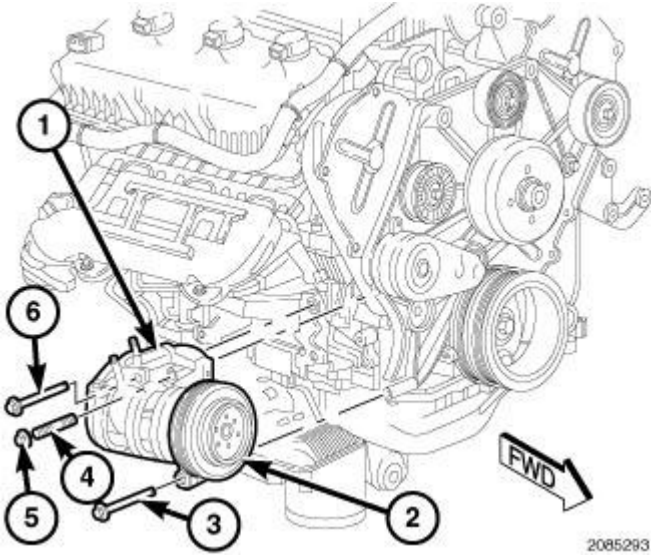

Fig. 92: Removing/Installing A/C Compressor
Courtesy of CHRYSLER LLC

17. Remove the nut (5) that secures the front of the A/C compressor (1).
18. Back out the A/C compressor mounting bolt (3) and stud (4) from the accessory drive bracket.

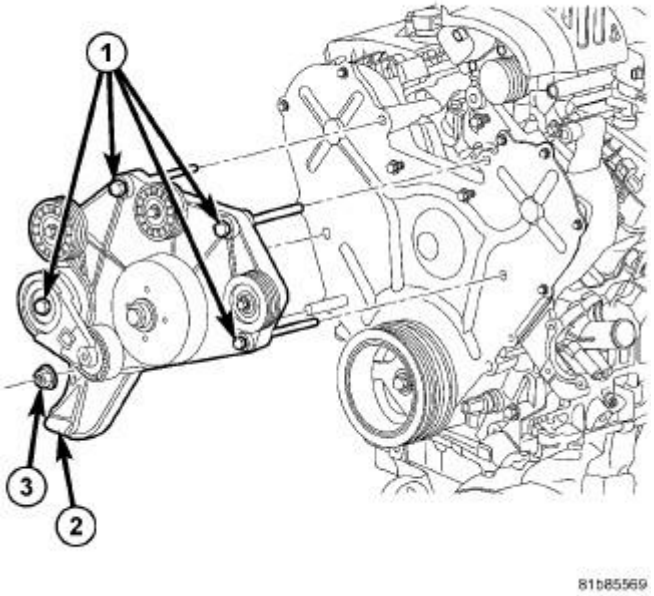

Fig. 93: Accessory Drive Bracket & Fasteners
Courtesy of CHRYSLER LLC

19. Remove four bolts (1) and nut (3) and remove the accessory drive bracket (2).

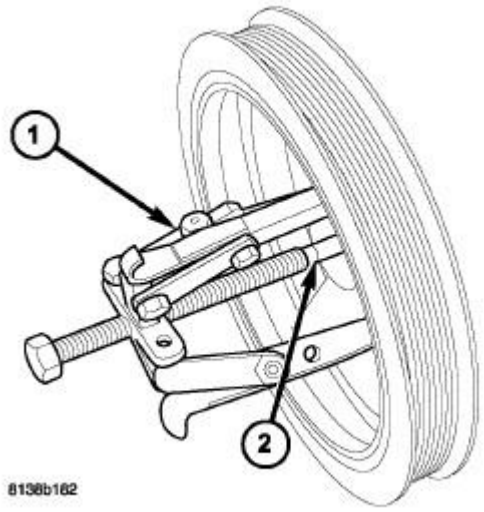

Fig. 94: Removing Crankshaft Damper
Courtesy of CHRYSLER LLC

20. Remove crankshaft damper bolt.
21. Using Puller (special tool #1023, Puller) (1) and Crankshaft Insert (special tool #9020, Insert, Crankshaft) (2), remove crankshaft damper.

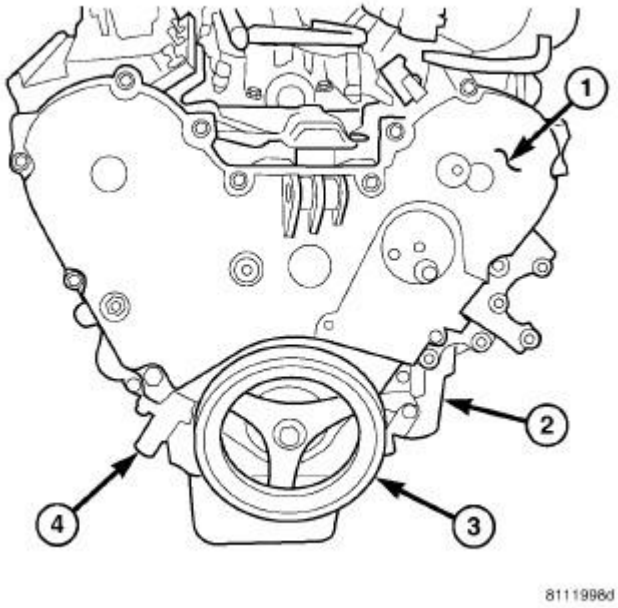

Fig. 95: Front Timing Belt Cover, Engine Oil Filter, Vibration Damper & Timing Belt Tensioner
Courtesy of CHRYSLER LLC

22. Remove the fourteen outer timing belt cover bolts and cover (1).

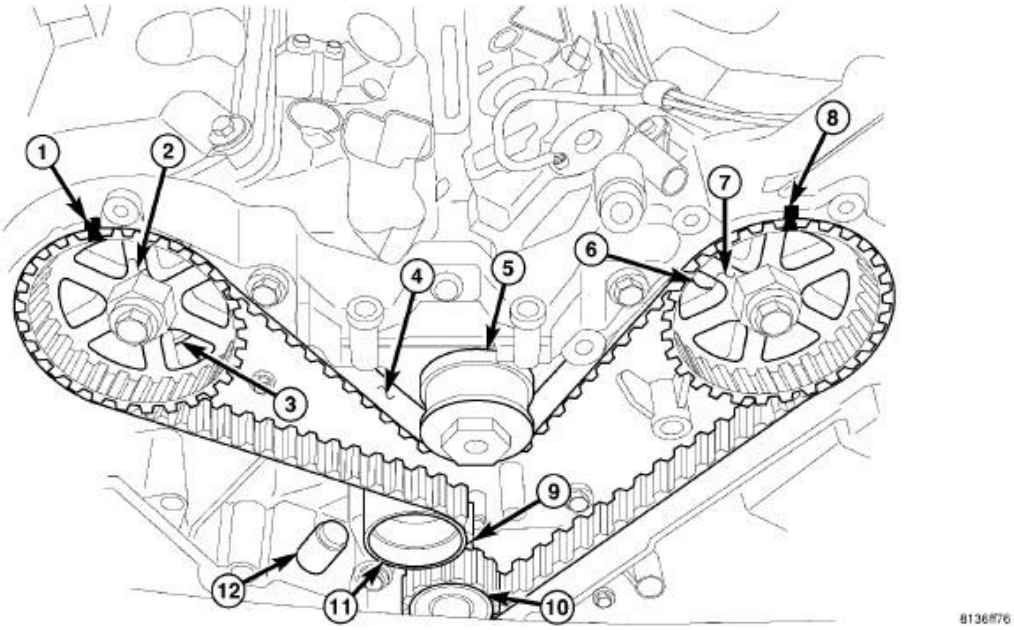

Fig. 96: Timing Gear Components
Courtesy of CHRYSLER LLC

23. Rotate the engine to TDC and align timing belt marks (1, 8, 9).

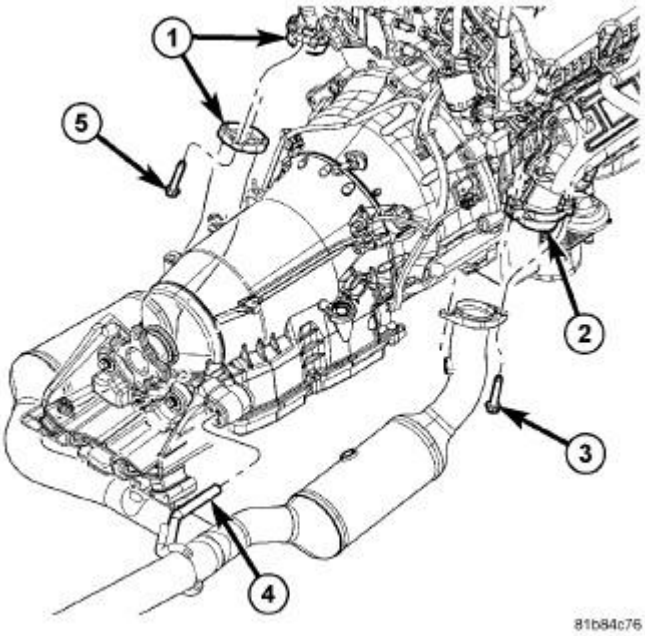

Fig. 97: Exhaust Pipe To Manifold With Fasteners
Courtesy of CHRYSLER LLC

24. Raise and support the vehicle.
25. Remove front exhaust pipe to exhaust manifold mounting bolts (3) and (5).

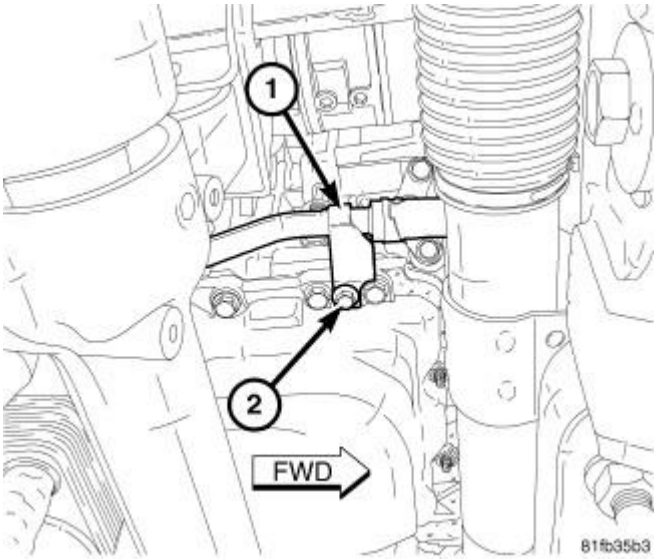

Fig. 98: Oil Cooler Line & Bolt
Courtesy of CHRYSLER LLC

26. Remove bolt (2) and reposition oil cooler hose (1).

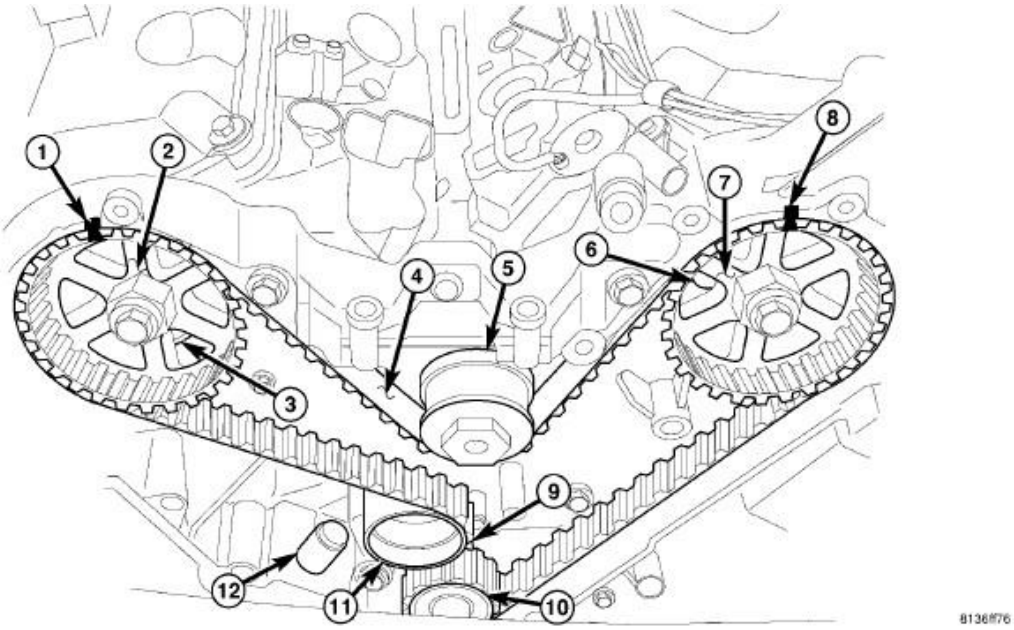

Fig. 99: Timing Gear Components
Courtesy of CHRYSLER LLC

27. Remove the timing belt tensioner (12) and reset the tensioner. Refer to **TENSIONER, ENGINE TIMING, REMOVAL**.
28. Lower vehicle.
29. Remove the timing belt (4).

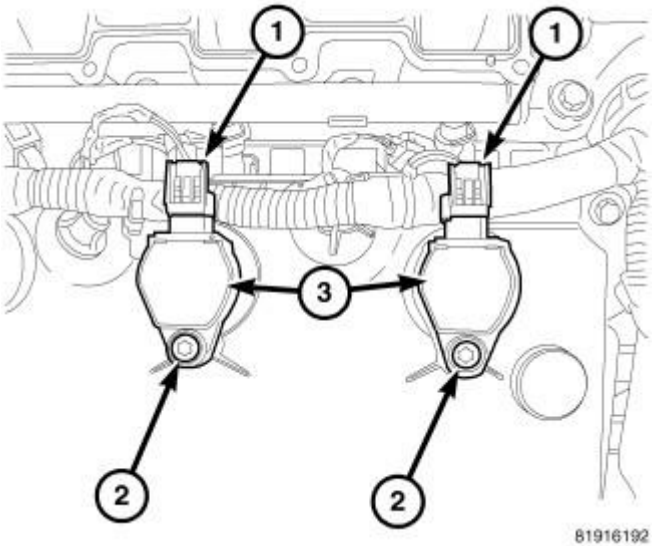

Fig. 100: Ignition Coils, Mounting Bolt & Electrical Connectors
Courtesy of CHRYSLER LLC

30. Disconnect wire harness connectors from knock sensor and ignition coils (1). Release wire harness track retainer tabs from cylinder head cover.
31. Remove left ignition coils (3). Refer to **COIL, IGNITION, REMOVAL** .
32. Remove left spark plugs. Refer to **SPARK PLUG, REMOVAL** .

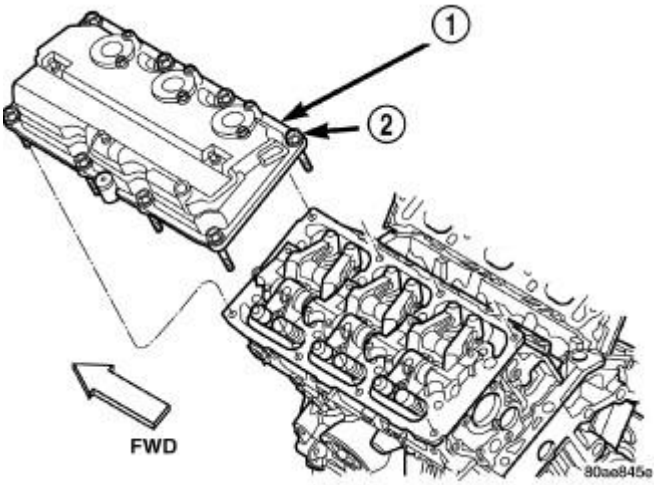

Fig. 101: Cylinder Head Cover & Bolts
Courtesy of CHRYSLER LLC

33. Remove dipstick retaining bolt and remove dipstick tube.
34. Remove eight bolts (2) and left cylinder head cover (1).

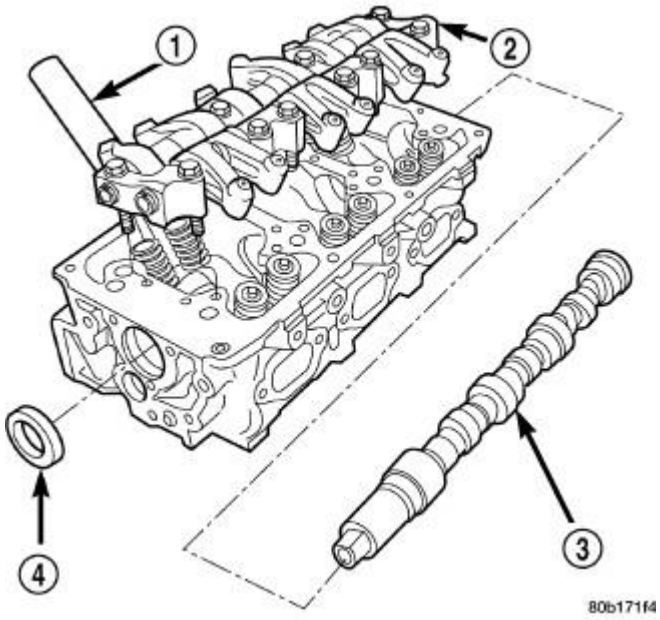

Fig. 102: Cylinder Head, Camshaft & Rocker Arms
Courtesy of CHRYSLER LLC

35. Remove ten bolts and left rocker arm assembly (2).

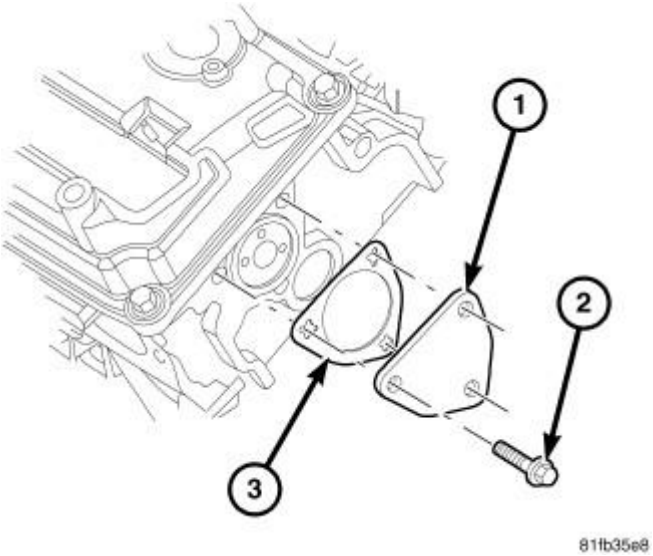

Fig. 103: Cam Thrust Plate, Gasket & Bolts
Courtesy of CHRYSLER LLC

36. Remove three bolts (2) and the left camshaft thrust plate (1).

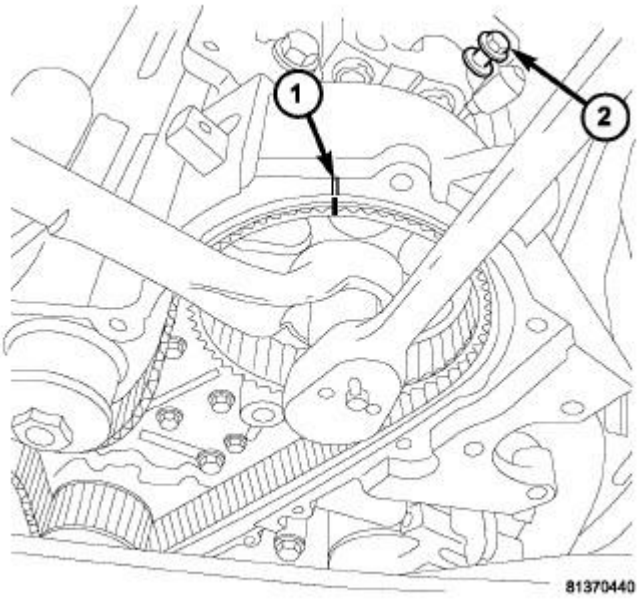

Fig. 104: Left Cam Gear Timing Mark & Retaining Bolt
Courtesy of CHRYSLER LLC

37. Counterhold the left cam gear and remove the cam gear retaining bolt.
38. Remove the cam gear.

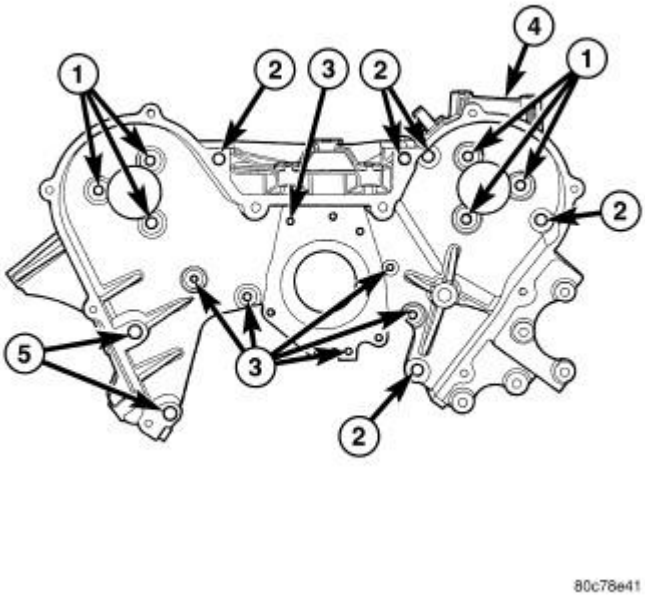

Fig. 105: Inner Timing Belt Cover Fasteners
Courtesy of CHRYSLER LLC

39. Remove the four inner timing cover to left cylinder head retaining bolts (1) and (2).

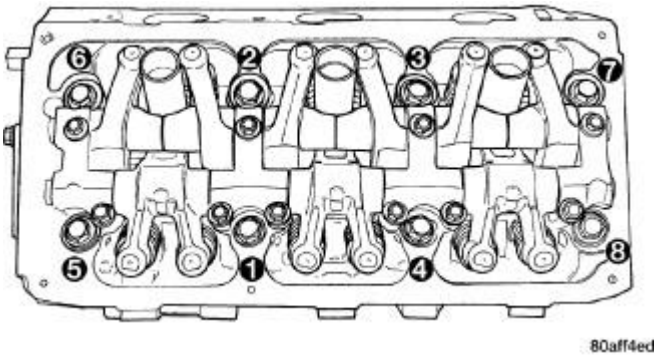

Fig. 106: Cylinder Head Bolt Removal/Tightening Sequence
Courtesy of CHRYSLER LLC

40. Remove the cylinder head bolts in REVERSE of tightening sequence shown in illustration.

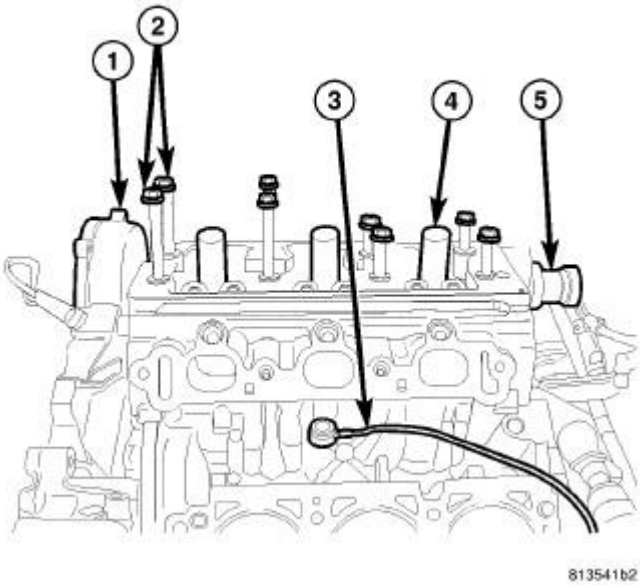

Fig. 107: Right Cylinder Head
Courtesy of CHRYSLER LLC

41. Push the camshaft (5) out of the back of the cylinder head approximately 3.5 inches and remove the cylinder head.
42. Clean and inspect all mating surfaces. If replacing cylinder head, transfer exhaust manifold.

CLEANING

CLEANING

To ensure engine gasket sealing, proper surface preparation must be performed, especially with the use of aluminum engine components and multi-layer steel cylinder head gaskets.

NOTE: Multi-Layer Steel (MLS) head gaskets require a scratch free sealing surface.

Remove all gasket material from cylinder head and block. Refer to **Engine - Standard Procedure**. Be careful not to gouge or scratch the aluminum head sealing surface.

Clean all engine oil passages.

INSPECTION

INSPECTION

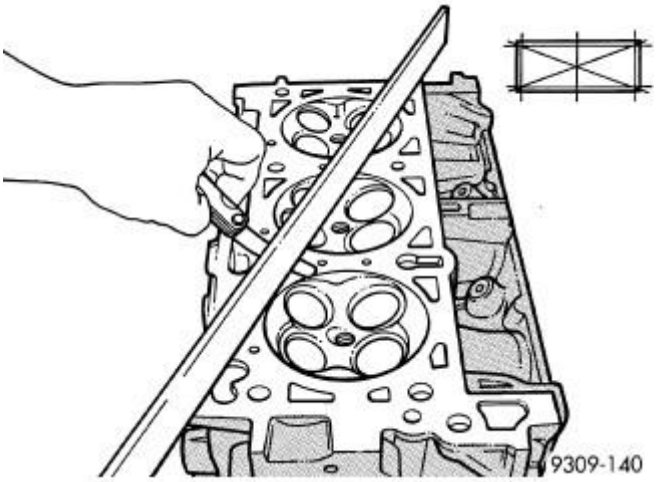

Fig. 108: Checking Cylinder Head Flatness
Courtesy of CHRYSLER LLC

1. Before cleaning, check for leaks, damage and cracks.
2. Clean cylinder head and oil passages.
3. Check cylinder head for flatness. Refer to **Fig. 108**.
4. Cylinder head must be flat within:

- Standard dimension = less than 0.05 mm (0.002 inch.)
- Service Limit = 0.2 mm (0.008 inch.)
- Grinding Limit = Maximum of 0.2 mm (0.008 inch.) is permitted.

CAUTION: 0.20 mm (0.008 in.) MAX is a combined total dimension of the stock removal limit from cylinder head and block top surface (Deck) together.

INSTALLATION

INSTALLATION

RIGHT CYLINDER HEAD

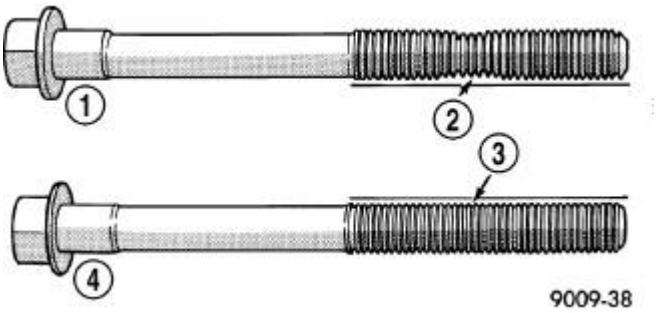

Fig. 109: Checking Cylinder Head Bolts For Stretching (Necking)
Courtesy of CHRYSLER LLC

CAUTION: The cylinder head bolts are tightened using a torque plus angle procedure. The bolts must be examined BEFORE reuse. If the threads are necked down the bolts must be replaced.

1. Check cylinder head bolts for necking by holding a scale or straight edge against the threads. If all the threads do not contact the scale (2) the bolt must be replaced.

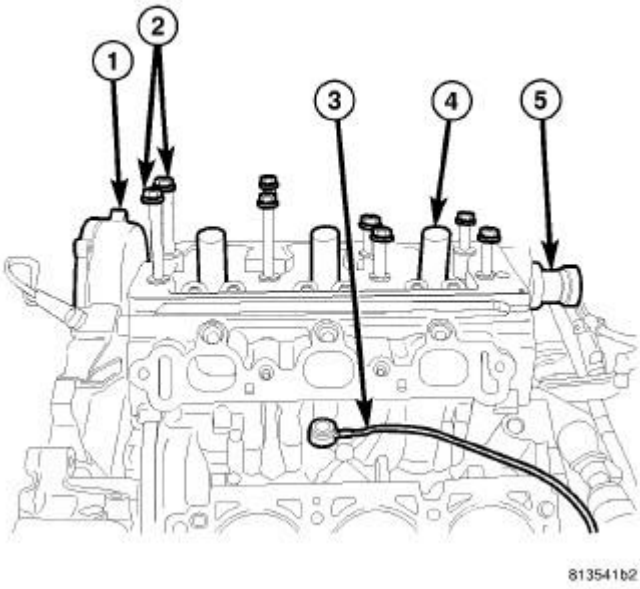

Fig. 110: Right Cylinder Head
Courtesy of CHRYSLER LLC

CAUTION: When cleaning cylinder head and cylinder block surfaces, DO NOT

use a metal scraper because the surfaces could be cut or ground. Use ONLY a wooden or plastic scraper.

2. Clean sealing surfaces of cylinder head and block. Refer to **Engine - Standard Procedure**.
3. Install camshaft (5) in cylinder head.

CAUTION: The cylinder head gaskets are not interchangeable between the left and right cylinder heads and are clearly marked (3) with "R" for right and "L" for left.

CAUTION: Ensure that the correct head gaskets are used and are oriented correctly on cylinder block.

4. Push camshaft (5) out of the back of the cylinder head approximately 3.5 inches. Install head gasket and cylinder head over locating dowels.

NOTE: Before installing the cylinder head bolts, lubricate the threads with clean engine oil.

5. Install and finger tighten eight head bolts (2).

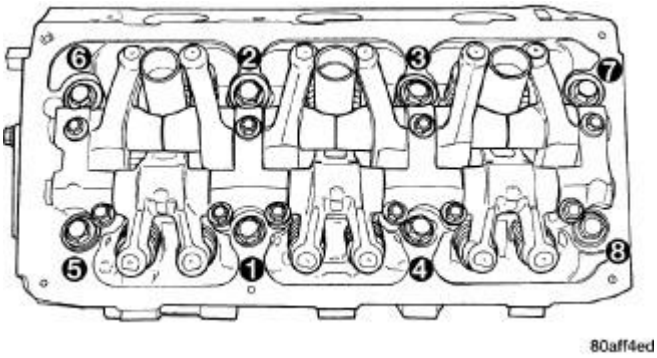

Fig. 111: Cylinder Head Bolt Tightening Sequence
Courtesy of CHRYSLER LLC

6. Tighten the cylinder head bolts in the following sequence, using the 4 step torque-turn method. Tighten according to the following torque values:
   - Step 1: All to 61 N.m (45 ft. lbs.)
   - Step 2: All to 88 N.m (65 ft. lbs.)
   - Step 3: All (again) to 88 N.m (65 ft. lbs.)
   - Step 4: + 90° Turn **Do not use a torque wrench for this step.**
7. Bolt torque after 90° turn should be over 122 N.m (90 ft. lbs.) in the tightening direction. If not, replace the bolt.

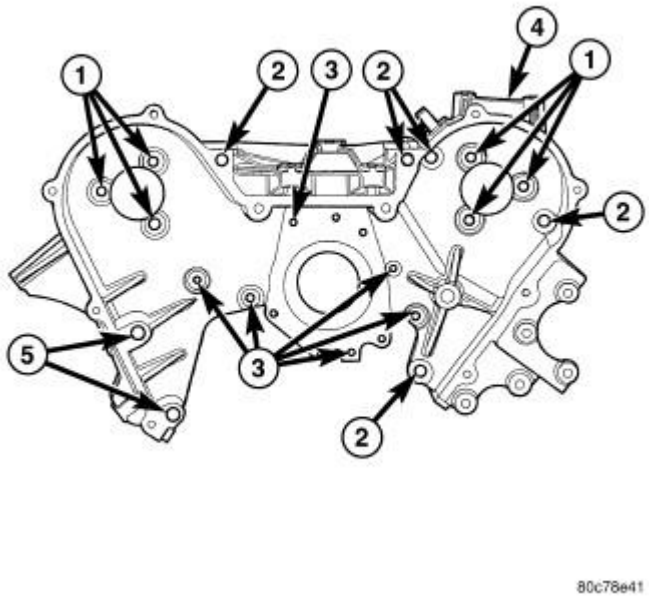

Fig. 112: Inner Timing Belt Cover Fasteners
Courtesy of CHRYSLER LLC

8. Install three inner timing cover to cylinder head bolts (1). Tighten bolts to 54 N.m (40 ft. lbs.).

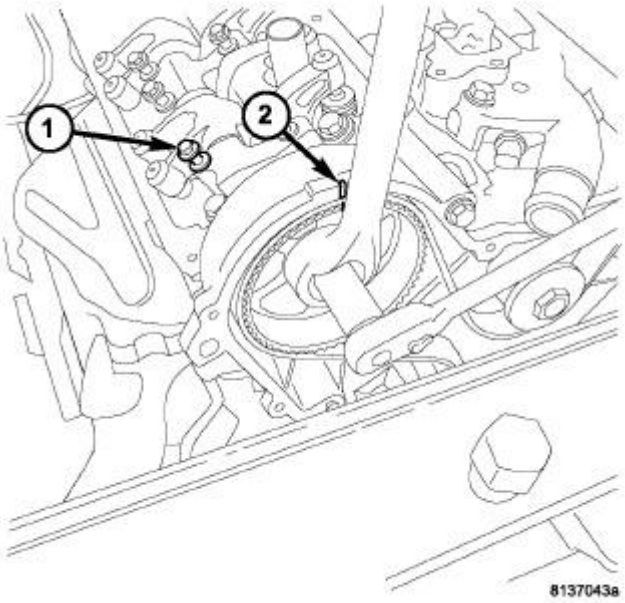

Fig. 113: Right Cam Gear Retainer Bolt & Timing Mark
Courtesy of CHRYSLER LLC

CAUTION: The camshaft sprockets are keyed and not interchangeable from side to side because of the camshaft position sensor pick-up.

9. Push the camshaft back into the cylinder head and install the camshaft sprocket (2).
10. Install **NEW** sprocket attaching bolt into place. The 255 mm (10 in.) bolt is to be installed in the left camshaft and the 213 mm (8 3/8 in.) bolt is to be installed into the right camshaft. Counterhold the camshaft sprocket (2) and tighten the camshaft sprocket bolt to 102 N.m (75 ft. lbs.) plus a 90° turn.

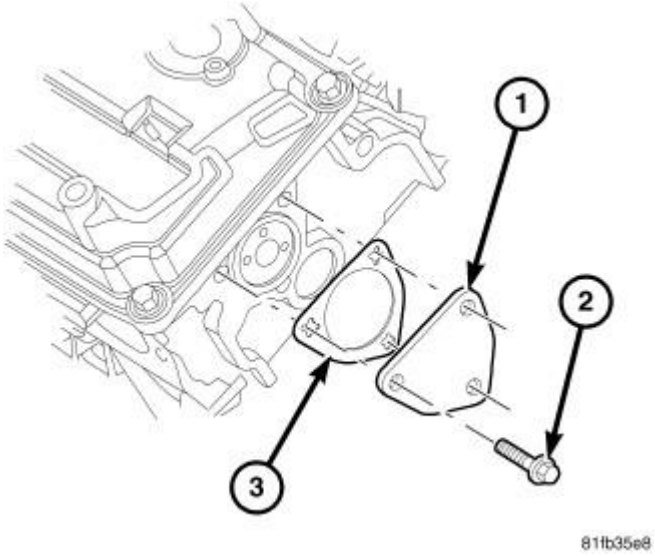

Fig. 114: Cam Thrust Plate, Gasket & Bolts
Courtesy of CHRYSLER LLC

11. Install the camshaft thrust plate (1) and gasket (3). Tighten three bolts (2) to 28 N.m (250 in. lbs.).

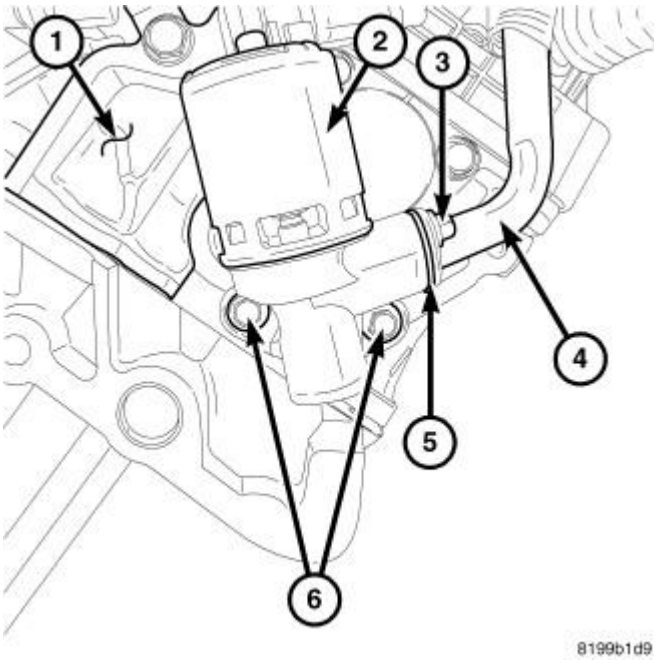

Fig. 115: Cylinder Head, EGR solenoid/Valve, Flange Bolt, Tube, Gasket & Mounting Bolts
Courtesy of CHRYSLER LLC

12. Install new gasket between EGR solenoid/valve (2) and rear of cylinder head (1).
13. Position EGR solenoid/valve assembly to rear of cylinder head. Install and tighten two mounting bolts (6) to 8 N.m (80 in. lbs.).

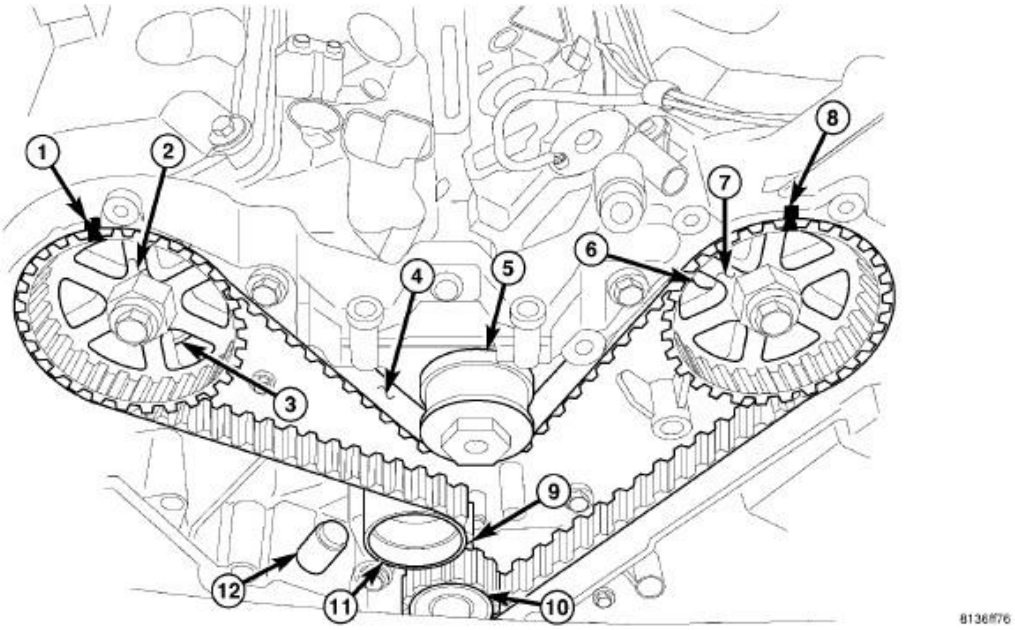

Fig. 116: Timing Gear Components
Courtesy of CHRYSLER LLC

14. Rotate the right camshaft gear (2) to align its timing mark (1). Verify that the left camshaft gear (7) timing mark (8) and crankshaft gear (10) timing mark (9) are still aligned.
15. Install the timing belt (4) starting at the crankshaft sprocket (10) going in a counterclockwise direction. Install the belt around the last sprocket. Maintain tension on the belt as it is positioned around the tensioner pulley (11).
16. Holding the tensioner pulley (11) against the belt, install the tensioner (12) into the housing and tighten two bolts to 28 N.m (250 in. lbs.). Each camshaft sprocket mark should remain aligned with the cover marks.
17. When tensioner is in place pull retaining pin to allow the tensioner to extend to the tensioner pulley bracket.
18. Rotate crankshaft sprocket two revolutions and check the timing marks on the camshafts and crankshaft. The marks should line up within their respective locations. If marks do not line up, repeat procedure.

NOTE: **With the camshaft gears in these positions the lobes are in a neutral position (no load to the valve). This will allow the rocker arm shaft assembly to be tightened into position with little or no valve spring load on it.**

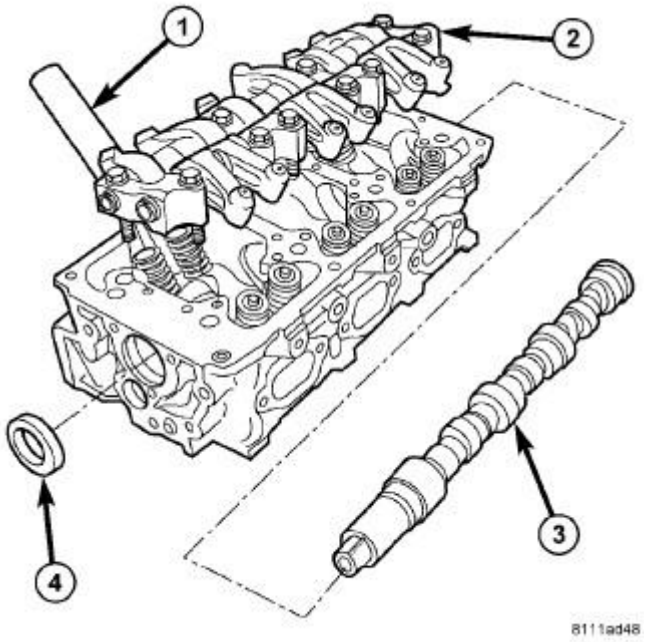

Fig. 117: Camshaft, Rocker Arm Assembly & Cylinder Head
Courtesy of CHRYSLER LLC

19. Install the rocker arm and shaft assembly (2) and ten bolts making sure that the identification marks face toward the front of engine for left head and toward the rear of the engine for right head.

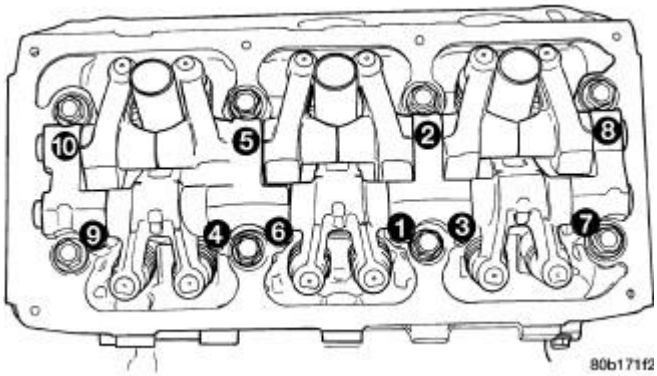

Fig. 118: Rocker Arm/Shaft Assembly Bolt Tightening Sequence
Courtesy of CHRYSLER LLC

20. Tighten the ten rocker arm/shaft assembly bolts in sequence to 31 N.m (275 in. lbs.).

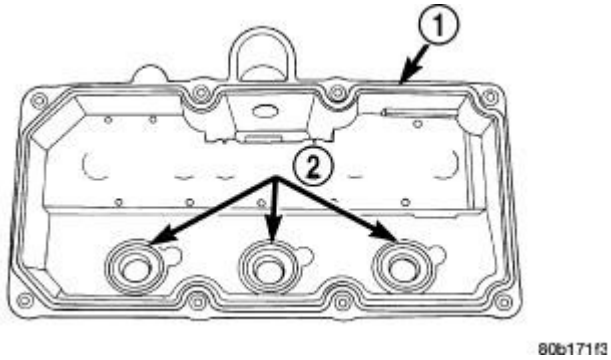

Fig. 119: Cylinder Head Cover Gasket & Spark Plug Tube Seals
Courtesy of CHRYSLER LLC

21. Clean cylinder head and cover mating surfaces. Inspect and replace gasket (1) and seals (2) as necessary. Refer to **COVER(S), CYLINDER HEAD, LEFT, INSTALLATION** and **COVER(S), CYLINDER HEAD, RIGHT, INSTALLATION**.
22. Install cylinder head cover and eight bolts. Tighten bolts to 12 N.m (105 in. lbs.).

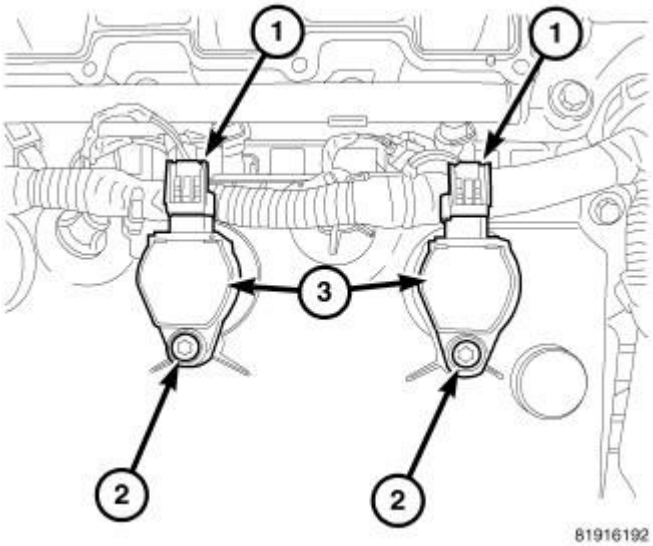

Fig. 120: Ignition Coils, Mounting Bolt & Electrical Connectors
Courtesy of CHRYSLER LLC

23. Install the spark plugs. Tighten to 28 N.m (20 ft. lbs.). Refer to **SPARK PLUG, INSTALLATION** .
24. Install ignition coils (3) into cylinder head.
25. Install and tighten coil mounting bolts (2) to 6.7 N.m (60 in. lbs.).
26. Reposition engine wire harness and install retainers to cylinder head cover. Connect and lock electrical connectors to ignition coils (1), capacitor and EGR valve.

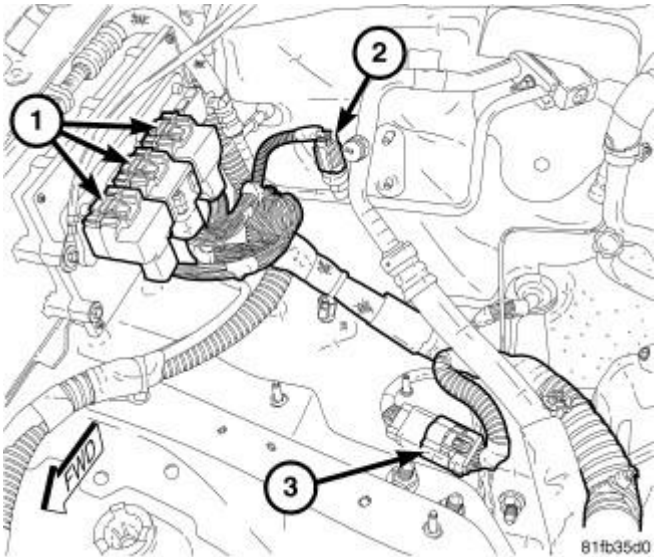

Fig. 121: PCM, A/C High Pressure Switch & Body Harness
Courtesy of CHRYSLER LLC

27. Reposition engine wire harness, connect and lock electrical connectors to PCM (1), body harness (3), A/C high pressure switch (2) and A/C compressor clutch.

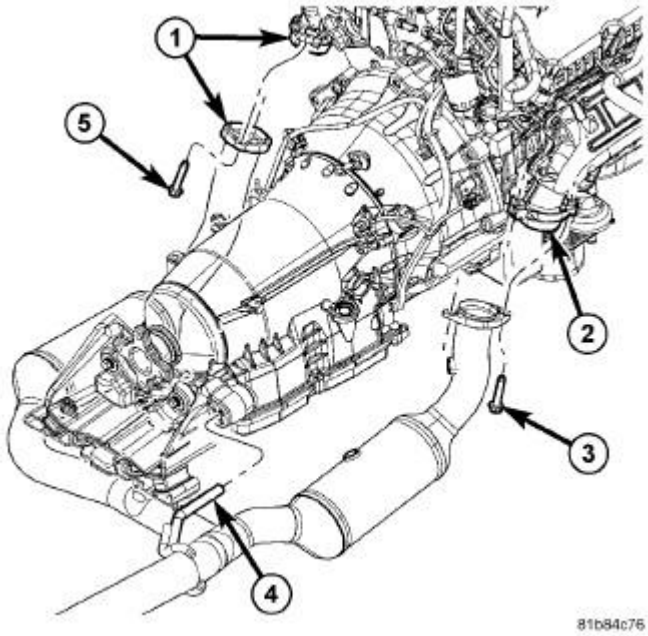

Fig. 122: Exhaust Pipe To Manifold With Fasteners
Courtesy of CHRYSLER LLC

28. Connect the front exhaust pipe to exhaust manifold (2). Tighten the fasteners (3) to 34 N.m (300 in. lbs.).

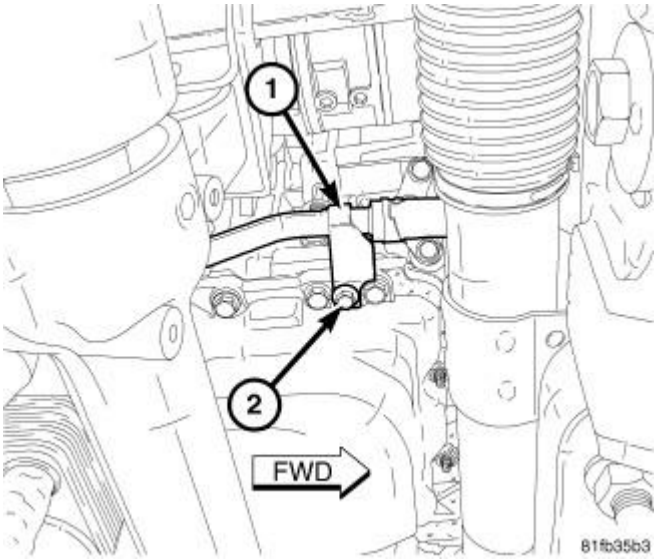

Fig. 123: Oil Cooler Line & Bolt
Courtesy of CHRYSLER LLC

29. Reposition oil cooler hose retainer bracket (1) near timing belt tensioner and install bolt (2).

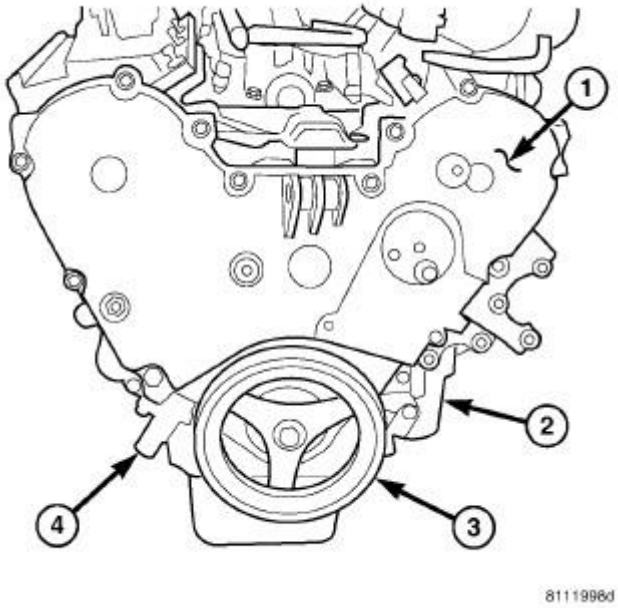

Fig. 124: Front Timing Belt Cover, Engine Oil Filter, Vibration Damper & Timing Belt Tensioner
Courtesy of CHRYSLER LLC

30. Install the front timing belt outer cover (1) and 14 bolts.
31. Tighten the timing cover bolts as follows:
    - M6 bolts - 12 N.m (105 in. lbs.)

- M8 bolts - 28 N.m (250 in. lbs.)
- M10 bolts - 54 N.m (40 ft. lbs.)

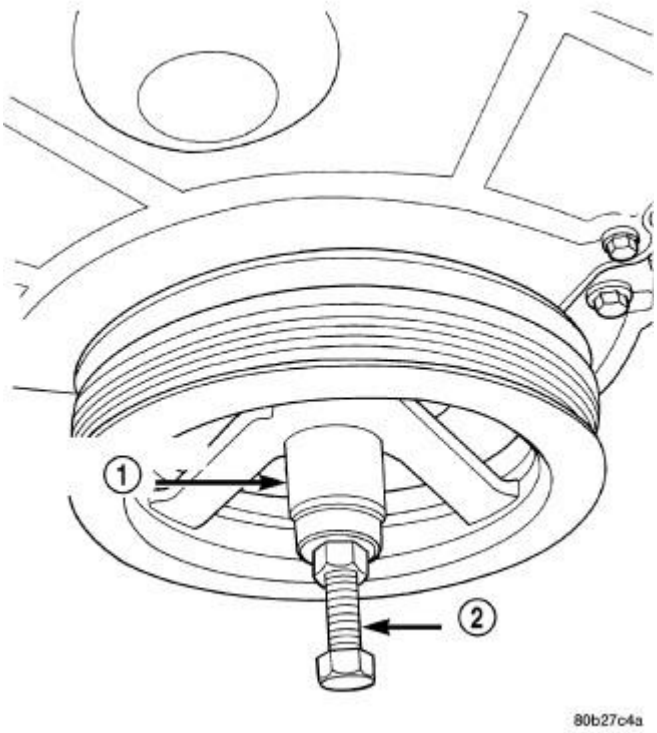

Fig. 125: Crankshaft Damper - Installation
Courtesy of CHRYSLER LLC

32. Install crankshaft damper using Forcing Screw (special tool #C-4685-C1, Screw, Forcing) (2), with Nut and Thrust Bearing from (special tool #6792, Installer, Crank Sprocket), and (special tool #6792-1, Cup) Installer (1).

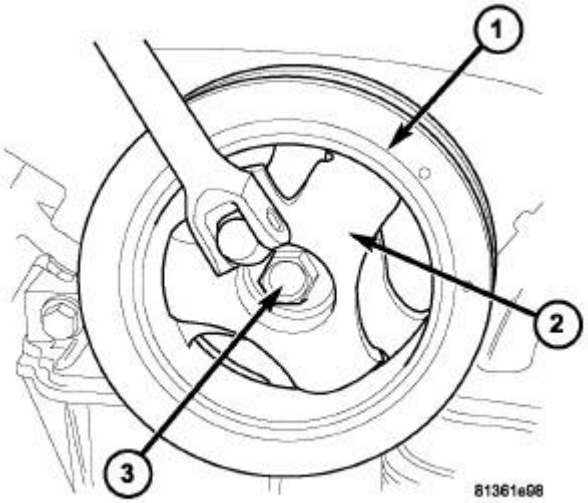

Fig. 126: Damper, Bolt & Holder
Courtesy of CHRYSLER LLC

33. Install crankshaft damper bolt (3). Tighten bolt to 95 N.m (70 ft. lbs.) while holding damper (1) with Damper Holding Fixture (special tool #9365, Holding Fixture, Damper) (2).

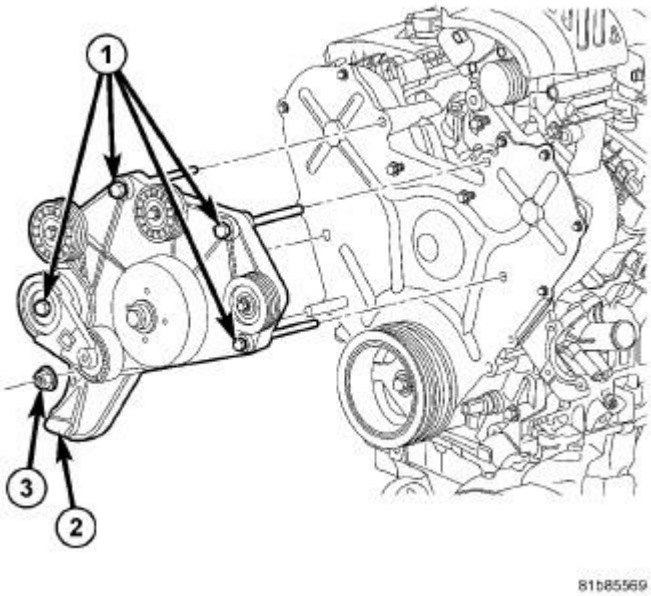

Fig. 127: Accessory Drive Bracket & Fasteners
Courtesy of CHRYSLER LLC

34. Install the accessory drive bracket (2). Tighten four bolts (1) and nut (3) to 54 N.m (40 ft. lbs.).

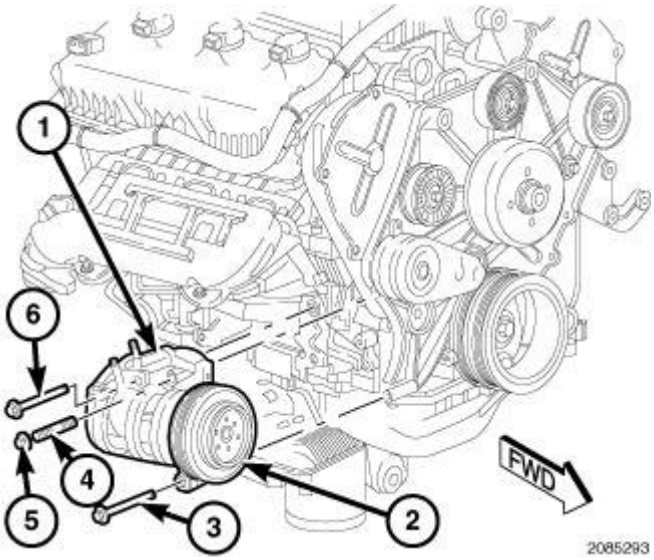

Fig. 128: Removing/Installing A/C Compressor
Courtesy of CHRYSLER LLC

35. Install the stud (4) that secures the upper front of the compressor to the accessory drive belt bracket. Tighten the stud securely.
36. Install the lower bolt (3) and upper nut (5) that secures the front of the A/C compressor to the accessory drive bracket. Tighten fasteners to 28 N.m (21 ft. lbs.).

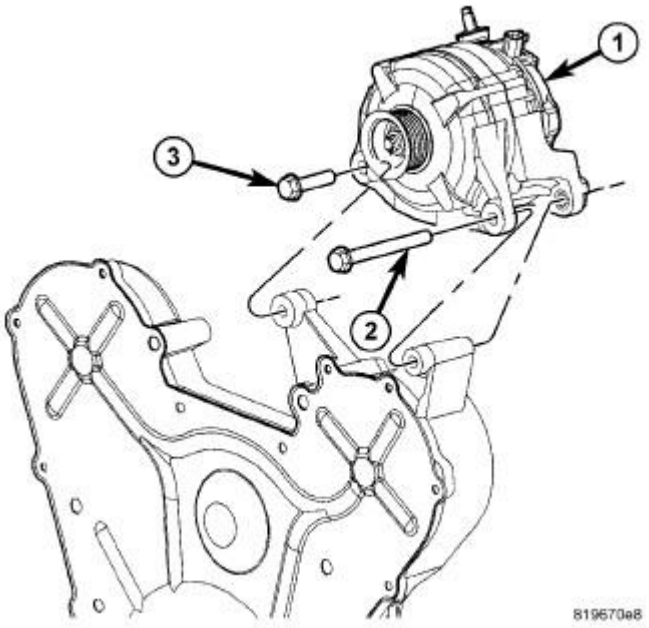

Fig. 129: Generator & Mounting Bolts
Courtesy of CHRYSLER LLC

37. Position generator (1) to engine and install two mounting bolts (2) and (3). Tighten both bolts to 57 N.m

(42 ft. lbs.).

38. Snap field wire connector into rear of generator.
39. Install B+ terminal and nut to generator mounting stud. Tighten nut to 13 N.m (115 in. lbs.)
40. Snap plastic protective cover to B+ terminal.

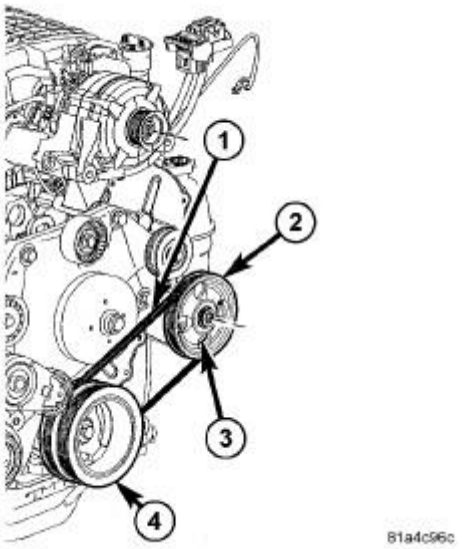

Fig. 130: Power Steering Belt
Courtesy of CHRYSLER LLC

41. Install the power steering belt (1). Refer to **BELT, SERPENTINE, INSTALLATION** and **BELT, SERPENTINE, POWER STEERING, INSTALLATION** .

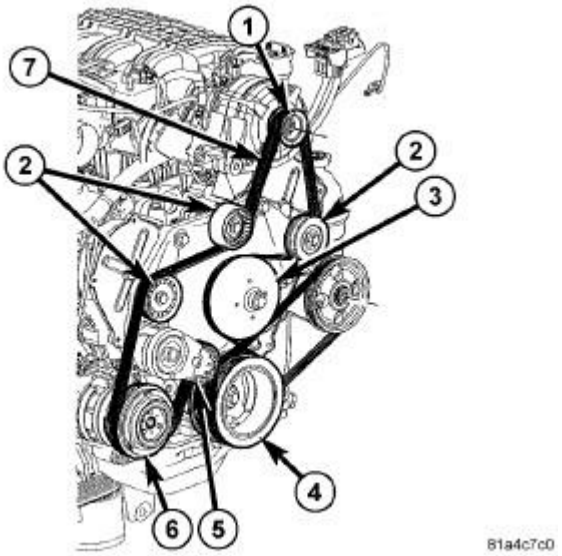

Fig. 131: Accessory Drive Belt Routing - 4.0L
Courtesy of CHRYSLER LLC

42. Install the accessory drive belt (7). Refer to **BELT, SERPENTINE, INSTALLATION** and **BELT, SERPENTINE, POWER STEERING, INSTALLATION** .

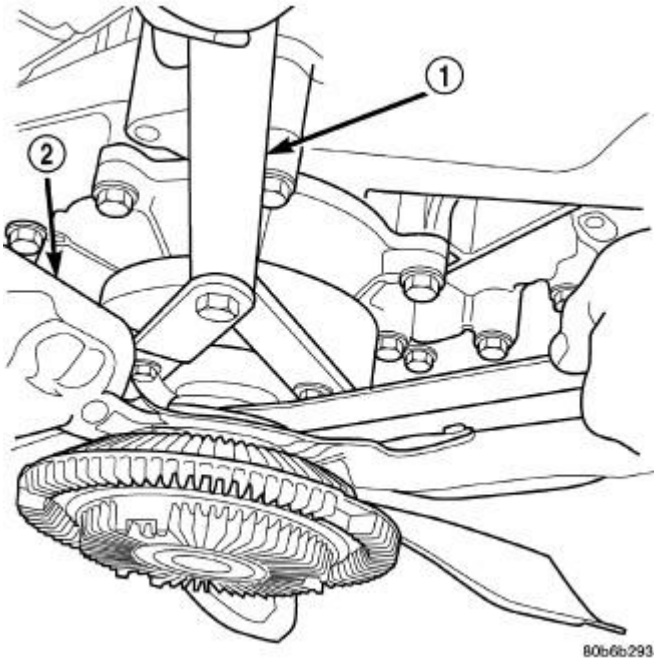

Fig. 132: Using Special Tool 6958 Spanner Wrench & Adapter Pins 8346
Courtesy of CHRYSLER LLC

43. Use Adapter Pins (special tool #8346, Pins, Adapter) in Spanner Wrench (special tool #6958, Wrench, Spanner) (1) to hold the pulley while installing the fan blade/viscous fan drive assembly. Tighten mounting nut to 50 N.m (37 ft. lbs.).

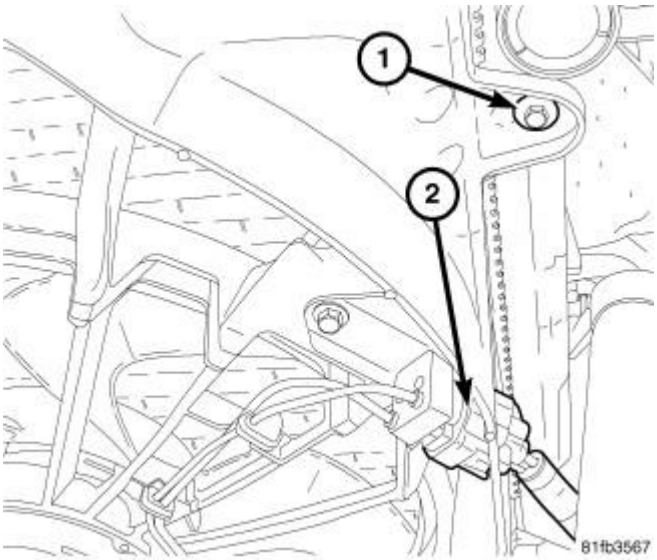

Fig. 133: Electrical Fan Connector & Bolt
Courtesy of CHRYSLER LLC

44. Install electric fan shroud with two screws (1). Tighten screws to 6 N.m (50 in. lbs.).
45. Connect and lock the electric fan connector (2).

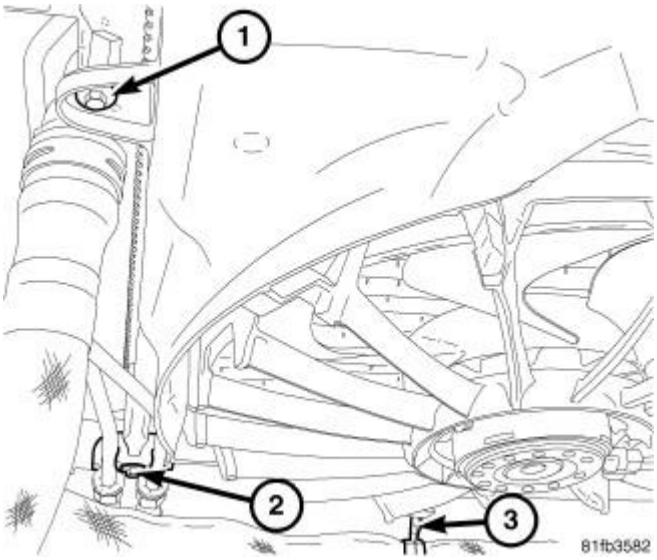

Fig. 134: Radiator Fastener, Transmission Cooling Line Retainer Bolt & Radiator Hose Retainer
Courtesy of CHRYSLER LLC

46. Install transmission cooler line retainer to electric fan shroud with one screw (2).
47. Install radiator hose retainer (3) to electric fan shroud.

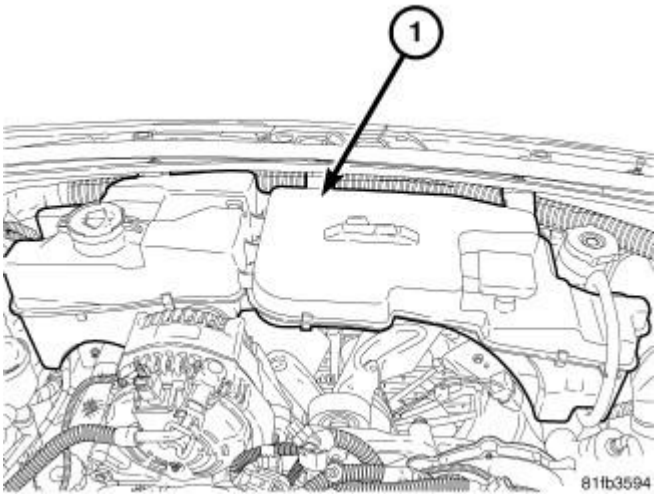

Fig. 135: Coolant Recovery/Washer Fluid Reservoir
Courtesy of CHRYSLER LLC

48. Install the coolant recovery/washer fluid reservoir assembly (1) with five screws. Connect two washer pump hoses, coolant recovery hose, and washer pump electrical connector.

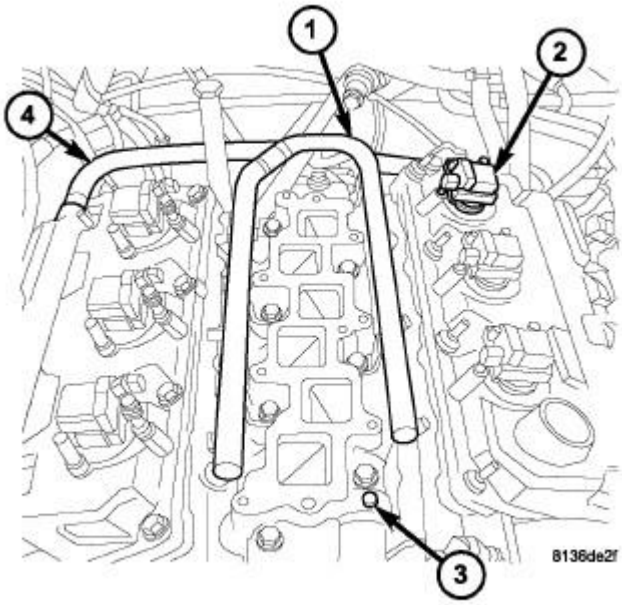

Fig. 136: Fuel Rail, Ignition Coil, Lower Intake Manifold & Hose
Courtesy of CHRYSLER LLC

49. Install lower intake manifold (3) and fuel rail (1). Refer to **MANIFOLD, INTAKE, INSTALLATION**.

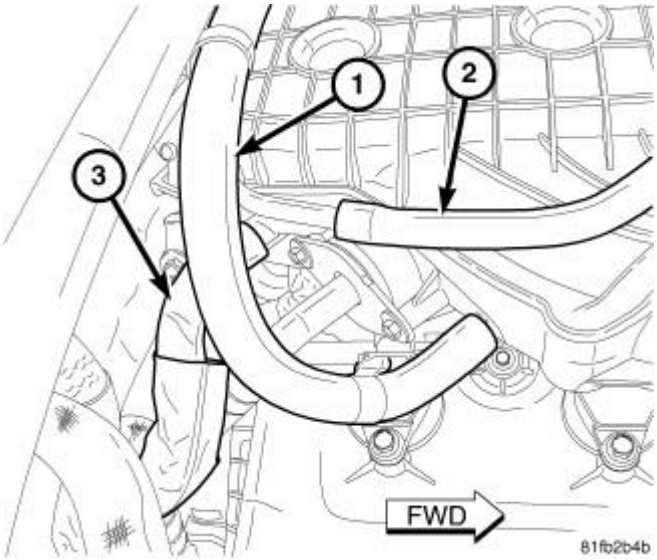

Fig. 137: EGR Tube, PCV & Power Brake Booster Vacuum Hoses
Courtesy of CHRYSLER LLC

50. Install the upper intake manifold, EGR tube, PCV, Purge and power brake booster vacuum hoses. Refer to **MANIFOLD, INTAKE, INSTALLATION**.

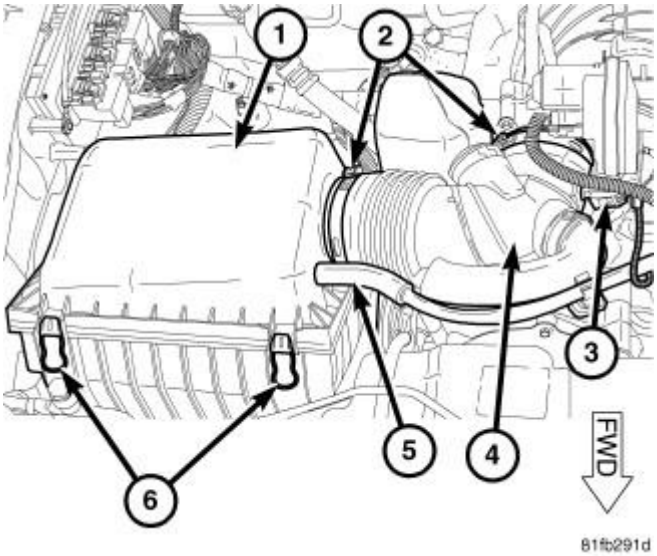

Fig. 138: Air Filter Housing
Courtesy of CHRYSLER LLC

51. Install and connect the air cleaner element housing (1). Refer to **AIR CLEANER, INSTALLATION**.
52. Fill the coolant system. Refer to **Coolant System - STANDARD PROCEDURE** .
53. Connect the negative battery cable. Tighten nut to 4.5 N.m (40 in. lbs.).

LEFT CYLINDER HEAD

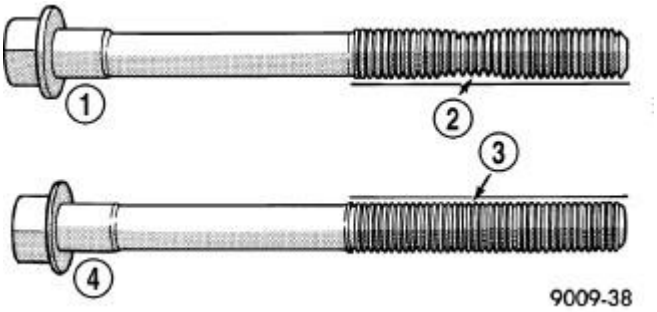

Fig. 139: Checking Cylinder Head Bolts For Stretching (Necking)
Courtesy of CHRYSLER LLC

CAUTION: The cylinder head bolts are tightened using a torque plus angle procedure. The bolts must be examined BEFORE reuse. If the threads are necked down the bolts must be replaced.

1. Check cylinder head bolts for necking by holding a scale or straight edge against the threads. If all the threads do not contact the scale (2) the bolt must be replaced.

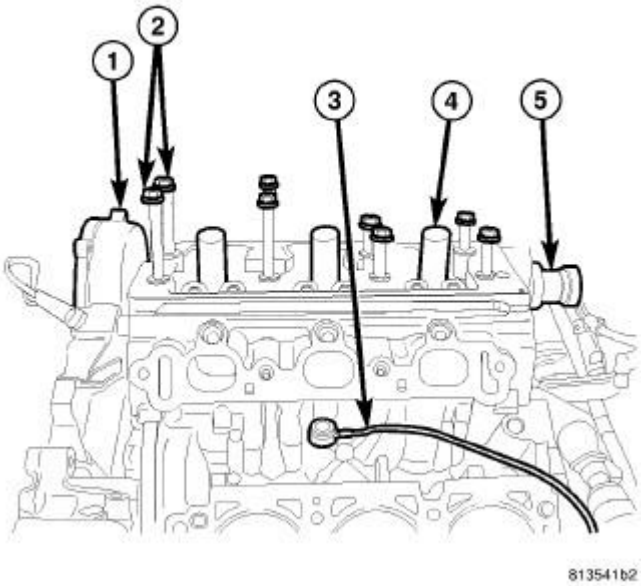

Fig. 140: Right Cylinder Head
Courtesy of CHRYSLER LLC

CAUTION: When cleaning cylinder head and cylinder block surfaces, DO NOT use a metal scraper because the surfaces could be cut or ground. Use ONLY a wooden or plastic scraper.

2. Clean sealing surfaces of cylinder head and block. Refer to **Engine - Standard Procedure**.
3. Install camshaft (5) in cylinder head.

CAUTION: The cylinder head gaskets are not interchangeable between the left and right cylinder heads and are clearly marked (3) with "R" for right and "L" for left.

CAUTION: Ensure that the correct head gaskets are used and are oriented correctly on cylinder block.

4. Push camshaft (5) out of the back of the cylinder head approximately 3.5 inches. Install head gasket and cylinder head over locating dowels.

NOTE: Before installing the cylinder head bolts, lubricate the threads with clean engine oil.

5. Install and finger tighten eight head bolts (2).

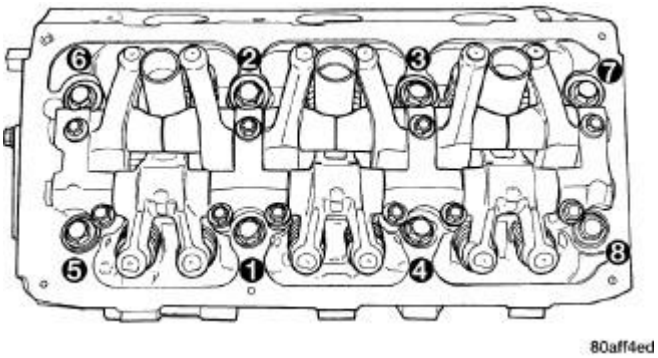

Fig. 141: Cylinder Head Bolt Tightening Sequence
Courtesy of CHRYSLER LLC

6. Tighten the cylinder head bolts in the following sequence, using the 4 step torque-turn method. Tighten according to the following torque values:
   - Step 1: All to 61 N.m (45 ft. lbs.)
   - Step 2: All to 88 N.m (65 ft. lbs.)
   - Step 3: All (again) to 88 N.m (65 ft. lbs.)
   - Step 4: + 90° Turn **Do not use a torque wrench for this step.**
7. Bolt torque after 90° turn should be over 122 N.m (90 ft. lbs.) in the tightening direction. If not, replace the bolt.

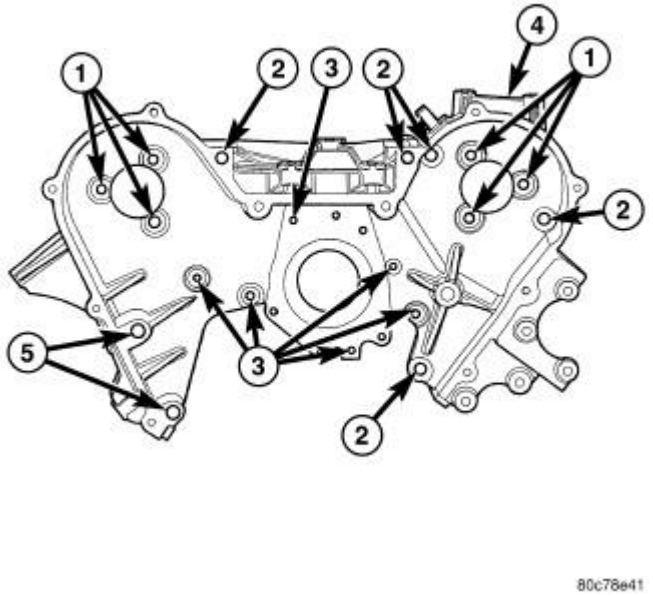

Fig. 142: Inner Timing Belt Cover Fasteners
Courtesy of CHRYSLER LLC

8. Install four inner timing cover to cylinder head bolts (1) and (2). Tighten bolts to 54 N.m (40 ft. lbs.).

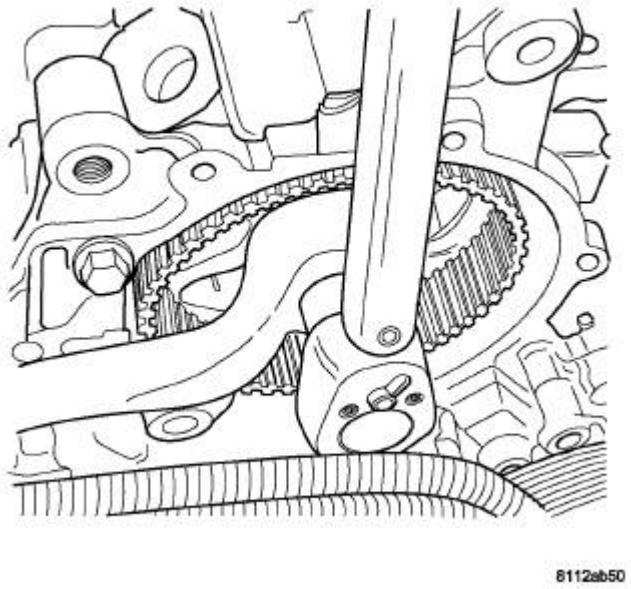

Fig. 143: Left Camshaft Sprocket
Courtesy of CHRYSLER LLC

CAUTION: The camshaft sprockets are keyed and not interchangeable from side to side because of the camshaft position sensor pick-up.

9. Push the camshaft back into the cylinder head and install the camshaft sprocket.
10. Install **NEW** sprocket attaching bolt into place. The 255 mm (10 in.) bolt is to be installed in the left camshaft and the 213 mm (8 3/8 in.) bolt is to be installed into the right camshaft. Counterhold the camshaft sprocket and tighten the camshaft sprocket bolt to 102 N.m (75 ft. lbs.) plus a 90° turn.

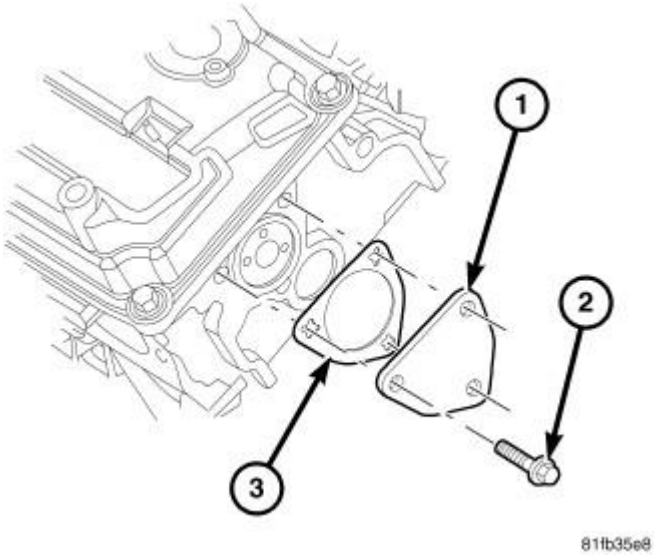

Fig. 144: Cam Thrust Plate, Gasket & Bolts
Courtesy of CHRYSLER LLC

11. Install the camshaft thrust plate (1) and gasket (3). Tighten three bolts (2) to 28 N.m (250 in. lbs.).

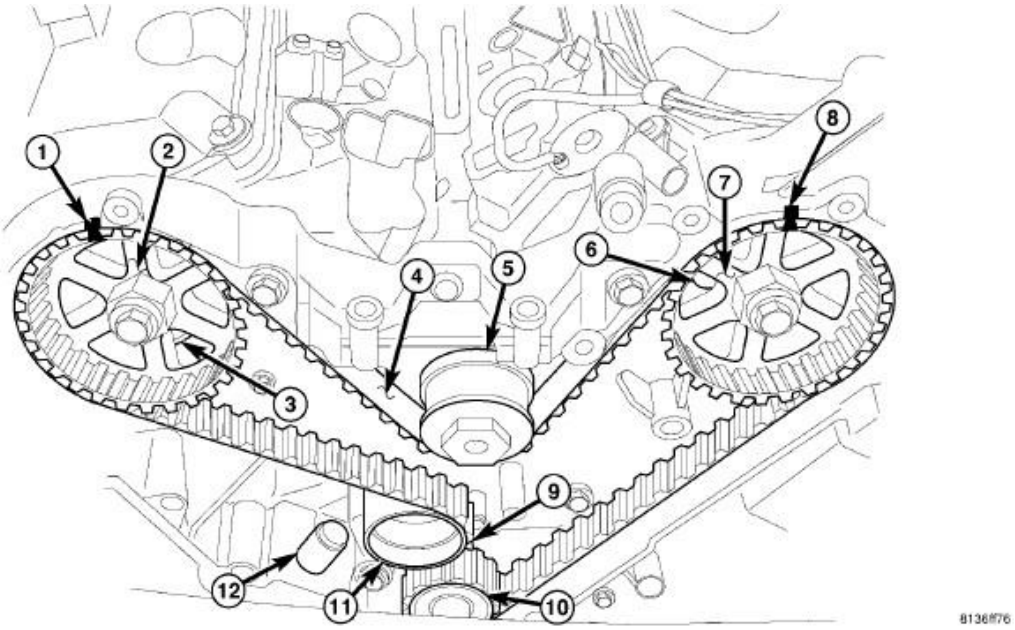

Fig. 145: Timing Gear Components
Courtesy of CHRYSLER LLC

12. Rotate the left camshaft gear (7) to align its timing mark (8). Verify that the right camshaft gear (2) timing mark (1) and crankshaft gear (10) timing mark (9) are still aligned.
13. Install the timing belt (4) starting at the crankshaft sprocket (10) going in a counterclockwise direction. Install the belt around the last sprocket. Maintain tension on the belt as it is positioned around the tensioner pulley (11).
14. Holding the tensioner pulley (11) against the belt, install the tensioner into the housing and tighten two bolts to 28 N.m (250 in. lbs.). Each camshaft sprocket mark should remain aligned with the cover marks.
15. When tensioner is in place pull retaining pin to allow the tensioner to extend to the tensioner pulley bracket.
16. Rotate crankshaft sprocket two revolutions and check the timing marks on the camshafts and crankshaft. The marks should line up within their respective locations. If marks do not line up, repeat procedure.

NOTE: **With the camshaft gears in these positions the lobes are in a neutral position (no load to the valve). This will allow the rocker arm shaft assembly to be tightened into position with little or no valve spring load on it.**

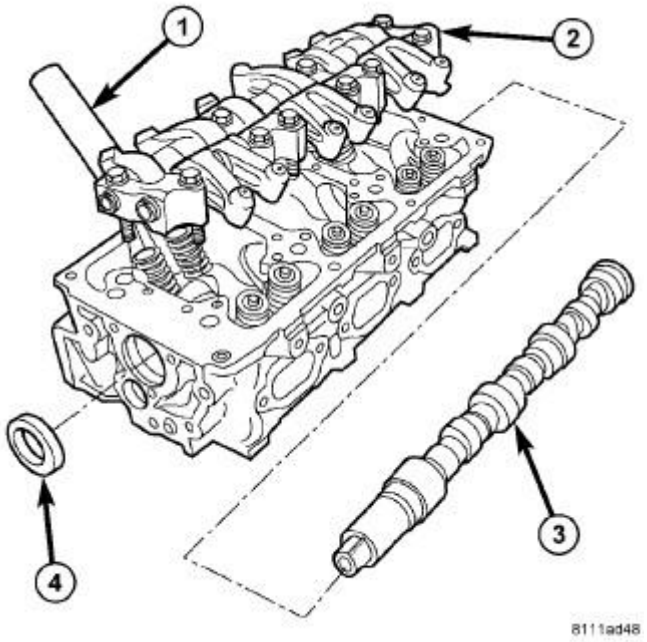

Fig. 146: Camshaft, Rocker Arm Assembly & Cylinder Head
Courtesy of CHRYSLER LLC

17. Install the rocker arm and shaft assembly (2) and ten bolts making sure that the identification marks face toward the front of engine for left head and toward the rear of the engine for right head.

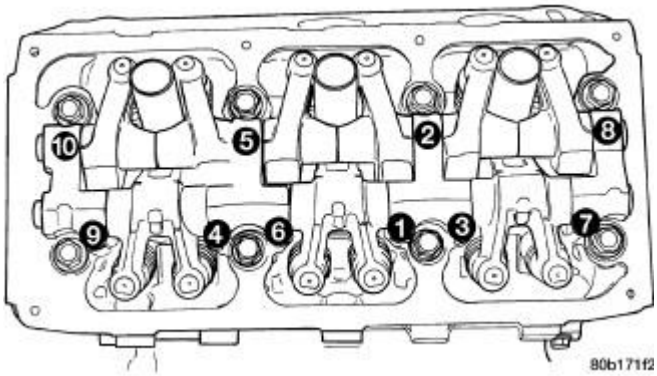

Fig. 147: Rocker Arm/Shaft Assembly Bolt Tightening Sequence
Courtesy of CHRYSLER LLC

18. Tighten the ten rocker arm/shaft assembly bolts in sequence to 31 N.m (275 in. lbs.).

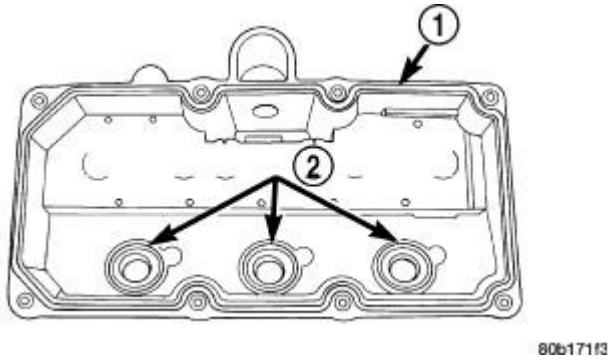

Fig. 148: Cylinder Head Cover Gasket & Spark Plug Tube Seals
Courtesy of CHRYSLER LLC

19. Clean cylinder head and cover mating surfaces. Inspect and replace gasket (1) and seals (2) as necessary. Refer to **COVER(S), CYLINDER HEAD, LEFT, INSTALLATION** and **COVER(S), CYLINDER HEAD, RIGHT, INSTALLATION**.
20. Install cylinder head cover and eight bolts. Tighten bolts to 12 N.m (105 in. lbs.).

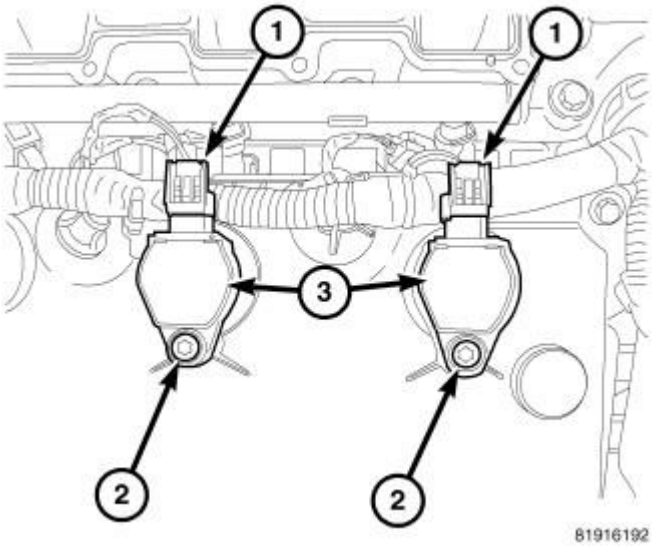

Fig. 149: Ignition Coils, Mounting Bolt & Electrical Connectors
Courtesy of CHRYSLER LLC

21. Install the spark plugs. Tighten to 28 N.m (20 ft. lbs.). Refer to **SPARK PLUG, INSTALLATION** .
22. Install ignition coil (3) into cylinder head.
23. Install and tighten coil mounting bolt (2) to 6.7 N.m (60 in. lbs.).
24. Reposition engine wire harness and install retainers to cylinder head cover. Connect and lock electrical connectors to ignition coils (1) and knock sensor.
25. Install dipstick tube and bolt.

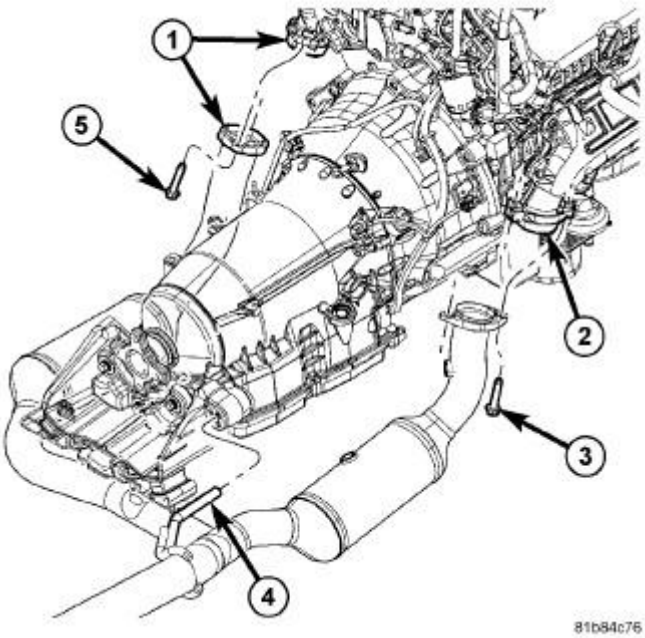

Fig. 150: Exhaust Pipe To Manifold With Fasteners
Courtesy of CHRYSLER LLC

26. Connect the front exhaust pipe to exhaust manifold (1). Tighten the fasteners (5) to 34 N.m (300 in. lbs.).

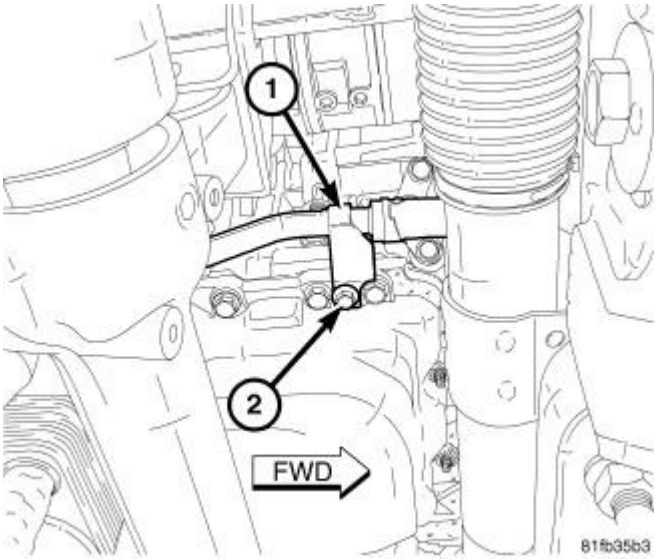

Fig. 151: Oil Cooler Line & Bolt
Courtesy of CHRYSLER LLC

27. Reposition oil cooler hose retainer bracket (1) near timing belt tensioner and install bolt (2).

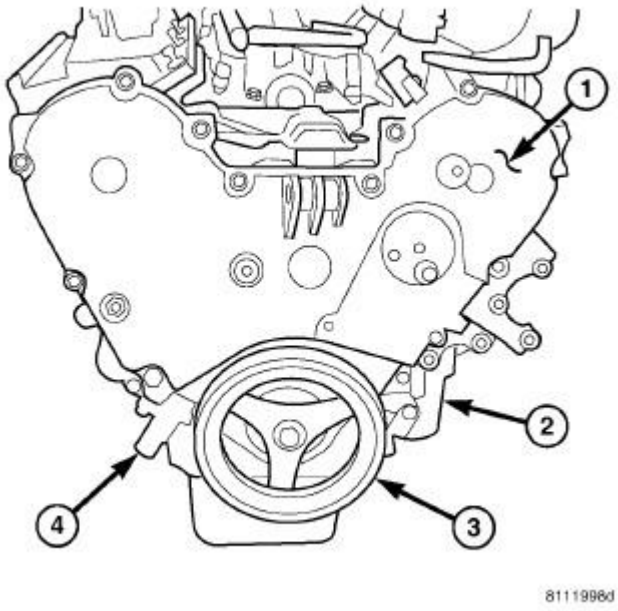

Fig. 152: Front Timing Belt Cover, Engine Oil Filter, Vibration Damper & Timing Belt Tensioner
Courtesy of CHRYSLER LLC

28. Install the front timing belt outer cover (1) and 14 bolts.
29. Tighten the timing cover bolts as follows:
    - M6 bolts - 12 N.m (105 in. lbs.)
    - M8 bolts - 28 N.m (250 in. lbs.)
    - M10 bolts - 54 N.m (40 ft. lbs.)

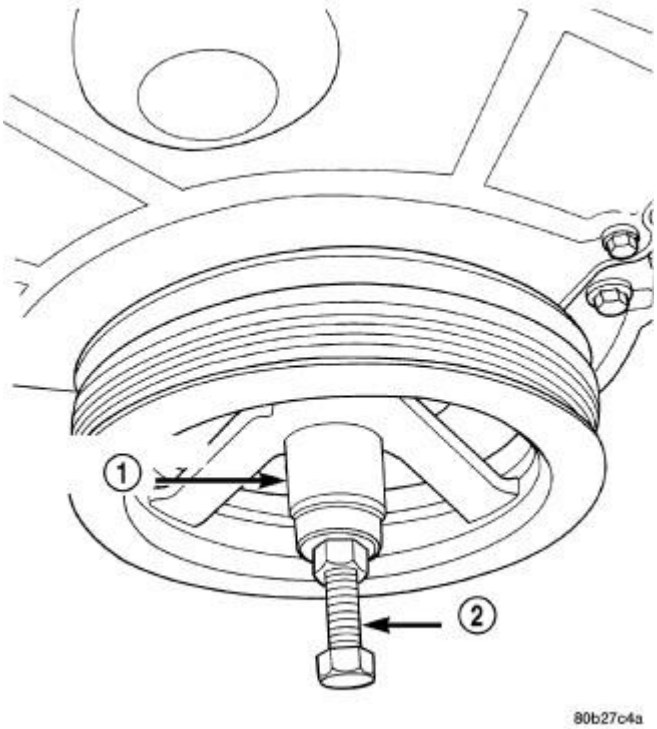

Fig. 153: Crankshaft Damper - Installation
Courtesy of CHRYSLER LLC

30. Install crankshaft damper using Special Tools (special tool #C-4685-C1, Screw, Forcing) (5.9 in.) Bolt (2), with Nut and Thrust Bearing from (special tool #6792, Installer, Crank Sprocket), and (special tool #6792-1, Cup) Installer (1).

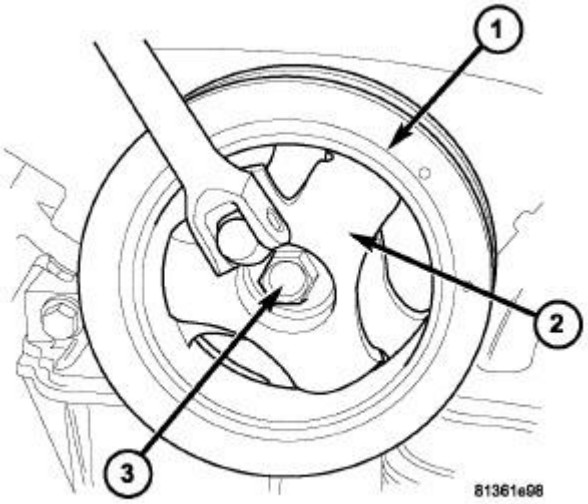

Fig. 154: Damper, Bolt & Holder
Courtesy of CHRYSLER LLC

31. Install crankshaft damper bolt (3). Tighten bolt to 95 N.m (70 ft. lbs.) while holding damper (1) with Special Tool (special tool #9365, Holding Fixture, Damper) (2).

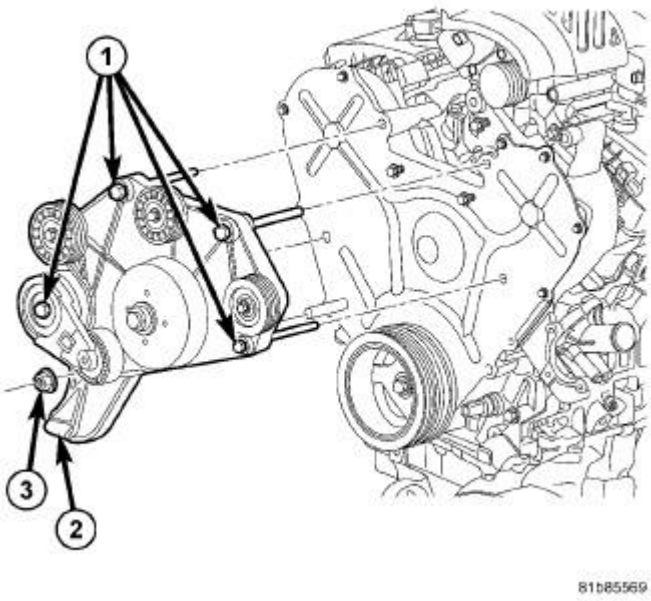

Fig. 155: Accessory Drive Bracket & Fasteners
Courtesy of CHRYSLER LLC

32. Install the accessory drive bracket (2). Tighten four bolts (1) and nut (3) to 54 N.m (40 ft. lbs.).

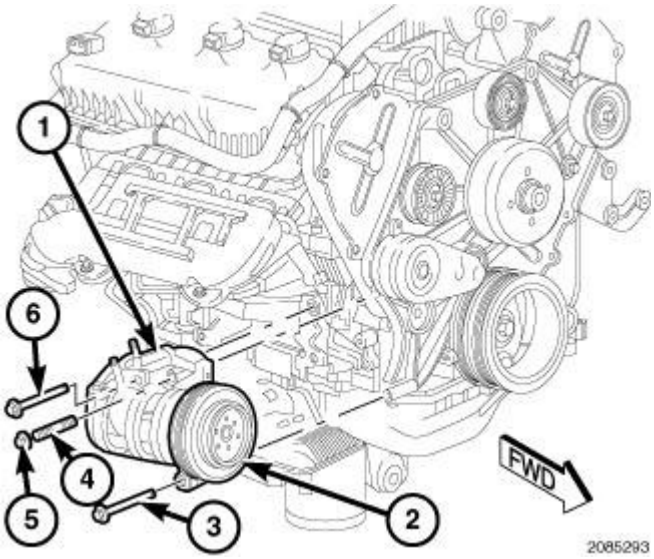

Fig. 156: Removing/Installing A/C Compressor
Courtesy of CHRYSLER LLC

33. Install the stud (4) that secures the upper front of the compressor to the accessory drive belt bracket.

Tighten the stud securely.

34. Install the lower bolt (3) and upper nut (5) that secures the front of the A/C compressor to the accessory drive bracket. Tighten fasteners to 28 N.m (21 ft. lbs.).

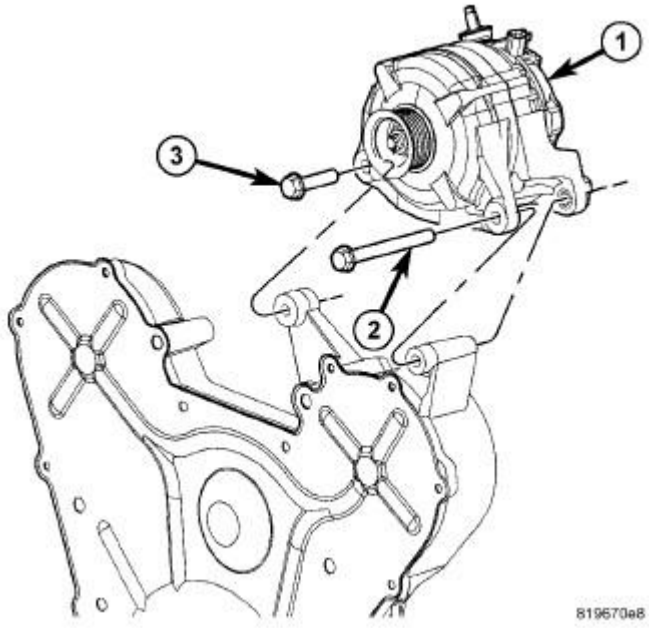

Fig. 157: Generator & Mounting Bolts
Courtesy of CHRYSLER LLC

35. Position generator (1) to engine and install two mounting bolts (2) and (3). Tighten both bolts to 57 N.m (42 ft. lbs.).
36. Snap field wire connector into rear of generator.
37. Install B+ terminal and nut to generator mounting stud. Tighten nut to 13 N.m (115 in. lbs.)
38. Snap plastic protective cover to B+ terminal.

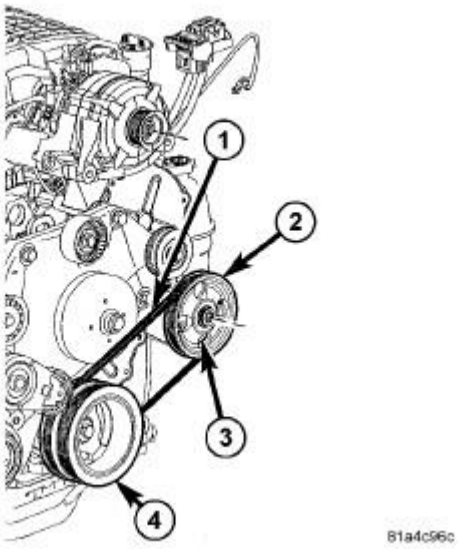

Fig. 158: Power Steering Belt
Courtesy of CHRYSLER LLC

39. Install the power steering belt (1). Refer to **BELT, SERPENTINE, INSTALLATION** and **BELT, SERPENTINE, POWER STEERING, INSTALLATION** .

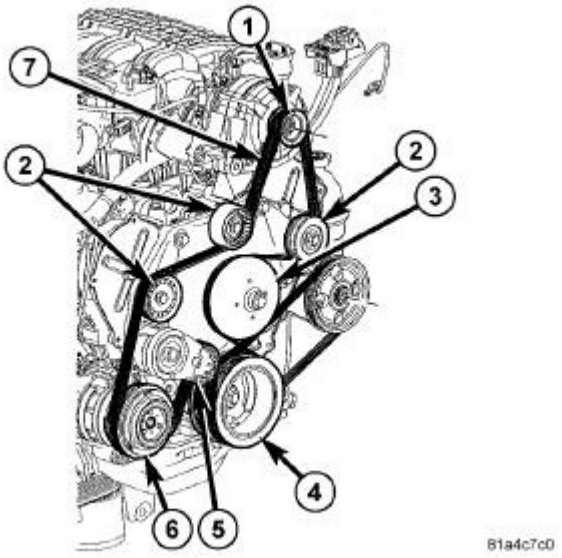

Fig. 159: Accessory Drive Belt Routing - 4.0L
Courtesy of CHRYSLER LLC

40. Install the accessory drive belt (7). Refer to **BELT, SERPENTINE, INSTALLATION** and **BELT, SERPENTINE, POWER STEERING, INSTALLATION** .

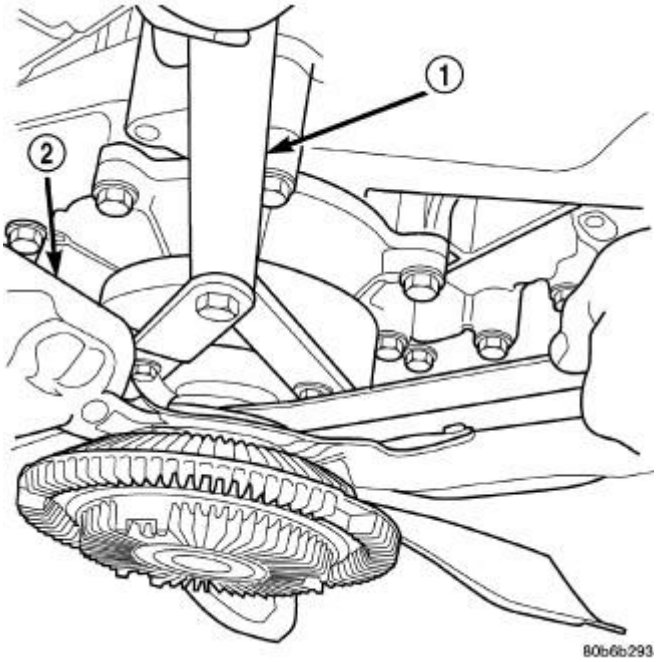

Fig. 160: Using Special Tool 6958 Spanner Wrench & Adapter Pins 8346
Courtesy of CHRYSLER LLC

41. Using Tool (special tool #6958, Wrench, Spanner), install the fan blade/viscous fan drive assembly. Tighten mounting nut to 50 N.m (37 ft. lbs.).

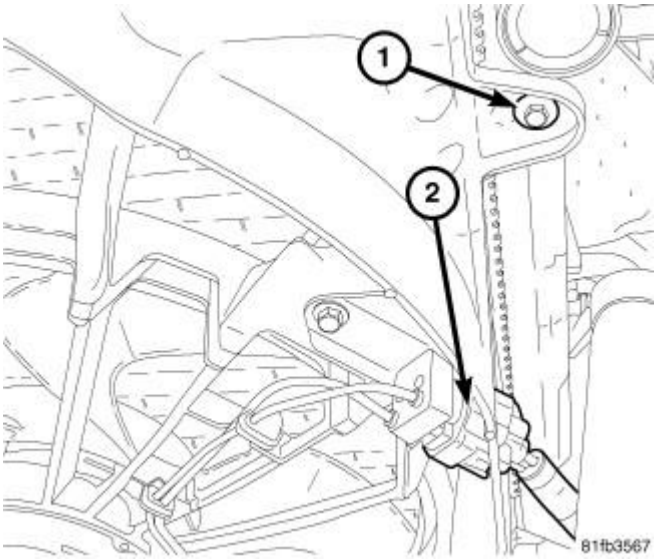

Fig. 161: Electrical Fan Connector & Bolt
Courtesy of CHRYSLER LLC

42. Install electric fan shroud with two screws (1). Tighten screws to 6 N.m (50 in. lbs.).
43. Connect and lock the electric fan connector (2).

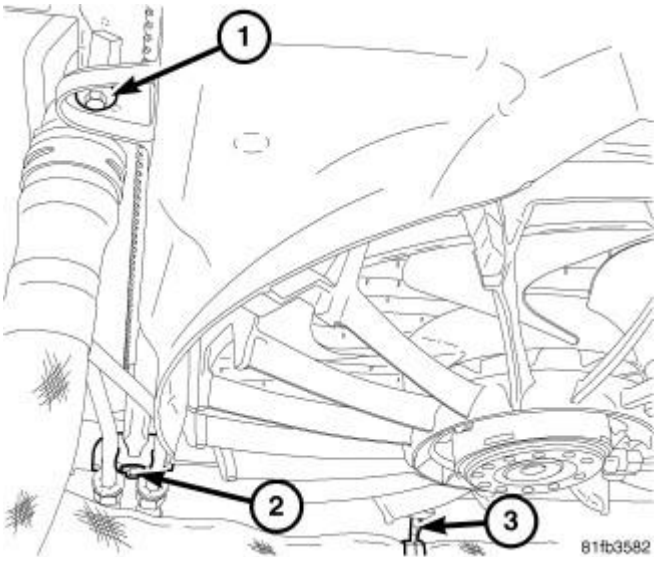

Fig. 162: Radiator Fastener, Transmission Cooling Line Retainer Bolt & Radiator Hose Retainer
Courtesy of CHRYSLER LLC

44. Install transmission cooler line retainer to electric fan shroud with one screw (2).
45. Install radiator hose retainer (3) to electric fan shroud.

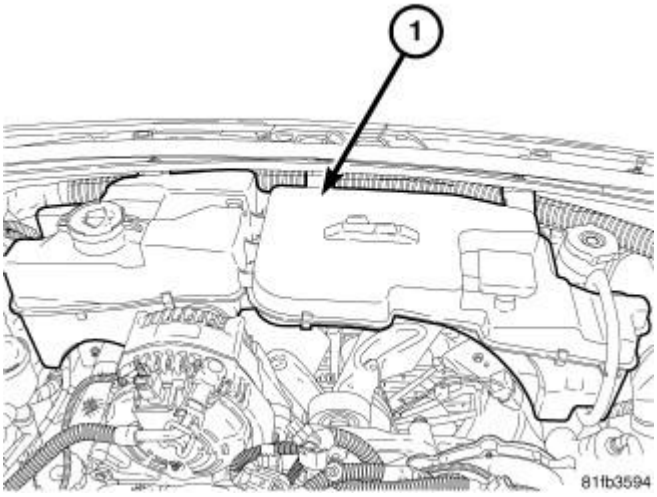

Fig. 163: Coolant Recovery/Washer Fluid Reservoir
Courtesy of CHRYSLER LLC

46. Install the coolant recovery/washer fluid reservoir assembly (1) with five screws. Connect two washer pump hoses, coolant recovery hose, and washer pump connector.

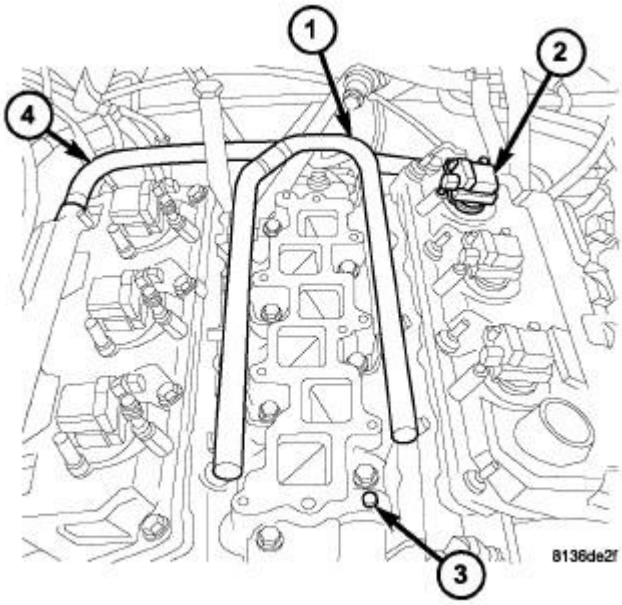

Fig. 164: Fuel Rail, Ignition Coil, Lower Intake Manifold & Hose
Courtesy of CHRYSLER LLC

47. Install lower intake manifold (3) and fuel rail (1). Refer to **MANIFOLD, INTAKE, INSTALLATION**.

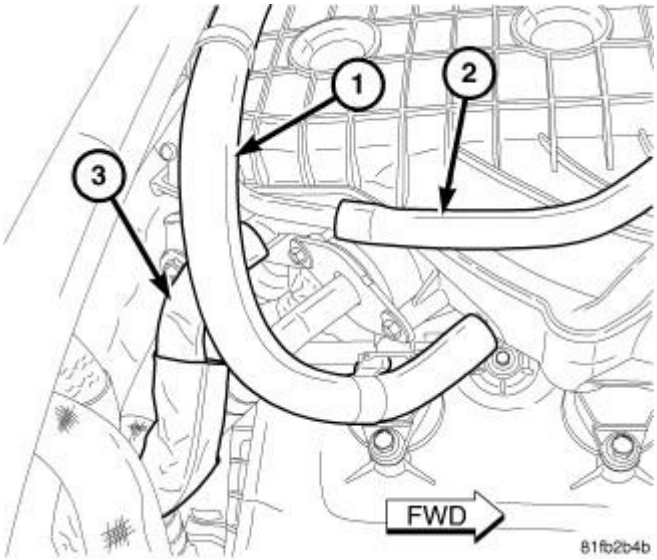

Fig. 165: EGR Tube, PCV & Power Brake Booster Vacuum Hoses
Courtesy of CHRYSLER LLC

48. Install the upper intake manifold, support brackets, EGR tube, PCV, Purge and power brake booster vacuum hoses. Refer to **MANIFOLD, INTAKE, INSTALLATION**.

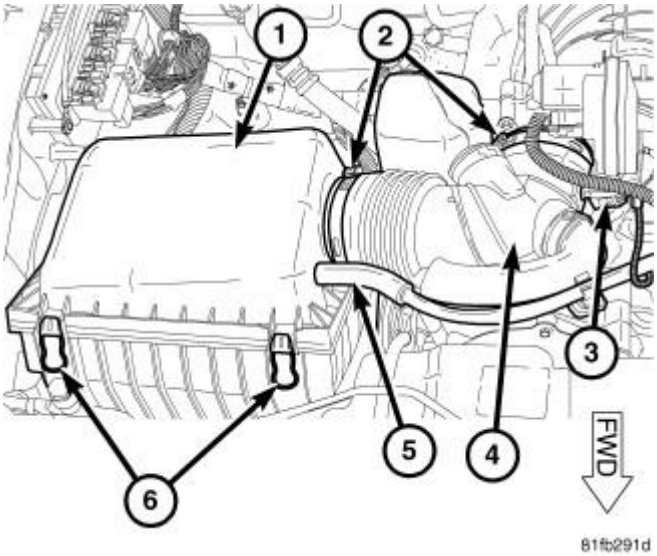

Fig. 166: Air Filter Housing
Courtesy of CHRYSLER LLC

49. Install and connect the air cleaner element housing (1). Refer to **AIR CLEANER, INSTALLATION**.
50. Fill the coolant system. Refer to **STANDARD PROCEDURE** .
51. Connect the negative battery cable. Tighten nut to 4.5 N.m (40 in. lbs.).

CAMSHAFT, ENGINE

DESCRIPTION

DESCRIPTION

A single overhead camshaft per cylinder head provides valve actuation. The left camshaft accommodates a cam sensor pick-up wheel and is therefore longer. Each camshaft is supported by four bearing journals. A thrust plate attached to the rear of each cylinder head controls camshaft end play. Right and left camshaft driving sprockets support a timing mark, are keyed, and not interchangeable because of the cam sensor pick-up wheel on the left sprocket. Camshaft bearing lubrication is provided via a oil supply passage through each rocker shaft pedestal dowel.

OPERATION

OPERATION

The camshaft is driven by the crankshaft via drive sprockets and belt. The camshaft has precisely machined lobes to provide accurate valve timing and duration.

REMOVAL

REMOVAL

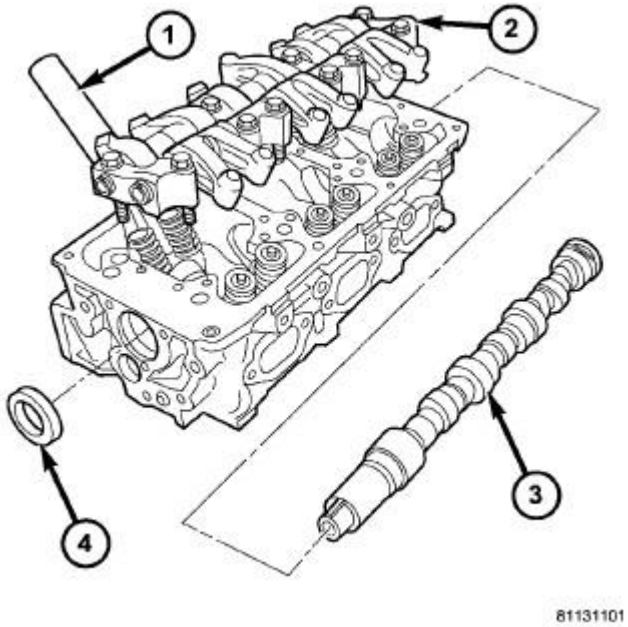

Fig. 167: Cylinder Head, Camshaft & Rocker Arm
Courtesy of CHRYSLER LLC

1 - SPARK PLUG TUBE
2 - ROCKER ARM ASSEMBLY
3 - CAMSHAFT
4 - SEAL

NOTE: Camshafts are removed from the rear of each cylinder head.

1. Remove the cylinder head. Refer to **CYLINDER HEAD, REMOVAL**.

CAUTION: Care must be taken not to nick or scratch the journals when removing the camshaft.

2. Carefully remove the camshaft (3) from the rear of the cylinder head. Refer to**Fig. 167**.

INSPECTION

INSPECTION

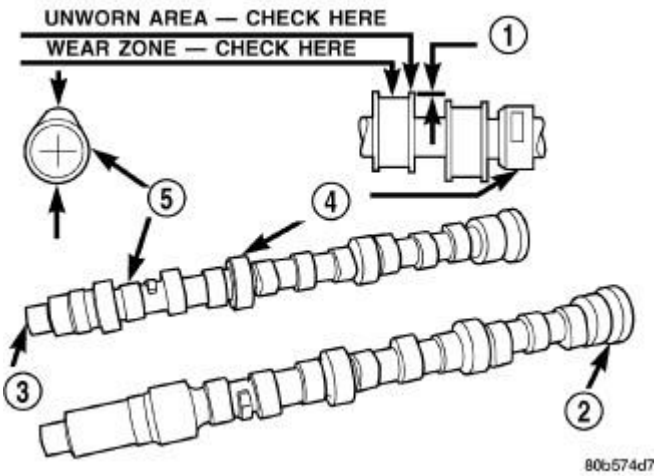

Fig. 168: Camshaft Inspection
Courtesy of CHRYSLER LLC

1 - ACTUAL WEAR
2 - LEFT CAMSHAFT
3 - RIGHT CAMSHAFT
4 - BEARING JOURNAL
5 - LOBE

1. Inspect camshaft bearing journals (4) for damage and binding. If journals are binding, check the cylinder head for damage. Also check cylinder head oil holes for clogging.
2. Check the cam lobe (5) and bearing surfaces for abnormal wear and damage. Replace camshaft if defective.

NOTE: If camshaft is replaced due to lobe wear or damage, always replace the rocker arms.

3. Measure the lobe (5) actual wear and replace camshaft if out of limit. Refer to **Fig. 168**. Standard value is 0.0254 mm (0.001 in.), wear **limit** is 0.254 mm (0.010 in.).

INSTALLATION

INSTALLATION

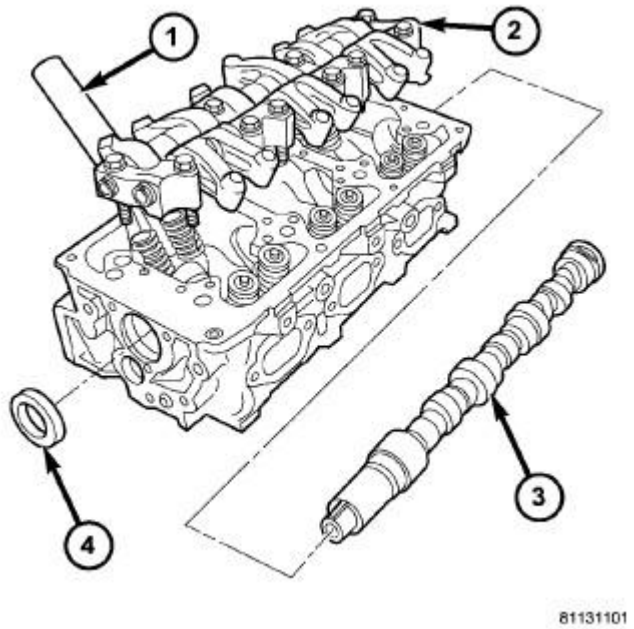

Fig. 169: Cylinder Head, Camshaft & Rocker Arm
Courtesy of CHRYSLER LLC

1 - SPARK PLUG TUBE
2 - ROCKER ARM ASSEMBLY
3 - CAMSHAFT
4 - SEAL

NOTE: Care must be taken not to scrape or nick the camshaft journals when installing the camshaft into position.

1. Lubricate camshaft (3) bearing journals, camshaft lobes and camshaft seal (4) with clean engine oil and install camshaft (3) into cylinder head. Refer to **Fig. 169**.
2. Install the cylinder head. Refer to **CYLINDER HEAD, INSTALLATION**.

COVER(S), CYLINDER HEAD, LEFT

REMOVAL

REMOVAL

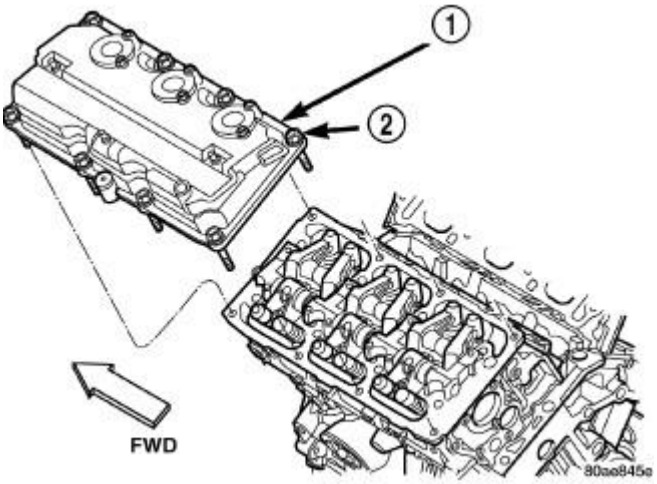

Fig. 170: Cylinder Head Cover & Bolts
Courtesy of CHRYSLER LLC

WARNING: DO NOT START OR RUN ENGINE WITH CYLINDER HEAD COVER REMOVED FROM THE ENGINE. DAMAGE OR PERSONAL INJURY MAY OCCUR.

1. Disconnect and isolate the negative battery cable.
2. Remove the upper intake manifold from the engine. Refer to **MANIFOLD, INTAKE, REMOVAL**.
3. Cover lower intake manifold with a suitable cover during service.
4. Disconnect and remove the three ignition coils. Refer to **COIL, IGNITION, REMOVAL** .
5. Lift up on the wire harness track retaining tabs and reposition wire harness.
6. Completely loosen eight cylinder head cover retaining bolts (2) and remove the cylinder head cover (1).

INSTALLATION

INSTALLATION

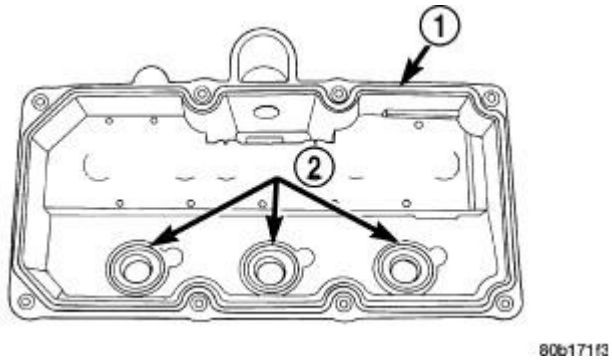

Fig. 171: Cylinder Head Cover Gasket & Spark Plug Tube Seals
Courtesy of CHRYSLER LLC

1 - CYLINDER HEAD COVER GASKET

2 - SPARK PLUG TUBE SEALS

1. Clean cylinder head and cover mating surfaces. Inspect and replace gasket (1) and seals (2) as necessary.

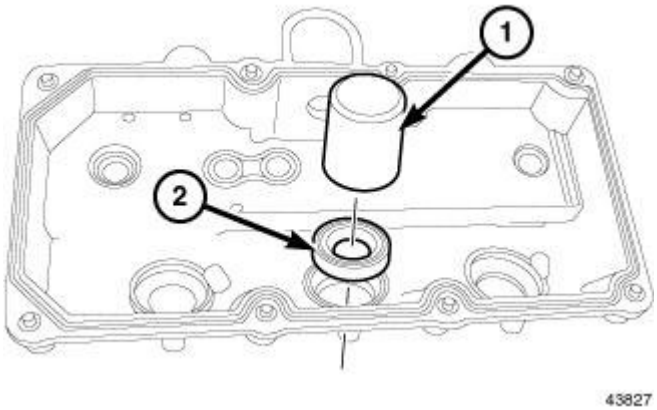

Fig. 172: Spark Plug Tube Seal Installation
Courtesy of CHRYSLER LLC

1 - SPECIAL TOOL MD-998306	
2 - SPARK PLUG TUBE SEAL	

2. To replace spark plug tube seals (2):
   1. Using a suitable pry tool, carefully remove tube seals (2).
   2. Position new seal (2) with the part number on seal facing cylinder head cover.
   3. Install seals using Camshaft Installer (special tool #MD-998306, Installer, Camshaft) (1).

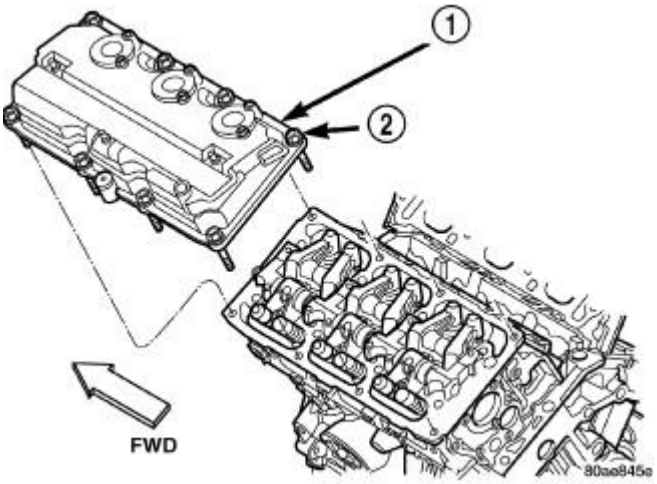

Fig. 173: Cylinder Head Cover & Bolts
Courtesy of CHRYSLER LLC

3. Install cylinder head cover (1) and eight bolts (2). Tighten to 12 N.m (105 in. lbs.).

4. Position the wiring harness on the cylinder head cover.
5. Reclip the wire harness track retaining tabs into the cover.
6. Install the ignition coils. Tighten mounting screws to 6.7 N.m (60 in. lbs.).
7. Connect the ignition coil electrical connectors.
8. Install upper intake manifold. Refer to **MANIFOLD, INTAKE, INSTALLATION**.
9. Connect negative battery cable. Tighten nut to 4.5 N.m (40 in. lbs.).

COVER(S), CYLINDER HEAD, RIGHT

REMOVAL

REMOVAL

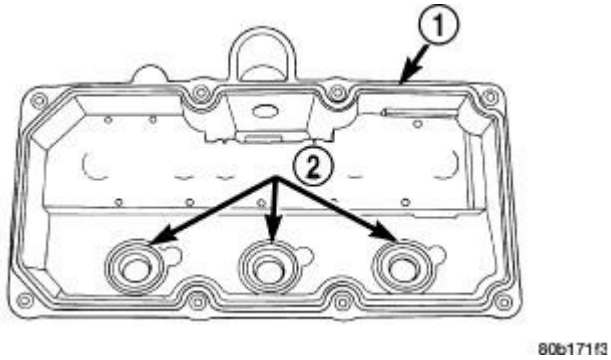

Fig. 174: Cylinder Head Cover Gasket & Spark Plug Tube Seals
Courtesy of CHRYSLER LLC

WARNING: DO NOT START OR RUN ENGINE WITH CYLINDER HEAD COVER REMOVED FROM THE ENGINE. DAMAGE OR PERSONAL INJURY MAY OCCUR.

1. Disconnect and isolate the negative battery cable.
2. Remove the upper intake manifold. Refer to **MANIFOLD, INTAKE, REMOVAL**.
3. Cover lower intake manifold openings during service.
4. Disconnect and remove the three ignition coils. Refer to **COIL, IGNITION, REMOVAL** .
5. Lift up on the wire harness track retaining tabs and reposition wire harness.
6. Completely loosen the eight cylinder head cover retaining bolts and remove the cylinder head cover (1).

INSTALLATION

INSTALLATION

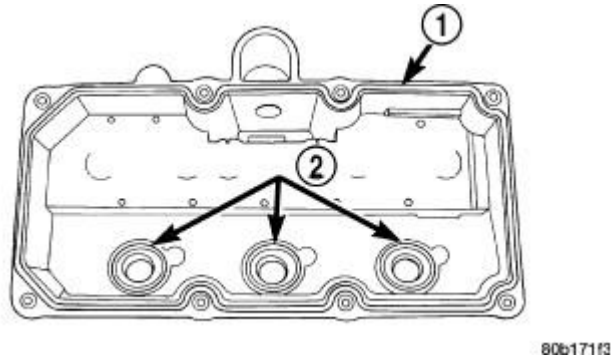

Fig. 175: Cylinder Head Cover Gasket & Spark Plug Tube Seals
Courtesy of CHRYSLER LLC

1. Clean cylinder head and cover mating surfaces. Inspect and replace gasket (1) and seals (2) as necessary.

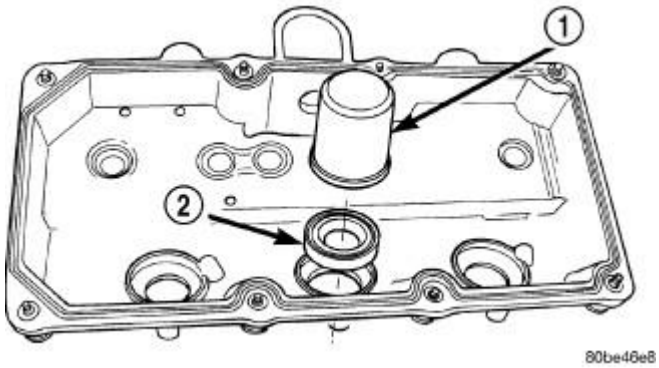

Fig. 176: Spark Plug Tube Seal Installation
Courtesy of CHRYSLER LLC

1 - SPECIAL TOOL MD-998306
2 - SPARK PLUG TUBE SEAL

2. To replace spark plug tube seals (2):
   1. Using a suitable pry tool, carefully remove tube seals (2).
   2. Position new seal (2) with the part number on seal facing cylinder head cover.
   3. Install seals using Camshaft Installer MD-99830 (1).
3. Install cylinder head cover and eight bolts. Tighten bolts to 12 N.m (105 in. lbs.).
4. Position the wire harness on the cylinder head cover.
5. Reclip the wire harness track retaining tabs into the cover.
6. Install the ignition coils. Tighten mounting screws to 6.7 N.m (60 in. lbs.).
7. Connect the ignition coil electrical connectors.
8. Install upper intake manifold. Refer to **MANIFOLD, INTAKE, INSTALLATION**.
9. Connect negative battery cable. Tighten the nut to 4.5 N.m (40 in. lbs.).

ROCKER ARM, VALVE

DESCRIPTION

ROCKER ARM

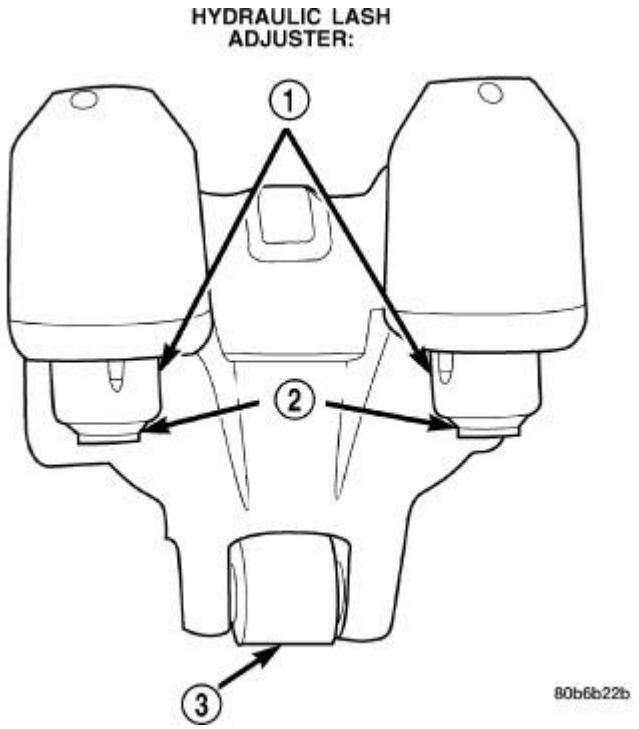

Fig. 177: Rocker Arm Assembly
Courtesy of CHRYSLER LLC

1 - RETAINER
2 - SWIVEL PAD
3 - ROLLER

Rocker arms are made of light weight permanent mold aluminum alloy with a roller (3) type follower operating against the camshaft. Refer to **Fig. 177**. The valve actuating end of the rocker arms are machined to retain hydraulic lash adjusters, eliminating the need for manual valve lash adjustment.

ROCKER ARM SHAFTS

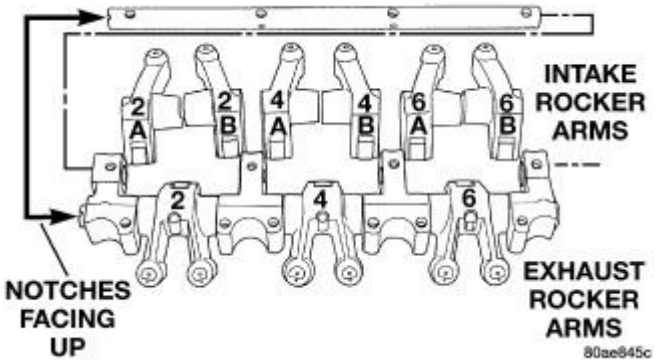

Fig. 178: Rocker Arms & Shafts
Courtesy of CHRYSLER LLC

The rocker arm shafts are tubular steel and are supported by several forged aluminum alloy pedestals, which are fastened to the cylinder head. Refer to **Fig. 178**. Four shafts are used, one for each intake and exhaust rocker arm bank on each cylinder head. The shafts are hollow to provide a duct for lubricating oil flow from the cylinder head to the valve mechanisms. One hollow dowel per pedestal is used to locate the pedestal to the cylinder head, orient the exhaust rocker shaft, and serve as a cam bearing oil feed passage.

OPERATION

OPERATION

The rocker arm is the pivot point between the camshaft lobe and the valve.

DIAGNOSIS AND TESTING

DIAGNOSIS AND TESTING - LASH ADJUSTER (TAPPET) NOISE DIAGNOSIS

Proper noise diagnosis is essential in locating the source of a NVH complaint. Locating a lash adjuster (tappet) type noise can sometimes be difficult. As a result, an initial misdiagnosis may occur.

Refer to the following chart indicating possible lash adjuster (tappet) noise sources and possible sources that could lead to a misdiagnosis.

Refer to **LASH ADJUSTER (TAPPET) NOISE CHART** for Possible Causes and Correction of a lash adjuster (tappet) type noise.

POSSIBLE NOISE SOURCES	POSSIBLE NOISE MISDIAGNOSIS SOURCES
Spongy/soft/aerated lash adjusters.	Exhaust leak.
Missing lash adjuster swivel contact pads.	Exhaust rocker arm-to-cylinder head cover contact.
Intake rocker-to-camshaft bearing journal contact.	Piston pin bore fit.
Rocker arm bind-up.	Timing drive hydraulic tensioner tick.
Intake rocker arm-to-spark plug tube contact.	Accessory drive belt deterioration.
Excessive cam end play.	Piston-to-bore clearance knock.

Broken valve spring.	Crankshaft bearing noise.
Broken/loose camshaft sprocket bolt.	
Incomplete cam lobe machining.	
Cracked lash adjuster cartridge body.	

LASH ADJUSTER (TAPPET) NOISE CHART

POSSIBLE CAUSES	CORRECTION
1. Engine oil level-too high or too low. This may cause aerated oil to enter the adjusters and cause them to be spongy.	1. Check and correct engine oil level.
2. Insufficient running time after rebuilding cylinder head.	2. Low speed running of up to 1 hour may be required to fully evacuate trapped air from the valve train system. During this time, turn engine off and let set for a few minutes before restarting. Repeat this several times after engine has reached normal operating temperature.
3. Air trapped in lash adjuster (after 1 hour run time).	3. See below: (a) Check lash adjusters for sponginess while installed in cylinder head. Depress part of rocker arm over adjuster. Normal adjusters should feel very firm. Very spongy adjusters can be bottomed out easily. (b) Before proceeding, perform **HYDRAULIC LASH ADJUSTER BLEEDING** procedure. (c) If lash adjuster(s) are still spongy, replace with new adjuster/rocker arm assembly*.
4. Low oil pressure	4. See below: (a) Check and correct engine oil level. (b) Check engine oil pressure. (c) Check for excessive bearing clearance and correct. (d) Check for worn oil pump.
5. Oil passage to cylinder head(s) plugged with debris.	5. Check cylinder head oil passages and cylinder head gasket restrictor for blockage. Clean or replace as necessary.
6. Worn valve guide(s).	6. Ream guide(s) and replace valve(s) with oversize valves and seal(s).
7. Air injested into oil due to broken or cracked oil pump pickup tube.	7. Inspect pickup tube and replace as necessary.
8. Collapsed lash adjuster due to debris injestion.	8. Clean debris from engine and replace lash adjuster/rocker assembly*.
9. Intake rocker arm roller clevis ear(s) contacting camshaft bearing journal(s) on side.	9. Inspect camshaft end play and all valve train components for wear. Replace as necessary.
***Lash adjusters are serviced with the rocker arms-do not disassemble.**	

STANDARD PROCEDURE

STANDARD PROCEDURE - HYDRAULIC LASH ADJUSTER BLEEDING

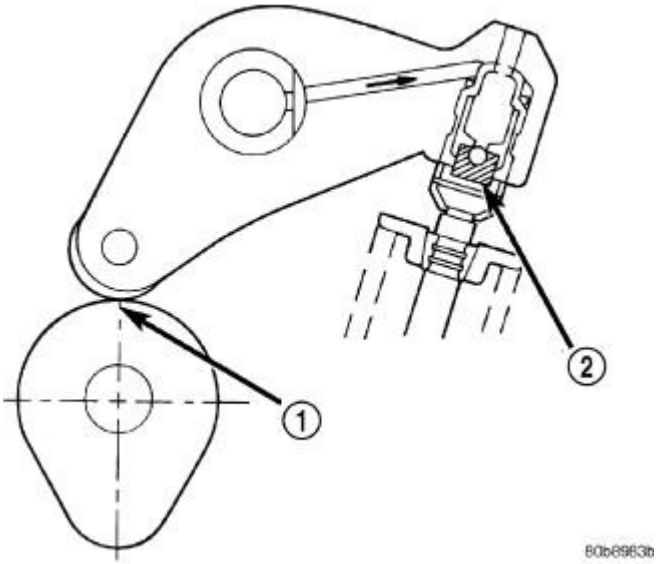

Fig. 179: Rocker Arm Positioned On Base Circle Of Camshaft
Courtesy of CHRYSLER LLC

1 - CAMSHAFT BASE CIRCLE
2 - HIGH-PRESSURE CHAMBER

Use this procedure to manually bleed aerated oil from the lash adjuster and remove sponginess.

1. Run the engine, bringing it to operating temperature in order to freshly pressurize and warm the valvetrain system oil supply.
2. Remove cylinder head cover(s).
3. Ensure the rocker arm is positioned on the base circle (1) of the cam. Refer to **Fig. 179**. Rotate engine as necessary.

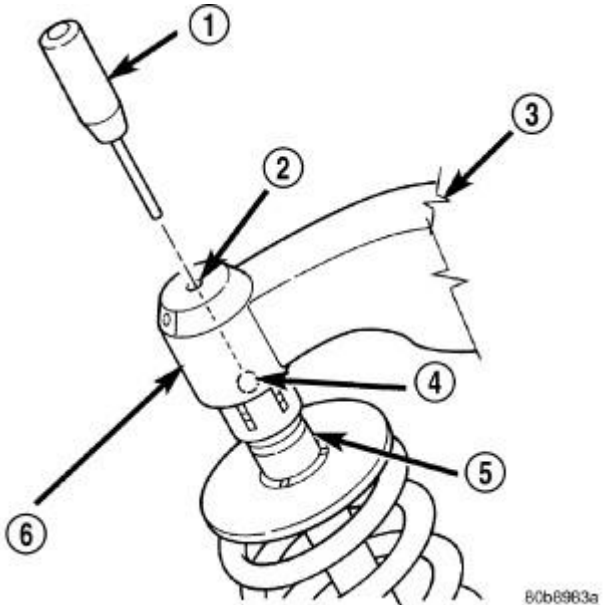

Fig. 180: Purging Air From Lash Adjuster
Courtesy of CHRYSLER LLC

1 - SPECIAL TOOL 8351
2 - OIL AIR RELIEF SERVICE ACCESS HOLE
3 - ROCKER ARM ASSEMBLY
4 - INTERNAL CHECK BALL
5 - VALVE TIP
6 - HYDRAULIC LASH ADJUSTER WITHIN ROCKER ARM

4. For intake rocker arm positions:
   1. Adjust Special Tool (special tool #8351, Release Probe) (1) Release Probe's gauge pin to extend approximately 20 mm (0.787 in.). Then, carefully insert the release probe gauge pin into the lash adjuster (6) service access hole (2). Refer to **Fig. 180**.

      CAUTION: If probe tip (1) breaks off within the lash adjuster (6), replace the affected rocker arm (3).

   2. Gently unseat lash adjuster's internal check ball (4).
   3. While the internal check ball (4) is held unseated, press the rocker arm (3) into the valve tip (5), allowing the lash adjuster (6) to fully collapse. Hold this fully collapsed position for about one second, or longer.
   4. Slowly release the rocker arm (3), thereby allowing the lash adjuster (6) to extend, which in turn refills the high pressure chamber with non-aerated oil.
   5. Remove probe to allow check ball (4) to seat.
   6. Recheck for sponginess. If the lash adjuster (6) sponginess is not completely or nearly eliminated, then repeat procedure.

   7. If the spongy condition cannot be removed, replace effected rocker arm(s) (3).
5. For exhaust rocker arm (3) positions:
   1. Adjust Special Tool (special tool #8351, Release Probe) (1) Release Probe gauge pin to extend approximately 20 mm (0.787 in.). Then, using two release probes, carefully insert gauge pins into the lash adjuster service access holes. Refer to **Fig. 180**.

CAUTION: If probe tip (1) breaks off within the lash adjuster (6), replace the affected rocker arm (3).

   2. Gently unseat BOTH lash adjuster's internal check ball (4) at the same time.
   3. While the internal check ball (4) is held unseated, press the rocker arm (6) into the valve tip, allowing the lash adjuster to fully collapse. Hold this fully collapsed position for about one second, or longer.
   4. Slowly release the rocker arm (3), thereby allowing the lash adjuster (6) to extend, which in turn refills the high pressure chamber with non-aerated oil.
   5. Remove probes (1) to allow check balls (4) to seat.
   6. Recheck for sponginess. If the lash adjuster (6) sponginess is not completely or nearly eliminated, then repeat procedure.
   7. If the spongy condition cannot be removed, replace effected rocker arm(s) (3).
6. Install cylinder head cover(s).

REMOVAL

REMOVAL

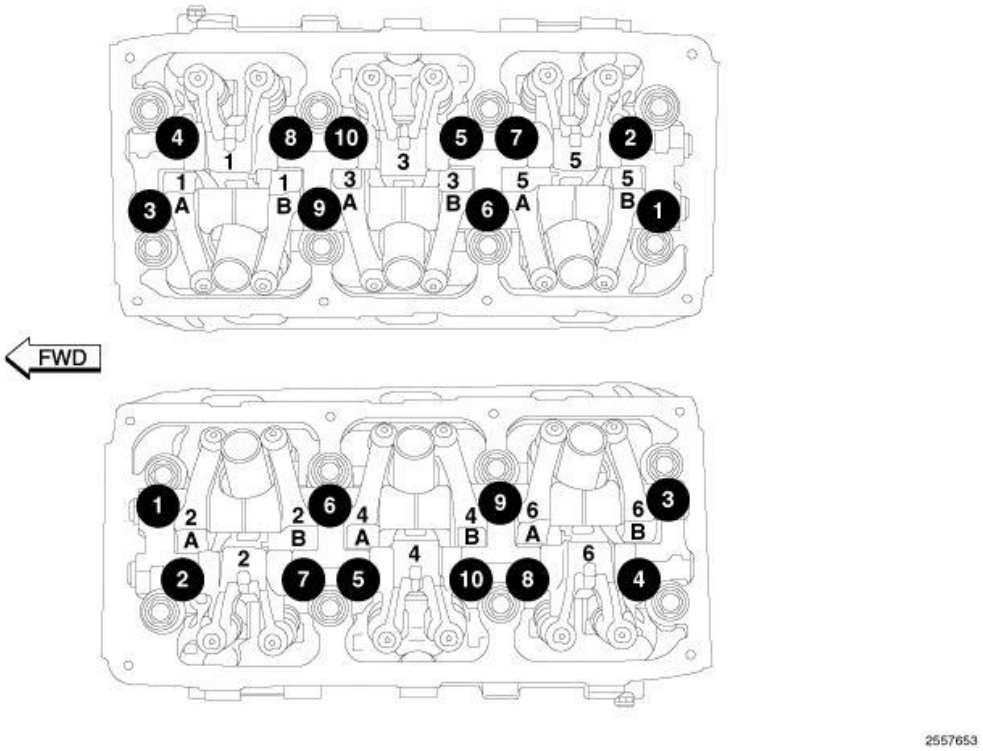

Fig. 181: Removing/Installing Rocker Arm Assembly Bolts In Sequence
Courtesy of CHRYSLER LLC

1. Remove the cylinder head covers. Refer to **COVER(S), CYLINDER HEAD, LEFT, REMOVAL** and **COVER(S), CYLINDER HEAD, RIGHT, REMOVAL**.

CAUTION: DO NOT use a number stamp or a punch to mark the rocker arms. Damage to the rocker arms could occur.

2. Using a permanent ink or paint marker, identify the location and position on each rocker arm.
3. Remove the rocker arm assembly bolts in the sequence shown in illustration.

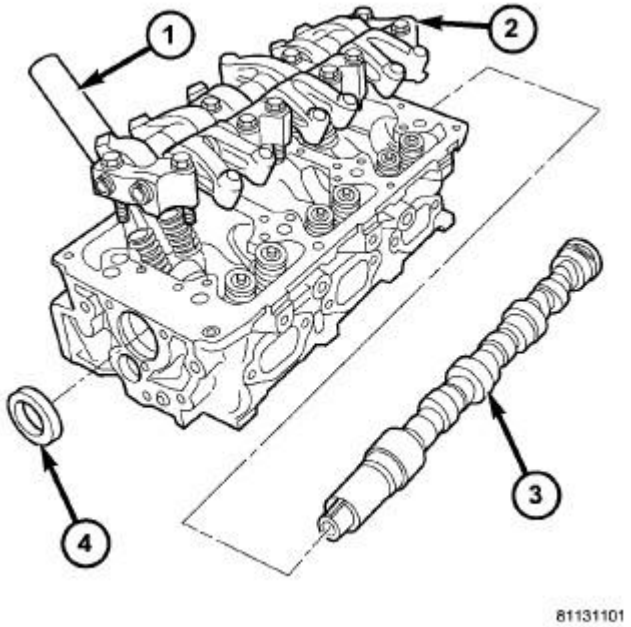

Fig. 182: Cylinder Head, Camshaft & Rocker Arm
Courtesy of CHRYSLER LLC

1 - SPARK PLUG TUBE
2 - ROCKER ARM ASSEMBLY
3 - CAMSHAFT
4 - SEAL

4. Remove the rocker arm assembly (2).

NOTE: To prevent air ingestion into the lash adjusters, avoid turning the rocker arm assembly upside down.

CAUTION: Do not allow rocker arm assembly to rest on lash adjusters, as damage may occur to lash adjusters and/or plastic retainers.

DISASSEMBLY

DISASSEMBLY

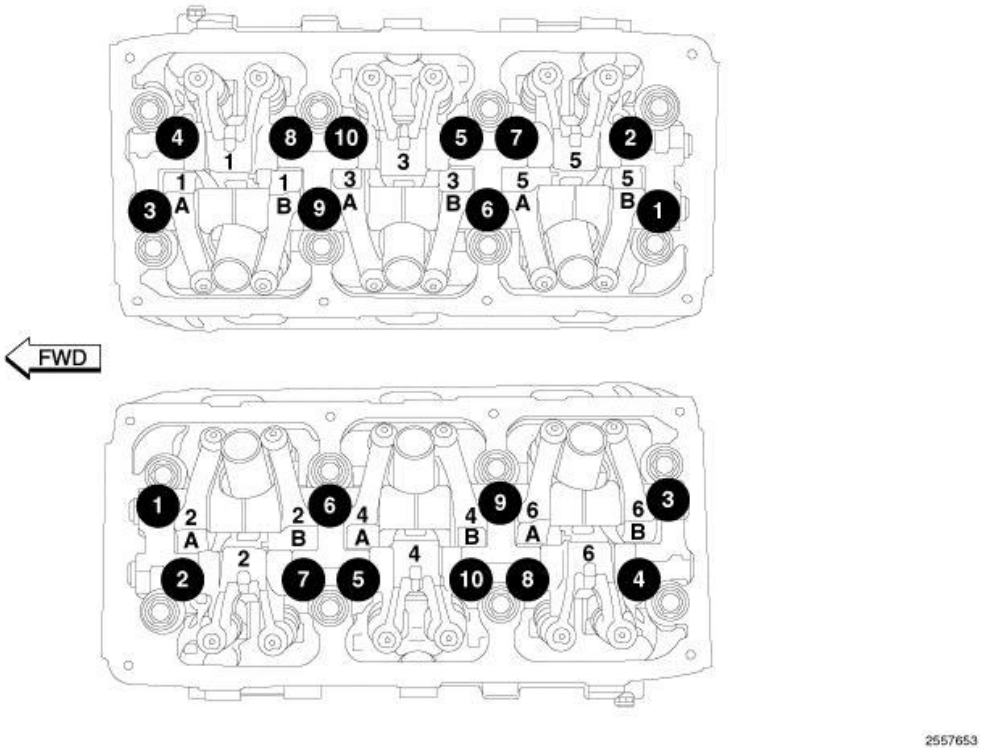

Fig. 183: Removing/Installing Rocker Arm Assembly Bolts In Sequence
Courtesy of CHRYSLER LLC

CAUTION: DO NOT use a number stamp or a punch to mark the rocker arms. Damage to the rocker arms could occur.

1. Using a permanent ink or paint marker, identify the location and position on each rocker arm and remove the rocker arm and shaft assembly. Refer to **ROCKER ARM, VALVE, REMOVAL**.

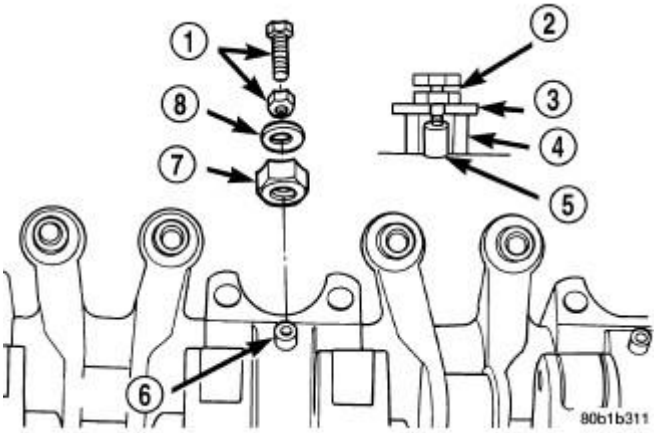

Fig. 184: Rocker Arms & Shaft - Disassembly
Courtesy of CHRYSLER LLC

1 - 4 mm SCREW AND NUT
2 - 4 mm SCREW AND NUT
3 - WASHER
4 - SPACER
5 - DOWEL
6 - DOWEL
7 - SPACER
8 - WASHER

2. Remove the dowel pins using a 4 mm screw, nut, spacer, and washer installed into the pin. Thread the screw into the pin, then loosen the nut on the screw. This will pull the dowel out of the shaft support. Do not reuse the dowel pins.

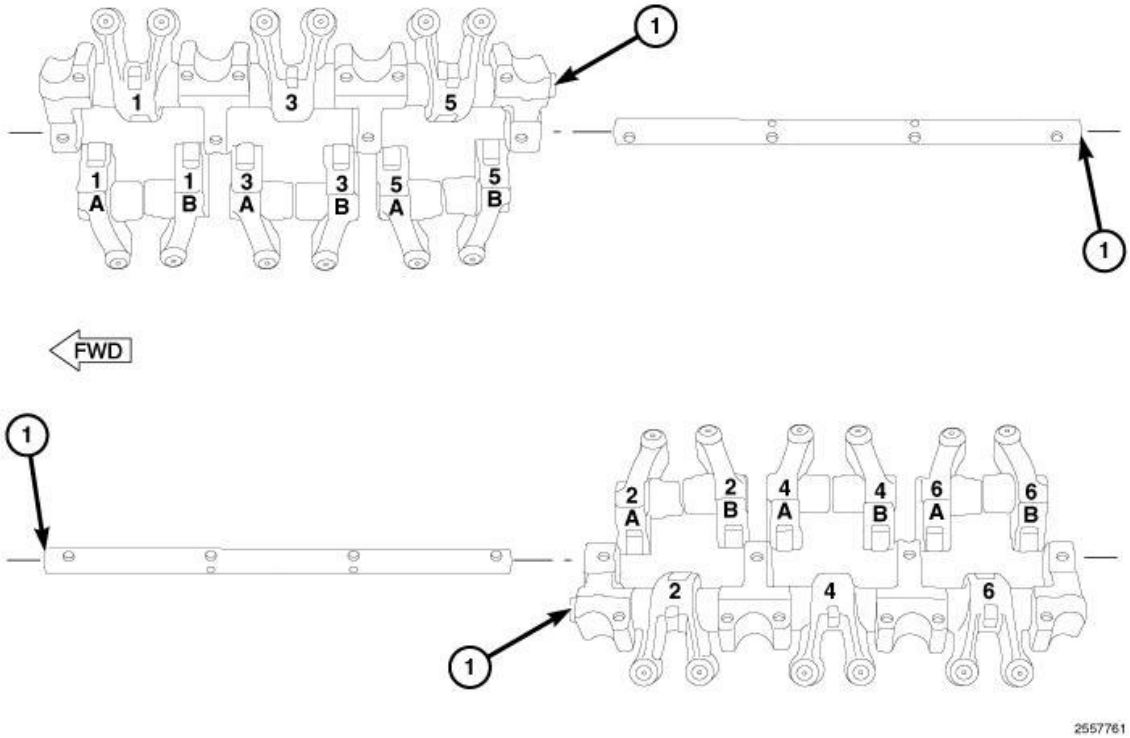

Fig. 185: Identification Marks
Courtesy of CHRYSLER LLC

NOTE: The identification marks (notches) (1) face toward the front of the engine for the left head and toward the rear of the engine for the right head.

3. Remove the rocker arms and pedestals in order.
4. Check the rocker arm mounting portion of the shafts for wear or damage. Replace if damaged or heavily worn.
5. Check the shaft oil holes for clogging with a small wire, clean as required.

INSPECTION

INSPECTION

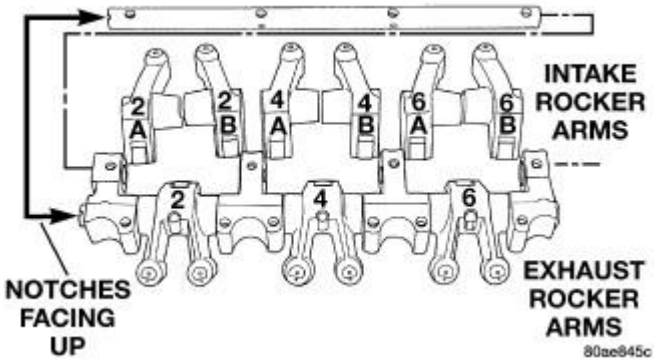

Fig. 186: Rocker Arms & Shafts
Courtesy of CHRYSLER LLC

The rocker arm shafts are hollow and are used as lubrication oil ducts. The rocker arm and shaft assembly on the **right** side of the engine has an oil passage hole from the cylinder head located at the third rocker shaft support pedestal. The rocker arm and shaft assembly on the **left** side of the engine has an oil passage hole from the cylinder head located at the second rocker shaft support pedestal.

NOTE: To prevent air ingestion into lash adjusters, avoid turning rocker arm assembly upside down.

CAUTION: Do not allow rocker arm assembly to rest on lash adjusters, as damage may occur to lash adjuster and plastic retainer.

The intake and exhaust rocker arms are different. They should be identified before disassembling the assembly. Refer to **Fig. 186**.

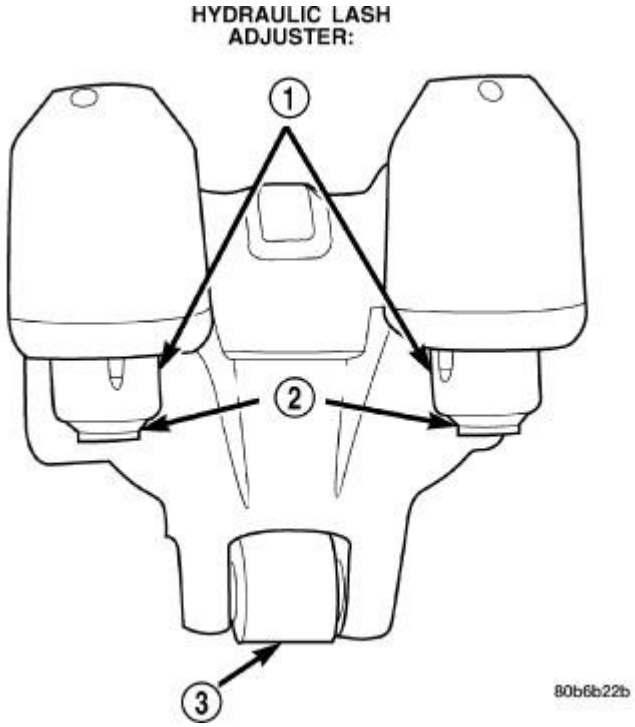

Fig. 187: Rocker Arm Assembly
Courtesy of CHRYSLER LLC

1 - RETAINER
2 - SWIVEL PAD
3 - ROLLER

Check rocker arms for wear or damage : Refer to **Fig. 187**.

- Roller scuffing or wear
- Shaft bore scuffing or wear
- Swivel pad on lash adjuster missing or broken
- Rocker arm showing signs of fatigue or cracking
- Roller axle protruding from arm

Replace assembly as necessary if any rocker arms shows signs of wear.

CAUTION: Do Not remove lash adjuster from rocker arm assembly. Damage to the adjuster and rocker arm will result.

ASSEMBLY

ASSEMBLY

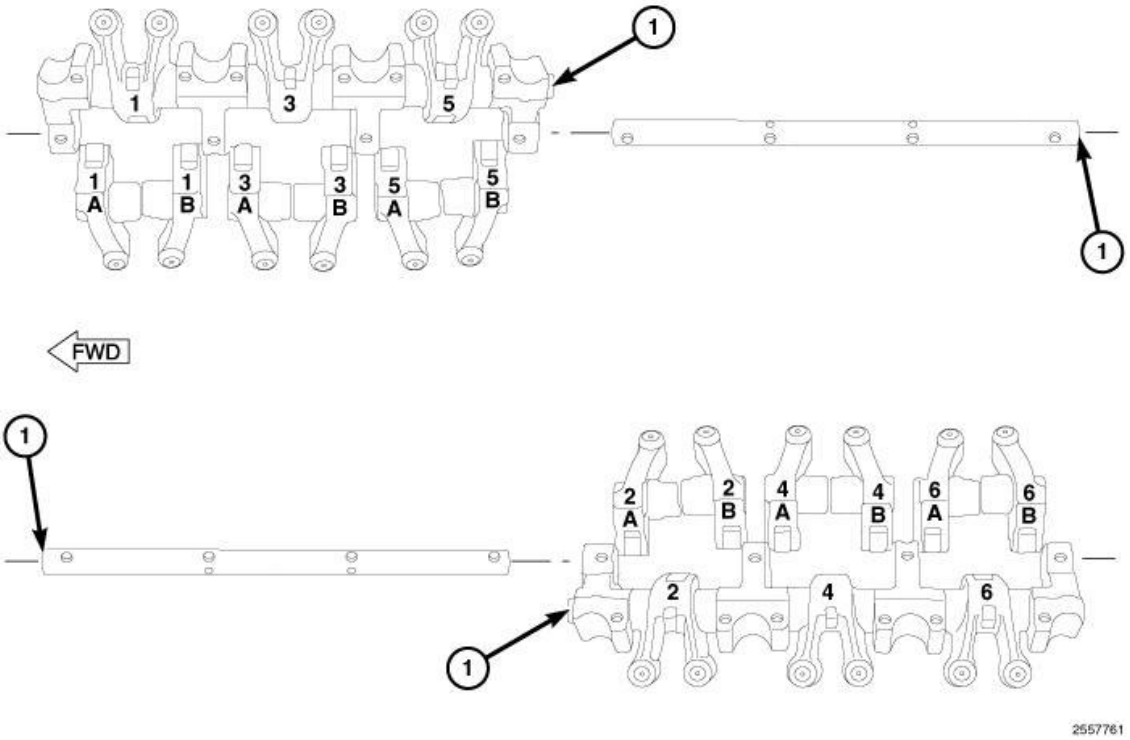

Fig. 188: Identification Marks
Courtesy of CHRYSLER LLC

CAUTION: The rocker arm shafts are hollow and are used as lubrication oil passages. The rocker arm and shaft assembly on the RIGHT side of the engine has an oil passage hole from the cylinder head to the third rocker shaft support. The rocker arm shaft assembly on the LEFT side of the engine has an oil passage hole from the cylinder head to the second rocker shaft support.

NOTE: A new fully assembled rocker arm and shaft assembly can be installed on either the right or left side of the engine. The identification marks (notches) (1) face toward the front of the engine for the left head and toward the rear of the engine for the right head.

1. Position the shafts with the notches (1) facing up. Install the rocker arms and pedestals onto the shafts.

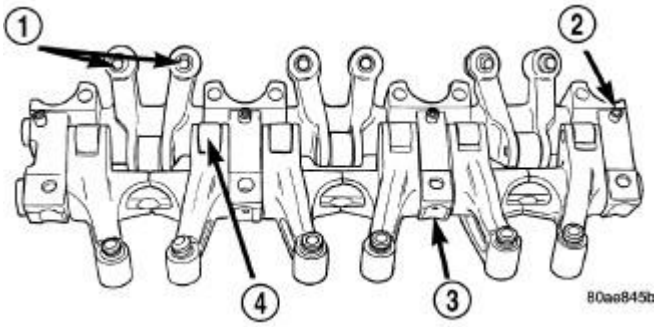

Fig. 189: Assemble Rocker Arms & Shaft
Courtesy of CHRYSLER LLC

1 - HYDRAULIC LASH ADJUSTERS
2 - DOWEL PIN
3 - PEDESTAL
4 - ROLLER

CAUTION: New dowel pins must be installed when reassembling.

2. Install the dowel pins (2). The dowel pins (2) pass through the pedestal (3) into the exhaust rocker shafts. Dowel pins (2) should be pressed in until they bottom-out against the rocker shaft in the pedestal (3).
3. Install the rocker arm and shafts assembly. Refer to **ROCKER ARM, VALVE, INSTALLATION**.

INSTALLATION

INSTALLATION

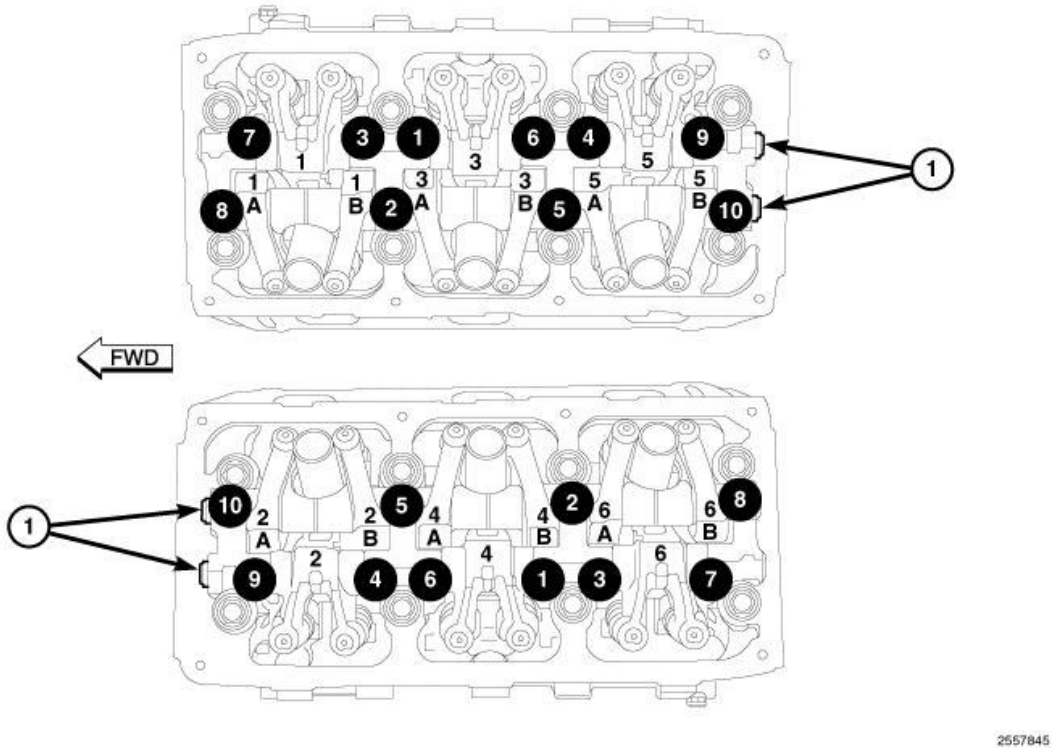

Fig. 190: Identification Marks (Notches), Rocker Arm & Shaft Assembly Bolt Tightening Sequence
Courtesy of CHRYSLER LLC

NOTE: The rocker arm and shaft assembly can be installed either prior to or after (preferred) cylinder head installation.

1. Rotate camshaft gears clockwise to where the number one cylinder intake valves would just start to open. The camshaft lobes are now in a neutral position (no load to the valve). This will allow the rocker arm shaft assembly to be tightened into position with little or no valve spring load on it.

NOTE: A new fully assembled rocker arm and shaft assembly can be installed on either the right or left side of the engine. The identification marks (notches) (1) face toward the front of the engine for the left head and toward the rear of the engine for the right head.

2. Install the rocker arm and shaft assembly making sure that the identification marks (1) face toward the front of engine for left head and toward the rear of the engine for right head.
3. Tighten the rocker arm/shaft assembly bolts in the sequence shown in illustration to 31 N.m (275 in. lbs.).
4. Install the cylinder head covers. Refer to **COVER(S), CYLINDER HEAD, LEFT, INSTALLATION** and **COVER(S), CYLINDER HEAD, RIGHT, INSTALLATION**.

SEAL(S), CAMSHAFT

REMOVAL

REMOVAL

RIGHT CYLINDER HEAD

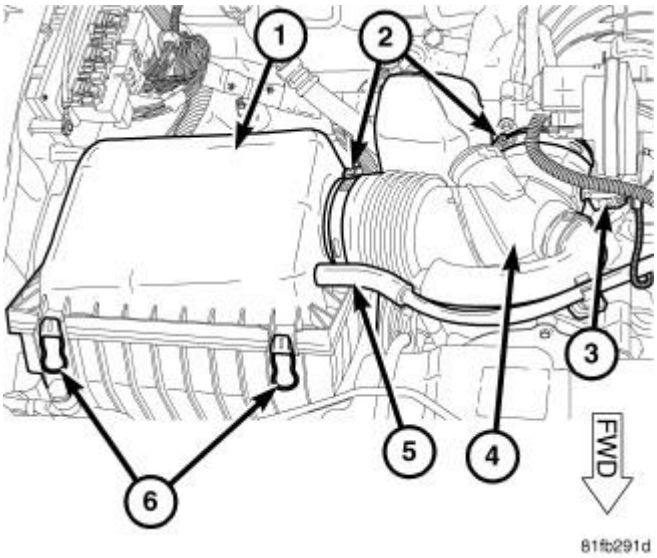

Fig. 191: Air Filter Housing
Courtesy of CHRYSLER LLC

1. Disconnect and isolate the negative battery cable.
2. Remove the air cleaner element housing. Refer to **BODY, AIR CLEANER, REMOVAL**.

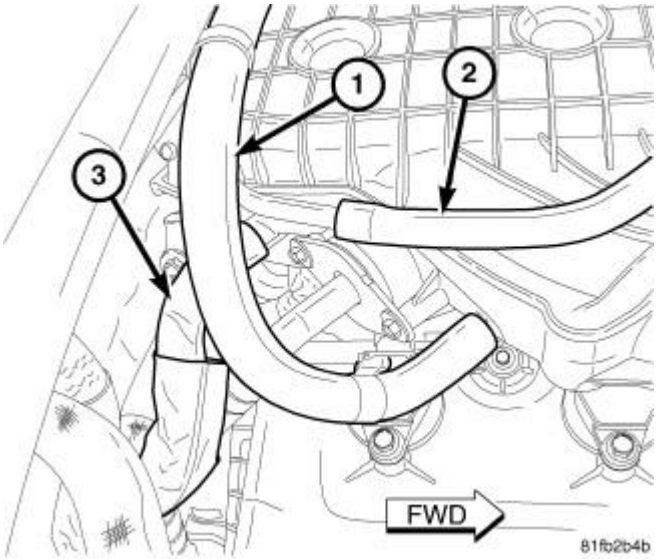

Fig. 192: EGR Tube, PCV & Power Brake Booster Vacuum Hoses
Courtesy of CHRYSLER LLC

3. Remove the upper intake manifold including EGR tube, PCV, purge and power brake booster vacuum hoses. Refer to **MANIFOLD, INTAKE, REMOVAL**.

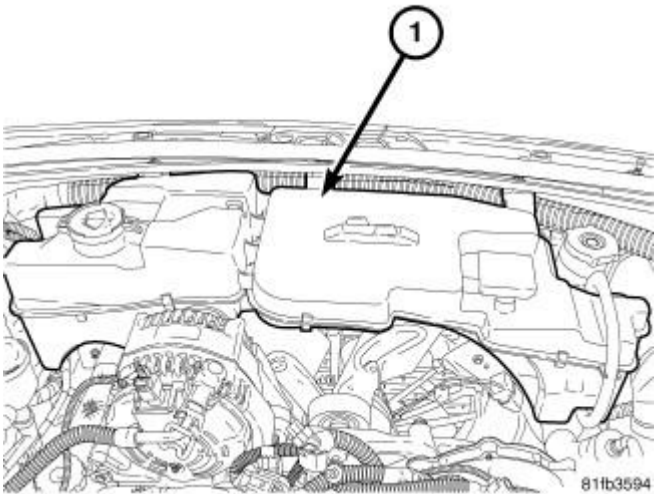

Fig. 193: Coolant Recovery/Washer Fluid Reservoir
Courtesy of CHRYSLER LLC

4. Disconnect two washer pump hoses, coolant recovery hose and washer pump electrical connector from the coolant recovery/washer fluid reservoir assembly (1).
5. Remove 5 screws and remove the coolant recovery/washer fluid reservoir assembly (1).

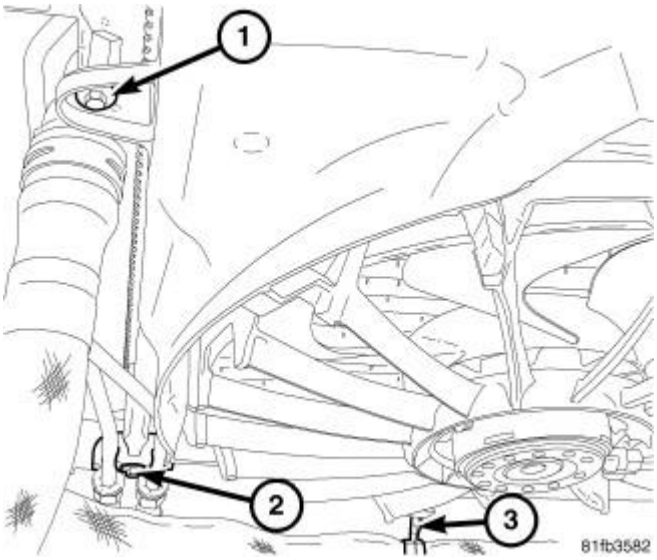

Fig. 194: Radiator Fastener, Transmission Cooling Line Retainer Bolt & Radiator Hose Retainer
Courtesy of CHRYSLER LLC

6. Disengage the radiator hose retainer (3) from the electric fan shroud.
7. Remove transmission cooling line retainer bolt (2) from the electric fan shroud.

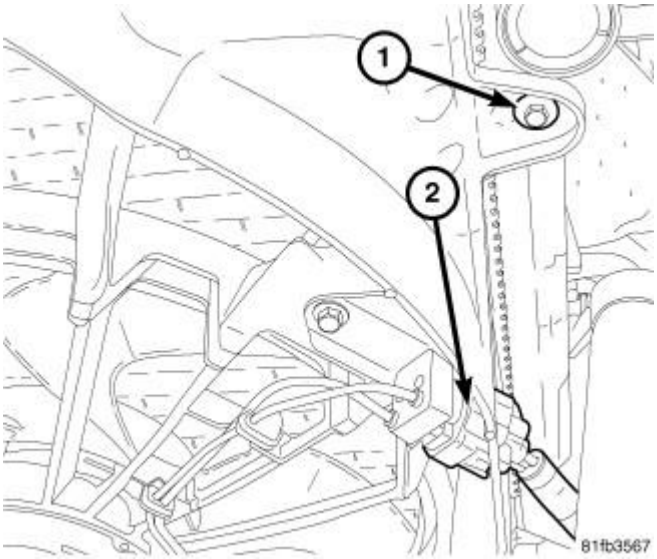

Fig. 195: Electrical Fan Connector & Bolt
Courtesy of CHRYSLER LLC

8. Disconnect the electric fan connector (2) from the electric fan shroud.
9. Remove two bolts (1) and lift the electric fan shroud from vehicle.

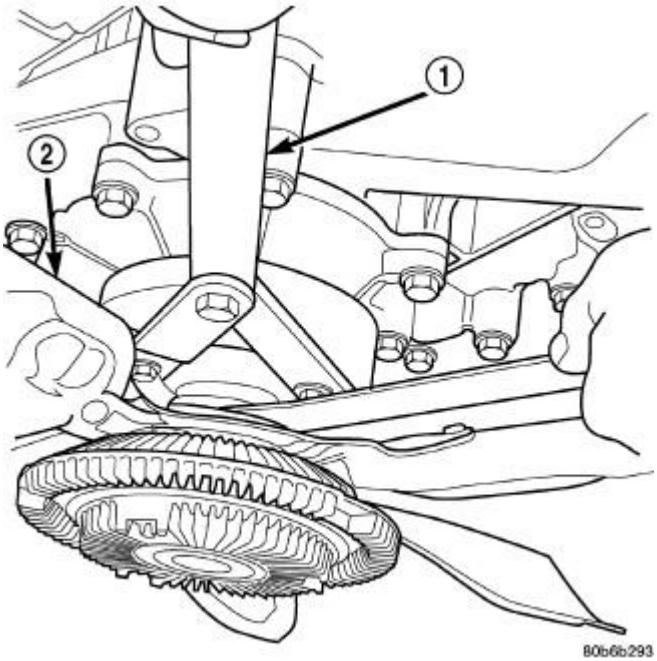

Fig. 196: Using Special Tool 6958 Spanner Wrench & Adapter Pins 8346
Courtesy of CHRYSLER LLC

10. Use Adapter Pins (special tool #8346, Pins, Adapter) in Spanner Wrench (special tool #6958, Wrench, Spanner) (1) to hold the pulley and remove fan/viscous fan drive assembly. Refer to **FAN, COOLING, VISCOUS, REMOVAL** and **FAN, COOLING, ELECTRIC, REMOVAL** .

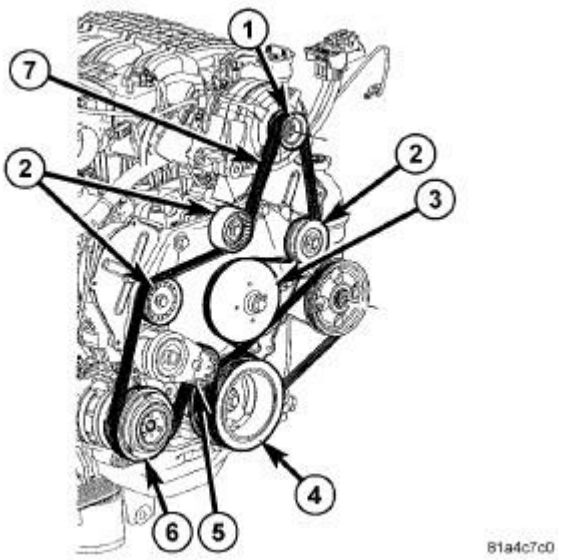

Fig. 197: Accessory Drive Belt Routing - 4.0L
Courtesy of CHRYSLER LLC

11. Remove accessory drive belt (7). Refer to **BELT, SERPENTINE, REMOVAL** and **BELT, SERPENTINE, POWER STEERING, REMOVAL** .

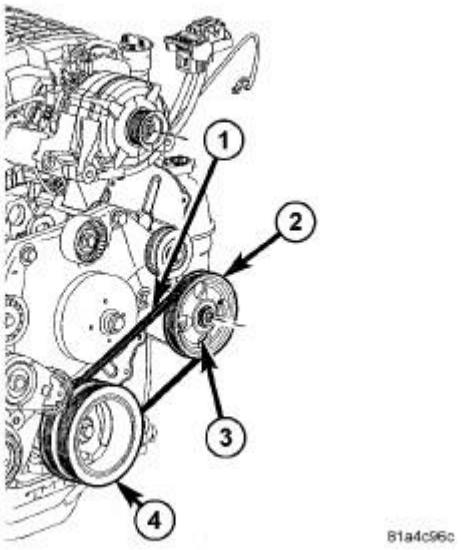

Fig. 198: Power Steering Belt
Courtesy of CHRYSLER LLC

12. Remove the power steering belt (1). Refer to **BELT, SERPENTINE, REMOVAL** and **BELT, SERPENTINE, POWER STEERING, REMOVAL** .

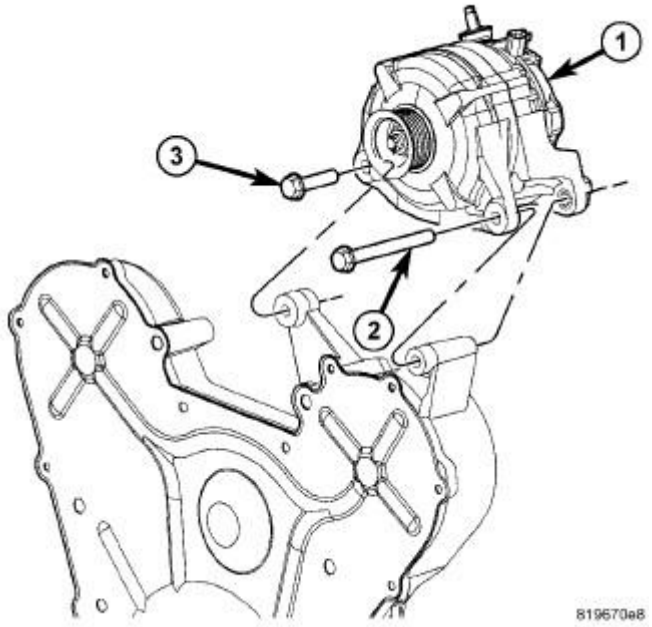

Fig. 199: Generator & Mounting Bolts
Courtesy of CHRYSLER LLC

13. Remove the generator. Refer to **GENERATOR, REMOVAL** .

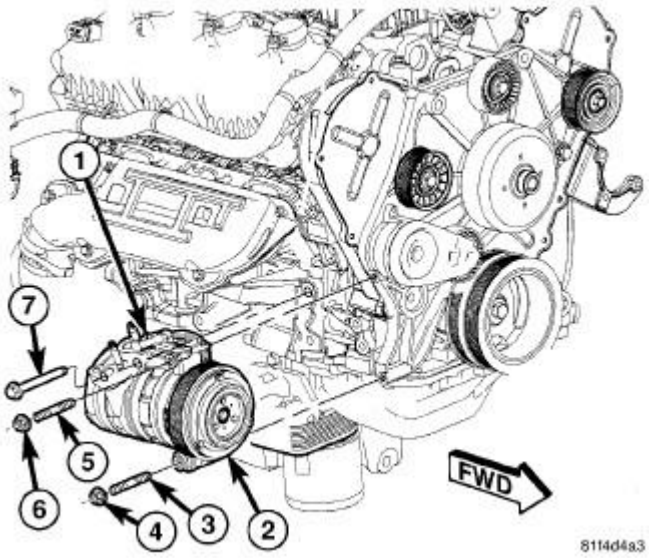

Fig. 200: Removing/Installing A/C Compressor
Courtesy of CHRYSLER LLC

14. Remove two nuts (4) and (6) that secure the front of the A/C compressor (1).
15. Back out the two A/C compressor mounting studs (3) and (5) from the accessory drive bracket.
16. Remove four bolts and nut and remove the accessory drive bracket.

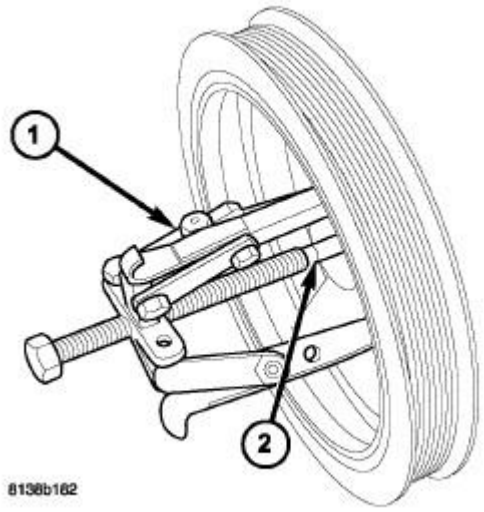

Fig. 201: Removing Crankshaft Damper
Courtesy of CHRYSLER LLC

17. Remove crankshaft damper bolt.
18. Using Puller (special tool #1023, Puller) (1) and Crankshaft Insert (special tool #9020, Insert, Crankshaft) (2), remove crankshaft damper.

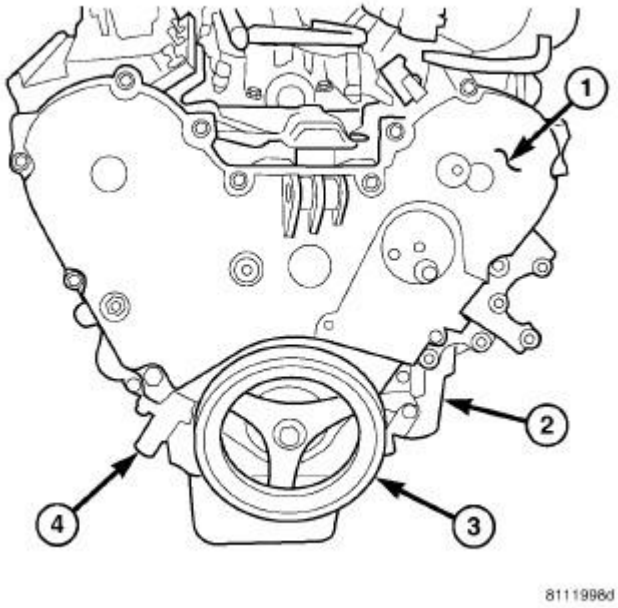

Fig. 202: Front Timing Belt Cover, Engine Oil Filter, Vibration Damper & Timing Belt Tensioner
Courtesy of CHRYSLER LLC

19. Remove the fourteen outer timing belt cover bolts and cover (1).

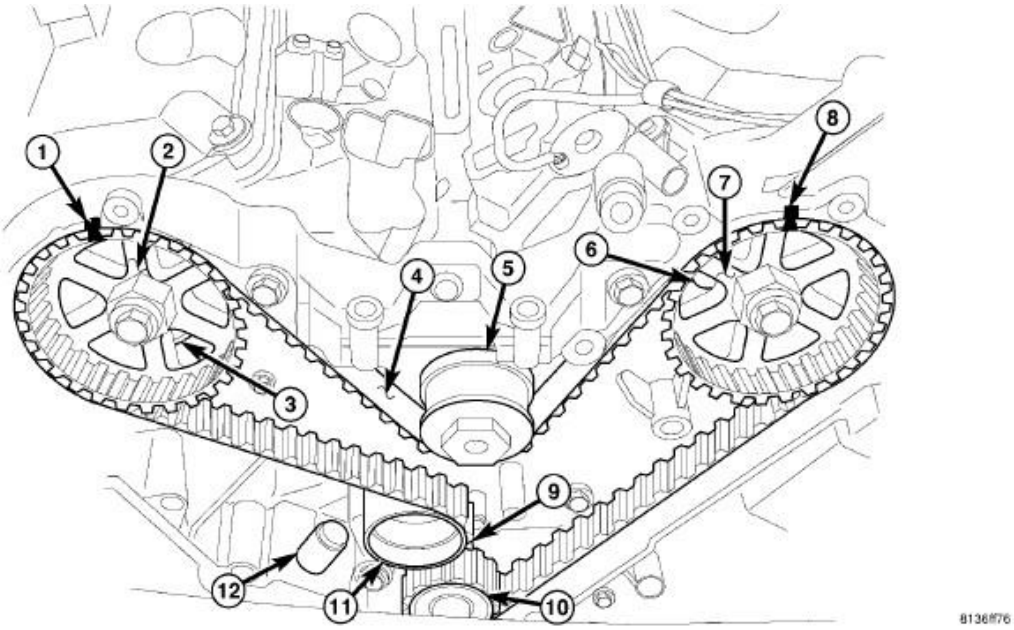

Fig. 203: Timing Gear Components
Courtesy of CHRYSLER LLC

20. Rotate the engine to TDC and align timing belt marks (1, 8, 9).

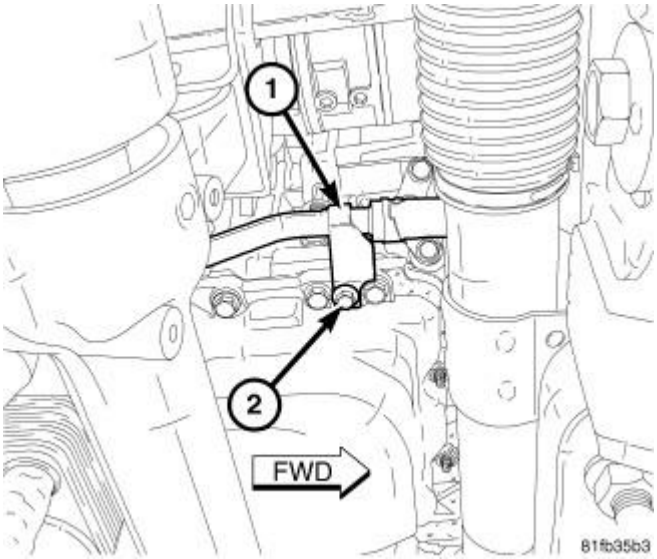

Fig. 204: Oil Cooler Line & Bolt
Courtesy of CHRYSLER LLC

21. Raise and support the vehicle.
22. Remove bolt (2) and reposition oil cooler hose (1).

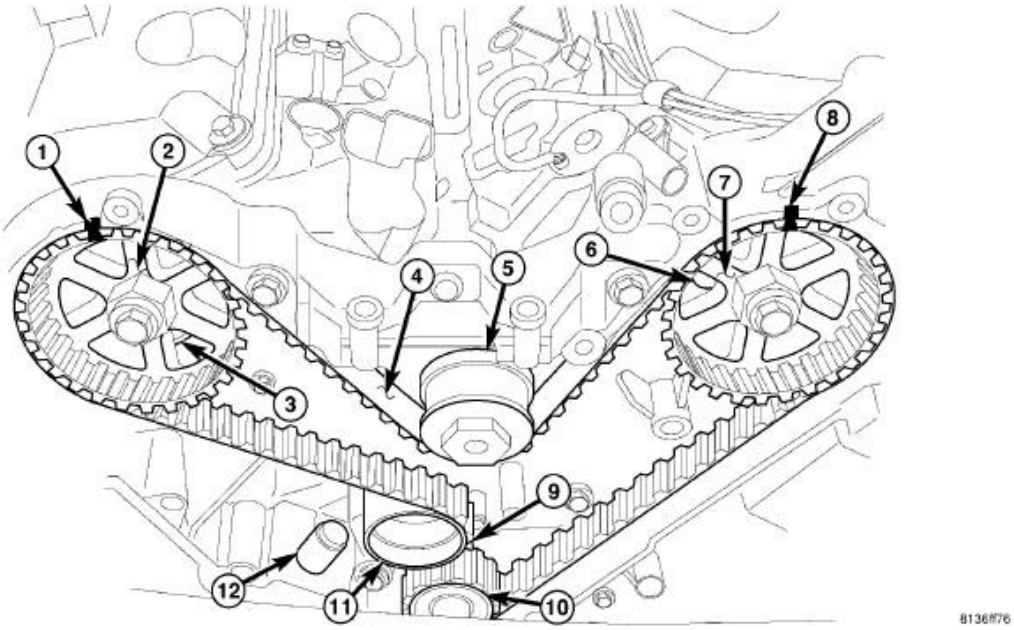

Fig. 205: Timing Gear Components
Courtesy of CHRYSLER LLC

23. Remove the timing belt tensioner (12) and reset the tensioner. Refer to **TENSIONER, ENGINE TIMING, REMOVAL**.
24. Lower vehicle.
25. Remove the timing belt (4).

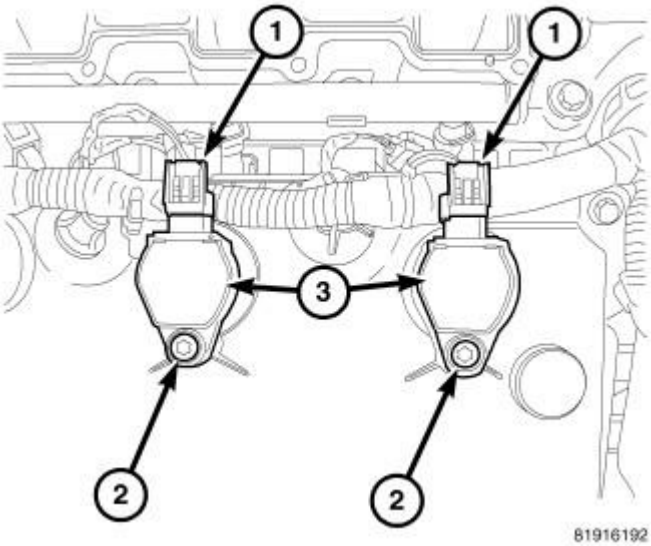

Fig. 206: Ignition Coils, Mounting Bolt & Electrical Connectors
Courtesy of CHRYSLER LLC

26. Disconnect wire harness connectors from EGR valve and ignition coils (1). Release wire harness track retainer tabs from cylinder head cover.
27. Remove right ignition coils (3). Refer to **COIL, IGNITION, REMOVAL** .

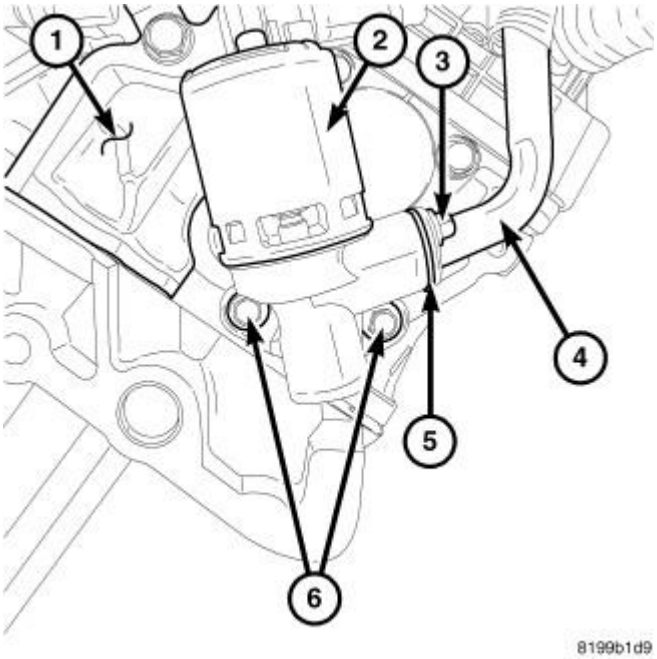

Fig. 207: Cylinder Head, EGR solenoid/Valve, Flange Bolt, Tube, Gasket & Mounting Bolts
Courtesy of CHRYSLER LLC

28. Remove the EGR valve (2) with two bolts (6) and gasket.

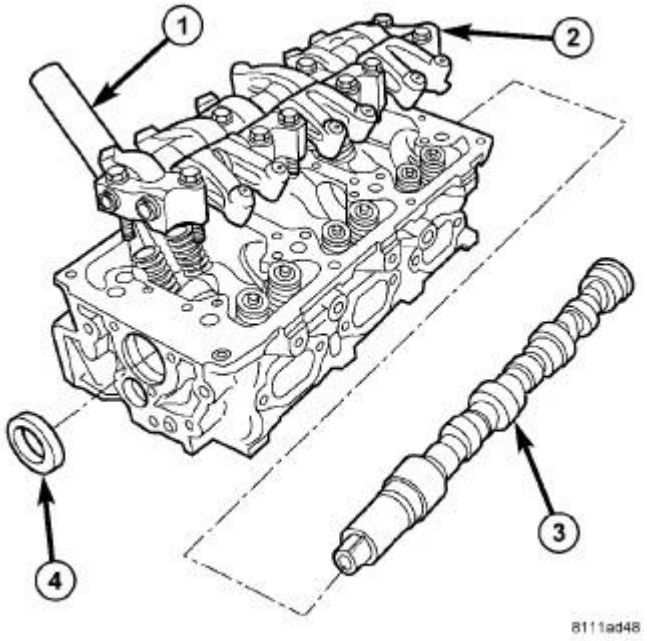

Fig. 208: Camshaft, Rocker Arm Assembly & Cylinder Head
Courtesy of CHRYSLER LLC

29. Remove eight bolts and right cylinder head cover.

30. Remove ten bolts and right rocker arm assembly (2).

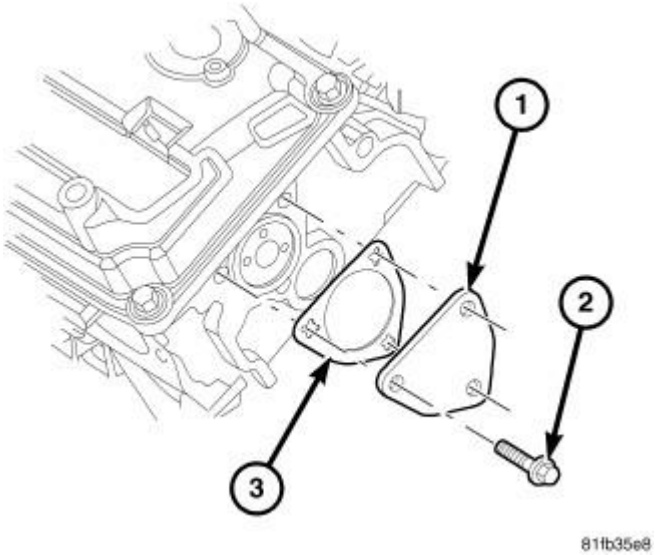

Fig. 209: Cam Thrust Plate, Gasket & Bolts
Courtesy of CHRYSLER LLC

31. Remove three bolts (2) and the right rear camshaft thrust plate (1).

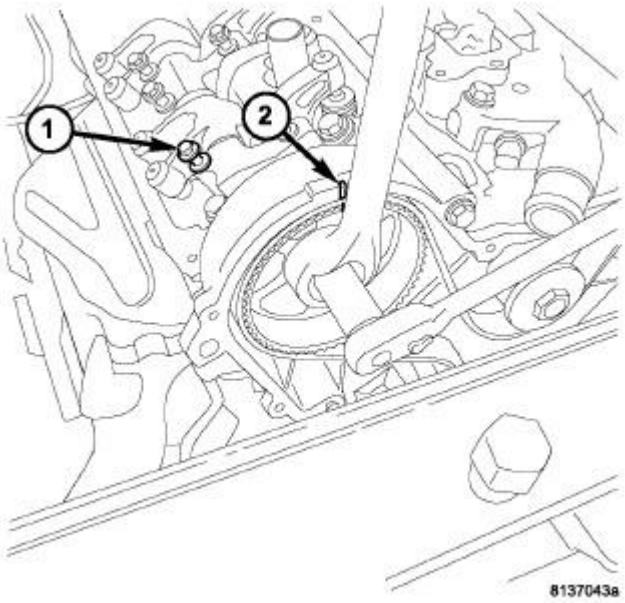

Fig. 210: Right Cam Gear Retainer Bolt & Timing Mark
Courtesy of CHRYSLER LLC

32. Counterhold the cam gear and remove the right cam gear retaining bolt.
33. Remove the right cam gear.

34. Maneuver the camshaft rearward and out of the cylinder head approximately 3.5 inches.

NOTE: Care must be taken not to damage the cylinder head to seal or camshaft journal surfaces when removing the camshaft seal.

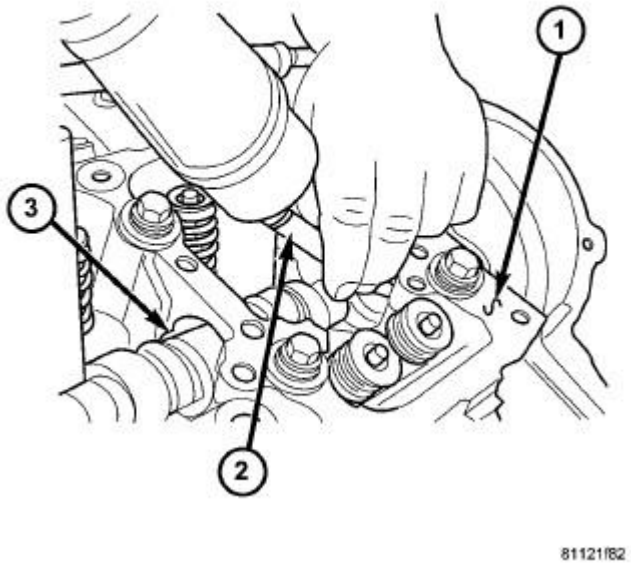

Fig. 211: Removing Camshaft Seal - Right Cylinder Head
Courtesy of CHRYSLER LLC

1 - CYLINDER HEAD
2 - DRIFT
3 - CAMSHAFT

35. Using an appropriate driver (2) carefully remove camshaft oil seal.

LEFT CYLINDER HEAD

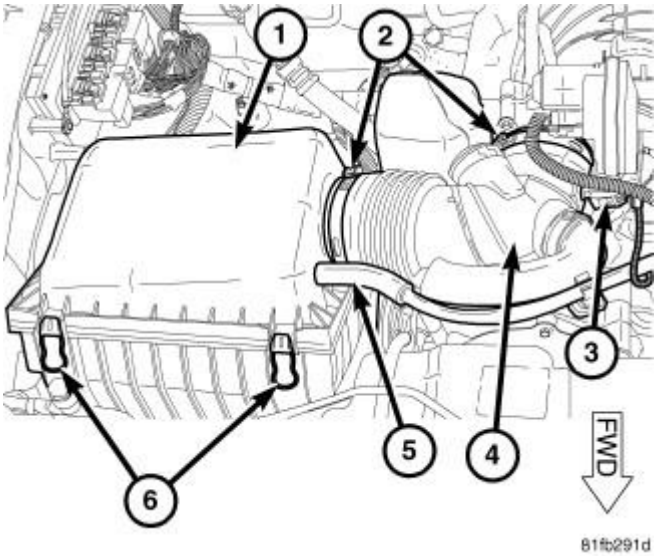

Fig. 212: Air Filter Housing
Courtesy of CHRYSLER LLC

1. Disconnect and isolate the negative battery cable.
2. Remove the air cleaner element housing. Refer to **BODY, AIR CLEANER, REMOVAL**.

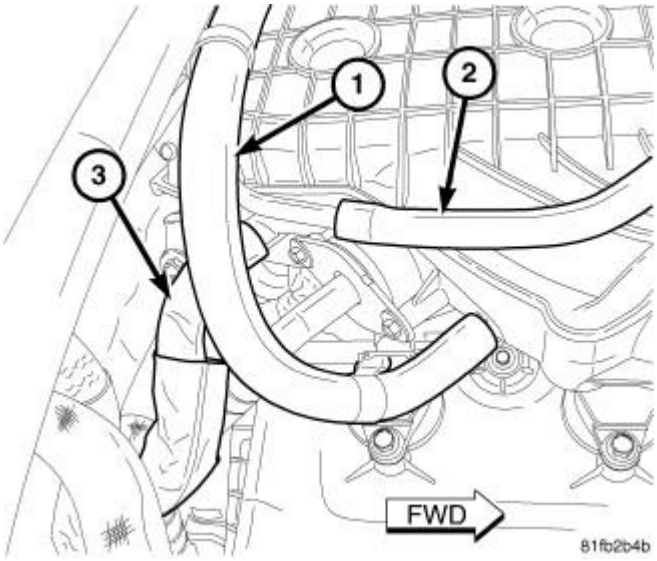

Fig. 213: EGR Tube, PCV & Power Brake Booster Vacuum Hoses
Courtesy of CHRYSLER LLC

3. Remove the upper intake manifold including support brackets, EGR tube, PCV, purge and power brake booster vacuum hoses. Refer to **MANIFOLD, INTAKE, REMOVAL**.

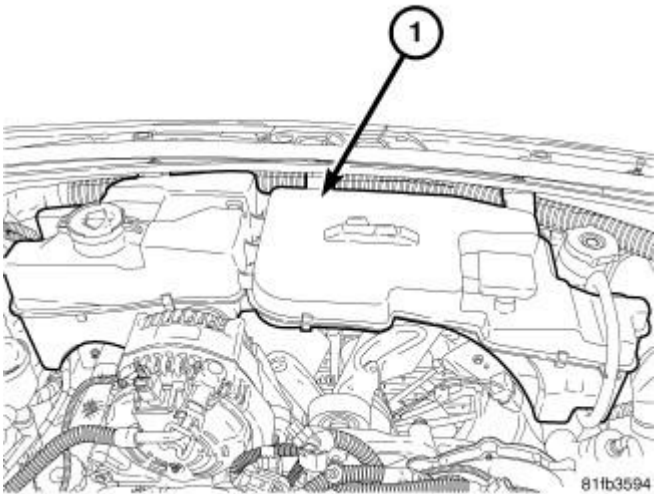

Fig. 214: Coolant Recovery/Washer Fluid Reservoir
Courtesy of CHRYSLER LLC

4. Disconnect two washer pump hoses, coolant recovery hose and washer pump electrical connector from the coolant recovery/washer fluid reservoir assembly (1).
5. Remove 5 screws and remove the coolant recovery/washer fluid reservoir assembly (1).

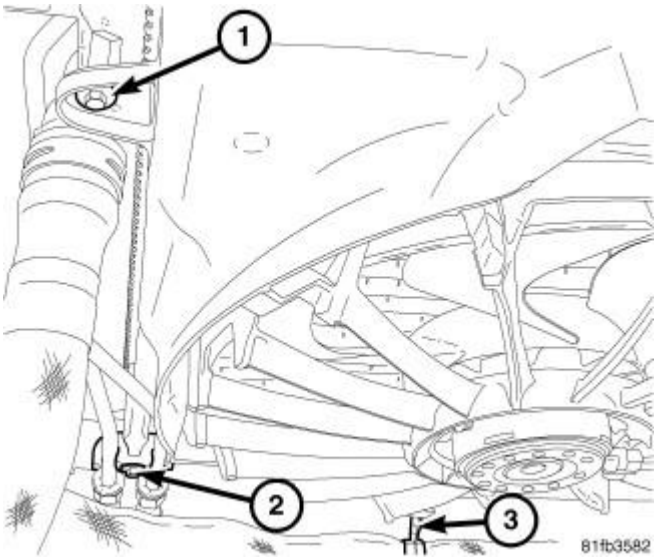

Fig. 215: Radiator Fastener, Transmission Cooling Line Retainer Bolt & Radiator Hose Retainer
Courtesy of CHRYSLER LLC

6. Disengage the radiator hose retainer (3) from the electric fan shroud.
7. Remove transmission cooling line retainer bolt (2) from the electric fan shroud.

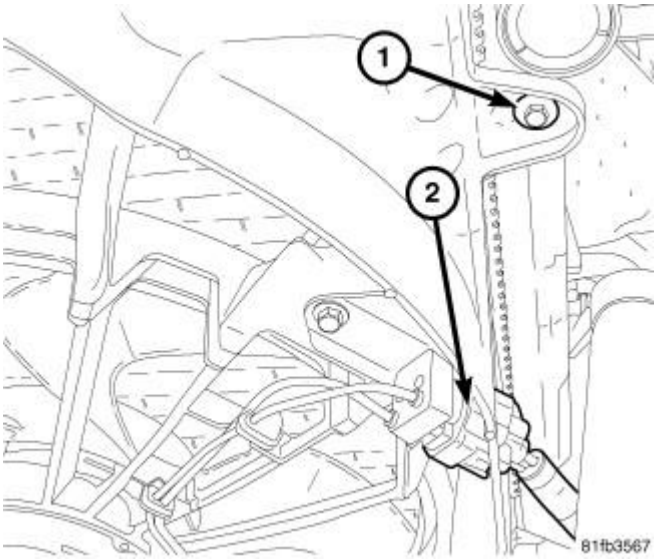

Fig. 216: Electrical Fan Connector & Bolt
Courtesy of CHRYSLER LLC

8. Disconnect the electric fan connector (2) from the electric fan shroud.
9. Remove two bolts (1) and lift the electric fan shroud from vehicle.

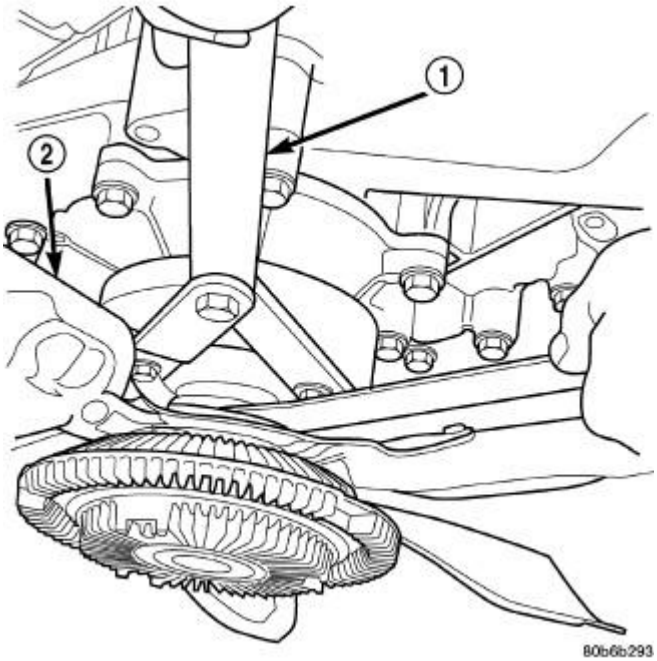

Fig. 217: Using Special Tool 6958 Spanner Wrench & Adapter Pins 8346
Courtesy of CHRYSLER LLC

10. Use Adapter Pins (special tool #8346, Pins, Adapter) in Spanner Wrench (special tool #6958, Wrench, Spanner) (1) to hold the pulley and remove fan/viscous fan drive assembly. Refer to **FAN, COOLING, VISCOUS, REMOVAL** and **FAN, COOLING, ELECTRIC, REMOVAL** .

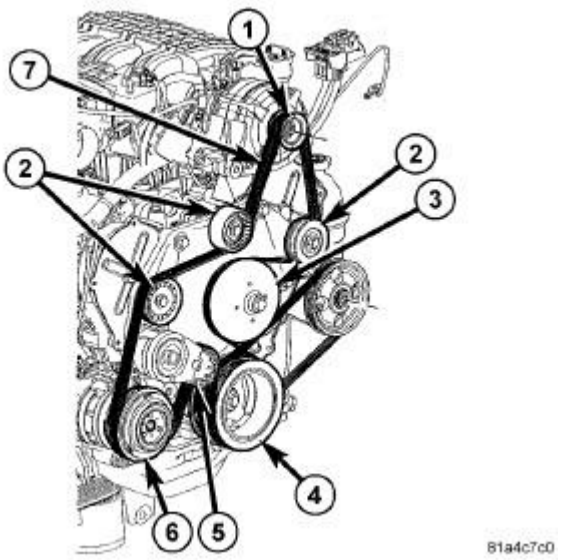

Fig. 218: Accessory Drive Belt Routing - 4.0L
Courtesy of CHRYSLER LLC

11. Remove accessory drive belt (7). Refer to **BELT, SERPENTINE, REMOVAL** and **BELT, SERPENTINE, POWER STEERING, REMOVAL** .

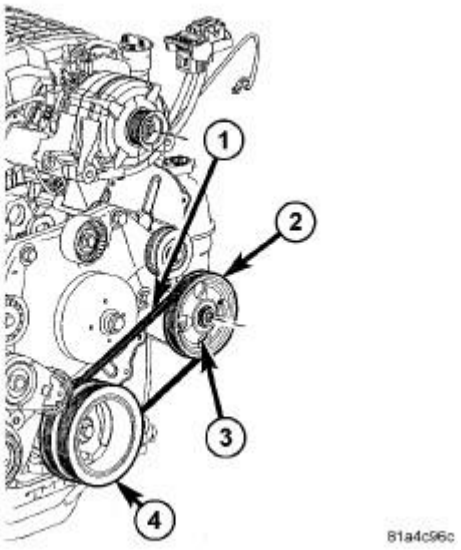

Fig. 219: Power Steering Belt
Courtesy of CHRYSLER LLC

12. Remove the power steering belt (1). Refer to **BELT, SERPENTINE, REMOVAL** and **BELT, SERPENTINE, POWER STEERING, REMOVAL** .

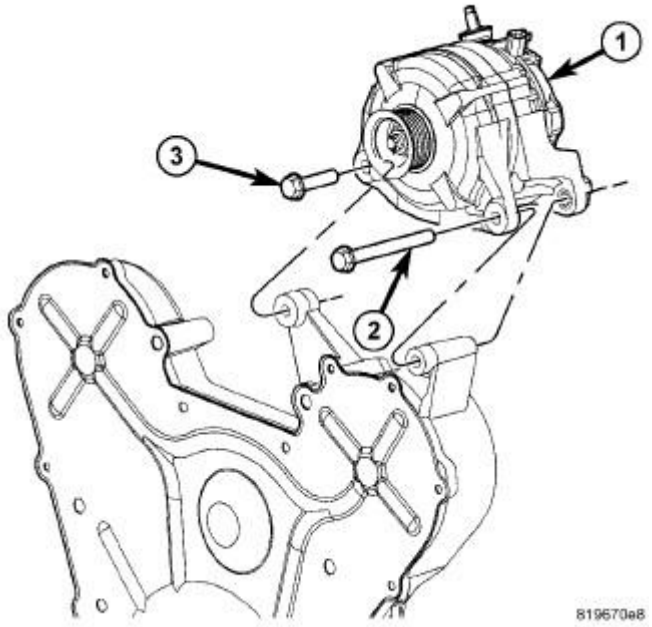

Fig. 220: Generator & Mounting Bolts
Courtesy of CHRYSLER LLC

13. Remove the generator. Refer to **GENERATOR, REMOVAL** .

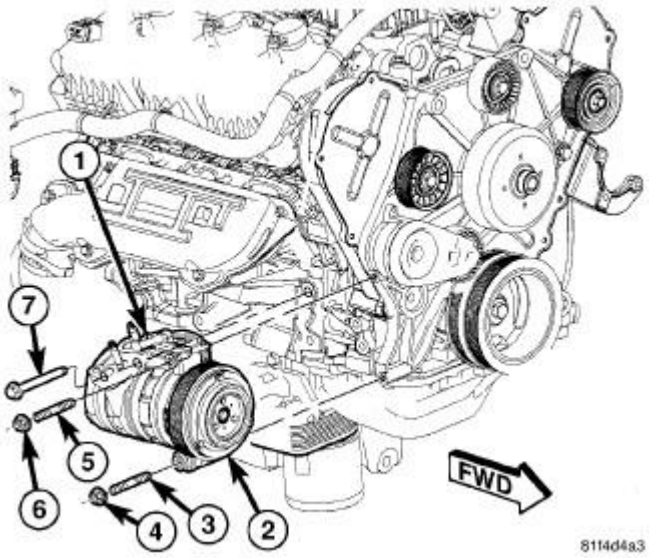

Fig. 221: Removing/Installing A/C Compressor
Courtesy of CHRYSLER LLC

14. Remove two nuts (4) and (6) that secure the front of the A/C compressor (1).
15. Back out the two A/C compressor mounting studs (3) and (5) from the accessory drive bracket.
16. Remove four bolts and nut and remove the accessory drive bracket.

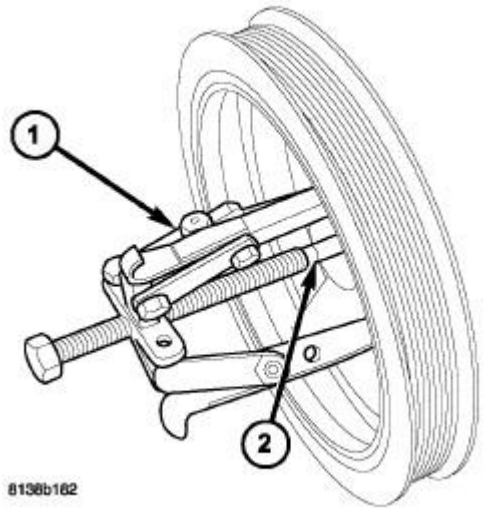

Fig. 222: Removing Crankshaft Damper
Courtesy of CHRYSLER LLC

17. Remove crankshaft damper bolt.
18. Using Puller (special tool #1023, Puller) (1) and Crankshaft Insert (special tool #9020, Insert, Crankshaft) (2), remove crankshaft damper.

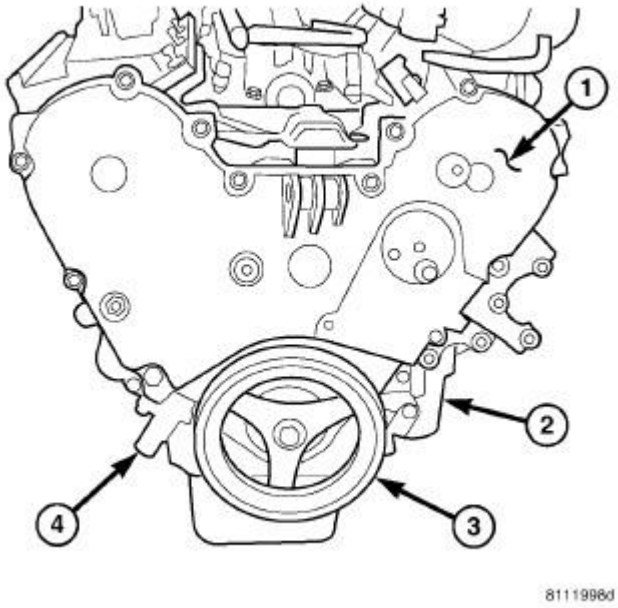

Fig. 223: Front Timing Belt Cover, Engine Oil Filter, Vibration Damper & Timing Belt Tensioner
Courtesy of CHRYSLER LLC

19. Remove the fourteen outer timing belt cover bolts and cover (1).

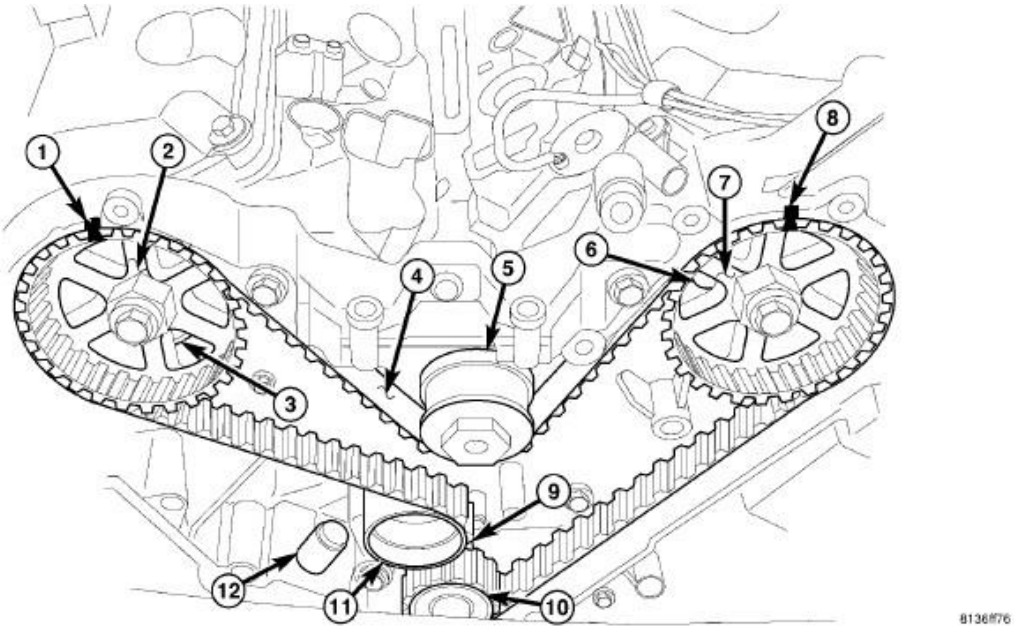

Fig. 224: Timing Gear Components
Courtesy of CHRYSLER LLC

20. Rotate the engine to TDC and align timing belt marks (1, 8, 9).

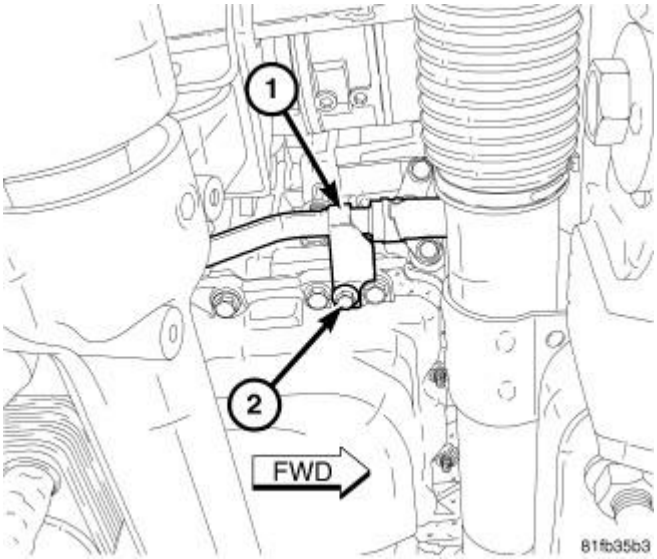

Fig. 225: Oil Cooler Line & Bolt
Courtesy of CHRYSLER LLC

21. Raise and support the vehicle.
22. Remove bolt (2) and reposition oil cooler hose (1).

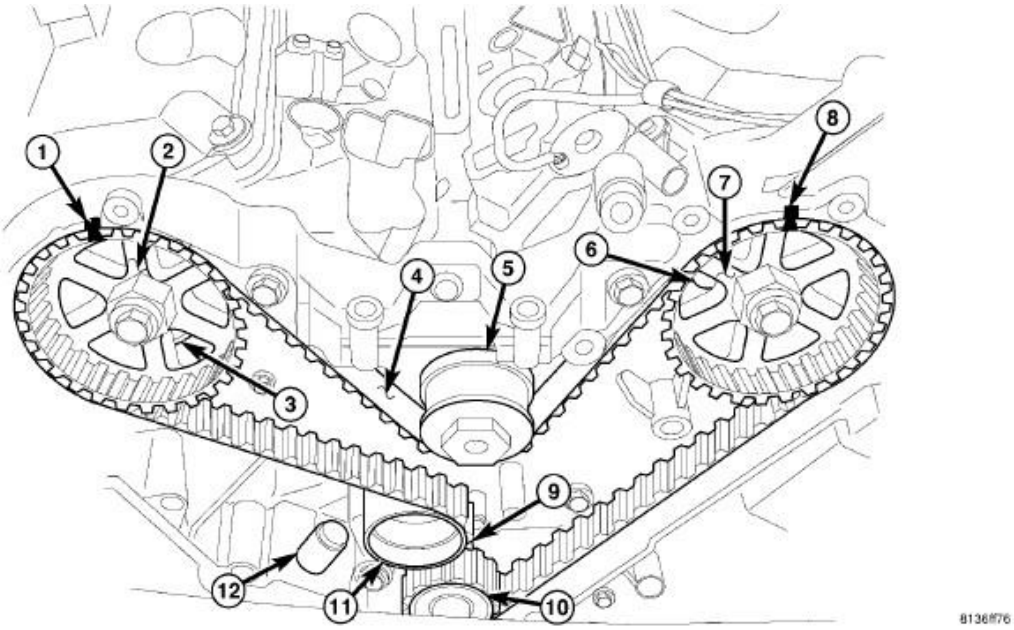

Fig. 226: Timing Gear Components
Courtesy of CHRYSLER LLC

23. Remove the timing belt tensioner (12) and reset the tensioner. Refer to **TENSIONER, ENGINE TIMING, REMOVAL**.
24. Lower vehicle.
25. Remove the timing belt (4).

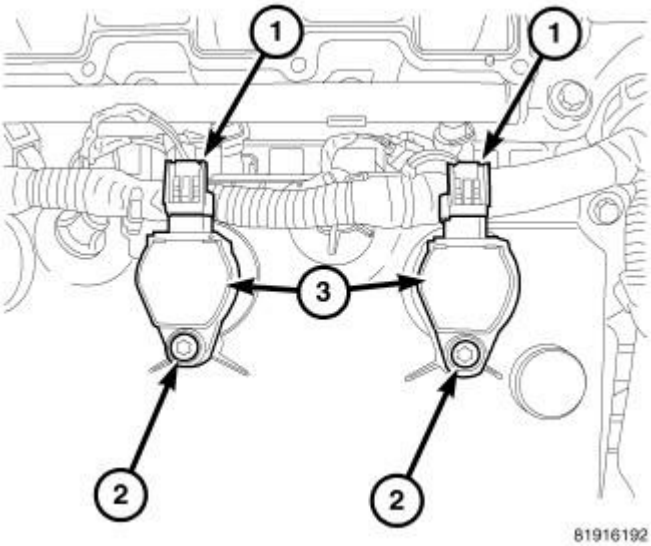

Fig. 227: Ignition Coils, Mounting Bolt & Electrical Connectors
Courtesy of CHRYSLER LLC

26. Disconnect wire harness connectors from ignition coils (1). Release wire harness track retainer tabs from cylinder head cover.
27. Remove left ignition coils (3). Refer to **COIL, IGNITION, REMOVAL** .

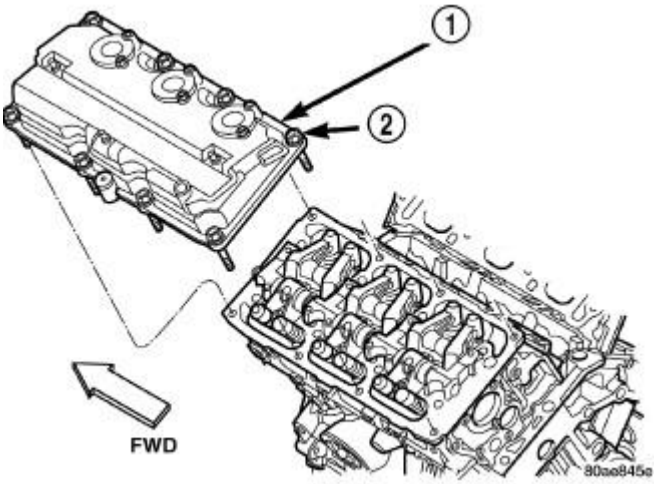

Fig. 228: Cylinder Head Cover & Bolts
Courtesy of CHRYSLER LLC

28. Remove eight bolts (2) and left cylinder head cover (1).

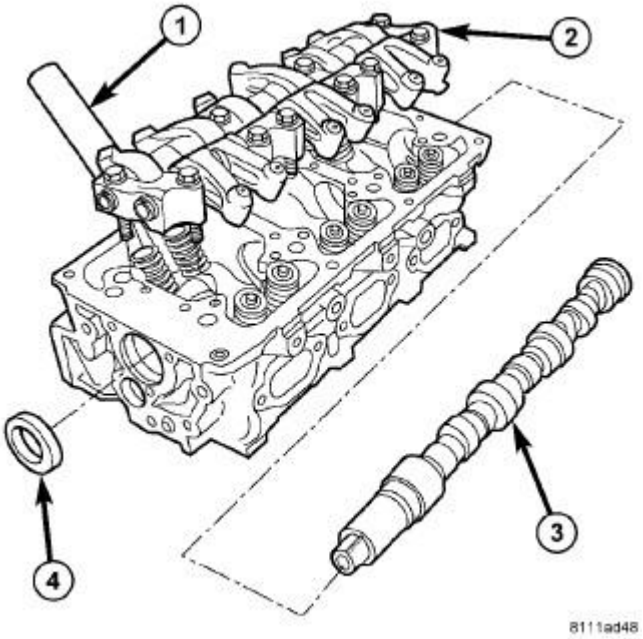

Fig. 229: Camshaft, Rocker Arm Assembly & Cylinder Head
Courtesy of CHRYSLER LLC

29. Remove ten bolts and left rocker arm assembly (2).

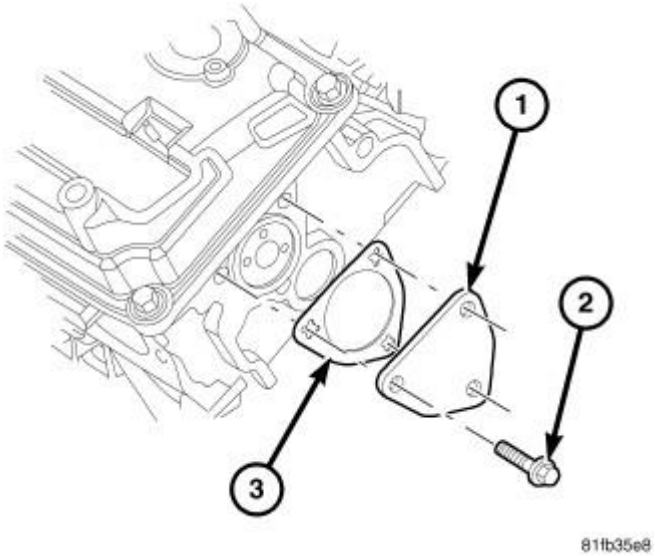

Fig. 230: Cam Thrust Plate, Gasket & Bolts
Courtesy of CHRYSLER LLC

30. Remove three bolts (2) and the left camshaft thrust plate (1).

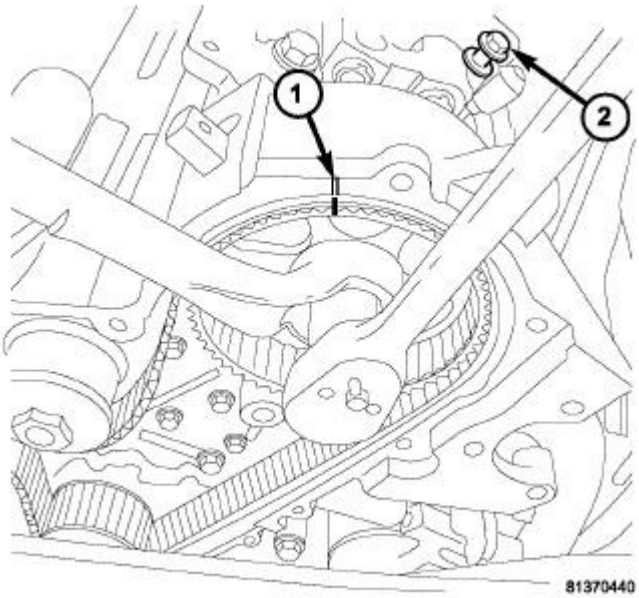

Fig. 231: Left Cam Gear Timing Mark & Retaining Bolt
Courtesy of CHRYSLER LLC

31. Counterhold the left cam gear and remove the cam gear retaining bolt.
32. Remove the cam gear.
33. Maneuver the camshaft rearward and out of the cylinder head approximately 3.5 inches.

NOTE: **Care must be taken not to damage the cylinder head to seal or camshaft journal surfaces when removing the camshaft seal.**

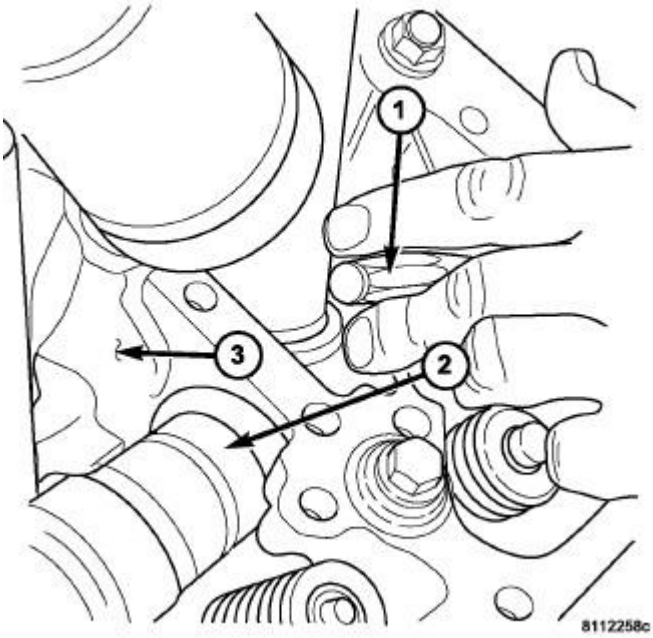

Fig. 232: Removing Camshaft Seal - Left Cylinder Head
Courtesy of CHRYSLER LLC

1 - DRIFT
2 - CAMSHAFT
3 - CYLINDER HEAD

34. Using an appropriate driver (1) carefully remove camshaft oil seal.

INSTALLATION

INSTALLATION

RIGHT CYLINDER HEAD

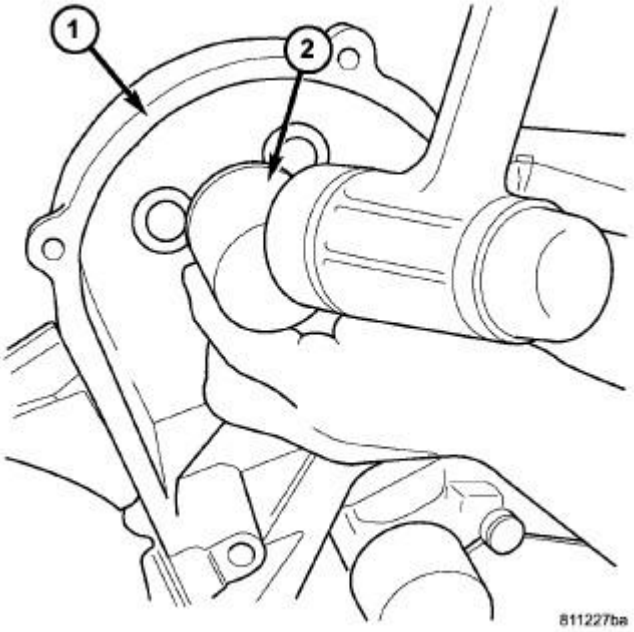

Fig. 233: Installing Right Camshaft Seal
Courtesy of CHRYSLER LLC

1. Position the camshaft seal into the cylinder head.
2. Using Camshaft Seal Installer (special tool #MD-998306, Installer, Camshaft) (2) tap the seal into place.

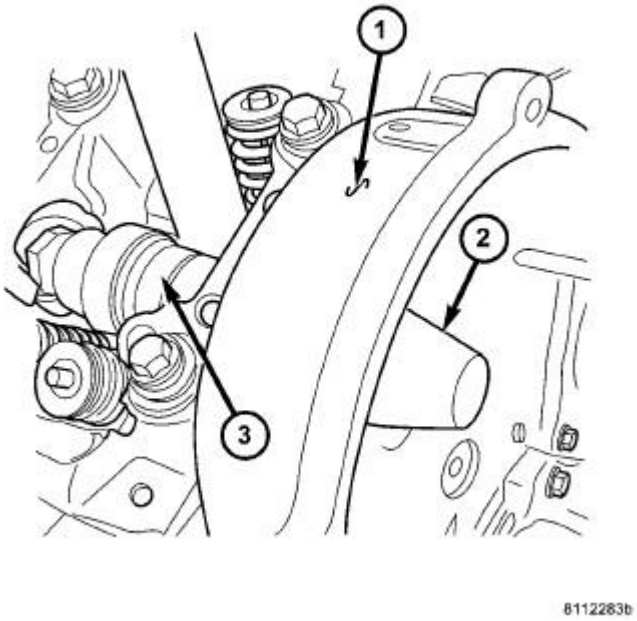

Fig. 234: Positioning Camshaft - Right
Courtesy of CHRYSLER LLC

3. Apply light coat of clean engine oil to the camshaft oil seal lip and Cam Seal Protector (special tool #6788, Protector, Cam Seal) (2).
4. Install Cam Seal Protector (special tool #6788, Protector, Cam Seal) (2) onto the camshaft.
5. Slide the camshaft (3) forward, inserting the seal protector (2) through the camshaft seal until the camshaft (3) seats.
6. Remove Seal Protector (2) from the camshaft.

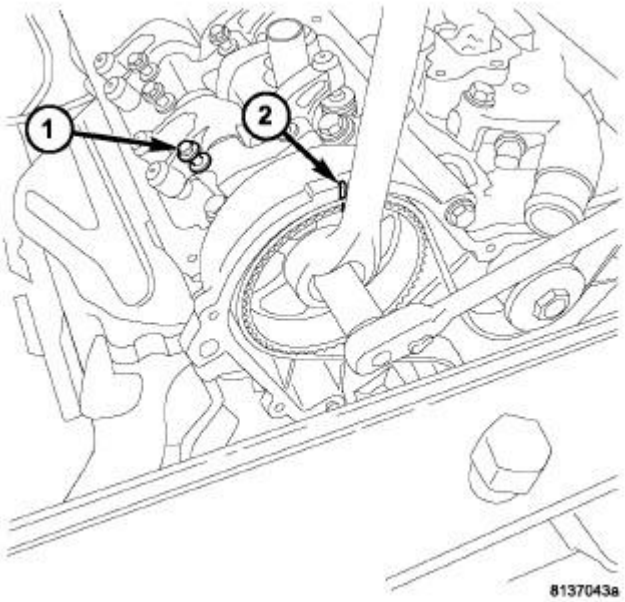

Fig. 235: Right Cam Gear Retainer Bolt & Timing Mark
Courtesy of CHRYSLER LLC

7. Install the camshaft sprocket (2).
8. Install **NEW** sprocket attaching bolt into place. The 255 mm (10 in.) bolt is to be installed in the left camshaft and the 213 mm (8 3/8 in.) bolt is to be installed into the right camshaft. Counterhold the camshaft sprocket (2) and tighten the camshaft sprocket bolt to 102 N.m (75 ft. lbs.) plus a 90° turn.

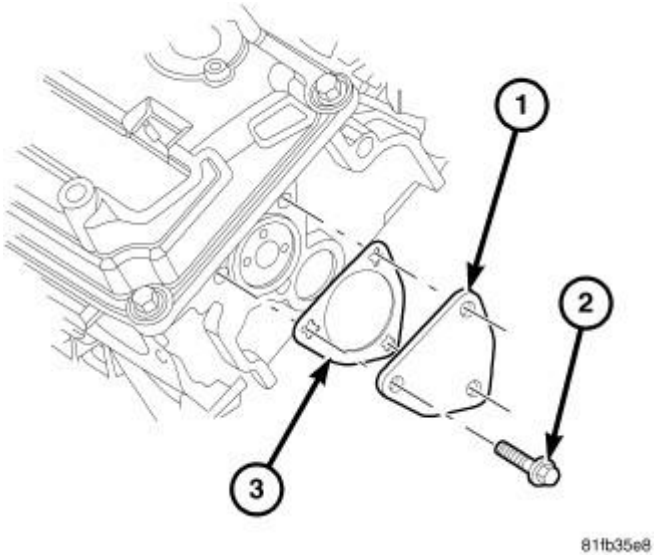

Fig. 236: Cam Thrust Plate, Gasket & Bolts
Courtesy of CHRYSLER LLC

9. Install the camshaft thrust plate (1) and gasket (3). Tighten three bolts (2) to 28 N.m (250 in. lbs.).

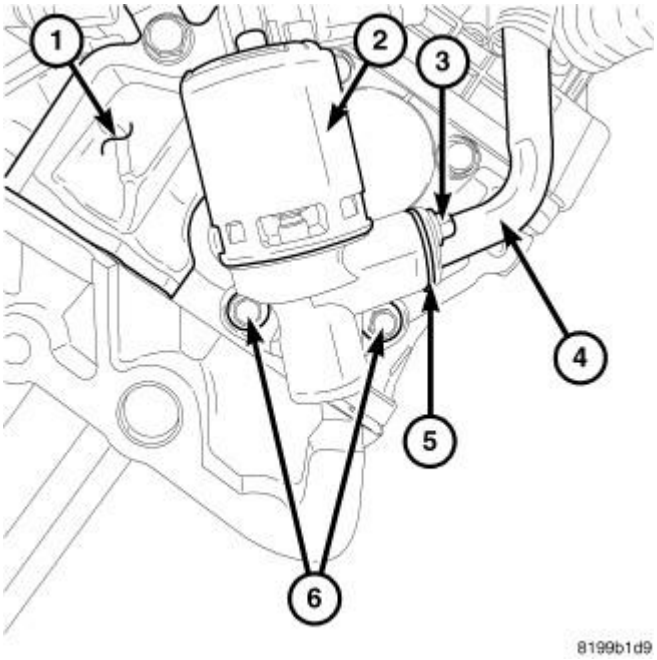

Fig. 237: Cylinder Head, EGR solenoid/Valve, Flange Bolt, Tube, Gasket & Mounting Bolts
Courtesy of CHRYSLER LLC

10. Install new gasket between EGR solenoid/valve (2) and rear of cylinder head (1).
11. Position EGR solenoid/valve assembly to rear of cylinder head. Install and tighten two mounting bolts (6) to 8 N.m (80 in. lbs.).

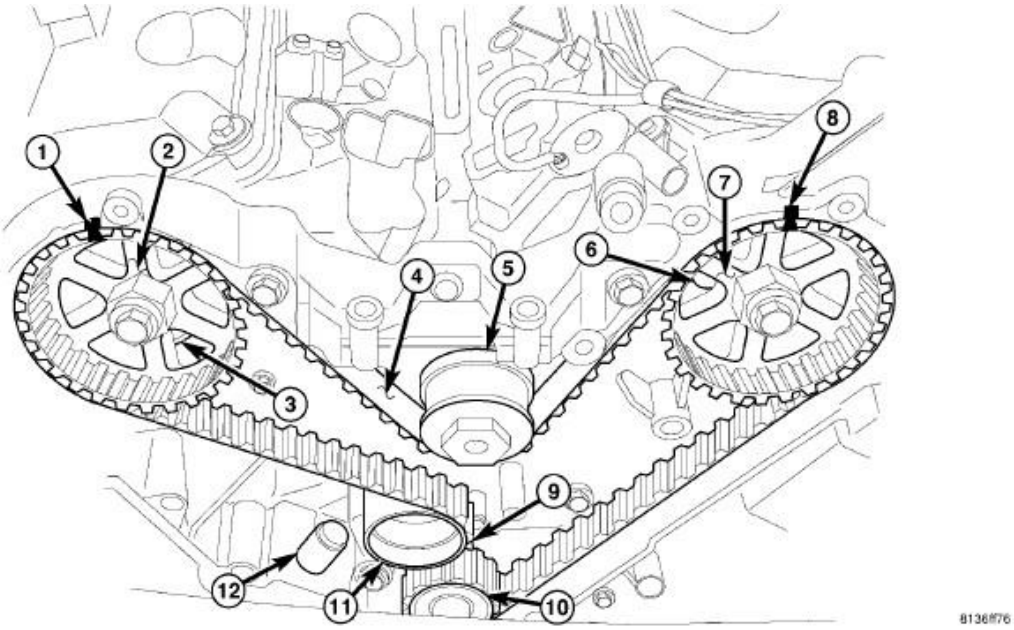

Fig. 238: Timing Gear Components
Courtesy of CHRYSLER LLC

12. Rotate the right camshaft gear (2) to align its timing mark (1). Verify that the left camshaft gear (7) timing mark (8) and crankshaft gear (10) timing mark (9) are still aligned.
13. Install the timing belt (4) starting at the crankshaft sprocket (10) going in a counterclockwise direction. Install the belt around the last sprocket. Maintain tension on the belt as it is positioned around the tensioner pulley (11).
14. Holding the tensioner pulley (11) against the belt, install the tensioner (12) into the housing and tighten two bolts to 28 N.m (250 in. lbs.). Each camshaft sprocket mark should remain aligned with the cover marks.
15. When tensioner is in place pull retaining pin to allow the tensioner to extend to the tensioner pulley bracket.
16. Rotate crankshaft sprocket two revolutions and check the timing marks on the camshafts and crankshaft. The marks should line up within their respective locations. If marks do not line up, repeat procedure.

NOTE: **With the camshaft gears in these positions the lobes are in a neutral position (no load to the valve). This will allow the rocker arm shaft assembly to be tightened into position with little or no valve spring load on it.**

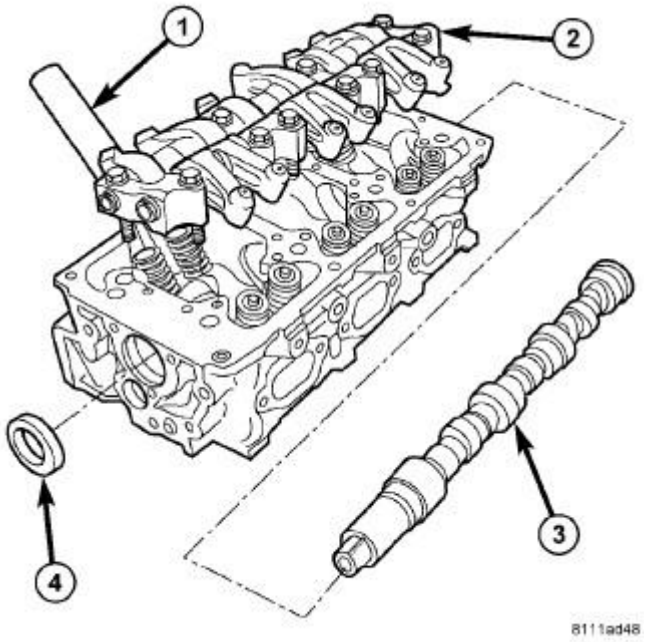

Fig. 239: Camshaft, Rocker Arm Assembly & Cylinder Head
Courtesy of CHRYSLER LLC

17. Install the rocker arm and shaft assembly (2) and ten bolts making sure that the identification marks face toward the front of engine for left head and toward the rear of the engine for right head.

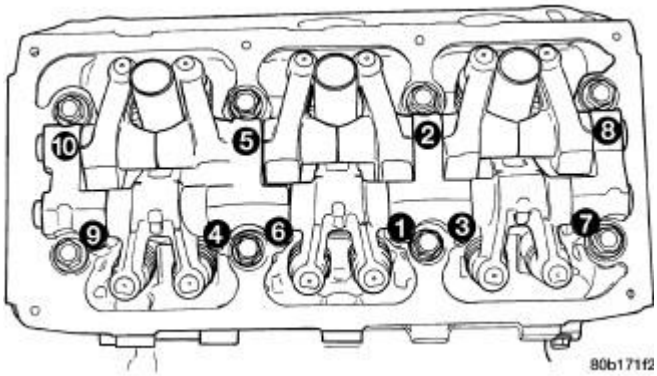

Fig. 240: Rocker Arm/Shaft Assembly Bolt Tightening Sequence
Courtesy of CHRYSLER LLC

18. Tighten the ten rocker arm/shaft assembly bolts in sequence to 31 N.m (275 in. lbs.).

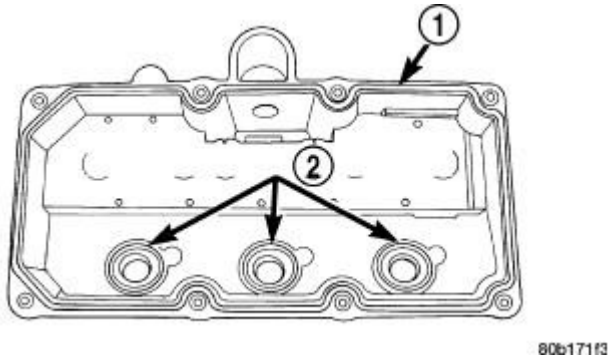

Fig. 241: Cylinder Head Cover Gasket & Spark Plug Tube Seals
Courtesy of CHRYSLER LLC

19. Clean cylinder head and cover mating surfaces. Inspect and replace gasket (1) and seals (2) as necessary. Refer to **COVER(S), CYLINDER HEAD, LEFT, INSTALLATION** and **COVER(S), CYLINDER HEAD, RIGHT, INSTALLATION**.
20. Install cylinder head cover and eight bolts. Tighten bolts to 12 N.m (105 in. lbs.).

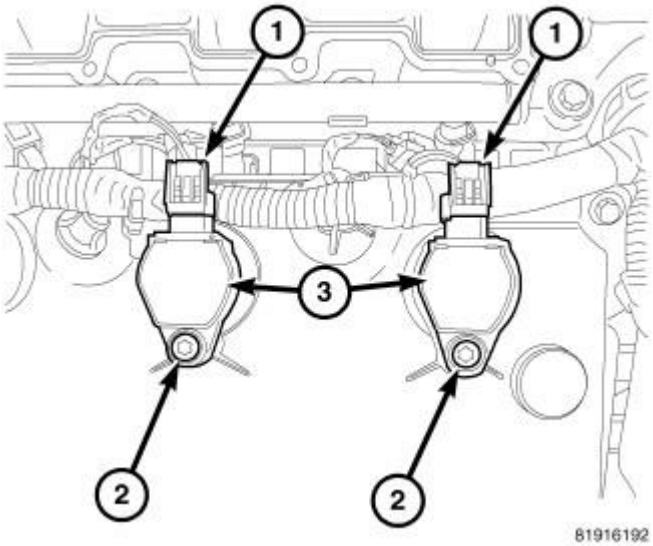

Fig. 242: Ignition Coils, Mounting Bolt & Electrical Connectors
Courtesy of CHRYSLER LLC

21. Install the spark plugs. Tighten to 28 N.m (20 ft. lbs.). Refer to **SPARK PLUG, INSTALLATION** .
22. Install ignition coils (3) into cylinder head.
23. Install and tighten coil mounting bolts (2) to 6.7 N.m (60 in. lbs.).
24. Reposition engine wire harness and install retainers to cylinder head cover. Connect and lock electrical connectors to ignition coils (1) and EGR valve.

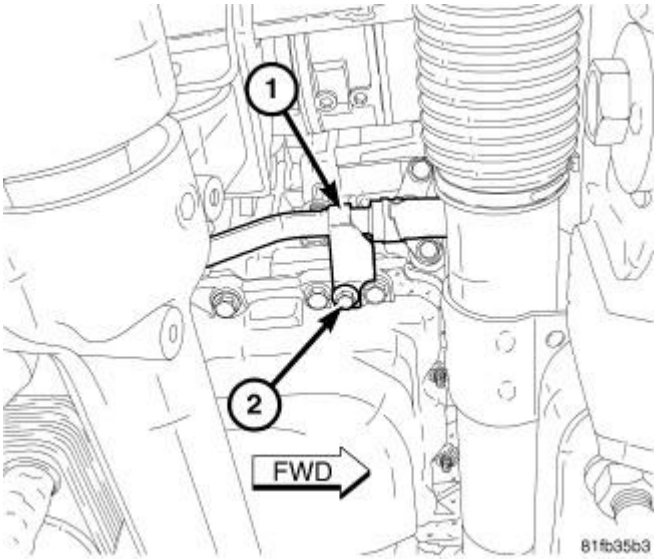

Fig. 243: Oil Cooler Line & Bolt
Courtesy of CHRYSLER LLC

25. Reposition oil cooler hose retainer bracket (1) near timing belt tensioner and install bolt (2).

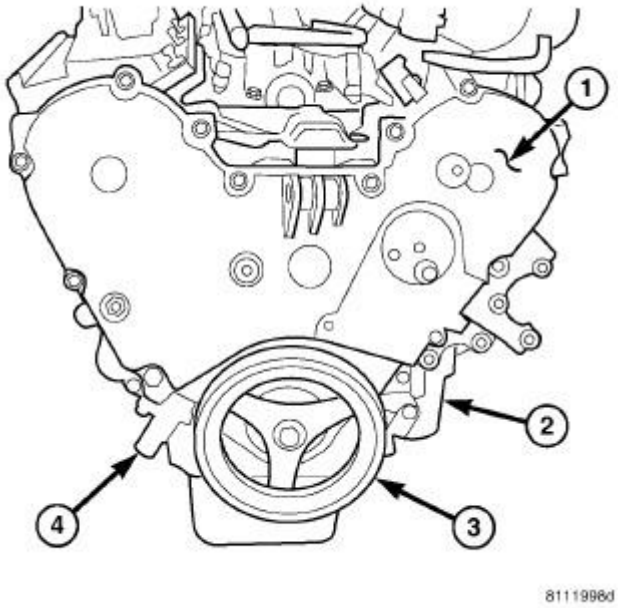

Fig. 244: Front Timing Belt Cover, Engine Oil Filter, Vibration Damper & Timing Belt Tensioner
Courtesy of CHRYSLER LLC

26. Install the front timing belt outer cover (1) and 14 bolts.
27. Tighten the timing cover bolts as follows:
    - M6 bolts - 12 N.m (105 in. lbs.)

- M8 bolts - 28 N.m (250 in. lbs.)
- M10 bolts - 54 N.m (40 ft. lbs.)

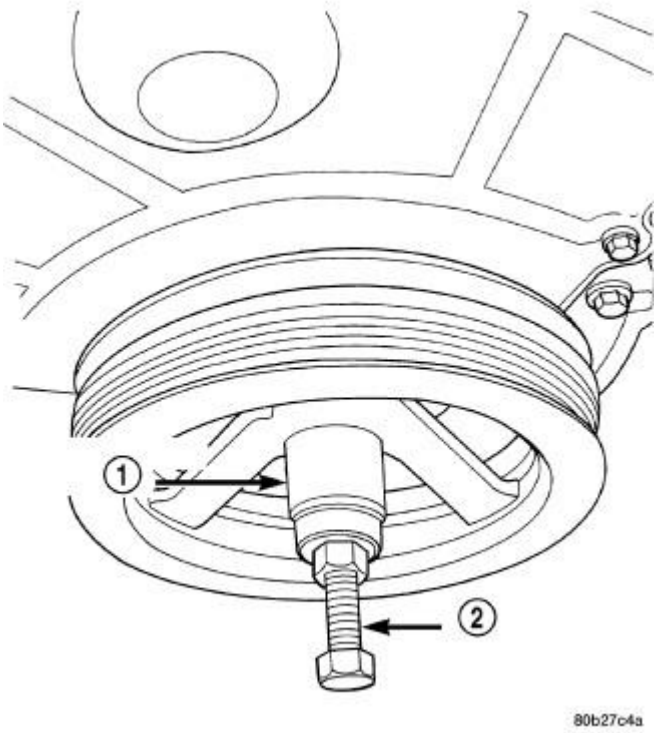

Fig. 245: Crankshaft Damper - Installation
Courtesy of CHRYSLER LLC

28. Install crankshaft damper using Forcing Screw (special tool #C-4685-C1, Screw, Forcing) (2), with Nut and Thrust Bearing from (special tool #6792, Installer, Crank Sprocket), and (special tool #6792-1, Cup) Installer (1).

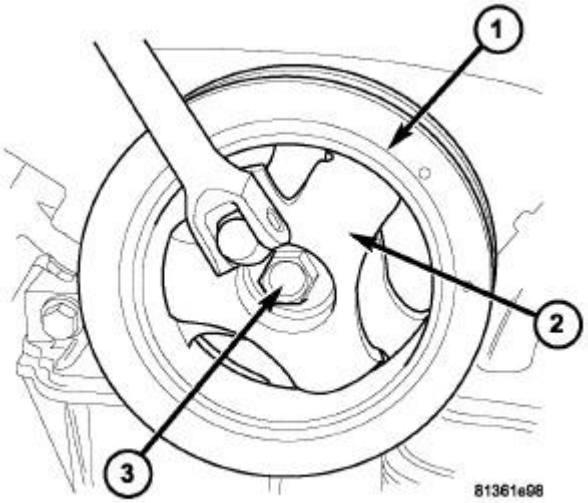

Fig. 246: Damper, Bolt & Holder
Courtesy of CHRYSLER LLC

29. Install crankshaft damper bolt (3). Tighten bolt to 95 N.m (70 ft. lbs.) while holding damper (1) with Damper Holding Fixture (special tool #9365, Holding Fixture, Damper) (2).

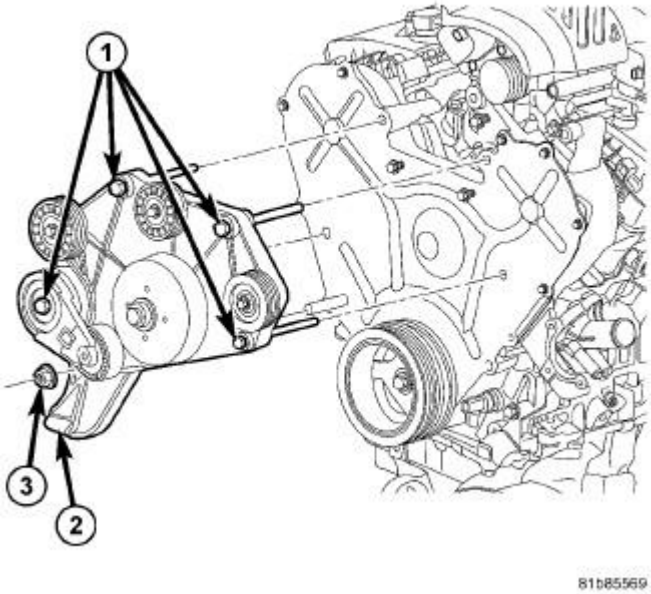

Fig. 247: Accessory Drive Bracket & Fasteners
Courtesy of CHRYSLER LLC

30. Install the accessory drive bracket (2). Tighten four bolts (1) and nut (3) to 54 N.m (40 ft. lbs.).

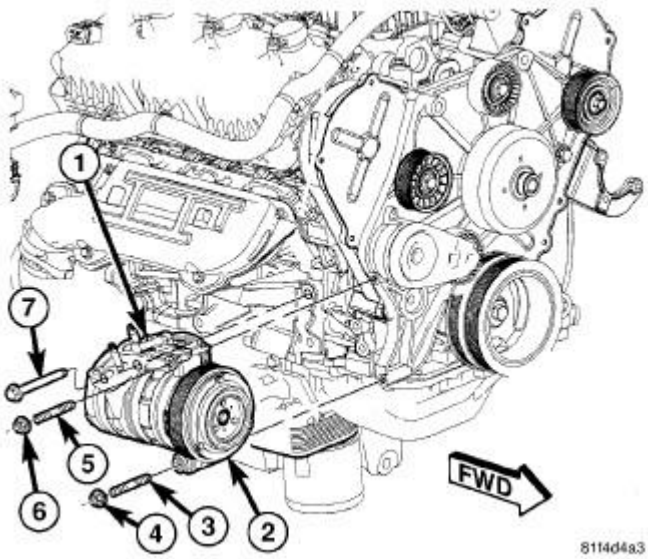

Fig. 248: Removing/Installing A/C Compressor
Courtesy of CHRYSLER LLC

31. Install the lower stud (3) and upper stud (5) that secures the front of the A/C compressor to the accessory drive bracket. Tighten studs securely.
32. Install the lower nut (4) and upper nut (6) that secures the front of the A/C compressor to the accessory drive bracket. Tighten nuts to 28 N.m (21 ft. lbs.).

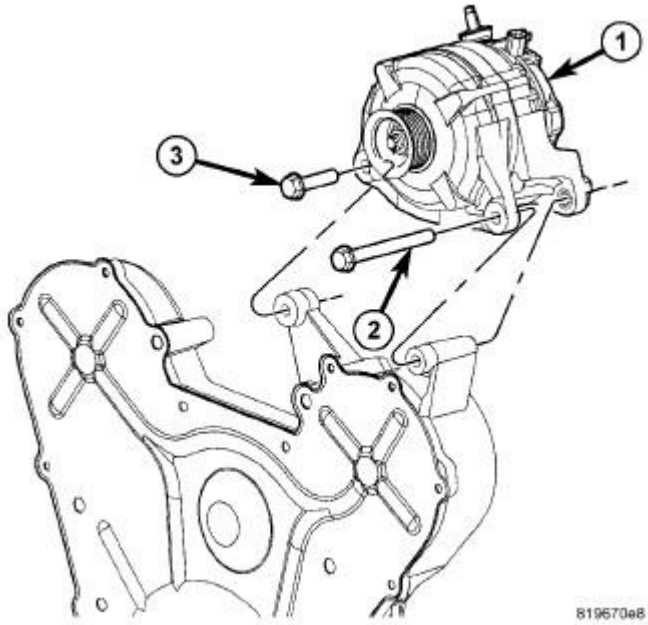

Fig. 249: Generator & Mounting Bolts
Courtesy of CHRYSLER LLC

33. Position generator (1) to engine and install two mounting bolts (2) and (3). Tighten both bolts to 57 N.m (42 ft. lbs.).
34. Snap field wire connector into rear of generator.
35. Install B+ terminal and nut to generator mounting stud. Tighten nut to 13 N.m (115 in. lbs.)
36. Snap plastic protective cover to B+ terminal.

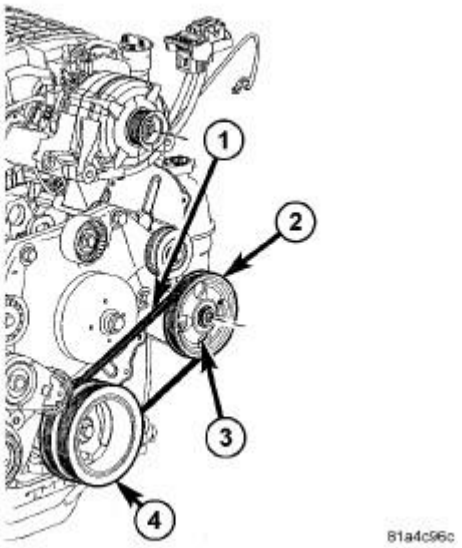

Fig. 250: Power Steering Belt
Courtesy of CHRYSLER LLC

37. Install the power steering belt (1). Refer to **BELT, SERPENTINE, INSTALLATION** and **BELT, SERPENTINE, POWER STEERING, INSTALLATION** .

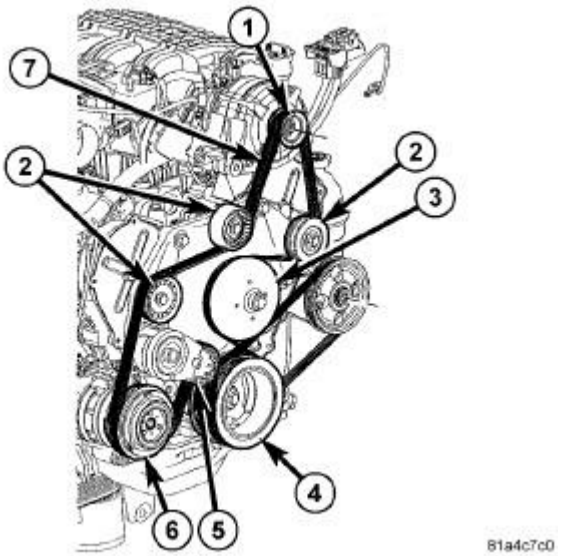

Fig. 251: Accessory Drive Belt Routing - 4.0L

Courtesy of CHRYSLER LLC

38. Install the accessory drive belt (7). Refer to **BELT, SERPENTINE, INSTALLATION** and **BELT, SERPENTINE, POWER STEERING, INSTALLATION** .

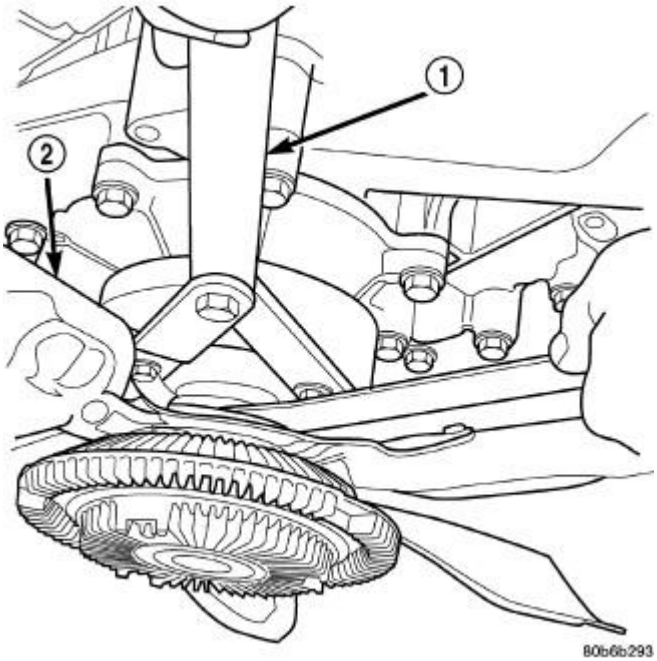

Fig. 252: Using Special Tool 6958 Spanner Wrench & Adapter Pins 8346
Courtesy of CHRYSLER LLC

39. Use Adapter Pins (special tool #8346, Pins, Adapter) in Spanner Wrench (special tool #6958, Wrench, Spanner) (1) to hold the pulley while installing the fan blade/viscous fan drive assembly. Tighten mounting nut to 50 N.m (37 ft. lbs.).

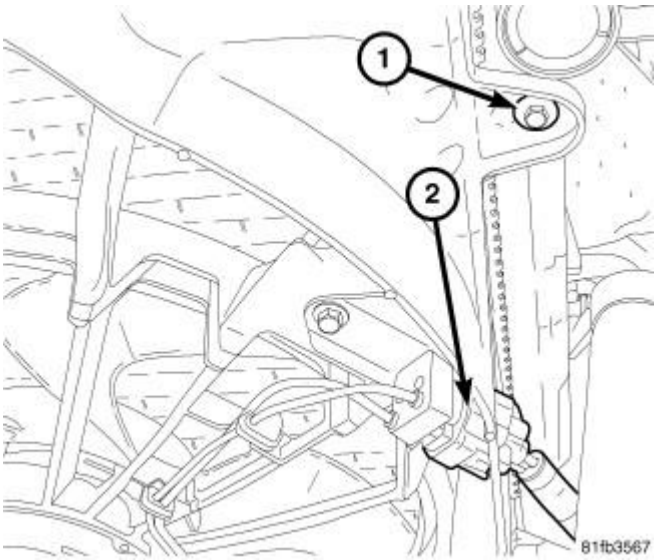

Fig. 253: Electrical Fan Connector & Bolt
Courtesy of CHRYSLER LLC

40. Install electric fan shroud with two screws (1). Tighten screws to 6 N.m (50 in. lbs.).
41. Connect and lock the electric fan connector (2).

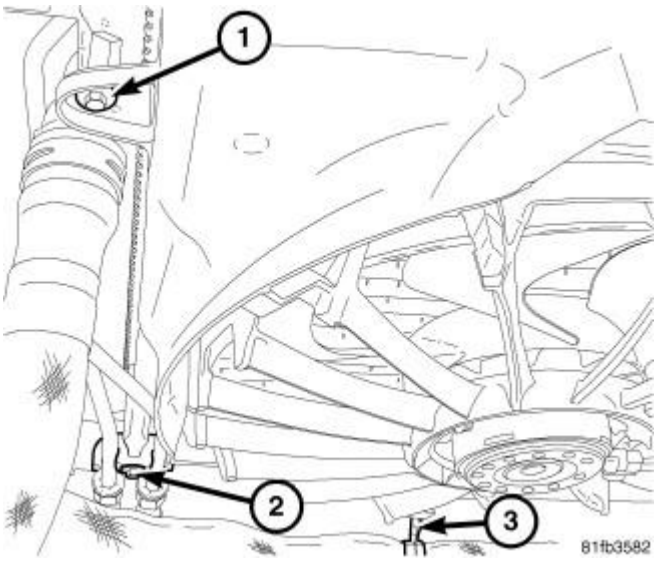

Fig. 254: Radiator Fastener, Transmission Cooling Line Retainer Bolt & Radiator Hose Retainer
Courtesy of CHRYSLER LLC

42. Install transmission cooler line retainer to electric fan shroud with one screw (2).
43. Install radiator hose retainer (3) to electric fan shroud.

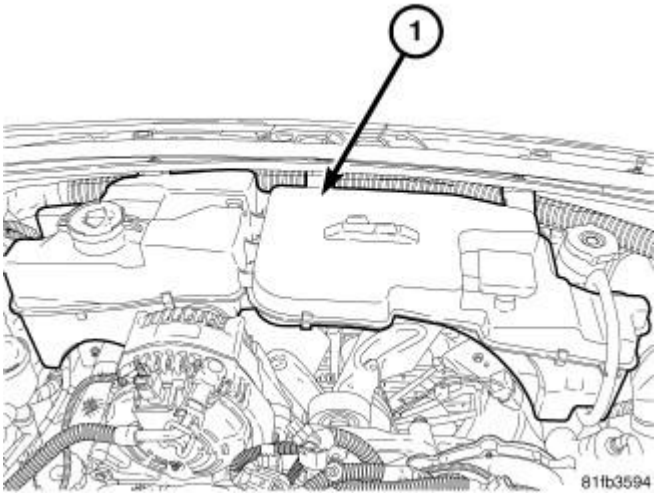

Fig. 255: Coolant Recovery/Washer Fluid Reservoir
Courtesy of CHRYSLER LLC

44. Install the coolant recovery/washer fluid reservoir assembly (1) with five screws. Connect two washer

pump hoses, coolant recovery hose, and washer pump electrical connector.

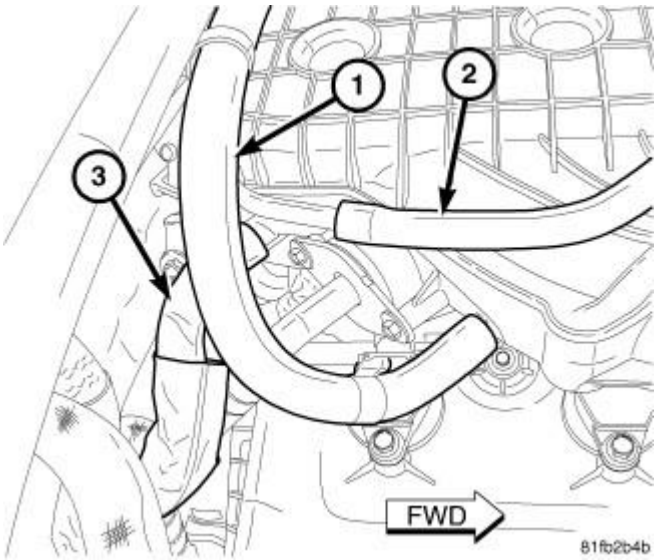

Fig. 256: EGR Tube, PCV & Power Brake Booster Vacuum Hoses
Courtesy of CHRYSLER LLC

45. Install the upper intake manifold, EGR tube, PCV, Purge and power brake booster vacuum hoses. Refer to **MANIFOLD, INTAKE, INSTALLATION**.

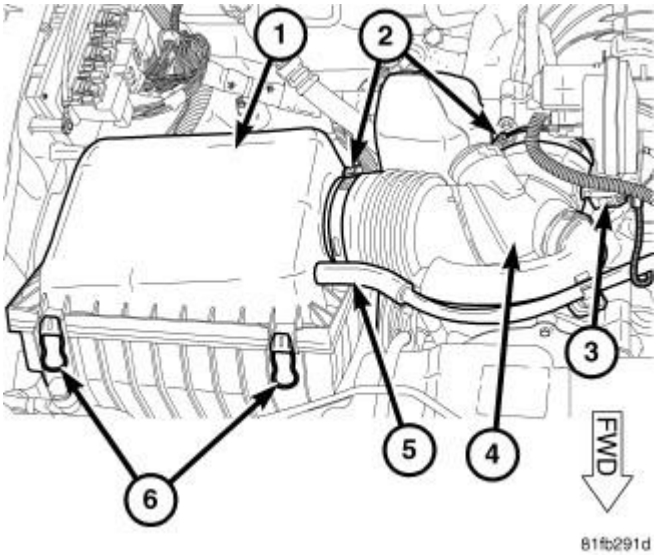

Fig. 257: Air Filter Housing
Courtesy of CHRYSLER LLC

46. Install and connect the air cleaner element housing (1). Refer to **AIR CLEANER, INSTALLATION**.
47. Connect the negative battery cable. Tighten nut to 4.5 N.m (40 in. lbs.).

LEFT CYLINDER HEAD

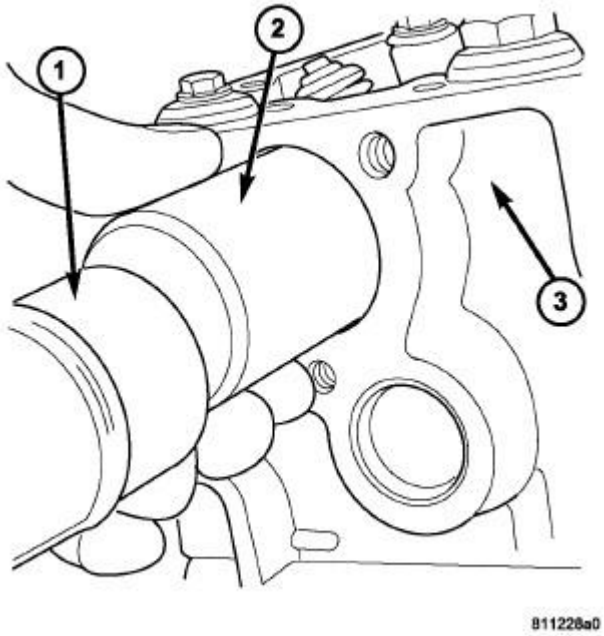

Fig. 258: Installing Left Camshaft Seal
Courtesy of CHRYSLER LLC

1. Position the camshaft seal into the cylinder head (3).
2. Using Camshaft Seal Installer (special tool #MD-998306, Installer, Camshaft) (2) tap the seal into place.

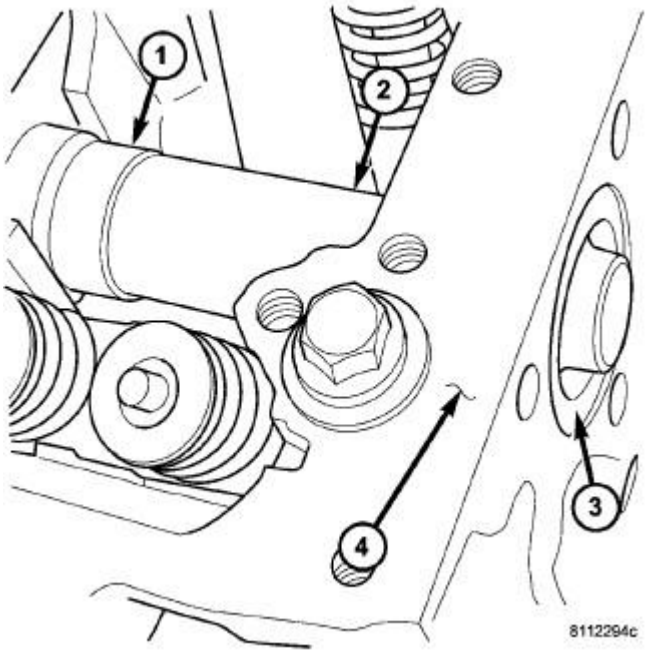

Fig. 259: Positioning Camshaft - Left
Courtesy of CHRYSLER LLC

3. Apply light coat of clean engine oil to the camshaft oil seal lip and Cam Seal Protector (special tool #6788, Protector, Cam Seal) (2).
4. Install Cam Seal Protector (special tool #6788, Protector, Cam Seal) (2) onto the camshaft (1).
5. Slide the camshaft (1) forward, inserting the seal protector (2) through the camshaft seal (3) until the camshaft seats.
6. Remove Seal Protector (2) from the camshaft.

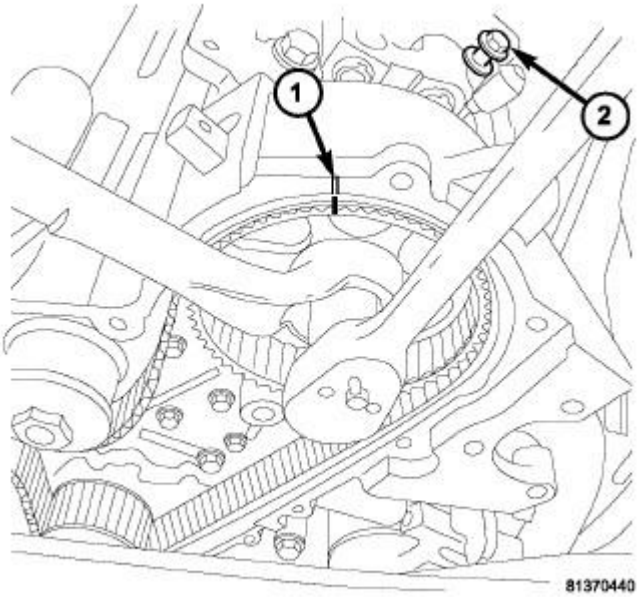

Fig. 260: Left Cam Gear Timing Mark & Retaining Bolt
Courtesy of CHRYSLER LLC

CAUTION: The camshaft sprockets are keyed and not interchangeable from side to side because of the camshaft position sensor pick-up.

7. Install the camshaft sprocket.
8. Install **NEW** sprocket attaching bolt into place. The 255 mm (10 in.) bolt is to be installed in the left camshaft and the 213 mm (8 3/8 in.) bolt is to be installed into the right camshaft. Counterhold the camshaft sprocket and tighten the camshaft sprocket bolt to 102 N.m (75 ft. lbs.) plus a 90° turn.

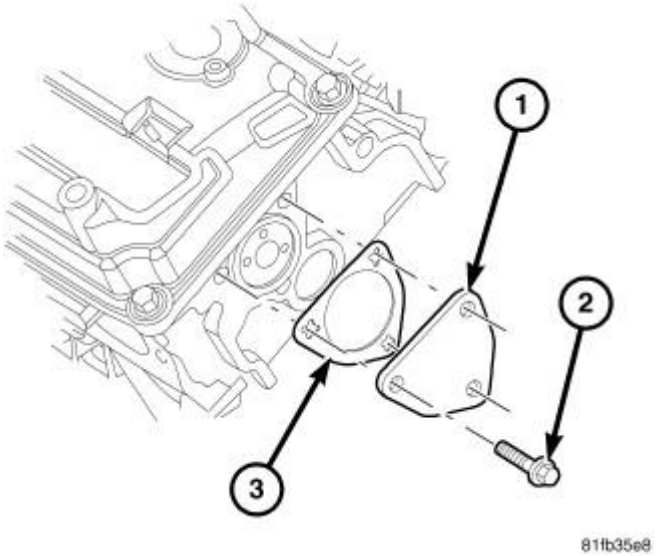

Fig. 261: Cam Thrust Plate, Gasket & Bolts
Courtesy of CHRYSLER LLC

9. Install the camshaft thrust plate (1) and gasket (3). Tighten three bolts (2) to 28 N.m (250 in. lbs.).

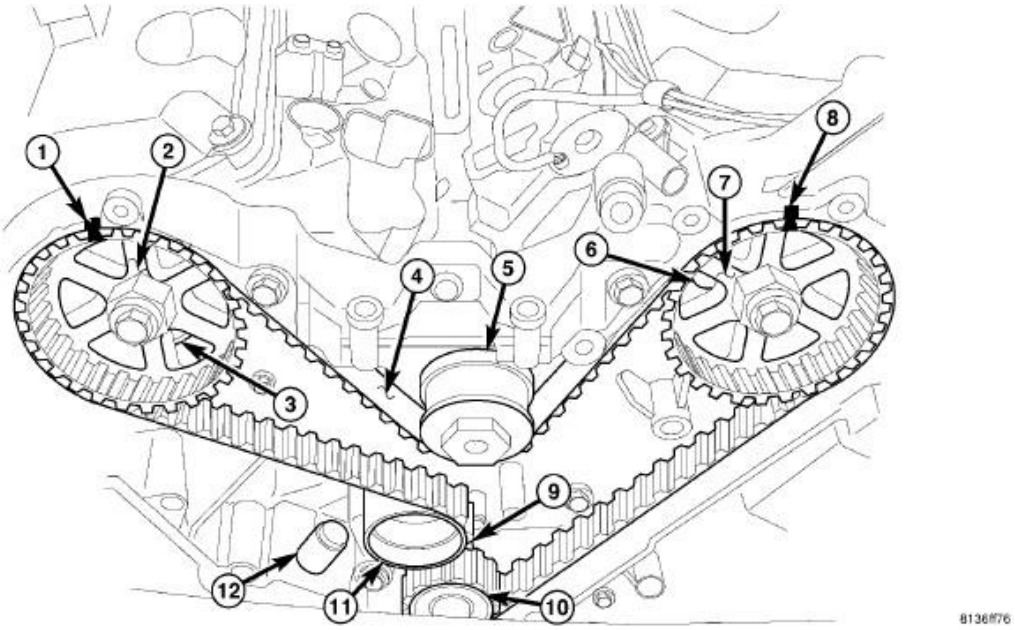

Fig. 262: Timing Gear Components
Courtesy of CHRYSLER LLC

10. Rotate the left camshaft gear (7) to align its timing mark (8). Verify that the right camshaft gear (2) timing mark (1) and crankshaft gear (10) timing mark (9) are still aligned.
11. Install the timing belt (4) starting at the crankshaft sprocket (10) going in a counterclockwise direction. Install the belt around the last sprocket. Maintain tension on the belt as it is positioned around the tensioner pulley (11).
12. Holding the tensioner pulley (11) against the belt, install the tensioner into the housing and tighten two

bolts to 28 N.m (250 in. lbs.). Each camshaft sprocket mark should remain aligned with the cover marks.

13. When tensioner is in place pull retaining pin to allow the tensioner to extend to the tensioner pulley bracket.
14. Rotate crankshaft sprocket two revolutions and check the timing marks on the camshafts and crankshaft. The marks should line up within their respective locations. If marks do not line up, repeat procedure.

NOTE: With the camshaft gears in these positions the lobes are in a neutral position (no load to the valve). This will allow the rocker arm shaft assembly to be tightened into position with little or no valve spring load on it.

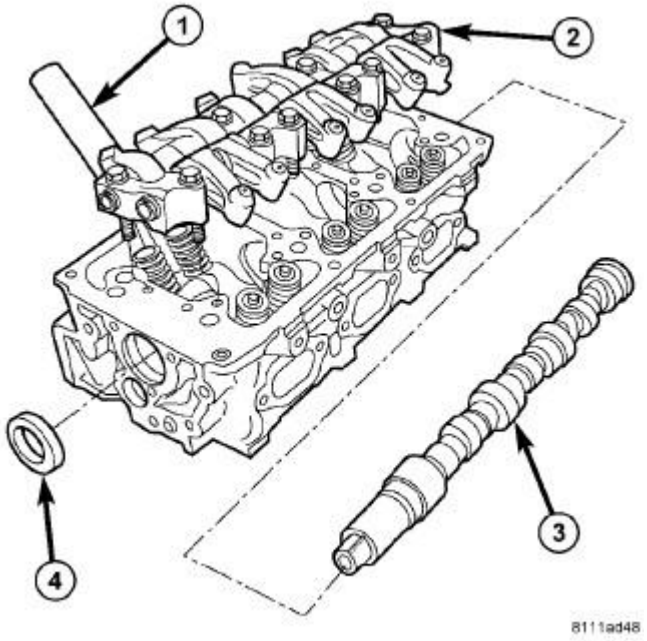

Fig. 263: Camshaft, Rocker Arm Assembly & Cylinder Head
Courtesy of CHRYSLER LLC

15. Install the rocker arm and shaft assembly (2) and ten bolts making sure that the identification marks face toward the front of engine for left head and toward the rear of the engine for right head.

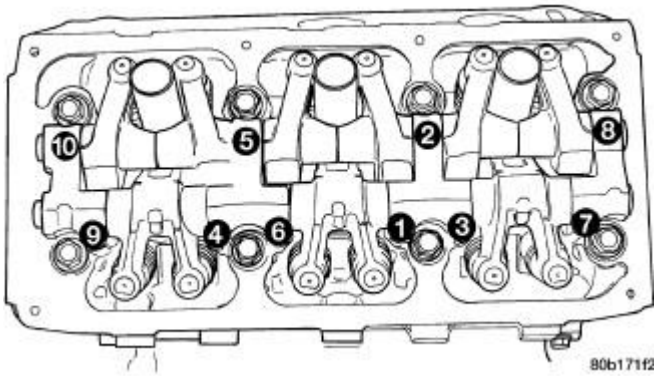

Fig. 264: Rocker Arm/Shaft Assembly Bolt Tightening Sequence
Courtesy of CHRYSLER LLC

16. Tighten the ten rocker arm/shaft assembly bolts in sequence to 31 N.m (275 in. lbs.).

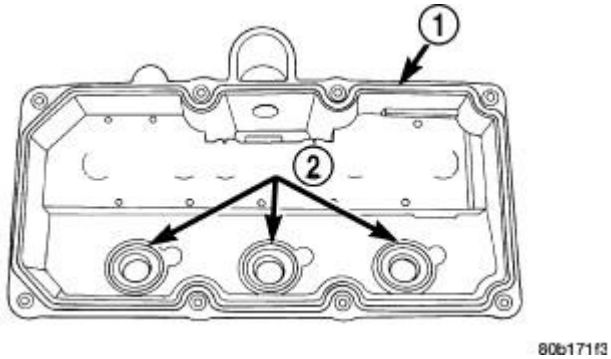

Fig. 265: Cylinder Head Cover Gasket & Spark Plug Tube Seals
Courtesy of CHRYSLER LLC

17. Clean cylinder head and cover mating surfaces. Inspect and replace gasket (1) and seals (2) as necessary. Refer to **COVER(S), CYLINDER HEAD, LEFT, INSTALLATION** and **COVER(S), CYLINDER HEAD, RIGHT, INSTALLATION**.
18. Install cylinder head cover and eight bolts. Tighten bolts to 12 N.m (105 in. lbs.).

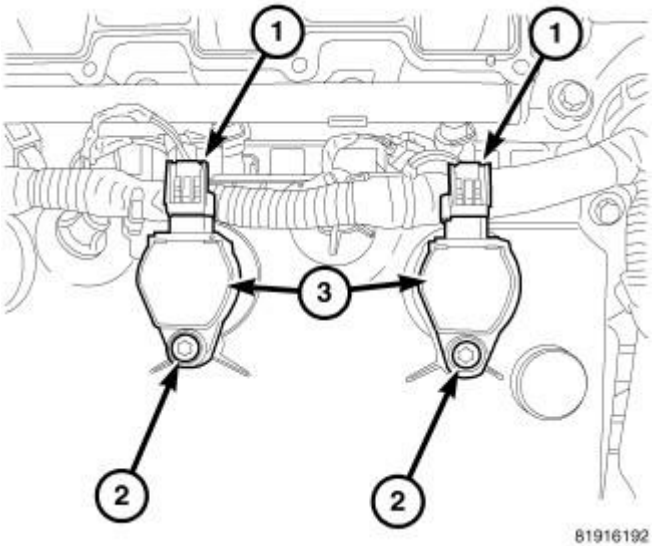

Fig. 266: Ignition Coils, Mounting Bolt & Electrical Connectors
Courtesy of CHRYSLER LLC

19. Install the spark plugs. Tighten to 28 N.m (20 ft. lbs.). Refer to **SPARK PLUG, INSTALLATION** .
20. Install ignition coil (3) into cylinder head.
21. Install and tighten coil mounting bolt (2) to 6.7 N.m (60 in. lbs.).
22. Reposition engine wire harness and install retainers to cylinder head cover. Connect and lock electrical connectors to ignition coils (1).

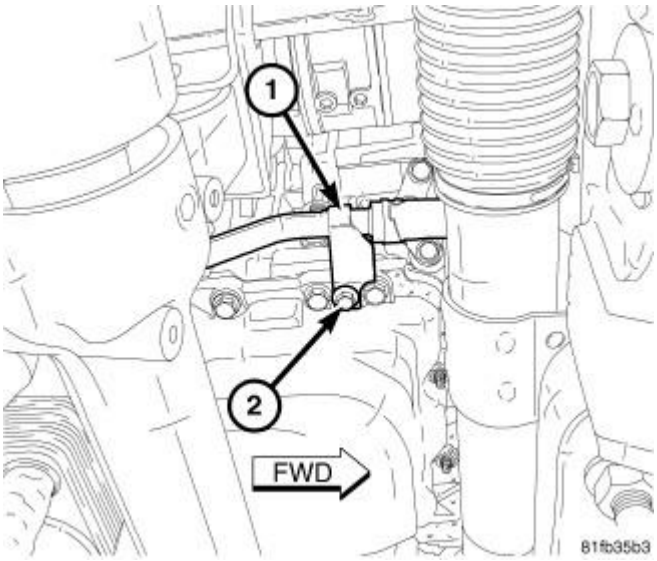

Fig. 267: Oil Cooler Line & Bolt
Courtesy of CHRYSLER LLC

23. Reposition oil cooler hose retainer bracket (1) near timing belt tensioner and install bolt (2).

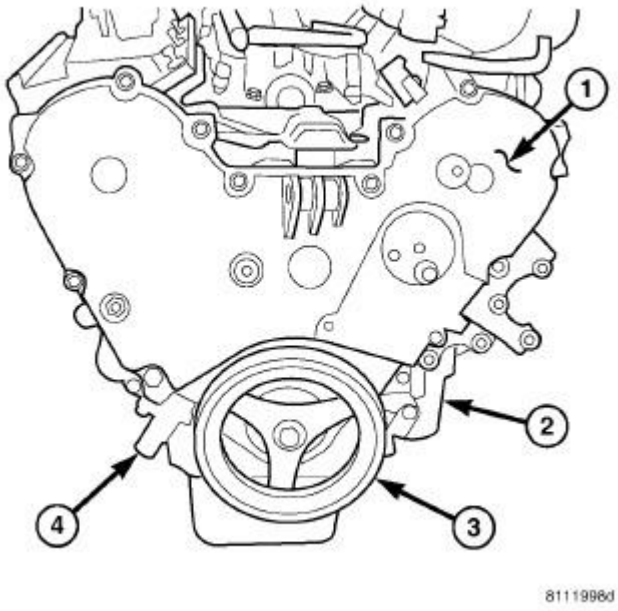

Fig. 268: Front Timing Belt Cover, Engine Oil Filter, Vibration Damper & Timing Belt Tensioner
Courtesy of CHRYSLER LLC

24. Install the front timing belt outer cover (1) and 14 bolts.
25. Tighten the timing cover bolts as follows:
    - M6 bolts - 12 N.m (105 in. lbs.)
    - M8 bolts - 28 N.m (250 in. lbs.)
    - M10 bolts - 54 N.m (40 ft. lbs.)

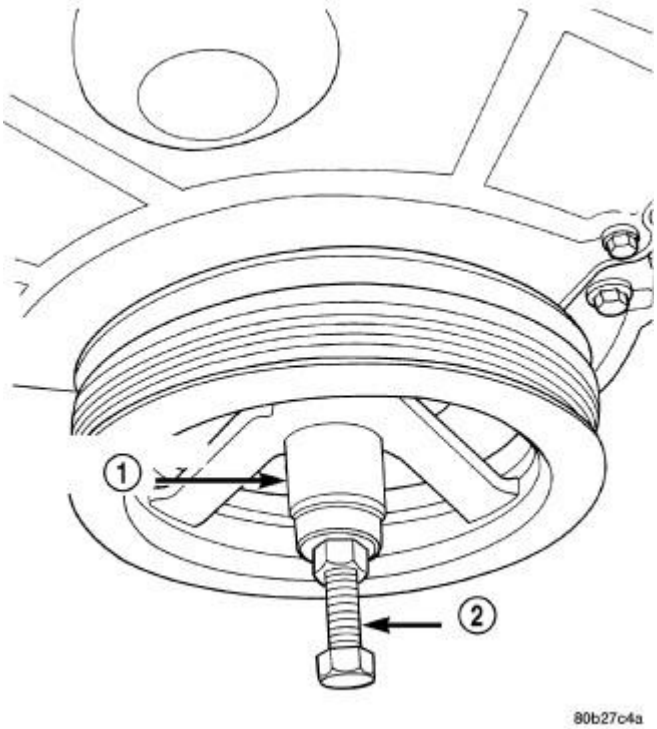

Fig. 269: Crankshaft Damper - Installation
Courtesy of CHRYSLER LLC

26. Install crankshaft damper using Forcing Screw (special tool #C-4685-C1, Screw, Forcing) (2), with Nut and Thrust Bearing from (special tool #6792, Installer, Crank Sprocket), and (special tool #6792-1, Cup) Installer (1).

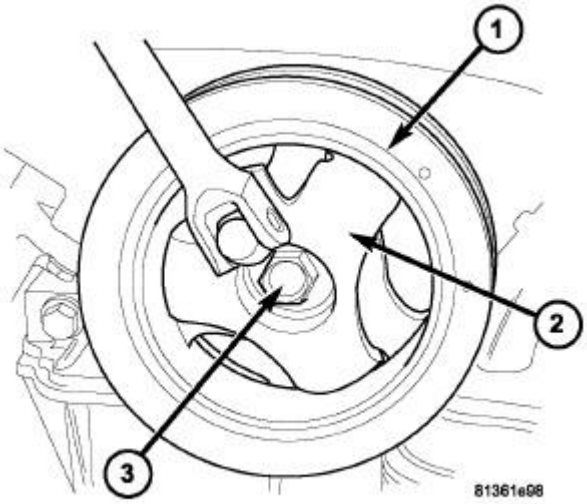

Fig. 270: Damper, Bolt & Holder
Courtesy of CHRYSLER LLC

27. Install crankshaft damper bolt (3). Tighten bolt to 95 N.m (70 ft. lbs.) while holding damper (1) with Damper Holding Fixture (special tool #9365, Holding Fixture, Damper) (2).

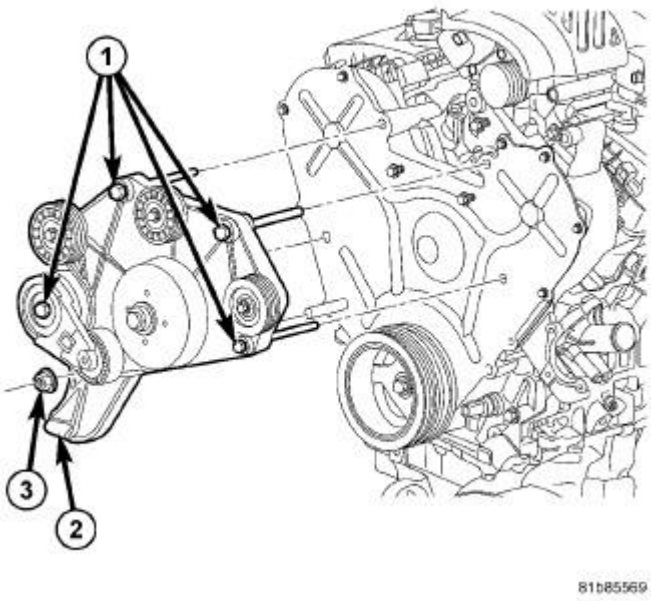

Fig. 271: Accessory Drive Bracket & Fasteners
Courtesy of CHRYSLER LLC

28. Install the accessory drive bracket (2). Tighten four bolts (1) and nut (3) to 54 N.m (40 ft. lbs.).

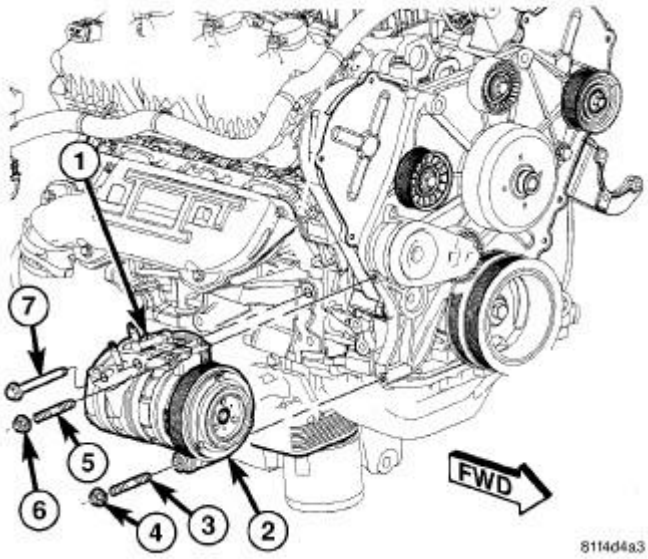

Fig. 272: Removing/Installing A/C Compressor
Courtesy of CHRYSLER LLC

29. Install the lower stud (3) and upper stud (5) that secures the front of the A/C compressor to the accessory drive bracket. Tighten studs securely.
30. Install the lower nut (4) and upper nut (6) that secures the front of the A/C compressor to the accessory drive bracket. Tighten nuts to 28 N.m (21 ft. lbs.).

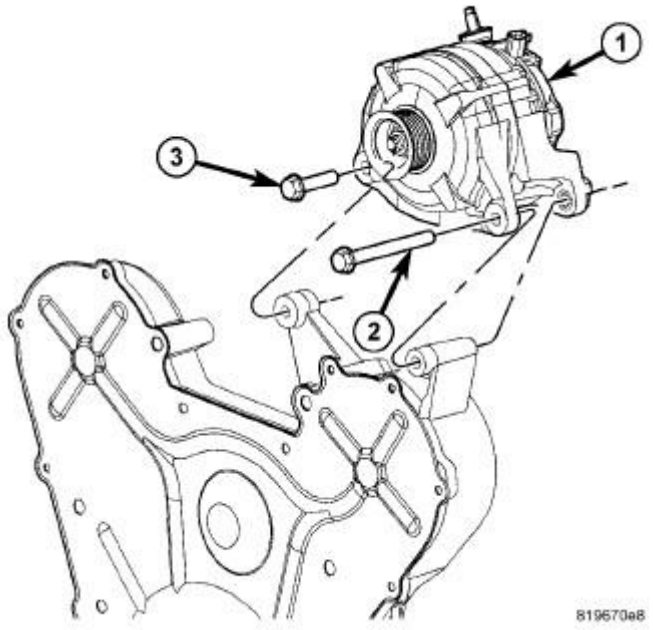

Fig. 273: Generator & Mounting Bolts
Courtesy of CHRYSLER LLC

31. Position generator (1) to engine and install two mounting bolts (2) and (3). Tighten both bolts to 57 N.m (42 ft. lbs.).
32. Snap field wire connector into rear of generator.
33. Install B+ terminal and nut to generator mounting stud. Tighten nut to 13 N.m (115 in. lbs.)
34. Snap plastic protective cover to B+ terminal.

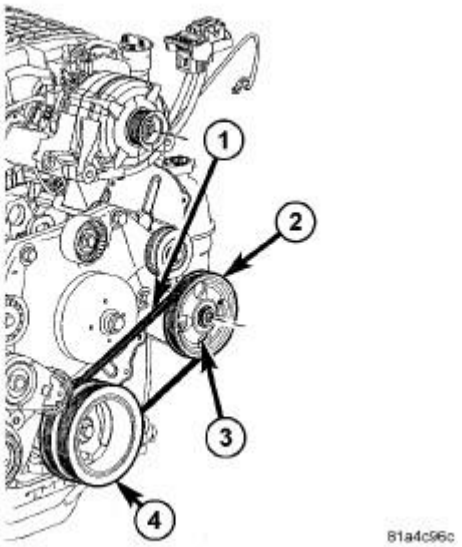

Fig. 274: Power Steering Belt
Courtesy of CHRYSLER LLC

35. Install the power steering belt (1). Refer to **BELT, SERPENTINE, INSTALLATION** and **BELT, SERPENTINE, POWER STEERING, INSTALLATION** .

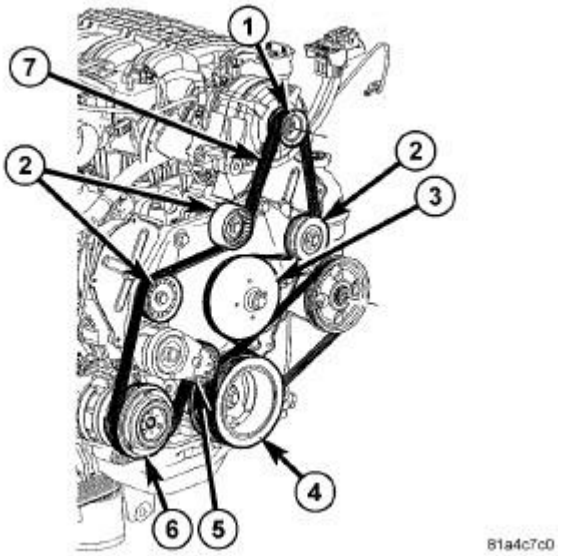

Fig. 275: Accessory Drive Belt Routing - 4.0L
Courtesy of CHRYSLER LLC

36. Install the accessory drive belt (7). Refer to **BELT, SERPENTINE, INSTALLATION** and **BELT, SERPENTINE, POWER STEERING, INSTALLATION** .

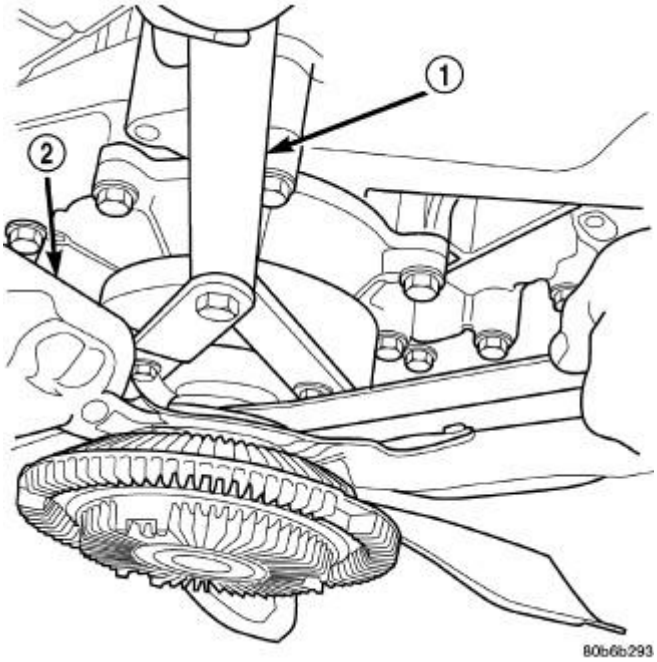

Fig. 276: Using Special Tool 6958 Spanner Wrench & Adapter Pins 8346
Courtesy of CHRYSLER LLC

37. Use Adapter Pins (special tool #8346, Pins, Adapter) in Spanner Wrench (special tool #6958, Wrench, Spanner) (1) to hold the pulley while installing the fan blade/viscous fan drive assembly. Tighten mounting nut to 50 N.m (37 ft. lbs.).

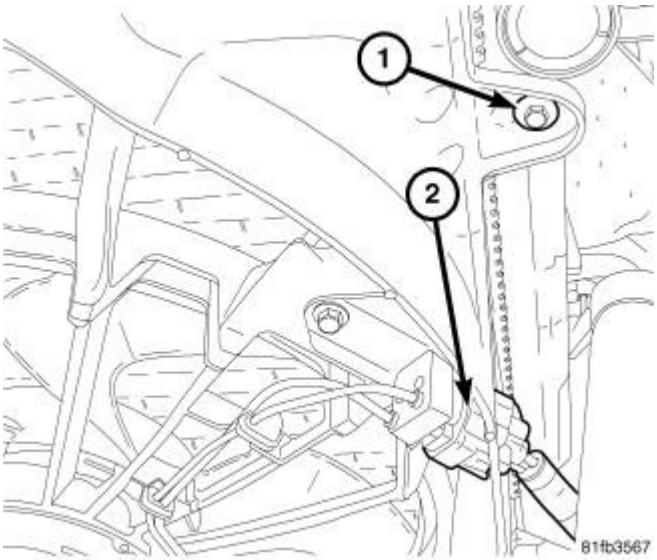

Fig. 277: Electrical Fan Connector & Bolt
Courtesy of CHRYSLER LLC

38. Install electric fan shroud with two screws (1). Tighten screws to 6 N.m (50 in. lbs.).
39. Connect and lock the electric fan connector (2).

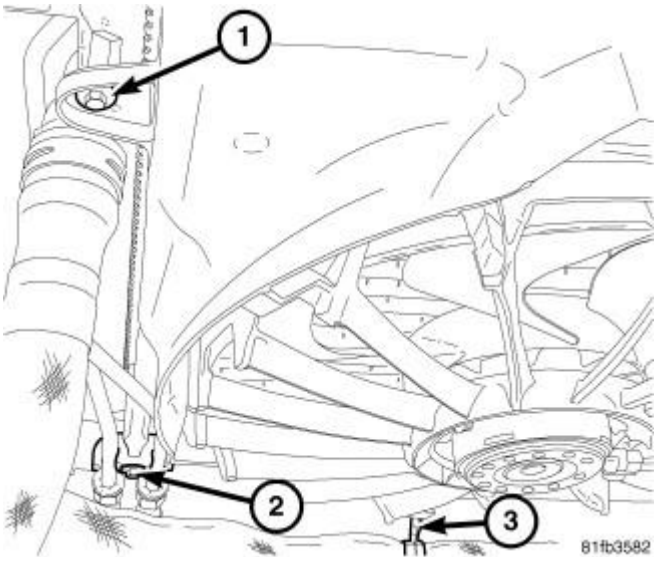

Fig. 278: Radiator Fastener, Transmission Cooling Line Retainer Bolt & Radiator Hose Retainer
Courtesy of CHRYSLER LLC

40. Install transmission cooler line retainer to electric fan shroud with one screw (2).
41. Install radiator hose retainer (3) to electric fan shroud.

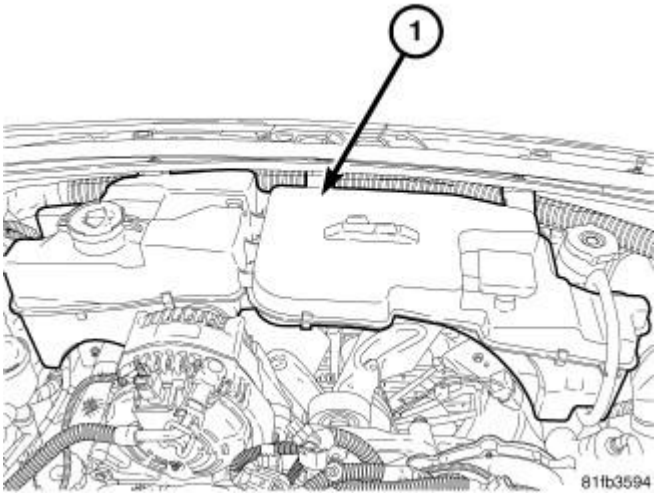

Fig. 279: Coolant Recovery/Washer Fluid Reservoir
Courtesy of CHRYSLER LLC

42. Install the coolant recovery/washer fluid reservoir assembly (1) with five screws. Connect two washer pump hoses, coolant recovery hose, and washer pump connector.

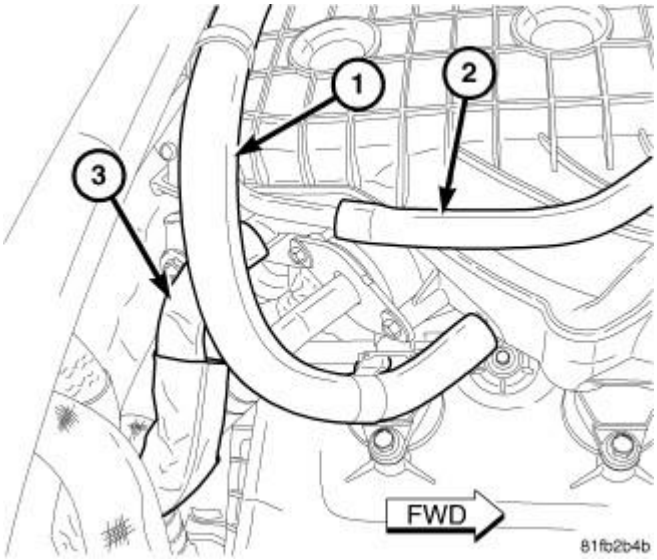

Fig. 280: EGR Tube, PCV & Power Brake Booster Vacuum Hoses
Courtesy of CHRYSLER LLC

43. Install the upper intake manifold, support brackets, EGR tube, PCV, Purge and power brake booster vacuum hoses. Refer to **MANIFOLD, INTAKE, INSTALLATION**.

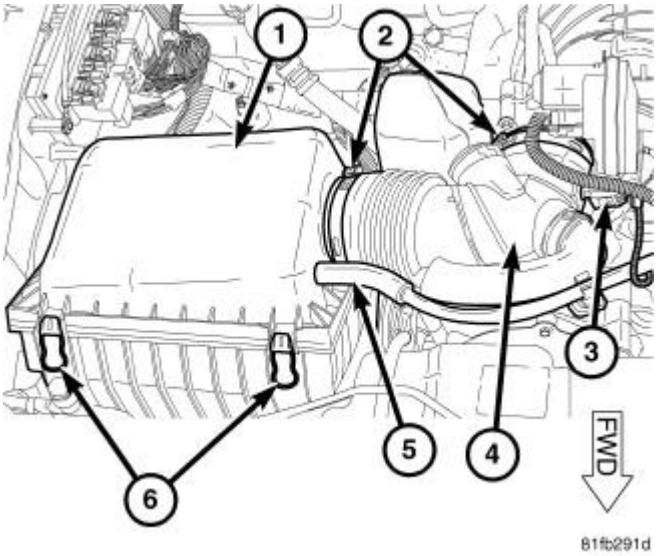

Fig. 281: Air Filter Housing
Courtesy of CHRYSLER LLC

44. Install and connect the air cleaner element housing (1). Refer to **AIR CLEANER, INSTALLATION**.
45. Connect the negative battery cable. Tighten nut to 4.5 N.m (40 in. lbs.).

SEAL(S), VALVE GUIDE

REMOVAL

REMOVAL

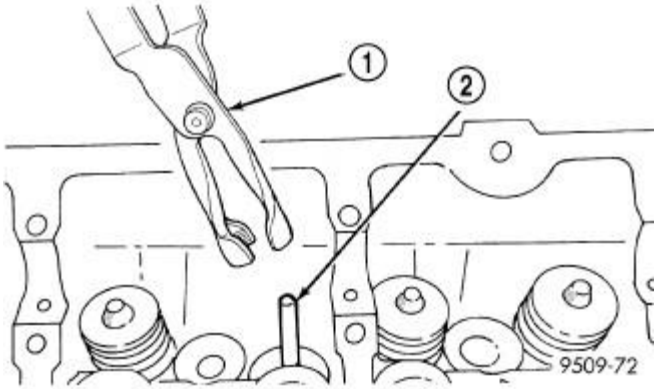

Fig. 282: Valve Stem Seal - Removal
Courtesy of CHRYSLER LLC

1 - VALVE SEAL TOOL
2 - VALVE STEM

1. Remove valve spring. Refer to **SPRING(S), VALVE, REMOVAL**.
2. Remove valve stem seals by using a valve stem seal tool. Refer to **Fig. 282**.

INSTALLATION

INSTALLATION

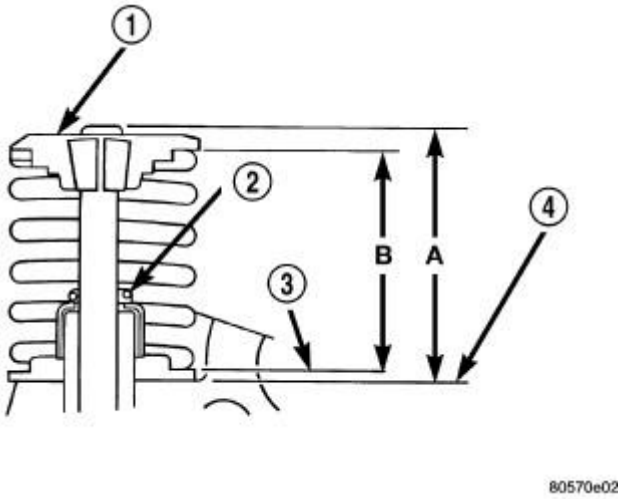

Fig. 283: Checking Valve Tip Height & Valve Spring Installed Height
Courtesy of CHRYSLER LLC

1 - SPRING RETAINER
2 - GARTER SPRING
3 - VALVE SPRING SEAT TOP

4 - CYLINDER HEAD SURFACE

1. The valve stem seal/valve spring seat should be pushed firmly and squarely over the valve guide using the valve stem as guide. **Do Not Force** seal against top of guide. When installing the valve retainer locks, compress the spring **only enough** to install the locks.

CAUTION: Do not remove garter spring (2) around the seal at the top of the valve stem seal. Refer to Fig. 283.

2. Install valve spring. Refer to **SPRING(S), VALVE, INSTALLATION**.

SPRING(S), VALVE

DESCRIPTION

DESCRIPTION

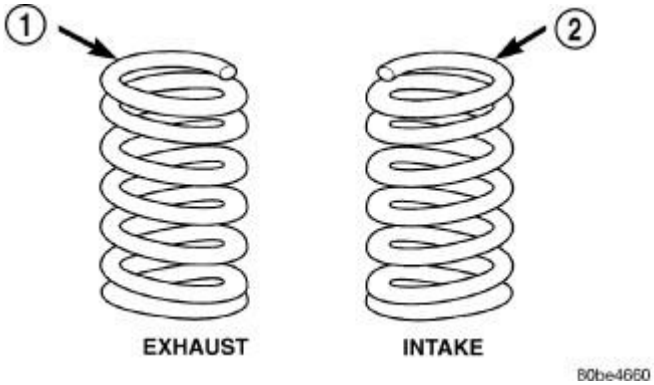

Fig. 284: Valve Spring Identification
Courtesy of CHRYSLER LLC

1 - YELLOW OR WHITE DYE
2 - ORANGE DYE

The valve springs are made from chrome silicon alloy wire and incorporate a "bee-hive" design. Valve spring retainers and locks are common from valve-to-valve. The valve spring seat is integral with the valve stem oil seal, which incorporates a garter spring to maintain consistent lubrication control to the valve stem.

The valve springs are unique for intake compared to exhaust. Both have different lengths and are wound in opposite directions. The valve springs are color coded, intake spring is right hand coil direction with orange dye on the top coils, and the exhaust spring is left hand coil direction with a yellow or white dye on the top coils. Refer to **Fig. 284**.

The exhaust spring with the white dye on the top of the coils has an increased open and closed load when compared to the exhaust spring with the yellow dye. A yellow and a white exhaust valve spring **should never** be used on a single forked rocker arm. Color coated exhaust springs should always be used in pairs for a forked exhaust rocker springs.

OPERATION

OPERATION

The valve spring returns the valve against its seat for a positive seal of the combustion chamber.

REMOVAL

CYLINDER HEAD OFF

1. Compress valve spring with valve spring compressor (special tool #C-3422-D, Compressor, Valve Spring) and adapter (special tool #6526A, Adapter, Valve Spring). Refer to **Engine - Special Tools**.
2. Remove valve retaining locks. Release valve spring compressor. Remove valve spring retainer and valve spring.
3. Remove valve stem seal assembly. Refer to **SEAL(S), VALVE GUIDE, REMOVAL**.

CYLINDER HEAD ON

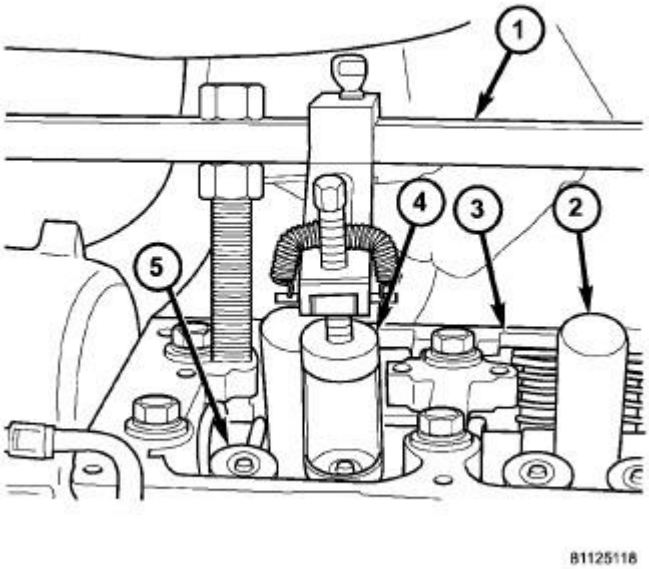

Fig. 285: Removing/Installing Valve Spring
Courtesy of CHRYSLER LLC

1 - MD 998772A
2 - SPARK PLUG TUBES
3 - CYLINDER HEAD
4 - 6527 - ADAPTOR
5 - VALVE SPRING RETAINER

1. Disconnect negative battery cable.
2. Remove upper intake manifold. Refer to **MANIFOLD, INTAKE, REMOVAL**.
3. Remove cylinder head cover(s). Refer to **COVER(S), CYLINDER HEAD, LEFT, REMOVAL** and **COVER(S), CYLINDER HEAD, RIGHT, REMOVAL**.
4. Remove rocker arm and shaft assembly. Refer to **ROCKER ARM, VALVE, REMOVAL**.
5. Remove spark plugs.
6. Rotate the crankshaft clockwise, until the number 1 piston is at Top Dead Center (TDC) on the compression stroke.
7. With air hose attached to spark plug adapter installed in number 1 spark plug hole, apply 620.5 to 689 kPa (90 to 100 psi) air pressure. This is to hold valves into place while servicing components.
8. Using Tool (special tool #MD998772A, Compressor, Valve Spring) (1) with adapter (special tool #6527, Adapter) (4) or equivalent, compress valve spring and remove valve locks (5). Release tension on valve spring, remove retainer (5) and valve spring. Refer to **Fig. 285**. Refer to **Engine - Special Tools**.
9. Remove valve stem seal, if required. Refer to **SEAL(S), VALVE GUIDE, REMOVAL**.
10. Follow the same procedure on the remaining 5 cylinders using the firing sequence 1-2-3-4-5-6. **Make sure piston is at TDC in each cylinder of the valve spring that is being removed.**
11. Remove spark plug adapter tool.

INSPECTION

INSPECTION

When valves have been removed for inspection, reconditioning or replacement, valve springs should be checked against specifications for free-length, spring force and spring installed height. Refer to **Engine - Specifications** to obtain specified height and allowable tensions. Replace springs that do not meet specifications.

INSTALLATION

CYLINDER HEAD OFF

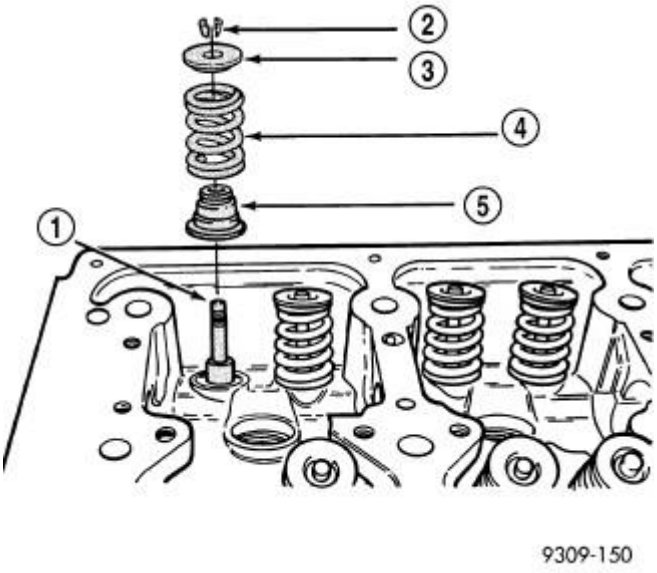

Fig. 286: Valve Seal & Spring-Installation
Courtesy of CHRYSLER LLC

1 - VALVE
2 - VALVE RETAINING LOCKS
3 - VALVE SPRING RETAINER
4 - VALVE SPRING
5 - VALVE SEAL AND VALVE SPRING SEAT ASSEMBLY

1. Install valves if removed.
2. Install valve stem seal/spring seat assembly (5) over valve guides on all valve stems. Refer to **Fig. 286**. Ensure that the garter spring is intact around the top of the rubber seal.
3. Place valve spring (color-coded end facing up) (4) and valve retainer into position.

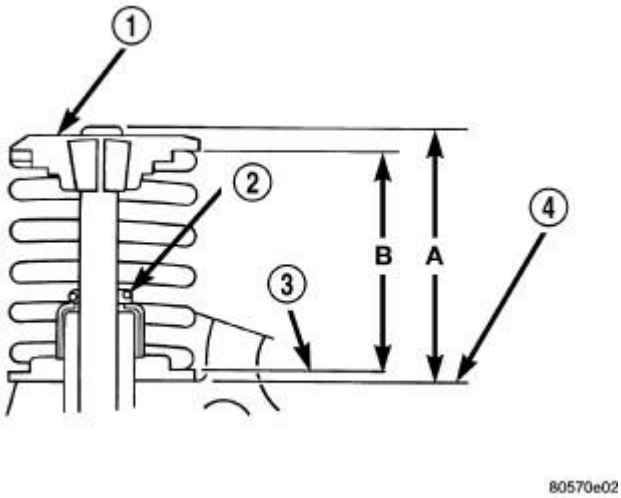

Fig. 287: Checking Valve Tip Height & Valve Spring Installed Height

Courtesy of CHRYSLER LLC

1 - SPRING RETAINER
2 - GARTER SPRING
3 - VALVE SPRING SEAT TOP
4 - CYLINDER HEAD SURFACE

4. Compress valve spring with valve spring compressor. Install locks and release tool. **If valve and/or seat are reground, measure the installed height of springs (B), make sure measurements are taken from top of spring seat to the bottom surface of spring retainer** . If height is greater than 38.75 mm (1.5256 in.), install a 0.762 mm (0.030 in.) spacer in head counterbore under the valve spring seat to bring spring height back within specification. Refer to **Fig. 287**.

CYLINDER HEAD ON

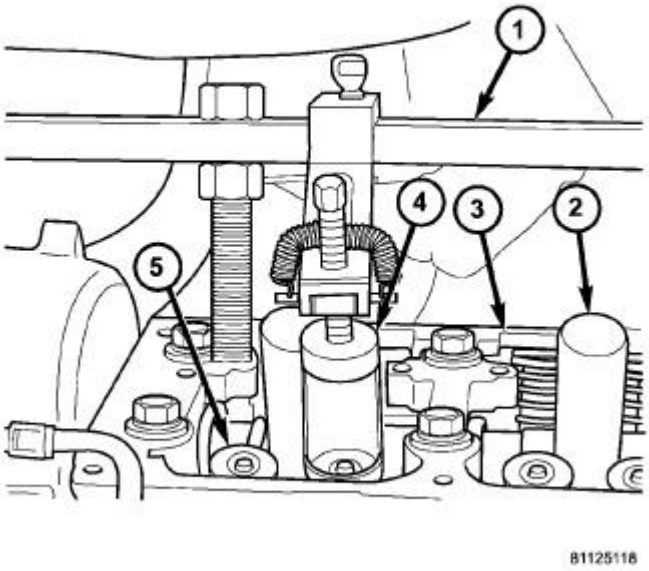

Fig. 288: Removing/Installing Valve Spring
Courtesy of CHRYSLER LLC

1 - MD 998772A
2 - SPARK PLUG TUBES
3 - CYLINDER HEAD
4 - 6527 - ADAPTOR
5 - VALVE SPRING RETAINER

1. Install new valve seal(s) if required. Refer to **SEAL(S), VALVE GUIDE, INSTALLATION**.
2. Place valve spring (color-coded end facing up) and valve retainer into position.

3. Compress valve spring using Special Tool (special tool #MD998772A, Compressor, Valve Spring) (1) with Adaptor (special tool #6527, Adapter) (4) only enough to install locks (5). Refer to **Fig. 288**.
4. After installing locks, release tension on valve spring and verify proper installation.
5. Remove Special Tool (special tool #MD998772A, Compressor, Valve Spring) (1) and spark plug adapter tool.
6. Install rocker arm and shaft assembly. Refer to **ROCKER ARM, VALVE, INSTALLATION**.
7. Install cylinder head cover(s). Refer to **COVER(S), CYLINDER HEAD, LEFT, INSTALLATION** and **COVER(S), CYLINDER HEAD, RIGHT, INSTALLATION**.
8. Install spark plugs.
9. Install upper intake manifold. Refer to **MANIFOLD, INTAKE, INSTALLATION**.
10. Connect negative battery cable.

TUBE, SPARK PLUG

REMOVAL

REMOVAL

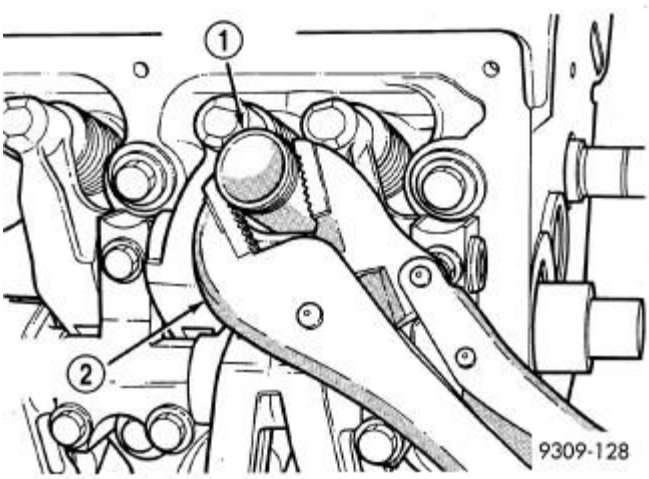

Fig. 289: Servicing Spark Plug Tubes
Courtesy of CHRYSLER LLC

1 - SPARK PLUG TUBE
2 - LOCKING PLIERS

1. Remove cylinder head cover(s). Refer to **COVER(S), CYLINDER HEAD, LEFT, REMOVAL** and **COVER(S), CYLINDER HEAD, RIGHT, REMOVAL**.
2. Using suitable locking pliers, remove the tube from the cylinder head and discard tube. Refer to **Fig. 289**.
3. Clean area around spark plug with Mopar® Parts Cleaner or equivalent.

INSTALLATION

INSTALLATION

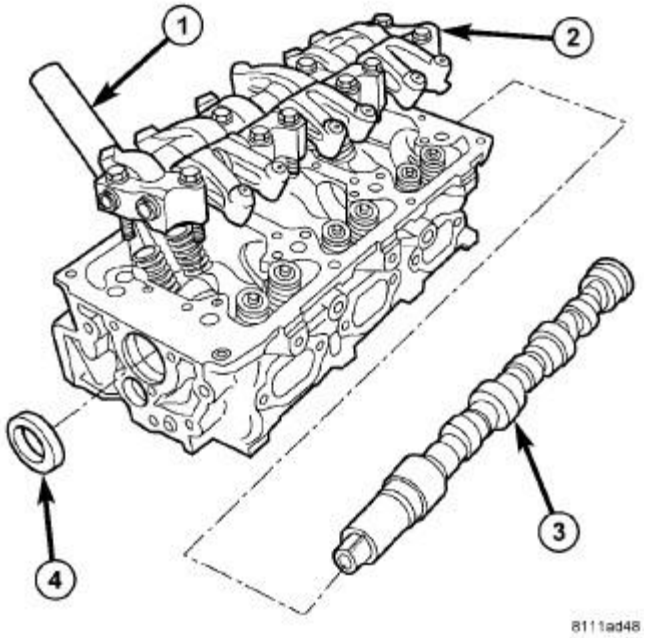

Fig. 290: Camshaft, Rocker Arm Assembly & Cylinder Head
Courtesy of CHRYSLER LLC

1. Apply Mopar® Stud and Bearing Mount to a new tube (1) approximately 1 mm (0.039 in.) from the end of tube, in a 3 mm (0.118 in.) wide area. Refer to **Fig. 290**.
2. Install sealer end of tube (1) into the cylinder head. Then carefully install the tube (1) using a hardwood block and mallet. Install the tube (1) until it is seated into the bottom of the bore.
3. For spark plug tube (1) seal replacement. Refer to **COVER(S), CYLINDER HEAD, LEFT, REMOVAL** and **COVER(S), CYLINDER HEAD, RIGHT, REMOVAL**.
4. Install cylinder head cover(s). Refer to **COVER(S), CYLINDER HEAD, LEFT, INSTALLATION** and **COVER(S), CYLINDER HEAD, RIGHT, INSTALLATION**.

VALVES, INTAKE AND EXHAUST

DESCRIPTION

DESCRIPTION

Valves are made of highly heat-resistant steel and are chrome plated to prevent stem scuffing. The intake valve is a one-piece forging, while the exhaust valve has a forged head with a welded stem for lock groove hardness. The four valves (two intake and two exhaust) employ a three-groove lock design to help facilitate valve rotation.

OPERATION

OPERATION

The intake valve allows the air/fuel mixture to enter the combustion chamber. The exhaust valve allows the burned air/fuel mixture to exit the combustion chamber. Also, the intake and exhaust valves seal the combustion chamber during the compression and power strokes.

STANDARD PROCEDURE

STANDARD PROCEDURE - VALVE AND VALVE SEAT REFACING

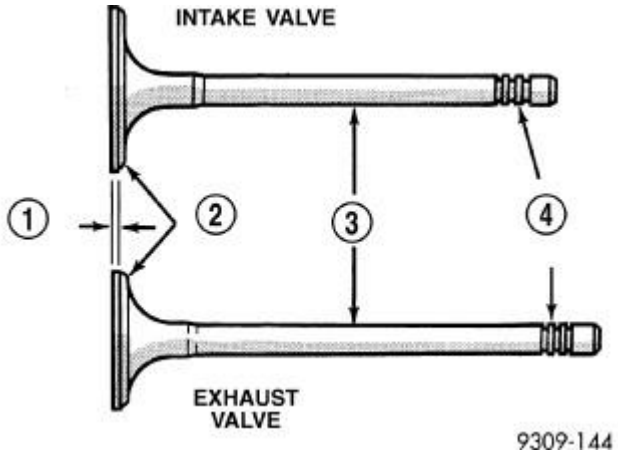

Fig. 291: Intake & Exhaust Valves
Courtesy of CHRYSLER LLC

1 - MARGIN
2 - FACE
3 - STEM
4 - VALVE SPRING RETAINER LOCK GROOVES

VALVES

1. Inspect the remaining margin (1) after the valves are refaced. Refer to **Engine - Specifications**.

VALVE SEATS

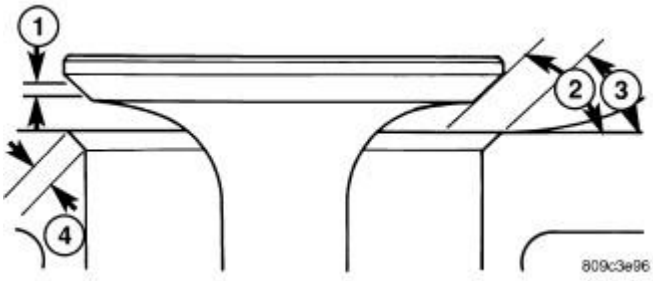

Fig. 292: Valve Face & Seat
Courtesy of CHRYSLER LLC

1 - SEAT WIDTH

2 - FACE ANGLE
3 - SEAT ANGLE
4 - SEAT CONTACT AREA

1. When refacing valve seats, it is important that the correct size valve guide pilot be used for reseating stones. A true and complete surface must be obtained.
2. Measure the concentricity of valve seat using dial indicator. Total runout should not exceed 0.051 mm (0.002 inch.) total indicator reading.
3. Inspect the valve seat (3) with Prussian blue to determine where the valve (1) contacts the seat. To do this, coat valve seat (1) **LIGHTLY** with Prussian blue then set valve in place. Rotate the valve with light pressure. If the blue is transferred to the center of valve face (2), contact is satisfactory. If the blue is transferred to top edge of valve face (2), then lower valve seat (3) with a 15° stone. If the blue is transferred to the bottom edge of valve face (2), then raise valve seat (3) with a 65° stone.

NOTE: Valve seats (1) which are worn or burned can be reworked, provided that correct angle and seat width (1) are maintained. Otherwise cylinder head must be replaced.

4. When seat is properly positioned the width of the intake seats should be 0.75 to 1.25 mm (0.0296 to 0.0493 in.) and exhaust seats should be 1.25 to 1.75 mm (0.049 to 0.069 in.). Refer to **Fig. 292**.

VALVE AND SPRING INSTALLED HEIGHT

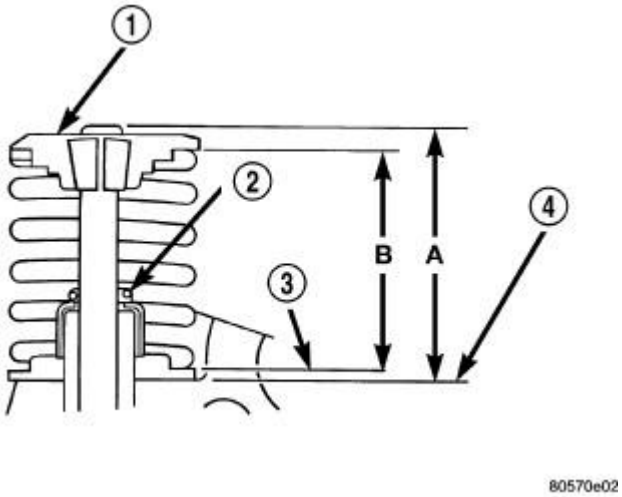

Fig. 293: Checking Valve Tip Height & Valve Spring Installed Height
Courtesy of CHRYSLER LLC

1 - SPRING RETAINER
2 - GARTER SPRING
3 - VALVE SPRING SEAT TOP
4 - CYLINDER HEAD SURFACE

1. Coat valve stems with clean engine oil and insert them in cylinder head.
2. If valves or seats have been refaced, check valve tip height (A). Refer to **Fig. 293**. If valve tip height is greater than 43.65 mm (1.7185 in.) intake or 46.48 mm (1.8299 in.) exhaust, grind valve tip until within specifications. Make sure measurement is taken from cylinder head surface to the top of valve stem.
3. Install valve seal/spring seat assembly over valve guides on all valve stem. Refer to **Fig. 295**. Ensure that the garter spring is intact around the top of the rubber seal.

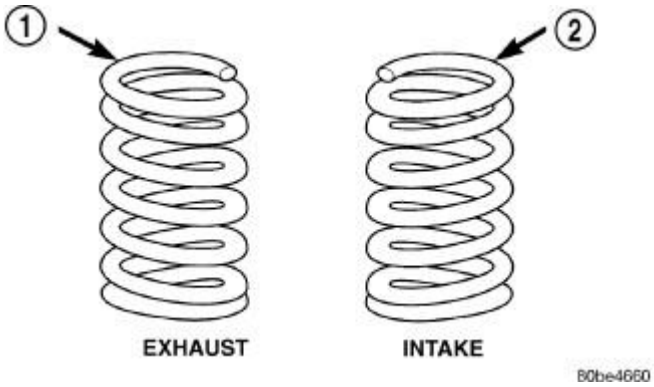

Fig. 294: Valve Spring Identification
Courtesy of CHRYSLER LLC

1 - YELLOW OR WHITE DYE
2 - ORANGE DYE

4. Place valve spring (color-coded end facing up) and valve retainer into position on spring seat. Refer to **Fig. 294**. Refer to **Fig. 293**.

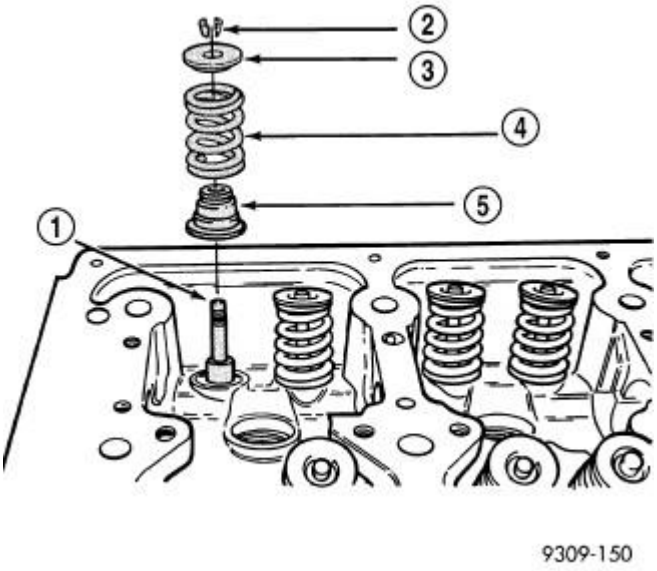

Fig. 295: Valve Seal & Spring-Installation
Courtesy of CHRYSLER LLC

1 - VALVE
2 - VALVE RETAINING LOCKS
3 - VALVE SPRING RETAINER
4 - VALVE SPRING
5 - VALVE SEAL AND VALVE SPRING SEAT ASSEMBLY

5. Compress valve springs (4) with valve spring compressor (special tool #C-3422-D, Compressor, Valve Spring) and adapter (special tool #6526A, Adapter, Valve Spring), install locks (2) and release tool. Refer to **Engine - Special Tools**.
6. If valves (1) and/or seats are refaced, measure the installed height of springs. Refer to **Fig. 293**. Measurements are taken from top of spring (4) seat to the bottom surface of spring retainer. If height is greater than 38.75 mm (1.5256 in.), install a 0.762 mm (0.030 in.) spacer in head counterbore under the valve spring seat to bring spring height back within specification.

REMOVAL

REMOVAL

1. Remove cylinder head(s). Refer to **CYLINDER HEAD, REMOVAL**.
2. Remove rocker arm assembly. Refer to **ROCKER ARM, VALVE, REMOVAL**.
3. Remove valve spring(s). Refer to **SPRING(S), VALVE, REMOVAL**.
4. Before removing valve, **remove any burrs from valve stem lock grooves to prevent damage to the valve guides.** Identify valves to insure installation in original location.
5. Remove valve(s) from cylinder head.

CLEANING

CLEANING

1. Clean all valves thoroughly and discard burned, warped and cracked valves.

INSPECTION

VALVES

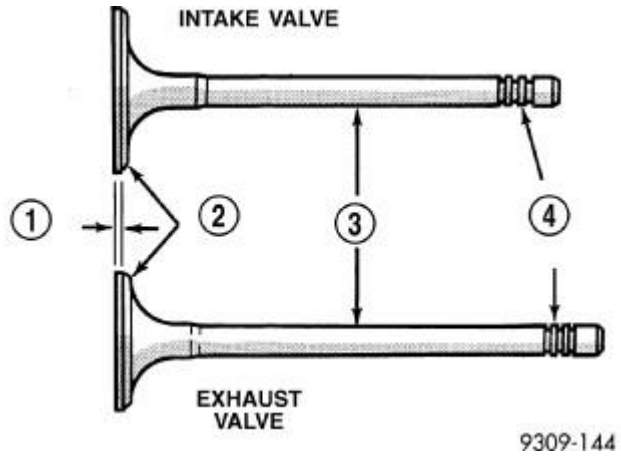

Fig. 296: Intake & Exhaust Valves
Courtesy of CHRYSLER LLC

1 - MARGIN
2 - FACE
3 - STEM
4 - VALVE SPRING RETAINER LOCK GROOVES

1. Measure valve stems for wear approximately 60 mm (2.36 in.) below the valve lock grooves. Refer to **Fig. 296**.
2. Compare measurement to specifications. Refer to **Engine - Specifications**.

NOTE: Valve stems are chrome plated and should not be polished. Refer to Fig. 296.

VALVE GUIDES

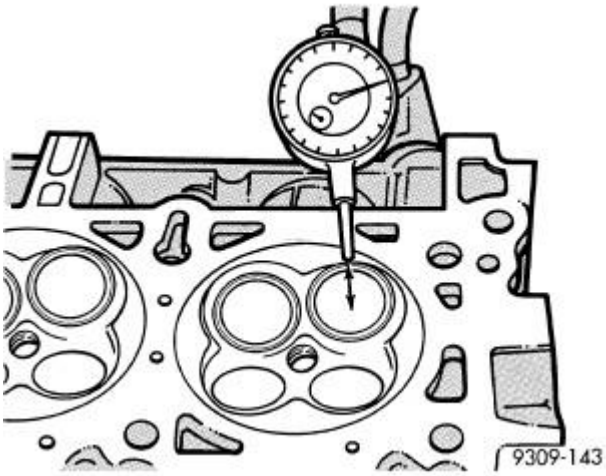

Fig. 297: Measuring Valve Guide Wear
Courtesy of CHRYSLER LLC

1. Measure valve stem-to-guide clearance as follows:

2. Install valve into cylinder head so it is 15 mm (0.590 inch.) off the valve seat. A small piece of hose may be used to hold valve in place.
3. Attach dial indicator Tool (special tool #C-3339A, Set, Dial Indicator) to cylinder head and set it at right angle of valve stem being measured. Refer to **Fig. 297**.
4. Move valve to and from the indicator.
5. Note dial indicator reading and compare to engine specifications. Refer to **Engine - Specifications**.

NOTE: Replace cylinder head if stem-to-guide clearance exceeds specifications, or if guide is loose in cylinder head.

INSTALLATION

INSTALLATION

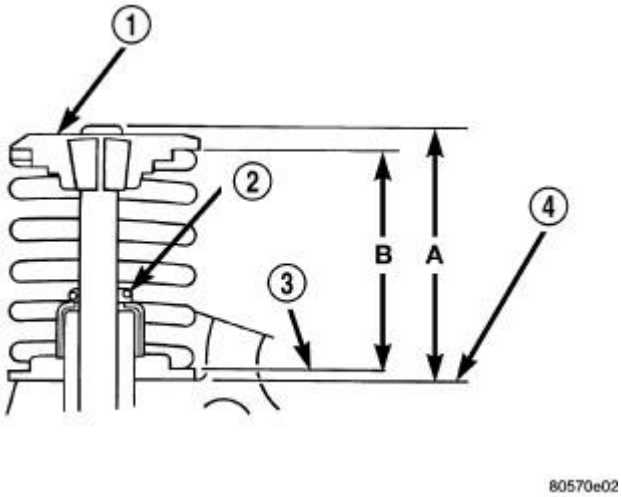

Fig. 298: Checking Valve Tip Height & Valve Spring Installed Height
Courtesy of CHRYSLER LLC

1 - SPRING RETAINER
2 - GARTER SPRING
3 - VALVE SPRING SEAT TOP
4 - CYLINDER HEAD SURFACE

1. Coat valve stems with clean engine oil and insert them in cylinder head.
2. If valves or seats have been reground, check valve tip height (A). Refer to **Fig. 298**. If valve tip height is greater than 43.65 mm (1.7185 in.) intake or 46.48 mm (1.8299 in.) exhaust, grind valve tip until within specifications. Make sure measurement is taken from cylinder head surface to the top of valve stem.
3. Install new valve stem seals.
4. Install valve springs. Refer to **SPRING(S), VALVE, INSTALLATION**.
5. Install cylinder head(s). Refer to **CYLINDER HEAD, INSTALLATION**.

ENGINE BLOCK

DESCRIPTION

DESCRIPTION

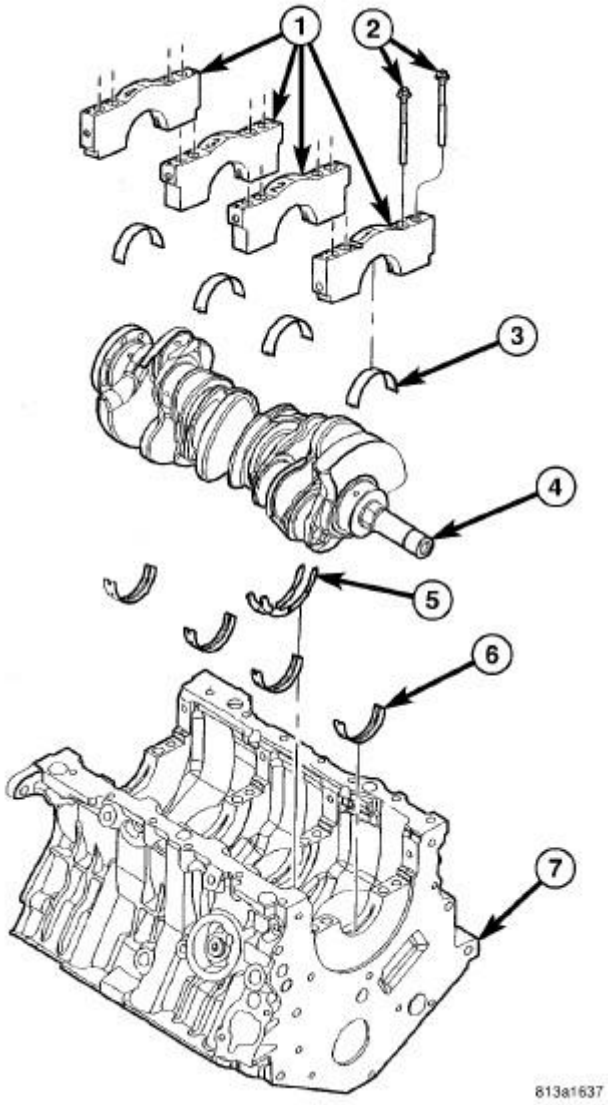

Fig. 299: Cylinder Block & Crankshaft
Courtesy of CHRYSLER LLC

1 - MAIN CAPS
2 - BOLTS
3 - MAIN BEARING-LOWER
4 - CRANKSHAFT

5 - THRUST WASHERS
6 - MAIN BEARING-UPPER
7 - ENGINE BLOCK

The cylinder block is made of heat treated aluminum with cast-in-place iron liners. Refer to **Fig. 299**. The block is a closed deck design with the right bank forward. To provide high rigidity and improved noise, vibration and harshness (NVH), the block has cast-in contours and ribs, along with powdered metal 6 bolt main caps (4 vertical, 2 horizontal), with a die cast aluminum structural beam windage tray mounted to the main caps.

INSPECTION

INSPECTION

ENGINE BLOCK

1. Clean cylinder block thoroughly and check all core hole plugs for evidence of leaking.
2. If new core plugs are to be installed. Refer to **Engine - Standard Procedure**.
3. Examine block and cylinder bores for cracks or fractures.
4. Check block deck surfaces for flatness. Deck surface must be within service limit of 0.1 mm (0.004 in.).

CYLINDER BORE

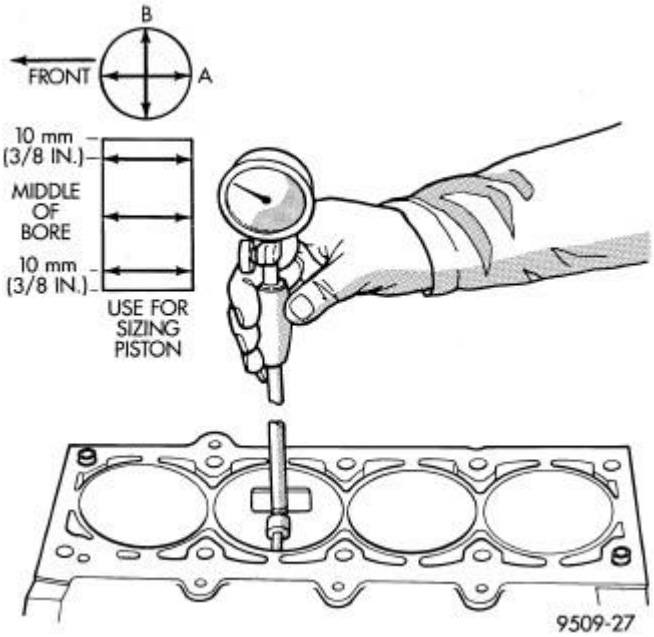

Fig. 300: Cylinder Bore Measurement
Courtesy of CHRYSLER LLC

NOTE: **The cylinder bores should be measured at normal room temperature, 21°C (70° F).**

The cylinder walls should be checked for out-of-round and taper with Tool C119 cylinder bore gauge, or equivalent. Refer to **Engine - Specifications**. Refer to **Fig. 300**. If the cylinder walls are badly scuffed or scored, the cylinder block should be replaced, and new pistons and rings fitted.

Measure the cylinder bore at three levels in directions A and B. Refer to **Fig. 300**. Top measurement should be 10 mm (3/8 in.) down and bottom measurement should be 10 mm (3/8 in.) up from bottom of bore. Refer to **Engine - Specifications**.

BEARING(S), CONNECTING ROD

STANDARD PROCEDURE

STANDARD PROCEDURE - CONNECTING RODS AND BEARINGS

CONNECTING ROD BEARINGS

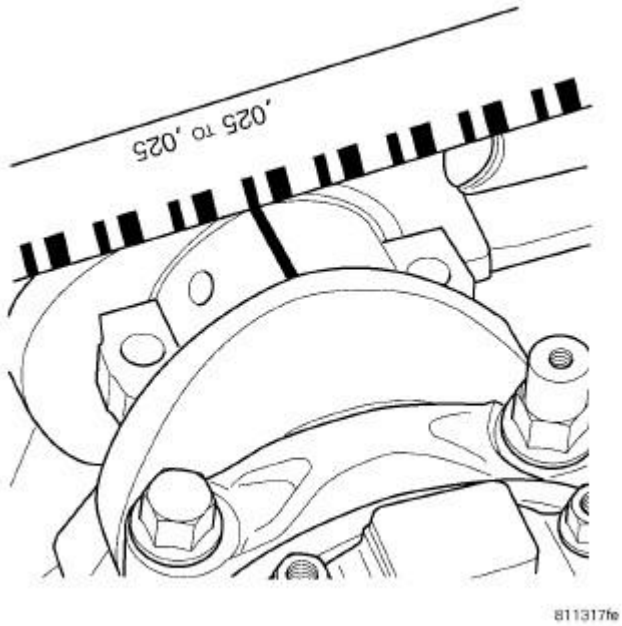

Fig. 301: Measuring Connecting Rod Bearing Clearance
Courtesy of CHRYSLER LLC

The bearing caps are not interchangeable and should be marked at removal to insure correct assembly.

The bearing shells must be installed with the tangs inserted into the machined grooves in the rods and caps. Install cap with the tangs on the same side as the rod.

Fit all rods on one bank until complete.

Limits of taper or out-of-round on any crankshaft journals should be held to specification limits. Bearings are available in 0.007 mm oversize (0.0003 in oversize), standard, 0.007 mm (0.0003 in) undersize 0.025 mm

(0.001 in) undersize, and 0.254 mm (0.010 in undersize). **Install the bearings in pairs. Do not use a new bearing half with an old bearing half. Do not file the rods or bearing caps.**

1. For measuring main bearing clearance and connecting rod bearing clearance use plastigage. For more information on using plastigage. Refer to **Engine - Standard Procedure**. Refer to **Engine - Specifications** for bearing clearance specifications.

SELECT FIT ROD BEARINGS

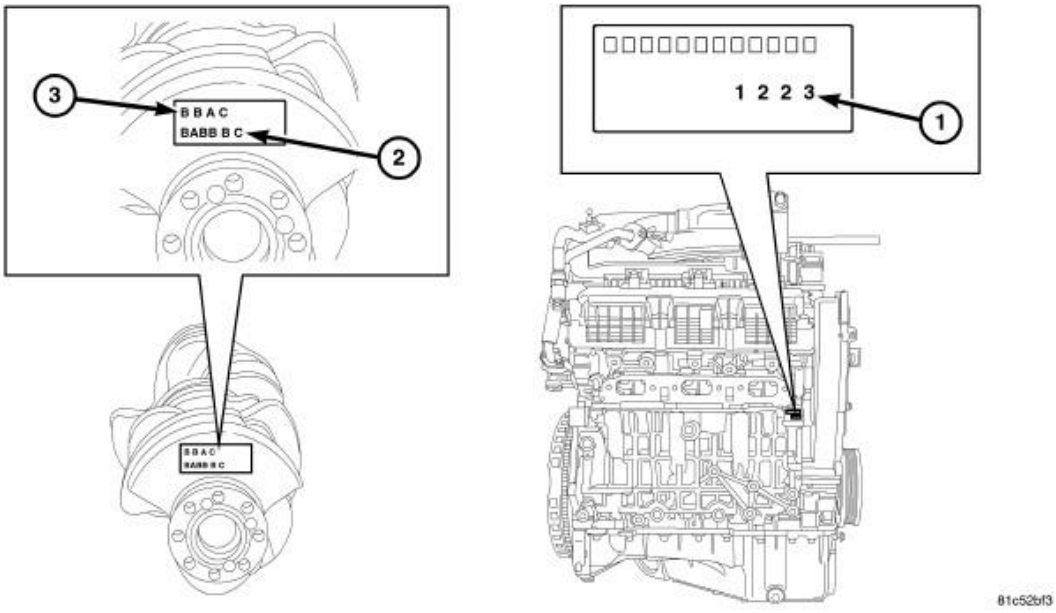

Fig. 302: Engine Block Main Bearing Codes, Rod Bearing Codes & Crank Main Bearing Code
Courtesy of CHRYSLER LLC

1 - Engine Block Main Bearing Codes
2 - Rod Bearing Codes
3 - Crank Main Bearing Code

1. Connecting rod bearings use select fit to achieve improved clearance control. On a new engine, the crankshaft journal is gaged to use a specific bearing size. The grade is indicated on the #9 counterweight (2) of the crankshaft and listed from left to right with the recommended size.

SELECT FIT ROD BEARING GRADES

GRADE	ROD BEARING CLASS	DESCRIPTION
A	1	0.007 mm (0.0003 in) undersize (+0.0035 mm shell thickness)
B	2	Standard
C	3	0.007 mm (0.0003 in) Oversize (-0.0035 mm Shell Thickness)

HOW TO DETERMINE ROD BEARING CLASS

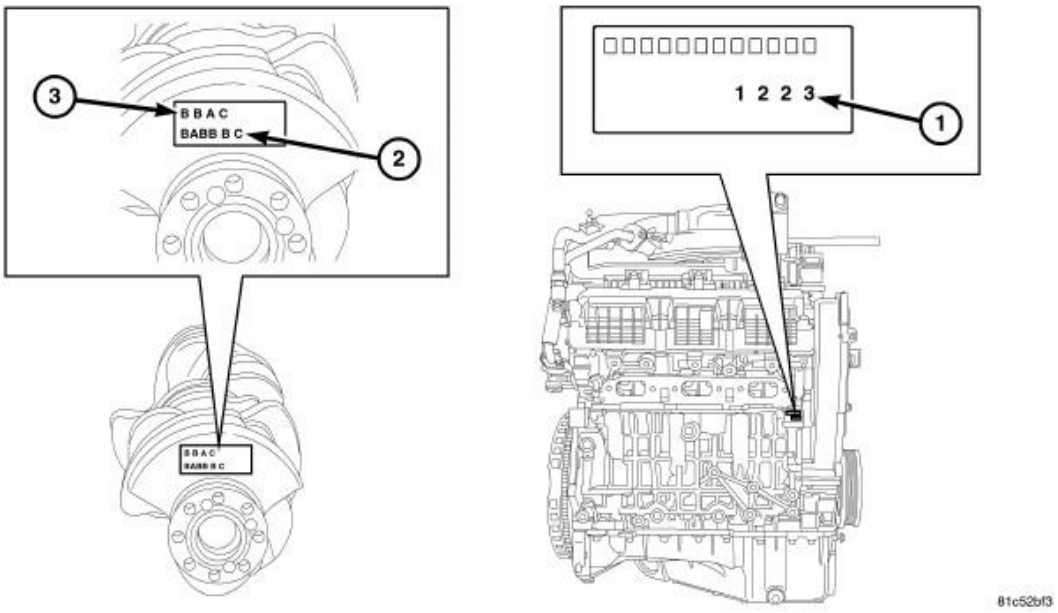

Fig. 303: Engine Block Main Bearing Codes, Rod Bearing Codes & Crank Main Bearing Code
Courtesy of CHRYSLER LLC

1 - Engine Block Main Bearing Codes
2 - Rod Bearing Codes
3 - Crank Main Bearing Code

This example shows how to determine the bearing class needed for each rod bearing, assuming that a new crankshaft is being installed in a new or existing engine block. If the code 'B' 'A' 'B' 'B' 'B' 'C' is stamped on the #9 counterweight of the crankshaft (2), then rod #1 would require Class 2 bearings, rod #2 would require Class 1 bearings, rod #3 would require Class 2 bearings, rod #4 would require Class 2 bearings, rod #5 would require Class 2 bearings, and rod #6 would require Class 3 bearings.

EXAMPLE

ROD BEARING SELECTION DATA						
Crankshaft #9 Counterweight Rod Bearing Grade Codes	B	A	B	B	B	C
Required rod bearing class	**2**	**1**	**2**	**2**	**2**	**3**

CONNECTING ROD BOLTS

NOTE: The rod bearing bolts should be examined before reuse. If the threads are necked down the bolts must be replaced.

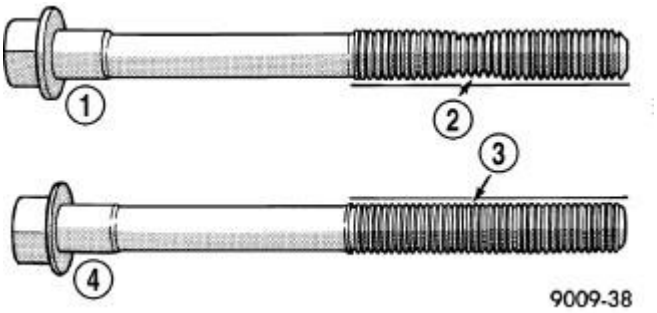

Fig. 304: Checking Cylinder Head Bolts For Stretching (Necking)
Courtesy of CHRYSLER LLC

1 - STRETCHED BOLT
2 - THREADS ARE NOT STRAIGHT ON LINE
3 - THREADS ARE STRAIGHT ON LINE
4 - UNSTRETCHED BOLT

1. Examine connecting rod bolts for stretching. Stretching can be checked by holding a scale or straight edge against the threads. If all the threads do not contact the scale the bolt must be replaced.
2. Before installing the bolts the threads should be cleaned and inspected.
3. Install clean bolts finger tight. Then alternately torque each bolt to assemble the cap properly.
4. Tighten the connecting rod cap bolts to specification. Refer to **Engine - Specifications**.

CONNECTING ROD SIDE CLEARANCE

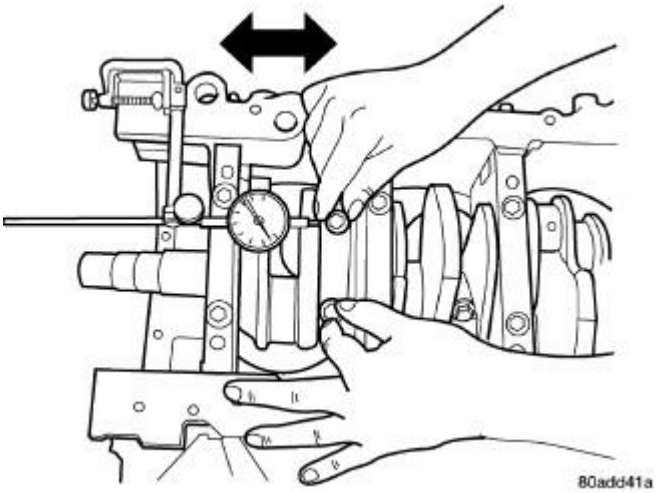

Fig. 305: Connecting Rod Side Clearance Measuring
Courtesy of CHRYSLER LLC

1. Mount a dial indicator to a stationary point on engine. Locate probe perpendicular to and resting against the connecting rod cap being checked. Move connecting rod all the way to rear of its travel (toward flywheel end of crank). Zero the dial indicator. Move connecting rod forward of to limit of travel (toward pulley end of crank) and read the dial indicator. Compare measurement to specification listed in engine

specifications. Refer to **Engine - Specifications**. Repeat procedure for each connecting rod. Turn crankshaft for connecting rod accessibility.

BEARING(S), CRANKSHAFT, MAIN

STANDARD PROCEDURE

STANDARD PROCEDURE - CRANKSHAFT MAIN BEARING FITTING

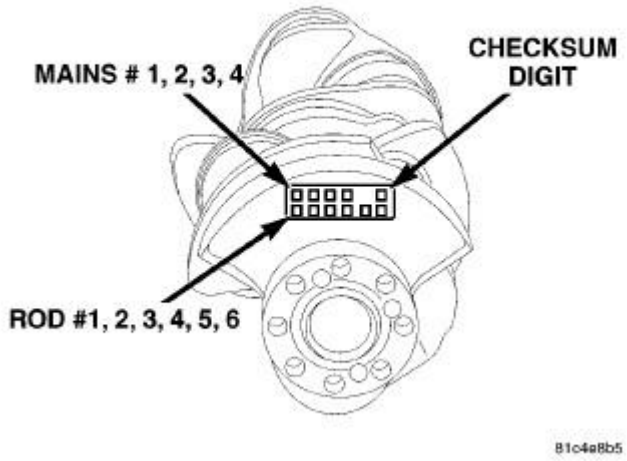

Fig. 306: Crankshaft Main Journal Grade Marking Location - Rear Of Block
Courtesy of CHRYSLER LLC

The main bearings use a "select fit" system to achieve proper oil clearances between the bearings and the crankshaft. When main bearings are being selected for a new crankshaft, the block and crankshaft grade identification marks must be used to identify the correct main bearings to use.

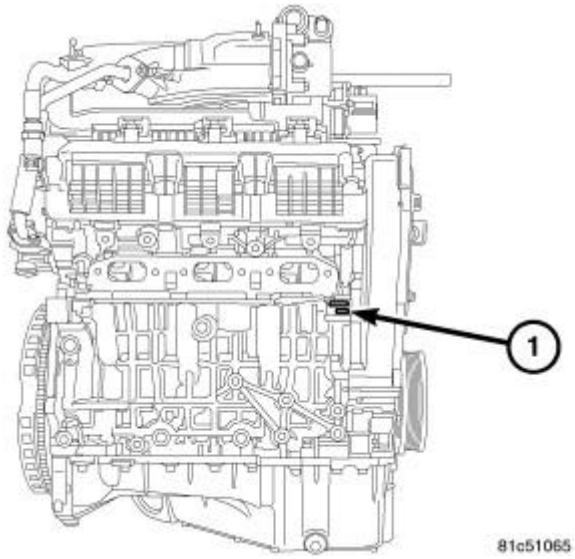

Fig. 307: Cylinder Block Main Bearing Bore Grade Codes
Courtesy of CHRYSLER LLC

1 - Item_1
2 - Item _2

The cylinder block main bearing bore grade codes (1) are located on the left side front of the engine block, just below the cylinder head mounting surface. These grade marks (1, 2, 3, or 4) are read left to right, corresponding to main bearing bore 1, 2, 3, or 4.

The grade marks for the crankshaft are located on the rearmost crankshaft counter weight. The crankshaft journal grade marks (A, B, or C) are read left to right, corresponding with journal number 1, 2, 3, 4. For an example, if the main bore grade on the side of the engine block is 3 and the journal grade on the #9 counterweight of the crankshaft is B, the proper select fit bearing would be a (2) +0.003 mm (+0.0001 in.).

Refer to the **EXAMPLE CRANKSHAFT MAIN BEARING SELECTION DATA** for a more detailed example of how to properly select the main bearings.

NOTE: Service main bearings have a number from (1-5) marked in ink on the bearing surface. For verification, refer to the for number to size identification. Refer to MAIN BEARING SELECTION CHART.

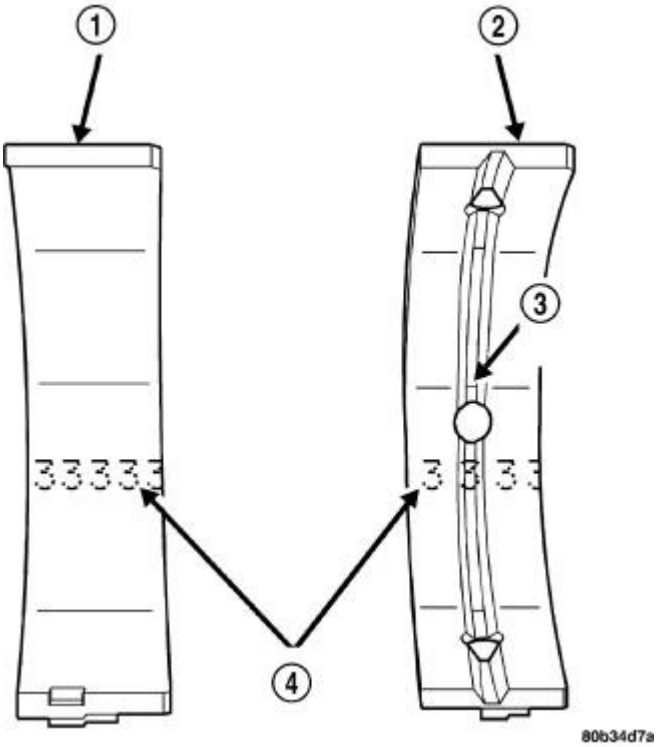

Fig. 308: Main Bearing Grade Marks
Courtesy of CHRYSLER LLC

1 - LOWER MAIN BEARING
2 - UPPER MAIN BEARING
3 - OIL FEED HOLE AND GROOVE
4 - GRADE SELECTION INK MARKS

The upper main bearing (2) has an oil feed hole and a center groove to allow lubrication of the main journal and must be properly positioned in the block.

MAIN BEARING SELECTION CHART

	Crankshaft Journal Grade Mark	Main Bearing Bore Grade Marks		
		1	2	3
Crankshaft Main Journal Grade Marks	A	(3) Standard	(2) +.003 mm (+0.0001 in.)	(1) +0.006 mm (+0.0002 in.)
	B	(4) -0.003 mm (-0.0001 in.)	(3) Standard	(2) +.003 mm (+0.0001 in.)
	C	(5) -0.006 mm (-0.0002 in.)	(4) -0.003 mm (-0.0001 in.)	(3) Standard

HOW TO DETERMINE CRANKSHAFT MAIN BEARING CLASS

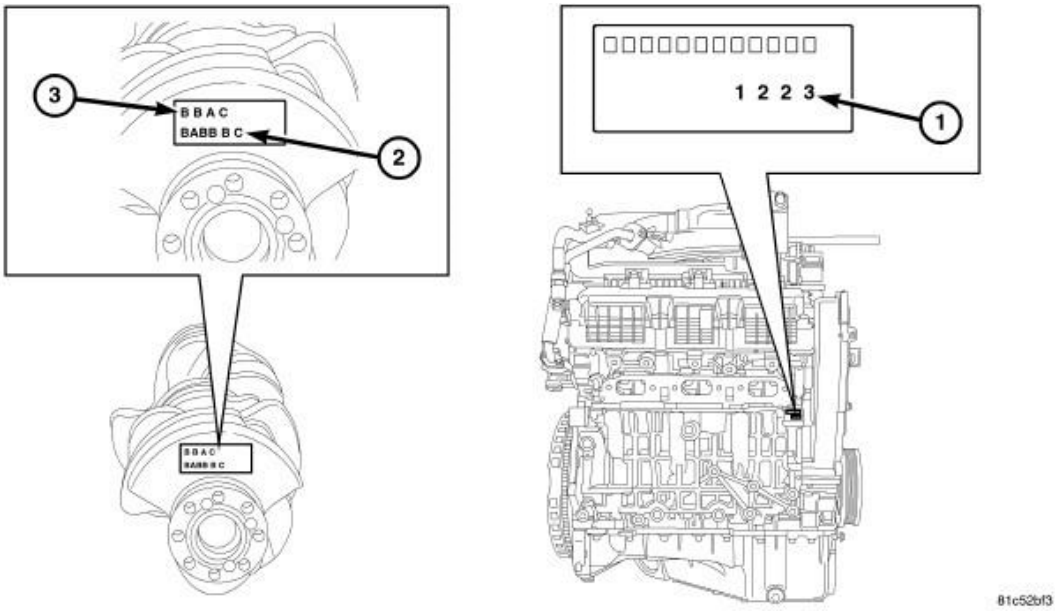

Fig. 309: Engine Block Main Bearing Codes, Rod Bearing Codes & Crank Main Bearing Code
Courtesy of CHRYSLER LLC

1 - Engine Block Main Bearing Codes
2 - Rod Bearing Codes
3 - Crank Main Bearing Code

This example shows how to determine the bearing class needed for each crankshaft main journal, assuming that a new crankshaft is being installed in a new or existing engine block. If the code 'B' 'B' 'A' 'C' is stamped on the #9 counterweight of the crankshaft (3), and the code '1' '2' '2' '3' is stamped on the side of the engine block (1), then main #1 would require Class 4 bearings, main #2 would require Class 3 bearings, main #3 would require Class 2 bearings, and main #4 would require Class 3 bearings.

EXAMPLE CRANKSHAFT MAIN BEARING SELECTION DATA

Crankshaft Main Journal Grade Codes	**B**	**B**	**A**	**C**
Cylinder Block Main Journal Grade Codes	1	2	2	3
Required bearing class	**4**	**3**	**2**	**3**

REMOVAL

REMOVAL

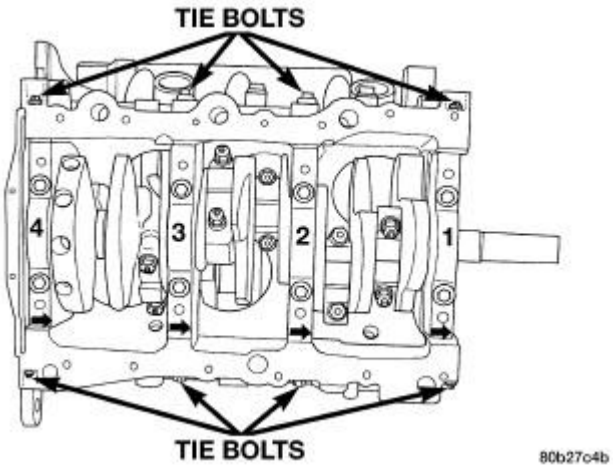

Fig. 310: Main Bearing Cap Identification & Bolts
Courtesy of CHRYSLER LLC

Bearing caps are not interchangeable and are marked to insure correct assembly. Refer to **Fig. 310**. Upper and lower bearing halves are NOT interchangeable.

1. Remove oil pan. Refer to **PAN, OIL, REMOVAL**.
2. Remove oil pick-up tube and windage tray.
3. Identify bearing caps before removal. Refer to **Fig. 310**.

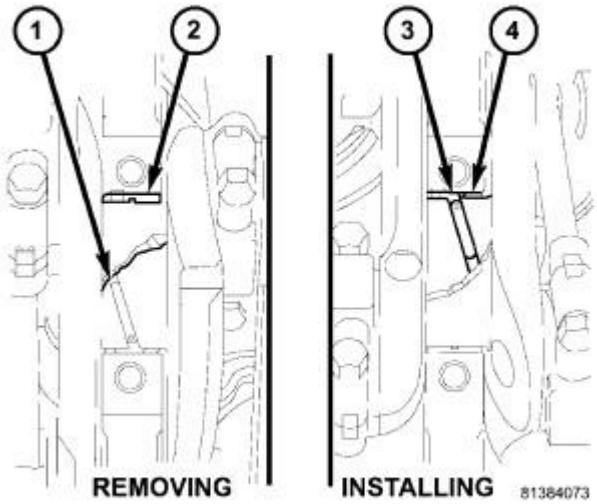

Fig. 311: Removing & Installing Upper Main Bearing With Special Tool C-3059
Courtesy of CHRYSLER LLC

1 - SPECIAL TOOL C-3059A
2 - BEARING
3 - SPECIAL TOOL C-3059A
4 - BEARING

4. Remove bearing caps one at a time. Remove upper half of bearing by inserting Main Bearing Tool (special tool #C-3059A, Remover/Installer) into the oil hole of crankshaft. Refer to **Fig. 311**.
5. Slowly rotate crankshaft clockwise, forcing out upper half of bearing shell.

INSTALLATION

INSTALLATION

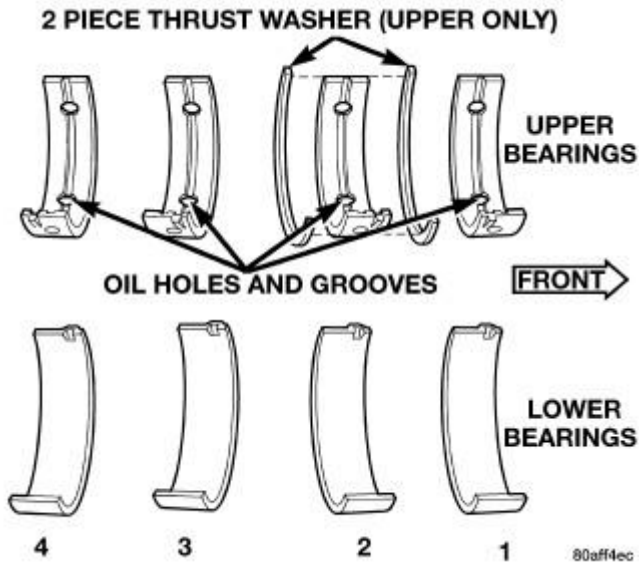

Fig. 312: Main Bearing Identification
Courtesy of CHRYSLER LLC

Bearing caps are not interchangeable and are marked to insure correct assembly. Upper and lower bearing halves are NOT interchangeable. Refer to **Fig. 312**.

CAUTION: Main bearings are select fit. Refer to Engine/Engine Block/BEARING(S), Crankshaft - Standard Procedure.

NOTE: Only one main bearing should be selectively fitted while all other main bearing caps are properly tightened.

When installing a new upper bearing shell, slightly chamber the sharp edges from the plain side.

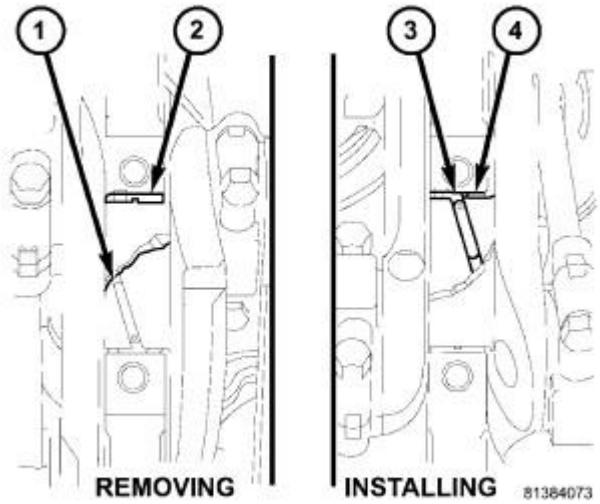

Fig. 313: Removing & Installing Upper Main Bearing With Special Tool C-3059
Courtesy of CHRYSLER LLC

1 - SPECIAL TOOL C-3059A
2 - BEARING
3 - SPECIAL TOOL C-3059A
4 - BEARING

1. Lubricate main bearing (4) with clean engine oil.
2. Start bearing (4) in place, and insert Main Bearing Tool (special tool #C-3059A, Remover/Installer) (3) into oil hole of crankshaft. Refer to **Fig. 313**.
3. Slowly rotate crankshaft counterclockwise sliding the bearing into position. Remove Main Bearing Tool (special tool #C-3059A, Remover/Installer).

NOTE: Lubricate main bearing cap bolts with engine oil before installation.

4. Lubricate and install lower bearing half and main cap Tighten bolts finger tight.

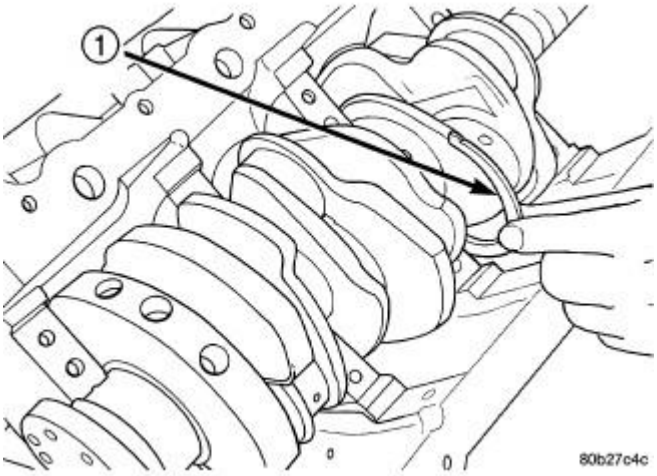

Fig. 314: Thrust Washer Installation
Courtesy of CHRYSLER LLC

1 - FRONT THRUST WASHER

5. For installing thrust washers (1) at the No. 2 main bearing location, use the following procedure:
    1. Move crankshaft forward to limit of travel. Lubricate and install the front thrust washer (1) by rolling the washer onto the machined shelf between the No. 2 upper main bulk head and crankshaft thrust surface. Refer to **Fig. 314**.
    2. Move crankshaft rearward to limit of travel. Lubricate and install the rear thrust washer by rolling the washer onto the machined shelf between the No. 2 upper main bulk head and crankshaft thrust surface.

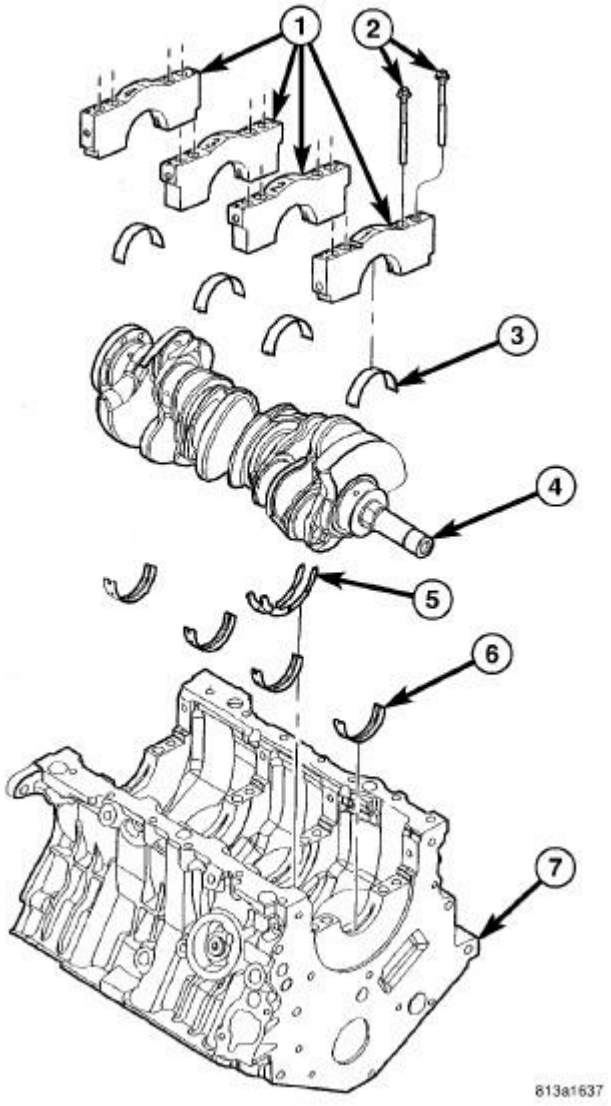

Fig. 315: Cylinder Block & Crankshaft
Courtesy of CHRYSLER LLC

1 - MAIN CAPS
2 - BOLTS
3 - MAIN BEARING-LOWER
4 - CRANKSHAFT
5 - THRUST WASHERS
6 - MAIN BEARING-UPPER
7 - ENGINE BLOCK

The main bearing cap bolts (2) must be tightened in the proper sequence. First the inner main cap bolts, secondly the windage tray bolts, lastly the main cap tie (horizontal) bolts.

6. Install each main bearing cap (1) and tighten inner bolts finger tight.
7. Tighten inner main bearing cap bolts (2) to 20 N.m + 1/4 turn (15 ft. lbs. + 1/4 turn).
8. Measure crankshaft end play. Refer to **CRANKSHAFT, STANDARD PROCEDURE**.
9. Install windage tray. Lubricate bolts with engine oil and tighten to 27 N.m + 1/4 turn (20 ft. lbs. + 1/4 turn).

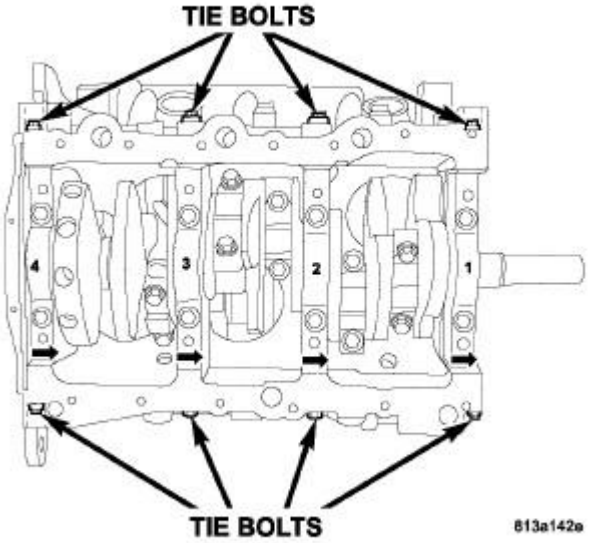

Fig. 316: Main Bearing Cap Identification & Bolts
Courtesy of CHRYSLER LLC

10. Install the main cap tie (horizontal) bolts and tighten to 28 N.m (250 in. lbs.). Refer to **Fig. 315** and **Fig. 316**.
11. Install oil pick-up tube.
12. Install oil pan. Refer to **PAN, OIL, INSTALLATION**.
13. Fill engine crankcase with proper oil to correct level.

CRANKSHAFT

DESCRIPTION

DESCRIPTION

The crankshaft is constructed of a forged micro alloy steel. A six throw, nine counterweight crankshaft is supported by four select fit main bearings with number two serving as the thrust washer location. The six separate connecting rod throws are an even-firing design which reduces torque fluctuations while a torsional vibration damper is used to control torsion caused vibration of the crankshaft. Rubber lipped seals are used at front and rear. The front seal is retained in the oil pump case and the rear seal is retained in a block-mounted

housing.

OPERATION

OPERATION

The crankshaft transfers force generated by combustion within the cylinder to the flywheel or flexplate.

STANDARD PROCEDURE

STANDARD PROCEDURE - MEASURING CRANKSHAFT END PLAY

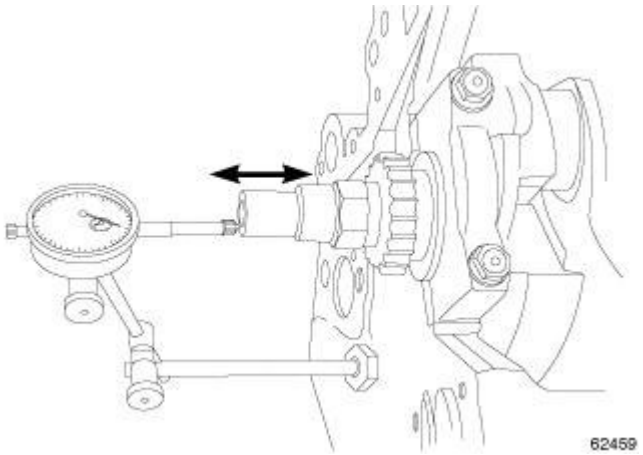

Fig. 317: Measuring Crankshaft End Play
Courtesy of CHRYSLER LLC

1. Mount a dial indicator to front of engine with the locating probe on nose of crankshaft.
2. Move crankshaft all the way to the rear of its travel.
3. Zero the dial indicator.
4. Move crankshaft all the way to the front and read the dial indicator. Crankshaft end play must be within specification. Refer to **Engine - Specifications**.

REMOVAL

REMOVAL

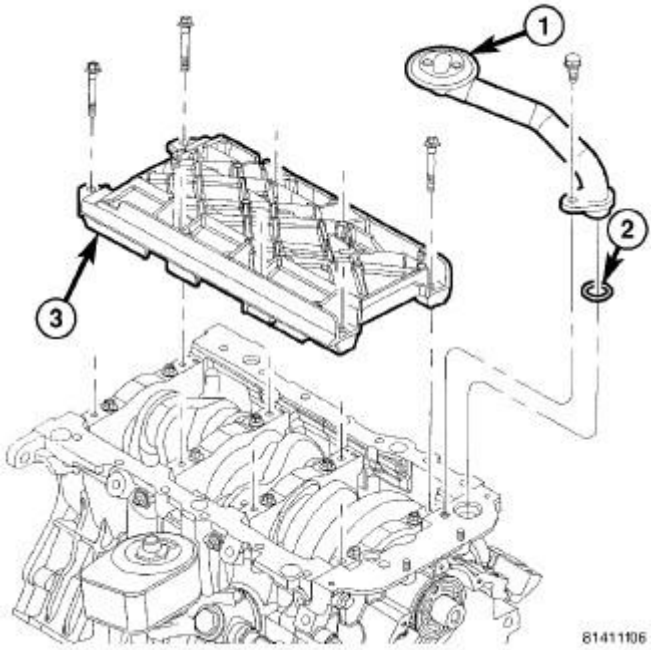

Fig. 318: Oil Pick Up Tube, Seal & Windage Tray
Courtesy of CHRYSLER LLC

1 - OIL PICK UP TUBE
2 - SEAL
3 - WINDAGE TRAY

1. Remove engine from vehicle. Refer to **REMOVAL**.
2. Remove oil pan. Refer to **PAN, OIL, REMOVAL**.
3. Remove oil pickup tube (1) and windage tray (3).
4. Remove front timing belt cover. Refer to **COVER(S), ENGINE TIMING, FRONT, REMOVAL** and **COVER(S), ENGINE TIMING, REAR, REMOVAL**.
5. Remove timing belt, tensioner and crankshaft sprocket.
6. Tap dowel pin out of crankshaft.
7. Remove oil pump assembly. Refer to **PUMP, ENGINE OIL, REMOVAL**.

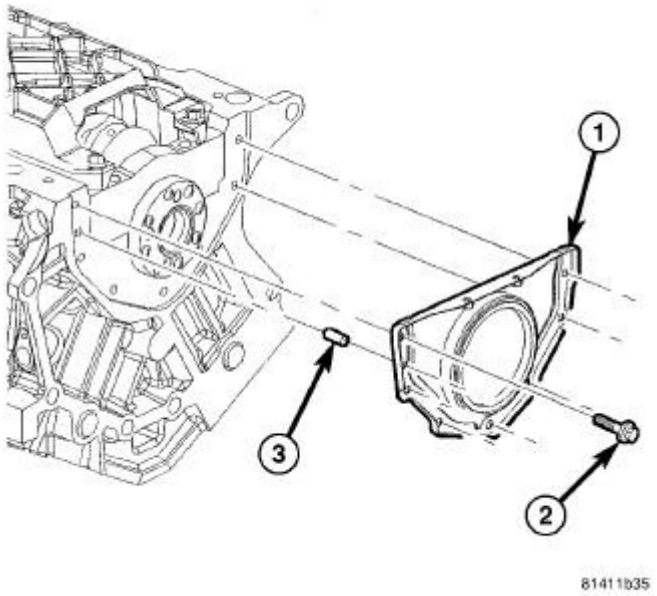

Fig. 319: Rear Crankshaft Oil Seal, Bolt & Alignment Dowel
Courtesy of CHRYSLER LLC

1 - REAR OIL SEAL AND RETAINER ASSEMBLY
2 - BOLT
3 - ALIGNMENT DOWEL

8. Remove crankshaft rear oil seal retainer (1).

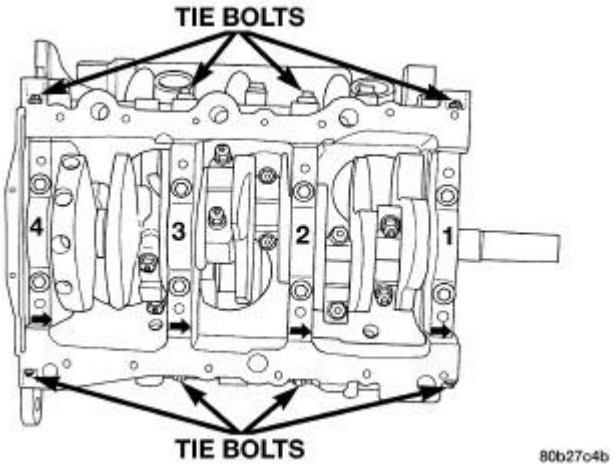

Fig. 320: Main Bearing Cap Identification & Bolts
Courtesy of CHRYSLER LLC

NOTE: Do not use a metal stamp to mark the bearing caps. Do use a scribe or

paint mark.

9. Identify rod bearing caps before removal. Also scribe a location reference mark from the #2 main bearing cap to the engine block to use as a guide during reassembly.
10. Remove connecting rod bearing caps. Connecting rod bearing caps are not interchangeable and should be paint marked or scribed before removal to insure correct assembly.

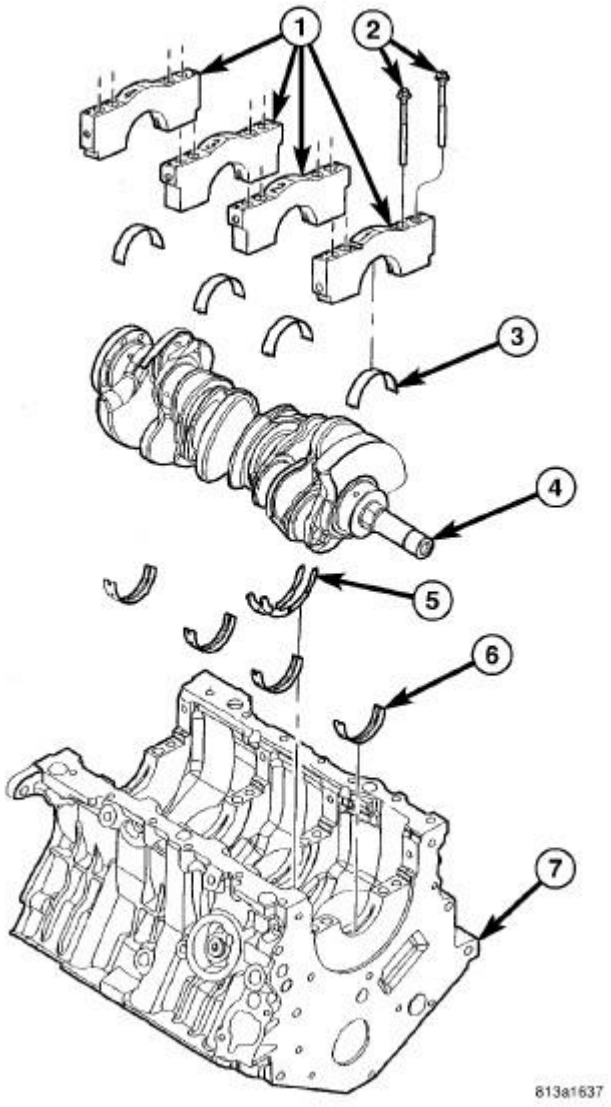

Fig. 321: Cylinder Block & Crankshaft
Courtesy of CHRYSLER LLC

11. Remove main bearing caps (1). Main bearing caps are not interchangeable and are marked to insure correct assembly and location.
12. Remove crankshaft (4) from cylinder block (7).

NOTE: **Before installing crankshaft, refer to fitting of main bearings and installation of connecting rod bearings. Refer to Engine/Engine Block/BEARING(S), Crankshaft - Standard Procedure. Refer to BEARING(S), CONNECTING ROD, STANDARD PROCEDURE.**

INSPECTION

INSPECTION

The crankshaft journals should be checked for excessive wear, taper and scoring. Limits of taper on any crankshaft journals should be held to 0.010 mm (0.0004 in.). Limits for journal roundness should be 0.008 mm (0.0003 in.). Journal grinding should not exceed 0.254 mm (0.010 in.) under the standard journal diameter. DO NOT grind thrust faces of Number 2 main bearing. DO NOT nick crank pin or bearing fillets. After grinding, remove rough edges from crankshaft oil holes and clean out all passages. Crank journals must be polished smooth 0.10 micron ra.

CAUTION: **With a forged steel crankshaft it is important that the final paper or cloth polish after any journal regrind be in the same direction as normal rotation in the engine.**

INSTALLATION

INSTALLATION

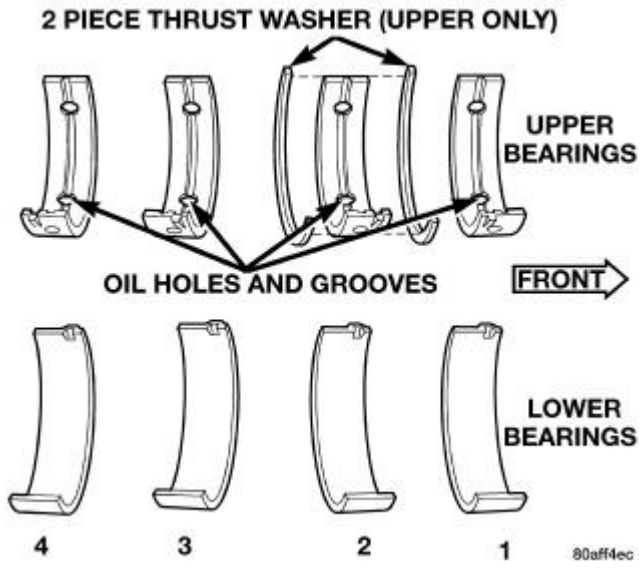

Fig. 322: Main Bearing Identification
Courtesy of CHRYSLER LLC

CAUTION: **Main bearings are select fit for proper bearing size selection. Refer to Engine/Engine Block/BEARING(S), Crankshaft - Standard Procedure.**

1. Install crankshaft upper main bearings in cylinder block. Ensure oil holes in bearings line up with oil holes in cylinder block. Refer to **Engine/Engine Block/BEARING(S), Crankshaft - Standard Procedure**.
2. Install the crankshaft to cylinder block.

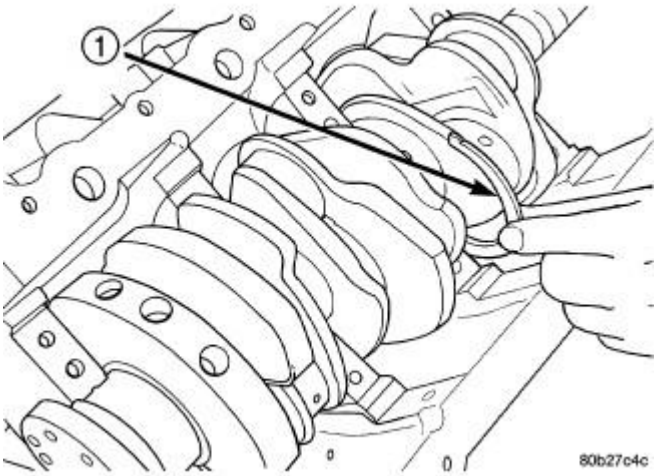

Fig. 323: Thrust Washer Installation
Courtesy of CHRYSLER LLC

1 - FRONT THRUST WASHER

3. Move crankshaft forward to limit of travel. Lubricate and install the front thrust washer by rolling the washer onto the machined shelf between the No. 2 upper main bulk head and crankshaft thrust surface.
4. Move crankshaft rearward to limit of travel. Lubricate and install the rear thrust washer by rolling the washer onto the machined shelf between the No. 2 upper main bulk head and crankshaft thrust surface.

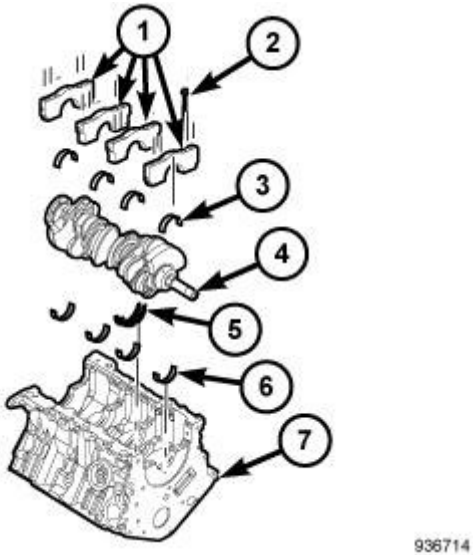

Fig. 324: Main Bearings Assembly
Courtesy of CHRYSLER LLC

5. Install lower main bearings (3) into main bearing caps (1).
6. Lubricate lower main bearings (3) with clean engine oil.

NOTE: Lubricate main bearing cap inner bolts (2) with engine oil before installation.

7. Install each main cap (1) and tighten inner bolts (2) finger tight. Align the location reference mark scribed on the #2 main bearing cap during disassembly.

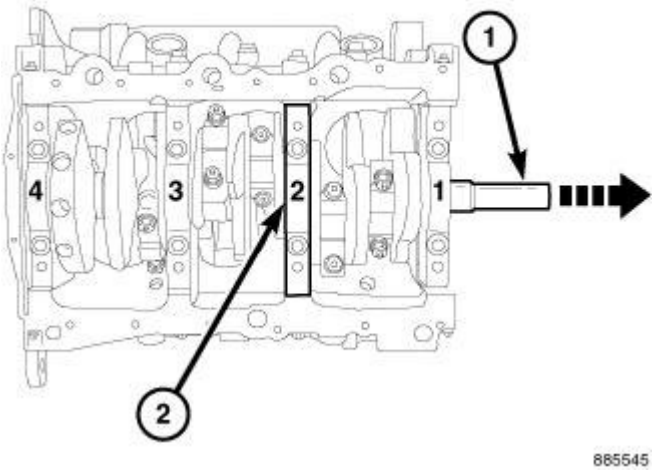

Fig. 325: Moving Crankshaft Forward To Limit Of Travel
Courtesy of CHRYSLER LLC

CAUTION: The #2 main bearing cap must be centered over the inner bolt holes located on the block. Failure to center the bearing cap can result in contact with the crankshaft counterweights and thrust bearing failure.

8. Verify that the #2 main bearing cap is properly centered over the inner bolt holes located in the block. Tighten main bearing cap inner bolts to 20 N.m (15 ft. lbs.).
9. Move crankshaft (1) forward to limit of travel so that crankshaft thrust face (2) is tight against thrust bearing.
10. Verify that a 0.25 mm (0.010 inch) shim or feeler gage will fit between the #2 main cap (rear face) and the crankshaft thrust face. Slide the gage side-to-side all of the way across the cap making sure that the clearance at all areas exceeds 0.25 mm (0.010 inch). The feeler gage should slide all the way down to the #2 main journal.

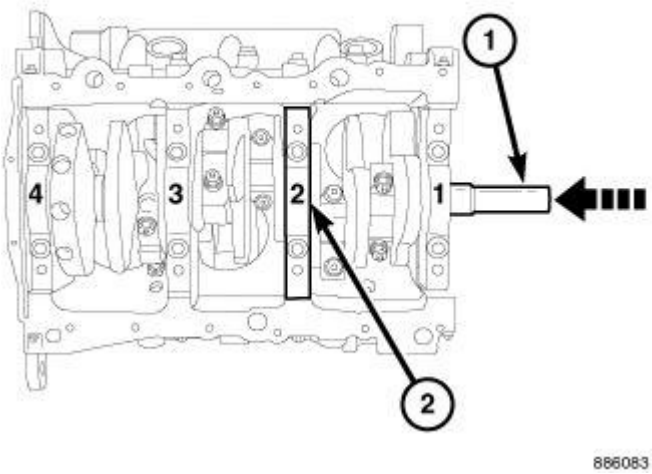

Fig. 326: Moving Crankshaft Rearward To Limit Of Travel
Courtesy of CHRYSLER LLC

11. Move crankshaft (1) rearward to limit of travel so that crankshaft thrust face (2) is tight against thrust bearing.
12. Verify that a 0.25 mm (0.010 inch) shim or feeler gage will fit between the #2 main cap (front face) and the crankshaft thrust face. Slide the gage side-to-side all of the way across the cap making sure that the clearance at all areas exceeds 0.25 mm (0.010 inch). The feeler gage should slide all the way down to the #2 main journal.
13. A properly centered #2 main bearing cap has a minimum of 0.25 mm (0.010 inch) clearance in both the forward and rearward crankshaft positions. If measured clearance is less than 0.25 mm (0.010 inch), loosen and reposition #2 main bearing cap until this minimum clearance can be verified by repeating this procedure.
14. Following verification of proper #2 bearing cap centering, finish tightening the main bearing cap inner bolts an additional 90° turn.

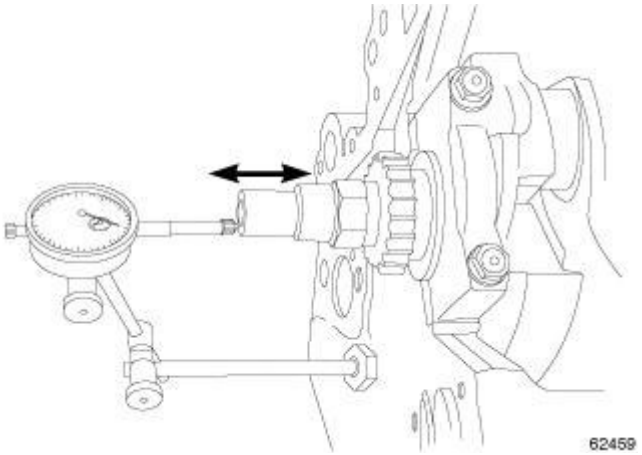

Fig. 327: Measuring Crankshaft End Play
Courtesy of CHRYSLER LLC

15. Measure crankshaft end play. Refer to **CRANKSHAFT, STANDARD PROCEDURE**.

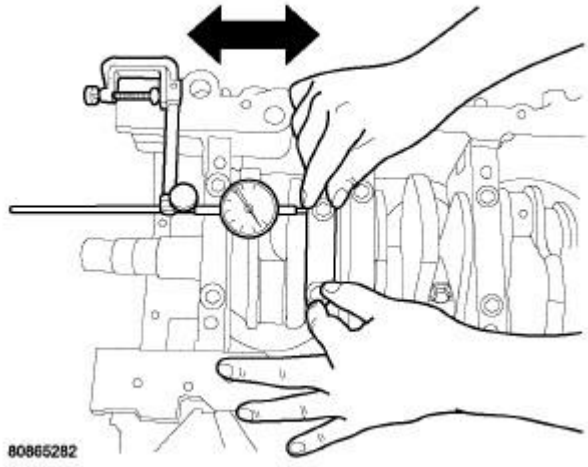

Fig. 328: Measuring Connecting Rod Side Clearance
Courtesy of CHRYSLER LLC

16. Install connecting rods and measure side clearance. Refer to **BEARING(S), CONNECTING ROD, STANDARD PROCEDURE**.

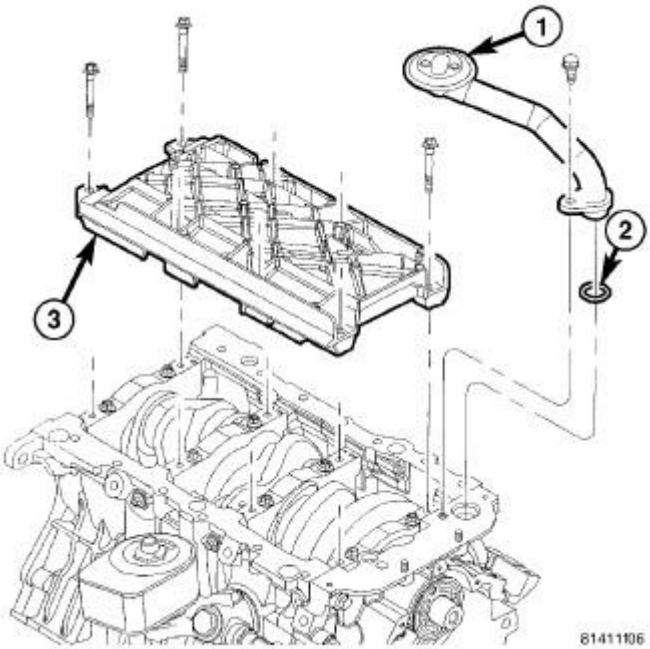

Fig. 329: Oil Pick Up Tube, Seal & Windage Tray
Courtesy of CHRYSLER LLC

1 - OIL PICK UP TUBE
2 - SEAL
3 - WINDAGE TRAY

NOTE: **The main bearing cap bolts must be tightened in the proper sequence. First the inner main cap bolts, secondly the windage tray bolts, lastly the main cap tie (horizontal) bolts.**

17. Install windage tray (3). Lubricate bolts with engine oil. Finger tighten all bolts first, then tighten to 28 N.m + 90° turn (20 ft. lbs. + 90° turn) beginning with the inside bolts tightening outward.
18. Install oil pickup tube (1) and tighten bolt to 28 N.m (20 ft. lbs.).

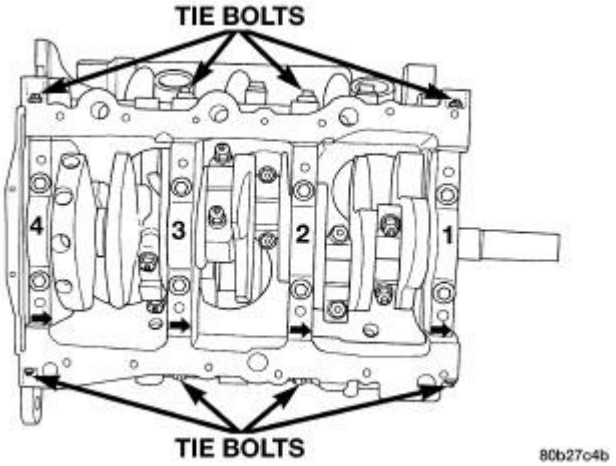

Fig. 330: Main Bearing Cap Identification & Bolts
Courtesy of CHRYSLER LLC

19. Install the main cap tie (horizontal) bolts and tighten to 28 N.m (20 ft. lbs.).

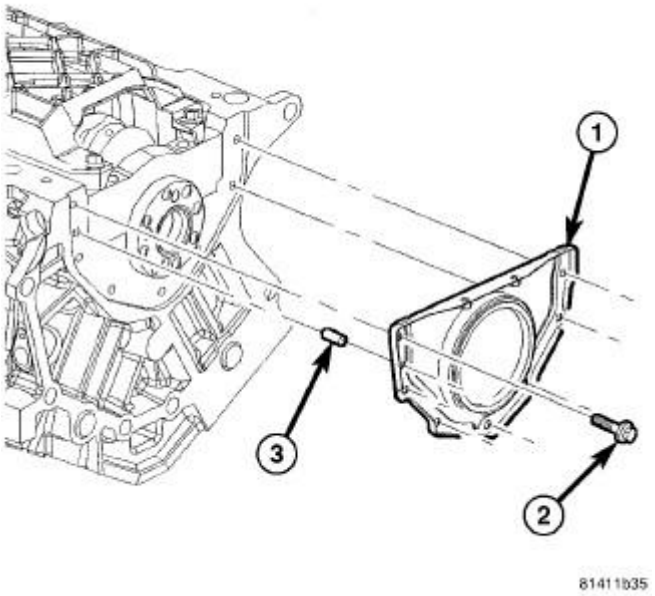

Fig. 331: Rear Crankshaft Oil Seal, Bolt & Alignment Dowel
Courtesy of CHRYSLER LLC

1 - REAR OIL SEAL AND RETAINER ASSEMBLY
2 - BOLT
3 - ALIGNMENT DOWEL

20. Install rear crankshaft oil seal retainer and oil seal (1).

21. Install oil pump assembly. Refer to **PUMP, ENGINE OIL, INSTALLATION**.
22. Install dowel pin in crankshaft. Refer to **SEAL, CRANKSHAFT OIL, FRONT, INSTALLATION**.
23. Install crankshaft sprocket, timing belt and tensioner.
24. Install front timing belt cover. Refer to **COVER(S), ENGINE TIMING, FRONT, INSTALLATION** and **COVER(S), ENGINE TIMING, REAR, INSTALLATION**.
25. Install oil pan. Refer to **PAN, OIL, INSTALLATION**.
26. Install engine assembly. Refer to **INSTALLATION**.
27. Fill engine crankcase with proper amount of oil.

DAMPER, VIBRATION

REMOVAL

REMOVAL

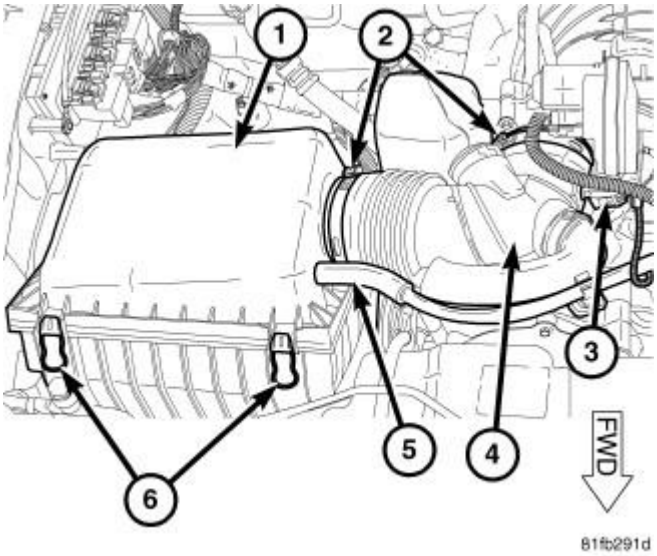

Fig. 332: Air Filter Housing
Courtesy of CHRYSLER LLC

1. Disconnect and isolate the negative battery cable.
2. Remove the air cleaner element housing. Refer to **BODY, AIR CLEANER, REMOVAL**.

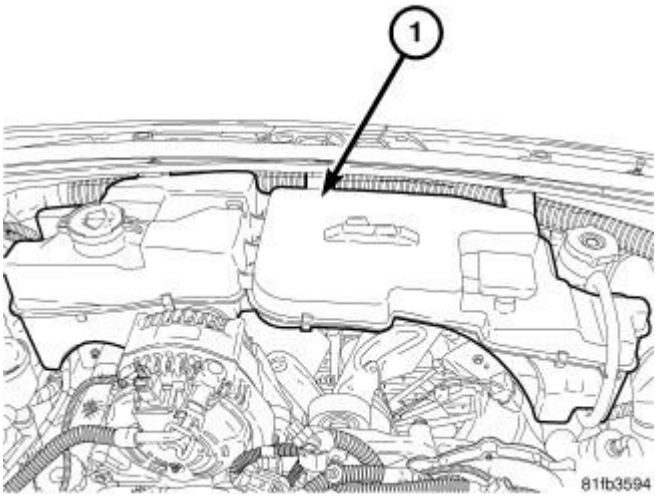

Fig. 333: Coolant Recovery/Washer Fluid Reservoir
Courtesy of CHRYSLER LLC

3. Disconnect two washer pump hoses, coolant recovery hose and washer pump electrical connector from the coolant recovery/washer fluid reservoir assembly (1).
4. Remove 5 screws and remove the coolant recovery/washer fluid reservoir assembly (1).

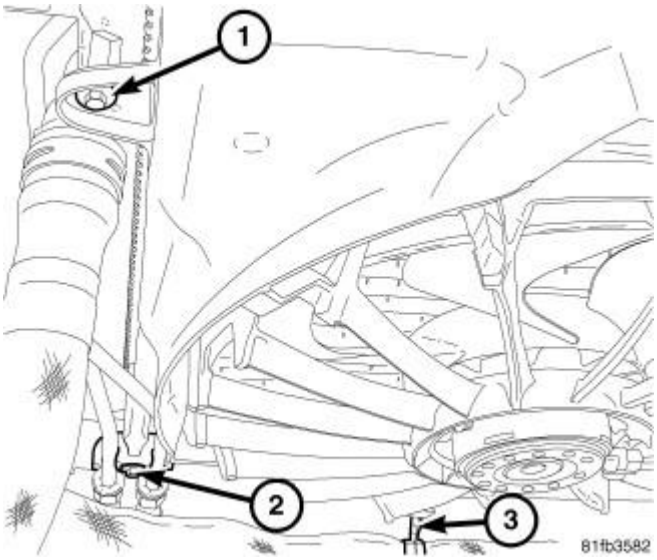

Fig. 334: Radiator Fastener, Transmission Cooling Line Retainer Bolt & Radiator Hose Retainer
Courtesy of CHRYSLER LLC

5. Disengage the radiator hose retainer (3) from the electric fan shroud.
6. Remove transmission cooling line retainer bolt (2) from the electric fan shroud.

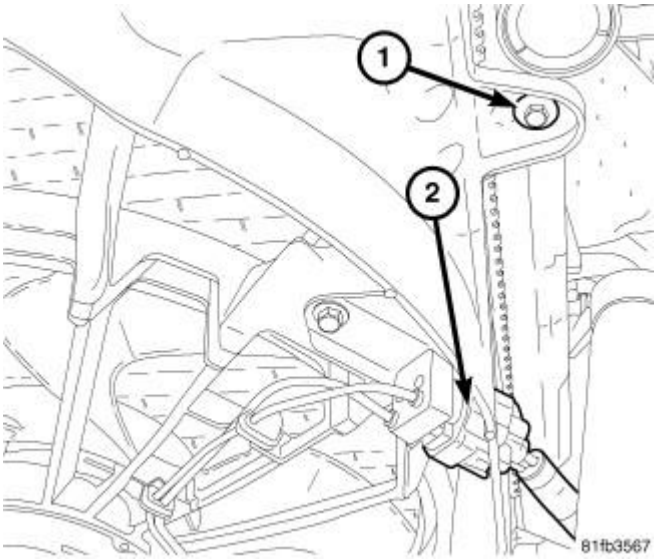

Fig. 335: Electrical Fan Connector & Bolt
Courtesy of CHRYSLER LLC

7. Disconnect the electric fan connector (2) from the electric fan shroud.
8. Remove two bolts (1) and lift the electric fan shroud from vehicle.

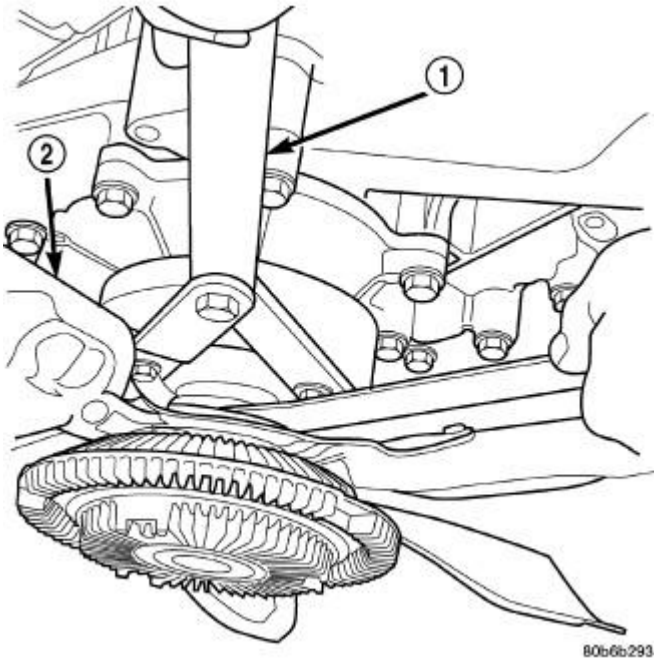

Fig. 336: Using Special Tool 6958 Spanner Wrench & Adapter Pins 8346
Courtesy of CHRYSLER LLC

9. Use Adapter Pins (special tool #8346, Pins, Adapter) in Spanner Wrench (special tool #6958, Wrench, Spanner) (1) to hold the pulley and remove fan/viscous fan drive assembly. Refer to **FAN, COOLING, VISCOUS, REMOVAL** and **FAN, COOLING, ELECTRIC, REMOVAL** .

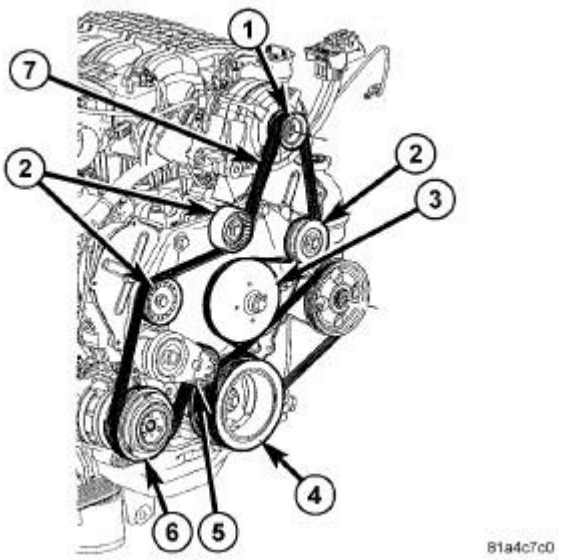

Fig. 337: Accessory Drive Belt Routing - 4.0L
Courtesy of CHRYSLER LLC

10. Remove accessory drive belt (7). Refer to **BELT, SERPENTINE, REMOVAL** and **BELT, SERPENTINE, POWER STEERING, REMOVAL** .

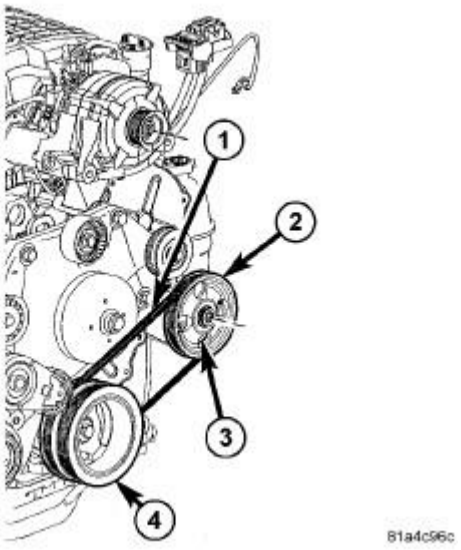

Fig. 338: Power Steering Belt
Courtesy of CHRYSLER LLC

Remove the power steering belt (1). Refer to **BELT, SERPENTINE, REMOVAL** and **BELT, SERPENTINE, POWER STEERING, REMOVAL** .

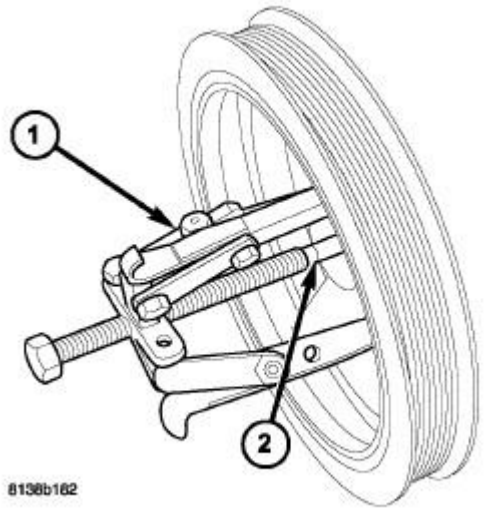

Fig. 339: Removing Crankshaft Damper
Courtesy of CHRYSLER LLC

11. Remove crankshaft damper bolt.
12. Using Puller (special tool #1023, Puller) (1) and Crankshaft Insert (special tool #9020, Insert, Crankshaft) (2), remove crankshaft damper.

INSTALLATION

INSTALLATION

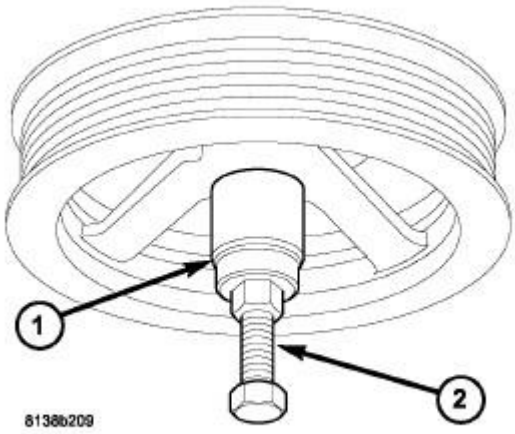

Fig. 340: Crankshaft Damper - Installation
Courtesy of CHRYSLER LLC

1 - SPECIAL TOOL 6792-1
2 - SPECIAL TOOL C-4685-C1

1. Install crankshaft damper using Forcing Screw (special tool #C-4685-C1, Screw, Forcing) (2), with Nut and Thrust Bearing from (special tool #6792, Installer, Crank Sprocket), and (special tool #6792-1, Cup) Installer (1).

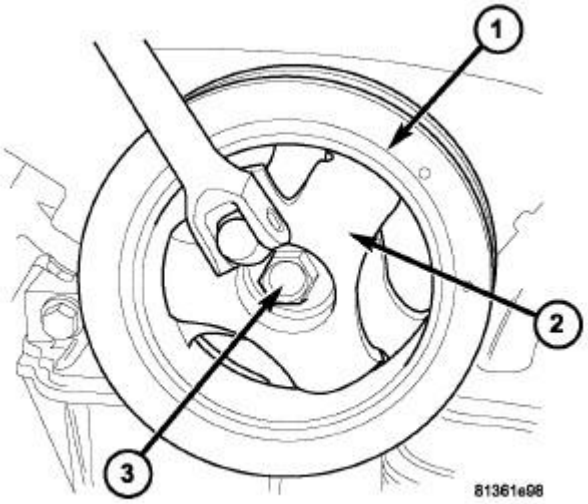

Fig. 341: Damper, Bolt & Holder
Courtesy of CHRYSLER LLC

2. Install crankshaft damper bolt (3). Tighten bolt to 95 N.m (70 ft. lbs.) while holding damper (1) with Damper Holding Fixture (special tool #9365, Holding Fixture, Damper) (2).

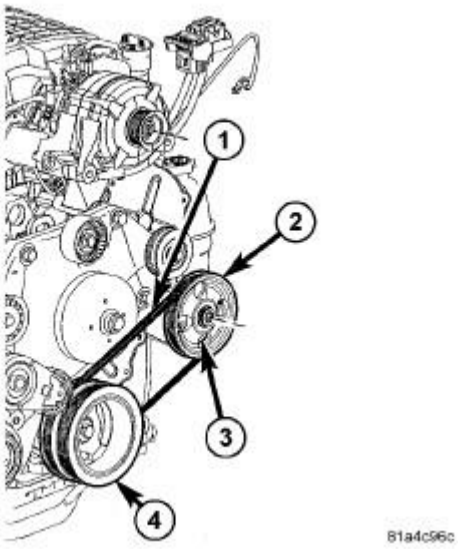

Fig. 342: Power Steering Belt
Courtesy of CHRYSLER LLC

3. Install the power steering belt (1). Refer to **BELT, SERPENTINE, INSTALLATION** and **BELT, SERPENTINE, POWER STEERING, INSTALLATION** .

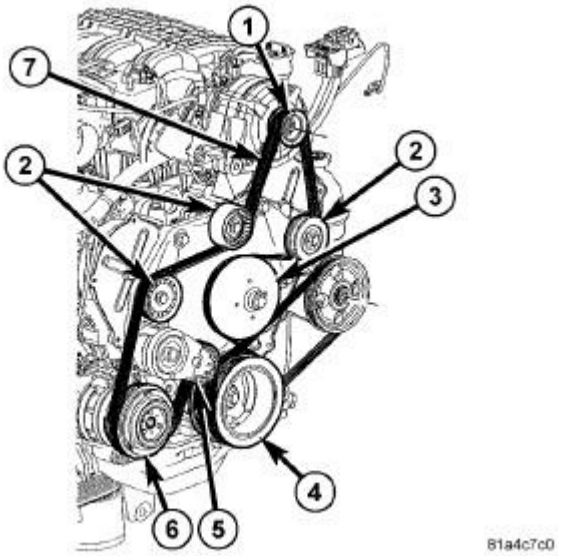

Fig. 343: Accessory Drive Belt Routing - 4.0L
Courtesy of CHRYSLER LLC

4. Install the accessory drive belt (7). Refer to **BELT, SERPENTINE, INSTALLATION** and **BELT, SERPENTINE, POWER STEERING, INSTALLATION** .

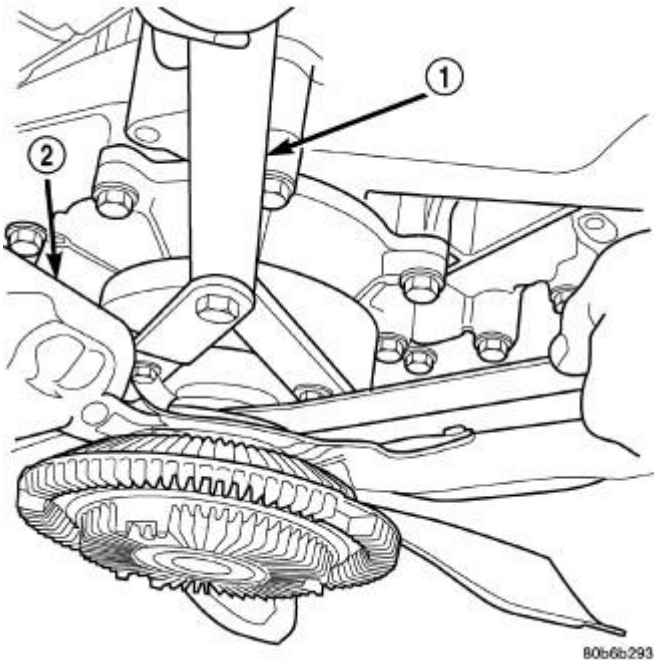

Fig. 344: Using Special Tool 6958 Spanner Wrench & Adapter Pins 8346
Courtesy of CHRYSLER LLC

5. Use Adapter Pins (special tool #8346, Pins, Adapter) in Spanner Wrench (special tool #6958, Wrench, Spanner) (1) to hold the pulley while installing the fan blade/viscous fan drive assembly. Tighten mounting nut to 50 N.m (37 ft. lbs.).

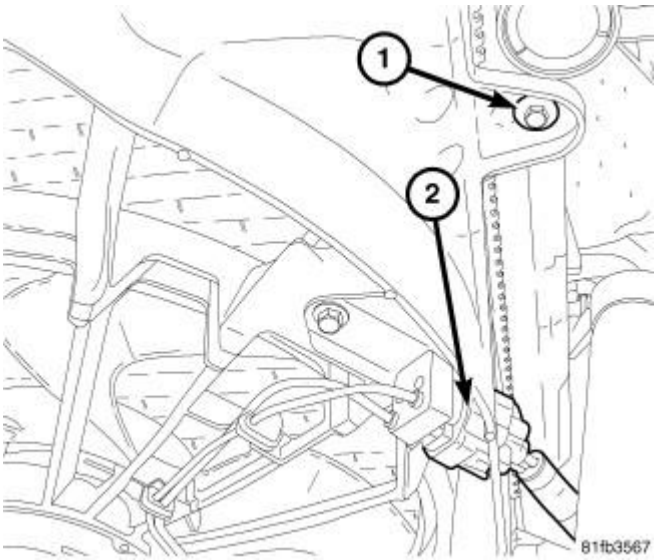

Fig. 345: Electrical Fan Connector & Bolt
Courtesy of CHRYSLER LLC

6. Install electric fan shroud with two screws (1). Tighten screws to 6 N.m (50 in. lbs.).
7. Connect and lock the electric fan connector (2).

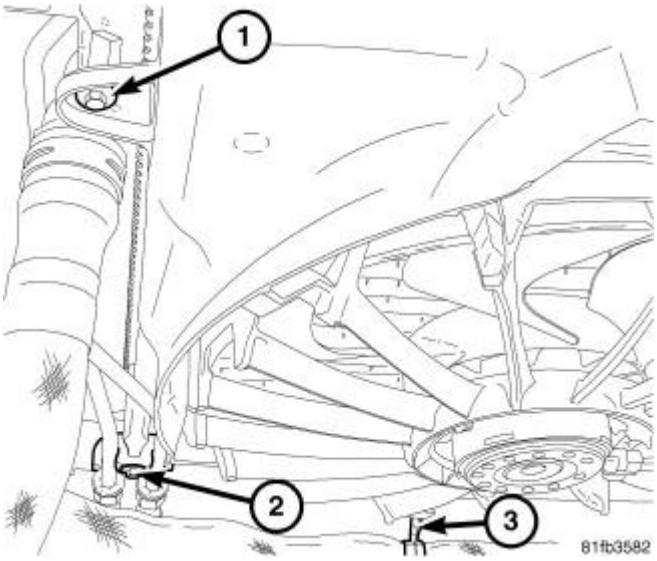

Fig. 346: Radiator Fastener, Transmission Cooling Line Retainer Bolt & Radiator Hose Retainer
Courtesy of CHRYSLER LLC

8. Install transmission cooler line retainer to electric fan shroud with one screw (2).
9. Install radiator hose retainer (3) to electric fan shroud.

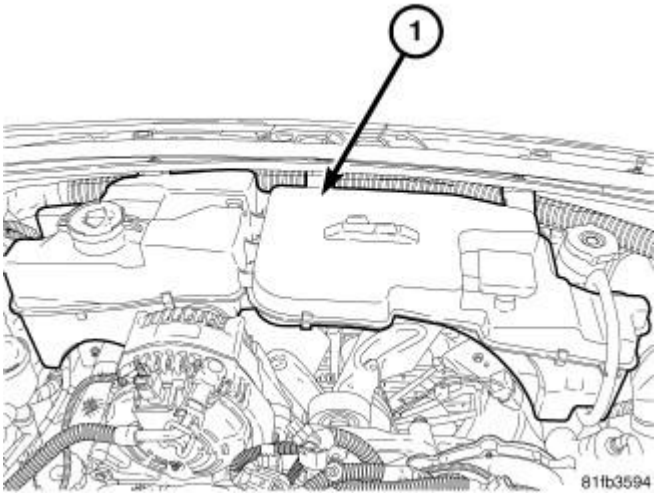

Fig. 347: Coolant Recovery/Washer Fluid Reservoir
Courtesy of CHRYSLER LLC

10. Install the coolant recovery/washer fluid reservoir assembly (1) with five screws. Connect two washer pump hoses, coolant recovery hose, and washer pump electrical connector.

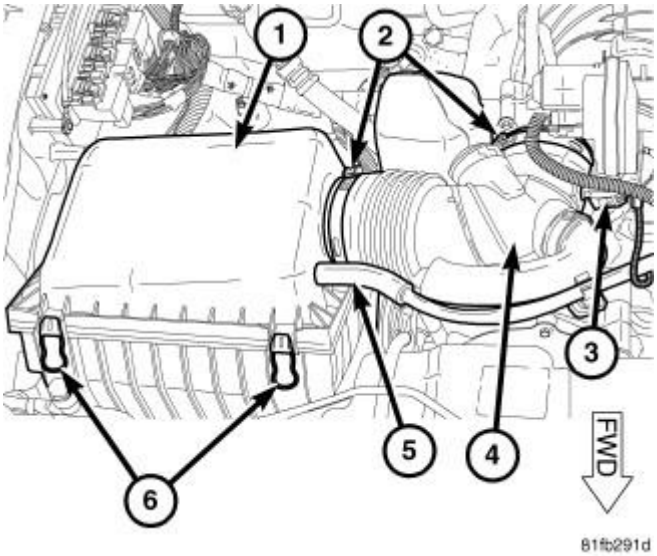

Fig. 348: Air Filter Housing
Courtesy of CHRYSLER LLC

11. Install and connect the air cleaner element housing (1). Refer to **AIR CLEANER, INSTALLATION**.
12. Connect the negative battery cable. Tighten nut to 4.5 N.m (40 in. lbs.).

FLEXPLATE

REMOVAL

REMOVAL

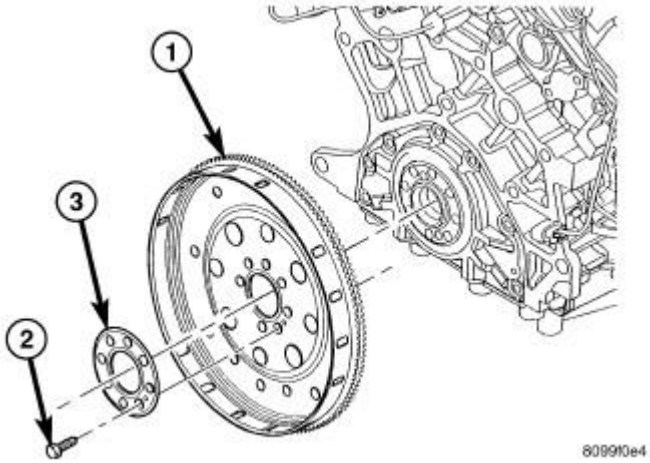

Fig. 349: Flex Plate With Bolts & Backing Plate
Courtesy of CHRYSLER LLC

1 - FLEX PLATE
2 - BOLT (QTY. 8)

3 - BACKING PLATE

1. Remove the transmission.
2. Remove flex plate attaching bolts (2).
3. Remove the flex plate (1). Refer to **Fig. 349**.

INSTALLATION

INSTALLATION

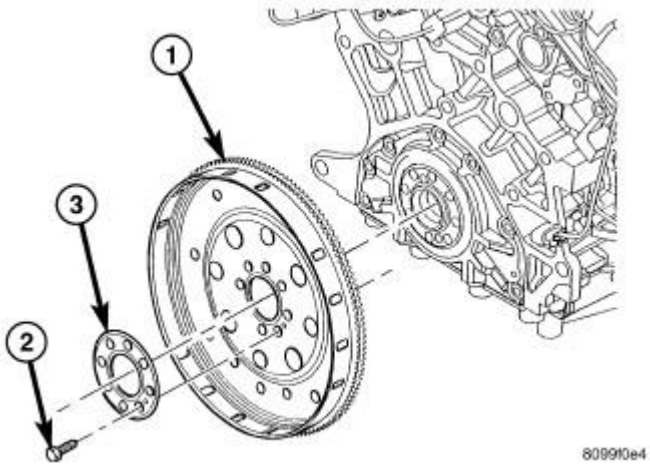

Fig. 350: Flex Plate With Bolts & Backing Plate
Courtesy of CHRYSLER LLC

1 - FLEX PLATE
2 - BOLT (QTY. 8)
3 - BACKING PLATE

1. Position the flex plate (1) with backing plate (3) on the crankshaft.
2. Apply Mopar® Lock AND Seal Adhesive to the eight flex plate bolts (2).
3. Install the flex plate bolts (2). Tighten the bolts to 95 N.m (70 ft. lbs.).
4. Install the transmission. Refer to **INSTALLATION** .

NOTE: The Cam/Crank Variation Relearn procedure must be performed anytime there has been a repair/replacement made to a powertrain system, for example: flywheel, valvetrain, camshaft and/or crankshaft sensors or components. Refer to DTC-Based Diagnostics/MODULE, Powertrain Control (PCM) - Standard Procedure .

RING(S), PISTON

DESCRIPTION

DESCRIPTION

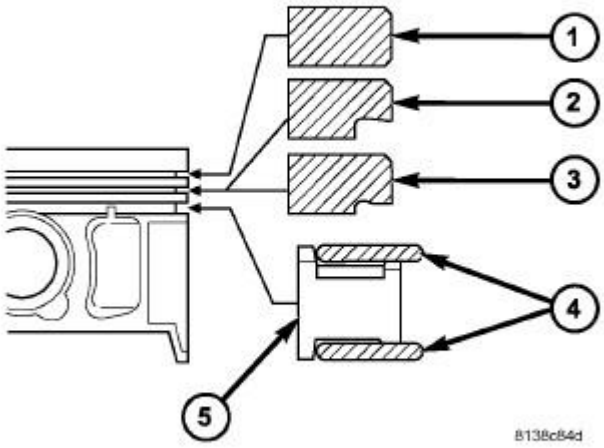

Fig. 351: Piston Rings
Courtesy of CHRYSLER LLC

1 - TOP PISTON RING
2 - CHROME INTERMEDIATE PISTON RING
3 - MICRO-NAPIER INTERMEDIATE PISTON RING
4 - OIL CONTROL RINGS
5 - SPACER

The piston rings include a moly-filled top ring with a symmetric barrel face. The intermediate piston ring is of the standard chrome design OR Micro-Napier design. The Micro-Napier design has a reduced "hook" on the running face, removes the need for chroming and improves oil economy. The oil control package consists of two steel rails and an expander spacer. Refer to **Fig. 351**.

STANDARD PROCEDURE

STANDARD PROCEDURE - PISTON RING FITTING

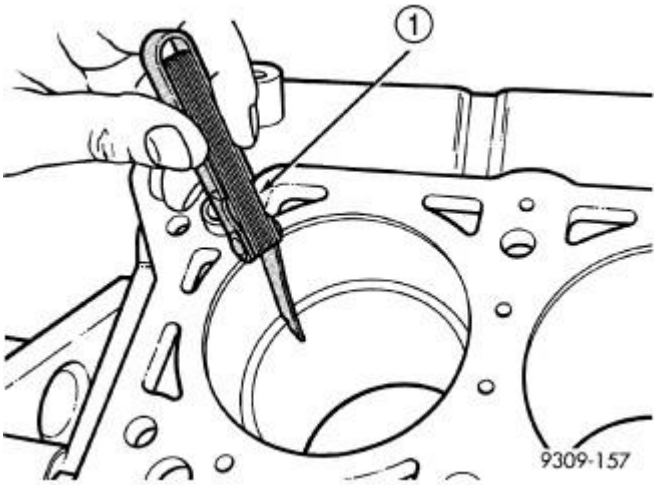

Fig. 352: Checking Gap On Piston Rings
Courtesy of CHRYSLER LLC

1 - FEELER GAUGE

1. Wipe cylinder bore clean. Insert ring and push down with piston to ensure it is square in bore. The ring gap measurement must be made with the ring positioning at least 12 mm (0.50 in.) from bottom of cylinder bore. Check gap with feeler gauge. Refer to **Fig. 352**. For clearance specifications, refer to **Engine - Specifications**.

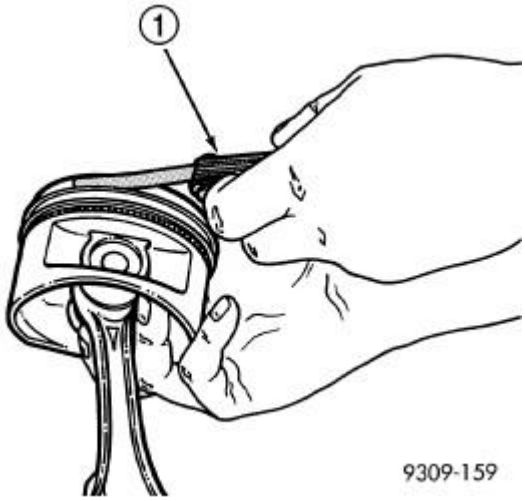

Fig. 353: Measuring Piston Ring Side Clearance
Courtesy of CHRYSLER LLC

1 - FEELER GAUGE

2. Check piston ring to groove clearance: Refer to **Fig. 353**. For clearance specifications refer to **Engine - Specifications**.

REMOVAL

REMOVAL

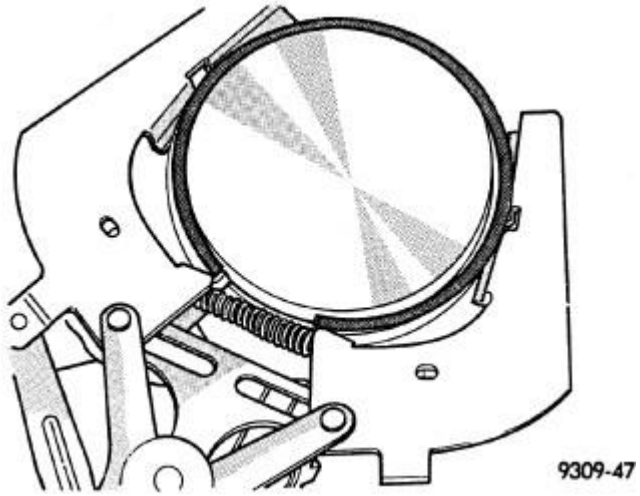

Fig. 354: Removing/Installing Upper And Intermediate Rings
Courtesy of CHRYSLER LLC

1. Remove piston and connecting rod. Refer to **ROD, PISTON AND CONNECTING, REMOVAL**.
2. Remove No. 1 and No. 2 piston rings from piston using a ring expander tool. Refer to **Fig. 354**.

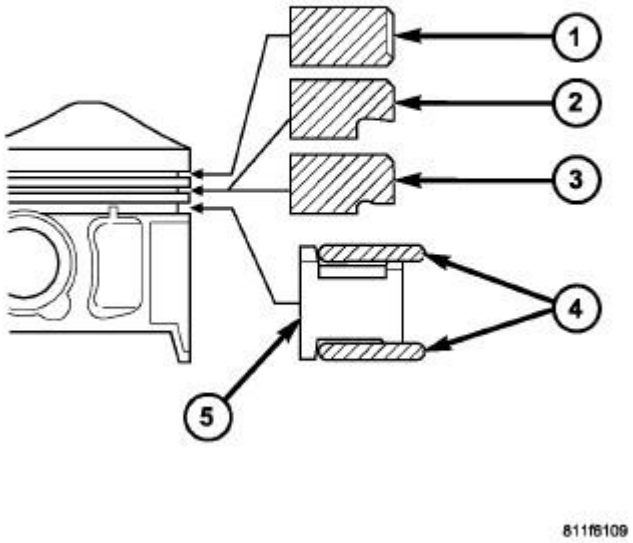

Fig. 355: Piston Rings
Courtesy of CHRYSLER LLC

1 - TOP PISTON RING
2 - CHROME INTERMEDIATE PISTON RING
3 - MICRO-NAPIER INTERMEDIATE PISTON RING
4 - OIL CONTROL RINGS
5 - SPACER

3. Remove upper oil control ring side rail. Refer to **Fig. 355**.
4. Remove lower oil control ring side rail. Refer to **Fig. 355**.
5. Remove oil control ring expander. Refer to**Fig. 355**.

INSTALLATION

INSTALLATION

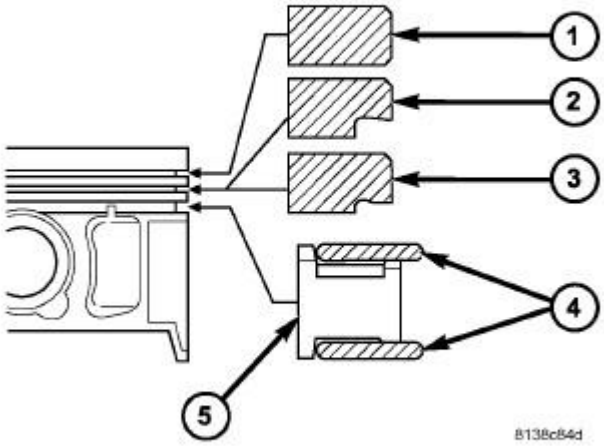

Fig. 356: Piston Rings
Courtesy of CHRYSLER LLC

1 - TOP PISTON RING
2 - CHROME INTERMEDIATE PISTON RING
3 - MICRO-NAPIER INTERMEDIATE PISTON RING
4 - OIL CONTROL RINGS
5 - SPACER

1. Measure clearance of piston rings to the cylinder bore and piston. Refer to **Engine/Engine Block/RING (S), Piston - Standard Procedure**.

The No. 1 and No. 2 piston rings have a different cross section. Refer to **Fig. 356**. Insure that which ever design No. 2 ring is installed, it is installed with manufacturers I.D. mark (dot) facing up, towards top of the piston. Refer to **Fig. 356**. Refer to **RING(S), PISTON, DESCRIPTION**.

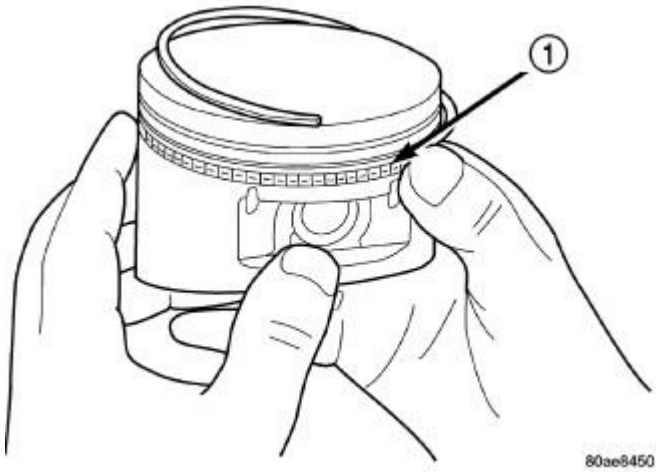

Fig. 357: Side Rail - Installation
Courtesy of CHRYSLER LLC

1 - SIDE RAIL END

CAUTION: Install piston rings in the following order:

- Oil ring expander.
- Lower oil control ring side rail.
- Upper oil control ring side rail.
- No. 2 Intermediate piston ring.
- No. 1 Upper piston ring.

2. Install the side rail by placing one end between the piston ring groove and the spacer. Hold end firmly and press down the portion to be installed until side rail is in position. **Do not use a piston ring expander tool during this step. Refer to Fig. 357.**

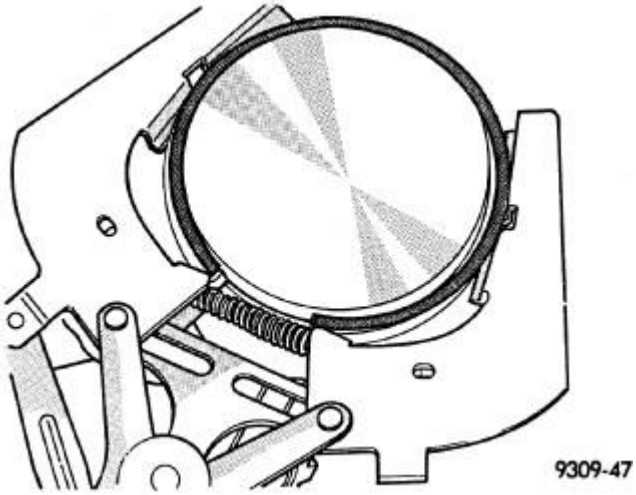

Fig. 358: Removing/Installing Upper And Intermediate Rings
Courtesy of CHRYSLER LLC

3. Install lower side rail first and then the upper side rail.

   The No. 1 and No. 2 piston rings have a different cross section. Refer to **Fig. 358**. Insure that which ever design No. 2 ring is installed, it is installed with manufacturers I.D. mark (dot) facing up, towards top of the piston. Refer to **RING(S), PISTON, DESCRIPTION**.

4. Install No. 2 piston ring and then No. 1 piston ring. Refer to **Fig. 358**.

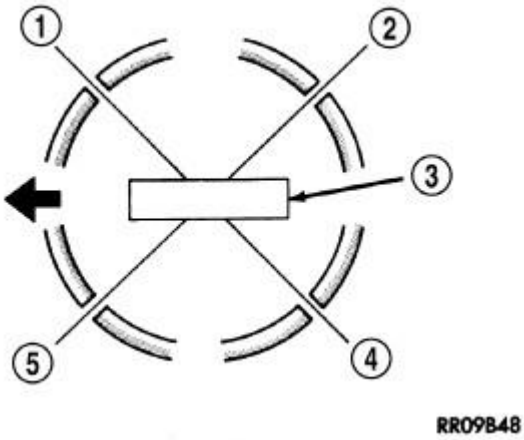

Fig. 359: Identifying Piston Ring End Gaps
Courtesy of CHRYSLER LLC

1 - SIDE RAIL UPPER
2 - NO. 1 RING GAP
3 - PISTON PIN
4 - SIDE RAIL LOWER
5 - NO. 2 RING GAP AND SPACER EXPANDER GAP

5. Position piston ring end gaps as shown in illustration in. Refer to **Fig. 359**.
6. Position oil control ring expander gap at least 45° from the side rail gaps but **not** on the piston pin center or on the thrust direction. Staggering ring gap is important for oil control.

ROD, PISTON AND CONNECTING

DESCRIPTION

DESCRIPTION

The pistons are made of a high strength aluminum alloy. Top land height has been decreased to reduce emissions. Piston skirts are coated with a solid lubricant for scuff resistance. Connecting rod is forged steel with a fractured connecting rod cap design. The connecting rod is also equipped with a squirt hole and attaches to the piston with a full floating pin retained by lock rings.

OPERATION

OPERATION

The piston and connecting rod assembly is the link between the combustion force and the crankshaft.

STANDARD PROCEDURE

STANDARD PROCEDURE - FITTING PISTONS

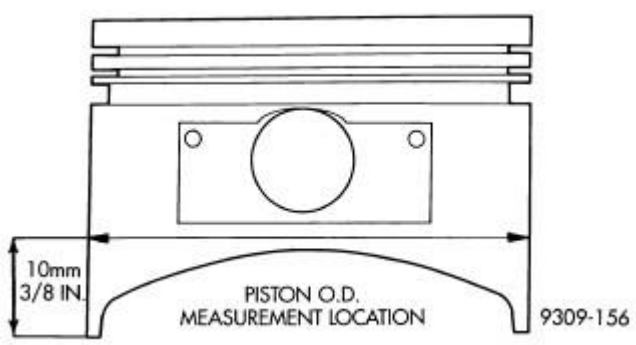

Fig. 360: Piston Measurements
Courtesy of CHRYSLER LLC

The pistons are machined to two different weight specifications and matched to rods based on weight. All piston and rod assemblies weigh the same to maintain engine balance.

Piston and cylinder wall must be clean and dry. Piston diameter should be measured 90° to piston pin at size location shown in illustration. Refer to **Fig. 360**. Cylinder bores should be measured halfway down the cylinder bore and transverse to the engine crankshaft center line. Refer to **Engine - Specifications**. **Pistons and cylinder bores should be measured at normal room temperature, 70°F (21°C).**

REMOVAL

REMOVAL

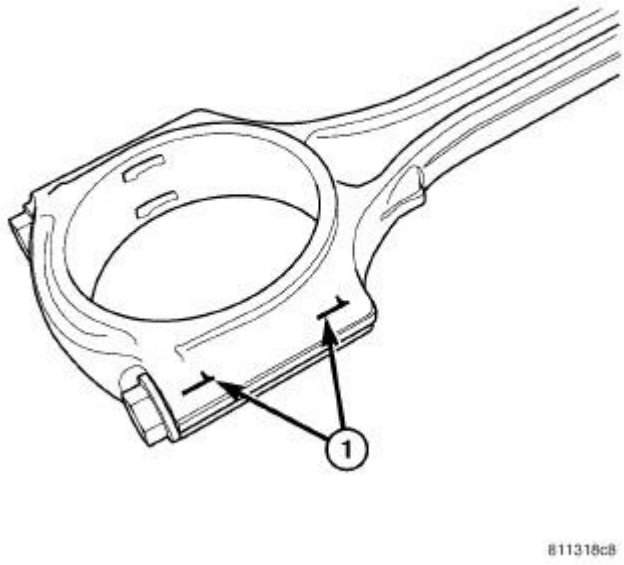

Fig. 361: Connecting Rod To Cylinder Identification
Courtesy of CHRYSLER LLC

1 - PAINT MARK OR SCRIBE

1. Remove the cylinder heads. Refer to **CYLINDER HEAD, REMOVAL**.
2. Remove the oil pan. Refer to **PAN, OIL, REMOVAL**.
3. Remove top ridge of cylinder bores with a reliable ridge reamer before removing pistons from cylinder block. **Be sure to keep tops of pistons covered during this operation. Pistons and connecting rods must be removed from top of cylinder block. When removing piston and connecting rod assemblies from the engine, rotate crankshaft so that each connecting rod is centered in cylinder bore.**

CAUTION: DO NOT stamp the connecting rods for cylinder identification

4. Inspect connecting rods and connecting rod caps for cylinder identification. Identify them with a paint mark or scribe, if necessary. Refer to **Fig. 361**.

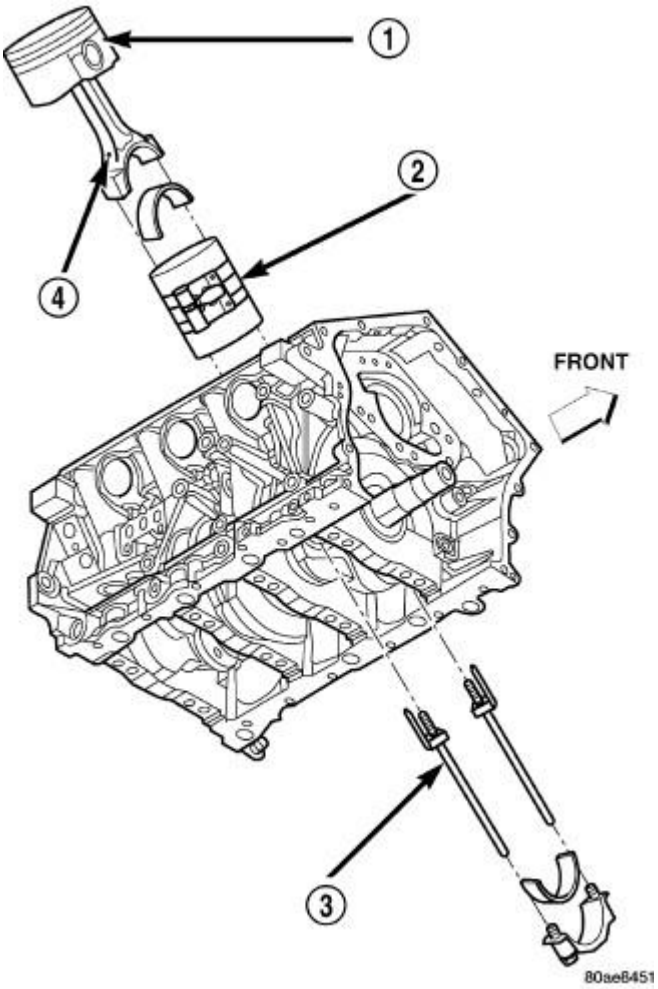

Fig. 362: Piston And Connecting Rod
Courtesy of CHRYSLER LLC

5. Remove connecting rod cap. Install protectors, tool (special tool #8189, Guide Pins), on connecting rod. Refer to **Fig. 362**. Guide each piston and rod assembly out of cylinder bore.

NOTE: Be careful not to nick crankshaft journals.

6. After removal, install bearing cap on the mating rod.

INSTALLATION

INSTALLATION

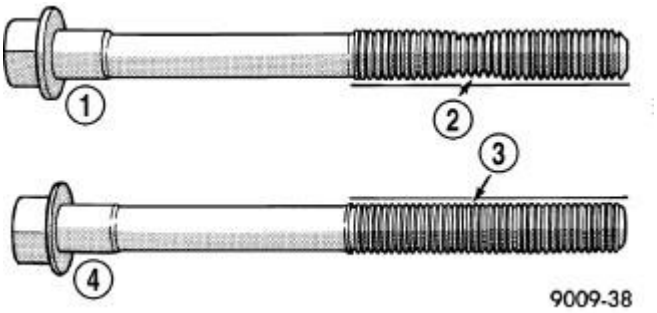

Fig. 363: Checking Cylinder Head Bolts For Stretching (Necking)
Courtesy of CHRYSLER LLC

1 - STRETCHED BOLT
2 - THREADS ARE NOT STRAIGHT ON LINE
3 - THREADS ARE STRAIGHT ON LINE
4 - UNSTRETCHED BOLT

1. Install the piston rings. Refer to **RING(S), PISTON, INSTALLATION**.

NOTE: The connecting rod bearing cap bolts must be examined before reuse. If the threads are necked down, the bolts must be replaced.

2. Check connecting rod bolts for necking by holding a scale or straight edge against the threads. If all threads do not contact the scale, the bolt must be replaced. Refer to **Fig. 363**.

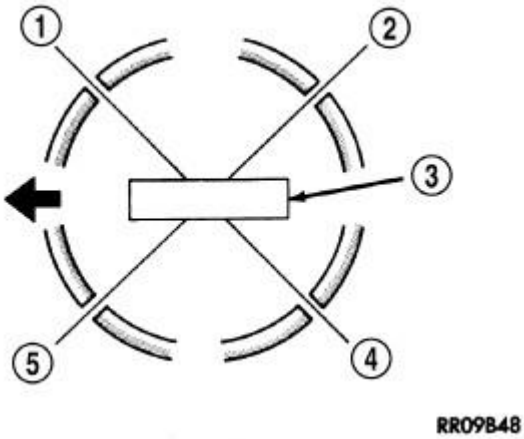

Fig. 364: Identifying Piston Ring End Gaps
Courtesy of CHRYSLER LLC

1 - SIDE RAIL UPPER
2 - NO. 1 RING GAP
3 - PISTON PIN
4 - SIDE RAIL LOWER

5 - NO. 2 RING GAP AND SPACER EXPANDER GAP

3. Before installing pistons and connecting rod assemblies into the bore, ensure that compression ring gaps are staggered so that neither is in line with oil ring rail gap. Refer to **Fig. 364**.

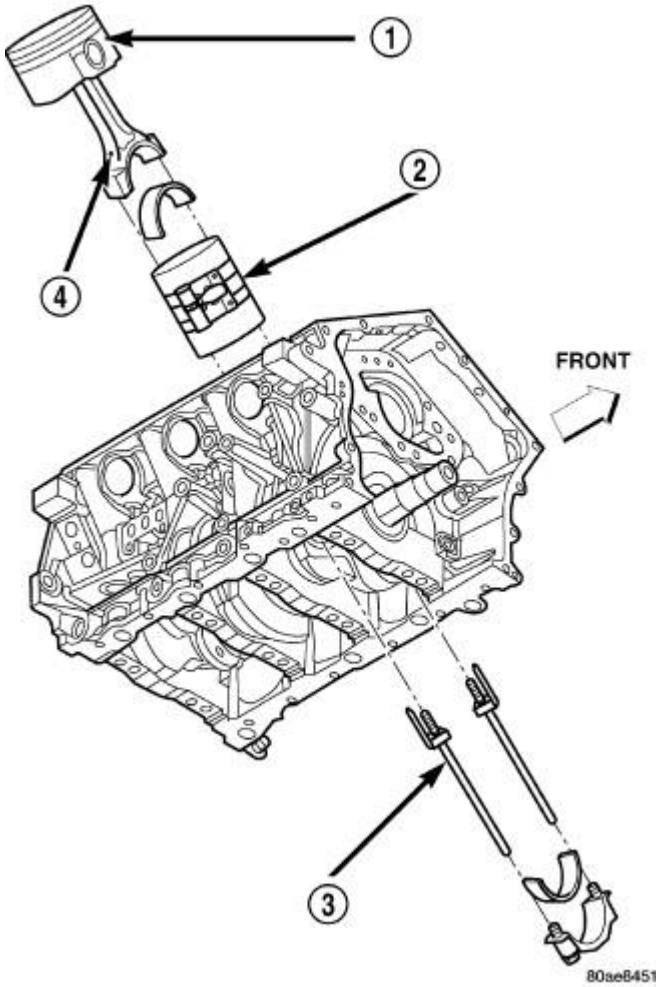

Fig. 365: Piston And Connecting Rod
Courtesy of CHRYSLER LLC

4. Immerse the piston head and rings in clean engine oil, slide the ring compressor over the piston and tighten with the special wrench. Refer to **Fig. 365**. **Ensure position of rings does not change during this operation.**
5. Install connecting rod bolt protectors, special tool # (special tool #8189, Guide Pins). Refer to **Fig. 365**.
6. Rotate crankshaft so that the connecting rod journal is on the center of the cylinder bore. Insert the rod and piston into cylinder bore and guide the rod over the crankshaft journal.

CAUTION: Do Not interchange piston assemblies cylinder-to-cylinder or bank-to-bank.

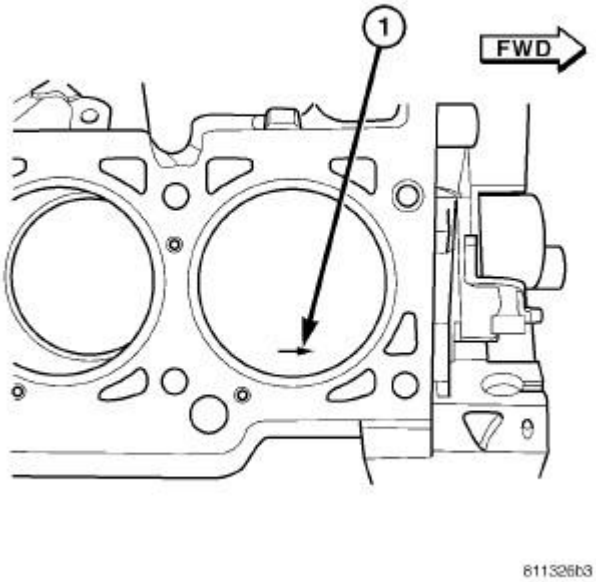

Fig. 366: Piston Orientation
Courtesy of CHRYSLER LLC

1 - ARROW FACES FRONT OF ENGINE

7. The arrow on top of piston must be pointing toward front of engine. Refer to**Fig. 366**.

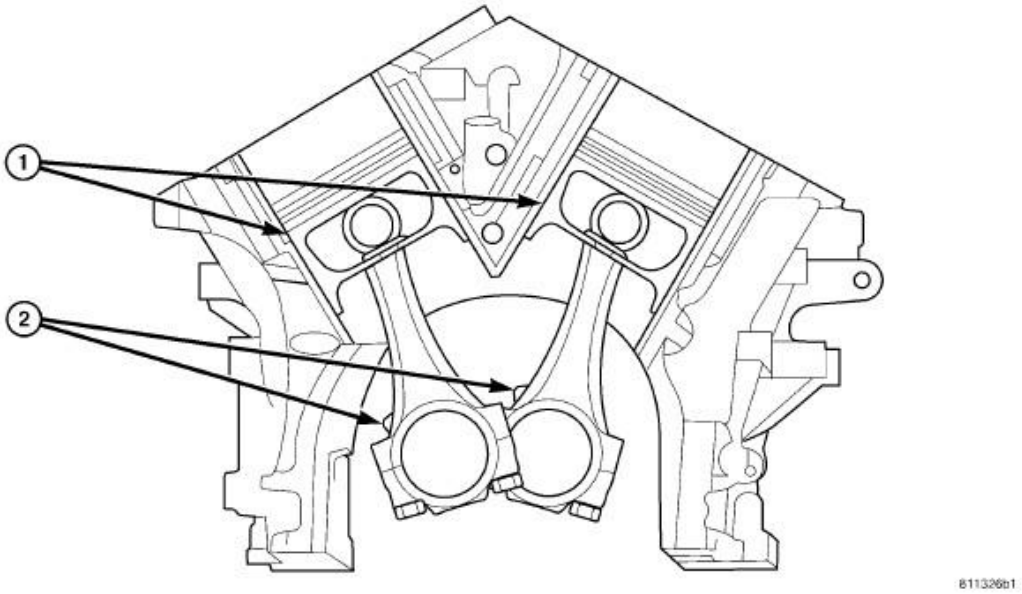

Fig. 367: Piston & Connecting Rod Positioning
Courtesy of CHRYSLER LLC

1 - MAJOR THRUST SIDE OF PISTON
2 - OIL SQUIRT HOLE

CAUTION: View of connecting rod oil squirt hole is from the front of the engine.

8. The oil squirt hole on connecting rod faces the major thrust side of the cylinder bore. Refer to **Fig. 367**.

NOTE: Make sure the rod bearings are seated with the oil squirt hole aligned.

9. Tap the piston down in cylinder bore, using a hammer handle. At the same time, guide connecting rod into position on connecting rod journal.

NOTE: Connecting rod bolts must be lubricated with clean engine oil.

10. Install the rod caps. Install cleaned and inspected connecting rod bolts and tighten to 27 N.m (20 ft. lbs.) Plus 1/4 turn.
11. Install the cylinder head(s). Refer to **CYLINDER HEAD, INSTALLATION**.
12. Install the oil pan. Refer to **PAN, OIL, INSTALLATION**.

SEAL, CRANKSHAFT OIL, FRONT

REMOVAL

REMOVAL

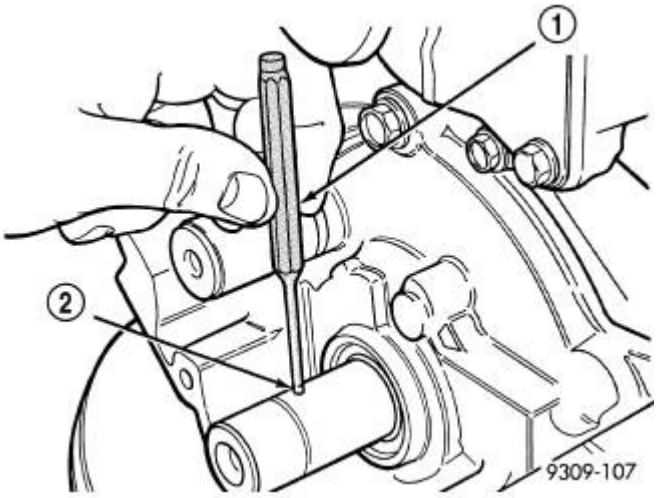

Fig. 368: Crankshaft Sprocket Dowel Pin-Removal/Installation
Courtesy of CHRYSLER LLC

1 - PIN PUNCH

2 - DOWEL

1. Remove the crankshaft sprocket. Refer to **SPROCKET(S), TIMING BELT AND CHAIN, REMOVAL**.
2. Tap the dowel pin (2) out of the crankshaft. Refer to **Fig. 368**.

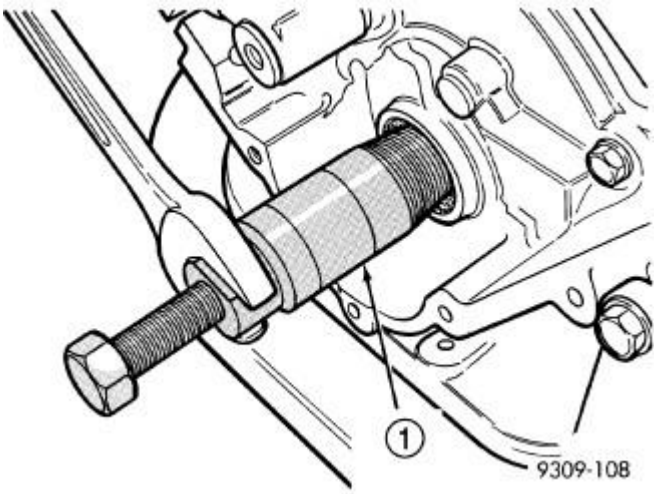

Fig. 369: Crankshaft Oil Seal With Special Tool 6341A - Removal
Courtesy of CHRYSLER LLC

1 - SPECIAL TOOL 6341A

3. Remove crankshaft seal using Tool (special tool #6341A, Remover, Seal) (1). Refer to **Fig. 369**.

CAUTION: Do not nick shaft seal surface or seal bore.

4. Shaft seal lip surface must be free of varnish, dirt or nicks. Polish with 400 grit paper if necessary.

INSTALLATION

INSTALLATION

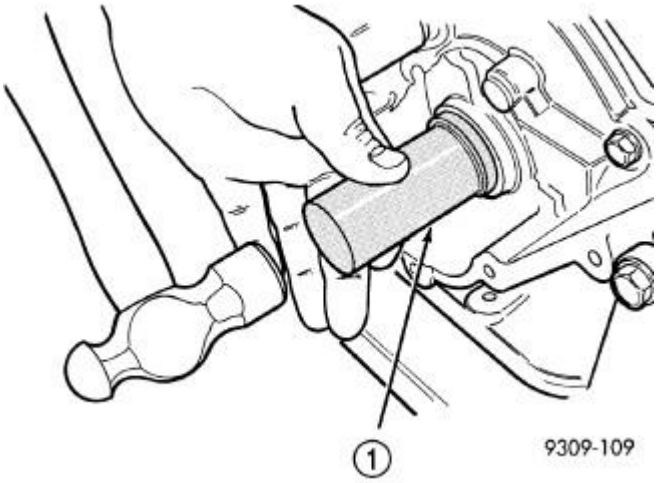

Fig. 370: Crankshaft Oil Seal With Special Tool 6342 - Installation
Courtesy of CHRYSLER LLC

1 - SPECIAL TOOL 6342

1. Install crankshaft seal using Special Tool (special tool #6342, Installer, Seal) (1). Refer to **Fig. 370**.
2. Install the dowel pin into the crankshaft to 1.2 mm (0.047 in.) protrusion.
3. Install the crankshaft sprocket. Refer to **SPROCKET(S), TIMING BELT AND CHAIN, INSTALLATION**.

SEAL, CRANKSHAFT OIL, REAR

DESCRIPTION

DESCRIPTION

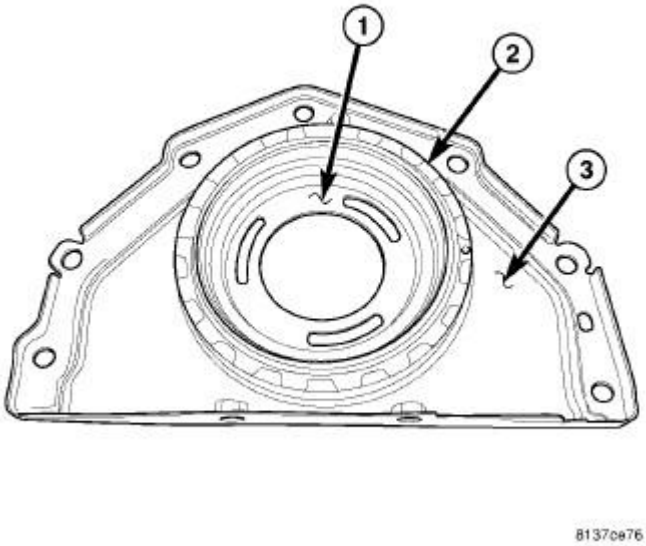

Fig. 371: Crankshaft Oil Seal - Rear
Courtesy of CHRYSLER LLC

1 - SEAL PROTECTOR
2 - SEAL
3 - RETAINER

The rear crankshaft oil seal (2) and retainer (3) are molded and serviced as an assembly. This assembly also includes a separate rear crankshaft seal protector (1) that should not be removed before the seal is installed on the engine block. Once the seal protector (1) is separated from the assembly it can not be re-installed on the assembly or reused.

REMOVAL

REMOVAL

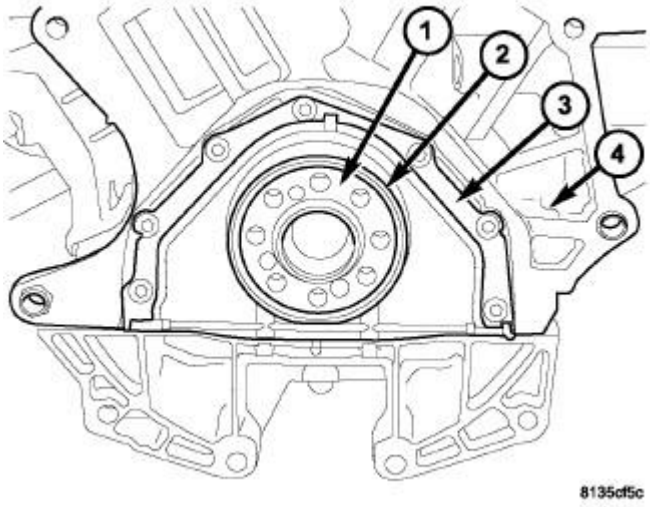

Fig. 372: Rear Main Seal & Retainer
Courtesy of CHRYSLER LLC

1 - CRANKSHAFT
2 - REAR CRANKSHAFT OIL SEAL
3 - REAR CRANKSHAFT OIL SEAL RETAINER
4 - ENGINE BLOCK

1. Remove the engine oil pan. Refer to **PAN, OIL, REMOVAL**.
2. Lower the weight of the engine back onto the engine mounts.
3. Remove transmission from vehicle.
4. Remove the flex plate.
5. Remove the rear crankshaft oil seal retainer bolts.
6. Remove the crankshaft oil seal and clean all mating surfaces.

INSTALLATION

INSTALLATION

CAUTION: If a burr or scratch is present on the crankshaft edge (chamfer), clean surface using 400 grit sand paper to prevent seal damage during installation. Make sure the rear crankshaft oil seal surface is clean and free of any abrasive materials.

NOTE: The rear crankshaft oil seal and retainer are an assembly. DO NOT separate the seal protector from the rear crankshaft oil seal before installation on engine. Damage to the seal lip will occur if the seal protector is removed and installed prior to installation on engine.

1. Apply engine oil to crankshaft seal surface.

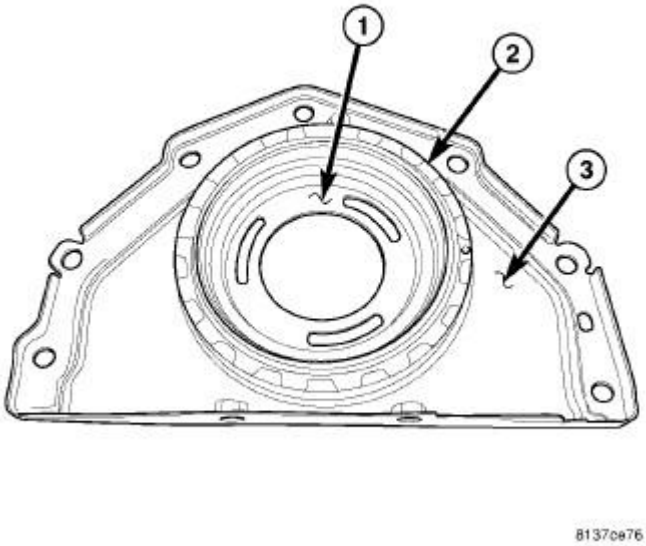

Fig. 373: Seal Protector, Seal & Retainer
Courtesy of CHRYSLER LLC

1 - SEAL PROTECTOR
2 - SEAL
3 - RETAINER

2. If the seal protector (1) is missing or was accidentally dislodged, go to step 3. Otherwise, carefully position the oil seal retainer assembly (3), and seal protector (1) on crankshaft and push firmly into place on engine block (during this step, the seal protector will be pushed from the rear oil seal assembly as a result of installing the rear oil seal). Hand tighten the rear oil seal fasteners, and go to step 4.

NOTE: The seal lip (2) must always uniformly curl inward toward the engine on the crankshaft (1).

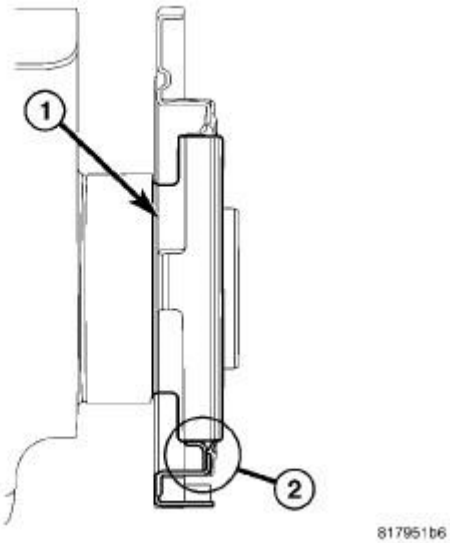

Fig. 374: Rear Seal Installed
Courtesy of CHRYSLER LLC

CAUTION: If for any reason the installation sleeve is missing or dislodged from rear crankshaft oil seal prior to installation, the following procedure must be performed.

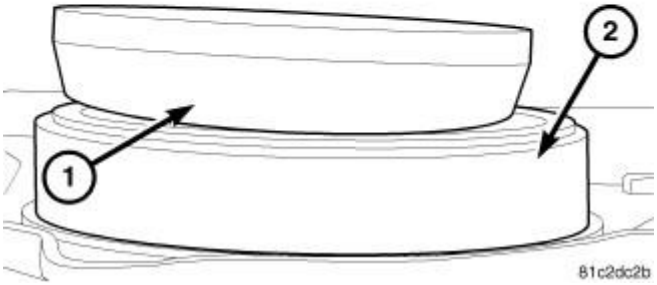

Fig. 375: Tapered End Of Rear Crankshaft Oil Seal
Courtesy of CHRYSLER LLC

3. Using the chamfered seal guide from Special Tool (special tool #6926, Installer, Crankshaft Seal), insert the tapered end (1) into the transmission side of the rear crankshaft oil seal assembly (2), and push the seal guide through the seal assembly. This will ensure the seal lip is positioned toward the engine when the seal assembly is installed. When the seal lip is correctly positioned, go to step 2.

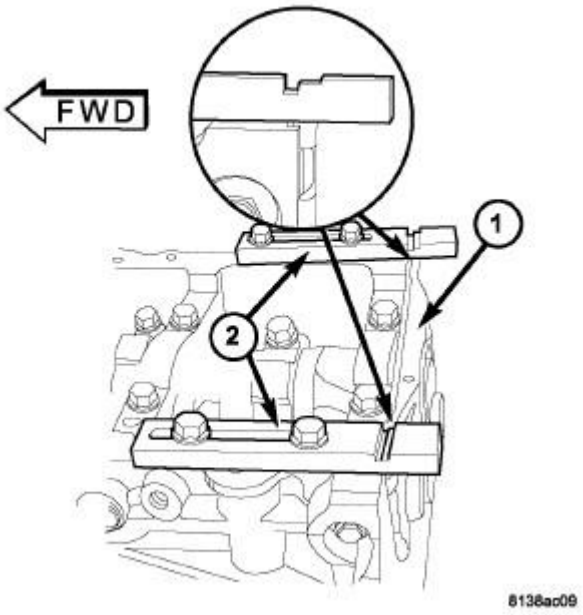

Fig. 376: Rear Crankshaft Seal Retainer Alignment
Courtesy of CHRYSLER LLC

1 - SEAL RETAINER
2 - SPECIAL TOOLS 8225

NOTE: The following steps must be performed to prevent oil leaks at sealing joints.

4. Attach Special Tools (special tool #8225, Alignment Fixture) (1) to pan rail using the oil pan fasteners.

NOTE: Special Tools (special tool #8225, Alignment Fixture) (1), are use to assist with the fit of the flush mount rear main seal retainer. The notch on tool should be located away the seal retainer.

5. While applying firm pressure to the seal retainer against Special Tools (special tool #8225, Alignment Fixture) (1), tighten seal retainer screws to 12 N.m (105 in. lbs.).
6. Remove special tool (special tool #8225, Alignment Fixture) (1).

NOTE: Make sure that the seal flange is flush with the block oil pan sealing surface.

7. Install oil pan. Tighten the 6 mm fasteners to 12 N.m (105 in.lbs.) and the 8 mm fasteners to 28 N.m (250 in.lbs.).
8. Install the flex plate and transmission.

ENGINE MOUNTING

DESCRIPTION

DESCRIPTION

The engine mounting system are of molded rubber material and consist of two mounts; right and a left side support the powertrain, and control powertrain torque.

INSULATOR, ENGINE MOUNT, LEFT

REMOVAL

REMOVAL

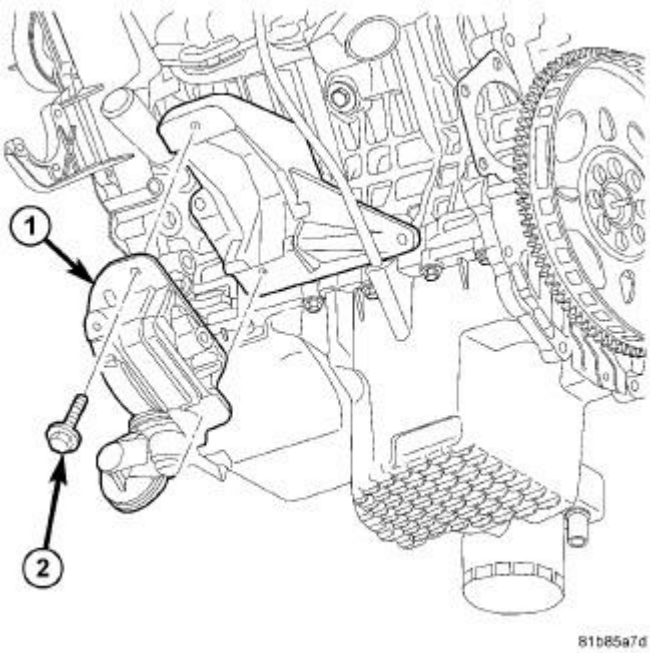

Fig. 377: Left Engine Mount & Bolts
Courtesy of CHRYSLER LLC

1. Disconnect the negative battery cable.
2. Raise and support the vehicle.
3. Remove both engine mount to frame nuts and remove the left engine mount bolts (2).
4. Using a suitable jack and a block of wood under the oil pan, raise the engine until the weight is off of the mounts (approximately 5 mm).
5. Remove the engine mount bolts and remove the mount.

INSTALLATION

INSTALLATION

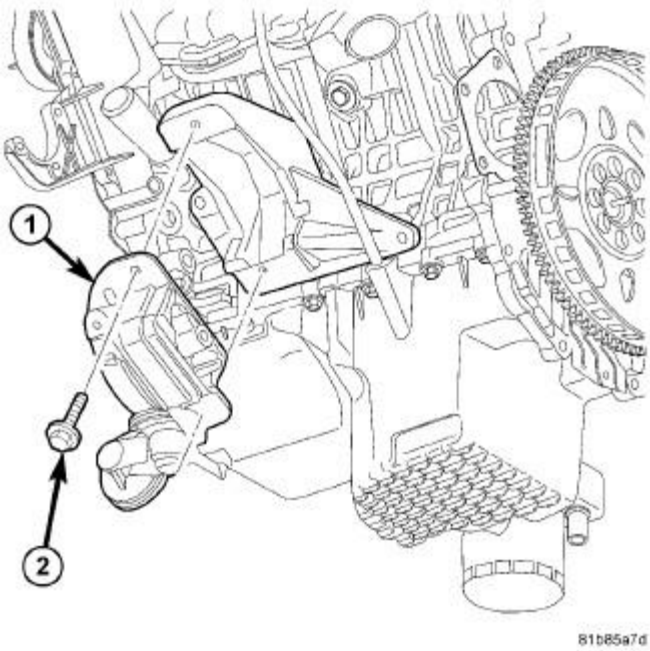

Fig. 378: Left Engine Mount & Bolts
Courtesy of CHRYSLER LLC

1. Install the left mount (1) to the engine mounting bracket. Hand tighten fasteners.
2. Tighten the engine mount to mounting bracket fasteners (2) to 75 N.m (55 ft.lbs.).
3. Lower the engine and remove lifting device.
4. Install the left engine mount to frame fasteners and tighten both to 75 N.m (55 ft. lbs.).
5. Connect the negative battery cable.

INSULATOR, ENGINE MOUNT, RIGHT

REMOVAL

REMOVAL

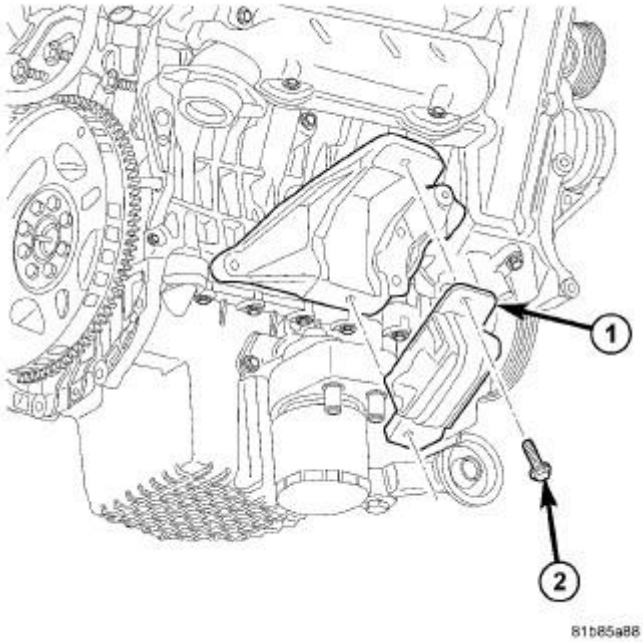

Fig. 379: Right Engine Mount & Bolts
Courtesy of CHRYSLER LLC

1. Disconnect the negative battery cable.
2. Raise and support the vehicle.
3. Remove both of the engine mount to frame fasteners.
4. Using a suitable jack stand and a block of wood positioned under the oil pan, raise the engine until the weight is off of the mounts (approximately 5 mm.).
5. Remove both of the engine mount to bracket bolts (2).
6. Remove the engine mount (1).

INSTALLATION

INSTALLATION

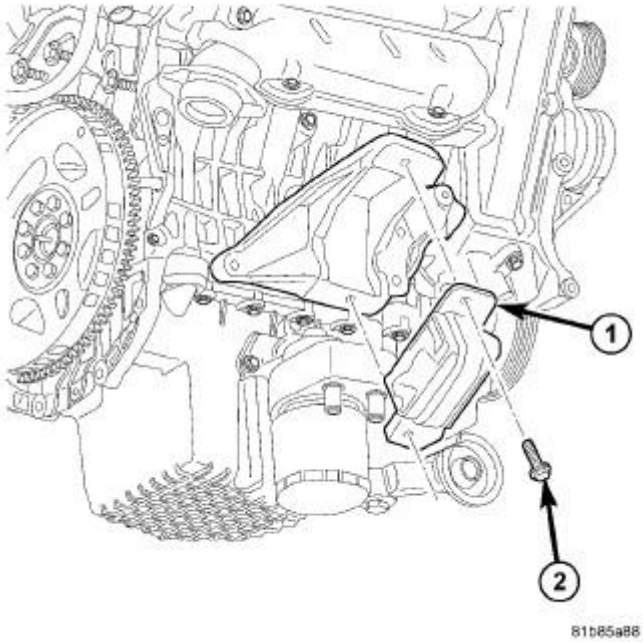

Fig. 380: Right Engine Mount & Bolts
Courtesy of CHRYSLER LLC

1. Install the engine mount (1) to the engine bracket. Tighten bolts (2) to 54 N.m (40 lbs. ft.).
2. Lower the engine and remove the lifting devise.
3. Install the right engine mount to frame fasteners and tighten both to 75 N.m (55 lbs. ft.).
4. Connect the negative battery cable.

INSULATOR, ENGINE MOUNT, REAR

REMOVAL

REMOVAL

NOTE: A resilient rubber cushion supports the transmission at the rear between the transmission extension housing and the rear support crossmember or skid plate.

1. Disconnect negative cable from battery.
2. Raise the vehicle and support the transmission.
3. Remove the nuts holding the support cushion to the crossmember. Remove the crossmember.

MANUAL TRANSMISSION

a. Remove the support cushion nuts and remove the cushion.
b. Remove the transmission support bracket bolts and remove the bracket from the transmission.

AUTOMATIC TRANSMISSION

a. Remove the support cushion bolts and remove the cushion and the support bracket from the transmission (4WD) or from the adaptor bracket (2WD).
b. On 2WD vehicles, remove the bolts holding the transmission support adaptor bracket to the transmission. Remove the adaptor bracket.

INSTALLATION

INSTALLATION

MANUAL TRANSMISSION:

NOTE: 4x2 shown in illustration, 4x4 similar.

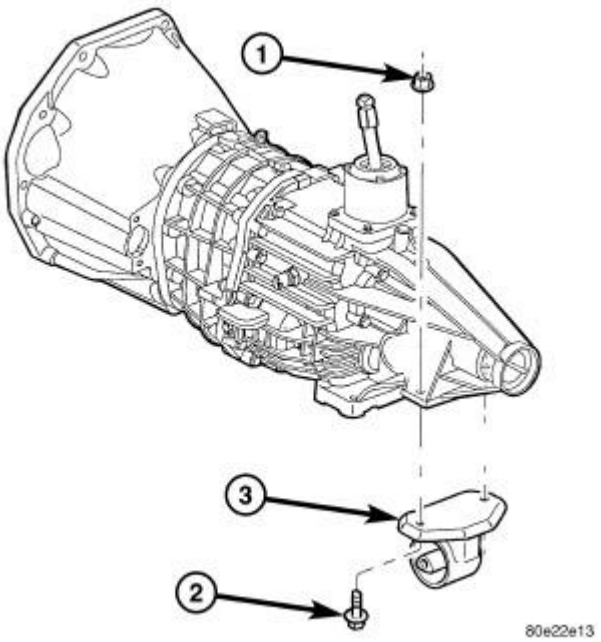

Fig. 381: Manual Transmission Mount Assembly - 2WD
Courtesy of CHRYSLER LLC

1 - NUT
2 - BOLT
3 - TRANS MOUNT

1. Install the transmission mount (3) to the transmission. Install the bolts (2) and tighten.
2. Position the crossmember in the vehicle. Install the crossmember to mount through bolt and nut.
3. Install crossmember-to-sill bolts and tighten to 41 N.m (30 ft. lbs.)
4. Remove the transmission support.

5. Lower the vehicle.
6. Connect negative cable to battery.

AUTOMATIC TRANSMISSION:

NOTE: 4x2 shown in illustration, 4x4 similar

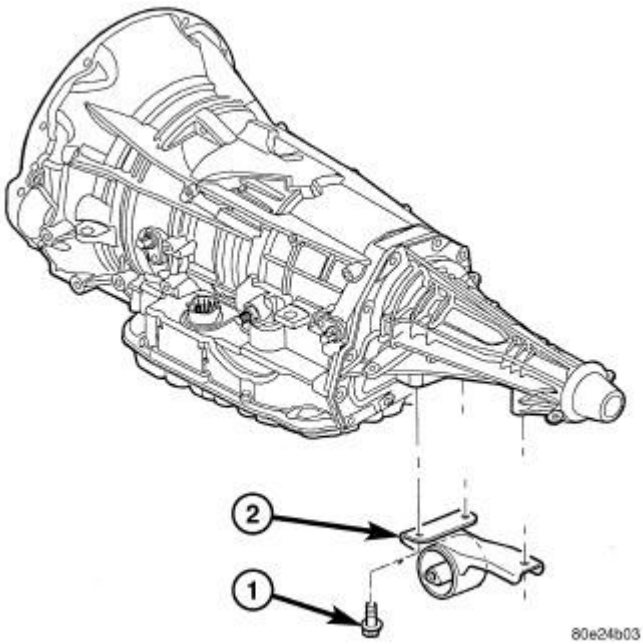

Fig. 382: Automatic Transmission Mount Assembly - 2WD
Courtesy of CHRYSLER LLC

1 - BOLT
2 - MOUNT

1. Install the transmission mount (2) to transmission and install the bolts (1).
2. Position the crossmember in the vehicle. Install the crossmember to mount through bolt and nut.
3. Install crossmember-to-sill bolts and tighten to 41 N.m (30 ft. lbs.)
4. Remove the transmission support.
5. Lower the vehicle.
6. Connect negative cable to battery.

LUBRICATION

DESCRIPTION

DESCRIPTION

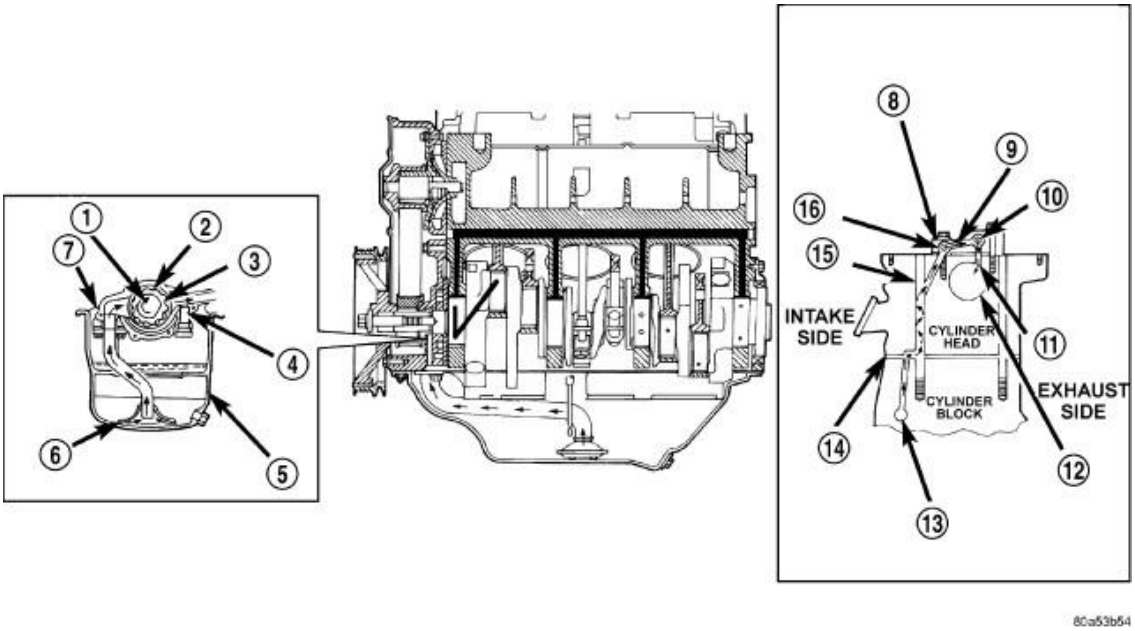

Fig. 383: Oil Lubrication System
Courtesy of CHRYSLER LLC

1 - CRANKSHAFT	9 - PEDESTAL DRILLED PASSAGE
2 - OUTER ROTOR	10 - EXHAUST ROCKER SHAFT
3 - INNER ROTOR	11 - SHAFT/PEDESTAL DOWEL PASSAGE
4 - RELIEF VALVE	12 - CAMSHAFT BEARING BORE
5 - OIL PAN	13 - CYLINDER BLOCK OIL GALLERY
6 - OIL SCREEN	14 - CYLINDER HEAD GASKET
7 - OIL PUMP CASE	15 - HEAD BOLT HOLE
8 - OIL FLOWS TO ONLY ONE PEDESTAL ON EACH HEAD - SECOND FROM REAR ON RIGHT HEAD - SECOND FROM FRONT ON LEFT HEAD	16 - INTAKE ROCKER SHAFT

The oil lubrication system is a full-flow filtration, pressure feed type. Refer to **Fig. 383**. The oil pump body is mounted to the engine block. The pump inner rotor is driven by the crankshaft. A windage tray, increases power by minimizing oil windage at high engine RPM. For increased oil cooling, an oil pan mounted, oil-to-coolant oil cooler is used.

OPERATION

OPERATION

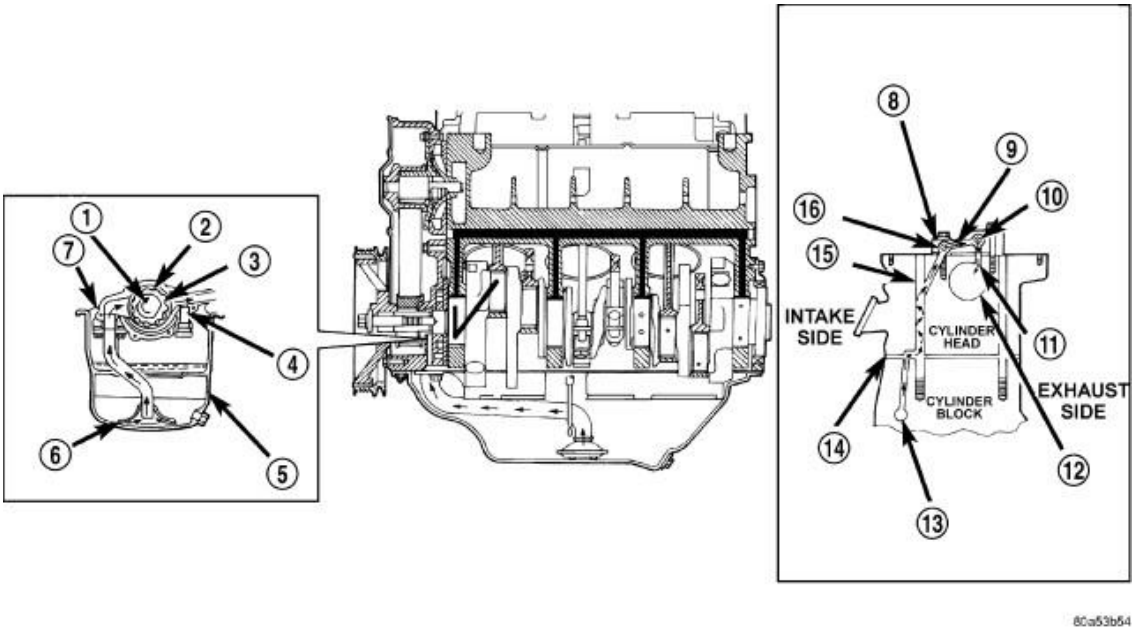

Fig. 384: Oil Lubrication System
Courtesy of CHRYSLER LLC

1 - CRANKSHAFT	9 - PEDESTAL DRILLED PASSAGE
2 - OUTER ROTOR	10 - EXHAUST ROCKER SHAFT
3 - INNER ROTOR	11 - SHAFT/PEDESTAL DOWEL PASSAGE
4 - RELIEF VALVE	12 - CAMSHAFT BEARING BORE
5 - OIL PAN	13 - CYLINDER BLOCK OIL GALLERY
6 - OIL SCREEN	14 - CYLINDER HEAD GASKET
7 - OIL PUMP CASE	15 - HEAD BOLT HOLE
8 - OIL FLOWS TO ONLY ONE PEDESTAL ON EACH HEAD - SECOND FROM REAR ON RIGHT HEAD - SECOND FROM FRONT ON LEFT HEAD	16 - INTAKE ROCKER SHAFT

Engine oil stored in the oil pan (5) is drawn in and discharged by a gear rotor type oil pump (2, 3). Refer to **Fig. 384**. The oil pump is directly coupled to the crankshaft (1). Oil pressure is regulated by a relief valve (4). The oil is fed through an oil filter and to the crankshaft journals from the oil gallery (8) in the cylinder block. This gallery also feeds oil under pressure to the cylinder heads. Oil flows through each cylinder heads oil passage to the rocker shafts (10, 16). Oil then feeds the camshaft journals (12), rocker arms, and hydraulic lash adjusters.

DIAGNOSIS AND TESTING

DIAGNOSIS AND TESTING - CHECKING ENGINE OIL PRESSURE

Check oil pressure using a gauge at oil pressure switch location.

1. Remove the oil pressure switch (1). Refer to **LUBRICATION/OIL PRESSURE SENSOR/SWITCH - REMOVAL**.

2. Install oil pressure test gauge, (special tool #C-3292A, Gauge, Pressure) with Adapter (special tool #8406, Adapter, Oil Pressure). For Special Tool identification, refer to **Engine - Special Tools**.

CAUTION: If oil pressure is 0 at idle, Do Not Run engine at 3000 RPM.

3. Warm engine to normal operating temperature.
4. Monitor gauge readings at idle and 3000 rpm. For specifications. Refer to **Engine - Specifications**.

COOLER, OIL

DESCRIPTION

DESCRIPTION

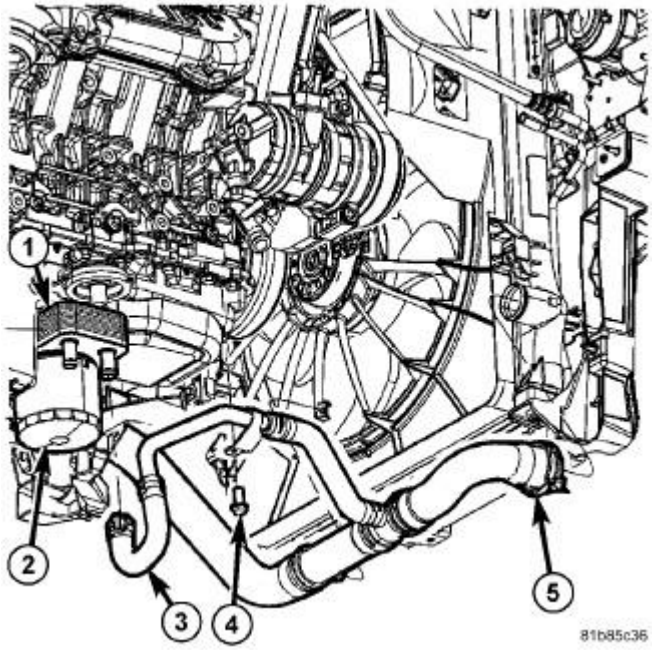

Fig. 385: Engine Oil Cooler, Filter, Coolant Hose, Bolt & Lower Radiator Hose
Courtesy of CHRYSLER LLC

The engine oil cooler (1) is a oil-to-coolant type and is mounted between the oil filter and the oil pan.

OPERATION

OPERATION

Engine oil travels from the oil cooler and into the oil filter. Engine oil then exits the filter into the main gallery. Engine coolant flows into the cooler from the heater return tube and exits into the water inlet tube.

REMOVAL

REMOVAL

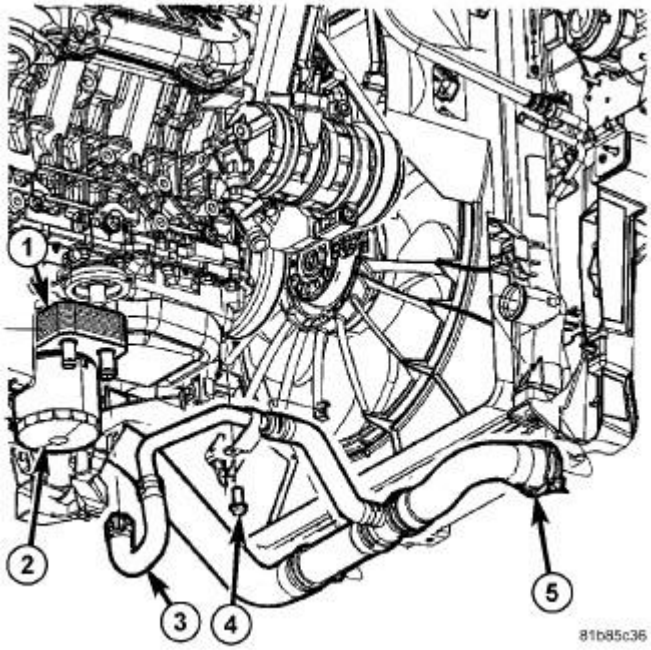

Fig. 386: Engine Oil Cooler, Filter, Coolant Hose, Bolt & Lower Radiator Hose
Courtesy of CHRYSLER LLC

1. Drain cooling system.
2. Raise vehicle on hoist.
3. Disconnect coolant hose (3) from oil cooler (1).

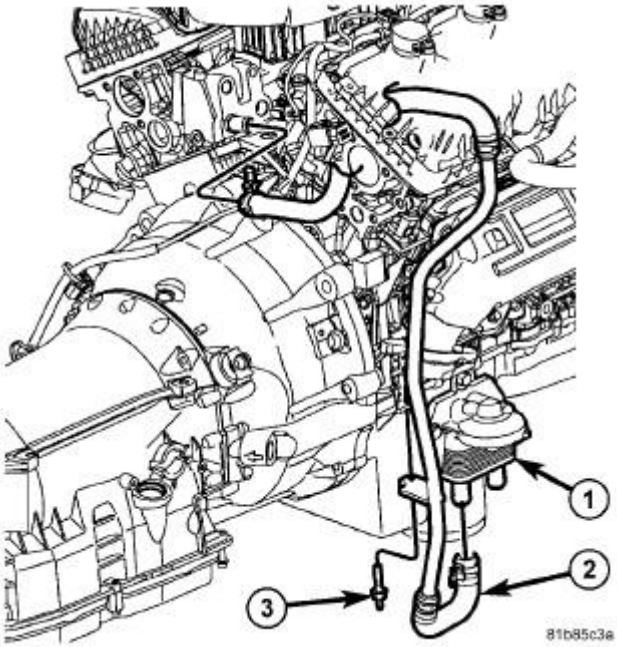

Fig. 387: Oil Cooler, Coolant Hose & Fastener
Courtesy of CHRYSLER LLC

4. Disconnect coolant hoses (2) from oil cooler (1).
5. Remove oil filter.
6. Remove oil cooler attaching fastener from center of oil cooler.
7. Remove oil cooler (1).

INSTALLATION

INSTALLATION

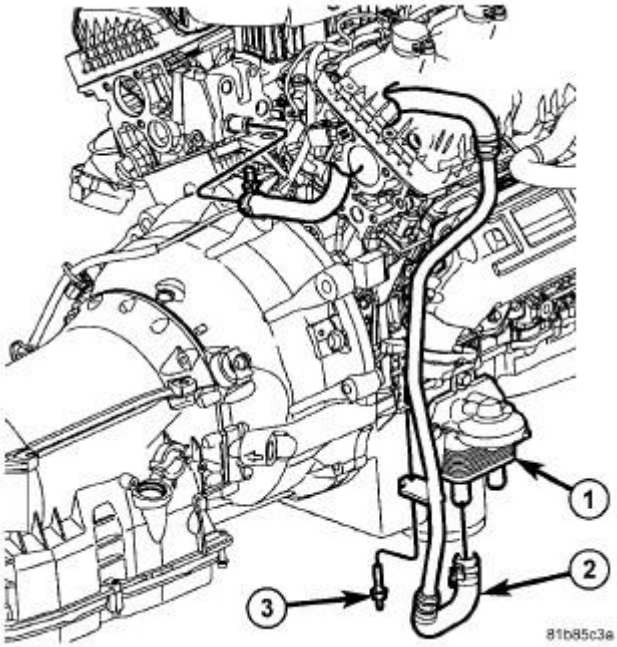

Fig. 388: Oil Cooler, Coolant Hose & Fastener
Courtesy of CHRYSLER LLC

1. Position oil cooler to fitting on oil pan.

NOTE: **Remove all oil and debris from the seal retainer surface. The cut out section of the oil cooler seal retainer flange (top), must be aligned with the tab on the oil pan. The oil cooler must be prevented from turning during the tightening sequence.**

2. Install oil cooler (1) attaching fastener and tighten to 61 N.m (45 ft. lbs.).
3. Install oil filter and tighten to 12 N.m (106 in. lbs.).
4. Connect coolant hose (2) to oil cooler (1).

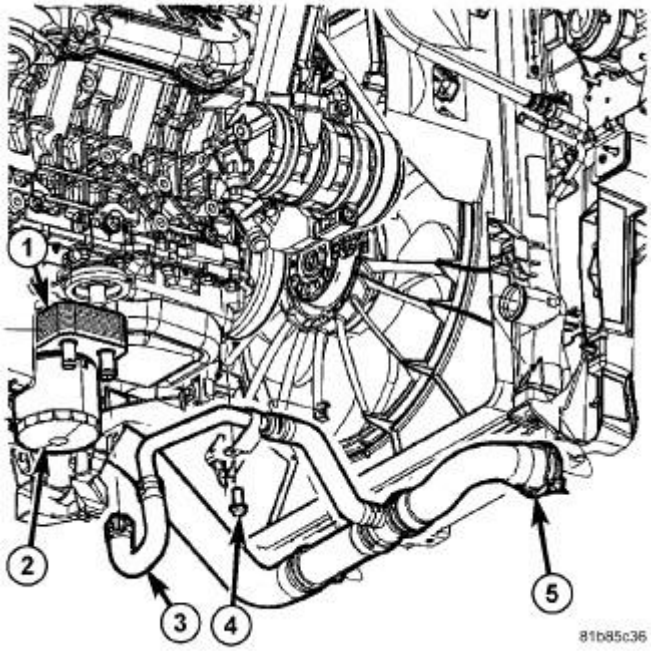

Fig. 389: Engine Oil Cooler, Filter, Coolant Hose, Bolt & Lower Radiator Hose
Courtesy of CHRYSLER LLC

5. Connect coolant hose (3) to oil cooler (1).
6. Fill cooling system.

FILTER, ENGINE OIL

REMOVAL

REMOVAL

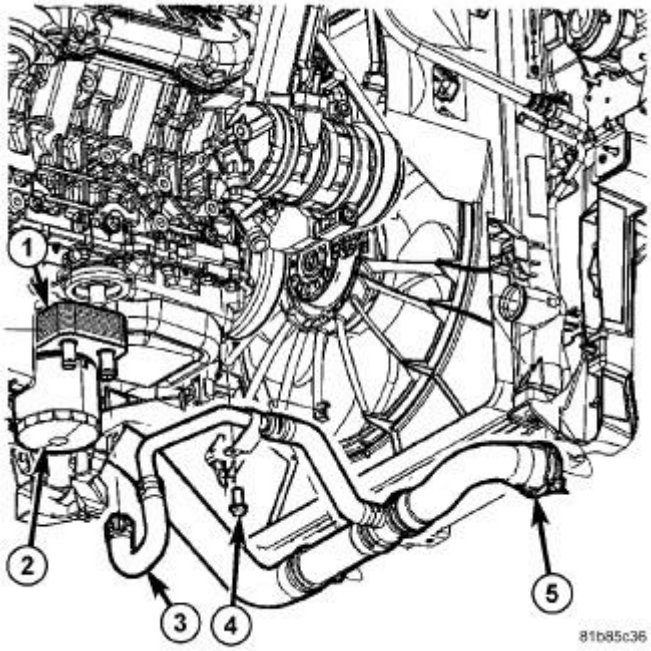

Fig. 390: Engine Oil Cooler, Filter, Coolant Hose, Bolt & Lower Radiator Hose
Courtesy of CHRYSLER LLC

NOTE: When servicing the oil filter, avoid deforming the filter can. Install the remove/install tool band strap against the base lock seam. The lock seam joining the can to the base is reinforced by the base plate.

1. Using a suitable oil filter wrench, unscrew filter (2) from base and discard.

INSTALLATION

INSTALLATION

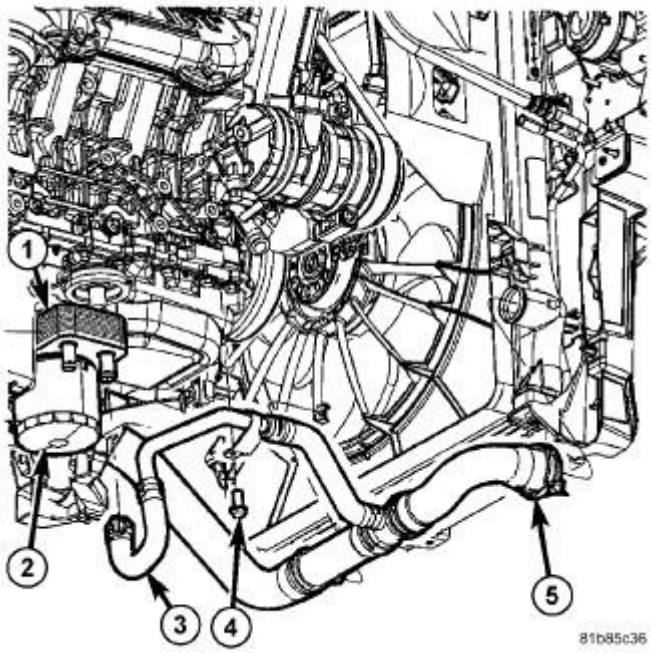

Fig. 391: Engine Oil Cooler, Filter, Coolant Hose, Bolt & Lower Radiator Hose
Courtesy of CHRYSLER LLC

1. Wipe base clean, then inspect gasket contact surface.
2. Lubricate gasket of new filter (2) with clean engine oil.
3. Install and tighten filter to 12 N.m (106 in. lbs.) of torque after gasket contacts base. Use filter wrench if necessary.
4. Start engine and check for leaks.

OIL

DESCRIPTION

DESCRIPTION

For engine oil type and capacity. Refer to **CAPACITIES AND RECOMMENDED FLUIDS, DESCRIPTION** .

STANDARD PROCEDURE

ENGINE OIL AND FILTER CHANGE

Change engine oil at mileage and time intervals described in the Maintenance Schedule. Refer to **MAINTENANCE SCHEDULES, DESCRIPTION** .

WARNING: **NEW OR USED ENGINE OIL CAN BE IRRITATING TO THE SKIN. AVOID PROLONGED OR REPEATED SKIN CONTACT WITH ENGINE OIL.**

CONTAMINANTS IN USED ENGINE OIL, CAUSED BY INTERNAL COMBUSTION, CAN BE HAZARDOUS TO YOUR HEALTH. THOROUGHLY WASH EXPOSED SKIN WITH SOAP AND WATER. DO NOT WASH SKIN WITH GASOLINE, DIESEL FUEL, THINNER, OR SOLVENTS, HEALTH PROBLEMS CAN RESULT. DO NOT POLLUTE, DISPOSE OF USED ENGINE OIL PROPERLY. CONTACT YOUR DEALER OR GOVERNMENT AGENCY FOR LOCATION OF COLLECTION CENTER IN YOUR AREA.

TO CHANGE ENGINE OIL

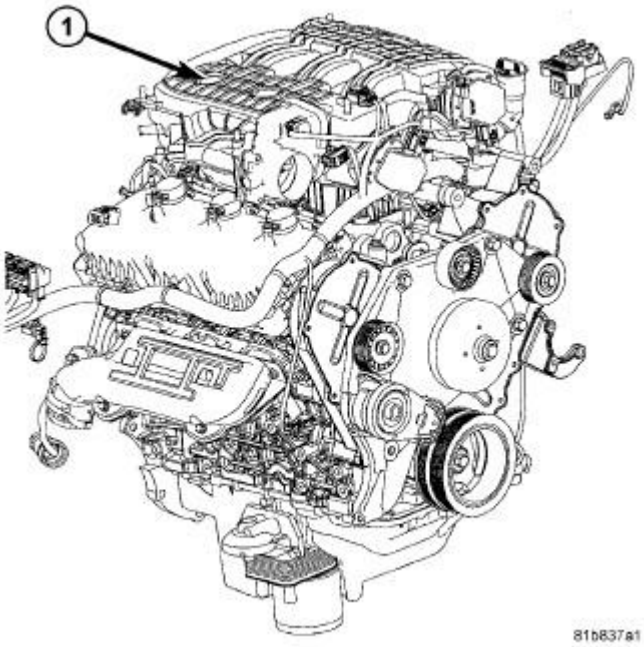

Fig. 392: 4.0L Engine
Courtesy of CHRYSLER LLC

1. Run engine until achieving normal operating temperature.
2. Position the vehicle on a level surface and turn engine off.
3. Open hood, remove engine oil fill cap. Refer to **Fig. 392**.

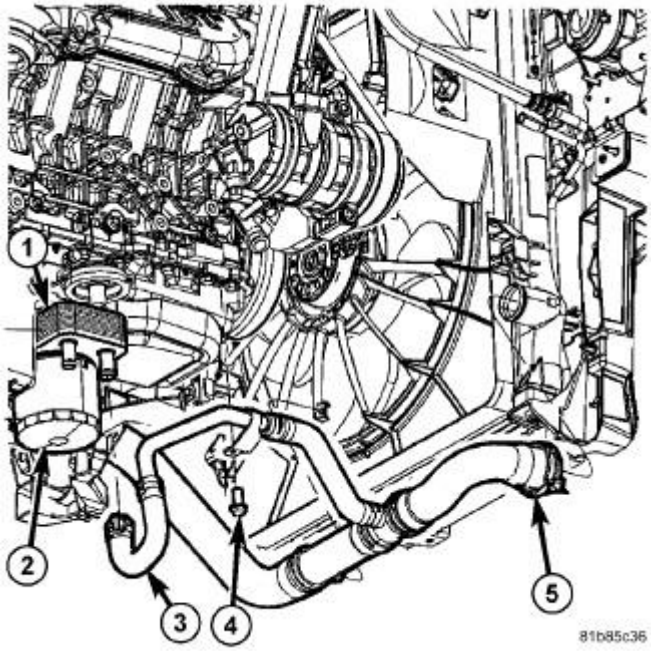

Fig. 393: Engine Oil Cooler, Filter, Coolant Hose, Bolt & Lower Radiator Hose
Courtesy of CHRYSLER LLC

4. Raise vehicle on hoist.
5. Place a suitable drain pan under crankcase drain.
6. Remove oil pan drain plug from crankcase and allow oil to drain into pan. Inspect drain plug threads for stretching or other damage. Replace drain plug and gasket if damaged.
7. Remove oil filter (2). Refer to **Fig. 393**.
8. Install drain plug in crankcase. Torque oil pan drain plug to 27 N.m (20 ft. lbs.).
9. Install new oil filter (2). Refer to **Fig. 393**.

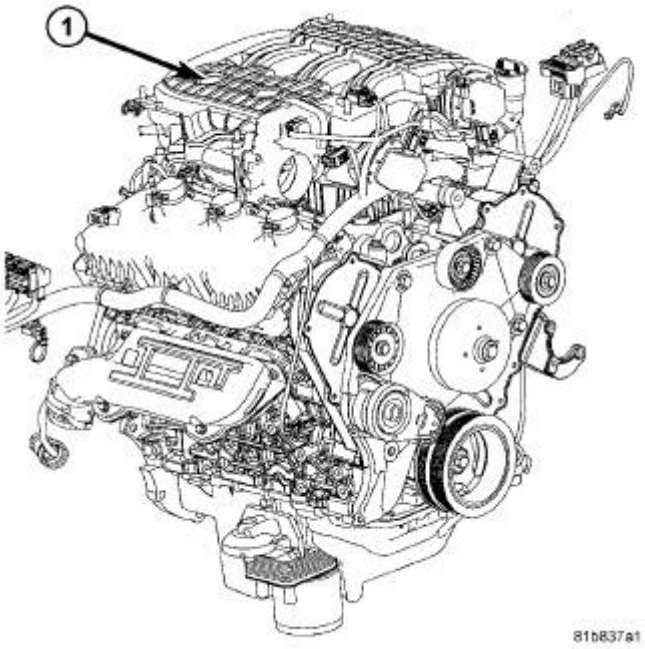

Fig. 394: 4.0L Engine
Courtesy of CHRYSLER LLC

10. Lower vehicle.
11. Fill crankcase with specified amount and type of engine oil. Refer to **LUBRICATION AND MAINTENANCE/FLUID TYPES - DESCRIPTION** and **LUBRICATION AND MAINTENANCE/FLUID TYPES - SPECIFICATIONS** .
12. Install oil fill cap. Refer to **Fig. 394**.
13. Start engine and inspect for leaks.
14. Stop engine and inspect oil level.

OIL FILTER SPECIFICATION

All engines are equipped with a high quality full-flow, disposable type oil filter. When replacing oil filter, use a Mopar® filter or equivalent.

USED ENGINE OIL DISPOSAL

Care should be exercised when disposing used engine oil after it has been drained from a vehicle engine. Refer to the WARNING above.

PAN, OIL

REMOVAL

REMOVAL

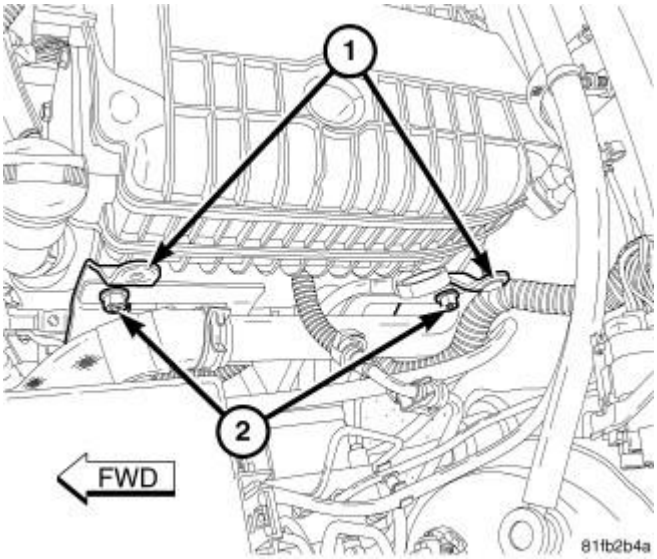

Fig. 395: Manifold Support Brackets & Nuts
Courtesy of CHRYSLER LLC

1. Disconnect and isolate the negative battery cable.

NOTE: **The steering column on vehicles with an automatic transmission may not be equipped with an internal locking shaft that allows the ignition key cylinder to be locked with the key. Alternative methods of locking the steering wheel for service will have to be used.**

2. Lock the steering wheel with the tires in the straight ahead position.
3. Remove two nuts (2) and reposition the upper radiator hose.
4. Remove the engine oil level indicator tube retaining bolt and remove the indicator tube.

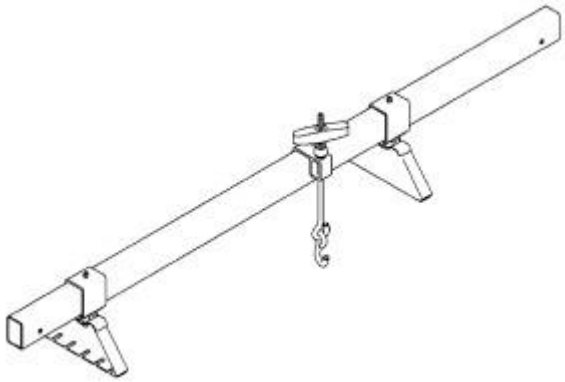

Fig. 396: Engine Support Tool #8534B
Courtesy of CHRYSLER LLC

5. Install the Engine Support Fixture (special tool #8534B, Fixture, Driveline Support) or equivalent.

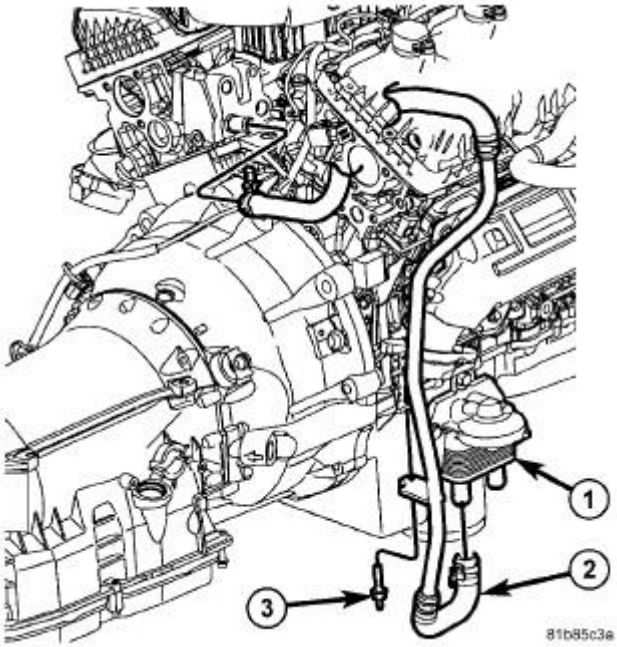

Fig. 397: Oil Cooler, Coolant Hose & Fastener
Courtesy of CHRYSLER LLC

6. Raise and support the vehicle. Refer to **HOISTING, STANDARD PROCEDURE** .
7. Drain engine oil and remove the oil filter. Refer to **Engine/Lubrication/OIL - Standard Procedure**.
8. Remove the oil cooler attaching fastener from the center of oil cooler (1) and reposition the oil cooler.

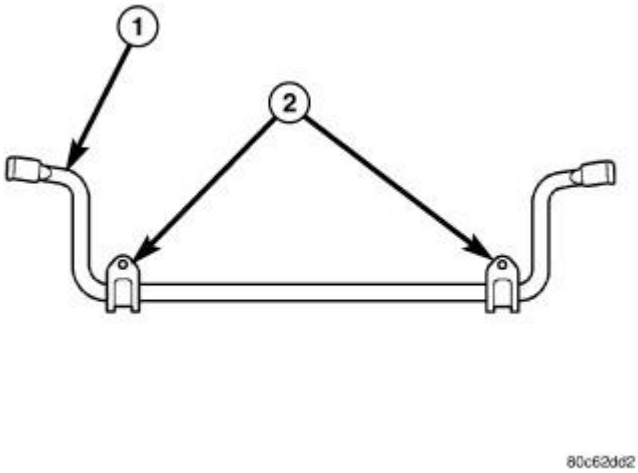

Fig. 398: Sway Bar
Courtesy of CHRYSLER LLC

9. Remove the stabilizer bar. Refer to **STABILIZER BAR, FRONT, REMOVAL** .

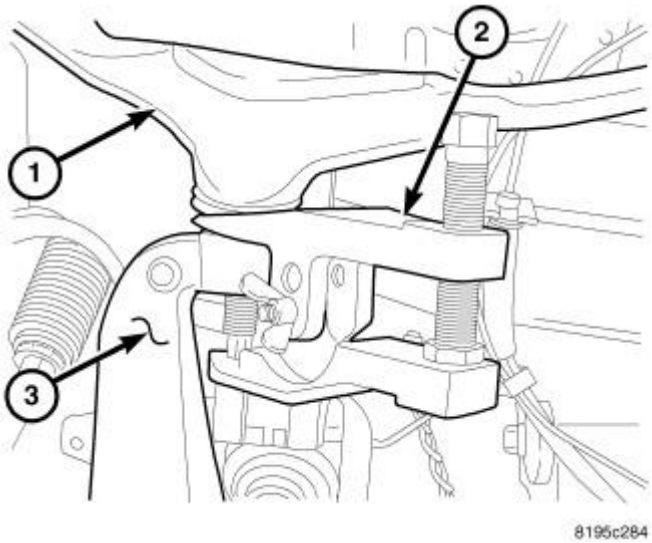

Fig. 399: Upper Ball Joint Separation
Courtesy of CHRYSLER LLC

10. Remove both steering knuckles (3). Refer to **KNUCKLE, STEERING, REMOVAL** .

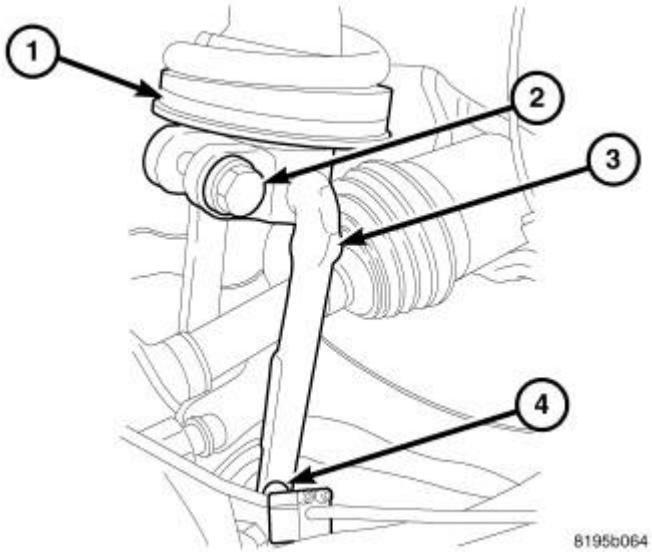

Fig. 400: Clevis Bracket
Courtesy of CHRYSLER LLC

11. Remove both shock absorber lower clevis bolts (4).

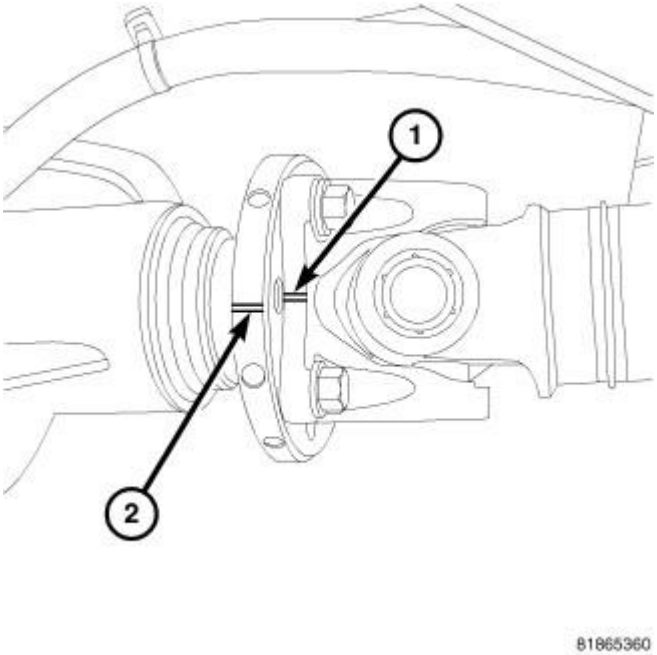

Fig. 401: Front Propeller Shaft Flange & Axle Flange
Courtesy of CHRYSLER LLC

12. Mark an installation reference line across the front propeller shaft flange (1) and the axle flange (2).

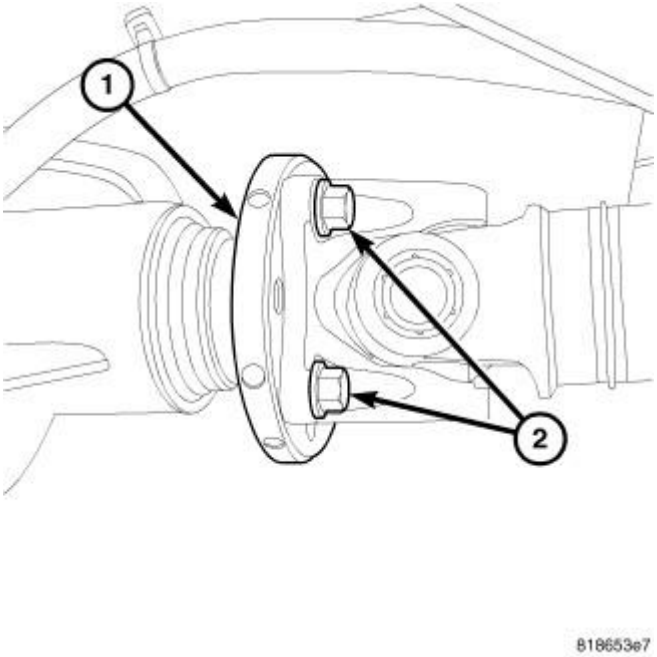

Fig. 402: Flange Bolts
Courtesy of CHRYSLER LLC

13. Remove the axle flange bolts (2) and reposition the front propeller shaft.

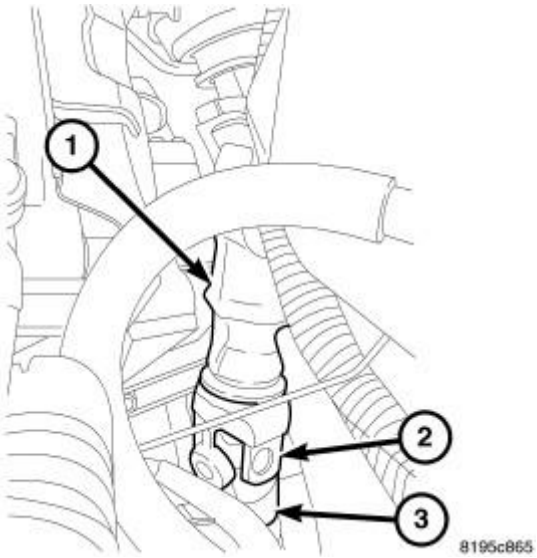

Fig. 403: Intermediate Shaft, Coupler & Lower Coupler Pinch Bolt
Courtesy of CHRYSLER LLC

14. Remove the lower coupler pinch bolt (3) at the steering gear.
15. Remove the coupler (2) from the steering gear and reposition the intermediate shaft (1).

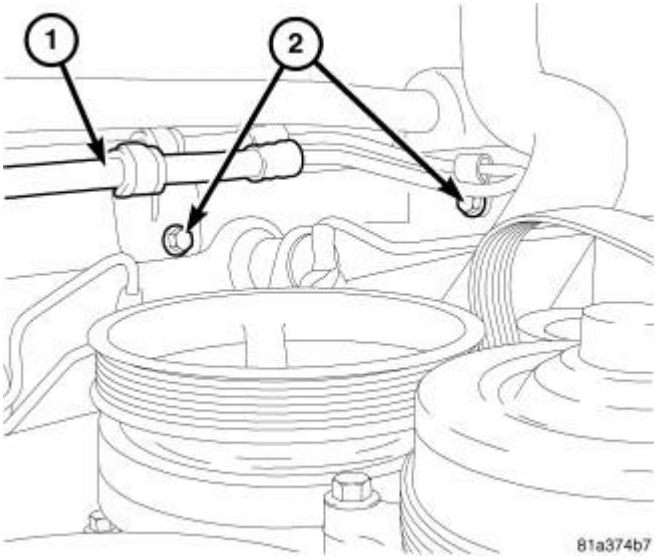

Fig. 404: Pressure Hose & Mounting Bolts
Courtesy of CHRYSLER LLC

16. Remove the power steering pressure hose mounting bolts (2) from the frame.

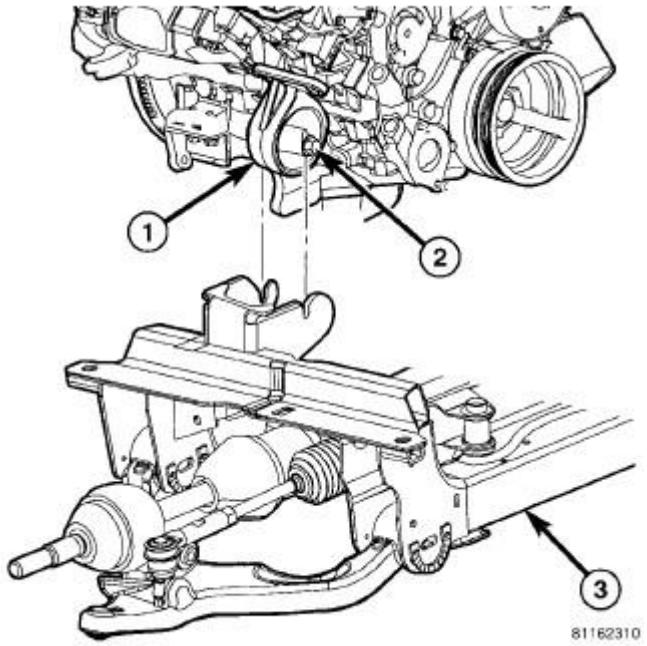

Fig. 405: Engine Mount
Courtesy of CHRYSLER LLC

17. Remove the vent hose from the front differential case.
18. Loosen the engine mount through bolts (2).

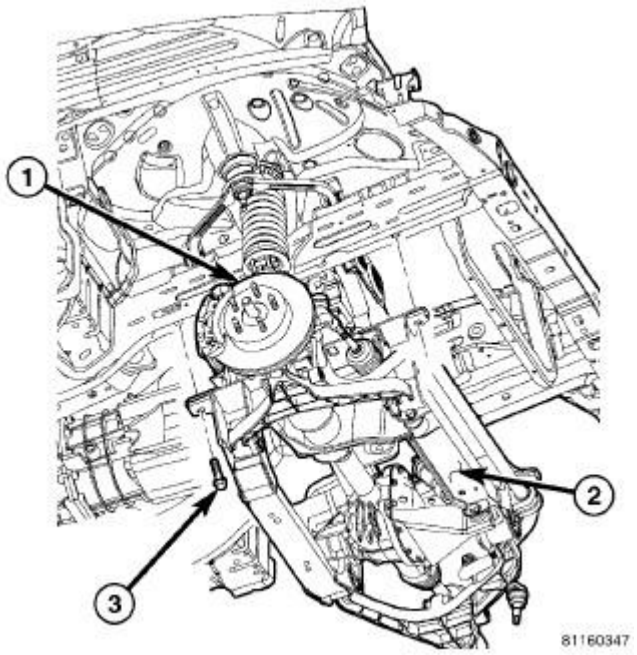

Fig. 406: Engine Cradle
Courtesy of CHRYSLER LLC

NOTE: Using a grease pencil or equivalent, mark the location of the engine support cradle.

19. Support the engine cradle (2) with jackstands.
20. Remove the engine cradle support bolts (3) and lower the engine cradle (2) approximately 5 inches.

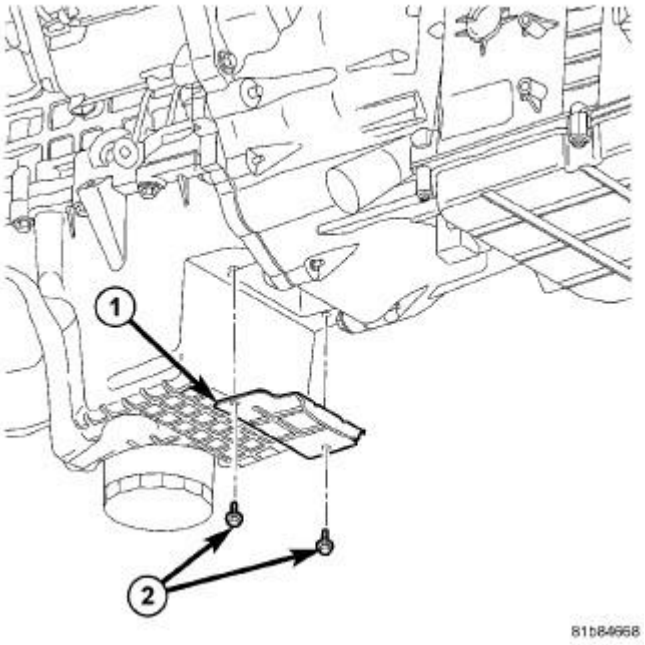

Fig. 407: Flex Plate Inspection Cover & Fasteners
Courtesy of CHRYSLER LLC

21. Remove the flex plate access cover (1).

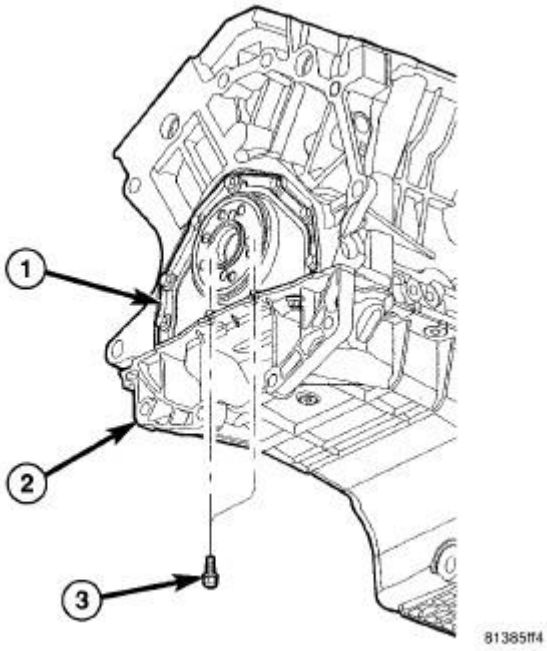

Fig. 408: Oil Pan, Bolt & Rear Main Seal Retainer
Courtesy of CHRYSLER LLC

22. Remove the two rear oil pan bolts (3).

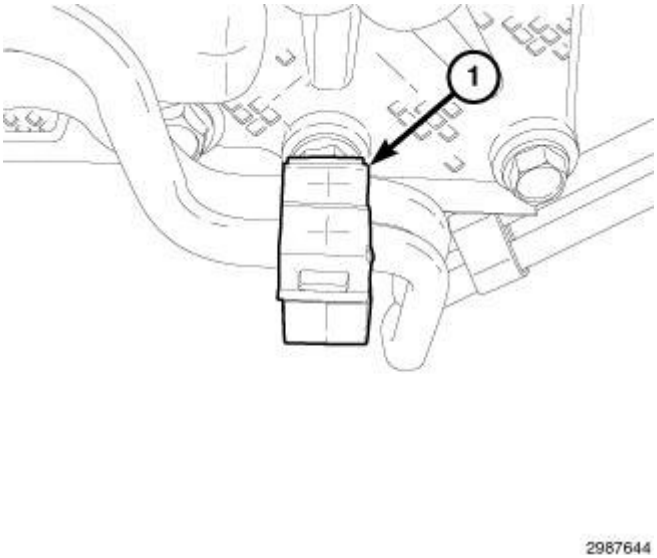

Fig. 409: Transmission Oil Cooling Line Retainer
Courtesy of CHRYSLER LLC

NOTE: The transmission oil cooling line retainer (1) is intended for one-time use only.

23. Disengage the transmission oil cooling line retainer (1) from the oil pan mounting stud and discard the

retainer.

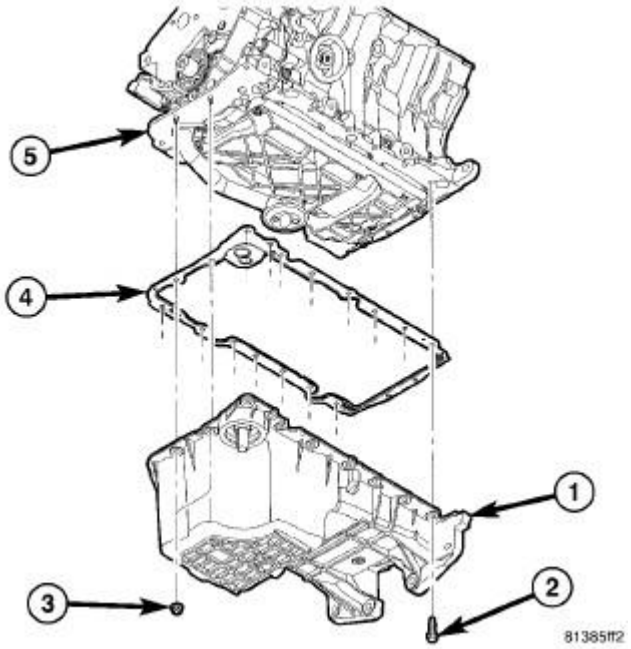

Fig. 410: Oil Pan, Bolt, Fastener, Gasket & Engine Block
Courtesy of CHRYSLER LLC

24. Remove the remaining oil pan bolts (2) and nuts (3).
25. Remove the oil pan (1).

NOTE: A small amount of oil will remain in the oil pan. Use care when removing the oil pan from the engine.

26. Clean all mating surfaces.

INSTALLATION

INSTALLATION

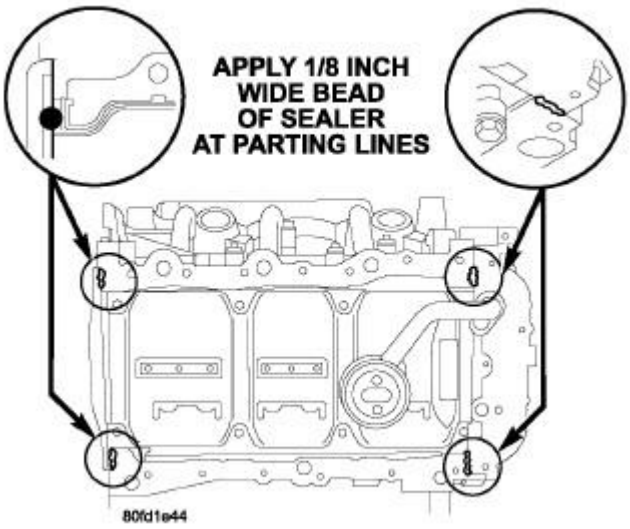

Fig. 411: Oil Pan Sealing
Courtesy of CHRYSLER LLC

1. Clean the oil pan and all gasket surfaces.
2. Apply a 1/8 inch bead of Mopar® Engine RTV GEN II at the parting line of the oil pump housing and the rear seal retainer.

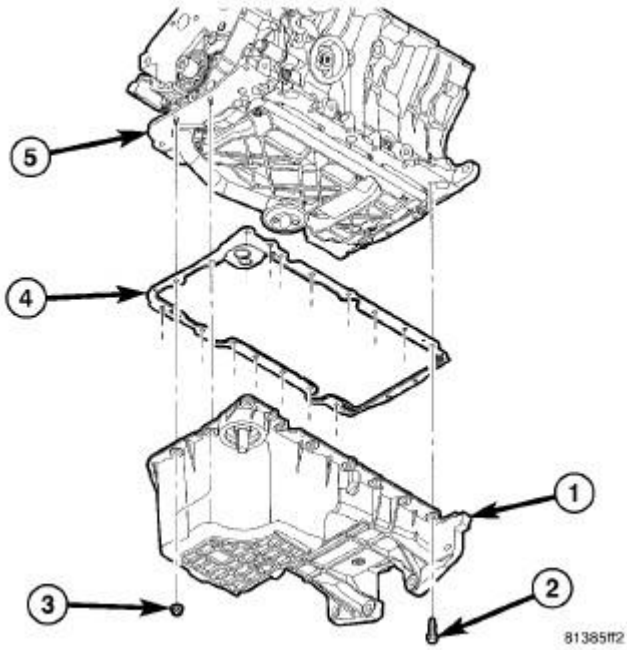

Fig. 412: Oil Pan, Bolt, Fastener, Gasket & Engine Block
Courtesy of CHRYSLER LLC

3. Install the oil pan gasket to the engine block.

4. Install the oil pan while aligning the oil level indicator tube and attach fasteners finger tight.

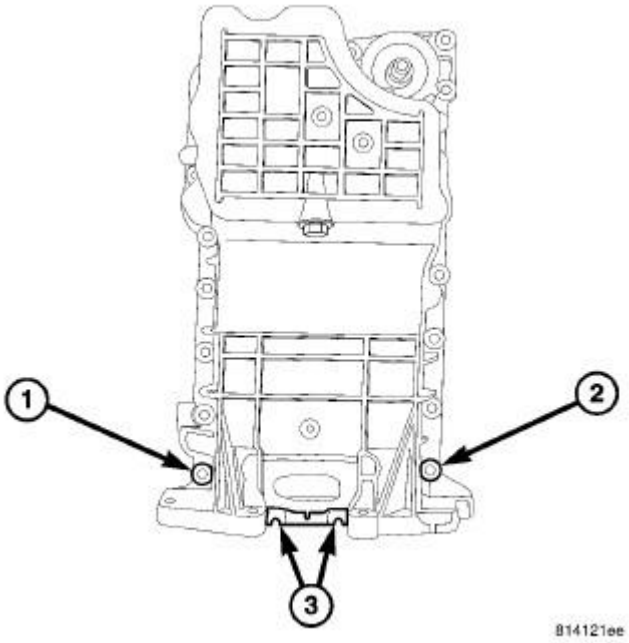

Fig. 413: Oil Pan Alignment
Courtesy of CHRYSLER LLC

NOTE: Assure that the rear face of the oil pan is flush to the transmission bell housing when installing the oil pan.

5. Pre-tighten the horizontal rear oil pan to transmission bolts to 1.4 N.m (12 in. lbs.).
6. First tighten the M8 (1) oil pan alignment bolt to 28 N.m (250 in. lbs.), then tighten bolt (2) to 28 N.m (250 in. lbs.).
7. Tighten the remaining M8 bolts and M8 nuts to 28 N.m (250 in. lbs.), and the M6 bolts to 12 N.m (105 in. lbs.).
8. Tighten the four M10 oil pan to transmission bolts to 55 N.m (40 ft. lbs.).

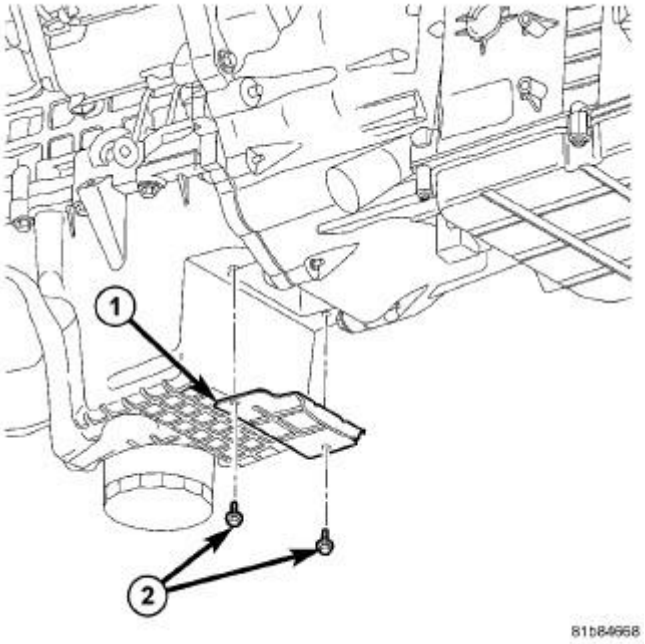

Fig. 414: Flex Plate Inspection Cover & Fasteners
Courtesy of CHRYSLER LLC

9. Install the flex plate access cover (1) and tighten the bolts (2) to 11 N.m (97 in. lbs.).

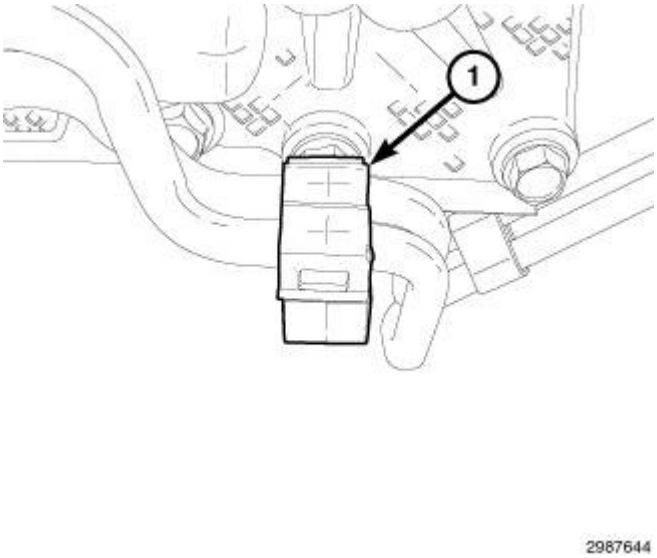

Fig. 415: Transmission Oil Cooling Line Retainer
Courtesy of CHRYSLER LLC

NOTE: The transmission oil cooling line retainer (1) is intended for one-time use only.

10. Install the retainer (1) to the transmission oil cooling lines and engage the retainer to the oil pan mounting

stud.

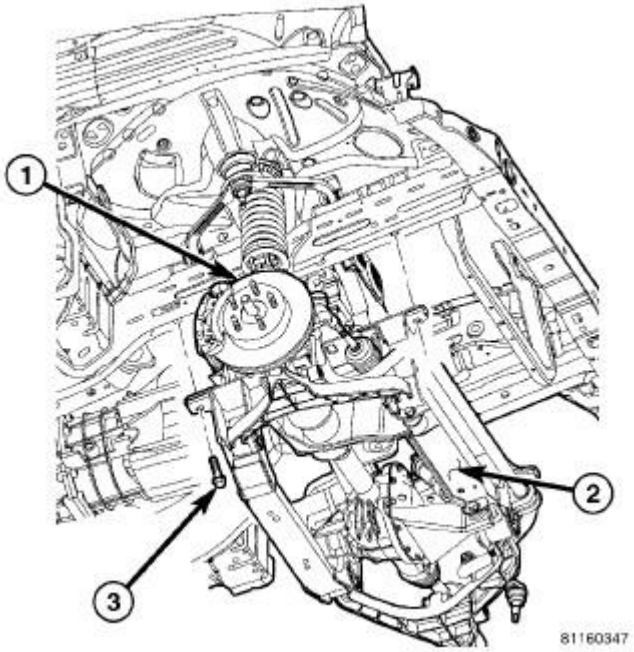

Fig. 416: Engine Cradle
Courtesy of CHRYSLER LLC

11. Raise the engine cradle (2) into the vehicle while lining up the engine mount through bolts.

NOTE: **Refer to the reference marks made during disassembly and align the cradle to those marks.**

12. Install the cradle mounting bolts (3) and tighten the front bolts to 122 N.m (90 ft. lbs.) and tighten the rear bolts to 115 N.m (85 ft. lbs.).

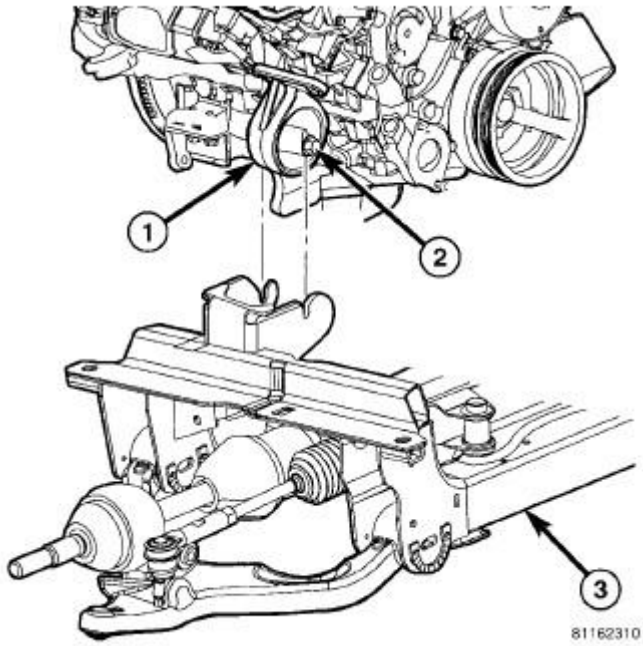

Fig. 417: Engine Mount
Courtesy of CHRYSLER LLC

13. Tighten the engine mount through bolts (2) to 88 N.m (65 ft. lbs.).

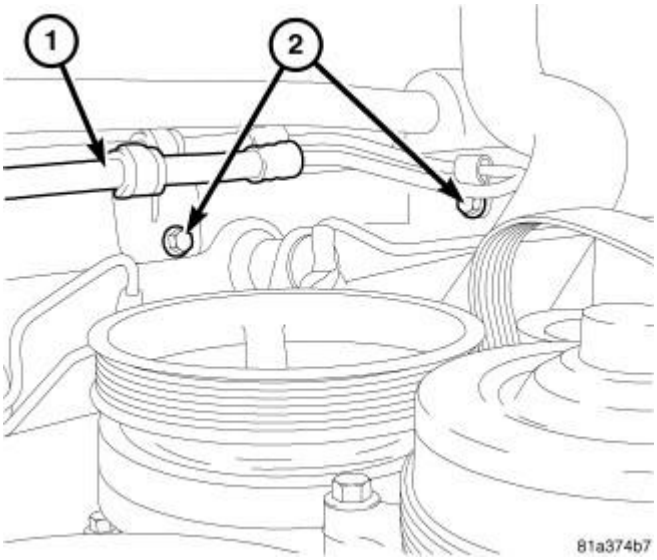

Fig. 418: Pressure Hose & Mounting Bolts
Courtesy of CHRYSLER LLC

14. Connect the vent hose to the front differential case.
15. Install the power steering pressure hose mounting bolts (2) to the frame. Tighten to 12 N.m (105 in. lbs.).

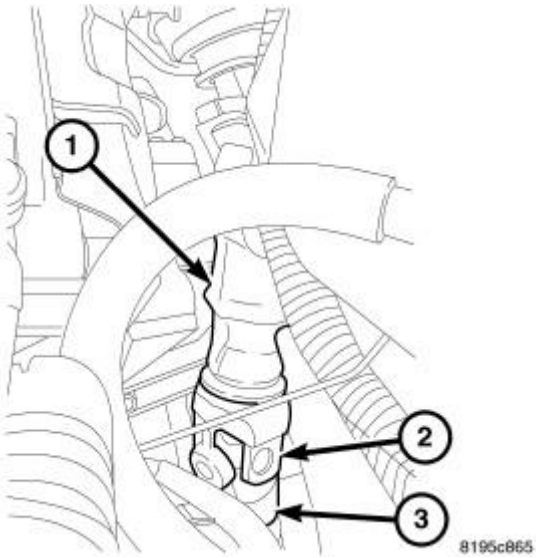

Fig. 419: Intermediate Shaft, Coupler & Lower Coupler Pinch Bolt
Courtesy of CHRYSLER LLC

16. Install the coupler (2) to the steering gear and tighten the lower coupler pinch bolt (3) to 53 N.m (39 ft. lbs.).

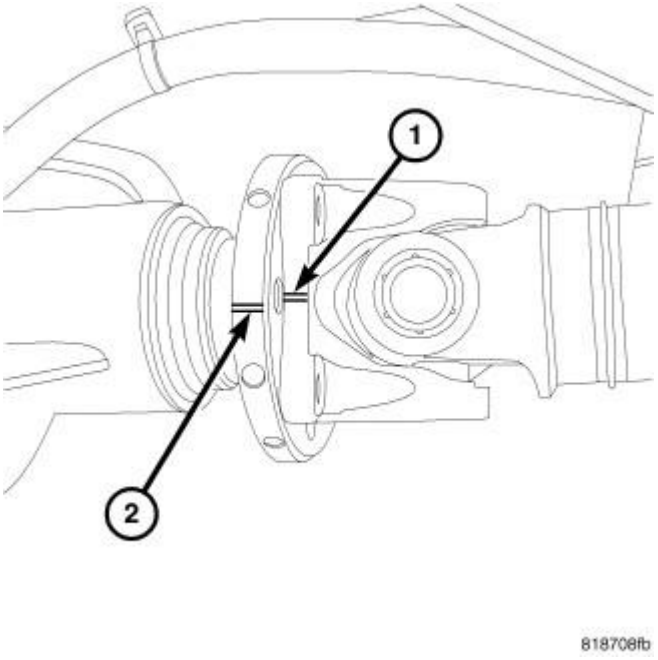

Fig. 420: Front Propeller Shaft Flange & Axle Flange
Courtesy of CHRYSLER LLC

NOTE: Clean all propeller shaft bolts and apply Mopar® Lock AND Seal Adhesive or equivalent to the threads before installation.

17. Align the installation reference marks on the front propeller shaft flange (1) and axle flange (2).

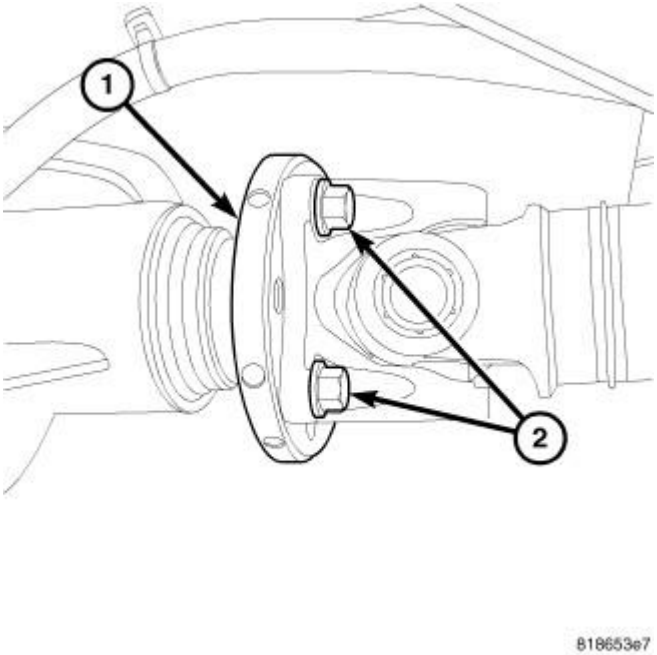

Fig. 421: Flange Bolts
Courtesy of CHRYSLER LLC

18. Install the axle flange bolts (2) and tighten to 108 N.m (80 ft. lbs.).

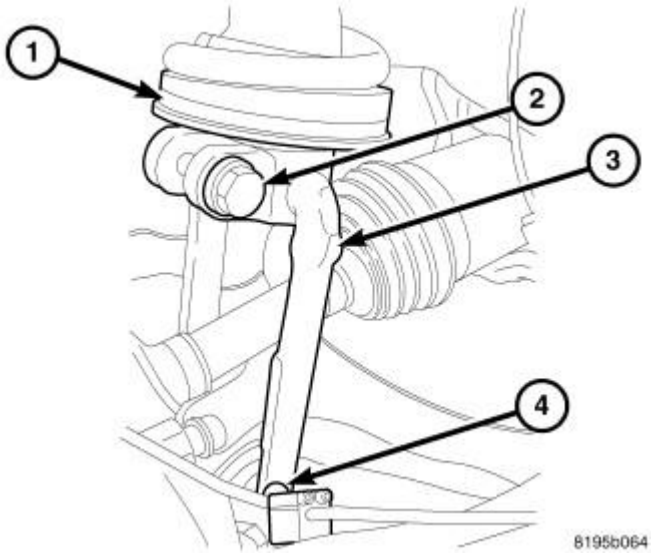

Fig. 422: Clevis Bracket
Courtesy of CHRYSLER LLC

19. Install both shock absorber lower clevis bolt/nut (4). Tighten the nut to 150 N.m (110 ft. lbs.) **with full vehicle weight** .

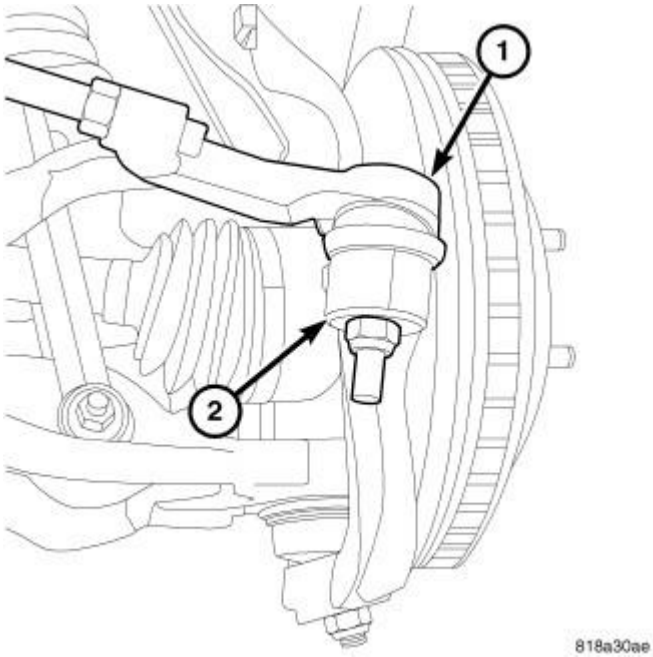

Fig. 423: Tie Rod End & Steering Knuckle
Courtesy of CHRYSLER LLC

20. Install the steering knuckles and tire/wheel assemblies. Refer to **KNUCKLE, STEERING, INSTALLATION** .

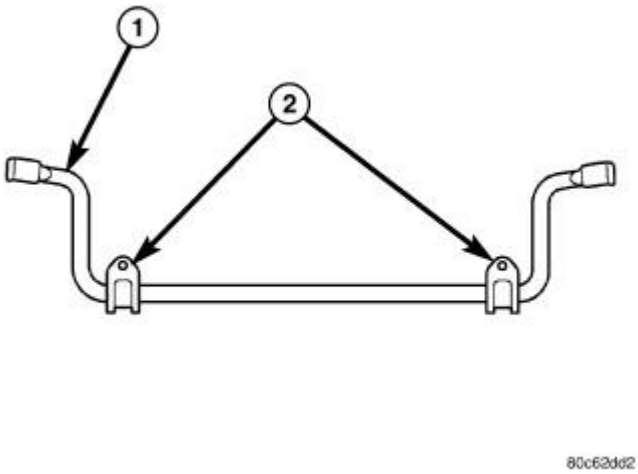

Fig. 424: Sway Bar
Courtesy of CHRYSLER LLC

21. Install the stabilizer bar. Refer to **STABILIZER BAR, FRONT, INSTALLATION** .

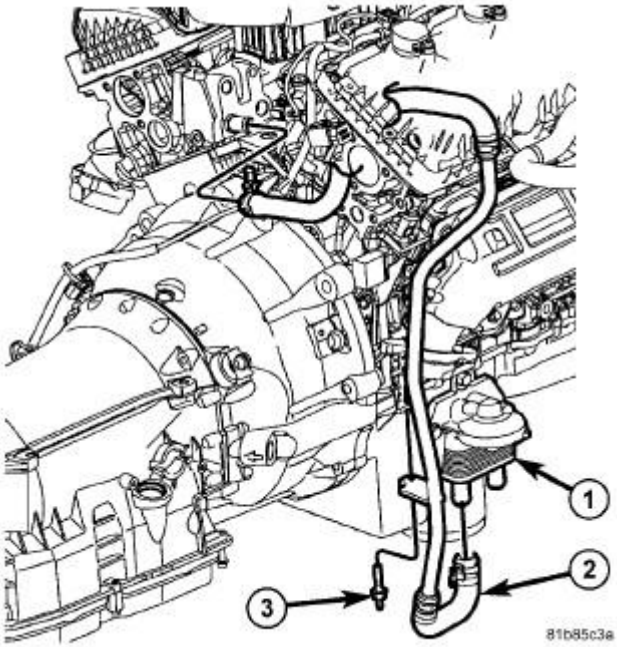

Fig. 425: Oil Cooler, Coolant Hose & Fastener
Courtesy of CHRYSLER LLC

22. Position the oil cooler (1) to the fitting on the oil pan.

NOTE: **Remove all oil and debris from the seal retainer surface. The cut out section of the oil cooler seal retainer flange (top), must be aligned with the tab on the oil pan. The oil cooler must be prevented from turning during the tightening sequence.**

23. Install the oil cooler attaching fastener to the center of the oil cooler and tighten to 61 N.m (45 ft. lbs.).
24. Install the oil filter. Refer to **FILTER, ENGINE OIL, INSTALLATION**.

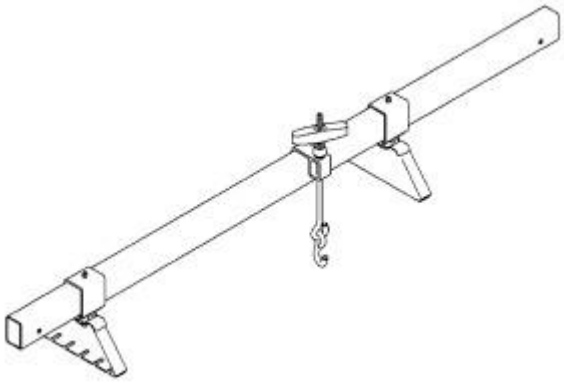

Fig. 426: Engine Support Tool #8534B
Courtesy of CHRYSLER LLC

25. Lower the vehicle and remove the engine support tool.

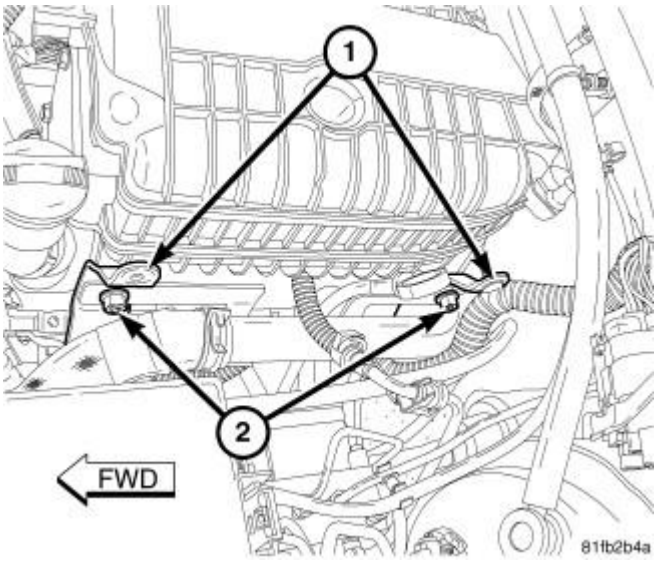

Fig. 427: Manifold Support Brackets & Nuts
Courtesy of CHRYSLER LLC

26. Install the engine oil level indicator tube and tighten the retaining bolt to 12 N.m (105 in. lbs.).
27. Install two nuts (2) to the left manifold support brackets (1) and upper radiator hose. Tighten the nuts to 12 N.m (105 in. lbs.).
28. Fill the engine crankcase with proper oil to the correct level. Refer to **Engine/Lubrication/OIL - Standard Procedure**.
29. Unlock the steering wheel.
30. Connect the negative battery cable and tighten nut to 5 N.m (45 in. lbs.).

PUMP, ENGINE OIL

REMOVAL

REMOVAL

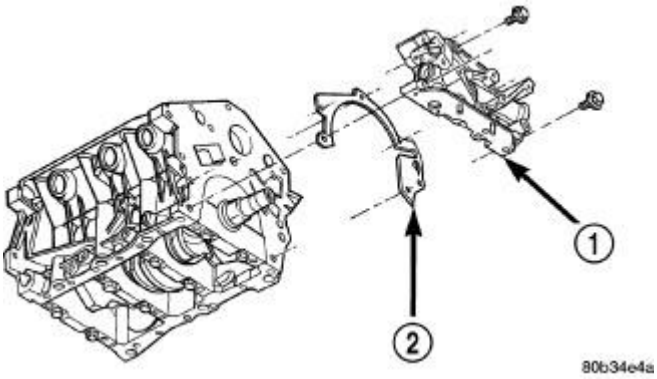

Fig. 428: Oil Pump & Gasket

Courtesy of CHRYSLER LLC

1 - OIL PUMP
2 - GASKET

1. Drain the cooling system. Refer to **STANDARD PROCEDURE** .
2. Remove the timing belt. Refer to **SPROCKET(S), TIMING BELT AND CHAIN, REMOVAL**.
3. Remove the crankshaft sprocket. Refer to **SPROCKET(S), TIMING BELT AND CHAIN, REMOVAL**.
4. Remove the oil pan. Refer to **PAN, OIL, REMOVAL**.

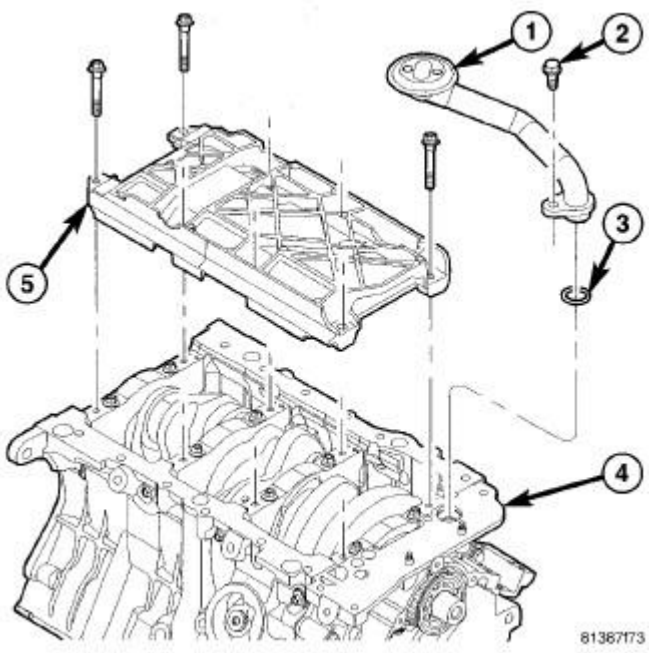

Fig. 429: Oil Pick Up Tube, Bolt, Seal, Oil Pump & Windage Tray
Courtesy of CHRYSLER LLC

1 - OIL PICK UP TUBE WITH STRAINER
2 - BOLT
3 - O-RING
4 - OIL PUMP
5 - WINDAGE TRAY

5. Remove the oil pickup tube. Refer to **Fig. 429**.

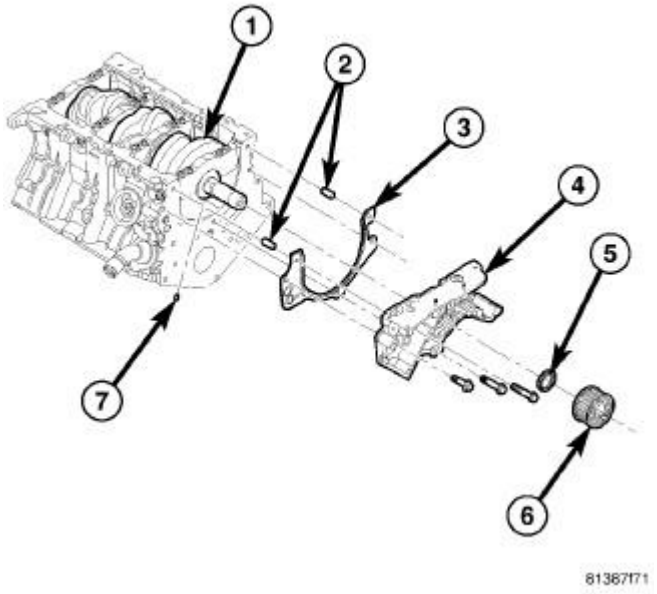

Fig. 430: Oil Pump & Crankshaft Gear Assembly
Courtesy of CHRYSLER LLC

1 - CRANKSHAFT
2 - DOWEL
3 - GASKET
4 - OIL PUMP
5 - FRONT CRANKSHAFT SEAL
6 - CRANKSHAFT GEAR
7 - PIN

6. Remove the oil pump fasteners. Remove the oil pump and gasket from engine. Refer to **Fig. 430**.

DISASSEMBLY

DISASSEMBLY

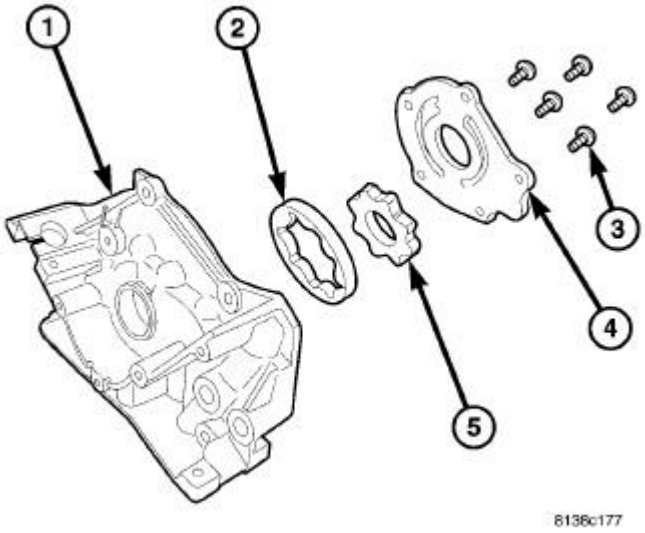

Fig. 431: Oil Pump Assembly
Courtesy of CHRYSLER LLC

1 - OIL PUMP BODY
2 - OIL PUMP OUTER ROTOR
3 - SCREWS
4 - OIL PUMP COVER
5 - OIL PUMP INNER ROTOR

1. Remove oil pump cover screws (3) and lift off cover (4). Refer to **Fig. 431**.
2. Remove pump rotors (2, 5).
3. Wash all parts in a suitable solvent and inspect carefully for damage or wear.

INSPECTION

INSPECTION

NOTE: **DO NOT inspect the oil relief valve assembly. If the oil relief valve is suspect, replace the oil pump.**

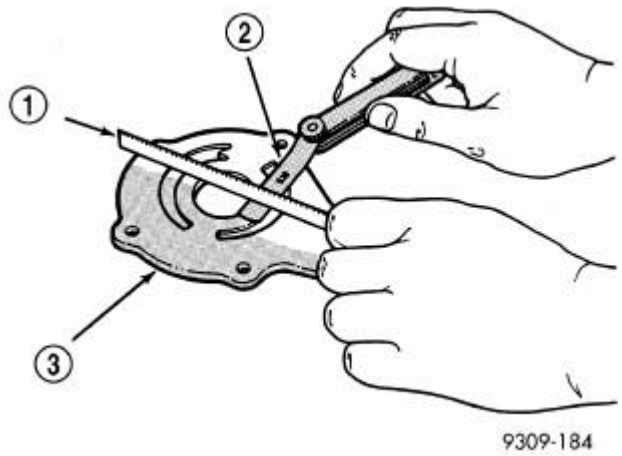

Fig. 432: Checking Oil Pump Cover Flatness
Courtesy of CHRYSLER LLC

1 - STRAIGHT EDGE
2 - FEELER GAUGE
3 - OIL PUMP COVER

1. Disassemble oil pump. Refer to **Engine/Lubrication/PUMP, Engine Oil - Disassembly**.
2. Clean all parts thoroughly. Mating surface of the oil pump housing should be smooth. Replace pump cover if scratched or grooved.
3. Lay a straightedge (1) across the pump cover (3) surface. Refer to **Fig. 432**. If a 0.025 mm (0.001 in.) feeler gauge can be inserted between cover and straight edge, cover should be replaced.

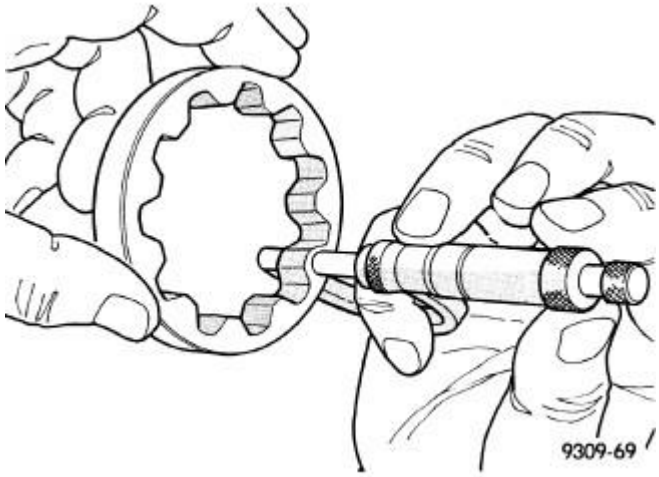

Fig. 433: Measuring Outer Rotor Thickness
Courtesy of CHRYSLER LLC

4. Measure thickness and diameter of outer rotor. Refer to **Fig. 433**. If outer rotor thickness measures 14.299 mm (0.563 in.) or less, or if the diameter is 79.78 mm (3.141 inches.) or less, replace outer rotor.

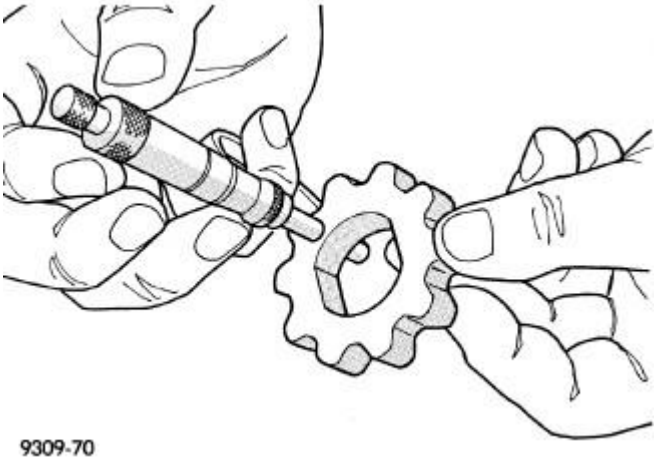

Fig. 434: Measuring Inner Rotor Thickness
Courtesy of CHRYSLER LLC

5. If inner rotor measures 14.299 mm (0.563 in.) or less replace inner rotor. Refer to **Fig. 434**.

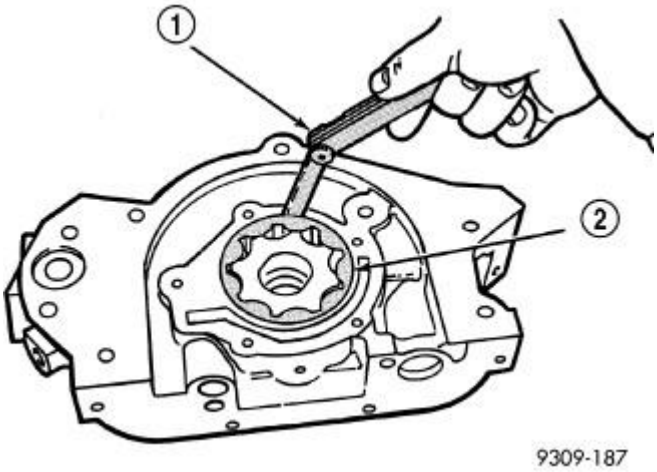

Fig. 435: Measuring Outer Rotor Clearance In Housing
Courtesy of CHRYSLER LLC

1 - FEELER GAUGE
2 - OUTER ROTOR

6. Slide outer rotor (2) into body, press to one side with fingers and measure clearance between rotor and body. Refer to **Fig. 435**. If measurement is 0.39 mm (0.015 inch.) or more, replace body only if outer rotor is in specifications.

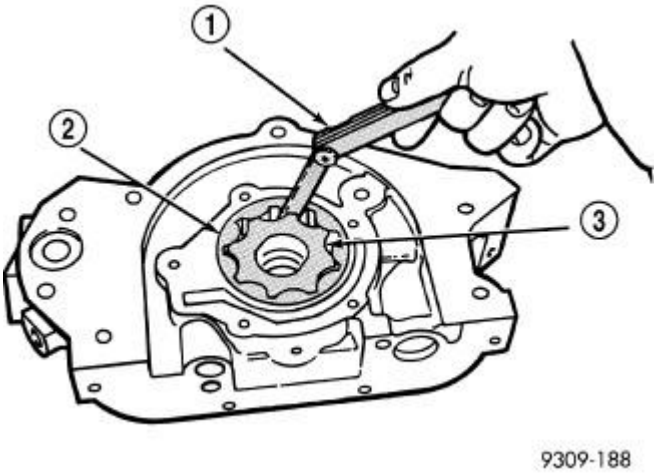

Fig. 436: Measuring Clearance Between Rotors
Courtesy of CHRYSLER LLC

1 - FEELER GAUGE
2 - OUTER ROTOR
3 - INNER ROTOR

7. Install inner rotor into body. If clearance between inner (3) and outer rotors (2) is 0.20 mm (0.008 inch.) or more, replace both rotors. Refer to **Fig. 436**.

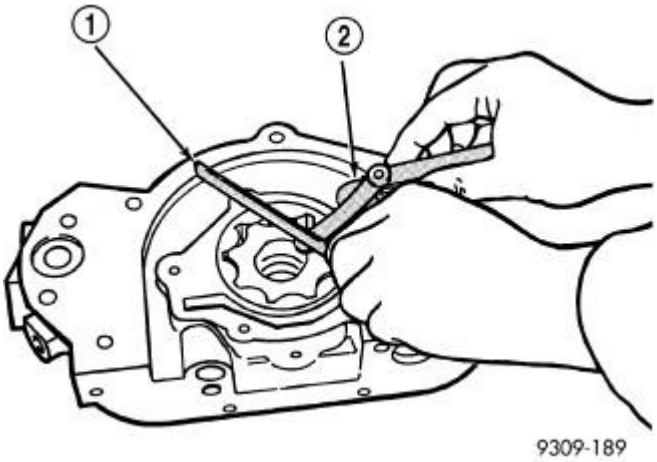

Fig. 437: Measuring Clearance Over Rotors
Courtesy of CHRYSLER LLC

1 - STRAIGHT EDGE
2 - FEELER GAUGES

8. Place a straightedge (1) across the face of the body, between bolt holes. Refer to **Fig. 437**. If a feeler gauge of 0.077 mm (0.003 in.) or more can be inserted between rotors and the straightedge, replace pump assembly **ONLY** if rotors are in specs.

9. Assemble oil pump. Refer to **Engine/Lubrication/PUMP, Engine Oil - Assembly**.

ASSEMBLY

ASSEMBLY

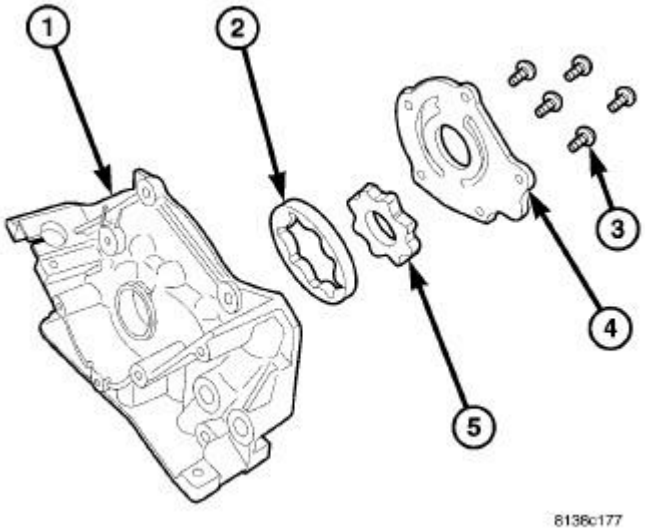

Fig. 438: Oil Pump Assembly
Courtesy of CHRYSLER LLC

1 - OIL PUMP BODY
2 - OIL PUMP OUTER ROTOR
3 - SCREWS
4 - OIL PUMP COVER
5 - OIL PUMP INNER ROTOR

1. Assemble oil pump using new parts as required.
2. Tighten cover screws (3) to 12 N.m (105 in. lbs.). Refer to **Fig. 438**.
3. Prime oil pump before installation by filling rotor cavity with engine oil.
4. If oil pressure is low and pump is within specifications, inspect for worn engine bearings or other reasons for oil pressure loss.

INSTALLATION

INSTALLATION

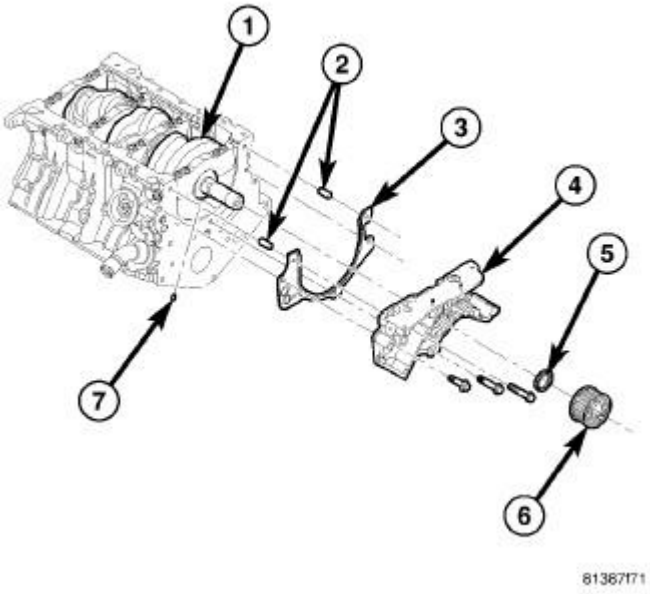

Fig. 439: Oil Pump & Crankshaft Gear Assembly
Courtesy of CHRYSLER LLC

1 - CRANKSHAFT
2 - DOWEL
3 - GASKET
4 - OIL PUMP
5 - FRONT CRANKSHAFT SEAL
6 - CRANKSHAFT GEAR
7 - PIN

1. Prime oil pump (4) before installation by filling rotor cavity with clean engine oil.
2. Install oil pump (4) and gasket (3) carefully over the crankshaft. Position pump onto block and tighten bolts to 28 N.m (250 in. lbs.).

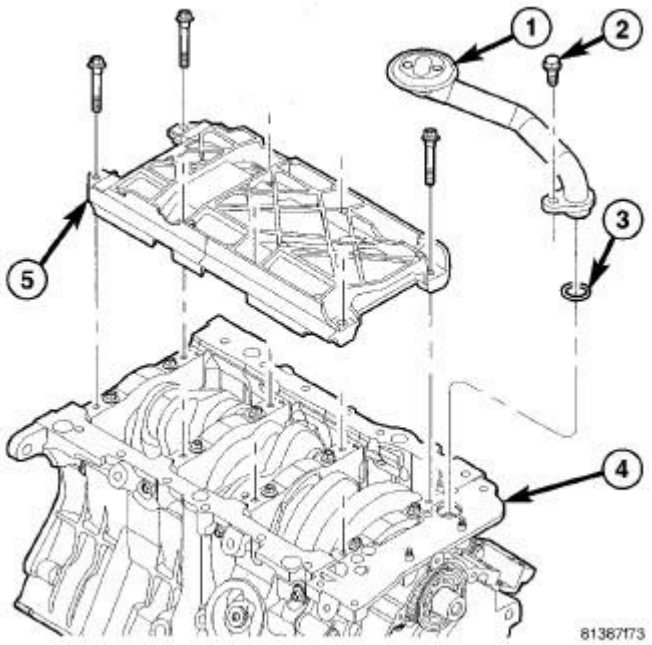

Fig. 440: Oil Pick Up Tube, Bolt, Seal, Oil Pump & Windage Tray
Courtesy of CHRYSLER LLC

1 - OIL PICK UP TUBE WITH STRAINER
2 - BOLT
3 - O-RING
4 - OIL PUMP
5 - WINDAGE TRAY

3. Install new O-ring (3) on oil pickup tube (1).
4. Install oil pickup tube (1).
5. Install oil pan. Refer to **ENGINE/LUBRICATION/OIL PAN - INSTALLATION**.
6. Install crankshaft sprocket. Refer to **ENGINE/VALVE TIMING/TIMING BELT/CHAIN AND SPROCKETS - INSTALLATION**.
7. Install timing belt. Refer to **ENGINE/VALVE TIMING/TIMING BELT/CHAIN AND SPROCKETS - INSTALLATION**.
8. Install the timing belt covers. Refer to **COVER(S), ENGINE TIMING, FRONT, INSTALLATION** and **COVER(S), ENGINE TIMING, REAR, INSTALLATION**.

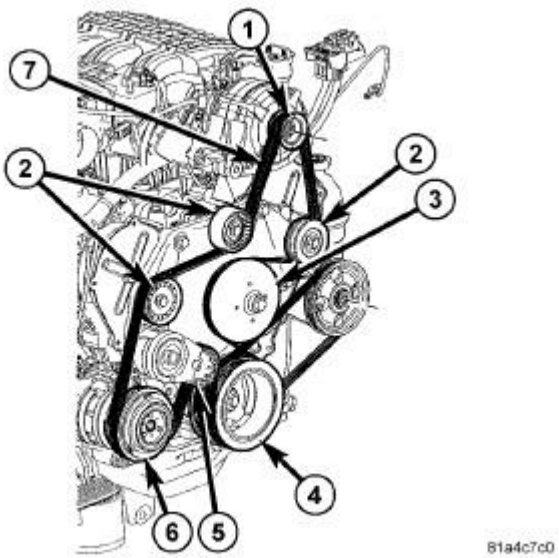

Fig. 441: Accessory Drive Belt Routing - 4.0L
Courtesy of CHRYSLER LLC

9. Install the crankshaft vibration damper (4). Refer to **ENGINE/ENGINE BLOCK/VIBRATION DAMPER - INSTALLATION**.
10. Install the accessory drive belt (7). Refer to **BELT, SERPENTINE, INSTALLATION** .
11. Fill the cooling system. Refer to **COOLING - STANDARD PROCEDURE** .
12. Fill engine crankcase with proper oil to the correct level.

SWITCH, OIL PRESSURE

REMOVAL

REMOVAL

1. Raise vehicle on hoist.
2. Position an oil collecting container under switch location.
3. Disconnect electrical connector.
4. Unscrew oil pressure switch.

INSTALLATION

INSTALLATION

1. Apply Mopar® Thread Sealant to the switch threads.
2. Install oil pressure switch to fitting.
3. Connect electrical connector.
4. Lower vehicle.
5. Start engine and check for leaks.

6. Check engine oil level and adjust as necessary.

MANIFOLDS

MANIFOLD, EXHAUST, LEFT

REMOVAL

REMOVAL

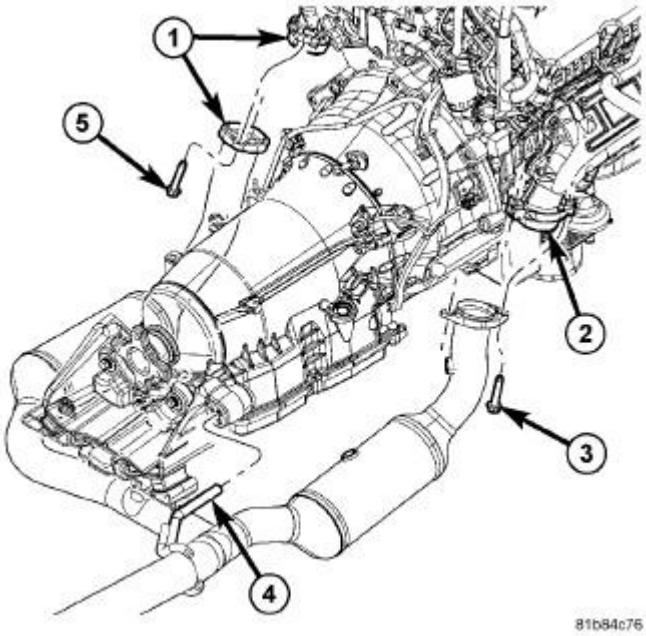

Fig. 442: Exhaust Pipe To Manifold With Fasteners
Courtesy of CHRYSLER LLC

1. Disconnect and isolate the negative battery cable.
2. Raise and support the vehicle.
3. Separate the front exhaust pipe to manifold union (2).

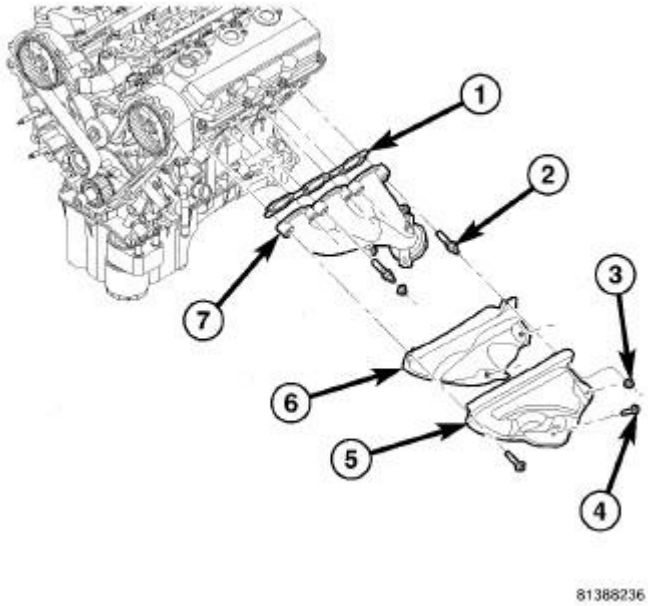

Fig. 443: Left Exhaust Manifold Assembly
Courtesy of CHRYSLER LLC

1 - GASKET
2 - STUD
3 - NUT
4 - BOLT
5 - UPPER HEAT SHIELD
6 - LOWER HEAT SHIELD
7 - EXHAUST MANIFOLD

4. Lower the vehicle.
5. Disconnect and remove the oxygen sensor from the exhaust manifold (7)
6. Remove the exhaust manifold shield (5) retaining bolts, exhaust manifold (7), and discard gasket (1).

INSPECTION

INSPECTION

1. Inspect exhaust manifolds for damage or cracks.
2. Check manifold flatness.
3. Inspect the exhaust manifold gasket for obvious discoloration or distortion.
4. Check distortion of the cylinder head mounting surface with a straightedge and thickness gauge.

INSTALLATION

INSTALLATION

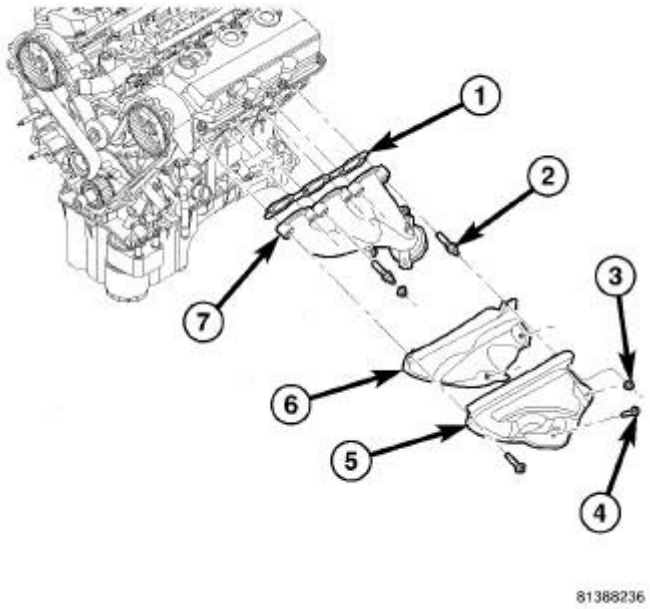

Fig. 444: Left Exhaust Manifold Assembly
Courtesy of CHRYSLER LLC

1 - GASKET
2 - STUD
3 - NUT
4 - BOLT
5 - UPPER HEAT SHIELD
6 - LOWER HEAT SHIELD
7 - EXHAUST MANIFOLD

NOTE: If replacing the exhaust manifold, tighten the exhaust outlet studs to manifold to 40 N.m (350 in.lbs.).

1. Position the exhaust manifold (7) and gasket (1). Install the retaining bolts (2). Tighten 4 bolts starting at the center working outward to 23 N.m (200 in. lbs.).
2. Install the exhaust manifold heat shields (5, 6). Tighten the bolts to 12 N.m (105 in. lbs.).
3. Tighten the out most stud nuts to 8 N.m (73 in.lbs.).
4. Connect the oxygen sensor.

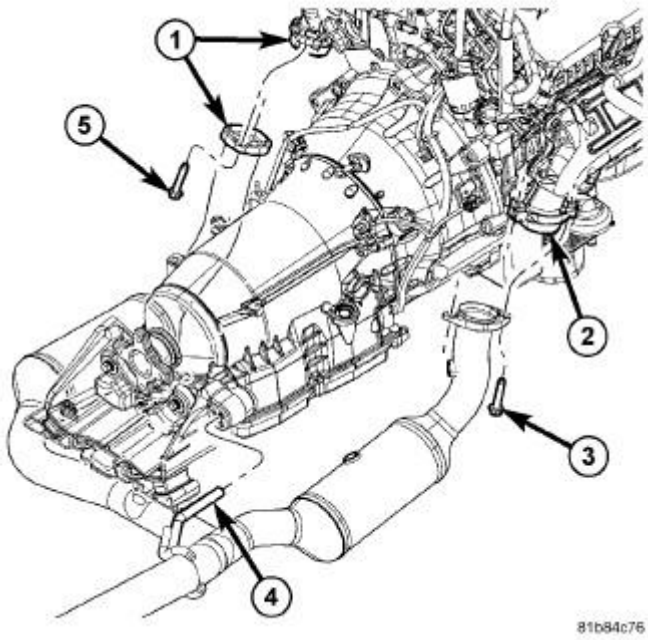

Fig. 445: Exhaust Pipe To Manifold With Fasteners
Courtesy of CHRYSLER LLC

5. Raise and support the vehicle.
6. Connect the exhaust pipe to manifold union (2). Tighten the exhaust stud nuts to 34 N.m (300 in.lbs.).
7. Connect the negative battery cable.

MANIFOLD, EXHAUST, RIGHT

REMOVAL

REMOVAL

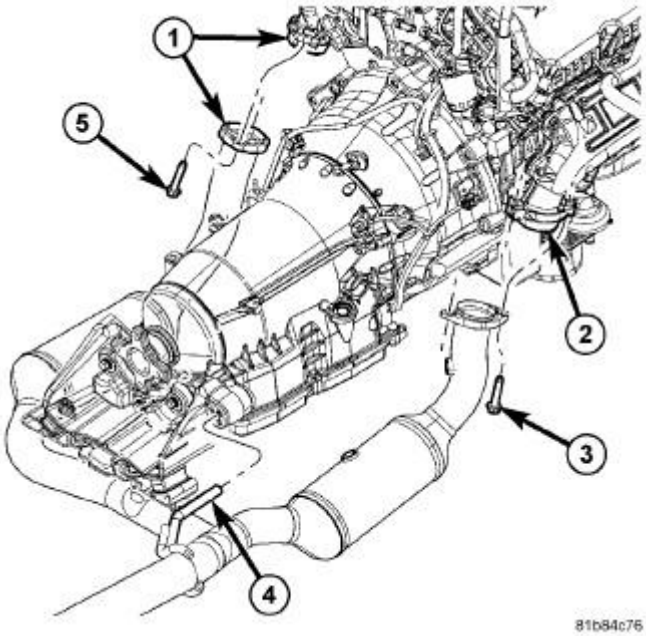

Fig. 446: Exhaust Pipe To Manifold With Fasteners
Courtesy of CHRYSLER LLC

1. Disconnect the negative battery cable.
2. Disconnect the upstream oxygen sensor electrical connector.
3. Raise and support the vehicle.
4. Remove the exhaust manifold to exhaust pipe flange retaining bolts (2).

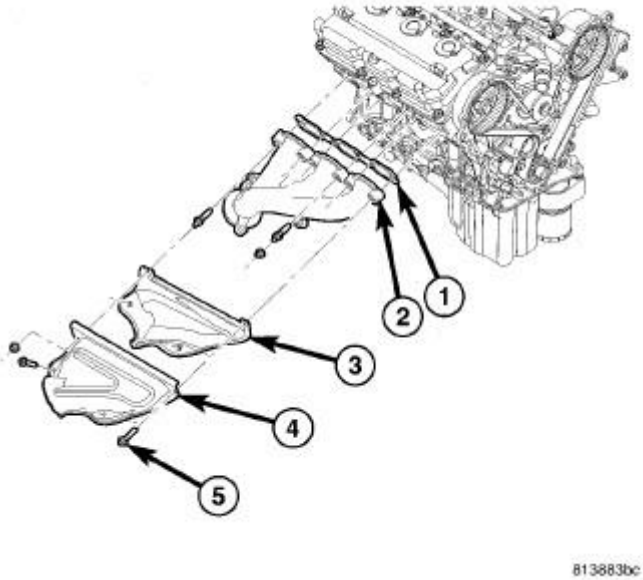

Fig. 447: Right Exhaust Manifold Assembly
Courtesy of CHRYSLER LLC

1 - GASKET
2 - MANIFOLD
3 - LOWER SHIELD
4 - UPPER SHIELD
5 - BOLT

5. Lower the vehicle.
6. Remove the exhaust manifold heat shield and manifold.
7. Remove the oxygen sensor from the exhaust manifold.

INSTALLATION

INSTALLATION

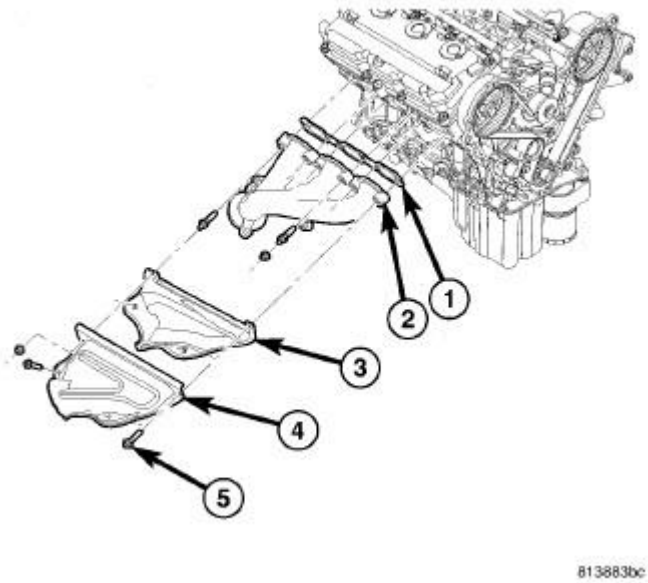

Fig. 448: Right Exhaust Manifold Assembly
Courtesy of CHRYSLER LLC

1 - GASKET
2 - MANIFOLD
3 - LOWER SHIELD
4 - UPPER SHIELD
5 - BOLT

1. Clean gasket surfaces.

NOTE: If replacing the exhaust manifold, tighten the exhaust outlet studs to 39 N.m (350 in.lbs.).

2. Position the exhaust manifold and gasket. Refer to **Fig. 448**. Install the retaining bolts. Tighten 4 bolts starting at the center working outward to 23 N.m (200 in. lbs.).
3. Install the heat shields. Tighten the heat shield fasteners to 12 N.m (105 in.lbs.).
4. Tighten the 2 out most nuts to 8 N.m (73 in.lbs.).
5. Connect the oxygen sensor.
6. Raise and support the vehicle.

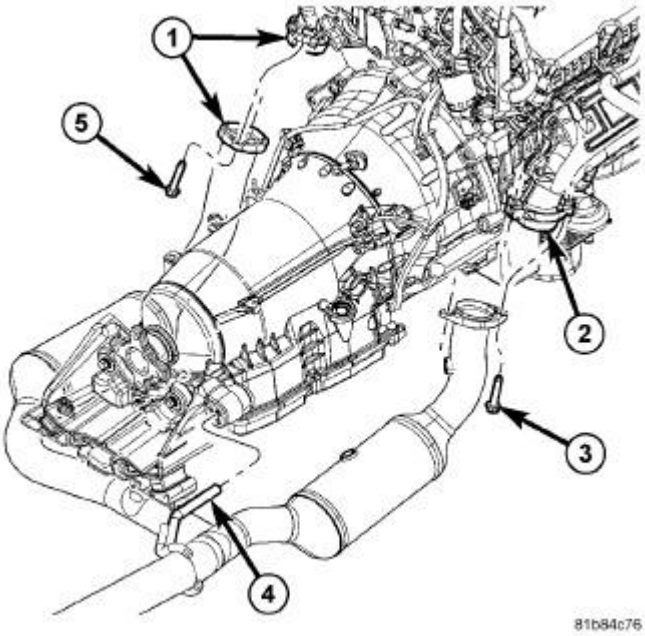

Fig. 449: Exhaust Pipe To Manifold With Fasteners
Courtesy of CHRYSLER LLC

7. Connect the front exhaust pipe to exhaust manifold (2). Tighten the fasteners to 34 N.m (300 in. lbs.).
8. Connect the negative battery cable.

MANIFOLD, INTAKE

REMOVAL

UPPER INTAKE MANIFOLD

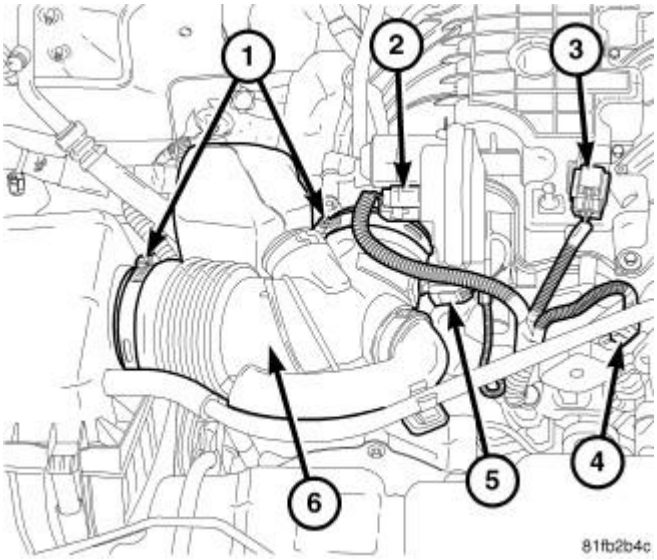

Fig. 450: IAT Sensor, MAP Sensor, Electronic Throttle Control, Manifold Tuning Valve, Clamps, Electrical Connectors & Air Inlet Hose
Courtesy of CHRYSLER LLC

1. Disconnect and isolate the negative battery cable.
2. Disconnect the IAT sensor (5), MAP sensor (3), electronic throttle control (2) and manifold tuning valve (4) electrical connectors.
3. Loosen clamps (1) and remove air inlet hose (6) from the throttle body.

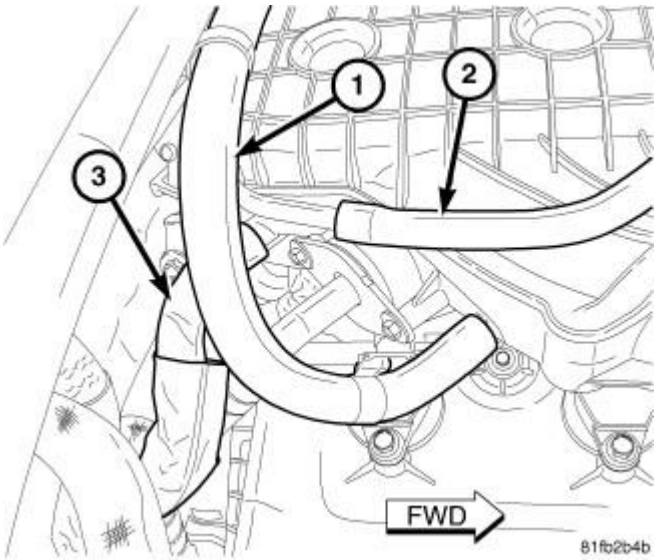

Fig. 451: EGR Tube, PCV & Power Brake Booster Vacuum Hoses
Courtesy of CHRYSLER LLC

4. Disconnect the PCV (3), purge (2) and power brake booster vacuum (1) hoses from the upper intake manifold.

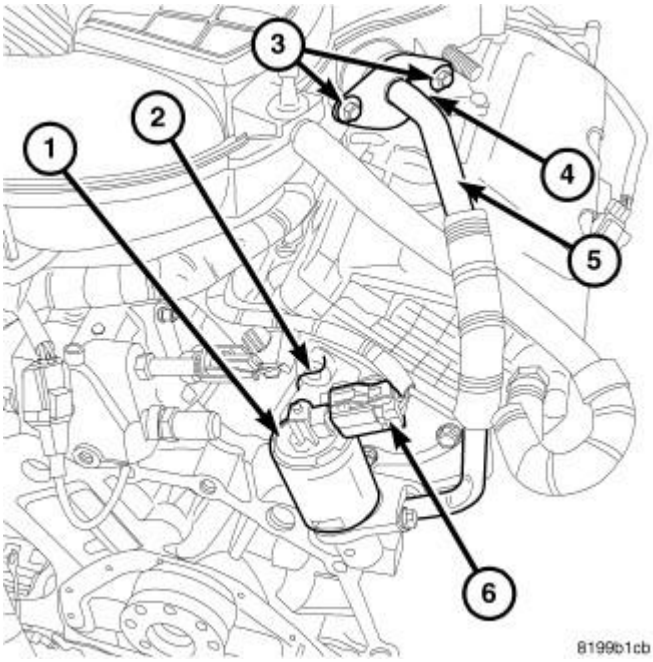

Fig. 452: EGR Valve, Right Cylinder Head, Flange Mounting Bolts, Exhaust Gas Routing Tube & Electrical Connector
Courtesy of CHRYSLER LLC

5. Remove two EGR tube mounting flange bolts (3) at the intake manifold.

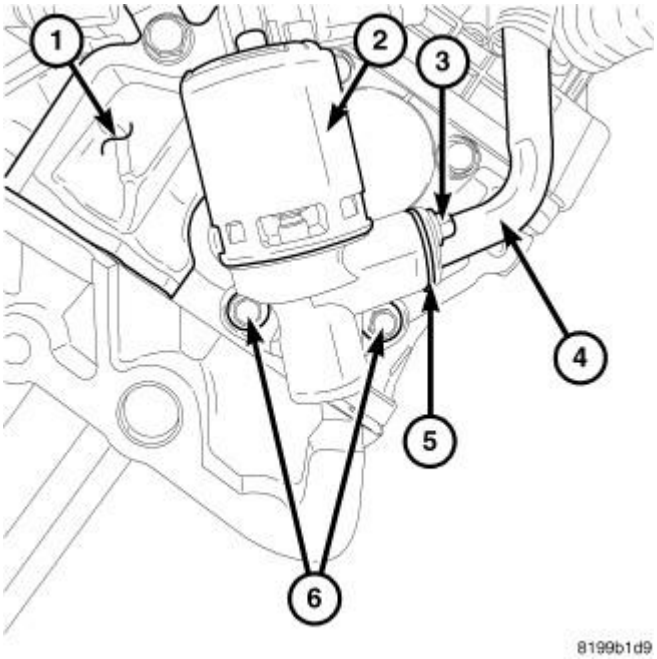

Fig. 453: Cylinder Head, EGR solenoid/Valve, Flange Bolt, Tube, Gasket & Mounting Bolts
Courtesy of CHRYSLER LLC

6. Remove two EGR tube mounting flange bolts (3) at the EGR solenoid/valve (2).

7. Separate the EGR tube (4) and gasket (5) from the EGR solenoid/valve (2). Slip opposite end of tube (4) from intake manifold.

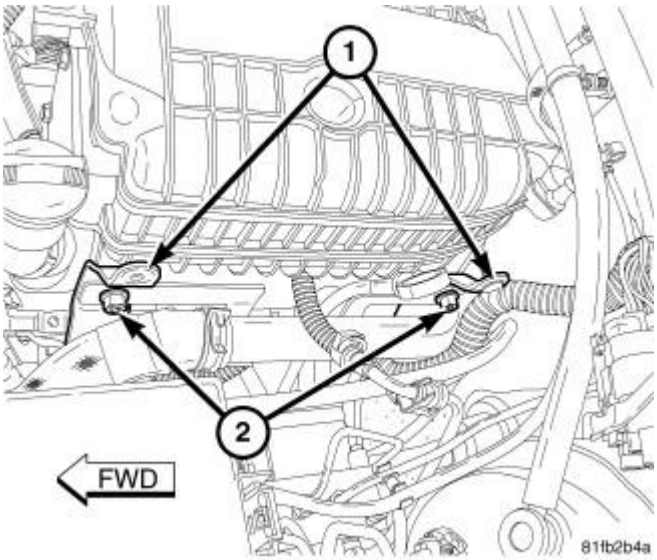

Fig. 454: Manifold Support Brackets & Nuts
Courtesy of CHRYSLER LLC

8. Remove two nuts (2) from studs on left intake manifold support brackets (1).
9. Remove the upper intake manifold retaining bolts and manifold. Clean all gasket sealing surfaces.

LOWER INTAKE MANIFOLD

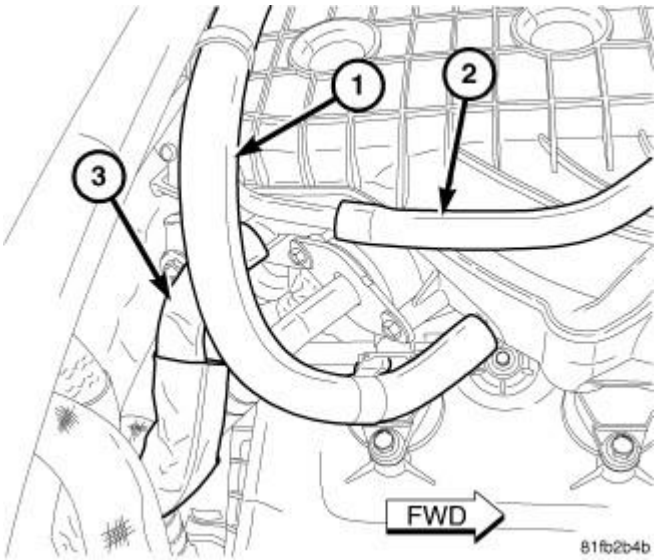

Fig. 455: EGR Tube, PCV & Power Brake Booster Vacuum Hoses
Courtesy of CHRYSLER LLC

WARNING: **The fuel system is under constant pressure even with engine off. Before servicing fuel rail, fuel system pressure must be released.**

1. Perform fuel pressure release procedure. Refer to **FUEL DELIVERY, GAS, STANDARD PROCEDURE** .
2. Remove and isolate negative battery cable at battery.
3. Drain the cooling system. Refer to **STANDARD PROCEDURE** .
4. Remove the upper intake manifold including EGR tube, PCV, purge and power brake booster vacuum hoses. Refer to **MANIFOLD, INTAKE, REMOVAL**.

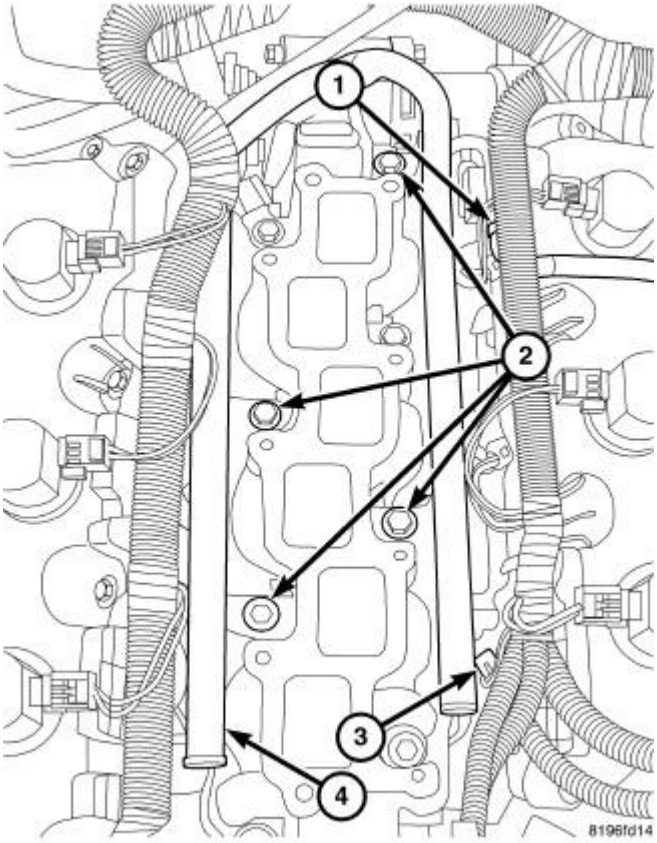

Fig. 456: Fuel Supply Hose, Mounting Bolts, Electrical Connectors & Fuel Rail
Courtesy of CHRYSLER LLC

5. Disconnect the fuel supply hose (1) from fuel rail. Refer to **FITTING, QUICK CONNECT, STANDARD PROCEDURE** .
6. Disconnect electrical connectors (3) at all six fuel injectors. The factory fuel injection wiring harness is numerically tagged (INJ 1, INJ 2, etc.) for injector position identification. If harness is not tagged, note wiring location before removal.
7. Remove four fuel rail mounting bolts (2).
8. Gently rock and pull **left** side of fuel rail until fuel injectors just start to clear machined holes in cylinder head. Gently rock and pull **right** side of rail until injectors just start to clear cylinder head holes. Repeat this procedure (left/right) until all injectors have cleared cylinder head holes.

9. Remove fuel rail (with injectors attached) from engine.

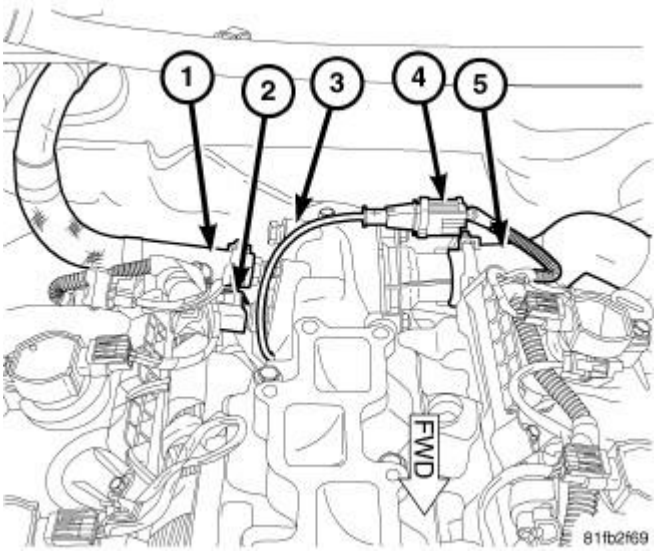

Fig. 457: Heater Hose, Coolant Temperature Sensor, Lower Intake Manifold, Knock Sensor & Coolant Hose
Courtesy of CHRYSLER LLC

10. Disconnect the coolant temperature sensor (2) and knock sensor (4) electrical connectors.
11. Disconnect the coolant hose (5) from the thermostat housing.
12. Disconnect heater hose (1) from the rear of the lower intake manifold (3).

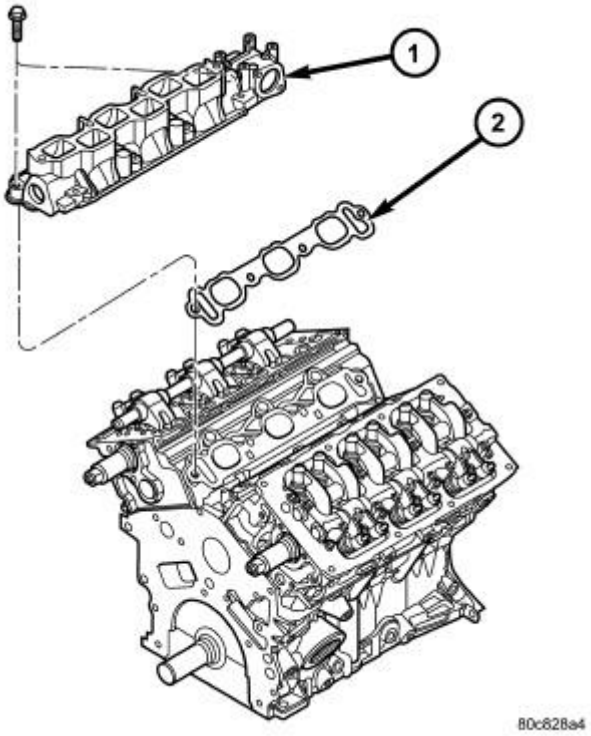

Fig. 458: Lower Intake Manifold & Gasket
Courtesy of CHRYSLER LLC

13. Remove the four remaining bolts attaching lower intake and remove intake manifold (1) and gaskets (2).

INSTALLATION

UPPER INTAKE MANIFOLD

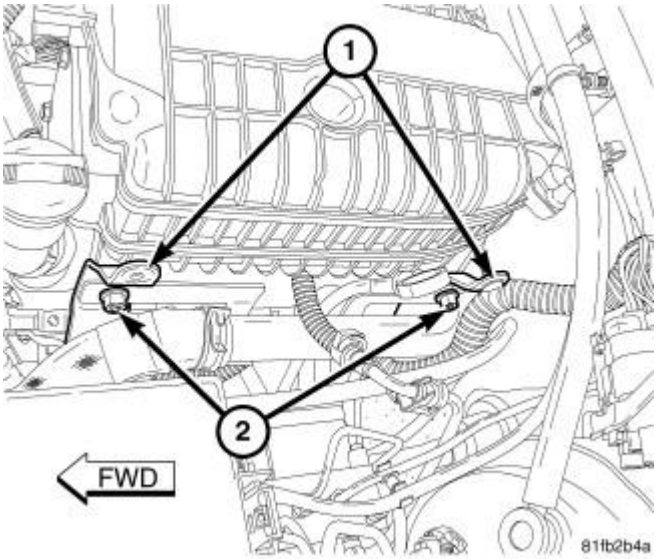

Fig. 459: Manifold Support Brackets & Nuts

Courtesy of CHRYSLER LLC

1. Clean and inspect gasket sealing surfaces.
2. Position new upper intake manifold gasket.
3. Install the upper intake manifold. Tighten bolts to 12 N.m (105 in. lbs.) starting in the center working outward in a cross sequence pattern.
4. Install two nuts (2) to the left manifold support brackets (1). Tighten nuts to 12 N.m (105 in. lbs.).

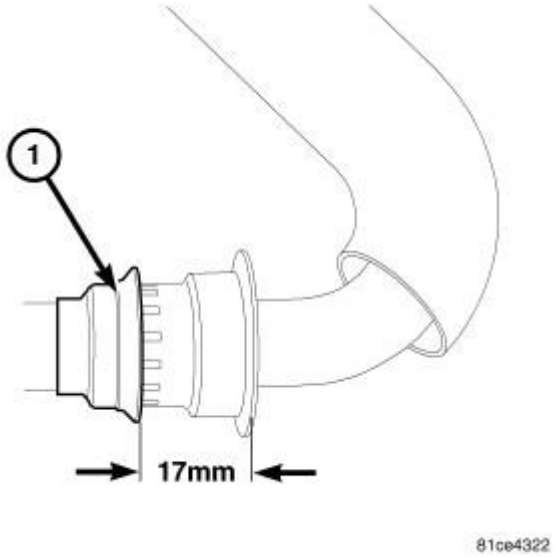

Fig. 460: Inner EGR Tube Seal
Courtesy of CHRYSLER LLC

1 - INNER EGR TUBE SEAL

CAUTION: Do Not use metal scrapers when cleaning the mounting surface of the EGR valve. Damage from scratching the surface may cause an improper seal.

CAUTION: Do not allow debris to enter the EGR valve when cleaning the mounting surface. Debris can lodge between the pintle and the seat causing valve leakage that results in rough idle and depressed manifold vacuum.

5. Clean and inspect gasket sealing surfaces.

NOTE: Install new rubber silicone seals on intake manifold end of EGR tube any time it is removed from the intake manifold.

6. Install new silicone rubber seal (1) on the intake manifold end of the EGR tube. Position seal 17 mm (0.67 in.) from the tube flange.

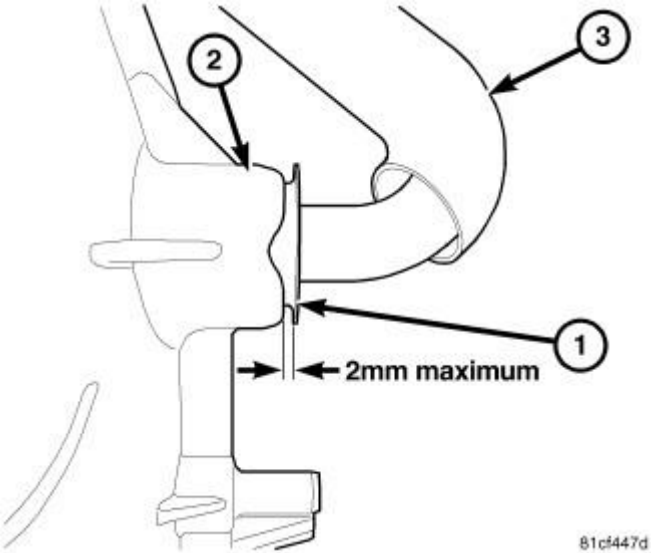

Fig. 461: EGR Tube Flange, Intake Manifold & EGR Tube
Courtesy of CHRYSLER LLC

1 - Item_1
2 - Item _2

7. Lubricate the EGR mounting tube hole in the intake manifold with Mopar® Rubber Bushing Installation Lube. Do not lubricate the EGR tube or seal.
8. Install the EGR tube (3) into the intake manifold (2) being careful not to damage the silicone rubber seals, and verify that the seals are correctly positioned in the intake manifold.

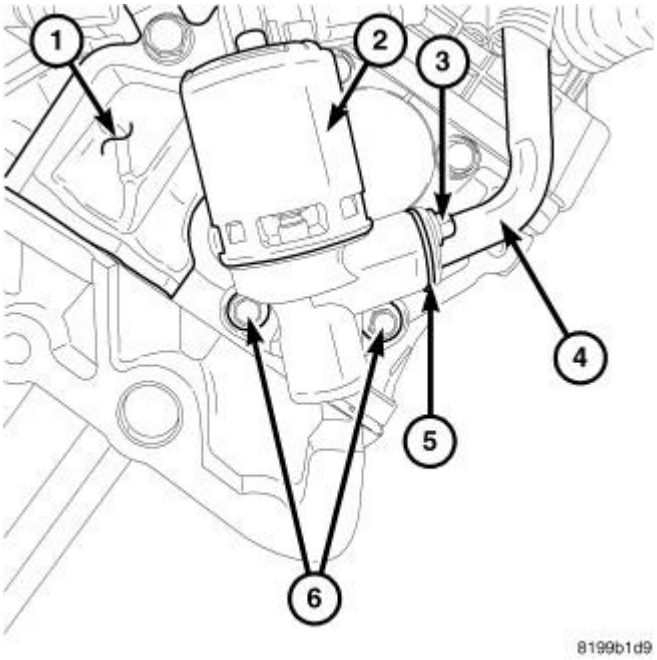

Fig. 462: Cylinder Head, EGR solenoid/Valve, Flange Bolt, Tube, Gasket & Mounting Bolts
Courtesy of CHRYSLER LLC

9. Install new gasket (5) between the EGR valve (2) and tube (4) and install bolts (3). Tighten bolts to 8 N.m (80 in. lbs.).

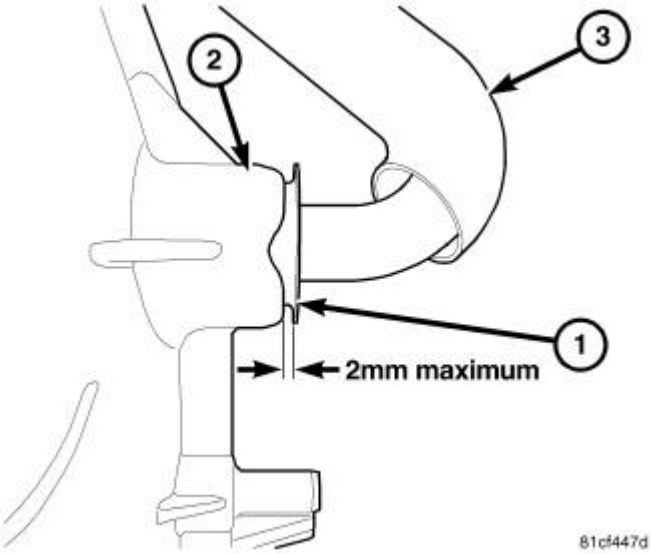

Fig. 463: EGR Tube Flange, Intake Manifold & EGR Tube
Courtesy of CHRYSLER LLC

1 - Item_1
2 - Item _2

NOTE: **The EGR tube flange (1) does not need to be flush with the intake manifold (2) to be sealed. The EGR tube flange can be up to 2 mm (0.08 in.) from intake manifold and still be sealed. This design allows the EGR tube position to vary with the tolerance stack up and remain properly sealed.**

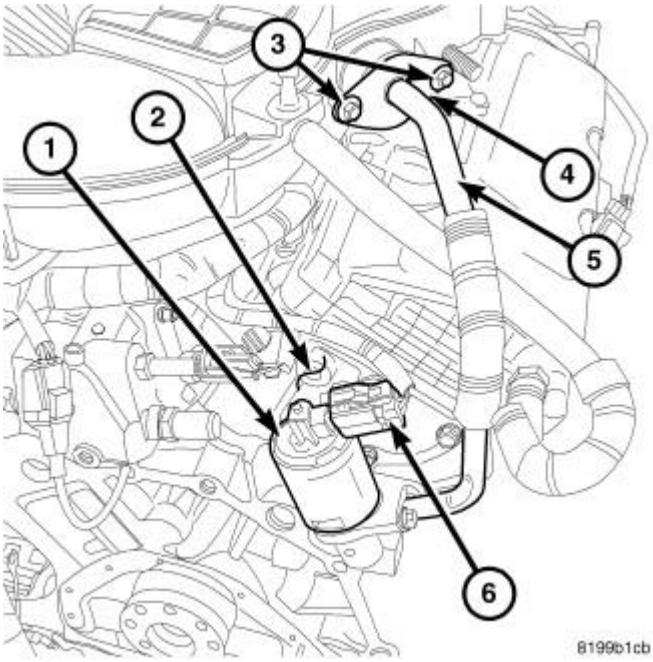

Fig. 464: EGR Valve, Right Cylinder Head, Flange Mounting Bolts, Exhaust Gas Routing Tube & Electrical Connector
Courtesy of CHRYSLER LLC

CAUTION: DO NOT use air tools to install bolts to intake manifold. Install bolts using hand tools only. Torque all fasteners to specification. The use of air tools can cause the threads of the intake manifold to become stripped.

10. Install the EGR tube flange mounting bolts (3) to intake manifold. Tighten bolts to 4 N.m (35 in. lbs.).

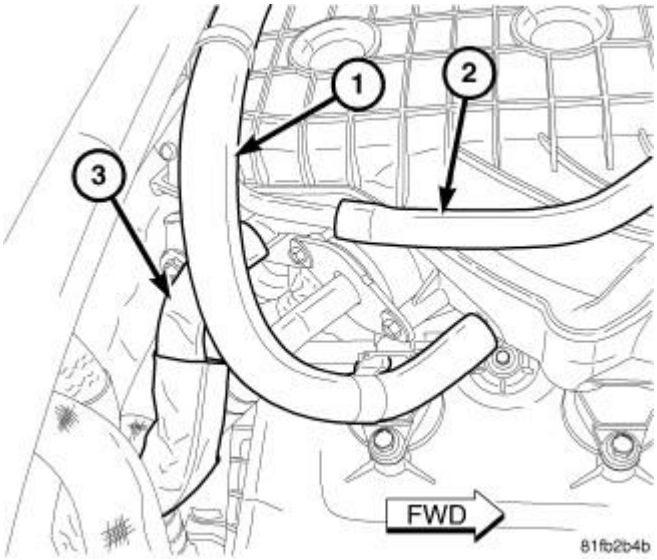

Fig. 465: EGR Tube, PCV & Power Brake Booster Vacuum Hoses
Courtesy of CHRYSLER LLC

11. Connect the PVC (3), purge (2) and power brake booster (1) vacuum hoses to the intake manifold.

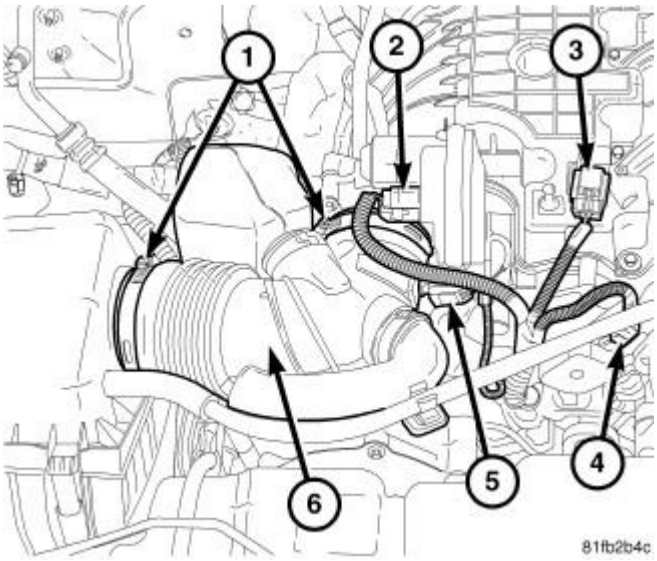

Fig. 466: IAT Sensor, MAP Sensor, Electronic Throttle Control, Manifold Tuning Valve, Clamps, Electrical Connectors & Air Inlet Hose
Courtesy of CHRYSLER LLC

12. Connect the manifold tuning valve (4), electronic throttle control (2), MAP sensor (3) and IAT sensor (5) electrical connectors.
13. Install the inlet hose (6) tighten clamps (1).
14. Connect negative battery cable. Tighten nut to 5 N.m (45 in. lbs.).

LOWER INTAKE MANIFOLD

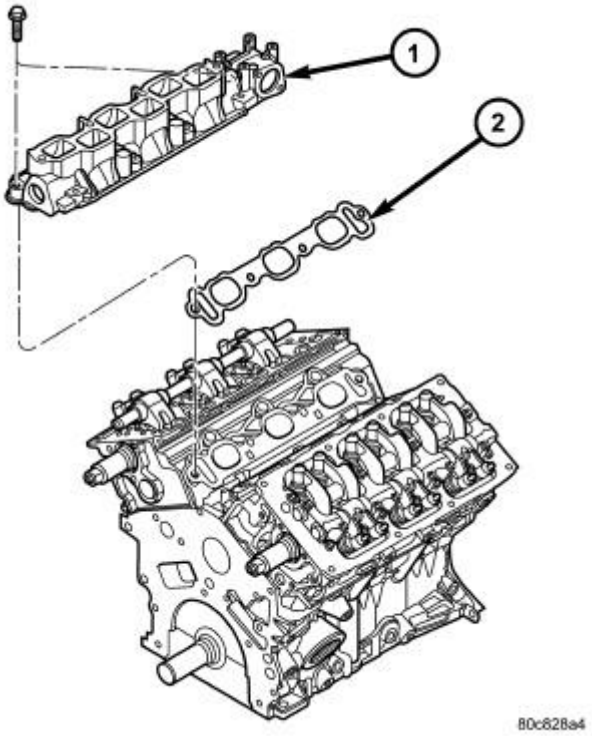

Fig. 467: Lower Intake Manifold & Gasket
Courtesy of CHRYSLER LLC

1. Clean all sealing surfaces.
2. Position new gaskets (2) and intake manifold (1) on cylinder head surfaces.
3. Install four of the eight manifold bolts. Do not tighten at this time.

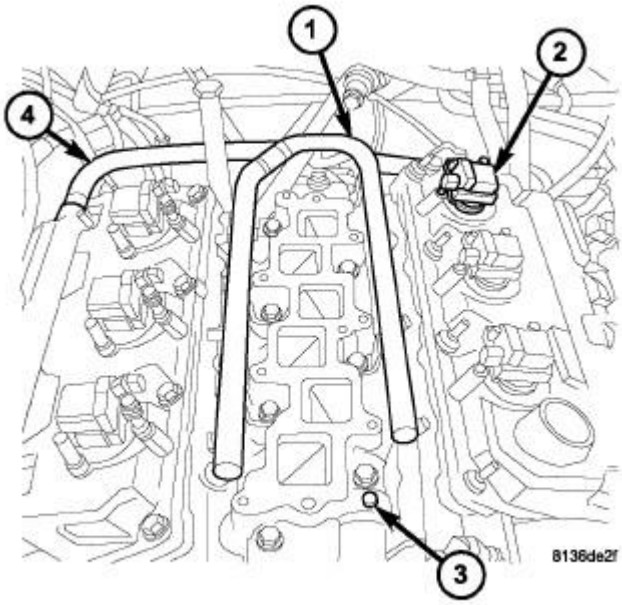

Fig. 468: Fuel Rail, Ignition Coil, Lower Intake Manifold & Hose
Courtesy of CHRYSLER LLC

4. Install fuel rail and injectors (1) as an assembly. Refer to **INJECTOR(S), FUEL, INSTALLATION** .

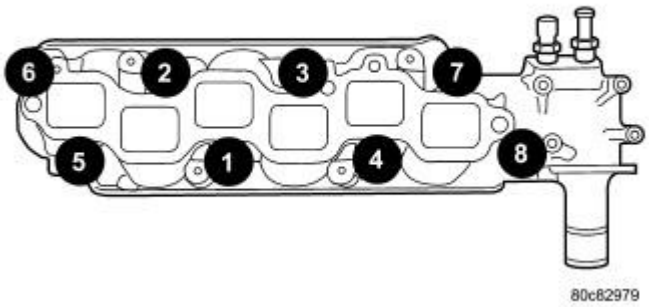

Fig. 469: Lower Intake Manifold Tightening Sequence
Courtesy of CHRYSLER LLC

5. Install the four remaining intake manifold bolts and gradually tighten in sequence shown in illustration until a torque of 28 N.m (250 in. lbs.) is obtained.

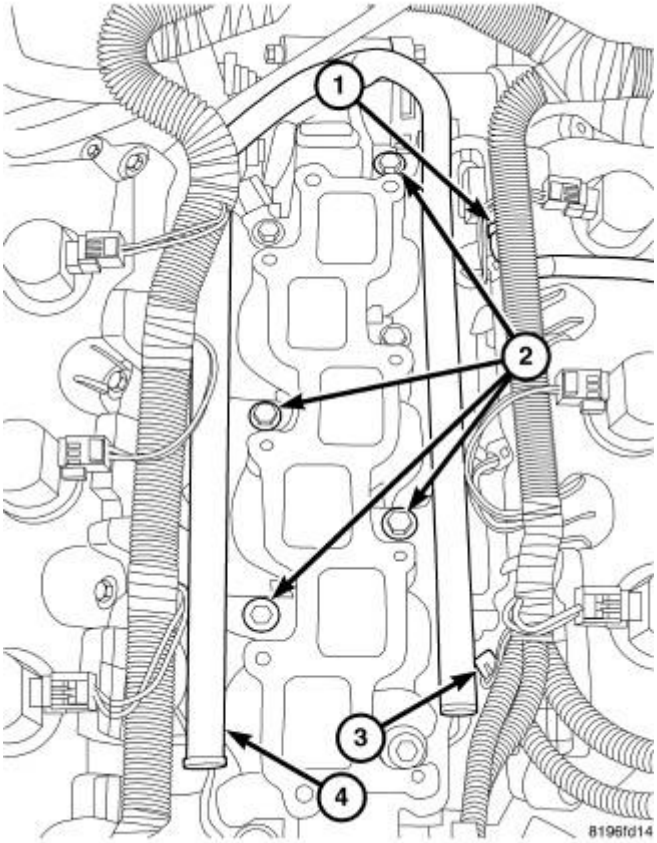

Fig. 470: Fuel Supply Hose, Mounting Bolts, Electrical Connectors & Fuel Rail
Courtesy of CHRYSLER LLC

6. Connect fuel supply hose (1) to fuel rail (4). Refer to **FITTING, QUICK CONNECT, STANDARD PROCEDURE** .
7. Connect fuel injector electrical connectors (3).

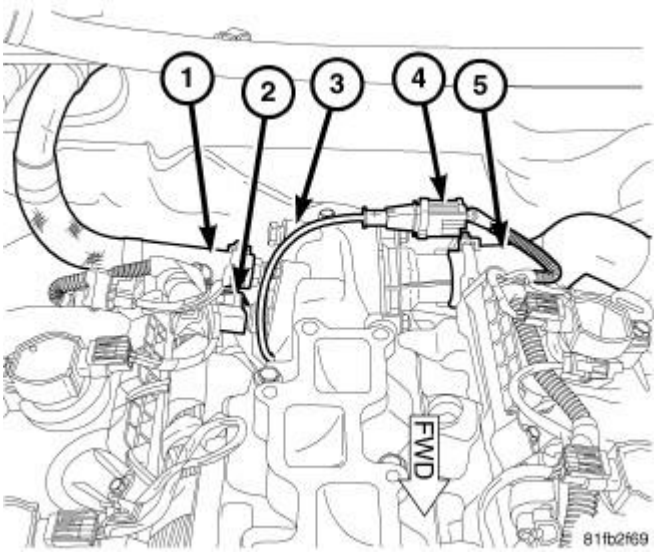

Fig. 471: Heater Hose, Coolant Temperature Sensor, Lower Intake Manifold, Knock Sensor & Coolant Hose
Courtesy of CHRYSLER LLC

8. Connect heater hose (1) to rear lower intake manifold (3).
9. Connect coolant hose (5) to thermostat housing.
10. Connect coolant temperature sensor (2) and knock sensor (4) electrical connectors.

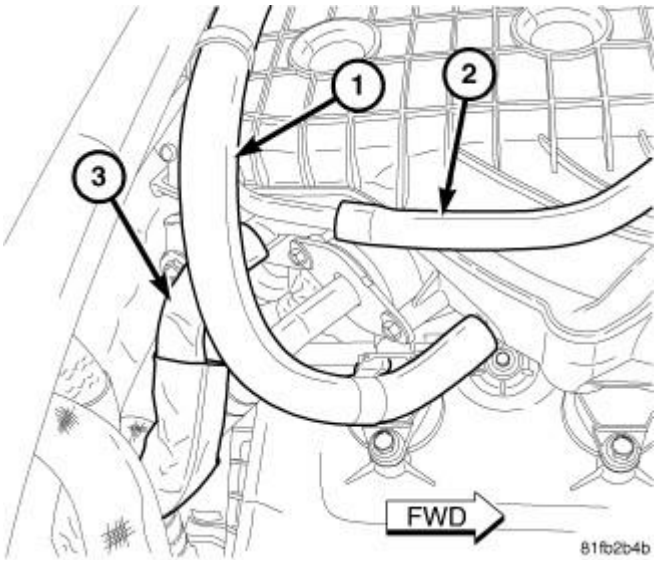

Fig. 472: EGR Tube, PCV & Power Brake Booster Vacuum Hoses
Courtesy of CHRYSLER LLC

11. Install upper intake manifold, EGR tube, PVC, purge and power brake booster vacuum hoses. Refer to **MANIFOLD, INTAKE, INSTALLATION**.
12. Fill the cooling system. Refer to **STANDARD PROCEDURE** .
13. Connect the negative battery cable. Tighten nut to 4.5 N.m (40 in. lbs.).

VALVE TIMING

DESCRIPTION

DESCRIPTION

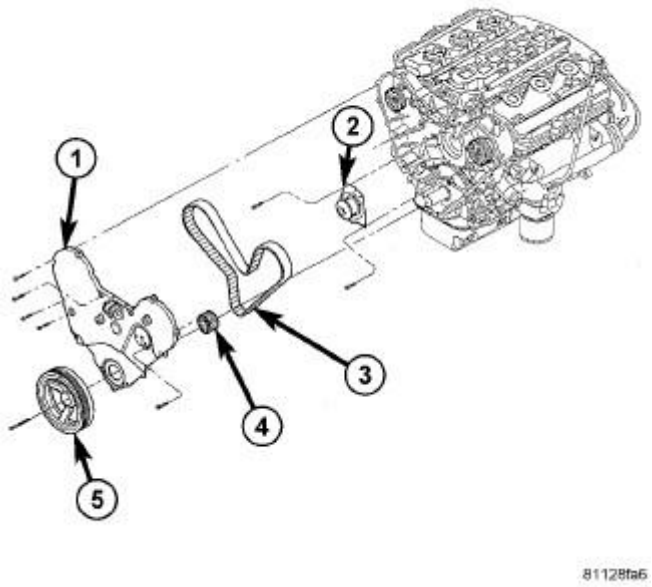

Fig. 473: Timing Drive System
Courtesy of CHRYSLER LLC

1 - FRONT TIMING COVER
2 - WATER PUMP
3 - TIMING BELT
4 - CRANKSHAFT SPROCKET
5 - CRANKSHAFT DAMPER

The timing drive system has been designed to provide quiet performance and reliability to support a **NON** free-wheeling engine.

The timing drive components include a crankshaft sprocket (4), camshaft sprockets, tensioner pulley, hydraulic tensioner and a timing belt (3). Refer to **Fig. 473**. The water pump (2) is driven by the back side of the timing belt (3). The right and left camshaft sprockets are keyed and not interchangeable because of the cam sensor pick-up wheel on the left sprocket.

COVER(S), ENGINE TIMING, FRONT

REMOVAL

REMOVAL

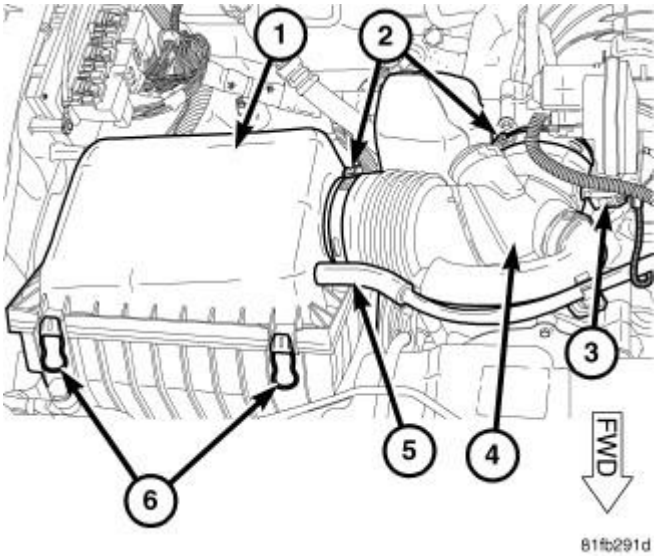

Fig. 474: Air Filter Housing
Courtesy of CHRYSLER LLC

1. Disconnect and isolate the negative battery cable.
2. Remove the air cleaner element housing. Refer to **BODY, AIR CLEANER, REMOVAL**.

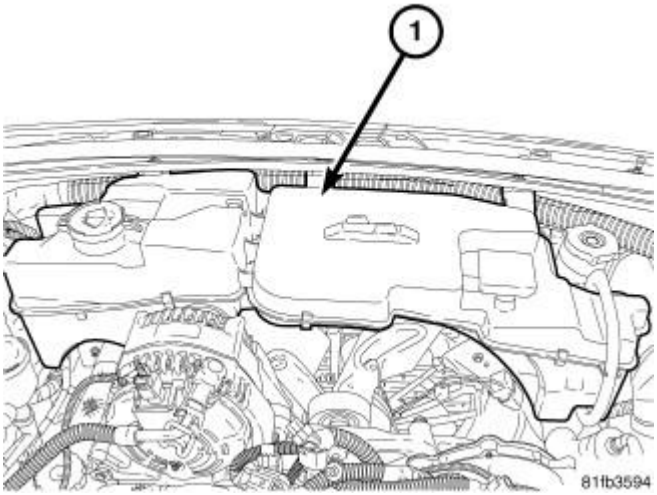

Fig. 475: Coolant Recovery/Washer Fluid Reservoir
Courtesy of CHRYSLER LLC

3. Disconnect two washer pump hoses, coolant recovery hose and washer pump electrical connector from the coolant recovery/washer fluid reservoir assembly (1).
4. Remove 5 screws and remove the coolant recovery/washer fluid reservoir assembly (1).

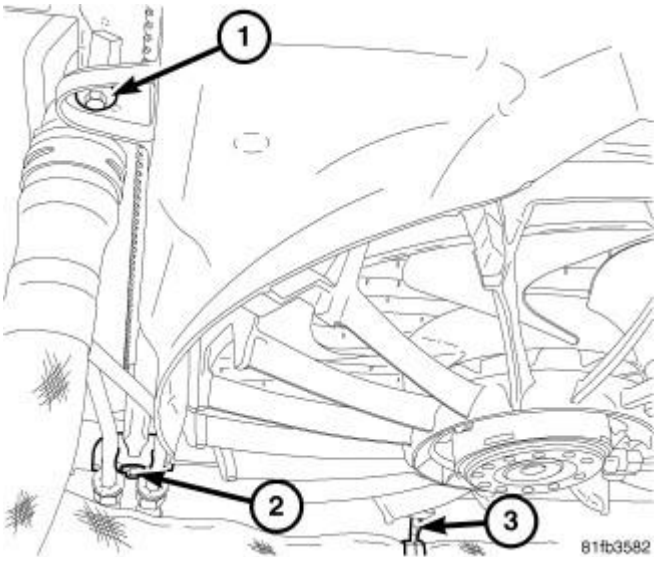

Fig. 476: Radiator Fastener, Transmission Cooling Line Retainer Bolt & Radiator Hose Retainer
Courtesy of CHRYSLER LLC

5. Disengage the radiator hose retainer (3) from the electric fan shroud.
6. Remove transmission cooling line retainer bolt (2) from the electric fan shroud.

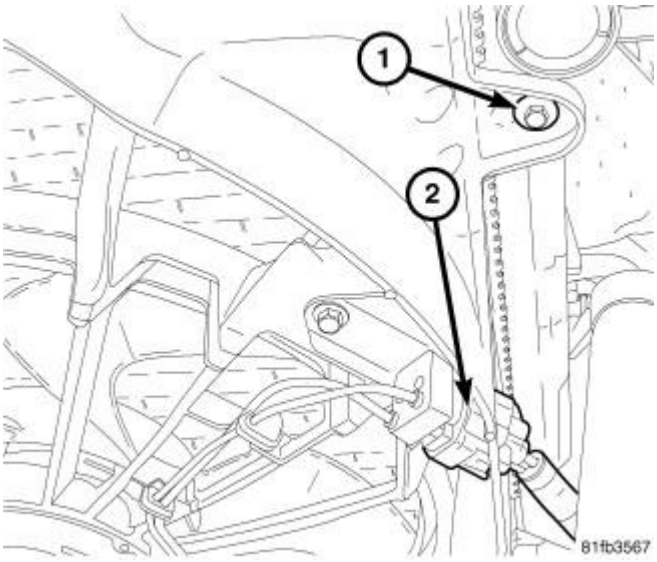

Fig. 477: Electrical Fan Connector & Bolt
Courtesy of CHRYSLER LLC

7. Disconnect the electric fan connector (2) from the electric fan shroud.
8. Remove two bolts (1) and lift the electric fan shroud from vehicle.

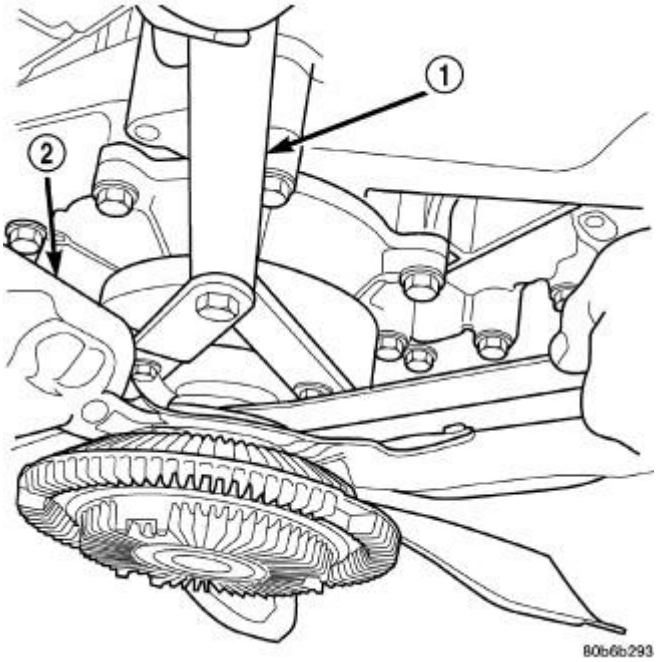

Fig. 478: Using Special Tool 6958 Spanner Wrench & Adapter Pins 8346
Courtesy of CHRYSLER LLC

9. Use Adapter Pins (special tool #8346, Pins, Adapter) in Spanner Wrench (special tool #6958, Wrench, Spanner) (1) to hold the pulley and remove fan/viscous fan drive assembly. Refer to **FAN, COOLING, VISCOUS, REMOVAL** and **FAN, COOLING, ELECTRIC, REMOVAL** .

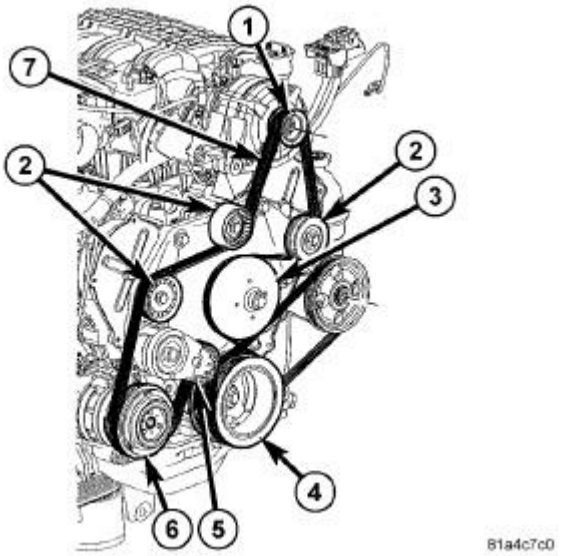

Fig. 479: Accessory Drive Belt Routing - 4.0L
Courtesy of CHRYSLER LLC

Remove accessory drive belt (7). Refer to **BELT, SERPENTINE, REMOVAL** and **BELT,**

SERPENTINE, POWER STEERING, REMOVAL .

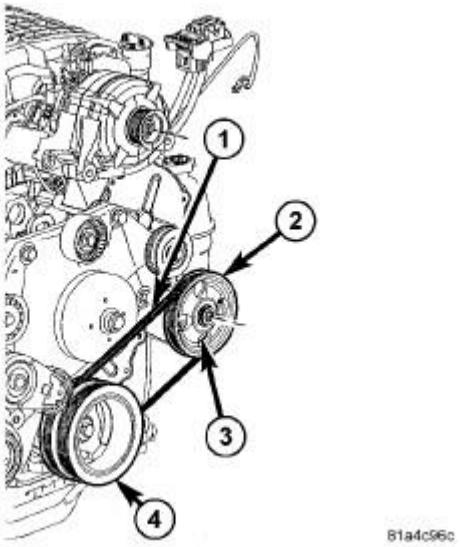

Fig. 480: Power Steering Belt
Courtesy of CHRYSLER LLC

10. Remove the power steering belt (1). Refer to **BELT, SERPENTINE, REMOVAL** and **BELT, SERPENTINE, POWER STEERING, REMOVAL** .

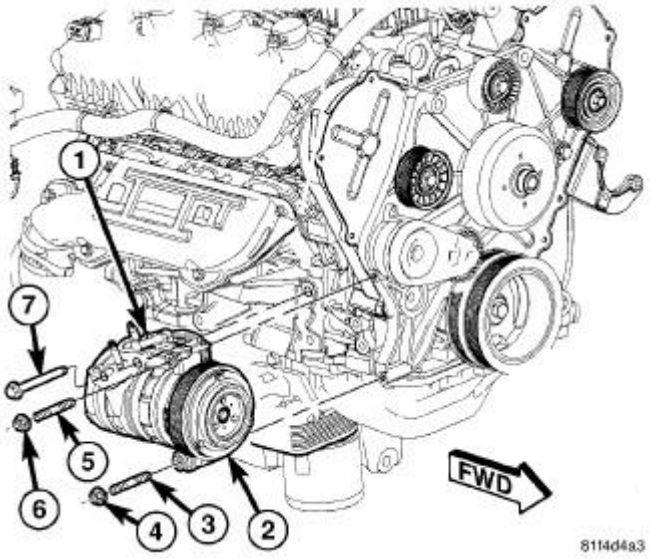

Fig. 481: Removing/Installing A/C Compressor
Courtesy of CHRYSLER LLC

11. Remove two nuts (4) and (6) that secure the front of the A/C compressor (1).
12. Back out the two A/C compressor mounting studs (3) and (5) from the accessory drive bracket.

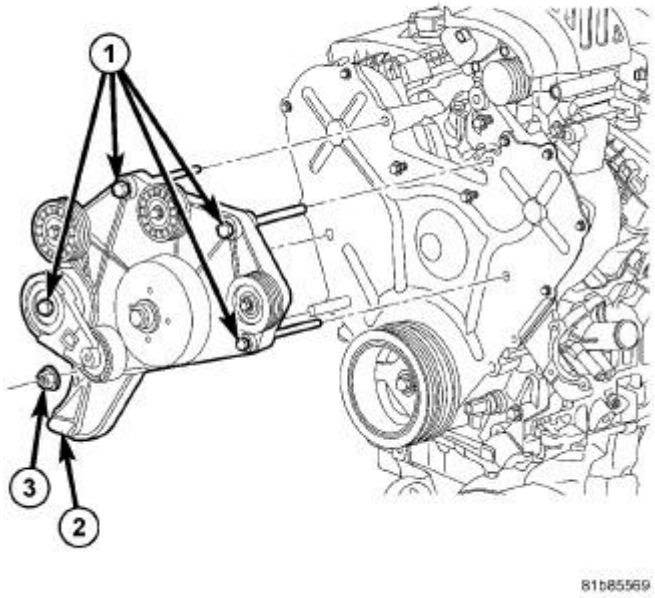

Fig. 482: Accessory Drive Bracket & Fasteners
Courtesy of CHRYSLER LLC

13. Remove four bolts (1) and nut (3) and remove the accessory drive bracket (2).

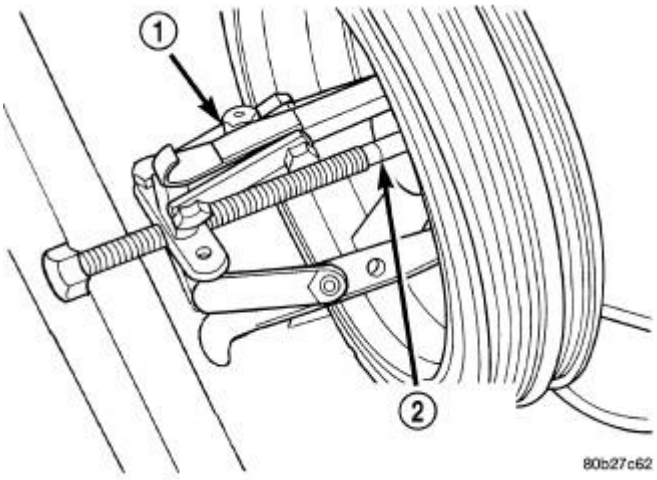

Fig. 483: Crankshaft Damper - Removal
Courtesy of CHRYSLER LLC

14. Remove crankshaft damper bolt.
15. Using Puller (special tool #1023, Puller) (1) and Crankshaft Insert (special tool #9020, Insert, Crankshaft) (2), remove crankshaft damper.

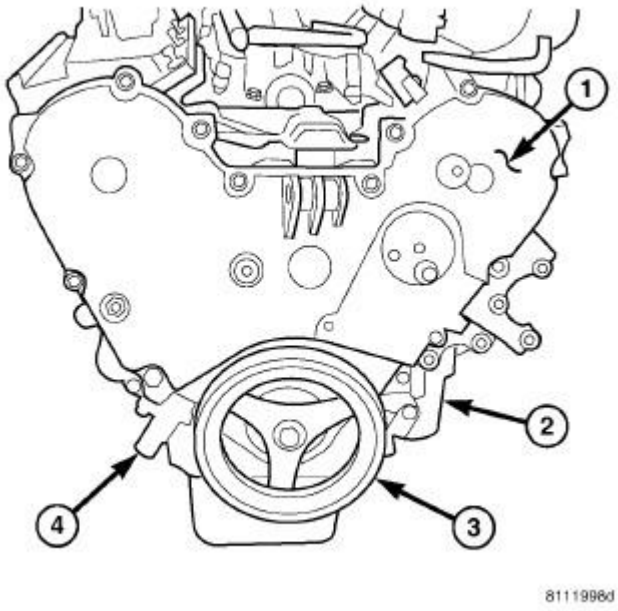

Fig. 484: Front Timing Belt Cover, Engine Oil Filter, Vibration Damper & Timing Belt Tensioner
Courtesy of CHRYSLER LLC

16. Remove the fourteen outer timing belt cover bolts and cover (1).

INSTALLATION

INSTALLATION

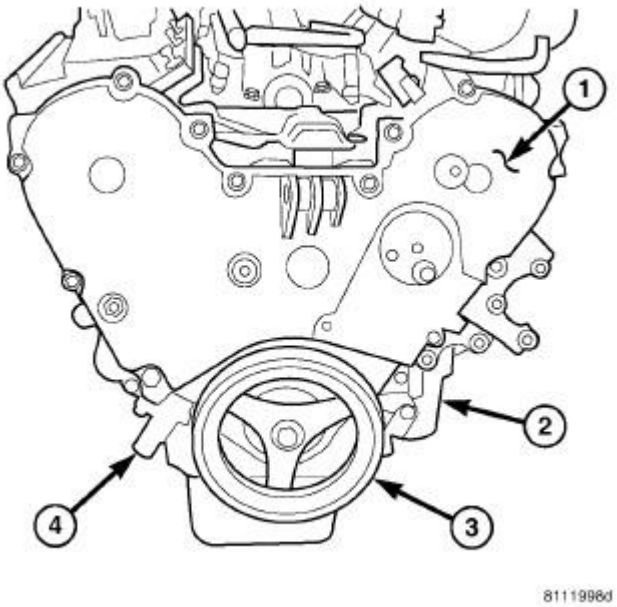

Fig. 485: Front Timing Belt Cover, Engine Oil Filter, Vibration Damper & Timing Belt Tensioner
Courtesy of CHRYSLER LLC

1. Install the front timing belt outer cover (1) and 14 bolts.
2. Tighten the timing cover bolts as follows:
   - M6 bolts - 12 N.m (105 in. lbs.)
   - M8 bolts - 28 N.m (250 in. lbs.)
   - M10 bolts - 54 N.m (40 ft. lbs.)

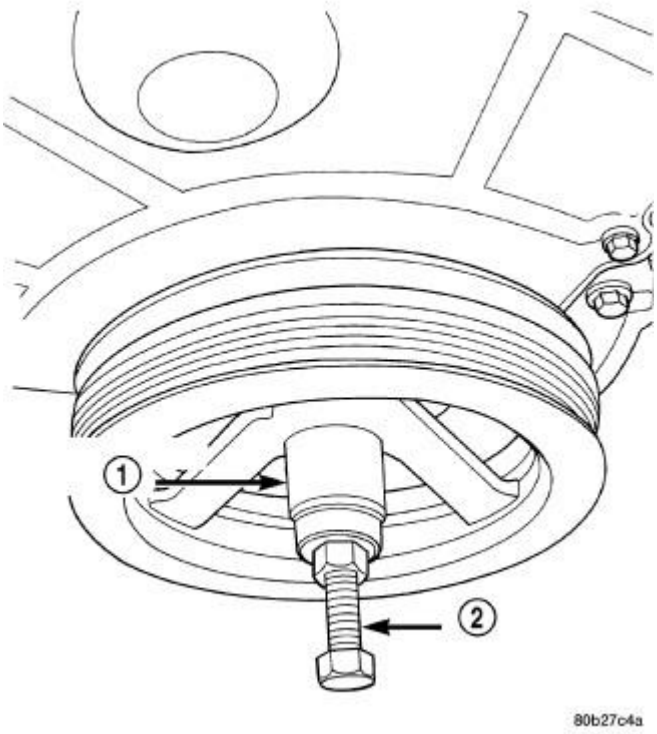

Fig. 486: Crankshaft Damper - Installation
Courtesy of CHRYSLER LLC

3. Install crankshaft damper using Forcing Screw (special tool #C-4685-C1, Screw, Forcing) (2), with Nut and Thrust Bearing from (special tool #6792, Installer, Crank Sprocket), and (special tool #6792-1, Cup) Installer (1).

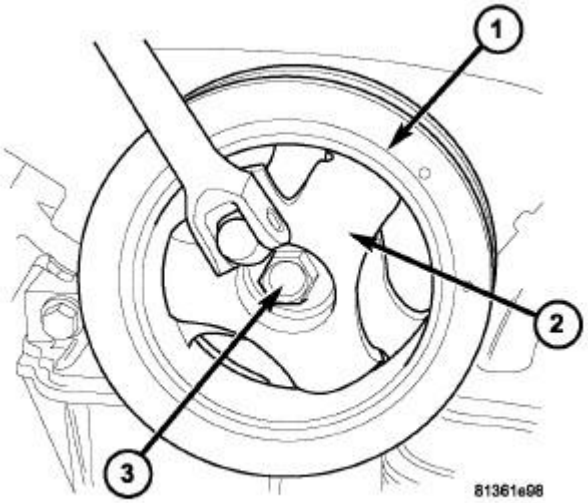

Fig. 487: Damper, Bolt & Holder
Courtesy of CHRYSLER LLC

4. Install crankshaft damper bolt (3). Tighten bolt to 95 N.m (70 ft. lbs.) while holding damper (1) with Damper Holding Fixture (special tool #9365, Holding Fixture, Damper) (2).

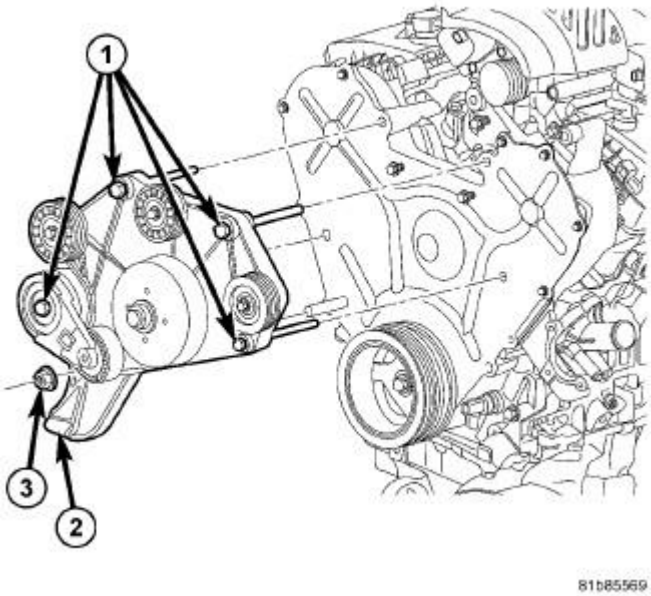

Fig. 488: Accessory Drive Bracket & Fasteners
Courtesy of CHRYSLER LLC

5. Install the accessory drive bracket (2). Tighten four bolts (1) and nut (3) to 54 N.m (40 ft. lbs.).

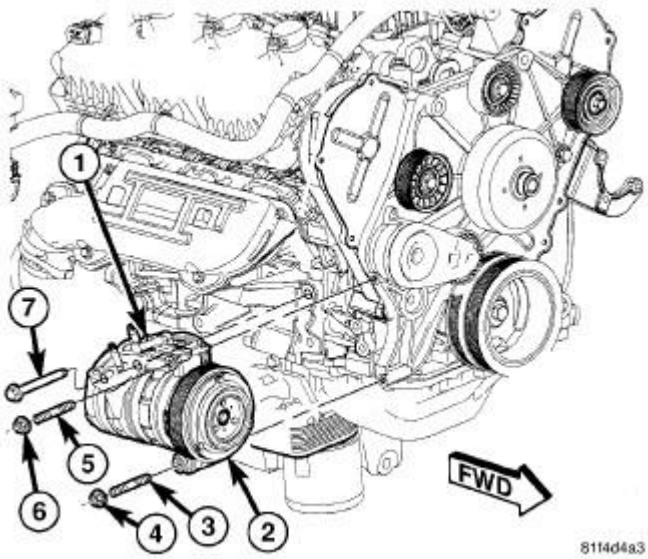

Fig. 489: Removing/Installing A/C Compressor
Courtesy of CHRYSLER LLC

6. Install the lower stud (3) and upper stud (5) that secures the front of the A/C compressor to the accessory drive bracket. Tighten studs securely.
7. Install the lower nut (4) and upper nut (6) that secures the front of the A/C compressor to the accessory drive bracket. Tighten nuts to 28 N.m (21 ft. lbs.).

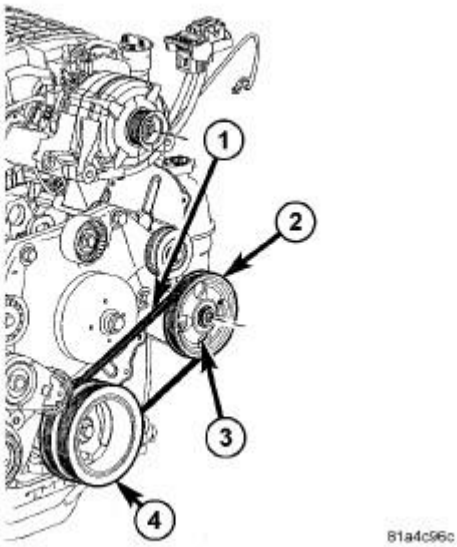

Fig. 490: Power Steering Belt
Courtesy of CHRYSLER LLC

8. Install the power steering belt (1). Refer to **BELT, SERPENTINE, INSTALLATION** and **BELT, SERPENTINE, POWER STEERING, INSTALLATION** .

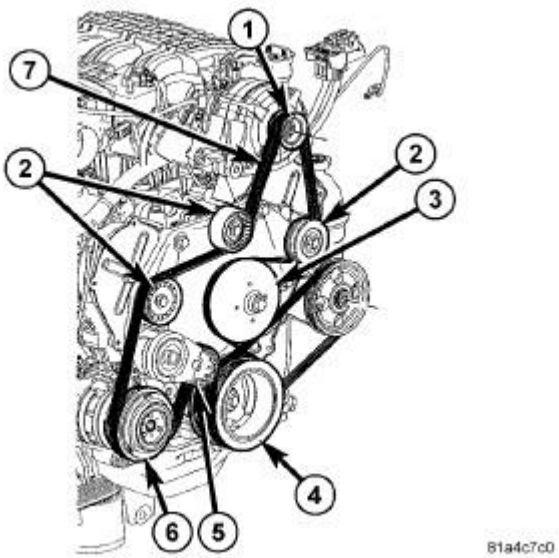

Fig. 491: Accessory Drive Belt Routing - 4.0L
Courtesy of CHRYSLER LLC

9. Install the accessory drive belt (7). Refer to **BELT, SERPENTINE, INSTALLATION** and **BELT, SERPENTINE, POWER STEERING, INSTALLATION** .

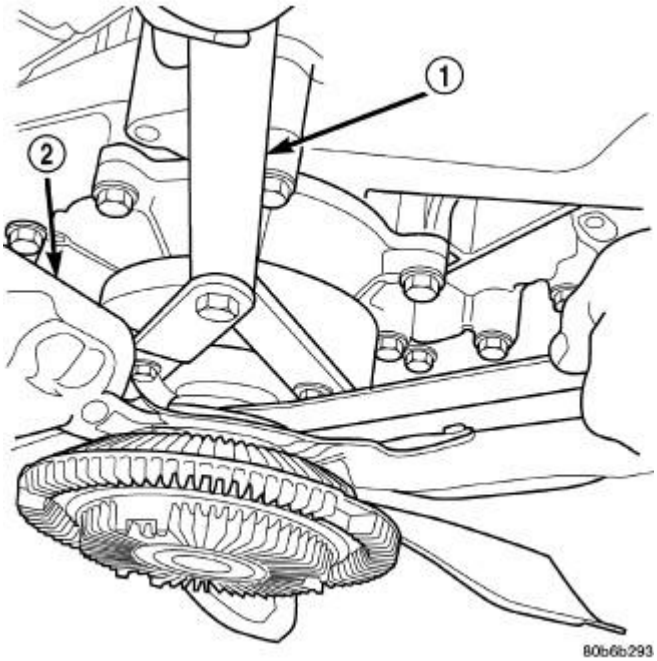

Fig. 492: Using Special Tool 6958 Spanner Wrench & Adapter Pins 8346
Courtesy of CHRYSLER LLC

10. Use Adapter Pins (special tool #8346, Pins, Adapter) in Spanner Wrench (special tool #6958, Wrench, Spanner) (1) to hold the pulley while installing the fan blade/viscous fan drive assembly. Tighten

mounting nut to 50 N.m (37 ft. lbs.).

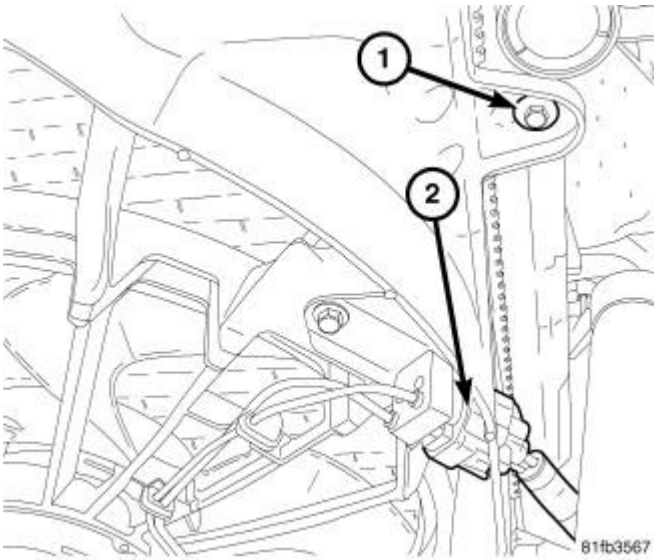

Fig. 493: Electrical Fan Connector & Bolt
Courtesy of CHRYSLER LLC

11. Install electric fan shroud with two screws (1). Tighten screws to 6 N.m (50 in. lbs.).
12. Connect and lock the electric fan connector (2).

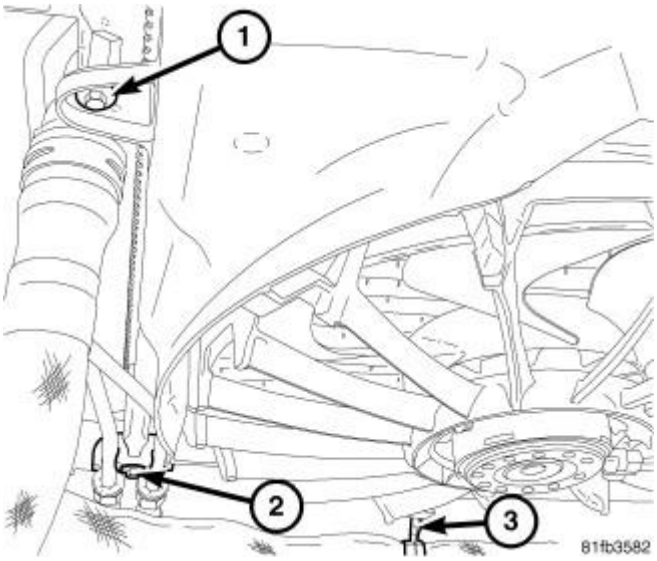

Fig. 494: Radiator Fastener, Transmission Cooling Line Retainer Bolt & Radiator Hose Retainer
Courtesy of CHRYSLER LLC

13. Install transmission cooler line retainer to electric fan shroud with one screw (2).
14. Install radiator hose retainer (3) to electric fan shroud.

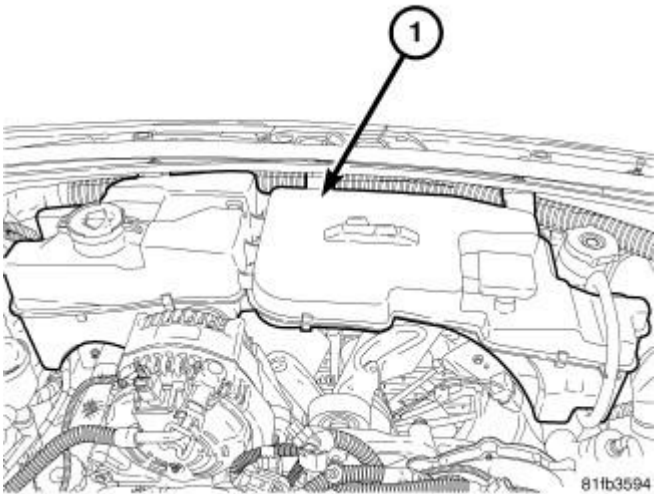

Fig. 495: Coolant Recovery/Washer Fluid Reservoir
Courtesy of CHRYSLER LLC

15. Install the coolant recovery/washer fluid reservoir assembly (1) with five screws. Connect two washer pump hoses, coolant recovery hose, and washer pump connector.

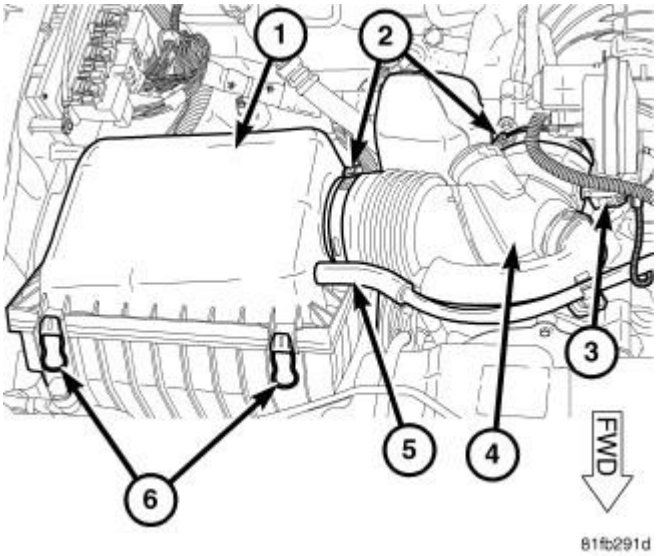

Fig. 496: Air Filter Housing
Courtesy of CHRYSLER LLC

16. Install and connect the air cleaner element housing (1). Refer to **AIR CLEANER, INSTALLATION**.
17. Connect the negative battery cable. Tighten nut to 4.5 N.m (40 in. lbs.).

COVER(S), ENGINE TIMING, REAR

REMOVAL

REMOVAL

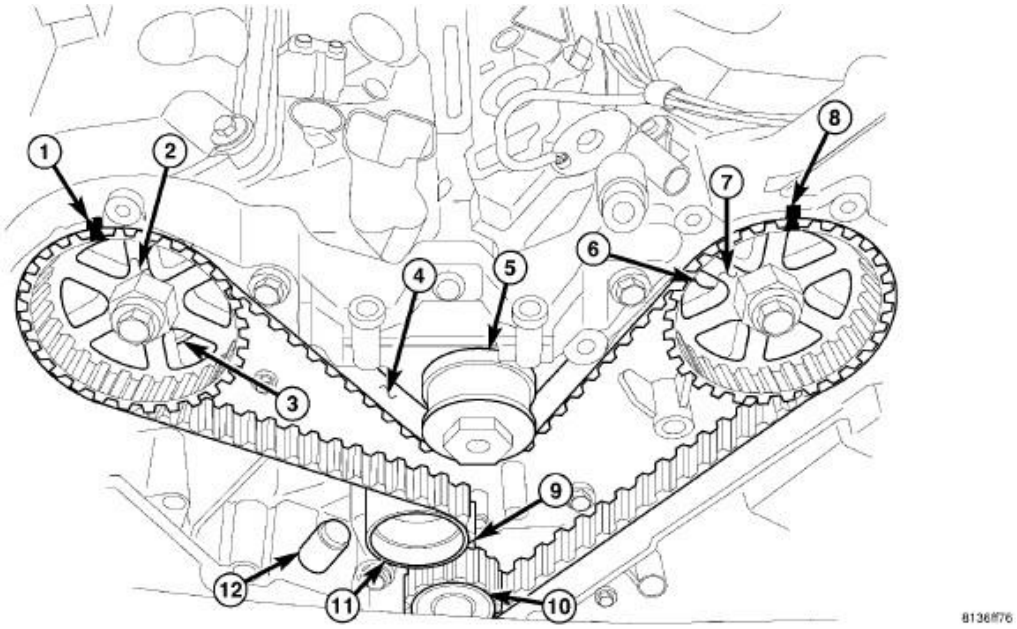

Fig. 497: Timing Gear Components
Courtesy of CHRYSLER LLC

NOTE: The rear timing belt cover has O-rings to seal the water pump passages to cylinder block. Do not reuse the O-rings.

1. Perform fuel pressure release procedure. Refer to **FUEL DELIVERY, GAS, STANDARD PROCEDURE** .
2. Disconnect and isolate the negative battery cable.
3. Drain the cooling system. Refer to **STANDARD PROCEDURE** .
4. Remove timing belt (4). Refer to **SPROCKET(S), TIMING BELT AND CHAIN, REMOVAL**.
5. Remove camshaft sprockets (2 and 7). Refer to **SPROCKET(S), TIMING BELT AND CHAIN, REMOVAL**.

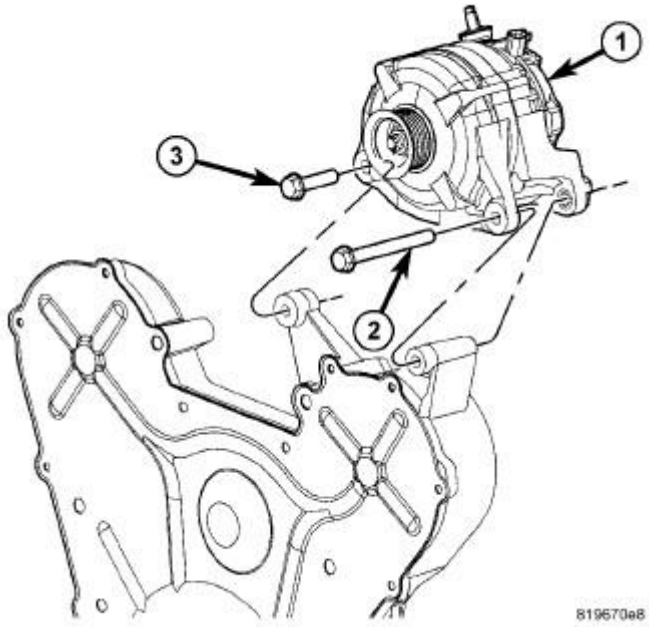

Fig. 498: Generator & Mounting Bolts
Courtesy of CHRYSLER LLC

6. Remove the generator. Refer to **GENERATOR, REMOVAL** .

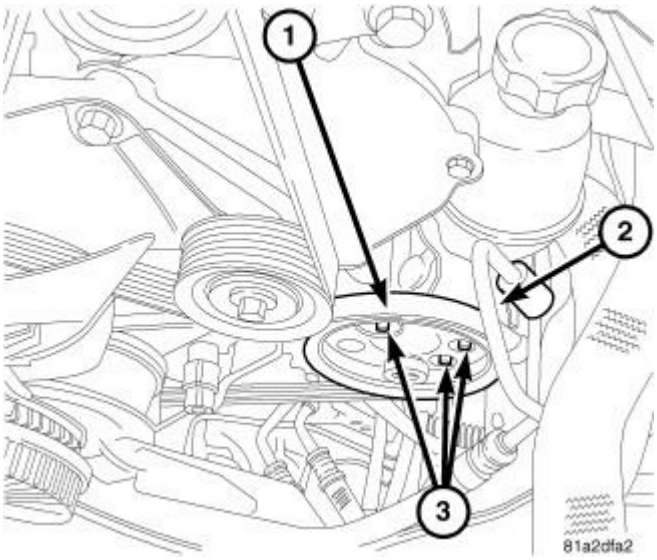

Fig. 499: Power Steering Belt, Pressure Line & Power Steering Pump Mounting Bolts
Courtesy of CHRYSLER LLC

7. Remove three pump mounting bolts (3) through pump pulley (1) and reposition the power steering pump.

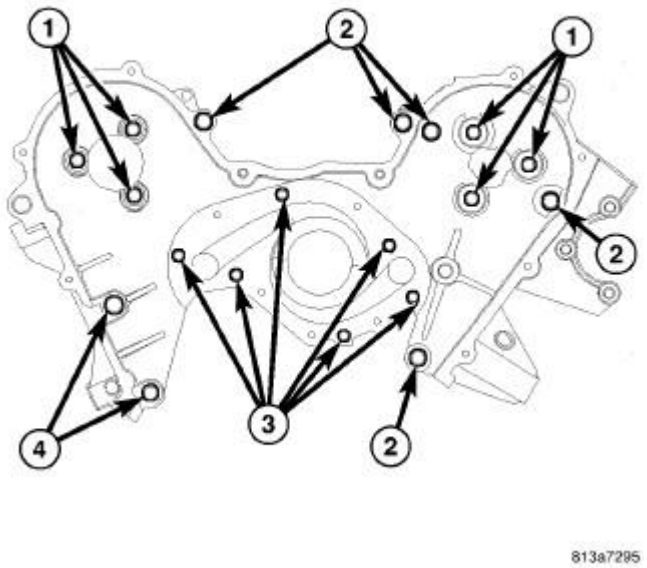

Fig. 500: Timing Belt Rear Cover
Courtesy of CHRYSLER LLC

1 - M8 FASTENERS (APPLY THREAD SEALANT)
2 - M10 FASTENERS
3 - M6 FASTENERS
4 - M10 FASTENERS (STUD/NUT)

8. Remove rear timing belt cover bolts (1, 2, 4).
9. Remove the rear cover.

INSTALLATION

INSTALLATION

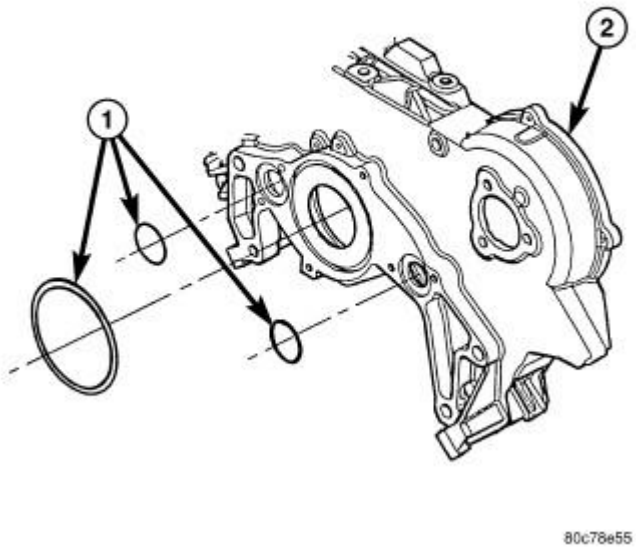

Fig. 501: Rear Timing Belt Cover Seals
Courtesy of CHRYSLER LLC

1 - REAR TIMING BELT COVER SEALS
2 - REAR TIMING BELT COVER

1. Clean rear timing belt cover O-ring sealing surfaces and grooves. Lubricate new O-rings (1) with Mopar® Dielectric Grease or equivalent to facilitate assembly.
2. Position **NEW** O-rings (1) on cover (2).

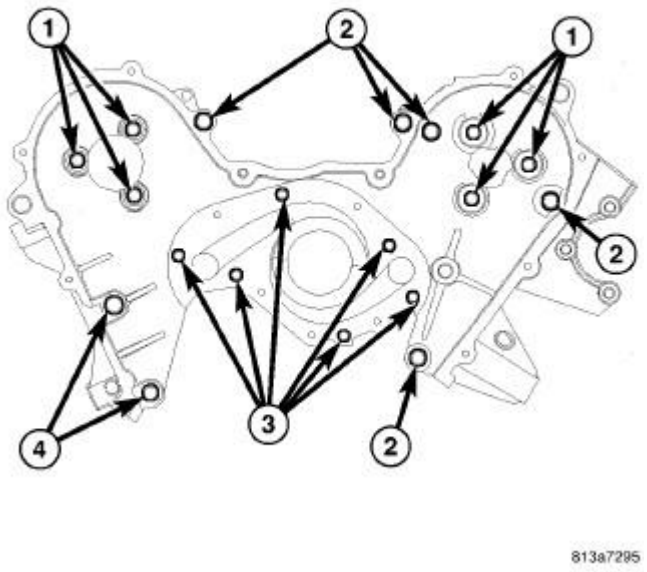

Fig. 502: Timing Belt Rear Cover
Courtesy of CHRYSLER LLC

1 - M8 FASTENERS (APPLY THREAD SEALANT)
2 - M10 FASTENERS
3 - M6 FASTENERS
4 - M10 FASTENERS (STUD/NUT)

3. Install rear timing belt cover. Tighten nuts and bolts to the following specified torque:
   - M10 (2, 4) - 54 N.m (40 ft. lbs.)
   - M8 (1) - 28 N.m (20 ft. lbs.)
4. Position water pump and new gasket.
5. Install water pump mounting bolts (3). Tighten to 12 N.m (105 in. lbs.).

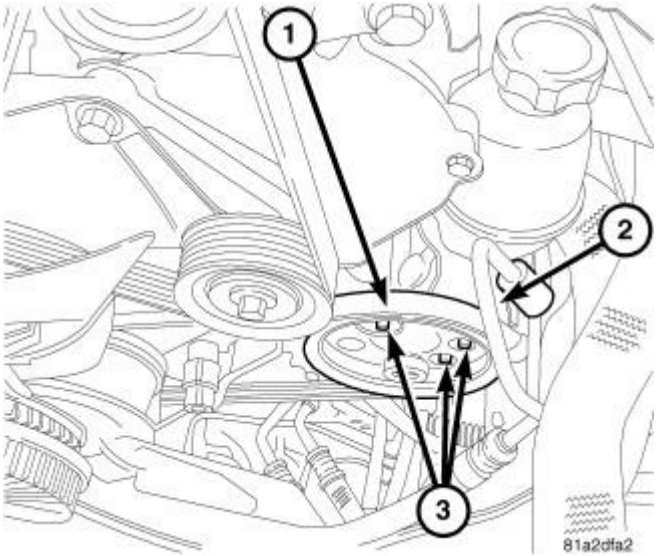

Fig. 503: Power Steering Belt, Pressure Line & Power Steering Pump Mounting Bolts
Courtesy of CHRYSLER LLC

6. Install three power steering pump mounting bolts (3) through pulley. Tighten pump mounting bolts to 28 N.m (21 ft. lbs.).

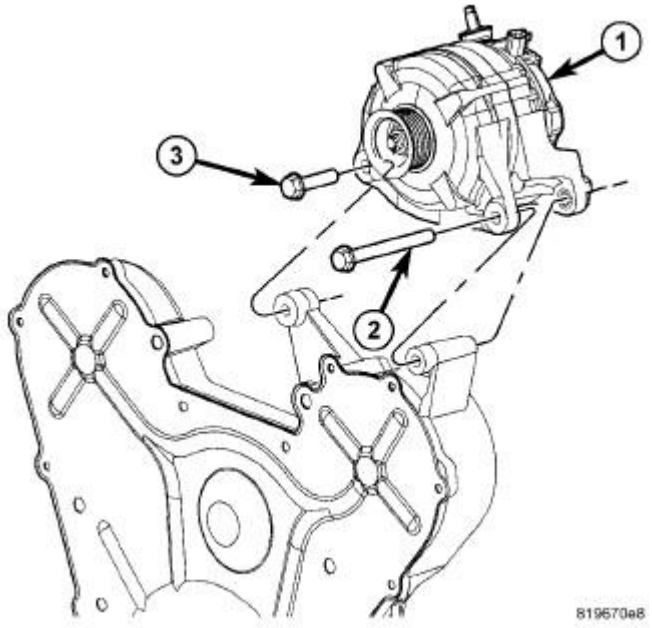

Fig. 504: Generator & Mounting Bolts
Courtesy of CHRYSLER LLC

7. Position generator (1) to engine and install two mounting bolts (2) and (3). Tighten both bolts to 57 N.m (42 ft. lbs.).
8. Snap field wire connector into rear of generator.

9. Install B+ terminal and nut to generator mounting stud. Tighten nut to 13 N.m (115 in. lbs.)
10. Snap plastic protective cover to B+ terminal.

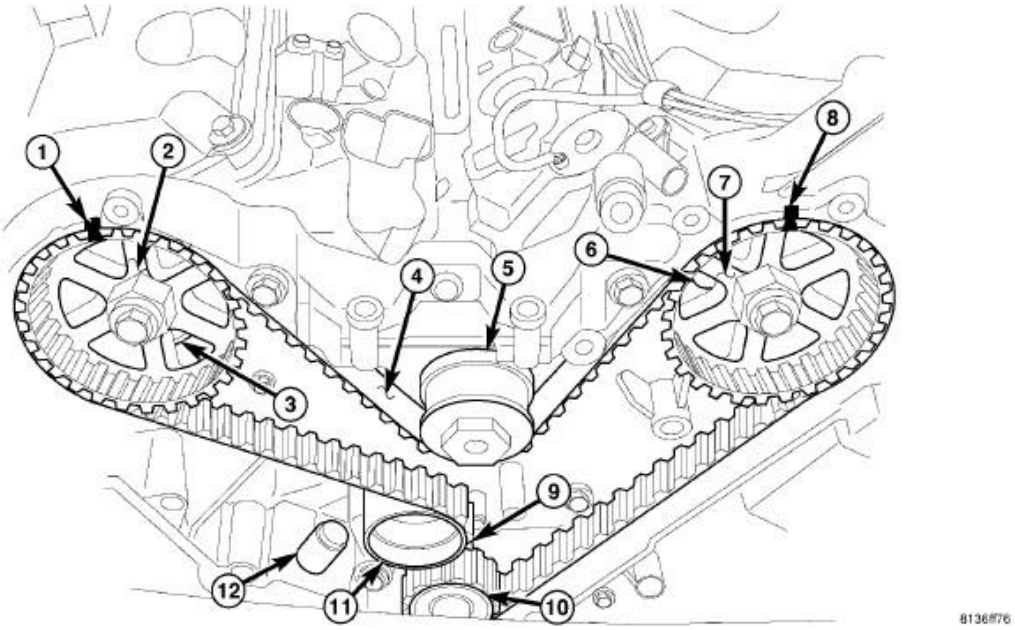

Fig. 505: Timing Gear Components
Courtesy of CHRYSLER LLC

11. Install camshaft sprockets (2 and 7). Refer to **SPROCKET(S), TIMING BELT AND CHAIN, INSTALLATION**.
12. Install timing belt (4). Refer to **SPROCKET(S), TIMING BELT AND CHAIN, INSTALLATION**.
13. Connect negative battery cable. Tighten nut to 5 N.m (45 in. lbs.).
14. Fill cooling system. Refer to **STANDARD PROCEDURE** .
15. Operate engine until it reaches normal operating temperature. Check cooling system for correct fluid level.

SPROCKET(S), TIMING BELT AND CHAIN

REMOVAL

TIMING BELT

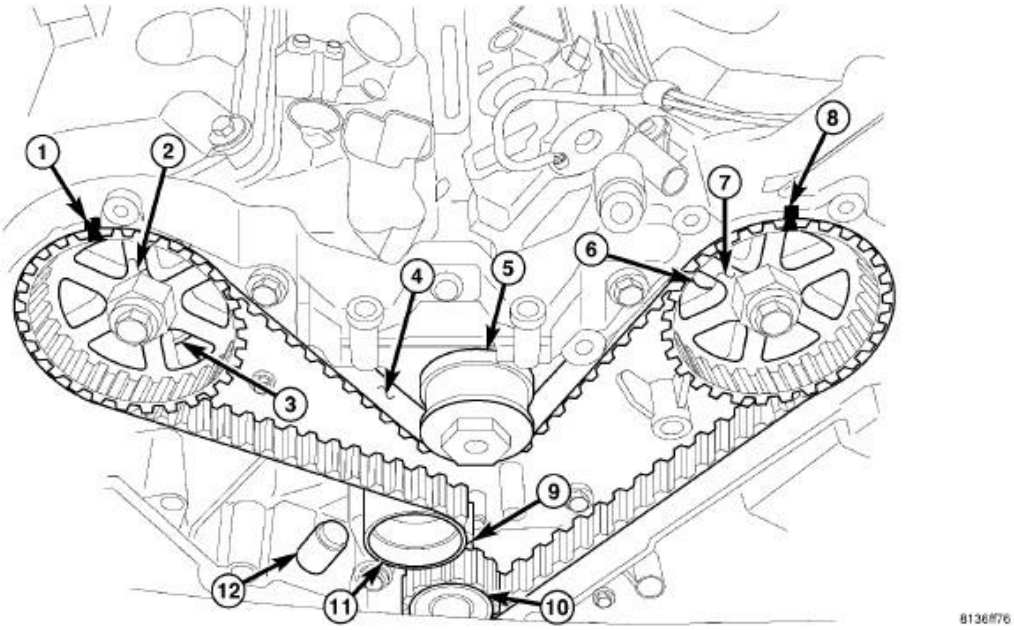

Fig. 506: Timing Gear Components
Courtesy of CHRYSLER LLC

CAUTION: The 4.0L is NOT a freewheeling engine. Therefore, the valve train rocker assemblies must be removed before attempting to rotate either crankshaft or camshafts independently of each other.

1. Disconnect and isolate the negative battery cable.
2. Remove the front timing belt cover. Refer to **COVER(S), ENGINE TIMING, FRONT, REMOVAL** and **COVER(S), ENGINE TIMING, REAR, REMOVAL**.
3. Mark belt running direction, if timing belt is to be reused.

CAUTION: When aligning timing marks, always rotate engine by turning the crankshaft. Failure to do so will result in valve and/or piston damage.

4. Rotate engine clockwise until crankshaft (10) mark aligns with the TDC mark on oil pump housing (9) and the camshaft sprocket (2, 7) timing marks (1, 8) are aligned with the marks on the rear cover.
5. Raise and support the vehicle.

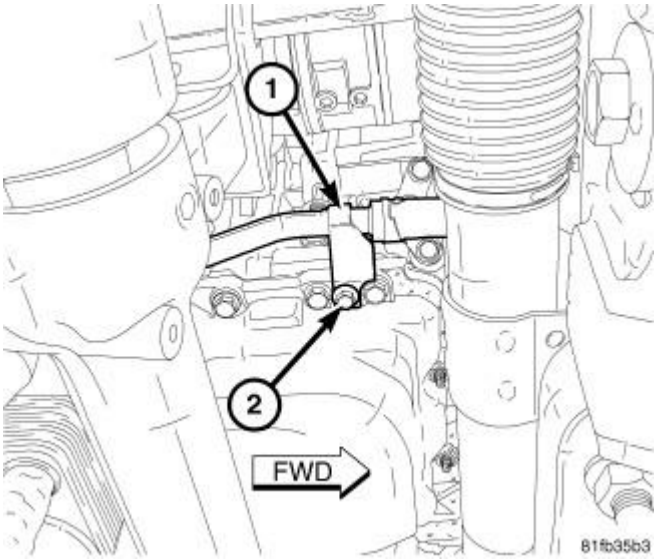

Fig. 507: Oil Cooler Line & Bolt
Courtesy of CHRYSLER LLC

6. Remove bolt (2) and reposition oil cooler hose (1).

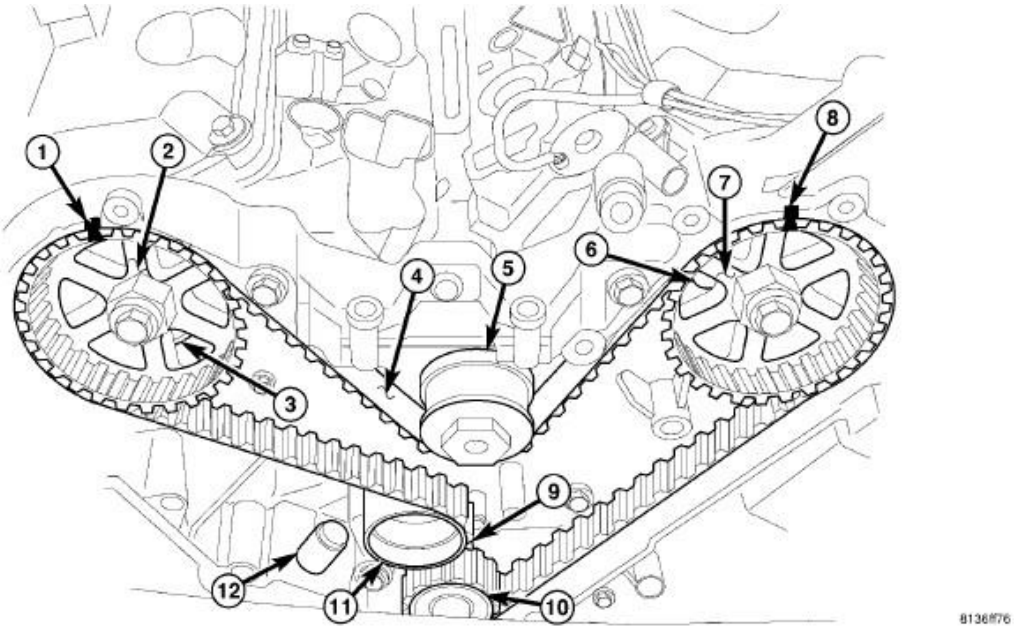

Fig. 508: Timing Gear Components
Courtesy of CHRYSLER LLC

7. Remove the timing belt tensioner (12).
8. Lower vehicle.
9. Remove the timing belt (4).
10. Inspect the tensioner for fluid leakage.
11. Inspect the pivot and bolt for free movement, bearing grease leakage, and smooth rotation. If not rotating

freely, replace the arm and pulley assembly.

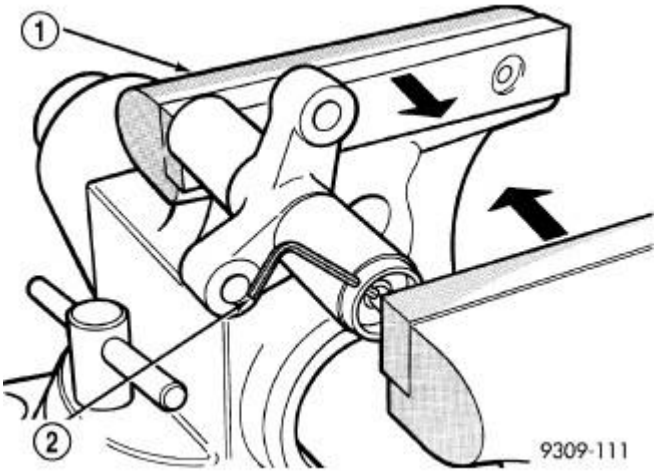

Fig. 509: Compressing Timing Belt Tensioner
Courtesy of CHRYSLER LLC

1 - VISE
2 - LOCKING PIN

12. When tensioner is removed from the engine it is necessary to compress the plunger into the tensioner body.

CAUTION: Index the tensioner in the vise the same way it is installed on the engine. This ensures proper pin orientation when tensioner is installed on the engine.

1. Place the tensioner into a vise (1) and SLOWLY compress the plunger. Total bleed down of tensioner should take approximately two minutes.
2. When plunger is compressed into the tensioner body install a pin (2) through the body and plunger to retain plunger in place until tensioner is installed.

CAMSHAFT SPROCKETS

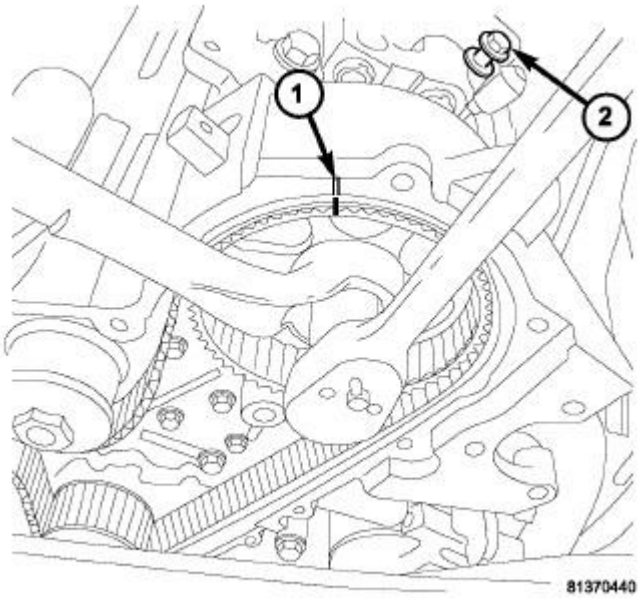

Fig. 510: Left Cam Gear Timing Mark & Retaining Bolt
Courtesy of CHRYSLER LLC

CAUTION: The 4.0L engine is NOT a free-wheeling design. Therefore, care should be taken not to rotate the camshafts or crankshaft with the timing belt removed.

NOTE: The camshaft timing gears are keyed to the camshaft.

1. Remove timing belt. Refer to **SPROCKET(S), TIMING BELT AND CHAIN, REMOVAL**.
2. Hold the left camshaft sprocket with a 36 mm (1 7/16 in.) box end wrench so that the timing mark (1) does not move while removing the retaining bolt.
3. Loosen and remove the camshaft gear retaining bolt and washer. The left bolt is 255 mm (10.0 in.) long.

NOTE: The camshaft timing gears are keyed to the camshaft.

4. Remove the camshaft sprocket.

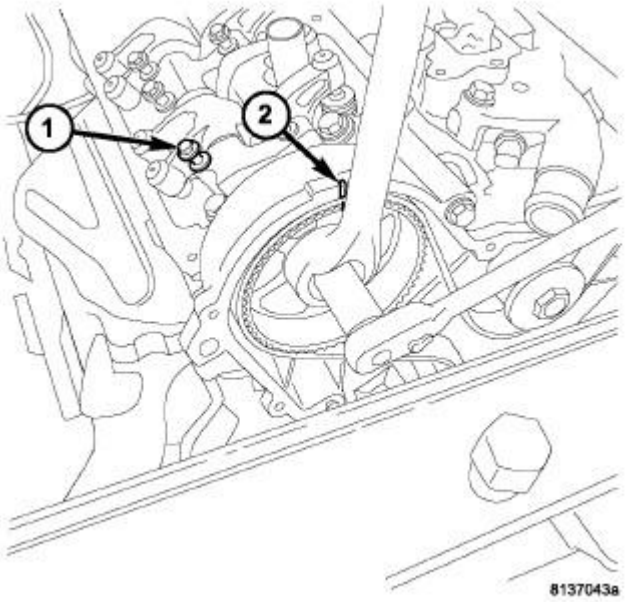

Fig. 511: Right Cam Gear Retainer Bolt & Timing Mark
Courtesy of CHRYSLER LLC

5. Hold the right camshaft sprocket with a 36 mm (1 7/16 in.) box end wrench so that the timing mark (2) does not move while removing the retaining bolt.
6. Loosen and remove the camshaft gear retaining bolt and washer. The right bolt is 213 mm (8 3/8 in.) long.

NOTE: The camshaft timing gears are keyed to the camshaft.

7. Remove the camshaft sprocket.

CRANKSHAFT SPROCKET

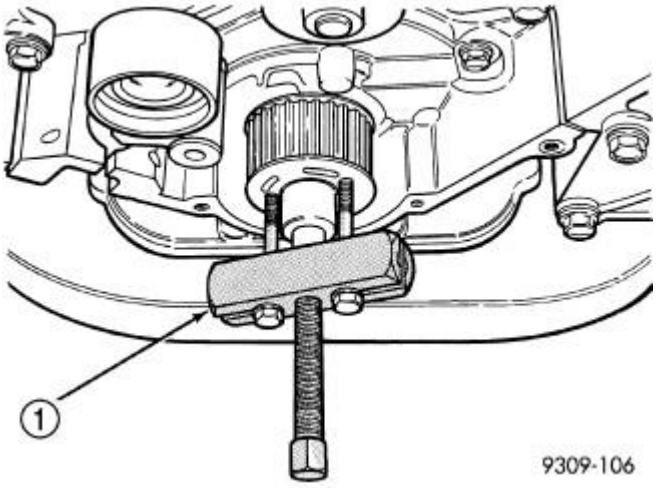

Fig. 512: Crankshaft Sprocket - Removal
Courtesy of CHRYSLER LLC

CAUTION: The 4.0L engine is NOT a free-wheeling design. Therefore, care should be taken not to rotate the camshafts or crankshaft with the timing belt removed.

1. Remove the timing belt. Refer to **SPROCKET(S), TIMING BELT AND CHAIN, REMOVAL**.
2. Remove crankshaft sprocket using Gear Puller L-4407A (1).

INSPECTION

TIMING BELT

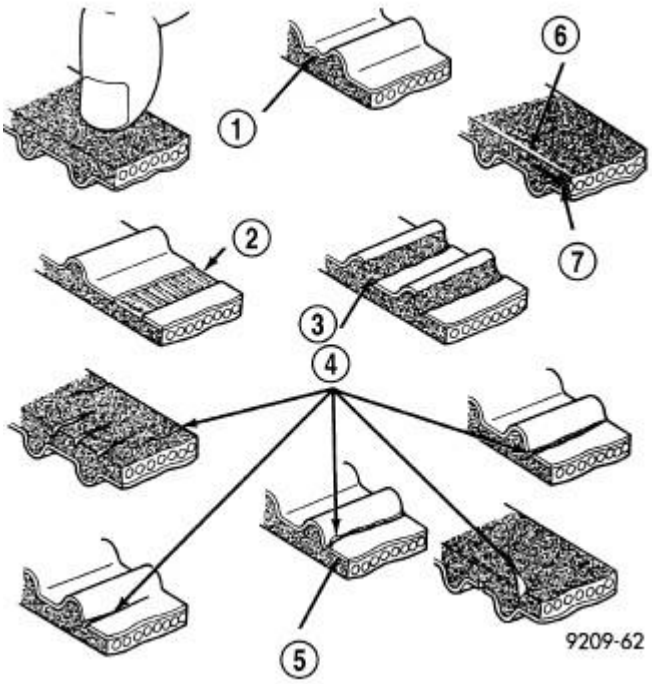

Fig. 513: Timing Belt Inspection
Courtesy of CHRYSLER LLC

1 - PEELING
2 - TOOTH MISSING AND CANVAS FIBER EXPOSED
3 - RUBBER EXPOSED
4 - CRACKS
5 - PEELING
6 - ROUNDED EDGE
7 - ABNORMAL WEAR (FLUFFY STRAND)

1. Remove front timing belt cover. Refer to **COVER(S), ENGINE TIMING, FRONT, REMOVAL** and

COVER(S), ENGINE TIMING, REAR, REMOVAL.

2. Inspect both sides of the timing belt. Replace belt if any of the following conditions exist: Refer to **Fig. 513**.
   1. Hardening of back rubber back side is glossy without resilience and leaves no indent when pressed with fingernail.
   2. Cracks (4) on rubber back.
   3. Cracks or peeling (1) of canvas.
   4. Cracks on rib root.
   5. Cracks on belt sides.
   6. Missing teeth (2).
   7. Abnormal wear (7) of belt sides. The sides are normal if they are sharp as if cut by a knife.
   8. Vehicle mileage or time at component maintenance requirement. Refer to **MAINTENANCE SCHEDULES, DESCRIPTION** .
3. If none of the above conditions are seen on the belt, the front timing belt cover can be installed. Refer to **COVER(S), ENGINE TIMING, FRONT, INSTALLATION** and **COVER(S), ENGINE TIMING, REAR, INSTALLATION**.

TIMING VERIFICATION

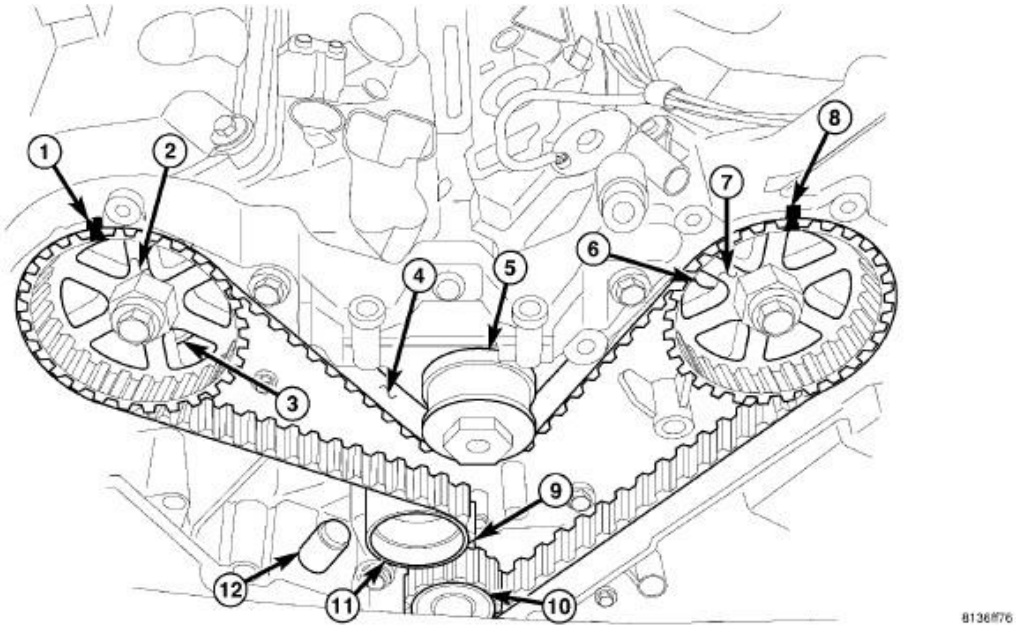

Fig. 514: Timing Gear Components
Courtesy of CHRYSLER LLC

Remove the outer timing covers. Rotate the crankshaft until the pointer on the crankshaft sprocket (10) aligns the TDC mark on the oil pump (9). Refer to **Fig. 514**. Check to determine if the camshaft sprocket (2, 7) timing marks (1, 8) are aligned with the marks on the inner timing cover. It may take an additional full revolution of the crankshaft before the camshaft sprocket marks are aligned.

INSTALLATION

TIMING BELT

CAUTION: The 4.0L is NOT a freewheeling engine. Therefore, the valve train rocker assemblies must be removed before attempting to rotate either crankshaft or camshafts independently of each other.

CAUTION: If camshafts have moved from the timing marks, always rotate camshaft towards the direction nearest to the timing marks (DO NOT TURN CAMSHAFTS A FULL REVOLUTION OR DAMAGE to valves and/or pistons could result).

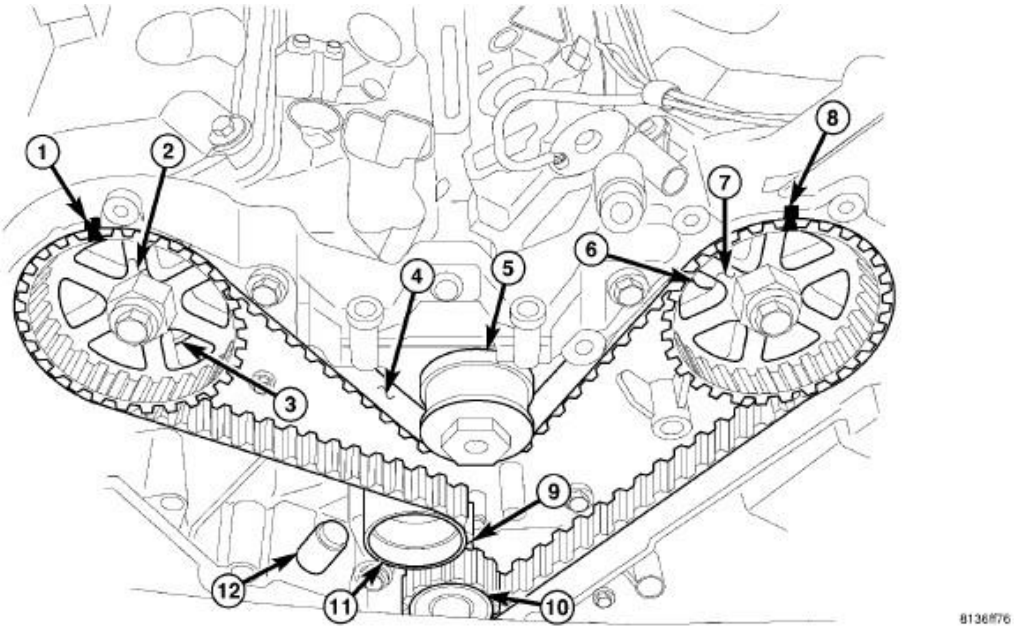

Fig. 515: Timing Gear Components
Courtesy of CHRYSLER LLC

1. Align the crankshaft sprocket (10) with the TDC mark (9) on the oil pump cover.
2. Align the camshaft sprockets (2, 7) timing reference marks (1, 8) with the marks on the rear cover.
3. Install the timing belt (4) starting at the crankshaft sprocket (10) going in a counterclockwise direction. Install the belt around the last sprocket and maintain tension on the belt as it is positioned around the tensioner pulley (11).

NOTE: It is necessary to compress the plunger into the tensioner body and install a locking pin prior to reinstalling the tensioner. See Timing Belt Removal for tensioner compression procedure. Refer to SPROCKET(S), TIMING BELT AND CHAIN, REMOVAL.

4. Hold the tensioner pulley (11) against the belt and install the reset (pinned) timing belt tensioner (2) into the housing. Tighten attaching bolts to 28 N.m (250 in. lbs.).
5. When tensioner (12) is in place, pull the retaining pin to allow the tensioner to extend to the pulley

bracket.

6. Rotate the crankshaft sprocket (10) two revolutions and check the timing marks on the camshafts and crankshaft. The marks should line up within their respective locations. If the marks do not line up, repeat the procedure.

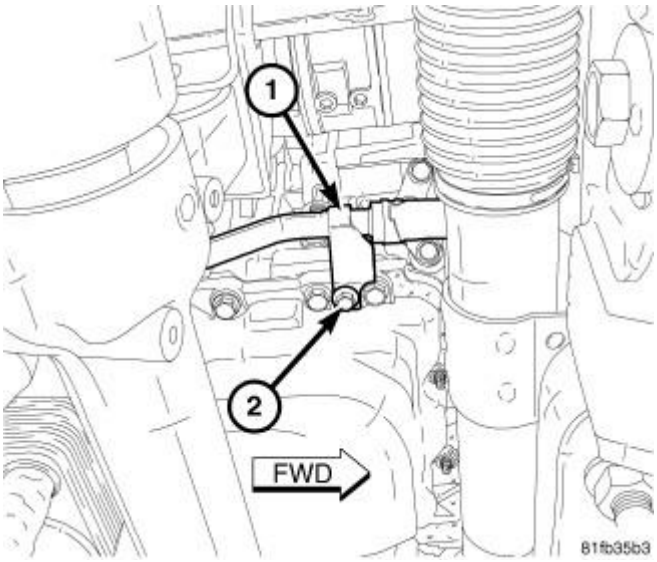

Fig. 516: Oil Cooler Line & Bolt
Courtesy of CHRYSLER LLC

7. Reposition the oil cooler hose retainer bracket (1) near the timing belt tensioner and install bolt (2).
8. Install the front timing belt cover. Refer to **COVER(S), ENGINE TIMING, FRONT, INSTALLATION** and **COVER(S), ENGINE TIMING, REAR, INSTALLATION**.
9. Connect the negative battery cable and tighten nut to 5 N.m (45 in. lbs.).

NOTE: **The Cam/Crank Variation Relearn procedure must be performed anytime there has been a repair/replacement made to a powertrain system, for example: flywheel, valvetrain, camshaft and/or crankshaft sensors or components. Refer to DTC-Based Diagnostics/MODULE, Powertrain Control (PCM) - Standard Procedure .**

CAMSHAFT SPROCKETS

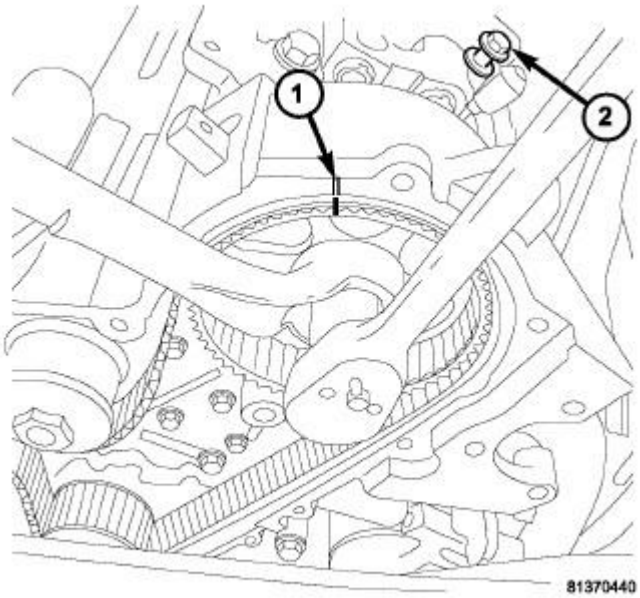

Fig. 517: Left Cam Gear Timing Mark & Retaining Bolt
Courtesy of CHRYSLER LLC

CAUTION: The 4.0L engine is NOT a free-wheeling design. Therefore, care should be taken not to rotate the camshafts or crankshaft with the timing belt removed.

CAUTION: The camshaft sprockets are keyed and not interchangeable from side to side because of the camshaft position sensor pick-up on the left sprocket.

1. Install the left camshaft sprocket onto the camshaft.
2. Install a **NEW** sprocket attaching bolt into place. The 255 mm (10 in.) bolt is to be installed into the left camshaft and the 213 mm (8 3/8 in.) bolt is to be installed into the right camshaft.
3. Hold the left camshaft sprocket with a 36 mm (1 7/16 in.) box end wrench so that the timing mark (1) does not move while tightening the retaining bolt. Tighten the bolt to 102 N.m (75 ft. lbs.) +90° turn.

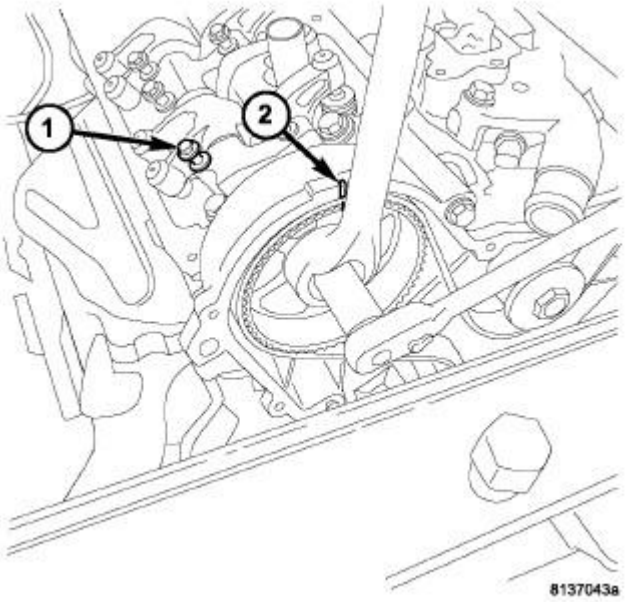

Fig. 518: Right Cam Gear Retainer Bolt & Timing Mark
Courtesy of CHRYSLER LLC

4. Install the right camshaft sprocket onto the camshaft.
5. Install a **NEW** sprocket attaching bolt into place. The 255 mm (10 in.) bolt is to be installed into the left camshaft and the 213 mm (8 3/8 in.) bolt is to be installed into the right camshaft.
6. Hold the right camshaft sprocket with a 36 mm (1 7/16 in.) box end wrench so that the timing mark (2) does not move while tightening the retaining bolt. Tighten the bolt to 102 N.m (75 ft. lbs.) +90° turn.
7. Install the timing belt and front timing belt cover. Refer to **SPROCKET(S), TIMING BELT AND CHAIN, INSTALLATION**.

NOTE: **The Cam/Crank Variation Relearn procedure must be performed anytime there has been a repair/replacement made to a powertrain system, for example: flywheel, valvetrain, camshaft and/or crankshaft sensors or components. Refer to DTC-Based Diagnostics/MODULE, Powertrain Control (PCM) - Standard Procedure .**

CRANKSHAFT SPROCKET

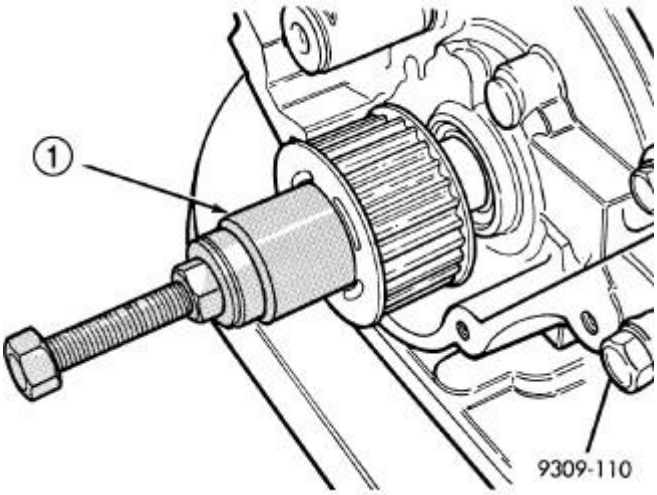

Fig. 519: Crankshaft Sprocket - Installation
Courtesy of CHRYSLER LLC

CAUTION: The 4.0L engine is NOT a free-wheeling design. Therefore, care should be taken not to rotate the camshafts or crankshaft with the timing belt removed.

CAUTION: To ensure proper installation depth of crankshaft sprocket, Sprocket Installer (special tool #6641, Installer, Sprocket) must be used.

1. Install crankshaft sprocket using Forcing Screw (special tool #C-4685-C1, Screw, Forcing), with Nut and Thrust Bearing from (special tool #6792, Installer, Crank Sprocket), and Sprocket Installer (special tool #6641, Installer, Sprocket) (1).
2. Install timing belt. Refer to **SPROCKET(S), TIMING BELT AND CHAIN, INSTALLATION**.

TENSIONER, ENGINE TIMING

REMOVAL

TENSIONER

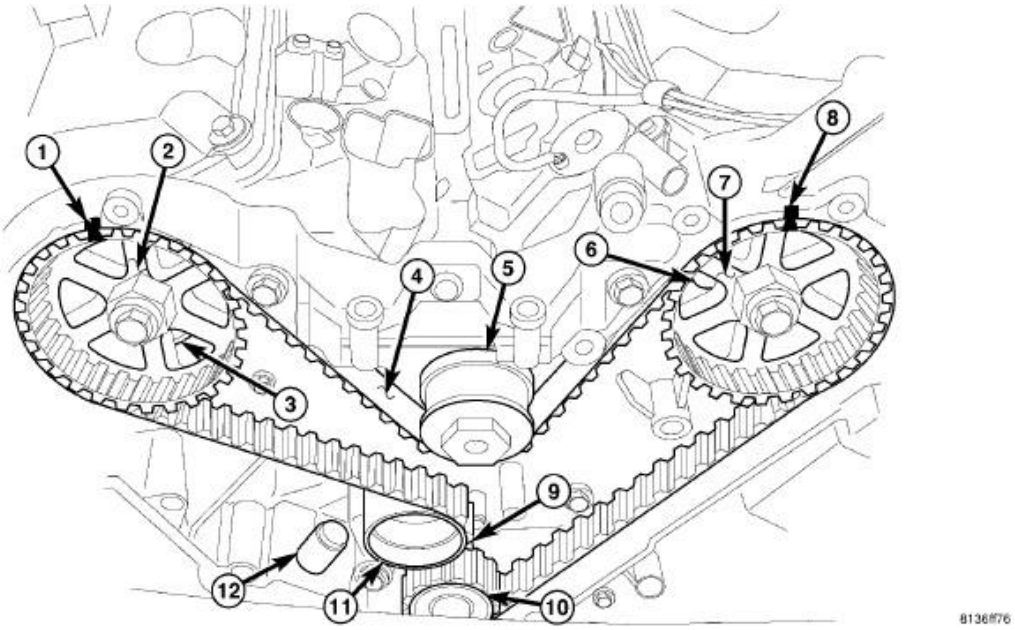

Fig. 520: Timing Gear Components
Courtesy of CHRYSLER LLC

CAUTION: The 4.0L is NOT a freewheeling engine. Therefore, the valve train rocker assemblies must be removed before attempting to rotate either crankshaft or camshafts independently of each other.

1. Disconnect and isolate the negative battery cable.
2. Remove the front timing belt cover. Refer to **COVER(S), ENGINE TIMING, FRONT, REMOVAL** and **COVER(S), ENGINE TIMING, REAR, REMOVAL**.
3. Mark belt running direction, if timing belt is to be reused.

CAUTION: When aligning timing marks, always rotate engine by turning the crankshaft. Failure to do so will result in valve and/or piston damage.

4. Rotate engine clockwise until crankshaft (10) mark aligns with the TDC mark on oil pump housing (9) and the camshaft sprocket (2, 7) timing marks (1, 8) are aligned with the marks on the rear cover.
5. Raise and support the vehicle.

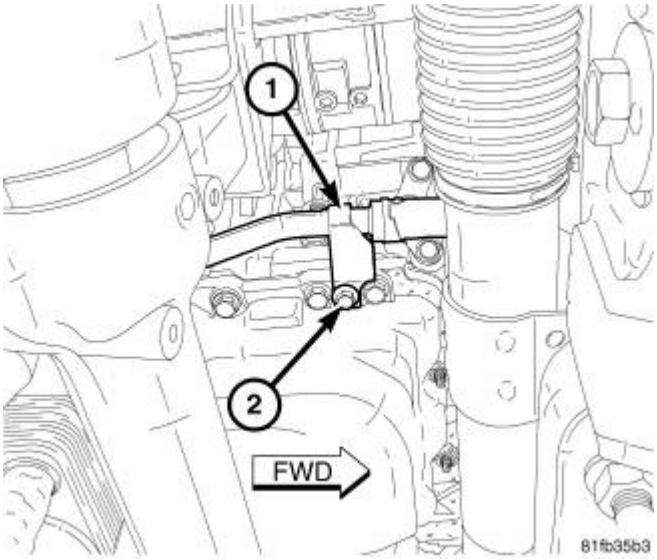

Fig. 521: Oil Cooler Line & Bolt
Courtesy of CHRYSLER LLC

6. Remove bolt (2) and reposition oil cooler hose (1).

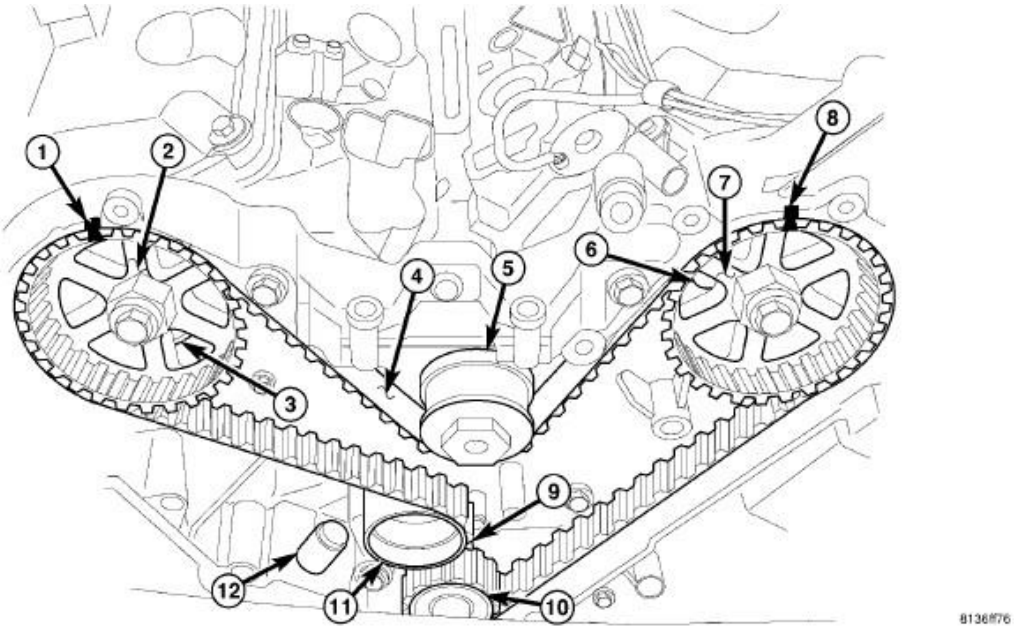

Fig. 522: Timing Gear Components
Courtesy of CHRYSLER LLC

7. Remove the timing belt tensioner (12).
8. Inspect the tensioner for fluid leakage.
9. Inspect the tensioner pivot and bolt for free movement, bearing grease leakage, and smooth rotation. If not rotating freely, replace the tensioner arm and pulley assembly.

TENSIONER PULLEY ASSEMBLY

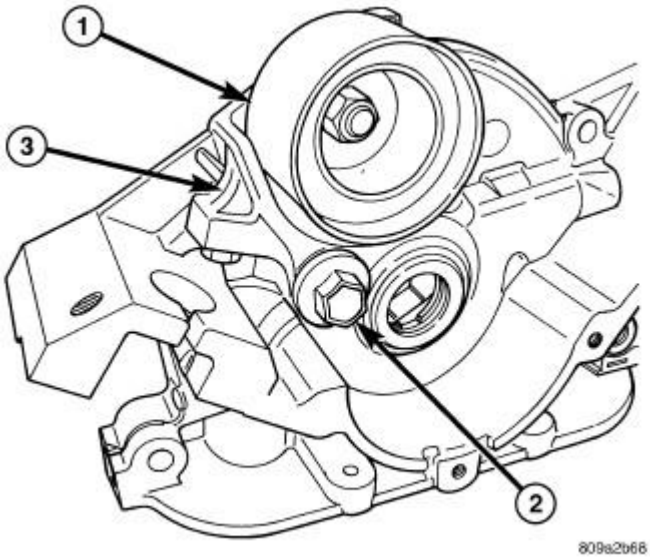

Fig. 523: Tensioner Pulley, Pivot Bolt & Tensioner Bracket
Courtesy of CHRYSLER LLC

1 - TENSIONER PULLEY
2 - PIVOT BOLT
3 - TENSIONER BRACKET

1. Remove the timing belt. Refer to **SPROCKET(S), TIMING BELT AND CHAIN, REMOVAL**.
2. Remove the timing belt tensioner pulley (1) and bracket (3) assembly by unscrewing the pivot bolt (2) from the oil pump housing. Refer to **Fig. 523**.

INSPECTION

TENSIONER

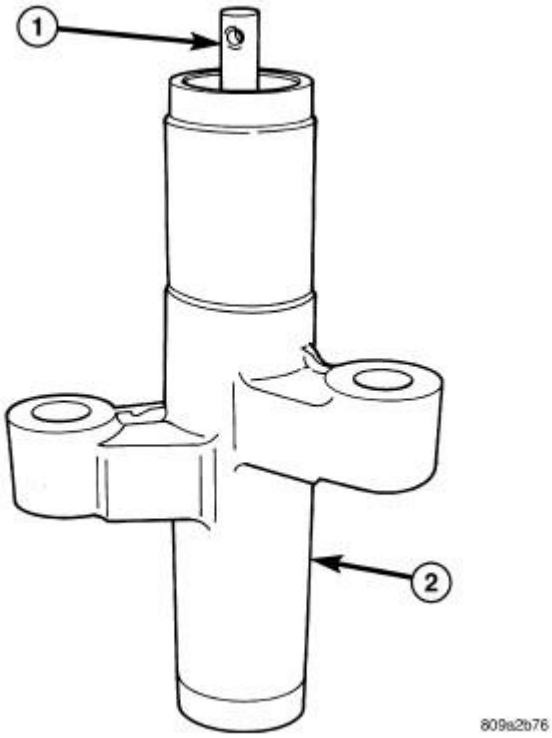

Fig. 524: Timing Belt Tensioner
Courtesy of CHRYSLER LLC

1 - PLUNGER (EXTENDED POSITION)
2 - TENSIONER HOUSING

1. Inspect hydraulic tensioner (2) for fluid loss around the plunger (1) seal. Refer to **Fig. 524**. Replace tensioner if leaking.

TENSIONER PULLEY ASSEMBLY

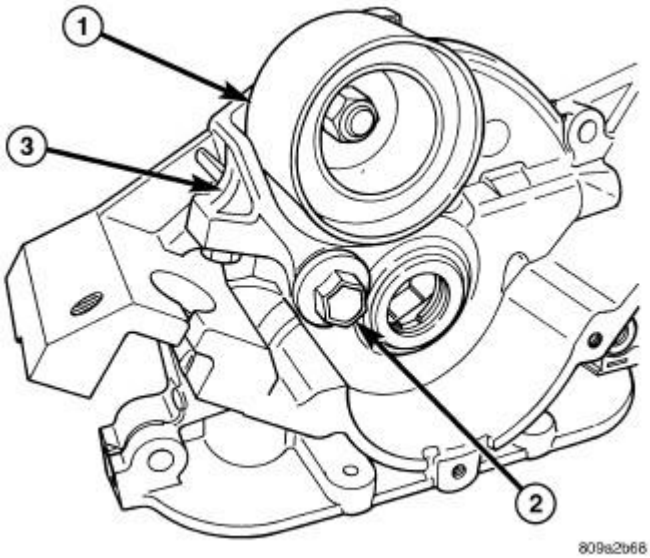

Fig. 525: Tensioner Pulley, Pivot Bolt & Tensioner Bracket
Courtesy of CHRYSLER LLC

1 - TENSIONER PULLEY
2 - PIVOT BOLT
3 - TENSIONER BRACKET

NOTE: The tensioner pulley (1), bracket (3), and pivot bolt (2) is serviced as an assembly.

1. Inspect pulley (1) for free movement. Refer to **Fig. 525**. Replace if pulley is loose, seized, or rough turning.
2. Inspect pulley bearing and seal. Replace if damaged.
3. Inspect pivot bolt (2) for free movement in assembly housing. Replace assembly if seized or excessive looseness.

INSTALLATION

TENSIONER

CAUTION: The 4.0L is NOT a freewheeling engine. Therefore, the valve train rocker assemblies must be removed before attempting to rotate either crankshaft or camshafts independently of each other.

CAUTION: If camshafts have moved from the timing marks, always rotate camshaft towards the direction nearest to the timing marks (DO NOT TURN CAMSHAFTS A FULL REVOLUTION OR DAMAGE to valves and/or pistons could result).

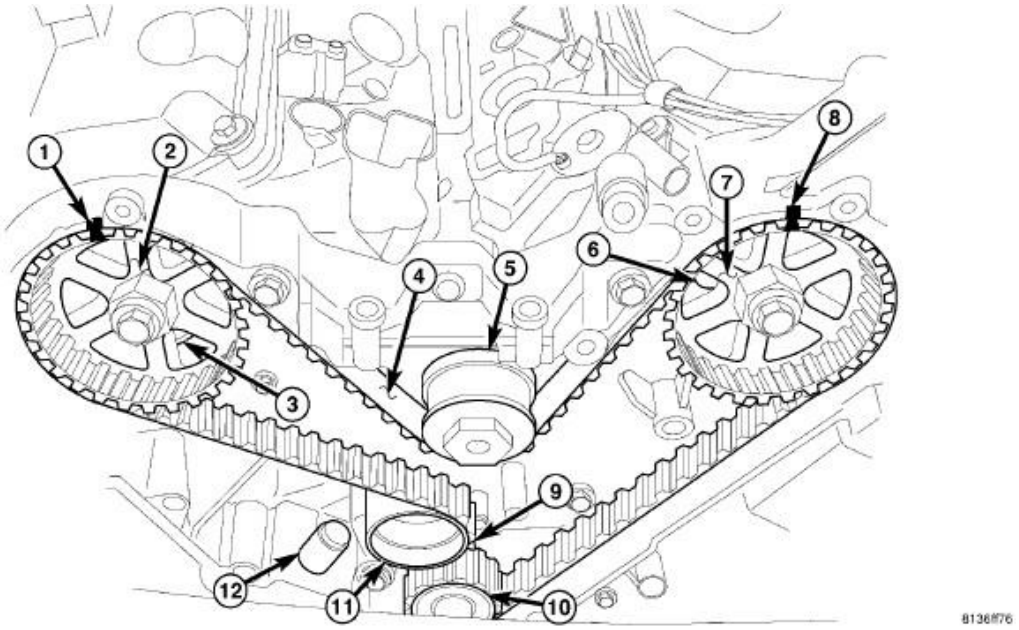

Fig. 526: Timing Gear Components
Courtesy of CHRYSLER LLC

1. Make sure the crankshaft sprocket (10) is aligned with the TDC mark (9) on the oil pump cover.
2. Make sure the camshaft sprockets (2, 7) timing reference marks (1, 8) are aligned with the marks on the rear cover.
3. Make sure the timing belt (4) is around the tensioner pulley (11).

NOTE: It is necessary to compress the plunger into the tensioner body and install a locking pin prior to reinstalling the tensioner.

4. Hold the tensioner pulley against the belt and install the reset (pinned) timing belt tensioner (12) into the housing. Tighten attaching bolts to 28 N.m (250 in. lbs.).
5. When tensioner is in place, pull the retaining pin to allow the tensioner to extend to the pulley bracket.
6. Rotate the crankshaft two revolutions and check the timing marks on the camshafts and crankshaft. The marks should line up within their respective locations. If the marks do not line up, repeat the procedure.

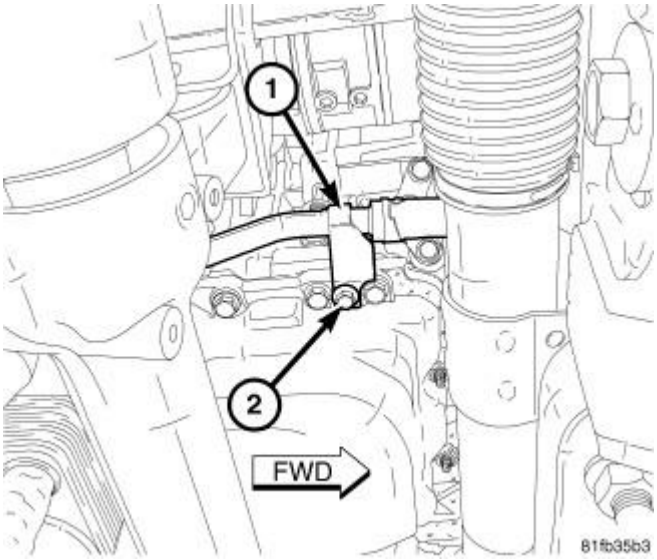

Fig. 527: Oil Cooler Line & Bolt
Courtesy of CHRYSLER LLC

7. Reposition the oil cooler hose retainer bracket (1) near the timing belt tensioner and install bolt (2).
8. Install the front timing belt cover. Refer to **COVER(S), ENGINE TIMING, FRONT, INSTALLATION** and **COVER(S), ENGINE TIMING, REAR, INSTALLATION**.
9. Connect the negative battery cable.

NOTE: **The Cam/Crank Variation Relearn procedure must be performed anytime there has been a repair/replacement made to a powertrain system, for example: flywheel, valvetrain, camshaft and/or crankshaft sensors or components. Refer to DTC-Based Diagnostics/MODULE, Powertrain Control (PCM) - Standard Procedure .**

TENSIONER PULLEY ASSEMBLY

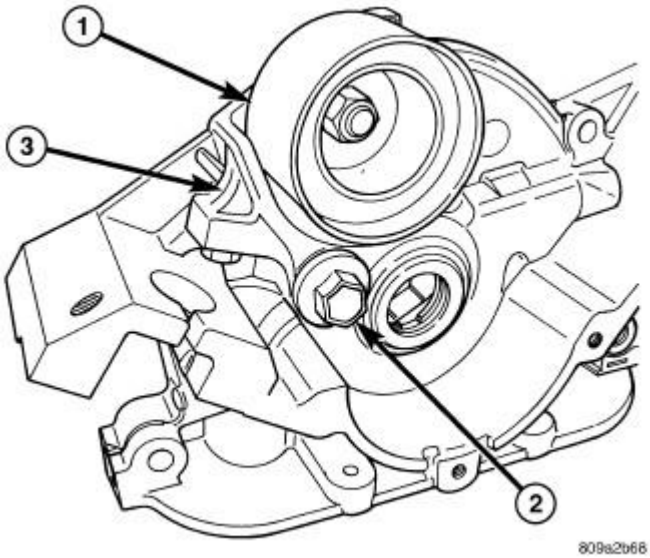

Fig. 528: Tensioner Pulley, Pivot Bolt & Tensioner Bracket
Courtesy of CHRYSLER LLC

1 - TENSIONER PULLEY
2 - PIVOT BOLT
3 - TENSIONER BRACKET

1. Install the timing belt tensioner pulley (1) assembly. Refer to **Fig. 528**. Tighten the pivot bolt (2) to 61 N.m (45 ft. lbs.).
2. Install the timing belt. Refer to **SPROCKET(S), TIMING BELT AND CHAIN, INSTALLATION**.

