2013 ENGINE

3.6L - Service Information - Durango

DESCRIPTION

DESCRIPTION

CAUTION: If the engine has experienced a catastrophic failure, THE INTAKE MANIFOLD MUST BE REPLACED!

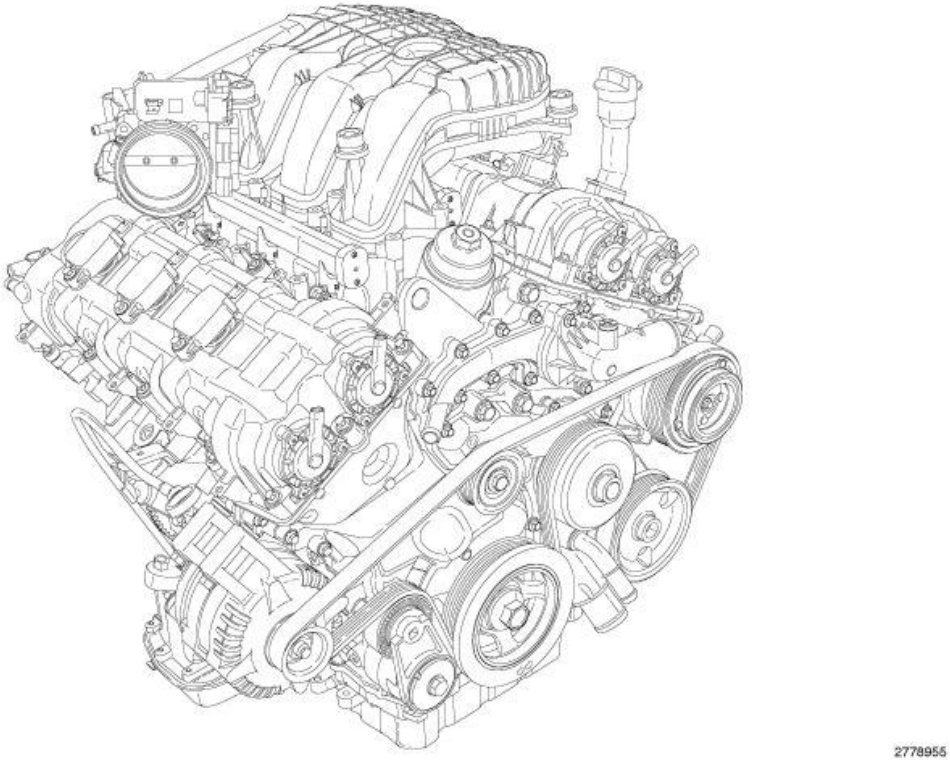

Fig. 1: 3.6L (219.7 CID) Flexible Fuel V-6 Engine
Courtesy of CHRYSLER GROUP, LLC

The 3.6 liter (219.7 CID) flexible fuel V-6 engine features Variable Valve Timing (VVT), Dual Overhead Camshafts (DOHC) and a high-pressure die-cast aluminum cylinder block with steel liners in a 60° configuration. The 3.6 liter engine has a chain driven variable discharge oil pump with a two-stage pressure regulator for improved fuel economy. The exhaust manifolds are integrated into the cylinder heads for reduced weight. The cylinders are numbered from front to rear. The right bank is numbered 1, 3, 5 and the left bank is numbered 2, 4, 6. The firing order is 1-2-3-4-5-6. The engine serial number is located on the left side of the cylinder block at the transmission flange.

DIAGNOSIS AND TESTING

ENGINE DIAGNOSIS - INTRODUCTION

 © 2011 Mitchell Repair Information Company, LLC.

Engine diagnosis is helpful in determining the causes of malfunctions not detected and remedied by routine maintenance.

These malfunctions may be classified as either performance (e.g., engine idles rough and stalls) or mechanical (e.g., a strange noise).

Refer to **ENGINE PERFORMANCE DIAGNOSTIC TABLE** and **ENGINE MECHANICAL DIAGNOSTIC TABLE** for possible causes and corrections of malfunctions. Refer to **FUEL SYSTEM** for the fuel system diagnosis.

Additional tests and diagnostic procedures may be necessary for specific engine malfunctions that can not be isolated with the Service Diagnosis charts. Information concerning additional tests and diagnosis is provided within the following diagnosis:

- Cylinder Compression Pressure Test. Refer to **CYLINDER COMPRESSION PRESSURE LEAKAGE** .
- Cylinder Combustion Pressure Leakage Test. Refer to **CYLINDER COMBUSTION PRESSURE LEAKAGE** .
- Engine Cylinder Head Gasket Failure Diagnosis. Refer to DIAGNOSIS AND TESTING - **CYLINDER HEAD GASKET** .
- Intake Manifold Leakage Diagnosis. Refer to **DIAGNOSIS AND TESTING - INTAKE MANIFOLD LEAKS** .

ENGINE PERFORMANCE DIAGNOSTIC TABLE

CONDITION	POSSIBLE CAUSE	CORRECTION
ENGINE WILL NOT START	1. Weak battery	1. Charge or replace as necessary. Refer to **DIAGNOSIS AND TESTING** - BATTERY.
	2. Corroded or loose battery connections.	2. Clean and tighten battery connections. Refer to **CLEANING** .
	3. Faulty engine starting system.	3. Diagnose engine starting system. Refer to **DIAGNOSIS AND TESTING** .
	4. Faulty coil or control unit.	4. Replace ignition coil. Refer to **COIL, IGNITION, REMOVAL** .
	5. Incorrect spark plug gap.	5. Correct as necessary.
	6. Incorrect cam timing.	6. Verify cam timing. Refer to **VALVE TIMING, STANDARD PROCEDURE**.
	7. Dirt or water in fuel system.	7. Clean fuel system.
	8. Faulty fuel pump or wiring.	8. Repair or replace as necessary.
	9. Faulty Camshaft Position	9. Replace sensor. Refer to

 © 2011 Mitchell Repair Information Company, LLC.

	(CMP) sensor. 10. Faulty Crankshaft Position (CKP) sensor.	**SENSOR, CAMSHAFT POSITION, REMOVAL** . 10. Replace sensor. Refer to **SENSOR, CRANKSHAFT POSITION, REMOVAL** .
ENGINE STALLS OR ROUGH IDLE	1. Vacuum leak.	1. Inspect intake manifold and vacuum hoses, repair or replace as necessary.
	2. Faulty Crankshaft Position (CKP) sensor.	2. Replace sensor. Refer to **SENSOR, CRANKSHAFT POSITION, REMOVAL** .
	3. Faulty ignition coil.	3. Replace ignition coil. Refer to **COIL, IGNITION, REMOVAL** .
	4. Incorrect cam timing.	4. Verify cam timing. Refer to **VALVE TIMING, STANDARD PROCEDURE**.
ENGINE LOSS OF POWER	1. Dirty or incorrectly gapped spark plugs.	1. Correct as necessary. Refer to **SPARK PLUG, REMOVAL** .
	2. Dirt or water in fuel system.	2. Clean fuel system.
	3. Faulty fuel pump.	3. Replace fuel pump. Refer to **MODULE, FUEL PUMP, REMOVAL** .
	4. Leaking cylinder head gasket.	4. Replace cylinder head gasket. Refer to **CYLINDER HEAD, REMOVAL**.
	5. Low compression.	5. Determine the cause and repair as necessary. Refer to **CYLINDER COMBUSTION PRESSURE LEAKAGE** .
	6. Burned, warped or pitted valves.	6. Replace as necessary. Refer to **VALVES, INTAKE AND EXHAUST, REMOVAL**.
	7. Plugged or restricted exhaust system.	7. Inspect and replace as necessary.
	8. Faulty ignition coil.	8. Replace ignition coil. Refer to **COIL, IGNITION, REMOVAL** .
	9. Incorrect cam timing.	9. Verify cam timing. Refer to **VALVE TIMING, STANDARD PROCEDURE**.
ENGINE MISSES ON ACCELERATION	1. Dirty or incorrectly gapped spark plugs.	1. Correct as necessary. Refer to **SPARK PLUG, REMOVAL** .
	2. Dirt in fuel system.	2. Clean fuel system.
	3. Burned, warped or pitted	3. Replace as necessary. Refer to

 © 2011 Mitchell Repair Information Company, LLC.

	valves.	**VALVES, INTAKE AND EXHAUST, REMOVAL**.
	4. Faulty ignition coil.	4. Replace ignition coil. Refer to **COIL, IGNITION, REMOVAL** .
ENGINE MISSES AT HIGH SPEED	1. Dirty or incorrectly gapped spark plugs.	1. Correct as necessary. Refer to **SPARK PLUG, REMOVAL** .
	4. Faulty ignition coil.	2. Replace ignition coil. Refer to **COIL, IGNITION, REMOVAL** .
	3. Dirt or water in fuel system.	3. Clean fuel system.

ENGINE MECHANICAL DIAGNOSTIC TABLE

CONDITION	POSSIBLE CAUSES	CORRECTIONS
NOISY VALVES	1. High or low oil level in crankcase.	1. Refer to ENGINE/LUBRICATION/OIL **STANDARD PROCEDURE** .
	2. Thin or diluted oil.	2. Change oil and filter.
	3. Low oil pressure.	3. Check oil pump, if OK, check rod and main bearings for excessive wear.
	4. Dirt in lash adjusters.	4. Replace as necessary.
	5. Worn rocker arms.	5. Replace as necessary.
	6. Worn lash adjusters	6. Replace as necessary.
	7. Worn valve guides.	7. Inspect the valve guides for wear, cracks or looseness. If either condition exists, replace the cylinder head. Refer to **CYLINDER HEAD, REMOVAL**.
	8. Excessive runout of valve seats on valve faces.	8. Refer to ENGINE/CYLINDER HEAD/VALVES, INTAKE AND EXHAUST **STANDARD PROCEDURE** .
CONNECTING ROD NOISE	1. Insufficient oil supply.	1. Refer to ENGINE/LUBRICATION/OIL **STANDARD PROCEDURE** .
	2. Low oil pressure.	2. Check oil pump, if OK, check rod and main bearings for excessive wear.
	3. Thin or diluted oil.	3. Change oil and filter.
	4. Excessive bearing clearance.	4. Replace as necessary.
	5. Connecting rod journal out-of-round.	5. Service or replace crankshaft.
	6. Misaligned connecting rods.	6. Replace bent connecting rods.
MAIN BEARING NOISE	1. Insufficient oil supply.	1. Refer to ENGINE/LUBRICATION/OIL **STANDARD PROCEDURE** .
	2. Low oil pressure.	2. Check oil pump, if OK, check rod and main

 © 2011 Mitchell Repair Information Company, LLC.

		bearings for excessive wear.
	3. Thin or diluted oil.	3. Change oil and filter.
	4. Excessive bearing clearance.	4. Replace as necessary.
	5. Excessive end play.	5. Check thrust washers for wear.
	6. Crankshaft journal out-of round.	6. Service or replace crankshaft.
	7. Loose flywheel or torque converter.	7. Tighten to correct torque

CYLINDER COMPRESSION PRESSURE LEAKAGE

NOTE: The results of a cylinder compression pressure test can be utilized to diagnose several engine malfunctions.

NOTE: Ensure the battery is completely charged and the engine starter motor is in good operating condition. Otherwise the indicated compression pressures may not be valid for diagnosis purposes.

1. Clean the spark plug recesses with compressed air.
2. Remove the spark plugs and record the cylinder number of each spark plug for future reference.
3. Inspect the spark plug electrodes for abnormal firing indicators such as fouled, hot, oily, etc.
4. Disable the fuel system and perform the fuel system pressure release procedure. Refer to **FUEL DELIVERY, GAS, STANDARD PROCEDURE** .
5. Insert a compression pressure gauge and rotate the engine with the engine starter motor for three revolutions.
6. Record the compression pressure on the 3rd revolution. Continue the test for the remaining cylinders.

NOTE: The recommended compression pressures are to be used only as a guide to diagnosing engine problems. An engine should not be disassembled to determine the cause of low compression unless some malfunction is present.

7. Compression should not be less than 689 kPa (100 psi) and not vary more than 25 percent from cylinder to cylinder.
8. If one or more cylinders have abnormally low compression pressures, repeat the compression test.

NOTE: If the same cylinder or cylinders repeat an abnormally low reading on the second compression test, it could indicate the existence of a problem in the cylinder in question.

9. If one or more cylinders continue to have abnormally low compression pressures, perform the cylinder combustion pressure leakage test. Refer to **CYLINDER COMBUSTION PRESSURE LEAKAGE** .

 © 2011 Mitchell Repair Information Company, LLC.

CYLINDER COMBUSTION PRESSURE LEAKAGE

The combustion pressure leakage test provides an accurate means for determining engine condition.

Combustion pressure leakage testing will detect:

- Exhaust and intake valve leaks (improper seating).
- Leaks between adjacent cylinders or into water jacket.
- Any causes for combustion/compression pressure loss.

1. Check the coolant level and fill as required. DO NOT install the radiator cap.
2. Start and operate the engine until it attains normal operating temperature, then turn the engine OFF.
3. Remove the spark plugs.
4. Remove the oil filler cap.
5. Remove the air cleaner hose.
6. Calibrate the tester according to the manufacturer's instructions. The shop air source for testing should maintain 483 kPa (70 psi) minimum, 1, 379 kPa (200 psi) maximum and 552 kPa (80 psi) recommended.
7. Perform the test procedures on each cylinder according to the tester manufacturer's instructions. Set piston of cylinder to be tested at TDC compression. While testing, listen for pressurized air escaping through the throttle body, tailpipe and oil filler cap opening. Check for bubbles in the radiator coolant.

All gauge pressure indications should be equal, with no more than 25% leakage.

FOR EXAMPLE: At 552 kPa (80 psi) input pressure, a minimum of 414 kPa (60 psi) should be maintained in the cylinder.

Refer to **CYLINDER COMBUSTION PRESSURE LEAKAGE DIAGNOSIS CHART**.

CYLINDER COMBUSTION PRESSURE LEAKAGE DIAGNOSIS CHART

CONDITION	POSSIBLE CAUSE	CORRECTION
AIR ESCAPES THROUGH THROTTLE BODY	Intake valve bent, burnt, or not seated properly	Inspect valve and valve seat. Reface or replace, as necessary. Inspect valve springs. Replace as necessary.
AIR ESCAPES THROUGH TAILPIPE	Exhaust valve bent, burnt, or not seated properly	Inspect valve and valve seat. Reface or replace, as necessary. Inspect valve springs. Replace as necessary.
AIR ESCAPES THROUGH RADIATOR	Head gasket leaking or cracked cylinder head or block	Remove cylinder head and inspect. Replace defective part
MORE THAN 50% LEAKAGE FROM ADJACENT CYLINDERS	Head gasket leaking or crack in cylinder head or block between adjacent cylinders	Remove cylinder head and inspect. Replace gasket, head, or block as necessary
MORE THAN 25% LEAKAGE AND AIR ESCAPES THROUGH OIL FILLER CAP	Stuck or broken piston rings; cracked piston; worn rings and/or cylinder wall	Inspect for broken rings or piston. Measure ring gap and cylinder diameter, taper and out-of-round.

 © 2011 Mitchell Repair Information Company, LLC.

OPENING ONLY		Replace defective part as necessary

OIL CONSUMPTION TEST AND DIAGNOSIS

The following diagnostic procedures are used to determine the source of excessive internal oil Consumption, these procedures and tests apply to vehicles with 50, 000 miles or less.

NOTE: Engine oil consumption may be greater than normal during engine break-in. Repairs should be delayed until vehicle has been driven at least 7, 500 miles.

Severe service (high ambient temperature, short trips, heavy loading, trailer towing, taxi, off-road, or law enforcement use) may result in greater oil consumption than normal.

Sustained high speed driving and high engine RPM operation may result in increased oil consumption.

Failure to comply with the recommended oil type and viscosity rating, as outlined in the owner's manual, may impact oil economy as well as fuel economy.

Oil consumption may increase with vehicle age and mileage due to normal engine wear.

NOTE: Because a few drops of external oil leakage per mile can quickly account for the loss of one quart of oil in a few hundred miles, ensure no external engine oil leaks are present.

- **Oil leakage is not the same as oil consumption and all external leakage must be eliminated before any action can be taken to verify and/or correct oil consumption complaints.**
- **Verify that the engine has the correct oil level dipstick and dipstick tube installed.**
- **Verify that the engine is not being run in an overfilled condition. Check the oil level 15 minutes after a hot shutdown with the vehicle parked on a level surface. In no case should the level be above MAX or the FULL mark on the dipstick.**

OIL CONSUMPTION TEST

1. Check the oil level at least 15 minutes after a hot shutdown.
2. If the oil level is low, top off with the proper viscosity and API service level engine oil. Add one bottle of MOPAR® 4-In-1 Leak Detection Dye into the engine oil.
3. Tamper proof the oil pan drain plug, oil filter, dipstick and oil fill cap.
4. Record the vehicle mileage.
5. Instruct the customer to drive the vehicle as usual.
6. Ask the customer to return to the servicing dealer after accumulating 500 miles, Check the oil level at least 15 minutes after a hot shutdown. If the oil level is half way between the "FULL" and "ADD" mark continue with the next step.
7. Using a black light, re-check for any external engine oil leaks, repair as necessary, if no external engine oil leaks are present, continue with oil consumption diagnosis.

 © 2011 Mitchell Repair Information Company, LLC.

OIL CONSUMPTION DIAGNOSIS

1. Check the positive crankcase ventilation (PCV) system. Make sure the system is not restricted and the PCV valve has the correct part number and correct vacuum source (18-20 in. Hg at idle below 3000 ft. above sea level is considered normal).
2. Perform a cylinder compression test and cylinder leak down test using the standard leak down gauge following manufacturers suggested best practices.

   NOTE: Verify the spark plugs are not oil saturated. If the spark plugs are oil saturated and compression is good it can be assumed the valve seals or valve guides are at fault.

3. If one or more cylinders have more than 15% leak down further engine tear down and inspection will be required.

TOP 19 REASONS THAT MAY LEAD TO ENGINE OIL CONSUMPTION

1. **Tapered and Out-of-Round Cylinders**

   The increased piston clearances permit the pistons to rock in the worn cylinders. While tilted momentarily, an abnormally large volume of oil is permitted to enter on one side of the piston. The rings, also tilted in the cylinder, permit oil to enter on one side. Upon reversal of the piston on each stroke, some of this oil is passed into the combustion chamber.

2. **Distorted Cylinders**

   This may be caused by unequal heat distribution or unequal tightening of cylinder head bolts. This condition presents a surface which the rings may not be able to follow completely. In this case, there may be areas where the rings will not remove all of the excess oil. When combustion takes place, this oil will be burned and cause high oil consumption.

3. **Improper operation of "PCV "system**

   The main purpose of the Positive Crankcase Ventilation (PCV) valve is to recirculate blow-by gases back from the crankcase area through the engine to consume unburned hydrocarbons. The PCV system usually has a one way check valve and a make up air source. The system uses rubber hoses that route crankcase blow by gases to the intake manifold. Vacuum within the engine intake manifold pulls the blow by gases out of the crankcase into the combustion chamber along with the regular intake air and fuel mixture.

   The PCV system can become clogged with sludge and varnish deposits and trap blow by gases in the crankcase. This degrades the oil, promoting additional formation of deposit material. If left uncorrected, the result is plugged oil rings, oil consumption, rapid ring wear due to sludge buildup, ruptured gaskets and seals due to crankcase pressurization.

4. **Worn Piston Ring Grooves**

   For piston rings to form a good seal, the sides of the ring grooves must be true and flat - not flared or

 © 2011 Mitchell Repair Information Company, LLC.

shouldered. Piston rings in tapered or irregular grooves will not seal properly and, consequently, oil will pass around behind the rings into the combustion chamber.

5. **Worn, Broken or Stuck Piston Rings**

   When piston rings are broken, worn or stuck to such an extent that the correct tension and clearances are not maintained, this will allow oil to be drawn into the combustion chamber on the intake stroke and hot gases of combustion to be blown down the cylinder past the piston on the power stroke. All of these conditions will result in burning and carbon build up of the oil on the cylinders, pistons and rings.

6. **Cracked or Broken Ring Lands**

   Cracked or broken ring lands prevent the rings from seating completely on their sides and cause oil pumping. This condition will lead to serious damage to the cylinders as well as complete destruction of the pistons and rings. Cracked or broken ring lands cannot be corrected by any means other than piston replacement.

7. **Worn Valve Stems and Guides**

   When wear has taken place on valve stems and valve guides, the vacuum in the intake manifold will draw oil and oil vapor between the intake valve stems and guides into the intake manifold and then into the cylinder where it will be burned.

8. **Bent or Misaligned Connecting Rods**

   Bent or misaligned connecting rods will not allow the pistons to ride straight in the cylinders. This will prevent the pistons and rings from forming a proper seal with the cylinder walls and promote oil consumption. In addition, it is possible that a bearing in a bent connect rod will not have uniform clearance on the connecting rod wrist pin. Under these conditions, the bearing will wear rapidly and throw off an excessive amount of oil into the cylinder.

9. **Fuel Dilution**

   If raw fuel is allowed to enter the lubrication system, the oil will become thinner and more volatile and will result in higher oil consumption. The following conditions will lead to higher oil consumption;

   - Excess fuel can enter and mix with the oil via a leaking fuel injector
   - Gasoline contaminated with diesel fuel
   - Restricted air intake
   - Excessive idling

10. **Contaminated Cooling Systems**

    Corrosion, rust, scale, sediment or other formations in the water jacket and radiator will prevent a cooling system from extracting heat efficiently. This is likely to cause cylinder distortion thus leading to higher oil consumption.

 © 2011 Mitchell Repair Information Company, LLC.

11. **Oil Viscosity**

    The use of oil with a viscosity that is too light may result in high oil consumption. Refer to the vehicle owner's manual for the proper oil viscosity to be used under specific driving conditions and/or ambient temperatures.

12. **Dirty Engine Oil**

    Failure to change the oil and filter at proper intervals may cause the oil to be so dirty that it will promote accumulation of sludge and varnish and restrict oil passages in the piston rings and pistons. This will increase oil consumption; dirty oil by nature is also consumed at a higher rate than clean oil.

13. **Crankcase Overfull**

    Due to an error in inserting the oil dip stick so that it does not come to a seat on its shoulder, a low reading may be obtained. Additional oil may be added to make the reading appear normal with the stick in this incorrect position which will actually make the oil level too high. If the oil level is so high that the lower ends of the connecting rods touch the oil in the oil pan excessive quantities of oil will be thrown on the cylinder walls and some of it will work its way up into the combustion chamber.

14. **Excessively High Oil Pressure**

    A faulty oil pressure relief valve may cause the oil pressure to be too high. The result will be that the engine will be flooded with an abnormally large amount of oil in a manner similar to that which occurs with worn bearings. This condition may also cause the oil filter to burst.

15. **Aftermarket Performance Chips and Modification**

    Increasing performance through the use of performance/power enhancement products to a stock or factory engine will increase the chance of excessive oil consumption.

16. **Lugging Engine**

    Lugging is running the engine at a lower RPM in a condition where a higher RPM (more power/torque) should be implemented. Especially susceptible on vehicles equipped with a manual transmission. This driving habit causes more stress loading on the piston and can lead to increases in engine oil consumption.

17. **Turbocharged Engines**

    There is a possibility for PCV "push-over" due to higher crankcase pressure (as compared to naturally aspirated engines) which is normal for turbocharged engines. This condition causes varying amounts of engine oil to enter the intake manifold, charge air cooler and associated plumbing to and from the charge air cooler, also a leaking turbocharger seal will draw oil into the combustion chamber where it will burn (blue smoke from tail pipe may be present) and form carbon deposits which contribute to further oil consumption as they interfere with proper engine function.

 © 2011 Mitchell Repair Information Company, LLC.

18. **Restricted Air Intake**

    Excessive restriction in the air intake system will increase engine vacuum and can increase oil consumption, an extremely dirty air filter would be one example of this situation.

19. **Intake Manifold port seals**

    Engines that have a "V" configuration and a "wet valley" (3.3/3.8L) could draw oil into the intake ports due to improper sealing between the intake manifold ports and cylinder head. Causes may include improper torque of intake manifold bolts, corrosion (aluminum intake manifold) and or warped sealing surface.

ENGINE LUBRICATION DIAGNOSTIC TABLE

CONDITION	POSSIBLE CAUSES	CORRECTION
OIL LEAKS	1. Gaskets and O-rings. Misaligned or damaged.	1. Replace as necessary.
	(a) Loose fasteners, broken or porous metal parts.	(a) Tighten fasteners, Repair or replace metal parts.
	2. Crankshaft rear oil seal.	2. Replace rear crankshaft oil seal. Refer to **SEAL, CRANKSHAFT OIL, REAR, REMOVAL**.
	3. Crankshaft seal flange. Scratched, nicked or grooved.	3. Polish or replace crankshaft.
	4. Oil pan flange cracked.	4. Replace oil pan. Refer to **PAN, OIL, REMOVAL**.
	5. Engine timing cover seal, damaged or misaligned.	5. Replace seal. Refer to **SEAL, CRANKSHAFT OIL, FRONT, REMOVAL**.
	6. Scratched or damaged vibration damper hub.	6. Polish or replace damper.
OIL PRESSURE DROP	1. Low oil level.	1. Check and correct oil level.
	2. Faulty oil pressure sensor.	2. Replace sensor. Refer to **SENSOR, OIL PRESSURE, REMOVAL**.
	3. Low oil pressure.	3. Check main bearing clearance. Refer to ENGINE/ENGINE BLOCK/BEARING(S), CRANKSHAFT, **STANDARD PROCEDURE** . 3. Check rod bearing clearance. Refer to **BEARING (S), CONNECTING ROD, STANDARD PROCEDURE**.
	4. Clogged oil filter.	4. Replace oil filter. Refer to **FILTER, ENGINE OIL, REMOVAL**.
	5. Worn oil pump.	5. Replace oil pump. Refer to **PUMP, ENGINE OIL, REMOVAL**.

 © 2011 Mitchell Repair Information Company, LLC.

	6. Thin or diluted oil.	6. Change oil and filter. Refer to ENGINE/LUBRICATION/OIL **STANDARD PROCEDURE** .
	7. Excessive bearing clearance.	7. Replace crankshaft bearings. Refer to ENGINE/ENGINE BLOCK/BEARING(S) **STANDARD PROCEDURE** . 7. Replace rod bearings. Refer to **BEARING(S), CONNECTING ROD, STANDARD PROCEDURE**.
	8. Oil pump relief valve stuck.	8. Replace oil pump. Refer to **PUMP, ENGINE OIL, REMOVAL**.
	9. Oil pump pick-up tube loose, damaged or clogged.	9. Replace oil pump pick-up. Refer to **PICK-UP, OIL PUMP, REMOVAL**.
OIL PUMPING AT RINGS; SPARK PLUGS FOULING	1. Worn or damaged rings.	1. Hone cylinder bores and replace rings. Refer to Engine/Engine Block/RING(S) **STANDARD PROCEDURE** .
	2. Carbon in oil ring slots.	2. Replace rings. Refer to **ROD, PISTON AND CONNECTING, REMOVAL**.
	3. Worn valve guides.	3. Replace cylinder heads. Refer to **CYLINDER HEAD, REMOVAL**.
	4. Leaking valve guide seals.	4. Replace valve guide seals. Refer to **SEAL(S), VALVE GUIDE, REMOVAL**.

STANDARD PROCEDURE

DUST COVERS AND CAPS

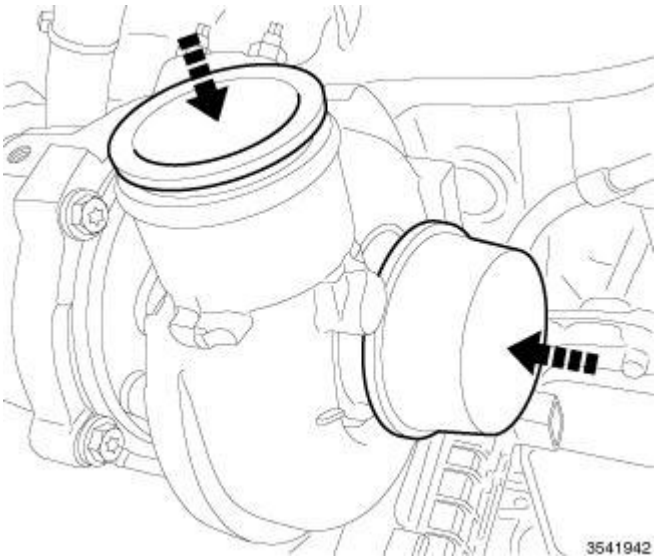

Fig. 2: Covers/Caps
Courtesy of CHRYSLER GROUP, LLC

 © 2011 Mitchell Repair Information Company, LLC.

Due to the high amounts of failures caused by dust, dirt, moisture and other foreign debris being introduced to the engine during service. Covers or caps are needed to reduce the possible damage that can be caused or created.

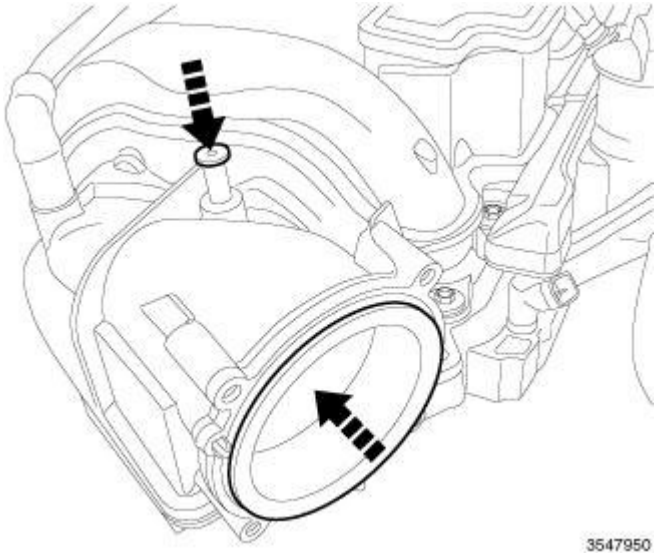

Fig. 3: Opening Cover
Courtesy of CHRYSLER GROUP, LLC

Covers over openings will reduce any possibilities for foreign materials to enter the engine systems. Using miller tool (special tool #10368, Set, Universal Protective Cap), Select the appropriated cover needed to the procedure.

REPAIR DAMAGED OR WORN THREADS

CAUTION: Be sure that the tapped holes maintain the original center line.

Damaged or worn threads can be repaired. Essentially, this repair consists of:

- Drilling out worn or damaged threads.
- Tapping the hole with a special Heli-Coil Tap, or equivalent.
- Installing an insert into the tapped hole to bring the hole back to its original thread size.

FORM-IN-PLACE GASKETS AND SEALERS

NOTE: All of the sealants mentioned below are not used on every engine, they are listed as a general reference guide. See appropriate Service Information for specific sealer usage.

There are numerous places where form-in-place gaskets are used on the engine. Care must be taken when applying form-in-place gaskets to assure obtaining the desired results. **Do not use form-in-place gasket**

 © 2011 Mitchell Repair Information Company, LLC.

material unless specified. Bead size, continuity, and location are of great importance. Too thin a bead can result in leakage while too much can result in spill-over which can break off and obstruct fluid feed lines. A continuous bead of the proper width is essential to obtain a leak-free gasket. All sealing surfaces that use form-in-place gaskets and sealers **must** be free of grease or oil. Surfaces should be cleaned with Mopar® brake parts cleaner prior to sealer application. After the sealer is applied, the parts should be assembled within 10 minutes.

There are numerous types of form-in-place gasket materials that are used in the engine area. Mopar® Engine RTV GEN II, Mopar® ATF-RTV, and Mopar® Gasket Maker gasket materials, each have different properties and can not be used in place of the other.

MOPAR® ENGINE RTV GEN II is used to seal components exposed to engine oil. This material is a specially designed black silicone rubber RTV that retains adhesion and sealing properties when exposed to engine oil. Moisture in the air causes the material to cure. This material is available in three ounce tubes and has a shelf life of one year. After one year this material will not properly cure. Always inspect the package for the expiration date before use.

MOPAR® ATF RTV is a specifically designed black silicone rubber RTV that retains adhesion and sealing properties to seal components exposed to automatic transmission fluid, engine coolants, and moisture. This material is available in three ounce tubes and has a shelf life of one year. After one year this material will not properly cure. Always inspect the package for the expiration date before use.

MOPAR® GASKET MAKER is an anaerobic type gasket material. The material cures in the absence of air when squeezed between two metallic surfaces. It will not cure if left in the uncovered tube. The anaerobic material is for use between two machined surfaces. Do not use on flexible metal flanges.

MOPAR® BED PLATE SEALANT is a unique (green-in-color) anaerobic type gasket material that is specially made to seal the area between the bed plate and cylinder block without disturbing the bearing clearance or alignment of these components. The material cures slowly in the absence of air when torqued between two metallic surfaces, and will rapidly cure when heat is applied.

MOPAR® THREEBOND ENGINE RTV SEALANT is a unique gasket material that is specially made to retain adhesion and sealing properties when used to seal components exposed to engine oil.

SEALER APPLICATION

Mopar® Gasket Maker material should be applied sparingly 1 mm (0.040 in.) diameter or less of sealant to one gasket surface. Be certain the material surrounds each mounting hole. Excess material can easily be wiped off. Components should be torqued in place within 15 minutes. The use of a locating dowel is recommended during assembly to prevent smearing material off the location.

Mopar® Engine RTV GEN II or ATF RTV gasket material should be applied in a continuous bead approximately 3 mm (0.120 in.) in diameter. All mounting holes must be circled. For corner sealing and "T" joint locations, a 3.17 or 6.35 mm (1/8 or 1/4 in.) drop is placed in the center of the gasket contact area. Uncured sealant may be removed with a shop towel. Components should be torqued in place while the sealant is still wet to the touch (within 10 minutes). The usage of a locating dowel is recommended during assembly to prevent smearing material off the location.

Mopar® Threebond Engine RTV Sealant gasket material should be applied in a continuous bead approximately

 © 2011 Mitchell Repair Information Company, LLC.

3 mm (0.120 in.) in diameter. The gasket surfaces should be cleaned with isopropyl alcohol wipes in preparation for sealant application. All mounting holes must be circled. For corner sealing and "T" joint locations, a 3.17 or 6.35 mm (1/8 or 1/4 in.) drop is placed in the center of the gasket contact area. Uncured sealant may be removed with a shop towel. Components should be assembled within 20 minutes and torqued in place within 45 minutes. The usage of a locating dowel is recommended during assembly to prevent smearing material off the location.

ENGINE GASKET SURFACE PREPARATION

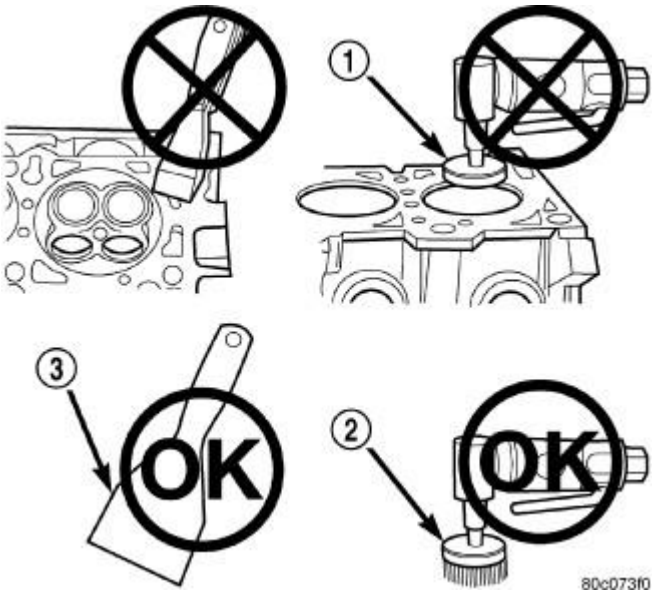

Fig. 4: Proper Tool Usage For Surface Preparation
Courtesy of CHRYSLER GROUP, LLC

1 - ABRASIVE PAD
2 - 3M ROLOC™ BRISTLE DISC
3 - PLASTIC/WOOD SCRAPER

To ensure engine gasket sealing, proper surface preparation must be performed, especially with the use of aluminum engine components and multi-layer steel cylinder head gaskets.

Never use the following to clean gasket surfaces:

- Metal scraper.
- Abrasive pad or paper to clean cylinder block and head.
- High speed power tool with an abrasive pad or a wire brush (1).

NOTE: Multi-Layer Steel (MLS) head gaskets require a scratch free sealing surface.

Only use the following for cleaning gasket surfaces:

- Solvent or a commercially available gasket remover

 © 2011 Mitchell Repair Information Company, LLC.

- Plastic or wood scraper (3).
- Drill motor with 3M Roloc™ Bristle Disc (white or yellow) (2).

CAUTION: Excessive pressure or high RPM (beyond the recommended speed), can damage the sealing surfaces. The mild (white, 120 grit) bristle disc is recommended. If necessary, the medium (yellow, 80 grit) bristle disc may be used on cast iron surfaces with care.

SPECIFICATIONS

SPECIFICATIONS

GENERAL SPECIFICATIONS

Description	Specification
Type	60° DOHC V-6 24-Valve
Compression Ratio	10.2:1
Lead Cylinder	#1 Right Bank
Firing Order	1-2-3-4-5-6

Description	Metric	Standard
Displacement	3.6 Liters	220 Cubic Inches
Bore and Stroke	96.0 x 83.0 mm	3.779 in. x 3.268 in.

CYLINDER BLOCK

Description	Specification	
	Metric	Standard
Cylinder Bore Diameter - Grade 1	95.995 mm ± 0.005 mm	3.7793 in. ± 0.0002 in.
Cylinder Bore Diameter - Grade 2	96.005 mm ± 0.005 mm	3.7797 in. ± 0.0002 in.
Cylinder Bore Out-of-Round (Max.)	0.009 mm	0.00035 in.
Cylinder Bore Cylindricity	0.014 mm	0.0006 in.
Crankshaft Bore Taper* (Max.)	0.006 mm	0.0002 in.
*Measured over length of bulkhead		
Engine Oil Galley Plug**	0.0 mm - 2.0 mm	0.0 in - 0.0787 in
**Measured proud of machined surface		

PISTONS

Description	Specification	
	Metric	Standard
Material	Cast Aluminum Alloy	
Piston Diameter (Metal to Metal) - Grade 1	95.955 mm ± 0.005 mm	3.7778 in. ± 0.0002 in.

 © 2011 Mitchell Repair Information Company, LLC.

Piston Diameter (Metal to Metal) - Grade 2	95.965 mm ± 0.005 mm	3.7781 in. ± 0.0002 in.
Piston Diameter (Metal to Coating) - Grade 1	95.970 - 96.000 mm	3.7783 - 3.7795 in.
Piston Diameter (Metal to Coating) - Grade 2	95.980 - 96.010 mm	3.7787 - 3.7835 in.
Clearance at Size Location (Metal to Metal)	0.030 - 0.050 mm	0.0012 - 0.0020 in.
Clearance at Size Location (Metal to Coating)	0.010 - 0.030 mm	0.0004 - 0.0012 in.
Piston Weight	354 - 364 grams	12.487 - 12.840 oz.
Piston Pin Offset	0.8 mm	0.031 in.
Piston Ring Groove Diameter - No. 1	88.24 - 88.44 mm	3.474 - 3.482 in.
Piston Ring Groove Diameter - No. 2	86.54 - 86.74 mm	3.407 - 3.415 in.
Piston Ring Groove Diameter - No. 3	89.16 - 89.36 mm	3.510 - 3.518 in.

PISTON PINS

Description	Specification	
	Metric	Standard
Type	Full Floating	
Pin Diameter	21.9985 ± 0.0015 mm	0.86608 ± 0.00006 in.
Clearance in Piston	0.002 - 0.011 mm	0.0001 - 0.0004 in.
Clearance in Rod	0.011 - 0.024 mm	0.0004 - 0.0009 in.

PISTON RINGS

Description	Specification	
	Metric	Standard
Ring Gap - Number 1 Ring (Top)	0.25 - 0.40 mm	0.010 - 0.016 in.
Ring Gap - Number 2 Ring (Center)	0.30 - 0.45 mm	0.012 - 0.018 in.
Ring Gap - Oil Control Ring (Steel Rails)	0.15 - 0.66 mm	0.006 - 0.026 in.

PISTON RING SIDE CLEARANCE

Description	Specification	
	Metric	Standard
Number 1 Ring (Top)	0.025 - 0.083 mm	0.0010 - 0.0033 in.
Number 2 Ring (Center)	0.030 - 0.078 mm	0.0012 - 0.0031 in.
Oil Control Ring (Steel Rails)	0.007 - 0.173 mm	0.0003 - 0.0068 in.

 © 2011 Mitchell Repair Information Company, LLC.

PISTON RING WIDTH

Description	Specification	
	Metric	Standard
Number 1 Ring (Top)	3.00 - 3.20 mm	0.118 - 0.126 in.
Number 2 Ring (Center)	3.59 - 3.85 mm	0.141 - 0.152 in.
Oil Control Ring (Steel Rails)	1.930 - 2.083 mm	0.076 - 0.082 in.

CONNECTING RODS

Description	Specification	
	Metric	Standard
Bearing Clearance (With Crush)	0.023 - 0.064 mm	0.0009 - 0.0025 in.
Side Clearance	0.070 - 0.370 mm	0.0028 - 0.0146 in.
Side Clearance (Max.)	0.370 mm	0.0146 in.
Piston Pin Bore Diameter	22.016 ± 0.005 mm	0.8668 ± 0.0002 in.
Bearing Bore Out of Round (Max.)	0.008 mm	0.0003 in.
Total Weight (Less Bearing)	546.7 ± 8 grams	19.28 ± 0.28 oz.

CRANKSHAFT MAIN BEARING JOURNALS

Description	Specification	
	Metric	Standard
Diameter	71.996 ± 0.009 mm	2.8345 ± 0.0035 in.
Bearing Clearance	0.024 - 0.050 mm	0.0009 - 0.0020 in.
Bearing Clearance (Max.)	0.050 mm	0.0020 in.
Out of Round (Max.)	0.005 mm	0.0002 in.
Taper (Max.)	0.005 mm	0.0002 in.
End Play	0.050 - 0.290 mm	0.0020 - 0.0114 in.
End Play (Max.)	0.290 mm	0.0114 in.

CONNECTING ROD JOURNALS

Description	Specification	
	Metric	Standard
Diameter	59.0 ± 0.009 mm	2.3228 ± 0.0035 in.
Bearing Clearance	0.023 - 0.064 mm	0.0009 - 0.0025 in.
Out of Round (Max.)	0.005 mm	0.0002 in.
Taper (Max.)	0.005 mm	0.0002 in.

CAMSHAFT

Description	Specification	
	Metric	Standard
Bore Diameter - No. 1 Cam Towers	32.020 - 32.041 mm	1.2606 - 1.2615 in.

 © 2011 Mitchell Repair Information Company, LLC.

Bore Diameter - No. 2, 3, 4 Cam Towers	24.020 - 24.041 mm	0.9457 - 0.9465 in.
Bearing Journal Diameter - No. 1	31.976 - 31.995 mm	1.2589 - 1.2596 in.
Bearing Journal Diameter - No. 2, 3, 4	23.977 - 23.996	0.9440 - 0.9447 in.
Bearing Clearance - No. 1	0.025 - 0.065 mm	0.00010 - 0.0026 in.
Bearing Clearance - No. 2, 3, 4	0.024 - 0.064 mm	0.0009 - 0.0025 in.
End Play	0.075 - 0.251 mm	0.003 - 0.010 in.

VALVE TIMING-INTAKE VALVES

Description	Specification
Opens	2° (ATDC)
Closes	82° (ABDC) or 262° (ATDC)
Duration	260°
Centerline	128°
Note: Units are in crank degrees, using 0.1524 mm (0.006 in.) valve lift as the threshold.	

VALVE TIMING-EXHAUST VALVES

Description	Specification
Opens	59° (BBDC) or 239° (BTDC)
Closes	12° (ATDC)
Duration	251°
Valve Overlap	10°
Note: Units are in crank degrees, using 0.1524 mm (0.006 in.) valve lift as the threshold.	

CYLINDER HEAD

Description	Specification	
	Metric	Standard
Gasket Thickness* (Compressed)	0.48 - 0.60 mm	0.019 - 0.024 in.
Flatness (Head Gasket Surface)	0.09 mm	0.0035 in.
Valve Seat Angle	44.75° ± 0.25° from the valve guide axis	
Valve Seat Runout (relative to the valve guide axis) - Intake and Exhaust	0.050 mm	0.002 in.
Intake Valve Seat Width	1.0 - 1.2 mm	0.04 - 0.05 in.
Exhaust Valve Seat Width	1.41 - 1.61 mm	0.055 - 0.063 in.
Guide Bore Diameter (Std.)	6.00 - 6.02 mm	0.236 - 0.237 in.
Valve Guide Height** - Intake and Exhaust	16.05 - 16.55 mm	0.632 - 0.652 in.
*Measured at the fire ring, not at the outer edge **Measured from cylinder head valve spring seat surface to top of guide		

 © 2011 Mitchell Repair Information Company, LLC.

VALVES

Description	Specification	
	Metric	Standard
Face Angle	45.25° ± 0.25°	
Head Diameter - Intake	39.0 ± 0.100 mm	1.535 ± 0.004 in.
Head Diameter - Exhaust	30.0 ± 0.100 mm	1.181 ± 0.004 in.
Length-Intake (Overall)	116.54 ± 0.23 mm	4.588 ± 0.009 in.
Length-Exhaust (Overall)	115.6 ± 0.23 mm	4.551 ± 0.009 in.
Stem Diameter - Intake	5.968 ± 0.009 mm	0.2350 ± 0.0004 in.
Stem Diameter - Exhaust	5.961± 0.009 mm	0.2347 ± 0.0004 in.
Stem-to-Guide Clearance - Intake (New)	0.023 - 0.061 mm	0.0009 - 0.0024 in.
Stem-to-Guide Clearance - Exhaust (New)	0.030 - 0.068 mm	0.0012 - 0.0027 in.
Stem-to-Guide Clearance-Intake (Max., Rocking Method)	0.29 mm	0.011 in.
Stem-to-Guide Clearance - Exhaust (Max., Rocking Method)	0.37 mm	0.015 in.
Valve Lift-Intake (Zero Lash)	10.3 mm	0.406 in.
Valve Lift-Exhaust (Zero Lash)	10.0 mm	0.394 in.
Valve Stem Tip Height* - Intake	52.4 - 53.5 mm	2.063 - 2.106 in.
Valve Stem Tip Height* - Exhaust	51.8 - 52.9 mm	2.039 - 2.083 in.
*Valve tip to aluminum spring seat boss		

VALVE SPRING

Description	Specification	
	Metric	Standard
Free Length - Intake AND Exhaust (Approx.)	52.5 mm	2.067 in.
Spring Force - Intake AND Exhaust (Valve Closed)	295 ± 13 N @ 40.0 mm	66 ± 3 lbs. @ 1.57 in.
Spring Force - Intake (Valve Open)	688 ± 31 N @ 10.3 mm	155 ± 7 lbs. @ 0.4055 in.
Spring Force - Exhaust (Valve Open)	676 ± 30 N @ 10.0 mm	152 ± 6 lbs. @ 0.3937 in.
Number of Coils - Intake AND Exhaust	9.35	
Wire Diameter - Intake AND Exhaust	3.18 x 3.99 mm (ovate)	0.125 x 0.157 in. (ovate)
Installed Height - Intake AND Exhaust (Spring seat top to bottom of retainer)	40.0 mm	1.575 in.

 © 2011 Mitchell Repair Information Company, LLC.

OIL PRESSURE

Description	Specification	
	Metric	Standard
(Note: At Normal Operating Temperatures)		
Pressure @ Curb Idle Speed*	34.7 kPa Min.	5 psi Min.
Pressure @ 600 - 1200 RPM	34.7 (warm) - 958.0 (cold) kPa	5 (warm) - 139 (cold) psi
Pressure @ 1201 - 3500 RPM	206.8 (warm) - 958.0 (cold) kPa	30 (warm) - 139 (cold) psi
Pressure @ 3501 - 6400 RPM	427.0 (warm) - 958.0 (cold) kPa	62 (warm) - 139 (cold) psi
*CAUTION: If oil pressure is zero at idle, DO NOT run engine at 3000 RPM.		

TORQUE SPECIFICATIONS

DESCRIPTION	N.m	Ft. Lbs.	In. Lbs.
Air Inlet Hose - Band Clamps	4	-	35
A/C Compressor to Engine - M8 Bolts	25	18	-
Camshaft Chain Tensioner (Primary) - M6 T30	12	-	106
Camshaft Chain Guide (Primary) - M6 T30	12	-	106
Camshaft Chain Idler Sprocket - M8 T45	25	18	-
Camshaft Chain LH Tensioner (Secondary) - M6 T30	12	-	106
Camshaft Chain LH Guide (Secondary) - M6 T30	12	-	106
Camshaft Chain RH Tensioner (Secondary) - M6 T30	12	-	106
Camshaft Chain RH Guide (Secondary) - M6 T30	12	-	106
Camshaft Position (CMP) Sensor to Cylinder Head - 6M T30	9	-	80
Camshaft Bearing Cap - M6 T30	9.5	-	84
Connecting Rod Cap - M9 Bolts	20 + 90° Turn	15 + 90° Turn	-
Coolant Pump to Engine Timing Cover - M6 Bolts	12	-	106
Coolant Crossover Housing to Engine Timing Cover - M6 Bolts	12	-	106
Coolant Pump to Engine Timing Cover - M10 Bolt	55	40	-
Crankshaft Target Wheel to Counterweight - M6 T30	10	-	89
Crankshaft Outer Main Bearing Cap and Windage Tray - M8 Bolts	21 + 90° Turn	16 + 90° Turn	-
Crankshaft Inner Main Bearing Cap - M11 Bolts	20 + 90° Turn	15 + 90° Turn	-
Crankshaft Side Main Bearing Cap (Tie Bolt) - M8 Bolts	28	-	250
Crankshaft Vibration Damper - M16 Bolt	40 + 105° Turn	30 + 105° Turn	-
Crankshaft Position (CKP) Sensor to Engine			

 © 2011 Mitchell Repair Information Company, LLC.

Block - M6 Bolt	12	-	106
Crankshaft Rear Oil Seal Retainer - M6 T30	12	-	106
Cylinder Head Oil Restrictor - M8 Plug	15	-	133
Cylinder Head to Engine Block - M12 Bolts in Sequence	See **INSTALLATION**		
Cylinder Head Cover - M6 Bolts	12	-	106
Catalytic Converter to Cylinder Head - M8 Bolts	23	17	-
Engine Coolant Temperature (ECT) Sensor	11	-	97
Engine Block Heater - M6 Bolt	12	-	106
Left/Right Engine Mount Bracket to Engine Block - M10 Bolts	61	45	-
Left/Right Engine Mount Isolator to Engine Mount Bracket - M10 Nuts	61	45	-
Left/Right Engine Mount Heatshield to Engine Mount Bracket - M6 Bolts	12	-	106
Left/Right Engine Mount Isolator to Frame - M10 Bolts	61	45	-
Flexplate to Crankshaft - M10 Bolts	95	70	-
Fuel Rail to Lower Intake Manifold - M6 Bolts	7	-	62
Generator - M8 Bolts	25	18	-
Heater Core Supply Tube to Cylinder Head - M8 Bolt	12	-	106
Idler Pulley to Engine Timing Cover - Accessory Drive M8 Bolt	25	18	-
Ignition Capacitor to Cylinder Head - M6 Bolts	10	-	89
Ignition Coil to Cylinder Head Cover - M6 Bolts	8	-	71
Intake Manifold (Upper) - M6 Bolts	8	-	71
Intake Manifold (Lower) - M6 Bolts	8	-	71
Knock Sensor to Engine Block - M8 T40	22	16	-
Negative Battery Cable to Battery	5	-	45
Oil Control Valve - Cam Phaser M18	150	111	-
Upper Oil Pan to Engine Block - M8 Bolts	25	18	-
Transmission to Upper Oil Pan - M10 Bolts	55	41	-
Transmission to Starter - M10 Bolts	55	41	-
Torque Converter Dust Shield - M8 Bolt	12	-	106
Oil Cooler to Oil Filter Housing Screws	4	-	35
Upper Oil Pan to Rear Seal Retainer - M6 Bolts	12	-	106
Oil Pan Drain - Plug M14	27	20	-
Oil Pressure Sensor to Oil Filter Housing	20	-	177
Oil Temperature Sensor to Oil Filter Housing	20	-	177
Lower Oil Pan to Upper Oil Pan - M6 Bolts	10.5	-	93
Piston Oil Cooler Jet to Engine Block - M5	6	-	53

 © 2011 Mitchell Repair Information Company, LLC.

Oil Filter Housing/Oil Cooler to Engine Block - M6 Bolts	12	-	106
Oil Filter Housing Cap	25	18	-
Oil Pump to Block - M6 Bolts	12	-	106
Oil Level Indicator to Engine Block - M10 Bolt	35	26	-
Oil Level Indicator to Cylinder Head - M6 Bolt	12	-	106
Oil Pump Sprocket - M8 T45	25	18	-
Oil Pump Pick Up Tube Bracket to Windage Tray - M6 Bolt	12	-	106
Oil Pump Pick Up Tube to Oil Pump - M6 Bolt	12	-	106
Oxygen Sensor to Exhaust Pipe - M18	50	37	-
PCV Valve - M5 T25	4	-	35
Power Steering Pump to Bracket - M8 Bolts	25	18	-
Power Steering Pump Bracket to Engine - M8 Bolts	25	18	-
Spark Plug to Cylinder Head - M12	17.5	13	-
Starter Mounting - M10 Bolts	55	41	-
Tensioner to Engine Timing Cover - Accessory Drive M10 Bolt	55	41	-
Thermostat Housing to Coolant Crossover - M6 Bolts	12	-	106
Throttle Body - M6 Bolts	7	-	62
Engine Timing Cover - M6 Bolts	12	-	106
Engine Timing Cover - M8 Bolt	25	18	-
Engine Timing Cover - M10 Bolts	55	41	-
Transmission to Engine Block - M10 Bolts	55	41	-
Transmission Fluid Indicator to Transmission - M6 Bolt	12	-	106
Torque Converter - M8 Bolts	42	31	-
Upper Intake Manifold Support Bracket to Cylinder Head - M8 Bolt	20	-	177
Upper Intake Manifold Support Bracket to Upper Intake Manifold - M6 Nuts	10	-	89
Variable Valve Timing Solenoid to Cylinder Head Cover - M5 T25	4	-	35
Wire Harness Retainer Bracket to LH Cylinder Head - M6 T30	12	-	106
Rear Engine Mount Bracket to Transmission - M8 Bolts	33	24	-
Rear Engine Mount Isolator to Rear Engine Mount Bracket - M10 Bolts	61	45	-
Rear Engine Mount Crossmember to Frame - M10 Bolts	55	41	-

 © 2011 Mitchell Repair Information Company, LLC.

Rear Engine Mount Isolator to Crossmember - M10 Bolts	61	45	-
Left/Right Crossmember Brace to Crossmember - M8 Bolts	55	41	-
Left/Right Crossmember Brace to Frame - M8 Bolts	55	41	-

REMOVAL

REMOVAL

CAUTION: If the original engine has experienced a catastrophic failure or an individual failure with the piston, cylinder bore, engine block, valve or valve seat, the intake manifold MUST be replaced with a new manifold.

1. Perform the fuel pressure release procedure. Refer to **FUEL DELIVERY, GAS, STANDARD PROCEDURE** .
2. Disconnect and isolate the negative battery cable.
3. Remove the hood. Refer to **HOOD, REMOVAL** .

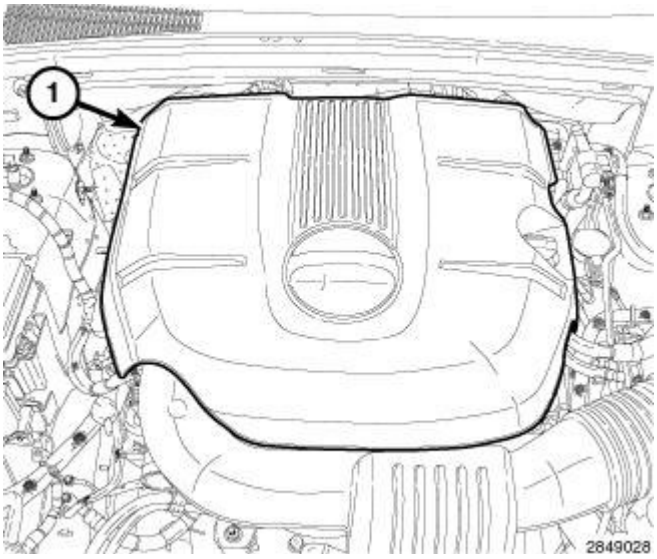

Fig. 5: Engine Cover
Courtesy of CHRYSLER GROUP, LLC

4. Remove the engine cover (1).

 © 2011 Mitchell Repair Information Company, LLC.

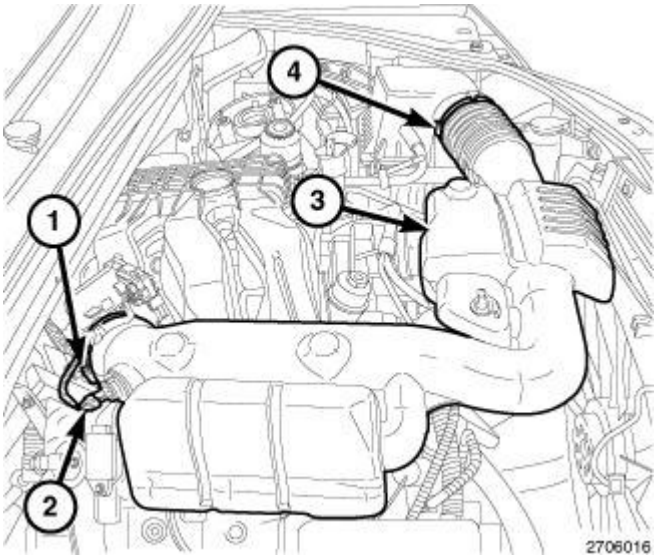

Fig. 6: Air Inlet Hose, Air Temperature (IAT) Sensor Connector & Clamps
Courtesy of CHRYSLER GROUP, LLC

5. Remove the resonator (3) and the air cleaner body. Refer to **BODY, AIR CLEANER, REMOVAL**.

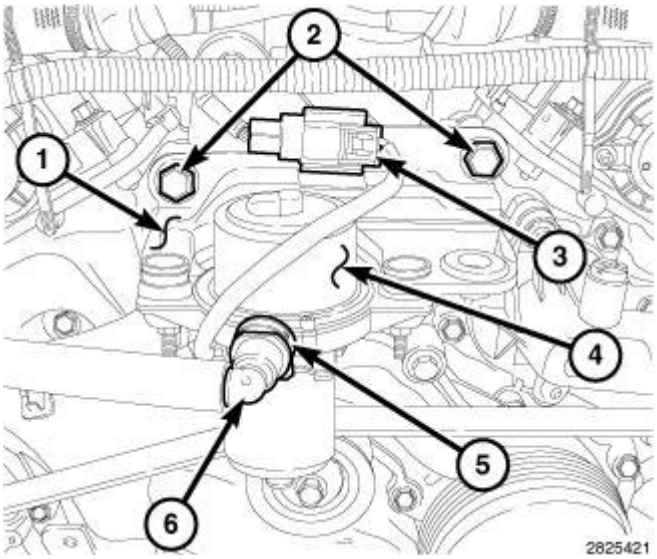

Fig. 7: Mounting Bracket, Bolts, Electrical Connector, Vacuum Pump, Locking Tab & Quick-Connect Type End
Courtesy of CHRYSLER GROUP, LLC

6. Remove the electric vacuum pump (4) and mounting bracket (1). Refer to **PUMP, ELECTRIC VACUUM, REMOVAL** .
7. Raise and support the vehicle. Refer to **HOISTING, STANDARD PROCEDURE** .
8. If equipped, remove the front skid plate, the front suspension skid plate, the transmission skid plate and the transfer case skid plate. Refer to PROCEDURE FRAME AND BUMPERS **UNDER BODY PROTECTION** .
9. Drain the cooling system. Refer to **STANDARD PROCEDURE** .

 © 2011 Mitchell Repair Information Company, LLC.

10. Drain the engine oil. Refer to ENGINE/LUBRICATION/OIL **STANDARD PROCEDURE** .

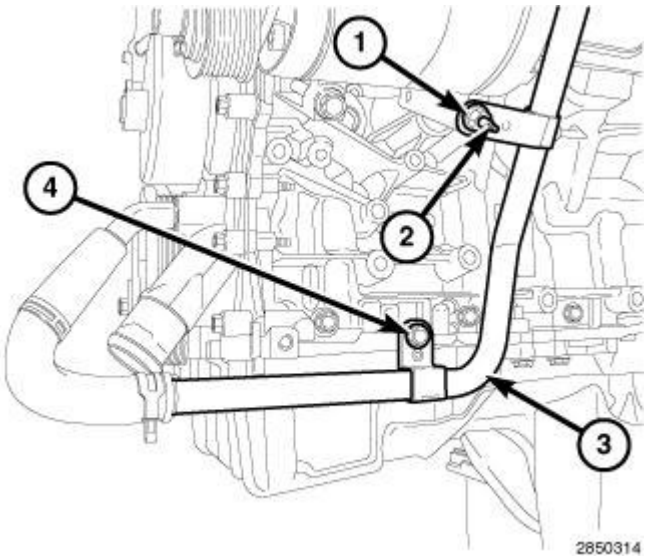

Fig. 8: Heater Core Return Tube, Nut & Bolt
Courtesy of CHRYSLER GROUP, LLC

11. Remove the nut (1) and bolt (4) from the support brackets of the heater core return tube (3).
12. Remove the A/C compressor mounting stud (2).
13. Lower the vehicle.

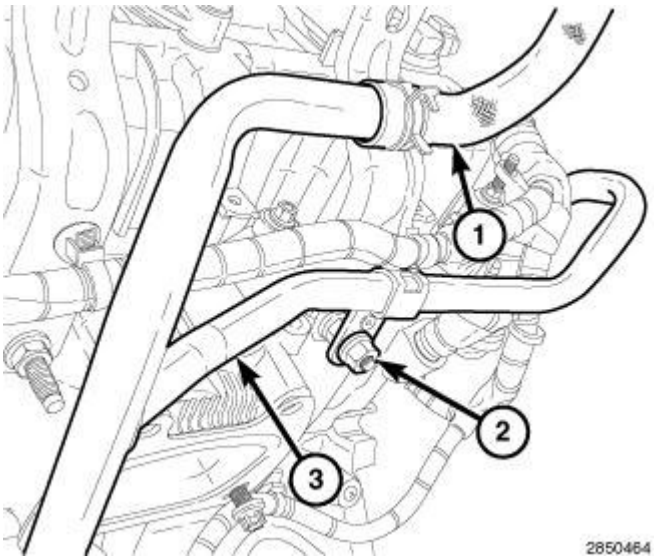

Fig. 9: Heater Core Return Hose, Heater Core Return Tube & Nut
Courtesy of CHRYSLER GROUP, LLC

14. Remove the nut (2) from the support bracket of the heater core return tube (3) and reposition the tube.

 © 2011 Mitchell Repair Information Company, LLC.

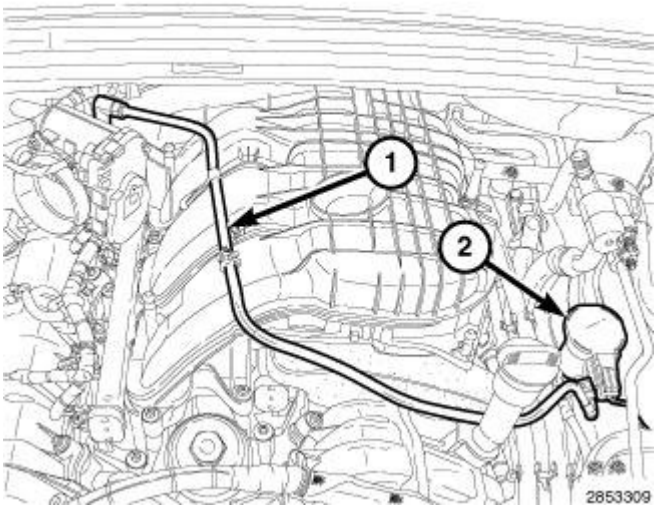

Fig. 10: Vapor Purge Tube & Fuel Purge Solenoid
Courtesy of CHRYSLER GROUP, LLC

15. Remove the vapor purge tube (1) from the fuel purge solenoid (2). Refer to **FITTING, QUICK CONNECT, STANDARD PROCEDURE** .

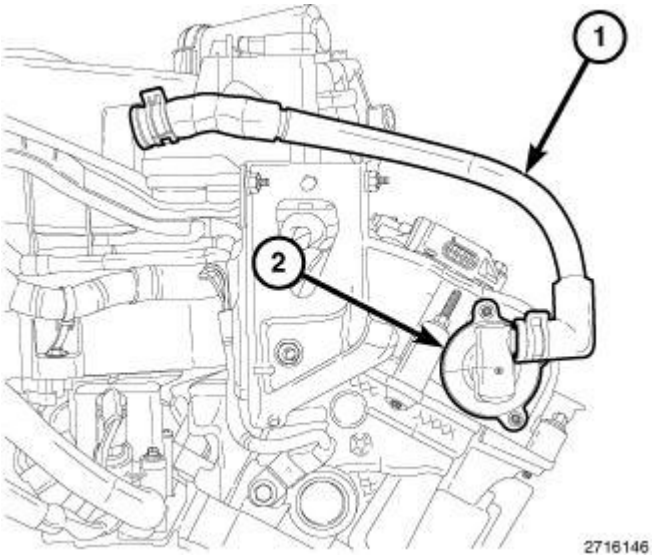

Fig. 11: PCV Hose & PCV Valve
Courtesy of CHRYSLER GROUP, LLC

16. Remove the PCV hose (1) from the PCV valve (2).

 © 2011 Mitchell Repair Information Company, LLC.

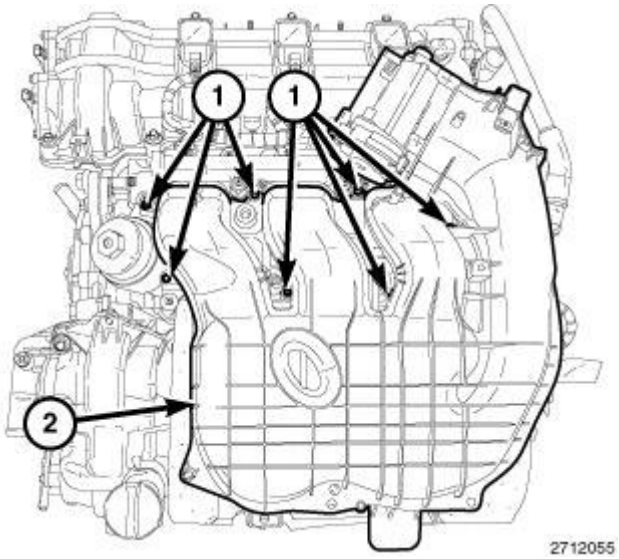

Fig. 12: Upper Intake Manifold & Bolts
Courtesy of CHRYSLER GROUP, LLC

17. Remove the upper intake manifold (2) and insulator. Refer to **MANIFOLD, INTAKE, REMOVAL**.

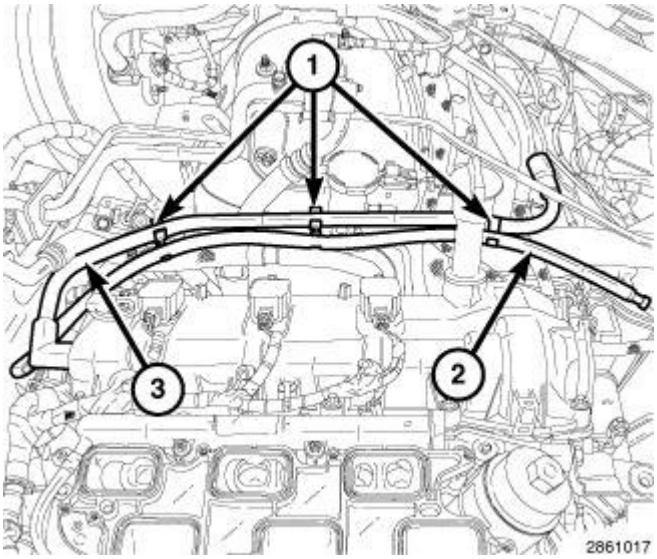

Fig. 13: Transmission Breather Hose, Make-Up Air Tube & Clips
Courtesy of CHRYSLER GROUP, LLC

18. Disengage the clips (1), remove the make-up air tube (3) from the left cylinder head cover and reposition the transmission breather hose (2).

 © 2011 Mitchell Repair Information Company, LLC.

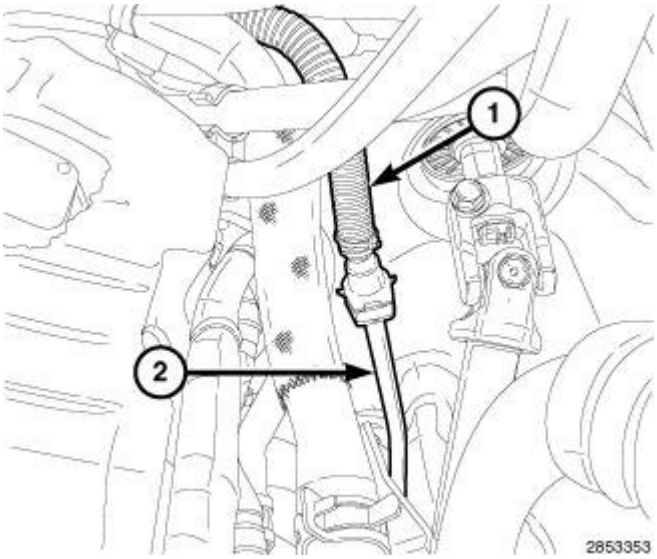

Fig. 14: Fuel Supply Hose At Underbody Fuel Supply Tube
Courtesy of CHRYSLER GROUP, LLC

19. Disconnect the fuel supply hose (1) from the underbody fuel tube (2). Refer to **FITTING, QUICK CONNECT, STANDARD PROCEDURE** .

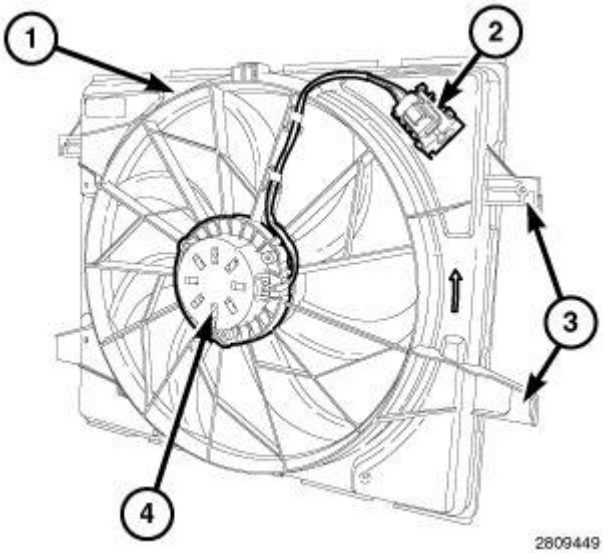

Fig. 15: Cooling Fan Module Components
Courtesy of CHRYSLER GROUP, LLC

20. Remove the cooling fan module. Refer to **FAN, COOLING, REMOVAL** .

 © 2011 Mitchell Repair Information Company, LLC.

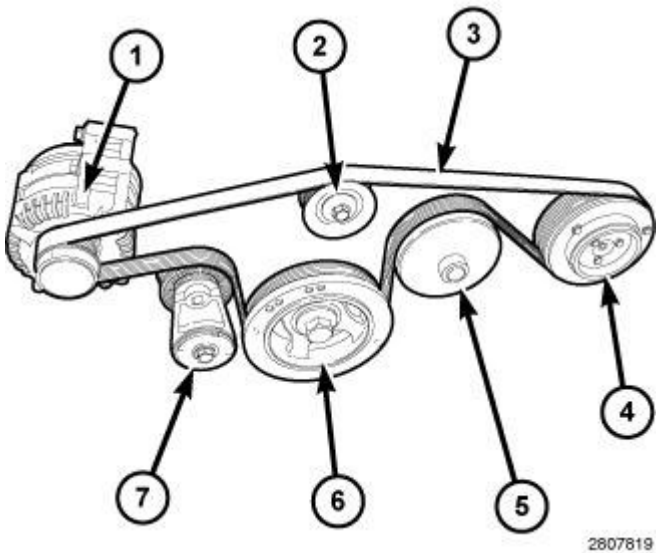

Fig. 16: Idler Pulley, Tensioner Arm, Belt, Idler, Tensioner & Belt Routing
Courtesy of CHRYSLER GROUP, LLC

21. Remove the accessory drive belt (3). Refer to **BELT, SERPENTINE, REMOVAL** .
22. Remove the generator (1). Refer to **GENERATOR, REMOVAL** .

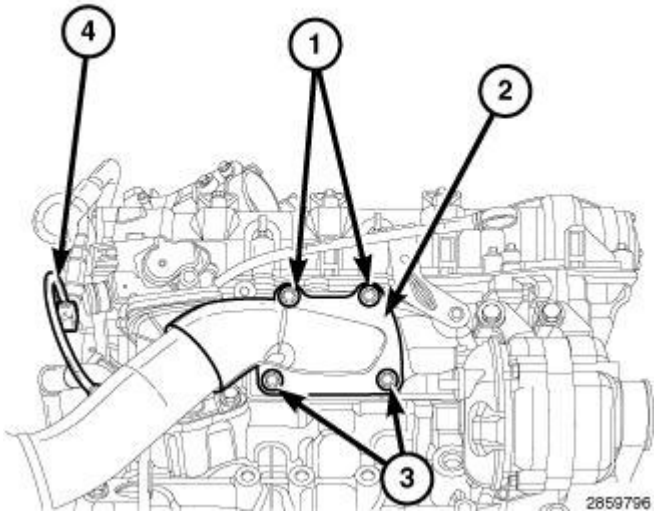

Fig. 17: Right Upstream Oxygen Electrical Sensor Connector, Down Pipe Flanges & Bolts
Courtesy of CHRYSLER GROUP, LLC

NOTE: Right catalytic converter shown in the illustration, left catalytic converter similar.

23. Disconnect the right and left upstream oxygen sensor connectors (4) from the main wire harness.
24. Loosen the lower catalytic converter flange bolts (3).
25. Remove the upper catalytic converter flange bolts (1) and reposition the right and left catalytic converters

 © 2011 Mitchell Repair Information Company, LLC.

(2).

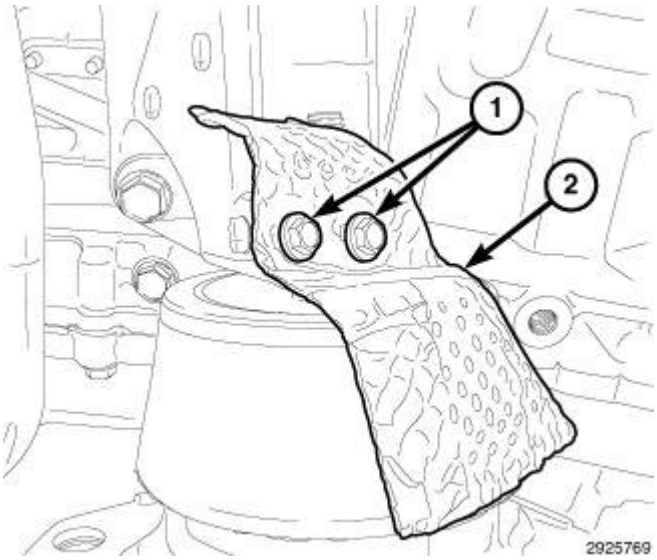

Fig. 18: Engine Mount Heatshield & Bolts
Courtesy of CHRYSLER GROUP, LLC

NOTE: Left engine mount shown in the illustration, right engine mount similar.

26. Remove the bolts (1) and the engine mount heatshield (2) from both the left and right engine mounts.

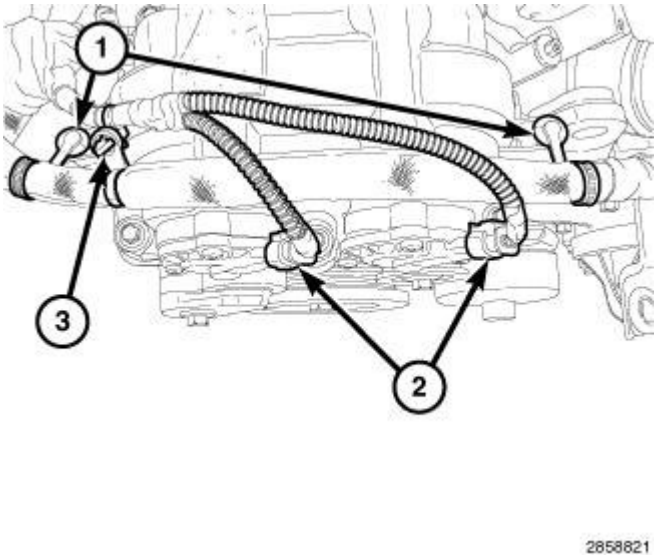

Fig. 19: Variable Valve Timing Solenoid Connectors & Harness Retainers
Courtesy of CHRYSLER GROUP, LLC

NOTE: Mark the variable valve timing solenoid connectors (2) with a paint pen or equivalent so that they may be reinstalled in their original locations.

27. Disconnect the electrical connectors (2) from the variable valve timing solenoids on the right cylinder

 © 2011 Mitchell Repair Information Company, LLC.

head.

28. Disengage the starter harness to main harness retainer (3).
29. Disengage two starter wire harness retainers (1) from the right cylinder head cover.

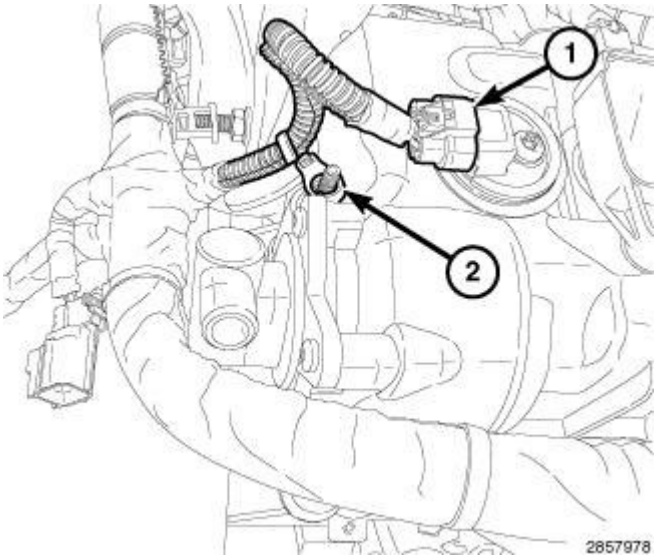

Fig. 20: Main Wire Harness Retainer & Connector
Courtesy of CHRYSLER GROUP, LLC

30. Disconnect the electrical connector (1) from the right Camshaft Position (CMP) sensor.
31. Disengage the main wire harness retainer (2) from the right cylinder head cover mounting stud.

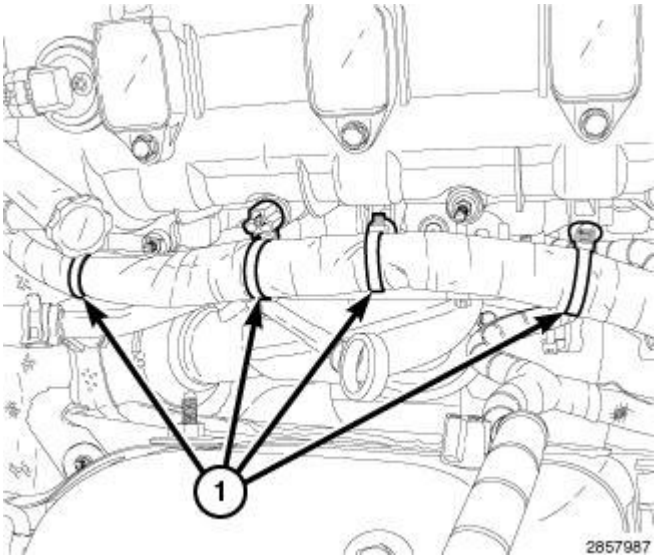

Fig. 21: Main Wire Harness Retainers At Right Cylinder Head Cover
Courtesy of CHRYSLER GROUP, LLC

32. Disengage four main wire harness retainers (1) from the right cylinder head cover.

 © 2011 Mitchell Repair Information Company, LLC.

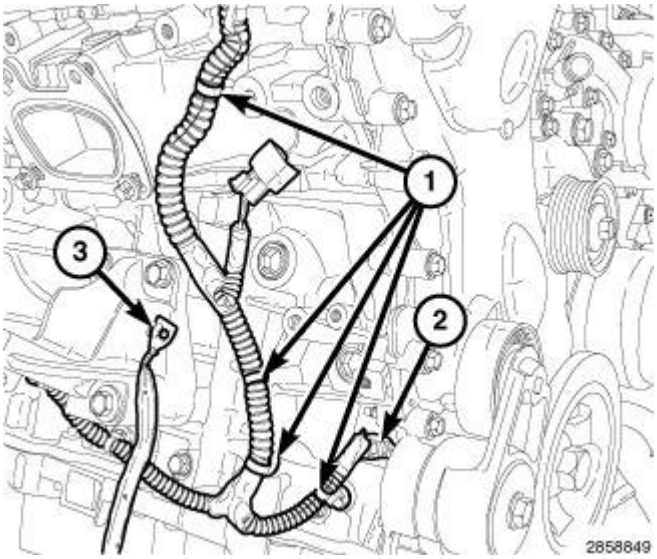

Fig. 22: Wire Harness Retainers, Oil Pump Solenoid Electrical Connector & Ground Strap
Courtesy of CHRYSLER GROUP, LLC

33. Disconnect the oil pump solenoid electrical connector (2).
34. Disengage four wire harness retainers (1).
35. Remove the ground strap (3) from the right engine mount bracket.

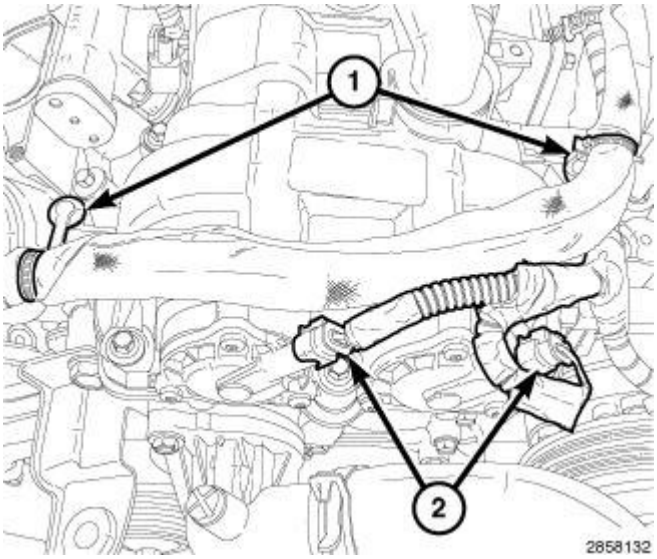

Fig. 23: Variable Valve Timing Solenoid Connectors & Wire Harness Retainers
Courtesy of CHRYSLER GROUP, LLC

NOTE: Mark the variable valve timing solenoid connectors (2) with a paint pen or equivalent so that they may be reinstalled in their original locations.

36. Disconnect the electrical connectors (2) from the left variable valve timing solenoids.
37. Disengage two starter wire harness retainers (1) from the left cylinder head cover.

 © 2011 Mitchell Repair Information Company, LLC.

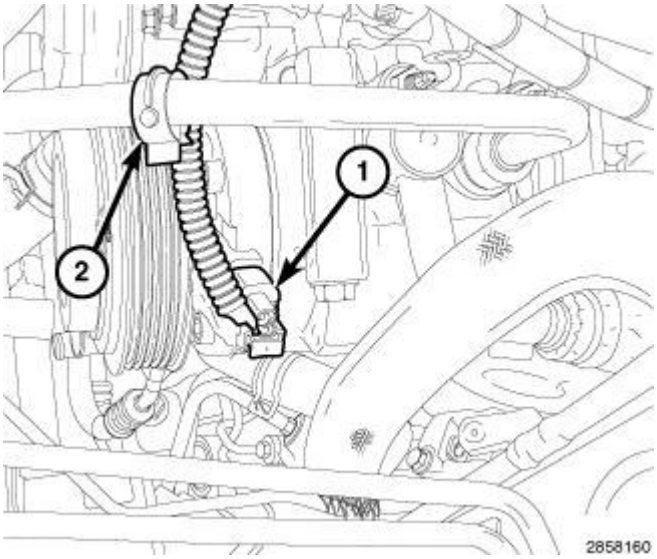

Fig. 24: A/C Compressor Electrical Connector & Wire Harness Retainer
Courtesy of CHRYSLER GROUP, LLC

38. Disconnect the A/C compressor electrical connector (1) and disengage the wire harness retainer (2) from the A/C compressor discharge line.

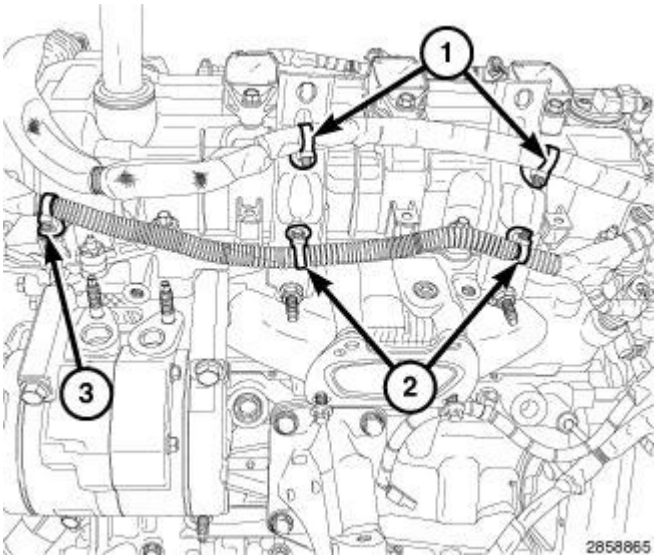

Fig. 25: Starter Wire Harness Retainers, Main Wire Harness Retainer & Manifold Support Bracket Retainers
Courtesy of CHRYSLER GROUP, LLC

39. Disengage two starter wire harness retainers (1) from the upper intake manifold support brackets.
40. Disengage one main wire harness retainer (3) from the left cylinder head cover and two retainers (2) from the upper intake manifold support brackets.

 © 2011 Mitchell Repair Information Company, LLC.

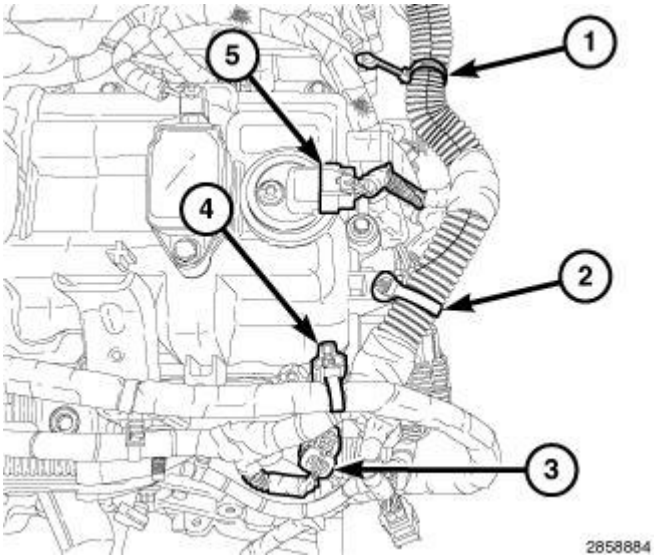

Fig. 26: ECT Sensor Connector, CMP Sensor & Main Wire Harness Retainers
Courtesy of CHRYSLER GROUP, LLC

41. Disconnect the Engine Coolant Temperature (ECT) sensor connector (3).
42. Disconnect the left Camshaft Position (CMP) sensor (5).
43. Disengage one main wire harness retainer (2) from the cylinder head cover and one main wire harness retainer (4) from the cylinder head cover mounting stud.
44. Disengage the main wire harness retainer (1) form the rear of the lower intake manifold.

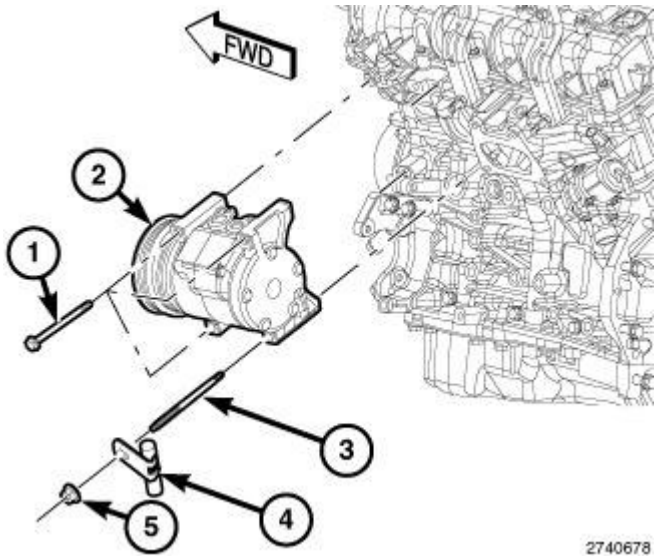

Fig. 27: A/C Compressor, Nut, Stud & Three Bolts
Courtesy of CHRYSLER GROUP, LLC

45. Remove the remaining three bolts (1) and reposition the A/C compressor (2).

 © 2011 Mitchell Repair Information Company, LLC.

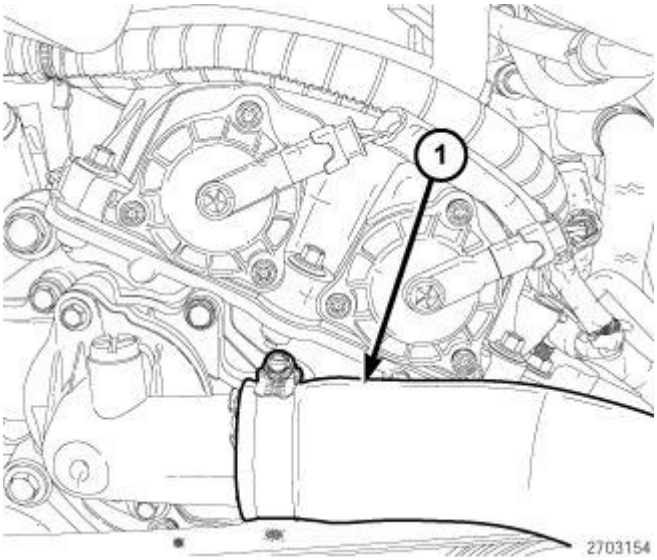

Fig. 28: Upper Radiator Hose
Courtesy of CHRYSLER GROUP, LLC

46. Remove the upper radiator hose (1) from the engine thermostat housing.

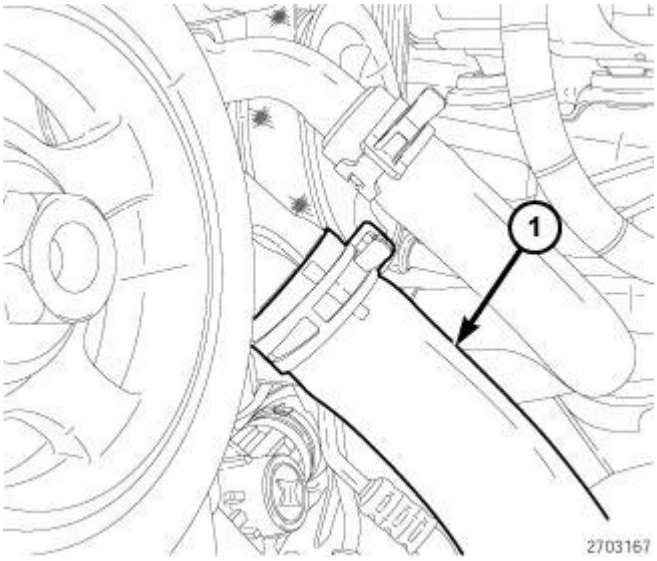

Fig. 29: Lower Radiator Hose
Courtesy of CHRYSLER GROUP, LLC

47. Remove the lower radiator hose (1) from the engine coolant pump housing.

 © 2011 Mitchell Repair Information Company, LLC.

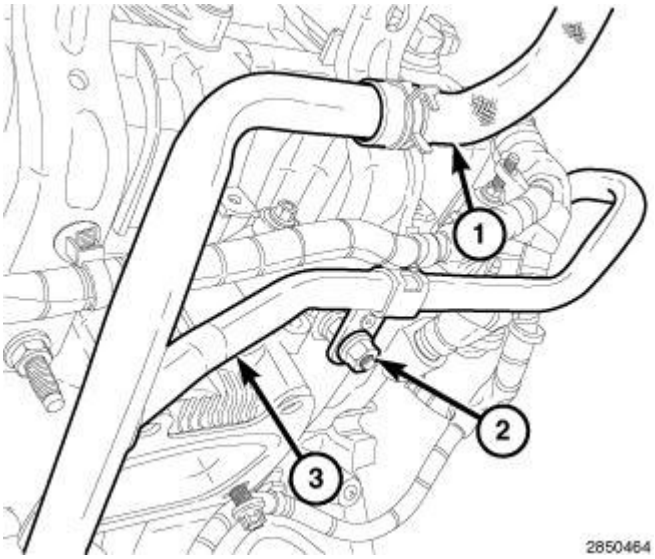

Fig. 30: Heater Core Return Hose, Heater Core Return Tube & Nut
Courtesy of CHRYSLER GROUP, LLC

48. Disconnect the heater core return hose (1).
49. Raise and support the vehicle. Refer to **HOISTING, STANDARD PROCEDURE** .

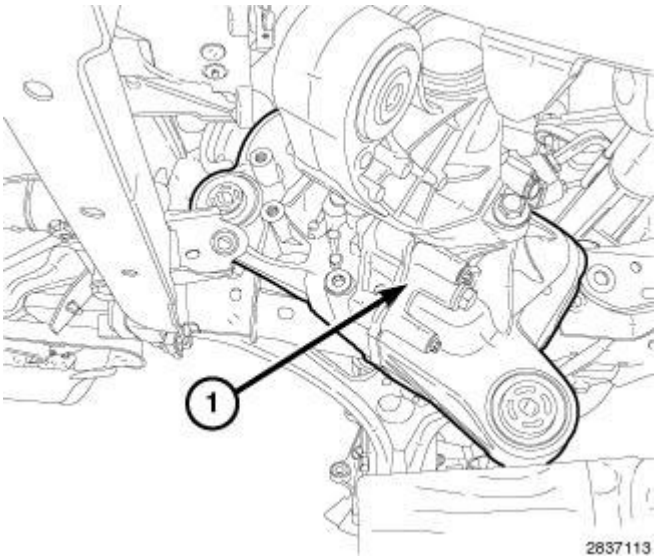

Fig. 31: Front Axle & Axle Bracket
Courtesy of CHRYSLER GROUP, LLC

50. If equipped with AWD, remove the front axle (1). Refer to **REMOVAL** .
51. Remove the starter. Refer to **STARTER, REMOVAL** .

 © 2011 Mitchell Repair Information Company, LLC.

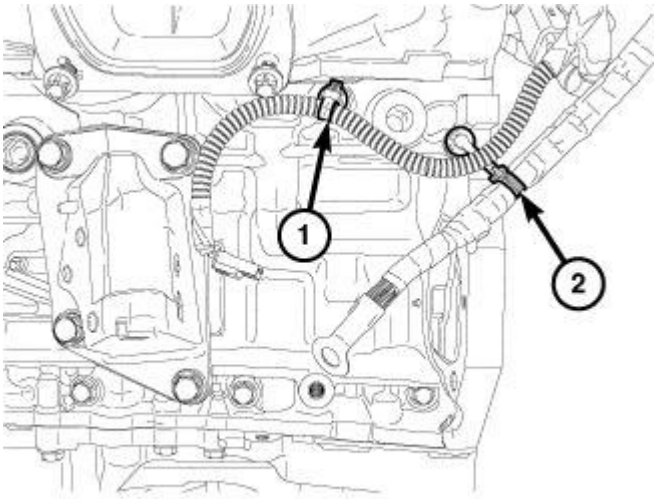

2858911

Fig. 32: Wire Harness Retainers
Courtesy of CHRYSLER GROUP, LLC

52. Disengage the starter wire harness retainer (2) and the main wire harness retainer (1) from the engine block.

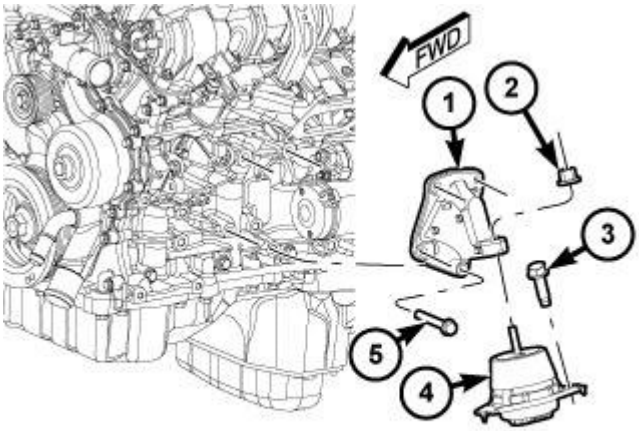

2797224

Fig. 33: Engine Mount Isolator, Left Engine Mount Bracket & Retaining Bolts
Courtesy of CHRYSLER GROUP, LLC

53. Reinstall the left engine mount bracket (1) and isolator (4) assembly with four bolts (5) and two bolts (3). Tighten all bolts to 61 N.m (45 ft. lbs.).

 © 2011 Mitchell Repair Information Company, LLC.

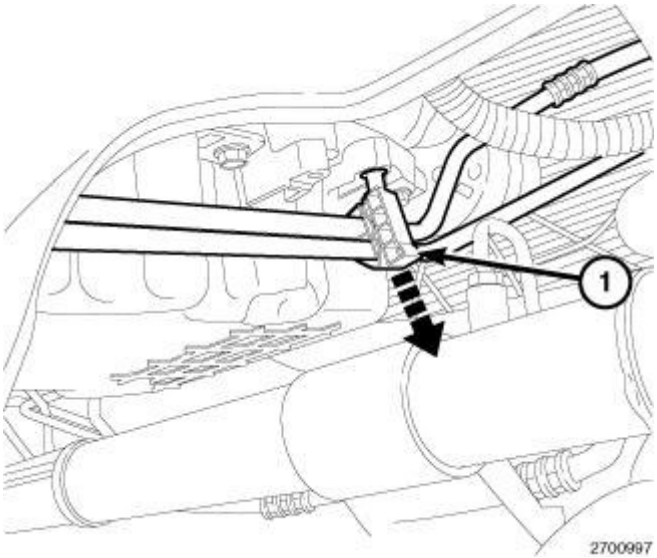

Fig. 34: Transmission Cooler Line Retainer
Courtesy of CHRYSLER GROUP, LLC

54. Unclip the transmission cooler line retainer (1) from the upper oil pan flange.

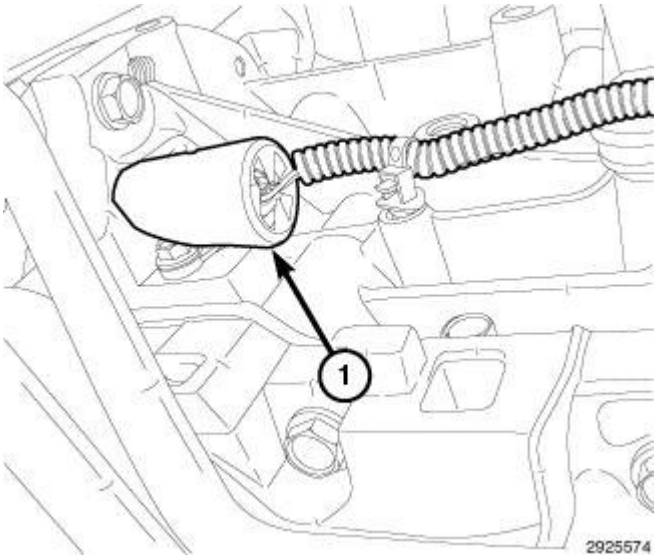

Fig. 35: Heat Shield
Courtesy of CHRYSLER GROUP, LLC

55. Push back the heatshield (1) from the crankshaft position (CKP) sensor.

 © 2011 Mitchell Repair Information Company, LLC.

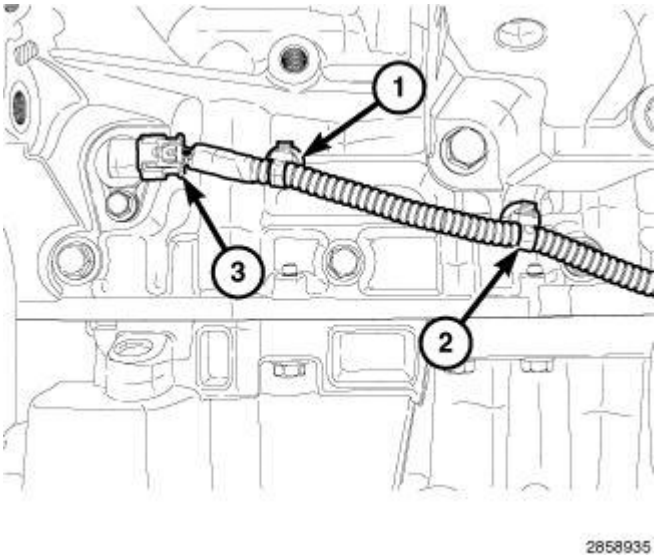

Fig. 36: Main Wire Harness Retainers & CKP Sensor
Courtesy of CHRYSLER GROUP, LLC

56. Disconnect the main wire harness from the Crankshaft Position (CKP) sensor (3).
57. Disengage one main wire harness retainer (1) from the engine block and one main wire harness retainer (2) from the right engine mounting bracket.
58. Disconnect and reposition the power cord from the engine block heater (if equipped).

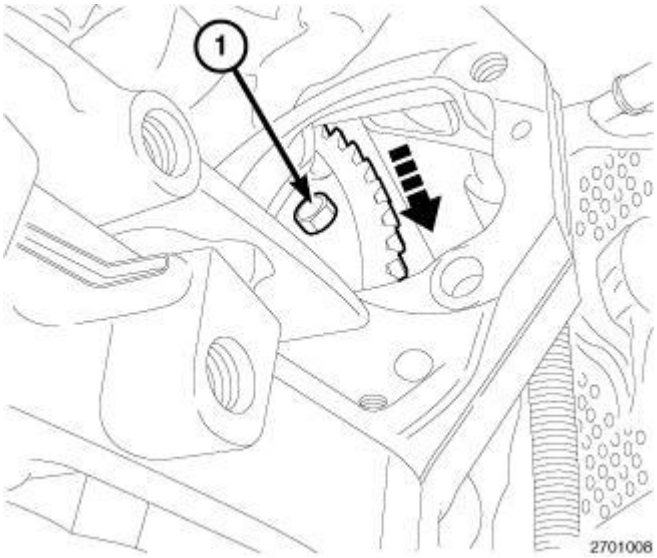

Fig. 37: Torque Converter Bolt
Courtesy of CHRYSLER GROUP, LLC

59. Rotate the crankshaft in a clockwise direction until the torque converter bolts (1) are accessible through the starter mounting. Remove the six torque converter bolts (1).

 © 2011 Mitchell Repair Information Company, LLC.

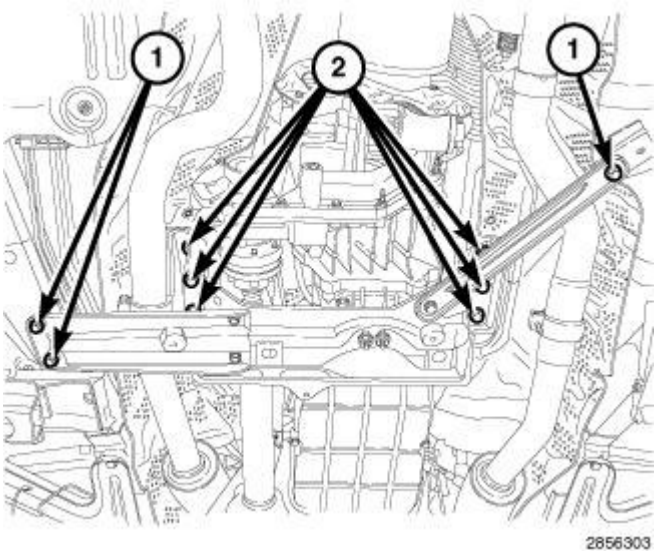

Fig. 38: Crossmember Brace & Bolts
Courtesy of CHRYSLER GROUP, LLC

NOTE: If equipped with AWD, the rear of the engine must be lowered in order to access the upper transmission to engine bolts.

60. If equipped with AWD, support the transmission with a suitable jack, remove three crossmember brace bolts (1), six crossmember bolts (2) and adjust the jack to lower the rear of the engine.

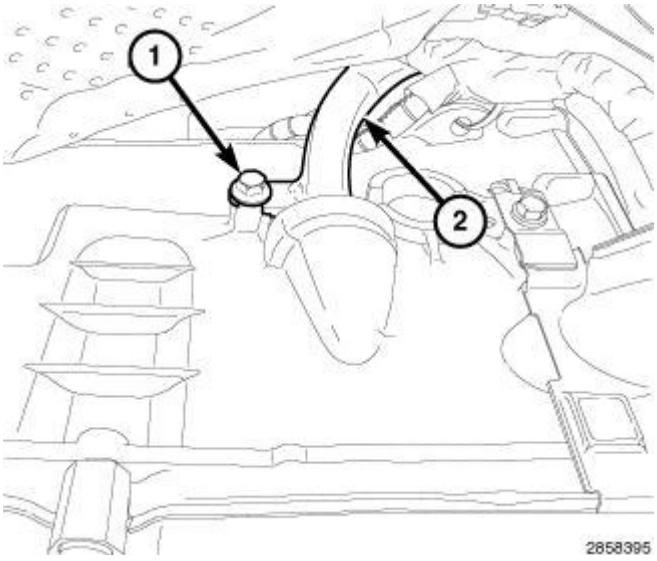

Fig. 39: Transmission Fluid Level Indicator Tube & Bolt
Courtesy of CHRYSLER GROUP, LLC

61. Loosen the bolt (1) securing the transmission fluid level indicator tube (2) to the transmission housing.

 © 2011 Mitchell Repair Information Company, LLC.

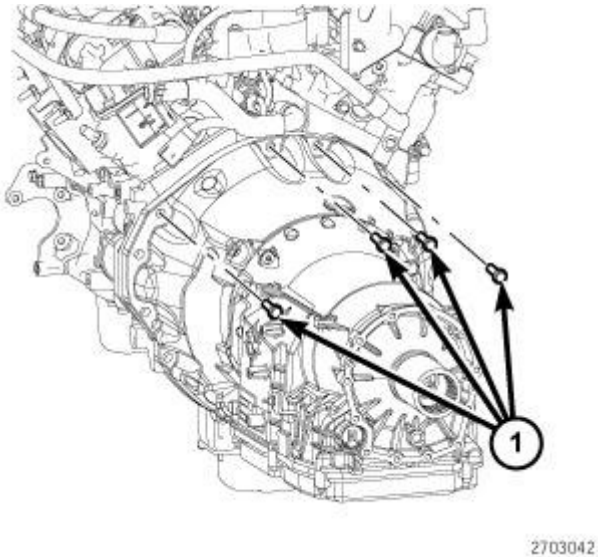

Fig. 40: Upper Transmission Engine Bolts
Courtesy of CHRYSLER GROUP, LLC

62. Remove four upper transmission to engine bolts (1).

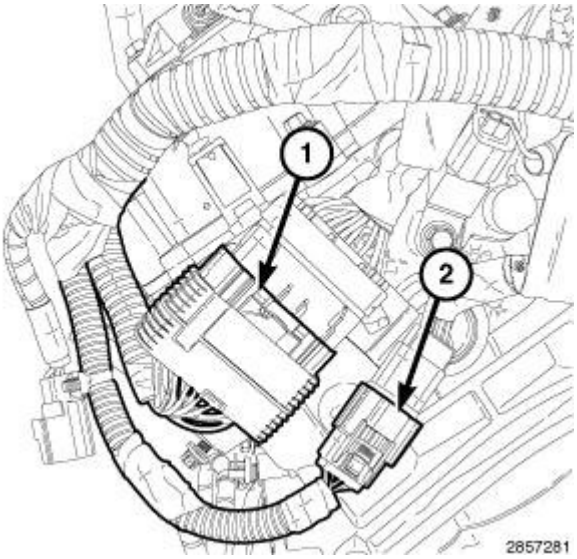

Fig. 41: Engine Injection/Ignition Harness & Engine Oil Pressure/Temperature Harness
Courtesy of CHRYSLER GROUP, LLC

63. Disconnect the main harness from the engine injection/ignition harness (1) at the rear of the left cylinder head.
64. Disconnect the main harness from the engine oil pressure/temperature harness (2) at the rear of the left cylinder head.

 © 2011 Mitchell Repair Information Company, LLC.

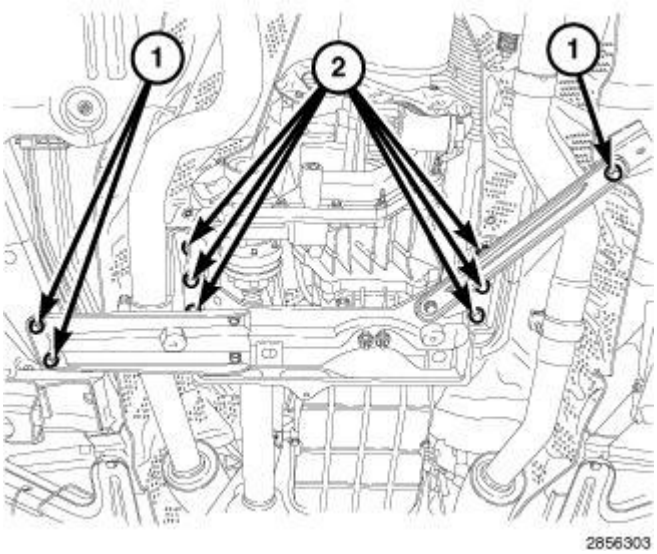

Fig. 42: Crossmember Brace & Bolts
Courtesy of CHRYSLER GROUP, LLC

65. If equipped with AWD, raise the rear of the engine, reinstall six crossmember bolts (2) and three crossmember brace bolts (1). Tighten all bolts to 55 N.m (41 ft. lbs.).

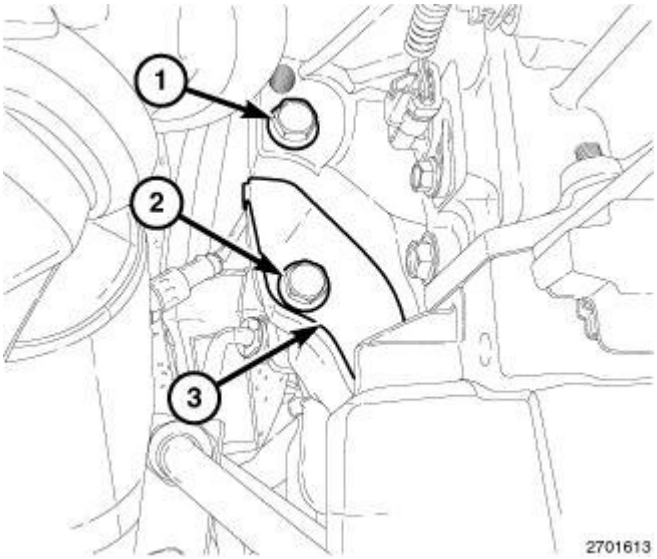

Fig. 43: Side Engine-To-Transmission Bolt, Transmission Dust Shield Retaining Bolt & Dust Shield
Courtesy of CHRYSLER GROUP, LLC

66. Remove the bolt (2) and the torque converter dust shield (3).
67. Remove the side engine to transmission bolt (1).

 © 2011 Mitchell Repair Information Company, LLC.

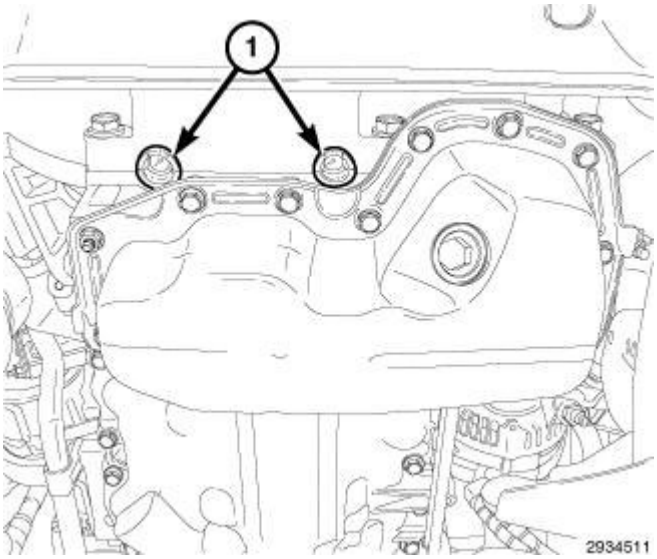

Fig. 44: Rubber Plugs
Courtesy of CHRYSLER GROUP, LLC

68. Remove two rubber plugs (1) covering the rear oil seal retainer flange bolts.

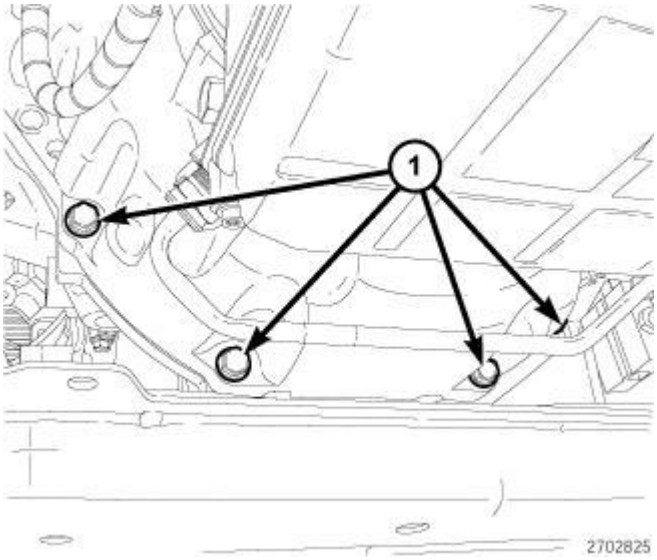

Fig. 45: Transmission-To-Engine Oil Pan Bolts
Courtesy of CHRYSLER GROUP, LLC

69. Remove four transmission to the engine oil pan bolts (1).
70. Lower the vehicle.

 © 2011 Mitchell Repair Information Company, LLC.

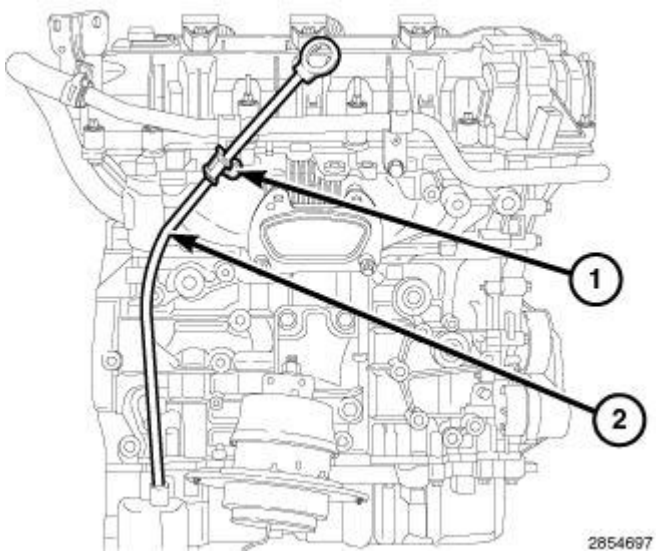

Fig. 46: Oil Level Indicator & Retaining Bolt
Courtesy of CHRYSLER GROUP, LLC

71. Remove the bolt (1) and remove the oil level indicator (2).

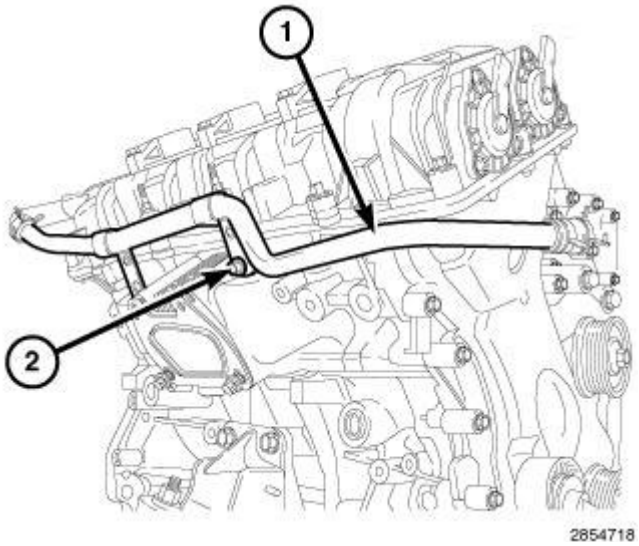

Fig. 47: Heater Core Supply Tube Support Bracket & Retaining Bolt
Courtesy of CHRYSLER GROUP, LLC

72. Remove the bolt (2) and the heater core supply tube (1).

 © 2011 Mitchell Repair Information Company, LLC.

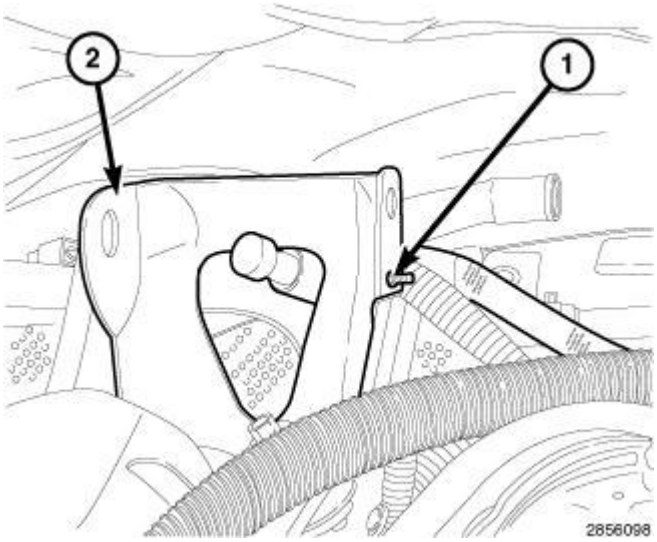

Fig. 48: Transfer Case Vent Hose Retainer & Upper Intake Manifold Support Bracket
Courtesy of CHRYSLER GROUP, LLC

73. If equipped with AWD, disengage the transfer case vent hose retainer (1) from the upper intake manifold support bracket (2).

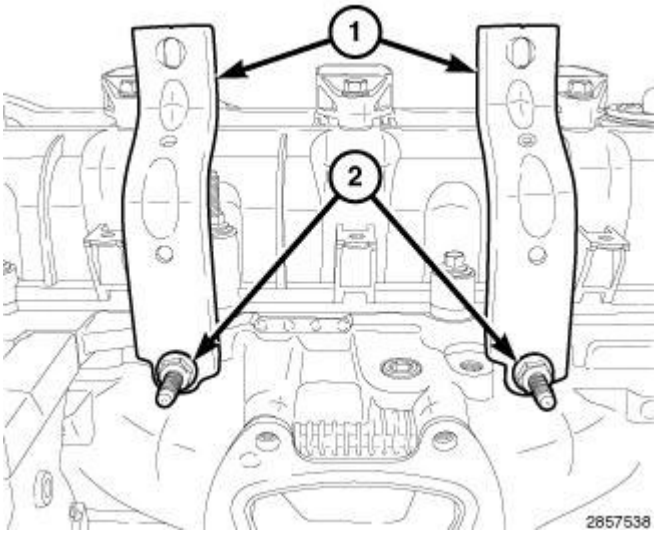

Fig. 49: Left Intake Manifold Support Brackets & Retaining Bolts
Courtesy of CHRYSLER GROUP, LLC

74. Remove the bolts (2) and remove the LH upper intake manifold support brackets (1).

 © 2011 Mitchell Repair Information Company, LLC.

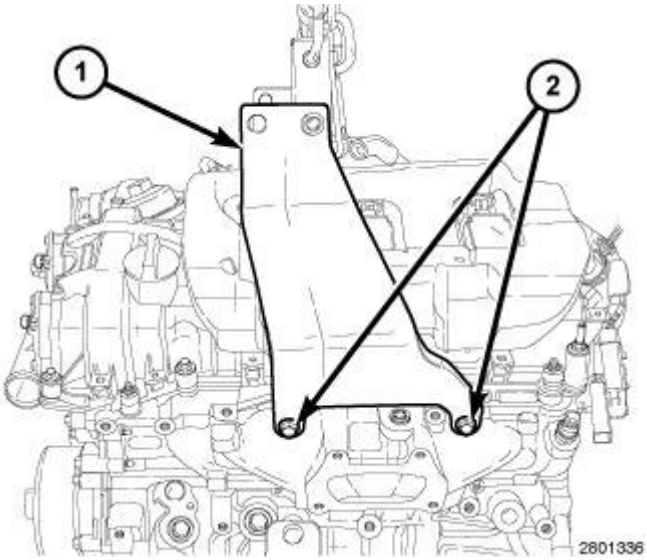

Fig. 50: Driver Side Engine Lifting Bracket & Bolts
Courtesy of CHRYSLER GROUP, LLC

75. Install the Driver Side Engine Lifting Bracket (special tool #10242-1, Brackets, Engine Lifting, Left Side) (1) on the LH cylinder head with bolts (2) provided with the Engine Lifting Bracket. Tighten the bolts to 21 N.m (15 ft. lbs.).

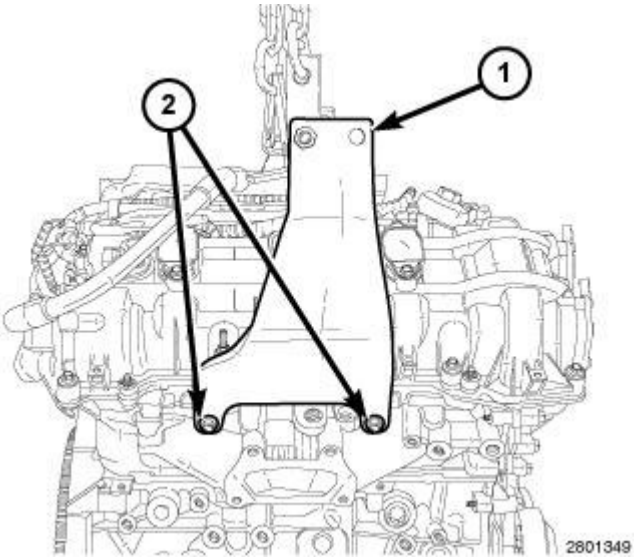

Fig. 51: Passenger Side Engine Lifting Bracket & Bolts
Courtesy of CHRYSLER GROUP, LLC

76. Install the Passenger Side Engine Lifting Bracket (special tool #10242-2, Brackets, Engine Lifting, Right Side) (1) on the RH cylinder head with bolts (2) provided with the Engine Lifting Bracket. Tighten the bolts to 21 N.m (15 ft. lbs.).
77. Reposition the starter wire harness and the main wire harness to the rear of the engine compartment.

 © 2011 Mitchell Repair Information Company, LLC.

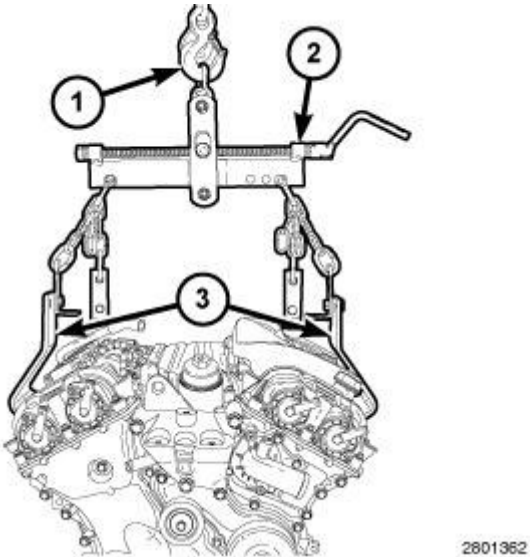

Fig. 52: Lifting Sling, Engine Lifting Brackets & Engine Hoist
Courtesy of CHRYSLER GROUP, LLC

78. Position a load-leveling lifting sling (2), such as OTC® 4305 Engine Load Leveler or equivalent, between the engine lifting brackets (3) and an engine hoist (1).
79. Support the transmission with a suitable jack.

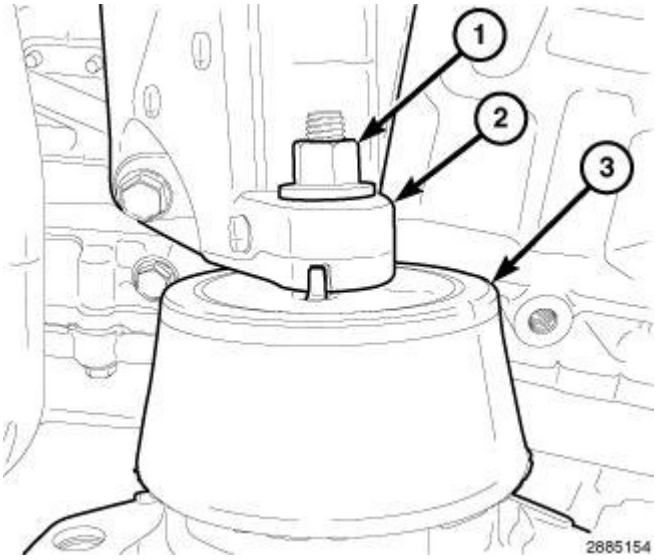

Fig. 53: Left Engine Mount Isolator & Upper Retaining Nut
Courtesy of CHRYSLER GROUP, LLC

NOTE: Left engine mount shown in the illustration, right engine mount similar.

80. Remove both the left and right engine mount nuts (1).

CAUTION: While slowly separating the engine from the vehicle, constant checks

 © 2011 Mitchell Repair Information Company, LLC.

must be made to assure proper positioning and that no damage to other components or wiring harnesses occur during separation.

81. Carefully remove the engine from the engine bay area.
82. If required, remove the following components for installation on the replacement engine:

- LH engine mount bracket
- RH engine mount bracket
- Accessory drive belt tensioner
- Upper intake manifold support bracket
- Heater core return tube
- Block heater (if equipped)

INSTALLATION

INSTALLATION

CAUTION: If the original engine has experienced a catastrophic failure or an individual failure with the piston, cylinder bore, engine block, valve or valve seat, the intake manifold MUST be replaced with a new manifold.

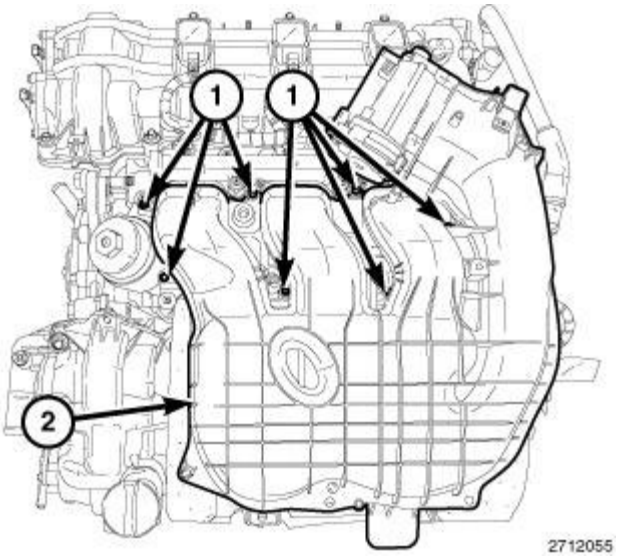

Fig. 54: Upper Intake Manifold & Bolts
Courtesy of CHRYSLER GROUP, LLC

NOTE: If installing a replacement engine, transfer components such as engine mount brackets, block heater, accessories, heater hoses and tubes to the replacement engine.

1. If required, remove the upper intake manifold. Refer to **MANIFOLD, INTAKE, REMOVAL**.

 © 2011 Mitchell Repair Information Company, LLC.

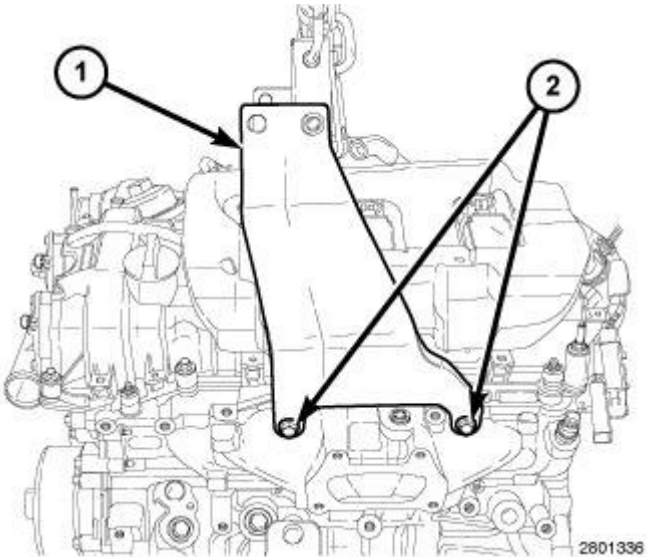

Fig. 55: Driver Side Engine Lifting Bracket & Bolts
Courtesy of CHRYSLER GROUP, LLC

2. Install the Driver Side Engine Lifting Bracket (special tool #10242-1, Brackets, Engine Lifting, Left Side) (1) on the LH cylinder head with bolts (2) provided with the Engine Lifting Bracket. Tighten the bolts to 21 N.m (15 ft. lbs.).

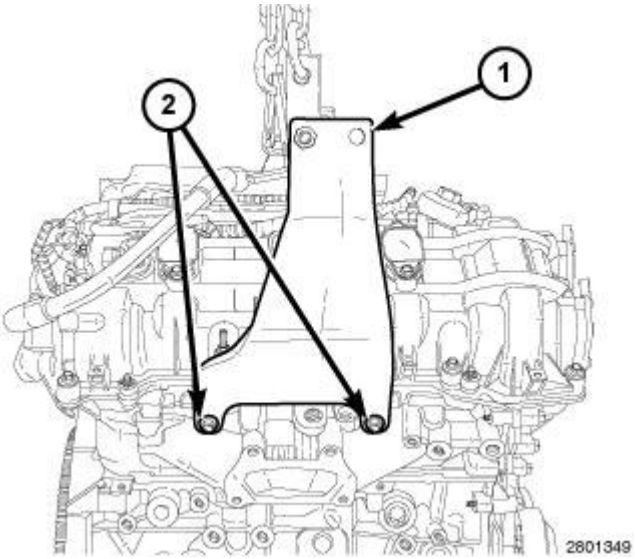

Fig. 56: Passenger Side Engine Lifting Bracket & Bolts
Courtesy of CHRYSLER GROUP, LLC

3. Install the Passenger Side Engine Lifting Bracket (special tool #10242-2, Brackets, Engine Lifting, Right Side) (1) on the RH cylinder head with bolts (2) provided with the Engine Lifting Bracket. Tighten the bolts to 21 N.m (15 ft. lbs.).

 © 2011 Mitchell Repair Information Company, LLC.

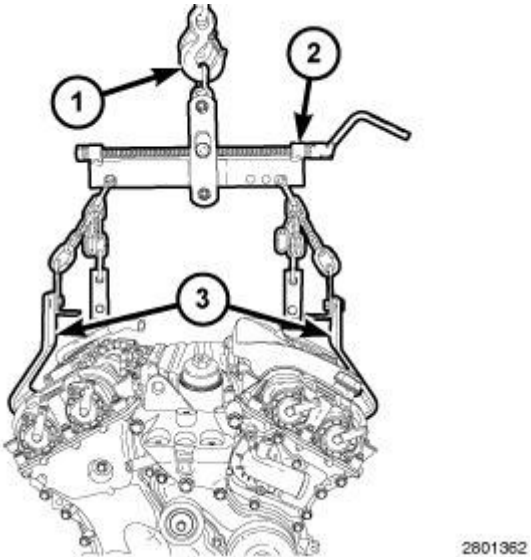

Fig. 57: Lifting Sling, Engine Lifting Brackets & Engine Hoist
Courtesy of CHRYSLER GROUP, LLC

4. Position a load-leveling lifting sling (2), such as OTC® 4305 Engine Load Leveler or equivalent, between the engine lifting brackets (3) and an engine hoist (1).
5. Reposition the starter wire harness and the main wire harness to the rear of the engine compartment.
6. Position the engine in the vehicle while aligning the two locator dowels into the transmission housing.

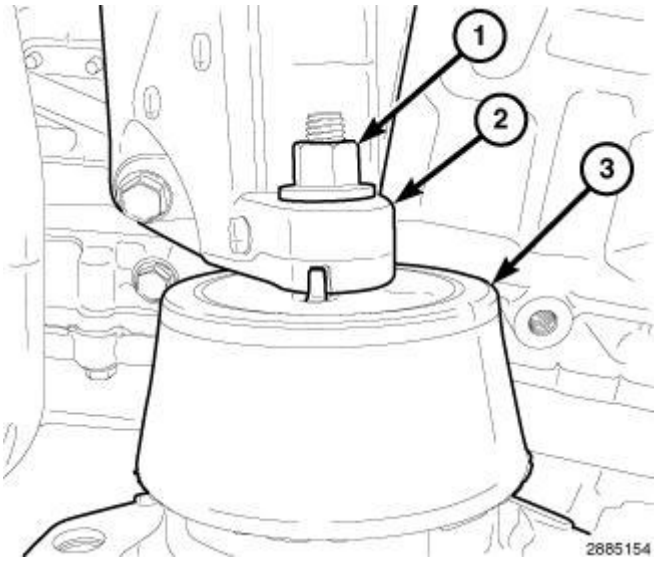

Fig. 58: Left Engine Mount Isolator & Upper Retaining Nut
Courtesy of CHRYSLER GROUP, LLC

NOTE: Left engine mount shown in the illustration, right engine mount similar.

7. Align the tab on the isolators (3) with the notch in the engine mount brackets (2) and lower the engine so the weight is resting on the isolators.

 © 2011 Mitchell Repair Information Company, LLC.

8. Install the left and right engine mount nuts (1) and tighten to 61 N.m (45 ft.lbs.).

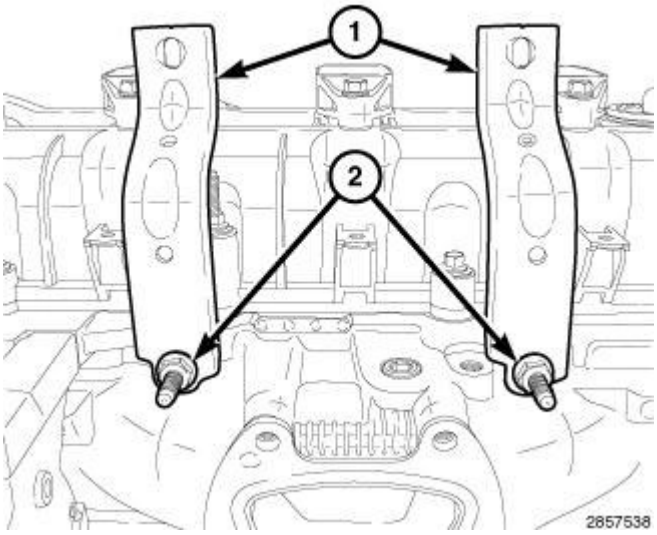

Fig. 59: Left Intake Manifold Support Brackets & Retaining Bolts
Courtesy of CHRYSLER GROUP, LLC

9. Remove the engine lifting brackets and install the LH upper intake manifold support brackets (1). Loosely install the studbolts (2).

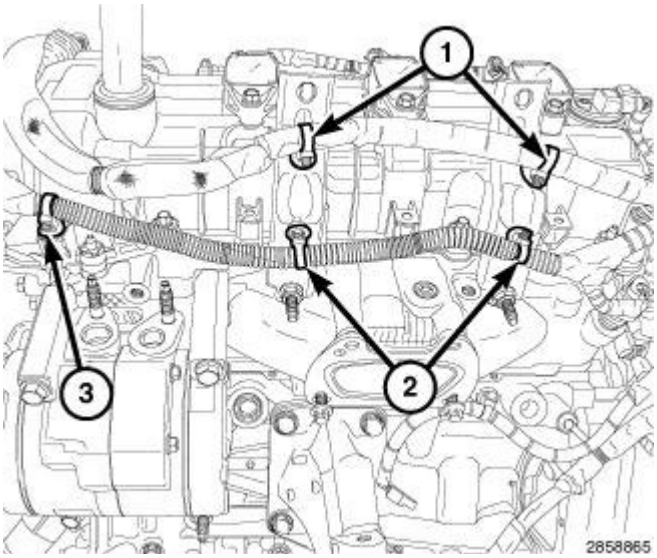

Fig. 60: Starter Wire Harness Retainers, Main Wire Harness Retainer & Manifold Support Bracket Retainers
Courtesy of CHRYSLER GROUP, LLC

10. Route the main wire harness and starter wire harness on the engine.
11. Engage two starter wire harness retainers (1) to the upper intake manifold support brackets.
12. Engage one main wire harness retainer (3) to the left cylinder head cover and two retainers (2) to the upper intake manifold support brackets.

 © 2011 Mitchell Repair Information Company, LLC.

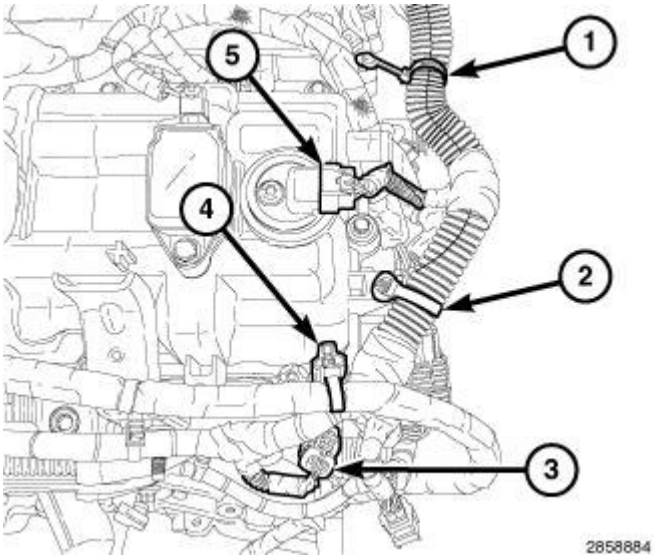

Fig. 61: ECT Sensor Connector, CMP Sensor & Main Wire Harness Retainers
Courtesy of CHRYSLER GROUP, LLC

13. Connect the Engine Coolant Temperature (ECT) sensor connector (3).
14. Connect the left Camshaft Position (CMP) sensor (5).
15. Engage one main wire harness retainer (2) to the cylinder head cover and one main wire harness retainer (4) to the cylinder head cover mounting stud.
16. Engage the main wire harness retainer (1) to the rear of the lower intake manifold.

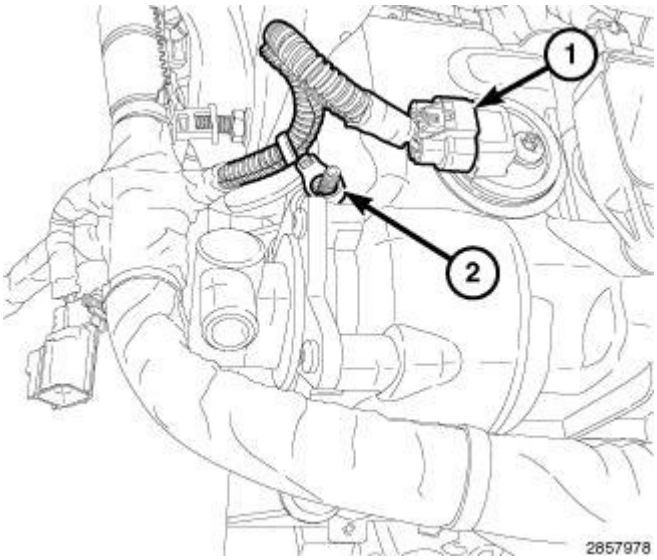

Fig. 62: Main Wire Harness Retainer & Connector
Courtesy of CHRYSLER GROUP, LLC

17. Connect the electrical connector (1) to the right Camshaft Position (CMP) sensor.
18. Engage the main wire harness retainer (2) to the right cylinder head cover mounting stud.

 © 2011 Mitchell Repair Information Company, LLC.

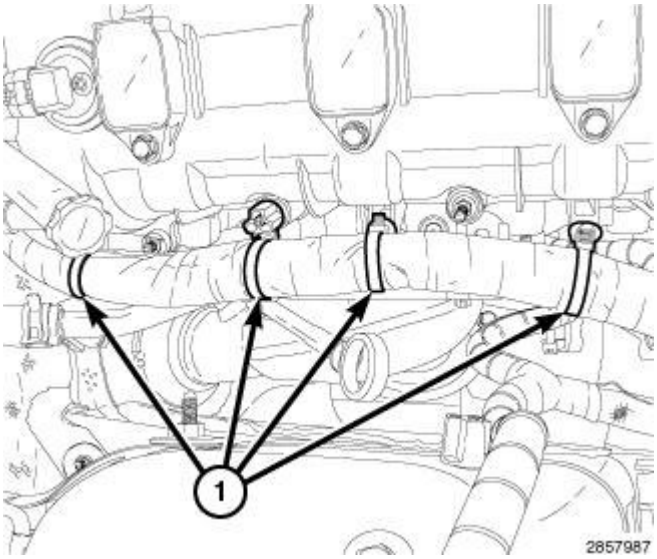

Fig. 63: Main Wire Harness Retainers At Right Cylinder Head Cover
Courtesy of CHRYSLER GROUP, LLC

19. Engage four main wire harness retainers (1) to the right cylinder head cover.

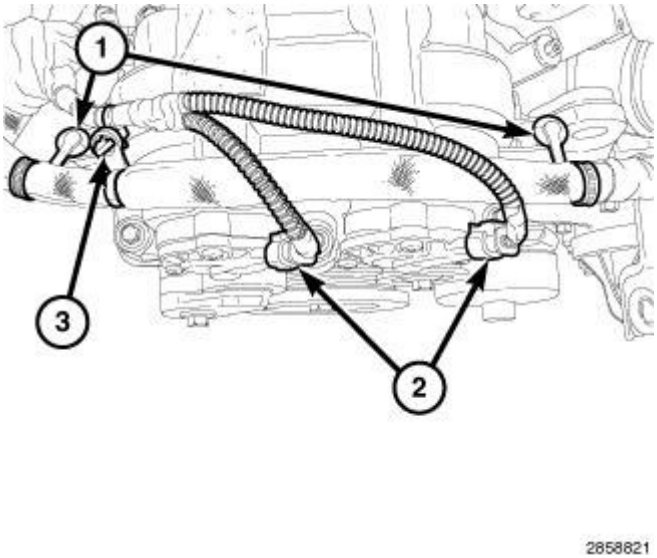

Fig. 64: Variable Valve Timing Solenoid Connectors & Harness Retainers
Courtesy of CHRYSLER GROUP, LLC

20. Connect the electrical connectors (2) to the variable valve timing solenoids on the right cylinder head.
21. Engage two starter wire harness retainers (1) to the right cylinder head cover.
22. Engage the starter harness to main harness retainer (3).

 © 2011 Mitchell Repair Information Company, LLC.

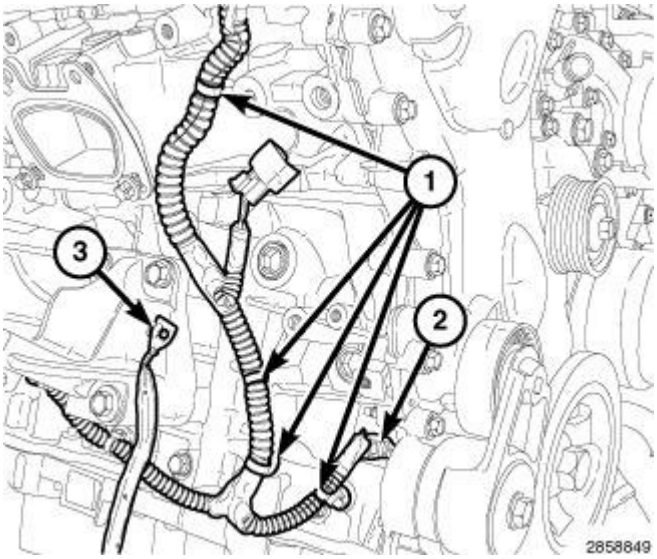

Fig. 65: Wire Harness Retainers, Oil Pump Solenoid Electrical Connector & Ground Strap
Courtesy of CHRYSLER GROUP, LLC

23. Connect the oil pump solenoid electrical connector (2).
24. Engage four wire harness retainers (1).
25. Install the ground strap (3) to the right engine mount bracket.
26. Raise and support the vehicle. Refer to **HOISTING, STANDARD PROCEDURE** .

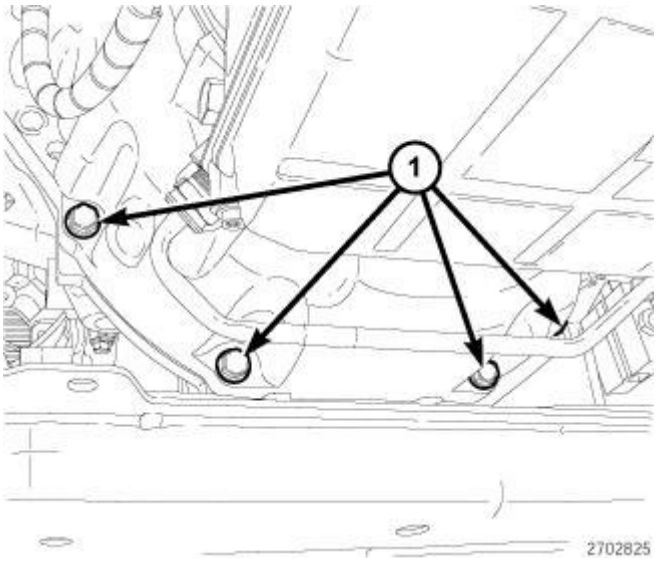

Fig. 66: Transmission-To-Engine Oil Pan Bolts
Courtesy of CHRYSLER GROUP, LLC

27. Install four transmission to engine oil pan bolts (1). Tighten the bolts to 55 N.m (41 ft. lbs.).

 © 2011 Mitchell Repair Information Company, LLC.

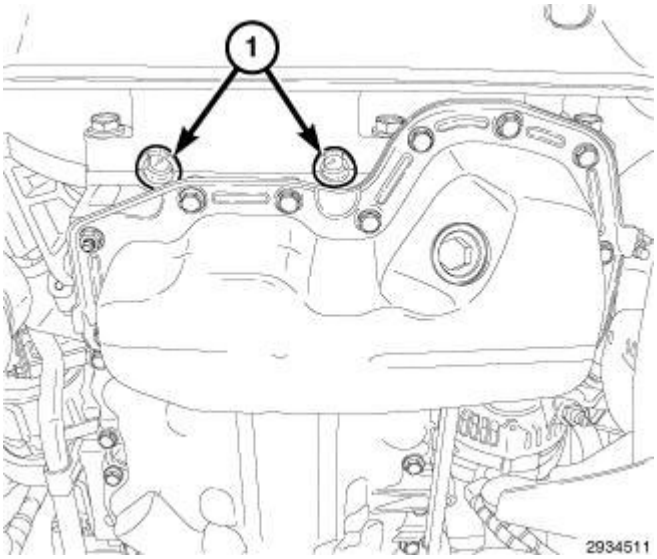

Fig. 67: Rubber Plugs
Courtesy of CHRYSLER GROUP, LLC

28. Install two rubber plugs (1) covering the rear oil seal retainer flange bolts.

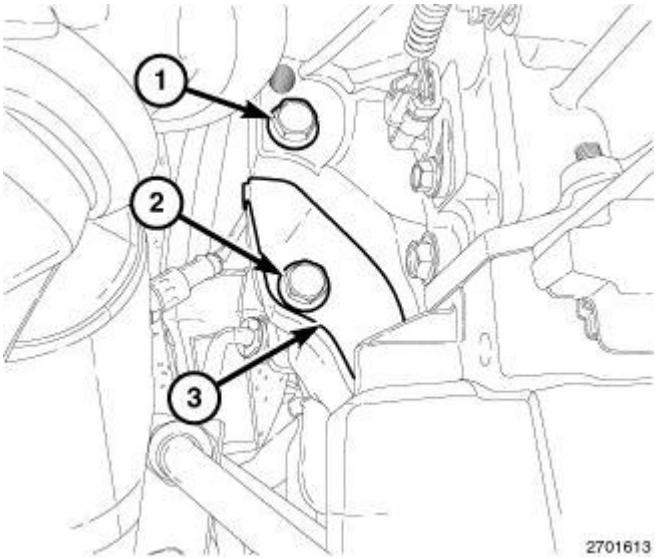

Fig. 68: Side Engine-To-Transmission Bolt, Transmission Dust Shield Retaining Bolt & Dust Shield
Courtesy of CHRYSLER GROUP, LLC

29. Install the side engine to transmission bolt (1). Tighten the bolt to 55 N.m (41 ft. lbs.).
30. Install the torque converter dust shield (3) with the bolt (2). Tighten the bolt to 12 N.m (106 in. lbs.).

 © 2011 Mitchell Repair Information Company, LLC.

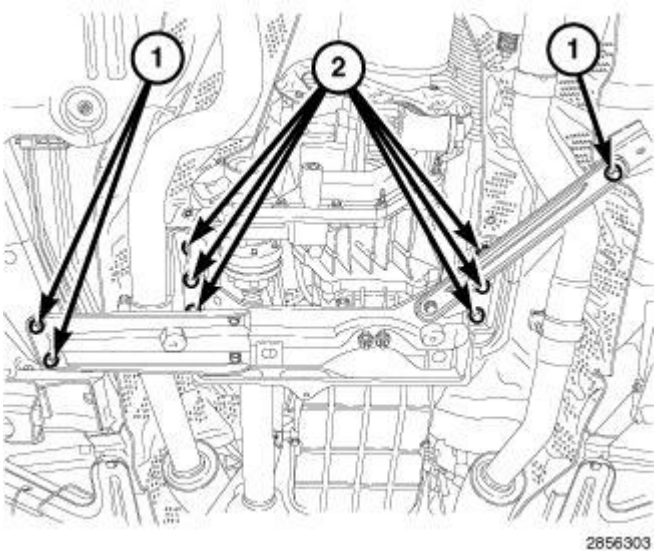

Fig. 69: Crossmember Brace & Bolts
Courtesy of CHRYSLER GROUP, LLC

NOTE: If equipped with AWD, the rear of the engine must be lowered in order to access the upper transmission to engine bolts.

31. If equipped with AWD, support the transmission with a suitable jack, remove three crossmember brace bolts (1), six crossmember bolts (2) and adjust the jack to lower the rear of the engine.

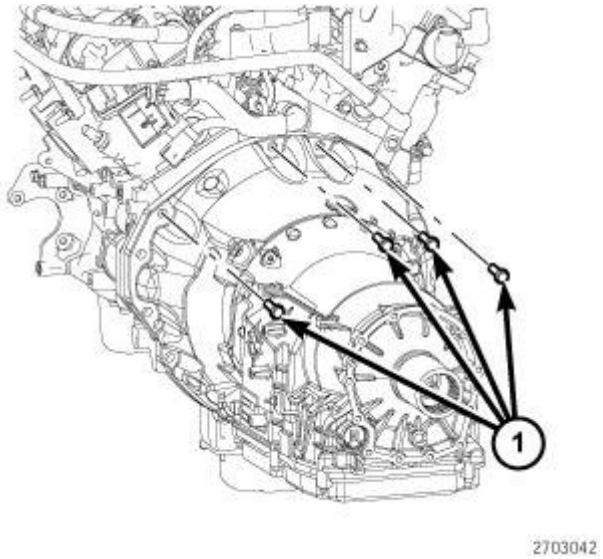

Fig. 70: Upper Transmission Engine Bolts
Courtesy of CHRYSLER GROUP, LLC

32. Install the four upper transmission to engine bolts (1). Tighten the bolts to 55 N.m (41 ft. lbs.).

 © 2011 Mitchell Repair Information Company, LLC.

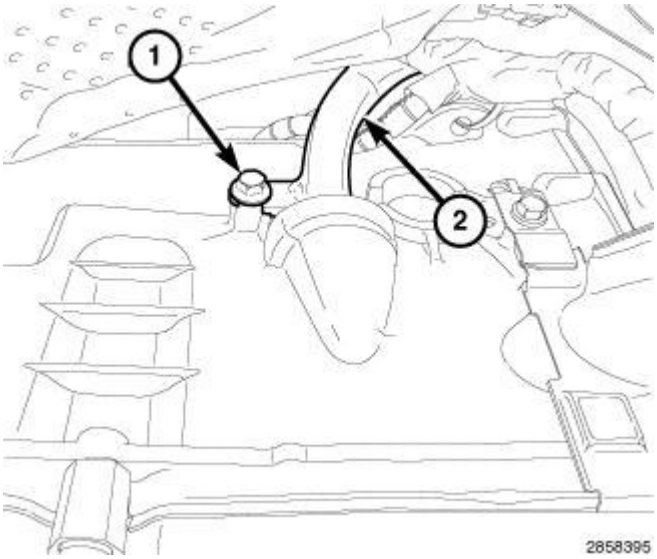

Fig. 71: Transmission Fluid Level Indicator Tube & Bolt
Courtesy of CHRYSLER GROUP, LLC

33. Install the bolt (1) securing the transmission fluid level indicator tube (2) to the transmission housing and tighten to 12 N.m (106 in. lbs.).

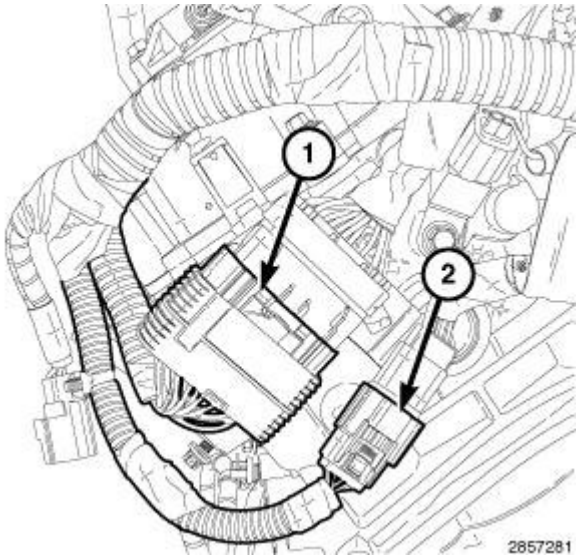

Fig. 72: Engine Injection/Ignition Harness & Engine Oil Pressure/Temperature Harness
Courtesy of CHRYSLER GROUP, LLC

34. Connect the main harness to the engine injection/ignition harness (1) at the rear of the left cylinder head.
35. Connect the main harness to the engine oil pressure/temperature harness (2) at the rear of the left cylinder head.

 © 2011 Mitchell Repair Information Company, LLC.

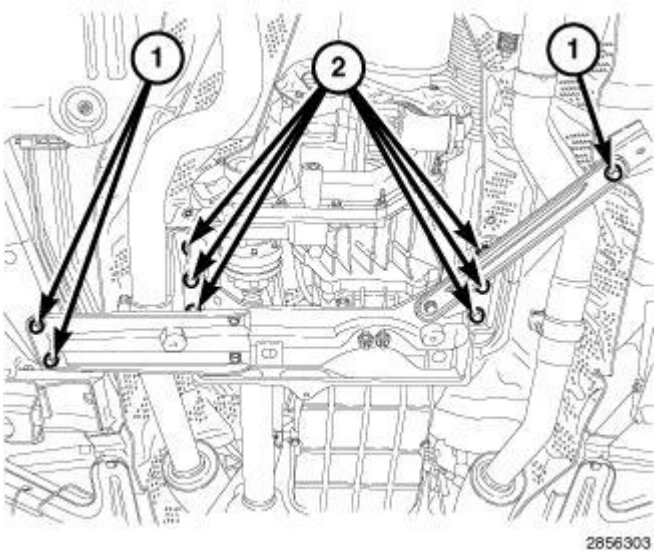

Fig. 73: Crossmember Brace & Bolts
Courtesy of CHRYSLER GROUP, LLC

36. If equipped with AWD, raise the rear of the engine, reinstall six crossmember bolts (2) and three crossmember brace bolts (1). Tighten all bolts to 55 N.m (41 ft. lbs.).

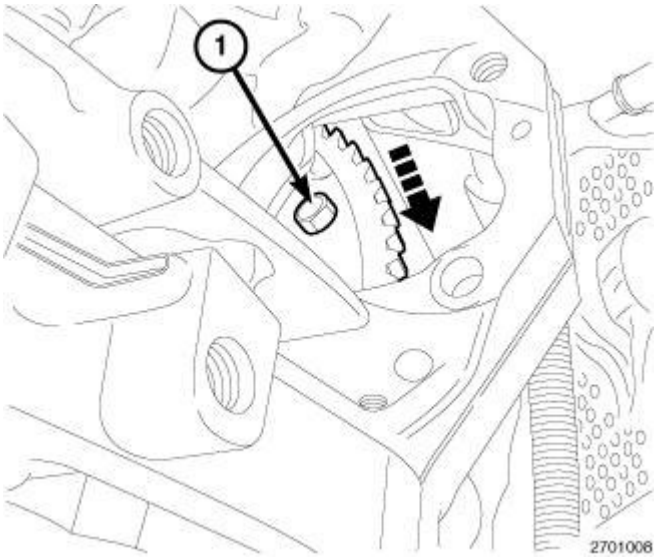

Fig. 74: Torque Converter Bolt
Courtesy of CHRYSLER GROUP, LLC

37. Rotate the crankshaft in a clockwise direction and install the six torque converter bolts (1) through the starter mounting. Tighten the bolts to 42 N.m (31 ft. lbs.).

 © 2011 Mitchell Repair Information Company, LLC.

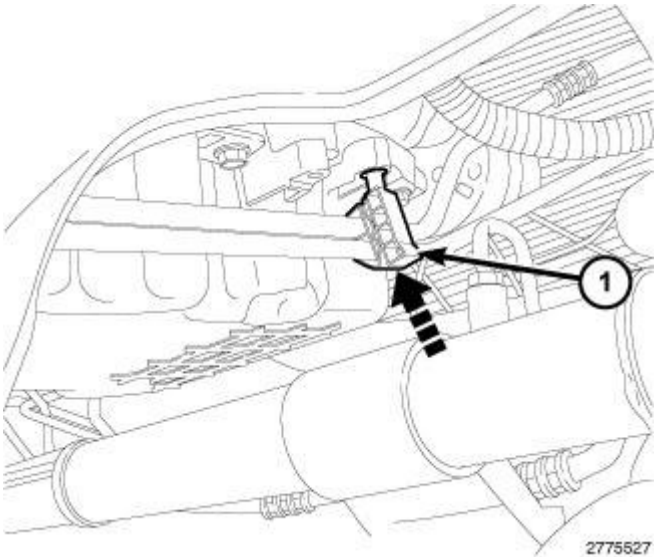

Fig. 75: Transmission Cooler Line Retainer
Courtesy of CHRYSLER GROUP, LLC

38. Clip the transmission cooler line retainer (1) to the oil pan flange.

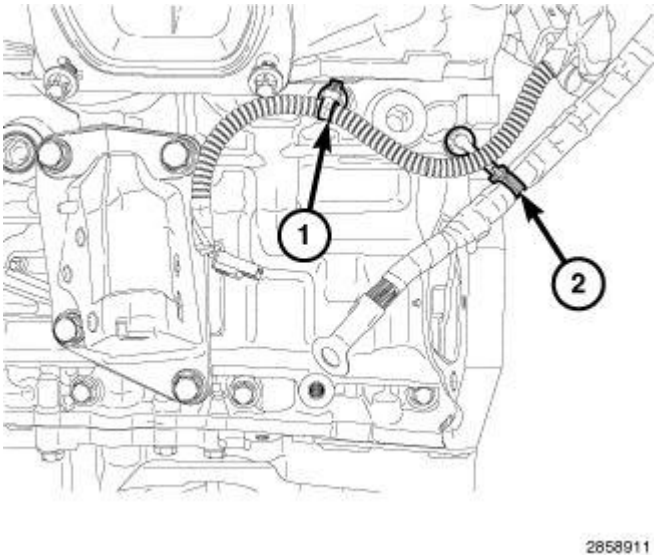

Fig. 76: Wire Harness Retainers
Courtesy of CHRYSLER GROUP, LLC

39. Engage the starter wire harness retainer (2) and the main wire harness retainer (1) to the engine block.
40. Install the starter. Refer to **STARTER, INSTALLATION** .
41. Connect the power cord to the engine block heater (if equipped).

 © 2011 Mitchell Repair Information Company, LLC.

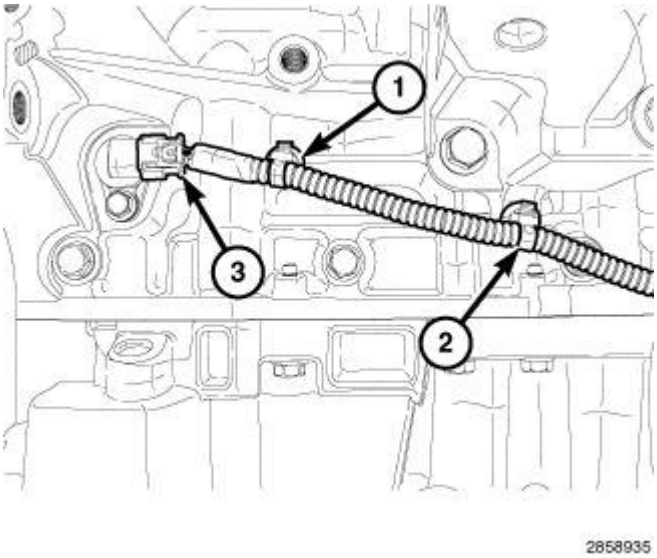

Fig. 77: Main Wire Harness Retainers & CKP Sensor
Courtesy of CHRYSLER GROUP, LLC

42. Connect the main wire harness to the Crankshaft Position (CKP) sensor (3).
43. Engage one main wire harness retainer (1) to the engine block and one main wire harness retainer (2) to the right engine mounting bracket.

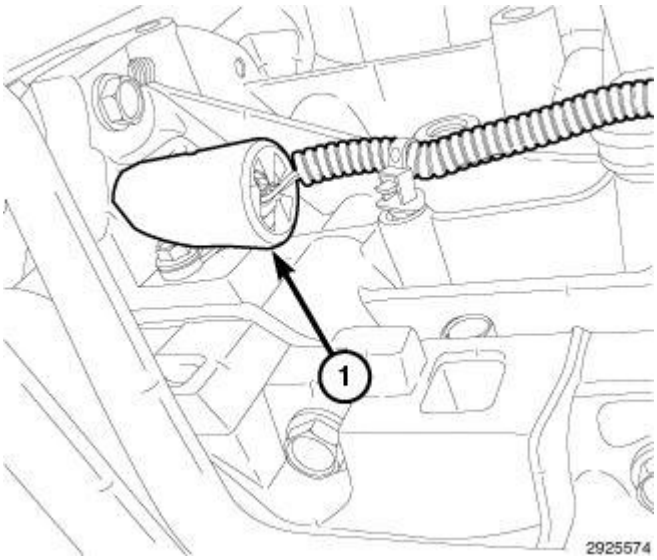

Fig. 78: Heat Shield
Courtesy of CHRYSLER GROUP, LLC

44. Position the heatshield (1) over the crankshaft position (CKP) sensor.

 © 2011 Mitchell Repair Information Company, LLC.

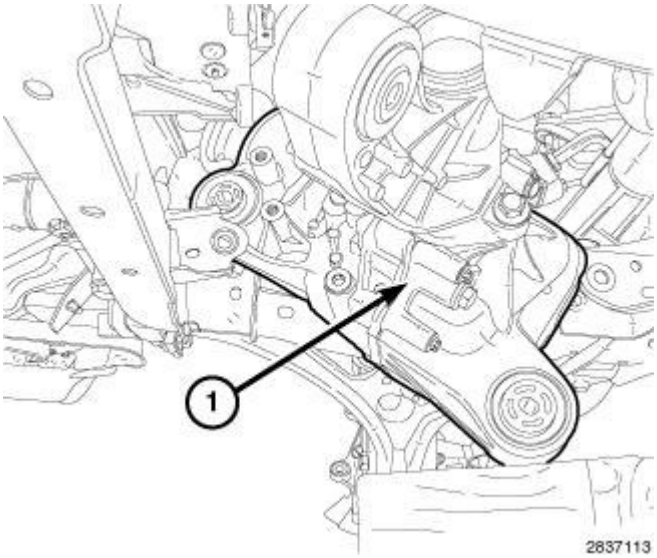

Fig. 79: Front Axle & Axle Bracket
Courtesy of CHRYSLER GROUP, LLC

45. If equipped with AWD, install the front axle (1). Refer to **INSTALLATION** .
46. Lower the vehicle.

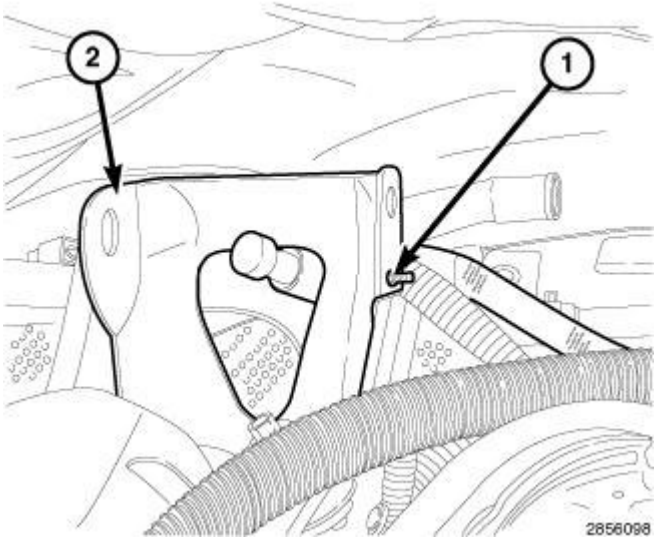

Fig. 80: Transfer Case Vent Hose Retainer & Upper Intake Manifold Support Bracket
Courtesy of CHRYSLER GROUP, LLC

47. If equipped with AWD, engage the transfer case vent hose retainer (1) to the upper intake manifold support bracket (2).

 © 2011 Mitchell Repair Information Company, LLC.

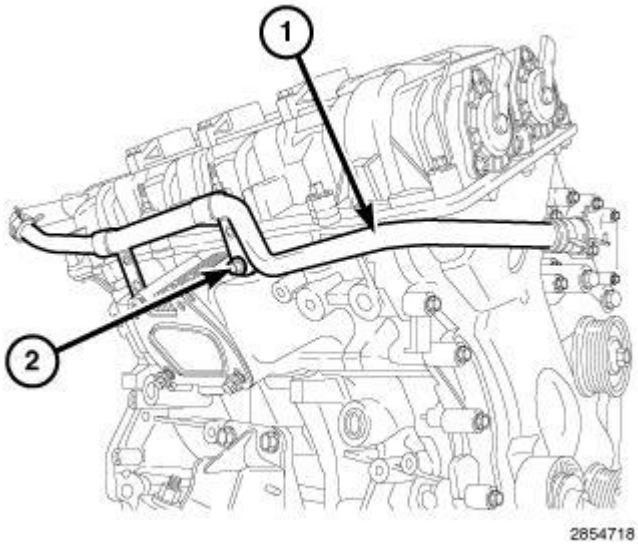

Fig. 81: Heater Core Supply Tube Support Bracket & Retaining Bolt
Courtesy of CHRYSLER GROUP, LLC

48. Install the heater core supply tube (1) with one bolt (2) tightened to 12 N.m (106 in. lbs.).

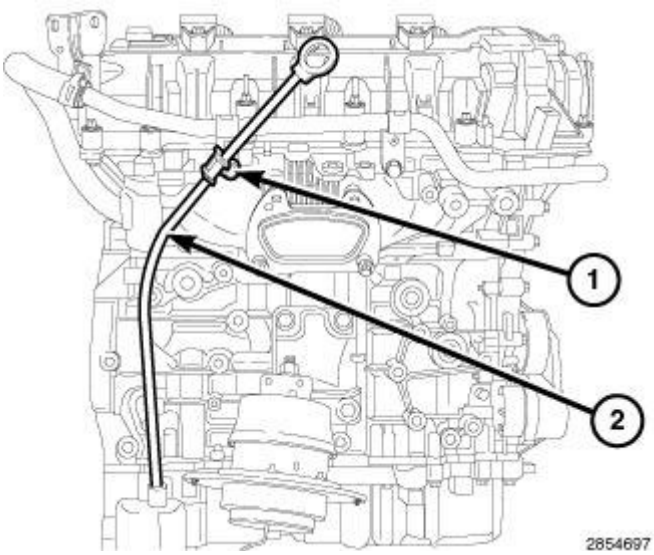

Fig. 82: Oil Level Indicator & Retaining Bolt
Courtesy of CHRYSLER GROUP, LLC

49. Install the oil level indicator (2) with bolt (1) tightened 12 N.m (106 in. lbs.).

 © 2011 Mitchell Repair Information Company, LLC.

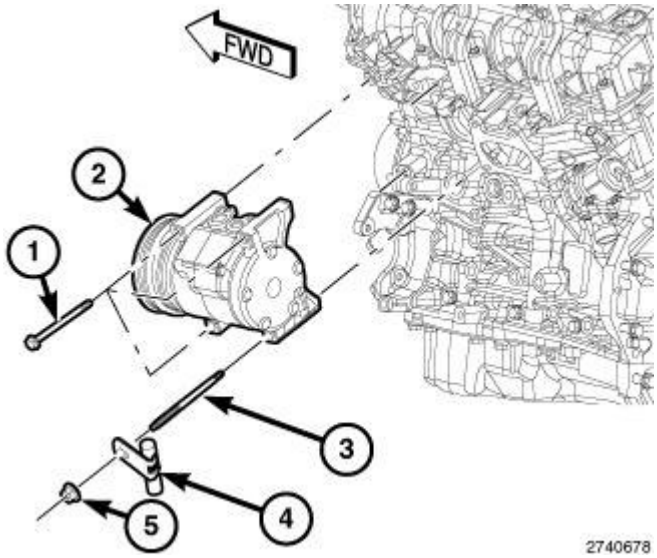

Fig. 83: A/C Compressor, Nut, Stud & Three Bolts
Courtesy of CHRYSLER GROUP, LLC

50. Install the A/C compressor (2) with three bolts (1) tightened to 25 N.m (18 ft. lbs.).

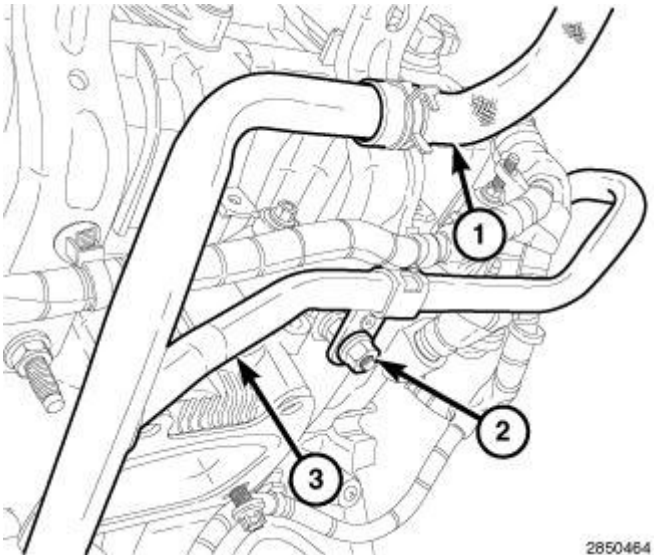

Fig. 84: Heater Core Return Hose, Heater Core Return Tube & Nut
Courtesy of CHRYSLER GROUP, LLC

51. Connect the heater core return hose (1).

 © 2011 Mitchell Repair Information Company, LLC.

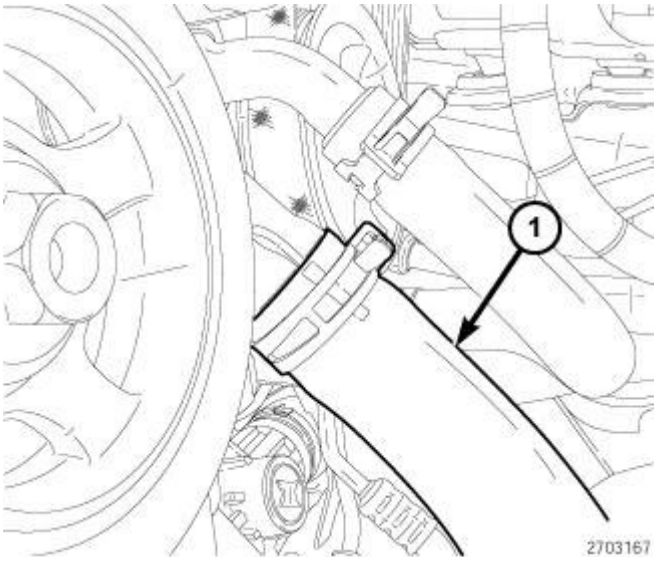

Fig. 85: Lower Radiator Hose
Courtesy of CHRYSLER GROUP, LLC

52. Install the lower radiator hose (1) to the engine coolant pump housing.

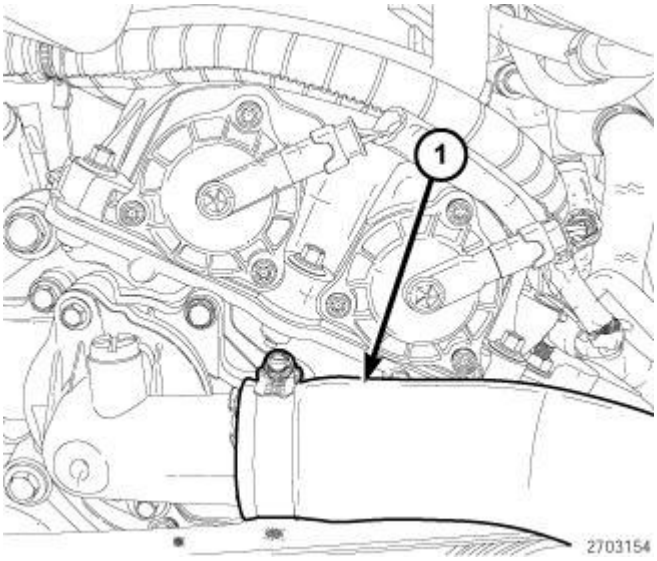

Fig. 86: Upper Radiator Hose
Courtesy of CHRYSLER GROUP, LLC

53. Install the upper radiator hose (1) to the engine thermostat housing.

 © 2011 Mitchell Repair Information Company, LLC.

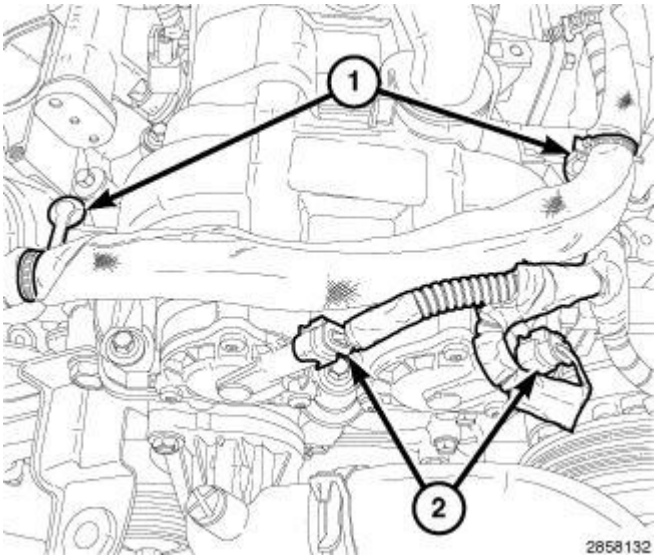

Fig. 87: Variable Valve Timing Solenoid Connectors & Wire Harness Retainers
Courtesy of CHRYSLER GROUP, LLC

54. Connect the electrical connectors (2) to the left variable valve timing solenoids.
55. Engage two starter wire harness retainers (1) to the left cylinder head cover.

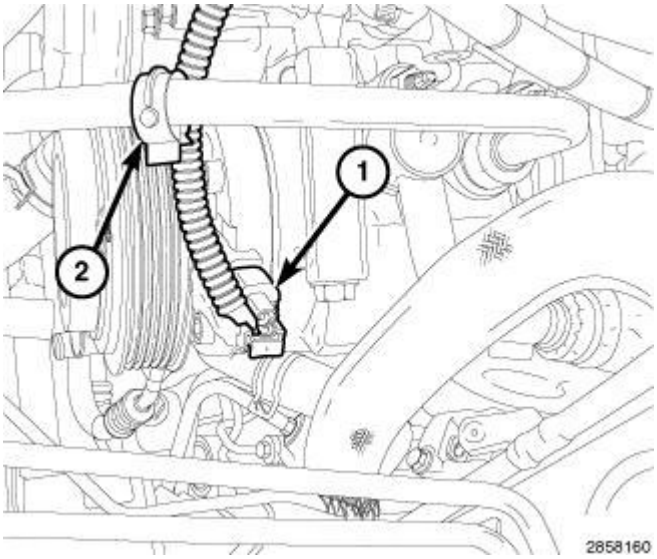

Fig. 88: A/C Compressor Electrical Connector & Wire Harness Retainer
Courtesy of CHRYSLER GROUP, LLC

56. Connect the A/C compressor electrical connector (1) and Engage the wire harness retainer (2) to the A/C compressor discharge line.

 © 2011 Mitchell Repair Information Company, LLC.

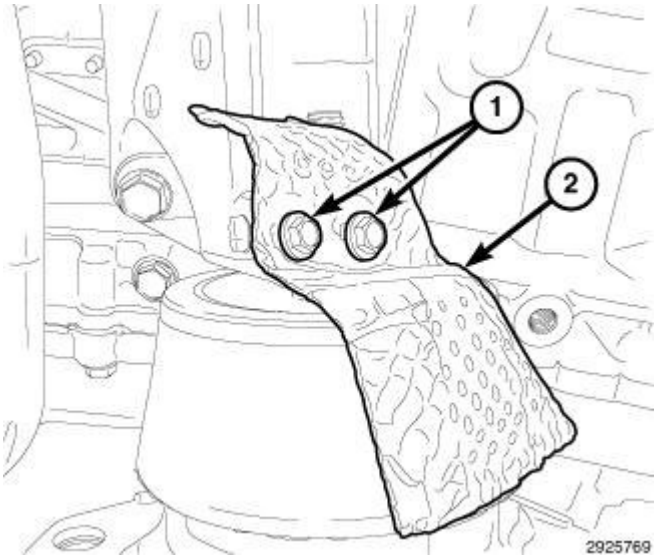

Fig. 89: Engine Mount Heatshield & Bolts
Courtesy of CHRYSLER GROUP, LLC

NOTE: Left engine mount shown in the illustration, right engine mount similar.

57. Install the engine mount heatshield (2) to both the left and right engine mounts with two bolts (1) tightened to 12 N.m (106 in. lbs.).

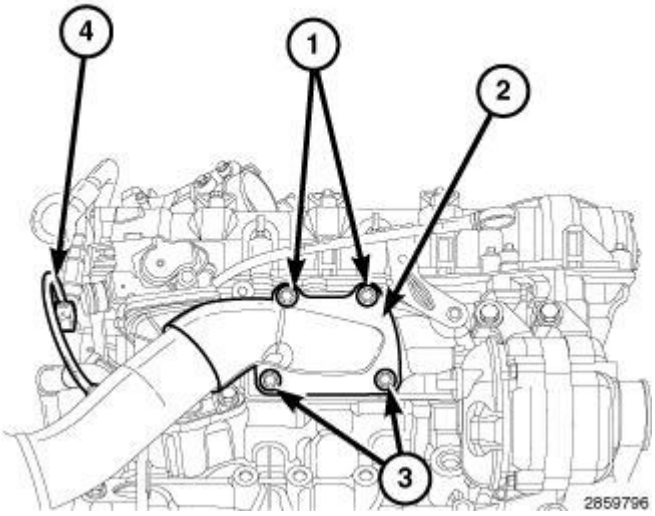

Fig. 90: Right Upstream Oxygen Electrical Sensor Connector, Down Pipe Flanges & Bolts
Courtesy of CHRYSLER GROUP, LLC

NOTE: Right catalytic converter shown in the illustration, left catalytic converter similar.

58. Install the right and left catalytic converters (2) onto the partially installed lower catalytic converter flange bolts (3).

 © 2011 Mitchell Repair Information Company, LLC.

59. Install the upper catalytic converter flange bolts (1) and tighten all M8 bolts to 23 N.m (17 ft. lbs.).
60. Connect the right and left upstream oxygen sensor connectors (4) to the main wire harness.

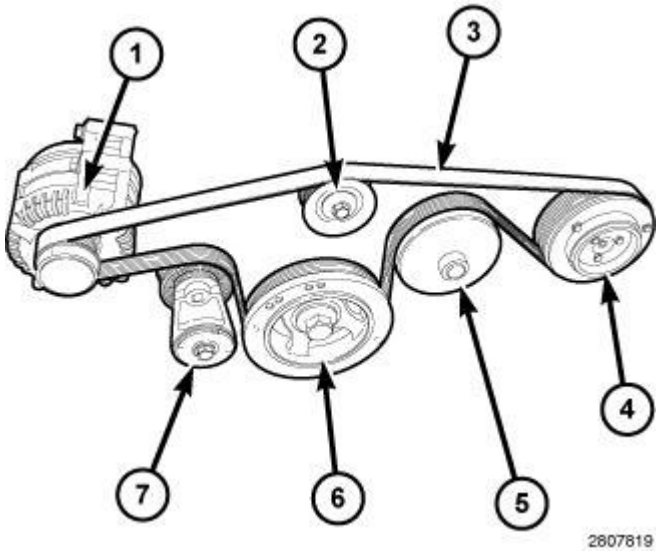

Fig. 91: Idler Pulley, Tensioner Arm, Belt, Idler, Tensioner & Belt Routing
Courtesy of CHRYSLER GROUP, LLC

61. Install the generator (1). Refer to **GENERATOR, INSTALLATION** .
62. Install the accessory drive belt (3). Refer to **BELT, SERPENTINE, INSTALLATION** .

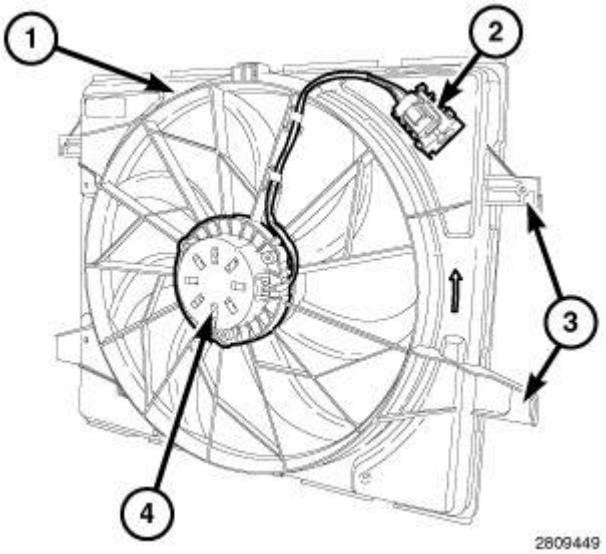

Fig. 92: Cooling Fan Module Components
Courtesy of CHRYSLER GROUP, LLC

63. Install the cooling fan module. Refer to **FAN, COOLING, INSTALLATION** .

 © 2011 Mitchell Repair Information Company, LLC.

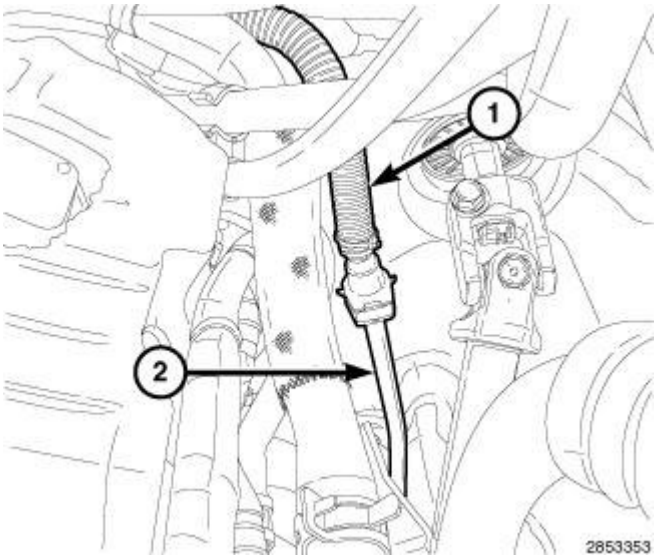

Fig. 93: Fuel Supply Hose At Underbody Fuel Supply Tube
Courtesy of CHRYSLER GROUP, LLC

64. Connect the fuel supply hose (1) to the underbody fuel tube (2). Refer to **FITTING, QUICK CONNECT, STANDARD PROCEDURE** .

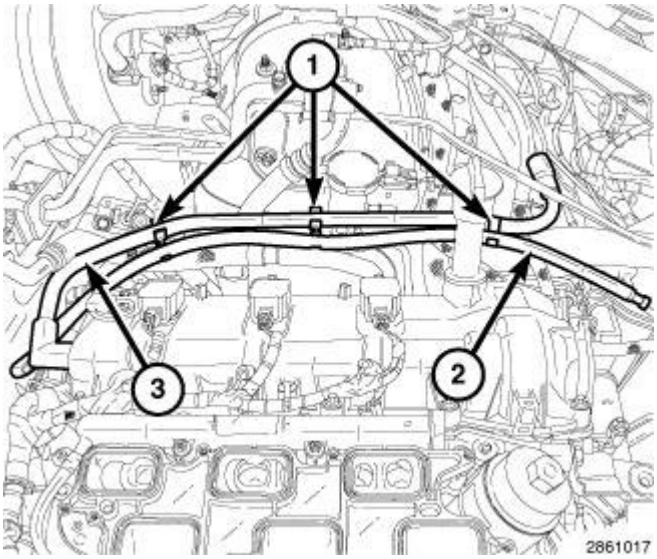

Fig. 94: Transmission Breather Hose, Make-Up Air Tube & Clips
Courtesy of CHRYSLER GROUP, LLC

65. Install the make-up air tube (3) to the left cylinder head cover and engage the clips (1) to the transmission breather hose (2).

 © 2011 Mitchell Repair Information Company, LLC.

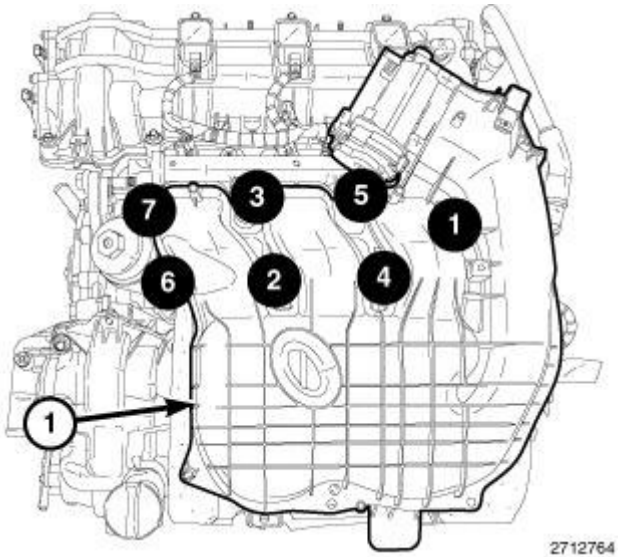

Fig. 95: Upper Intake Manifold Bolt Tightening Sequence
Courtesy of CHRYSLER GROUP, LLC

66. Install the upper intake manifold and insulator. Refer to **MANIFOLD, INTAKE, INSTALLATION**.

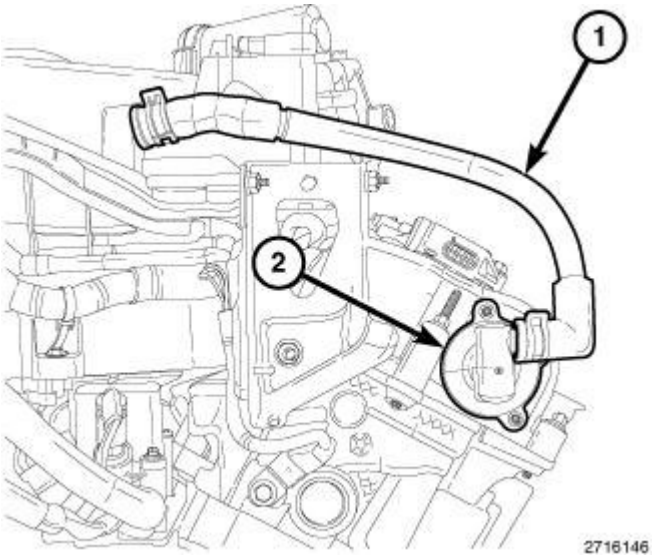

Fig. 96: PCV Hose & PCV Valve
Courtesy of CHRYSLER GROUP, LLC

67. Install the PCV hose (1) to the PCV valve (2).

 © 2011 Mitchell Repair Information Company, LLC.

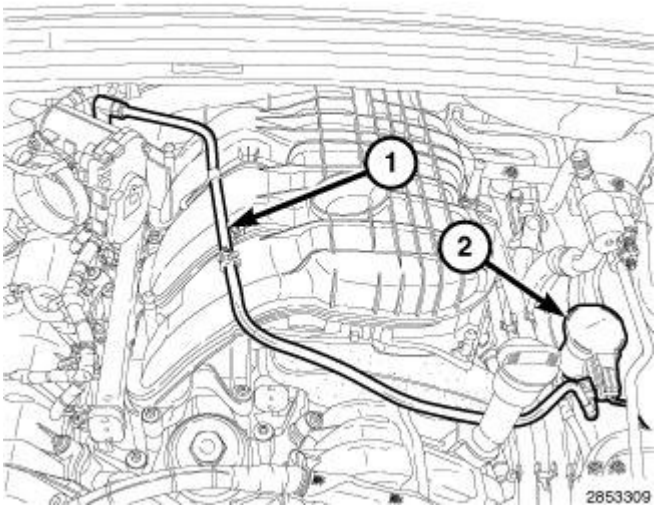

Fig. 97: Vapor Purge Tube & Fuel Purge Solenoid
Courtesy of CHRYSLER GROUP, LLC

68. Install the vapor purge tube (1) to the fuel purge solenoid (2). Refer to **FITTING, QUICK CONNECT, STANDARD PROCEDURE** .

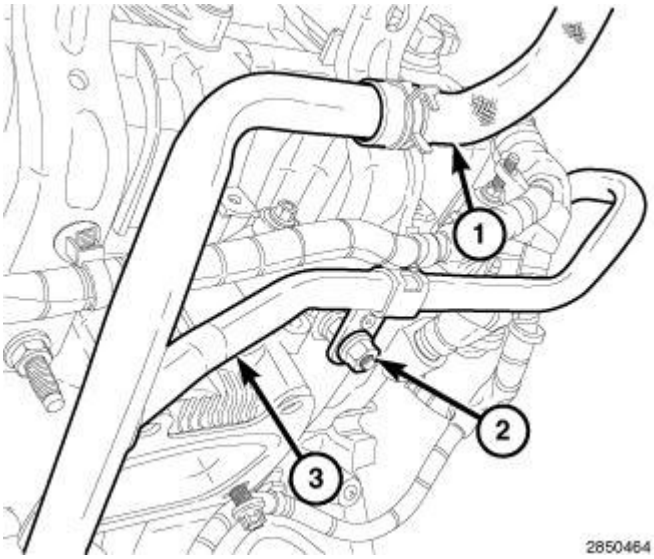

Fig. 98: Heater Core Return Hose, Heater Core Return Tube & Nut
Courtesy of CHRYSLER GROUP, LLC

69. Install the nut (2) to the support bracket of the heater core return tube (3) and tighten to 12 N.m (106 in. lbs.).
70. Raise and support the vehicle. Refer to **HOISTING, STANDARD PROCEDURE** .

 © 2011 Mitchell Repair Information Company, LLC.

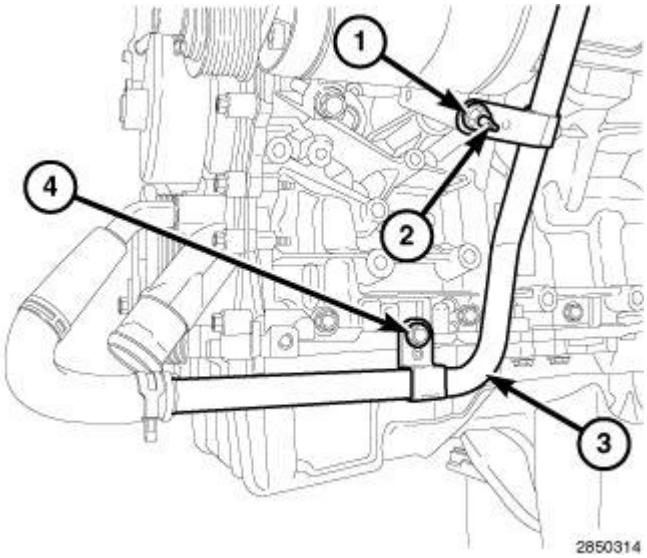

Fig. 99: Heater Core Return Tube, Nut & Bolt
Courtesy of CHRYSLER GROUP, LLC

71. Install the A/C compressor mounting stud (2) and tighten to 25 N.m (18 ft. lbs.).
72. Install the nut (1) and bolt (4) to the support brackets of the heater core return tube (3). Tighten to 12 N.m (106 in. lbs.).
73. If equipped, install the transfer case skid plate, the transmission skid plate, the front suspension skid plate and the front skid plate. Refer to FRAME AND BUMPERS **UNDER BODY PROTECTION** .
74. Lower the vehicle.

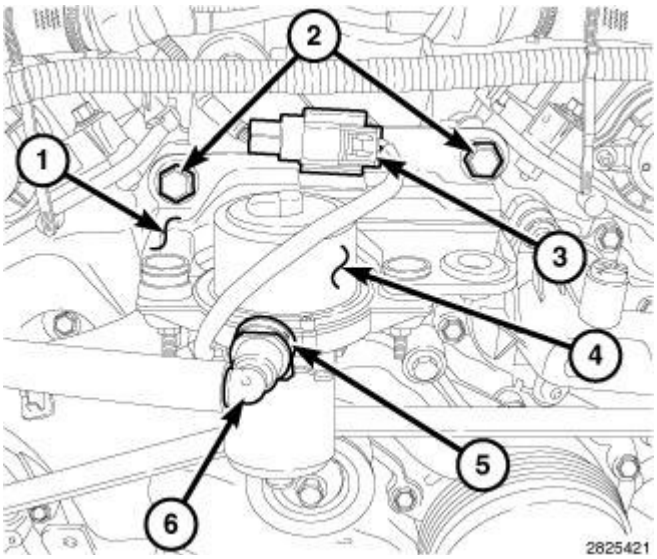

Fig. 100: Mounting Bracket, Bolts, Electrical Connector, Vacuum Pump, Locking Tab & Quick-Connect Type End
Courtesy of CHRYSLER GROUP, LLC

75. Install the electric vacuum pump (4) and mounting bracket (1). Refer to **PUMP, ELECTRIC VACUUM, INSTALLATION** .

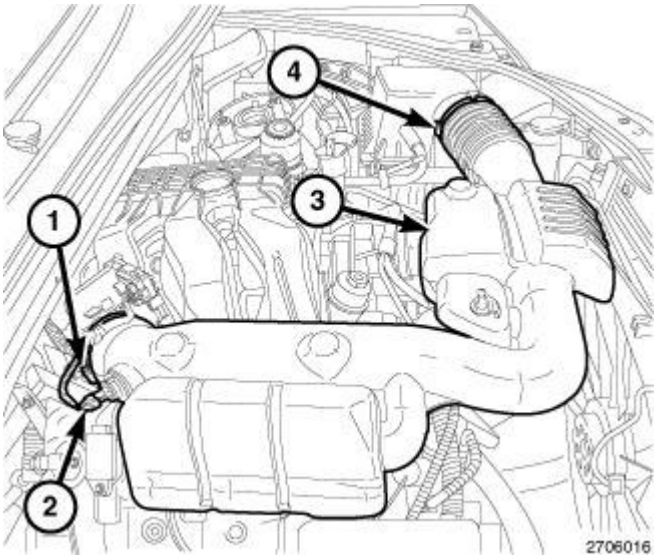

Fig. 101: Air Inlet Hose, Air Temperature (IAT) Sensor Connector & Clamps
Courtesy of CHRYSLER GROUP, LLC

76. Install the resonator (3) and the air cleaner body. Refer to **BODY, AIR CLEANER, INSTALLATION**.
77. If removed, install the oil filter and fill the engine crankcase with the proper oil to the correct level. Refer to ENGINE/LUBRICATION/OIL **STANDARD PROCEDURE** .
78. Fill the cooling system. Refer to **STANDARD PROCEDURE** .

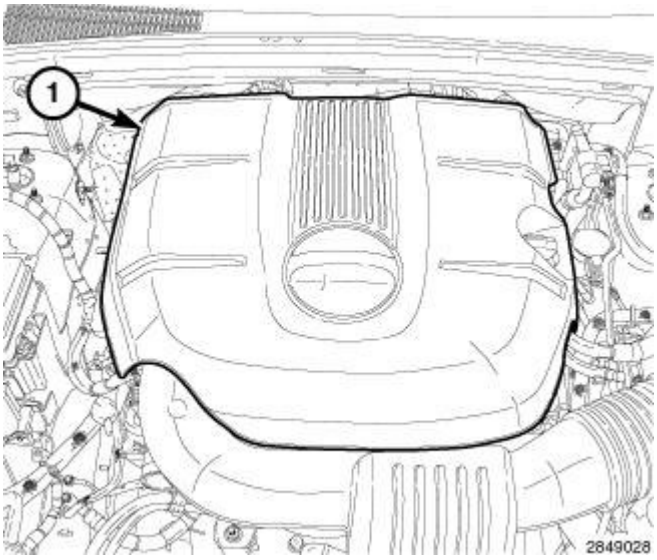

Fig. 102: Engine Cover
Courtesy of CHRYSLER GROUP, LLC

79. Install the engine cover (1).
80. Install the hood. Refer to **HOOD, INSTALLATION** .
81. Connect the negative battery cable and tighten nut to 5 N.m (45 in. lbs.).
82. Run the engine until it reaches normal operating temperature. Check cooling system for correct fluid

 © 2011 Mitchell Repair Information Company, LLC.

level. Refer to **STANDARD PROCEDURE** .

NOTE: **The Cam/Crank Variation Relearn procedure must be performed using the scan tool anytime there has been a repair/replacement made to a powertrain system, for example: flywheel, valvetrain, camshaft and/or crankshaft sensors or components.**

SPECIAL TOOLS

SPECIAL TOOLS

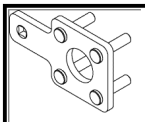	10198 - Holder, Vibration Damper (Originally Shipped In Kit Number(s) 10223.)
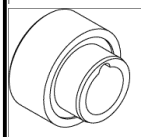	10199 - Installer, Crankshaft Front Oil Seal (Originally Shipped In Kit Number(s) 10223.)
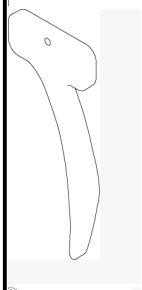	10200-1 - Holder, Timing Chain, Left Side
	10200-3 - Pin
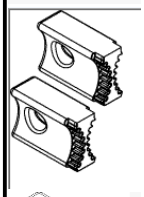	10202 - Locks, Camshaft/Phaser
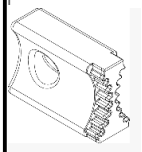	10202-1 - Lock, Camshaft/Phaser, Right Side
	10202-2 - Lock, Camshaft/Phaser, Left Side
	10224 - Adapter, Valve Spring (Originally Shipped In Kit Number(s) 10223.) 10242-1 - Brackets, Engine Lifting, Left Side (Originally Shipped In Kit Number(s) 10223.)

 © 2011 Mitchell Repair Information Company, LLC.

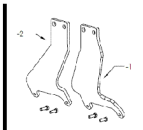
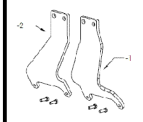

10242-2 - Brackets, Engine Lifting, Right Side
(Originally Shipped In Kit Number(s) 10223.)

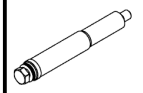

10255 - Installer, Spark Plug Tube

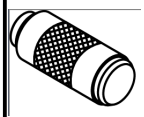

10256 - Installer, Cam Installer, Cam Sensor/ Spark Plug Tube Seal
(Originally Shipped In Kit Number(s) 10256.)

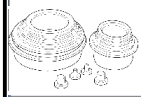

10368 - Set, Universal Protective Cap

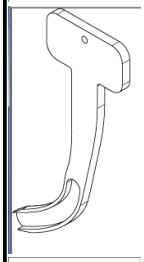

10369 - Holder, Timing Chain

7700-A - Tester, Cooling System

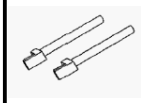

8189 - Guide Pins
(Originally Shipped In Kit Number(s) 8180, 8180CC, 8263, 8263CC.)

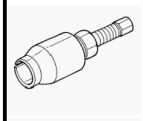

8511 - Remover, Seal
(Originally Shipped In Kit Number(s) 8283, 8283CC, 8527, 8527CC, 8575, 8575CC, 9975.)

8514 - Pins, Tensioner
(Originally Shipped In Kit Number(s) 8283, 8283CC, 8527, 8527CC, 8575, 8575CC, 9975.)

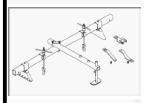

8534B - Fixture, Driveline Support
(Originally Shipped In Kit Number(s) 8534, 8534B, 8849, 9565.)

C-119 - Cylinder Indicator

C-3292A - Gauge, Pressure

C-3339A - Set, Dial Indicator
(Originally Shipped In Kit Number(s) 9202.)

 © 2011 Mitchell Repair Information Company, LLC.

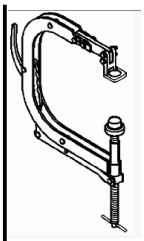	C-3422-D - Compressor, Valve Spring
	C-3685-A - Bloc-Chek Kit
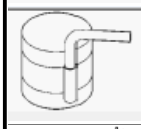	C-385 - Compressor, Piston
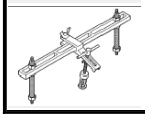	MD998772A - Compressor, Valve Spring (Originally Shipped In Kit Number(s) 8678, 8853, 8854.)

AIR INTAKE SYSTEM

AIR CLEANER

REMOVAL

REMOVAL

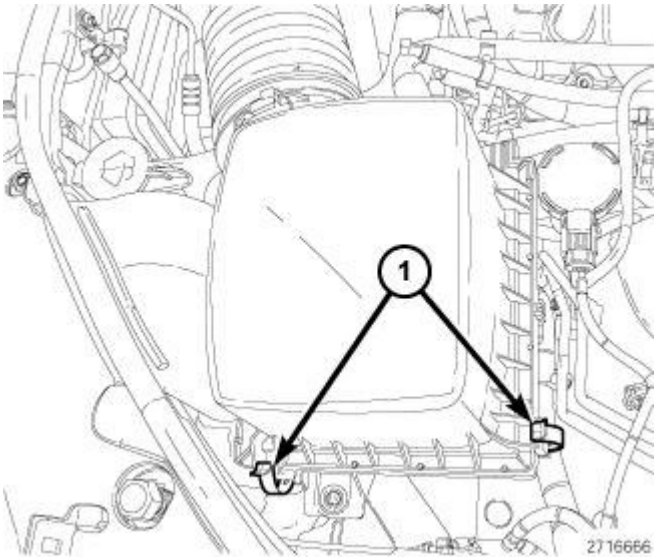

Fig. 103: Air Cleaner Housing Cover Latches
Courtesy of CHRYSLER GROUP, LLC

1. Release the air cleaner housing cover latches (1).

 © 2011 Mitchell Repair Information Company, LLC.

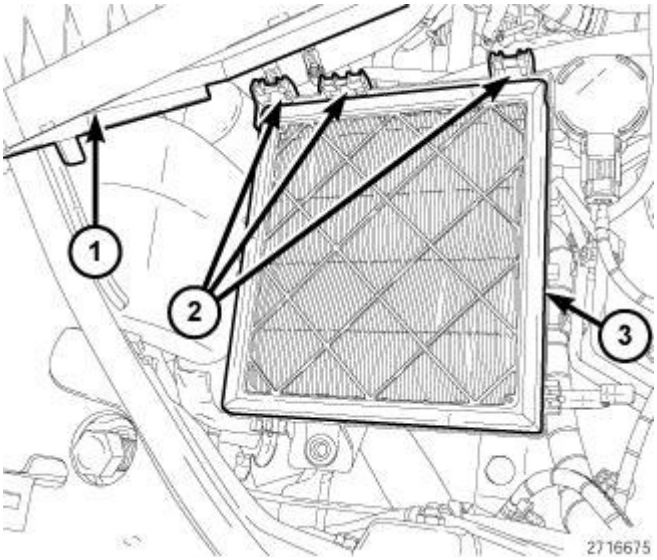

Fig. 104: Air Cleaner Housing Cover, Tabs & Air Cleaner Element
Courtesy of CHRYSLER GROUP, LLC

2. Lift the cover (1) and release the cover to housing alignment tabs (2).
3. Remove the air cleaner element (3).

CAUTION: Do not use compressed air to clean out the air cleaner housing without first covering the air inlet to the throttle body. Dirt or foreign objects could enter the intake manifold causing engine damage.

4. Remove any dirt or debris from the bottom of the air cleaner housing.

INSTALLATION

INSTALLATION

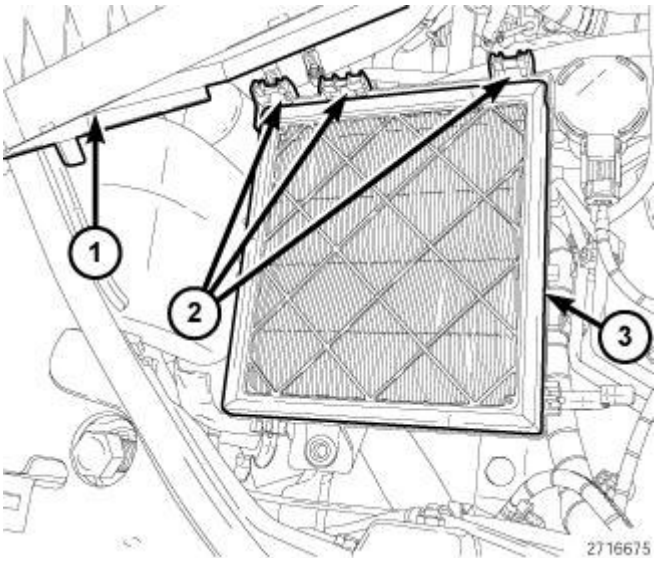

 © 2011 Mitchell Repair Information Company, LLC.

Fig. 105: Air Cleaner Housing Cover, Tabs & Air Cleaner Element
Courtesy of CHRYSLER GROUP, LLC

1. Install the air cleaner element (3) into the air cleaner housing.
2. Position the cover (1) so that the alignment tabs insert into the lower housing (2).

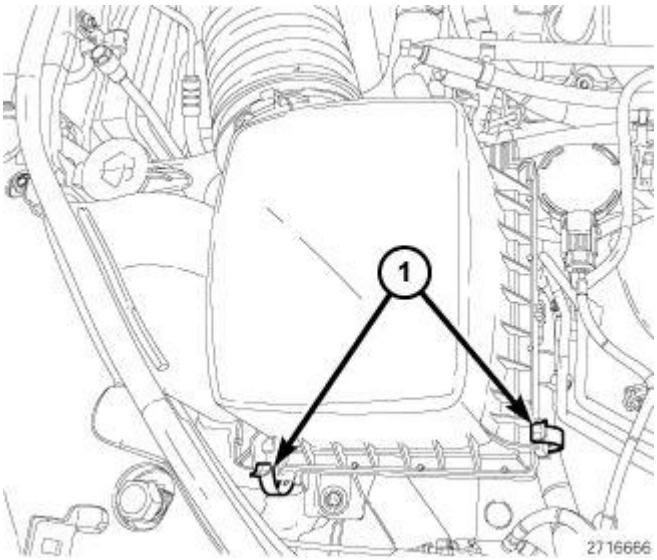

Fig. 106: Air Cleaner Housing Cover Latches
Courtesy of CHRYSLER GROUP, LLC

3. Seat the cover onto the housing and secure the housing cover latches (1).

BODY, AIR CLEANER

REMOVAL

REMOVAL

1. Disconnect and isolate the negative battery cable.

 © 2011 Mitchell Repair Information Company, LLC.

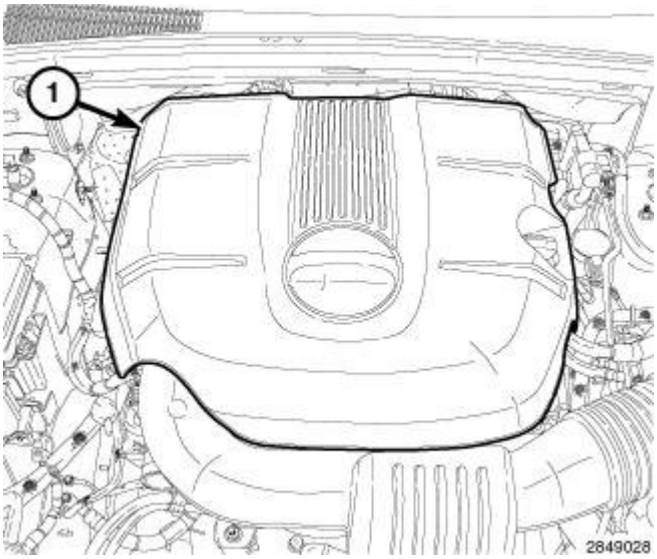

Fig. 107: Engine Cover
Courtesy of CHRYSLER GROUP, LLC

2. Remove the engine cover (1).

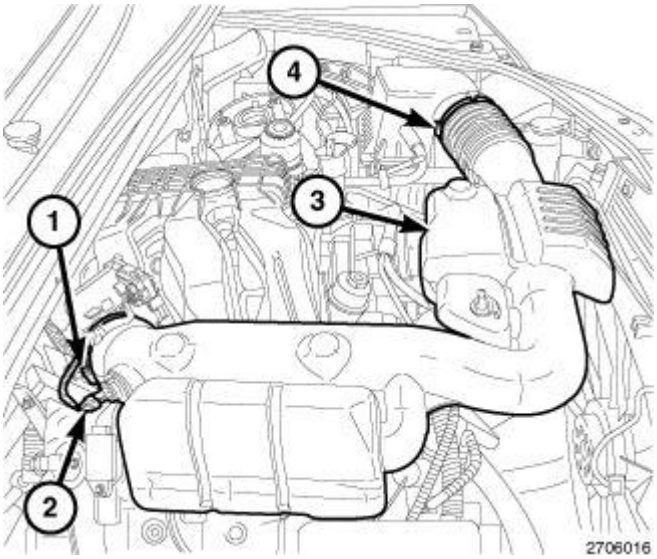

Fig. 108: Air Inlet Hose, Air Temperature (IAT) Sensor Connector & Clamps
Courtesy of CHRYSLER GROUP, LLC

3. Disconnect the electrical connector (2) from the Inlet Air Temperature (IAT) sensor.
4. Loosen the clamp (1) at the throttle body.
5. Loosen the clamp (4) at the air cleaner body.
6. Remove the resonator (3).

 © 2011 Mitchell Repair Information Company, LLC.

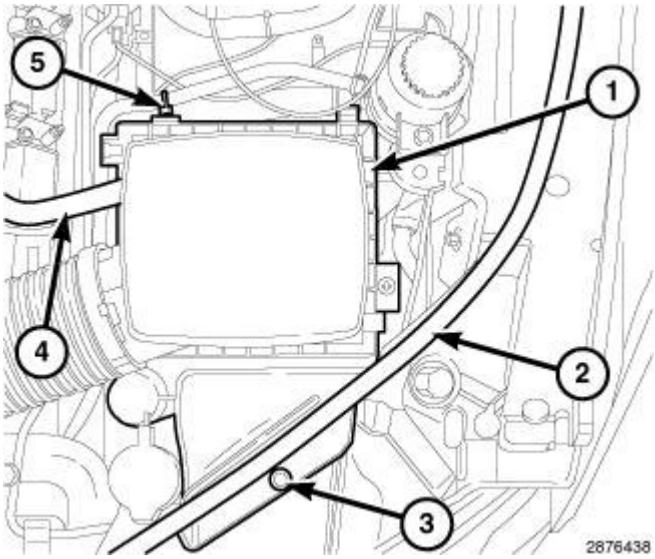

Fig. 109: Air Cleaner Body, Hood Seal, Push Pin, Air Makeup Hose & Hose Retainer
Courtesy of CHRYSLER GROUP, LLC

7. Disconnect the fresh air makeup hose (4) from the air cleaner body.
8. Disengage the hose retainer (5) from the air cleaner body.
9. Remove the push pin (3).
10. Reposition the hood seal (2) and pull the air cleaner body (1) straight up off of the locating pins.

INSTALLATION

INSTALLATION

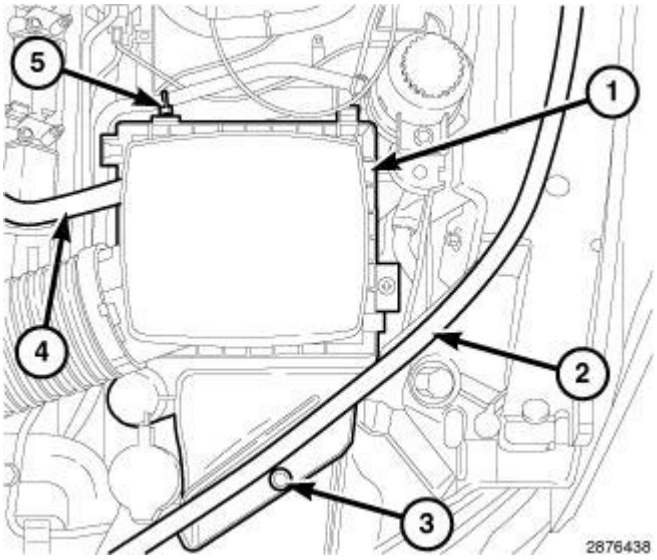

Fig. 110: Air Cleaner Body, Hood Seal, Push Pin, Air Makeup Hose & Hose Retainer
Courtesy of CHRYSLER GROUP, LLC

1. Install the air cleaner body (1) straight down on the locating pins while routing the air inlet under the

 © 2011 Mitchell Repair Information Company, LLC.

hood seal (2).
2. Install the push pin (3).
3. Engage the hose retainer (5) to the air cleaner body.
4. Install the fresh air makeup hose (4) to the air cleaner body.

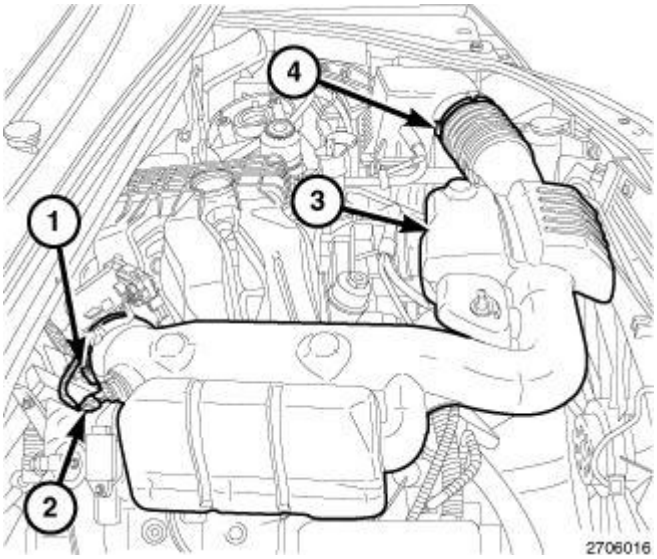

Fig. 111: Air Inlet Hose, Air Temperature (IAT) Sensor Connector & Clamps
Courtesy of CHRYSLER GROUP, LLC

5. Install the resonator (3) to the air cleaner body and the throttle body. Tighten the clamps (1) and (4) to 4 N.m (35 in. lbs.).
6. Connect the electrical connector (2) to the Inlet Air Temperature (IAT) sensor.

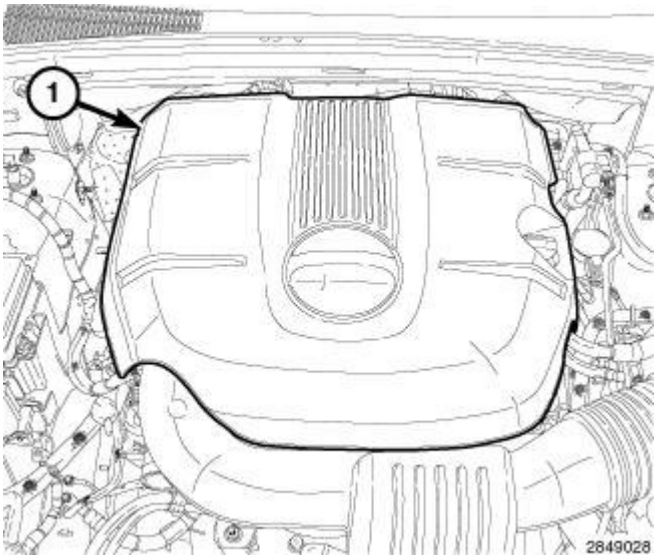

Fig. 112: Engine Cover
Courtesy of CHRYSLER GROUP, LLC

 © 2011 Mitchell Repair Information Company, LLC.

7. Install the engine cover (1).
8. Connect the negative battery cable and tighten nut to 5 N.m (45 in. lbs.).

CYLINDER HEAD

DESCRIPTION

DESCRIPTION

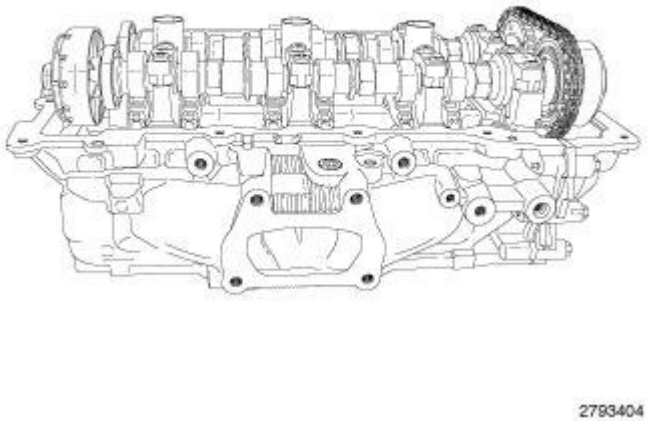

Fig. 113: Aluminum Cylinder Head
Courtesy of CHRYSLER GROUP, LLC

The 3.6L aluminum cylinder heads are a unique design with left and right castings. The exhaust manifolds are integrated into the cylinder heads. The cylinder head features four valves per cylinder with pressed in powdered metal valve guides. The valve guides are not serviceable. The DOHC valvetrain uses roller rocker arms with hydraulic lifters. The cylinder head's camshaft bearing caps are made of powdered metal and the location and direction of each cap is marked on the side of the caps. The spark plug tubes are pressed into the cylinder heads and sealed in place. The tubes are a thin wall design and caution must be taken when working in the spark plug tube area.

DIAGNOSIS AND TESTING

CYLINDER HEAD GASKET

A cylinder head gasket leak can be located between adjacent cylinders or between a cylinder and the adjacent water jacket.

Possible indications of the cylinder head gasket leaking between adjacent cylinders are:

- Loss of engine power
- Engine misfiring

 © 2011 Mitchell Repair Information Company, LLC.

- Poor fuel economy

Possible indications of the cylinder head gasket leaking between a cylinder and an adjacent water jacket are:

- Engine overheating
- Loss of coolant
- Excessive steam (white smoke) emitting from exhaust
- Coolant foaming

CYLINDER-TO-CYLINDER LEAKAGE TEST

To determine if an engine cylinder head gasket is leaking between adjacent cylinders, follow the procedures in Cylinder Compression Pressure Test. Refer to **CYLINDER COMPRESSION PRESSURE LEAKAGE** . An engine cylinder head gasket leaking between adjacent cylinders will result in approximately a 50 - 70% reduction in compression pressure.

CYLINDER-TO-WATER JACKET LEAKAGE TEST

WARNING: USE EXTREME CAUTION WHEN THE ENGINE IS OPERATING WITH COOLANT PRESSURE CAP REMOVED.

VISUAL TEST METHOD

With the engine cool, remove the coolant pressure cap. Start the engine and allow it to warm up until thermostat opens.

If a large combustion/compression pressure leak exists, bubbles will be visible in the coolant.

COOLING SYSTEM TESTER METHOD

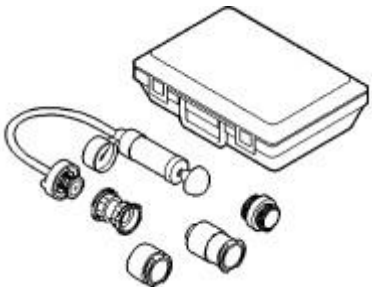

Fig. 114: Cooling System Pressure Tester - 7700a
Courtesy of CHRYSLER GROUP, LLC

WARNING: WITH THE COOLING SYSTEM TESTER IN PLACE, PRESSURE WILL BUILD UP FAST. EXCESSIVE PRESSURE BUILT UP BY CONTINUOUS ENGINE OPERATION MUST BE RELEASED TO A SAFE PRESSURE POINT. NEVER PERMIT THE PRESSURE TO EXCEED 138 kPa (20 psi).

 © 2011 Mitchell Repair Information Company, LLC.

Install Cooling System Tester (special tool #7700-A, Tester, Cooling System) or equivalent to pressure cap neck. Start the engine and observe the tester's pressure gauge. If gauge pulsates with every power stroke of a cylinder a combustion pressure leak is evident.

CHEMICAL TEST METHOD

Fig. 115: Bloc-Chek-Kit - C-3685-A
Courtesy of CHRYSLER GROUP, LLC

Combustion leaks into the cooling system can also be checked by using Bloc-Chek Kit (special tool #C-3685-A, Bloc-Chek Kit) or equivalent. Perform test following the procedures supplied with the tool kit.

HYDRAULIC LASH ADJUSTER

A tappet-like noise may be produced from several components. Check the following components.

1. Engine oil level too high or too low. This may cause aerated oil to enter the adjusters and cause them to be spongy.
2. Insufficient running time after rebuilding cylinder head. Low speed running up to 1 hour may be required.
3. Turn engine off and let set for a few minutes before restarting. Repeat this several times after engine has reached normal operating temperature.
4. Low oil pressure.
5. The oil passage in cylinder head gasket or the oil passage to the cylinder head is plugged with debris.
6. Air ingested into oil due to broken or cracked oil pump pick up.
7. Worn valve guides.
8. Rocker arm ears contacting valve spring retainer.
9. Rocker arm loose, adjuster stuck or at maximum extension and still leaves lash in the system.
10. Oil leak or excessive cam bore wear in cylinder head.
11. Faulty lash adjuster.
    - Check lash adjusters for "sponginess" while installed in cylinder head and cam on camshaft at base circle. Depress part of rocker arm over adjuster. Normal adjusters should feel firm when pressed quickly. When pressed very slowly, lash adjusters should collapse.
    - Remove suspected lash adjusters, and replace.
    - Before installation, make sure adjusters are full of oil. This can be verified by little plunger travel when lash adjuster is depressed quickly.

REMOVAL

LEFT

 © 2011 Mitchell Repair Information Company, LLC.

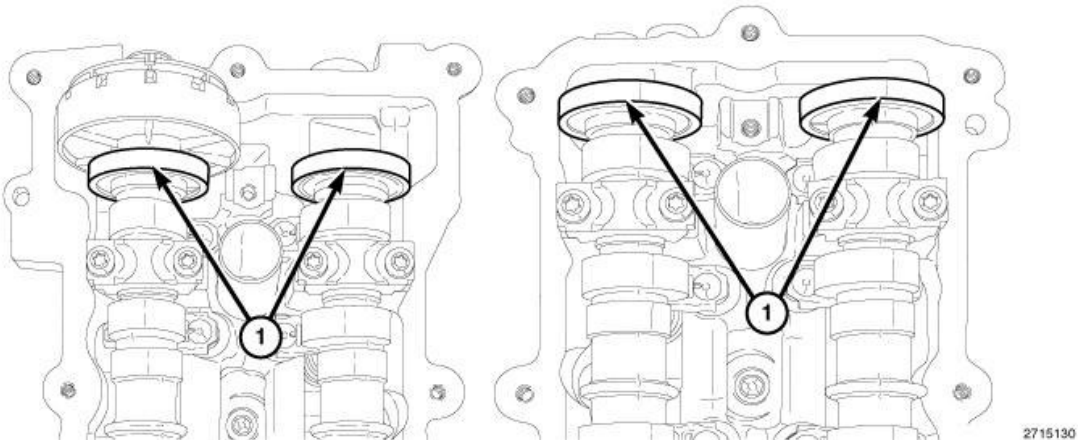

Fig. 116: Magnetic Timing Wheels
Courtesy of CHRYSLER GROUP, LLC

CAUTION: The magnetic timing wheels (1) must not come in contact with magnets (pickup tools, trays, etc.) or any other strong magnetic field. This will destroy the timing wheels ability to correctly relay camshaft position to the camshaft position sensor.

1. Perform the fuel pressure release procedure. Refer to **FUEL DELIVERY, GAS, STANDARD PROCEDURE** .
2. Disconnect and isolate the negative battery cable.

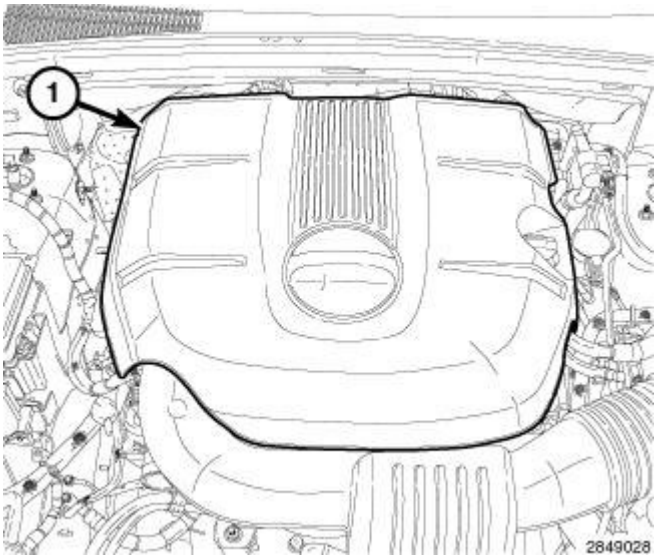

Fig. 117: Engine Cover
Courtesy of CHRYSLER GROUP, LLC

3. Remove the engine cover (1).

 © 2011 Mitchell Repair Information Company, LLC.

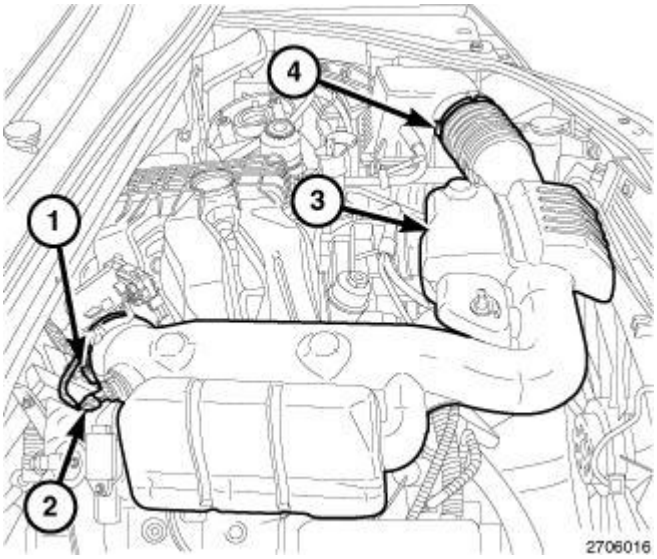

Fig. 118: Air Inlet Hose, Air Temperature (IAT) Sensor Connector & Clamps
Courtesy of CHRYSLER GROUP, LLC

4. Remove the air inlet hose (3) and the air cleaner body. Refer to **BODY, AIR CLEANER, REMOVAL**.

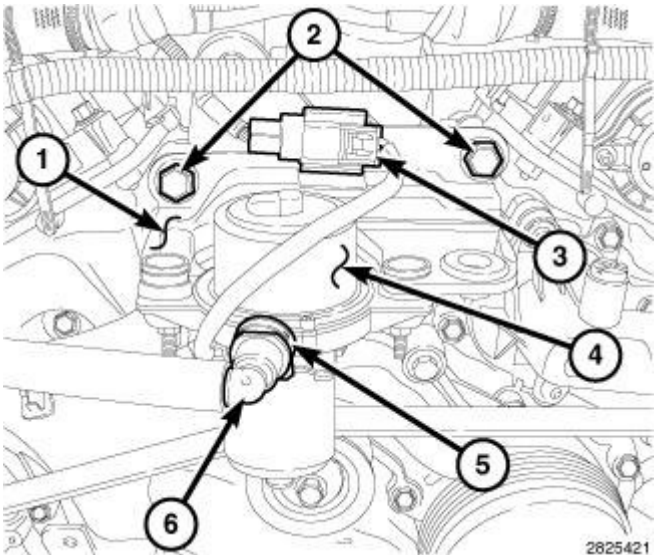

Fig. 119: Mounting Bracket, Bolts, Electrical Connector, Vacuum Pump, Locking Tab & Quick-Connect Type End
Courtesy of CHRYSLER GROUP, LLC

5. Remove the electric vacuum pump (4) and mounting bracket (1). Refer to **PUMP, ELECTRIC VACUUM, REMOVAL** .
6. Raise and support the vehicle. Refer to **HOISTING, STANDARD PROCEDURE** .
7. If equipped, remove the front skid plate and front suspension skid plate (Refer to FRAME AND BUMPERS **UNDER BODY PROTECTION**).
8. Drain the cooling system. Refer to **STANDARD PROCEDURE** .

 © 2011 Mitchell Repair Information Company, LLC.

9. Drain the engine oil. Refer to ENGINE/LUBRICATION/OIL **STANDARD PROCEDURE** .

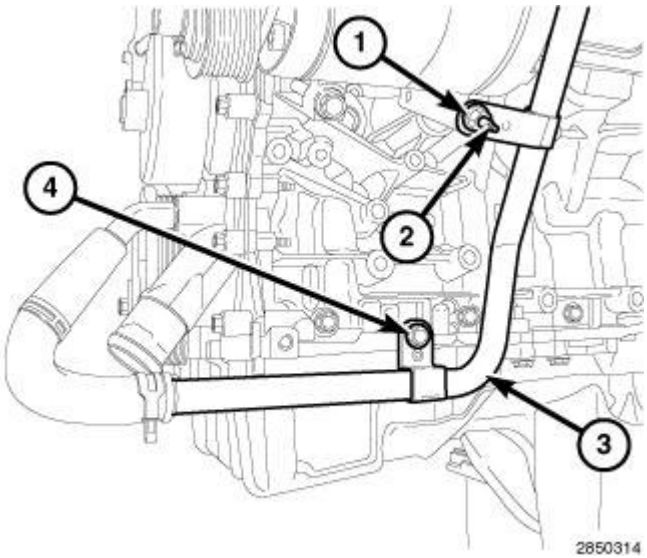

Fig. 120: Heater Core Return Tube, Nut & Bolt
Courtesy of CHRYSLER GROUP, LLC

NOTE: Power steering pump not shown in the illustration.

10. Remove the nut (1) and bolt (4) from the support brackets of the heater core return tube (3).
11. Remove the A/C compressor mounting stud (2).

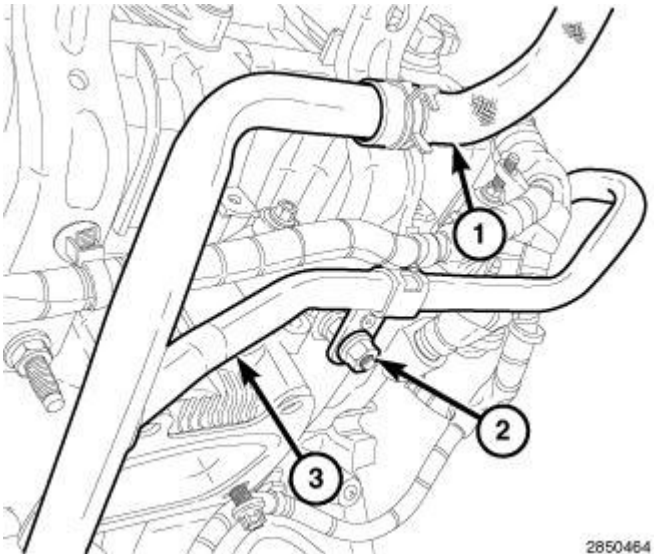

Fig. 121: Heater Core Return Hose, Heater Core Return Tube & Nut
Courtesy of CHRYSLER GROUP, LLC

12. Lower the vehicle.
13. Remove the nut (2) from the support bracket of the heater core return tube (3) and reposition the tube.

 © 2011 Mitchell Repair Information Company, LLC.

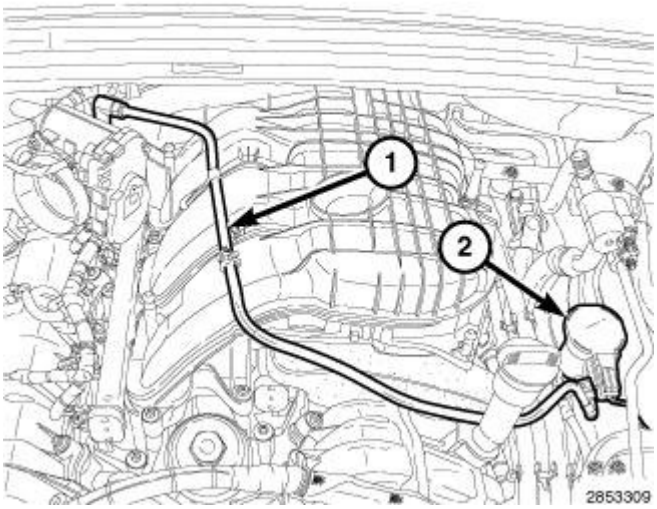

Fig. 122: Vapor Purge Tube & Fuel Purge Solenoid
Courtesy of CHRYSLER GROUP, LLC

14. Remove the vapor purge tube (1) from the fuel purge solenoid (2). Refer to **FITTING, QUICK CONNECT, STANDARD PROCEDURE** .

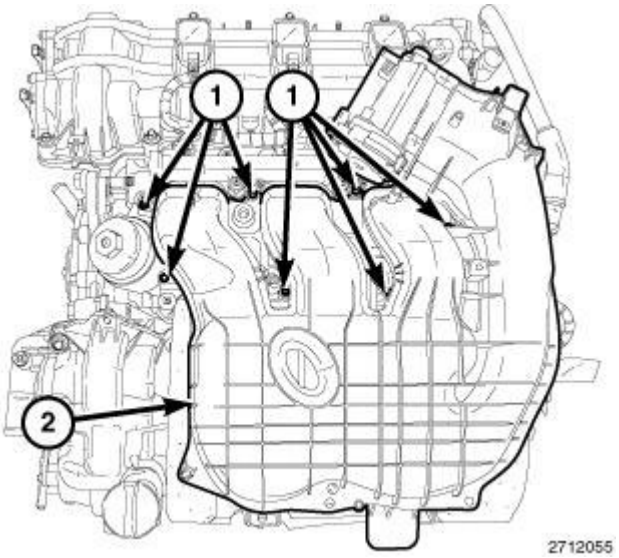

Fig. 123: Upper Intake Manifold & Bolts
Courtesy of CHRYSLER GROUP, LLC

15. Remove the upper and lower intake manifolds (2) and insulator. Refer to **MANIFOLD, INTAKE, REMOVAL**.

 © 2011 Mitchell Repair Information Company, LLC.

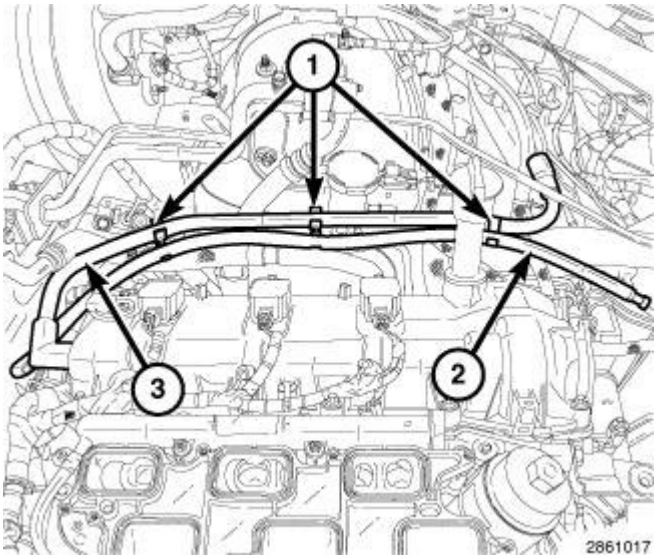

Fig. 124: Transmission Breather Hose, Make-Up Air Tube & Clips
Courtesy of CHRYSLER GROUP, LLC

16. Disengage the clips (1), remove the make-up air tube (3) from the left cylinder head cover and reposition the transmission breather hose (2).

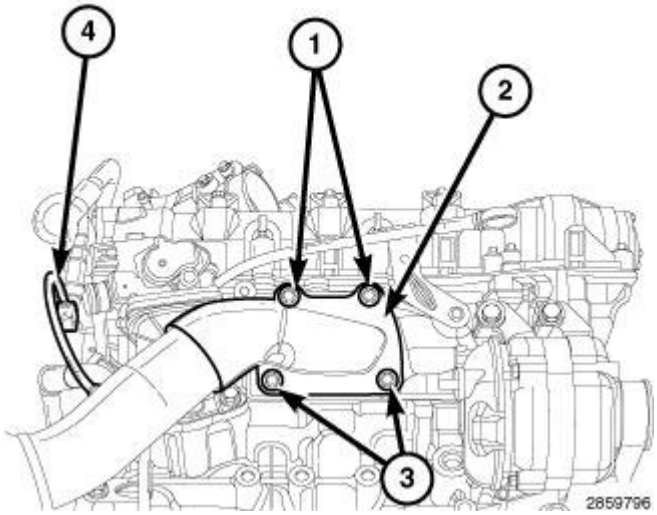

Fig. 125: Right Upstream Oxygen Electrical Sensor Connector, Down Pipe Flanges & Bolts
Courtesy of CHRYSLER GROUP, LLC

NOTE: Right catalytic converter shown in the illustration, left catalytic converter similar.

17. Disconnect the left upstream oxygen sensor connector (4) from the main wire harness.
18. Loosen the lower catalytic converter flange bolts (3).
19. Remove the upper catalytic converter flange bolts (1) and reposition the catalytic converter (2).

 © 2011 Mitchell Repair Information Company, LLC.

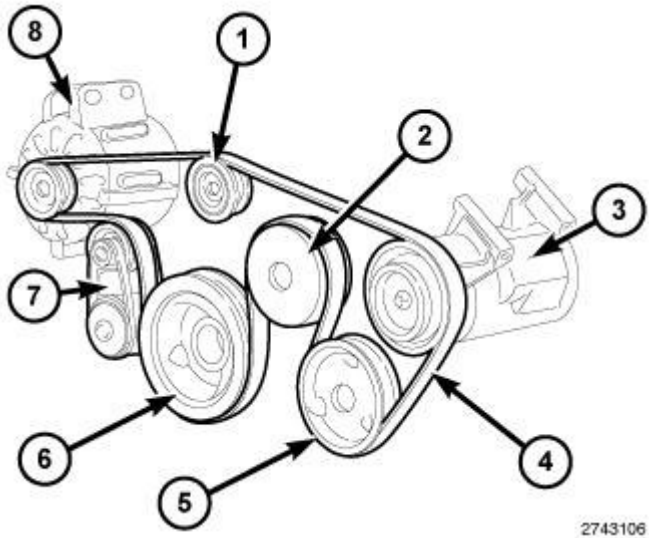

Fig. 126: Drive Belt Tensioners & Accessory Drive Belt Routing
Courtesy of CHRYSLER GROUP, LLC

20. Remove the accessory drive belt (4). Refer to **BELT, SERPENTINE, REMOVAL** .

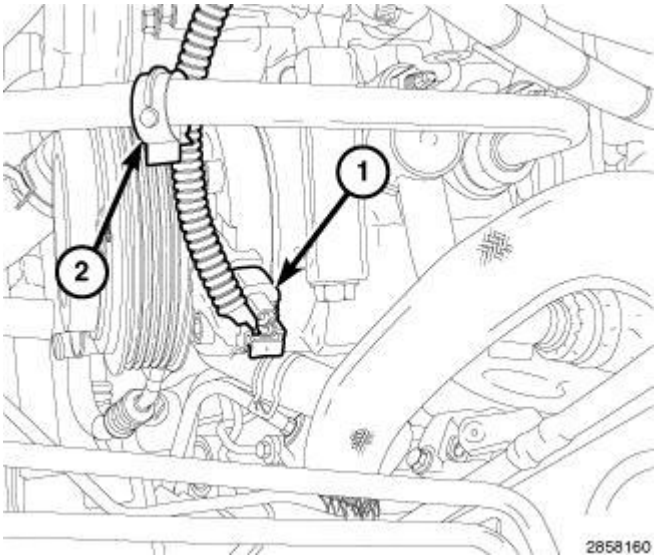

Fig. 127: A/C Compressor Electrical Connector & Wire Harness Retainer
Courtesy of CHRYSLER GROUP, LLC

21. Disconnect the A/C compressor electrical connector (1) and disengage the wire harness retainer (2) from the A/C compressor discharge line.

 © 2011 Mitchell Repair Information Company, LLC.

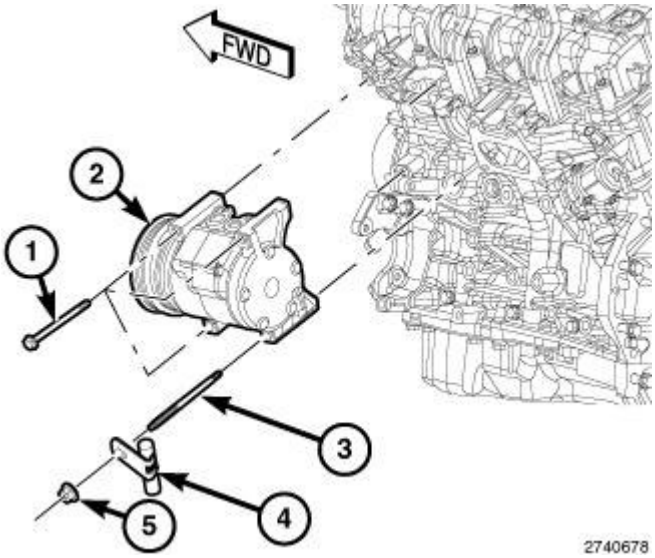

Fig. 128: A/C Compressor, Nut, Stud & Three Bolts
Courtesy of CHRYSLER GROUP, LLC

22. Remove the remaining three bolts (1) and reposition the A/C compressor (2).

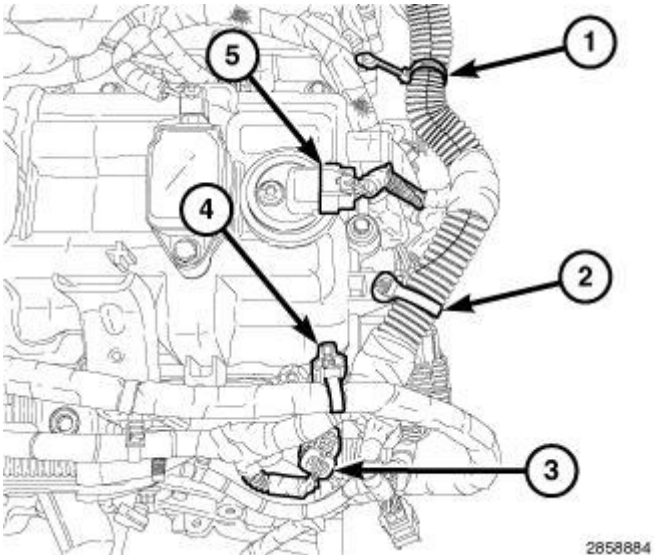

Fig. 129: ECT Sensor Connector, CMP Sensor & Main Wire Harness Retainers
Courtesy of CHRYSLER GROUP, LLC

23. Disconnect the Engine Coolant Temperature (ECT) sensor electrical connector (3).
24. Disconnect the ignition coil capacitor electrical connector.

 © 2011 Mitchell Repair Information Company, LLC.

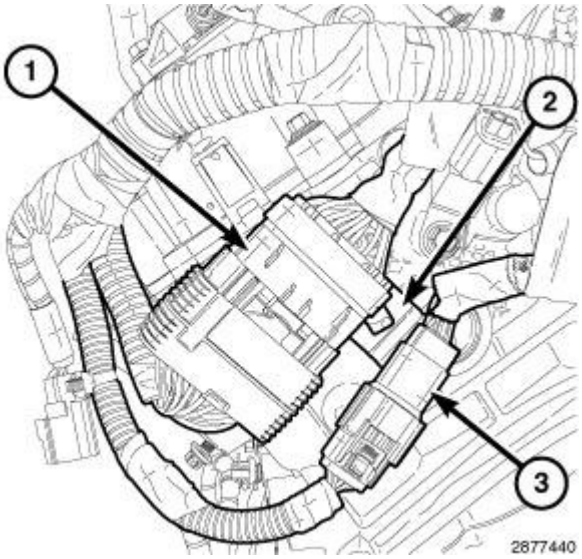

Fig. 130: Injection/Ignition Electrical Connector & Engine Oil Pressure/Temperature Sensor Electrical Connector
Courtesy of CHRYSLER GROUP, LLC

25. Disengage the injection/ignition harness connector (1) and the engine oil pressure/temperature harness connector (3) from the retainer bracket (2) on the rear of the left cylinder head.

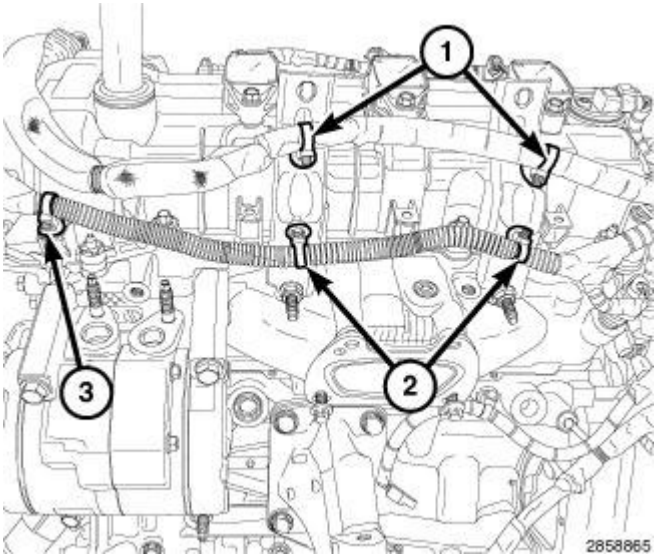

Fig. 131: Starter Wire Harness Retainers, Main Wire Harness Retainer & Manifold Support Bracket Retainers
Courtesy of CHRYSLER GROUP, LLC

26. Disengage two starter wire harness retainers (1) from the upper intake manifold support brackets.
27. Disengage one main wire harness retainer (3) from the left cylinder head cover and two retainers (2) from the upper intake manifold support brackets.

 © 2011 Mitchell Repair Information Company, LLC.

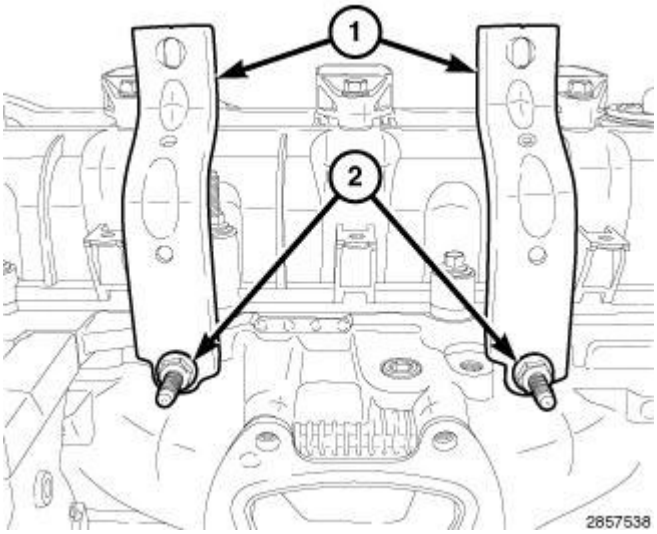

Fig. 132: Left Intake Manifold Support Brackets & Retaining Bolts
Courtesy of CHRYSLER GROUP, LLC

28. Remove the bolts (2) and remove the LH upper intake manifold support brackets (1).

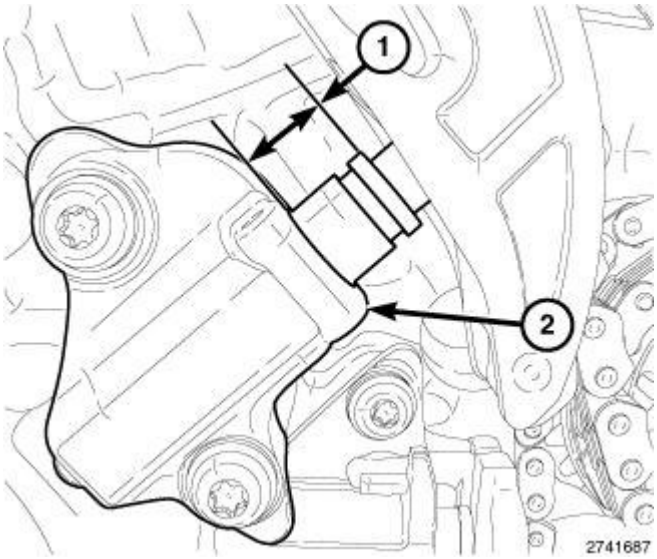

Fig. 133: Piston Extension & RH Cam Chain Tensioner
Courtesy of CHRYSLER GROUP, LLC

29. Remove the spark plugs. Refer to **SPARK PLUG, REMOVAL** .
30. Remove the cylinder head covers, lower and upper oil pans, crankshaft vibration damper and engine timing cover. Refer to **COVER(S), ENGINE TIMING, REMOVAL**.

NOTE: Take this opportunity to measure timing chain wear. Refer to VALVE TIMING, STANDARD PROCEDURE.

31. Lower the vehicle.

 © 2011 Mitchell Repair Information Company, LLC.

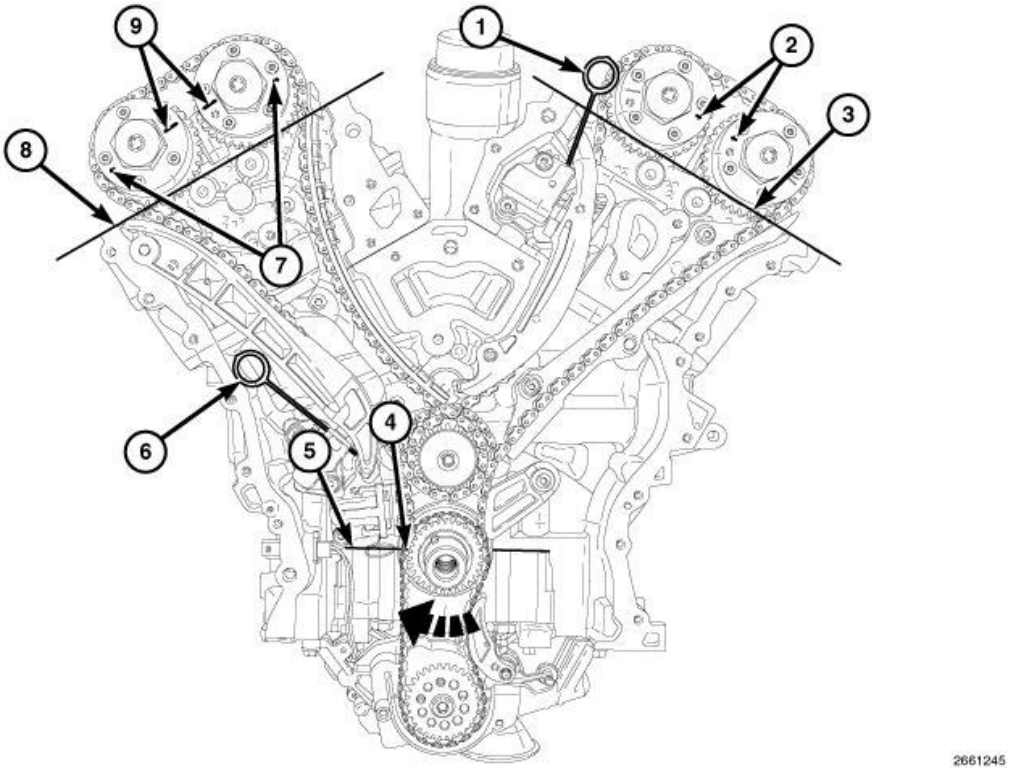

Fig. 134: Rotating Crankshaft Clockwise To Position No. 1 Piston At TDC On Exhaust Stroke
Courtesy of CHRYSLER GROUP, LLC

CAUTION: When aligning timing marks, always rotate engine by turning the crankshaft. Failure to do so will result in valve and/or piston damage.

32. Rotate the crankshaft CW to place the number one piston at TDC on the exhaust stroke by aligning the dimple (4) on the crankshaft with the block/bearing cap junction (5). The left side cam phaser arrows (2) should point toward each other and be parallel to the valve cover sealing surface (3). The right side cam phaser arrows (7) should point away from each other and the scribe lines (9) should be parallel to the valve cover sealing surface (8).

CAUTION: Always reinstall timing chains so that they maintain the same direction of rotation. Inverting a previously run chain on a previously run sprocket will result in excessive wear to both the chain and sprocket.

33. Mark the direction of rotation on the timing chain using a paint pen or equivalent to aid in reassembly.

 © 2011 Mitchell Repair Information Company, LLC.

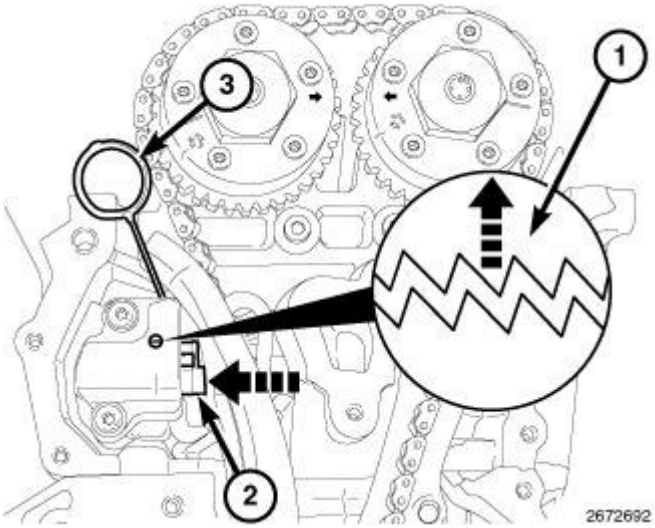

Fig. 135: Resetting Left Cam Chain Tensioner
Courtesy of CHRYSLER GROUP, LLC

CAUTION: When the timing chains are removed and the cylinder heads are still installed, DO NOT rotate the camshafts or crankshaft without first locating the proper crankshaft position. Failure to do so will result in valve and/or piston damage.

34. Reset the LH cam chain tensioner by lifting the pawl (1), pushing back the piston (2) and installing Tensioner Pin (special tool #8514, Pins, Tensioner) (3). Refer to **VALVE TIMING, STANDARD PROCEDURE**.

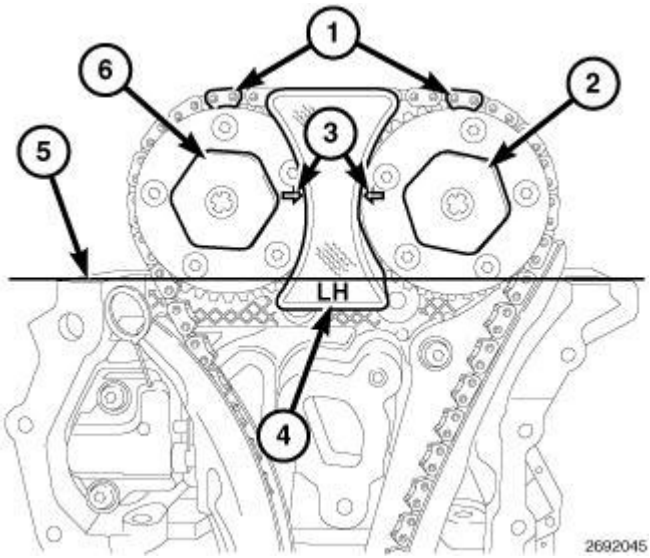

Fig. 136: Phaser Timing Marks, Oil Control Valves & LH Camshaft Phaser Lock
Courtesy of CHRYSLER GROUP, LLC

NOTE: Minor rotation of a camshaft (a few degrees) may be required to install the

camshaft phaser lock.

35. Install the LH Camshaft Phaser Lock (special tool #10202, Locks, Camshaft/Phaser) (4).
36. Loosen both the intake oil control valve (6) and exhaust oil control valve (2).
37. Remove the LH Camshaft Phaser Lock (special tool #10202, Locks, Camshaft/Phaser) (4).
38. Remove the oil control valve (2) from the left side exhaust cam phaser and pull the phaser off of the camshaft.
39. Remove the oil control valve (6) from the left side intake cam phaser and pull the phaser off of the camshaft.

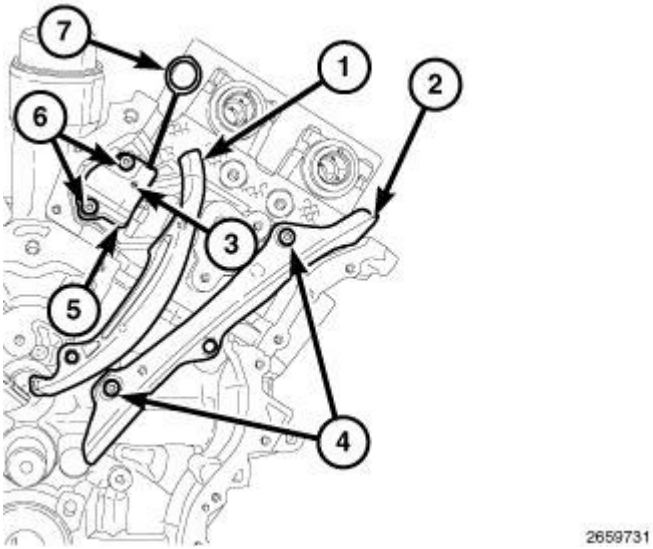

Fig. 137: Left Cam Chain Tensioner, Arm, Guide & Bolts
Courtesy of CHRYSLER GROUP, LLC

40. Remove the LH cam chain tensioner arm (1).
41. Remove two T30 bolts (6) and the LH cam chain tensioner (5).
42. Remove two T30 bolts (4) and the LH cam chain guide (2).

 © 2011 Mitchell Repair Information Company, LLC.

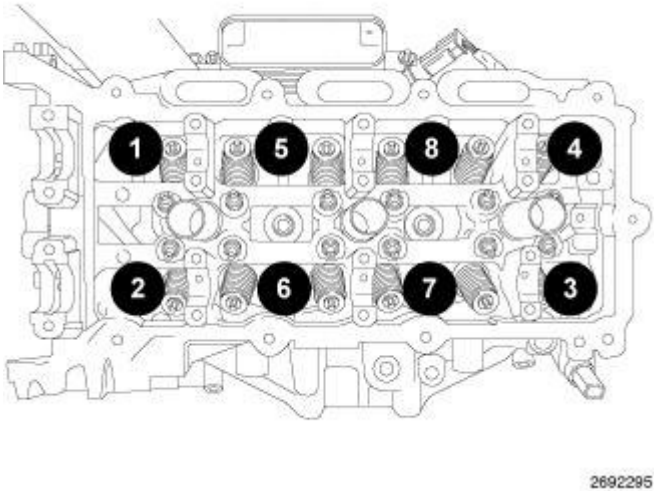

Fig. 138: Cylinder Head Retaining Bolt Removal Sequence - Left
Courtesy of CHRYSLER GROUP, LLC

43. Remove the left camshafts. Refer to **CAMSHAFT, ENGINE, REMOVAL**.

NOTE: **If the rocker arms are to be reused, identify their positions so that they can be reassembled into their original locations.**

44. Remove the rocker arms. Refer to **ROCKER ARM, VALVE, REMOVAL**.

NOTE: **If the hydraulic lifters are to be reused, identify their positions so that they can be reassembled into their original locations.**

45. If required, remove the hydraulic lifters. Refer to **LIFTER(S), HYDRAULIC, REMOVAL**.
46. Using the sequence shown in the illustration, remove the cylinder head retaining bolts.

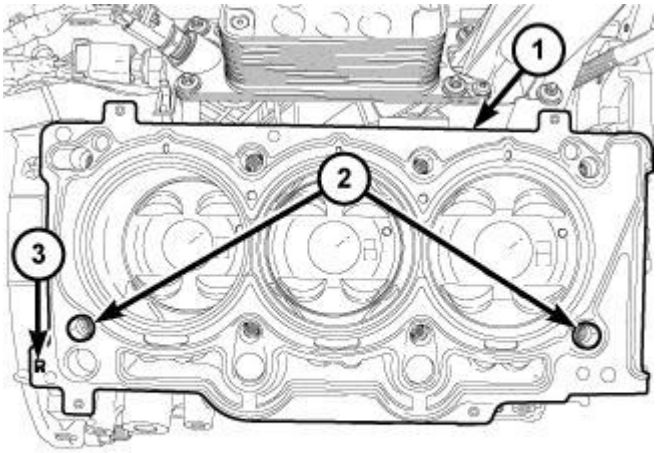

Fig. 139: Head Gasket & Locating Dowels
Courtesy of CHRYSLER GROUP, LLC

WARNING: The multi-layered steel head gaskets have very sharp edges that could cause personal injury if not handled carefully.

NOTE: Right head gasket shown in the illustration, left head gasket similar.

NOTE: The head gasket (1) crimps the locating dowels (2) and the dowels may pull out of the engine block when the head gasket is removed.

47. Remove the cylinder head and gasket (1). Discard the gasket.

CAUTION: Do not lay the cylinder head on its gasket sealing surface, due to the design of the cylinder head gasket, any distortion to the cylinder head sealing surface may prevent the gasket from properly sealing resulting in leaks.

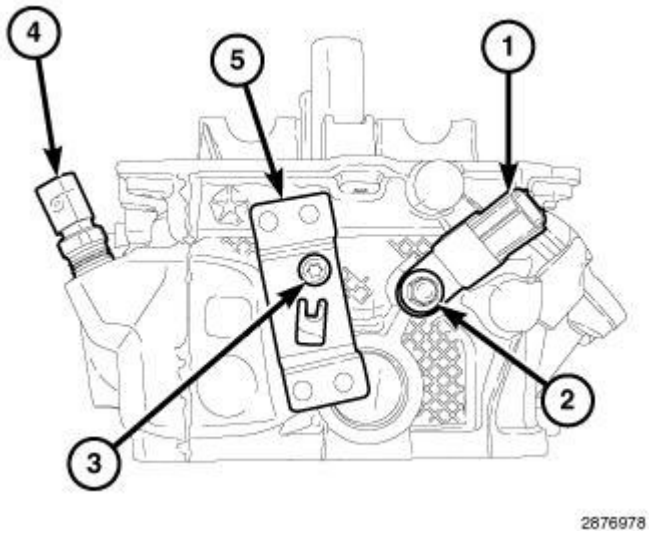

Fig. 140: ECT Sensor, Ignition Coil Capacitor, Engine Wire Harness Retainer Bracket & Bolts
Courtesy of CHRYSLER GROUP, LLC

48. If required, remove the Engine Coolant Temperature (ECT) sensor (4).
49. If required, remove the bolt (2) and the ignition coil capacitor (1).
50. If required, remove the bolt (3) and the engine wire harness retainer bracket (5).

RIGHT

 © 2011 Mitchell Repair Information Company, LLC.

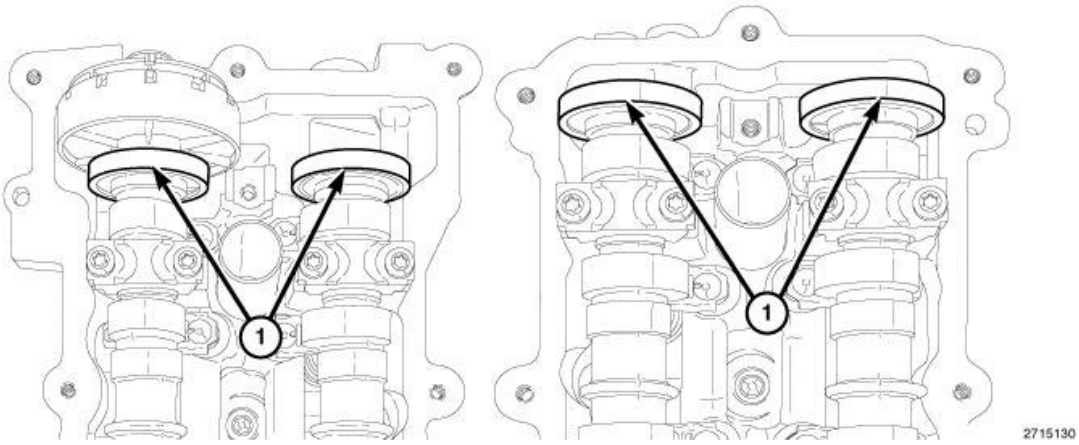

Fig. 141: Magnetic Timing Wheels
Courtesy of CHRYSLER GROUP, LLC

CAUTION: The magnetic timing wheels (1) must not come in contact with magnets (pickup tools, trays, etc.) or any other strong magnetic field. This will destroy the timing wheels ability to correctly relay camshaft position to the camshaft position sensor.

1. Perform the fuel pressure release procedure. Refer to **FUEL DELIVERY, GAS, STANDARD PROCEDURE** .
2. Disconnect and isolate the negative battery cable.

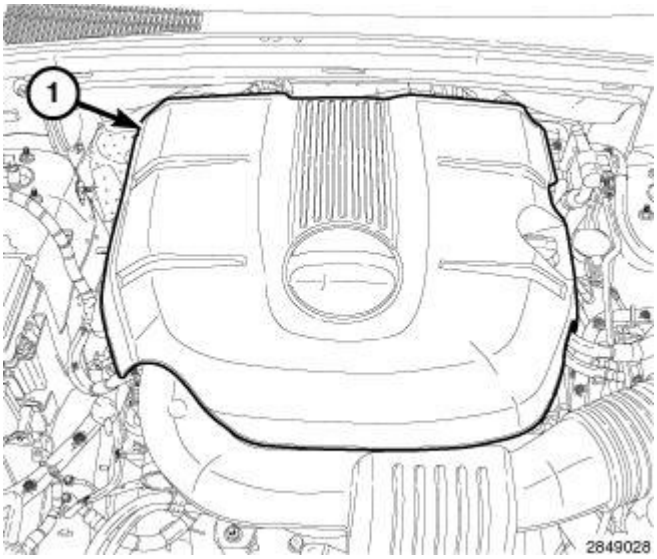

Fig. 142: Engine Cover
Courtesy of CHRYSLER GROUP, LLC

3. Remove the engine cover (1).

 © 2011 Mitchell Repair Information Company, LLC.

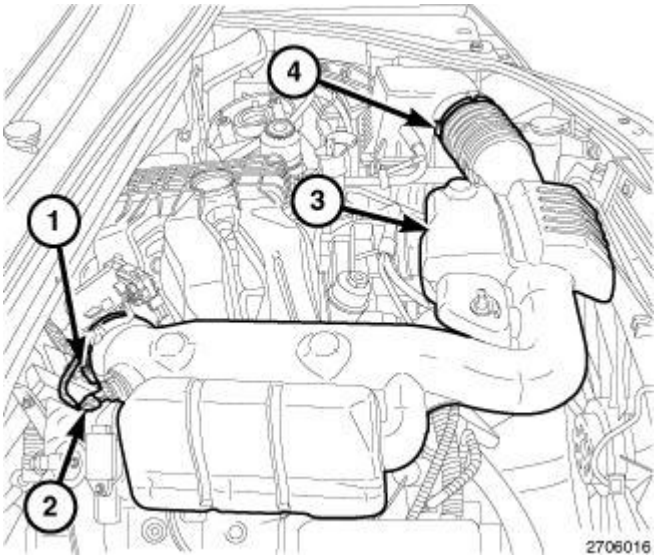

Fig. 143: Air Inlet Hose, Air Temperature (IAT) Sensor Connector & Clamps
Courtesy of CHRYSLER GROUP, LLC

4. Disconnect the electrical connector (2) from the Inlet Air Temperature (IAT) sensor.
5. Loosen the clamp (1) at the throttle body.
6. Loosen the clamp (4) at the air cleaner body.
7. Remove the air inlet hose (3).

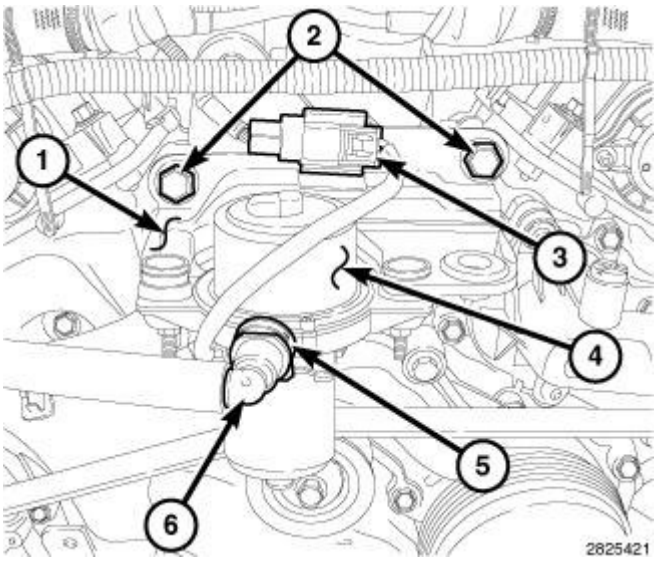

Fig. 144: Mounting Bracket, Bolts, Electrical Connector, Vacuum Pump, Locking Tab & Quick-Connect Type End
Courtesy of CHRYSLER GROUP, LLC

8. Remove the electric vacuum pump (4) and mounting bracket (1). Refer to **PUMP, ELECTRIC VACUUM, REMOVAL** .
9. Raise and support the vehicle. Refer to **HOISTING, STANDARD PROCEDURE** .

 © 2011 Mitchell Repair Information Company, LLC.

10. If equipped, remove the front skid plate and front suspension skid plate. Refer to FRAME AND BUMPERS **UNDER BODY PROTECTION** .
11. Drain the cooling system. Refer to **STANDARD PROCEDURE** .
12. Drain the engine oil. Refer to ENGINE/LUBRICATION/OIL **STANDARD PROCEDURE** .
13. Lower the vehicle.

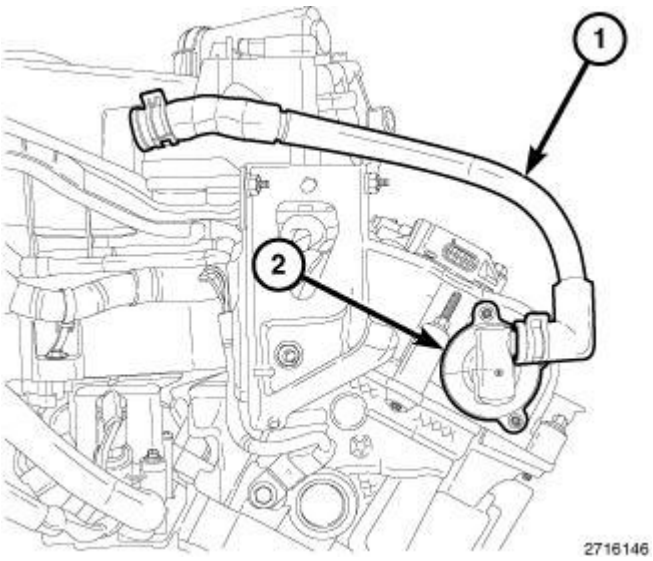

Fig. 145: PCV Hose & PCV Valve
Courtesy of CHRYSLER GROUP, LLC

14. Remove the PCV hose (1) from the PCV valve (2).

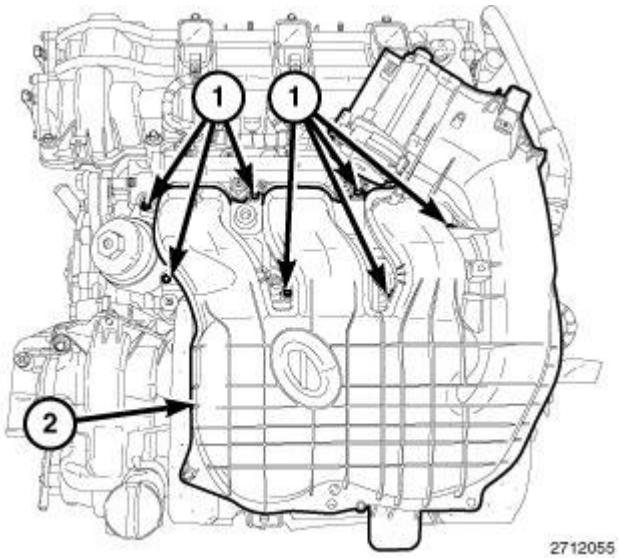

Fig. 146: Upper Intake Manifold & Bolts
Courtesy of CHRYSLER GROUP, LLC

15. Remove the upper and lower intake manifolds (2) and insulator. Refer to **MANIFOLD, INTAKE,**

 © 2011 Mitchell Repair Information Company, LLC.

REMOVAL.

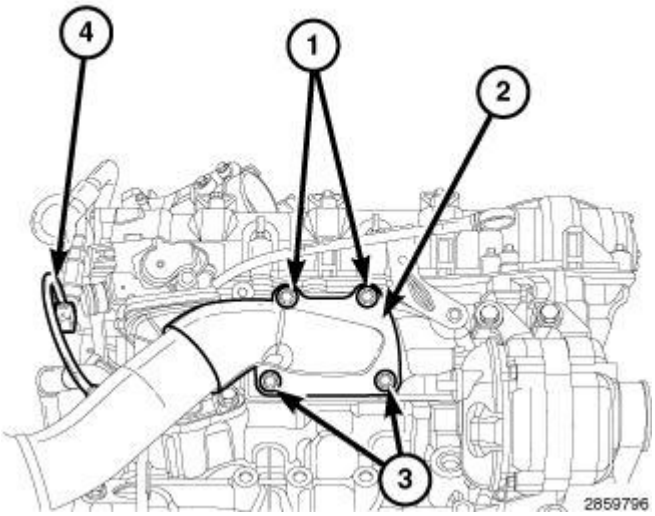

Fig. 147: Right Upstream Oxygen Electrical Sensor Connector, Down Pipe Flanges & Bolts
Courtesy of CHRYSLER GROUP, LLC

16. Disconnect the right upstream oxygen sensor connector (4) from the main wire harness.
17. Loosen the lower catalytic converter flange bolts (3).
18. Remove the upper catalytic converter flange bolts (1) and reposition the catalytic converter (2).

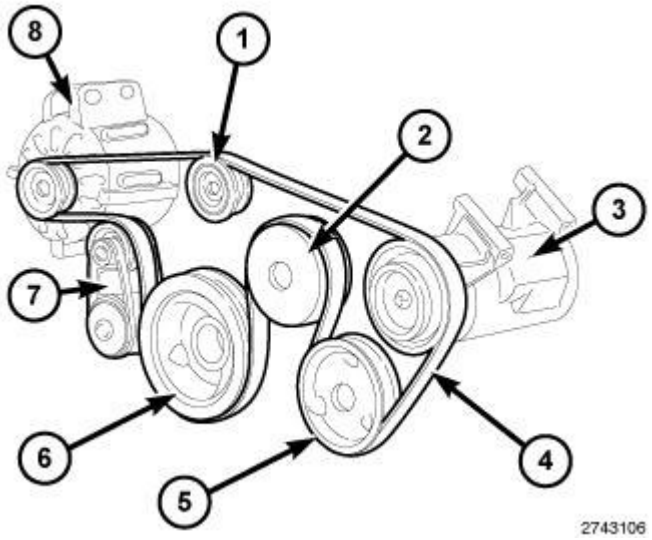

Fig. 148: Drive Belt Tensioners & Accessory Drive Belt Routing
Courtesy of CHRYSLER GROUP, LLC

19. Remove the accessory drive belt (4). Refer to **BELT, SERPENTINE, REMOVAL** .
20. Remove the generator (8). Refer to **GENERATOR, REMOVAL** .

 © 2011 Mitchell Repair Information Company, LLC.

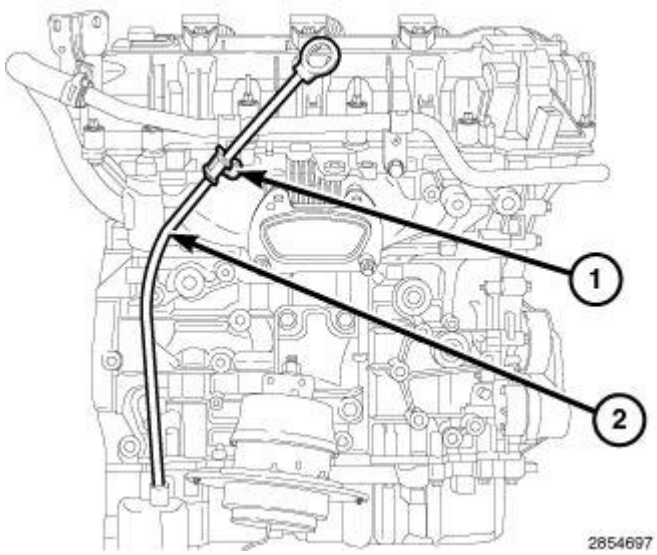

Fig. 149: Oil Level Indicator & Retaining Bolt
Courtesy of CHRYSLER GROUP, LLC

21. Remove the bolt (1) and remove the oil level indicator (2).

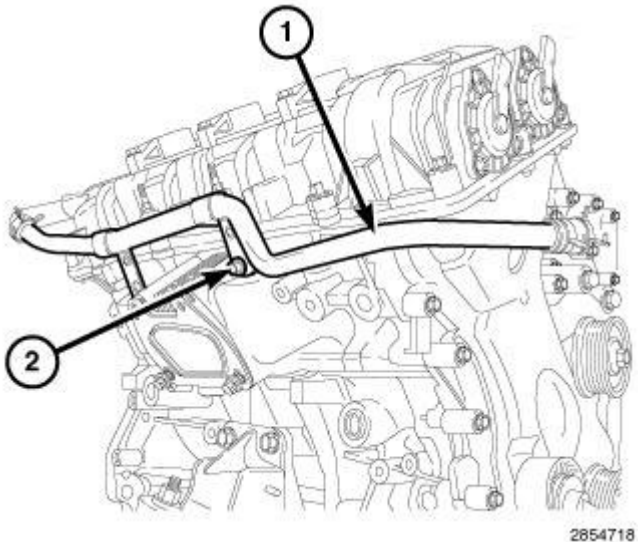

Fig. 150: Heater Core Supply Tube Support Bracket & Retaining Bolt
Courtesy of CHRYSLER GROUP, LLC

22. Remove the bolt (2) and the heater core supply tube (1).
23. Disconnect the ignition coil capacitor electrical connector.

 © 2011 Mitchell Repair Information Company, LLC.

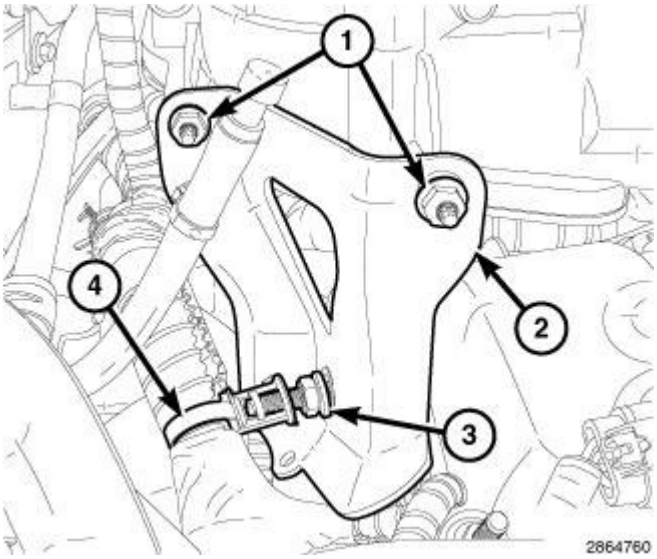

Fig. 151: Upper Intake Manifold Support Bracket, Stud & Fasteners
Courtesy of CHRYSLER GROUP, LLC

24. Remove the studbolt (3) and remove the upper intake manifold support bracket (2).

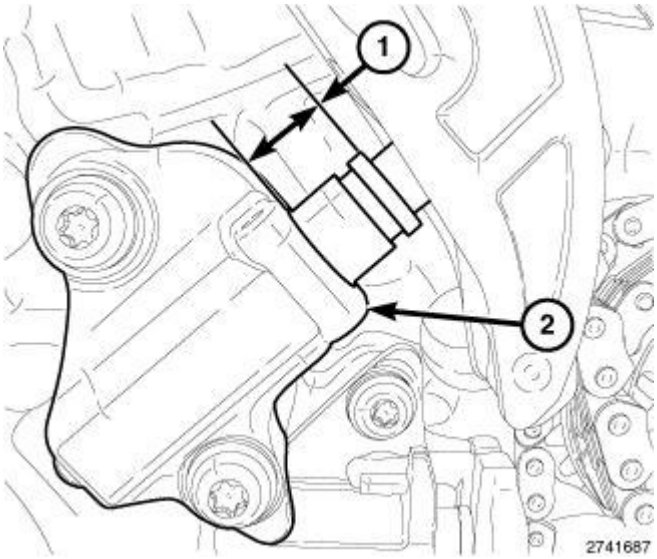

Fig. 152: Piston Extension & RH Cam Chain Tensioner
Courtesy of CHRYSLER GROUP, LLC

25. Remove the spark plugs. Refer to **SPARK PLUG, REMOVAL** .
26. Remove the cylinder head covers, lower and upper oil pans, crankshaft vibration damper and engine timing cover. Refer to **COVER(S), ENGINE TIMING, REMOVAL**.

NOTE: **Take this opportunity to measure timing chain wear. Refer to VALVE TIMING, STANDARD PROCEDURE.**

27. Lower the vehicle.

 © 2011 Mitchell Repair Information Company, LLC.

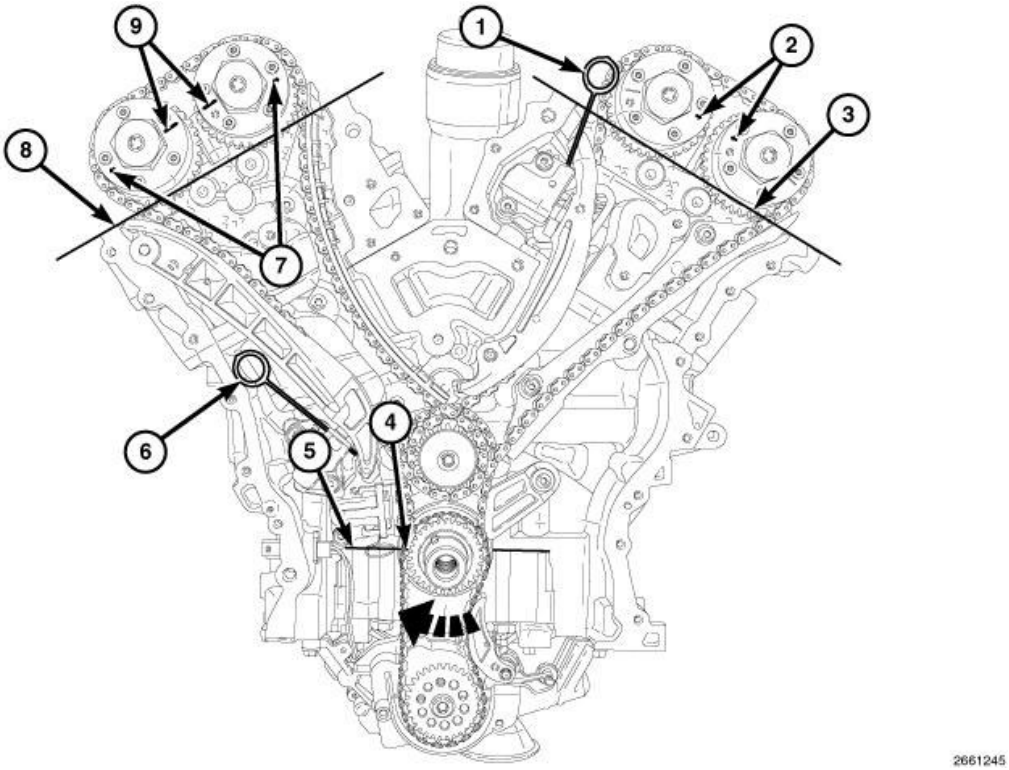

Fig. 153: Rotating Crankshaft Clockwise To Position No. 1 Piston At TDC On Exhaust Stroke
Courtesy of CHRYSLER GROUP, LLC

CAUTION: When aligning timing marks, always rotate engine by turning the crankshaft. Failure to do so will result in valve and/or piston damage.

28. Rotate the crankshaft CW to place the number one piston at TDC on the exhaust stroke by aligning the dimple (4) on the crankshaft with the block/bearing cap junction (5). The left side cam phaser arrows (2) should point toward each other and be parallel to the valve cover sealing surface (3). The right side cam phaser arrows (7) should point away from each other and the scribe lines (9) should be parallel to the valve cover sealing surface (8).

CAUTION: Always reinstall timing chains so that they maintain the same direction of rotation. Inverting a previously run chain on a previously run sprocket will result in excessive wear to both the chain and sprocket.

29. Mark the direction of rotation on the timing chain using a paint pen or equivalent to aid in reassembly.

 © 2011 Mitchell Repair Information Company, LLC.

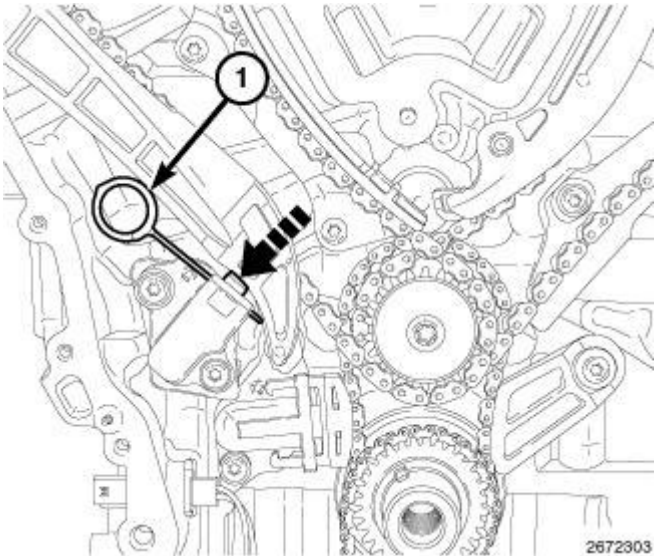

Fig. 154: Resetting Right Cam Chain Tensioner
Courtesy of CHRYSLER GROUP, LLC

CAUTION: When the timing chains are removed and the cylinder heads are still installed, DO NOT rotate the camshafts or crankshaft without first locating the proper crankshaft position. Failure to do so will result in valve and/or piston damage.

30. Reset the RH cam chain tensioner by pushing back the tensioner piston and installing Tensioner Pin (special tool #8514, Pins, Tensioner) (1).

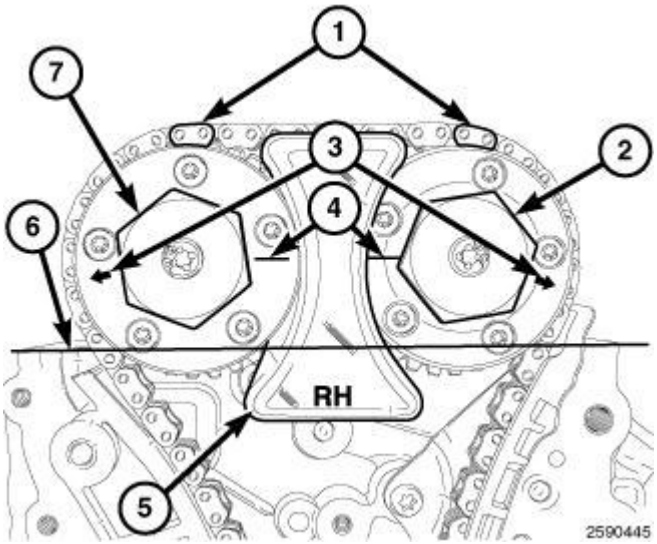

Fig. 155: Phaser Timing Marks, Oil Control Valves & RH Camshaft Phaser Lock
Courtesy of CHRYSLER GROUP, LLC

NOTE: Minor rotation of a camshaft (a few degrees) may be required to install the camshaft phaser lock.

 © 2011 Mitchell Repair Information Company, LLC.

31. Install the RH Camshaft Phaser Lock (special tool #10202, Locks, Camshaft/Phaser) (5).
32. Loosen both the intake oil control valve (2) and exhaust oil control valve (7).
33. Remove the RH Camshaft Phaser Lock (special tool #10202, Locks, Camshaft/Phaser) (5).
34. Remove the oil control valve (2) from the right side intake cam phaser and pull the phaser off of the camshaft.
35. Remove the oil control valve (7) from the right side exhaust cam phaser and pull the phaser off of the camshaft.

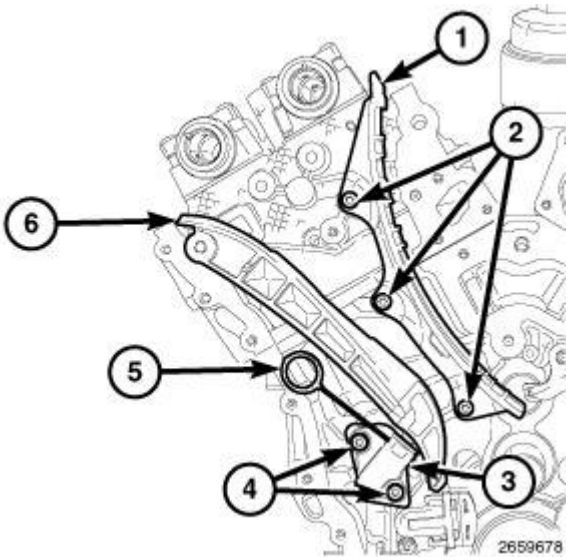

Fig. 156: Right Cam Chain Tensioner, Arm, Guide & Bolts
Courtesy of CHRYSLER GROUP, LLC

36. Remove the RH cam chain tensioner arm (6).
37. Remove two T30 bolts (4) and the RH cam chain tensioner (3).
38. Remove three T30 bolts (2) and the RH cam chain guide (1).
39. Remove the right camshafts. Refer to **CAMSHAFT, ENGINE, REMOVAL**.

NOTE: If the rocker arms are to be reused, identify their positions so that they can be reassembled into their original locations.

40. Remove the rocker arms. Refer to **ROCKER ARM, VALVE, REMOVAL**.

NOTE: If the hydraulic lifters are to be reused, identify their positions so that they can be reassembled into their original locations.

41. If required, remove the hydraulic lifters. Refer to **LIFTER(S), HYDRAULIC, REMOVAL**.

 © 2011 Mitchell Repair Information Company, LLC.

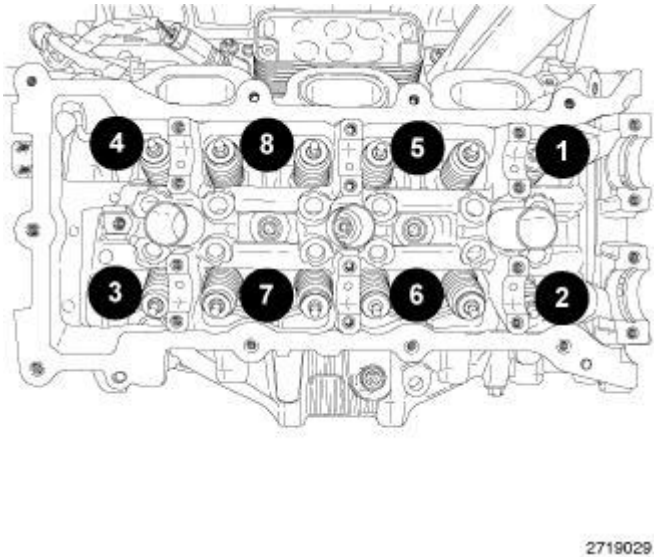

Fig. 157: Cylinder Head Retaining Bolt Removal Sequence - Right
Courtesy of CHRYSLER GROUP, LLC

42. Using the sequence shown in the illustration, remove the cylinder head retaining bolts.

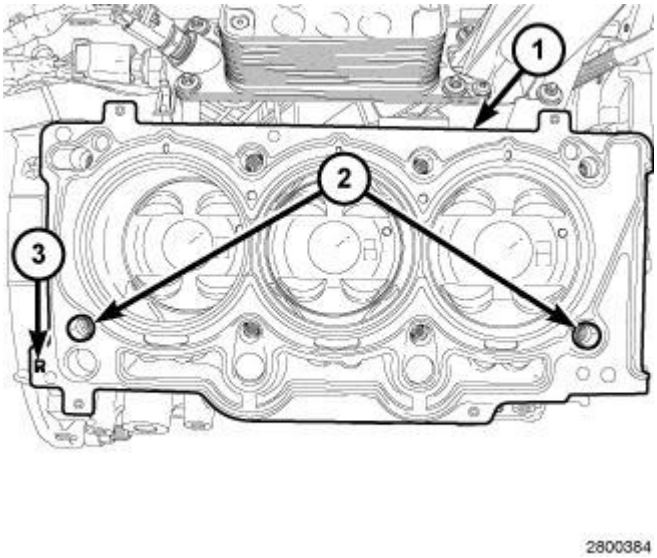

Fig. 158: Head Gasket & Locating Dowels
Courtesy of CHRYSLER GROUP, LLC

WARNING: **The multi-layered steel head gaskets have very sharp edges that could cause personal injury if not handled carefully.**

NOTE: **The head gasket (1) crimps the locating dowels (2) and the dowels may pull out of the engine block when the head gasket is removed.**

43. Remove the cylinder head and gasket. Discard the gasket.

 © 2011 Mitchell Repair Information Company, LLC.

CAUTION: Do not lay the cylinder head on its gasket sealing surface, due to the design of the cylinder head gasket, any distortion to the cylinder head sealing surface may prevent the gasket from properly sealing resulting in leaks.

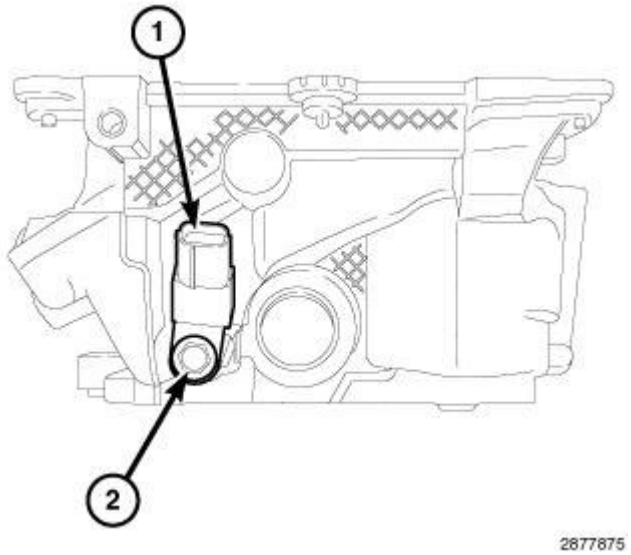

Fig. 159: Ignition Coil Capacitor & Bolt
Courtesy of CHRYSLER GROUP, LLC

44. If required, remove the bolt (2) and the ignition coil capacitor (1).

CLEANING

CLEANING

CAUTION: When cleaning cylinder head and cylinder block surfaces, DO NOT use a metal scraper because the surfaces could be cut or ground. Use ONLY a wooden or plastic scraper.

To ensure engine gasket sealing, proper surface preparation must be performed, especially with the use of aluminum engine components and multi-layer steel cylinder head gaskets.

NOTE: Multi-Layer Steel (MLS) head gaskets require a scratch free sealing surface.

1. Remove all gasket material from cylinder head and block. Refer to ENGINE **STANDARD PROCEDURE** . Be careful not to gouge or scratch the aluminum head sealing surface.
2. Clean all engine oil passages.

CAUTION: Non-compressible debris such as oil, coolant or RTV sealants that are not removed from bolt holes can cause the aluminum casting to crack when tightening the bolts.

 © 2011 Mitchell Repair Information Company, LLC.

3. Clean out the cylinder head bolt holes in the engine block.

   DO NOT USE any adhesives when installing the MLS head gaskets. The use of adhesives may cause the gasket not to seal properly and may leak. MLS gaskets are to be installed on a surface free of debris and oils.

INSPECTION

INSPECTION

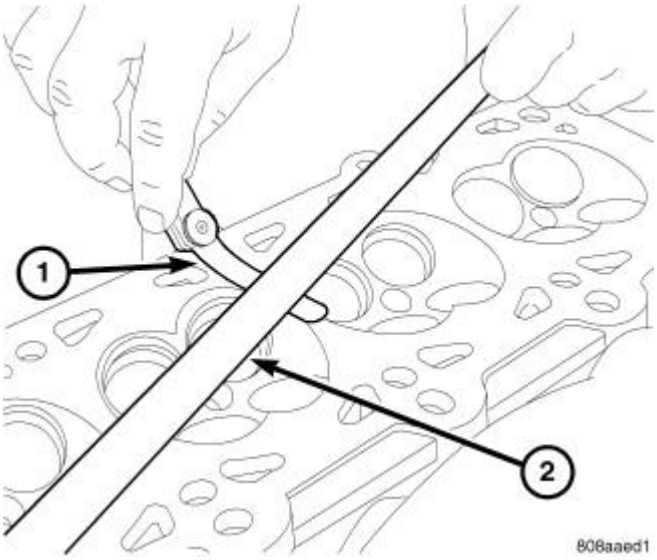

Fig. 160: Checking Cylinder Head Flatness
Courtesy of CHRYSLER GROUP, LLC

1. Check cylinder head warpage with a straight edge (2) and feeler gauge (1).
2. Cylinder head must be flat within specification. Refer to ENGINE **SPECIFICATIONS** .
3. Verify that the valve tappets move freely in theirs bores and that they have been rotating.
4. Inspect camshaft bearing journals for scoring.
5. Remove carbon and varnish deposits from inside of valve guides with a reliable guide cleaner.
6. Inspect the following components and verify that they are within specification : Refer to ENGINE **SPECIFICATIONS** .
   - Camshafts
   - Valve Tappets
   - Springs
   - Valve Seats
   - Valve Guides
   - Valves

INSTALLATION

 © 2011 Mitchell Repair Information Company, LLC.

LEFT

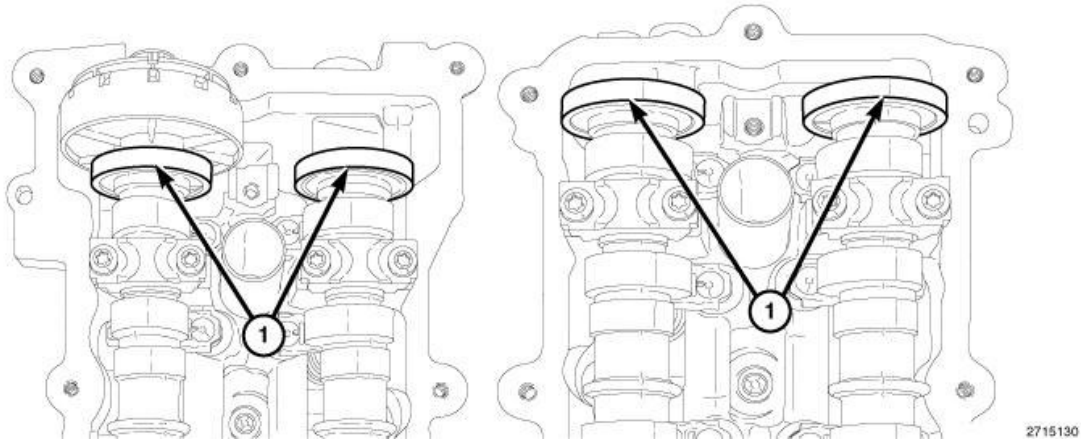

Fig. 161: Magnetic Timing Wheels
Courtesy of CHRYSLER GROUP, LLC

CAUTION: The magnetic timing wheels (1) must not come in contact with magnets (pickup tools, trays, etc.) or any other strong magnetic field. This will destroy the timing wheels ability to correctly relay camshaft position to the camshaft position sensor.

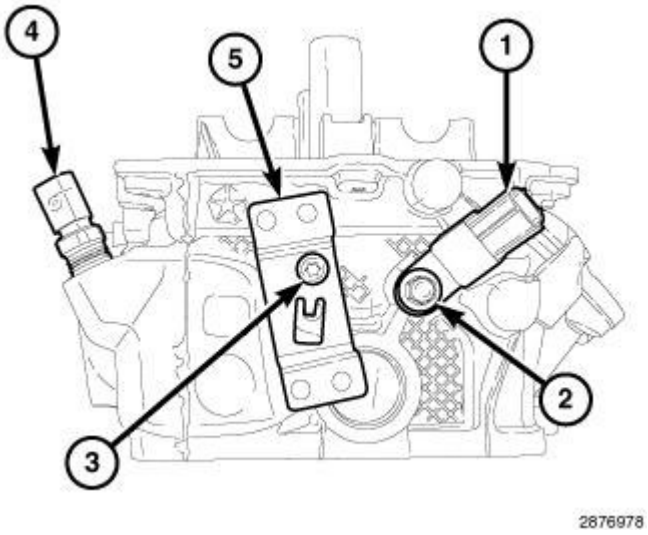

Fig. 162: ECT Sensor, Ignition Coil Capacitor, Engine Wire Harness Retainer Bracket & Bolts
Courtesy of CHRYSLER GROUP, LLC

1. If removed, install the Engine Coolant Temperature (ECT) sensor (4) and tighten to 11 N.m (97 in. lbs.).
2. If removed, install the ignition coil capacitor (1) with a M6 bolt (2) tightened to 10 N.m (89 in. lbs.).
3. If removed, install the engine wire harness retainer bracket (5) with a T30 bolt (3) tightened to 12 N.m (106 in. lbs.).

 © 2011 Mitchell Repair Information Company, LLC.

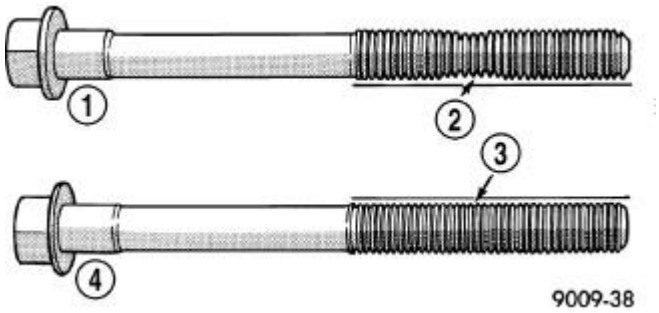

Fig. 163: Checking Cylinder Head Bolts For Stretching (Necking)
Courtesy of CHRYSLER GROUP, LLC

CAUTION: The cylinder head bolts are tightened using a torque plus angle procedure. The bolts must be examined BEFORE reuse. If the threads are necked down the bolts must be replaced.

NOTE: Typical cylinder head bolt shown in the illustration.

4. Check cylinder head bolts for necking by holding a scale or straight edge against the threads. If all the threads do not contact the scale (2) the bolt must be replaced.

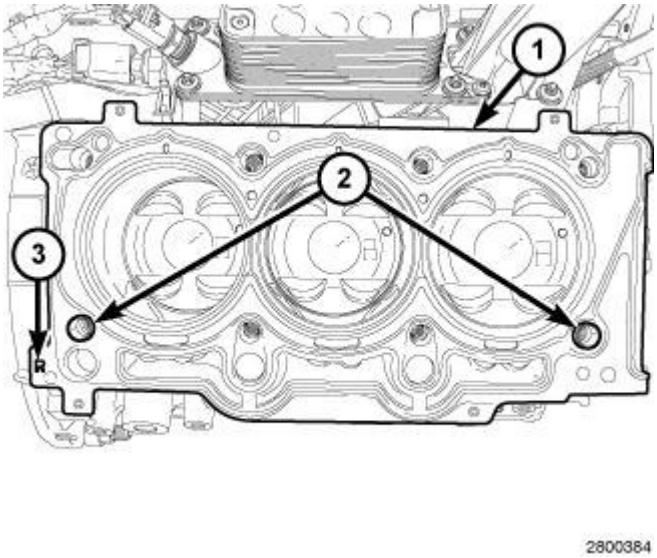

Fig. 164: Head Gasket & Locating Dowels
Courtesy of CHRYSLER GROUP, LLC

NOTE: Right head gasket shown in the illustration, left head gasket similar.

CAUTION: When cleaning cylinder head and cylinder block surfaces, DO NOT use a metal scraper because the surfaces could be cut or ground. Use ONLY a wooden or plastic scraper.

 © 2011 Mitchell Repair Information Company, LLC.

5. Clean and prepare the gasket sealing surfaces of the cylinder head and block. Refer to ENGINE **STANDARD PROCEDURE** .

CAUTION: Non-compressible debris such as oil, coolant or RTV sealants that are not removed from bolt holes can cause the aluminum casting to crack when tightening the bolts.

6. Clean out the cylinder head bolt holes in the engine block.

WARNING: The multi-layered steel head gaskets have very sharp edges that could cause personal injury if not handled carefully.

CAUTION: The installation of the cylinder head gaskets are not interchangeable between the left and right cylinder heads. They are clearly marked (3) with "R" for right and "L" for left. They must be applied on a dry surface, without the use of any adhesives.

7. Position the new cylinder head gasket (1) on the locating dowels (2).
8. Position the cylinder head onto the cylinder block. Make sure the cylinder head seats fully over the locating dowels.

NOTE: Do not apply any additional oil to the bolt threads.

9. Install the eight head bolts finger tight.

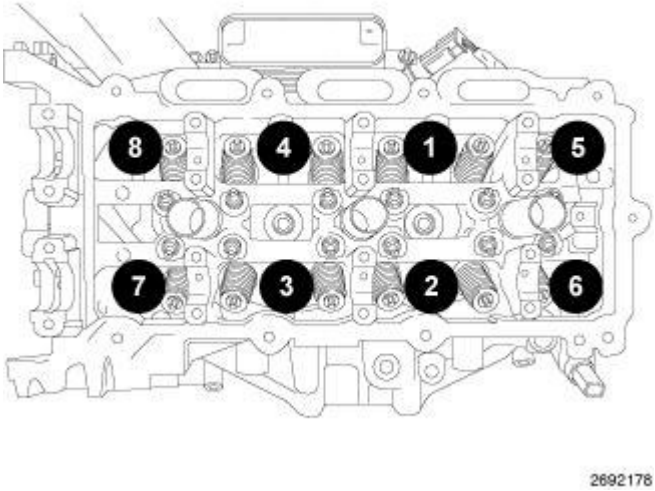

Fig. 165: Cylinder Head Retaining Bolt Tightening Sequence - Left
Courtesy of CHRYSLER GROUP, LLC

10. Tighten the cylinder head bolts in the sequence shown in the illustration, following this 9-step torque plus angle method. Tighten according to the following torque values:

 © 2011 Mitchell Repair Information Company, LLC.

- Step 1: All to 30 N.m (22 ft. lbs.)
- Step 2: All to 45 N.m (33 ft. lbs.)
- Step 3: All + 75° Turn **Do not use a torque wrench for this step.**
- Step 4: All + 50° Turn **Do not use a torque wrench for this step.**
- Step 5: Loosen all fasteners in reverse of sequence shown in the illustration
- Step 6: All to 30 N.m (22 ft. lbs.)
- Step 7: All to 45 N.m (33 ft. lbs.)
- Step 8: All + 70° Turn **Do not use a torque wrench for this step.**
- Step 9: All + 70° Turn **Do not use a torque wrench for this step.**

NOTE: If the hydraulic lifters are being reused, reassemble them into their original locations.

11. If removed, install the hydraulic lifters. Refer to **LIFTER(S), HYDRAULIC, INSTALLATION**.

NOTE: If the rocker arms are being reused, reassemble them into their original locations.

12. Install the rocker arms and camshafts. Refer to **CAMSHAFT, ENGINE, INSTALLATION**.

CAUTION: Do not rotate the camshafts more than a few degrees independently of the crankshaft. Valve to piston contact could occur resulting in possible valve damage. If the camshafts need to be rotated more than a few degrees, first move the pistons away from the cylinder heads by rotating the crankshaft counterclockwise to a position 30° before-top-dead-center. Once the camshafts are returned to their top-dead-center position, rotate the crankshaft clockwise to return the crankshaft to top-dead-center.

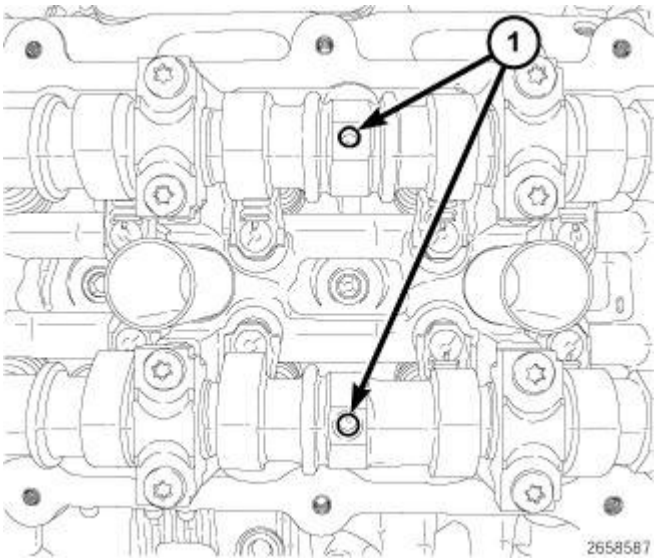

 © 2011 Mitchell Repair Information Company, LLC.

Fig. 166: Positioning Camshaft Alignment Holes Vertically
Courtesy of CHRYSLER GROUP, LLC

13. Rotate the camshafts CW to TDC by positioning the alignment holes (1) vertically.

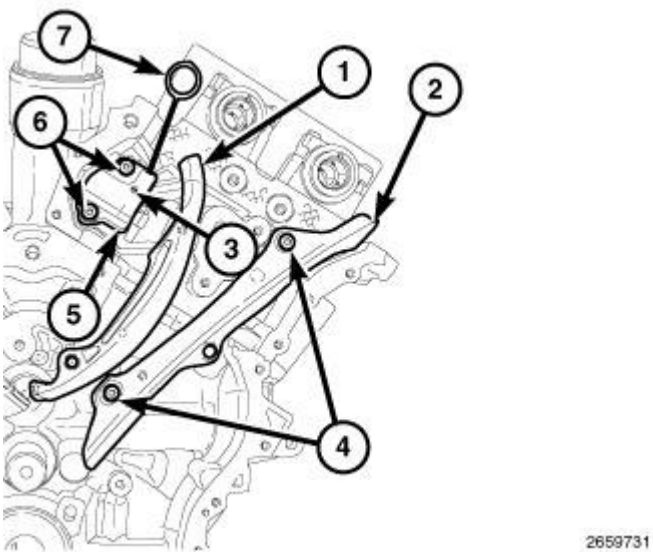

Fig. 167: Left Cam Chain Tensioner, Arm, Guide & Bolts
Courtesy of CHRYSLER GROUP, LLC

14. Install the LH cam chain guide (2) with two bolts (4). Tighten the T30 bolts (4) to 12 N.m (106 in. lbs.).
15. Install the LH cam chain tensioner (5) to the cylinder head with two bolts (6). Tighten the T30 bolts (6) to 12 N.m (106 in. lbs.).
16. Reset the LH cam chain tensioner (5) by lifting the pawl (3), pushing back the piston and installing Tensioner Pin (special tool #8514, Pins, Tensioner) (7). Refer to **VALVE TIMING, STANDARD PROCEDURE**.
17. Install the LH tensioner arm (1).
18. Press the LH intake cam phaser onto the intake camshaft. Install and hand tighten the oil control valve.

 © 2011 Mitchell Repair Information Company, LLC.

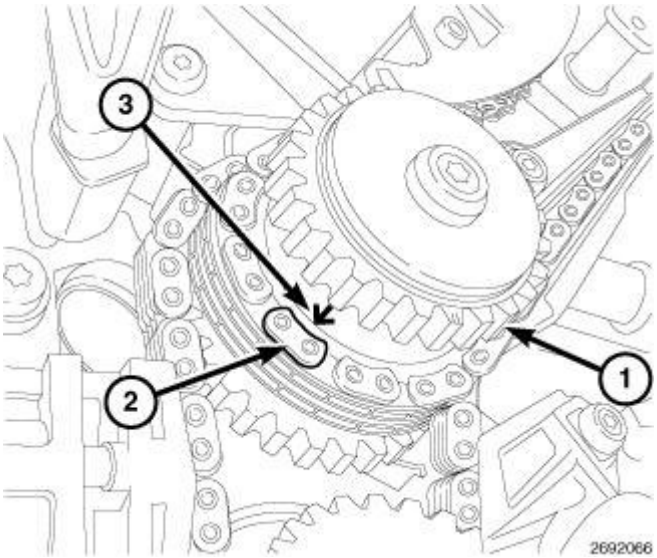

Fig. 168: Idler Sprocket, Plated Link & Arrow
Courtesy of CHRYSLER GROUP, LLC

CAUTION: Always reinstall timing chains so that they maintain the same direction of rotation. Inverting a previously run chain on a previously run sprocket will result in excessive wear to both the chain and sprocket.

19. Drape the left side cam chain over the LH intake cam phaser and onto the idler sprocket (1) so that the arrow (3) is aligned with the plated link (2) on the cam chain.

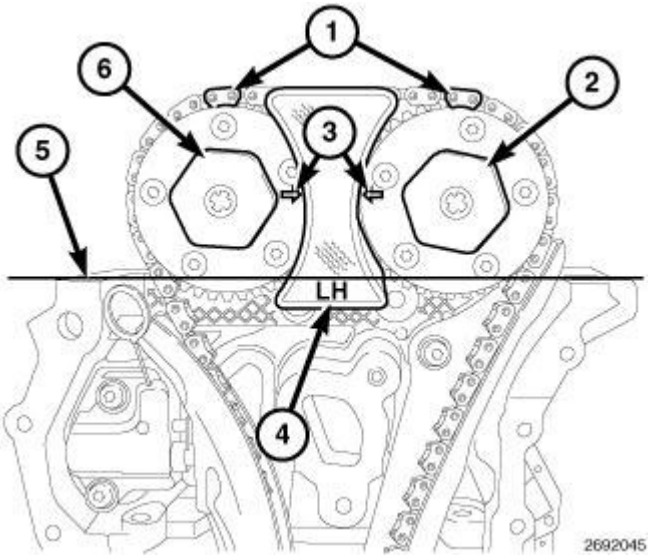

Fig. 169: Phaser Timing Marks, Oil Control Valves & LH Camshaft Phaser Lock
Courtesy of CHRYSLER GROUP, LLC

20. While maintaining this alignment, route the cam chain around the exhaust and intake cam phasers so that the plated links are aligned with the phaser timing marks (1). Position the left side cam phasers so that the

 © 2011 Mitchell Repair Information Company, LLC.

arrows (3) point toward each other and are parallel to the valve cover sealing surface (5). Press the exhaust cam phaser onto the exhaust cam, install and hand tighten the oil control valve (2).

NOTE: Minor rotation of a camshaft (a few degrees) may be required to install the camshaft phaser or phaser lock.

21. Install the LH Camshaft Phaser Lock (special tool #10202, Locks, Camshaft/Phaser) (4) and tighten the oil control valves (2) and (6) to 150 N.m (110 ft. lbs.).
22. Remove the LH Camshaft Phaser Lock (special tool #10202, Locks, Camshaft/Phaser).
23. Remove the Tensioner Pin (special tool #8514, Pins, Tensioner) (1) from the LH cam chain tensioner.

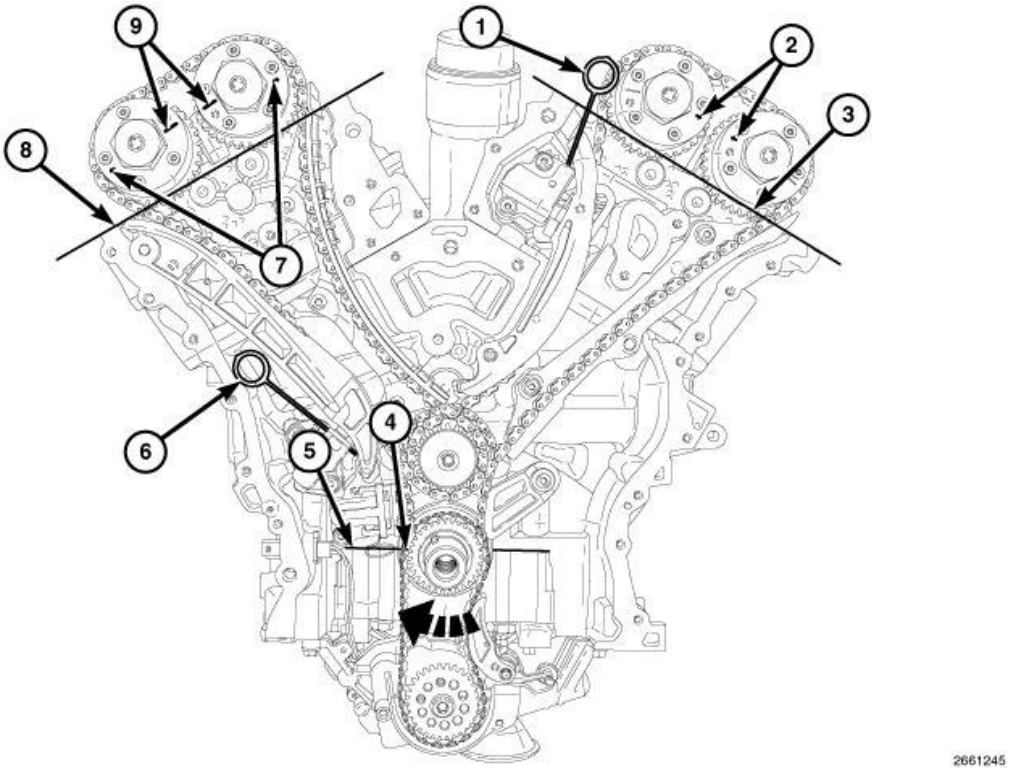

Fig. 170: Rotating Crankshaft Clockwise To Position No. 1 Piston At TDC On Exhaust Stroke
Courtesy of CHRYSLER GROUP, LLC

24. Rotate the crankshaft CW two complete revolutions stopping when the dimple (4) on the crankshaft is aligned the with the block/bearing cap junction (5).
25. While maintaining this alignment, verify that the arrows on the left side cam phasers (2) point toward each other and are parallel to the valve cover sealing surface (3) and that the right side cam phaser arrows (7) point away from each other and the scribe lines (9) are parallel to the valve cover sealing surface (8).

 © 2011 Mitchell Repair Information Company, LLC.

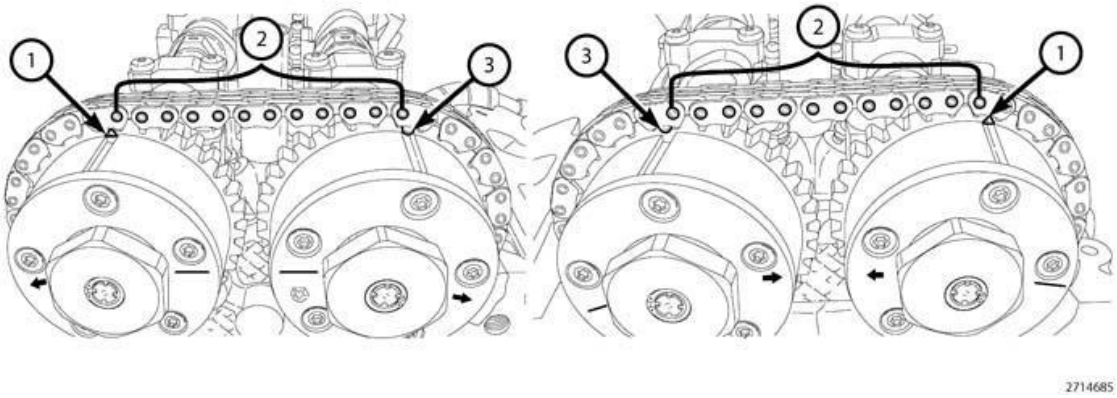

Fig. 171: Chain Pins, Exhaust Cam Phaser Triangle Marking & Circle Marking
Courtesy of CHRYSLER GROUP, LLC

26. There should be 12 chain pins (2) between the exhaust cam phaser triangle marking (1) and the intake cam phaser circle marking (3).
27. If the engine timing is not correct, repeat this procedure.
28. Install the engine timing cover, crankshaft vibration damper, upper and lower oil pans and cylinder head covers. Refer to **COVER(S), ENGINE TIMING, INSTALLATION**.

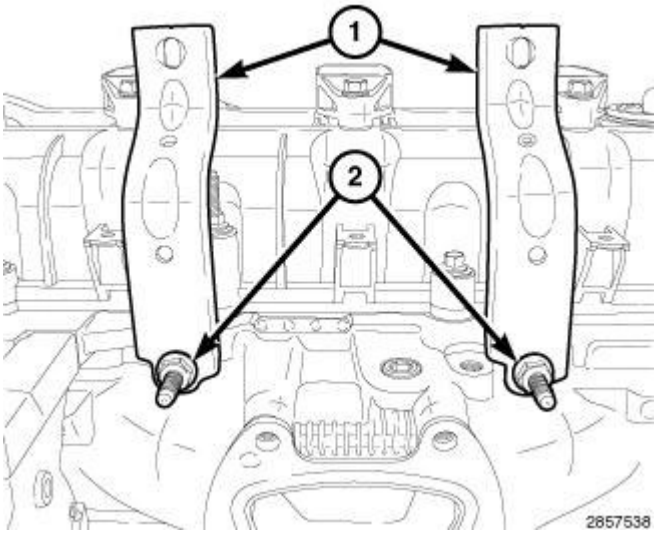

Fig. 172: Left Intake Manifold Support Brackets & Retaining Bolts
Courtesy of CHRYSLER GROUP, LLC

29. Install the LH upper intake manifold support brackets (1). Loosely install the studbolts (2).

 © 2011 Mitchell Repair Information Company, LLC.

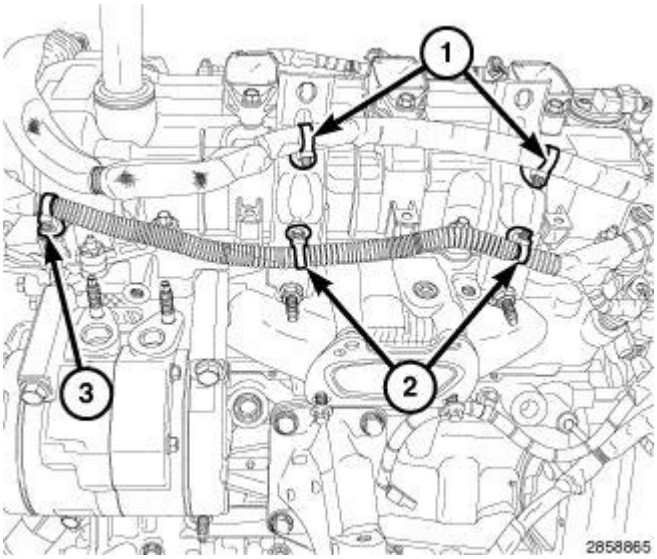

Fig. 173: Starter Wire Harness Retainers, Main Wire Harness Retainer & Manifold Support Bracket Retainers
Courtesy of CHRYSLER GROUP, LLC

30. Engage two starter wire harness retainers (1) to the upper intake manifold support brackets.
31. Engage one main wire harness retainer (3) to the left cylinder head cover and two retainers (2) to the upper intake manifold support brackets.
32. Install the spark plugs. Tighten to 17.5 N.m (13 ft. lbs.). Refer to **SPARK PLUG, INSTALLATION** .
33. Connect the ignition coil capacitor electrical connector.

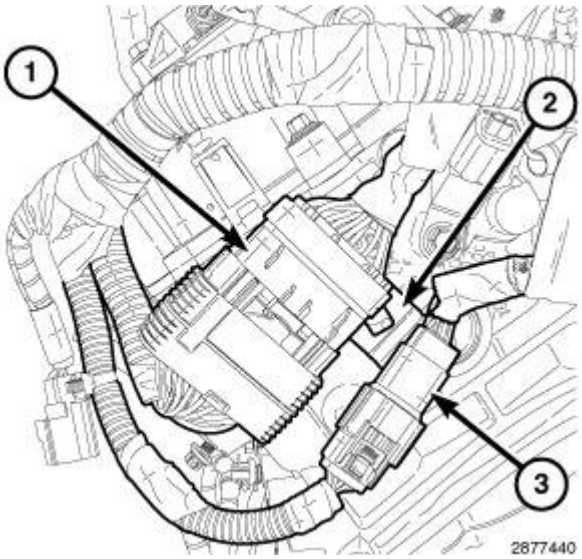

Fig. 174: Injection/Ignition Electrical Connector & Engine Oil Pressure/Temperature Sensor Electrical Connector
Courtesy of CHRYSLER GROUP, LLC

34. Engage the injection/ignition harness connector (1) and the engine oil pressure/temperature harness connector (3) to the retainer bracket (2) on the rear of the left cylinder head.

 © 2011 Mitchell Repair Information Company, LLC.

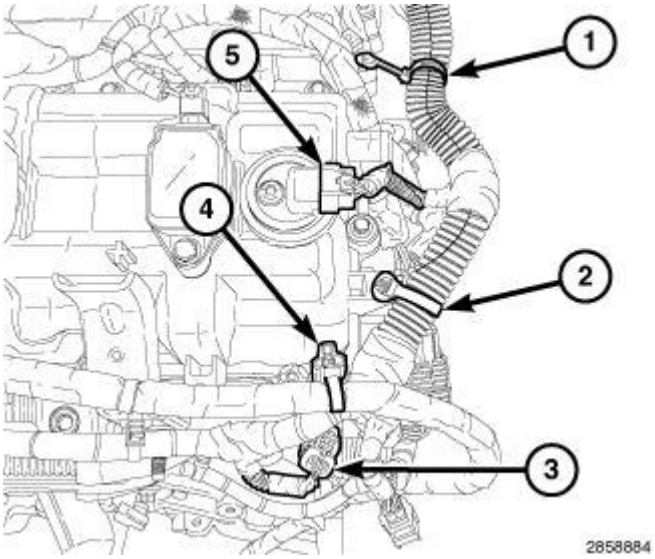

Fig. 175: ECT Sensor Connector, CMP Sensor & Main Wire Harness Retainers
Courtesy of CHRYSLER GROUP, LLC

35. Connect the Engine Coolant Temperature (ECT) sensor electrical connector (3).

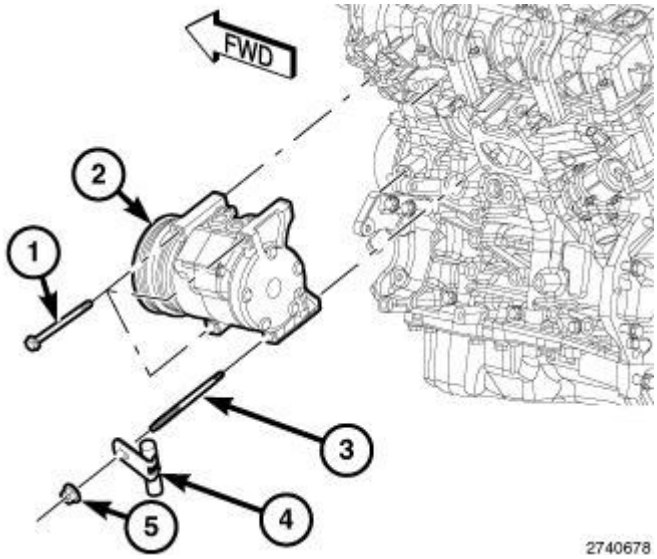

Fig. 176: A/C Compressor, Nut, Stud & Three Bolts
Courtesy of CHRYSLER GROUP, LLC

36. Install the A/C compressor (2) with three bolts (1) tightened to 25 N.m (18 ft. lbs.).

 © 2011 Mitchell Repair Information Company, LLC.

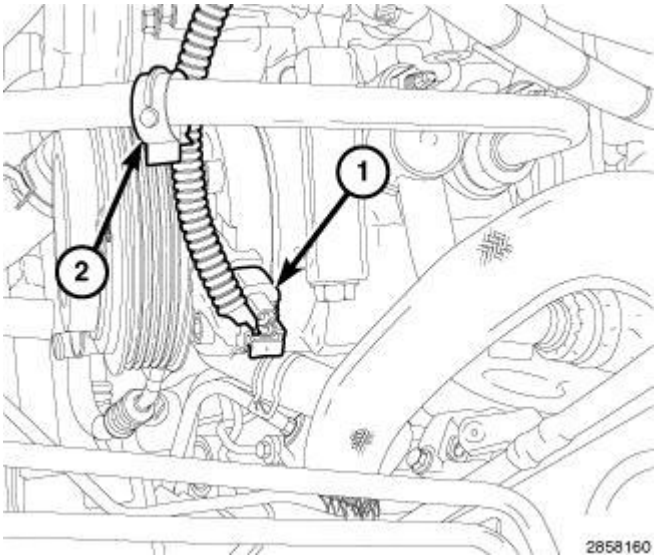

Fig. 177: A/C Compressor Electrical Connector & Wire Harness Retainer
Courtesy of CHRYSLER GROUP, LLC

37. Connect the A/C compressor electrical connector (1) and Engage the wire harness retainer (2) to the A/C compressor discharge line.

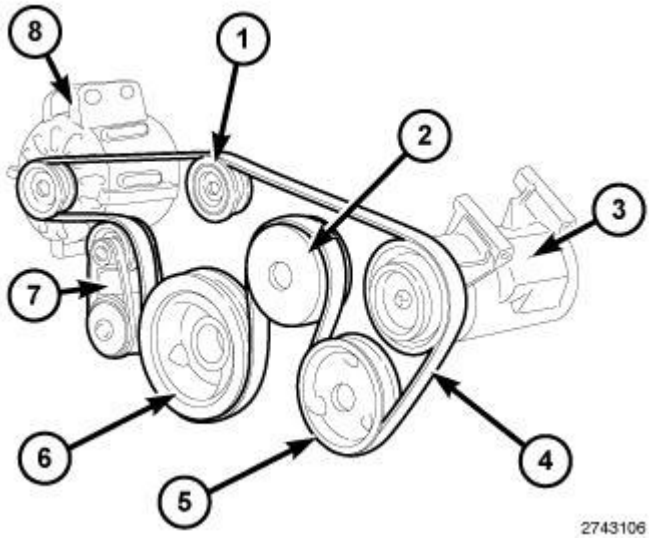

Fig. 178: Drive Belt Tensioners & Accessory Drive Belt Routing
Courtesy of CHRYSLER GROUP, LLC

38. Install the accessory drive belt (4). Refer to **BELT, SERPENTINE, INSTALLATION** .

 © 2011 Mitchell Repair Information Company, LLC.

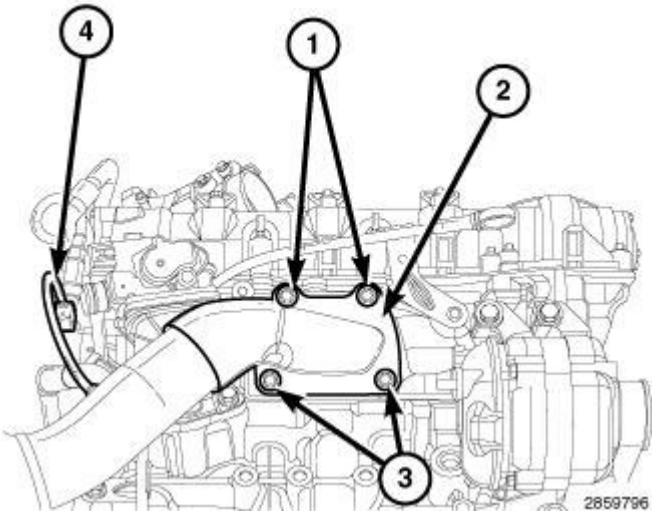

Fig. 179: Right Upstream Oxygen Electrical Sensor Connector, Down Pipe Flanges & Bolts
Courtesy of CHRYSLER GROUP, LLC

NOTE: Right catalytic converter shown in the illustration, left catalytic converter similar.

39. Install the left catalytic converter (2) onto the partially installed lower catalytic converter flange bolts (3).
40. Install the upper catalytic converter flange bolts (1) and tighten all M8 bolts to 23 N.m (17 ft. lbs.).
41. Connect the left upstream oxygen sensor connector (4) to the main wire harness.

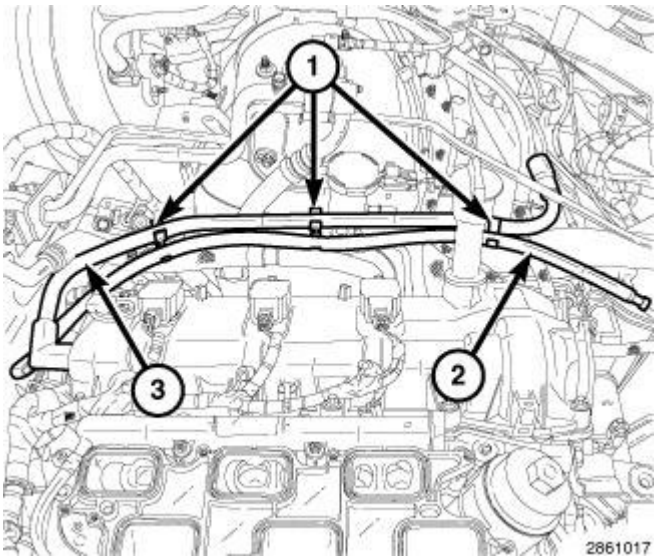

Fig. 180: Transmission Breather Hose, Make-Up Air Tube & Clips
Courtesy of CHRYSLER GROUP, LLC

42. Install the make-up air tube (3) to the left cylinder head cover and engage the clips (1) to the transmission breather hose (2).

 © 2011 Mitchell Repair Information Company, LLC.

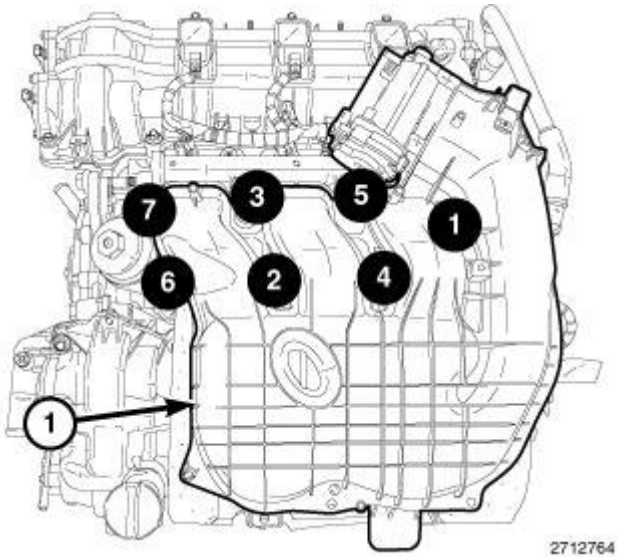

Fig. 181: Upper Intake Manifold Bolt Tightening Sequence
Courtesy of CHRYSLER GROUP, LLC

43. Install the upper and lower intake manifolds. Refer to **MANIFOLD, INTAKE, INSTALLATION**.

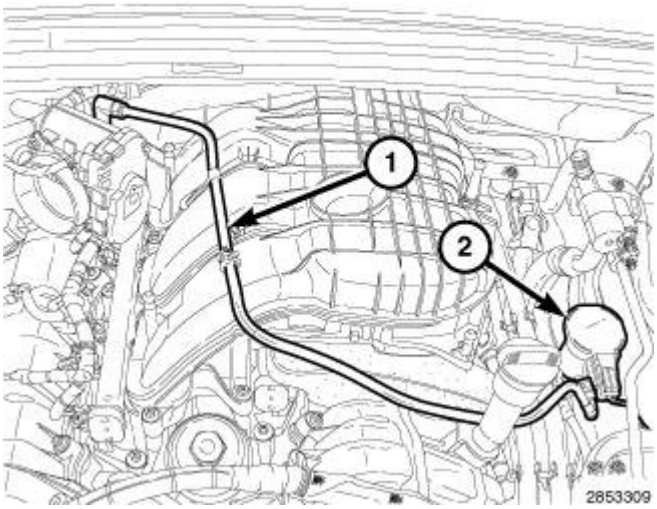

Fig. 182: Vapor Purge Tube & Fuel Purge Solenoid
Courtesy of CHRYSLER GROUP, LLC

44. Install the vapor purge tube (1) to the fuel purge solenoid (2). Refer to **FITTING, QUICK CONNECT, STANDARD PROCEDURE** .

 © 2011 Mitchell Repair Information Company, LLC.

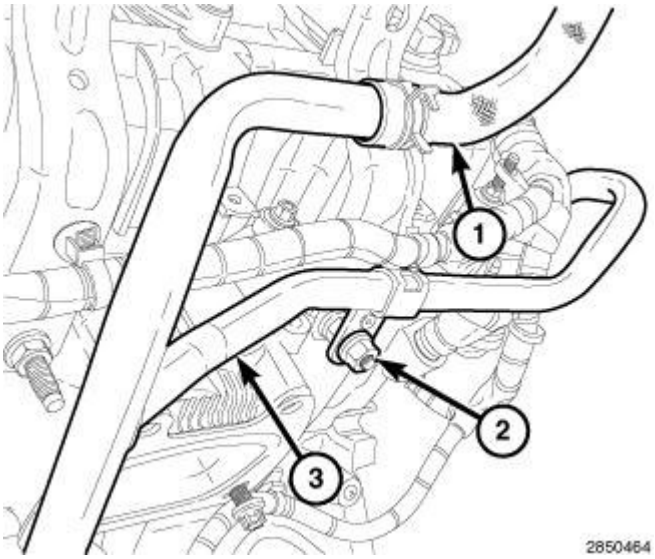

Fig. 183: Heater Core Return Hose, Heater Core Return Tube & Nut
Courtesy of CHRYSLER GROUP, LLC

45. Install the nut (2) to the support bracket of the heater core return tube (3) and tighten to 12 N.m (106 in. lbs.).
46. Raise and support the vehicle. Refer to **HOISTING, STANDARD PROCEDURE** .

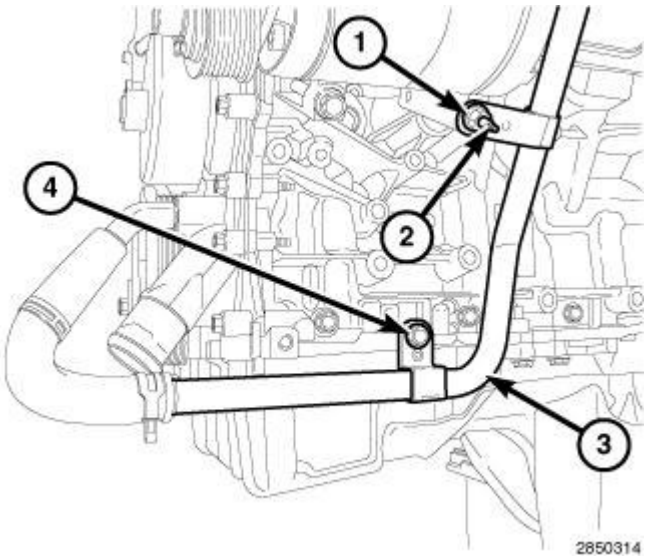

Fig. 184: Heater Core Return Tube, Nut & Bolt
Courtesy of CHRYSLER GROUP, LLC

NOTE: Power steering pump not shown in the illustration.

47. Install the A/C compressor mounting stud (2) and tighten to 25 N.m (18 ft. lbs.).
48. Install the nut (1) and bolt (4) to the support brackets of the heater core return tube (3). Tighten to 12 N.m (106 in. lbs.).

49. If equipped, install the front skid plate and front suspension skid plate (Refer to FRAME AND BUMPERS **UNDER BODY PROTECTION**).

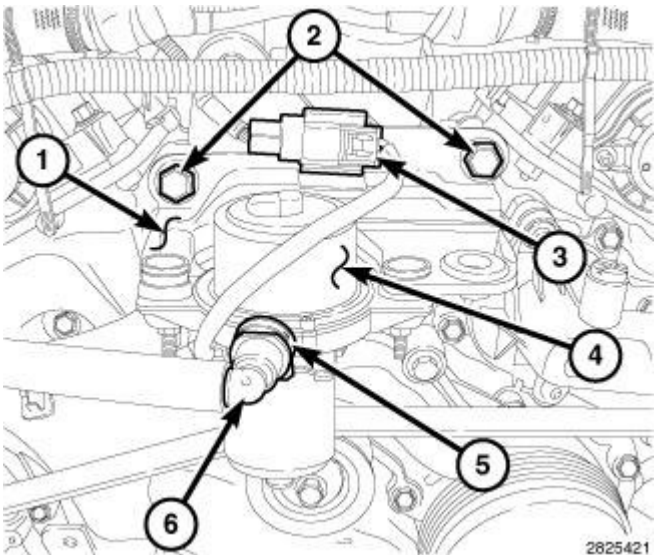

Fig. 185: Mounting Bracket, Bolts, Electrical Connector, Vacuum Pump, Locking Tab & Quick-Connect Type End
Courtesy of CHRYSLER GROUP, LLC

50. Lower the vehicle.
51. Install the electric vacuum pump (4) and mounting bracket (1). Refer to **PUMP, ELECTRIC VACUUM, INSTALLATION** .

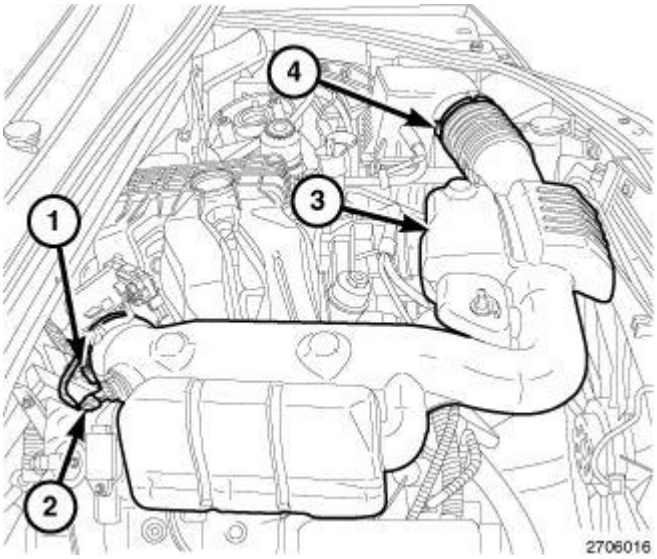

Fig. 186: Air Inlet Hose, Air Temperature (IAT) Sensor Connector & Clamps
Courtesy of CHRYSLER GROUP, LLC

52. Install the air inlet hose (3) and the air cleaner body. Refer to **BODY, AIR CLEANER, INSTALLATION**.

 © 2011 Mitchell Repair Information Company, LLC.

53. If removed, install the oil filter and fill the engine crankcase with the proper oil to the correct level. Refer to ENGINE/LUBRICATION/OIL **STANDARD PROCEDURE** .
54. Fill the cooling system. Refer to **STANDARD PROCEDURE** .

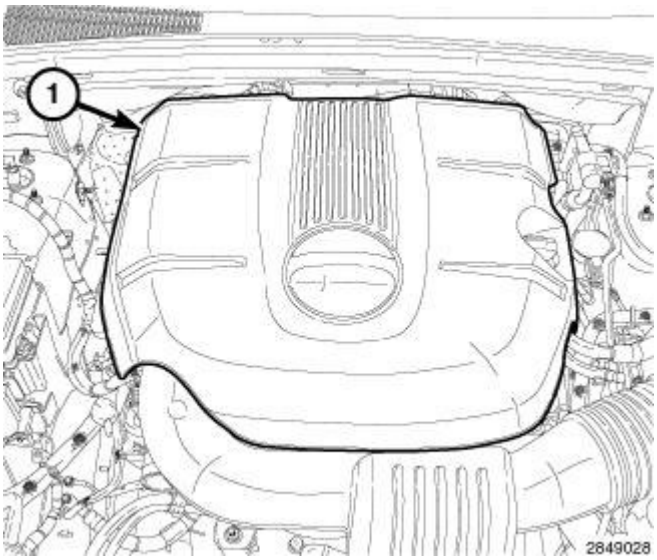

Fig. 187: Engine Cover
Courtesy of CHRYSLER GROUP, LLC

55. Install the engine cover (1).
56. Connect the negative battery cable and tighten nut to 5 N.m (45 in. lbs.).
57. Run the engine until it reaches normal operating temperature. Check cooling system for correct fluid level. Refer to **STANDARD PROCEDURE** .

NOTE: **The Cam/Crank Variation Relearn procedure must be performed using the scan tool anytime there has been a repair/replacement made to a powertrain system, for example: flywheel, valvetrain, camshaft and/or crankshaft sensors or components.**

RIGHT

 © 2011 Mitchell Repair Information Company, LLC.

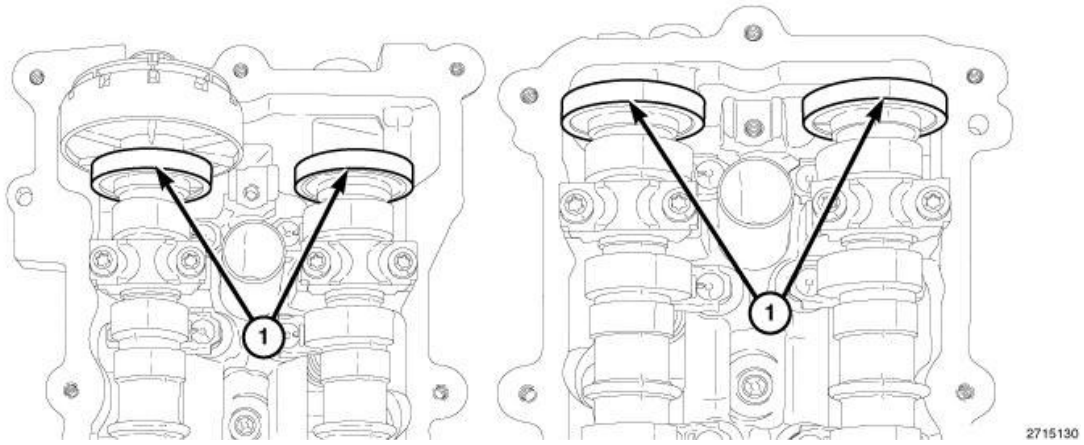

Fig. 188: Magnetic Timing Wheels
Courtesy of CHRYSLER GROUP, LLC

CAUTION: The magnetic timing wheels (1) must not come in contact with magnets (pickup tools, trays, etc.) or any other strong magnetic field. This will destroy the timing wheels ability to correctly relay camshaft position to the camshaft position sensor.

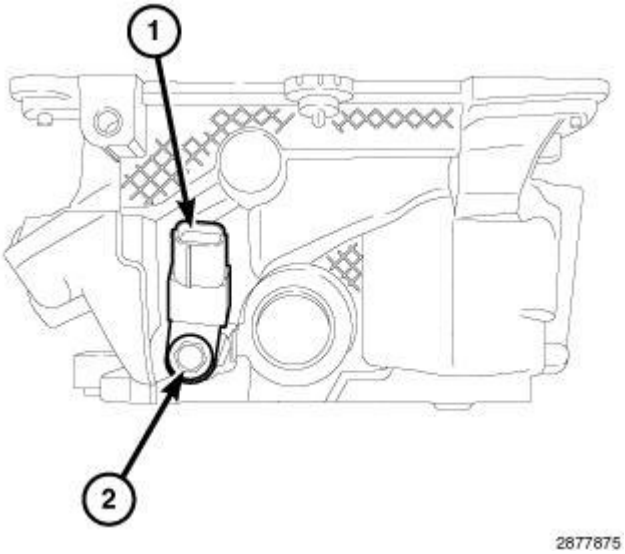

Fig. 189: Ignition Coil Capacitor & Bolt
Courtesy of CHRYSLER GROUP, LLC

1. If removed, install the ignition coil capacitor (1) with a M6 bolt (2) tightened to 10 N.m (89 in. lbs.).

 © 2011 Mitchell Repair Information Company, LLC.

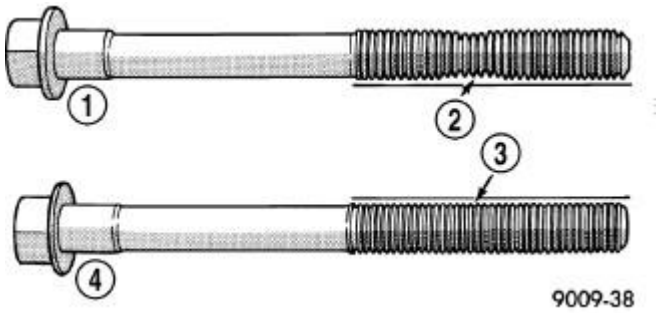

Fig. 190: Checking Cylinder Head Bolts For Stretching (Necking)
Courtesy of CHRYSLER GROUP, LLC

CAUTION: The cylinder head bolts are tightened using a torque plus angle procedure. The bolts must be examined BEFORE reuse. If the threads are necked down the bolts must be replaced.

NOTE: Typical cylinder head bolt shown in the illustration.

2. Check cylinder head bolts for necking by holding a scale or straight edge against the threads. If all the threads do not contact the scale (2) the bolt must be replaced.

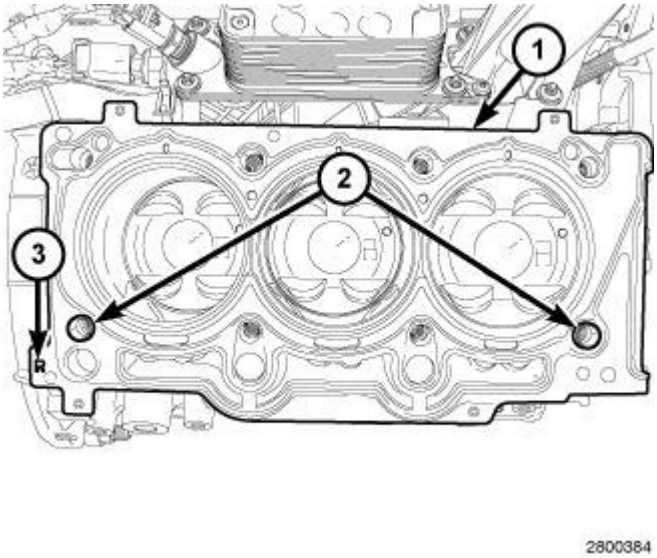

Fig. 191: Head Gasket & Locating Dowels
Courtesy of CHRYSLER GROUP, LLC

CAUTION: When cleaning cylinder head and cylinder block surfaces, DO NOT use a metal scraper because the surfaces could be cut or ground. Use ONLY a wooden or plastic scraper.

3. Clean and prepare the gasket sealing surfaces of the cylinder head and block. Refer to ENGINE **STANDARD PROCEDURE** .

CAUTION: Non-compressible debris such as oil, coolant or RTV sealants that are not removed from bolt holes can cause the aluminum casting to crack when tightening the bolts.

4. Clean out the cylinder head bolt holes in the engine block.

WARNING: The multi-layered steel head gaskets have very sharp edges that could cause personal injury if not handled carefully.

CAUTION: The installation of the cylinder head gaskets are not interchangeable between the left and right cylinder heads. They are clearly marked (3) with "R" for right and "L" for left. They must be applied on a dry surface, without the use of any adhesives.

5. Position the new cylinder head gasket (1) on the locating dowels (2).

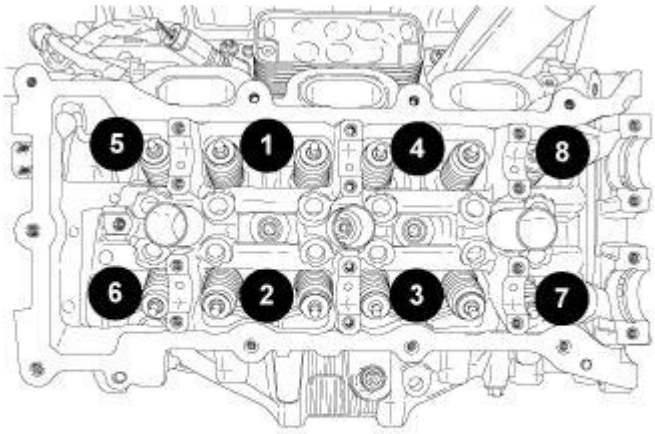

2719043

Fig. 192: Cylinder Head Retaining Bolt Tightening Sequence - Right
Courtesy of CHRYSLER GROUP, LLC

6. Position the cylinder head onto the cylinder block. Make sure the cylinder head seats fully over the locating dowels.

NOTE: Do not apply any additional oil to the bolt threads.

7. Install the eight head bolts finger tight.
8. Tighten the cylinder head bolts in the sequence shown in the illustration, following this 9-step torque plus angle method. Tighten according to the following torque values:
   - Step 1: All to 30 N.m (22 ft. lbs.)
   - Step 2: All to 45 N.m (33 ft. lbs.)

 © 2011 Mitchell Repair Information Company, LLC.

- Step 3: All + 75° Turn **Do not use a torque wrench for this step.**
- Step 4: All + 50° Turn **Do not use a torque wrench for this step.**
- Step 5: Loosen all fasteners in reverse of sequence shown in the illustration
- Step 6: All to 30 N.m (22 ft. lbs.)
- Step 7: All to 45 N.m (33 ft. lbs.)
- Step 8: All + 70° Turn **Do not use a torque wrench for this step.**
- Step 9: All + 70° Turn **Do not use a torque wrench for this step.**

NOTE: If the hydraulic lifters are being reused, reassemble them into their original locations.

9. If removed, install the hydraulic lifters. Refer to **LIFTER(S), HYDRAULIC, INSTALLATION**.

NOTE: If the rocker arms are being reused, reassemble them into their original locations.

10. Install the rocker arms and camshafts. Refer to **CAMSHAFT, ENGINE, INSTALLATION**.

CAUTION: Do not rotate the camshafts more than a few degrees independently of the crankshaft. Valve to piston contact could occur resulting in possible valve damage. If the camshafts need to be rotated more than a few degrees, first move the pistons away from the cylinder heads by rotating the crankshaft counterclockwise to a position 30° before-top-dead-center. Once the camshafts are returned to their top-dead-center position, rotate the crankshaft clockwise to return the crankshaft to top-dead-center.

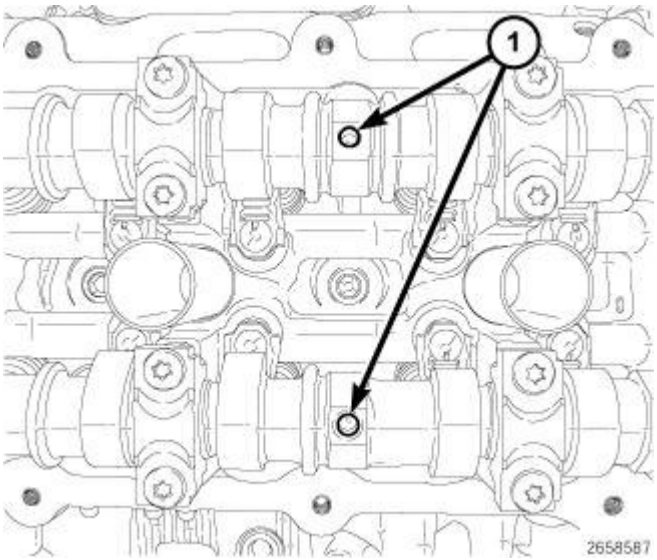

Fig. 193: Positioning Camshaft Alignment Holes Vertically
Courtesy of CHRYSLER GROUP, LLC

 © 2011 Mitchell Repair Information Company, LLC.

11. Verify that the camshafts are set at TDC by positioning the alignment holes (1) vertically.

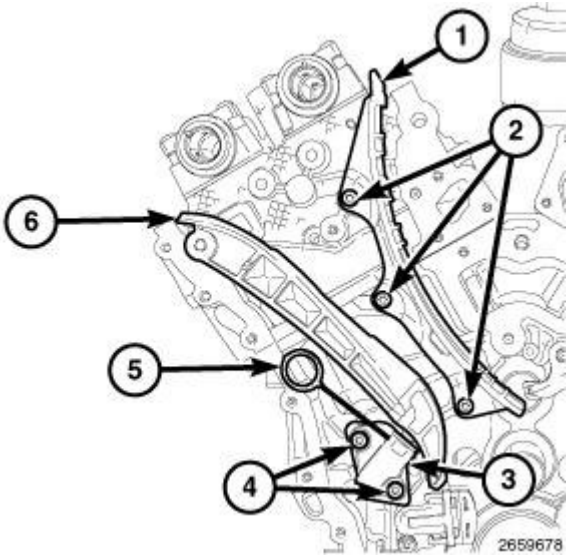

Fig. 194: Right Cam Chain Tensioner, Arm, Guide & Bolts
Courtesy of CHRYSLER GROUP, LLC

12. Install the RH cam chain guide (1) with three bolts (2). Tighten the T30 bolts (2) to 12 N.m (106 in. lbs.).
13. Install the RH cam chain tensioner (3) to the engine block with two bolts (4). Tighten the T30 bolts (4) to 12 N.m (106 in. lbs.).
14. Reset the RH cam chain tensioner (3) by pushing back the tensioner piston and installing Tensioner Pin (special tool #8514, Pins, Tensioner) (5).
15. Install the RH tensioner arm (6).
16. Press the RH exhaust cam phaser onto the exhaust camshaft. Install and hand tighten the oil control valve.

CAUTION: Always reinstall timing chains so that they maintain the same direction of rotation. Inverting a previously run chain on a previously run sprocket will result in excessive wear to both the chain and sprocket.

 © 2011 Mitchell Repair Information Company, LLC.

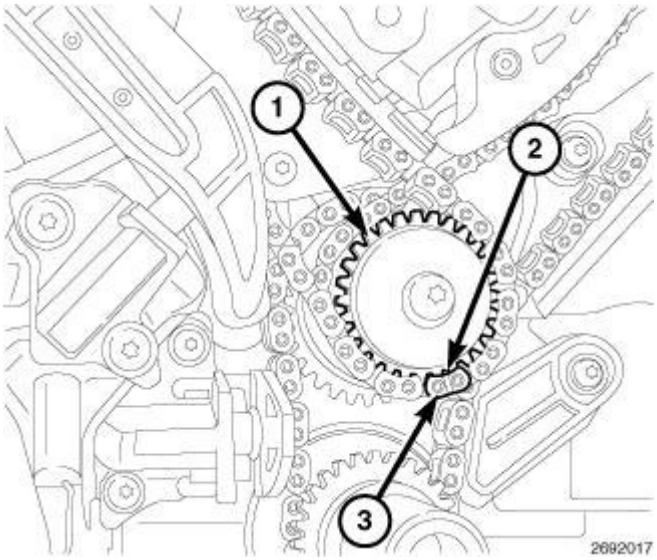

Fig. 195: Idler Sprocket, Dimple & Plated Link
Courtesy of CHRYSLER GROUP, LLC

17. Drape the right side cam chain over the RH exhaust cam phaser and onto the idler sprocket (1) so that the dimple (2) is aligned with the plated link (3) on the cam chain.

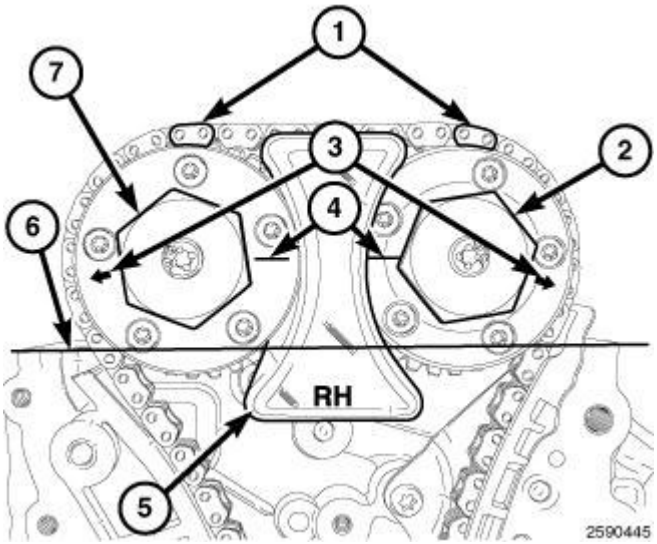

Fig. 196: Phaser Timing Marks, Oil Control Valves & RH Camshaft Phaser Lock
Courtesy of CHRYSLER GROUP, LLC

18. While maintaining this alignment, route the cam chain around the exhaust and intake cam phasers so that the plated links are aligned with the phaser timing marks (1). Position the right side cam phasers so that the arrows (3) point away from each other and the scribe lines (4) are parallel to the valve cover sealing surface (6). Press the intake cam phaser onto the intake cam, install and hand tighten the oil control valve (2).

NOTE: Minor rotation of a camshaft (a few degrees) may be required to install the

 © 2011 Mitchell Repair Information Company, LLC.

camshaft phaser or phaser lock.

19. Install the RH Camshaft Phaser Lock (special tool #10202, Locks, Camshaft/Phaser) (5) and tighten the oil control valves (2) and (7) to 150 N.m (110 ft. lbs.).
20. Remove the RH Camshaft Phaser Lock (special tool #10202, Locks, Camshaft/Phaser).
21. Remove the Tensioner Pin (special tool #8514, Pins, Tensioner) (6) from the RH cam chain tensioner.

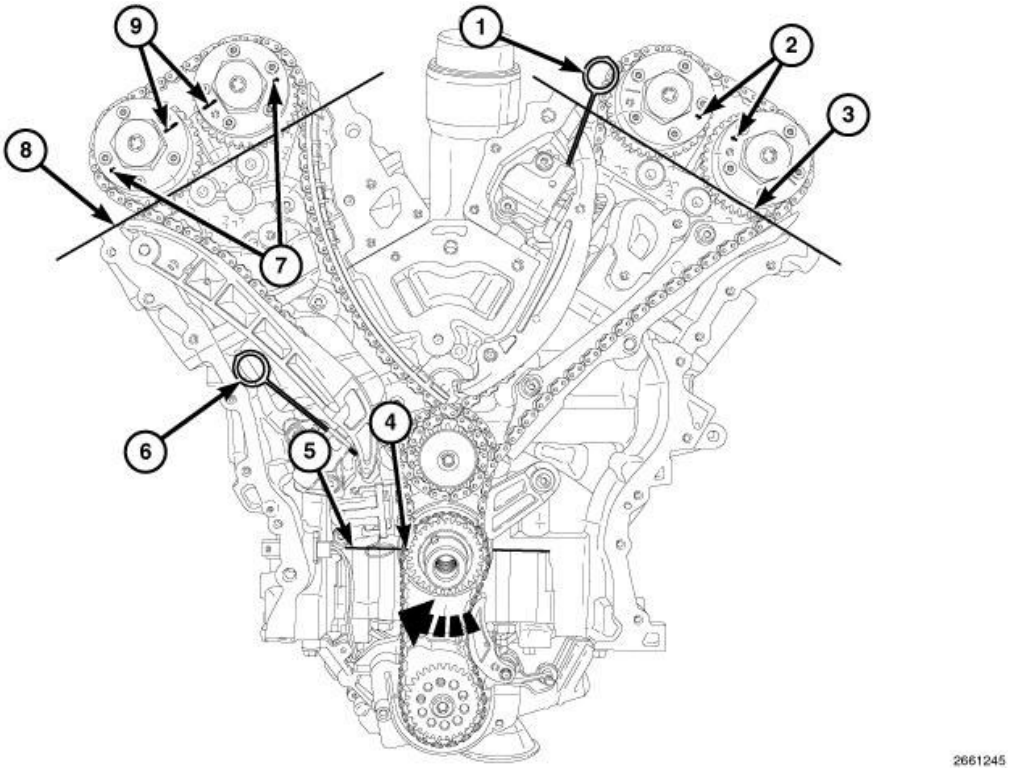

Fig. 197: Rotating Crankshaft Clockwise To Position No. 1 Piston At TDC On Exhaust Stroke
Courtesy of CHRYSLER GROUP, LLC

22. Rotate the crankshaft CW two complete revolutions stopping when the dimple (4) on the crankshaft is aligned the with the block/bearing cap junction (5).
23. While maintaining this alignment, verify that the arrows on the left side cam phasers (2) point toward each other and are parallel to the valve cover sealing surface (3) and that the right side cam phaser arrows (7) point away from each other and the scribe lines (9) are parallel to the valve cover sealing surface (8).

 © 2011 Mitchell Repair Information Company, LLC.

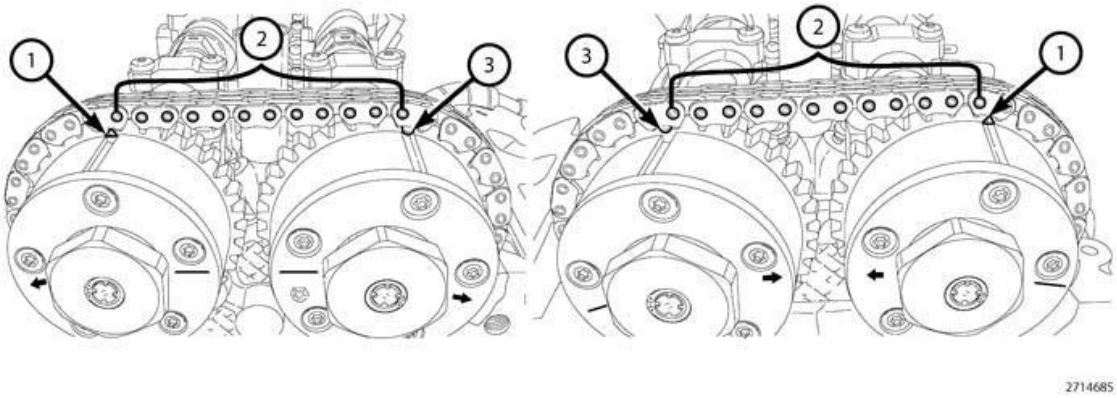

Fig. 198: Chain Pins, Exhaust Cam Phaser Triangle Marking & Circle Marking
Courtesy of CHRYSLER GROUP, LLC

24. There should be 12 chain pins (2) between the exhaust cam phaser triangle marking (1) and the intake cam phaser circle marking (3).
25. If the engine timing is not correct, repeat this procedure.
26. Install the engine timing cover, crankshaft vibration damper, upper and lower oil pans and cylinder head covers. Refer to **COVER(S), ENGINE TIMING, INSTALLATION**.
27. Install the spark plugs. Tighten to 17.5 N.m (13 ft. lbs.). Refer to **SPARK PLUG, INSTALLATION** .
28. Connect the ignition coil capacitor electrical connector.

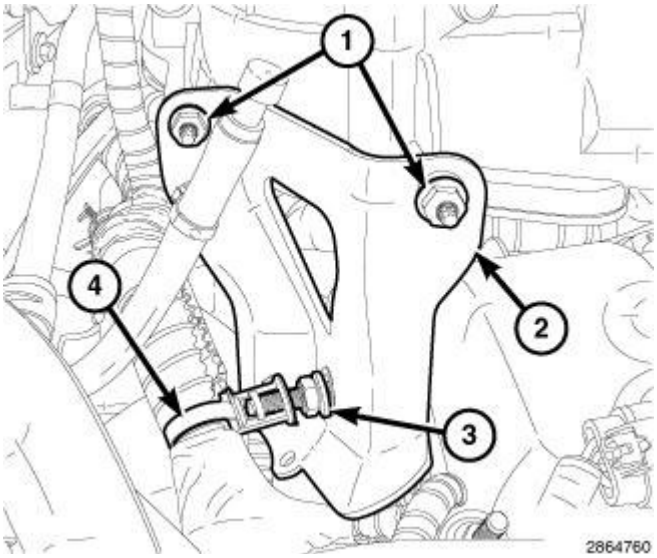

Fig. 199: Upper Intake Manifold Support Bracket, Stud & Fasteners
Courtesy of CHRYSLER GROUP, LLC

29. Install the upper intake manifold support bracket (2) with the studbolt (3) hand tight.

 © 2011 Mitchell Repair Information Company, LLC.

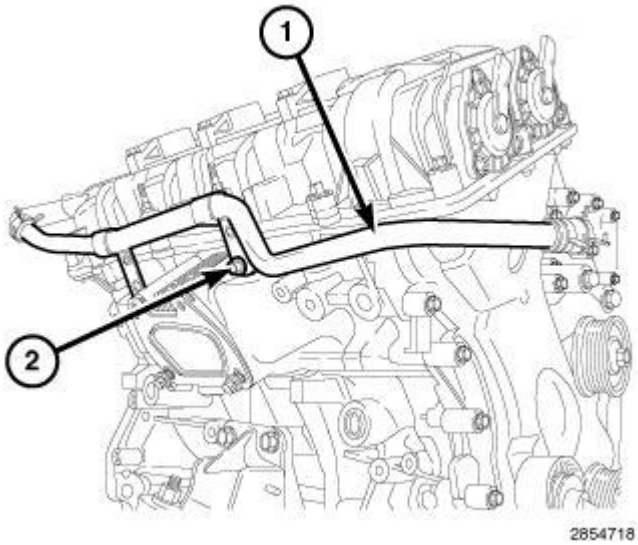

Fig. 200: Heater Core Supply Tube Support Bracket & Retaining Bolt
Courtesy of CHRYSLER GROUP, LLC

30. Install the heater core supply tube (1) with one bolt (2) tightened to 12 N.m (106 in. lbs.).

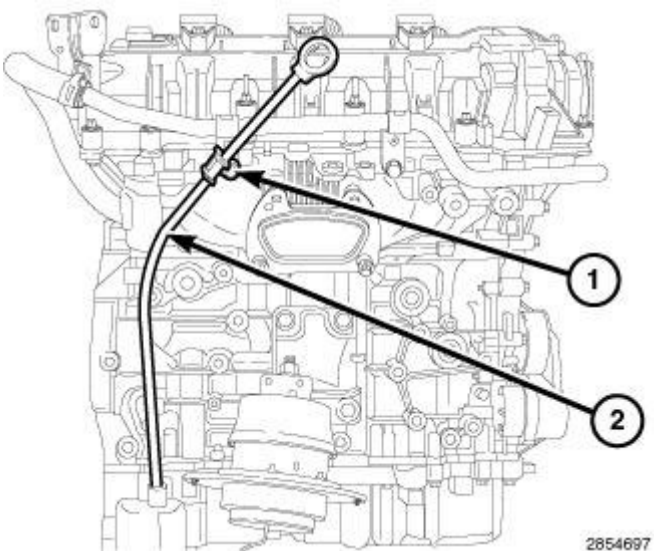

Fig. 201: Oil Level Indicator & Retaining Bolt
Courtesy of CHRYSLER GROUP, LLC

31. Install the oil level indicator (2) with bolt (1) tightened 12 N.m (106 in. lbs.).

 © 2011 Mitchell Repair Information Company, LLC.

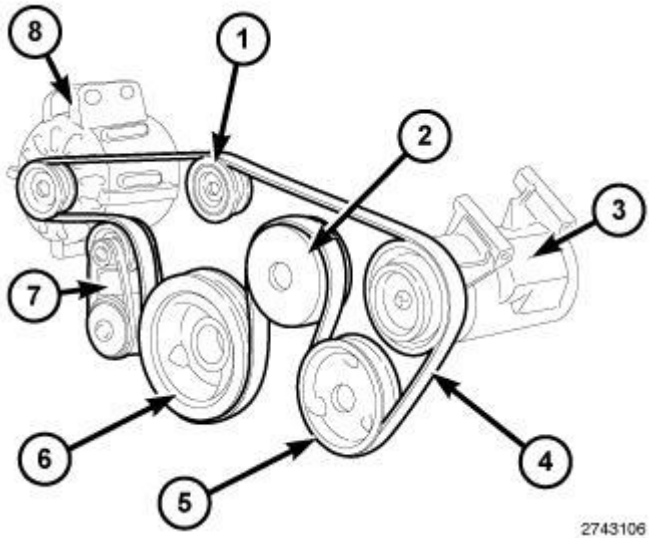

Fig. 202: Drive Belt Tensioners & Accessory Drive Belt Routing
Courtesy of CHRYSLER GROUP, LLC

32. Install the generator (8). Refer to **GENERATOR, INSTALLATION** .
33. Install the accessory drive belt (4). Refer to **BELT, SERPENTINE, INSTALLATION** .

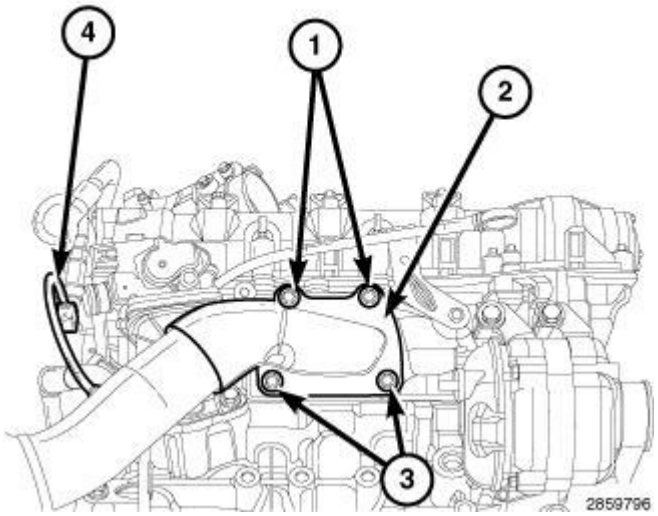

Fig. 203: Right Upstream Oxygen Electrical Sensor Connector, Down Pipe Flanges & Bolts
Courtesy of CHRYSLER GROUP, LLC

34. Install the right catalytic converter (2) onto the partially installed lower catalytic converter flange bolts (3).
35. Install the upper catalytic converter flange bolts (1) and tighten all M8 bolts to 23 N.m (17 ft. lbs.).
36. Connect the right upstream oxygen sensor connectors (4) to the main wire harness.

 © 2011 Mitchell Repair Information Company, LLC.

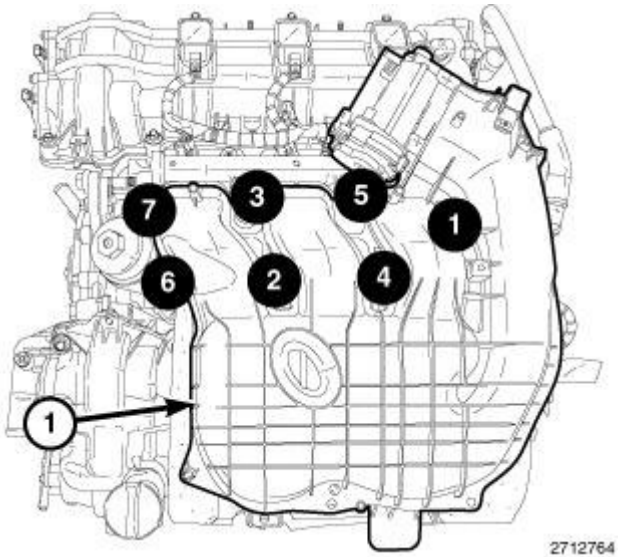

Fig. 204: Upper Intake Manifold Bolt Tightening Sequence
Courtesy of CHRYSLER GROUP, LLC

37. Install the upper and lower intake manifolds. Refer to **MANIFOLD, INTAKE, INSTALLATION**.

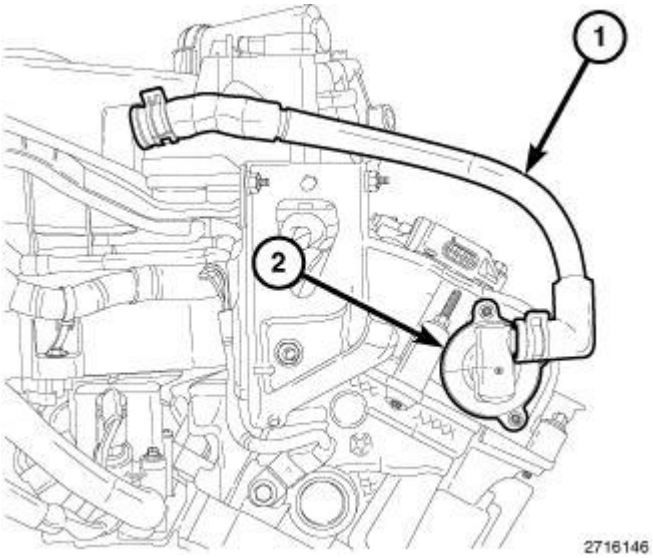

Fig. 205: PCV Hose & PCV Valve
Courtesy of CHRYSLER GROUP, LLC

38. Install the PCV hose (1) to the PCV valve (2).
39. Raise and support the vehicle. Refer to **HOISTING, STANDARD PROCEDURE** .
40. If equipped, install the front skid plate and front suspension skid plate. Refer to FRAME AND BUMPERS **UNDER BODY PROTECTION** .
41. Lower the vehicle.

 © 2011 Mitchell Repair Information Company, LLC.

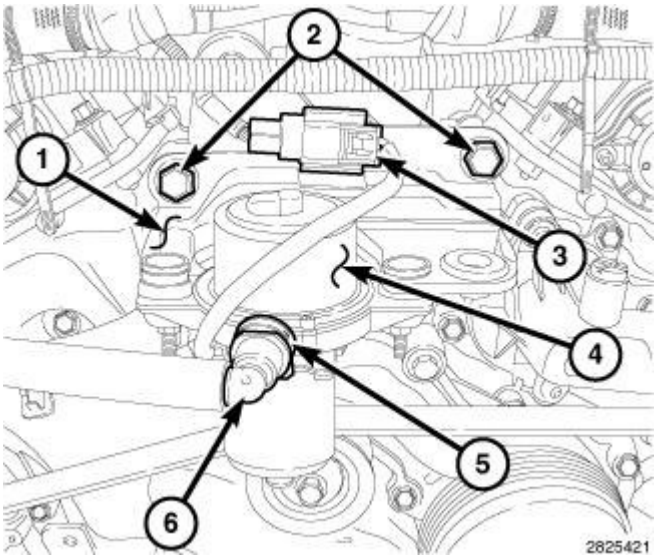

Fig. 206: Mounting Bracket, Bolts, Electrical Connector, Vacuum Pump, Locking Tab & Quick-Connect Type End
Courtesy of CHRYSLER GROUP, LLC

42. Install the electric vacuum pump (4) and mounting bracket (1). Refer to **PUMP, ELECTRIC VACUUM, INSTALLATION** .

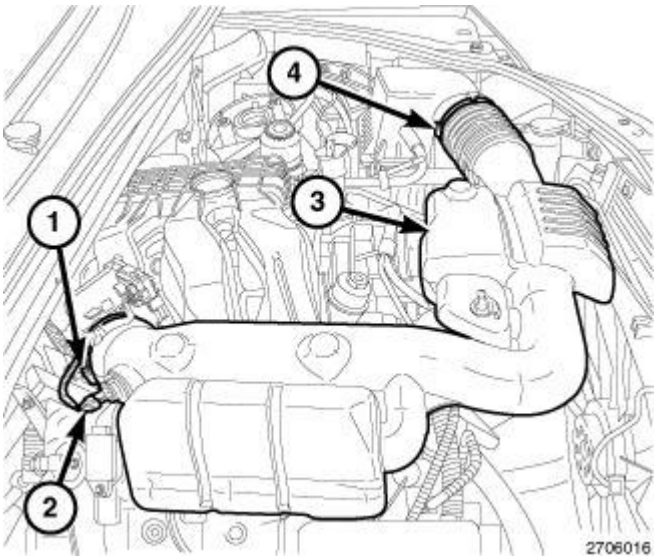

Fig. 207: Air Inlet Hose, Air Temperature (IAT) Sensor Connector & Clamps
Courtesy of CHRYSLER GROUP, LLC

43. Install the air inlet hose (3) to the air cleaner body and the throttle body. Tighten the clamps (1) and (4) to 4 N.m (35 in. lbs.).
44. Connect the electrical connector (2) to the Inlet Air Temperature (IAT) sensor.
45. If removed, install the oil filter and fill the engine crankcase with the proper oil to the correct level. Refer to ENGINE/LUBRICATION/OIL **STANDARD PROCEDURE** .
46. Fill the cooling system. Refer to **STANDARD PROCEDURE** .

 © 2011 Mitchell Repair Information Company, LLC.

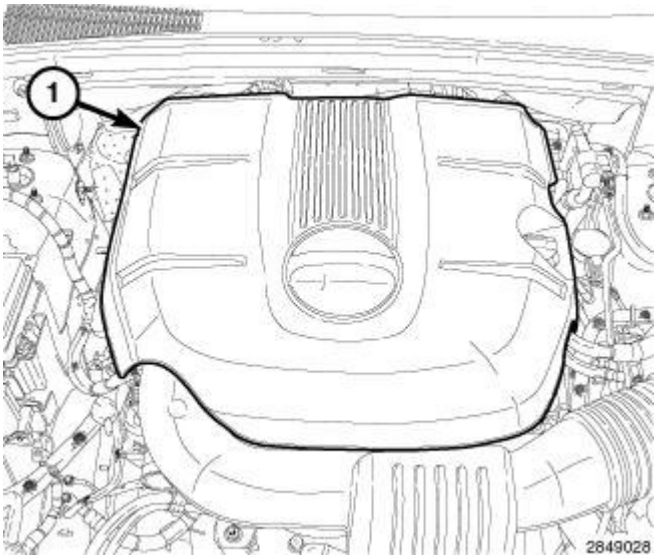

Fig. 208: Engine Cover
Courtesy of CHRYSLER GROUP, LLC

47. Install the engine cover (1).
48. Connect the negative battery cable and tighten nut to 5 N.m (45 in. lbs.).
49. Run the engine until it reaches normal operating temperature. Check cooling system for correct fluid level. Refer to **STANDARD PROCEDURE** .

NOTE: **The Cam/Crank Variation Relearn procedure must be performed using the scan tool anytime there has been a repair/replacement made to a powertrain system, for example: flywheel, valvetrain, camshaft and/or crankshaft sensors or components.**

ASSEMBLY, VARIABLE VALVE TIMING, PHASER / OIL CONTROL VALVE

DESCRIPTION

DESCRIPTION

 © 2011 Mitchell Repair Information Company, LLC.

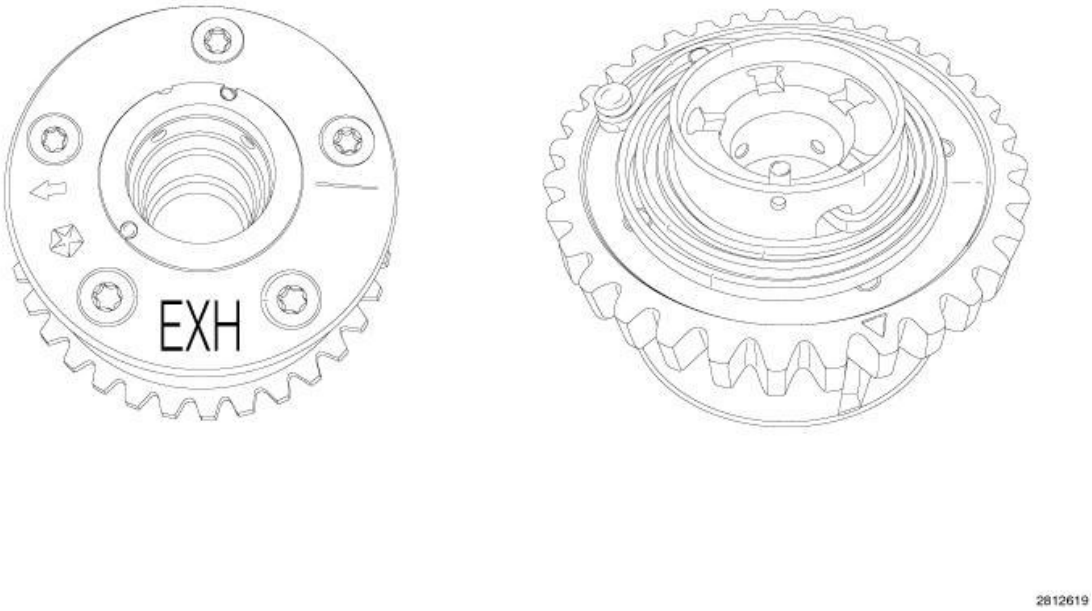

Fig. 209: Exhaust Phaser Assembly
Courtesy of CHRYSLER GROUP, LLC

The 3.6L engine is equipped with Variable Valve Timing (VVT). This system adjusts the timing of all four camshafts independently using solenoids and oil control valves to direct oil pressure into the camshaft phaser assemblies. The camshaft phaser assembly advances and/or retards camshaft timing to improve engine performance, mid-range torque, idle quality, fuel economy, and reduce emissions. The four phasers are located on the front of the camshafts, behind the VVT solenoids, inside of the engine timing cover. The exhaust phasers are identified with EXH and the intake phasers are identified with INT. The exhaust phaser has a clockspring, the intake phaser does not. The camshaft sprockets are integrated with the camshaft phaser and are serviced as an assembly. Do not attempt to disassemble the phasers, they are not serviceable. Phasers are interchangeable between the right and left cylinder heads but should be installed in the same location as removed.

The 3.6L engine has an Oil Control Valve (OCV) for each phaser. The OCV also acts as a bolt for mounting the Phaser to the camshaft. The OCVs spool valve is spring loaded and should move freely within the OCV body. The four OCVs are identical but should be installed in the same location as removed.

OPERATION

OPERATION

 © 2011 Mitchell Repair Information Company, LLC.

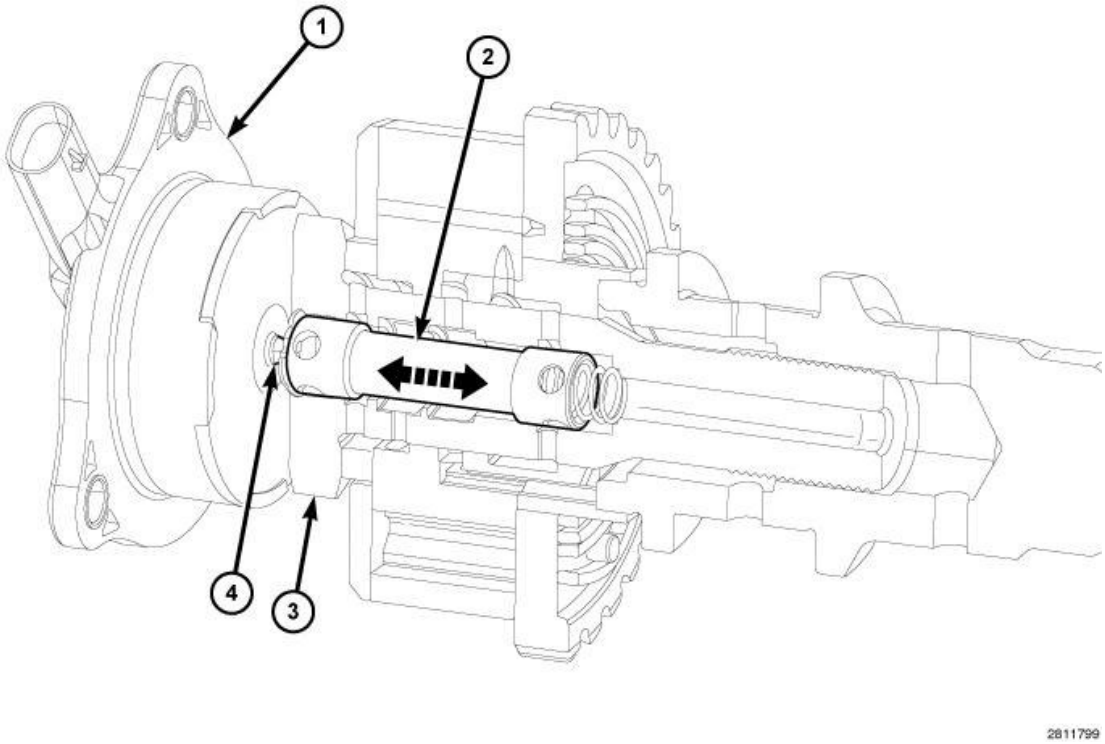

Fig. 210: Oil Control Valve (OCV), VVT Solenoid, Solenoid Pintle & Internal Spool Valve
Courtesy of CHRYSLER GROUP, LLC

Each phaser position is adjusted using regulated oil pressure through the Oil Control Valve (OCV) (3). To begin phaser movement, a voltage signal is applied to the VVT solenoid (1) to extend or retract the solenoid pintle (4). The pintle pushes against an internal spool valve (2) within the OCV moving the valve forwards and backwards to direct oil flow.

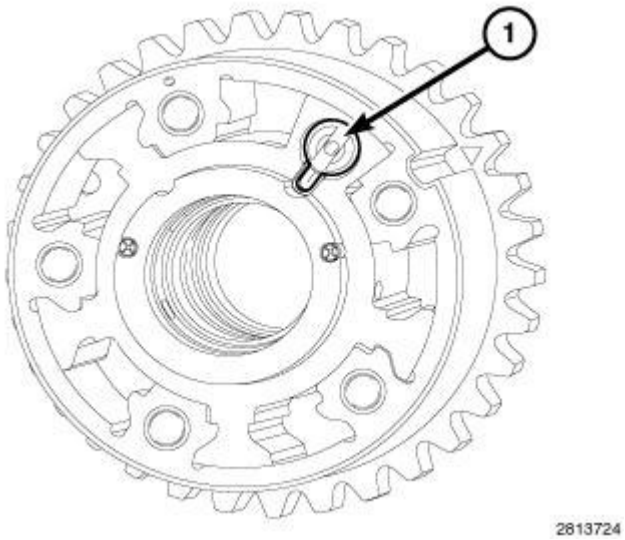

Fig. 211: Phasers In Lock-Pin Position
Courtesy of CHRYSLER GROUP, LLC

 © 2011 Mitchell Repair Information Company, LLC.

At engine startup, system oil pressure overcomes spring pressure and unlocks the phaser lock-pin (1) in preparation for phasing. The phasers remain in this position until a PCM signal is given to pulse-width modulate the VVT solenoid. At engine shutdown, as oil pressure is reduced, both Phasers return to their lock-pin position (1). However, because the exhaust Phaser needs to travel to a position above and beyond the standard camshaft clockwise rotation, the assistance of a clock spring is required. The intake Phaser on the other hand, simply relies on the torsional resistance from the valvetrain to push it back towards lock-pin position.

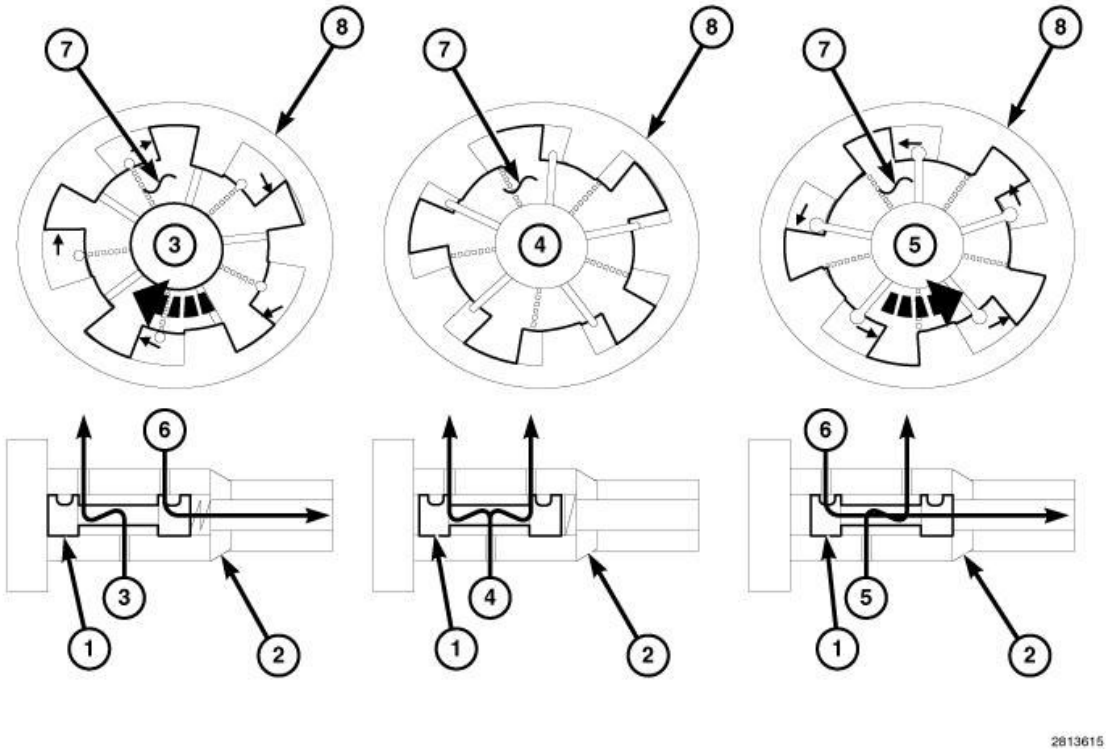

Fig. 212: Spool Valve, Vanes, OCV & Advance, Hold Or Retard Position
Courtesy of CHRYSLER GROUP, LLC

The position of the spool valve (1) inside the OCV (2) determines which ports and chambers inside the phaser are being fed, either to advance (3), hold (4) or retard (5) the timing of the phaser sprocket relative to the camshaft. The spool valve also returns oil from the chambers to the sump (6). The Camshaft Position (CMP) sensor monitors the position of the camshaft with respect to the crankshaft and provides feedback to the PCM. As oil pressure pushes against the vanes (6) of the phaser rotor, the rotor begins to move. Since this rotor is physically attached to the camshaft, rotor rotation causes the camshaft position to rotate relative to the standard sprocket (7) position.

REMOVAL

LEFT

 © 2011 Mitchell Repair Information Company, LLC.

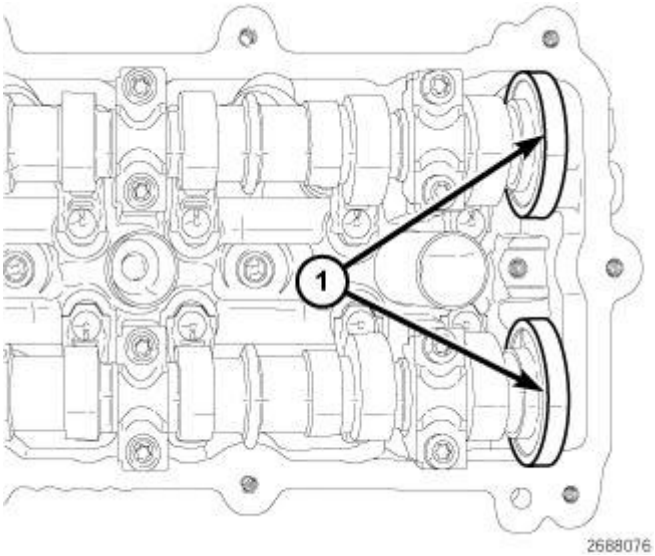

Fig. 213: Magnetic Timing Wheels
Courtesy of CHRYSLER GROUP, LLC

CAUTION: The magnetic timing wheels (1) must not come in contact with magnets (pickup tools, trays, etc.) or any other strong magnetic field. This will destroy the timing wheels ability to correctly relay camshaft position to the camshaft position sensor.

1. Remove the upper intake manifold, left ignition coils and left cylinder head cover. Refer to **COVER(S), CYLINDER HEAD, REMOVAL**.
2. Remove the right ignition coils and all spark plugs. Refer to **SPARK PLUG, REMOVAL** .

CAUTION: When aligning timing marks, always rotate engine by turning the crankshaft. Failure to do so will result in valve and/or piston damage.

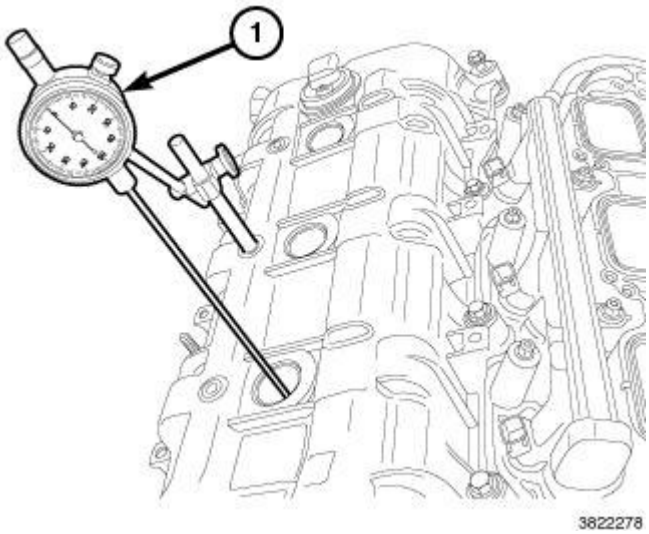

 © 2011 Mitchell Repair Information Company, LLC.

Fig. 214: Mount Dial Indicator Set To Stationary Point On Engine
Courtesy of CHRYSLER GROUP, LLC

3. Mount Dial Indicator Set (special tool #C-3339A, Set, Dial Indicator) (1) to a stationary point on the engine, such as the number three cylinder ignition coil mount. Position the indicator probe into the number one cylinder, rotate the crankshaft clockwise (as viewed from the front) to place the number one cylinder piston at top-dead-center on the exhaust stroke and set the indicator dial to zero.

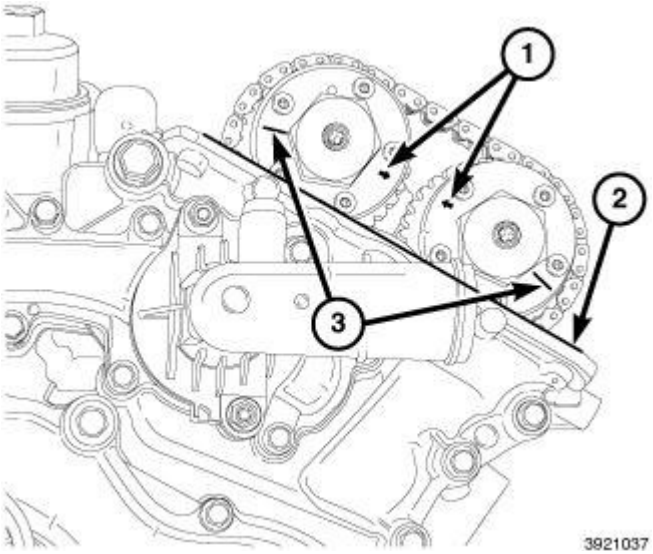

Fig. 215: Arrows, Scribe Lines & Cylinder Head Cover Mounting Surface
Courtesy of CHRYSLER GROUP, LLC

4. The left side cam phaser **SCRIBE LINES** (3) should face away from each other and the **ARROWS** (1) should point toward each other and be parallel to the cylinder head cover mounting surface (2) when the number one cylinder piston is positioned at top-dead-center on the exhaust stroke.

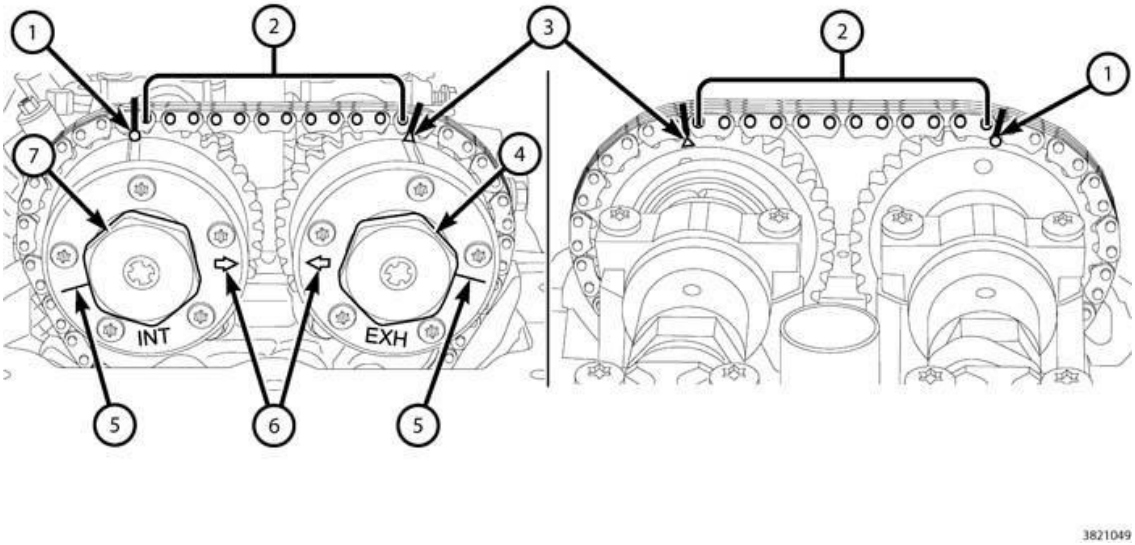

Fig. 216: Phaser Timing Mark, Chain Pins, Exhaust Cam Phaser Triangle Marking, Oil Control Valve, Scribe Lines & Arrows
Courtesy of CHRYSLER GROUP, LLC

NOTE: The cam phaser timing markings (1 and 3) could align with either an external or internal chain link. Either alignment is acceptable as long as there are twelve chain pins (2) between the markings.

NOTE: Using a paint pen or equivalent. Mark the timing chain links to the corresponding timing marks located on the cam phasers.

5. There should be twelve chain pins (2) **BETWEEN** the exhaust cam phaser triangle marking (3) and the intake cam phaser circle marking (1) as viewed from either the front or rear of the cam phasers.
6. Mark both sides of the cam chain at the phaser timing marks (1 and 3) using a paint pen or equivalent to aid in reassembly.

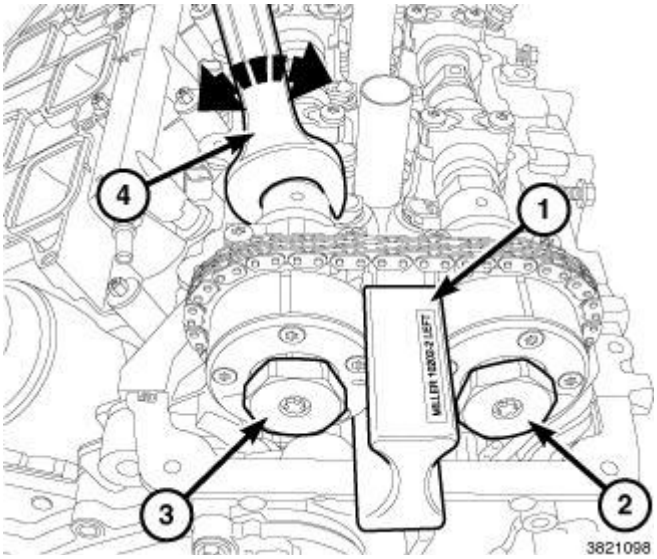

Fig. 217: Camshaft Phaser Lock, Oil Control Valves & Wrench
Courtesy of CHRYSLER GROUP, LLC

NOTE: It may be necessary to rock the camshaft slightly (a few degrees) with a wrench (4) when installing the camshaft phaser lock.

7. Install the (special tool #10202-2, Lock, Camshaft/Phaser, Left Side) (1) against the cylinder head cover mounting surface with the tool number facing up.
8. Loosen, but do not remove, the exhaust oil control valve (2) and the intake oil control valve (3).
9. Remove the (special tool #10202-2, Lock, Camshaft/Phaser, Left Side) (1).

 © 2011 Mitchell Repair Information Company, LLC.

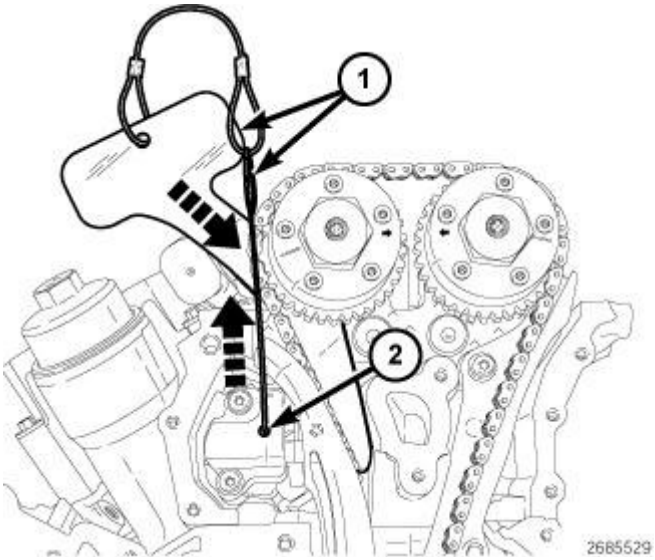

Fig. 218: Pin, Rack & Timing Chain Holder
Courtesy of CHRYSLER GROUP, LLC

NOTE: Illustration shows engine timing cover removed for clarity.

10. Using (special tool #10200-3, Pin) (2), lift the pawl off of the rack (3). While holding the pawl off of the rack, push (special tool #10200-1, Holder, Timing Chain, Left Side) (1) into place between the cylinder head and the cam chain guide to force the rack and piston back into the tensioner body. The holder remains in place while the phasers are removed. Refer to **VALVE TIMING, STANDARD PROCEDURE**.

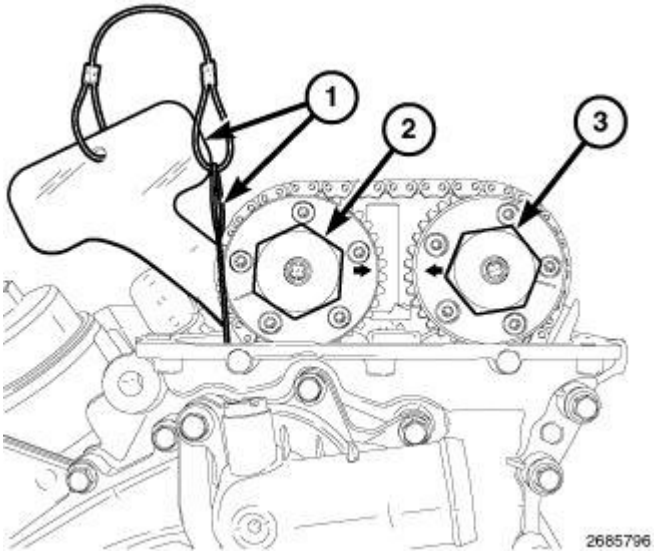

Fig. 219: Pin, Rack, Timing Chain Holder & Oil Control Valves
Courtesy of CHRYSLER GROUP, LLC

11. Remove the oil control valve (4) and pull the left side exhaust cam phaser off of the camshaft.
12. Remove the oil control valve (3) and pull the left side intake cam phaser off of the camshaft.

 © 2011 Mitchell Repair Information Company, LLC.

RIGHT

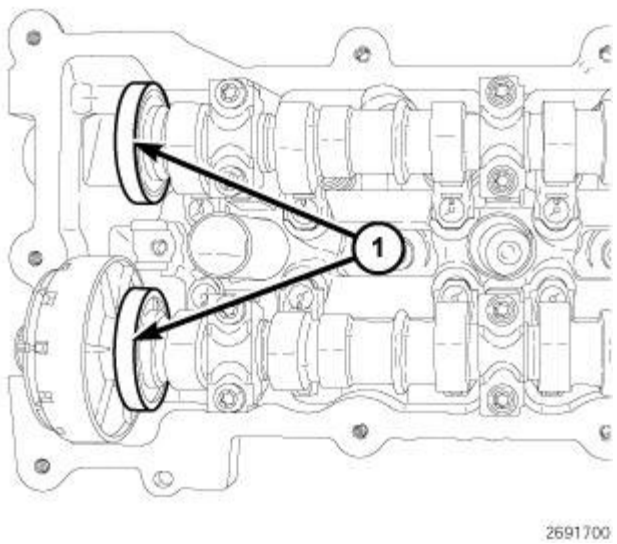

Fig. 220: Magnetic Timing Wheels
Courtesy of CHRYSLER GROUP, LLC

CAUTION: The magnetic timing wheels (1) must not come in contact with magnets (pickup tools, trays, etc.) or any other strong magnetic field. This will destroy the timing wheels ability to correctly relay camshaft position to the camshaft position sensor.

1. Remove the upper intake manifold, right ignition coils and right cylinder head cover. Refer to **COVER (S), CYLINDER HEAD, REMOVAL**.
2. Remove the left ignition coils and all spark plugs. Refer to **SPARK PLUG, REMOVAL** .

CAUTION: When aligning timing marks, always rotate engine by turning the crankshaft. Failure to do so will result in valve and/or piston damage.

 © 2011 Mitchell Repair Information Company, LLC.

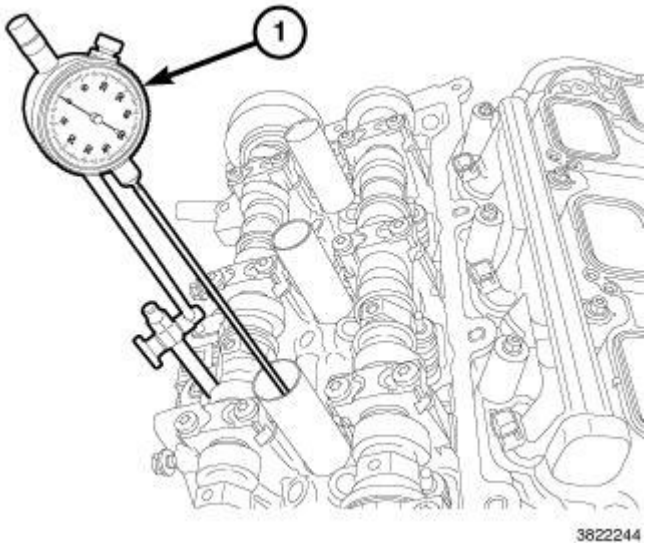

Fig. 221: Mount Dial Indicator Set To Stationary Point On Engine
Courtesy of CHRYSLER GROUP, LLC

3. Mount Dial Indicator Set (special tool #C-3339A, Set, Dial Indicator) (1) to a stationary point on the engine, such as the cylinder head cover mounting surface. Position the indicator probe into the number one cylinder, rotate the crankshaft clockwise (as viewed from the front) to place the number one piston at top-dead-center on the exhaust stroke and set the indicator dial to zero.

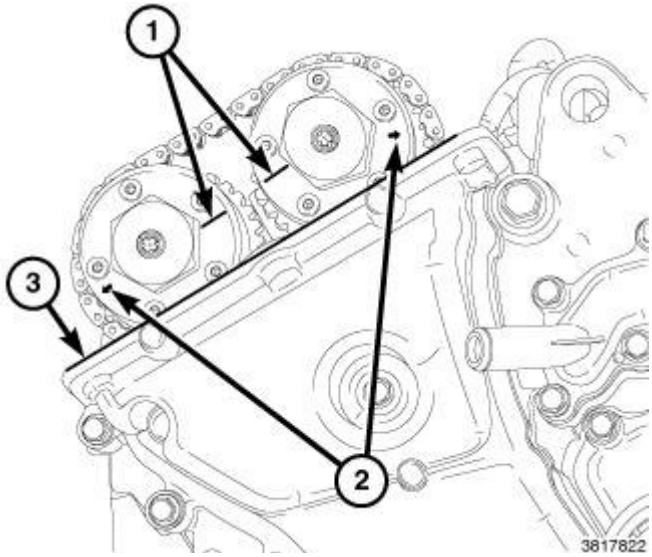

Fig. 222: Arrows, Scribe Lines & Cylinder Head Cover Mounting Surface
Courtesy of CHRYSLER GROUP, LLC

4. The right side cam phaser **ARROWS** (2) should point away from each other and the **SCRIBE LINES** (1) should be parallel to the cylinder head cover mounting surface (3) when the right side number one cylinder piston is positioned at top-dead-center on the exhaust stroke.

 © 2011 Mitchell Repair Information Company, LLC.

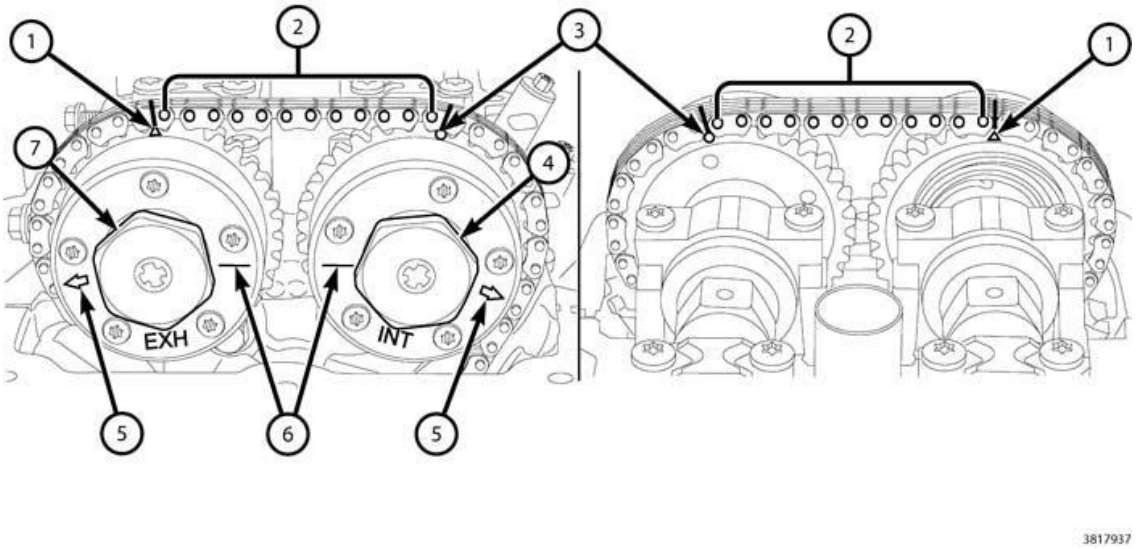

Fig. 223: Phaser Timing Mark, Chain Pins, Exhaust Cam Phaser Triangle Marking, Oil Control Valve, Scribe Lines & Arrows
Courtesy of CHRYSLER GROUP, LLC

NOTE: **The phaser markings (1 and 3) could align with either an external or internal chain link. Either alignment is acceptable as long as there are twelve chain pins (2) between the markings.**

NOTE: **Using a paint pen or equivalent. Mark the timing chain links to the corresponding timing marks located on the cam phasers.**

5. There should be twelve chain pins (2) **BETWEEN** the exhaust cam phaser triangle marking (1) and the intake cam phaser circle marking (3) as viewed from either the front or rear of the cam phasers.
6. Mark both sides of the cam chain at the phaser timing marks (1 and 3) using a paint pen or equivalent to aid in reassembly.

 © 2011 Mitchell Repair Information Company, LLC.

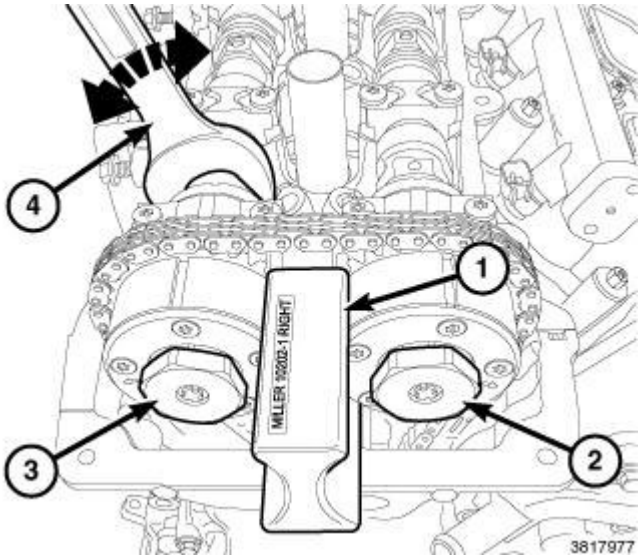

Fig. 224: Camshaft Phaser Lock, Oil Control Valves & Wrench
Courtesy of CHRYSLER GROUP, LLC

NOTE: It may be necessary to rock the camshaft slightly (a few degrees) with a wrench (4) when installing the camshaft phaser lock.

7. Install the (special tool #10202-1, Lock, Camshaft/Phaser, Right Side) (1) against the cylinder head cover mounting surface with the tool number facing up.
8. Loosen, but do not remove, the exhaust oil control valve (3) and the intake oil control valve (2).
9. Remove the (special tool #10202-1, Lock, Camshaft/Phaser, Right Side) (1).

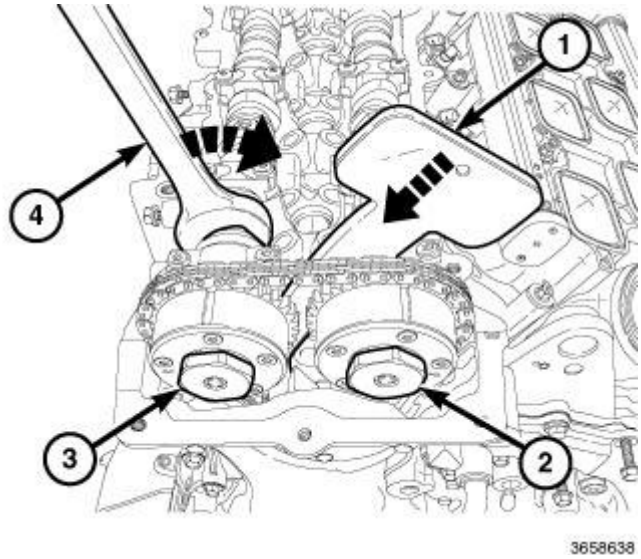

Fig. 225: Compressing Tensioner By Slightly Rotating Exhaust Camshaft Clockwise
Courtesy of CHRYSLER GROUP, LLC

CAUTION: Do not insert the Timing Chain Holder into position without first

compressing the tensioner. The Timing Chain Holder is not designed to compress the tensioner and excessive force can damage the timing chain tensioner arm.

10. Use the timing chain to compress the tensioner by slightly rotating the exhaust camshaft clockwise (4). Insert (special tool #10369, Holder, Timing Chain) (1) into place between the cylinder head boss and the tensioner arm to hold the tensioner in the compressed position. The Timing Chain Holder remains in place while the phasers are removed.

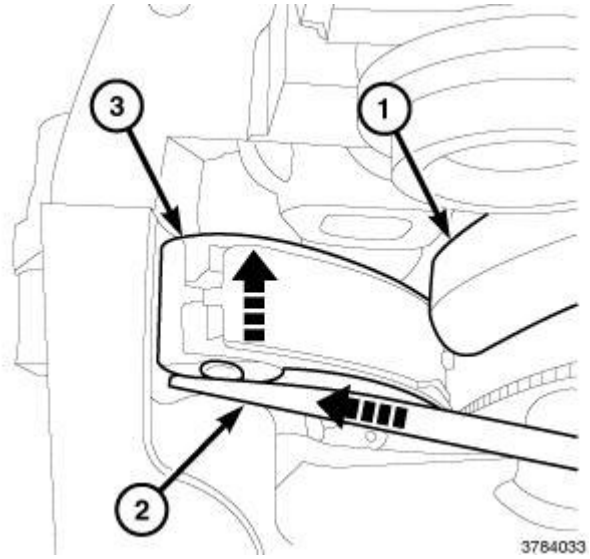

Fig. 226: Timing Chain Holder, Trim Stick & Tensioner Arm
Courtesy of CHRYSLER GROUP, LLC

NOTE: **If the Timing Chain Holder (1) does not engage or slips from position, wedge a trim stick (2) or equivalent between the front cover and the tensioner arm (3) to push the tensioner arm towards the rear of the engine and then repeat the previous step.**

 © 2011 Mitchell Repair Information Company, LLC.

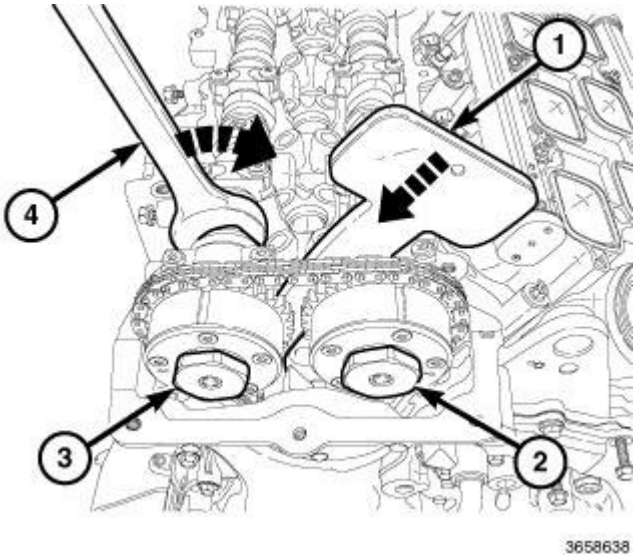

Fig. 227: Compressing Tensioner By Slightly Rotating Exhaust Camshaft Clockwise
Courtesy of CHRYSLER GROUP, LLC

11. Remove the oil control valve (3) and pull the right side exhaust cam phaser off of the camshaft.
12. Remove the oil control valve (2) and pull the right side intake cam phaser off of the camshaft.

INSTALLATION

LEFT

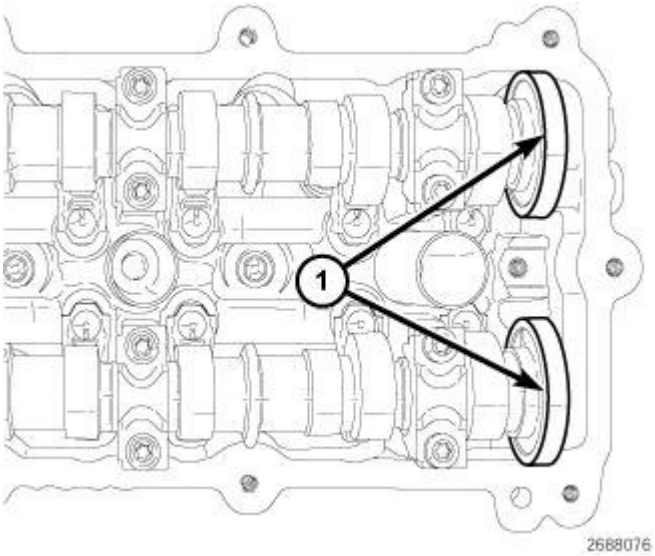

Fig. 228: Magnetic Timing Wheels
Courtesy of CHRYSLER GROUP, LLC

CAUTION: The magnetic timing wheels (1) must not come in contact with magnets (pickup tools, trays, etc.) or any other strong magnetic field. This will destroy the timing wheels ability to correctly relay camshaft position to the

 © 2011 Mitchell Repair Information Company, LLC.

camshaft position sensor.

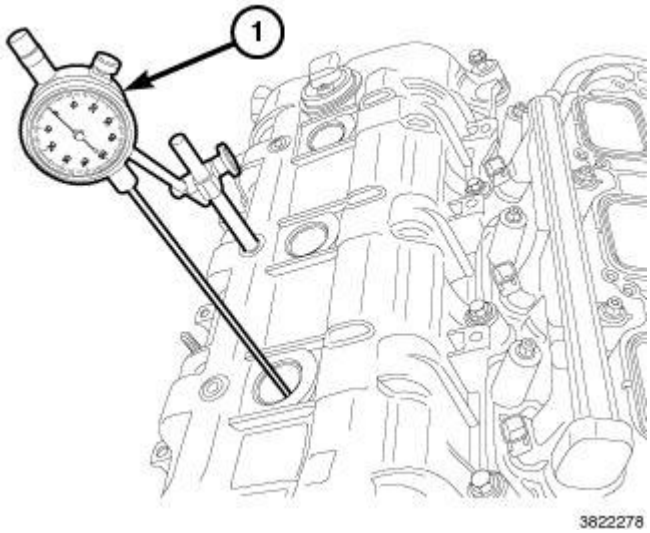

Fig. 229: Mount Dial Indicator Set To Stationary Point On Engine
Courtesy of CHRYSLER GROUP, LLC

CAUTION: Do not rotate the crankshaft more than a few degrees independently of the camshafts. Piston to valve contact could occur resulting in possible valve damage. If the crankshaft needs to be rotated more than a few degrees, first remove the camshafts.

1. Verify that the indicator dial (1) is set to zero when the right side number one cylinder piston is positioned at top-dead-center on the exhaust stroke.

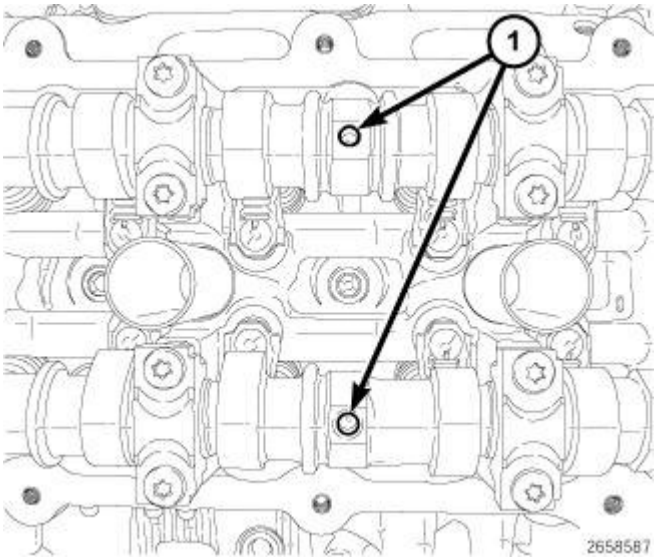

Fig. 230: Positioning Camshaft Alignment Holes Vertically
Courtesy of CHRYSLER GROUP, LLC

 © 2011 Mitchell Repair Information Company, LLC.

CAUTION: Do not rotate the camshafts more than a few degrees independently of the crankshaft. Valve to piston contact could occur resulting in possible valve damage.

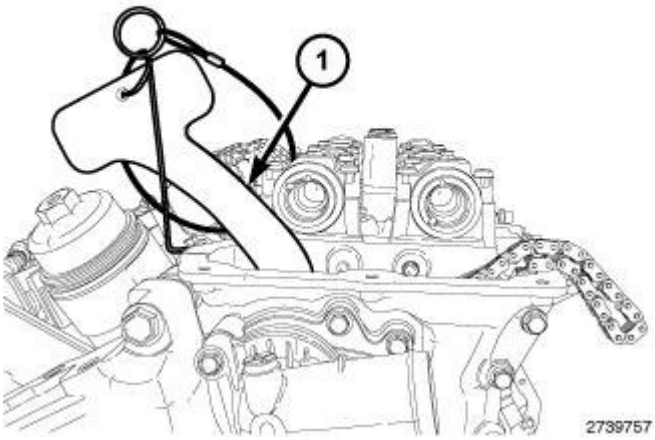

Fig. 231: Timing Chain Holder
Courtesy of CHRYSLER GROUP, LLC

NOTE: The Timing Chain Holder (1) should still be in place as inserted during the Removal procedure. If required, the Timing Chain Holder can be reinserted by repeating Step 10 of the Removal procedure. Refer to ASSEMBLY, VARIABLE VALVE TIMING, PHASER / OIL CONTROL VALVE, REMOVAL.

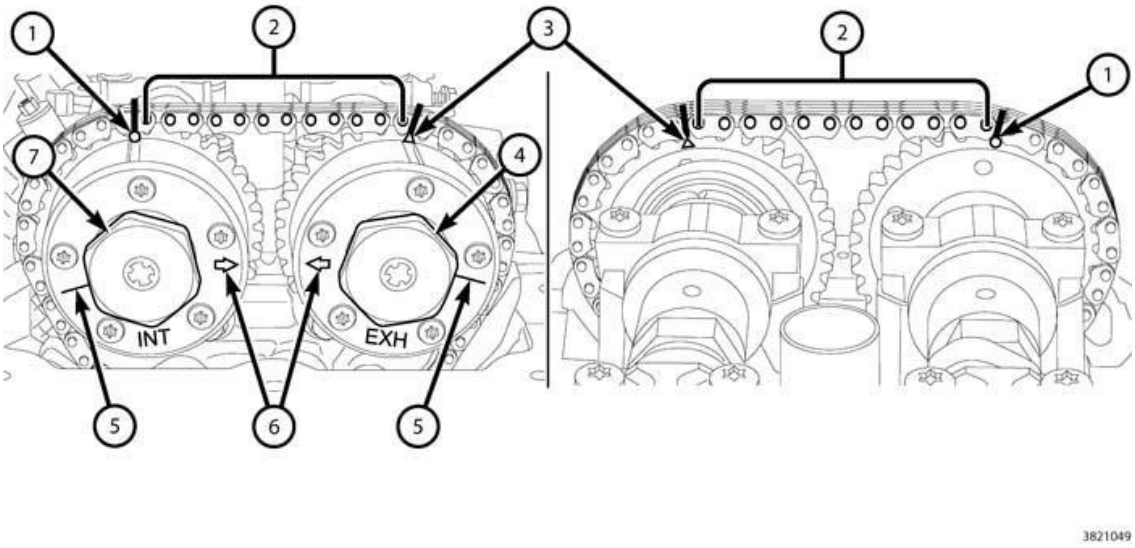

Fig. 232: Phaser Timing Mark, Chain Pins, Exhaust Cam Phaser Triangle Marking, Oil Control Valve, Scribe Lines & Arrows

 © 2011 Mitchell Repair Information Company, LLC.

Courtesy of CHRYSLER GROUP, LLC

NOTE: Minor rotation of a camshaft (a few degrees) may be required to install the camshaft phaser.

2. Verify that the camshafts are set at top-dead-center by positioning the alignment holes (1) vertically.
3. Route the cam chain around the left intake cam phaser while aligning the paint mark with the phaser timing mark (1). Press the left intake cam phaser onto the intake camshaft. Install and hand tighten the oil control valve (7).
4. While maintaining this alignment, route the cam chain around the exhaust cam phaser so that the paint mark is aligned with the phaser timing mark (3). Press the exhaust cam phaser onto the exhaust cam, install and hand tighten the oil control valve (4).
5. The **SCRIBE LINES** (5) on the cam phasers should face away from each other and the **ARROWS** (6) should point toward each other and be parallel to the cylinder head cover mounting surface. There should be twelve chain pins (2) **BETWEEN** the exhaust cam phaser triangle marking (3) and the intake cam phaser circle marking (1).

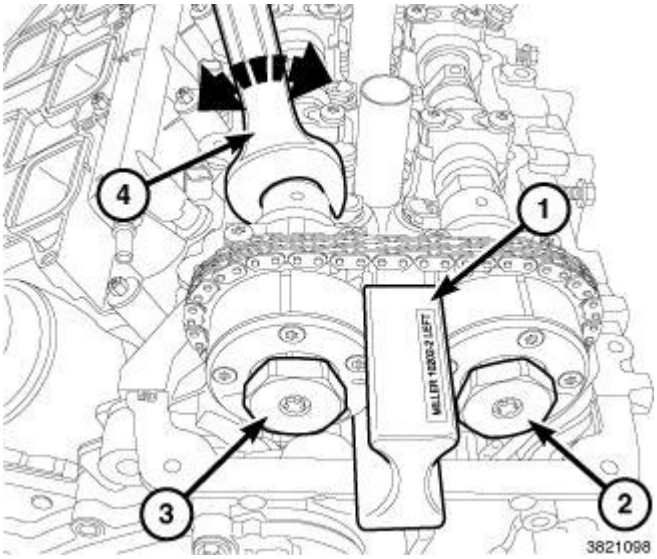

Fig. 233: Camshaft Phaser Lock, Oil Control Valves & Wrench
Courtesy of CHRYSLER GROUP, LLC

NOTE: It may be necessary to rock the camshaft slightly (a few degrees) with a wrench (4) when installing the camshaft phaser lock.

6. Install the (special tool #10202-2, Lock, Camshaft/Phaser, Left Side) (1) against the cylinder head cover mounting surface with the tool number facing up.
7. Tighten the oil control valves (2) and (3) to 150 N.m (110 ft. lbs.).
8. Remove the Camshaft Phaser Lock (1) and the Timing Chain Holder.

 © 2011 Mitchell Repair Information Company, LLC.

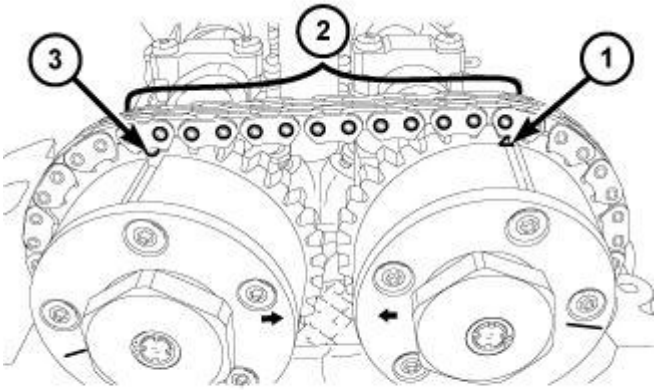

2740056

Fig. 234: Chain Pins, Arrows, Scribe Lines, Cam Phaser Triangle Marking & Circle Marking
Courtesy of CHRYSLER GROUP, LLC

9. Rotate the crankshaft clockwise two complete revolutions stopping when the right side number one cylinder piston is again positioned at top-dead-center on the exhaust stroke. To assure correct engine timing, verify the following;
   - The indicator dial is set to **ZERO** when the right side number one cylinder piston is positioned at top-dead-center on the exhaust stroke.
   - The **SCRIBE LINES** (3) on the left side cam phasers face away from each other.
   - The **ARROWS** (4) on the left side cam phasers point toward each other and are parallel to the cylinder head cover mounting surface.
   - There are twelve chain pins (2) **BETWEEN** the exhaust cam phaser triangle marking (1) and the intake cam phaser circle marking (3).
10. If the engine timing is not correct, repeat this procedure.
11. Install the spark plugs. Refer to **SPARK PLUG, INSTALLATION** .
12. Install the right ignition coils. Refer to **COIL, IGNITION, INSTALLATION** .
13. Install the left cylinder head cover and left ignition coils. Refer to **COVER(S), CYLINDER HEAD, INSTALLATION**.
14. Install the upper intake manifold and air cleaner housing assembly. Refer to **MANIFOLD, INTAKE, INSTALLATION**.
15. Connect the negative battery cable and tighten nut to 5 N.m (45 in. lbs.).
16. Start the engine and perform the appropriate POWERTRAIN VERIFICATION TEST located in appropriate Electrical Diagnostics article.
    - Cam/Crank Variation Relearn
    - Target Coefficient Relearn

NOTE: Following the first restart after a DTC driven phaser replacement, clear all DTCs and verify that subsequent restarts do not set any additional codes. For any

 © 2011 Mitchell Repair Information Company, LLC.

DTCs that reset, refer to appropriate Electrical Diagnostics article.

RIGHT

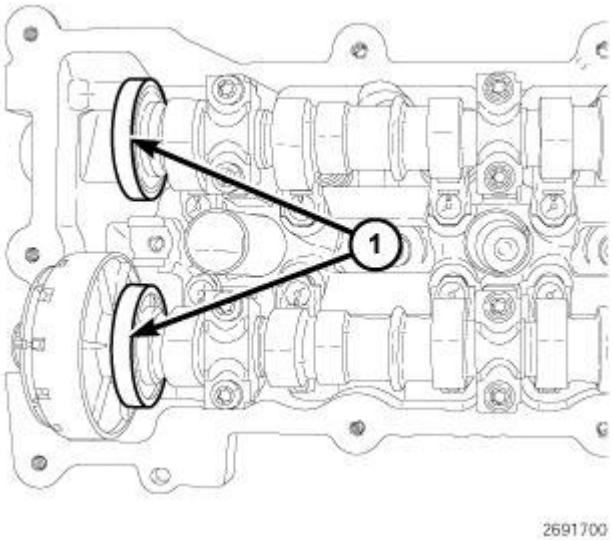

Fig. 235: Magnetic Timing Wheels
Courtesy of CHRYSLER GROUP, LLC

CAUTION: The magnetic timing wheels (1) must not come in contact with magnets (pickup tools, trays, etc.) or any other strong magnetic field. This will destroy the timing wheels ability to correctly relay camshaft position to the camshaft position sensor.

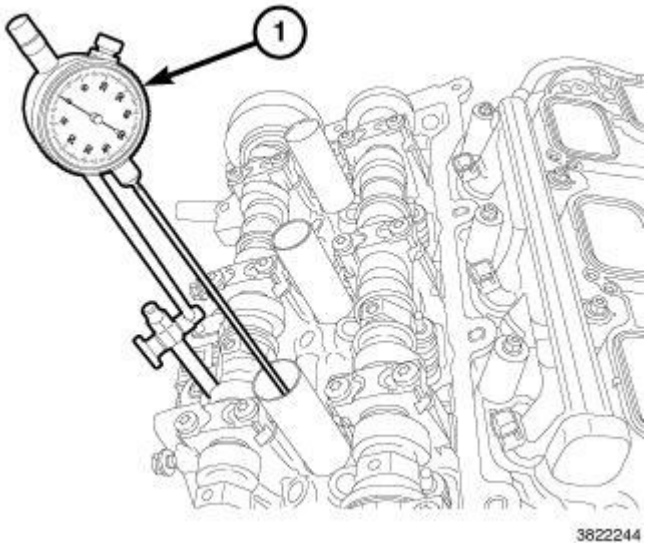

Fig. 236: Mount Dial Indicator Set To Stationary Point On Engine
Courtesy of CHRYSLER GROUP, LLC

CAUTION: Do not rotate the crankshaft more than a few degrees independently of the

 © 2011 Mitchell Repair Information Company, LLC.

camshafts. Piston to valve contact could occur resulting in possible valve damage. If the crankshaft needs to be rotated more than a few degrees, first remove the camshafts.

1. Verify that the indicator dial (1) is set to zero when the right side number one cylinder piston is positioned at top-dead-center on the exhaust stroke.

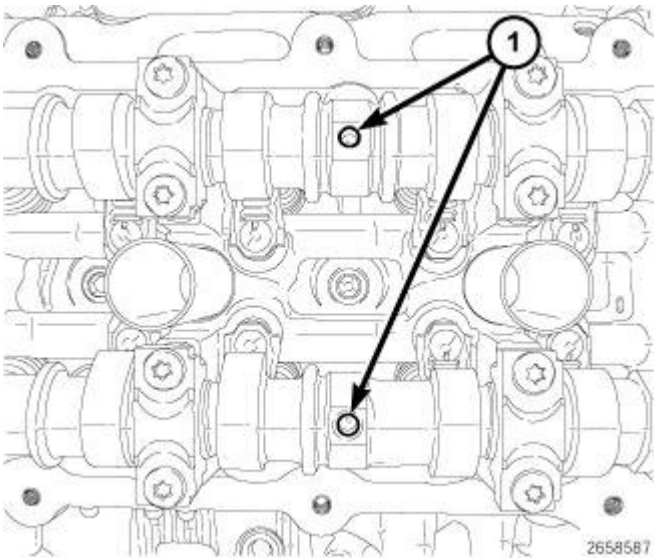

Fig. 237: Positioning Camshaft Alignment Holes Vertically
Courtesy of CHRYSLER GROUP, LLC

CAUTION: Do not rotate the camshafts more than a few degrees independently of the crankshaft. Valve to piston contact could occur resulting in possible valve damage.

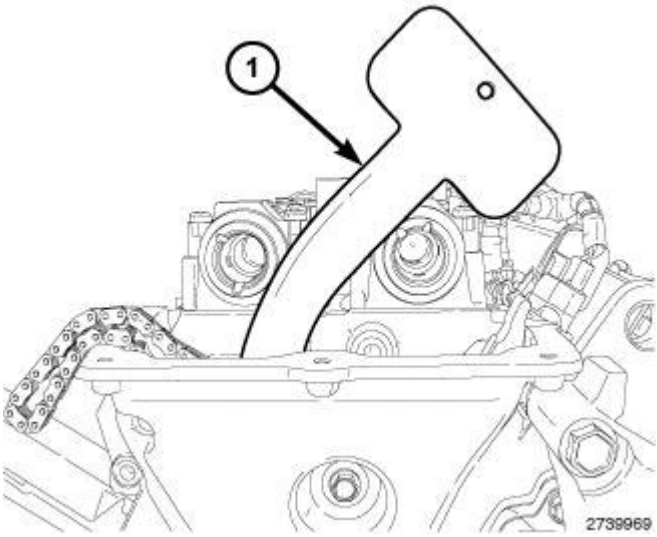

Fig. 238: Timing Chain Holder
Courtesy of CHRYSLER GROUP, LLC

 © 2011 Mitchell Repair Information Company, LLC.

NOTE: **The Timing Chain Holder (1) should still be in place as inserted during the Removal procedure. If required, the Timing Chain Holder can be reinserted by installing the exhaust cam phaser and repeating Step 10 of the Removal procedure. Refer to ASSEMBLY, VARIABLE VALVE TIMING, PHASER / OIL CONTROL VALVE, REMOVAL.**

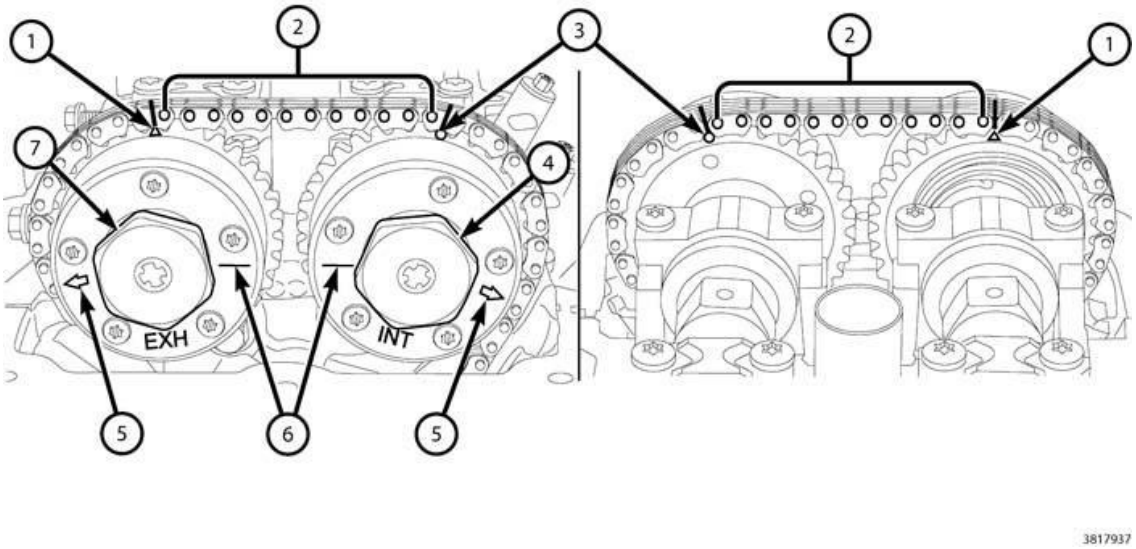

Fig. 239: Phaser Timing Mark, Chain Pins, Exhaust Cam Phaser Triangle Marking, Oil Control Valve, Scribe Lines & Arrows
Courtesy of CHRYSLER GROUP, LLC

NOTE: **Minor rotation of a camshaft (a few degrees) may be required to install the camshaft phaser.**

2. Verify that the camshafts are set at top-dead-center by positioning the alignment holes (1) vertically.
3. Route the cam chain around the right exhaust cam phaser while aligning the paint mark with the phaser timing mark (1). Press the right exhaust cam phaser onto the exhaust camshaft. Install and hand tighten the oil control valve (7).
4. While maintaining this alignment, route the cam chain around the intake cam phaser so that the paint mark is aligned with the phaser timing mark (3). Press the intake cam phaser onto the intake cam, install and hand tighten the oil control valve (4).
5. The **ARROWS** (5) on the cam phasers should point away from each other and the **SCRIBE LINES** (6) should be parallel to the cylinder head cover mounting surface. There should be twelve chain pins (2) **BETWEEN** the exhaust cam phaser triangle marking (1) and the intake cam phaser circle marking (3).

 © 2011 Mitchell Repair Information Company, LLC.

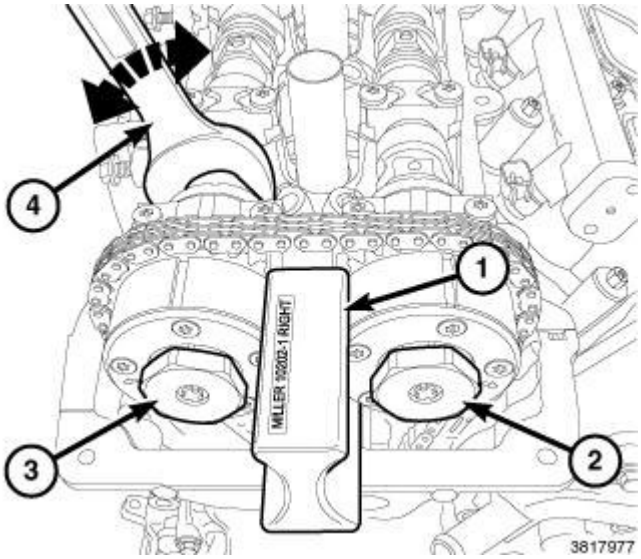

Fig. 240: Camshaft Phaser Lock, Oil Control Valves & Wrench
Courtesy of CHRYSLER GROUP, LLC

NOTE: It may be necessary to rock the camshaft slightly (a few degrees) with a wrench (4) when installing the camshaft phaser lock.

6. Install the (special tool #10202-1, Lock, Camshaft/Phaser, Right Side) (1) against the cylinder head cover mounting surface with the tool number facing up.
7. Tighten the oil control valves (2) and (3) to 150 N.m (110 ft. lbs.).
8. Remove the Camshaft Phaser Lock (1) and the Timing Chain Holder.

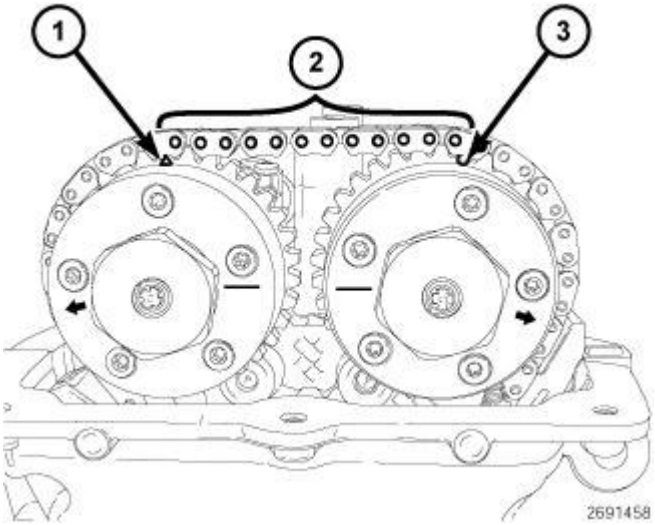

Fig. 241: Chain Pins, Arrows, Scribe Lines, Cam Phaser Triangle Marking & Circle Marking
Courtesy of CHRYSLER GROUP, LLC

9. Rotate the crankshaft clockwise two complete revolutions stopping when the right side number one cylinder piston is again positioned at top-dead-center on the exhaust stroke. To assure correct engine

 © 2011 Mitchell Repair Information Company, LLC.

timing, verify the following;

- The indicator dial is set to **ZERO** when the right side number one cylinder piston is positioned at top-dead-center on the exhaust stroke.
- The **ARROWS** (4) on the right side cam phasers point away from each other.
- The **SCRIBE LINES** (5) on the right side cam phasers are parallel to the cylinder head cover mounting surface.
- There are twelve chain pins (2) **BETWEEN** the exhaust cam phaser triangle marking (1) and the intake cam phaser circle marking (3).

10. If the engine timing is not correct, repeat this procedure.
11. Install the spark plugs. Refer to **SPARK PLUG, INSTALLATION** .
12. Install the left ignition coils. Refer to **COIL, IGNITION, INSTALLATION** .
13. Install the right cylinder head cover and right ignition coils. Refer to **COVER(S), CYLINDER HEAD, INSTALLATION**.
14. Install the upper intake manifold and air cleaner housing assembly. Refer to **MANIFOLD, INTAKE, INSTALLATION**.
15. Connect the negative battery cable and tighten nut to 5 N.m (45 in. lbs.).
16. Start the engine and perform the appropriate POWERTRAIN VERIFICATION TEST located in appropriate Electrical Diagnostics article.
    - Cam/Crank Variation Relearn
    - Target Coefficient Relearn

NOTE: Following the first restart after a DTC driven phaser replacement, clear all DTCs and verify that subsequent restarts do not set any additional codes. For any DTCs that reset, refer to appropriate Electrical Diagnostics article.

CAMSHAFT, ENGINE

DESCRIPTION

DESCRIPTION

 © 2011 Mitchell Repair Information Company, LLC.

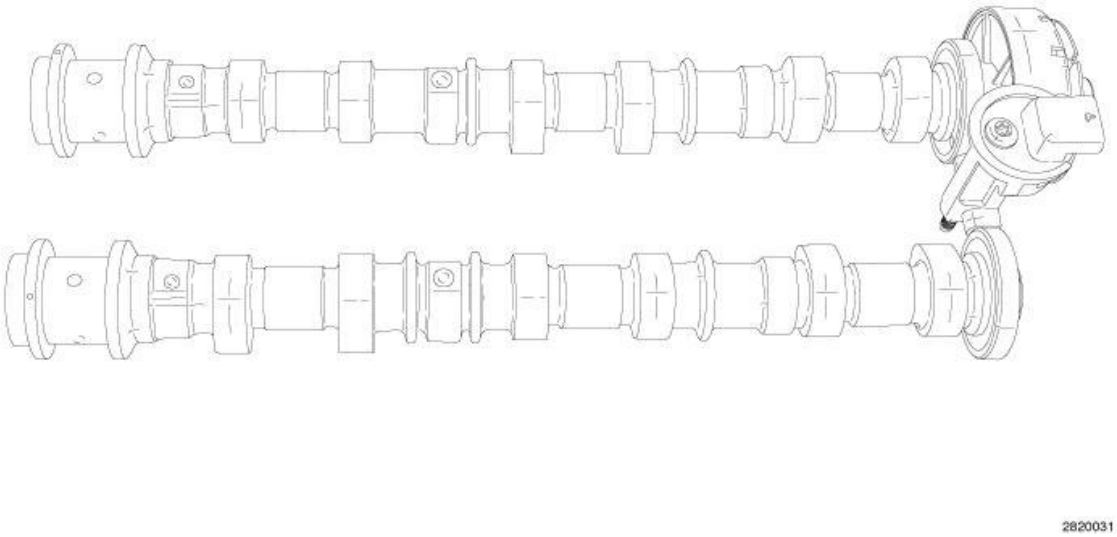

Fig. 242: Dual Over Head Camshaft (DOHC) Configuration
Courtesy of CHRYSLER GROUP, LLC

The 3.6L engine uses a Dual Over Head Camshaft (DOHC) configuration. The camshafts are a nodular cast iron design and have a pressed on magnetic timing wheel that is magnetic encoded. The two Camshaft Position (CMP) sensors are located between the timing wheels. Attached to the rear of the right exhaust camshaft is a centrifuge which is part of the crankcase ventilation system. The centrifuge is used to separate oil droplets from the crankcase gases before they enter the PCV valve. Four bearing journals are machined into the camshaft. Camshaft end play is controlled by two thrust walls that border the nose piece journal.

OPERATION

OPERATION

 © 2011 Mitchell Repair Information Company, LLC.

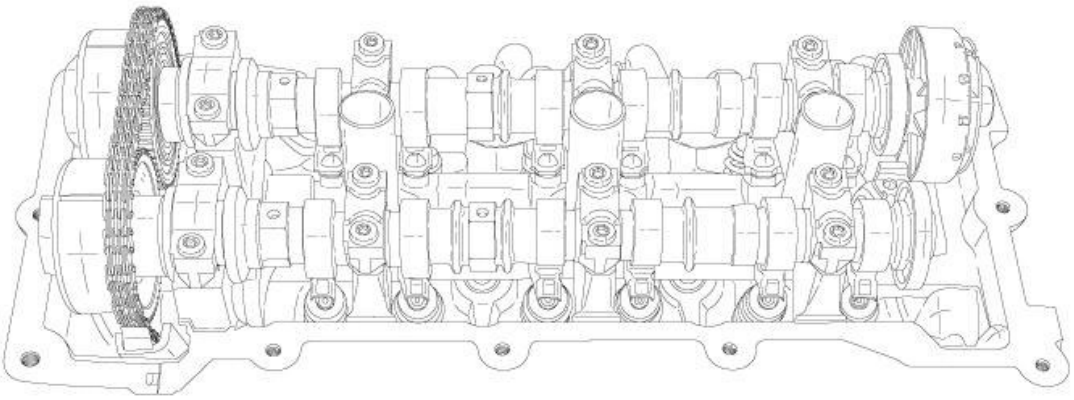

Fig. 243: Right Hand Camshafts
Courtesy of CHRYSLER GROUP, LLC

NOTE: RH camshafts shown in the illustration, LH camshafts similar.

The camshaft has precisely machined (egg shaped) lobes to provide accurate valve timing and duration. The camshaft is driven by the crankshaft via drive sprockets and chains.

STANDARD PROCEDURE

CAMSHAFT END PLAY

NOTE: Right intake camshaft shown in the illustration, other camshafts similar.

1. Remove the cylinder head cover. Refer to **COVER(S), CYLINDER HEAD, REMOVAL**.

NOTE: Cylinder #1 or #4 must be used when checking for Top Dead Center (TDC).

 © 2011 Mitchell Repair Information Company, LLC.

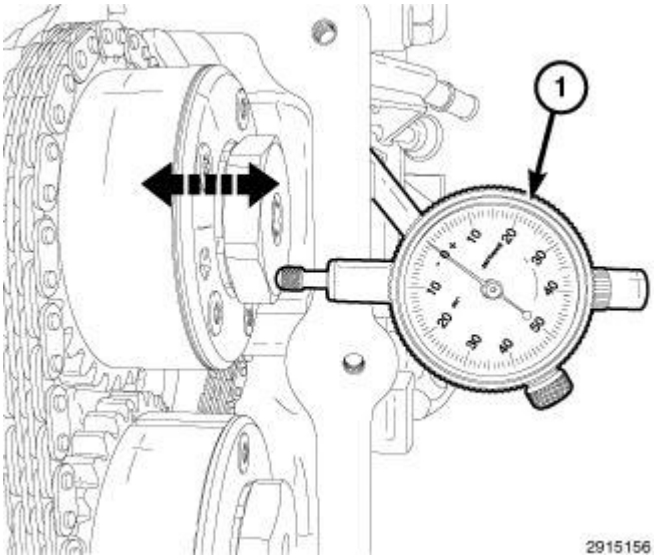

Fig. 244: Measuring Camshaft End Play Using Dial Indicator
Courtesy of CHRYSLER GROUP, LLC

2. Mount Dial Indicator Set (special tool #C-3339A, Set, Dial Indicator) (1) to a stationary point at the front of the engine. Locate the probe perpendicular against the nose of the camshaft.
3. Move the camshaft all the way to the rear of its travel.
4. Zero the dial indicator.
5. Move the camshaft forward to the limit of travel and read the dial indicator. Compare the measured end play to the specification. Refer to ENGINE **SPECIFICATIONS** .

REMOVAL

LEFT

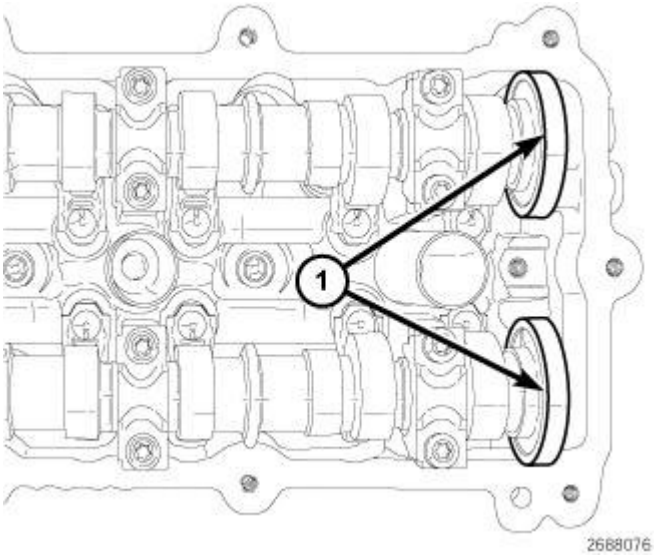

Fig. 245: Magnetic Timing Wheels
Courtesy of CHRYSLER GROUP, LLC

 © 2011 Mitchell Repair Information Company, LLC.

CAUTION: The magnetic timing wheels (1) must not come in contact with magnets (pickup tools, trays, etc.) or any other strong magnetic field. This will destroy the timing wheels ability to correctly relay camshaft position to the camshaft position sensor.

CAUTION: When the timing chain is removed and the cylinder heads are still installed, Do not forcefully rotate the camshafts or crankshaft independently of each other. Severe valve and/or piston damage can occur.

CAUTION: DO NOT STAMP OR STRIKE THE CAMSHAFT BEARING CAPS. SEVERE DAMAGE WILL OCCUR TO THE BEARING CAPS.

1. Remove the upper intake manifold, all ignition coils, all spark plugs and left cylinder head cover. Refer to **COVER(S), CYLINDER HEAD, REMOVAL**.

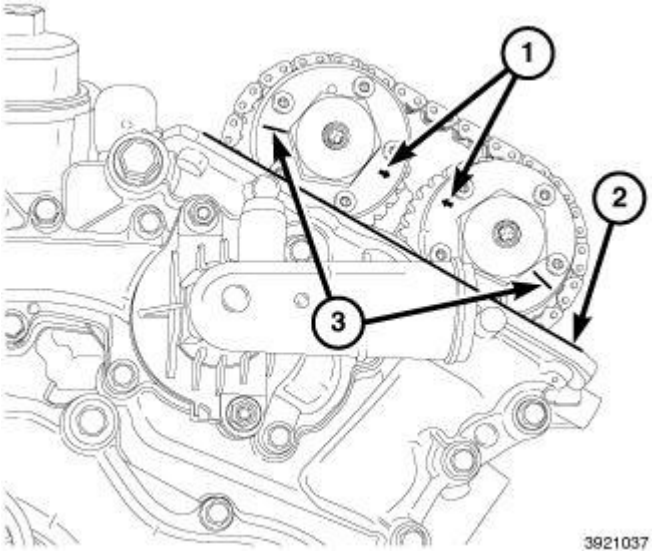

Fig. 246: Arrows, Scribe Lines & Cylinder Head Cover Mounting Surface
Courtesy of CHRYSLER GROUP, LLC

2. The left side cam phaser **SCRIBE LINES** (3) should face away from each other and the **ARROWS** (1) should point toward each other and be parallel to the cylinder head cover mounting surface (2). The number one cylinder piston is positioned at top-dead-center on the exhaust stroke.
3. Mark the camshaft phasers to the timing chain with a paint pen or equivalent.

NOTE: Illustration shows engine timing cover removed for clarity.

 © 2011 Mitchell Repair Information Company, LLC.

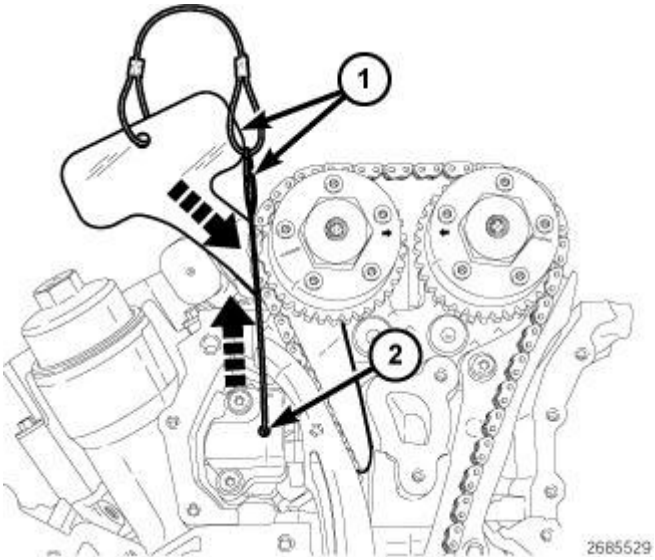

Fig. 247: Pin, Rack & Timing Chain Holder
Courtesy of CHRYSLER GROUP, LLC

4. Using the

   (special tool #10200-3, Pin)

   (2), lift the pawl off of the rack (3). While holding the pawl off of the rack, push

   (special tool #10200-1, Holder, Timing Chain, Left Side)

   (1) into place between the cylinder head and the cam chain guide to force the rack and piston back into the tensioner body.

   NOTE: The holder remains in place while the phasers are removed.

   NOTE: Minor rotation of a camshaft (a few degrees) may be required when installing the LH Camshaft/Phaser Lock.

 © 2011 Mitchell Repair Information Company, LLC.

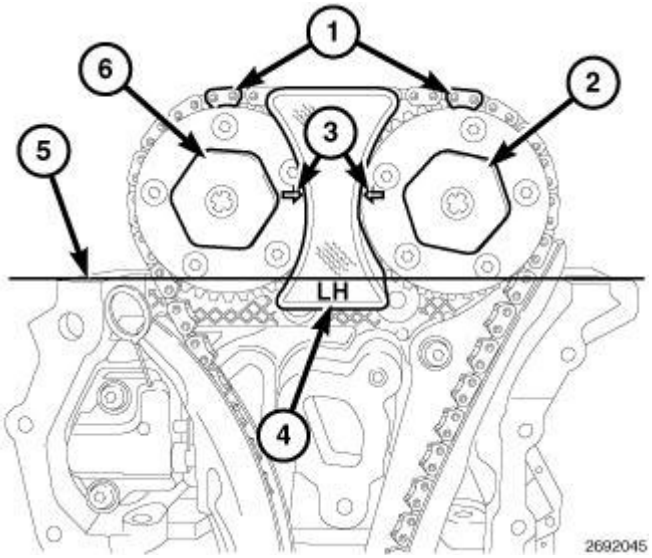

Fig. 248: Phaser Timing Marks, Oil Control Valves & LH Camshaft Phaser Lock
Courtesy of CHRYSLER GROUP, LLC

5. Install the (special tool #10202, Locks, Camshaft/Phaser) (4).
6. Remove the exhaust oil control valve (2) and the intake oil control valve (6).

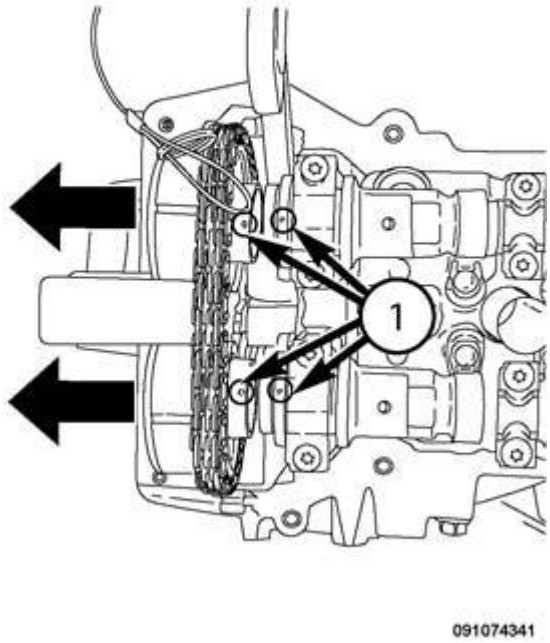

Fig. 249: Alignment Marks
Courtesy of CHRYSLER GROUP, LLC

NOTE: **The alignment marks located on the camshaft specifies the location of the drive pin in reference to the phaser alignment mark.**

 © 2011 Mitchell Repair Information Company, LLC.

7. Using care. Remove both the intake and exhaust oil control valves simultaneously.

NOTE: DO NOT REMOVE THE PHASER LOCK.

NOTE: Camshaft bearing caps should have been marked during engine manufacturing. For example, the number one exhaust camshaft bearing cap is marked "1E->". The caps should be installed with the notch forward.

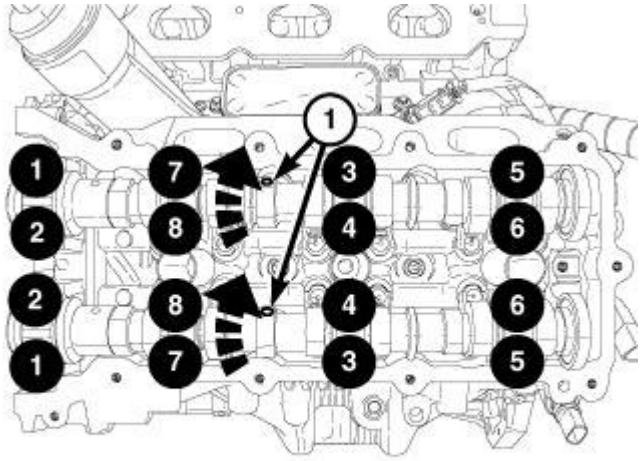

2676491

Fig. 250: Camshaft Bearing Cap Bolts Removal Sequence - Left
Courtesy of CHRYSLER GROUP, LLC

8. Rotate the camshafts counterclockwise to position the alignment holes (1) **approximately 30° before top-dead-center** . This places the camshafts in the neutral position (no valve load).
9. Loosen the camshaft bearing cap bolts in the sequence shown in the illustration.

NOTE: When the camshaft is removed the rocker arms may slide downward, mark the rocker arms before removing the camshaft.

10. Remove the camshaft bearing caps and the camshafts.

RIGHT

 © 2011 Mitchell Repair Information Company, LLC.

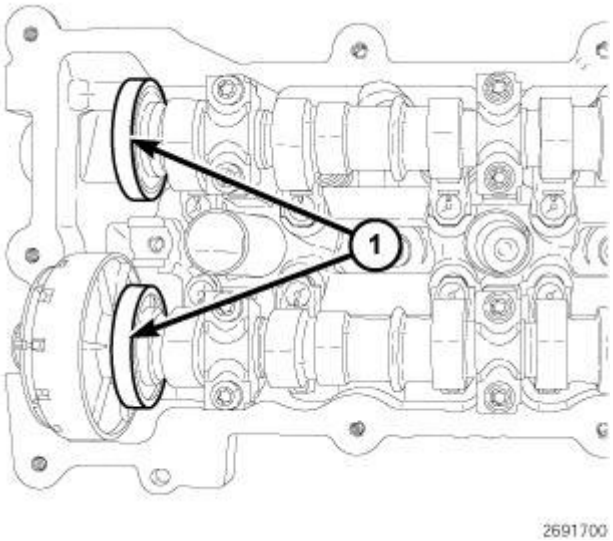

Fig. 251: Magnetic Timing Wheels
Courtesy of CHRYSLER GROUP, LLC

CAUTION: The magnetic timing wheels (1) must not come in contact with magnets (pickup tools, trays, etc.) or any other strong magnetic field. This will destroy the timing wheels ability to correctly relay camshaft position to the camshaft position sensor.

CAUTION: When the timing chain is removed and the cylinder heads are still installed, Do not forcefully rotate the camshafts or crankshaft independently of each other. Severe valve and/or piston damage can occur.

CAUTION: DO NOT STAMP OR STRIKE THE CAMSHAFT BEARING CAPS. SEVERE DAMAGE WILL OCCUR TO THE BEARING CAPS.

 © 2011 Mitchell Repair Information Company, LLC.

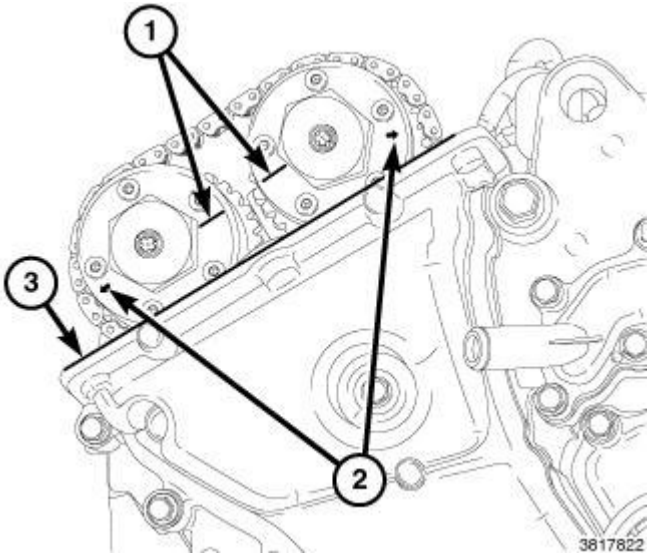

Fig. 252: Arrows, Scribe Lines & Cylinder Head Cover Mounting Surface
Courtesy of CHRYSLER GROUP, LLC

1. Remove the upper intake manifold, all ignition coils, all spark plugs, right cylinder head cover. Refer to **COVER(S), CYLINDER HEAD, REMOVAL**.
2. The right side cam phaser **ARROWS** (2) should point away from each other and the **SCRIBE LINES** (1) should be parallel to the cylinder head cover mounting surface (3) when the right side number one cylinder piston is positioned at top-dead-center on the exhaust stroke.
3. Mark the camshaft phasers to the timing chain with a paint pen or equivalent.

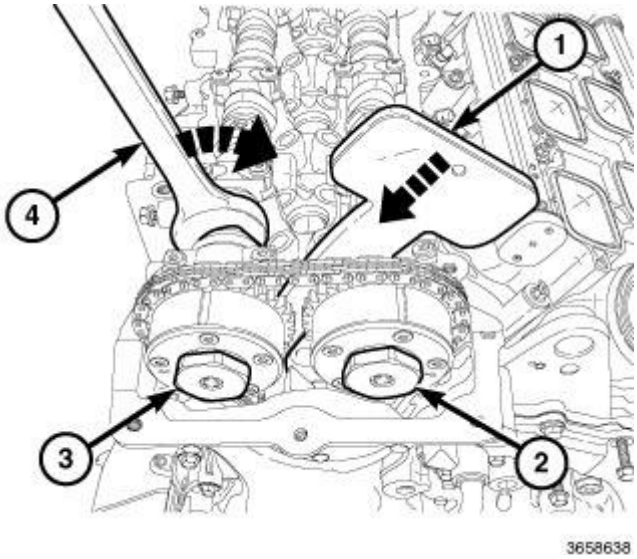

Fig. 253: Compressing Tensioner By Slightly Rotating Exhaust Camshaft Clockwise
Courtesy of CHRYSLER GROUP, LLC

4. Use the timing chain to compress the tensioner by slightly rotating the exhaust camshaft clockwise (4). Insert the (special tool #10369, Holder, Timing Chain) (1) into place between the cylinder head boss and the tensioner arm to hold the tensioner in the compressed position. The Timing Chain Holder remains in

place while the phasers are removed.

NOTE: Minor rotation of a camshaft (a few degrees) may be required when installing the RH Camshaft/Phaser Lock.

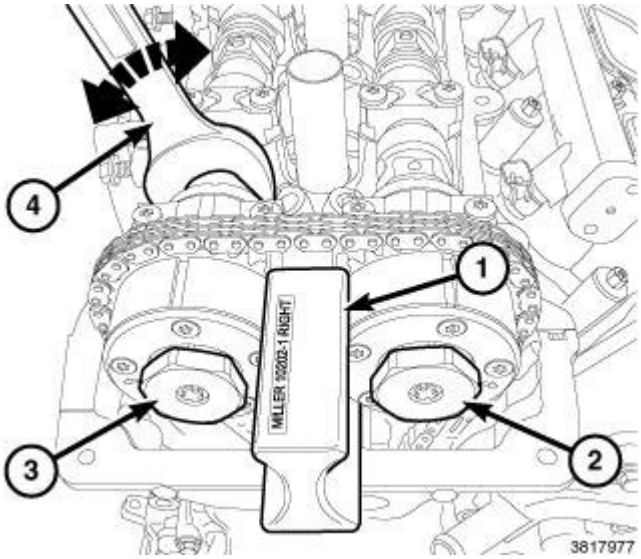

Fig. 254: Camshaft Phaser Lock, Oil Control Valves & Wrench
Courtesy of CHRYSLER GROUP, LLC

5. Install (special tool #10202-1, Lock, Camshaft/Phaser, Right Side) (1).
6. Remove both the intake (2) and exhaust (3) oil control valves.

NOTE: Left side shown in the illustration. Right side similar.

 © 2011 Mitchell Repair Information Company, LLC.

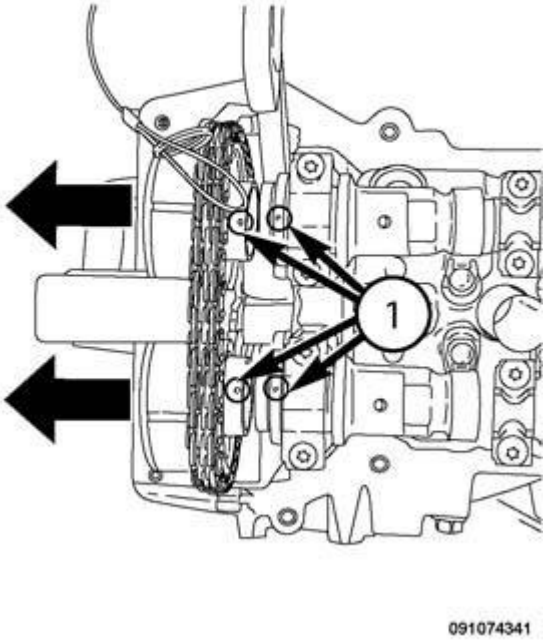

Fig. 255: Alignment Marks
Courtesy of CHRYSLER GROUP, LLC

7. Using care. Remove both the intake and exhaust oil control valves simultaneously.

NOTE: DO NOT REMOVE THE PHASER LOCK

8. Camshaft bearing caps should have been marked during engine manufacturing. For example, the number one exhaust camshaft bearing cap is marked "1E->". The caps should be installed with the notch forward.

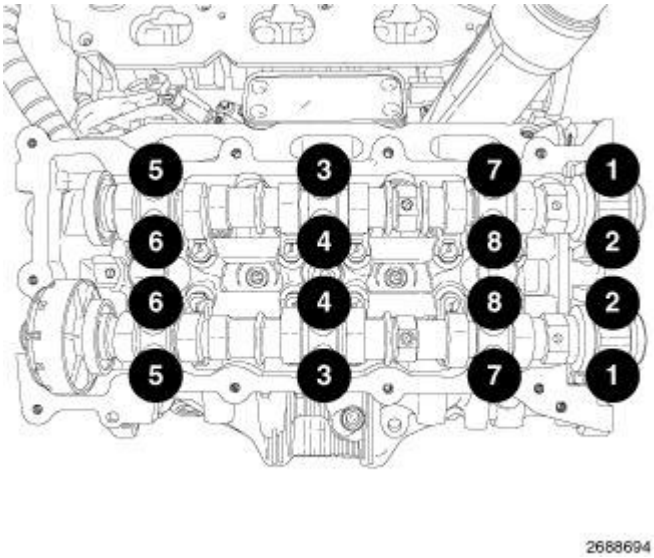

Fig. 256: Camshaft Bearing Cap Bolts Removal Sequence - Right
Courtesy of CHRYSLER GROUP, LLC

NOTE: Loosen the camshaft bearing cap bolts in the sequence shown in the illustration.

NOTE: When the camshaft is removed the rocker arms may slide downward, mark the rocker arms before removing the camshaft.

9. Remove the camshaft bearing caps and the camshafts.

INSPECTION

INSPECTION

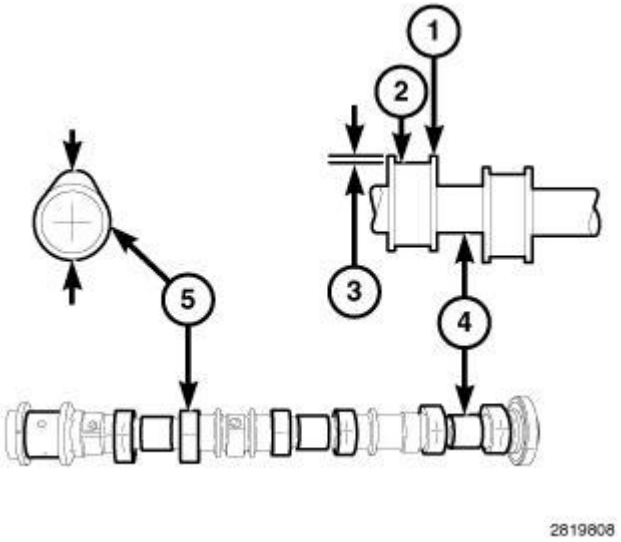

Fig. 257: Inspecting Camshaft Bearing Journals & Cam Lobes
Courtesy of CHRYSLER GROUP, LLC

NOTE: RH intake camshaft shown in the illustration, other camshafts similar.

1. Inspect camshaft bearing journals (4) for damage and binding. If journals are binding, check the cylinder head for damage. Also check cylinder head oil holes for clogging.
2. Check the surface of the cam lobes (5) for abnormal wear (3). Measure and compare the unworn area (1) to the worn area (2). Replace camshafts that are not within specification. Refer to ENGINE **SPECIFICATIONS** .

INSTALLATION

LEFT

 © 2011 Mitchell Repair Information Company, LLC.

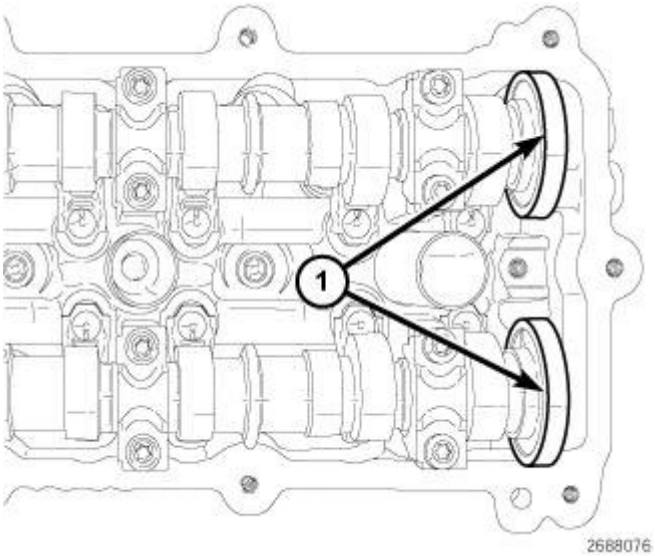

Fig. 258: Magnetic Timing Wheels
Courtesy of CHRYSLER GROUP, LLC

CAUTION: The magnetic timing wheels (1) must not come in contact with magnets (pickup tools, trays, etc.) or any other strong magnetic field. This will destroy the timing wheels ability to correctly relay camshaft position to the camshaft position sensor.

1. Lubricate the camshaft journals with clean engine oil.

CAUTION: Do not rotate the camshafts more than a few degrees independently of the crankshaft. Valve to piston contact could occur resulting in possible valve damage. If the camshafts need to be rotated more than a few degrees, first move the pistons away from the cylinder heads by rotating the crankshaft counterclockwise to a position 30° before-top-dead-center. Once the camshafts are returned to their top-dead-center position, rotate the crankshaft clockwise to return the crankshaft to top-dead-center.

2. Install the left side camshaft(s) with the alignment holes (1) positioned approximately 30° before top-dead-center. This will place the camshafts at the neutral position (no valve load) easing the installation of the camshaft bearing caps.

   Caps are identified numerically (1 through 4), intake or exhaust (I or E) and should be installed from the front to the rear of the engine. All caps should be installed with the notch forward so that the stamped arrows (<) on the caps point toward the front of the engine.

3. Verify the rocker arms are aligned to the cam lobe. Refer to **ROCKER ARM, VALVE, INSTALLATION**.

.

 © 2011 Mitchell Repair Information Company, LLC.

4. Install the camshaft bearing caps and hand tighten the retaining bolts to 2 N.m (18 in. lbs.).

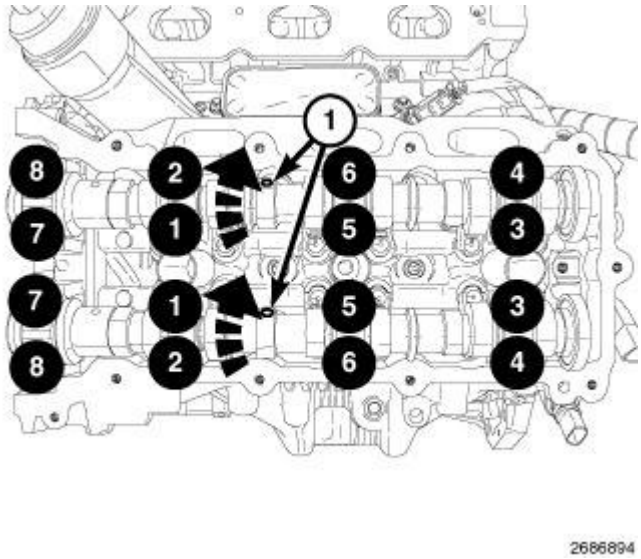

Fig. 259: Bearing Cap Retaining Bolts Tightening Sequence - Left
Courtesy of CHRYSLER GROUP, LLC

5. Tighten the bearing cap retaining bolts in the sequence shown in the illustration to 9.5 N.m (84 in. lbs.).

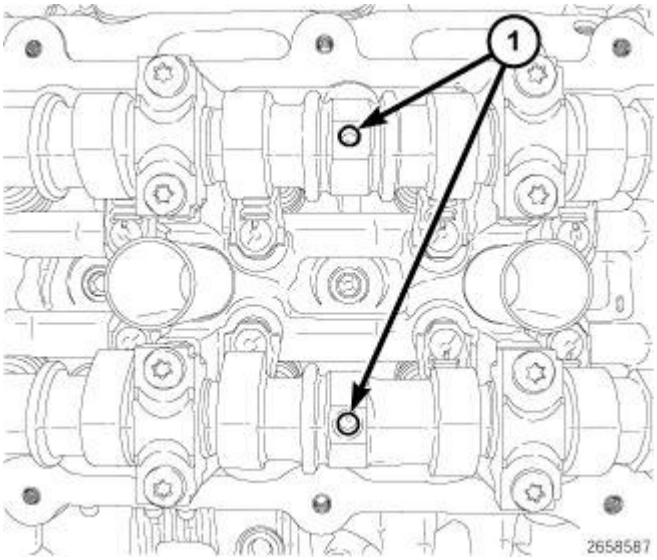

Fig. 260: Positioning Camshaft Alignment Holes Vertically
Courtesy of CHRYSLER GROUP, LLC

6. Rotate the camshafts clockwise to top-dead-center by positioning the alignment holes (1) vertically.
7. Install the timing chain tensioner holder.

 © 2011 Mitchell Repair Information Company, LLC.

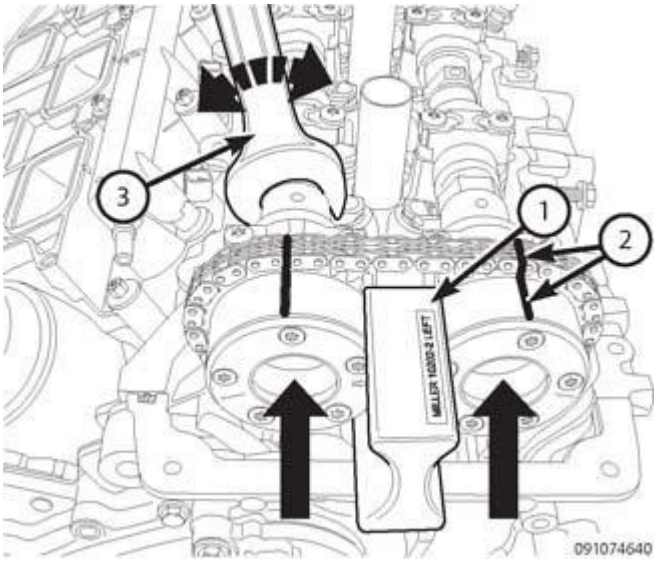

Fig. 261: Marks On Timing Chain
Courtesy of CHRYSLER GROUP, LLC

NOTE: Minor rotation of a camshaft (a few degrees) may be required when installing the LT Camshaft/Phasers to the camshaft alignment pins.

8. Verify the cam phasers are aligned with the marks (2) made on the timing chain.
9. Install the camshaft phasers onto the camshafts.

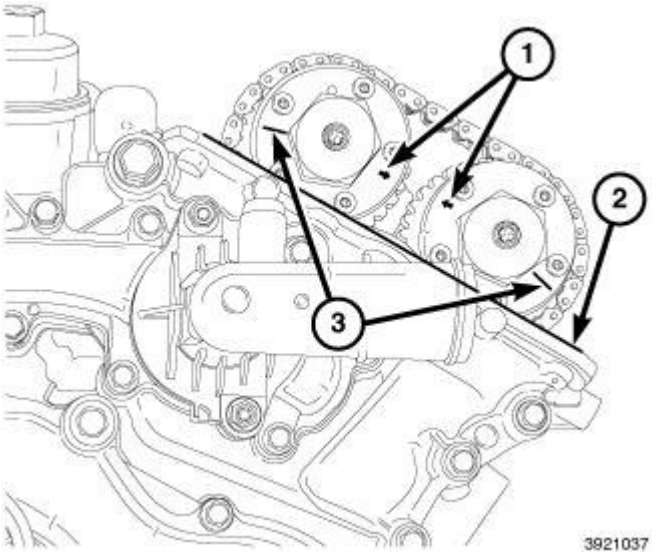

Fig. 262: Arrows, Scribe Lines & Cylinder Head Cover Mounting Surface
Courtesy of CHRYSLER GROUP, LLC

10. Using care, slowly rotate the engine four revolutions to verify the valve to piston clearance and camshaft phaser timing mark alignment (1).
11. Install the cylinder head cover, spark plugs, ignition coils and the upper intake manifold. Refer to **ASSEMBLY, VARIABLE VALVE TIMING, PHASER / OIL CONTROL VALVE,**

INSTALLATION.

NOTE: The Cam/Crank Variation Relearn procedure must be performed using the scan tool anytime there has been a repair/replacement made to a powertrain system, for example: flywheel, valvetrain, camshaft and/or crankshaft sensors or components.

RIGHT

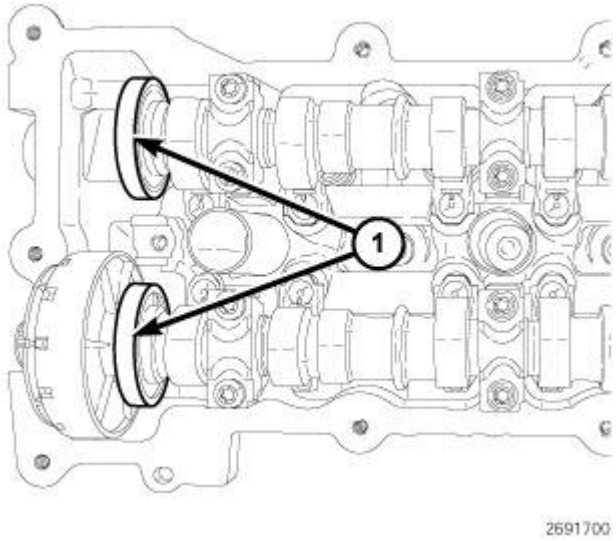

Fig. 263: Magnetic Timing Wheels
Courtesy of CHRYSLER GROUP, LLC

CAUTION: The magnetic timing wheels (1) must not come in contact with magnets (pickup tools, trays, etc.) or any other strong magnetic field. This will destroy the timing wheels ability to correctly relay camshaft position to the camshaft position sensor.

1. Lubricate camshaft journals with clean engine oil.

 © 2011 Mitchell Repair Information Company, LLC.

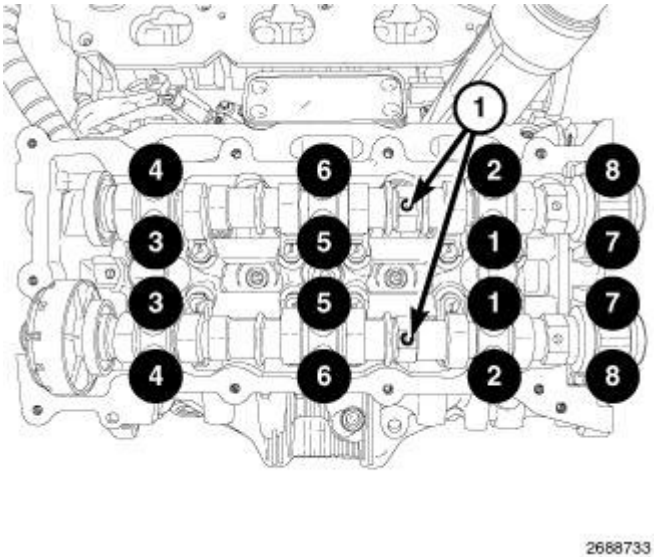

Fig. 264: Bearing Cap Retaining Bolts Tightening Sequence - Right
Courtesy of CHRYSLER GROUP, LLC

CAUTION: Do not rotate the camshafts more than a few degrees independently of the crankshaft. Valve to piston contact could occur resulting in possible valve damage. If the camshafts need to be rotated more than a few degrees, first move the pistons away from the cylinder heads by rotating the crankshaft counterclockwise to a position 30° before-top-dead-center. Once the camshafts are returned to their top-dead-center position, rotate the crankshaft clockwise to return the crankshaft to top-dead-center.

2. Install the right side camshaft(s) at top-dead-center by positioning the alignment holes (1) vertically. This will place the camshafts at the neutral position (no valve load) easing the installation of the camshaft bearing caps.

NOTE: Caps are identified numerically (1 through 4), intake or exhaust (I or E) and should be installed from the front to the rear of the engine. All caps should be installed with the notch forward so that the stamped arrows (<) on the caps point toward the front of the engine.

3. Install the camshaft bearing caps and hand tighten the retaining bolts to 2 N.m (18 in. lbs.).
4. Verify the rocker arms are aligned to the cam lobe

   Refer to **ROCKER ARM, VALVE, INSTALLATION**.

5. Tighten the bearing cap retaining bolts in the sequence shown in the illustration to 9.5 N.m (84 in. lbs.).

 © 2011 Mitchell Repair Information Company, LLC.

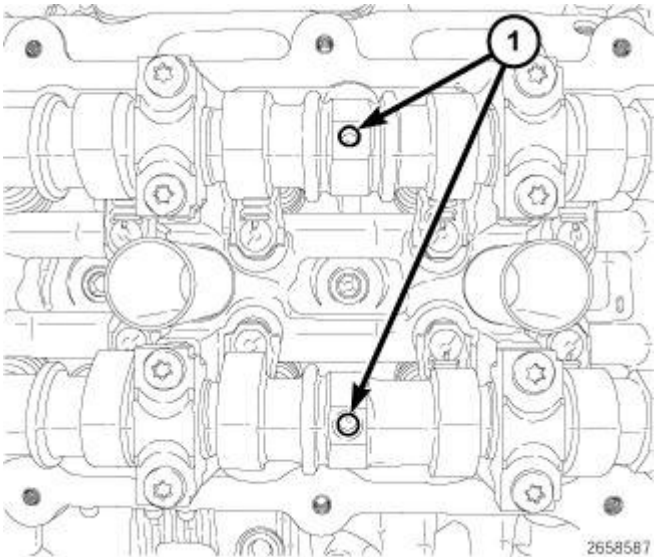

Fig. 265: Positioning Camshaft Alignment Holes Vertically
Courtesy of CHRYSLER GROUP, LLC

6. Verify the alignment holes are vertical to the cylinder head surface.

NOTE: Minor rotation of a camshaft (a few degrees) may be required when installing the RT Camshaft/Phasers to the camshaft alignment pins.

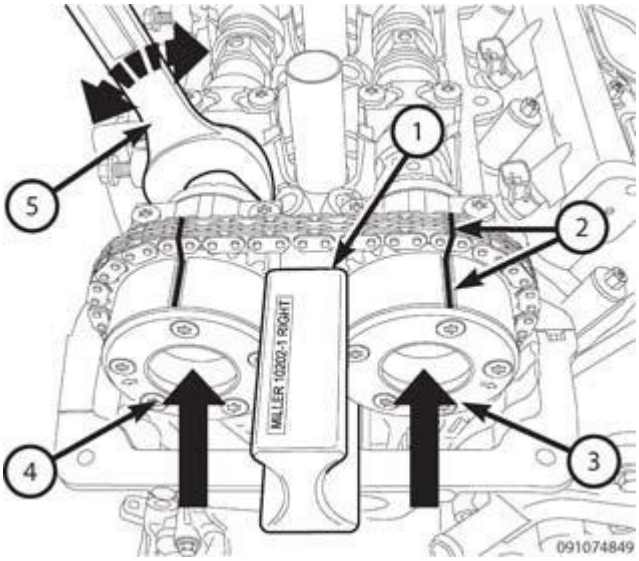

Fig. 266: Marks On Timing Chain
Courtesy of CHRYSLER GROUP, LLC

7. Verify the cam phasers (3 and 4) are aligned to the marks (2) made on the timing chain.
8. Install the phasers (3 and 4) onto the camshafts.
9. Install the oil control valves. Tighten to 150 N.m (110 ft. lbs.).

 © 2011 Mitchell Repair Information Company, LLC.

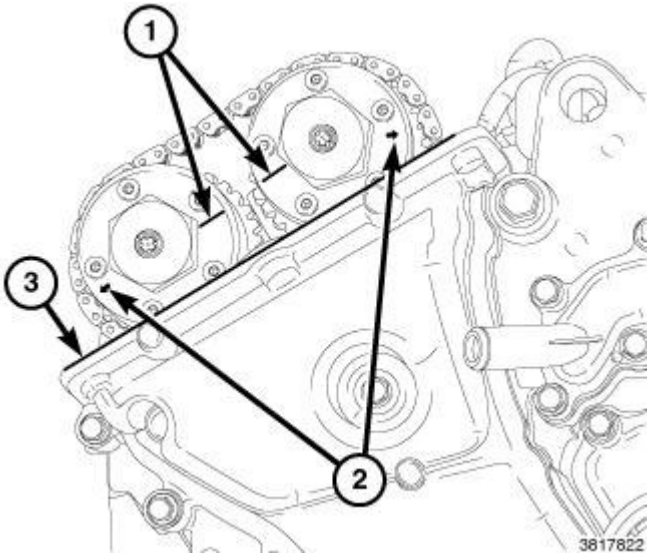

Fig. 267: Arrows, Scribe Lines & Cylinder Head Cover Mounting Surface
Courtesy of CHRYSLER GROUP, LLC

10. Using care, slowly rotate the engine four revolutions to verify the valve to piston clearance and camshaft phaser timing mark alignment (1).
11. Install the cylinder head cover, spark plugs, ignition coils and the upper intake manifold. Refer to **ASSEMBLY, VARIABLE VALVE TIMING, PHASER / OIL CONTROL VALVE, INSTALLATION**.

NOTE: **The Cam/Crank Variation Relearn procedure must be performed using the scan tool anytime there has been a repair/replacement made to a powertrain system, for example: flywheel, valvetrain, camshaft and/or crankshaft sensors or components.**

COVER(S), CYLINDER HEAD

DESCRIPTION

DESCRIPTION

 © 2011 Mitchell Repair Information Company, LLC.

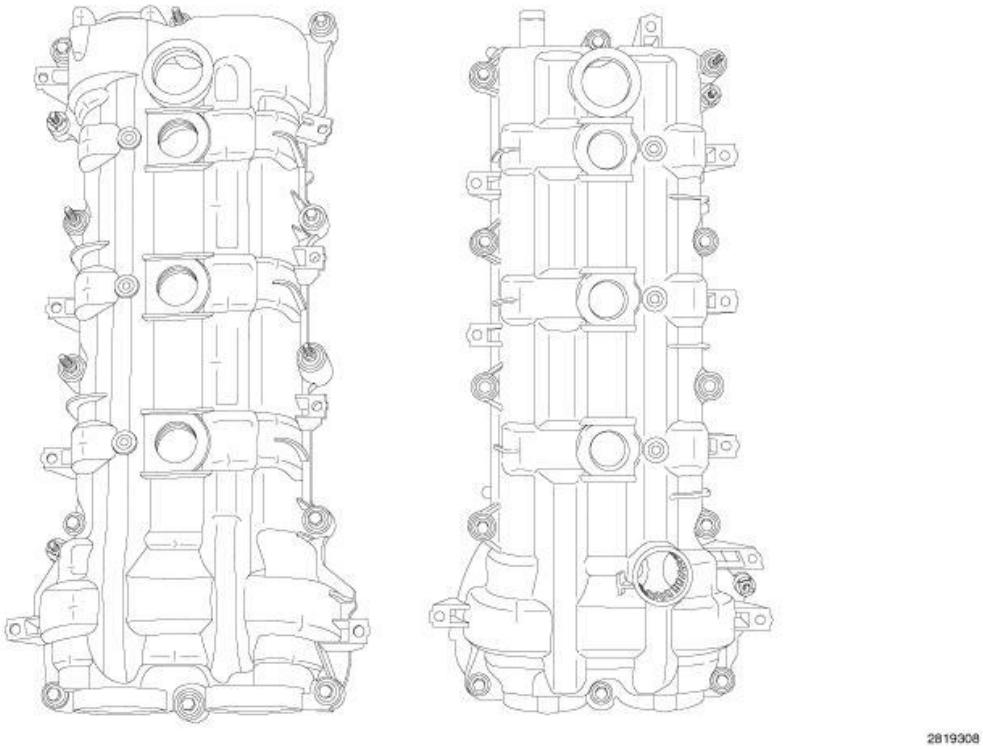

Fig. 268: Cylinder Head Covers
Courtesy of CHRYSLER GROUP, LLC

The cylinder head covers are made of a carbon and fiberglass composite. The cylinder head covers are not interchangeable from side-to-side. The cylinder head covers are sealed with a press-in-place gasket that is designed to isolate the cover from the cylinder head for improved NVH. There are two dowel pins on the outboard side of the cover flange to locate the cover to holes in the cylinder head. RTV is used to seal the T-joint at the timing cover, cylinder head and cylinder head cover.

REMOVAL

LEFT

 © 2011 Mitchell Repair Information Company, LLC.

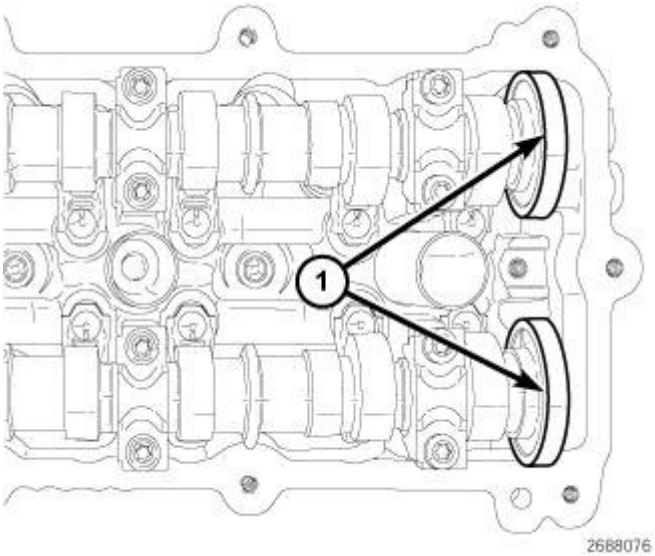

Fig. 269: Magnetic Timing Wheels
Courtesy of CHRYSLER GROUP, LLC

CAUTION: The magnetic timing wheels (1) must not come in contact with magnets (pickup tools, trays, etc.) or any other strong magnetic field. This will destroy the timing wheels ability to correctly relay camshaft position to the camshaft position sensor.

1. Disconnect and isolate the negative battery cable.

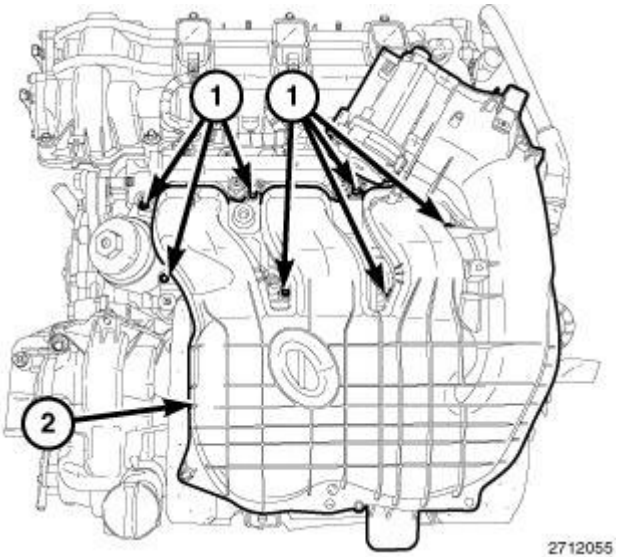

Fig. 270: Upper Intake Manifold & Bolts
Courtesy of CHRYSLER GROUP, LLC

2. Remove the air inlet hose and upper intake manifold (2). Refer to **MANIFOLD, INTAKE, REMOVAL**.

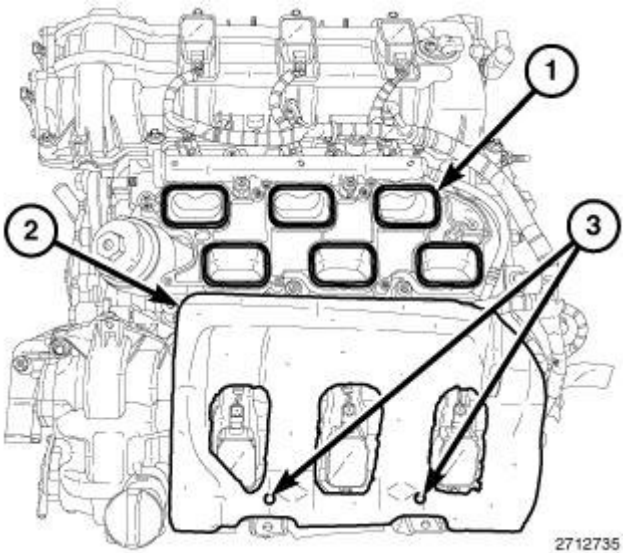

Fig. 271: Intake Ports, Insulator & Alignment Posts
Courtesy of CHRYSLER GROUP, LLC

3. Cover the open intake ports (1) to prevent debris from entering the engine.
4. Remove the insulator (2) from the LH cylinder head cover.

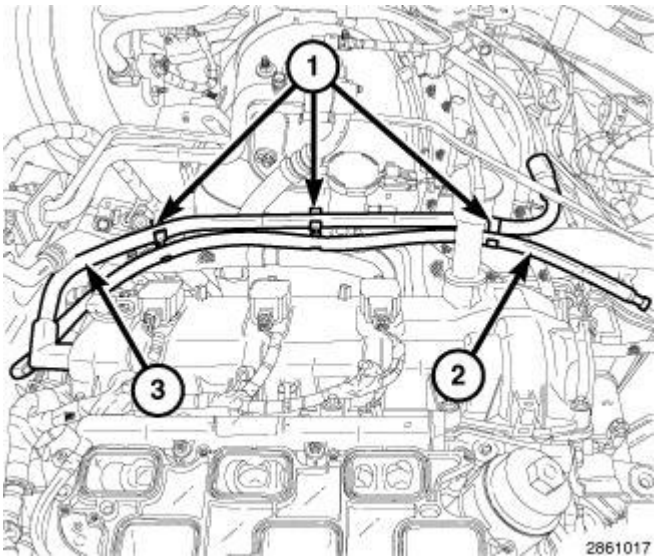

Fig. 272: Transmission Breather Hose, Make-Up Air Tube & Clips
Courtesy of CHRYSLER GROUP, LLC

5. Disengage the clips (1), remove the make-up air tube (3) from the left cylinder head cover and reposition the transmission breather hose (2).

 © 2011 Mitchell Repair Information Company, LLC.

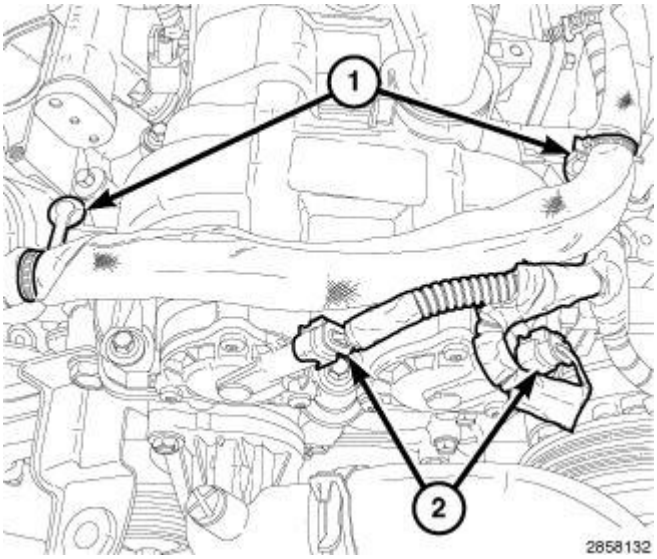

Fig. 273: Variable Valve Timing Solenoid Connectors & Wire Harness Retainers
Courtesy of CHRYSLER GROUP, LLC

NOTE: Mark the variable valve timing solenoid connectors (2) with a paint pen or equivalent so that they may be reinstalled in their original locations.

6. Disconnect the electrical connectors (2) from the left variable valve timing solenoids.
7. Disengage two starter wire harness retainers (1) from the left cylinder head cover.

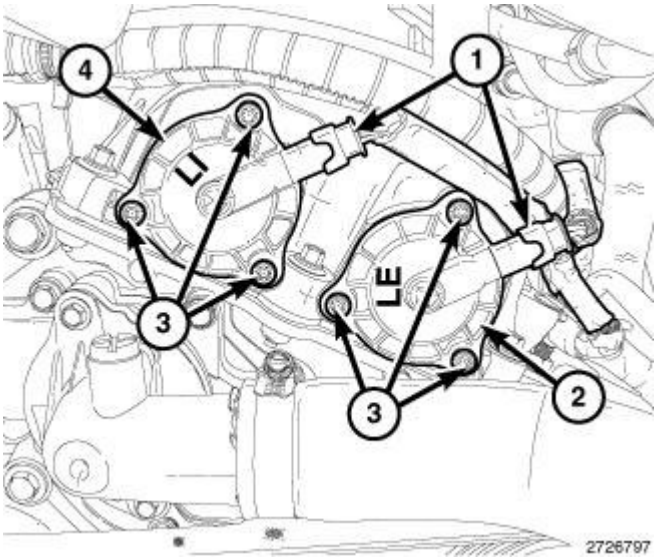

Fig. 274: Variable Valve Timing Solenoids, Connectors & Bolts
Courtesy of CHRYSLER GROUP, LLC

8. Mark the variable valve timing solenoids (2 and 4) with a paint pen or equivalent so that they may be reinstalled in their original locations.
9. Remove the variable valve timing solenoids. Refer to **SOLENOID, VARIABLE VALVE TIMING, REMOVAL** .

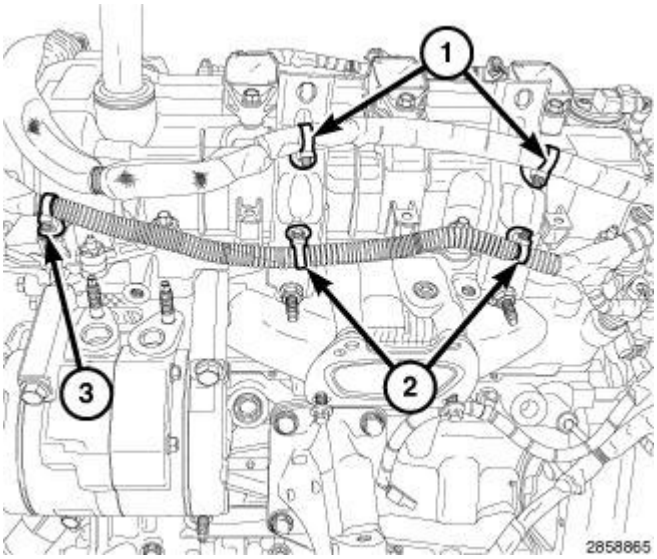

Fig. 275: Starter Wire Harness Retainers, Main Wire Harness Retainer & Manifold Support Bracket Retainers
Courtesy of CHRYSLER GROUP, LLC

10. Disengage one main wire harness retainer (3) from the left cylinder head cover.

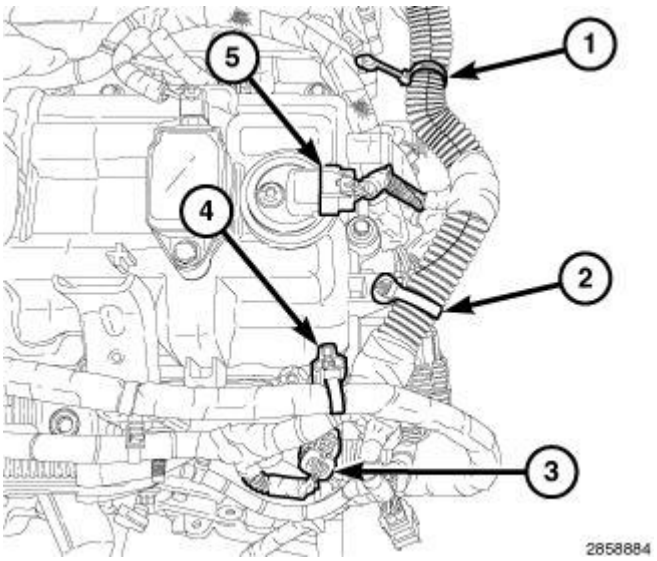

Fig. 276: ECT Sensor Connector, CMP Sensor & Main Wire Harness Retainers
Courtesy of CHRYSLER GROUP, LLC

11. Disconnect the left Camshaft Position (CMP) sensor (5).
12. Disengage one main wire harness retainer (2) from the cylinder head cover and one main wire harness retainer (4) from the cylinder head cover mounting stud.

 © 2011 Mitchell Repair Information Company, LLC.

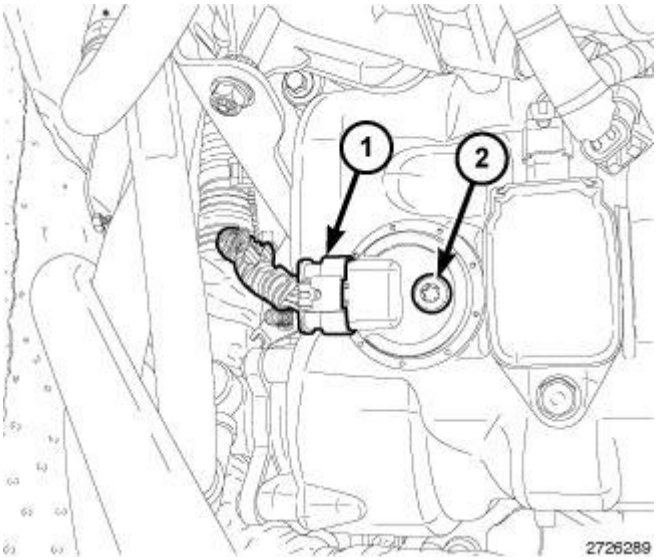

Fig. 277: CMP Sensor & Bolt
Courtesy of CHRYSLER GROUP, LLC

NOTE: The RH CMP sensor is shown in the illustration, the LH CMP sensor is similar. If removing both RH and LH CMP sensors, mark the sensors so they can be installed in their original locations.

13. Remove the camshaft position sensor. Refer to **SENSOR, CAMSHAFT POSITION, REMOVAL** .

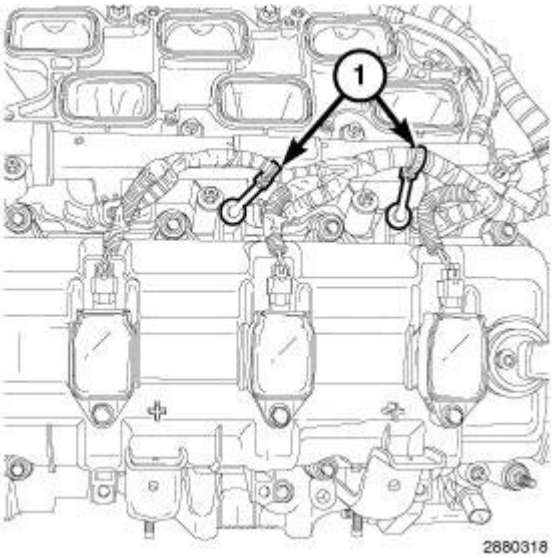

Fig. 278: Injection/Ignition Harness Retainers
Courtesy of CHRYSLER GROUP, LLC

14. Disengage two injection/ignition harness retainers (1) from the left cylinder head cover.

 © 2011 Mitchell Repair Information Company, LLC.

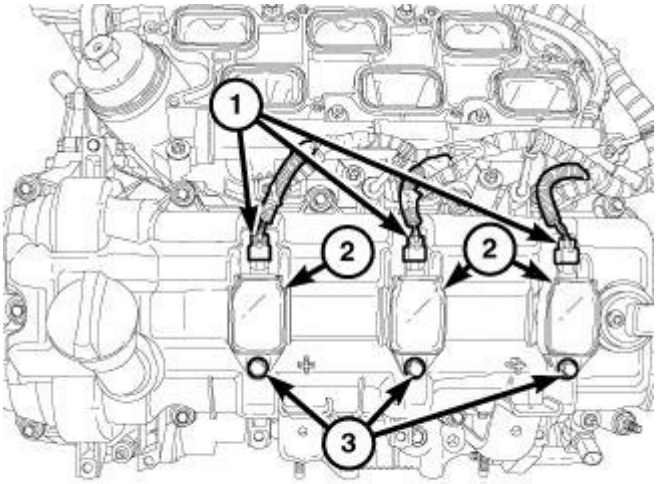

2726572

Fig. 279: Electrical Connector, Ignition Coils & Ignition Coil Retaining Bolts
Courtesy of CHRYSLER GROUP, LLC

15. Remove the ignition coils (2). Refer to **COIL, IGNITION, REMOVAL** .

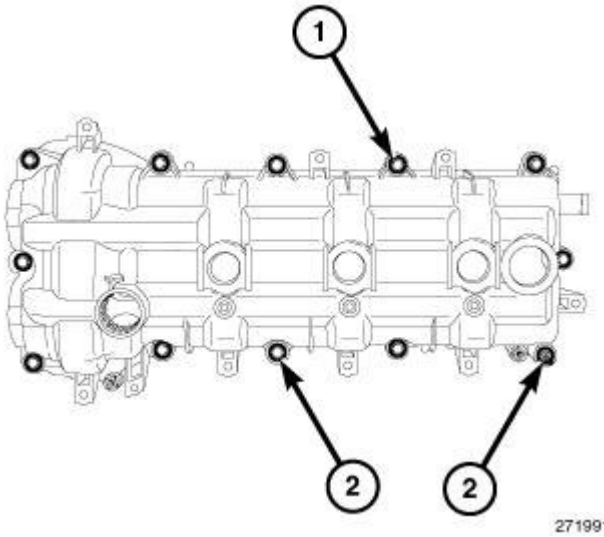

2719912

Fig. 280: Cylinder Head Cover Mounting Bolts & Studbolts
Courtesy of CHRYSLER GROUP, LLC

16. Loosen ten cylinder head cover mounting bolts (1) and two studbolts (2) and remove the cylinder head cover.

 © 2011 Mitchell Repair Information Company, LLC.

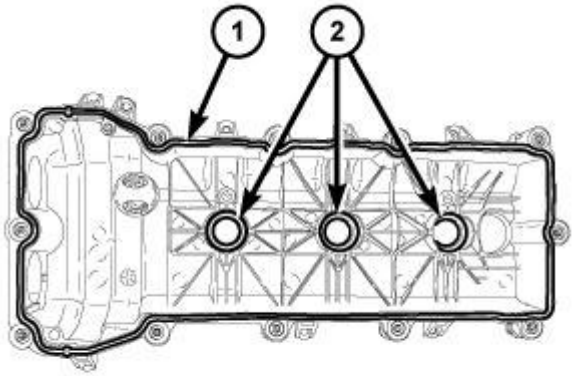

2776066

Fig. 281: Cylinder Head Cover Gasket & Spark Plug Tube Seals
Courtesy of CHRYSLER GROUP, LLC

17. Remove and discard the cylinder head cover gasket (1).
18. The spark plug tube seals (2) can be reused if not damaged.

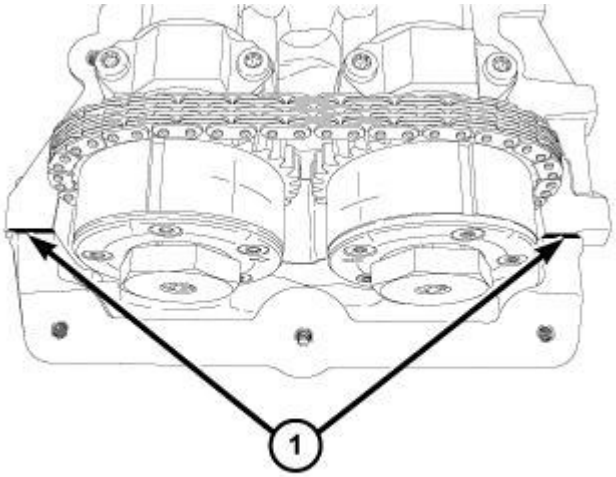

2776075

Fig. 282: RTV Sealant Locations
Courtesy of CHRYSLER GROUP, LLC

CAUTION: Do not use oil based liquids, wire brushes, abrasive wheels or metal scrapers to clean the engine gasket surfaces. Use only isopropyl (rubbing) alcohol, along with plastic or wooden scrapers. Improper gasket surface preparation may result in engine fluid leakage.

19. Remove all residual sealant (1) from the cylinder head, timing chain cover and cylinder head cover mating surfaces. Refer to ENGINE **STANDARD PROCEDURE** .

 © 2011 Mitchell Repair Information Company, LLC.

RIGHT

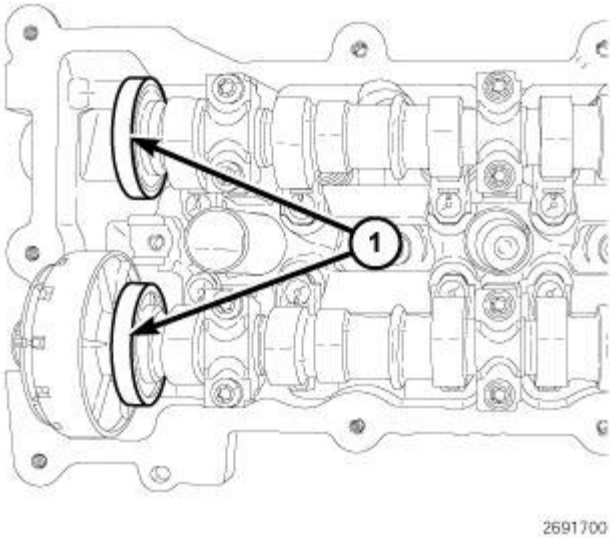

Fig. 283: Magnetic Timing Wheels
Courtesy of CHRYSLER GROUP, LLC

CAUTION: The magnetic timing wheels (1) must not come in contact with magnets (pickup tools, trays, etc.) or any other strong magnetic field. This will destroy the timing wheels ability to correctly relay camshaft position to the camshaft position sensor.

1. Disconnect and isolate the negative battery cable.

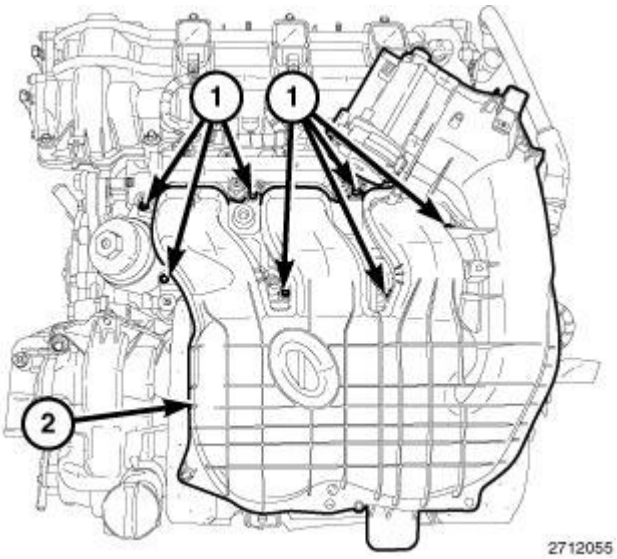

Fig. 284: Upper Intake Manifold & Bolts
Courtesy of CHRYSLER GROUP, LLC

2. Remove the air inlet hose and upper intake manifold (2). Refer to **MANIFOLD, INTAKE, REMOVAL**.

 © 2011 Mitchell Repair Information Company, LLC.

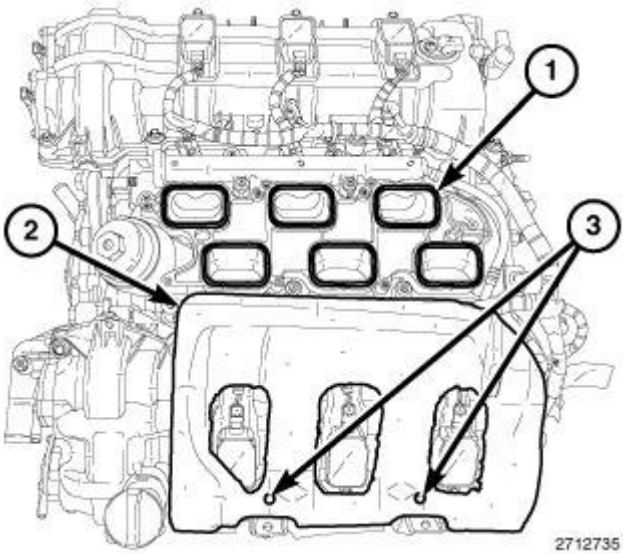

Fig. 285: Intake Ports, Insulator & Alignment Posts
Courtesy of CHRYSLER GROUP, LLC

3. Cover the open intake ports (1) to prevent debris from entering the engine.

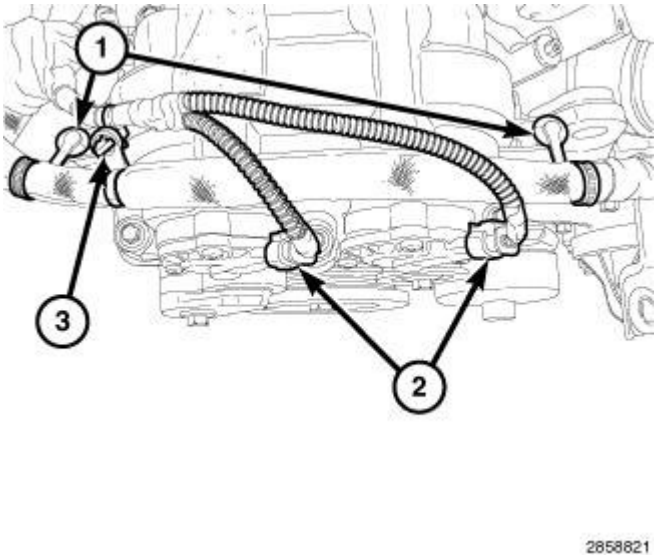

Fig. 286: Variable Valve Timing Solenoid Connectors & Harness Retainers
Courtesy of CHRYSLER GROUP, LLC

NOTE: Mark the variable valve timing solenoid connectors (2) with a paint pen or equivalent so that they may be reinstalled in their original locations.

4. Disconnect the electrical connectors (2) from the variable valve timing solenoids on the right cylinder head.
5. Disengage the starter harness to main harness retainer (3).
6. Disengage two starter wire harness retainers from the right cylinder head cover (1).

 © 2011 Mitchell Repair Information Company, LLC.

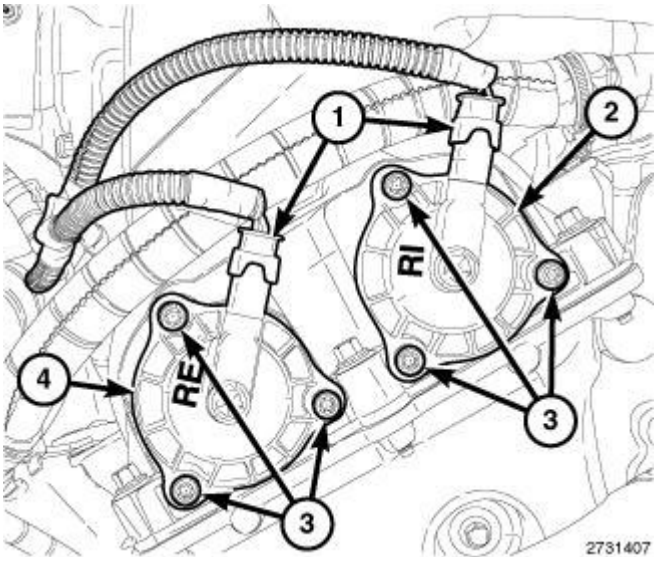

Fig. 287: Variable Valve Timing Solenoids, Connectors & Bolts
Courtesy of CHRYSLER GROUP, LLC

7. Mark the variable valve timing solenoids (2 and 4) with a paint pen or equivalent so that they may be reinstalled in their original locations.
8. Remove the variable valve timing solenoids. Refer to **SOLENOID, VARIABLE VALVE TIMING, REMOVAL** .

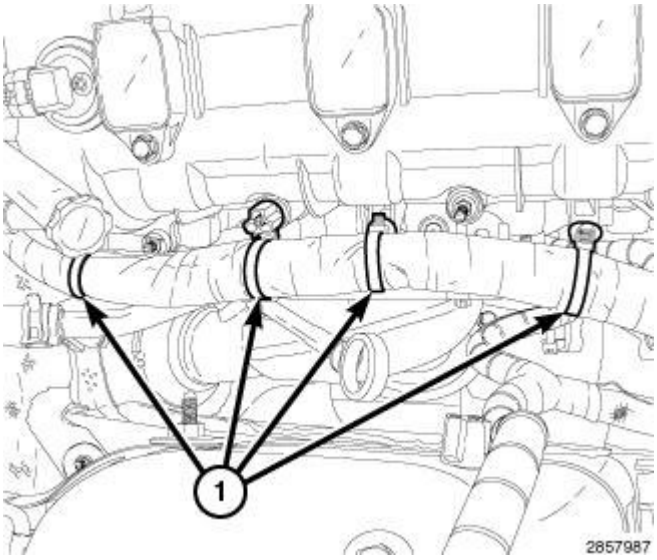

Fig. 288: Main Wire Harness Retainers At Right Cylinder Head Cover
Courtesy of CHRYSLER GROUP, LLC

9. Disengage four main wire harness retainers (1) from the right cylinder head cover.

 © 2011 Mitchell Repair Information Company, LLC.

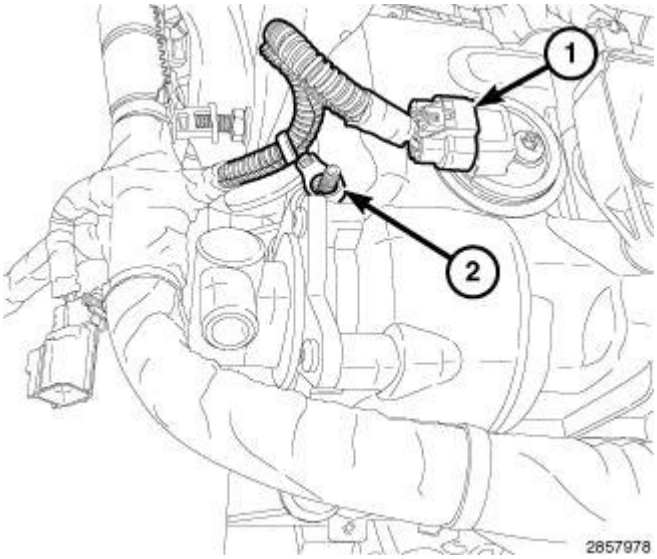

Fig. 289: Main Wire Harness Retainer & Connector
Courtesy of CHRYSLER GROUP, LLC

10. Disconnect the electrical connector (1) from the right Camshaft Position (CMP) sensor.
11. Disengage the main wire harness retainer (2) from the right cylinder head cover mounting stud.

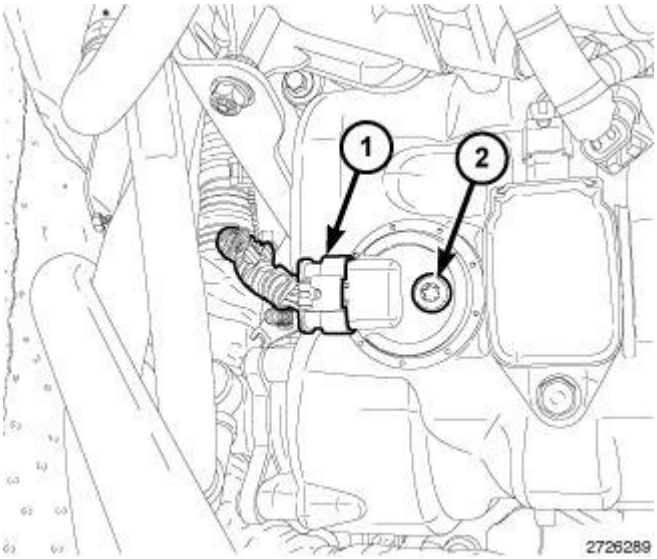

Fig. 290: CMP Sensor & Bolt
Courtesy of CHRYSLER GROUP, LLC

NOTE: If removing both RH and LH CMP sensors, mark the sensors so they can be installed in their original locations.

12. Remove the camshaft position sensor. Refer to **SENSOR, CAMSHAFT POSITION, REMOVAL** .

 © 2011 Mitchell Repair Information Company, LLC.

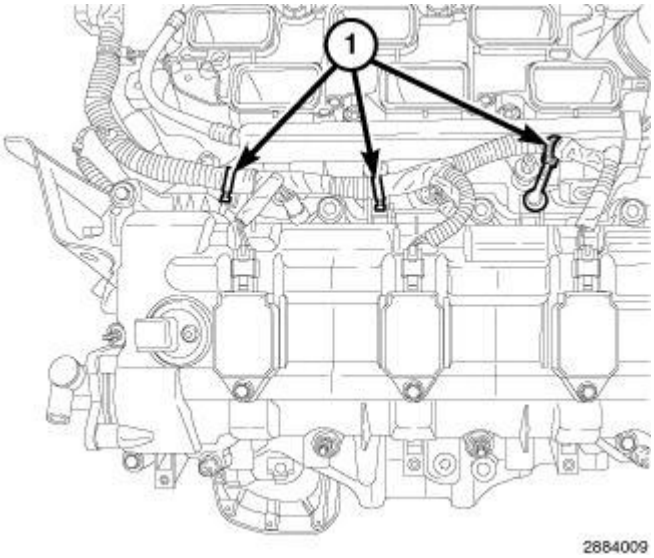

Fig. 291: Injection/Ignition Harness Retainers
Courtesy of CHRYSLER GROUP, LLC

13. Disengage three injection/ignition harness retainers (1) from the right cylinder head cover.

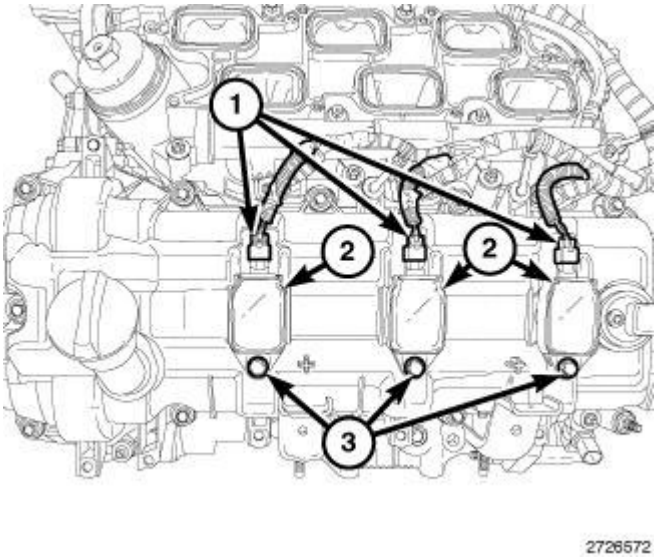

Fig. 292: Electrical Connector, Ignition Coils & Ignition Coil Retaining Bolts
Courtesy of CHRYSLER GROUP, LLC

NOTE: The LH ignition coils are shown in the illustration, the RH ignition coils are similar.

14. Remove the ignition coils (2). Refer to **COIL, IGNITION, REMOVAL** .
15. Raise and support the vehicle. Refer to **HOISTING, STANDARD PROCEDURE** .

 © 2011 Mitchell Repair Information Company, LLC.

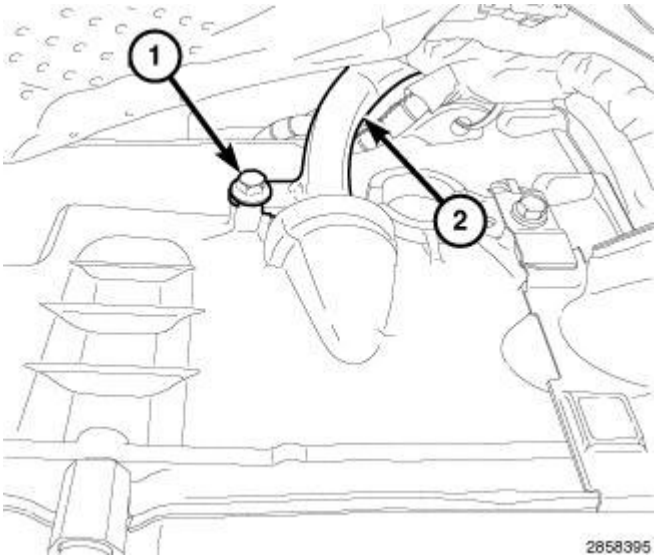

Fig. 293: Transmission Fluid Level Indicator Tube & Bolt
Courtesy of CHRYSLER GROUP, LLC

16. Loosen the bolt (1) securing the transmission fluid level indicator tube (2) to the transmission housing.

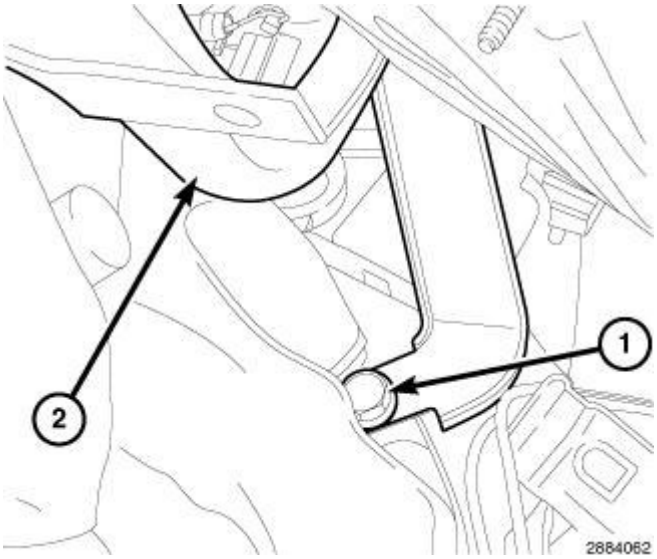

Fig. 294: Upper Transmission-To-Engine Bolt & Transmission Oil Level Indicator Tube
Courtesy of CHRYSLER GROUP, LLC

17. Remove the upper transmission to engine bolt (1) and reposition the transmission oil level indicator tube (2).
18. Lower the vehicle.

 © 2011 Mitchell Repair Information Company, LLC.

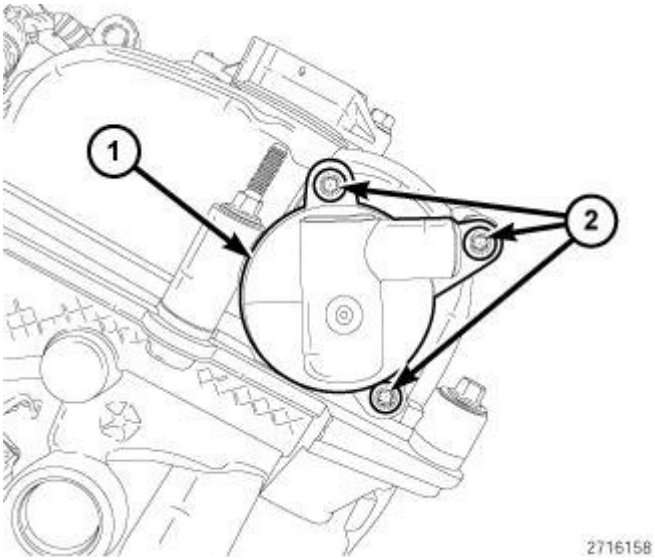

Fig. 295: Three Screws & PCV Valve
Courtesy of CHRYSLER GROUP, LLC

19. Remove the PCV valve (1). Refer to **VALVE, POSITIVE CRANKCASE VENTILATION (PCV), 3.6L, REMOVAL** .

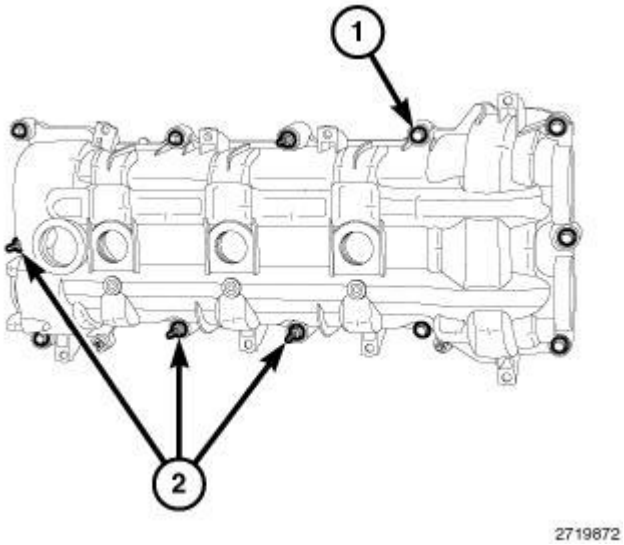

Fig. 296: Cylinder Head Cover Mounting Bolts & Studbolts
Courtesy of CHRYSLER GROUP, LLC

20. Loosen nine cylinder head cover mounting bolts (1) and three studbolts (2) and remove the cylinder head cover.

 © 2011 Mitchell Repair Information Company, LLC.

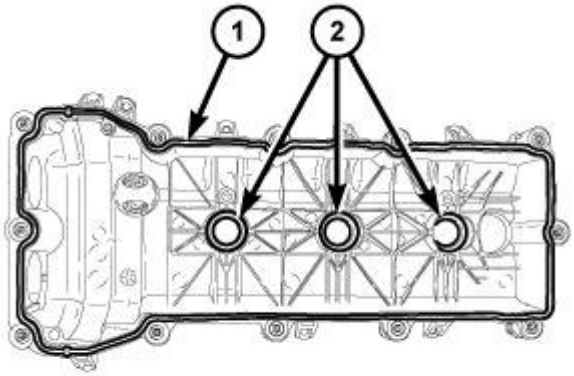

2776066

Fig. 297: Cylinder Head Cover Gasket & Spark Plug Tube Seals
Courtesy of CHRYSLER GROUP, LLC

NOTE: The LH cylinder head cover is shown in the illustration, the RH cylinder head cover is similar.

21. Remove and discard the cylinder head cover gasket (1).
22. The spark plug tube seals (2) can be reused if not damaged.

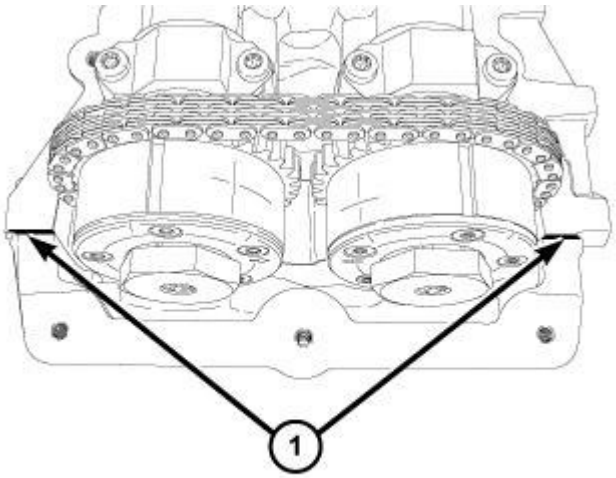

2776075

Fig. 298: RTV Sealant Locations
Courtesy of CHRYSLER GROUP, LLC

NOTE: The LH cylinder head cover T-joints are shown in the illustration, the RH cylinder head cover T-joints are similar.

 © 2011 Mitchell Repair Information Company, LLC.

CAUTION: Do not use oil based liquids, wire brushes, abrasive wheels or metal scrapers to clean the engine gasket surfaces. Use only isopropyl (rubbing) alcohol, along with plastic or wooden scrapers. Improper gasket surface preparation may result in engine fluid leakage.

23. Remove all residual sealant (1) from the cylinder head, timing chain cover and cylinder head cover mating surfaces. Refer to ENGINE **STANDARD PROCEDURE** .

INSTALLATION

LEFT

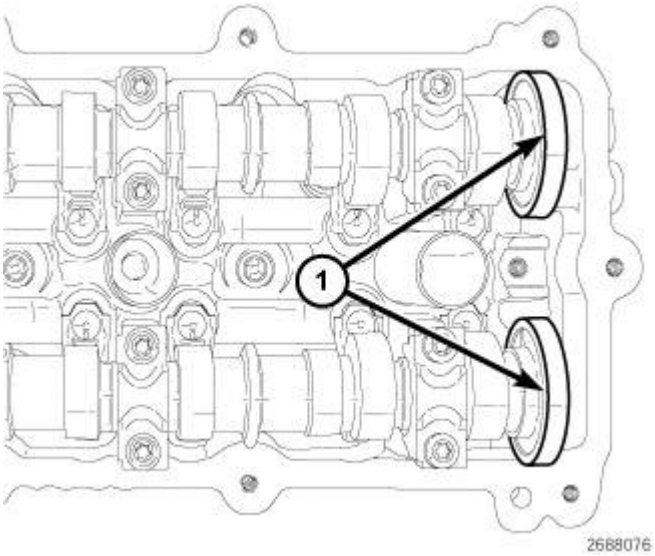

Fig. 299: Magnetic Timing Wheels
Courtesy of CHRYSLER GROUP, LLC

CAUTION: The magnetic timing wheels (1) must not come in contact with magnets (pickup tools, trays, etc.) or any other strong magnetic field. This will destroy the timing wheels ability to correctly relay camshaft position to the camshaft position sensor.

 © 2011 Mitchell Repair Information Company, LLC.

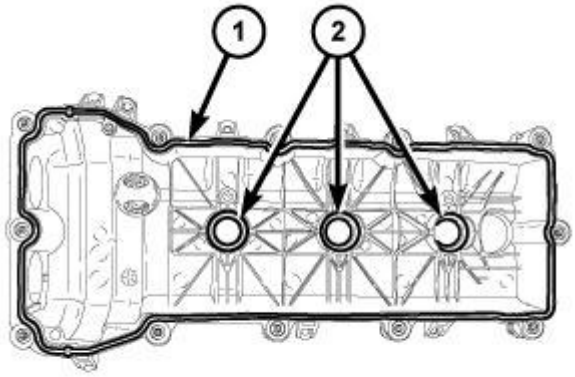

2776066

Fig. 300: Cylinder Head Cover Gasket & Spark Plug Tube Seals
Courtesy of CHRYSLER GROUP, LLC

1. Install the cylinder head cover gasket (1).
2. The spark plug tube seals (2) can be reused if not damaged.

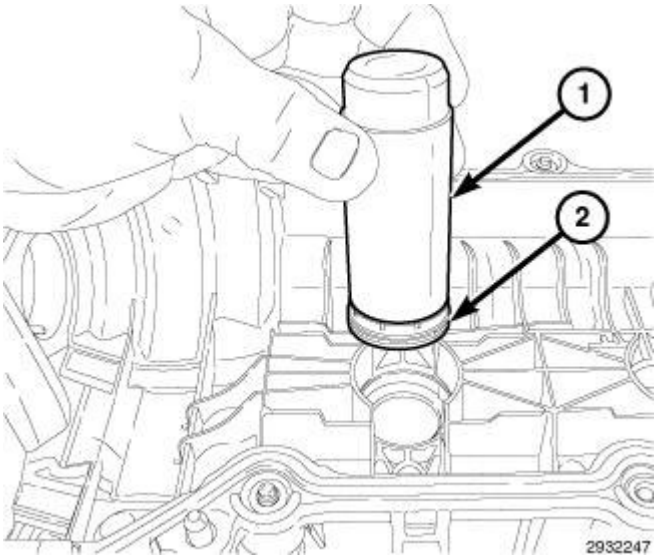

Fig. 301: Spark Plug Tube Seal & Installer
Courtesy of CHRYSLER GROUP, LLC

3. If required, install new spark plug tube seals (2) in the cylinder head cover:
   - Lubricate the spark plug tube seal inner and outer diameters with clean engine oil.
   - Place the spark plug tube seal (2) on the Cam Sensor/Spark Plug Tube Seal Installer (special tool #10256, Installer, Cam Installer, Cam Sensor/ Spark Plug Tube Seal) (1).
   - Push the seal into the cylinder head cover until the base of the seal is seated.
   - Remove the tool.

 © 2011 Mitchell Repair Information Company, LLC.

4. Clean the timing engine timing cover, cylinder head and cylinder head cover mating surfaces with isopropyl alcohol in preparation for sealant application.

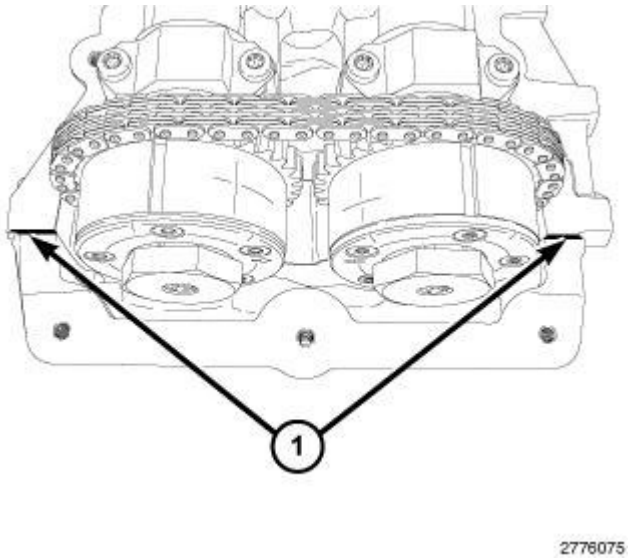

Fig. 302: RTV Sealant Locations
Courtesy of CHRYSLER GROUP, LLC

CAUTION: Engine assembly requires the use of a unique sealant that is compatible with engine oil. Using a sealant other than Mopar® Threebond Engine RTV Sealant may result in engine fluid leakage.

CAUTION: Following the application of Mopar® Threebond Engine RTV Sealant to the gasket surfaces, the components must be assembled within 20 minutes and the attaching fasteners must be tightened to specification within 45 minutes. Prolonged exposure to the air prior to assembly may result in engine fluid leakage.

5. Apply a 2 to 3 mm wide bead of Mopar® Threebond Engine RTV Sealant (1) to the two engine timing cover to cylinder head T-joints as shown in the illustration.

 © 2011 Mitchell Repair Information Company, LLC.

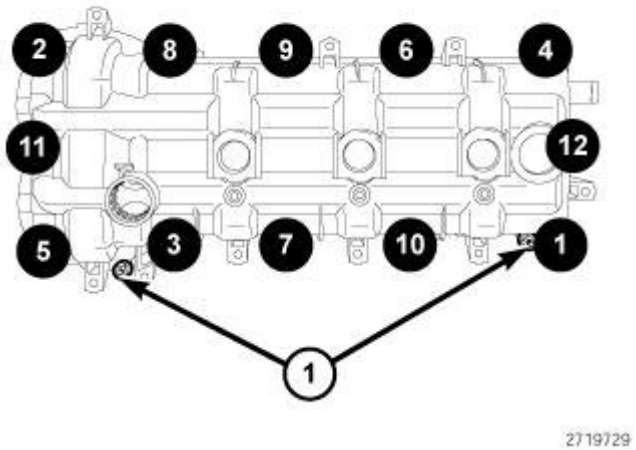

Fig. 303: Cylinder Head Cover Bolts & Double Ended Studs Tightening Sequence - Left
Courtesy of CHRYSLER GROUP, LLC

6. Align the locator pins (1) to the cylinder head and install the cylinder head cover.
7. Tighten the cylinder head cover bolts and double ended studs in the sequence shown in the illustration to 12 N.m (106 in. lbs.).
8. If removed, install the spark plugs. Refer to **SPARK PLUG, INSTALLATION** .

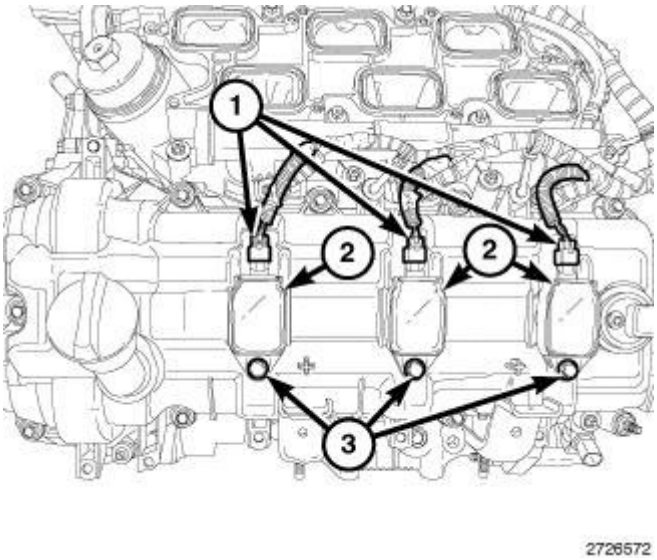

Fig. 304: Electrical Connector, Ignition Coils & Ignition Coil Retaining Bolts
Courtesy of CHRYSLER GROUP, LLC

9. Install the ignition coils. Refer to **COIL, IGNITION, INSTALLATION** .

 © 2011 Mitchell Repair Information Company, LLC.

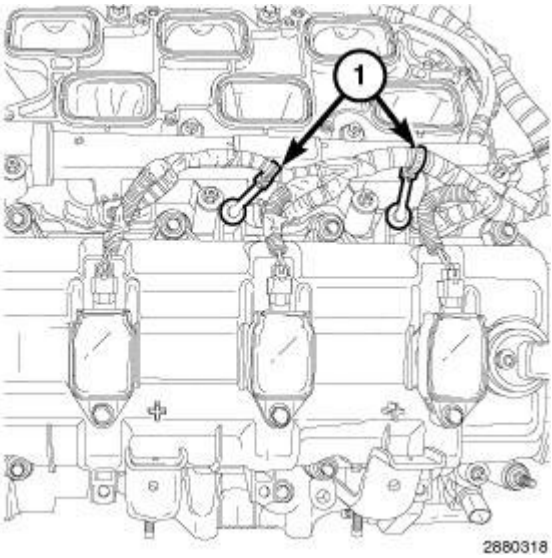

Fig. 305: Injection/Ignition Harness Retainers
Courtesy of CHRYSLER GROUP, LLC

10. Engage two injection/ignition harness retainers (1) to the left cylinder head cover.

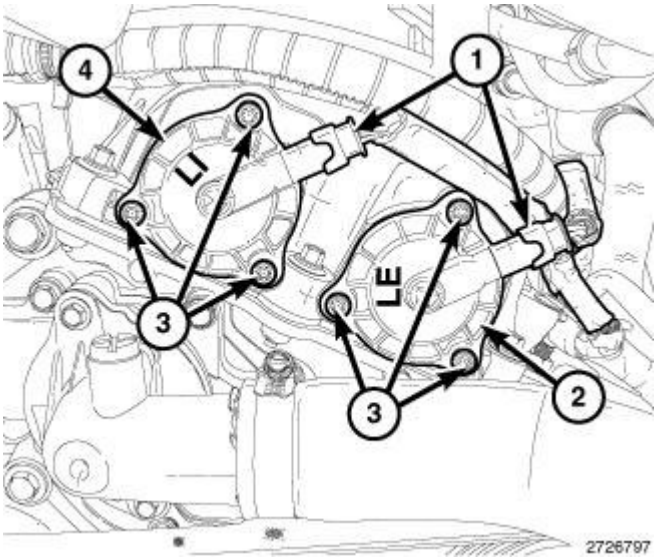

Fig. 306: Variable Valve Timing Solenoids, Connectors & Bolts
Courtesy of CHRYSLER GROUP, LLC

11. Refer to the markings made at disassembly and install the variable valve timing solenoids (2 and 4) in their original locations. Refer to **SOLENOID, VARIABLE VALVE TIMING, INSTALLATION** .

 © 2011 Mitchell Repair Information Company, LLC.

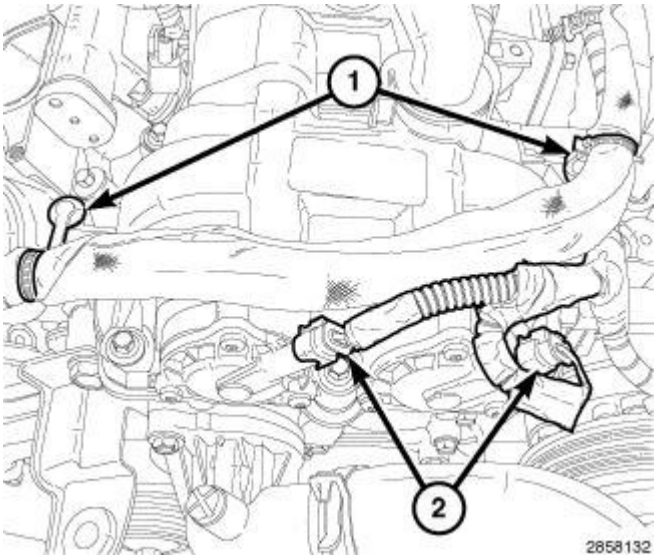

Fig. 307: Variable Valve Timing Solenoid Connectors & Wire Harness Retainers
Courtesy of CHRYSLER GROUP, LLC

12. Connect the electrical connectors (2) to the left variable valve timing solenoids.
13. Engage two starter wire harness retainers (1) to the left cylinder head cover.

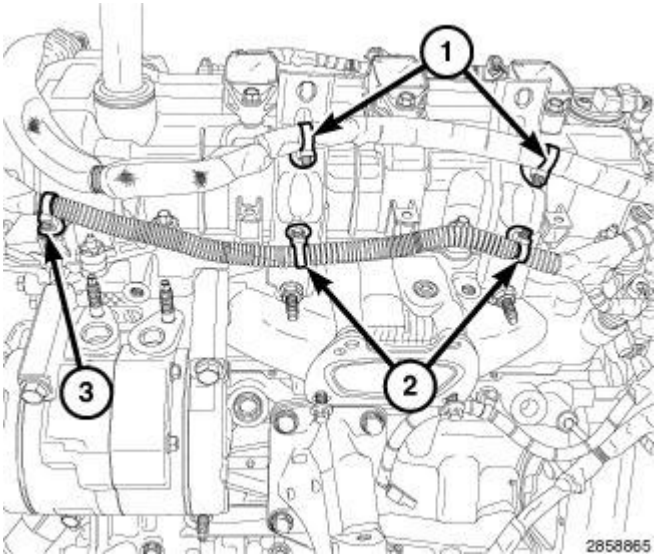

Fig. 308: Starter Wire Harness Retainers, Main Wire Harness Retainer & Manifold Support Bracket Retainers
Courtesy of CHRYSLER GROUP, LLC

14. Engage one main wire harness retainer (3) to the left cylinder head cover.

 © 2011 Mitchell Repair Information Company, LLC.

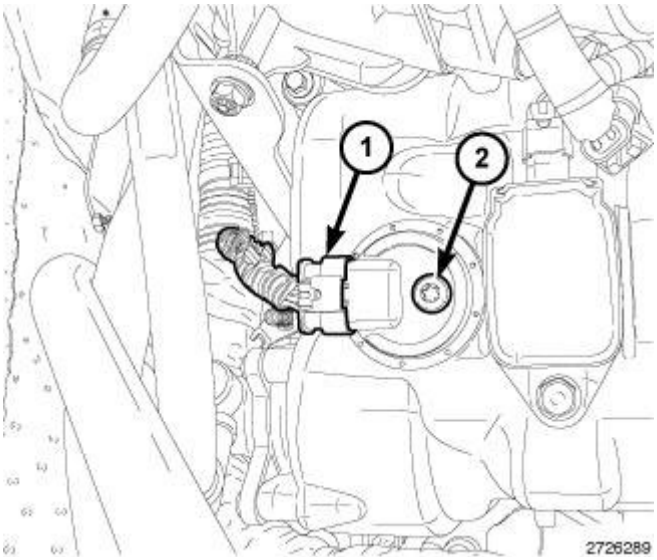

Fig. 309: CMP Sensor & Bolt
Courtesy of CHRYSLER GROUP, LLC

NOTE: **The RH CMP sensor is shown in the illustration, the LH CMP sensor is similar. If both RH and LH CMP sensors where removed, install them into their original locations.**

15. Install the camshaft position sensor. Refer to **SENSOR, CAMSHAFT POSITION, INSTALLATION** .

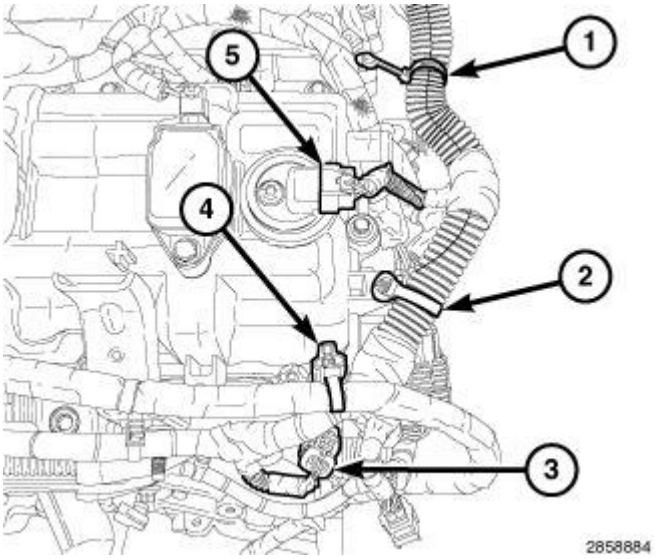

Fig. 310: ECT Sensor Connector, CMP Sensor & Main Wire Harness Retainers
Courtesy of CHRYSLER GROUP, LLC

16. Connect the electrical connector (5) to the left Camshaft Position (CMP) sensor.
17. Engage one main wire harness retainer (2) to the cylinder head cover and one main wire harness retainer (4) to the cylinder head cover mounting stud.

 © 2011 Mitchell Repair Information Company, LLC.

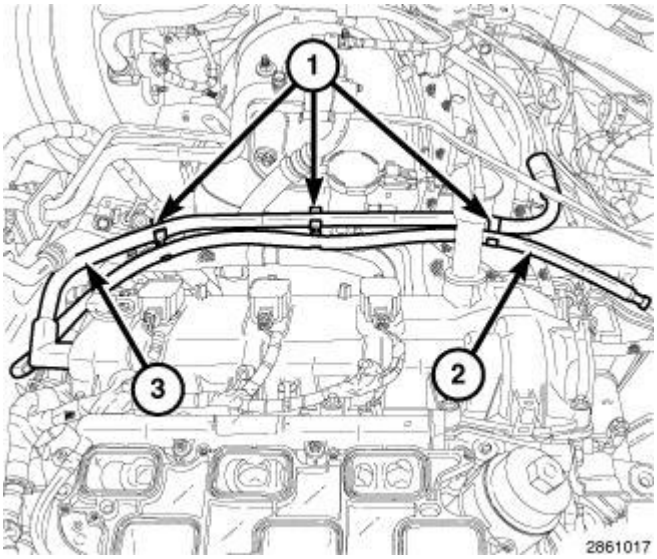

Fig. 311: Transmission Breather Hose, Make-Up Air Tube & Clips
Courtesy of CHRYSLER GROUP, LLC

18. Install the make-up air tube (3) to the left cylinder head cover and engage the clips (1) to the transmission breather hose (2).

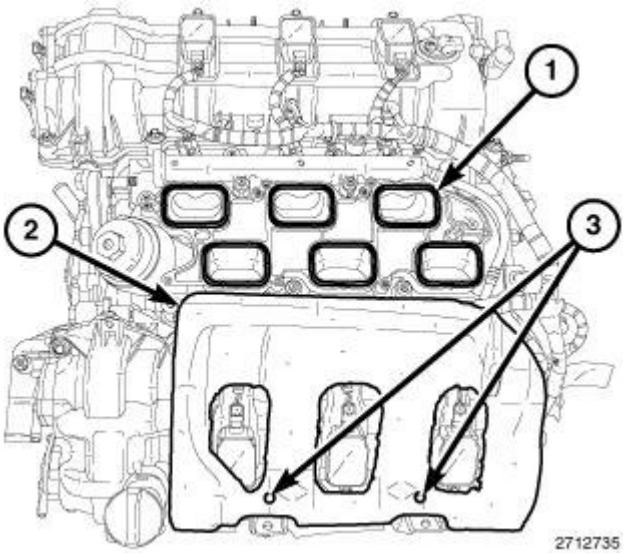

Fig. 312: Intake Ports, Insulator & Alignment Posts
Courtesy of CHRYSLER GROUP, LLC

19. Install the insulator (2) to the two alignment posts (3) on top of the LH cylinder head cover.

 © 2011 Mitchell Repair Information Company, LLC.

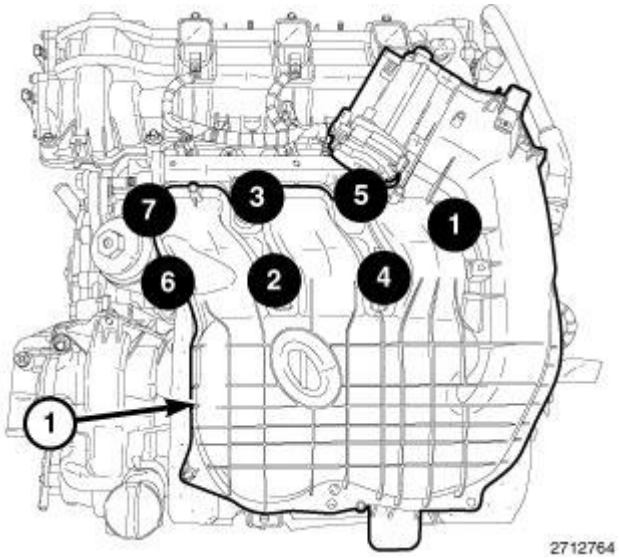

Fig. 313: Upper Intake Manifold Bolt Tightening Sequence
Courtesy of CHRYSLER GROUP, LLC

20. Install the upper intake manifold (1), support brackets and air inlet hose. Refer to **MANIFOLD, INTAKE, INSTALLATION**.
21. Connect the negative battery cable and tighten nut to 5 N.m (45 in. lbs.).

NOTE: **The Cam/Crank Variation Relearn procedure must be performed using the scan tool anytime there has been a repair/replacement made to a powertrain system, for example: flywheel, valvetrain, camshaft and/or crankshaft sensors or components.**

RIGHT

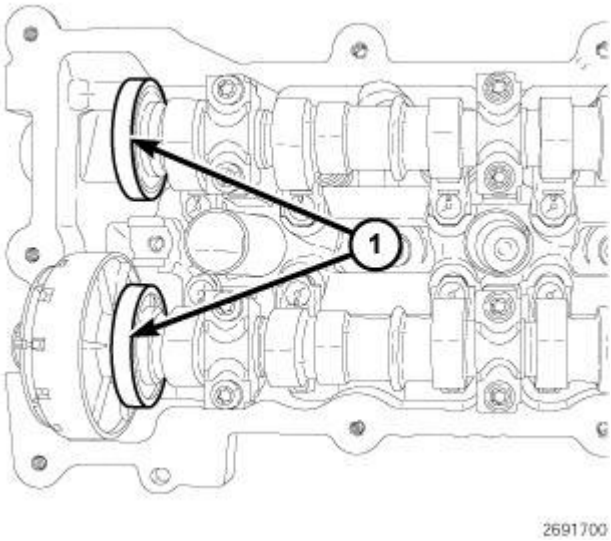

Fig. 314: Magnetic Timing Wheels
Courtesy of CHRYSLER GROUP, LLC

 © 2011 Mitchell Repair Information Company, LLC.

CAUTION: The magnetic timing wheels (1) must not come in contact with magnets (pickup tools, trays, etc.) or any other strong magnetic field. This will destroy the timing wheels ability to correctly relay camshaft position to the camshaft position sensor.

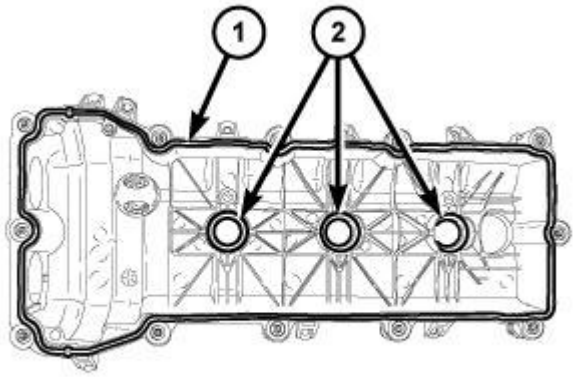

2776066

Fig. 315: Cylinder Head Cover Gasket & Spark Plug Tube Seals
Courtesy of CHRYSLER GROUP, LLC

NOTE: The LH cylinder head cover is shown in the illustration, the RH cylinder head cover is similar.

1. Install the cylinder head cover gasket (1).
2. The spark plug tube seals (2) can be reused if not damaged.

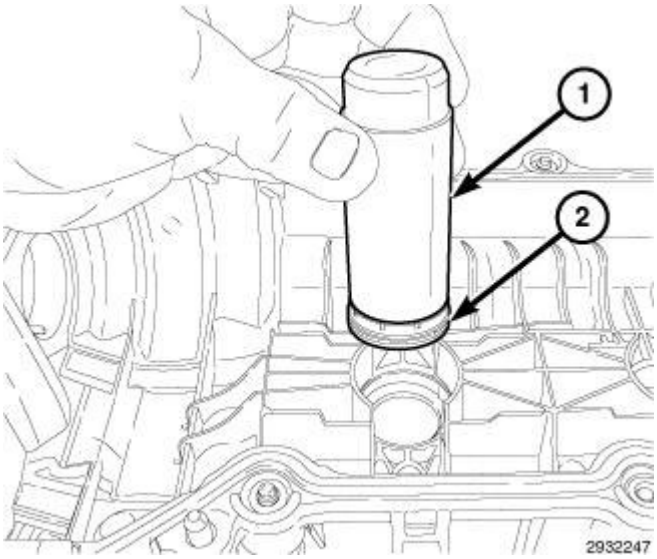

2932247

Fig. 316: Spark Plug Tube Seal & Installer

 © 2011 Mitchell Repair Information Company, LLC.

Courtesy of CHRYSLER GROUP, LLC

3. If required, install new spark plug tube seals (2) in the cylinder head cover:
   - Lubricate the spark plug tube seal inner and outer diameters with clean engine oil.
   - Place the spark plug tube seal (2) on the Cam Sensor/Spark Plug Tube Seal Installer (special tool #10256, Installer, Cam Installer, Cam Sensor/ Spark Plug Tube Seal) (1).
   - Push the seal into the cylinder head cover until the base of the seal is seated.
   - Remove the tool.

NOTE: The LH cylinder head cover T-joint is shown in the illustration, the RH cylinder head cover T-joint is similar.

4. Clean the timing engine timing cover, cylinder head and cylinder head cover mating surfaces with isopropyl alcohol in preparation for sealant application.

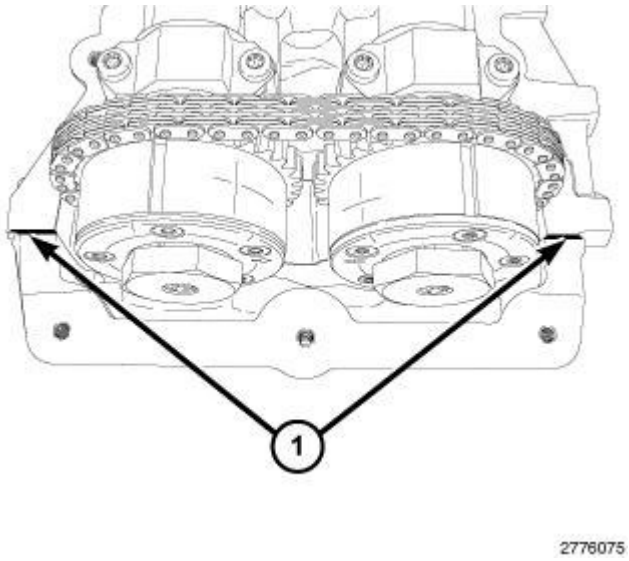

Fig. 317: RTV Sealant Locations
Courtesy of CHRYSLER GROUP, LLC

CAUTION: Engine assembly requires the use of a unique sealant that is compatible with engine oil. Using a sealant other than Mopar® Threebond Engine RTV Sealant may result in engine fluid leakage.

CAUTION: Following the application of Mopar® Threebond Engine RTV Sealant to the gasket surfaces, the components must be assembled within 20 minutes and the attaching fasteners must be tightened to specification within 45 minutes. Prolonged exposure to the air prior to assembly may result in engine fluid leakage.

5. Apply a 2 to 3 mm wide bead of Mopar® Threebond Engine RTV Sealant (1) to the two engine timing cover to cylinder head T-joints as shown in the illustration.

 © 2011 Mitchell Repair Information Company, LLC.

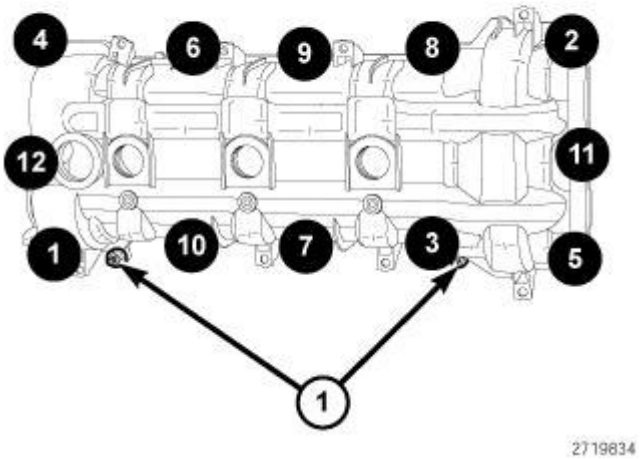

Fig. 318: Cylinder Head Cover Bolts & Double Ended Studs Tightening Sequence - Right
Courtesy of CHRYSLER GROUP, LLC

6. Align the locator pins (1) to the cylinder head and install the cylinder head cover.
7. Tighten the cylinder head cover bolts and double ended studs in the sequence shown in the illustration to 12 N.m (106 in. lbs.).
8. If removed, install the spark plugs. Refer to **SPARK PLUG, INSTALLATION** .

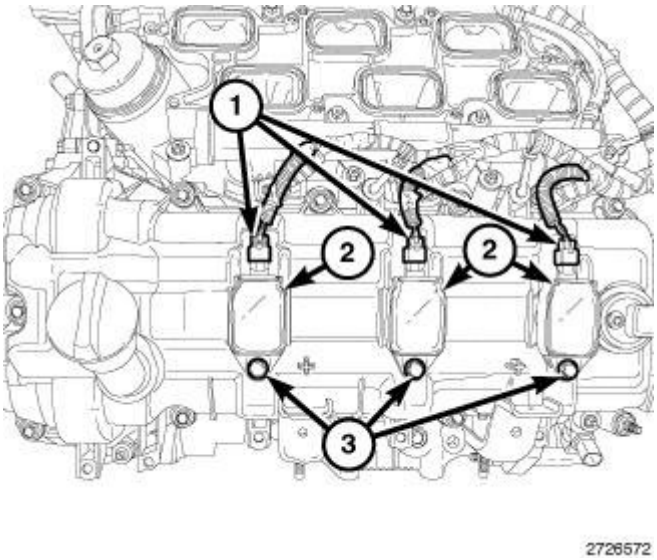

Fig. 319: Electrical Connector, Ignition Coils & Ignition Coil Retaining Bolts
Courtesy of CHRYSLER GROUP, LLC

NOTE: The LH ignition coils are shown in the illustration, the RH ignition coils are similar.

9. Install the ignition coils (2). Refer to **COIL, IGNITION, INSTALLATION** .

 © 2011 Mitchell Repair Information Company, LLC.

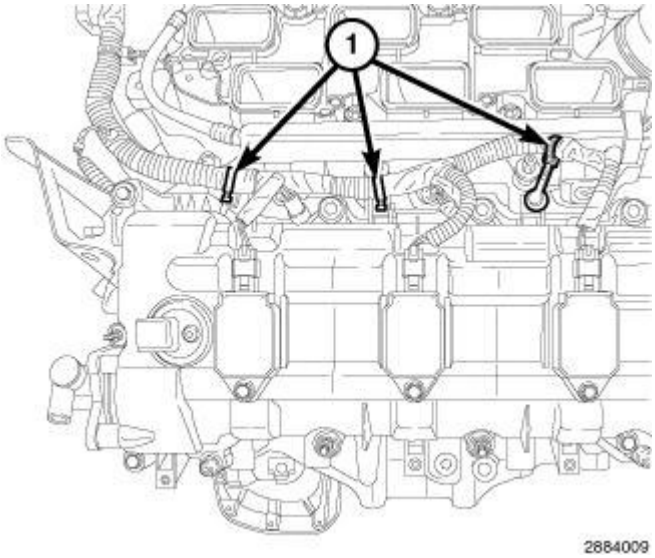

Fig. 320: Injection/Ignition Harness Retainers
Courtesy of CHRYSLER GROUP, LLC

10. Engage three injection/ignition harness retainers (1) to the right cylinder head cover.

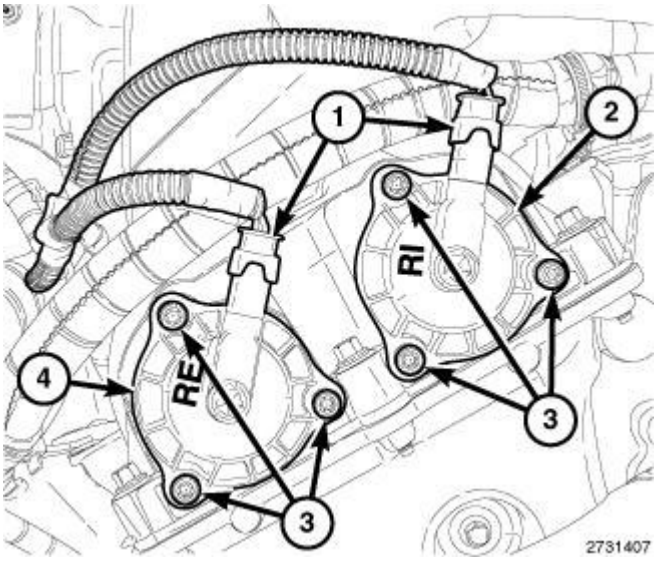

Fig. 321: Variable Valve Timing Solenoids, Connectors & Bolts
Courtesy of CHRYSLER GROUP, LLC

11. Refer to the markings made at disassembly and install the variable valve timing solenoids (2 and 4) in their original locations. Refer to **SOLENOID, VARIABLE VALVE TIMING, INSTALLATION** .

 © 2011 Mitchell Repair Information Company, LLC.

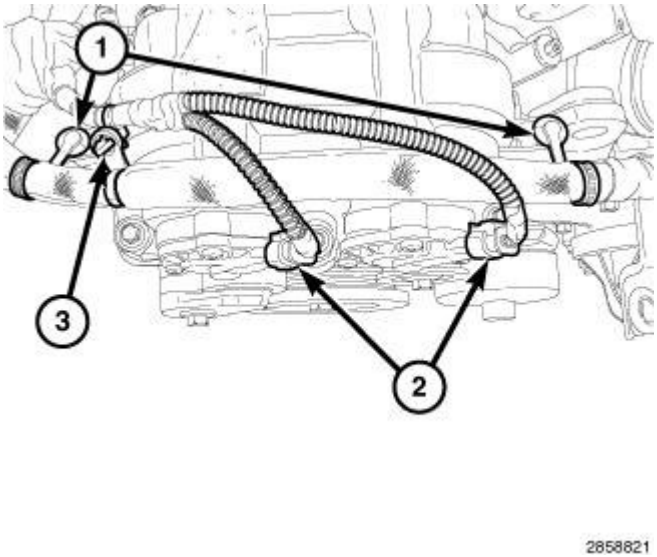

Fig. 322: Variable Valve Timing Solenoid Connectors & Harness Retainers
Courtesy of CHRYSLER GROUP, LLC

12. Connect the electrical connectors (2) to the variable valve timing solenoids on the right cylinder head.
13. Engage two starter wire harness retainers to the right cylinder head cover (1).
14. Engage the starter harness to main harness retainer (3).

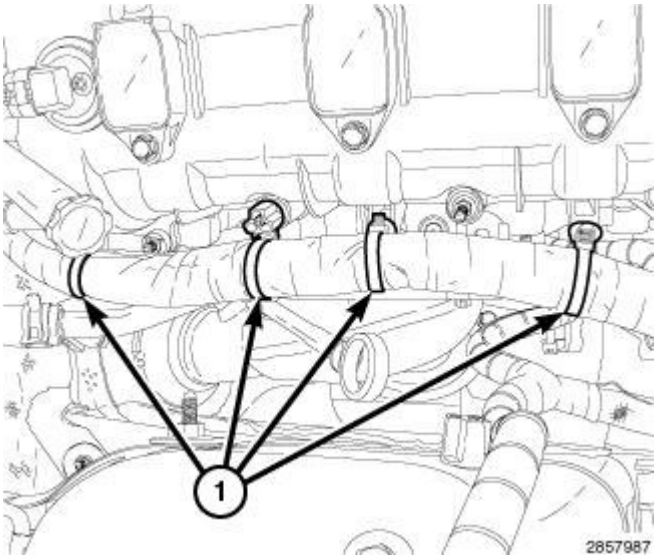

Fig. 323: Main Wire Harness Retainers At Right Cylinder Head Cover
Courtesy of CHRYSLER GROUP, LLC

15. Engage four main wire harness retainers (1) to the right cylinder head cover.

 © 2011 Mitchell Repair Information Company, LLC.

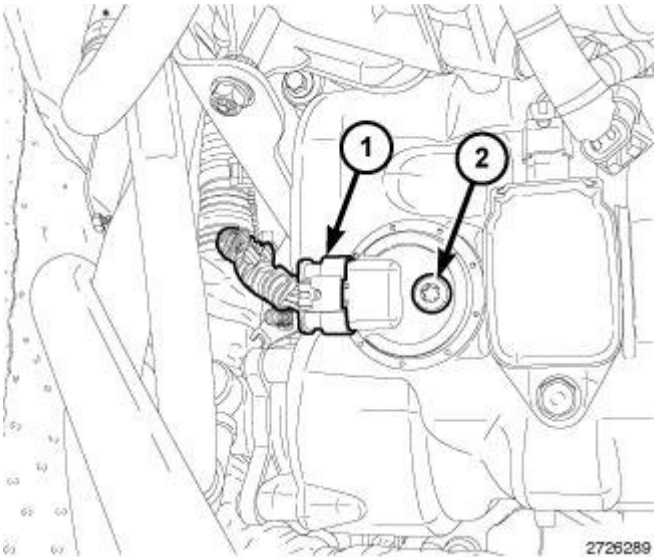

Fig. 324: CMP Sensor & Bolt
Courtesy of CHRYSLER GROUP, LLC

NOTE: If both RH and LH CMP sensors where removed, install them into their original locations.

16. Install the camshaft position sensor. Refer to **SENSOR, CAMSHAFT POSITION, INSTALLATION** .

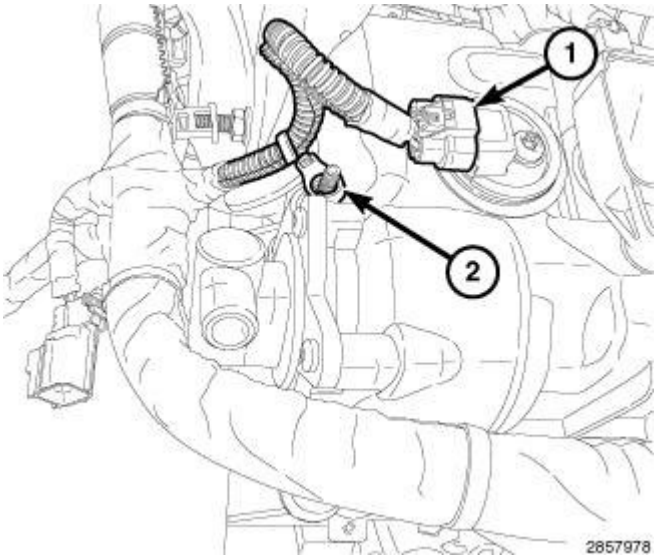

Fig. 325: Main Wire Harness Retainer & Connector
Courtesy of CHRYSLER GROUP, LLC

17. Connect the electrical connector (1) to the right Camshaft Position (CMP) sensor.
18. Engage the main wire harness retainer (2) to the right cylinder head cover mounting stud.

 © 2011 Mitchell Repair Information Company, LLC.

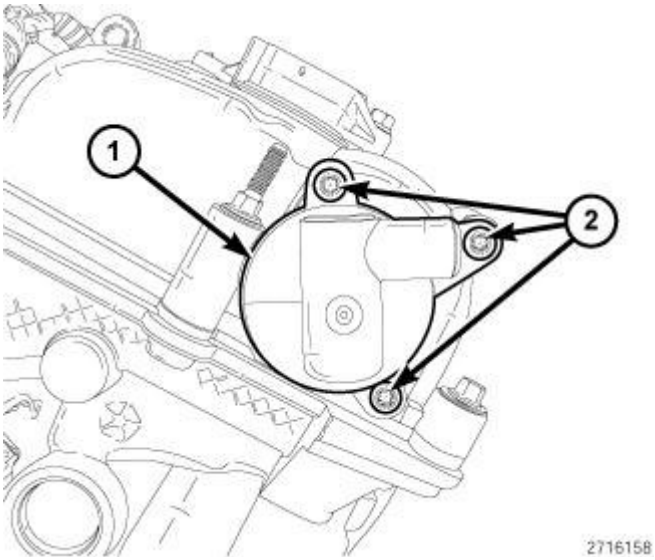

Fig. 326: Three Screws & PCV Valve
Courtesy of CHRYSLER GROUP, LLC

19. Install the PCV valve (1). Refer to **VALVE, POSITIVE CRANKCASE VENTILATION (PCV), 3.6L, REMOVAL** .
20. Raise and support the vehicle. Refer to **HOISTING, STANDARD PROCEDURE** .

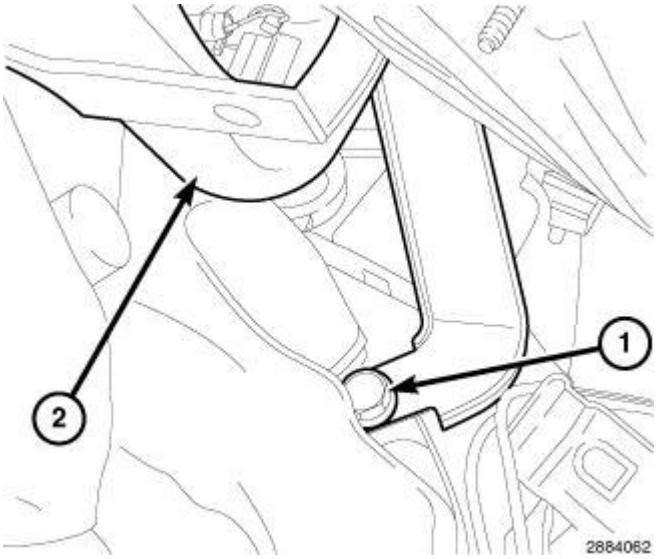

Fig. 327: Upper Transmission-To-Engine Bolt & Transmission Oil Level Indicator Tube
Courtesy of CHRYSLER GROUP, LLC

21. Install the transmission oil level indicator tube (2) with the upper transmission to engine bolt (1) tightened to 55 N.m (41 ft. lbs.).

 © 2011 Mitchell Repair Information Company, LLC.

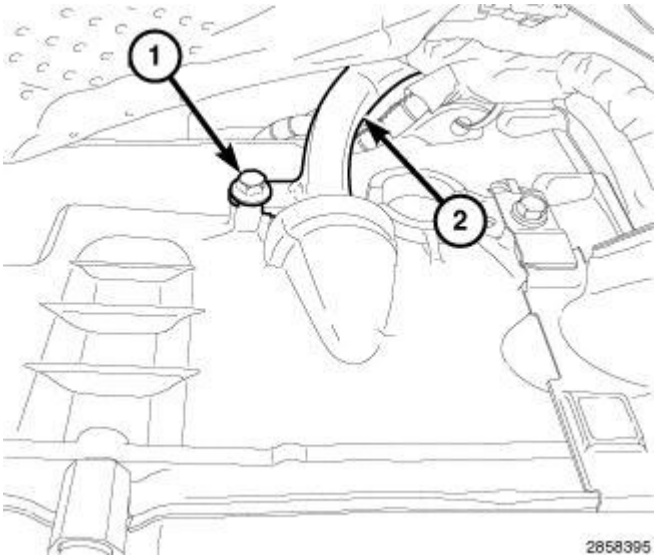

Fig. 328: Transmission Fluid Level Indicator Tube & Bolt
Courtesy of CHRYSLER GROUP, LLC

22. Install the bolt (1) securing the transmission fluid level indicator tube (2) to the transmission housing and tighten to 12 N.m (106 in. lbs.).
23. Lower the vehicle.

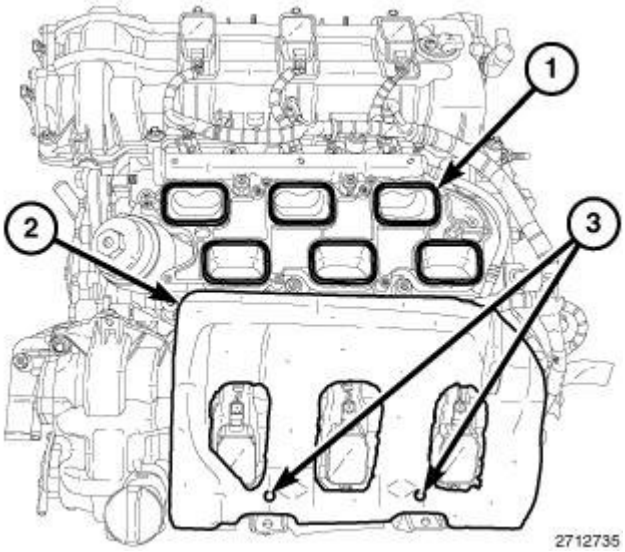

Fig. 329: Intake Ports, Insulator & Alignment Posts
Courtesy of CHRYSLER GROUP, LLC

24. If removed, install the insulator (2) to the two alignment posts (3) on top of the LH cylinder head cover.

 © 2011 Mitchell Repair Information Company, LLC.

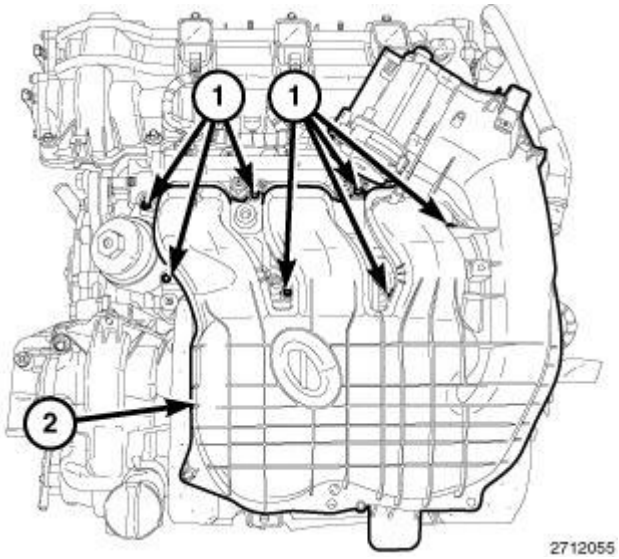

Fig. 330: Upper Intake Manifold & Bolts
Courtesy of CHRYSLER GROUP, LLC

25. Install the upper intake manifold (1), support brackets and air inlet hose. Refer to **MANIFOLD, INTAKE, INSTALLATION**.
26. Connect the negative battery cable and tighten nut to 5 N.m (45 in. lbs.).

NOTE: The Cam/Crank Variation Relearn procedure must be performed using the scan tool anytime there has been a repair/replacement made to a powertrain system, for example: flywheel, valvetrain, camshaft and/or crankshaft sensors or components.

LIFTER(S), HYDRAULIC

DIAGNOSIS AND TESTING

DIAGNOSIS AND TESTING - HYDRAULIC LIFTER(S) NOISE DIAGNOSIS

Proper noise diagnosis is essential in locating the source of an NVH complaint. Locating a lash adjuster (tappet) type noise can sometimes be difficult. As a result, an initial misdiagnosis may occur.

Refer to the following chart for possible causes and correction of a lash adjuster (tappet) type noise.

LASH ADJUSTER (TAPPET) NOISE CHART

POSSIBLE CAUSES	CORRECTION
1. Engine oil level-too high or too low. This may allow aerated oil to enter the adjusters and cause them to be spongy.	1. Check and correct the engine oil level.
2. Insufficient running time after rebuilding a cylinder head.	2. Low speed running of up to 1 hour may be required to fully evacuate trapped air from the valve train system. During this time, turn engine

 © 2011 Mitchell Repair Information Company, LLC.

	off and let set for a few minutes before restarting. Repeat this several times after engine has reached normal operating temperature.
3. Air trapped in the lash adjuster (after 1 hour of run time).	3. See below: (a) Check lash adjusters for sponginess while installed in the cylinder head. Depress the rocker arm over the adjuster. Normal adjusters should feel very firm. Very spongy adjusters can be bottomed out easily. (b) If the lash adjuster(s) are still spongy, replace the lash adjuster(s). Refer to **LIFTER(S), HYDRAULIC, REMOVAL**.
4. Low oil pressure.	4. See below: (a) Check and correct the engine oil level. (b) Check the engine oil pressure. Refer to ENGINE/LUBRICATION **DIAGNOSIS AND TESTING** . (c) Check for excessive main bearing clearance and correct. Refer to ENGINE/ENGINE BLOCK/BEARING(S) **STANDARD PROCEDURE** . (d) Check for a worn oil pump. Refer to ENGINE/LUBRICATION/PUMP **INSPECTION** .
5. Oil passage to the cylinder head(s) plugged with debris.	5. Check cylinder head oil passages for blockage. Clean or replace as necessary.
6. Worn valve guide(s).	6. Measure valve stem-to-guide clearance. Refer to **VALVES, INTAKE AND EXHAUST, INSPECTION**.
7. Air ingested into oil due to broken or cracked oil pump pickup tube.	7. Inspect pickup tube and replace as necessary. Refer to **PICK-UP, OIL PUMP, REMOVAL**.
8. Collapsed lash adjuster due to debris ingestion.	8. Clean debris from engine and replace lash adjuster(s). Refer to **LIFTER(S), HYDRAULIC, REMOVAL**.

REMOVAL

REMOVAL

1. Disconnect and isolate the negative battery cable.
2. Remove the camshaft(s). Refer to **CAMSHAFT, ENGINE, REMOVAL**.

NOTE: If the rocker arms are to be reused, identify their positions so that they can be reassembled into their original locations.

3. Remove the rocker arm(s). Refer to **ROCKER ARM, VALVE, REMOVAL**.

 © 2011 Mitchell Repair Information Company, LLC.

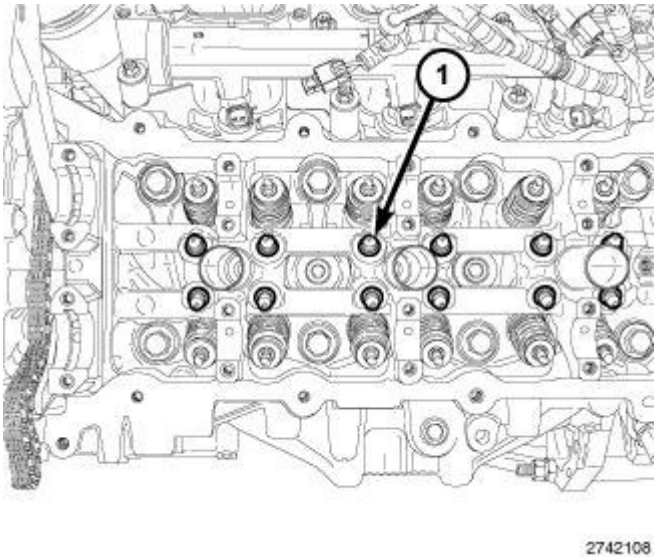

Fig. 331: Hydraulic Lifters
Courtesy of CHRYSLER GROUP, LLC

NOTE: **The LH cylinder head hydraulic lifters are shown in the illustration, the RH cylinder head hydraulic lifters are similar.**

NOTE: **If the hydraulic lifters are to be reused, identify their positions so that they can be reassembled into their original locations.**

4. Remove the hydraulic lifter(s) (1).

INSTALLATION

INSTALLATION

1. Verify that the hydraulic lifters are at least partially full of oil. There should be little or no plunger travel when the hydraulic lifter is depressed.

 © 2011 Mitchell Repair Information Company, LLC.

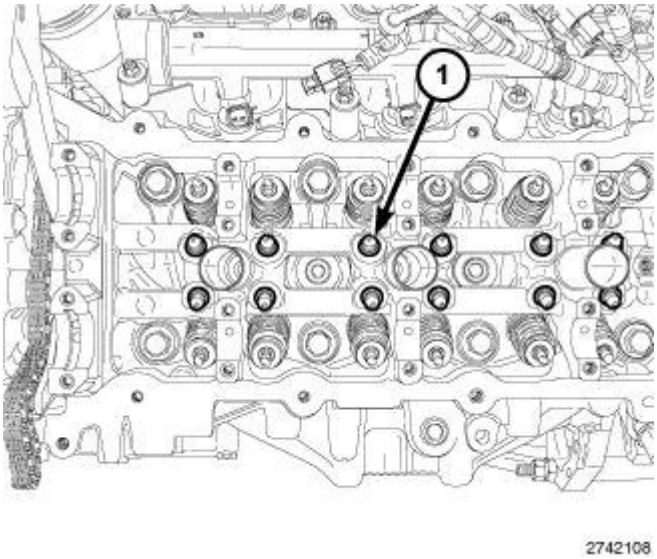

Fig. 332: Hydraulic Lifters
Courtesy of CHRYSLER GROUP, LLC

NOTE: **The LH cylinder head hydraulic lifters are shown in the illustration, the RH cylinder head hydraulic lifters are similar. If the hydraulic lifters are being reused, reassemble them into their original locations.**

2. Install the hydraulic lifter(s) (1).

NOTE: **If the rocker arms are being reused, reassemble them into their original locations.**

3. Install the rocker arm(s). Refer to **ROCKER ARM, VALVE, INSTALLATION**.
4. Install the camshaft(s), phasers, cylinder head cover(s) and upper intake manifold. Refer to **CAMSHAFT, ENGINE, INSTALLATION**.
5. Connect the negative battery cable and tighten nut to 5 N.m (45 in. lbs.).

ROCKER ARM, VALVE

DESCRIPTION

DESCRIPTION

 © 2011 Mitchell Repair Information Company, LLC.

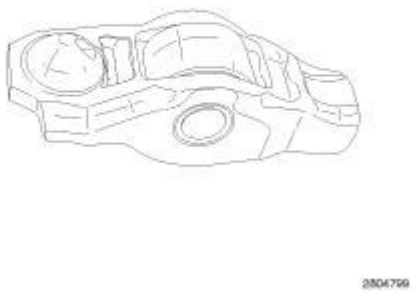

Fig. 333: Rocker Arm
Courtesy of CHRYSLER GROUP, LLC

The rocker arms are steel stampings with an integral roller bearing. The rocker arms incorporate a 0.5 mm oil hole in the lash adjuster socket for roller and camshaft lubrication.

REMOVAL

REMOVAL

1. Disconnect and isolate the negative battery cable.
2. Remove the camshaft(s). Refer to **CAMSHAFT, ENGINE, REMOVAL**.

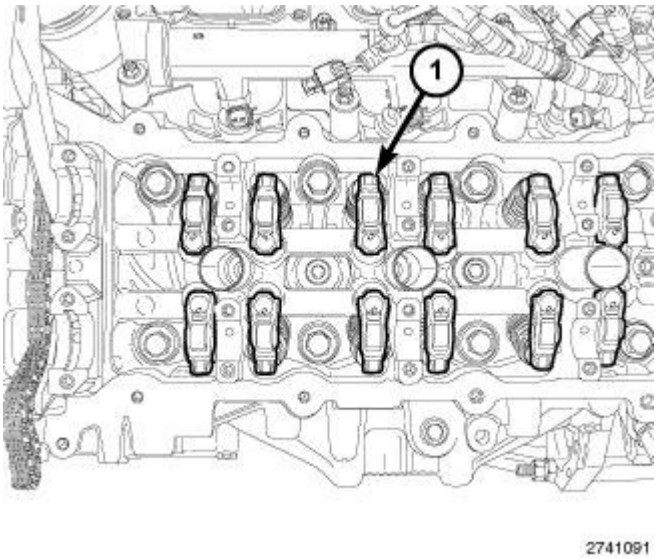

Fig. 334: Locating Rocker Arms
Courtesy of CHRYSLER GROUP, LLC

NOTE: The LH cylinder head rocker arms are shown in the illustration, the RH cylinder head rocker arms are similar.

NOTE: If the rocker arms are to be reused, identify their positions so that they can

 © 2011 Mitchell Repair Information Company, LLC.

be reassembled into their original locations.

3. Remove the rocker arm(s) (1).

INSPECTION

INSPECTION

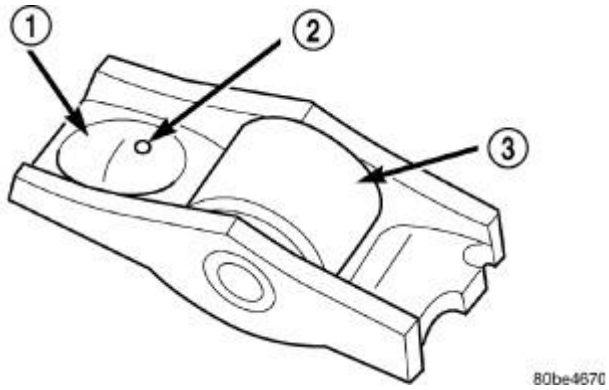

Fig. 335: Rocker Arm
Courtesy of CHRYSLER GROUP, LLC

Inspect the cam follower assembly for wear or damage. Replace as necessary.

INSTALLATION

INSTALLATION

CAUTION: Proper inspection of the rocker arms is required to ensure proper installation. Inspection from the top and also side view is critical to verify the proper seated position of each and every rocker arm. Failure to install the rocker arms correctly may cause severe engine damage.

1. Lubricate the rocker arms with clean engine oil before installation.

 © 2011 Mitchell Repair Information Company, LLC.

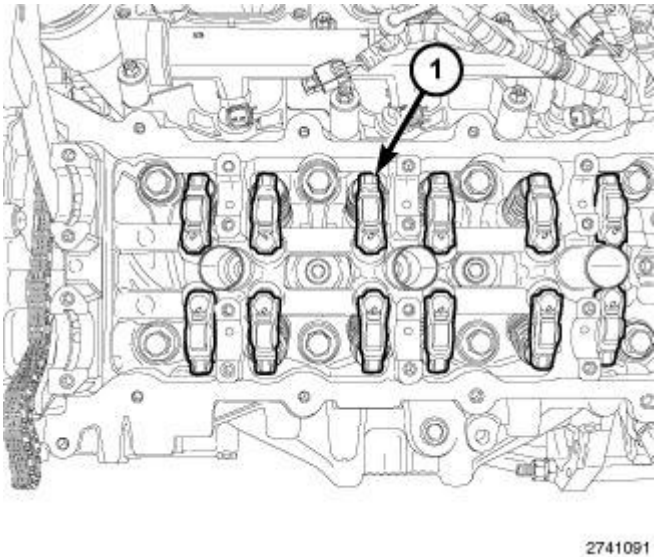

Fig. 336: Locating Rocker Arms
Courtesy of CHRYSLER GROUP, LLC

NOTE: **The LH cylinder head rocker arms are shown in the illustration, the RH cylinder head rocker arms are similar. If the rocker arms are being reused, reassemble them into their original locations.**

NOTE: **When placing the rocker arms. The valve stem should fit securely into the rocker arm guides.**

2. Position the rocker arm(s) (1) onto the lifter(s) and valve stem(s).
3. Position the camshaft(s) onto the mounts and install the camshaft caps. Hand tighten the cap retaining bolts to 2 N.m (18 in. lbs.).

 © 2011 Mitchell Repair Information Company, LLC.

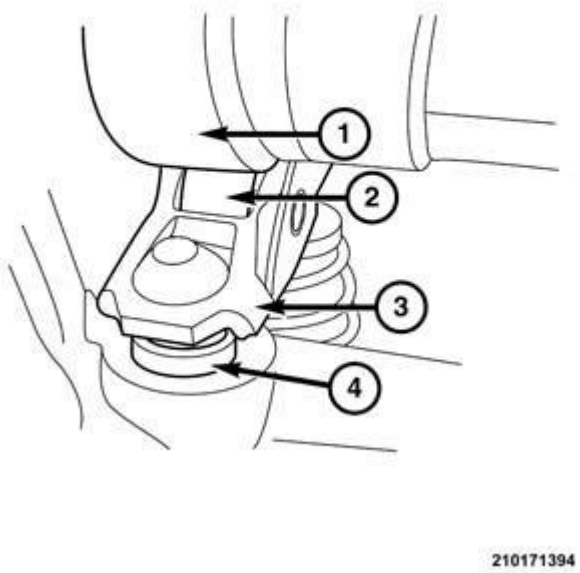

Fig. 337: Rocker Arm & Lifter
Courtesy of CHRYSLER GROUP, LLC

NOTE: **If any of the rocker arms are not installed properly. Loosen the camshaft caps and reposition the rocker arms.**

4. Verify that the rocker arm (3) is positioned over the lifter (4).
5. Verify that the rocker arm roller (2) is seated to the camshaft lobe (1).

 © 2011 Mitchell Repair Information Company, LLC.

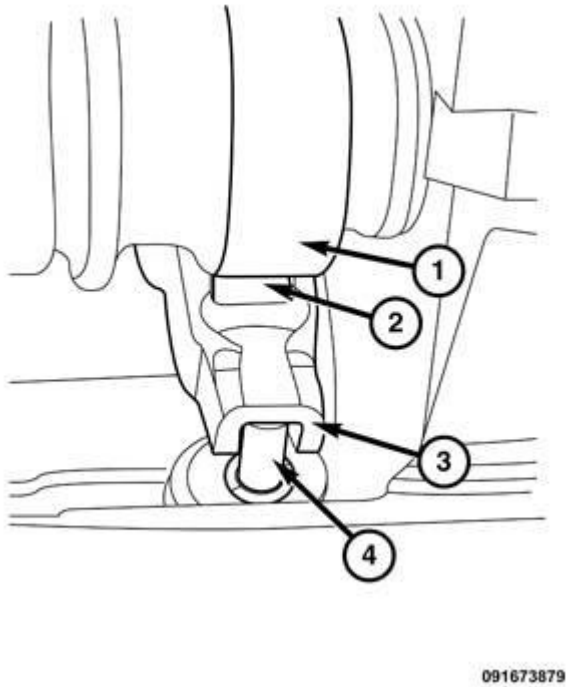

Fig. 338: Camshaft Lobe, Rocker Arm Roller, Rocker Arm Guide & Valve Stem
Courtesy of CHRYSLER GROUP, LLC

6. Use a mirror to verify the valve stem (4) is centered between the rocker arm guides (3).
7. Verify the camshaft lobe (1) is centered over the rocker arm roller (2).
8. Tighten the camshaft caps. Refer to **CAMSHAFT, ENGINE, INSTALLATION**.

SEAL(S), VALVE GUIDE

DESCRIPTION

DESCRIPTION

 © 2011 Mitchell Repair Information Company, LLC.

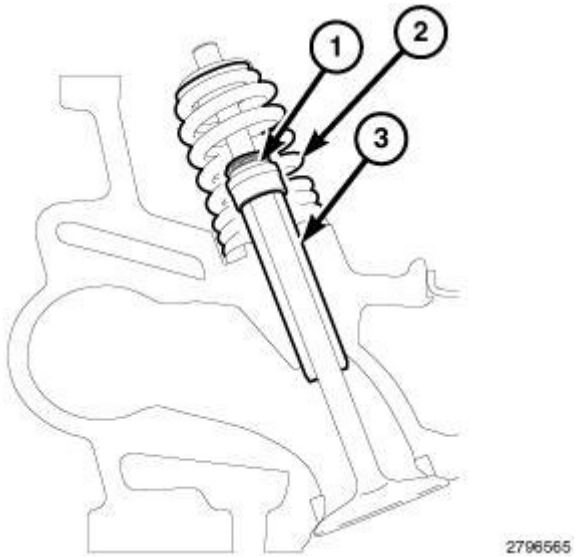

Fig. 339: Valve Stem Oil Seal, Valve Spring & Valve Guide
Courtesy of CHRYSLER GROUP, LLC

The valve stem oil seals (1) are made of elastomer over-molded steel in a non-integrated type guide mounted configuration. The seal is not held in place by the valve spring (2). The valve stem seals are not reusable if removed from the valve guides (3), they must be replaced. Always coat the valve seals with clean engine oil before installing the valves.

REMOVAL

REMOVAL

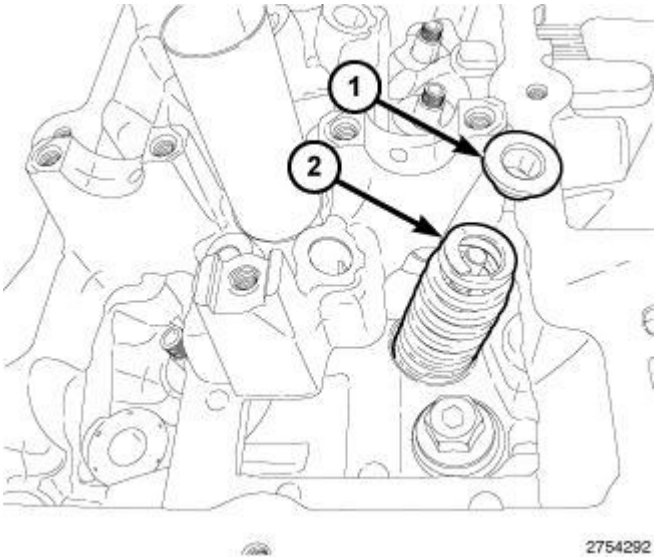

Fig. 340: Valve Spring & Valve Spring Retainer
Courtesy of CHRYSLER GROUP, LLC

NOTE: If the springs are to be reused, identify their positions so that they can be

 © 2011 Mitchell Repair Information Company, LLC.

reassembled into their original locations. Number 5 cylinder exhaust valve spring shown in the illustration, all other valve springs similar.

1. Remove the valve spring(s) (2). Refer to **SPRING(S), VALVE, REMOVAL**.

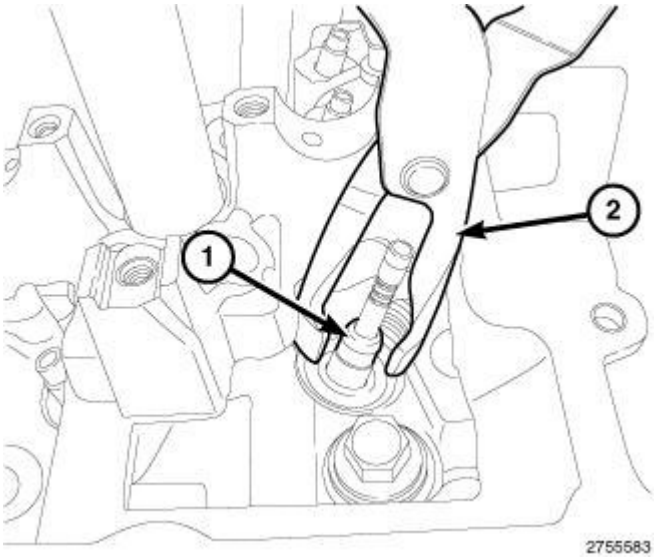

Fig. 341: Valve Guide Seal & Valve Seal Tool
Courtesy of CHRYSLER GROUP, LLC

NOTE: Number 5 cylinder exhaust valve guide seal shown in the illustration, all other valve guide seals similar.

2. Remove the valve guide seal (1) using a valve seal tool (2). Discard the removed seal.

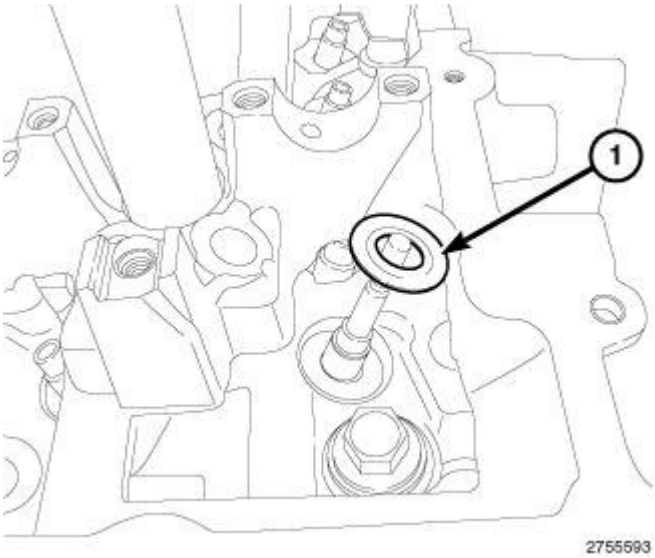

Fig. 342: Valve Spring Seat
Courtesy of CHRYSLER GROUP, LLC

 © 2011 Mitchell Repair Information Company, LLC.

NOTE: **Number 5 cylinder exhaust valve spring seat shown in the illustration, all other valve spring seats similar.**

3. If required, remove the valve spring seat (1).
4. If required, remove the valve(s). Refer to **VALVES, INTAKE AND EXHAUST, REMOVAL**.

INSTALLATION

INSTALLATION

1. If removed, install the valve(s). Refer to **VALVES, INTAKE AND EXHAUST, INSTALLATION**.

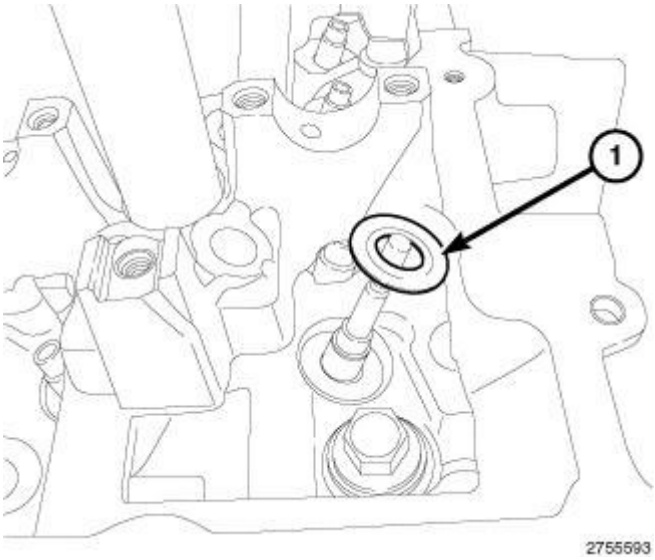

Fig. 343: Valve Spring Seat
Courtesy of CHRYSLER GROUP, LLC

NOTE: **Reassemble the valves into their original locations. If the valves or valve seats have been refinished, verify that the valve stem tip height is within specification. Refer to ENGINE SPECIFICATIONS . Number 5 cylinder exhaust valve shown in the illustration, all other valves similar.**

2. If removed, install the spring seat (1) over the valve guide.

 © 2011 Mitchell Repair Information Company, LLC.

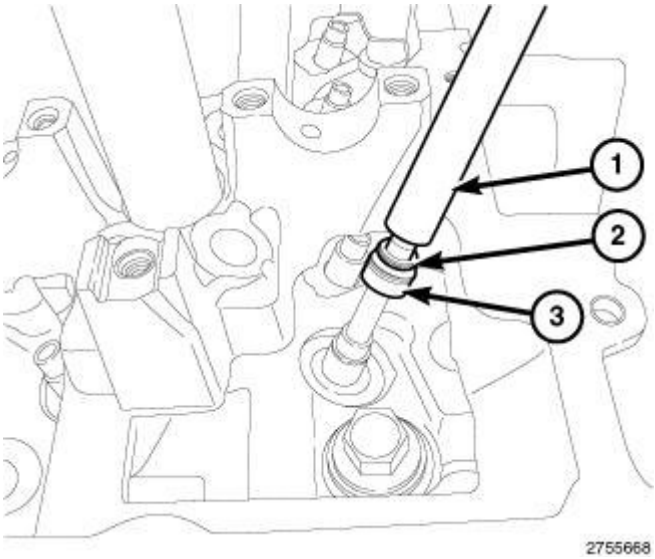

Fig. 344: Installing Valve Guide Seal
Courtesy of CHRYSLER GROUP, LLC

3. Apply engine oil to the lip of the valve guide seal (3). Install the valve guide seal (3) over the valve stem. Using an appropriate driver (1), push the seal firmly and squarely over the valve guide. **Do Not Force** the seal against the top of guide.

NOTE: **Ensure that the garter spring (2) is intact around the top of the valve guide seal (3). Number 5 cylinder exhaust valve guide seal shown in the illustration, all other valves similar.**

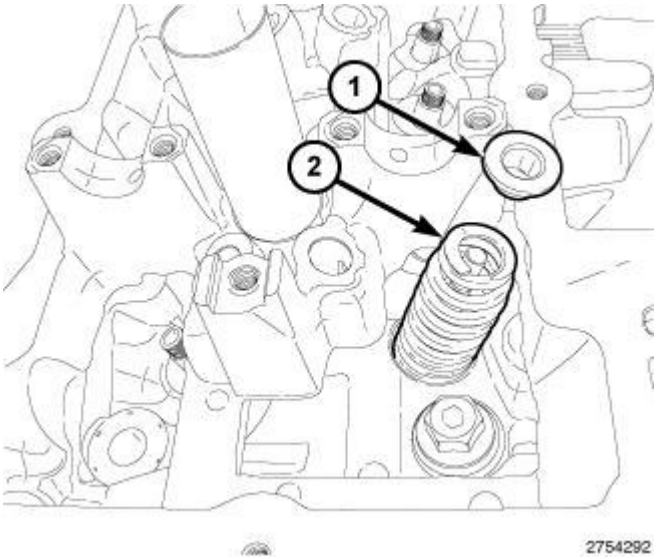

Fig. 345: Valve Spring & Valve Spring Retainer
Courtesy of CHRYSLER GROUP, LLC

NOTE: **If the valve springs are being reused, reassemble them into their original locations. Number 5 cylinder exhaust valve spring shown in the**

illustration, all other valves similar.

4. Install the valve spring(s) (2). Refer to **SPRING(S), VALVE, INSTALLATION**.

SPRING(S), VALVE

DESCRIPTION

DESCRIPTION

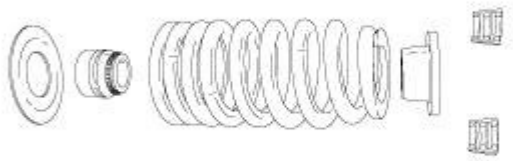

Fig. 346: Valve Spring Components
Courtesy of CHRYSLER GROUP, LLC

The valve springs are a beehive design and made from high strength chrome silicon steel. The springs are common for intake and exhaust applications. Valve guide seals are rubber overmolded on a steel support cylinder with a garter spring at the seal lip. The seals are not integrated with the valve spring seat. The valve spring seat is a flat steel washer. The steel valve spring retainers are designed for use with beehive springs and the valve spring retainer locks are a three bead Butt type design.

REMOVAL

IN VEHICLE

 © 2011 Mitchell Repair Information Company, LLC.

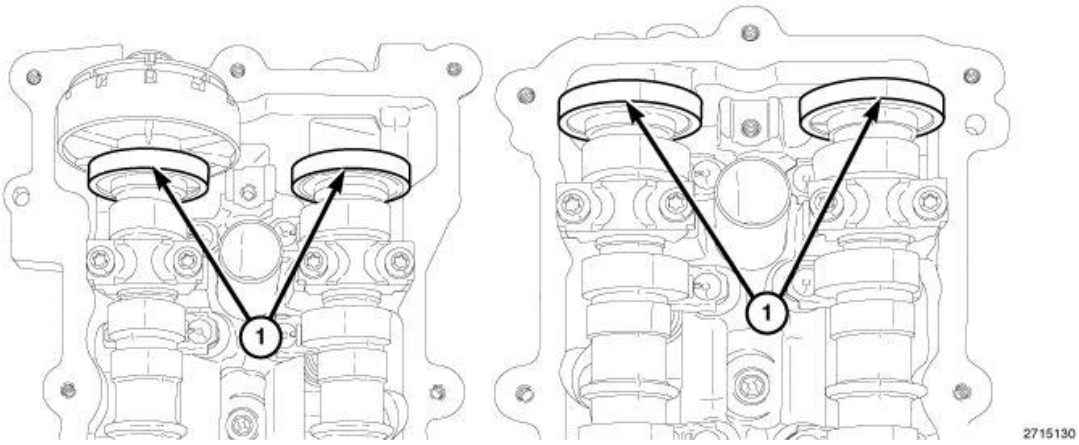

Fig. 347: Magnetic Timing Wheels
Courtesy of CHRYSLER GROUP, LLC

CAUTION: The magnetic timing wheels (1) must not come in contact with magnets (pickup tools, trays, etc.) or any other strong magnetic field. This will destroy the timing wheels ability to correctly relay camshaft position to the camshaft position sensor.

1. Disconnect and isolate the negative battery cable.
2. Remove the cowl extension silencer. Refer to BODY/EXTERIOR/SILENCER, COWL EXTENSION **REMOVAL** .

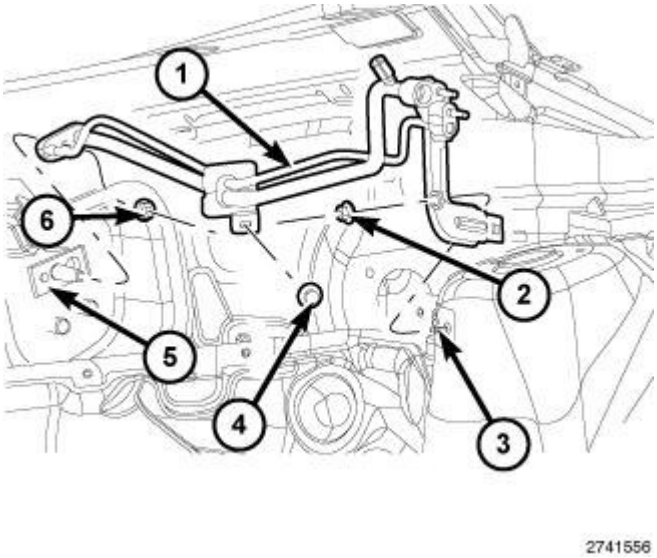

Fig. 348: A/C Suction & Liquid Line Assembly
Courtesy of CHRYSLER GROUP, LLC

3. If removing the LH exhaust valve springs, recover the refrigerant from the refrigerant system and remove the A/C suction and liquid line assembly (1). Refer to **LINE, A/C SUCTION, REMOVAL** .

 © 2011 Mitchell Repair Information Company, LLC.

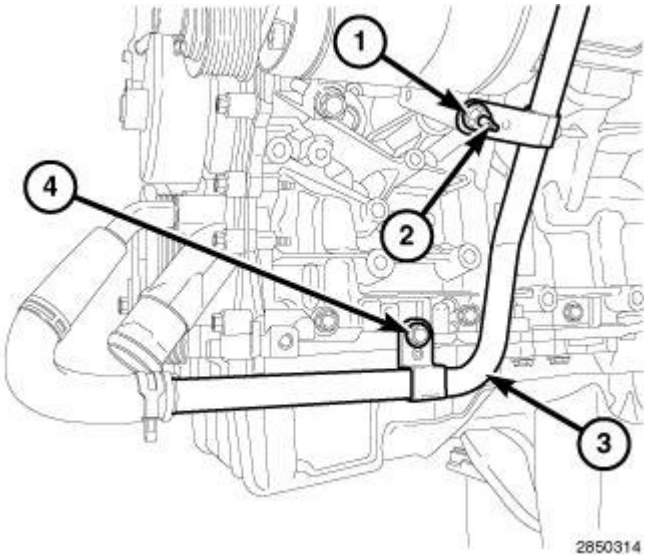

Fig. 349: Heater Core Return Tube, Nut & Bolt
Courtesy of CHRYSLER GROUP, LLC

NOTE: Power steering pump not shown in the illustration.

4. If removing the LH exhaust valve springs, remove the nut (1) and bolt (4) from the support brackets of the heater core return tube (3) and reposition the tube.

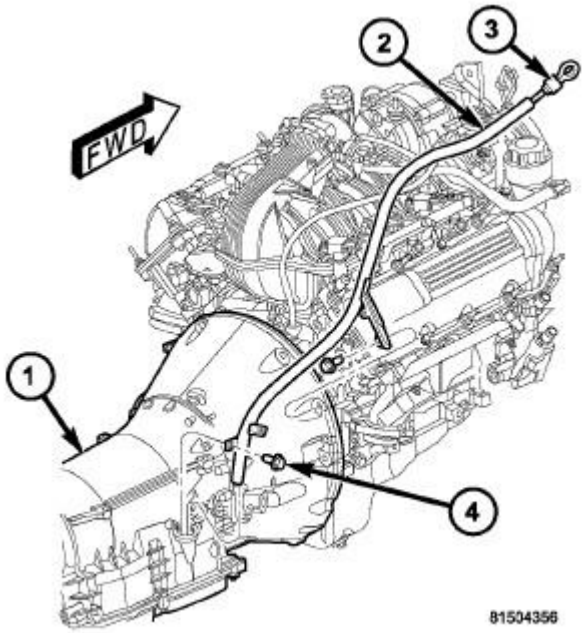

Fig. 350: Transmission Fluid Level Indicator Tube Assembly
Courtesy of CHRYSLER GROUP, LLC

5. If removing the RH valve springs, remove the transmission fluid level indicator tube (2).

 © 2011 Mitchell Repair Information Company, LLC.

6. Remove both cylinder head covers. Refer to **COVER(S), CYLINDER HEAD, REMOVAL**.

NOTE: **Only remove the camshafts from one head at a time. The opposite head must remain assembled in order to lock the crankshaft against rotation.**

7. Remove the camshaft(s). Refer to **CAMSHAFT, ENGINE, REMOVAL**.

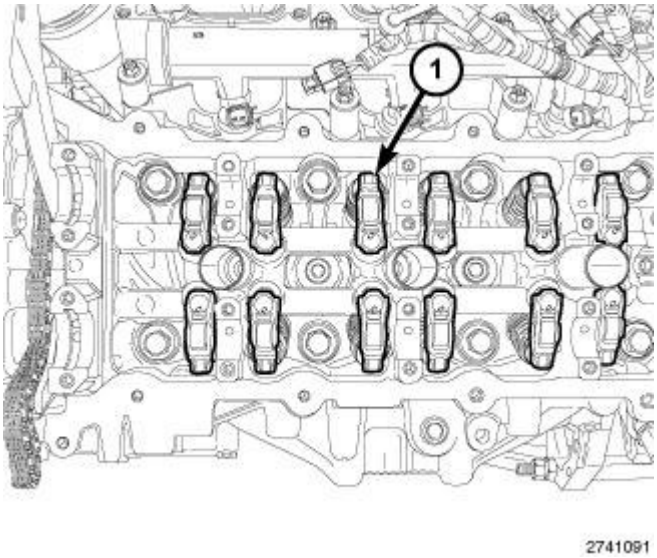

Fig. 351: Locating Rocker Arms
Courtesy of CHRYSLER GROUP, LLC

NOTE: **The LH cylinder head rocker arms are shown in the illustration, the RH cylinder head rocker arms are similar.**

NOTE: **If the rocker arms are to be reused, identify their positions so that they can be reassembled into their original locations.**

8. Remove the rocker arm(s) (1). Refer to **ROCKER ARM, VALVE, REMOVAL**.

 © 2011 Mitchell Repair Information Company, LLC.

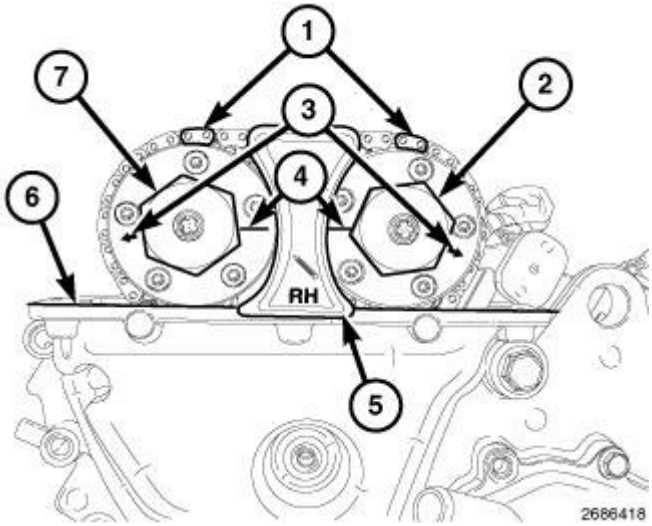

Fig. 352: Phaser Timing Marks, Oil Control Valves & RH Camshaft Phaser Lock
Courtesy of CHRYSLER GROUP, LLC

NOTE: RH camshaft phaser lock shown in the illustration, LH camshaft phaser lock similar.

CAUTION: Air pressure applied to the cylinder holds the valves in place. This air pressure also has a tendency to force the piston down and rotate the crankshaft. Do not allow the crankshaft to rotate. Crankshaft rotation may damage the timing chain or front timing cover and affect camshaft timing.

9. If removing the LH camshafts, install the RH Camshaft Phaser Lock (special tool #10202, Locks, Camshaft/Phaser) (5) to lock the crankshaft against rotation. If removing the RH camshafts, install the LH Camshaft Phaser Lock (special tool #10202, Locks, Camshaft/Phaser) to lock the crankshaft against rotation.
10. Remove the spark plug. Refer to **SPARK PLUG, REMOVAL** .

 © 2011 Mitchell Repair Information Company, LLC.

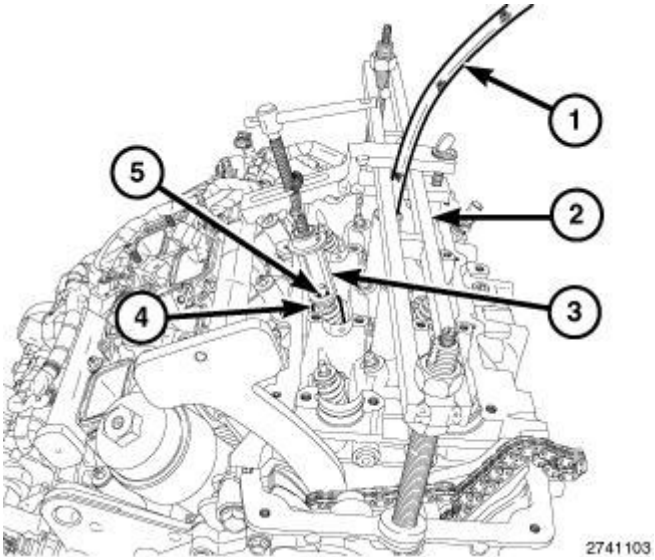

Fig. 353: Shop Air Supply & Valve Spring Compressor
Courtesy of CHRYSLER GROUP, LLC

NOTE: Number 4 cylinder intake valve spring compression shown in the illustration, all other valves similar.

11. Install Valve Spring Compressor (special tool #MD998772A, Compressor, Valve Spring) (2) onto the cylinder head.
12. Install a spark plug adapter attached to a regulated shop air supply (1). Pressurize the cylinder being serviced to 620.5 - 689 kPa (90 - 100 psi) to hold the valves in place.

CAUTION: Air pressure must be maintained as long as the valve springs are removed to prevent the valves from dropping into the cylinders.

13. Using Valve Spring Compressor Adapter (special tool #10224, Adapter, Valve Spring) (3), compress valve spring (4) and remove valve retaining locks (5).

 © 2011 Mitchell Repair Information Company, LLC.

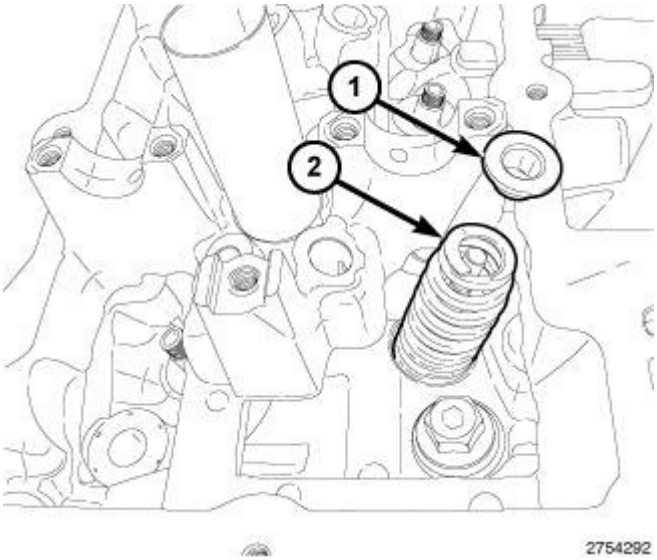

Fig. 354: Valve Spring & Valve Spring Retainer
Courtesy of CHRYSLER GROUP, LLC

NOTE: **If the springs are to be reused, identify their positions so that they can be reassembled into their original locations. Number 5 cylinder exhaust valve spring shown in the illustration, all other valve springs similar.**

14. Release the valve spring compression and remove the valve spring retainer (1) and valve spring (2).
15. If required, remove the valve guide seal and spring seat. Refer to **SEAL(S), VALVE GUIDE, REMOVAL**.

OFF VEHICLE

1. Remove the cylinder head(s). Refer to **CYLINDER HEAD, REMOVAL**.

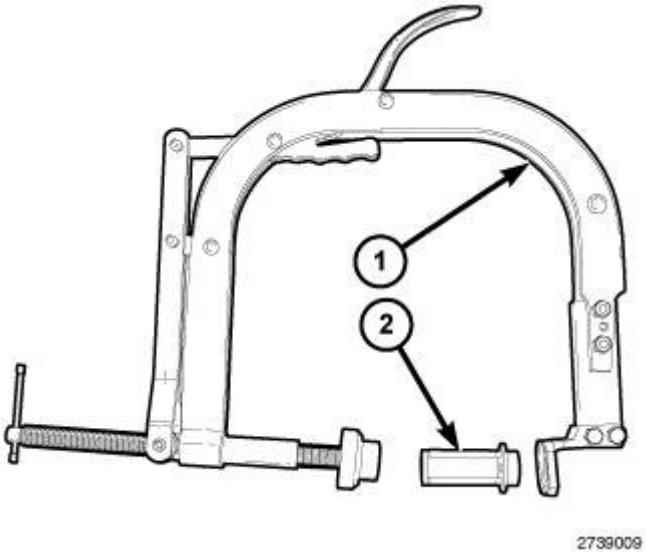

Fig. 355: Valve Spring Compressor Components

 © 2011 Mitchell Repair Information Company, LLC.

Courtesy of CHRYSLER GROUP, LLC

2. Position the Valve Spring Compressor Adapter (special tool #10224, Adapter, Valve Spring) (2) in the Valve Spring Compressor (special tool #C-3422-D, Compressor, Valve Spring) (1).

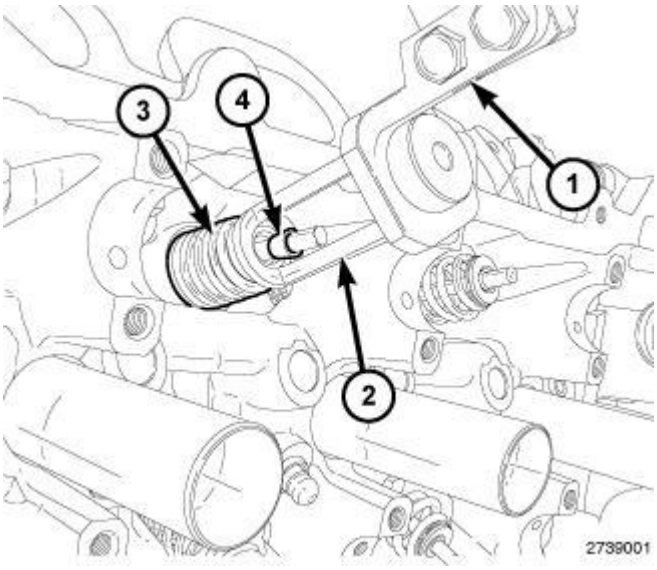

Fig. 356: Compressing Valve Spring & Locating Valve Retaining Locks
Courtesy of CHRYSLER GROUP, LLC

NOTE: Number 3 cylinder intake valve spring compression shown in the illustration, all other valves similar.

3. Compress the valve spring (3) and remove the valve retaining locks (4).

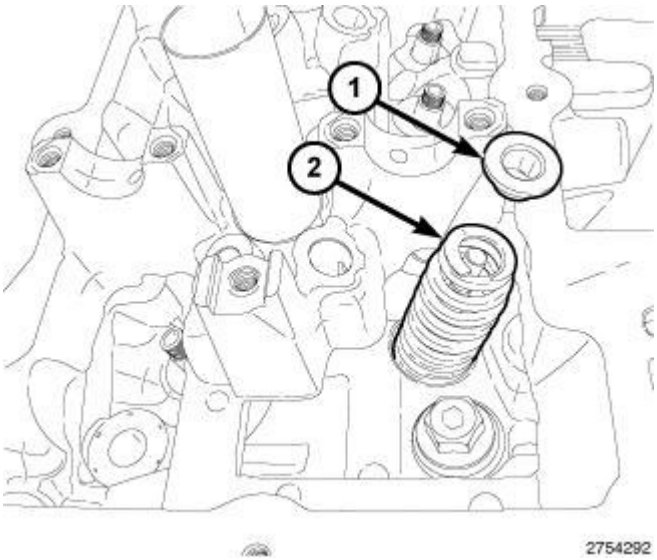

Fig. 357: Valve Spring & Valve Spring Retainer
Courtesy of CHRYSLER GROUP, LLC

 © 2011 Mitchell Repair Information Company, LLC.

NOTE: **If the springs are to be reused, identify their positions so that they can be reassembled into their original locations. Number 5 cylinder exhaust valve spring shown in the illustration, all other valves similar.**

4. Release the valve spring compression and remove the valve spring retainer (1) and valve spring (2).
5. If required, remove the valve(s). Refer to **VALVES, INTAKE AND EXHAUST, REMOVAL**.
6. If required, remove the valve guide seal and spring seat. Refer to **SEAL(S), VALVE GUIDE, REMOVAL**.

INSPECTION

INSPECTION

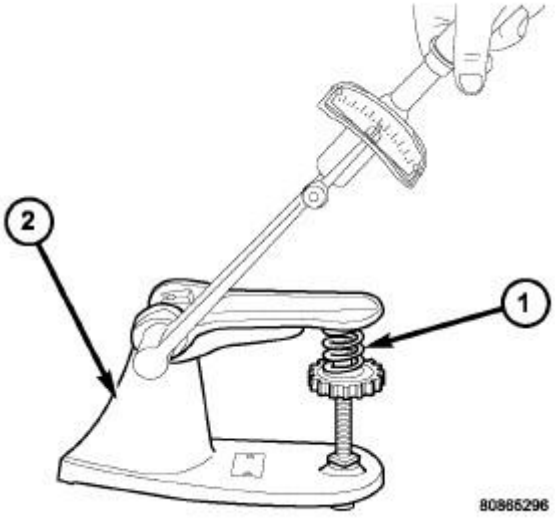

Fig. 358: Testing Valve Spring
Courtesy of CHRYSLER GROUP, LLC

When valves have been removed for inspection, reconditioning or replacement, valve springs should be checked against specifications for free-length, spring force and spring installed height. Refer to ENGINE **SPECIFICATIONS** .

Spring force can be measured with a test fixture (2). Follow the tool manufactures instructions. Replace any springs that do not meet specifications.

 © 2011 Mitchell Repair Information Company, LLC.

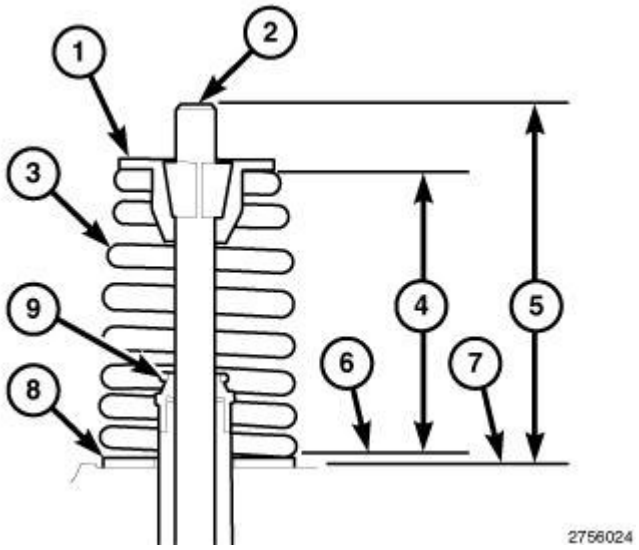

Fig. 359: Checking Valve Spring Installed Height
Courtesy of CHRYSLER GROUP, LLC

Installed height of the valve spring must be checked with the valve assembled into the cylinder head. Refer to **SPRING(S), VALVE, INSTALLATION**.

If the valves or valve seats have been refinished and the installed valve spring height (4) is greater than 40.0 mm (1.575 in.), install an additional spring seat (8) in the head counterbore under the original valve spring seat (8) to bring the spring height back within specification. Make sure the measurement is taken from the top of spring seat (6) to the bottom surface of spring retainer (1).

INSTALLATION

IN VEHICLE

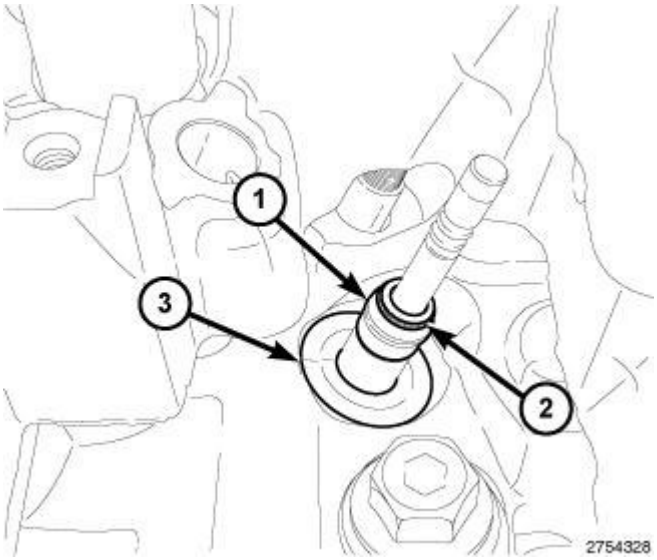

Fig. 360: Spring Seat, Valve Guide Seal & Garter Spring
Courtesy of CHRYSLER GROUP, LLC

 © 2011 Mitchell Repair Information Company, LLC.

1. If removed, install the spring seat (3) and valve guide seal (1) over the valve guide. Refer to **SEAL(S), VALVE GUIDE, INSTALLATION**.

NOTE: **Ensure that the garter spring (2) is intact around the top of the valve guide seal (1). Number 5 cylinder exhaust valve guide seal shown in the illustration, all other valves similar.**

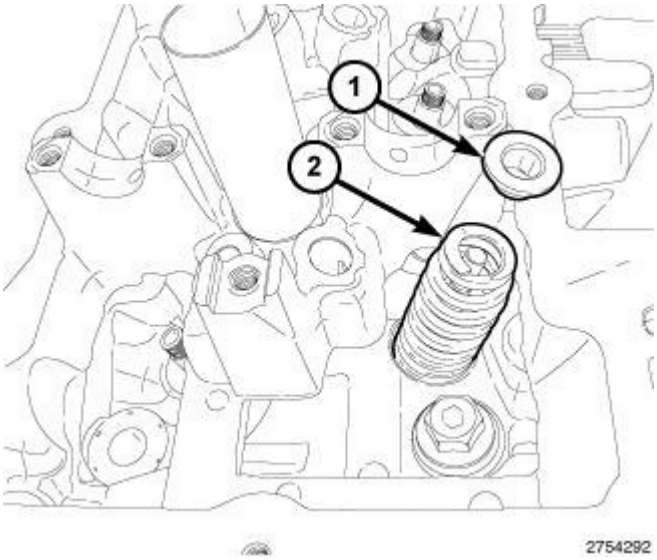

Fig. 361: Valve Spring & Valve Spring Retainer
Courtesy of CHRYSLER GROUP, LLC

NOTE: **If the valve springs are being reused, reassemble them into their original locations. Number 5 cylinder exhaust valve spring shown in the illustration, all other valves similar.**

2. Install the valve spring (2) and valve spring retainer (1).

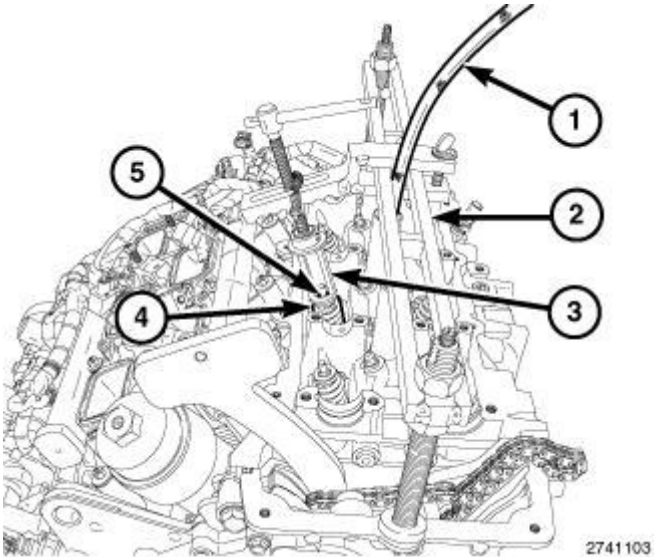

 © 2011 Mitchell Repair Information Company, LLC.

Fig. 362: Shop Air Supply & Valve Spring Compressor
Courtesy of CHRYSLER GROUP, LLC

NOTE: Number 4 cylinder intake valve spring compression shown in the illustration, all other valves similar.

3. Using Valve Spring Compressor Adapter (special tool #10224, Adapter, Valve Spring) (3) with Valve Spring Compressor (special tool #MD998772A, Compressor, Valve Spring) (2), compress the valve spring (4) **only enough** to install the valve retaining locks (5).
4. Relieve the air pressure and remove the spark plug adapter.
5. Install the spark plug and tighten to 17.5 N.m (13 ft. lbs.). Refer to **SPARK PLUG, INSTALLATION** .

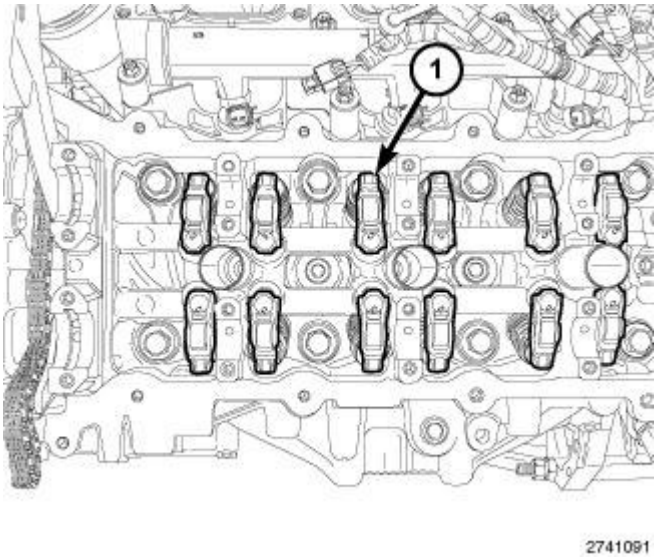

Fig. 363: Locating Rocker Arms
Courtesy of CHRYSLER GROUP, LLC

NOTE: The LH cylinder head rocker arms are shown in the illustration, the RH cylinder head rocker arms are similar. If the rocker arms are being reused, reassemble them into their original locations.

6. Install the rocker arm(s) (1). Refer to **ROCKER ARM, VALVE, INSTALLATION**.
7. Install the camshaft(s), phasers, cylinder head cover(s) and upper intake manifold. Refer to **CAMSHAFT, ENGINE, INSTALLATION**.

 © 2011 Mitchell Repair Information Company, LLC.

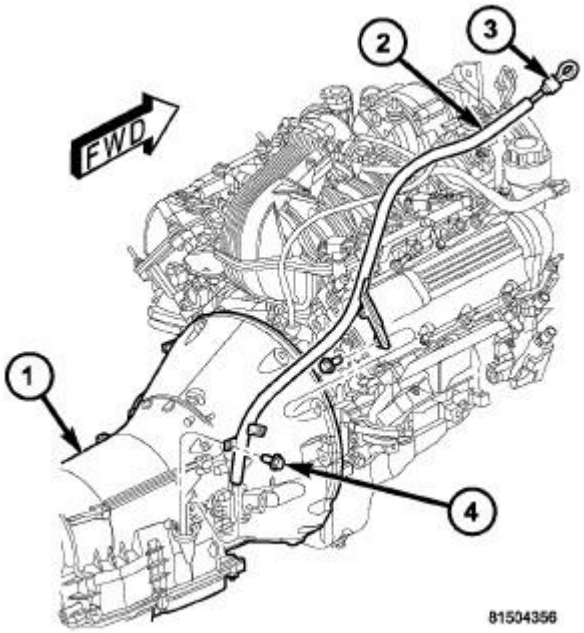

Fig. 364: Transmission Fluid Level Indicator Tube Assembly
Courtesy of CHRYSLER GROUP, LLC

8. If removed, install the transmission fluid level indicator tube (2).

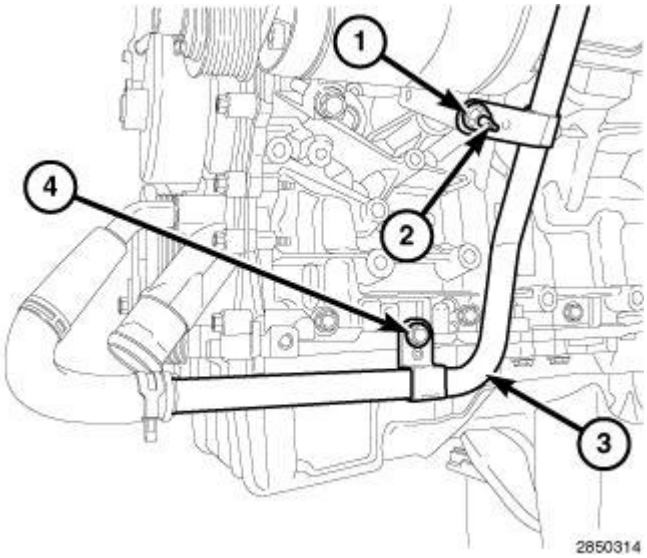

Fig. 365: Heater Core Return Tube, Nut & Bolt
Courtesy of CHRYSLER GROUP, LLC

NOTE: Power steering pump not shown in the illustration.

9. If removed, install the nut (1) and bolt (4) to the support brackets of the heater core return tube (3). Tighten the fasteners to 12 N.m (106 in. lbs.).

 © 2011 Mitchell Repair Information Company, LLC.

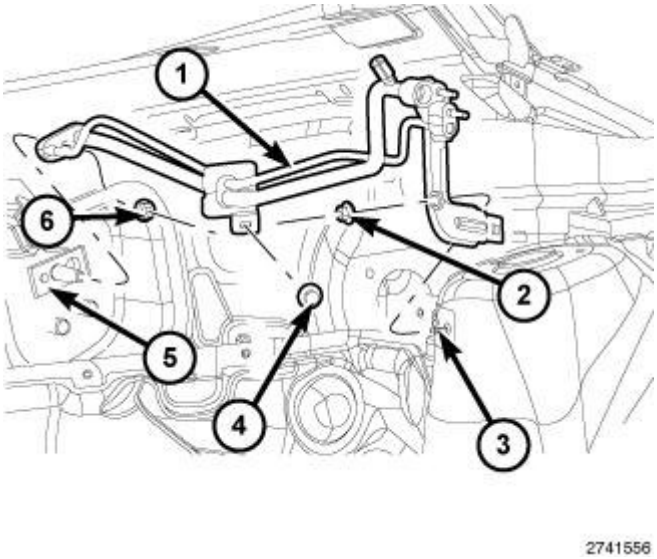

Fig. 366: A/C Suction & Liquid Line Assembly
Courtesy of CHRYSLER GROUP, LLC

10. If removed, install the A/C suction and liquid line assembly (1). Refer to **LINE, A/C SUCTION, INSTALLATION** .
11. Install the cowl extension silencer. Refer to BODY/EXTERIOR/SILENCER, COWL EXTENSION **INSTALLATION** .
12. Connect the negative battery cable and tighten nut to 5 N.m (45 in. lbs.).

OFF VEHICLE

1. If removed, install the valve(s). Refer to **VALVES, INTAKE AND EXHAUST, INSTALLATION**.

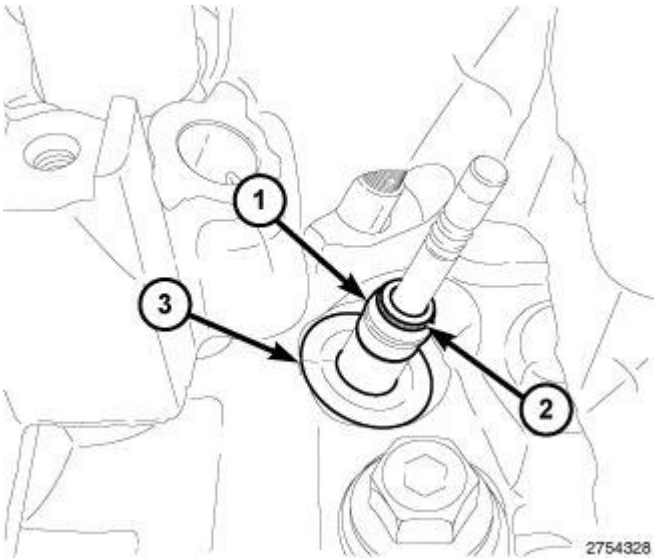

Fig. 367: Spring Seat, Valve Guide Seal & Garter Spring
Courtesy of CHRYSLER GROUP, LLC

 © 2011 Mitchell Repair Information Company, LLC.

NOTE: **Reassemble the valves into their original locations. If the valves or valve seats have been refinished, verify that the valve stem tip height is within specification. Refer to ENGINE SPECIFICATIONS . Number 5 cylinder exhaust valve shown in the illustration, all other valves similar.**

2. If removed, install the spring seat (3) and valve guide seal (1) over the valve guide. Refer to **SEAL(S), VALVE GUIDE, INSTALLATION**

NOTE: **Ensure that the garter spring (2) is intact around the top of the valve guide seal (1). Number 5 cylinder exhaust valve guide seal shown in the illustration, all other valves similar.**

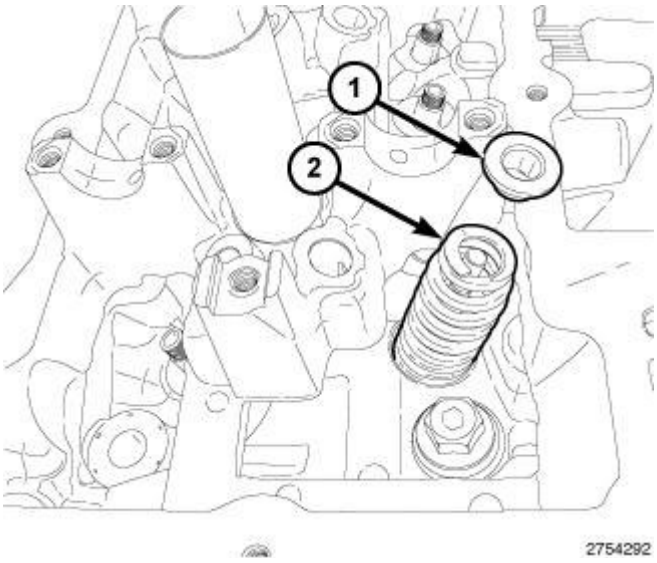

Fig. 368: Valve Spring & Valve Spring Retainer
Courtesy of CHRYSLER GROUP, LLC

NOTE: **If the valve springs are being reused, reassemble them into their original locations. Number 5 cylinder exhaust valve spring shown in the illustration, all other valves similar.**

3. Install the valve spring (2) and valve spring retainer (1).

 © 2011 Mitchell Repair Information Company, LLC.

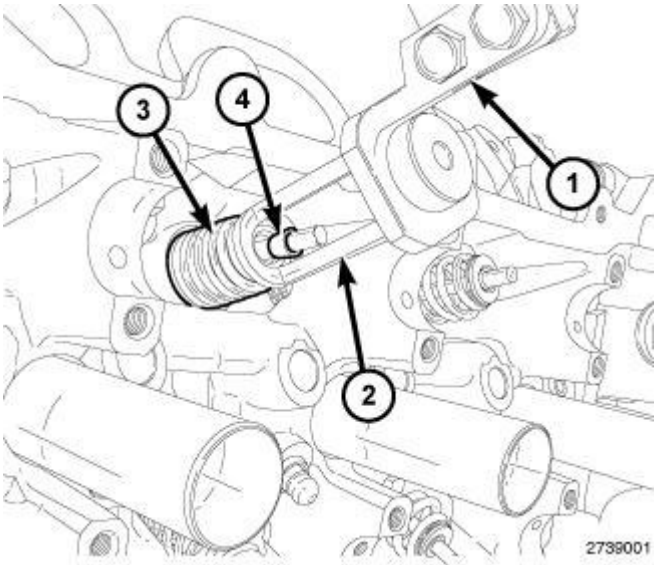

Fig. 369: Compressing Valve Spring & Locating Valve Retaining Locks
Courtesy of CHRYSLER GROUP, LLC

NOTE: Number 3 cylinder intake valve spring compression shown in the illustration, all other valves similar.

4. Compress valve springs (3) with the Valve Spring Compressor Adapter (special tool #10224, Adapter, Valve Spring) (2) mounted in the Valve Spring Compressor (special tool #C-3422-D, Compressor, Valve Spring) (1). Install the retaining locks (4) and release the valve spring compression.

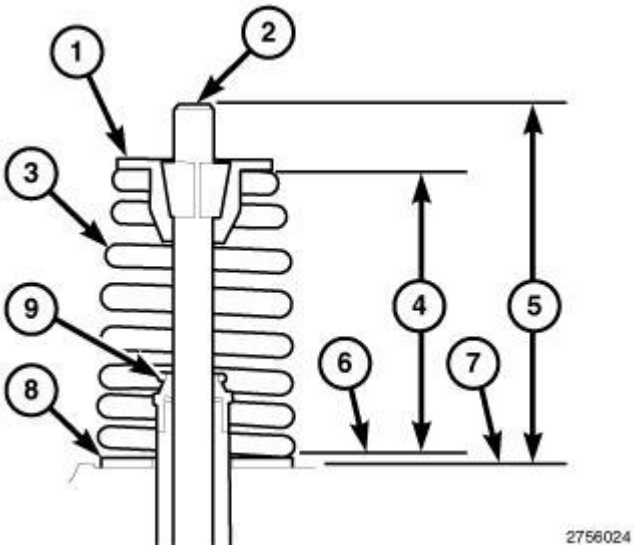

Fig. 370: Checking Valve Spring Installed Height
Courtesy of CHRYSLER GROUP, LLC

5. If the valves or valve seats have been refinished, check the installed height of the valve springs (4). If the installed valve spring height (4) is greater than 40.0 mm (1.575 in.), install an additional spring seat (8) in the head counterbore under the original valve spring seat (8) to bring the spring height back within

 © 2011 Mitchell Repair Information Company, LLC.

specification. Make sure the measurement is taken from the top of spring seat (6) to the bottom surface of spring retainer (1).

6. Install the cylinder head(s). Refer to **CYLINDER HEAD, INSTALLATION**.

TUBE, SPARK PLUG

REMOVAL

REMOVAL

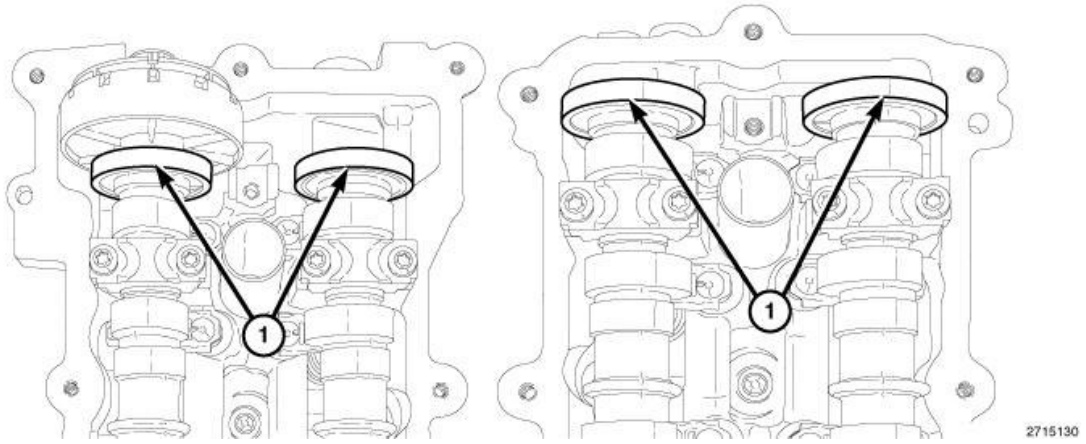

Fig. 371: Magnetic Timing Wheels
Courtesy of CHRYSLER GROUP, LLC

CAUTION: The magnetic timing wheels (1) must not come in contact with magnets (pickup tools, trays, etc.) or any other strong magnetic field. This will destroy the timing wheels ability to correctly relay camshaft position to the camshaft position sensor.

1. Disconnect and isolate the negative battery cable.
2. Remove the ignition coils. Refer to **COIL, IGNITION, REMOVAL** .
3. Using compressed air, blow out any dirt or contaminates from around the top of the spark plugs.
4. Remove the cylinder head cover(s). Refer to **COVER(S), CYLINDER HEAD, REMOVAL**.

 © 2011 Mitchell Repair Information Company, LLC.

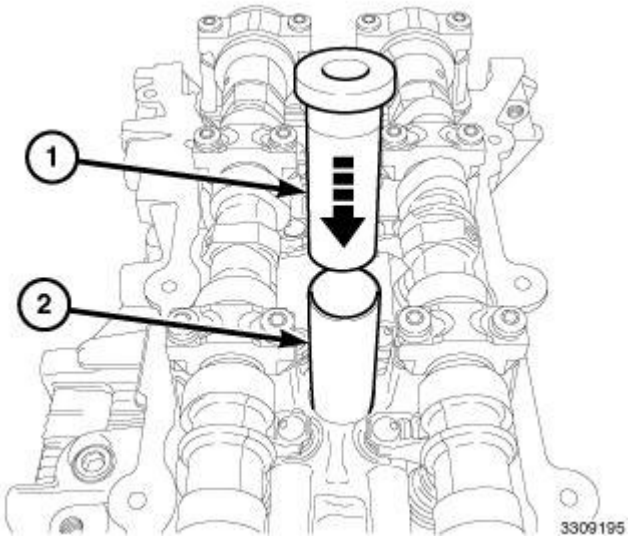

Fig. 372: Spark Plug Tube Installer & Spark Plug Tube
Courtesy of CHRYSLER GROUP, LLC

5. Install the top half of Spark Plug Tube Installer (special tool #10255, Installer, Spark Plug Tube) (1) into the spark plug tube to be removed (2).

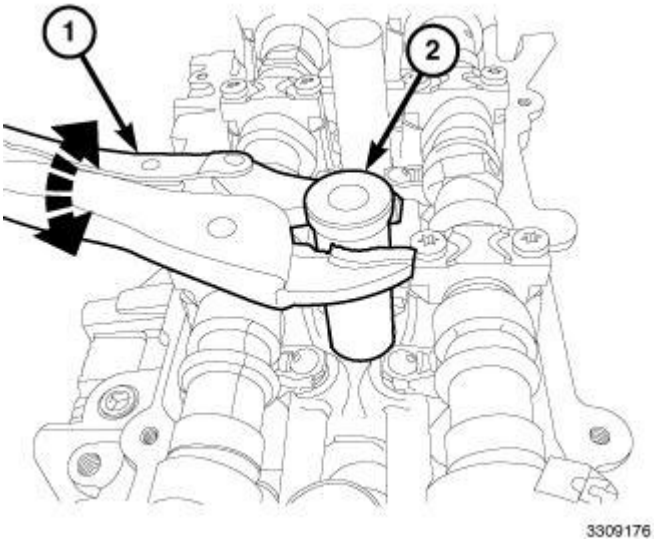

Fig. 373: Locking Pliers & Spark Plug Tube
Courtesy of CHRYSLER GROUP, LLC

6. Using suitable locking pliers (1), remove the spark plug tube (2) from the cylinder head and discard the tube.
7. Clean the area around the spark plug tube mounting with Mopar® Parts Cleaner or equivalent.

INSTALLATION

INSTALLATION

 © 2011 Mitchell Repair Information Company, LLC.

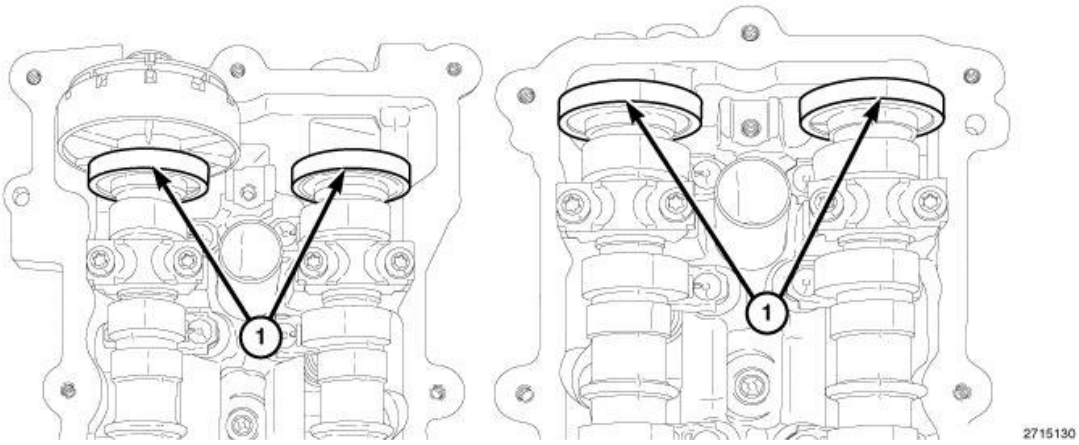

Fig. 374: Magnetic Timing Wheels
Courtesy of CHRYSLER GROUP, LLC

CAUTION: The magnetic timing wheels (1) must not come in contact with magnets (pickup tools, trays, etc.) or any other strong magnetic field. This will destroy the timing wheels ability to correctly relay camshaft position to the camshaft position sensor.

1. Remove the spark plug. Refer to **SPARK PLUG, REMOVAL** .

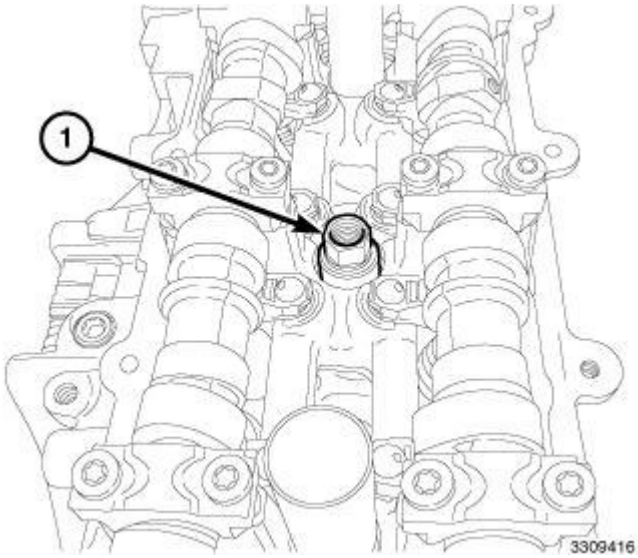

Fig. 375: Spark Plug Tube Installer
Courtesy of CHRYSLER GROUP, LLC

2. Install the lower half of Spark Plug Tube Installer (special tool #10255, Installer, Spark Plug Tube) (1) into the cylinder head and tighten to 17.5 N.m (13 ft. lbs.).

 © 2011 Mitchell Repair Information Company, LLC.

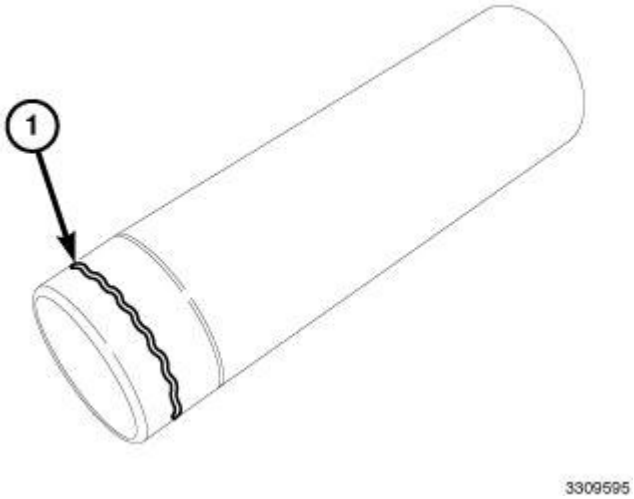

Fig. 376: Applying Stud & Bearing Mount Bead To Spark Plug Tube
Courtesy of CHRYSLER GROUP, LLC

3. Apply Mopar® Stud and Bearing Mount to the new spark plug tube approximately 3 mm (0.118 in.) from the end of the tube, in a 2 mm (0.078 in.) wide bead (1).

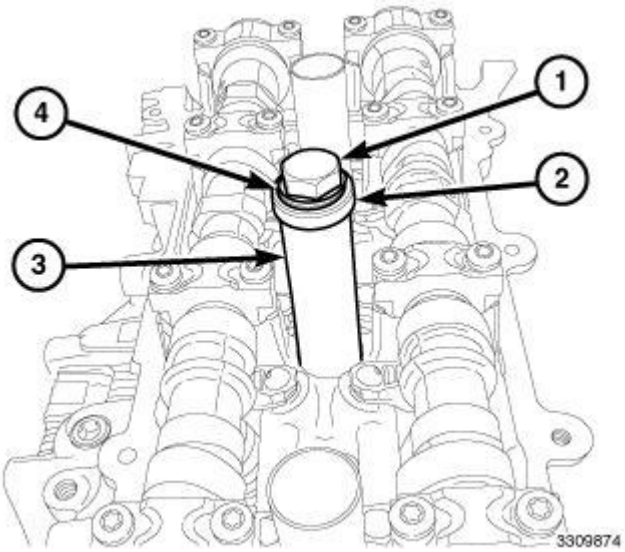

Fig. 377: Spark Plug Tube, Thrust Washers, Spark Plug Tube Installer & Bolt
Courtesy of CHRYSLER GROUP, LLC

4. Position the spark plug tube (3) on the top half of Spark Plug Tube Installer (special tool #10255, Installer, Spark Plug Tube) (2) and assemble the tool on the cylinder head. Make sure there are two thrust washers (4) installed.

CAUTION: Do not overtighten the bolt (1). Overtightening can damage the cylinder head spark plug threads.

 © 2011 Mitchell Repair Information Company, LLC.

5. Tighten the bolt (1) to draw the spark plug tube into position. When the top half of the tool contacts the bottom half of the tool, the tube is installed.

CAUTION: Spark plug torque is critical and must not exceed the specified value. Overtightening stretches the spark plug shell reducing its heat transfer capability resulting in possible catastrophic engine failure.

6. Install the spark plug and tighten to 17.5 N.m (13 ft. lbs.). Refer to **SPARK PLUG, INSTALLATION** .

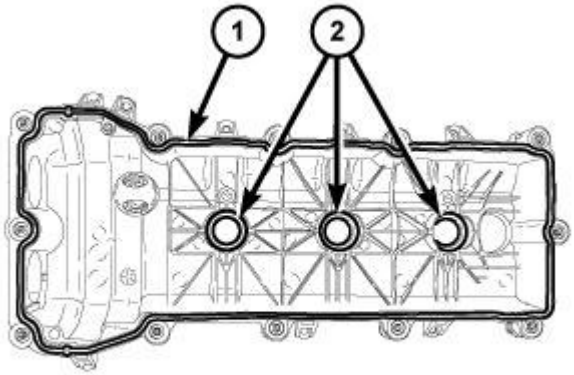

2776066

Fig. 378: Cylinder Head Cover Gasket & Spark Plug Tube Seals
Courtesy of CHRYSLER GROUP, LLC

NOTE: LH cylinder head cover shown in the illustration, RH cylinder head cover similar.

7. If required, install a new spark plug tube seal (2). Refer to **COVER(S), CYLINDER HEAD, INSTALLATION**.
8. Install the cylinder head cover(s). Refer to **COVER(S), CYLINDER HEAD, INSTALLATION**.

Connect the negative battery cable and tighten nut to 5 N.m (45 in. lbs.).

VALVES, INTAKE AND EXHAUST

DESCRIPTION

DESCRIPTION

 © 2011 Mitchell Repair Information Company, LLC.

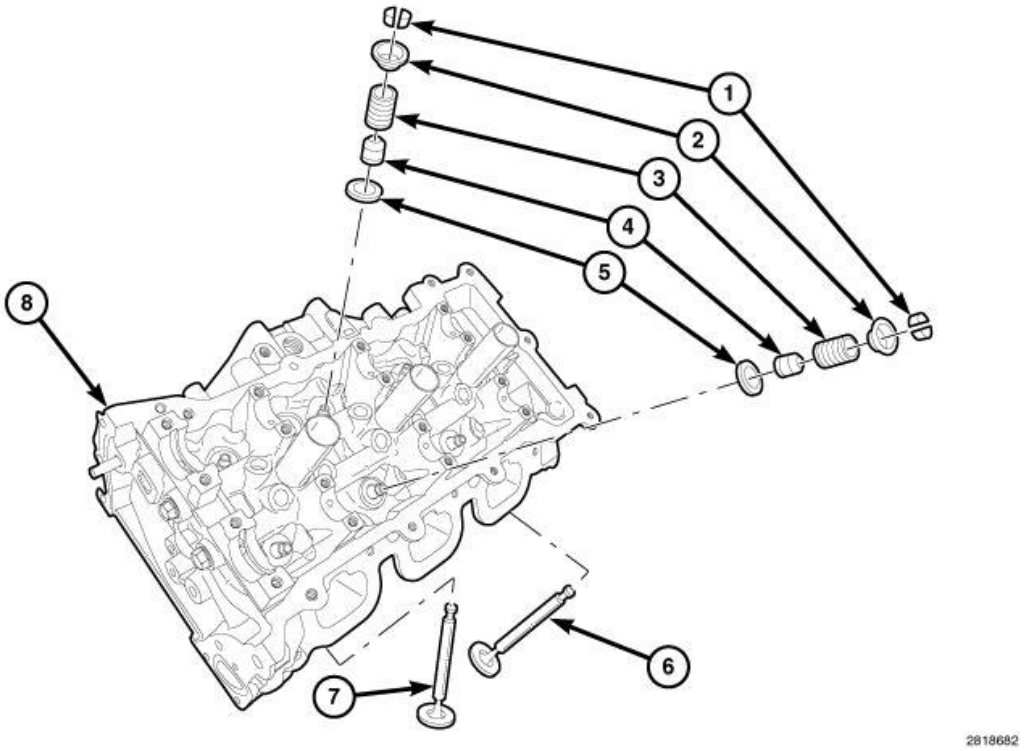

Fig. 379: Intake Valve & Exhaust Valve Component Configuration
Courtesy of CHRYSLER GROUP, LLC

The intake valve (6) is made from a one piece forged heat resistant (martensitic) steel. The exhaust valve (7) is a two piece construction with a forged (austenitic) head welded to the (martensitic) stem. Both valves have a nitrided surface treatment to prevent scuffing except at the tip and lock grooves. The four valves per cylinder are actuated by roller rocker arms, which pivot on stationary lash adjusters. All valves use three bead lock keepers (1) to retain springs (3) and to promote valve rotation.

STANDARD PROCEDURE

REFACING INTAKE AND EXHAUST VALVES

 © 2011 Mitchell Repair Information Company, LLC.

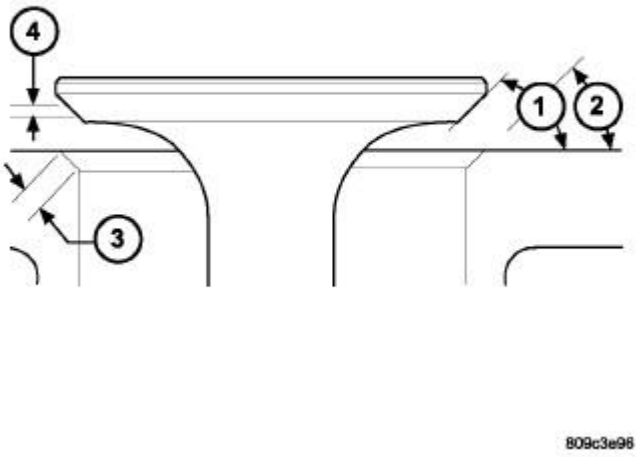

Fig. 380: Valve Face & Seat
Courtesy of CHRYSLER GROUP, LLC

1 - SEAT WIDTH
2 - FACE ANGLE
3 - SEAT ANGLE
4 - SEAT CONTACT AREA

The intake and exhaust valves have a 45.25 ± 0.25 degree face angle (1). The valve seats (2) have a 44.75 ± 0.25 degree face angle.

VALVES

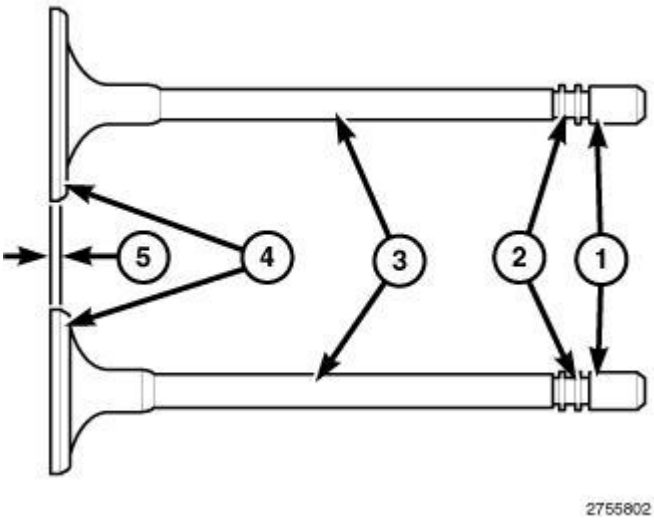

Fig. 381: Inspecting Valve Margin
Courtesy of CHRYSLER GROUP, LLC

 © 2011 Mitchell Repair Information Company, LLC.

Inspect the remaining margin (5) after the valves are refaced. Refer to ENGINE **SPECIFICATIONS** .

VALVE SEATS

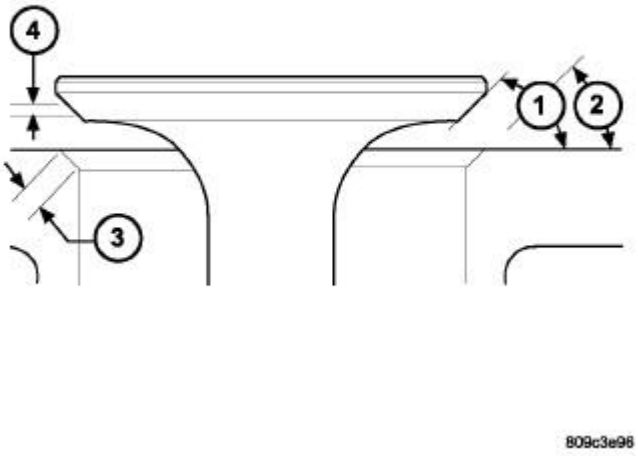

Fig. 382: Valve Face & Seat
Courtesy of CHRYSLER GROUP, LLC

1 - SEAT WIDTH
2 - FACE ANGLE
3 - SEAT ANGLE
4 - SEAT CONTACT AREA

NOTE: **When refacing the valve seats, it is important that the correct size valve guide pilot be used for the reseating stones. A true and complete surface must be obtained.**

1. Measure the concentricity of the valve seat using a dial indicator. Total runout should not exceed 0.050 mm (0.002 inch.) total indicator reading.
2. Inspect the valve seat (3) with Prussian blue to determine where the valve contacts the seat. To do this, coat the valve seat (3) **LIGHTLY** with Prussian blue then set the valve in place. Rotate the valve with light pressure. If the blue is transferred to the center of the valve face (4), contact is satisfactory. If the blue is transferred to the top edge of the valve face, then lower the valve seat with a 15 degree stone. If the blue is transferred to the bottom edge of the valve face, then raise the valve seat with a 65 degree stone.

NOTE: **Valve seats which are worn or burned can be reworked, provided that the correct angle and seat width are maintained. Otherwise the cylinder head must be replaced.**

 © 2011 Mitchell Repair Information Company, LLC.

3. When the seat is properly positioned the width of the intake seat should be 1.0 - 1.2 mm (0.04 - 0.05 in.) and the exhaust seats should be 1.41 - 1.61 mm (0.055 - 0.063 in.).

VALVE AND SPRING INSTALLED HEIGHT

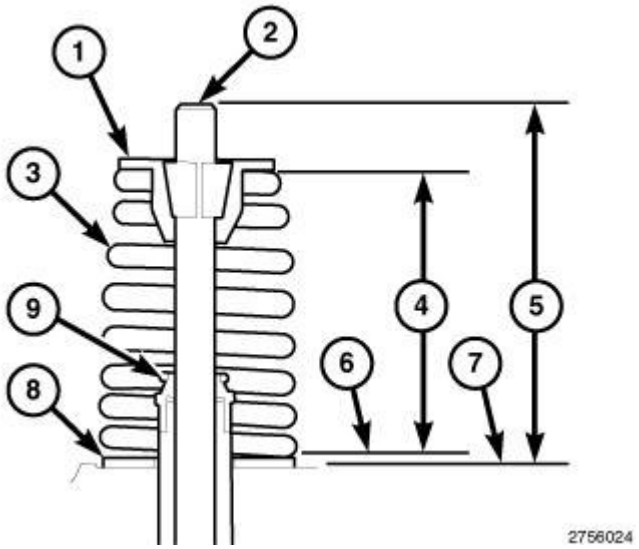

Fig. 383: Checking Valve Spring Installed Height
Courtesy of CHRYSLER GROUP, LLC

1. Coat the valve stems (2) with clean engine oil and install the valves into the cylinder head.

NOTE: **If the valves are being reused, reassemble them into their original locations.**

2. If the valves or valve seats have been refinished, check the valve tip height (5). If the valve tip height (5) exceeds the specification, grind the valve tip until it is within specification. Refer to ENGINE **SPECIFICATIONS** . Make sure the measurement is taken from the cylinder head surface (7) to the top of the valve stem (2).

 © 2011 Mitchell Repair Information Company, LLC.

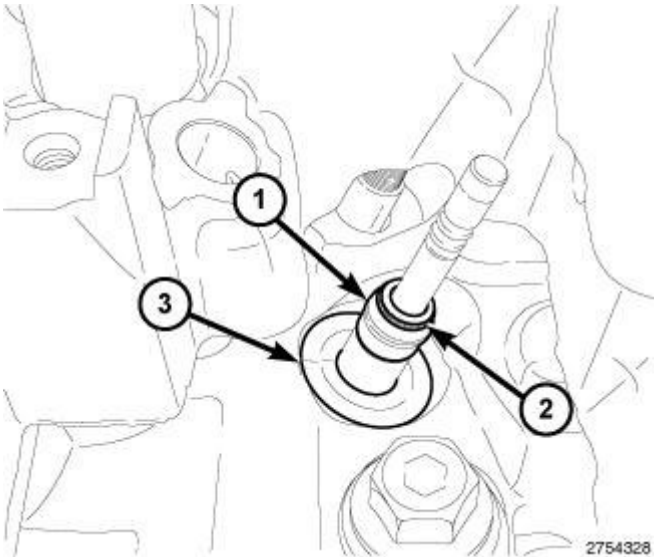

Fig. 384: Spring Seat, Valve Guide Seal & Garter Spring
Courtesy of CHRYSLER GROUP, LLC

3. If removed, install the spring seat (3) and valve guide seal (1) over the valve guide. Refer to **SEAL(S), VALVE GUIDE, INSTALLATION**.

NOTE: **Ensure that the garter spring (2) is intact around the top of the valve guide seal (1). Number 5 cylinder exhaust valve guide seal shown in the illustration, all other valves similar.**

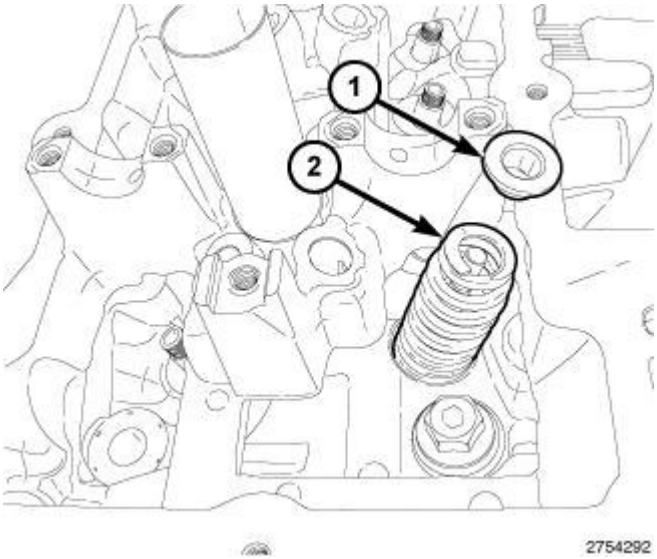

Fig. 385: Valve Spring & Valve Spring Retainer
Courtesy of CHRYSLER GROUP, LLC

NOTE: **If the valve springs are being reused, reassemble them into their original locations. Number 5 cylinder exhaust valve spring shown in the illustration, all other valves similar.**

 © 2011 Mitchell Repair Information Company, LLC.

4. Install the valve spring (2) and valve spring retainer (1).

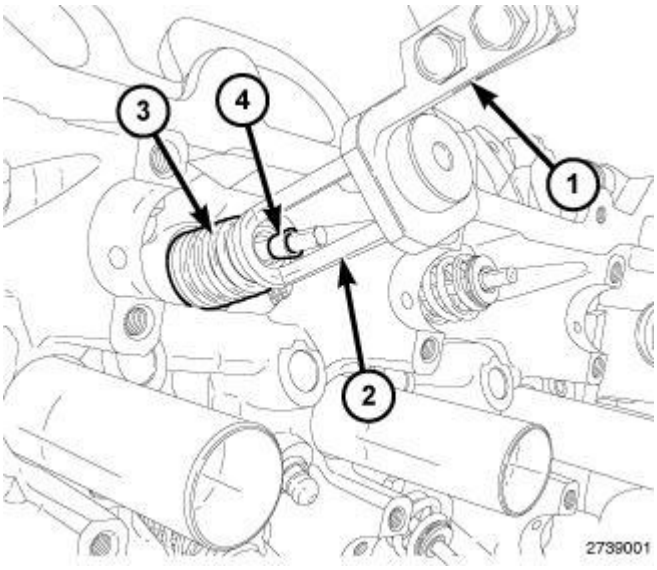

Fig. 386: Compressing Valve Spring & Locating Valve Retaining Locks
Courtesy of CHRYSLER GROUP, LLC

NOTE: Number 3 cylinder intake valve spring compression shown in the illustration, all other valves similar.

5. Compress valve springs (3) with the Valve Spring Compressor Adapter (special tool #10224, Adapter, Valve Spring) (2) mounted in the Valve Spring Compressor (special tool #C-3422-D, Compressor, Valve Spring) (1). Install the retaining locks (4) and release the valve spring compression.

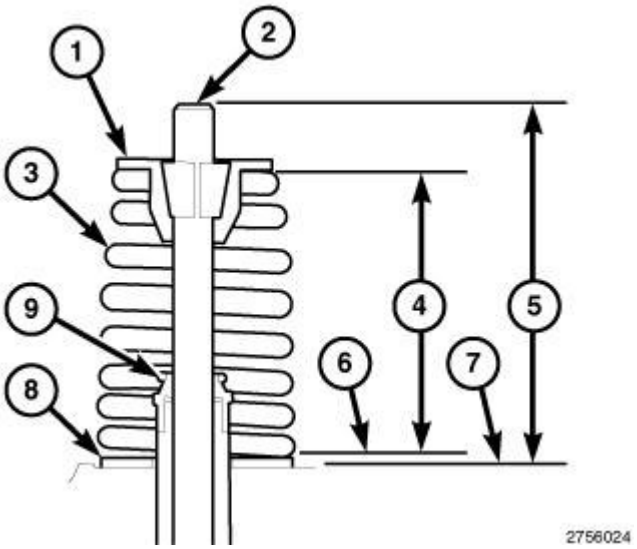

Fig. 387: Checking Valve Spring Installed Height
Courtesy of CHRYSLER GROUP, LLC

6. If the valves or valve seats have been refinished, check the installed height of the valve springs (4). If the

 © 2011 Mitchell Repair Information Company, LLC.

installed valve spring height (4) is greater than 40.0 mm (1.575 in.), install a second spring seat (8) in the head counterbore under the valve spring seat (8) to bring the spring height back within specification. Make sure the measurement is taken from the top of spring seat (6) to the bottom surface of spring retainer (1).

REMOVAL

REMOVAL

1. Remove the cylinder head(s). Refer to **CYLINDER HEAD, REMOVAL**.

NOTE: **If the springs are to be reused, identify their positions so that they can be reassembled into their original locations. Number 5 cylinder exhaust valve spring shown in the illustration, all other valve springs similar.**

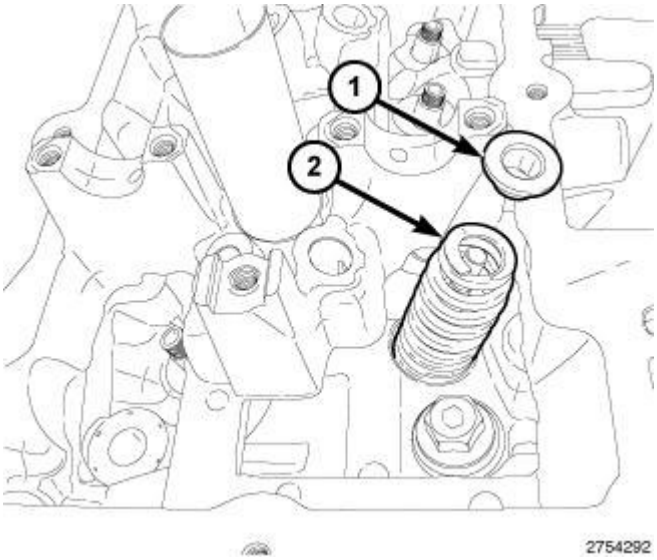

Fig. 388: Valve Spring & Valve Spring Retainer
Courtesy of CHRYSLER GROUP, LLC

2. Remove the valve spring(s) (2). Refer to **SPRING(S), VALVE, REMOVAL**.

 © 2011 Mitchell Repair Information Company, LLC.

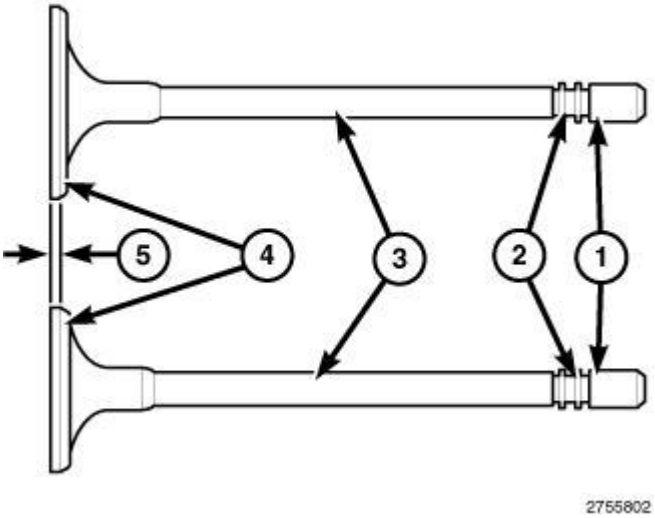

Fig. 389: Inspecting Valve Margin
Courtesy of CHRYSLER GROUP, LLC

CAUTION: Before removing the valves, remove any burrs from the valve stem retainer lock grooves (2) and stem tip (1) to prevent damage to the valve guides.

3. Remove the valve(s) (3). Identify each valve to ensure installation in the original location.

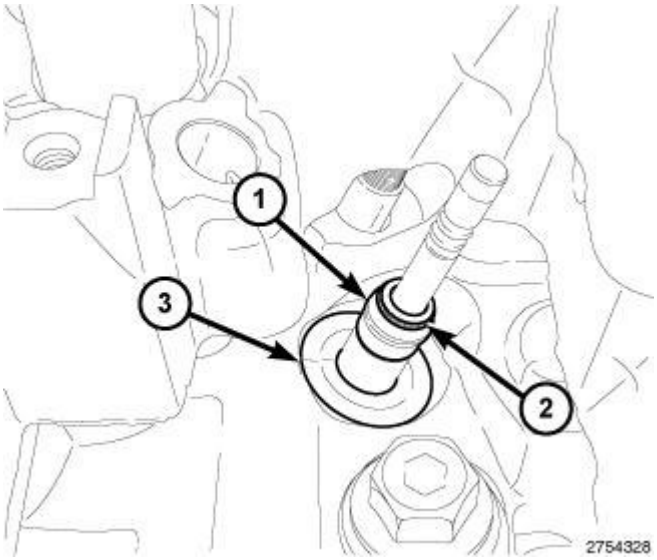

Fig. 390: Spring Seat, Valve Guide Seal & Garter Spring
Courtesy of CHRYSLER GROUP, LLC

4. If required, remove the valve guide seal (1) and spring seat (3). Refer to **SEAL(S), VALVE GUIDE, REMOVAL**.

INSPECTION

 © 2011 Mitchell Repair Information Company, LLC.

INSPECTION

VALVES

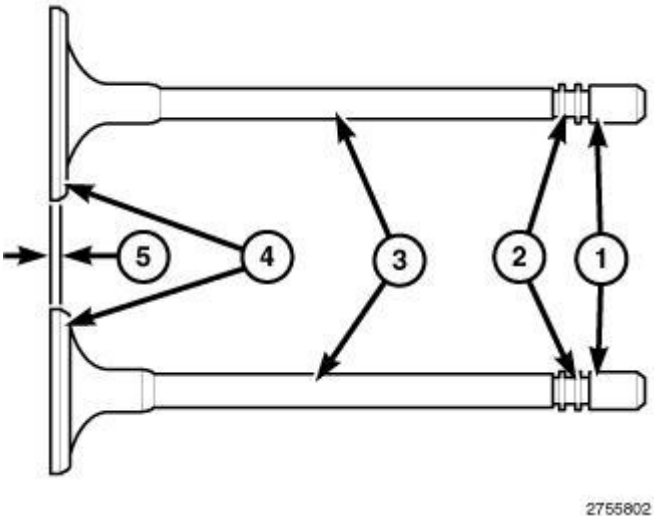

Fig. 391: Inspecting Valve Margin
Courtesy of CHRYSLER GROUP, LLC

1. Clean and inspect the valves thoroughly. Replace burned, warped and cracked valves.
2. Inspect the retainer lock grooves for wear or damage (2).
3. Inspect the valve face (4) for for wear and pitting.
4. Measure the valve stems (3) and margins (5) for wear. Refer to ENGINE **SPECIFICATIONS** .

VALVE GUIDES

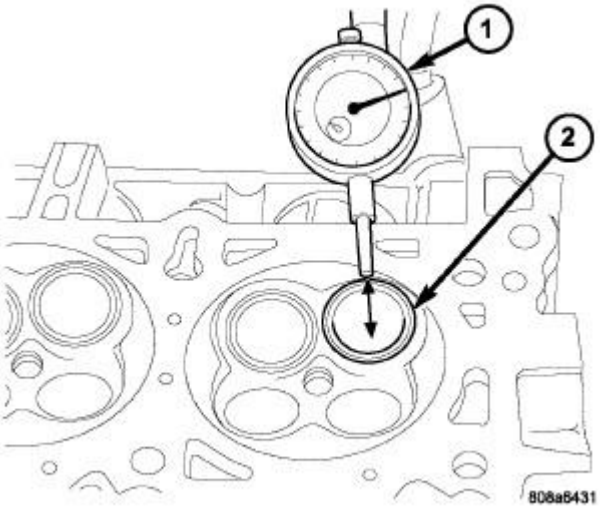

Fig. 392: Measuring Valve Guide Wear

 © 2011 Mitchell Repair Information Company, LLC.

Courtesy of CHRYSLER GROUP, LLC

1. Remove carbon and varnish deposits from inside of the valve guides with a reliable guide cleaner.
2. Measure valve stem-to-guide clearance as follows:
3. Install the valve (2) into the cylinder head so that it is 15 mm (0.590 inch.) off of the valve seat. A small piece of hose may be used to hold the valve in place.
4. Attach the Dial Indicator Set (special tool #C-3339A, Set, Dial Indicator) (1) to the cylinder head and set it at a right angle to the valve stem being measured.
5. Move the valve to and from the indicator. Compare this reading to the specification. Refer to ENGINE **SPECIFICATIONS** .

NOTE: If stem-to-guide clearance exceeds specifications, you must measure the valve stem. If the valve stem is within specification or if the valve guide is loose in the cylinder head, replace the cylinder head.

INSTALLATION

INSTALLATION

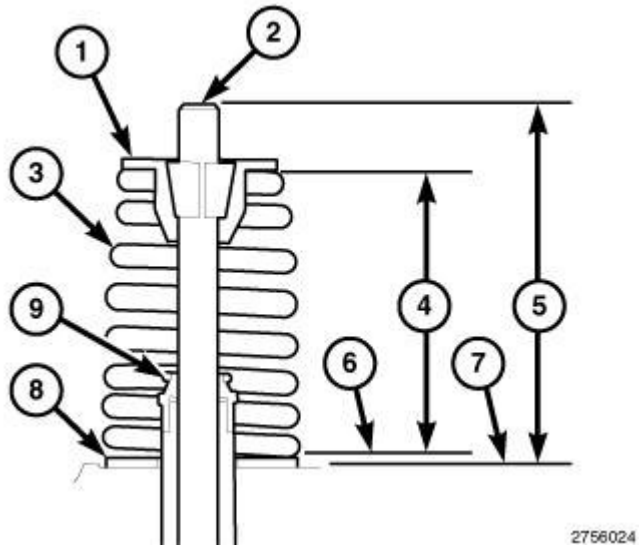

Fig. 393: Checking Valve Spring Installed Height
Courtesy of CHRYSLER GROUP, LLC

1. Coat the valve stems (2) with clean engine oil and install the valves into the cylinder head.

NOTE: If the valves are being reused, reassemble them into their original locations.

2. If the valves or valve seats have been refinished, check the valve tip height (5). If the valve tip height (5) exceeds the specification, grind the valve tip until it is within specification. Refer to ENGINE **SPECIFICATIONS** . Make sure the measurement is taken from the cylinder head surface (7) to the top of the valve stem (2).

 © 2011 Mitchell Repair Information Company, LLC.

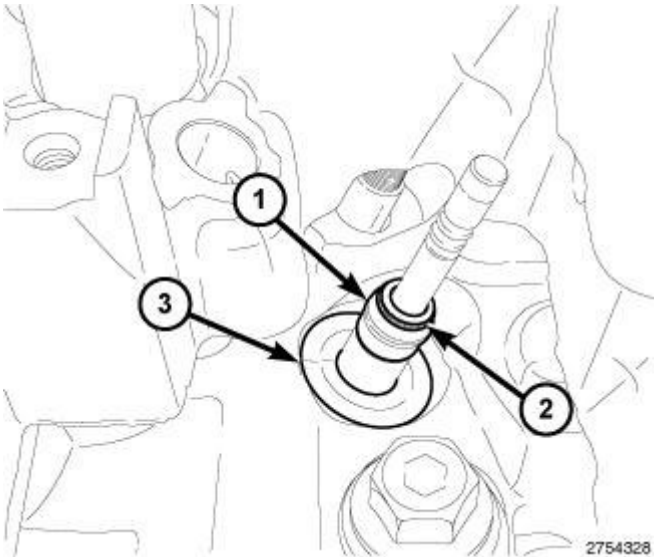

Fig. 394: Spring Seat, Valve Guide Seal & Garter Spring
Courtesy of CHRYSLER GROUP, LLC

3. If removed, install the spring seat (3) and valve guide seal (1) over the valve guide. Refer to **SEAL(S), VALVE GUIDE, INSTALLATION**.

NOTE: Ensure that the garter spring (2) is intact around the top of the valve guide seal (1). Number 5 cylinder exhaust valve guide seal shown in the illustration, all other valves similar.

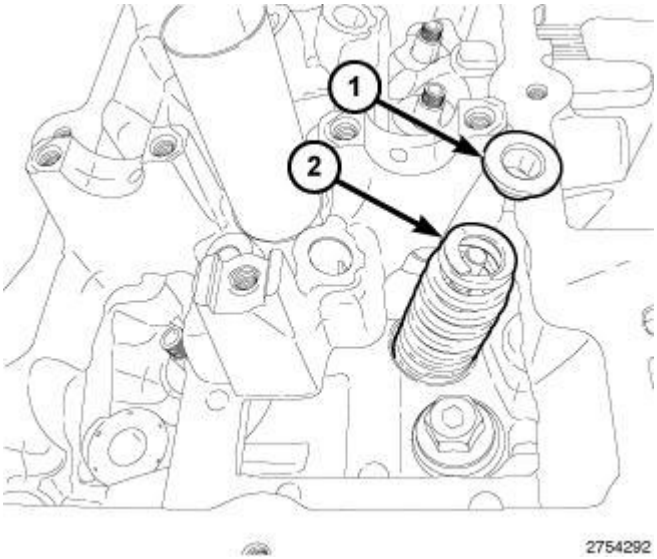

Fig. 395: Valve Spring & Valve Spring Retainer
Courtesy of CHRYSLER GROUP, LLC

4. Install the valve spring(s) (2). Refer to **SPRING(S), VALVE, INSTALLATION**.

NOTE: Reassemble the valves springs into their original locations. If the valves or

 © 2011 Mitchell Repair Information Company, LLC.

valve seats have been refinished, verify that the valve spring installed height is within specification. Refer to ENGINE SPECIFICATIONS . Number 5 cylinder exhaust valve spring shown in the illustration, all other valves springs similar.

5. Install the cylinder head(s). Refer to **CYLINDER HEAD, INSTALLATION**.

ENGINE BLOCK

DESCRIPTION

DESCRIPTION

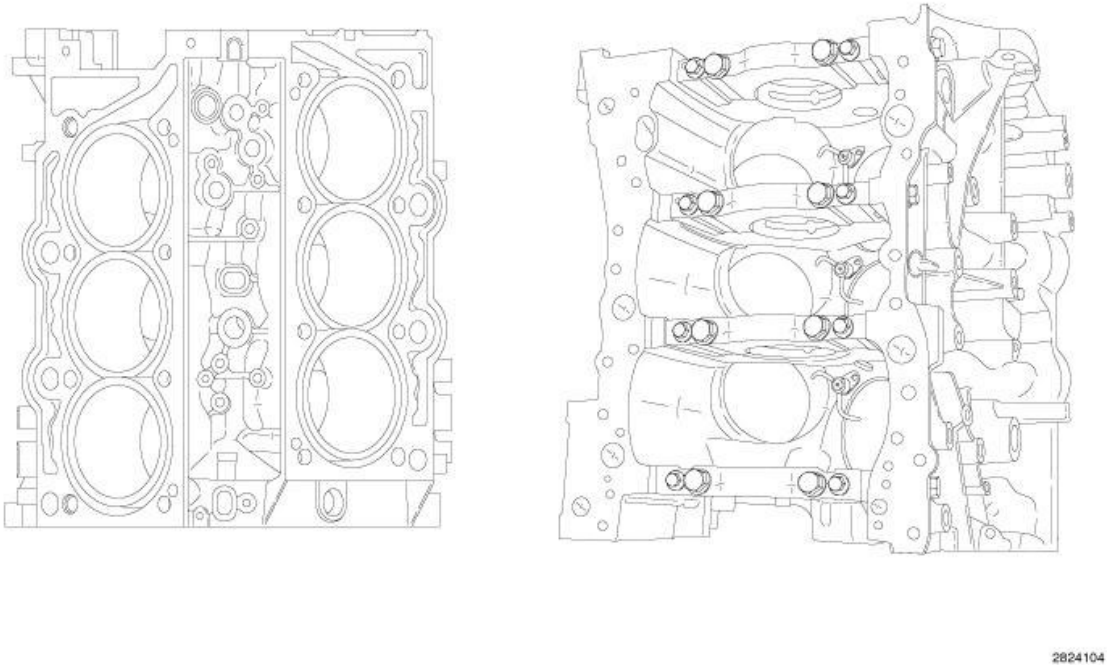

Fig. 396: Cylinder Block & Main Bearing Caps
Courtesy of CHRYSLER GROUP, LLC

The cylinder block is a 60 degree high-pressure die cast aluminum design with cast steel cylinder liners. The leading side of the block is on the right side and houses cylinders 1, 3 and 5. The cylinder block is an open deck design with cut slots between each cylinder. Two knock sensors are located in the block valley. The cylinder block has three sets of piston cooling jets which are attached to the main oil gallery. The four powdered metal main bearing caps are a cross-bolted design and have directional arrows molded into the caps. The number 2 main bearing is the location for the two piece upper half thrust bearings. The thrust bearings are installed with the oil groves facing outward. The main bearing caps are a 6-bolt design and cross-bolted for improved lower end strength. There are three oil drain back drillings located on each of the cylinder banks.

STANDARD PROCEDURE

 © 2011 Mitchell Repair Information Company, LLC.

MEASURING BEARING CLEARANCE USING PLASTIGAGE

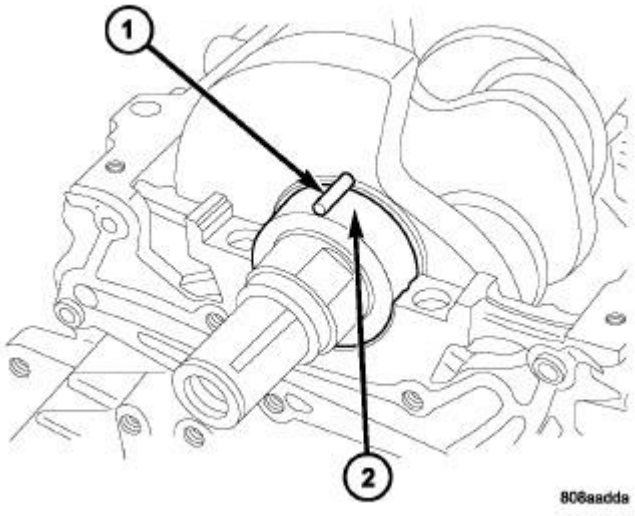

Fig. 397: Plastigage Placed In Lower Shell
Courtesy of CHRYSLER GROUP, LLC

NOTE: Typical crankshaft journal shown in the illustration.

Engine crankshaft and connecting rod bearing clearances can be determined by the use of Plastigage or equivalent. The following is the recommended procedure for the use of Plastigage:

1. Remove the oil film from surface to be checked. Plastigage is soluble in oil.
2. Place a piece of Plastigage (1) across the entire width of the journal (In addition, suspected areas can be checked by placing the Plastigage in the suspected area). Plastigage must not crumble in use. If brittle, obtain fresh stock.
3. Torque the bearing cap bolts of the bearing being checked to the proper specifications. Refer to ENGINE **SPECIFICATIONS** .

NOTE: DO NOT rotate the crankshaft. Plastigage will smear, causing inaccurate results.

 © 2011 Mitchell Repair Information Company, LLC.

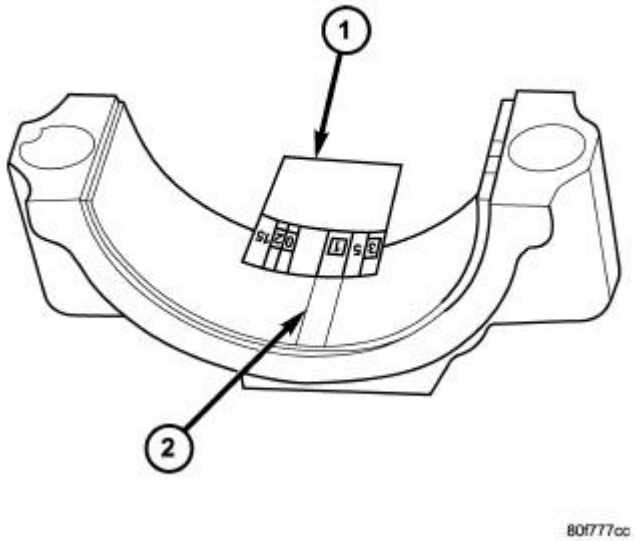

Fig. 398: Measuring Bearing Clearance With Plastigage
Courtesy of CHRYSLER GROUP, LLC

NOTE: Typical connecting rod cap shown in the illustration.

4. Remove the bearing cap and compare the width of the flattened Plastigage (2) with the scale provided on the package (1). Locate the band closest to the same width. This band shows the amount of clearance. Differences in readings between the ends indicate the amount of taper present or the possibility of foreign material trapped under the bearing insert.
5. Record all readings taken. Compare clearance measurements to engine specifications. Refer to ENGINE **SPECIFICATIONS** .

 © 2011 Mitchell Repair Information Company, LLC.

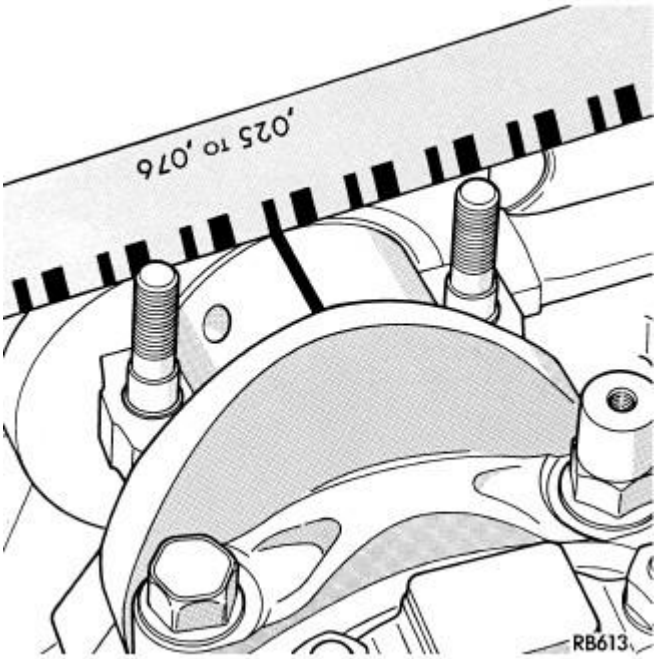

Fig. 399: Checking Connecting Rod Bearing Clearance With Plastigage
Courtesy of CHRYSLER GROUP, LLC

NOTE: **Typical connecting rod journal shown in the illustration.**

NOTE: **Plastigage is available in a variety of clearance ranges. Use the most appropriate range for the specifications you are checking. Plastigage generally is accompanied by two scales. One scale is in inches, the other is a metric scale.**

6. Install the proper bearings to achieve the specified bearing clearances.
7. Repeat the Plastigage measurement to verify your bearing selection prior to final assembly.

CYLINDER BORE HONING

 © 2011 Mitchell Repair Information Company, LLC.

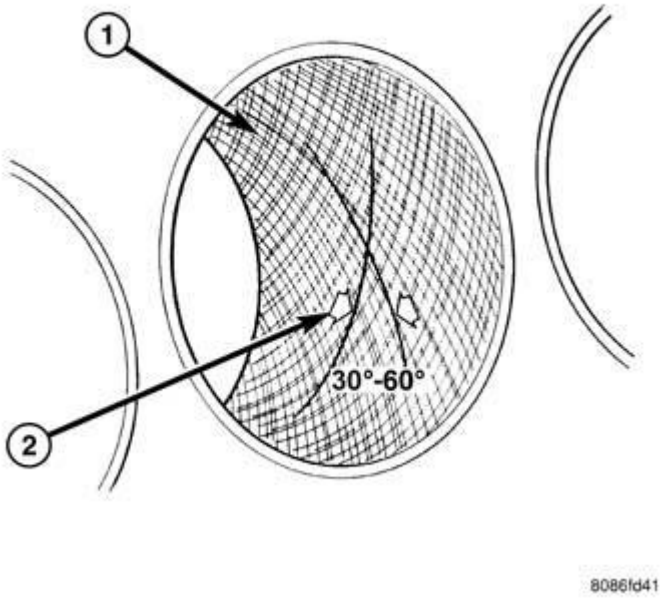

Fig. 400: Cylinder Bore Crosshatch Pattern
Courtesy of CHRYSLER GROUP, LLC

Before honing, stuff plenty of clean shop towels under the bores and over the crankshaft to keep abrasive materials from entering the crankshaft area.

1. Used carefully, a cylinder bore sizing hone equipped with 220 grit stones, is the best tool for this job. In addition to deglazing, it will reduce taper and out-of-round, as well as removing light scuffing, scoring and scratches. Usually, a few strokes will clean up a bore and maintain the required limits.

CAUTION: DO NOT use rigid type hones to remove cylinder wall glaze.

2. Deglazing of the cylinder walls may be done if the cylinder bore is straight and round. Use of a cylinder surfacing hone equipped with 280 grit stones, about 20-60 strokes, depending on the bore condition, will be sufficient to provide a satisfactory surface. Use a light honing oil, available from major oil distributors.

CAUTION: DO NOT use engine or transmission oil, mineral spirits, or kerosene.

3. Honing should be done by moving the hone up and down fast enough to get a crosshatch pattern. The hone marks should INTERSECT at 50° to 60° for proper seating of rings.
4. A controlled hone motor speed between 200 and 300 RPM is necessary to obtain the proper crosshatch angle (1). The number of up and down strokes per minute can be regulated to get the desired 50° to 60° angle (2). Faster up and down strokes increase the crosshatch angle.
5. After honing, it is necessary that the block be cleaned to remove all traces of abrasive. Use a brush to

 © 2011 Mitchell Repair Information Company, LLC.

wash parts with a solution of hot water and detergent. Dry parts thoroughly. Use a clean, white, lint-free cloth to check that the bore is clean. Oil the bores after cleaning to prevent rusting.

INSPECTION

INSPECTION

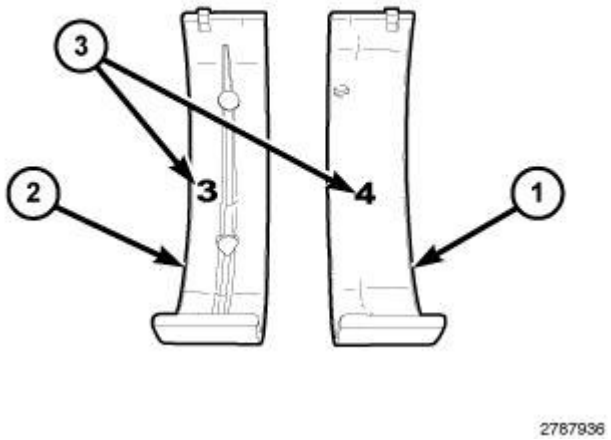

Fig. 401: Main Bearing Inserts
Courtesy of CHRYSLER GROUP, LLC

1. Wipe the main bearing inserts (1 and 2) clean.
2. Inspect the inserts for abnormal wear patterns, scoring, grooving, fatigue, pitting and for metal or other foreign material imbedded in the lining.
3. Inspect the back of the inserts for fractures, scrapes, or irregular wear patterns.
4. Inspect the insert locking tabs for damage.
5. Inspect the crankshaft thrust washers for scoring, scratches, wear or blueing.
6. Replace any bearing that shows abnormal wear. Refer to ENGINE/ENGINE BLOCK/BEARING(S) **STANDARD PROCEDURE** .
7. Inspect the main bearing bores for signs of scoring, nicks and burrs.
8. If the cylinder block main bearing bores show damage the engine block must be replaced.

 © 2011 Mitchell Repair Information Company, LLC.

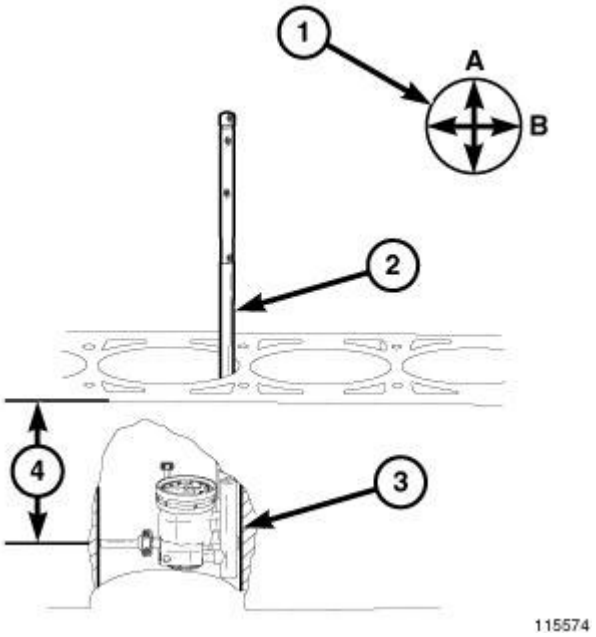

Fig. 402: Measuring Cylinder Bore Diameter
Courtesy of CHRYSLER GROUP, LLC

9. Use Cylinder Indicator (special tool #C-119, Cylinder Indicator) (2) to correctly measure the inside diameter of the cylinder bore (3). A cylinder bore gauge capable of reading in 0.003 mm (0.0001 in.) INCREMENTS is required. If a bore gauge is not available, do not use an inside micrometer.
10. Measure the inside diameter of the cylinder bore at three levels below the top of the bore (4). Start at the top of the bore, perpendicular (across or at 90 degrees) to the axis of the crankshaft at point A (1).
11. Repeat the measurement near the middle of the bore, then repeat the measurement near the bottom of the bore.
12. Determine taper by subtracting the smaller diameter from the larger diameter.
13. Rotate measuring device 90° to point B (1) and repeat the three measurements. Verify that the maximum taper is within specifications. Refer to ENGINE **SPECIFICATIONS** .
14. Determine out-of-roundness by comparing the difference between A and B at each of the three levels. Verify that the maximum out of round is within specifications. Refer to ENGINE **SPECIFICATIONS** .
15. If cylinder bore taper and out-of-roundness are within specification, the cylinder bore can be honed. Refer to ENGINE/ENGINE BLOCK **STANDARD PROCEDURE** . If the cylinder bore taper or out-of-round condition exceeds the maximum limits, the cylinder block must be replaced.

NOTE: A slight amount of taper always exists in the cylinder bore after the engine has been in use for a period of time.

BEARING(S), CONNECTING ROD

STANDARD PROCEDURE

CONNECTING ROD BEARING FITTING

 © 2011 Mitchell Repair Information Company, LLC.

Bearing oil clearance can also be determined by using Plastigage or equivalent. Refer to ENGINE/ENGINE BLOCK **STANDARD PROCEDURE** .

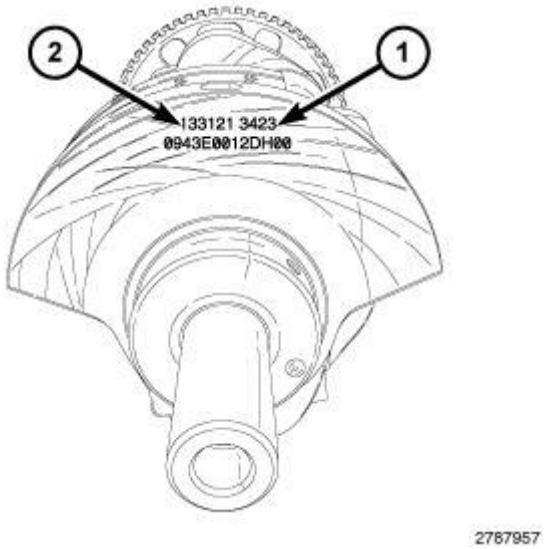

Fig. 403: Connecting Rod Bearing Journal Diameter Grade Markings
Courtesy of CHRYSLER GROUP, LLC

The connecting rod bearings are "select fit" to achieve proper oil clearance. Connecting rod bearing journal diameter grade markings (2) are stamped into the front crankshaft counterweight. These marks are read from left to right, corresponding with journal number 1, 2, 3, 4, 5, 6. Select the bearing size that corresponds to the crankshaft markings for each rod bearing journal.

Connecting rod bearing journal diameter grade markings correspond to specific journal diameters. The chart below identifies the three crankshaft grade markings and their associated journal diameters.

Crankshaft Marking	Journal Size mm (in.)
1	58.9910 - 58.9969 mm (2.3225 - 2.3227 in.)
2	58.9970 - 59.0029 mm (2.3227 - 2.3229 in.)
3	59.0030 - 59.0090 mm (2.3229 - 2.3232 in.)

 © 2011 Mitchell Repair Information Company, LLC.

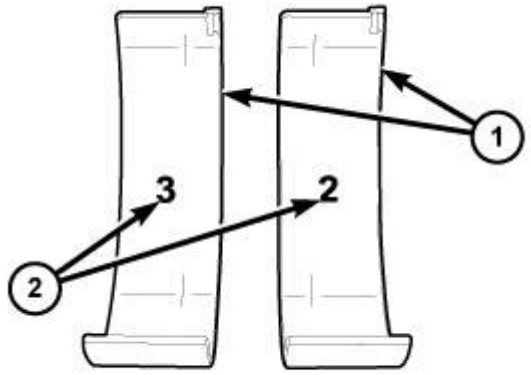

2789568

Fig. 404: Connecting Rod Bearing Shells & Bearing Size
Courtesy of CHRYSLER GROUP, LLC

NOTE: Install the rod bearings in pairs. Do not mix sizes or use a new bearing half with an old bearing half.

The connecting rod bearing shells (1) are marked with the bearing size (2) on the bearing lining surface. The bearings are available in three different sizes in order to achieve the desired oil clearance.

Rod bearing shells are available in three sizes. The chart below identifies the three bearing sizes.

Bearing Marking	Size mm (in.)
1	1.583 - 1.580 mm (0.0623 - 0.0622 in.)
2	1.580 - 1.577 mm (0.0622 - 0.0621 in.)
3	1.577 - 1.574 mm (0.0621 - 0.0620 in.)

CONNECTING ROD BEARING REPLACEMENT

 © 2011 Mitchell Repair Information Company, LLC.

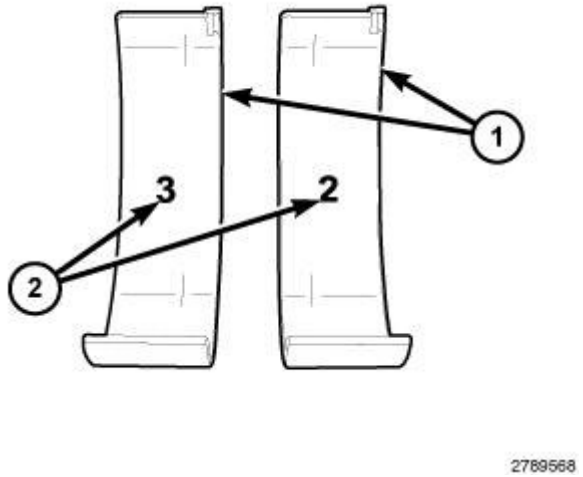

Fig. 405: Connecting Rod Bearing Shells & Bearing Size
Courtesy of CHRYSLER GROUP, LLC

The connecting rod bearings (1) are serviced in-vehicle. They must be replaced one-at-a-time in order to prevent the pistons from contacting the valves. The connecting rod bearings are "select fit" to achieve proper oil clearances. Refer to **BEARING(S), CONNECTING ROD, STANDARD PROCEDURE**.

1. Disconnect and isolate the negative battery cable.
2. Remove the spark plugs. Refer to **SPARK PLUG, REMOVAL** .
3. Remove the oil pan, oil pump pick-up and engine oil pump. Refer to **PUMP, ENGINE OIL, REMOVAL**.

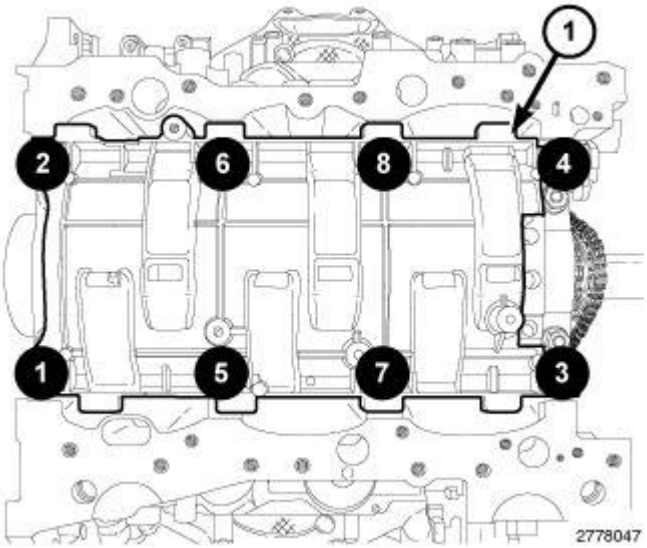

Fig. 406: Main Bearing Cap Bolts From Windage Tray Removal Sequence
Courtesy of CHRYSLER GROUP, LLC

4. Remove the eight main bearing cap bolts from the windage tray in the sequence shown in the illustration

and remove the windage tray (1).

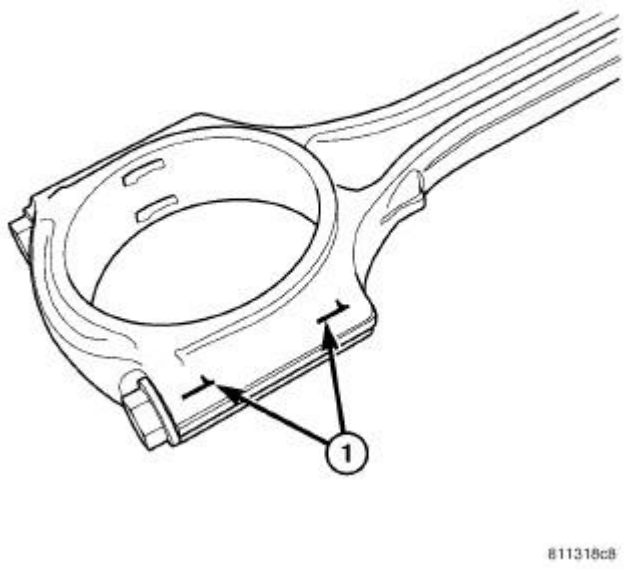

Fig. 407: Connecting Rod To Cylinder Identification
Courtesy of CHRYSLER GROUP, LLC

CAUTION: DO NOT use a number stamp or a punch to mark connecting rods or caps, as damage to connecting rods could occur

NOTE: Connecting rods and bearing caps are not interchangeable and should be marked before removing to ensure correct reassembly.

5. Mark connecting rod and bearing cap positions (1) using a permanent ink marker or scribe tool.

 © 2011 Mitchell Repair Information Company, LLC.

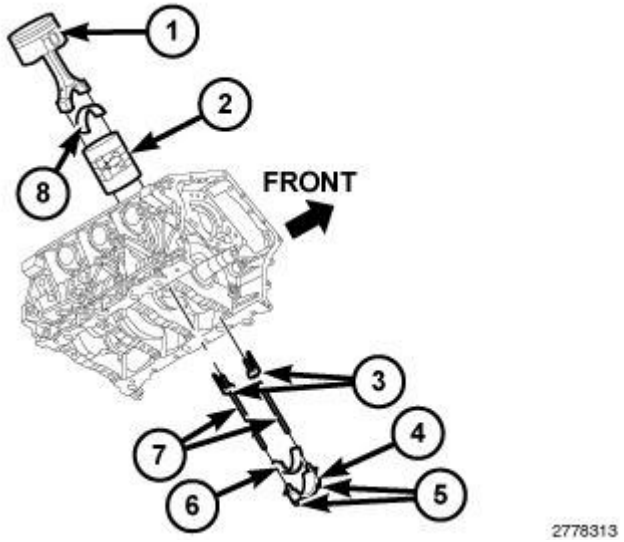

Fig. 408: Piston, Connecting Rod Cap, Bolts, Plastic Guide Plates & Guide Pins
Courtesy of CHRYSLER GROUP, LLC

NOTE: Typical V6 engine configuration shown in the illustration.

CAUTION: Replace only one connecting rod bearing at a time while all other connecting rod bearing caps remain properly tightened. If all connecting rod bearing caps are removed, crankshaft rotation will result in valve and/or piston damage.

CAUTION: Care must be taken not to damage the fractured rod and cap joint face surfaces, as engine damage may occur.

6. Remove the connecting rod cap bolts (5) and the connecting rod cap (4). Discard the cap bolts.
7. Remove the plastic guide plates (3) from the Guide Pins (special tool #8189, Guide Pins) (7) and install the Guide Pins to the connecting rod being removed.

CAUTION: Care must be taken not to nick crankshaft journals, as engine damage may occur.

8. Rotate the crankshaft away from the connecting rod and remove the bearing shell.
9. If required, select and fit new bearings to the connecting rod. Refer to **BEARING(S), CONNECTING ROD, STANDARD PROCEDURE**.
10. Install the bearing shell (8) on the connecting rod with the tang inserted into the machined groove in the rod. Lubricate the bearing surface with clean engine oil.
11. Rotate the crankshaft while guiding the connecting rod into position over the rod journal.

CAUTION: The connecting rod bolts must not be reused. Always replace the

 © 2011 Mitchell Repair Information Company, LLC.

connecting rod bolts whenever they are loosened or removed.

12. Install the bearing shell (6) on the connecting rod cap (4) with the tang inserted into the machined groove in the cap. Lubricate the bearing surface with clean engine oil.

NOTE: Do not lubricate the threads of the connecting rod cap bolts (5).

13. Install the connecting rod cap and bearing with the tang on the same side as the rod. Tighten the the **NEW** connecting rod cap bolts (5) to 20 N.m (15 ft. lbs.) plus 90°.
14. If required, check the connecting rod side clearance. Refer to ENGINE/ENGINE BLOCK/ROD, PISTON AND CONNECTING **STANDARD PROCEDURE** .
15. Repeat the previous steps for each connecting rod bearing being replaced.

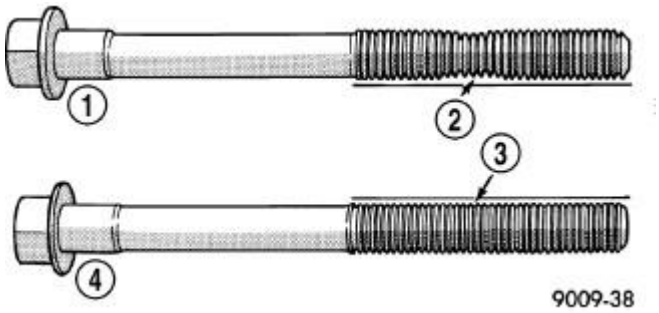

Fig. 409: Checking Cylinder Head Bolts For Stretching (Necking)
Courtesy of CHRYSLER GROUP, LLC

CAUTION: The main bearing cap bolts are tightened using a torque plus angle procedure. The bolts must be examined BEFORE reuse. If the threads are necked down the bolts must be replaced.

16. Check the main bearing cap bolts for necking by holding a scale or straight edge against the threads. If all the threads do not contact the scale (2) the bolt must be replaced.

 © 2011 Mitchell Repair Information Company, LLC.

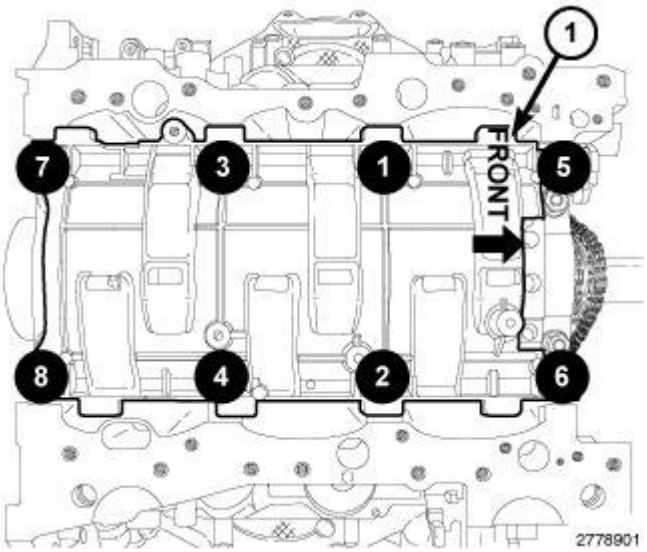

Fig. 410: Windage Tray With Main Bearing Cap Bolts Installation Sequence
Courtesy of CHRYSLER GROUP, LLC

17. Install the windage tray with eight main bearing cap bolts. Tighten the bolts in the sequence shown in the illustration to 21 N.m (16 ft. lbs.) plus 90°.
18. Install the engine oil pump, oil pump pick-up and oil pan. Refer to **PUMP, ENGINE OIL, INSTALLATION**.
19. Install the spark plugs and ignition coils. Refer to **SPARK PLUG, INSTALLATION** .
20. If removed, install the oil filter and fill the engine crankcase with the proper oil to the correct level. Refer to ENGINE/LUBRICATION/OIL **STANDARD PROCEDURE** .
21. Connect the negative battery cable and tighten nut to 5 N.m (45 in. lbs.).
22. Operate the engine until it reaches normal operating temperature.

BEARING(S), CRANKSHAFT, MAIN

STANDARD PROCEDURE

MAIN BEARING FITTING

NOTE: Crankshaft thrust washers are not selectable and are only available in a single thickness.

Bearing oil clearance can also be determined by using Plastigage or equivalent. Refer to ENGINE/ENGINE BLOCK **STANDARD PROCEDURE** .

 © 2011 Mitchell Repair Information Company, LLC.

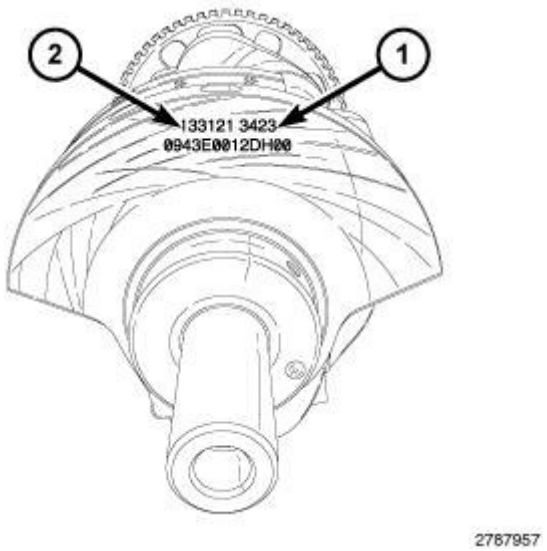

Fig. 411: Connecting Rod Bearing Journal Diameter Grade Markings
Courtesy of CHRYSLER GROUP, LLC

The upper and lower main bearings are "select fit" to achieve proper oil clearances. Crankshaft main bearing journal diameter grade markings (1) are stamped into the front crankshaft counterweight. These marks are read from left to right, corresponding with journal number 1, 2, 3, 4.

Crankshaft main bearing journal diameter grade markings correspond to specific journal diameters. The chart below identifies the five crankshaft grade markings and their associated journal diameters.

Crankshaft Marking	Journal Size mm (in.)
1	71.9870 - 71.9905 mm (2.8341 - 2.8343 in.)
2	71.9906 - 71.9941 mm (2.8343 - 2.8344 in.)
3	71.9942 - 71.9977 mm (2.8344 - 2.8345 in.)
4	71.9978 - 72.0013 mm (2.8346 - 2.8347 in.)
5	72.0014 - 72.0050 mm (2.8347 - 2.8348 in.)

 © 2011 Mitchell Repair Information Company, LLC.

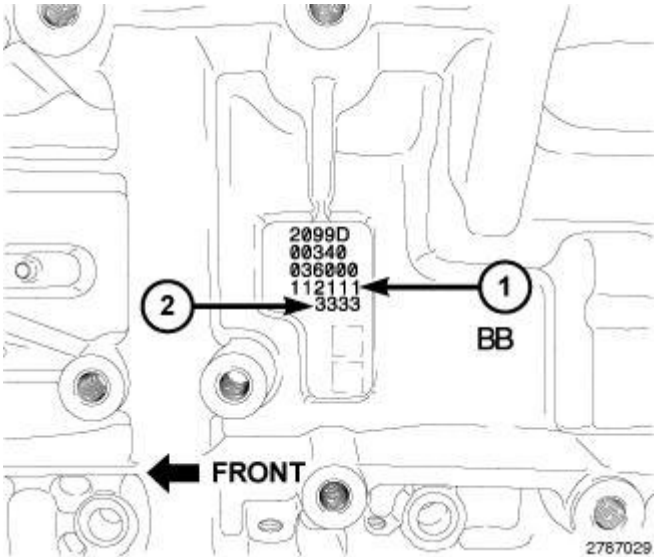

Fig. 412: Engine Block Main Bearing Journal Diameter Grade Markings
Courtesy of CHRYSLER GROUP, LLC

Engine block main bearing journal diameter grade markings (2) are stamped into the left side of the engine block. These marks are read from left to right, corresponding with journal number 1, 2, 3, 4.

Engine block main bearing journal grade markings correspond to specific journal diameters. The chart below identifies the five engine block grade markings and their associated journal diameters.

Engine Block Marking	Journal Size mm (in.)
1	77.0055 - 77.0090 mm (3.0317 - 3.0318 in.)
2	77.0019 - 77.0054 mm (3.0316 - 3.0317 in.)
3	76.9983 - 77.0018 mm (3.0314 - 3.0316 in.)
4	76.9947 - 76.9982 mm (3.0313 - 3.0314 in.)
5	76.9910 - 76.9946 mm (3.0311 - 3.0313 in.)

For upper and lower main bearing selection, obtain the grade identification marks from the crankshaft and engine block. Main bearings are available in five sizes. Upper and lower sizes can be mixed on a journal in order to achieve the desired oil clearance. The chart below identifies the five sizes available and how they should be selected based on crankshaft and engine block grade markings.

Engine Block Marking	Crankshaft Marking				
	1	**2**	**3**	**4**	**5**
1	1/1	1/2	2/2	2/3	3/3
2	1/2	2/2	2/3	3/3	3/4
3	2/2	2/3	3/3	3/4	4/4
4	2/3	3/3	3/4	4/4	4/5
5	3/3	3/4	4/4	4/5	5/5
UPPER/LOWER Main Bearings to Achieve 0.024 - 0.050 mm (0.0009 - 0.0020 in.) Oil Clearance					

 © 2011 Mitchell Repair Information Company, LLC.

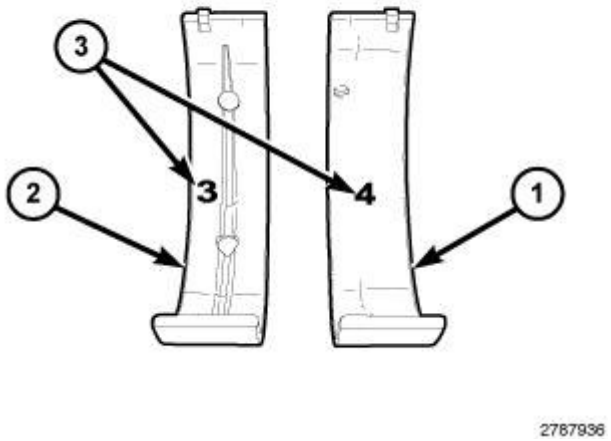

Fig. 413: Main Bearing Inserts
Courtesy of CHRYSLER GROUP, LLC

The upper main bearing shell (2) and lower main bearing shell (1) are marked with the bearing size (3) on the bearing lining surface. The upper and lower bearings are available in five different sizes and can be mixed on a journal in order to achieve the proper oil clearance.

Upper and lower main bearing shells are available in five sizes. The chart below identifies the five bearing sizes.

Bearing Marking	Size mm (in.)
1	2.4951 - 2.4987 mm (0.0982 - 0.0984 in.)
2	2.4915 - 2.4951 mm (0.0981 - 0.0982 in.)
3	2.4879 - 2.4915 mm (0.0979 - 0.0981 in.)
4	2.4843 - 2.4879 mm (0.0978 - 0.0979 in.)
5	2.4807 - 2.4843 mm (0.0977 - 0.0978 in.)

MAIN BEARING REPLACEMENT

 © 2011 Mitchell Repair Information Company, LLC.

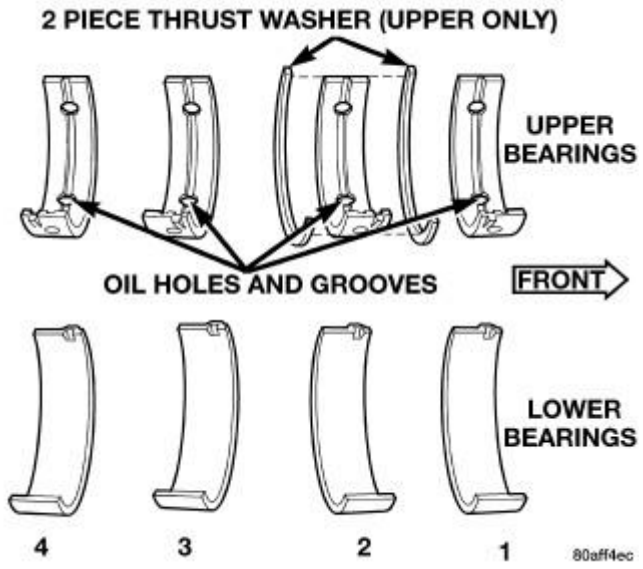

Fig. 414: Main Bearing Identification
Courtesy of CHRYSLER GROUP, LLC

The main bearings are serviced in-vehicle. They must be replaced one-at-a-time in order to properly support the crankshaft. The upper and lower main bearing shells are NOT interchangeable. The upper and lower main bearings are "select fit" to achieve proper oil clearances. Refer to ENGINE/ENGINE BLOCK/BEARING(S) **STANDARD PROCEDURE** .

1. Disconnect and isolate the negative battery cable.
2. Remove the spark plugs. Refer to **SPARK PLUG, REMOVAL** .
3. Remove the oil pan, oil pump pick-up and engine oil pump. Refer to **PUMP, ENGINE OIL, REMOVAL**.

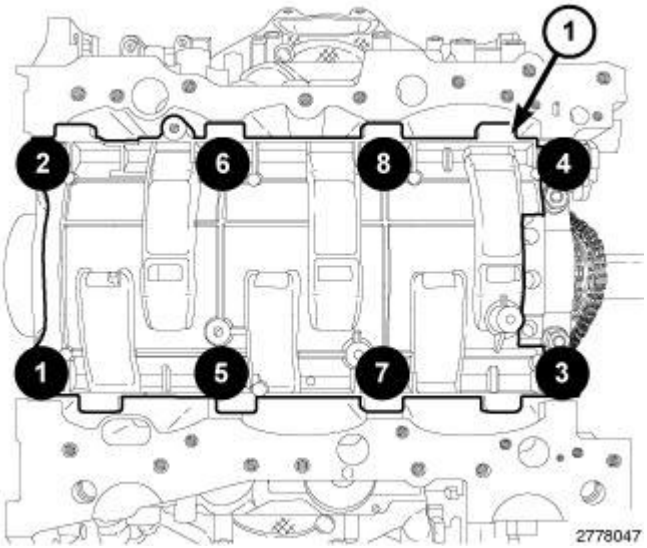

Fig. 415: Main Bearing Cap Bolts From Windage Tray Removal Sequence
Courtesy of CHRYSLER GROUP, LLC

4. Remove the eight main bearing cap bolts from the windage tray in the sequence shown in the illustration and remove the windage tray (1).

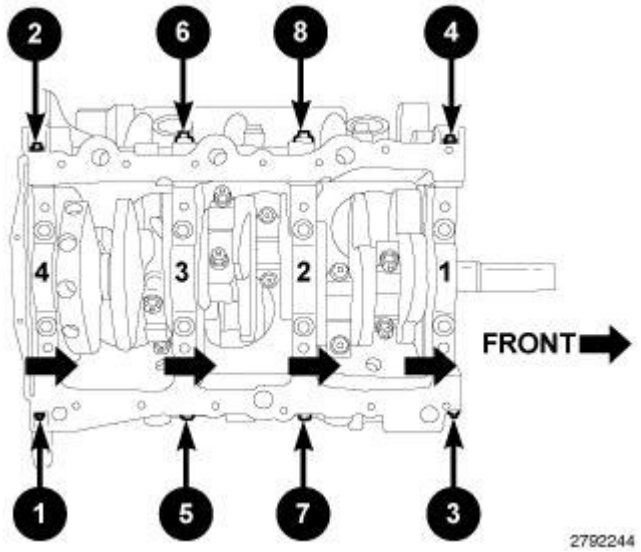

Fig. 416: Main Bearing Tie Bolts Removal Sequence
Courtesy of CHRYSLER GROUP, LLC

NOTE: Typical V6 engine configuration shown in the illustration.

5. Remove the eight main bearing tie bolts in the sequence shown in the illustration.

CAUTION: DO NOT use a number stamp or a punch to mark main bearing caps, as damage to main bearings could occur.

NOTE: Main bearing caps are not interchangeable and are marked to insure correct assembly.

6. Mark the main bearing cap positions using a permanent ink marker or a scribe tool.

 © 2011 Mitchell Repair Information Company, LLC.

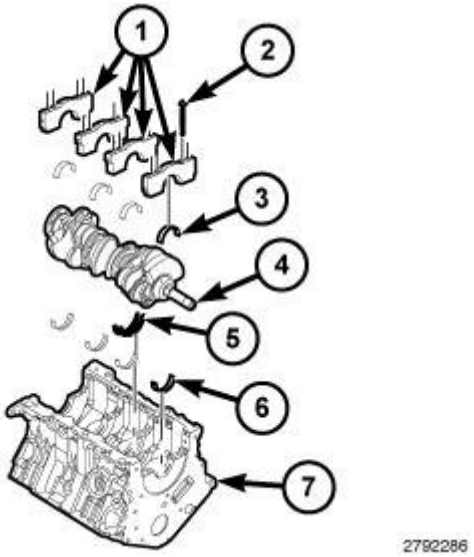

Fig. 417: Main Bearing Caps, Bolts, Crankshaft & Engine Block
Courtesy of CHRYSLER GROUP, LLC

NOTE: Typical V6 engine configuration shown in the illustration.

CAUTION: Replace only one main bearing at a time while all other main bearing caps remain properly tightened. If all main bearing caps are removed, the weight of the unsupported crankshaft will damage the crankshaft oil seals.

NOTE: Replace the main bearings in the following order; 2, 3, 1, 4.

7. Remove the two cap bolts (2) and remove the main bearing cap (1).
8. When removing the No. 2 bearing cap, also remove the thrust washers (5).
9. Slide the upper main bearing half (6) out from between the crankshaft and the engine block.
10. If required, select fit new main bearings to the engine block. Refer to ENGINE/ENGINE BLOCK/BEARING(S) **STANDARD PROCEDURE** .
11. Lubricate the upper main bearing half (6) with clean engine oil and slide the bearing into position.

 © 2011 Mitchell Repair Information Company, LLC.

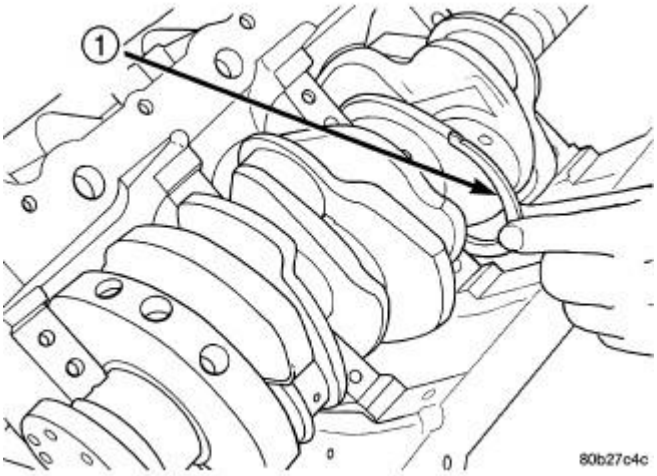

Fig. 418: Thrust Washer Installation
Courtesy of CHRYSLER GROUP, LLC

NOTE: Typical V6 engine configuration shown in the illustration.

12. When installing thrust washers (1) at the No. 2 main bearing location, use the following procedure:
    a. Move the crankshaft forward to the limit of travel. Lubricate and install the front thrust washer (1) by rolling the washer onto the machined shelf between the No. 2 upper main bulk head and crankshaft thrust surface.
    b. Move the crankshaft rearward to the limit of travel. Lubricate and install the rear thrust washer by rolling the washer onto the machined shelf between the No. 2 upper main bulk head and crankshaft thrust surface.

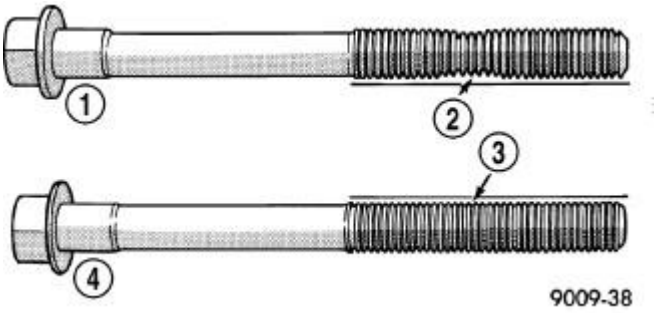

Fig. 419: Checking Cylinder Head Bolts For Stretching (Necking)
Courtesy of CHRYSLER GROUP, LLC

CAUTION: The main bearing cap bolts are tightened using a torque plus angle procedure. The bolts must be examined BEFORE reuse. If the threads are necked down the bolts must be replaced.

13. Check the main bearing cap bolts for necking by holding a scale or straight edge against the threads. If all the threads do not contact the scale (2) the bolt must be replaced.

 © 2011 Mitchell Repair Information Company, LLC.

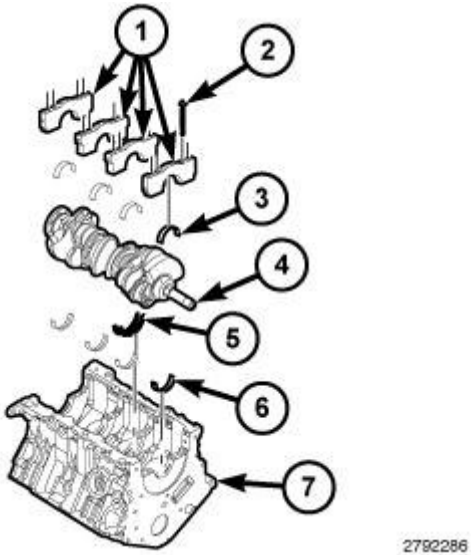

Fig. 420: Main Bearing Caps, Bolts, Crankshaft & Engine Block
Courtesy of CHRYSLER GROUP, LLC

NOTE: Typical V6 engine configuration shown in the illustration.

14. Lubricate and install the lower bearing half (3) onto the main cap (1).
15. Install the main bearing cap (1) with two inner main bearing cap bolts (2) tightened to 20 N.m (15 ft. lbs.) plus 90°.
16. Repeat the previous steps for main bearings 3, 1 and 4.
17. Measure crankshaft end play. Refer to **CRANKSHAFT, STANDARD PROCEDURE**.

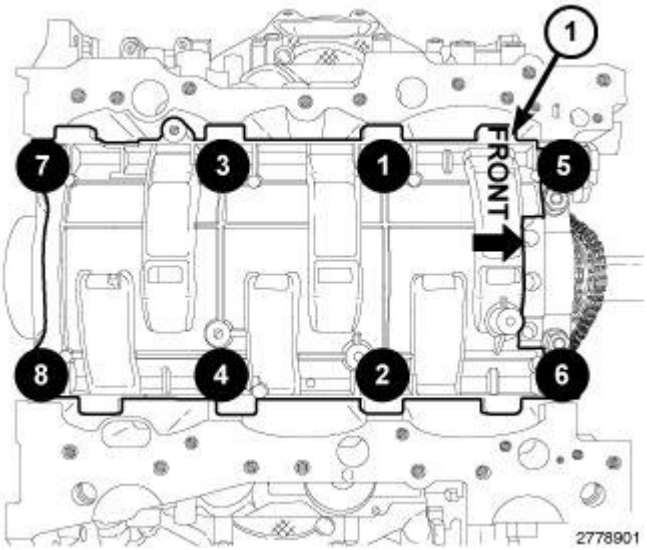

Fig. 421: Windage Tray With Main Bearing Cap Bolts Installation Sequence
Courtesy of CHRYSLER GROUP, LLC

18. Install the windage tray with eight main bearing cap bolts. Tighten the bolts in the sequence shown in the

 © 2011 Mitchell Repair Information Company, LLC.

illustration to 21 N.m (16 ft. lbs.) plus 90°.

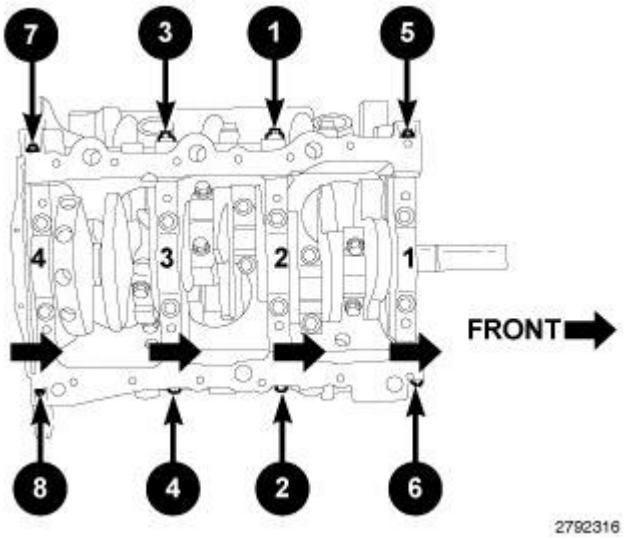

Fig. 422: Main Bearing Tie Bolts Installation Sequence
Courtesy of CHRYSLER GROUP, LLC

NOTE: Typical V6 engine configuration shown in the illustration.

19. Install the eight main bearing tie bolts. Tighten the bolts in the sequence shown in the illustration to 28 N.m (21 ft. lbs.).
20. Install the engine oil pump, oil pump pick-up and oil pan. Refer to **PUMP, ENGINE OIL, INSTALLATION**.
21. Install the spark plugs and ignition coils. Refer to **SPARK PLUG, INSTALLATION** .
22. If removed, install the oil filter and fill the engine crankcase with the proper oil to the correct level. Refer to ENGINE/LUBRICATION/OIL **STANDARD PROCEDURE** .
23. Connect the negative battery cable and tighten nut to 5 N.m (45 in. lbs.).
24. Operate the engine until it reaches normal operating temperature.

CRANKSHAFT

DESCRIPTION

DESCRIPTION

 © 2011 Mitchell Repair Information Company, LLC.

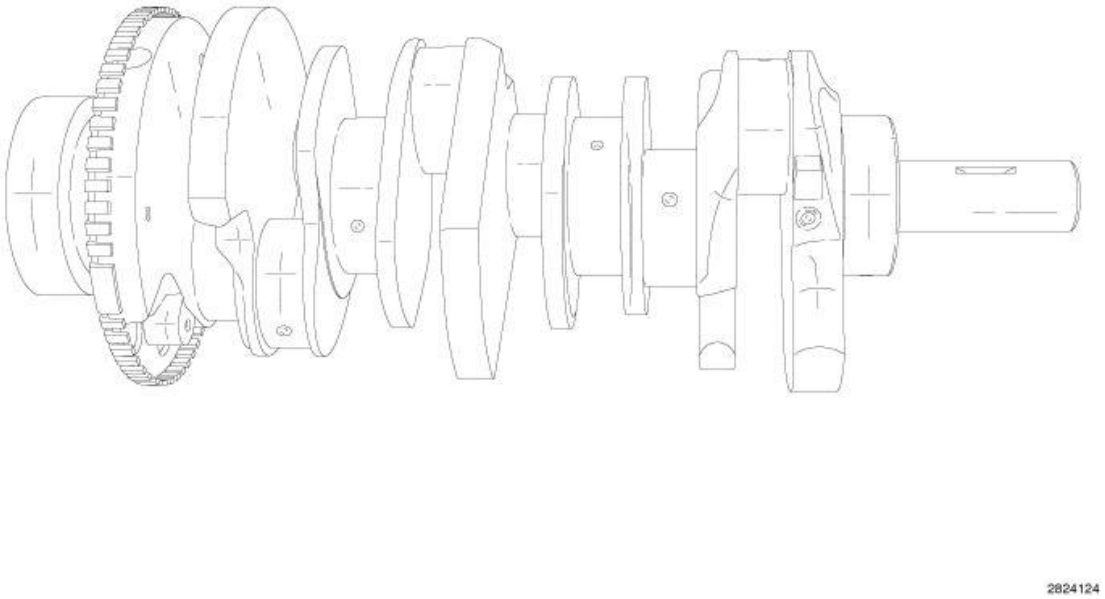

Fig. 423: Crankshaft
Courtesy of CHRYSLER GROUP, LLC

The crankshaft is a cast design and is constructed using ductile iron. The crankshaft is a three throw split pin design with counterweights for balancing purposes. The main journals are crossed drilled for rod bearing lubrication. The crankshaft is supported by four select fit main bearings with number 2 serving as the thrust washer location. The rear counterweight has provisions for crankshaft position sensor target wheel mounting. Both the front and rear seals are a single piece design and are mounted to the timing cover and cylinder block.

STANDARD PROCEDURE

STANDARD PROCEDURE - END PLAY

 © 2011 Mitchell Repair Information Company, LLC.

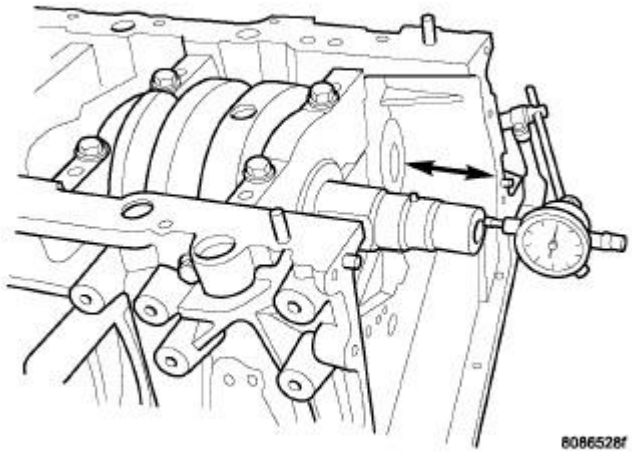

Fig. 424: Checking Crankshaft End Play
Courtesy of CHRYSLER GROUP, LLC

NOTE: Typical V6 engine shown in the illustration.

1. Mount Dial Indicator Set (special tool #C-3339A, Set, Dial Indicator) to a stationary point at the front of the engine. Locate the probe perpendicular against the nose of the crankshaft.
2. Move the crankshaft all the way to the rear of its travel.
3. Zero the dial indicator.
4. Move the crankshaft forward to the limit of travel and read the dial indicator. Compare the measured end play to the specification. Refer to ENGINE **SPECIFICATIONS** .

NOTE: Crankshaft thrust washers are not selectable and are only available in a single thickness.

REMOVAL

REMOVAL

 © 2011 Mitchell Repair Information Company, LLC.

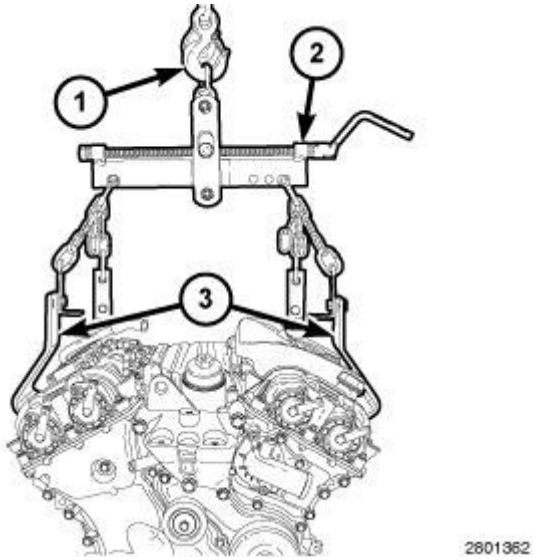

Fig. 425: Lifting Sling, Engine Lifting Brackets & Engine Hoist
Courtesy of CHRYSLER GROUP, LLC

NOTE: To remove the crankshaft from the engine, the engine must be removed from the vehicle.

1. Remove the engine. Refer to **REMOVAL**.
2. Remove the cylinder head covers, spark plugs, upper oil pan, engine timing cover, timing chain and sprockets. Refer to **CHAIN AND SPROCKETS, TIMING, REMOVAL**.
3. Remove the flexplate and the rear crankshaft oil seal. Refer to **SEAL, CRANKSHAFT OIL, REAR, REMOVAL**.
4. Remove the oil pump pick-up and engine oil pump. Refer to **PUMP, ENGINE OIL, REMOVAL**.

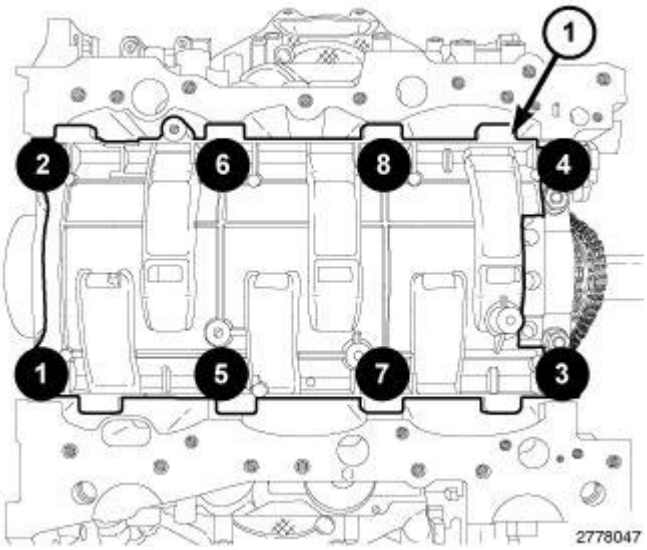

Fig. 426: Main Bearing Cap Bolts From Windage Tray Removal Sequence
Courtesy of CHRYSLER GROUP, LLC

5. Remove the eight main bearing cap bolts from the windage tray in the sequence shown in the illustration and remove the windage tray (1).

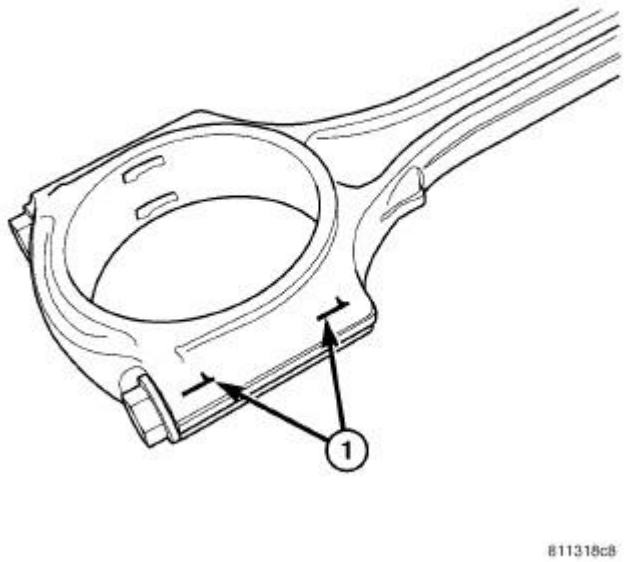

Fig. 427: Connecting Rod To Cylinder Identification
Courtesy of CHRYSLER GROUP, LLC

CAUTION: DO NOT use a number stamp or a punch to mark connecting rods or caps, as damage to connecting rods could occur

NOTE: Connecting rods and bearing caps are not interchangeable and should be marked before removing to ensure correct reassembly.

6. Mark connecting rod and bearing cap positions (1) using a permanent ink marker or scribe tool.

 © 2011 Mitchell Repair Information Company, LLC.

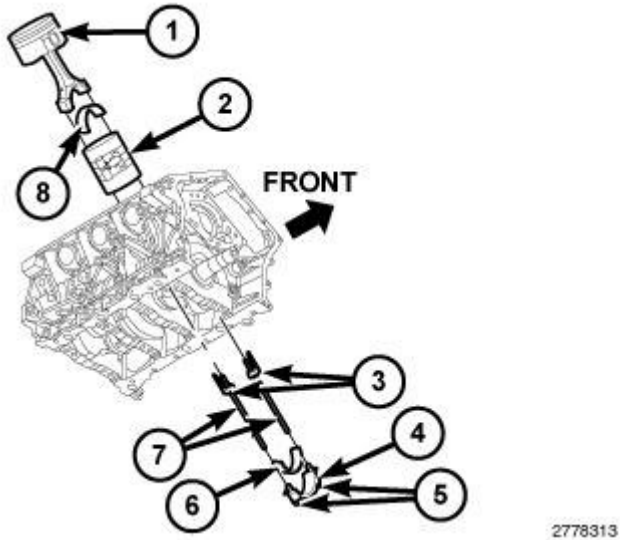

Fig. 428: Piston, Connecting Rod Cap, Bolts, Plastic Guide Plates & Guide Pins
Courtesy of CHRYSLER GROUP, LLC

NOTE: Typical V6 engine configuration shown in the illustration.

CAUTION: Care must be taken not to damage the fractured rod and cap joint face surfaces, as engine damage may occur.

7. Remove the connecting rod cap bolts (5) and the connecting rod caps (4). Discard the cap bolts.

CAUTION: Care must be taken not to nick crankshaft journals, as engine damage may occur.

8. Remove the plastic guide plates (3) from the Guide Pins (special tool #8189, Guide Pins) (7) and install the Guide Pins to the connecting rod.

CAUTION: Avoid contact with the piston oil cooler jet(s). Positioning of the oil cooler jet(s) is critical for proper engine operation.

9. Push the connecting rod and piston into the cylinder until the connecting rod is clear of the crankshaft journal. Remove the guide pins. Repeat this procedure at each cylinder until all of the connecting rods are clear of the crankshaft.

 © 2011 Mitchell Repair Information Company, LLC.

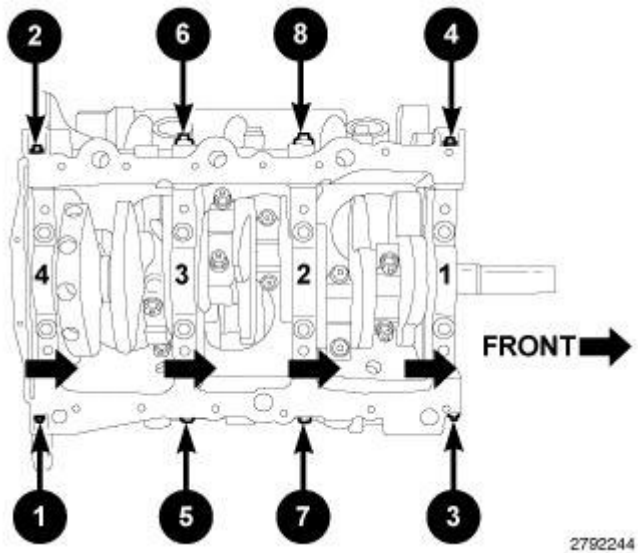

Fig. 429: Main Bearing Tie Bolts Removal Sequence
Courtesy of CHRYSLER GROUP, LLC

NOTE: Typical V6 engine configuration shown in the illustration.

Remove the main bearing cross bolts in the sequence shown in the illustration.

CAUTION: DO NOT use a number stamp or a punch to mark main bearing caps, as damage to main bearings could occur.

NOTE: Main bearing caps are not interchangeable and are marked to insure correct assembly.

10. Mark the main bearing cap positions using a permanent ink marker or a scribe tool.

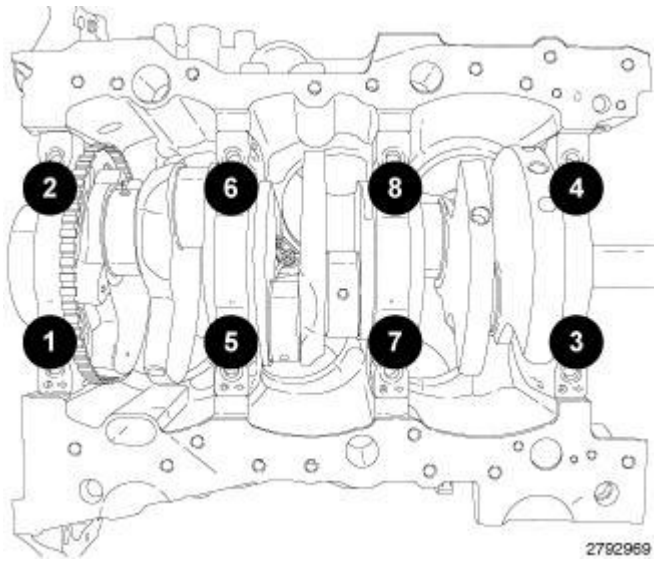

Fig. 430: Main Bearing Cap Bolts Removal Sequence
Courtesy of CHRYSLER GROUP, LLC

11. Remove the eight main bearing cap bolts in the sequence shown in the illustration and remove the main bearing caps.

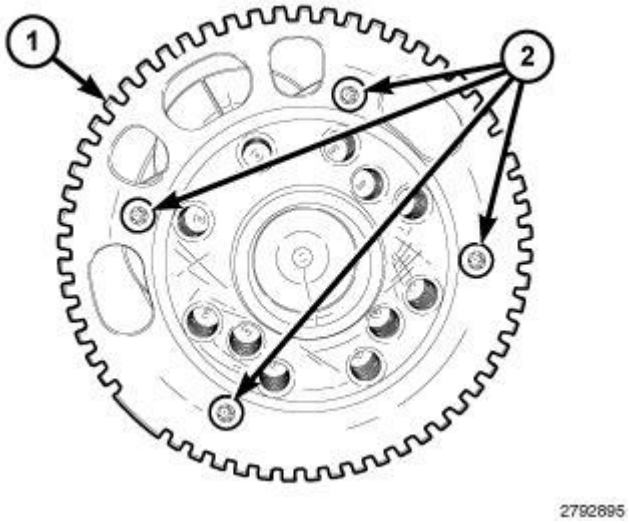

Fig. 431: Target Wheel & Bolts
Courtesy of CHRYSLER GROUP, LLC

CAUTION: Do not rest the crankshaft on the target wheel (1). Damaged or bent target wheel teeth will destroy the target wheels ability to correctly relay crankshaft position to the crankshaft position sensor.

12. Remove the crankshaft from the engine block.
13. If required, remove the four bolts (2) and the target wheel (1). Discard the four bolts.

INSPECTION

INSPECTION

 © 2011 Mitchell Repair Information Company, LLC.

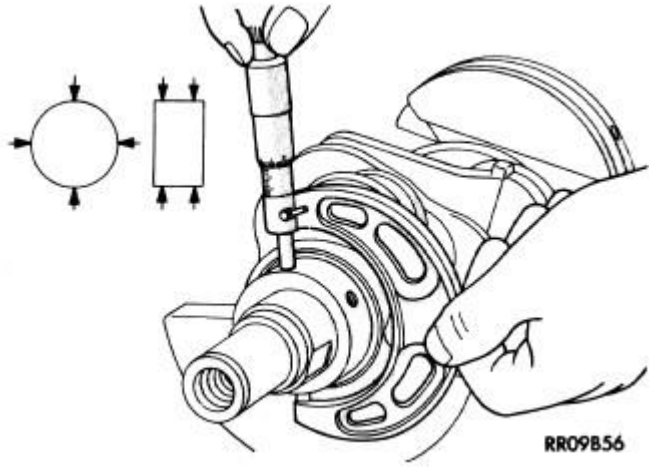

Fig. 432: Measuring Crankshaft Journal
Courtesy of CHRYSLER GROUP, LLC

NOTE: Typical crankshaft journal measurements shown in the illustration.

1. Clean the oil off the bearing journals.
2. Determine the maximum diameter of the journals with a micrometer. Measure at two locations 90° apart at each end of the journals.
3. Compare the measured rod journal diameter to the crankshaft connecting rod bearing journal diameter grade marking chart Select the bearing size that corresponds to the crankshaft markings for each rod bearing journal that will provide the proper oil clearance. Refer to **BEARING(S), CONNECTING ROD, STANDARD PROCEDURE**.
4. Compare the measured main bearing journal diameter to the crankshaft main bearing journal diameter grade marking chart Obtain the main bearing journal grade identification marks from the engine block and select the upper and lower main bearing sizes that will provide the proper oil clearance. Refer to ENGINE/ENGINE BLOCK/BEARING(S) **STANDARD PROCEDURE** .
5. For connecting rod journals, verify that the maximum taper and maximum out of round are within specifications. Refer to ENGINE **SPECIFICATIONS** .
6. For main bearing journals, verify that the maximum taper and maximum out of round are within specifications. Refer to ENGINE **SPECIFICATIONS** .

INSTALLATION

INSTALLATION

 © 2011 Mitchell Repair Information Company, LLC.

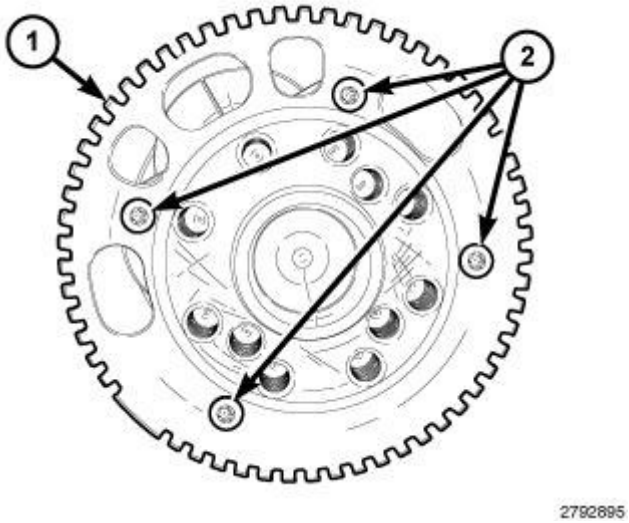

Fig. 433: Target Wheel & Bolts
Courtesy of CHRYSLER GROUP, LLC

1. If required, select and fit new crankshaft main bearings to the engine block. Refer to ENGINE/ENGINE BLOCK/BEARING(S) **STANDARD PROCEDURE** .
2. If required, select and fit new bearings to the connecting rod. Refer to **BEARING(S), CONNECTING ROD, STANDARD PROCEDURE**.
3. If removed, install the target wheel (1) to the crankshaft with four new bolts (2). Ensure the threaded holes in the crankshaft are free of residual thread lock adhesive. Tighten the bolts to 10 N.m (89 in. lbs.).

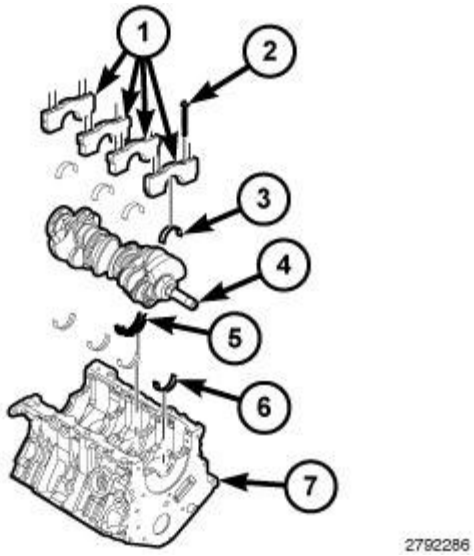

Fig. 434: Main Bearing Caps, Bolts, Crankshaft & Engine Block
Courtesy of CHRYSLER GROUP, LLC

NOTE: Typical V6 engine configuration shown in the illustration.

4. If removed, lubricate and install the upper main bearing halves (6) into the engine block (7).

 © 2011 Mitchell Repair Information Company, LLC.

CAUTION: When installing the crankshaft, use care not to damage bearing surfaces on the crankshaft.

5. Install the crankshaft (4) into the engine block (7).

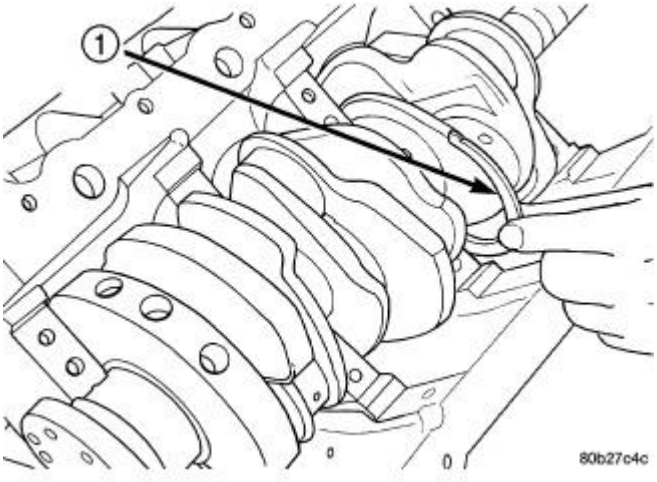

Fig. 435: Thrust Washer Installation
Courtesy of CHRYSLER GROUP, LLC

NOTE: Typical V6 engine configuration shown in the illustration.

6. Installing thrust washers (1) at the No. 2 main bearing location, using the following procedure:
   a. Move the crankshaft forward to the limit of travel. Lubricate and install the front thrust washer (1) by rolling the washer onto the machined shelf between the No. 2 upper main bulk head and crankshaft thrust surface.
   b. Move the crankshaft rearward to the limit of travel. Lubricate and install the rear thrust washer by rolling the washer onto the machined shelf between the No. 2 upper main bulk head and crankshaft thrust surface.

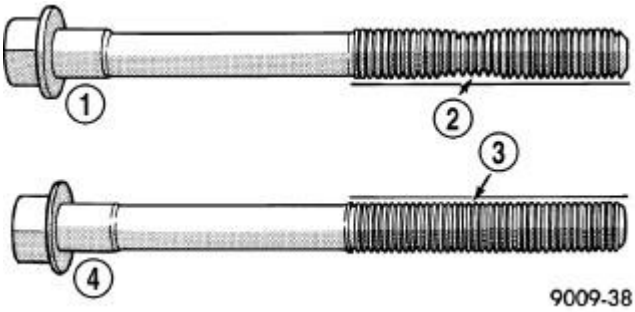

Fig. 436: Checking Cylinder Head Bolts For Stretching (Necking)
Courtesy of CHRYSLER GROUP, LLC

CAUTION: The main bearing cap bolts are tightened using a torque plus angle

 © 2011 Mitchell Repair Information Company, LLC.

procedure. The bolts must be examined BEFORE reuse. If the threads are necked down the bolts must be replaced.

7. Check the main bearing cap bolts for necking by holding a scale or straight edge against the threads. If all the threads do not contact the scale (2) the bolt must be replaced.

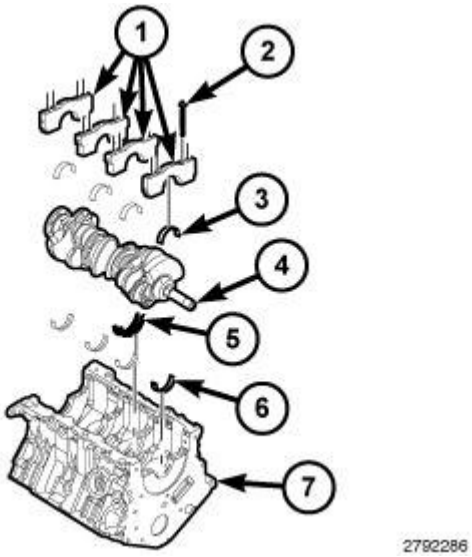

Fig. 437: Main Bearing Caps, Bolts, Crankshaft & Engine Block
Courtesy of CHRYSLER GROUP, LLC

NOTE: Typical V6 engine configuration shown in the illustration.

8. If removed, lubricate and install the lower main bearing halves (3) onto the main caps (1).
9. Install the main bearing caps (1) with two inner main bearing cap bolts (2).

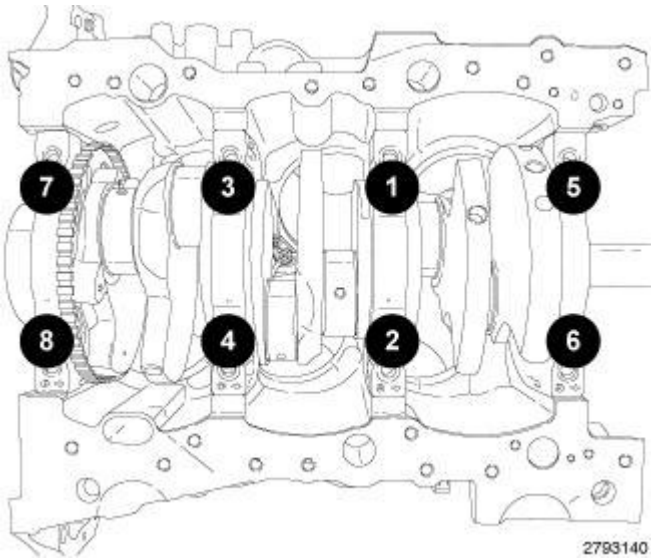

Fig. 438: Inner Main Bearing Cap Bolts Tightening Sequence

 © 2011 Mitchell Repair Information Company, LLC.

Courtesy of CHRYSLER GROUP, LLC

10. Tighten the inner main bearing cap bolts in the sequence shown in the illustration to 20 N.m (15 ft. lbs.) plus 90°.
11. Measure crankshaft end play. Refer to **CRANKSHAFT, STANDARD PROCEDURE**.

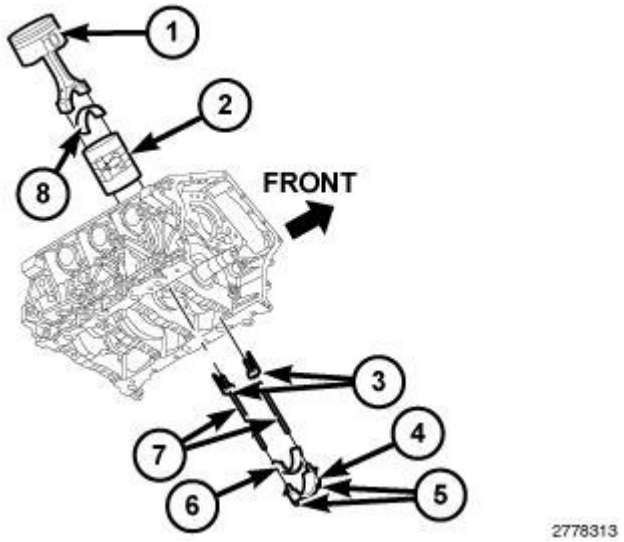

Fig. 439: Piston, Connecting Rod Cap, Bolts, Plastic Guide Plates & Guide Pins
Courtesy of CHRYSLER GROUP, LLC

NOTE: Typical V6 engine configuration shown in the illustration.

12. If removed, install the bearing shell (8) on the connecting rod with the tang inserted into the machined groove in the rod. Lubricate the bearing surface with clean engine oil.

CAUTION: Care must be taken not to nick crankshaft journals, as engine damage may occur.

13. Remove the plastic guide plates (3) from the Guide Pins (special tool #8189, Guide Pins) (7) and install the Guide Pins to the connecting rod.

CAUTION: Avoid contact with the piston oil cooler jet(s). Positioning of the oil cooler jet(s) is critical for proper engine operation.

14. Pull the connecting rod and piston toward the crankshaft until the connecting rod is seated on the crankshaft journal. Remove the guide pins.

CAUTION: The connecting rod bolts must not be reused. Always replace the connecting rod bolts whenever they are loosened or removed.

 © 2011 Mitchell Repair Information Company, LLC.

15. If removed, install the bearing shell (6) on the connecting rod cap (4) with the tang inserted into the machined groove in the cap. Lubricate the bearing surface with clean engine oil.

NOTE: Do not lubricate the threads of the connecting rod cap bolts (5).

16. Install the connecting rod cap and bearing with the tang on the same side as the rod. Tighten the the **NEW** connecting rod cap bolts (5) to 20 N.m (15 ft. lbs.) plus 90°.
17. If required, check the connecting rod side clearance. Refer to ENGINE/ENGINE BLOCK/ROD, PISTON AND CONNECTING **STANDARD PROCEDURE** .
18. Repeat the previous steps for the remaining connecting rods.

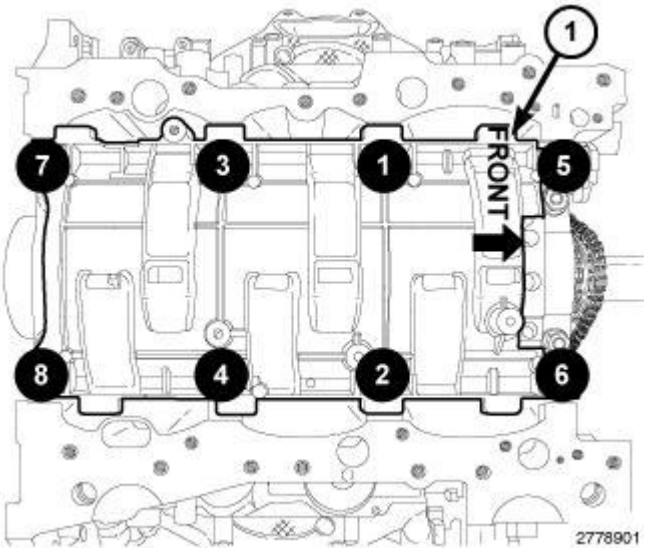

Fig. 440: Windage Tray With Main Bearing Cap Bolts Installation Sequence
Courtesy of CHRYSLER GROUP, LLC

19. Install the windage tray (1) with eight main bearing cap bolts. Tighten the bolts in the sequence shown in the illustration to 21 N.m (16 ft. lbs.) plus 90°.

 © 2011 Mitchell Repair Information Company, LLC.

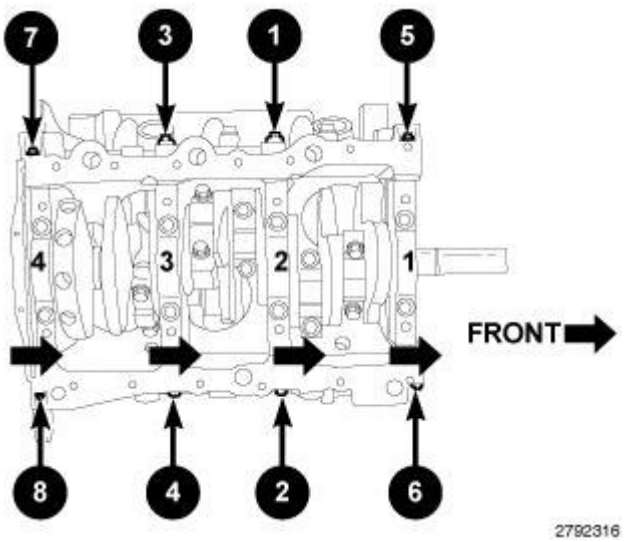

Fig. 441: Main Bearing Tie Bolts Installation Sequence
Courtesy of CHRYSLER GROUP, LLC

NOTE: Typical V6 engine configuration shown in the illustration.

20. Install the eight main bearing tie bolts. Tighten the bolts in the sequence shown in the illustration to 28 N.m (21 ft. lbs.).
21. Install the engine oil pump and oil pump pick-up. Refer to **PUMP, ENGINE OIL, INSTALLATION**.
22. Install the rear crankshaft oil seal and flexplate. Refer to **SEAL, CRANKSHAFT OIL, REAR, INSTALLATION**.
23. Install the timing chain and sprockets, engine timing cover, oil pans, spark plugs and cylinder head covers. Refer to **CHAIN AND SPROCKETS, TIMING, INSTALLATION**.

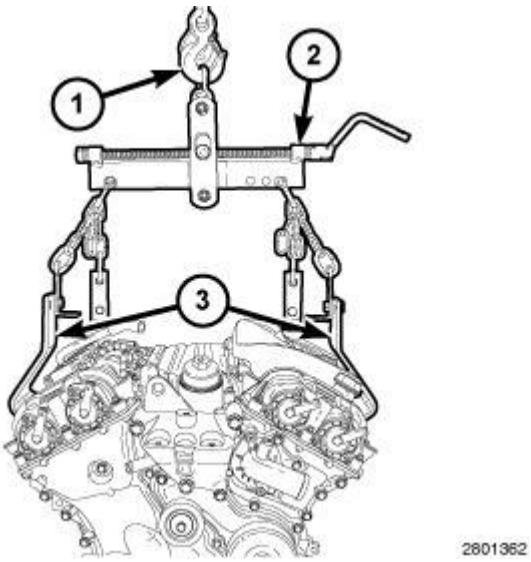

Fig. 442: Lifting Sling, Engine Lifting Brackets & Engine Hoist
Courtesy of CHRYSLER GROUP, LLC

 © 2011 Mitchell Repair Information Company, LLC.

24. Install the engine. Refer to **INSTALLATION**.
25. If removed, install the oil filter and fill the engine crankcase with the proper oil to the correct level. Refer to ENGINE/LUBRICATION/OIL **STANDARD PROCEDURE** .
26. Connect the negative battery cable and tighten nut to 5 N.m (45 in. lbs.).
27. Fill the cooling system. Refer to **STANDARD PROCEDURE** .
28. Operate the engine until it reaches normal operating temperature. Check cooling system for correct fluid level. Refer to **STANDARD PROCEDURE** .

NOTE: The Cam/Crank Variation Relearn procedure must be performed using the scan tool anytime there has been a repair/replacement made to a powertrain system, for example: flywheel, valvetrain, camshaft and/or crankshaft sensors or components.

DAMPER, VIBRATION

REMOVAL

REMOVAL

1. Remove the accessory drive belt. Refer to **BELT, SERPENTINE, REMOVAL** .

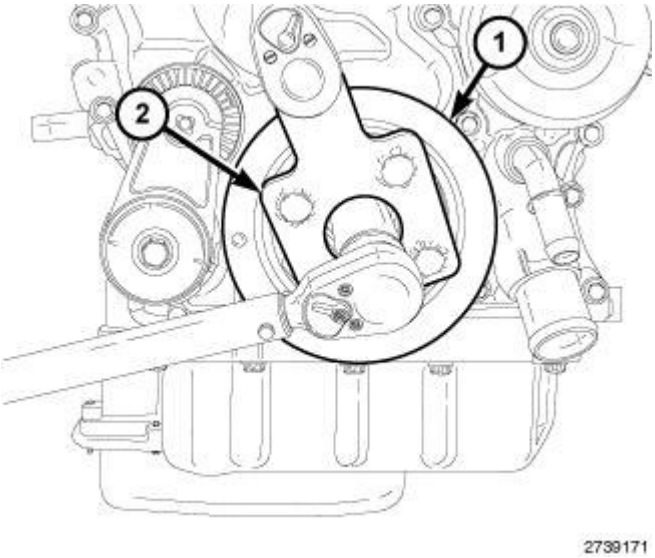

Fig. 443: Crankshaft Vibration Damper & Vibration Damper Holder
Courtesy of CHRYSLER GROUP, LLC

NOTE: A force greater than 350 N.m (260 ft. lbs.) may be required to remove the crankshaft vibration damper bolt.

2. Hold the crankshaft vibration damper (1) with Vibration Damper Holder (special tool #10198, Holder, Vibration Damper) (2) and remove the crankshaft vibration damper bolt.
3. Pull the crankshaft vibration damper (1) off of the crankshaft.

 © 2011 Mitchell Repair Information Company, LLC.

INSTALLATION

INSTALLATION

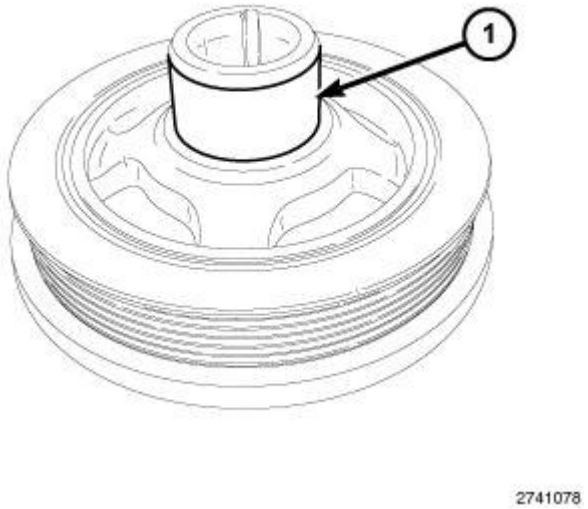

Fig. 444: Front Crankshaft Seal Surface
Courtesy of CHRYSLER GROUP, LLC

1. Apply a light coating of engine oil to the front crankshaft seal surface (1).

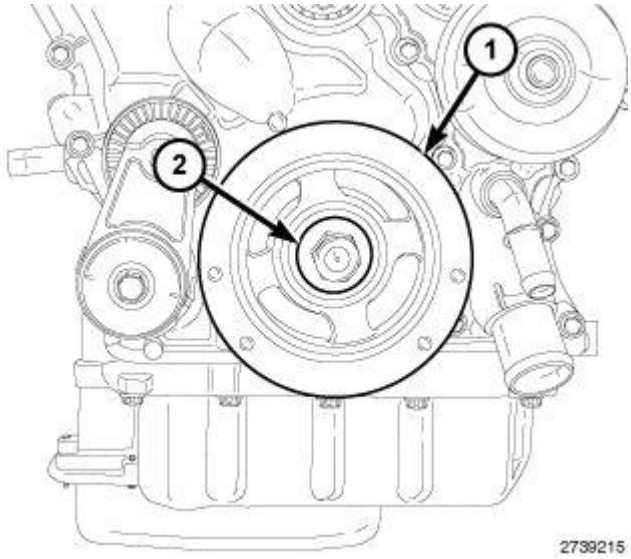

Fig. 445: Crankshaft Vibration Damper & Bolt
Courtesy of CHRYSLER GROUP, LLC

2. Align the crankshaft vibration damper (1) to the flywheel key on the crankshaft and install the damper. Seat the damper on the crankshaft sprocket.
3. Install and hand tighten the crankshaft vibration damper bolt (2).

 © 2011 Mitchell Repair Information Company, LLC.

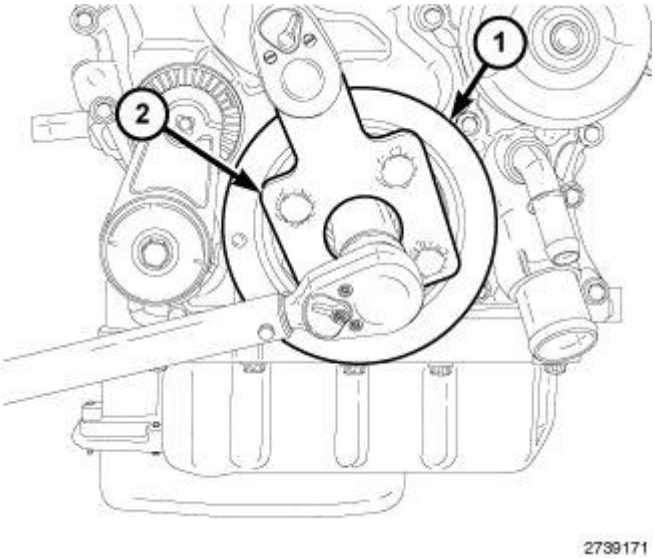

Fig. 446: Crankshaft Vibration Damper & Vibration Damper Holder
Courtesy of CHRYSLER GROUP, LLC

4. Hold the crankshaft vibration damper (1) with Vibration Damper Holder (special tool #10198, Holder, Vibration Damper) (2) and tighten the crankshaft vibration damper bolt to 40 N.m + 105° (30 ft. lbs. + 105°).
5. Install the accessory drive belt. Refer to **BELT, SERPENTINE, INSTALLATION** .

FLEXPLATE

REMOVAL

REMOVAL

1. Remove the transmission.

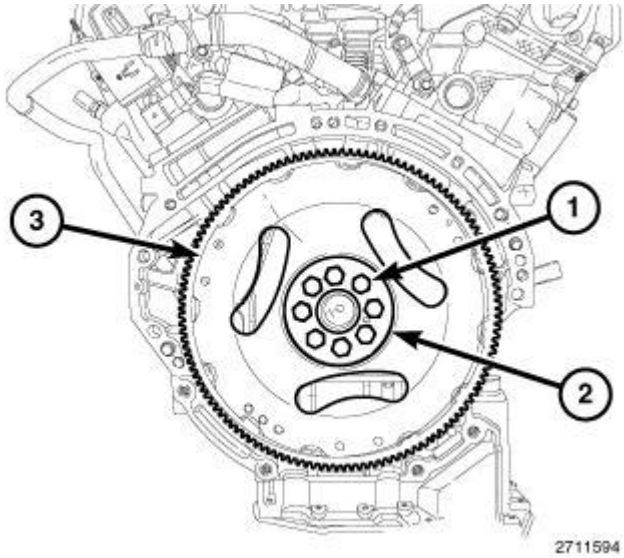

 © 2011 Mitchell Repair Information Company, LLC.

Fig. 447: Flexplate, Spacer Plate & Bolts
Courtesy of CHRYSLER GROUP, LLC

2. Remove the bolts (1) and the spacer plate (2).
3. Remove the flexplate (3).

INSTALLATION

INSTALLATION

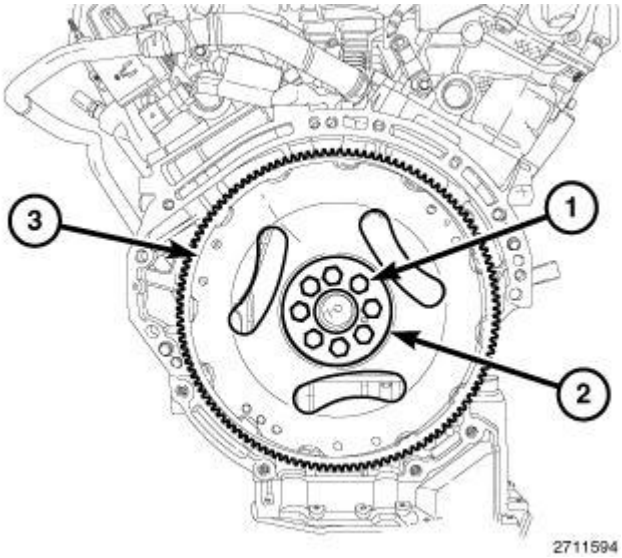

Fig. 448: Flexplate, Spacer Plate & Bolts
Courtesy of CHRYSLER GROUP, LLC

1. Position the flexplate (3) onto the crankshaft.
2. Install the spacer (2) and the bolts (1) hand tight.
3. Tighten the flexplate retaining bolts (1) to 95 N.m (70 ft. lbs.) in a criss-cross pattern.
4. Install the transmission.

RING(S), PISTON

STANDARD PROCEDURE

STANDARD PROCEDURE - PISTON RING FITTING

1. Wipe the cylinder bore clean.
2. Using a piston, to ensure that the ring is squared in the cylinder bore, slide the ring downward into the cylinder to a position 12 mm (0.50 in.) from the bottom of the cylinder bore.

 © 2011 Mitchell Repair Information Company, LLC.

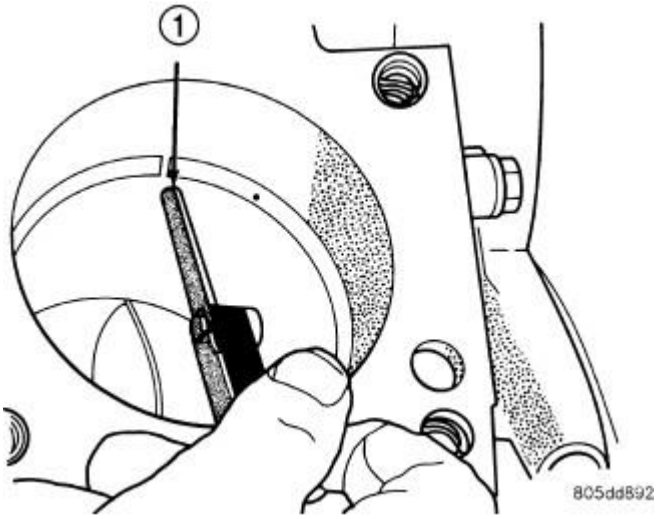

Fig. 449: Measuring Piston Ring End Gap
Courtesy of CHRYSLER GROUP, LLC

3. Using a feeler gauge (1), check the ring end gap. Replace any rings not within specification.

Ring Position	Ring End Gap
No. 1 (top) Ring	0.25 - 0.40 mm (0.010 - 0.016 in.)
No. 2 (center) Ring	0.30 - 0.45 mm (0.012 - 0.018 in.)
Oil Control Ring (Steel Rail)	0.15 - 0.66 mm (0.006- 0.26 in.)

4. Clean the piston ring grooves. Remove any nicks or burrs.

 © 2011 Mitchell Repair Information Company, LLC.

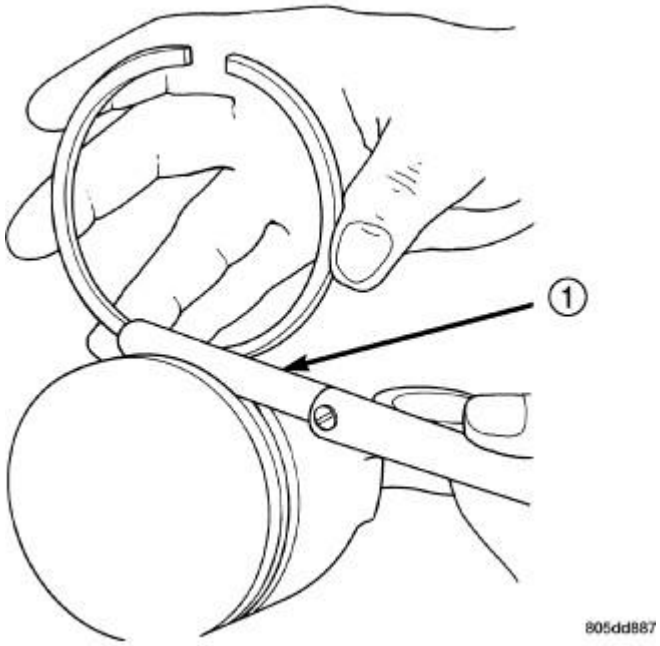

Fig. 450: Checking Piston Ring Grooves Clearances
Courtesy of CHRYSLER GROUP, LLC

5. Measure the ring side clearance as shown in the illustration. Make sure the feeler gauge (1) fits snugly between the ring land and the ring. Replace any ring not within specification.

Ring Position	Ring Side Clearance
No. 1 (top) Ring	0.025 - 0.033 mm (0.0010 - 0.0013 in.)
No. 2 (center) Ring	0.030 - 0.078 mm (0.0012 - 0.0031 in.)
Oil Control Ring (Steel Rails)	0.007 - 0.173 mm (.0003 - 0.0068 in.)

REMOVAL

REMOVAL

NOTE: Typical piston shown in the illustration.

1. Remove the piston and connecting rod(s). Refer to **ROD, PISTON AND CONNECTING, REMOVAL**.

 © 2011 Mitchell Repair Information Company, LLC.

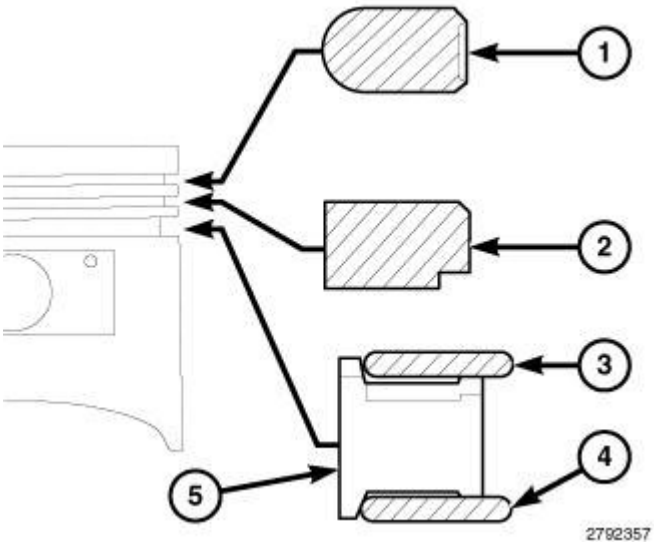

Fig. 451: Piston Ring Removal/Installation Sequence
Courtesy of CHRYSLER GROUP, LLC

CAUTION: To avoid damage to the piston rings, they must be removed in the following order:

- **No. 1 (upper) piston ring (1)**
- **No. 2 (intermediate) piston ring (2)**
- **Oil ring upper side rail (3)**
- **Oil ring lower side rail (4)**
- **Oil ring expander (5)**

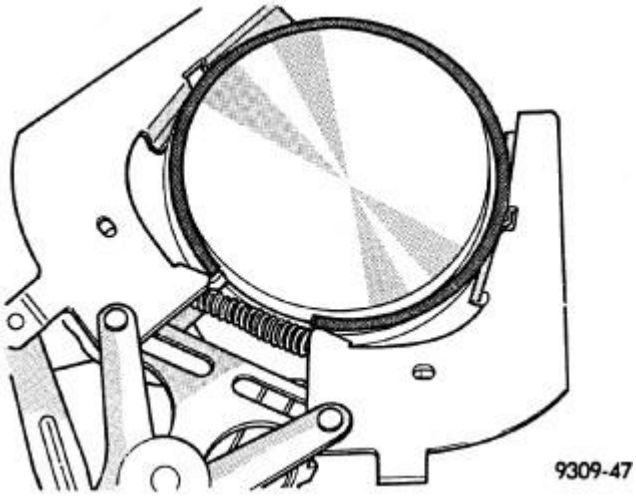

Fig. 452: Removing/Installing Upper & Intermediate Rings
Courtesy of CHRYSLER GROUP, LLC

NOTE: Typical piston shown in the illustration.

 © 2011 Mitchell Repair Information Company, LLC.

2. Remove the No. 1 (upper) piston ring using a ring expander tool.
3. Remove the No. 2 (intermediate) piston ring using a ring expander tool.

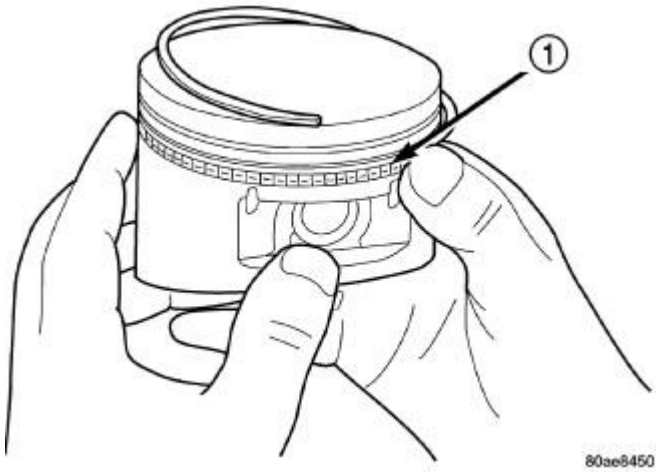

Fig. 453: Removing/Installing Piston Ring Side Rail
Courtesy of CHRYSLER GROUP, LLC

NOTE: Typical piston shown in the illustration. Do not use a piston ring expander to remove the oil ring side rails.

4. Remove the oil ring upper side rail.
5. Remove the oil ring lower side rail.
6. Remove the oil ring expander (1).

INSTALLATION

INSTALLATION

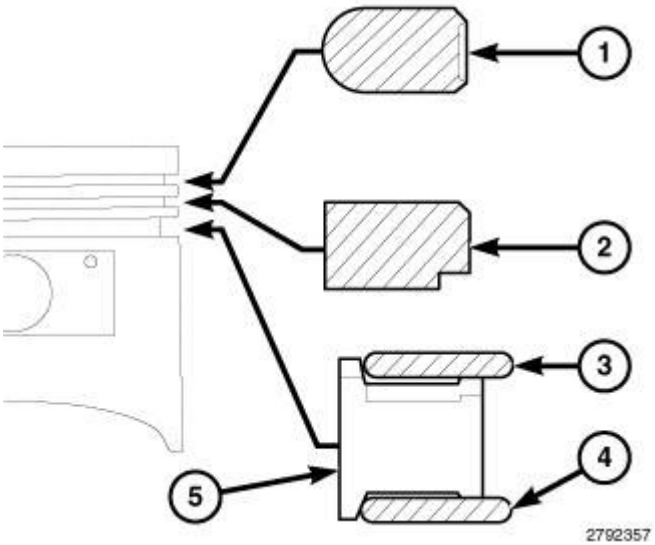

 © 2011 Mitchell Repair Information Company, LLC.

Fig. 454: Piston Ring Removal/Installation Sequence
Courtesy of CHRYSLER GROUP, LLC

NOTE: Typical piston shown in the illustration.

1. If required, fit new rings to the piston. Refer to Engine/Engine Block/RING(S) **STANDARD PROCEDURE** .

CAUTION: To avoid damage to the piston rings, they must be installed in the following order:

- **Oil ring expander (5)**
- **Oil ring lower side rail (4)**
- **Oil ring upper side rail (3)**
- **No. 2 (intermediate) piston ring (2)**
- **No. 1 (upper) piston ring (1)**

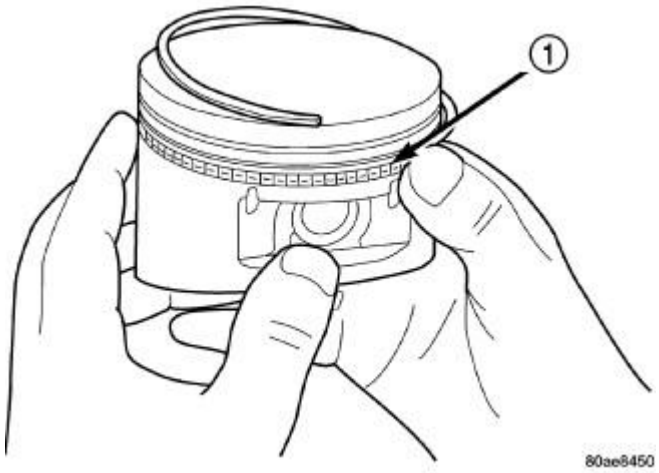

Fig. 455: Removing/Installing Piston Ring Side Rail
Courtesy of CHRYSLER GROUP, LLC

NOTE: Typical piston shown in the illustration. Do not use a piston ring expander to install the oil ring side rails.

2. Install the oil ring expander (1).
3. Install the oil ring lower side rail by placing one end between the piston ring groove and the oil ring expander. Hold this end firmly and press down the portion to be installed until the side rail is in position.
4. Install the oil ring upper side rail in the same manner as the lower side rail.

 © 2011 Mitchell Repair Information Company, LLC.

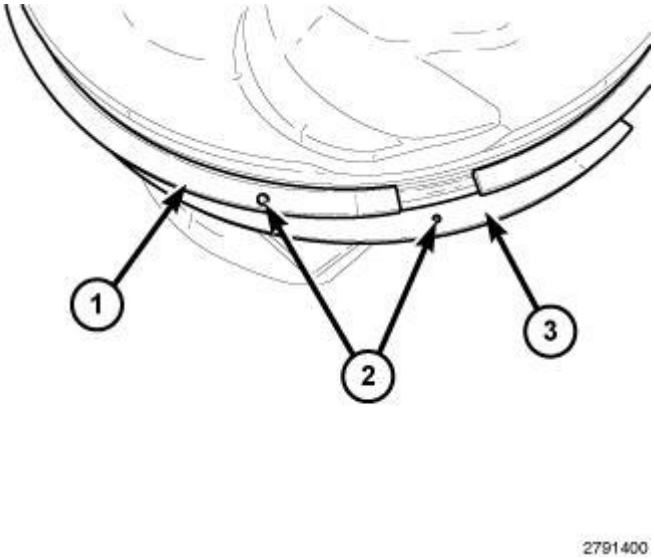

Fig. 456: Dot Marks On Piston Rings
Courtesy of CHRYSLER GROUP, LLC

NOTE: The No. 1 (upper) piston ring (1) and No. 2 (intermediate) piston ring (3) have a different cross section. Install the rings with manufacturers I.D. mark (dot) (2) facing up, towards the top of the piston.

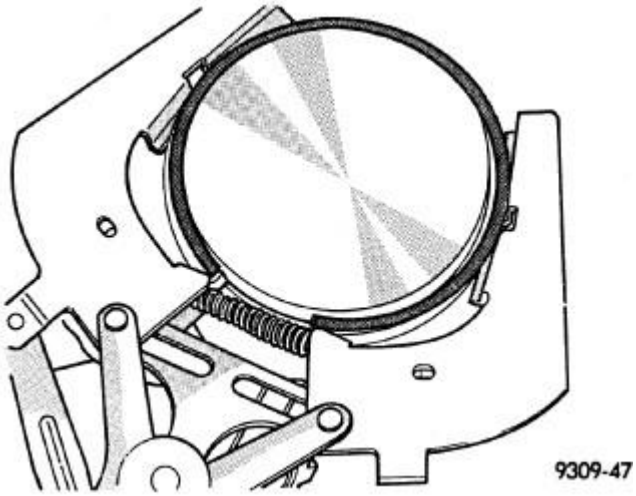

Fig. 457: Removing/Installing Upper & Intermediate Rings
Courtesy of CHRYSLER GROUP, LLC

NOTE: Typical piston shown in the illustration.

5. Install the No. 2 (intermediate) piston ring using a ring expander tool.
6. Install the No. 1 (upper) piston ring using a ring expander tool.
7. Rotate the rings around the piston, the rings must rotate in the grooves with out binding.

 © 2011 Mitchell Repair Information Company, LLC.

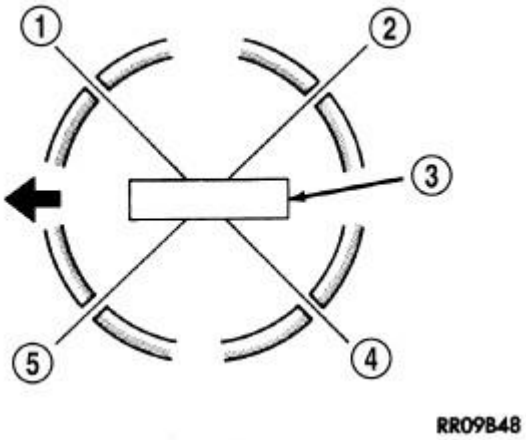

Fig. 458: Piston Ring End Gap Position
Courtesy of CHRYSLER GROUP, LLC

8. Position the piston ring end gaps as follows:
   - Oil ring expander gap (5)
   - Oil ring lower side rail end gap (4)
   - Oil ring upper side rail end gap (1)
   - No. 2 (intermediate) ring end gap (5)
   - No. 1 (upper) ring end gap (2)
9. Install the piston and connecting rod(s). Refer to **ROD, PISTON AND CONNECTING, INSTALLATION**.

ROD, PISTON AND CONNECTING

DESCRIPTION

DESCRIPTION

 © 2011 Mitchell Repair Information Company, LLC.

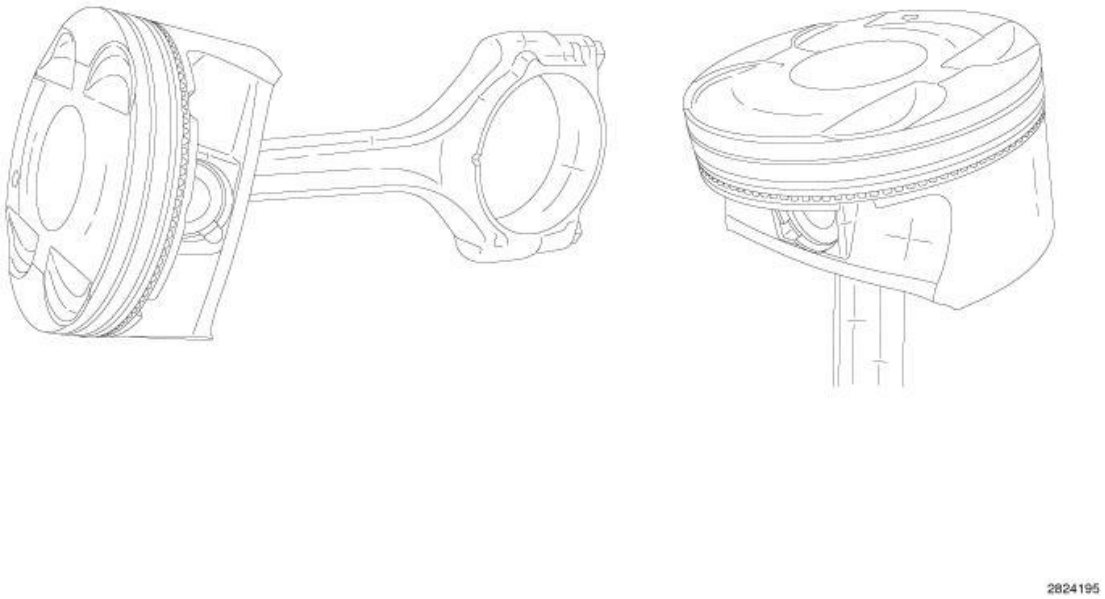

Fig. 459: Piston & Connecting Rod
Courtesy of CHRYSLER GROUP, LLC

CAUTION: Do not use a metal stamp to mark connecting rods as damage may result, instead use ink or a scratch awl.

The pistons are a lightweight design with ultra low tension piston rings for improved fuel economy. The pistons are made of a high strength aluminum alloy and the piston skirt has a Moly® coating. The top piston ring land has an anodized coating for improved wear. The piston is connected to the rod using a full floating pin with two locking clips. The connecting rod is forged steel with a bolted cracked cap design. The connecting rod bolts are not reusable. Pistons are available in two different diameters with grade markings for each bore indicated on the side of the cylinder block. The upper compression ring is a 1.2 mm steel ring with a spray coating. The intermediate compression ring is 1.2 mm micro napier design. Both compression rings have a dot or a mark on the piston ring. The marked side of the ring must face the top of the piston. The 2 mm three piece oil control ring is very thin. These are chrome plated rings and have a stainless steel expander.

STANDARD PROCEDURE

PISTON FITTING

 © 2011 Mitchell Repair Information Company, LLC.

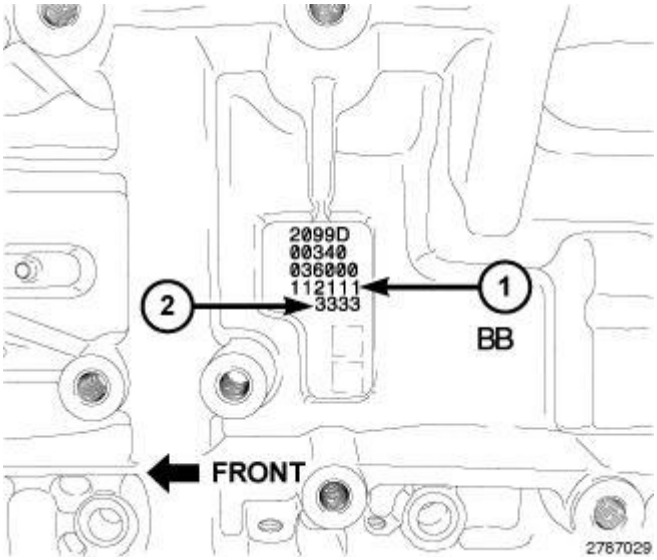

Fig. 460: Engine Block Main Bearing Journal Diameter Grade Markings
Courtesy of CHRYSLER GROUP, LLC

The pistons are "select fit" to achieve proper oil clearance. Engine block cylinder bore diameter grade markings (1) are stamped into the left side of the engine block. These marks are read from left to right, corresponding with cylinder number 1, 2, 3, 4, 5, 6.

Engine block cylinder bore diameter grade markings correspond to specific cylinder bore diameters. The chart below identifies the two engine block grade markings and their associated cylinder bore diameters.

Engine Block Marking	Cylinder Bore Size mm (in.)
1	95.995 ± 0.005 mm (3.7793 ± 0.0002 in.)
2	96.005 ± 0.005 mm (3.7797 ± 0.0002 in.)

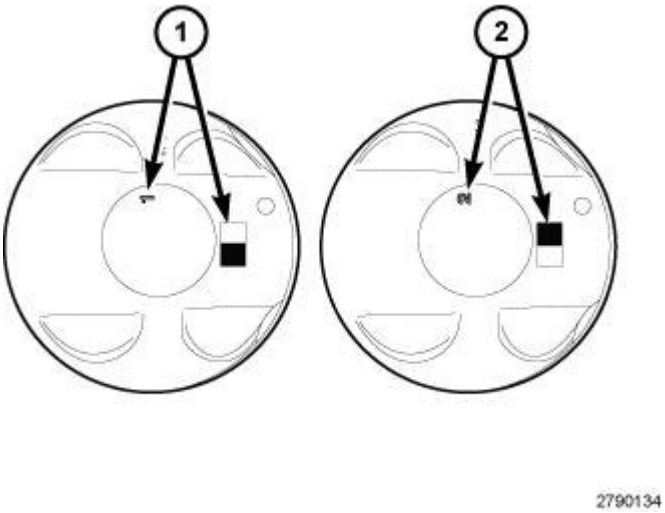

Fig. 461: Piston Size Located On Piston Crown
Courtesy of CHRYSLER GROUP, LLC

 © 2011 Mitchell Repair Information Company, LLC.

The piston is marked with the piston size (1 and 2) on the piston crown. The pistons are available in two different sizes in order to achieve the desired oil clearance. Select the piston size that corresponds to the engine block cylinder bore diameter grade markings for each cylinder.

Pistons are available in two sizes. The chart below identifies the two piston sizes.

Piston Marking	Size mm (in.)	
	Metal to Metal	Metal to Coating
1	95.995 ± 0.005 mm (3.7793 ± 0.0002 in.)	95.970 - 96.000 mm (3.7783 - 3.7795 in.)
2	95.965 ± 0.005 mm (3.7781 ± 0.0002 in.)	95.980 - 96.010 mm (3.7787 - 3.7835 in.)

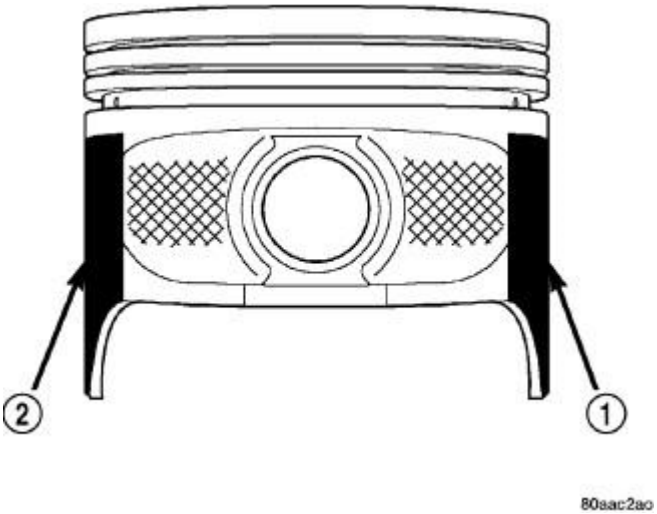

Fig. 462: Coating Material On Piston
Courtesy of CHRYSLER GROUP, LLC

NOTE: Typical coated piston shown in the illustration.

The coated pistons are serviced with the piston pin and connecting rod pre-assembled. The coating material (1 and 2) is applied to the piston after the final piston machining process. Piston installation into the cylinder bore requires slightly more pressure than that required for non-coated pistons. The bonded coating on the piston will give the appearance of a line-to-line fit with the cylinder bore.

CONNECTING ROD SIDE CLEARANCE

DIAL INDICATOR

 © 2011 Mitchell Repair Information Company, LLC.

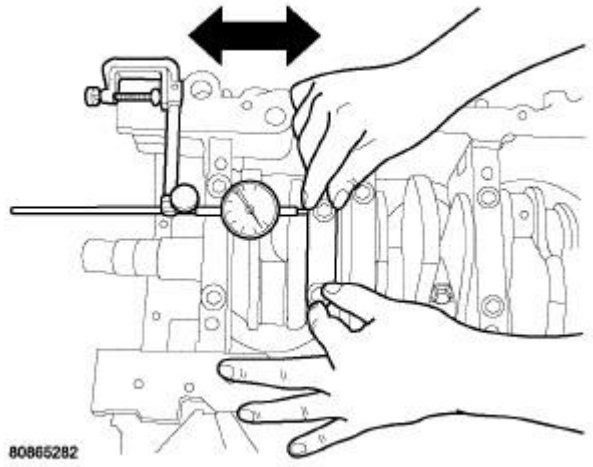

Fig. 463: Measuring Connecting Rod Side Clearance
Courtesy of CHRYSLER GROUP, LLC

1. Mount Dial Indicator Set (special tool #C-3339A, Set, Dial Indicator) to a stationary point on the engine. Locate the probe perpendicular to and resting against the connecting rod cap being checked.
2. Move the connecting rod all the way to the rear of its travel.
3. Zero the dial indicator.
4. Move the connecting rod forward to the limit of travel and read the dial indicator. Compare the measured side clearance to the specification. Refer to ENGINE **SPECIFICATIONS** .
5. Repeat this procedure for each connecting rod. Rotate the crankshaft for connecting rod accessibility.

FEELER GAUGE

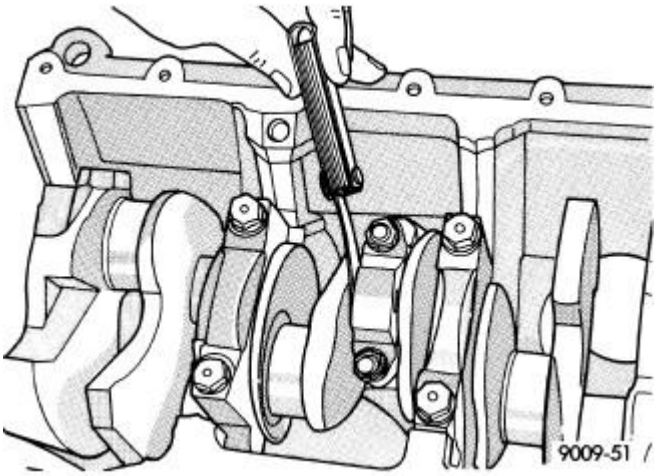

Fig. 464: Measuring Gap Between Connecting Rod & Crankshaft Journal Flange
Courtesy of CHRYSLER GROUP, LLC

 © 2011 Mitchell Repair Information Company, LLC.

1. Slide a snug-fitting feeler gauge between the connecting rod and crankshaft journal flange. Compare the measured side clearance to the specification. Refer to ENGINE **SPECIFICATIONS** .
2. Repeat this procedure for each connecting rod. Rotate the crankshaft for connecting rod accessibility.

REMOVAL

REMOVAL

1. Disconnect and isolate the negative battery cable.
2. Remove the oil pans, engine timing cover and cylinder heads. Refer to **CYLINDER HEAD, REMOVAL**.
3. Remove the engine oil pump. Refer to **PUMP, ENGINE OIL, REMOVAL**.

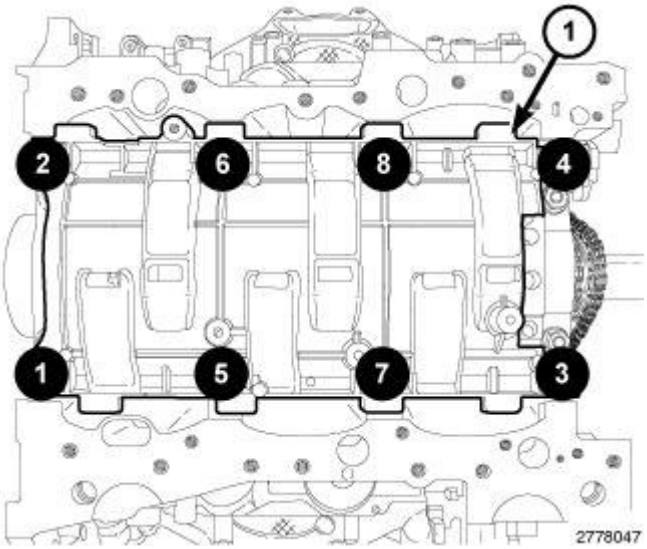

Fig. 465: Main Bearing Cap Bolts From Windage Tray Removal Sequence
Courtesy of CHRYSLER GROUP, LLC

4. Remove the eight main bearing cap bolts from the windage tray in the sequence shown in the illustration and remove the windage tray (1).
5. If necessary, remove the top ridge of the cylinder bores with a reliable ridge reamer before removing the pistons from the engine block. **Be sure to keep the tops of pistons covered during this operation.** Pistons and connecting rods must be removed from the top of the engine block. When removing piston and connecting rod assemblies from the engine, rotate the crankshaft CW so that each connecting rod is centered in the cylinder bore.

 © 2011 Mitchell Repair Information Company, LLC.

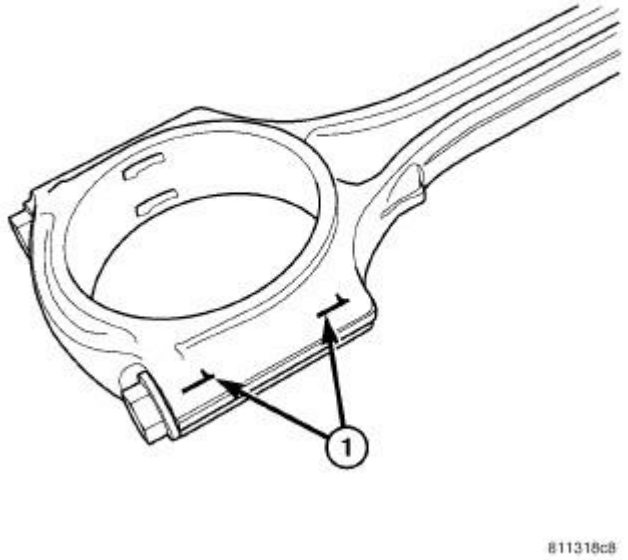

Fig. 466: Connecting Rod To Cylinder Identification
Courtesy of CHRYSLER GROUP, LLC

CAUTION: DO NOT use a number stamp or a punch to mark connecting rods or caps, as damage to connecting rods could occur

NOTE: Connecting rods and bearing caps are not interchangeable and should be marked before removing to ensure correct reassembly.

6. Mark connecting rod and bearing cap positions (1) using a permanent ink marker or scribe tool.

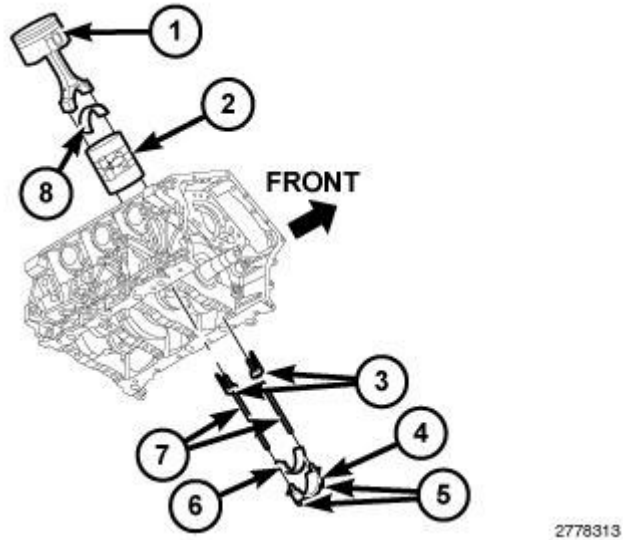

Fig. 467: Piston, Connecting Rod Cap, Bolts, Plastic Guide Plates & Guide Pins
Courtesy of CHRYSLER GROUP, LLC

NOTE: Typical V6 engine configuration shown in the illustration.

CAUTION: Care must be taken not to damage the fractured rod and cap joint face surfaces, as engine damage may occur.

7. Remove the connecting rod cap bolts (5) and the connecting rod cap (4). Discard the cap bolts.

CAUTION: Care must be taken not to nick crankshaft journals, as engine damage may occur.

8. Remove the plastic guide plates (3) from the Guide Pins (special tool #8189, Guide Pins) (7) and install the Guide Pins to the connecting rod being removed.

CAUTION: Avoid contact with the piston oil cooler jet(s). Positioning of the oil cooler jet(s) is critical for proper engine operation.

9. Remove the piston and connecting rod (1) from cylinder bore.
10. Repeat the previous steps for each piston being removed.
11. Immediately after piston and connecting rod removal, reinstall the bearing cap (4) on the mating connecting rod to prevent damage to the fractured cap and rod surfaces.
12. If required, remove the piston rings. Refer to **RING(S), PISTON, REMOVAL**.
13. Repeat the previous steps for each piston being removed.

CLEANING

CLEANING

CAUTION: DO NOT use a wire wheel or other abrasive cleaning devise to clean the pistons or connecting rods. The pistons have a Moly coating, this coating must not be damaged.

CAUTION: Do not remove the piston pin from the piston and connecting rod assembly.

1. Using a suitable cleaning solvent clean the pistons in warm water and towel dry.
2. Use a wood or plastic scraper to clean the ring land grooves.

INSPECTION

INSPECTION

 © 2011 Mitchell Repair Information Company, LLC.

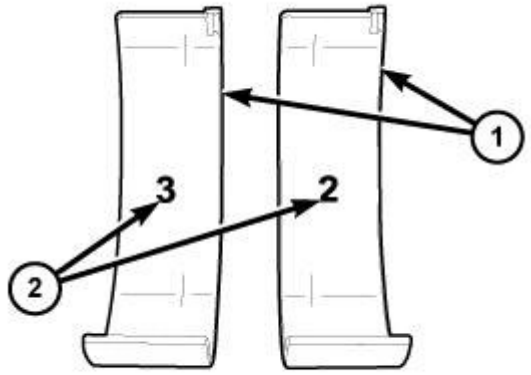

2789568

Fig. 468: Connecting Rod Bearing Shells & Bearing Size
Courtesy of CHRYSLER GROUP, LLC

1. Wipe the inserts (1) clean.
2. Inspect the inserts for abnormal wear patterns, scoring, grooving, fatigue, pitting and for metal or other foreign material imbedded in the lining.
3. Inspect the back of the inserts for fractures, scrapes, or irregular wear patterns.
4. Inspect the insert locking tabs for damage.
5. Replace any bearing that shows abnormal wear. Refer to **BEARING(S), CONNECTING ROD, STANDARD PROCEDURE**.

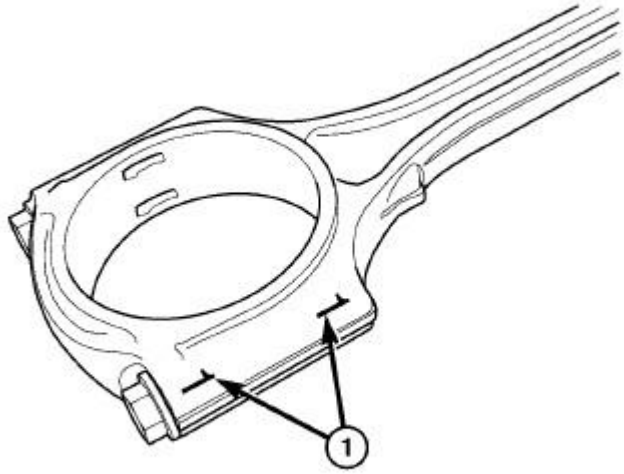

811318c8

Fig. 469: Connecting Rod To Cylinder Identification
Courtesy of CHRYSLER GROUP, LLC

6. Inspect the connecting rod bearing bores for signs of scoring, nicks and burrs.

NOTE: **Misaligned or bent connecting rods can cause abnormal wear on pistons, piston rings, cylinder walls, connecting rod bearings and crankshaft connecting rod journals. If wear patterns or damage to any of these components indicate the probability of a misaligned connecting rod, inspect it for correct rod alignment.**

7. Replace misaligned, bent or twisted connecting rods.

NOTE: **Connecting rods are serviced with the piston pre-assembled. The pistons are "select fit" to achieve proper oil clearance. Refer to ENGINE/ENGINE BLOCK/ROD, PISTON AND CONNECTING STANDARD PROCEDURE .**

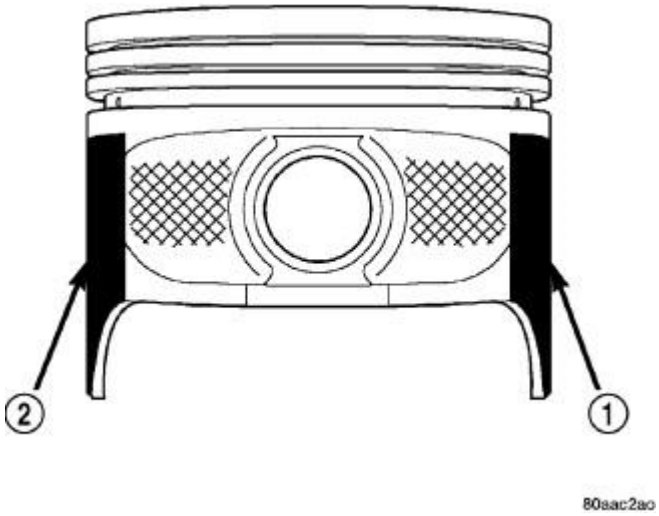

Fig. 470: Coating Material On Piston
Courtesy of CHRYSLER GROUP, LLC

NOTE: **Typical coated piston shown in the illustration.**

8. Inspect the piston for scoring or scraping marks in the piston skirts. Check the ring lands for cracks and/or deterioration.
9. Check the piston for taper and out of round shape.

NOTE: **The coating material (1 and 2) is applied to the piston after the final piston machining process. Measuring the outside diameter of a coated piston will not provide accurate results. Therefore measuring the inside diameter of the cylinder bore with a dial Bore Gauge is MANDATORY . Refer to ENGINE/ENGINE BLOCK INSPECTION .**

 © 2011 Mitchell Repair Information Company, LLC.

10. Compare the measured cylinder bore diameter to the engine block cylinder bore grade marking chart Select the piston size that corresponds to the engine block markings for each cylinder to provide the proper oil clearance. Refer to ENGINE/ENGINE BLOCK/ROD, PISTON AND CONNECTING **STANDARD PROCEDURE** .

NOTE: Piston installation into the cylinder bore requires slightly more pressure than that required for non-coated pistons. The bonded coating on the piston will give the appearance of a line-to-line fit with the cylinder bore.

NOTE: The coated pistons will be serviced with the piston pin and connecting rod pre-assembled.

INSTALLATION

INSTALLATION

1. If required, select and fit new piston and connecting rod assemblies to the engine block. Refer to ENGINE/ENGINE BLOCK/ROD, PISTON AND CONNECTING **STANDARD PROCEDURE** .
2. If required, select and fit new bearings to the connecting rod. Refer to **BEARING(S), CONNECTING ROD, STANDARD PROCEDURE**.
3. If required, hone the cylinder bores. Refer to ENGINE/ENGINE BLOCK **STANDARD PROCEDURE** .
4. If removed, install the piston rings. Refer to **RING(S), PISTON, INSTALLATION**.

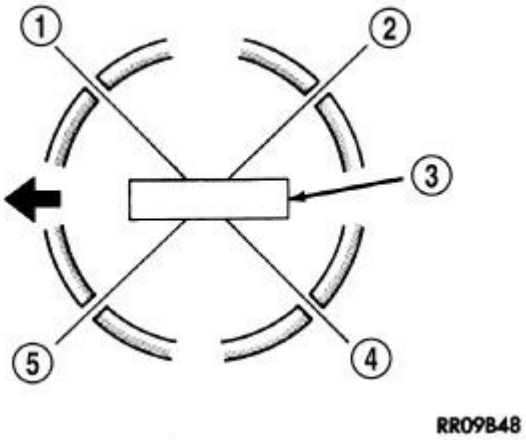

Fig. 471: Piston Ring End Gap Position
Courtesy of CHRYSLER GROUP, LLC

5. Position the piston ring end gaps as follows:
   - Oil ring expander gap (5)
   - Oil ring lower side rail end gap (4)
   - Oil ring upper side rail end gap (1)
   - No. 2 (intermediate) ring end gap (5)

 © 2011 Mitchell Repair Information Company, LLC.

- No. 1 (upper) ring end gap (2)

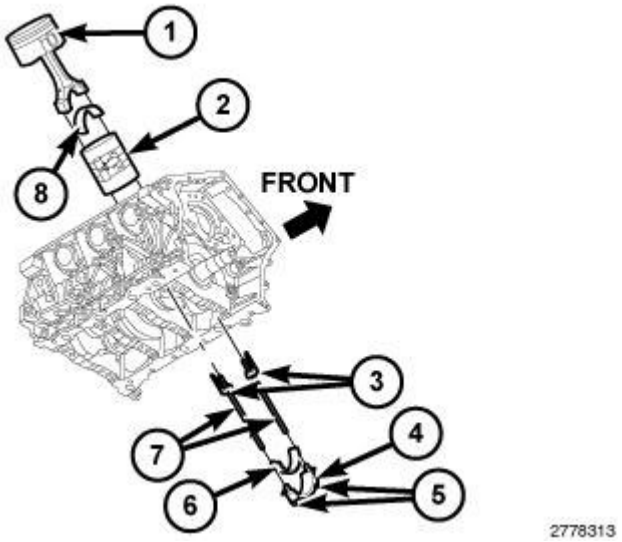

Fig. 472: Piston, Connecting Rod Cap, Bolts, Plastic Guide Plates & Guide Pins
Courtesy of CHRYSLER GROUP, LLC

NOTE: Typical V6 engine configuration shown in the illustration.

NOTE: Ensure the position of the ring end gaps does not change when installing the ring compressor.

6. Lubricate the piston rings with clean engine oil. Position Piston Compressor (special tool #C-385, Compressor, Piston) (2) over the piston and rings. Tighten the compressor (2).

NOTE: Install the rod bearings in pairs. Do not mix sizes or use a new bearing half with an old bearing half.

7. Install the bearing shell (8) on the connecting rod with the tang inserted into the machined groove in the rod. Lubricate the bearing surface with clean engine oil.
8. Remove the plastic guide plates (3) from the Guide Pins (special tool #8189, Guide Pins) (7) and install the Guide Pins to the connecting rod being installed.

 © 2011 Mitchell Repair Information Company, LLC.

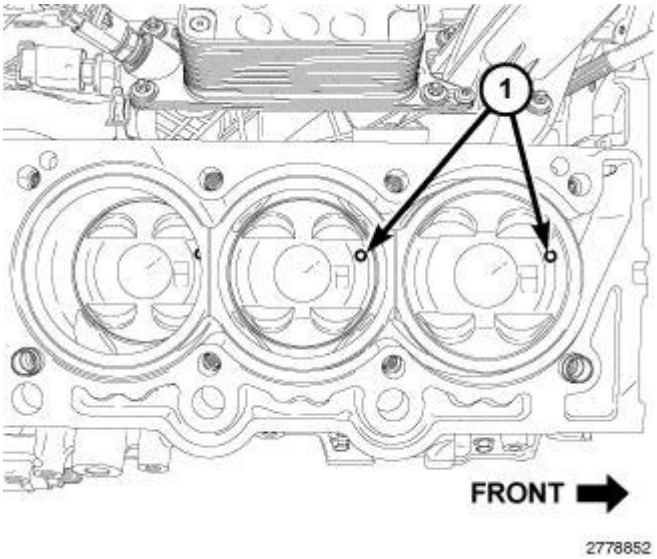

Fig. 473: Piston Installation Position
Courtesy of CHRYSLER GROUP, LLC

NOTE: Right cylinder bank shown in the illustration, left cylinder bank similar.

9. The pistons crowns are stamped with a mark (1) indicating installation position. This mark must be positioned toward the front of engine on both cylinder banks.
10. Wipe the cylinder bore clean and lubricate with clean engine oil.
11. Rotate the crankshaft until the connecting rod journal is on the center of cylinder bore.

CAUTION: Avoid contact with the piston oil cooler jet(s). Positioning of the oil cooler jet(s) is critical for proper engine operation.

12. Insert the piston and connecting rod into the cylinder bore and carefully position the guide pins over the crankshaft journal.
13. Tap the piston down in the cylinder bore using a hammer handle while guiding the connecting rod into position over the rod journal.

 © 2011 Mitchell Repair Information Company, LLC.

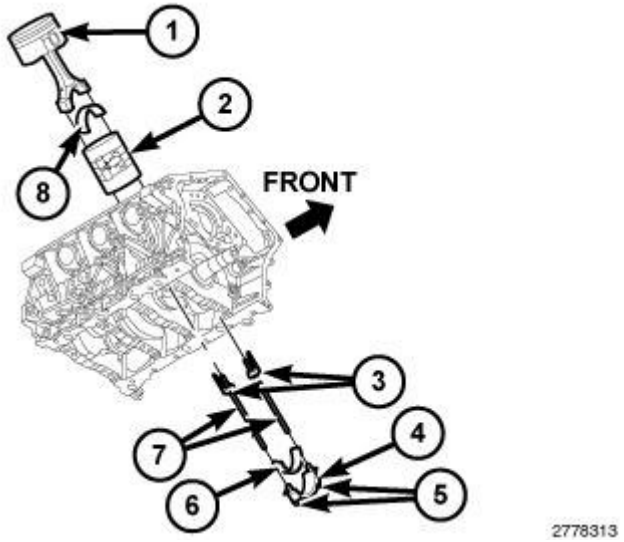

Fig. 474: Piston, Connecting Rod Cap, Bolts, Plastic Guide Plates & Guide Pins
Courtesy of CHRYSLER GROUP, LLC

NOTE: Typical V6 engine configuration shown in the illustration.

CAUTION: The connecting rod bolts must not be reused. Always replace the connecting rod bolts whenever they are loosened or removed.

14. Install the bearing shell (6) on the connecting rod cap (4) with the tang inserted into the machined groove in the cap. Lubricate the bearing surface with clean engine oil.

NOTE: Do not lubricate the threads of the connecting rod cap bolts (5).

15. Install the connecting rod cap and bearing with the tang on the same side as the rod. Tighten the the **NEW** connecting rod cap bolts (5) to 20 N.m (15 ft. lbs.) plus 90°.
16. If required, check the connecting rod side clearance. Refer to ENGINE/ENGINE BLOCK/ROD, PISTON AND CONNECTING **STANDARD PROCEDURE** .
17. Repeat the previous steps for each piston being installed.

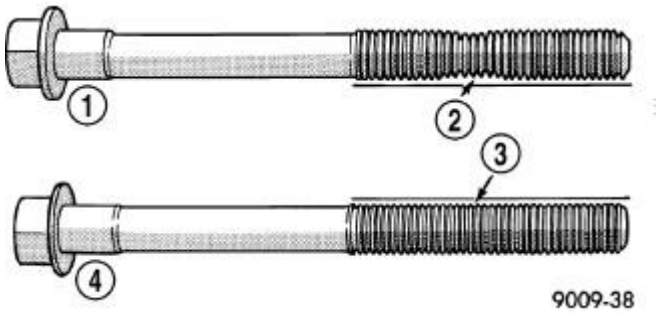

Fig. 475: Checking Cylinder Head Bolts For Stretching (Necking)
Courtesy of CHRYSLER GROUP, LLC

CAUTION: The main bearing cap bolts are tightened using a torque plus angle procedure. The bolts must be examined BEFORE reuse. If the threads are necked down the bolts must be replaced.

18. Check the main bearing cap bolts for necking by holding a scale or straight edge against the threads. If all the threads do not contact the scale (2) the bolt must be replaced.

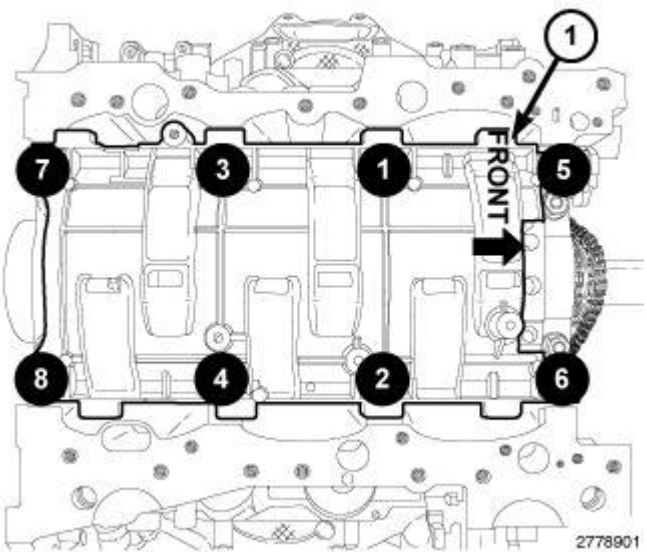

Fig. 476: Windage Tray With Main Bearing Cap Bolts Installation Sequence
Courtesy of CHRYSLER GROUP, LLC

19. Install the windage tray with eight main bearing cap bolts. Tighten the bolts in the sequence shown in the illustration to 21 N.m (16 ft. lbs.) plus 90°.
20. Install the engine oil pump and oil pump pick-up. Refer to **PUMP, ENGINE OIL, INSTALLATION**.
21. Install the cylinder heads, engine timing cover and oil pans. Refer to **CYLINDER HEAD, INSTALLATION**.
22. If removed, install the oil filter and fill the engine crankcase with the proper oil to the correct level. Refer to ENGINE/LUBRICATION/OIL **STANDARD PROCEDURE** .
23. Connect the negative battery cable and tighten nut to 5 N.m (45 in. lbs.).
24. Fill the cooling system. Refer to **STANDARD PROCEDURE** .
25. Operate the engine until it reaches normal operating temperature. Check cooling system for correct fluid level. Refer to **STANDARD PROCEDURE** .

SEAL, CRANKSHAFT OIL, FRONT

REMOVAL

REMOVAL

1. Remove the accessory drive belt and the crankshaft vibration damper. Refer to **DAMPER, VIBRATION, REMOVAL**.

 © 2011 Mitchell Repair Information Company, LLC.

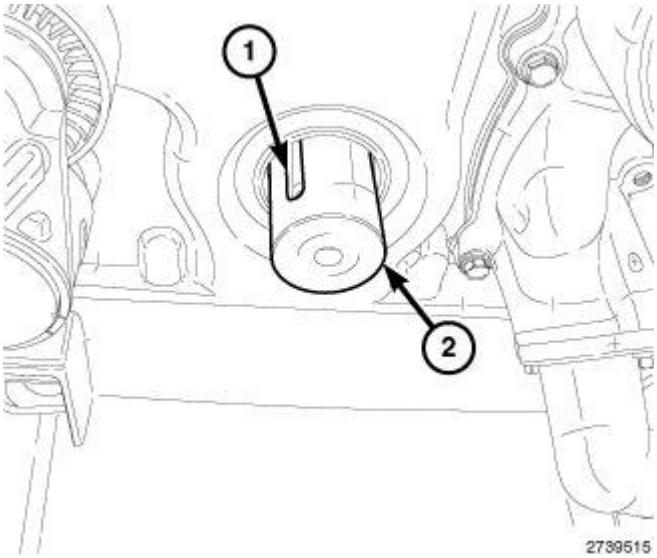

Fig. 477: Sleeve & Flywheel Key
Courtesy of CHRYSLER GROUP, LLC

2. Install the sleeve (2) from Seal Remover (special tool #8511, Remover, Seal) around the flywheel key (1) and onto the nose of the crankshaft.

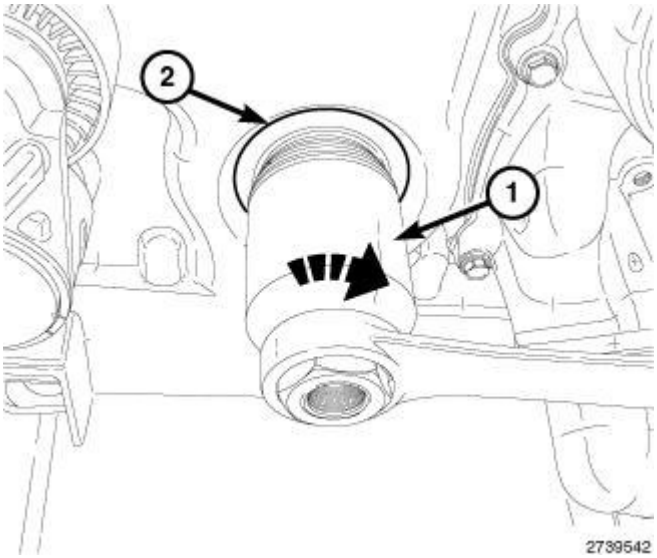

Fig. 478: Seal Remover & Front Crankshaft Oil Seal
Courtesy of CHRYSLER GROUP, LLC

3. Screw Seal Remover (special tool #8511, Remover, Seal) (1) into the front crankshaft oil seal (2).

 © 2011 Mitchell Repair Information Company, LLC.

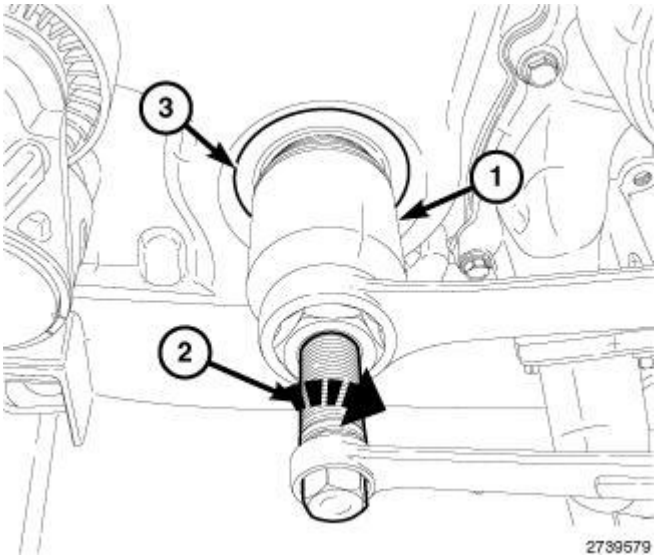

Fig. 479: Extractor Screw, Seal Remover & Front Crankshaft Oil Seal
Courtesy of CHRYSLER GROUP, LLC

4. Install the extractor screw (2) into the Seal Remover (special tool #8511, Remover, Seal) (1). Hold the seal remover stationary and tighten the extractor screw against the sleeve until the front crankshaft oil seal (3) is removed from the engine timing cover.

INSTALLATION

INSTALLATION

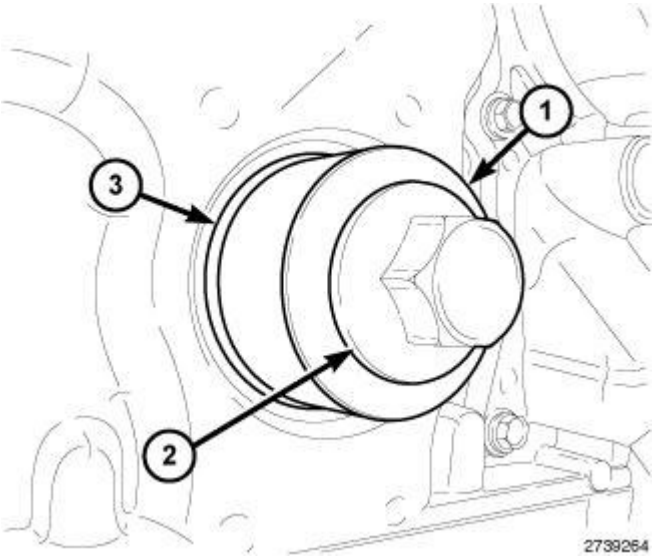

Fig. 480: Front Crankshaft Seal Installer & Oil Seal
Courtesy of CHRYSLER GROUP, LLC

1. Position the front crankshaft oil seal (3) into place on the engine timing cover.
2. Align the Front Crankshaft Seal Installer (special tool #10199, Installer, Crankshaft Front Oil Seal) (1) to

 © 2011 Mitchell Repair Information Company, LLC.

the flywheel key on the crankshaft and against the front crankshaft oil seal (3).

CAUTION: Only tighten the crankshaft vibration damper bolt until the oil seal is seated in the cover. Overtightening of the bolt can crack the front timing cover.

3. Install and tighten the crankshaft vibration damper bolt (2) until the Crankshaft oil seal is seated in the engine timing cover.
4. Install the crankshaft vibration damper and accessory drive belt. Refer to **DAMPER, VIBRATION, INSTALLATION**.

SEAL, CRANKSHAFT OIL, REAR

REMOVAL

REMOVAL

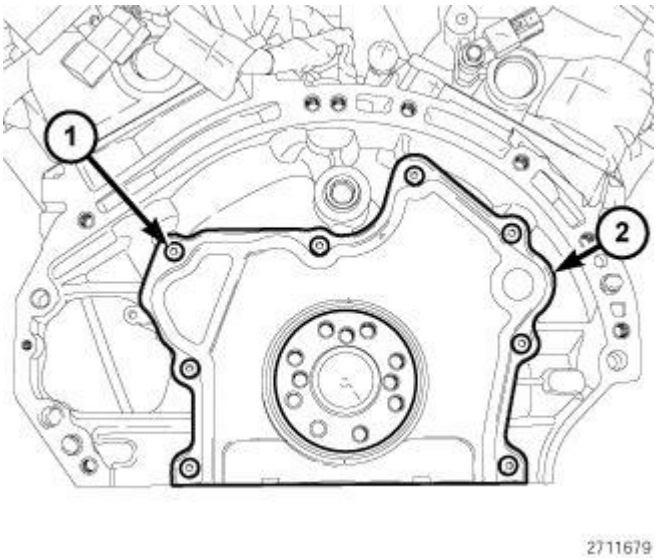

Fig. 481: Seal Retainer & Attaching Screws
Courtesy of CHRYSLER GROUP, LLC

The rear crankshaft oil seal is incorporated into the seal retainer (2) and can not be removed from the retainer. The rear crankshaft oil seal and seal retainer (2) are serviced as an assembly.

1. Remove the transmission. Refer to **REMOVAL** .
2. Remove the flexplate. Refer to **FLEXPLATE, REMOVAL**.
3. Remove the upper oil pan. Refer to **PAN, OIL, REMOVAL**.
4. Remove the eight seal retainer attaching screws (1).
5. Remove and discard the seal retainer (2).

INSTALLATION

 © 2011 Mitchell Repair Information Company, LLC.

INSTALLATION

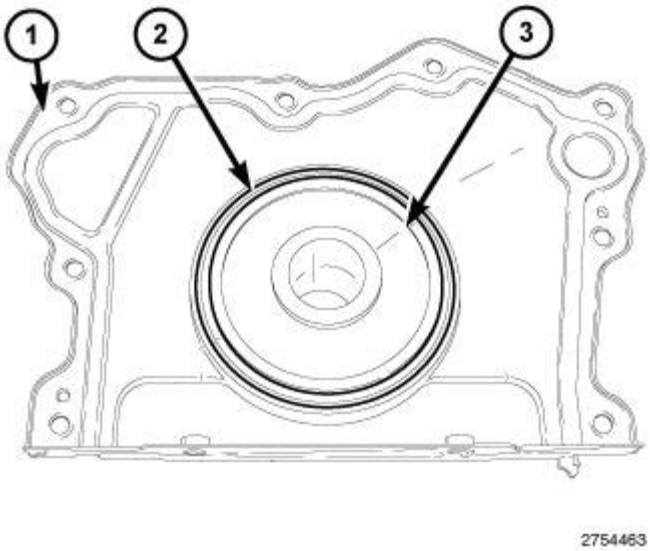

Fig. 482: Rear Crankshaft Oil Seal, Retainer & Seal Protector
Courtesy of CHRYSLER GROUP, LLC

CAUTION: The rear crankshaft oil seal (2) and retainer (1) are an assembly. To avoid damage to the seal lip, DO NOT remove the seal protector (3) from the rear crankshaft oil seal before installation onto the engine.

CAUTION: Whenever the crankshaft is replaced, the rear crankshaft oil seal must also be replaced. Failure to do so may result in engine fluid leakage.

1. Inspect the crankshaft to make sure there are no nicks or burrs on the seal surface.
2. Clean the engine block sealing surfaces thoroughly.

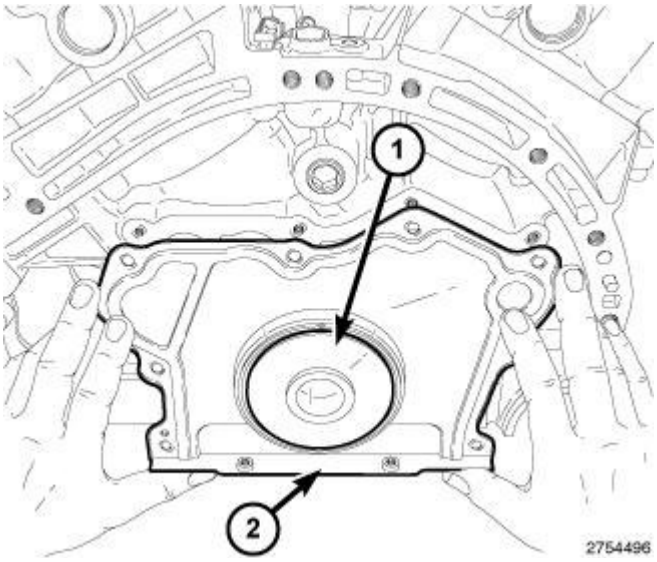

Fig. 483: Oil Seal Retainer Assembly & Seal Protector
Courtesy of CHRYSLER GROUP, LLC

NOTE: It is not necessary to lubricate the seal or the crankshaft when installing the seal retainer. Residual oil following installation can be mistaken for seal leakage.

3. Carefully position the oil seal retainer assembly (2), and seal protector (1) on the crankshaft and push firmly into place on the engine block (during this step, the seal protector will be pushed from the rear oil seal assembly as a result of installing the rear oil seal).

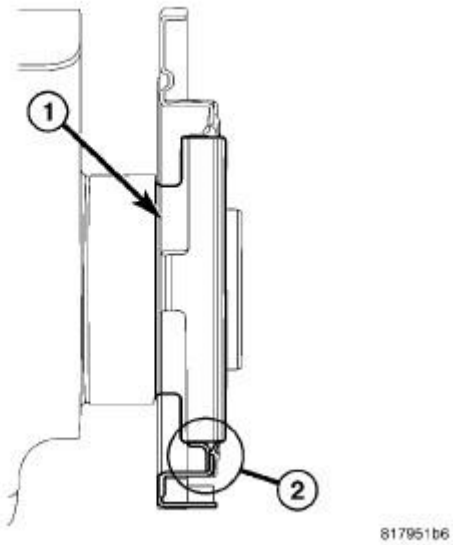

Fig. 484: Rear Seal Installed
Courtesy of CHRYSLER GROUP, LLC

4. Verify that the seal lip (2) on the retainer is uniformly curled inward toward the engine on the crankshaft (1).

 © 2011 Mitchell Repair Information Company, LLC.

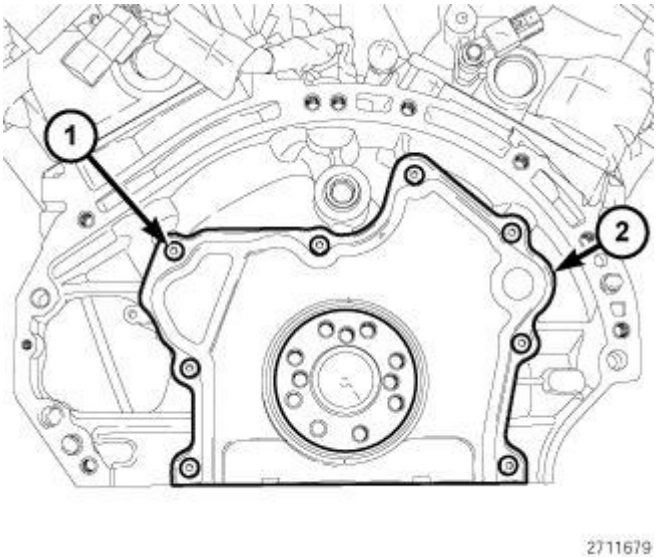

Fig. 485: Seal Retainer & Attaching Screws
Courtesy of CHRYSLER GROUP, LLC

5. Install the eight seal retainer bolts (1) and tighten to 12 N.m (106 in. lbs.).

NOTE: Make sure that the seal retainer flange is flush with the engine block oil pan sealing surface.

6. Install the upper oil pan. Refer to **PAN, OIL, INSTALLATION**.
7. Install the flexplate. Refer to **FLEXPLATE, INSTALLATION**.
8. Install the transmission. Refer to **INSTALLATION** .
9. Fill the engine crankcase with the proper oil to the correct level. Refer to ENGINE/LUBRICATION/OIL **STANDARD PROCEDURE** .

ENGINE MOUNTING

INSULATOR, ENGINE MOUNT, LEFT

REMOVAL

REMOVAL

1. Disconnect and isolate the negative battery cable.

 © 2011 Mitchell Repair Information Company, LLC.

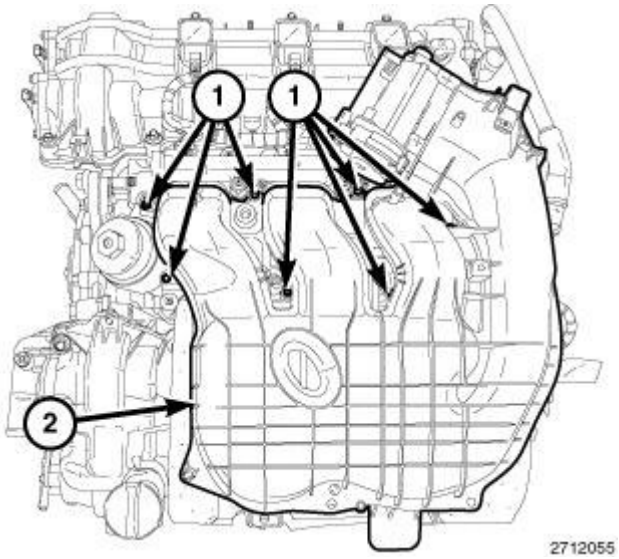

Fig. 486: Upper Intake Manifold & Bolts
Courtesy of CHRYSLER GROUP, LLC

2. Remove the air inlet hose, upper intake manifold (2) and insulator. Refer to **MANIFOLD, INTAKE, REMOVAL**.

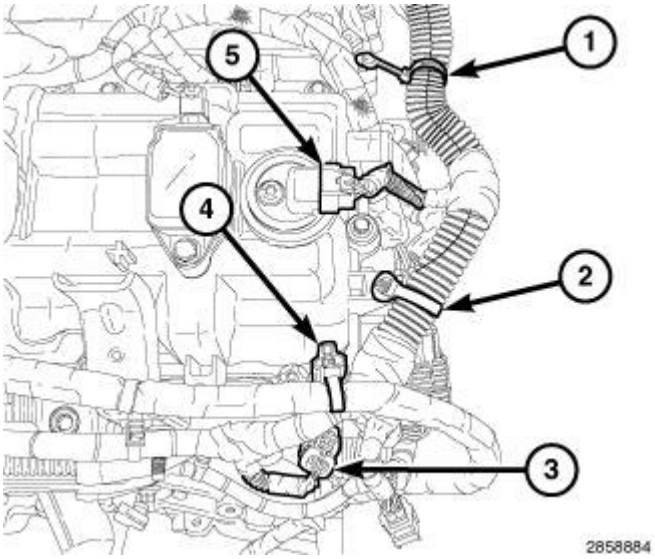

Fig. 487: ECT Sensor Connector, CMP Sensor & Main Wire Harness Retainers
Courtesy of CHRYSLER GROUP, LLC

CAUTION: The engine must be raised substantially to facilitate engine mount removal. Failure to disconnect the left CMP sensor may result in damage to the sensor and/or wire harness connector.

3. Disconnect the left Camshaft Position (CMP) sensor (5).

 © 2011 Mitchell Repair Information Company, LLC.

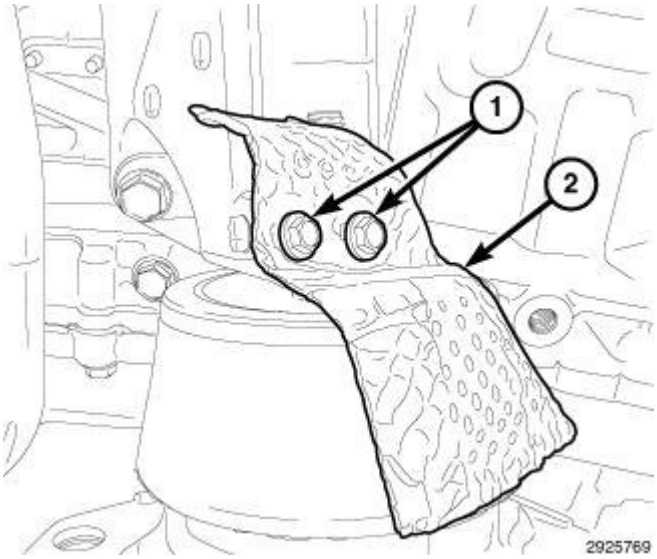

Fig. 488: Engine Mount Heatshield & Bolts
Courtesy of CHRYSLER GROUP, LLC

NOTE: Left engine mount shown in the illustration, right engine mount similar.

4. Remove the bolts (1) and the engine mount heatshield (2) from both the left and right engine mounts.

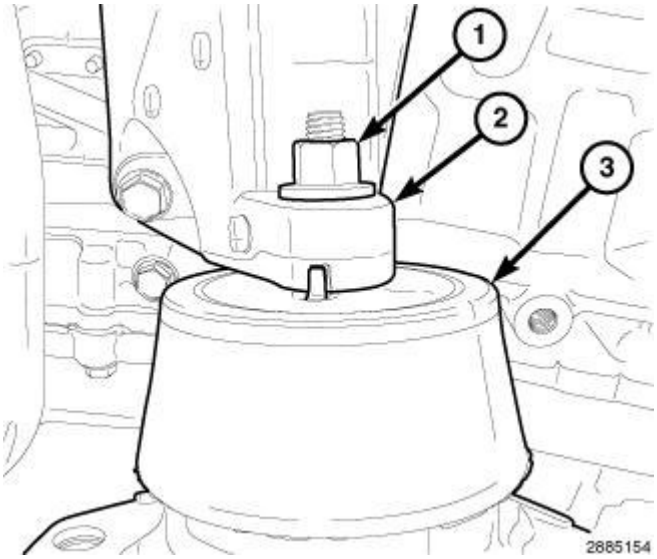

Fig. 489: Left Engine Mount Isolator & Upper Retaining Nut
Courtesy of CHRYSLER GROUP, LLC

NOTE: Left engine mount shown in the illustration, right engine mount similar.

5. Remove both the left and right engine mount nuts (1).

 © 2011 Mitchell Repair Information Company, LLC.

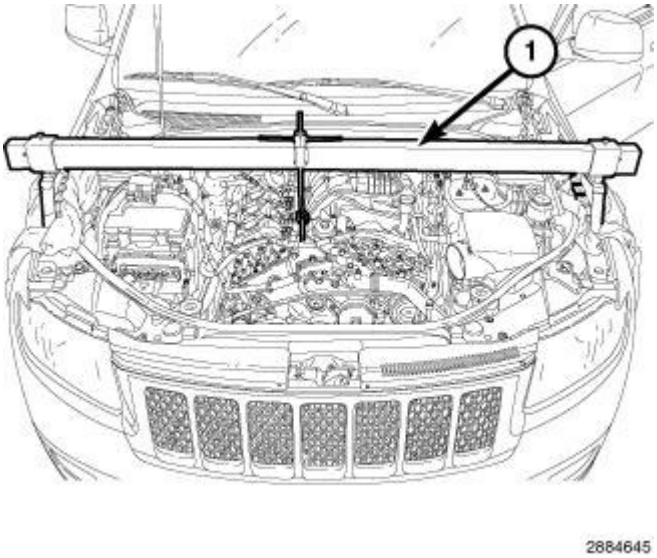

Fig. 490: Engine Support Fixture
Courtesy of CHRYSLER GROUP, LLC

6. Install Engine Support Fixture (special tool #8534B, Fixture, Driveline Support) and carefully lift the engine as high as possible.
7. Raise and support the vehicle. Refer to **HOISTING, STANDARD PROCEDURE** .
8. If equipped, remove the front skid plate and front suspension skid plate. Refer to FRAME AND BUMPERS **UNDER BODY PROTECTION** .

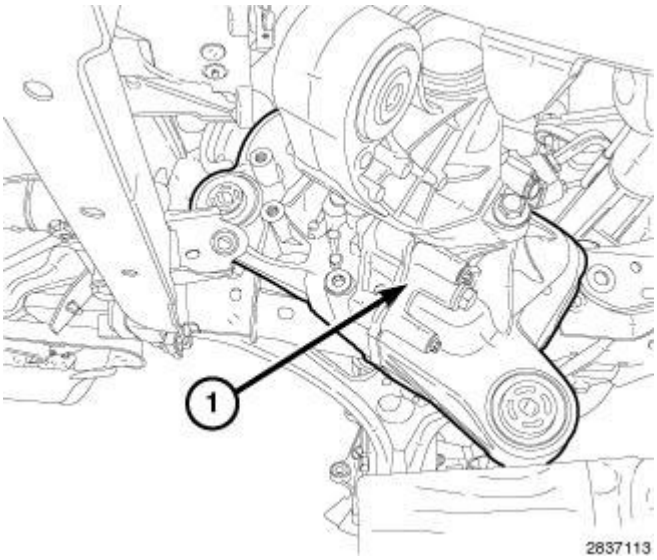

Fig. 491: Front Axle & Axle Bracket
Courtesy of CHRYSLER GROUP, LLC

9. If equipped with AWD, remove the front axle (1). Refer to **REMOVAL** .

 © 2011 Mitchell Repair Information Company, LLC.

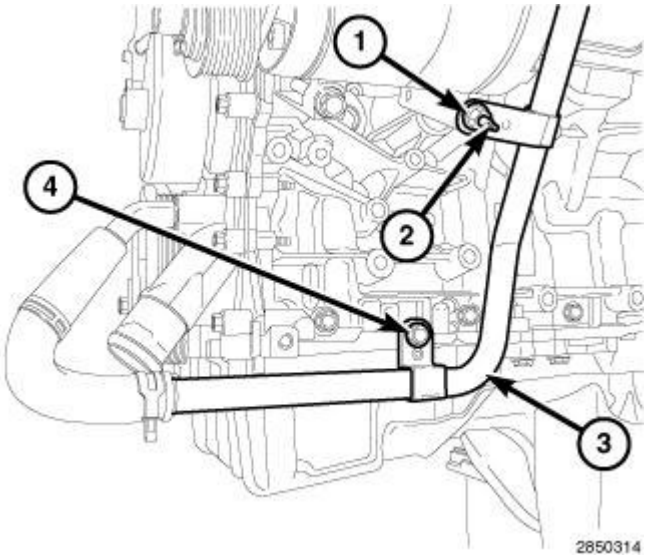

Fig. 492: Heater Core Return Tube, Nut & Bolt
Courtesy of CHRYSLER GROUP, LLC

NOTE: Power steering pump not shown in the illustration.

10. Remove the nut (1) and bolt (4) from the support brackets and reposition the heater core return tube (3).

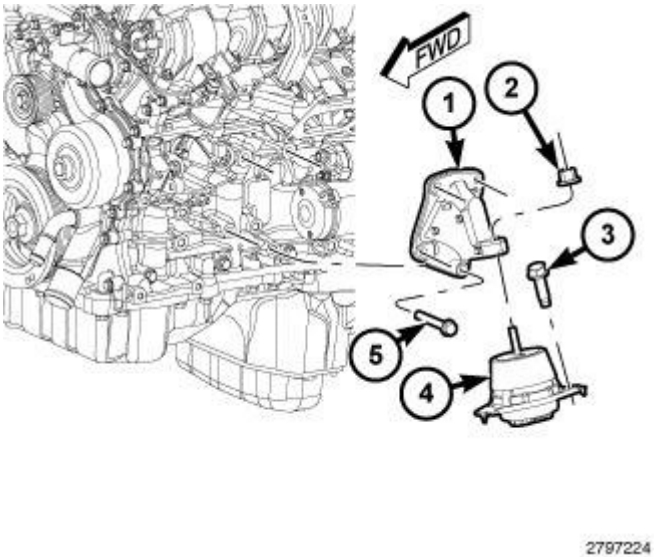

Fig. 493: Engine Mount Isolator, Left Engine Mount Bracket & Retaining Bolts
Courtesy of CHRYSLER GROUP, LLC

11. Remove the four bolts (5) from the left engine mount bracket (1).
12. Remove the two bolts (3) from the left engine mount isolator (4).
13. Reposition the engine mount bracket (1) and isolator (4).
14. Remove the starter. Refer to **STARTER, REMOVAL** .
15. Rotate the isolator into the starter location and separate it from the engine mount bracket. Remove the left

 © 2011 Mitchell Repair Information Company, LLC.

engine mount isolator (1) from the vehicle.

16. If required, remove the left engine mount bracket (1) from the vehicle.

INSTALLATION

INSTALLATION

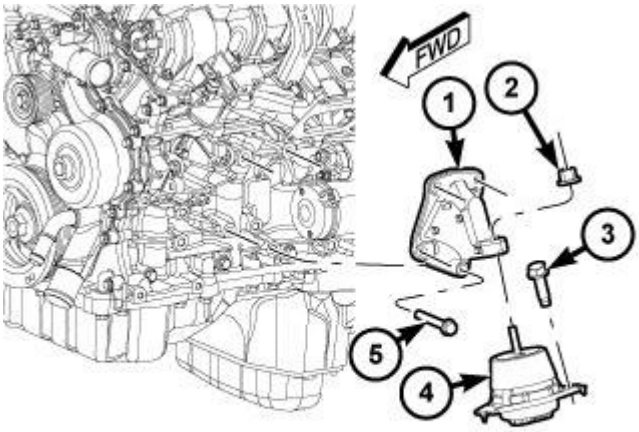

Fig. 494: Engine Mount Isolator, Left Engine Mount Bracket & Retaining Bolts
Courtesy of CHRYSLER GROUP, LLC

1. If removed, position the left engine mount bracket (1) into the vehicle.
2. Install the left engine mount isolator (4) into the vehicle.
3. Utilize the space from the absent starter to insert the isolator stud into the bracket and rotate the assembly into position.
4. Install the starter. Refer to **STARTER, INSTALLATION** .
5. Install the left engine mount isolator (4) to the frame with two bolts (3) tightened to 61 N.m (45 ft. lbs.).
6. Install the left engine mount bracket (1) to the engine block with four bolts (5) tightened to 61 N.m (45 ft. lbs.).

 © 2011 Mitchell Repair Information Company, LLC.

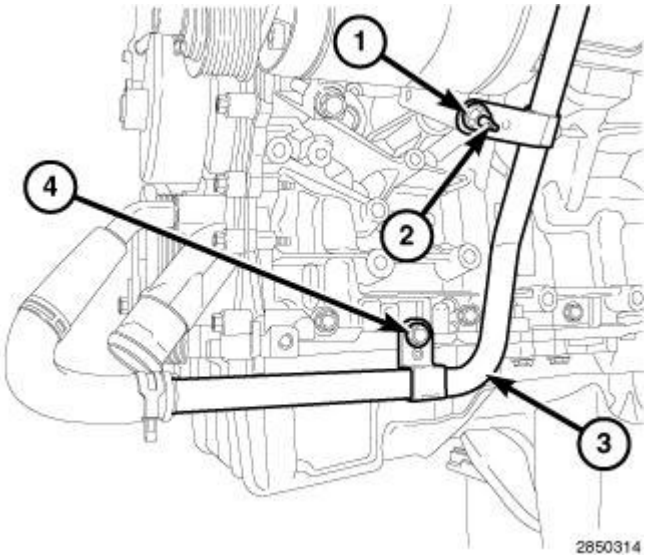

Fig. 495: Heater Core Return Tube, Nut & Bolt
Courtesy of CHRYSLER GROUP, LLC

NOTE: Power steering pump not shown in the illustration.

7. Install the nut (1) and bolt (4) to the support brackets of the heater core return tube (3). Tighten both fasteners to 12 N.m (106 in. lbs.).

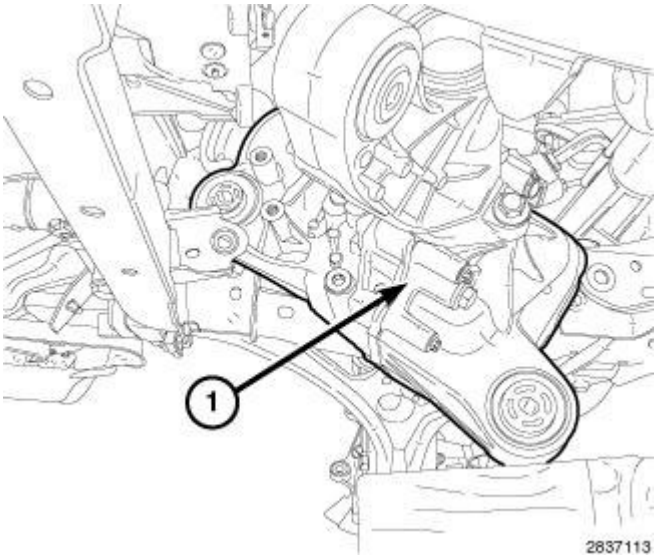

Fig. 496: Front Axle & Axle Bracket
Courtesy of CHRYSLER GROUP, LLC

8. If equipped with AWD, install the front axle (1). Refer to **INSTALLATION** .
9. If equipped, install the front skid plate and front suspension skid plate (Refer to FRAME AND BUMPERS **UNDER BODY PROTECTION**).
10. Lower the vehicle.

 © 2011 Mitchell Repair Information Company, LLC.

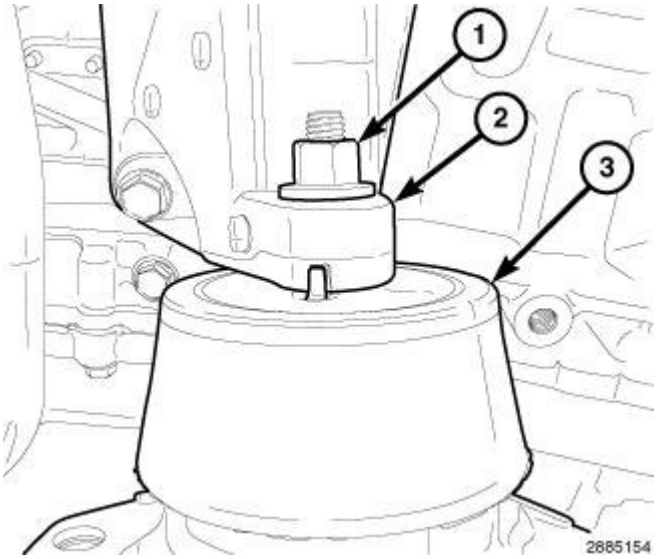

Fig. 497: Left Engine Mount Isolator & Upper Retaining Nut
Courtesy of CHRYSLER GROUP, LLC

NOTE: Left engine mount shown in the illustration, right engine mount similar.

11. Align the tab on the isolators (3) with the notch in the engine mount brackets (2) and lower the engine so the weight is resting on the isolators.
12. Install the left and right engine mount nuts (1) and tighten to 61 N.m (45 ft. lbs.).

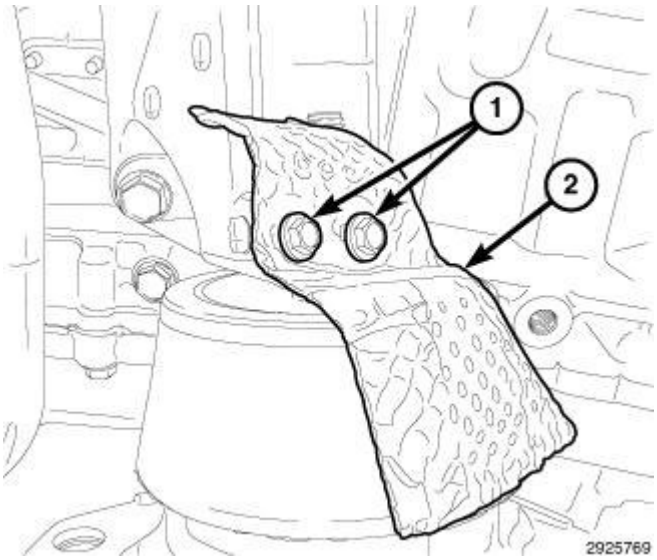

Fig. 498: Engine Mount Heatshield & Bolts
Courtesy of CHRYSLER GROUP, LLC

NOTE: Left engine mount shown in the illustration, right engine mount similar.

13. Install the engine mount heatshield (2) to both the left and right engine mounts with two bolts (1) tightened to 12 N.m (106 in. lbs.).

 © 2011 Mitchell Repair Information Company, LLC.

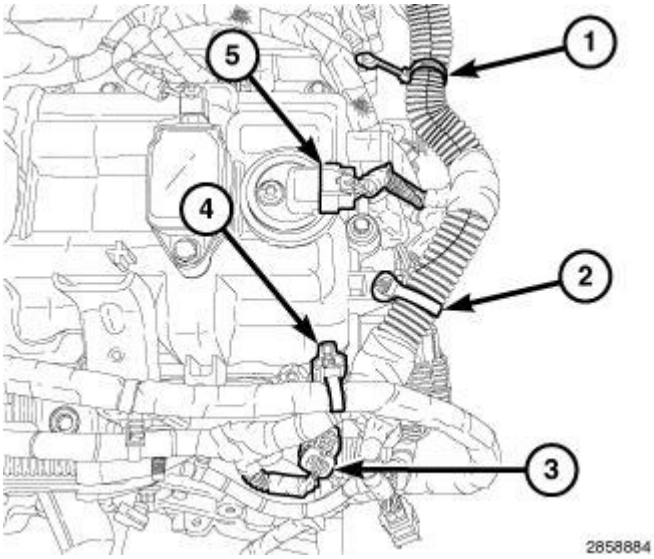

Fig. 499: ECT Sensor Connector, CMP Sensor & Main Wire Harness Retainers
Courtesy of CHRYSLER GROUP, LLC

14. Connect the left Camshaft Position (CMP) sensor (5).

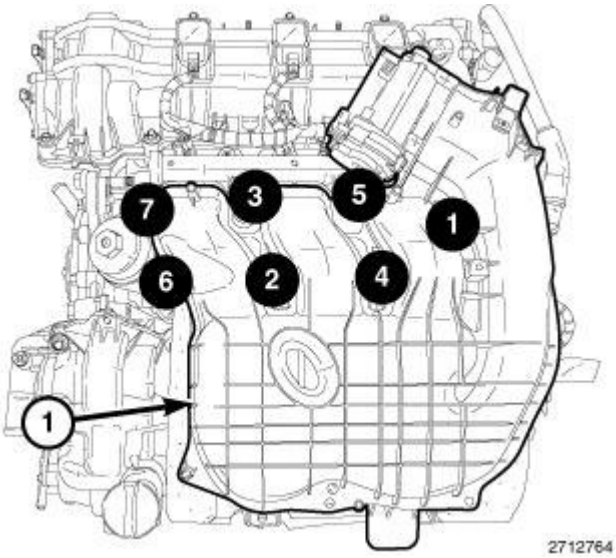

Fig. 500: Upper Intake Manifold Bolt Tightening Sequence
Courtesy of CHRYSLER GROUP, LLC

15. Install the upper intake manifold, insulator and air inlet hose. Refer to **MANIFOLD, INTAKE, INSTALLATION**.
16. Connect the negative battery cable and tighten nut to 5 N.m (45 in. lbs.).

INSULATOR, ENGINE MOUNT, RIGHT

REMOVAL

 © 2011 Mitchell Repair Information Company, LLC.

REMOVAL

1. Disconnect and isolate the negative battery cable.

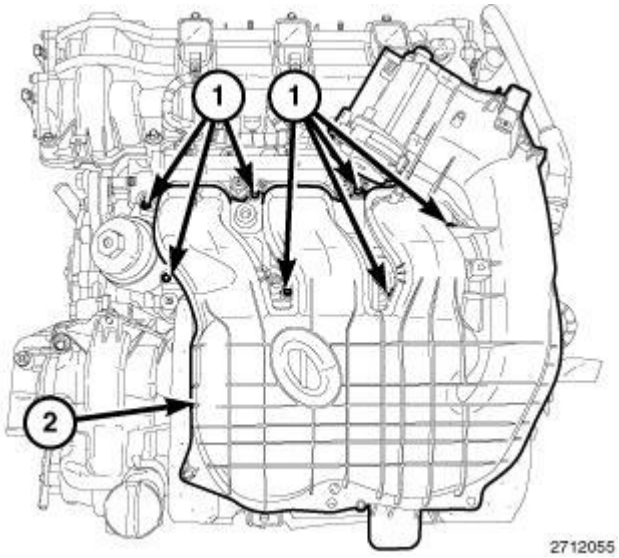

Fig. 501: Upper Intake Manifold & Bolts
Courtesy of CHRYSLER GROUP, LLC

2. Remove the air inlet hose, upper intake manifold (2) and insulator. Refer to **MANIFOLD, INTAKE, REMOVAL**.

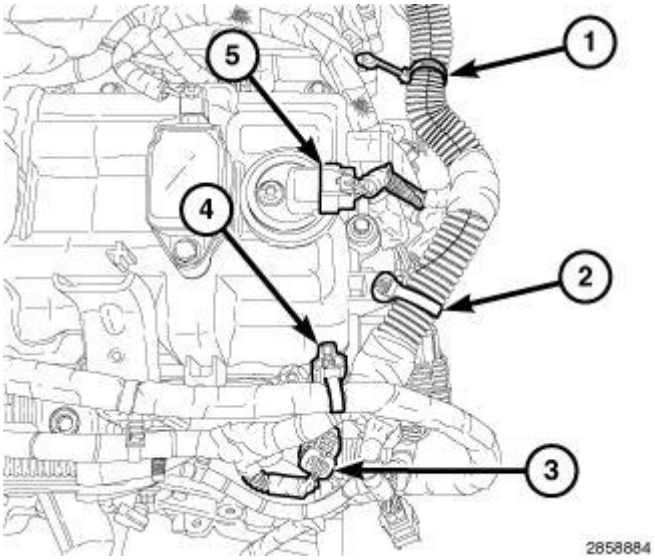

Fig. 502: ECT Sensor Connector, CMP Sensor & Main Wire Harness Retainers
Courtesy of CHRYSLER GROUP, LLC

CAUTION: The engine must be raised substantially to facilitate engine mount removal. Failure to disconnect the left CMP sensor may result in damage to the sensor and/or wire harness connector.

 © 2011 Mitchell Repair Information Company, LLC.

3. Disconnect the left Camshaft Position (CMP) sensor (5).

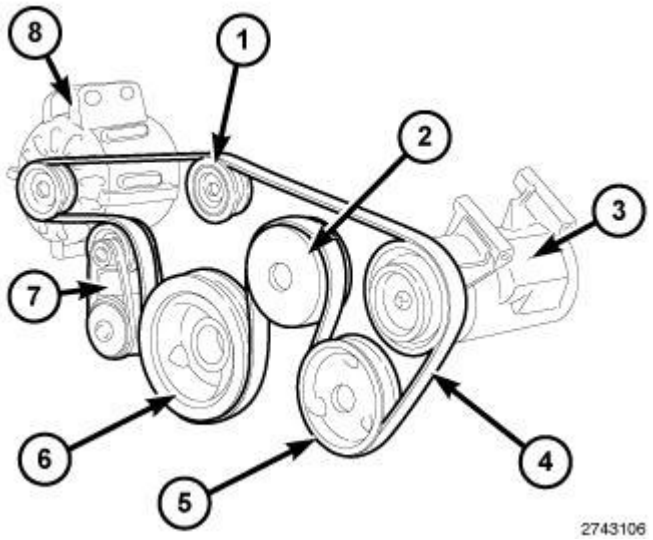

Fig. 503: Drive Belt Tensioners & Accessory Drive Belt Routing
Courtesy of CHRYSLER GROUP, LLC

4. Remove the accessory drive belt (4). Refer to **BELT, SERPENTINE, REMOVAL** .
5. Remove the generator (8). Refer to **GENERATOR, REMOVAL** .

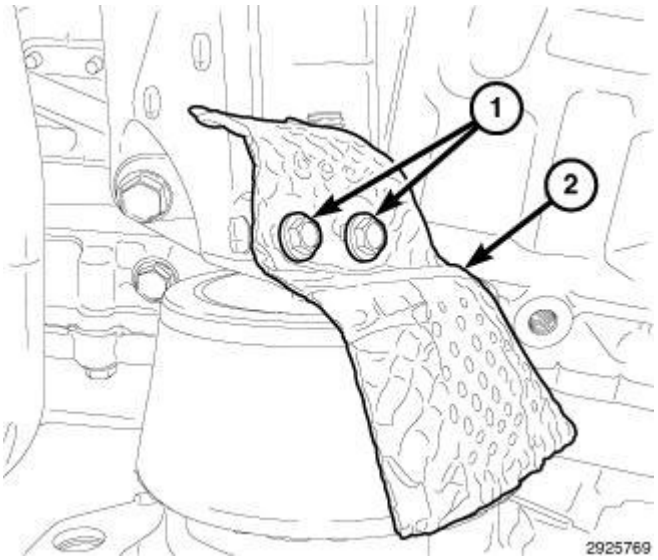

Fig. 504: Engine Mount Heatshield & Bolts
Courtesy of CHRYSLER GROUP, LLC

NOTE: Left engine mount shown in the illustration, right engine mount similar.

6. Remove the bolts (1) and the engine mount heatshield (2) from both the left and right engine mounts.

 © 2011 Mitchell Repair Information Company, LLC.

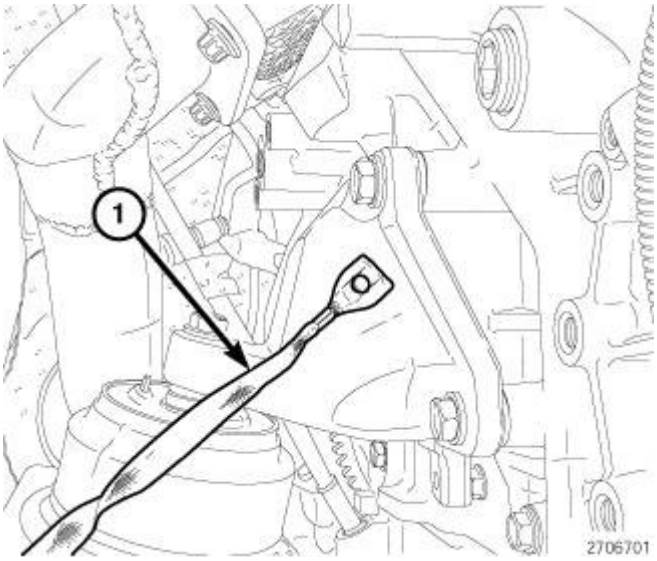

Fig. 505: Ground Strap
Courtesy of CHRYSLER GROUP, LLC

7. Remove the ground strap (1) from the right engine mount bracket.

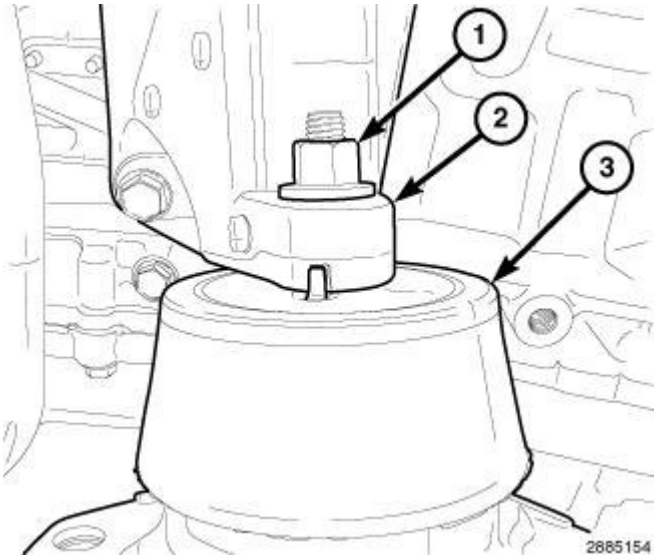

Fig. 506: Left Engine Mount Isolator & Upper Retaining Nut
Courtesy of CHRYSLER GROUP, LLC

NOTE: Left engine mount shown in the illustration, right engine mount similar.

8. Remove both the left and right engine mount nuts (1).

 © 2011 Mitchell Repair Information Company, LLC.

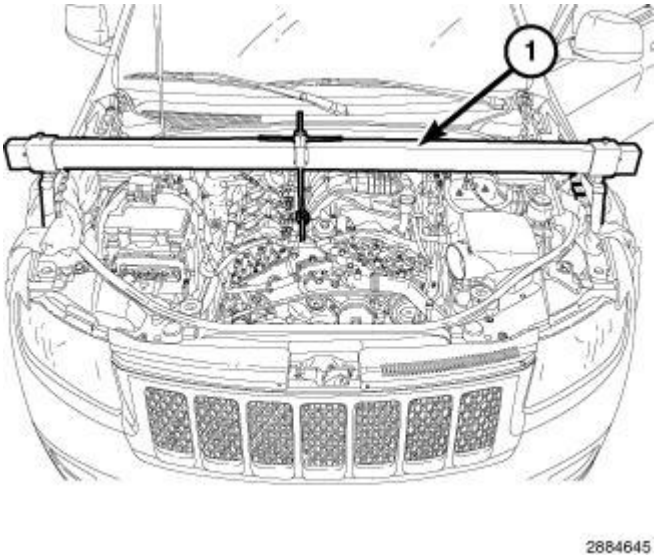

Fig. 507: Engine Support Fixture
Courtesy of CHRYSLER GROUP, LLC

9. Install Engine Support Fixture (special tool #8534B, Fixture, Driveline Support) and carefully lift the engine as high as possible.
10. Raise and support the vehicle. Refer to **HOISTING, STANDARD PROCEDURE** .
11. If equipped, remove the front skid plate and front suspension skid plate (Refer to FRAME AND BUMPERS **UNDER BODY PROTECTION**).

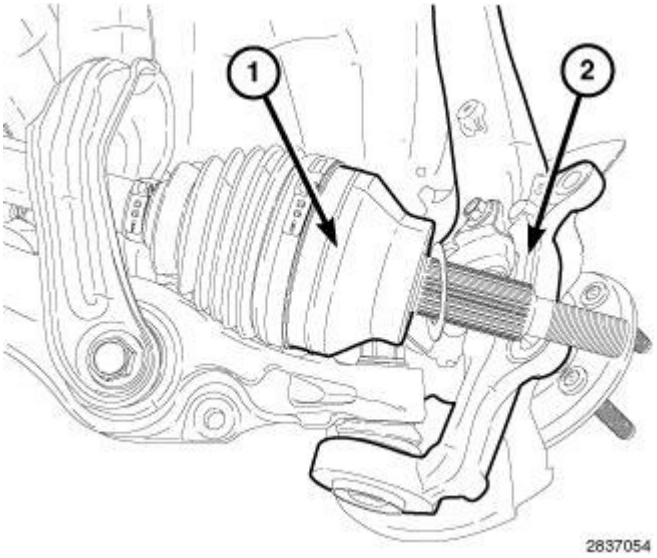

Fig. 508: Knuckle & Half Shaft
Courtesy of CHRYSLER GROUP, LLC

12. If equipped with AWD, remove the right front half shaft (1). Refer to **REMOVAL** .

 © 2011 Mitchell Repair Information Company, LLC.

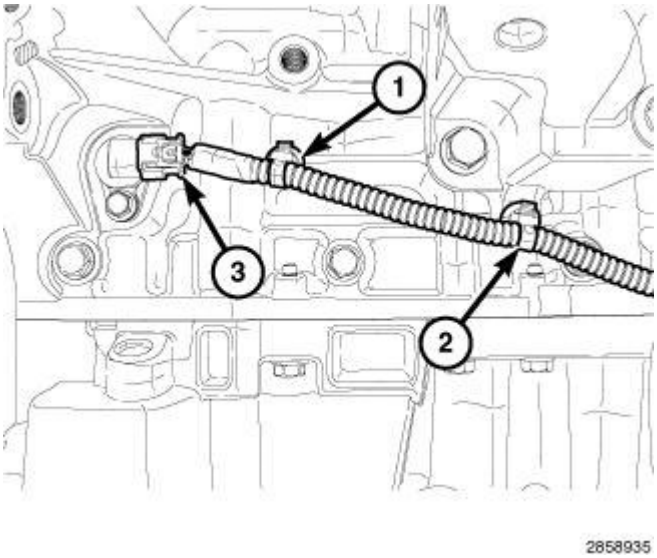

Fig. 509: Main Wire Harness Retainers & CKP Sensor
Courtesy of CHRYSLER GROUP, LLC

13. Disengage one main wire harness retainer (2) from the right engine mounting bracket.

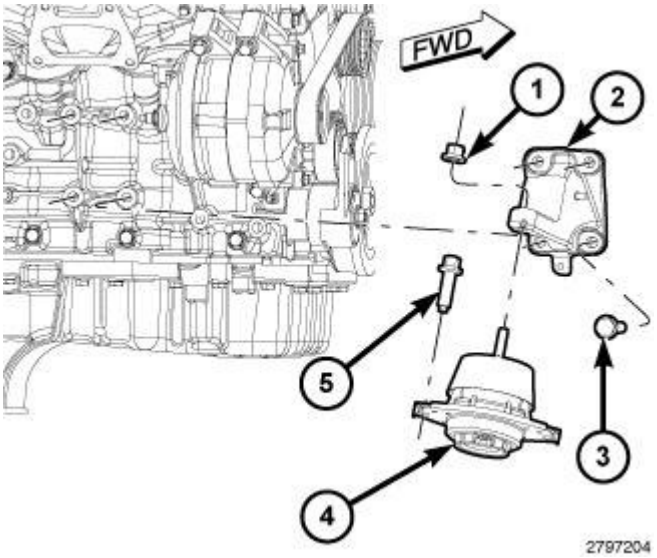

Fig. 510: Engine Mount Isolator, Right Engine Mount Bracket & Retaining Bolts
Courtesy of CHRYSLER GROUP, LLC

14. Remove the four bolts (3) from the right engine mount bracket (2).
15. Remove the two bolts (5) from the right engine mount isolator (4).
16. Separate the isolator (4) from the engine mount bracket (2) and remove the isolator from the vehicle.
17. If required, remove the right engine mount bracket (2) from the vehicle.

INSTALLATION

INSTALLATION

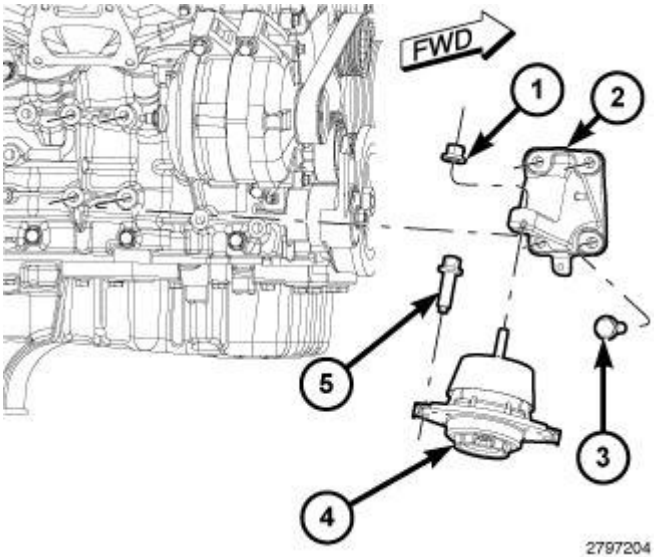

Fig. 511: Engine Mount Isolator, Right Engine Mount Bracket & Retaining Bolts
Courtesy of CHRYSLER GROUP, LLC

1. If removed, position the right engine mount bracket (2) into the vehicle.
2. Install the right engine mount isolator (4) into the vehicle.
3. Insert the isolator stud into the bracket and rotate the assembly into position.
4. Install the right engine mount isolator (4) to the frame with two bolts (5) tightened to 61 N.m (45 ft. lbs.).
5. Install the right engine mount bracket (2) to the engine block with four bolts (3) tightened to 61 N.m (45 ft. lbs.).

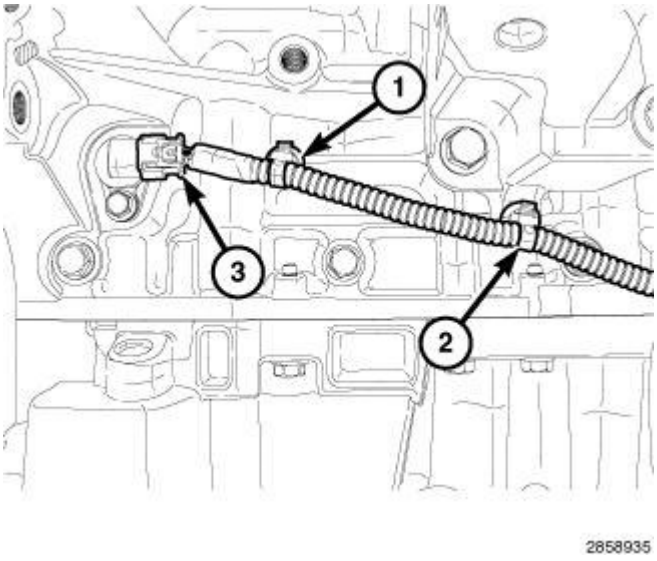

Fig. 512: Main Wire Harness Retainers & CKP Sensor
Courtesy of CHRYSLER GROUP, LLC

6. Engage one main wire harness retainer (2) to the right engine mounting bracket.

 © 2011 Mitchell Repair Information Company, LLC.

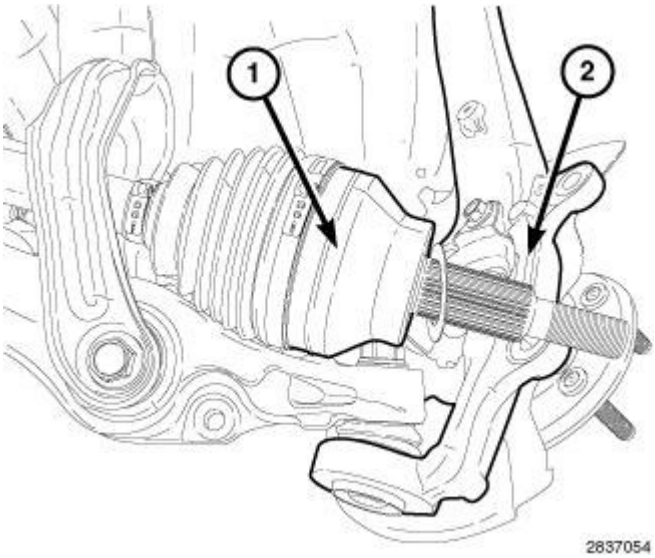

Fig. 513: Knuckle & Half Shaft
Courtesy of CHRYSLER GROUP, LLC

7. If equipped with AWD, install the right front half shaft (1). Refer to **INSTALLATION** .
8. If equipped, install the front skid plate and front suspension skid plate. Refer to FRAME AND BUMPERS **UNDER BODY PROTECTION** .
9. Lower the vehicle.

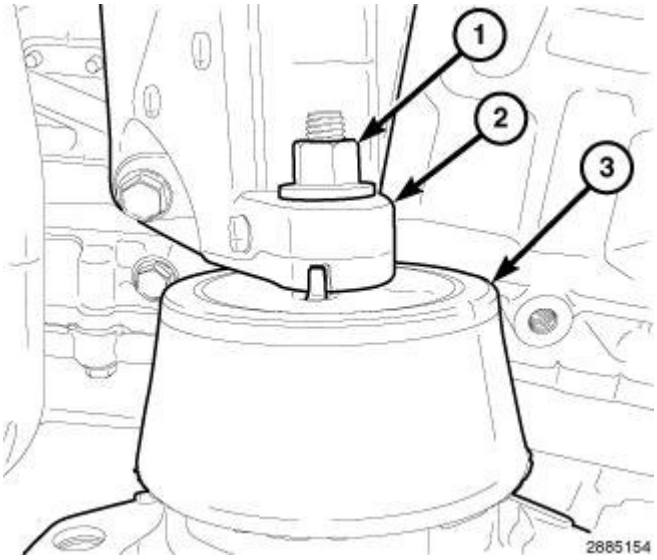

Fig. 514: Left Engine Mount Isolator & Upper Retaining Nut
Courtesy of CHRYSLER GROUP, LLC

NOTE: Left engine mount shown in the illustration, right engine mount similar.

10. Align the tab on the isolators (3) with the notch in the engine mount brackets (2) and lower the engine so the weight is resting on the isolators.

 © 2011 Mitchell Repair Information Company, LLC.

11. Install the left and right engine mount nuts (1) and tighten to 61 N.m (45 ft. lbs.).

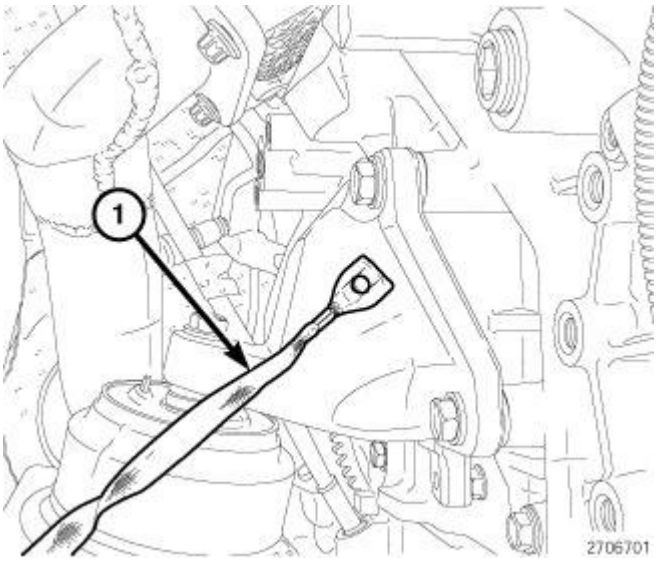

Fig. 515: Ground Strap
Courtesy of CHRYSLER GROUP, LLC

12. Install the ground strap (1) to the right engine mount bracket.

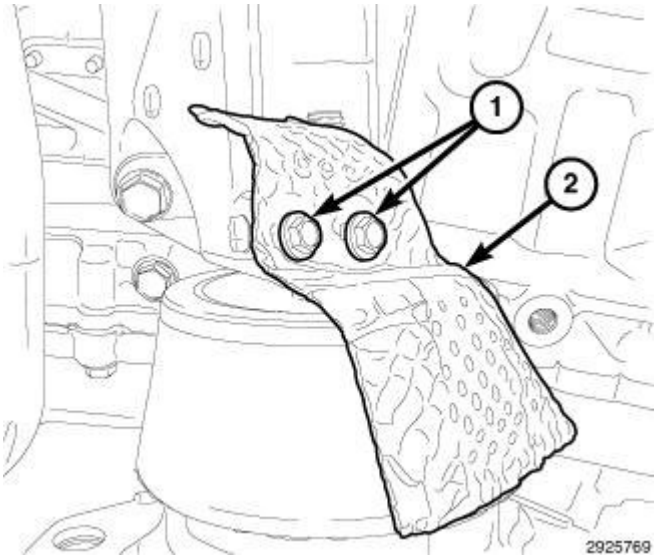

Fig. 516: Engine Mount Heatshield & Bolts
Courtesy of CHRYSLER GROUP, LLC

NOTE: Left engine mount shown in the illustration, right engine mount similar.

13. Install the engine mount heatshield (2) to both the left and right engine mounts with two bolts (1) tightened to 12 N.m (106 in. lbs.).

 © 2011 Mitchell Repair Information Company, LLC.

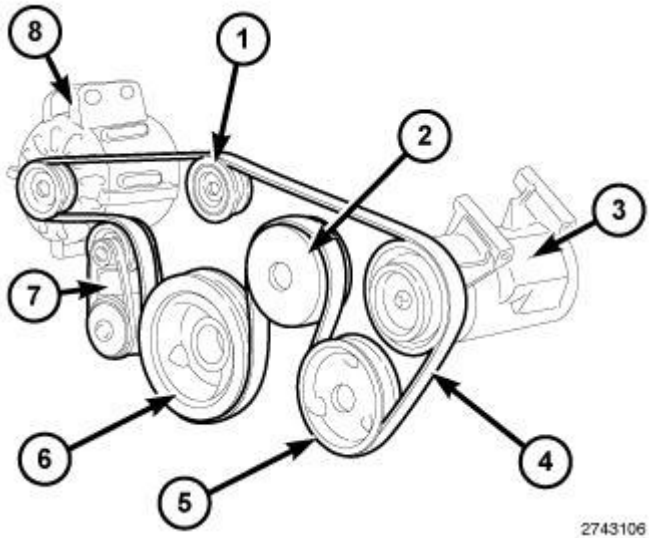

Fig. 517: Drive Belt Tensioners & Accessory Drive Belt Routing
Courtesy of CHRYSLER GROUP, LLC

14. Install the generator (8). Refer to **GENERATOR, INSTALLATION** .
15. Install the accessory drive belt (4). Refer to **BELT, SERPENTINE, INSTALLATION** .

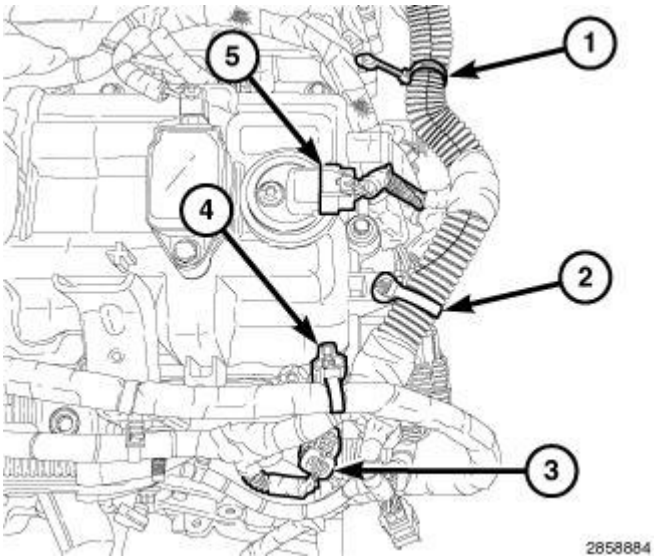

Fig. 518: ECT Sensor Connector, CMP Sensor & Main Wire Harness Retainers
Courtesy of CHRYSLER GROUP, LLC

16. Connect the left Camshaft Position (CMP) sensor (5).

 © 2011 Mitchell Repair Information Company, LLC.

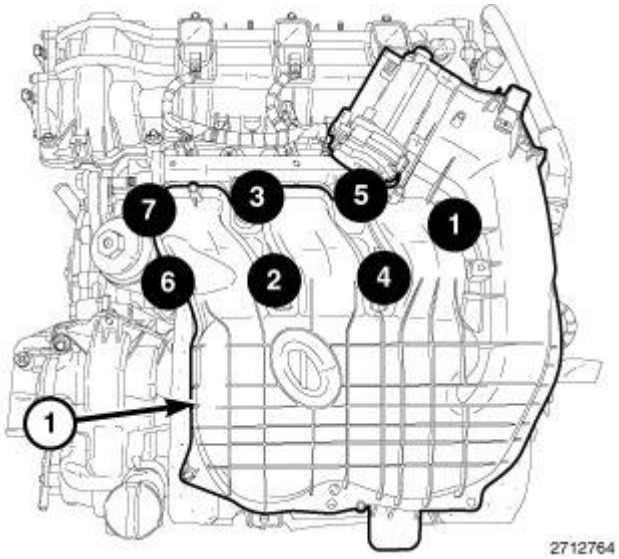

Fig. 519: Upper Intake Manifold Bolt Tightening Sequence
Courtesy of CHRYSLER GROUP, LLC

17. Install the upper intake manifold, insulator and air inlet hose. Refer to **MANIFOLD, INTAKE, INSTALLATION**.
18. Connect the negative battery cable and tighten nut to 5 N.m (45 in. lbs.).

INSULATOR, ENGINE MOUNT, REAR

REMOVAL

REMOVAL

1. Raise and support the vehicle. Refer to **HOISTING, STANDARD PROCEDURE** .
2. Remove the skid plate, if equipped. Refer to **PLATE, SKID, TRANSMISSION, REMOVAL** and/or **PLATE, SKID, TRANSFER CASE, REMOVAL** .

 © 2011 Mitchell Repair Information Company, LLC.

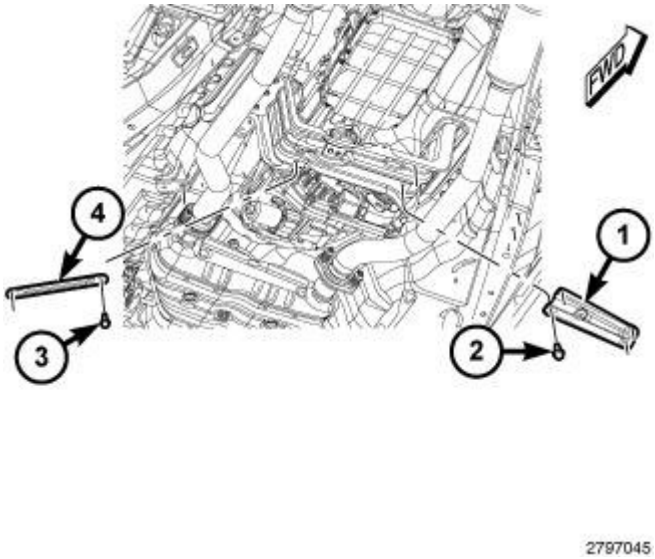

Fig. 520: Left & Right Crossmember Brace With Fasteners
Courtesy of CHRYSLER GROUP, LLC

3. Remove four bolts (2) and the left crossmember brace (1).
4. Remove two bolts (3) and the right crossmember brace (4).

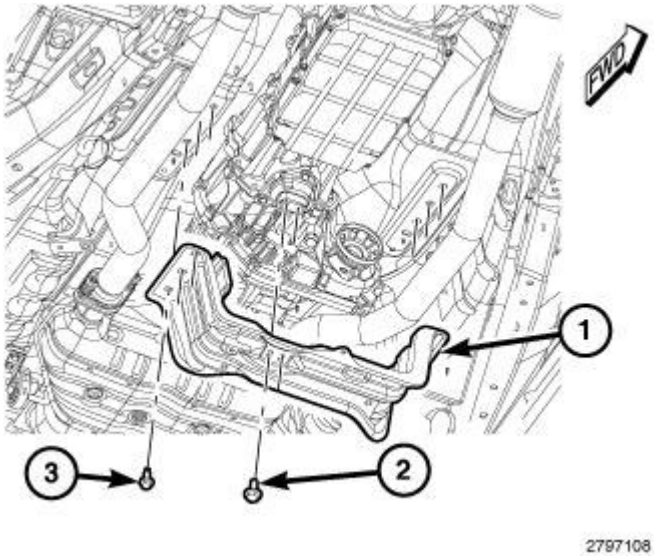

Fig. 521: Crossmember & Bolts
Courtesy of CHRYSLER GROUP, LLC

5. Remove the two bolts (2) from the rear engine mount isolator.
6. Using a suitable jack stand and a block of wood positioned under the transmission oil pan, raise the transmission until the weight is off of the isolator (approximately 5 mm).
7. Remove six bolts (3) and the crossmember (1).

 © 2011 Mitchell Repair Information Company, LLC.

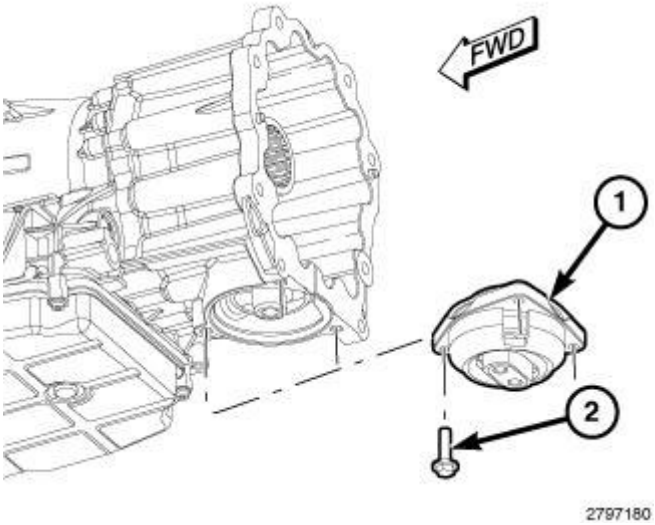

Fig. 522: Rear Engine Mount Isolator & Bolts (4x4)
Courtesy of CHRYSLER GROUP, LLC

8. On 4x4 vehicles, remove three bolts (2) and the rear engine mount isolator (1).

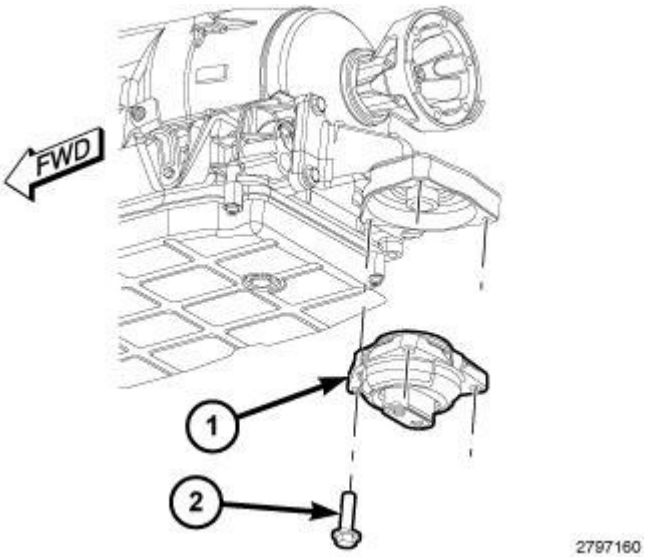

Fig. 523: Rear Engine Mount Isolator & Bolts (4x2)
Courtesy of CHRYSLER GROUP, LLC

9. On 4x2 vehicles, remove three bolts (2) and the rear engine mount isolator (1).

 © 2011 Mitchell Repair Information Company, LLC.

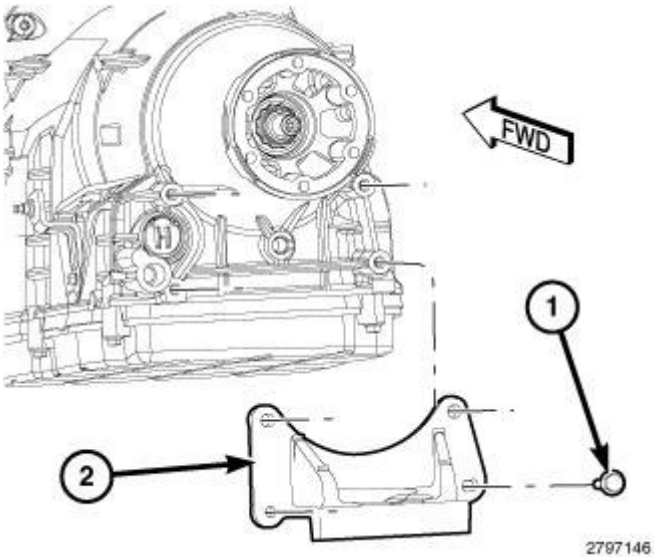

Fig. 524: Rear Engine Mount Bracket & Bolts (4x2)
Courtesy of CHRYSLER GROUP, LLC

10. On 4x2 vehicles if required, remove four bolts (1) and the rear engine mount bracket (2).

INSTALLATION

INSTALLATION

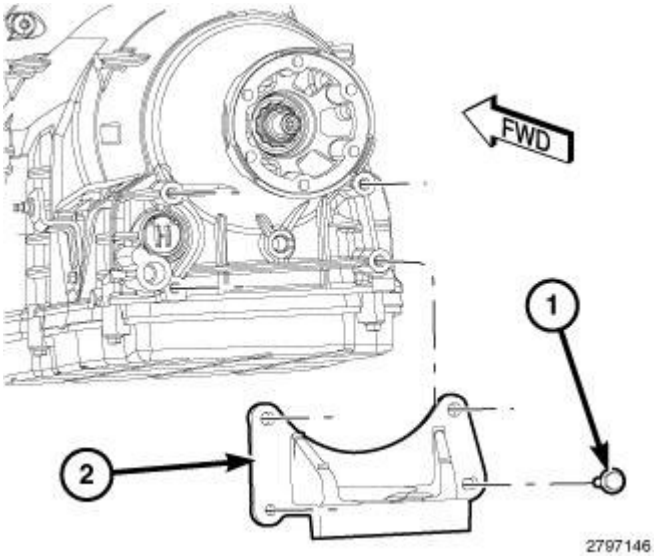

Fig. 525: Rear Engine Mount Bracket & Bolts (4x2)
Courtesy of CHRYSLER GROUP, LLC

1. On 4x2 vehicles if removed, install the rear engine mount bracket (2) with four bolts (1) tightened to 33 N.m (24 ft. lbs.).

 © 2011 Mitchell Repair Information Company, LLC.

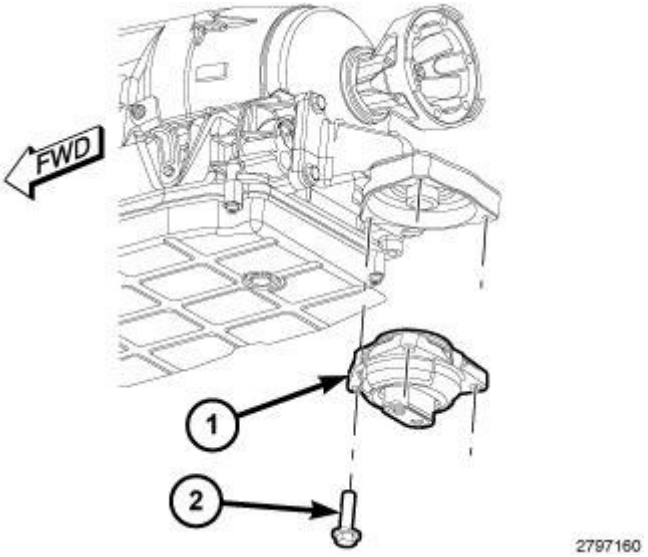

Fig. 526: Rear Engine Mount Isolator & Bolts (4x2)
Courtesy of CHRYSLER GROUP, LLC

2. On 4x2 vehicles, install the rear engine mount isolator (1) with three bolts (2) tightened to 61 N.m (45 ft. lbs.).

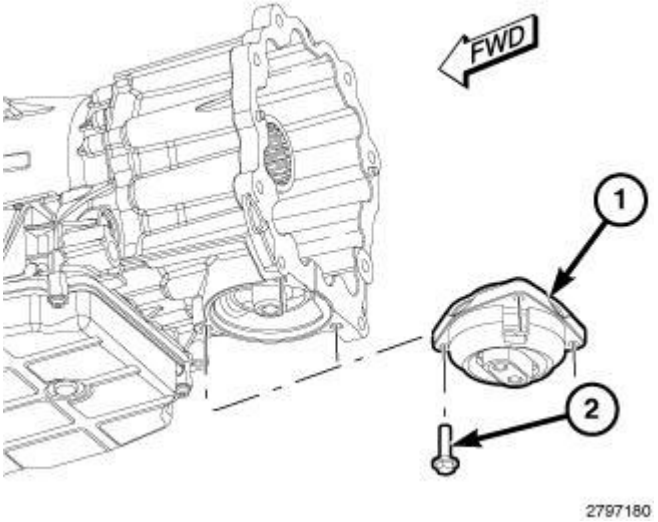

Fig. 527: Rear Engine Mount Isolator & Bolts (4x4)
Courtesy of CHRYSLER GROUP, LLC

3. On 4x4 vehicles, install the rear engine mount isolator (1) with three bolts (2) tightened to 61 N.m (45 ft. lbs.).

 © 2011 Mitchell Repair Information Company, LLC.

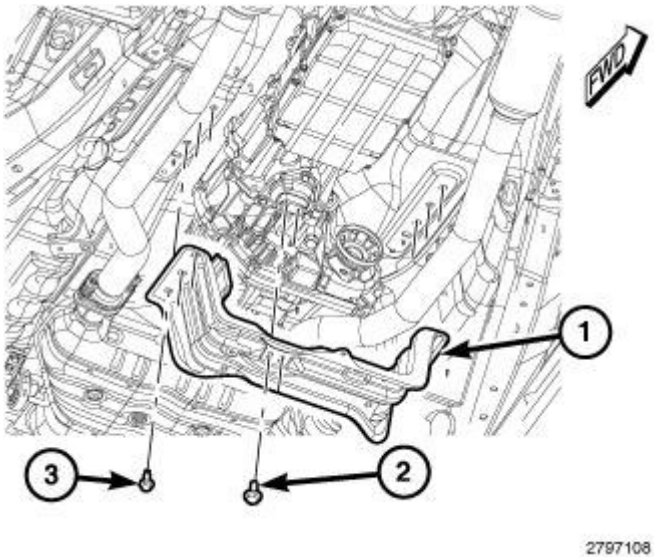

Fig. 528: Crossmember & Bolts
Courtesy of CHRYSLER GROUP, LLC

4. Install the crossmember (1) with six bolts (3) tightened to 55 N.m (41 ft. lbs.).
5. Lower the transmission so the weight is resting on the isolator.
6. Install two bolts (2) to the rear engine mount isolator and tighten to 61 N.m (45 ft. lbs.).

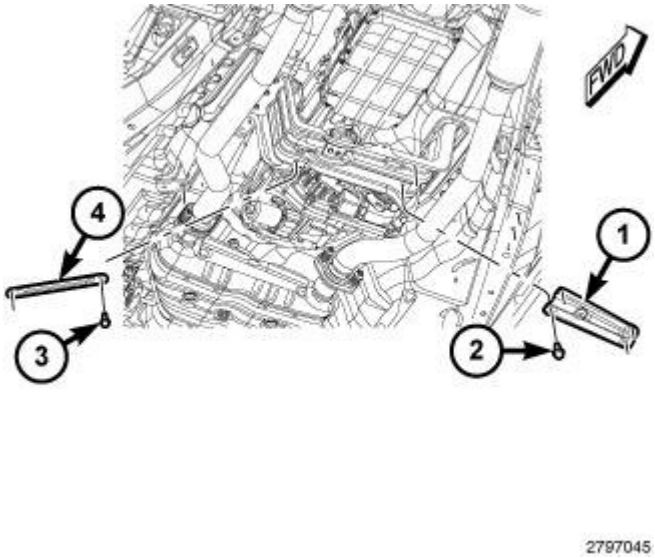

Fig. 529: Left & Right Crossmember Brace With Fasteners
Courtesy of CHRYSLER GROUP, LLC

7. Install the left crossmember brace (1) with four bolts (2) tightened to 55 N.m (41 ft. lbs.).
8. Install the right crossmember brace (4) with two bolts (3) tightened to 55 N.m (41 ft. lbs.).
9. Install the skid plate, if equipped. Refer to **PLATE, SKID, TRANSMISSION, INSTALLATION** and/or **PLATE, SKID, TRANSFER CASE, INSTALLATION** .
10. Lower the vehicle.

 © 2011 Mitchell Repair Information Company, LLC.

LUBRICATION

DESCRIPTION

DESCRIPTION

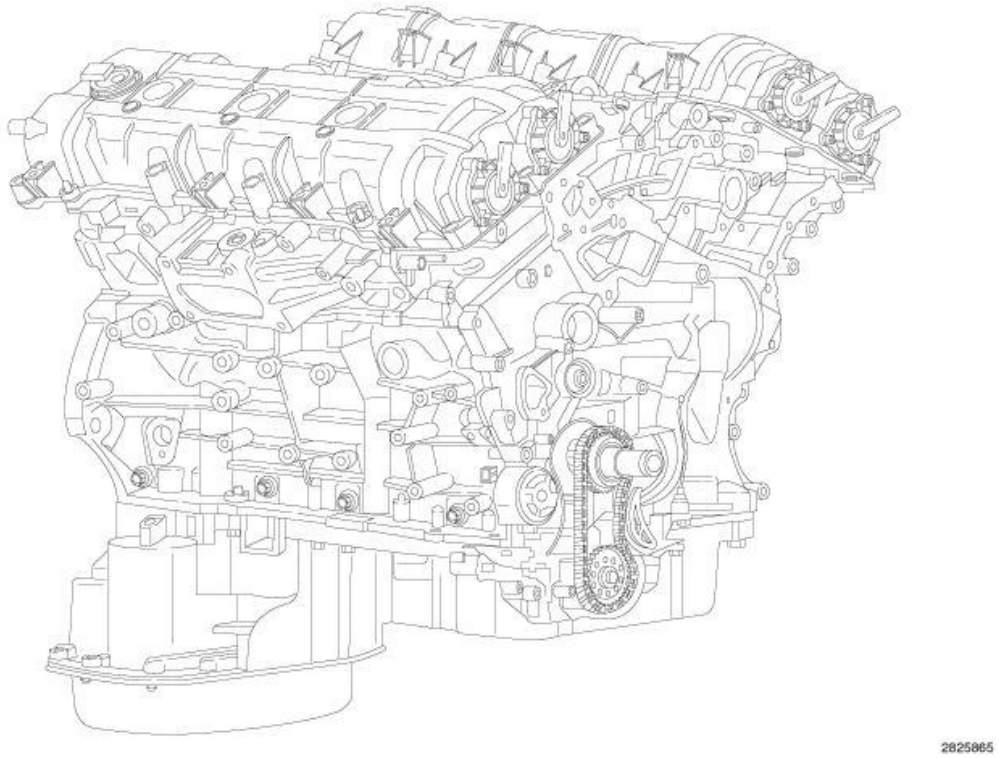

Fig. 530: 3.6L Engine
Courtesy of CHRYSLER GROUP, LLC

The lubrication system is a full flow filtration, pressure feed type lubrication system. The oil pump is mounted to the bottom of the cylinder block and chain driven by the crankshaft sprocket. The oil pump pick-up tube is attached to the oil pump and supported at the windage tray. There are three oil gallery plugs installed in the engine block. A system oil pressure sensor allows oil pressure to be monitored with a diagnostic scan tool. The oil pressure and oil temperature sensors are located on the oil filter housing assembly which is mounted to the top of the engine block between the cylinder heads. The oil cooler is mounted to the oil filter housing. There is a pressure relief valve in the oil pump that is only activated on a cold start or for emergency relief since the oil pump output is self-regulating. There are three piston oil cooler jets mounted to the engine block. Each jet cools two pistons.

OPERATION

OPERATION

 © 2011 Mitchell Repair Information Company, LLC.

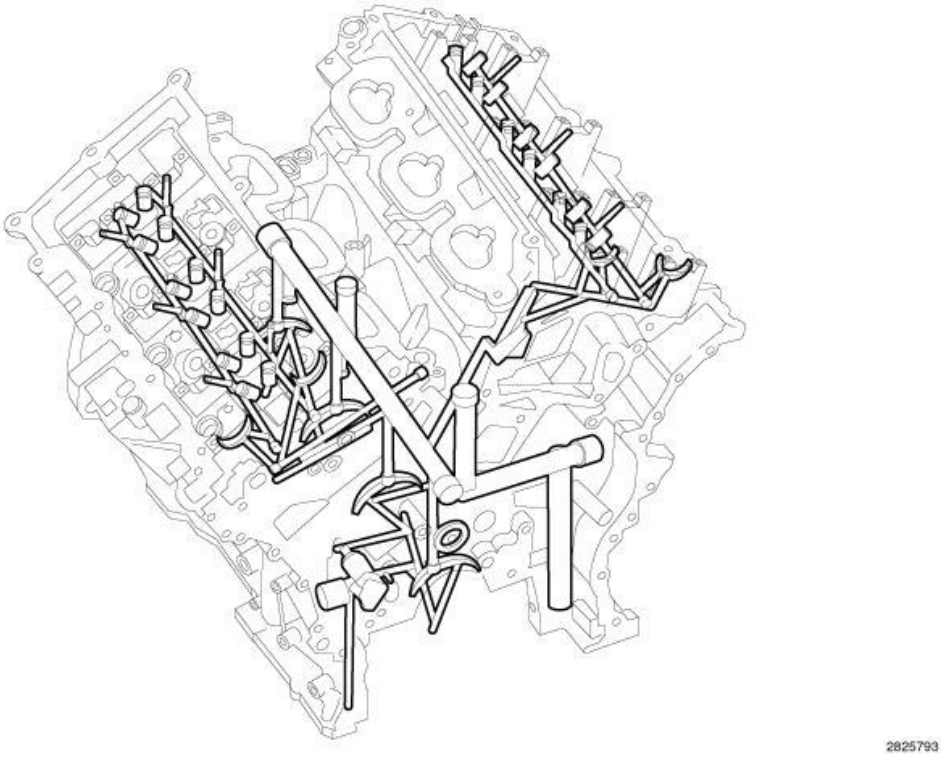

Fig. 531: Engine Lubrication Flow
Courtesy of CHRYSLER GROUP, LLC

The oil from the oil pan is pumped by a vane type oil pump mounted to the bottom of the cylinder block that is chain driven by the crankshaft sprocket. The oil from the pump travels to the oil filter element and then to the oil cooler assembly. After the oil has been filtered and cooled, the oil enters the main oil gallery. The pressurized oil travels through the main gallery to the four main journals to lubricate the crankshaft main bearings. The pressurized oil travels through the crankshaft main journals to cross-drilling supplying oil to the connecting rod journals. From the number one main bearing gallery, oil travels to the right secondary chain tensioner and to the primary chain idler shaft. The main oil gallery also supplies oil to three sets of piston oil cooling jets. From the cylinder block the oil flows through drillings into the left and right cylinder heads. Left cylinder head oil is supplied to the left secondary timing chain tensioner, camshaft journals and hydraulic lash adjusters. Right cylinder hear oil is supplied to the right camshaft journals and hydraulic lash adjusters. The camshaft valve lobes and rocker arms are lubricated through a small hole in the rocker arm; oil flows through the lash adjuster then through the rocker arm and onto the camshaft lobe. Oil also flows through each of the four forward camshaft bearings into the camshafts and phasers.

ENGINE LUBRICATION FLOW CHART

FROM	TO
Oil Pickup Tube	Oil Pump
Oil Pump	Oil Filter
Oil Filter	Oil Cooler
Oil Cooler	Block Main Oil Gallery
Block Main Oil Gallery	1. Crankshaft Main Journals 2. Left Cylinder Head

 © 2011 Mitchell Repair Information Company, LLC.

	3. Right Cylinder Head 4. Piston Cooling Jets
Crankshaft Number One Main Journal	1. Primary Chain Idler Shaft 2. Right Secondary Chain Tensioner 3. Oil Pump Feedback
Crankshaft Main Journals	Crankshaft Rod Journals
Left Cylinder Head	1. Left Secondary Chain Tensioner 2. Hydraulic Lash Adjusters 3. Camshaft Journals 4. Phaser Oil Control Valves
Right Cylinder Head	1. Hydraulic Lash Adjusters 2. Camshaft Journals 3. Phaser Oil Control Valves
Hydraulic Lash Adjusters	1. Rocker Arms 2. Cam Lobes

DIAGNOSIS AND TESTING

ENGINE OIL LEAK

Begin with a thorough visual inspection of the engine, particularly at the area of the suspected leak. If an oil leak source is not readily identifiable, the following steps should be followed:

1. Do not clean or de-grease the engine at this time because some solvents may cause rubber to swell, temporarily stopping the leak.
2. Add an oil soluble dye (use as recommended by manufacturer). Start the engine and let idle for approximately 15 minutes. Check the oil dipstick to make sure the dye is thoroughly mixed as indicated with a bright yellow color under a black light.
3. Using a black light, inspect the entire engine for fluorescent dye, particularly at the suspected area of the oil leak. If the oil leak is found and identified, repair per Service Information instructions.
4. If dye is not observed, drive the vehicle at various speeds for approximately 24 km (15 miles), and repeat the inspection.

   If the oil leak source is not positively identified at this time, proceed with the air leak detection test method.

AIR LEAK DETECTION TEST METHOD

1. Disconnect the make-up air hose from the cylinder head cover. Cap or plug the make-up air hose nipple.
2. Remove the PCV hose from the PCV valve. Cap or plug the PCV valve nipple.
3. Attach an air hose with a pressure gauge and regulator to the dipstick tube.

CAUTION: Do not subject the engine assembly to more than 20.6 kPa (3 PSI) of test pressure.

 © 2011 Mitchell Repair Information Company, LLC.

4. Gradually increase air pressure from 1 psi to 2.5 psi maximum while applying soapy water at the suspected leak source. Adjust the regulator to a suitable test pressure within this range that provides the best bubble generation which will pinpoint the leak source. If the oil leak is detected and identified, repair per Service Information procedures.
5. If the leakage occurs at the rear oil seal area, follow the procedures for rear seal area leaks. Refer to ENGINE/LUBRICATION **DIAGNOSIS AND TESTING** .
6. If no leaks are detected, turn off the air supply and remove the air hose and all plugs and caps. Install the PCV valve and make-up air hoses.
7. Clean the oil off of the suspect oil leak area using a suitable solvent. Drive the vehicle at various speeds approximately 24 km (15 miles). Inspect the engine for signs of an oil leak by using a black light.

CHECKING ENGINE OIL PRESSURE

1. Disconnect and isolate the negative battery cable.

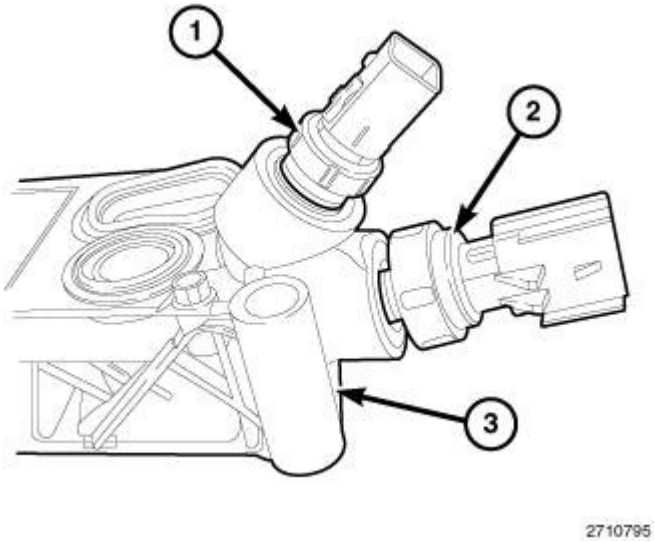

Fig. 532: Oil Temperature Sensor, Oil Pressure Sensor & Oil Filter Housing
Courtesy of CHRYSLER GROUP, LLC

2. Remove the oil pressure sensor (2) from the oil filter housing (3). Refer to **SENSOR, OIL PRESSURE, REMOVAL**.

 © 2011 Mitchell Repair Information Company, LLC.

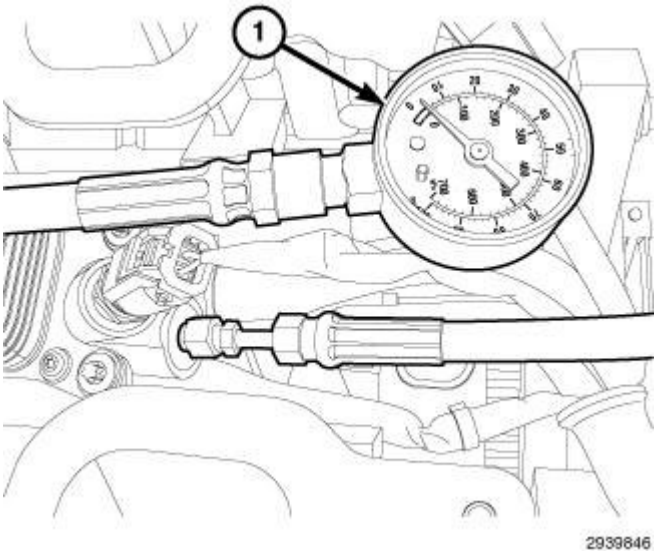

Fig. 533: Pressure Gauge Installed To Oil Pressure Port
Courtesy of CHRYSLER GROUP, LLC

3. Install Pressure Gauge (special tool #C-3292A, Gauge, Pressure) (1) to the oil pressure port. Tighten to 20 N.m (177 in. lbs.).
4. Install the upper and lower intake manifolds and air inlet hose. Refer to **MANIFOLD, INTAKE, INSTALLATION**.
5. Connect the negative battery cable and tighten nut to 5 N.m (45 in. lbs.).
6. Start and idle the engine. If oil pressure is 0 at idle, shut off the engine and consult the Engine Lubrication and Diagnostic Table. Refer to **ENGINE LUBRICATION DIAGNOSTIC TABLE** .
7. Run the engine until it reaches normal operating temperature.
8. Verify that the engine has acceptable oil pressure. Refer to ENGINE **SPECIFICATIONS** .

REAR SEAL AREA LEAKS

Since it is sometimes difficult to determine the source of an oil leak in the rear seal area of the engine, a more involved inspection is necessary. The following steps should be followed to help pinpoint the source of the leak.

If the leakage occurs at the crankshaft rear oil seal area:

1. Disconnect and isolate the negative battery cable.
2. Raise and support the vehicle. Refer to **HOISTING, STANDARD PROCEDURE** .

 © 2011 Mitchell Repair Information Company, LLC.

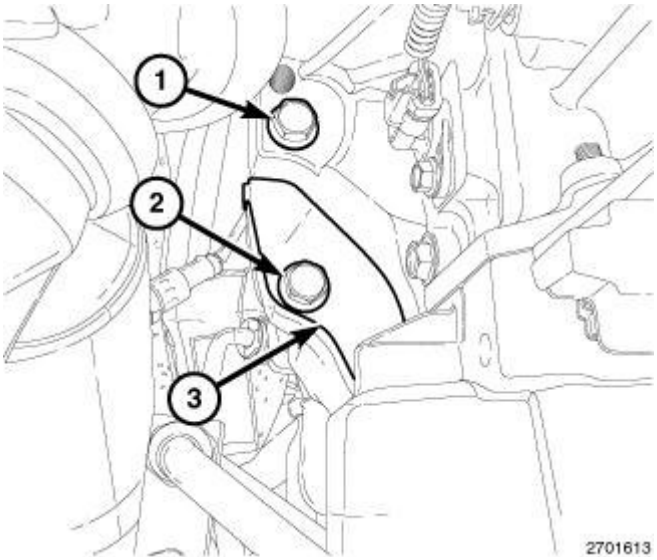

Fig. 534: Side Engine-To-Transmission Bolt, Transmission Dust Shield Retaining Bolt & Dust Shield
Courtesy of CHRYSLER GROUP, LLC

3. Remove the bolt (2) and the torque converter dust shield (3).

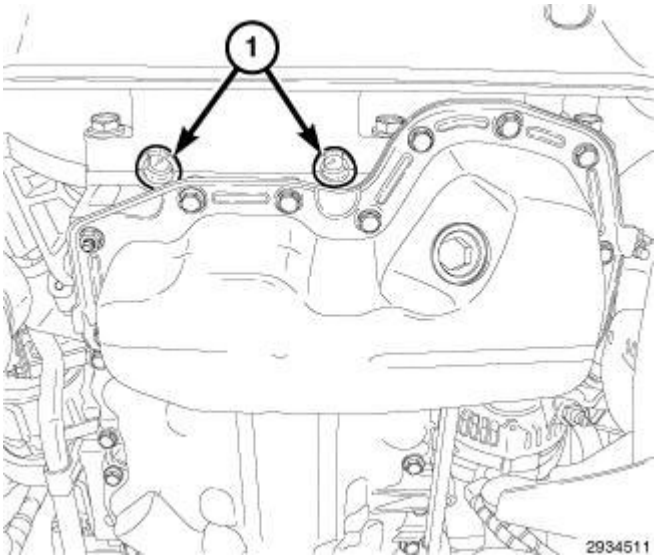

Fig. 535: Rubber Plugs
Courtesy of CHRYSLER GROUP, LLC

4. Remove two rubber plugs (1) covering the rear oil seal retainer flange bolts.
5. Inspect the flexplate and rear of the block for evidence of oil. Use a black light to check for the oil leak:
   a. Circular spray pattern generally indicates seal leakage or crankshaft damage.
   b. Where leakage tends to run straight down, possible causes are a porous block, rear oil seal retainer, oil galley pipe plug and rear seal retainer to oil pan mating surfaces.
6. If no leaks are detected, use the Air Leak Detection Method as outlined in Engine Oil Leak. Refer to

ENGINE/LUBRICATION **DIAGNOSIS AND TESTING** .

CAUTION: Do not subject the engine assembly to more than 20.6 kPa (3 PSI) of test pressure.

7. If the leak is not detected, very slowly turn the crankshaft and watch for leakage. If a leak is detected between the crankshaft and seal while slowly turning the crankshaft, it is possible the crankshaft seal surface is damaged. The seal area on the crankshaft could have minor nicks or scratches that can be polished out with emery cloth.

CAUTION: Use extreme caution when crankshaft polishing is necessary to remove minor nicks or scratches. The crankshaft seal flange is specially machined to complement the function of the rear oil seal.

8. For bubbles that remain steady with shaft rotation, no further inspection can be done until disassembled. Refer to **SEAL, CRANKSHAFT OIL, REAR, REMOVAL**.

COOLER, OIL

DESCRIPTION

DESCRIPTION

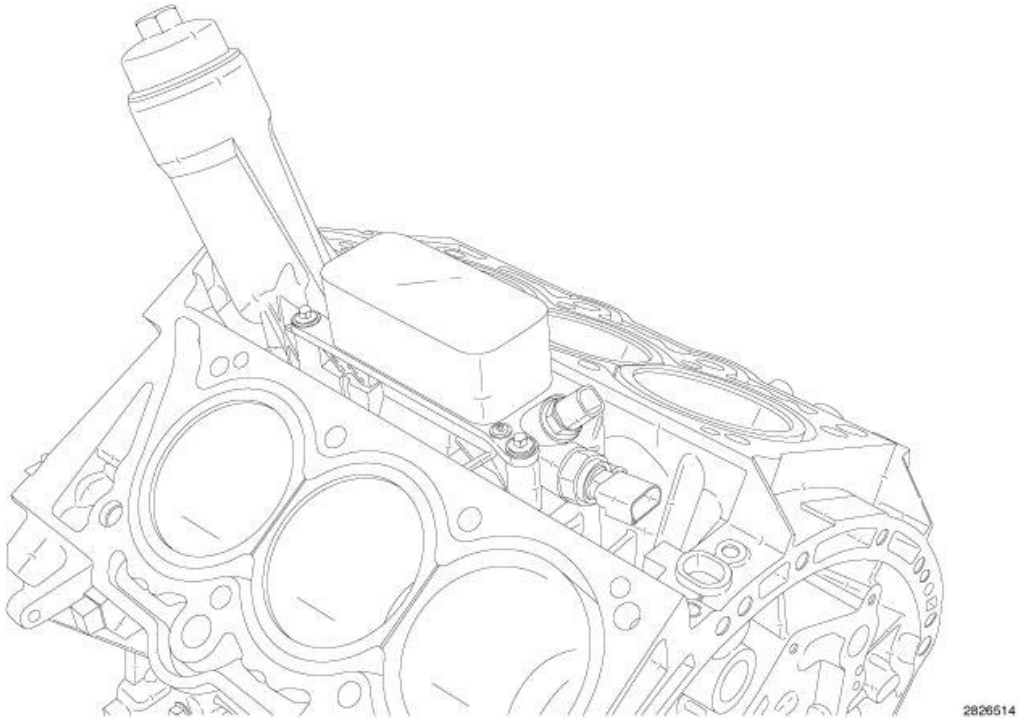

Fig. 536: Oil Filter Housing
Courtesy of CHRYSLER GROUP, LLC

 © 2011 Mitchell Repair Information Company, LLC.

The oil cooler is attached to the top of the oil filter housing which is located in the V of the cylinder block. The oil cooler is a plate style coolant-to-oil heat exchanger.

OPERATION

OPERATION

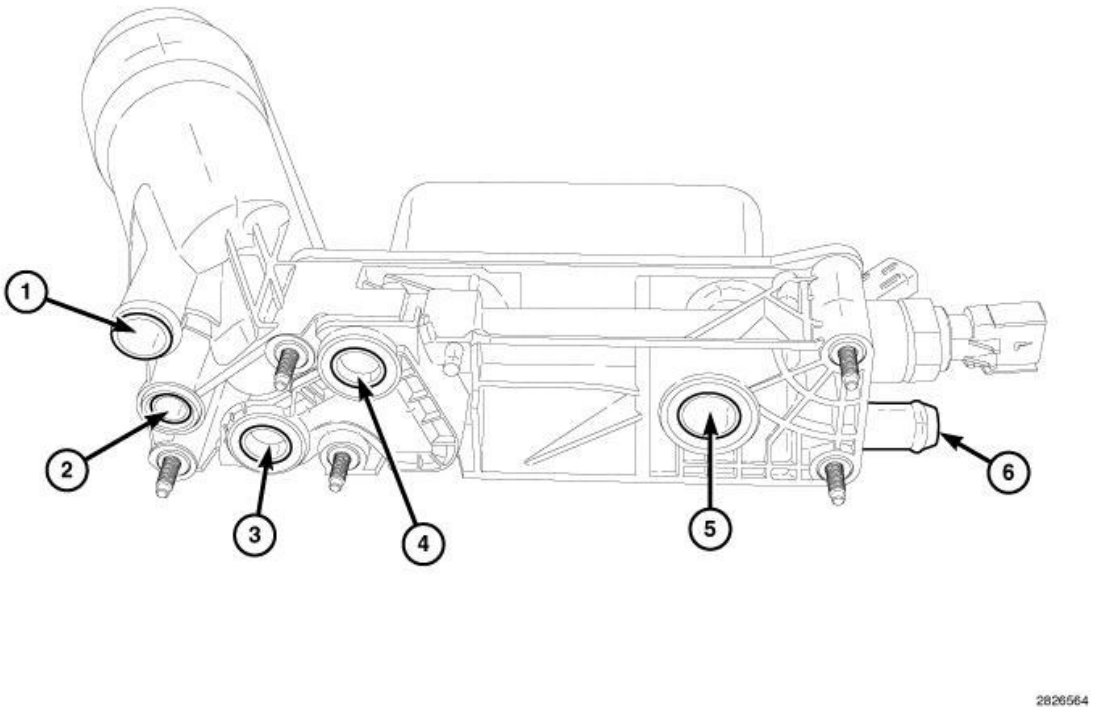

Fig. 537: Oil Flow & Coolant Flow Locations
Courtesy of CHRYSLER GROUP, LLC

Oil flows from the engine oil pump to the oil filter housing inlet (1) and to the oil filter element located within the oil filter housing. After the oil is filtered it travels internally through the engine oil cooler and then to the main oil gallery (5).

Coolant flows from the right cylinder block water jacket (3) and from the left cylinder block water jacket (4) into the housing. The coolant flows through the oil cooler and exits the housing from the rear hose nipple (6) where it is returned to the water pump. A coolant by-pass in the housing is designed to direct excessive coolant flow around the oil cooler for continuous circulation.

REMOVAL

REMOVAL

1. Perform the fuel pressure release procedure. Refer to **FUEL DELIVERY, GAS, STANDARD PROCEDURE** .
2. Disconnect and isolate the negative battery cable.

3. Drain the cooling system. Refer to **STANDARD PROCEDURE** .
4. Remove the air cleaner housing assembly, upper and lower intake manifolds. Refer to **MANIFOLD, INTAKE, REMOVAL**.

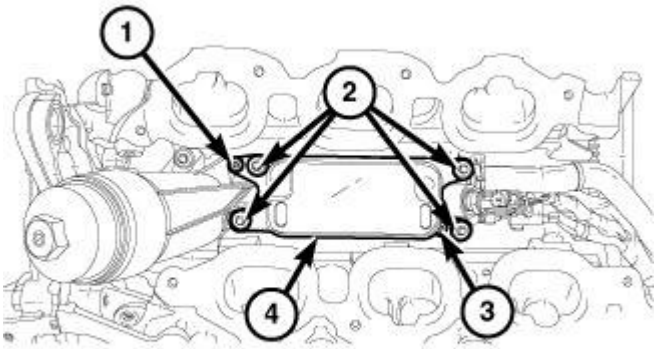

2707169

Fig. 538: Oil Cooler & Fasteners
Courtesy of CHRYSLER GROUP, LLC

NOTE: The oil cooler can not be cleaned out. In the event that the engine requires rebuilding or replacement, replace the oil cooler.

5. Remove four bolts (2) and two screws (1) and (3).
6. Remove the oil cooler (4).

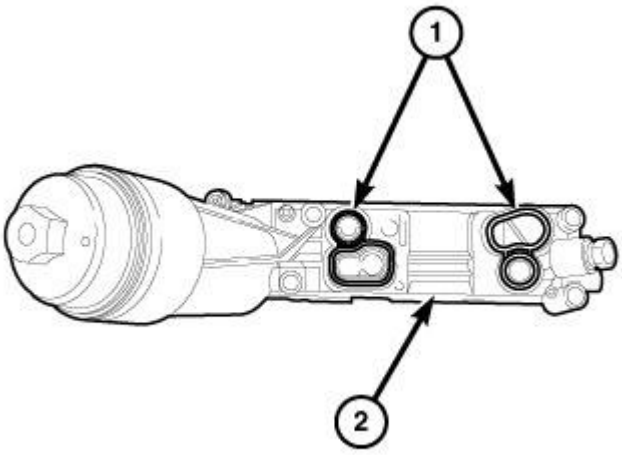

2710718

Fig. 539: Oil Cooler Seals & Oil Filter Housing
Courtesy of CHRYSLER GROUP, LLC

 © 2011 Mitchell Repair Information Company, LLC.

7. Remove and discard the oil cooler seals (1).

INSTALLATION

INSTALLATION

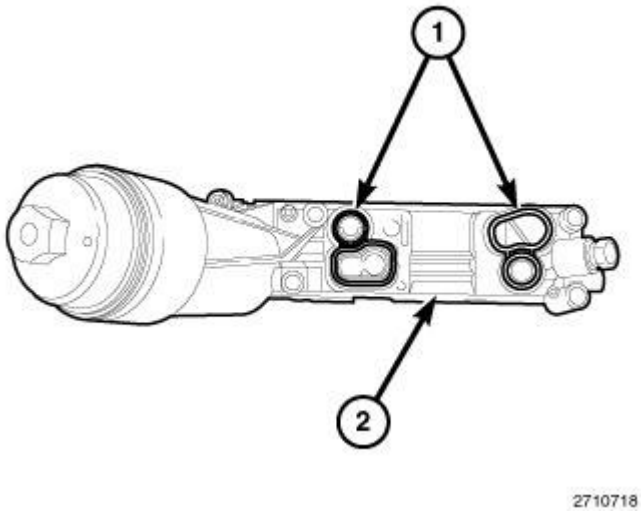

Fig. 540: Oil Cooler Seals & Oil Filter Housing
Courtesy of CHRYSLER GROUP, LLC

NOTE: Always use new dry seals (1) when installing the oil cooler. Do not lubricate the seals.

1. Install the new oil cooler seals (1) onto the oil filter housing (2).

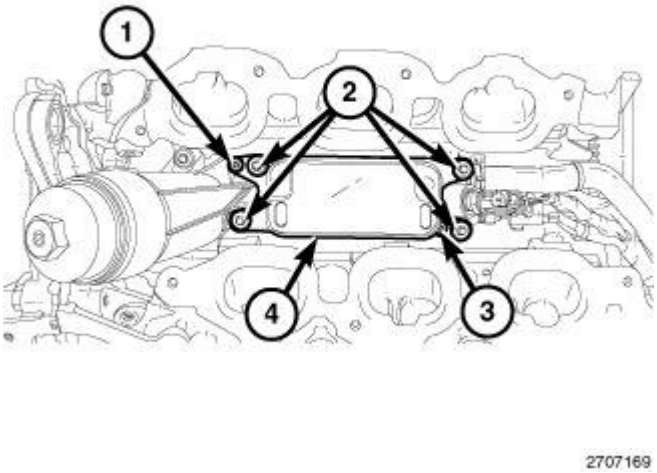

Fig. 541: Oil Cooler & Fasteners
Courtesy of CHRYSLER GROUP, LLC

 © 2011 Mitchell Repair Information Company, LLC.

2. Position the oil cooler (4) on the oil filter housing.
3. Install two screws (1) and (3). Tighten the screws to 4 N.m (35 in. lbs.).
4. Install four bolts (2) and tighten to 12 N.m (106 in. lbs.).
5. Install the upper and lower intake manifolds and air cleaner housing assembly. Refer to **MANIFOLD, INTAKE, INSTALLATION**.
6. Fill the engine crankcase with the proper oil to the correct level. Refer to ENGINE/LUBRICATION/OIL **STANDARD PROCEDURE** .
7. Connect the negative battery cable and tighten nut to 5 N.m (45 in. lbs.).
8. Fill the cooling system. Refer to **STANDARD PROCEDURE** .
9. Operate the engine until it reaches normal operating temperature. Check cooling system for correct fluid level. Refer to **STANDARD PROCEDURE** .

FILTER, ENGINE OIL

REMOVAL

REMOVAL

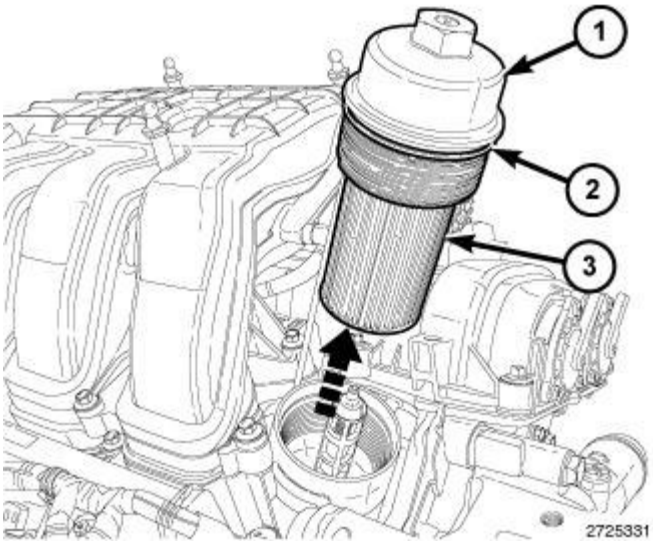

Fig. 542: Oil Filter Cap, O-Ring Seal & Oil Filter
Courtesy of CHRYSLER GROUP, LLC

1. Place an oil absorbant cloth around the oil filter housing at the base of the oil filter cap (2).

   All engines are equipped with a high quality full-flow, disposable type oil filter. Chrysler Corporation recommends a Mopar® or equivalent oil filter be used.

CAUTION: When performing an engine oil change, the oil filter cap must be removed. Removing the oil filter cap releases oil held within the oil filter cavity and allows it to drain into the sump. Failure to remove the cap prior to reinstallation of the drain plug will not allow complete

 © 2011 Mitchell Repair Information Company, LLC.

draining of the used engine oil.

NOTE: The oil filter (3) is attached to the oil filter cap (2).

2. Rotate the oil filter cap (1) counterclockwise and remove the cap (2) and filter (3) from the oil filter housing.

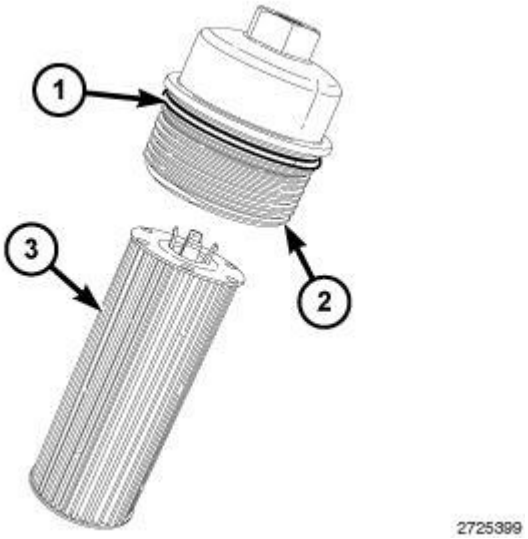

Fig. 543: O-Ring Seal, Oil Filter Cap & Oil Filter
Courtesy of CHRYSLER GROUP, LLC

3. Remove the oil filter (3) from the oil filter cap (2).
4. Remove and discard the O-ring seal (1).

INSTALLATION

INSTALLATION

 © 2011 Mitchell Repair Information Company, LLC.

Fig. 544: O-Ring Seal, Oil Filter Cap & Oil Filter
Courtesy of CHRYSLER GROUP, LLC

NOTE: It is not necessary to pre-oil the oil filter or fill the oil filter housing.

1. Lightly lubricate the new O-ring seal (1) with clean engine oil.
2. Install the O-ring seal (1) on the filter cap (2).
3. Install the new oil filter (3) into the oil filter cap (2).

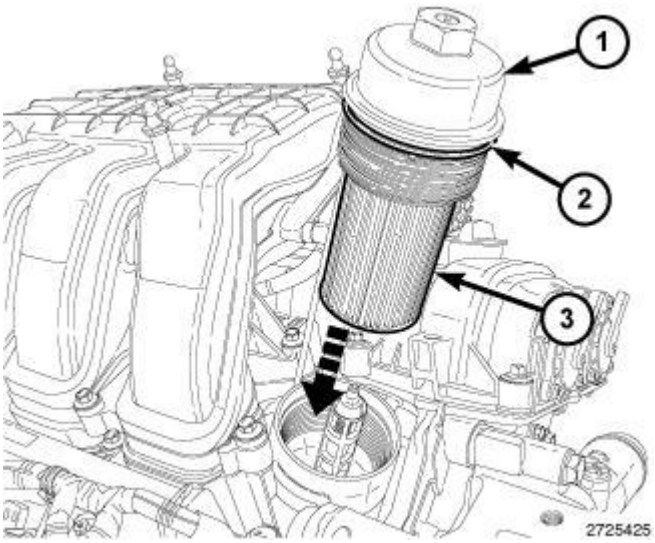

Fig. 545: Oil Filter Cap, O-Ring Seal & Oil Filter
Courtesy of CHRYSLER GROUP, LLC

4. Thread the oil filter cap (1) into the oil filter housing and tighten to 25 N.m (18 ft. lbs.).
5. Add oil, verify crankcase oil level and start engine. Inspect for oil leaks. Refer to ENGINE/LUBRICATION/OIL **STANDARD PROCEDURE** .

 © 2011 Mitchell Repair Information Company, LLC.

HOUSING, OIL FILTER

DESCRIPTION

DESCRIPTION

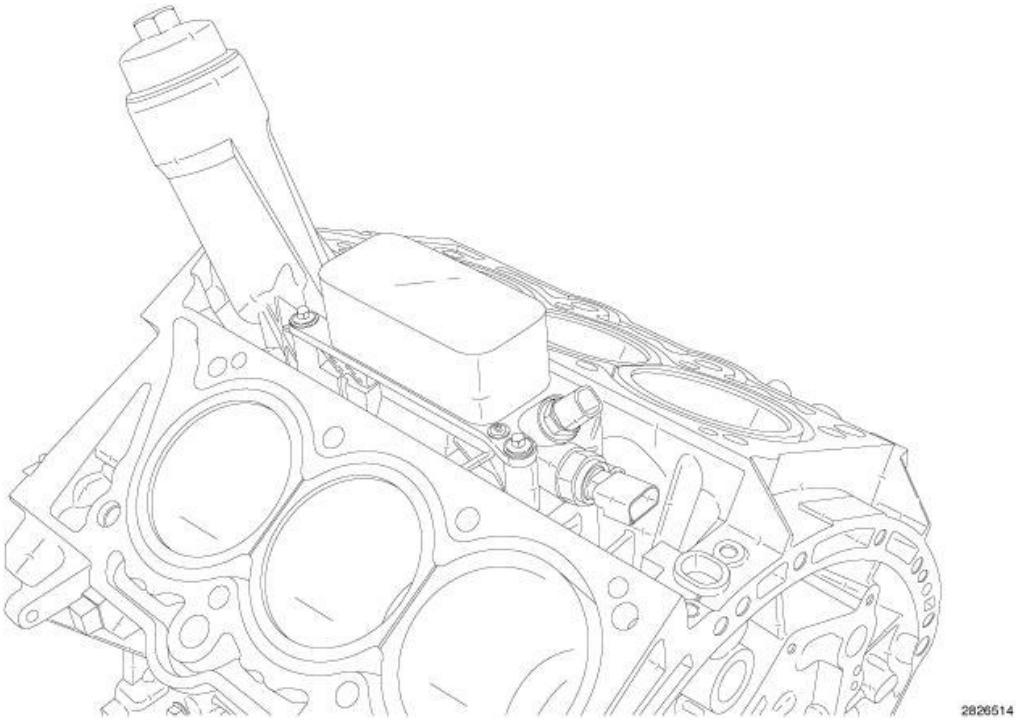

Fig. 546: Oil Filter Housing
Courtesy of CHRYSLER GROUP, LLC

The oil filter housing is located in the V of the cylinder block. The oil filter element is located within the housing and the engine oil cooler is attached to the top of the housing. Both the oil pressure and oil temperature sensors are located at the rear of the housing.

OPERATION

OPERATION

 © 2011 Mitchell Repair Information Company, LLC.

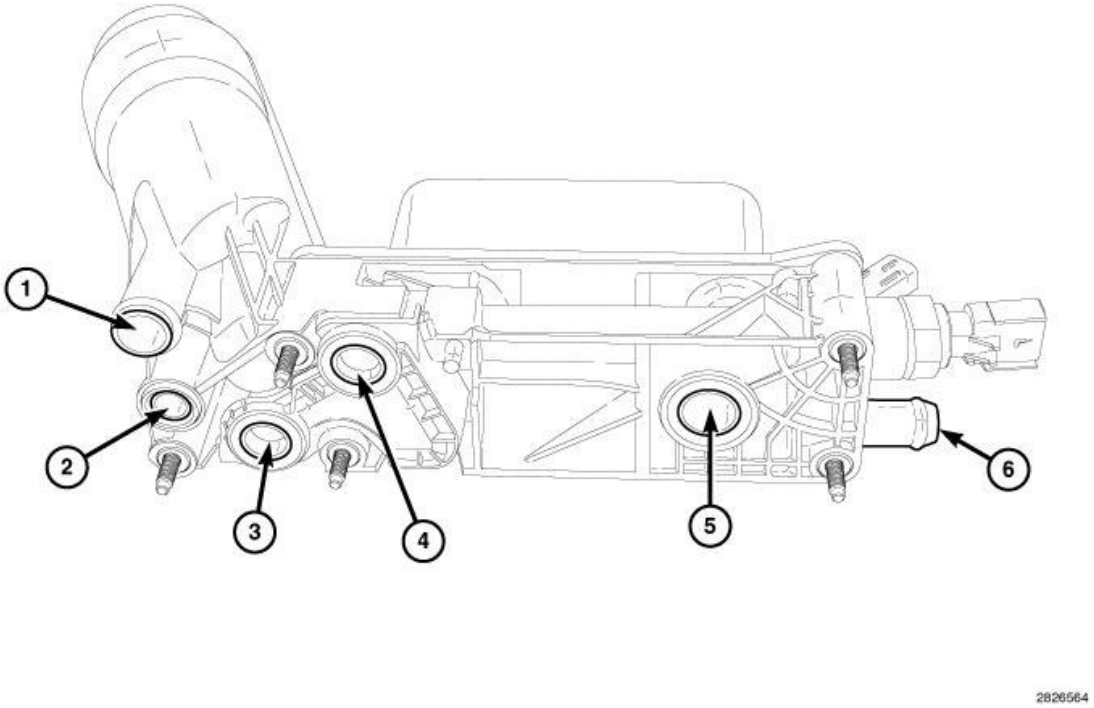

Fig. 547: Oil Flow & Coolant Flow Locations
Courtesy of CHRYSLER GROUP, LLC

Oil flows from the engine oil pump to the oil filter housing inlet (1) and to the oil filter element located within the oil filter housing. After the oil is filtered and then cooled it travels to the main oil gallery (5). An oil filter by-pass is built into the housing and is not serviceable. Removing the oil filter cap from the housing allows oil to drain from the oil filter cavity into to the crankcase (2).

Coolant flows from the right cylinder block water jacket (3) and from the left cylinder block water jacket (4) into the housing. The coolant flows through the oil cooler and exits the housing from the rear hose nipple (6) where it is returned to the water pump. A coolant by-pass in the housing is designed to direct excessive coolant flow around the oil cooler for continuous circulation.

REMOVAL

REMOVAL

1. Perform the fuel pressure release procedure. Refer to **FUEL DELIVERY, GAS, STANDARD PROCEDURE** .
2. Disconnect and isolate the negative battery cable.
3. Drain the cooling system. Refer to **STANDARD PROCEDURE** .
4. Remove the air cleaner housing assembly, upper and lower intake manifolds. Refer to **MANIFOLD, INTAKE, REMOVAL**.

 © 2011 Mitchell Repair Information Company, LLC.

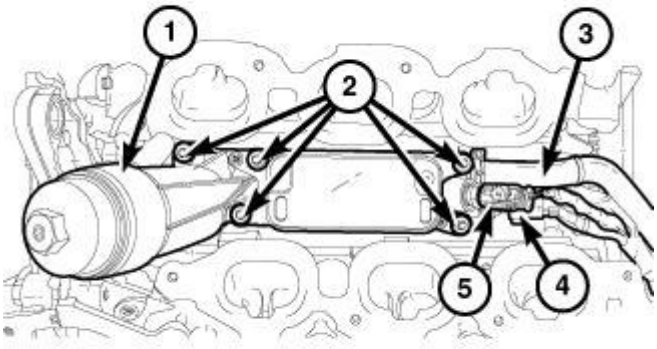

2707704

Fig. 548: Oil Temperature Sensor Electrical Connector, Oil Pressure Sensor Electrical Connector, Oil Filter Housing, Heater Hose & Bolts
Courtesy of CHRYSLER GROUP, LLC

5. Disconnect the oil temperature sensor electrical connector (5).
6. Disconnect the oil pressure sensor electrical connector (4).
7. Remove five bolts (2) and remove the oil filter housing (1).
8. Lift the oil filter housing (1) and remove the heater hose (3).

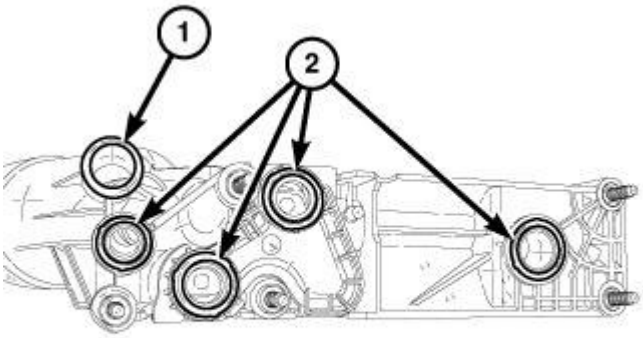

2707844

Fig. 549: Oil Filter Housing Seals & O-Ring Seal
Courtesy of CHRYSLER GROUP, LLC

9. Remove and discard the oil filter housing seals (2). The O-ring seal (1) can be reused.

 © 2011 Mitchell Repair Information Company, LLC.

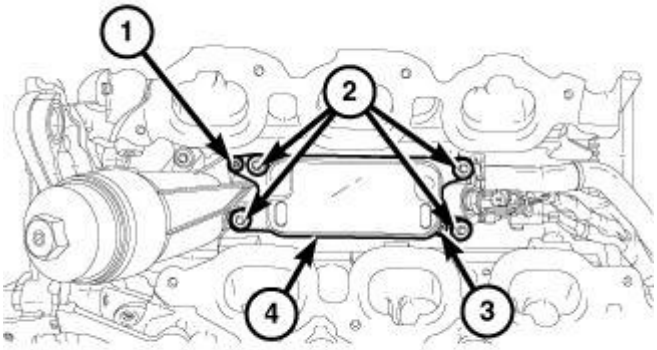

2707169

Fig. 550: Oil Cooler & Fasteners
Courtesy of CHRYSLER GROUP, LLC

10. If required, remove two screws (1) and (3) and remove the oil cooler (4) from the oil filter housing.

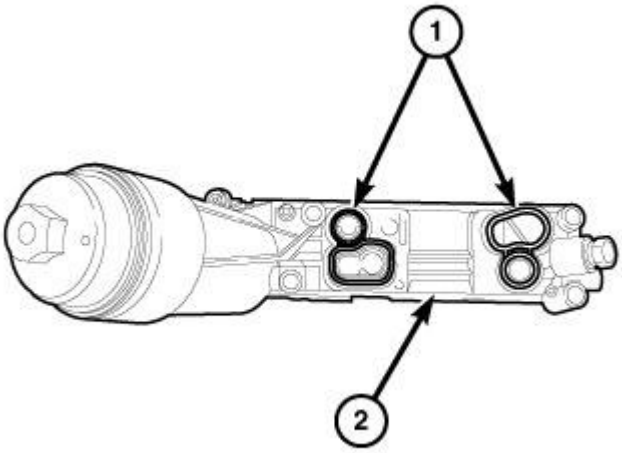

2710718

Fig. 551: Oil Cooler Seals & Oil Filter Housing
Courtesy of CHRYSLER GROUP, LLC

11. Remove and discard the oil cooler seals (1).

 © 2011 Mitchell Repair Information Company, LLC.

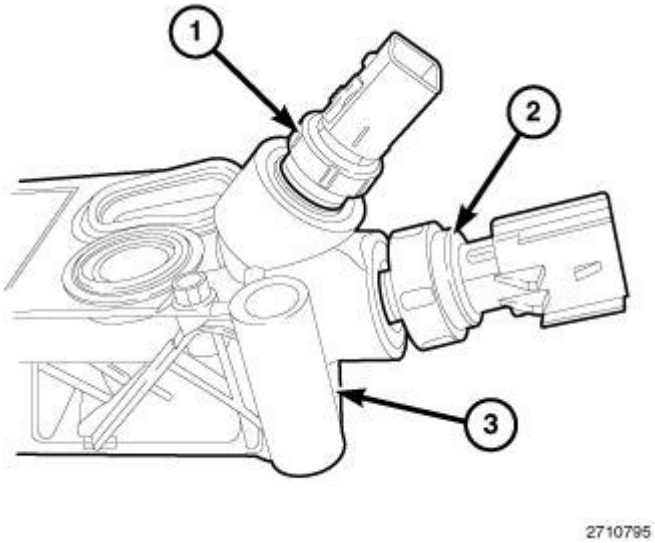

Fig. 552: Oil Temperature Sensor, Oil Pressure Sensor & Oil Filter Housing
Courtesy of CHRYSLER GROUP, LLC

12. If required, remove the oil temperature sensor (1) from the oil filter housing (3).
13. If required, remove the oil pressure sensor (2) from the oil filter housing (3).

INSTALLATION

INSTALLATION

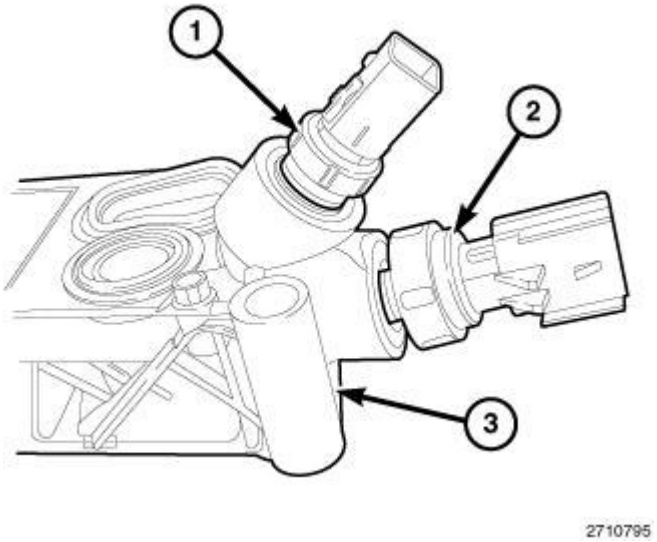

Fig. 553: Oil Temperature Sensor, Oil Pressure Sensor & Oil Filter Housing
Courtesy of CHRYSLER GROUP, LLC

1. If removed, install the oil pressure sensor (2) and tighten to 20 N.m (177 in. lbs.).
2. If removed, install the oil temperature sensor (1) and tighten to 20 N.m (177 in. lbs.).

 © 2011 Mitchell Repair Information Company, LLC.

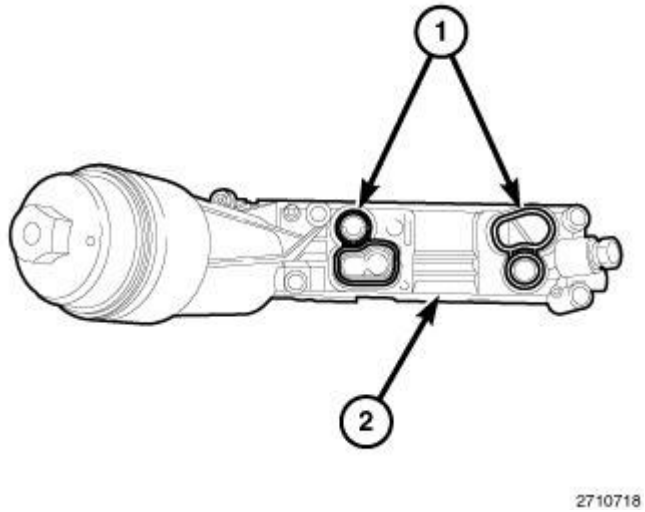

Fig. 554: Oil Cooler Seals & Oil Filter Housing
Courtesy of CHRYSLER GROUP, LLC

NOTE: Always use new dry seals (1) when installing the oil cooler. Do not lubricate the seals.

3. If removed, install the new oil cooler seals (1) onto the oil filter housing (2).

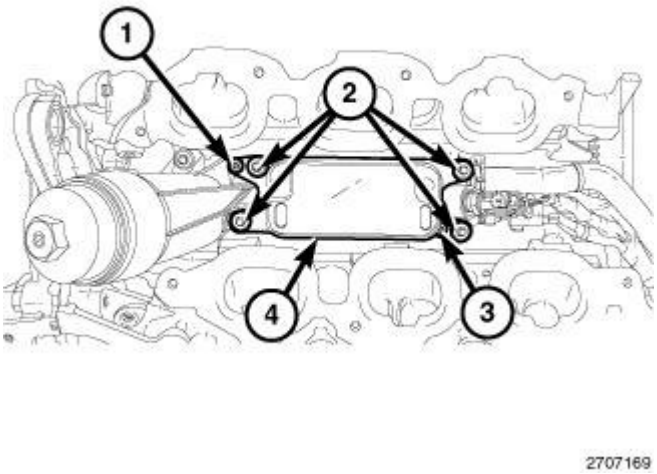

Fig. 555: Oil Cooler & Fasteners
Courtesy of CHRYSLER GROUP, LLC

4. If removed, position the oil cooler (4) on the oil filter housing and install two screws (1) and (3). Tighten the screws to 4 N.m (35 in. lbs.).

 © 2011 Mitchell Repair Information Company, LLC.

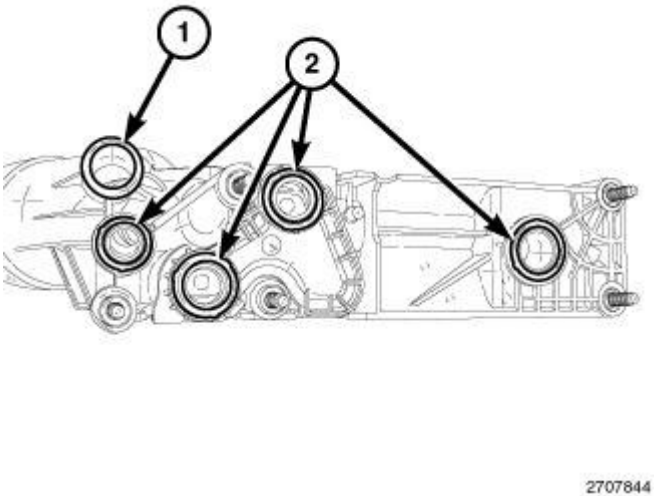

Fig. 556: Oil Filter Housing Seals & O-Ring Seal
Courtesy of CHRYSLER GROUP, LLC

NOTE: **Always use new dry seals (2) when installing the oil filter housing. Do not lubricate the seals. The O-ring seal (1) can be reused. Lubricate the O-ring seal with clean engine oil prior to installation.**

5. Install new oil filter housing seals (2) onto the oil filter housing.

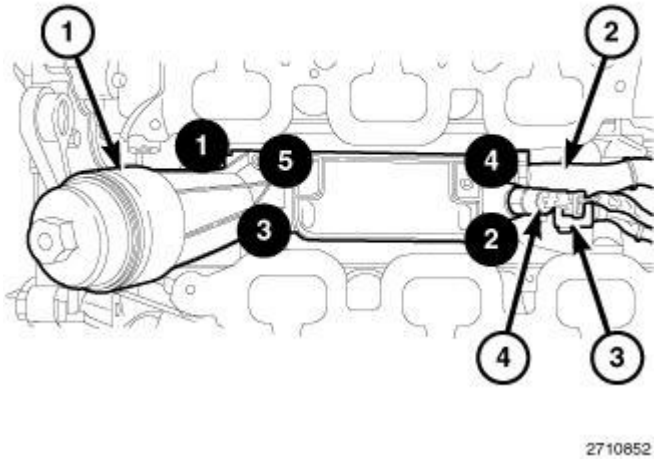

Fig. 557: Heater Hose, Electrical Connectors, Oil Filter Housing & Bolt Tightening Sequence
Courtesy of CHRYSLER GROUP, LLC

6. Install the heater hose (2) to the oil filter housing (1).
7. Position the oil filter housing (1) on the engine block.
8. Install five bolts and tighten in the sequence shown in the illustration to 12 N.m (106 in. lbs.).

 © 2011 Mitchell Repair Information Company, LLC.

9. Connect the oil pressure sensor electrical connector (3).
10. Connect the oil temperature sensor electrical connector (4).
11. Install the upper and lower intake manifolds and air cleaner housing assembly. Refer to **MANIFOLD, INTAKE, INSTALLATION**.
12. If removed, install the oil filter and fill the engine crankcase with the proper oil to the correct level. Refer to ENGINE/LUBRICATION/OIL **STANDARD PROCEDURE** .
13. Connect the negative battery cable and tighten nut to 5 N.m (45 in. lbs.).
14. Fill the cooling system. Refer to **STANDARD PROCEDURE** .
15. Operate the engine until it reaches normal operating temperature. Check cooling system for correct fluid level. Refer to **STANDARD PROCEDURE** .

JET, PISTON OIL COOLER

DESCRIPTION

DESCRIPTION

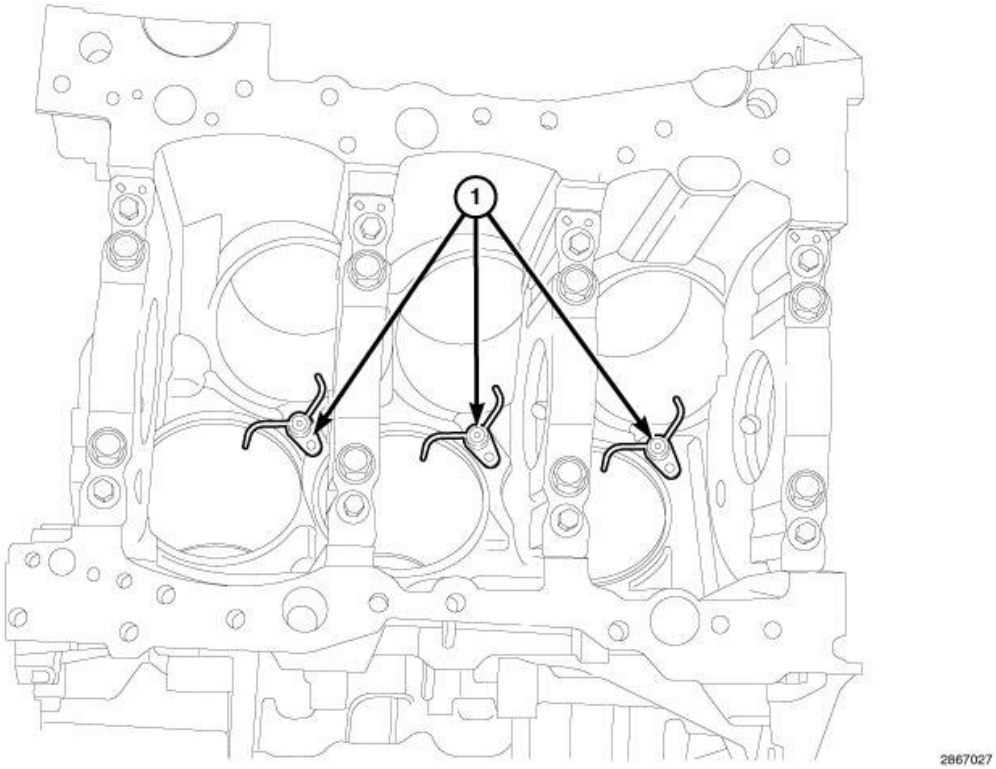

Fig. 558: Engine Blocked-Mounted Oil Jets
Courtesy of CHRYSLER GROUP, LLC

The 3.6 liter engine has three engine blocked-mounted oil jets (1) installed to cool the underside of each piston. The oil jets are fed by the main oil gallery, and spray upward on the bottom of the pistons and cylinder walls. Each set of jets has a check valve which closes below 2.5 bar (35 psi) to maintain ample oil pressure at idle. All three sets of oil jets are identical and seal to the engine block using an o-ring and fastener.

 © 2011 Mitchell Repair Information Company, LLC.

REMOVAL

REMOVAL

1. Remove the crankshaft. Refer to **CRANKSHAFT, REMOVAL**.

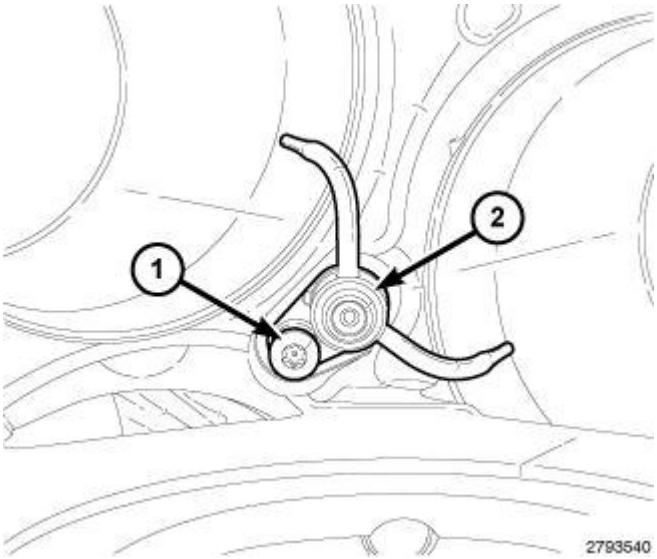

Fig. 559: Piston Oil Cooler Jet & Bolt
Courtesy of CHRYSLER GROUP, LLC

NOTE: Piston oil cooler jet for cylinders one/two shown in the illustration. Piston oil cooler jets for cylinders three/four and five/six are similar.

2. Remove the bolt (1) and the piston oil cooler jet(s) (2) from the engine block.

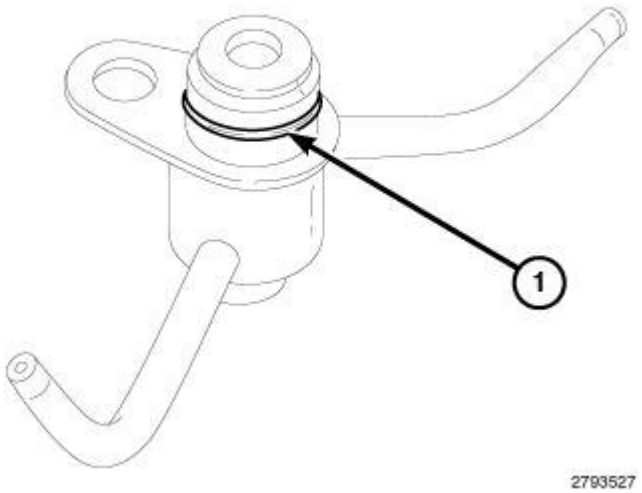

Fig. 560: Piston Oil Cooler Jet O-Ring Seal
Courtesy of CHRYSLER GROUP, LLC

 © 2011 Mitchell Repair Information Company, LLC.

3. Remove and discard the O-ring seal (1) from the piston oil cooler jet(s).

INSTALLATION

INSTALLATION

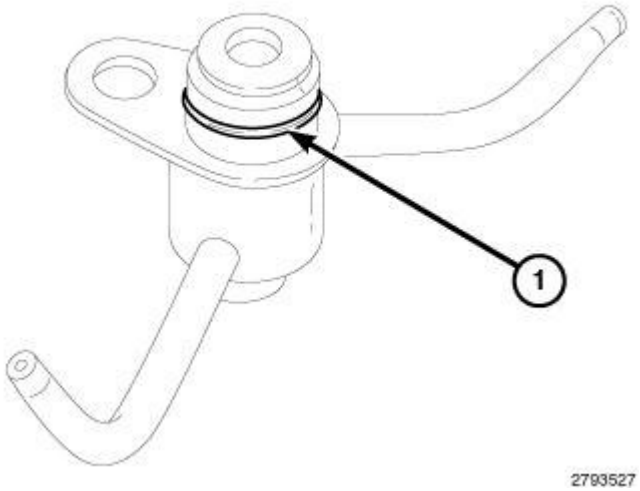

Fig. 561: Piston Oil Cooler Jet O-Ring Seal
Courtesy of CHRYSLER GROUP, LLC

1. Lubricate a new O-ring seal (1) with engine oil and install on the piston oil cooler jet(s).

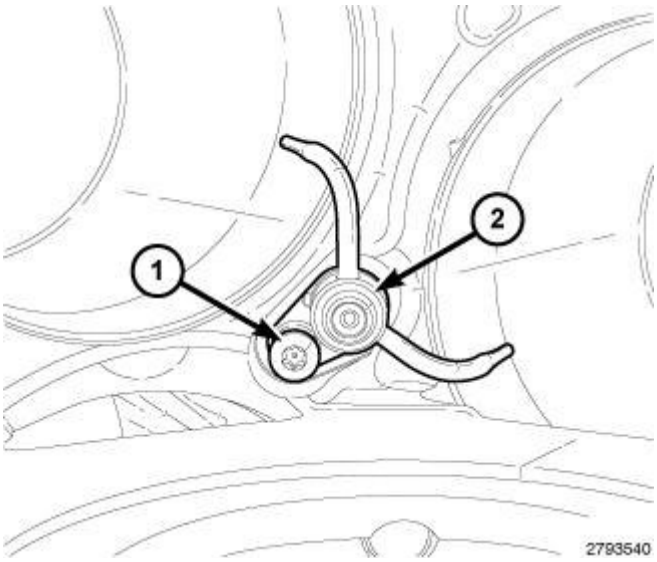

Fig. 562: Piston Oil Cooler Jet & Bolt
Courtesy of CHRYSLER GROUP, LLC

NOTE: **Piston oil cooler jet for cylinders one/two shown in the illustration. Piston oil cooler jets for cylinders three/four and five/six are similar.**

 © 2011 Mitchell Repair Information Company, LLC.

2. Install the piston oil cooler jet(s) (2) into the engine block and tighten the retaining bolt (1) to 6 N.m (53 in. lbs.).
3. Install the crankshaft. Refer to **CRANKSHAFT, INSTALLATION**.
4. If removed, install the oil filter and fill the engine crankcase with the proper oil to the correct level. Refer to ENGINE/LUBRICATION/OIL **STANDARD PROCEDURE** .
5. Fill the cooling system. Refer to **STANDARD PROCEDURE** .
6. Connect the negative battery cable and tighten nut to 5 N.m (45 in. lbs.).
7. Run the engine until it reaches normal operating temperature. Check cooling system for correct fluid level. Refer to **STANDARD PROCEDURE** .

OIL

STANDARD PROCEDURE

STANDARD PROCEDURE - ENGINE OIL AND FILTER CHANGE

WARNING: New or used engine oil can be irritating to the skin. Avoid prolonged or repeated skin contact with engine oil. Contaminants in used engine oil, caused by internal combustion, can be hazardous to your health. Thoroughly wash exposed skin with soap and water. Do not wash skin with gasoline, diesel fuel, thinner, or solvents, health problems can result. Do not pollute, dispose of used engine oil properly. Contact your dealer or government agency for location of collection center in your area.

Change the engine oil and filter at mileage and time intervals described in the Maintenance Schedule. Refer to **MAINTENANCE SCHEDULES, DESCRIPTION** .

1. Run the engine until achieving normal operating temperature.
2. Position the vehicle on a level surface and turn the engine off.

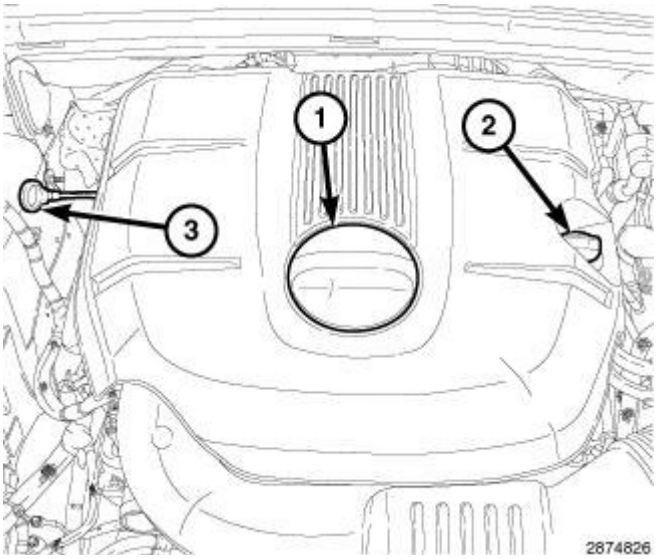

 © 2011 Mitchell Repair Information Company, LLC.

Fig. 563: Oil Filter Access Cover, Oil Fill Cap & Oil Level Indicator
Courtesy of CHRYSLER GROUP, LLC

3. Remove the oil filter access cover (1).

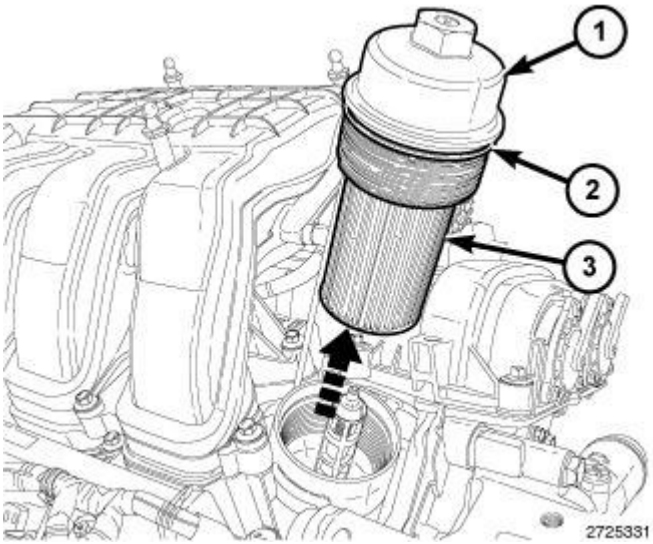

Fig. 564: Oil Filter Cap, O-Ring Seal & Oil Filter
Courtesy of CHRYSLER GROUP, LLC

NOTE: Illustration shows engine cover removed for clarity.

CAUTION: When performing an engine oil change, the oil filter cap must be removed. Removing the oil filter cap releases oil held within the oil filter cavity and allows it to drain into the sump. Failure to remove the cap prior to reinstallation of the drain plug will not allow complete draining of the used engine oil.

4. Place an oil absorbent cloth around the oil filter housing at the base of the oil filter cap.

NOTE: The oil filter (3) is attached to the oil filter cap (2).

5. Rotate the oil filter cap (1) counterclockwise and remove the cap (1) and filter (3) from the oil filter housing.
6. Raise and support the vehicle. Refer to **HOISTING, STANDARD PROCEDURE** .

 © 2011 Mitchell Repair Information Company, LLC.

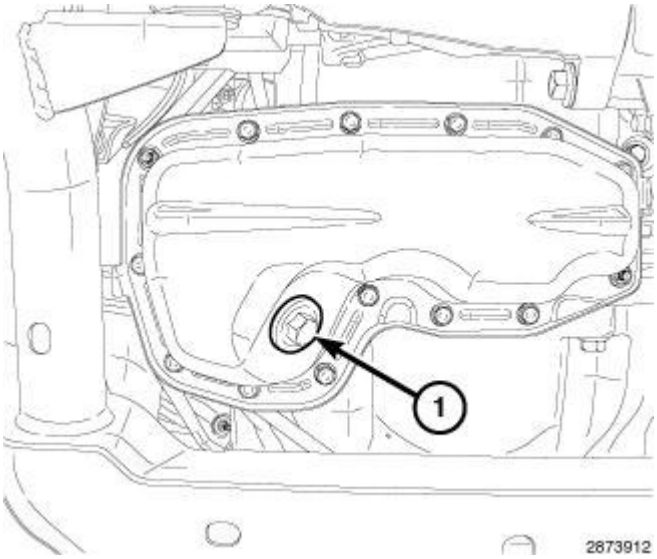

Fig. 565: Oil Pan Drain Plug
Courtesy of CHRYSLER GROUP, LLC

7. Place a suitable drain pan under the crankcase drain plug (1).
8. Remove the drain plug (1) from oil pan and allow the oil to drain into the pan. Inspect the drain plug threads for stretching or other damage. Replace the drain plug and gasket if damaged.
9. Install the drain plug (1) in the oil pan and tighten to 27 N.m (20 ft. lbs.).
10. Lower the vehicle.

Fig. 566: O-Ring Seal, Oil Filter Cap & Oil Filter
Courtesy of CHRYSLER GROUP, LLC

11. Remove the oil filter (3) from the oil filter cap (2).
12. Remove and discard the O-ring seal (1).

 © 2011 Mitchell Repair Information Company, LLC.

NOTE: It is not necessary to pre-oil the oil filter or fill the oil filter housing.

13. Lightly lubricate the new O-ring seal (1) with clean engine oil.
14. Install the O-ring seal (1) on the filter cap (2).
15. Install the new oil filter (3) into the oil filter cap (2).

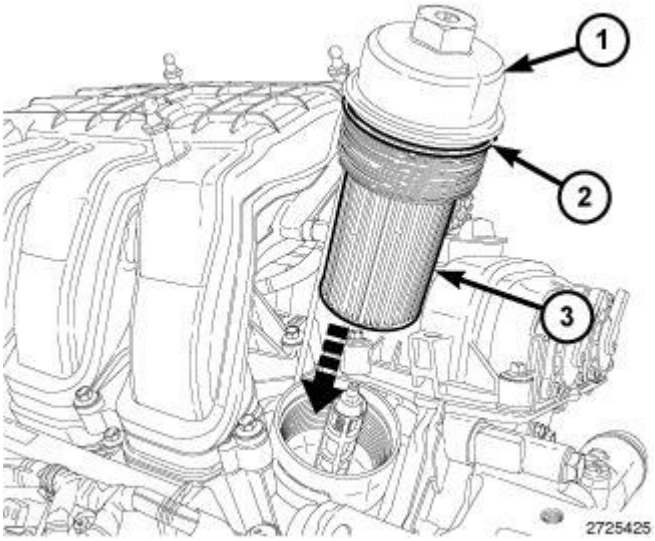

Fig. 567: Oil Filter Cap, O-Ring Seal & Oil Filter
Courtesy of CHRYSLER GROUP, LLC

NOTE: Illustration shows engine cover removed for clarity.

16. Thread the oil filter cap (1) into the oil filter housing and tighten to 25 N.m (18 ft. lbs.).

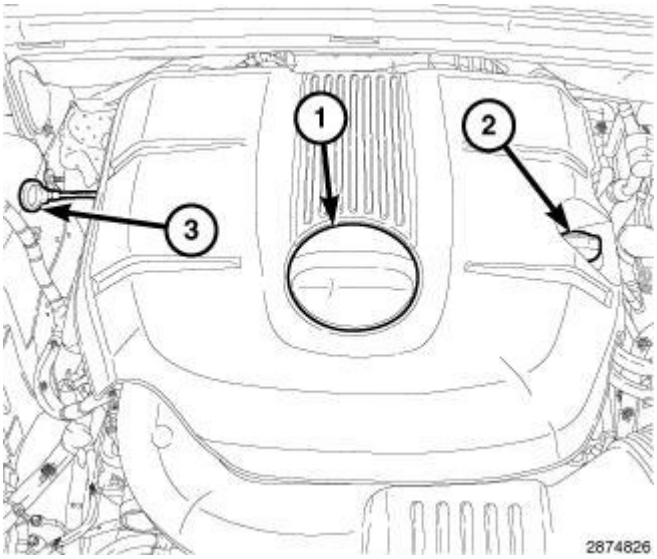

Fig. 568: Oil Filter Access Cover, Oil Fill Cap & Oil Level Indicator
Courtesy of CHRYSLER GROUP, LLC

 © 2011 Mitchell Repair Information Company, LLC.

17. Remove the oil fill cap (2). Fill the crankcase with the specified type and amount of engine oil. Refer to **CAPACITIES AND RECOMMENDED FLUIDS, SPECIFICATIONS** .
18. Install the oil fill cap (2).
19. Start the engine and inspect for leaks.
20. Stop the engine and check the oil level (3).

OIL FILTER SPECIFICATION

All engines are equipped with a high quality full-flow, disposable type oil filter. When replacing oil filter, use a Mopar® filter or equivalent.

USED ENGINE OIL DISPOSAL

Care should be exercised when disposing of used engine oil after it has been drained from a vehicle engine. Refer to the WARNING under **STANDARD PROCEDURE - ENGINE OIL AND FILTER CHANGE**.

PAN, OIL

DESCRIPTION

DESCRIPTION

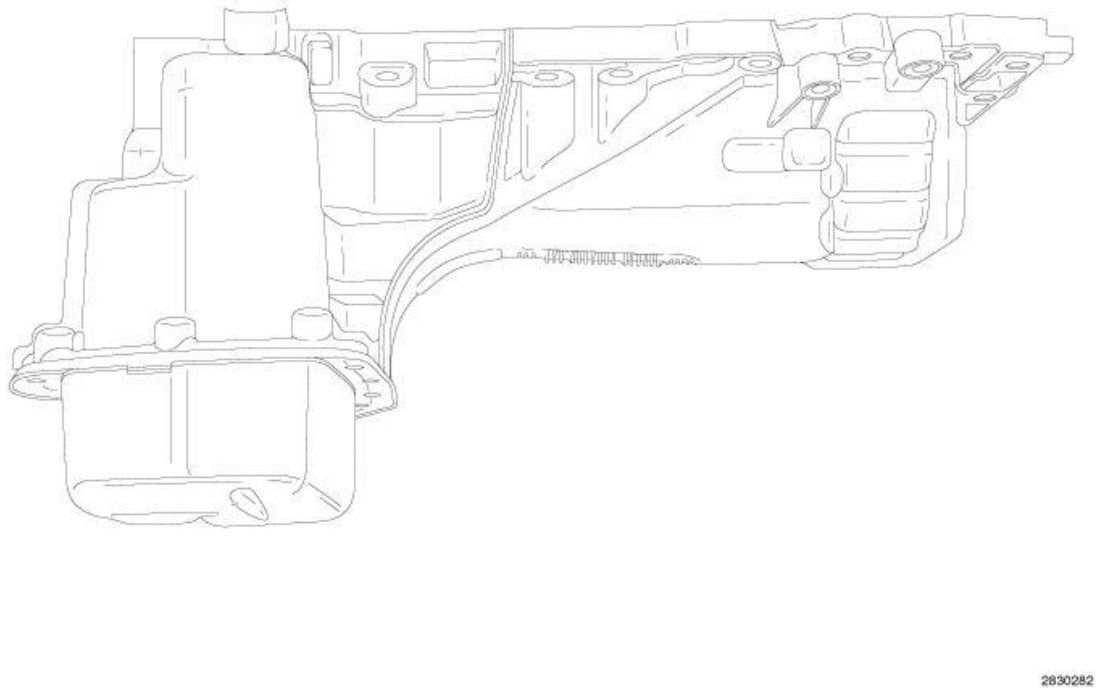

Fig. 569: Upper & Lower Oil Pan
Courtesy of CHRYSLER GROUP, LLC

There is an upper and lower oil pan. The upper oil pan is cast aluminum and also serves as the lower end

structural support. The lower pan is a stamped steel design. Both upper and lower oil pans are sealed using Mopar® Threebond Engine RTV Sealant. The lower oil pan must be removed in order to access all of the upper oil pan attaching bolts.

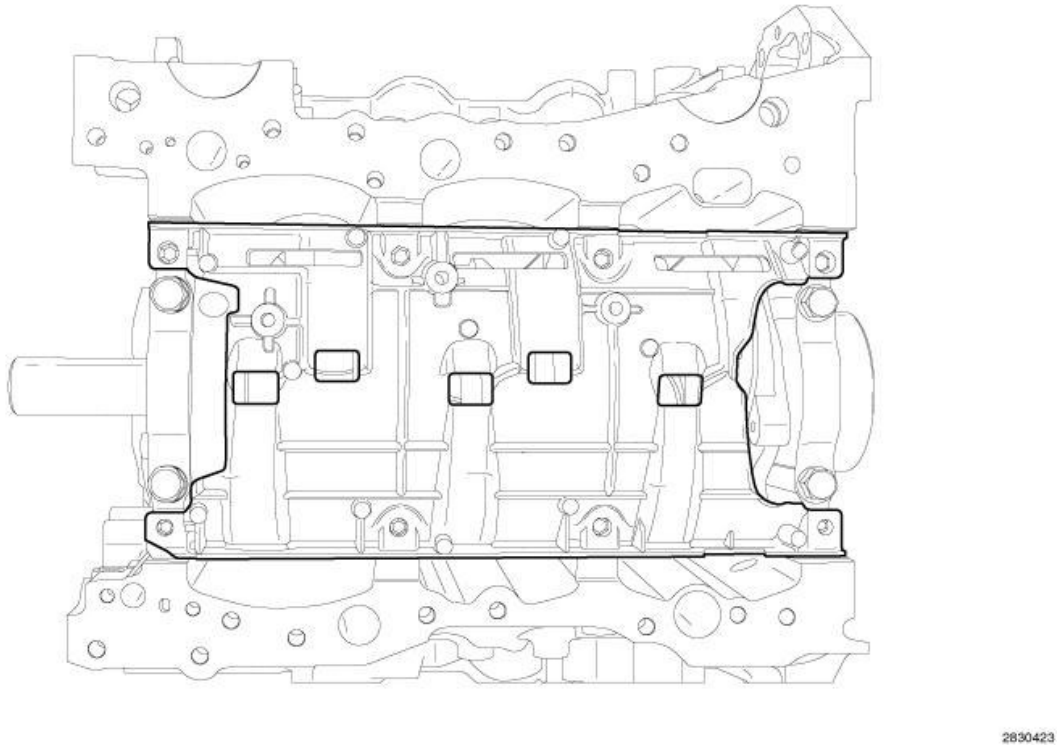

Fig. 570: Windage Tray
Courtesy of CHRYSLER GROUP, LLC

CAUTION: Do not attempt to support the weight of the engine on the windage tray. The windage tray is a thin cast aluminum construction and can be easily damaged.

The high pressure die cast aluminum windage tray is mounted to the main bearing caps and is designed to keep oil off of the connecting rods as the crankshaft rotates. When the oil is kept off the connecting rods, the engine rotates easier and oil foaming decreases. Like the oil pan, the windage tray is designed to stiffen the lower end of the engine. The tray is directional and the main bearing cap bolts hold it in place.

REMOVAL

LOWER OIL PAN

1. Raise and support the vehicle. Refer to **HOISTING, STANDARD PROCEDURE** .
2. Drain the engine oil. Refer to ENGINE/LUBRICATION/OIL **STANDARD PROCEDURE** .
3. Remove the front suspension skid plate, if equipped. Refer to **PLATE, SKID, FRONT SUSPENSION, REMOVAL** .

 © 2011 Mitchell Repair Information Company, LLC.

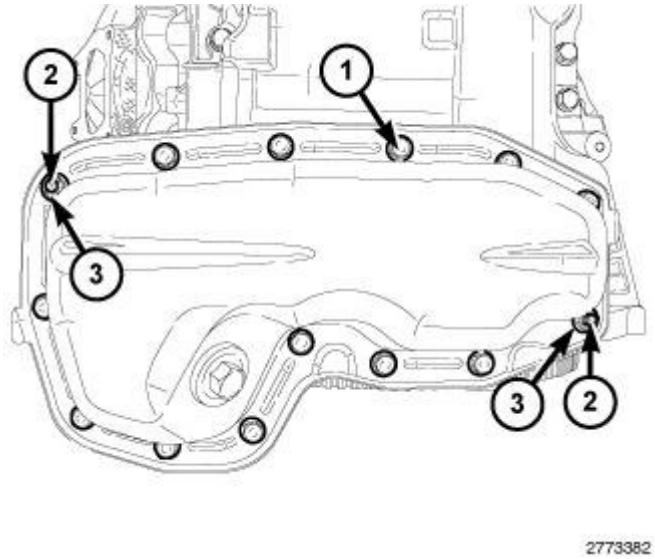

Fig. 571: Lower Oil Pan & Fasteners
Courtesy of CHRYSLER GROUP, LLC

NOTE: The lower oil pan must be removed to access all of the upper oil pan retaining bolts.

4. Remove twelve bolts (1), two nuts (3) and two studs (2) from the flange of the lower oil pan.

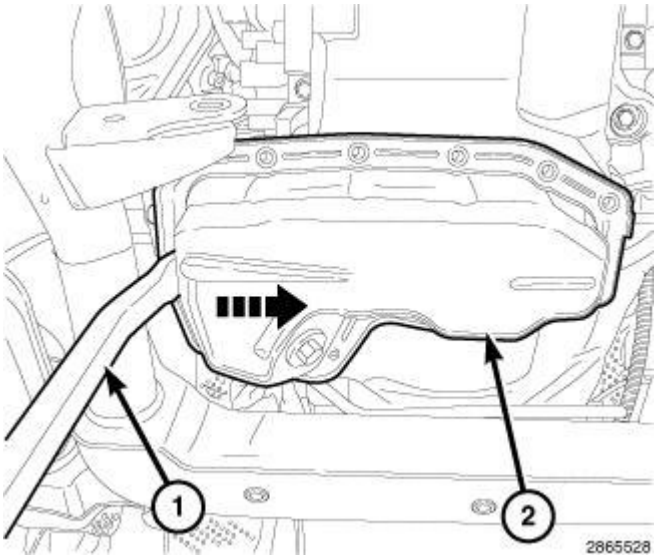

Fig. 572: Removing Lower Oil Pan
Courtesy of CHRYSLER GROUP, LLC

CAUTION: Do not pry on the lower oil pan flange. There are no designated pry points for lower oil pan removal. Prying on only one or a few locations could bend the flange and damage the pan.

5. Using a pry bar (1), apply a side force to the lower oil pan (2) in order to shear the sealant bond and

 © 2011 Mitchell Repair Information Company, LLC.

remove the pan.

6. Remove all residual sealant from the upper and lower oil pans. Refer to **PAN, OIL, CLEANING**.

UPPER

1. Disconnect and isolate the negative battery cable.

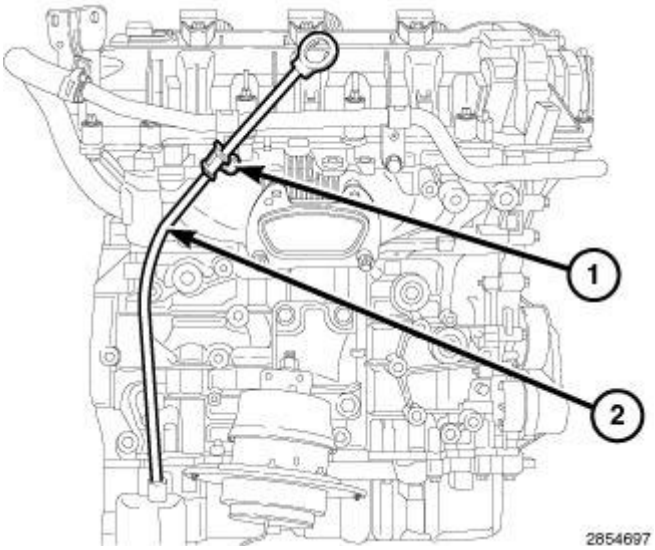

Fig. 573: Oil Level Indicator & Retaining Bolt
Courtesy of CHRYSLER GROUP, LLC

2. Remove the bolt (1) and remove the oil level indicator (2).
3. Raise and support the vehicle. Refer to **HOISTING, STANDARD PROCEDURE** .
4. Drain the engine oil. Refer to ENGINE/LUBRICATION/OIL **STANDARD PROCEDURE** .
5. If equipped, remove the front skid plate and the front suspension skid plate. Refer to FRAME AND BUMPERS **UNDER BODY PROTECTION** .

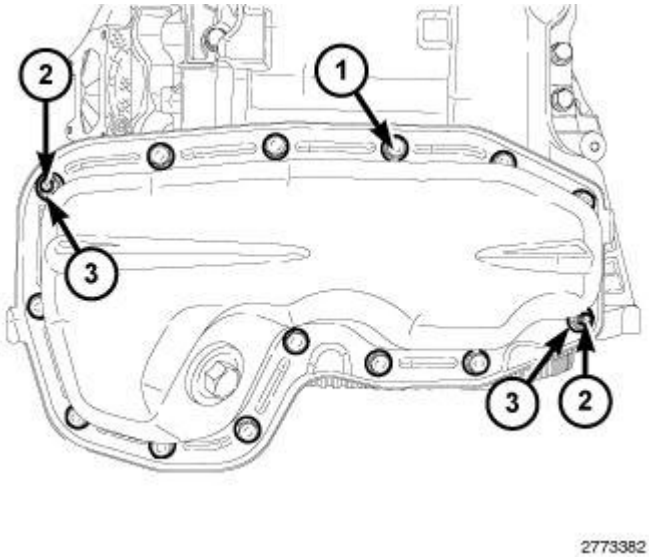

Fig. 574: Lower Oil Pan & Fasteners
Courtesy of CHRYSLER GROUP, LLC

NOTE: The lower oil pan must be removed to access all of the upper oil pan retaining bolts.

6. Remove the lower oil pan. Refer to **PAN, OIL, REMOVAL**.

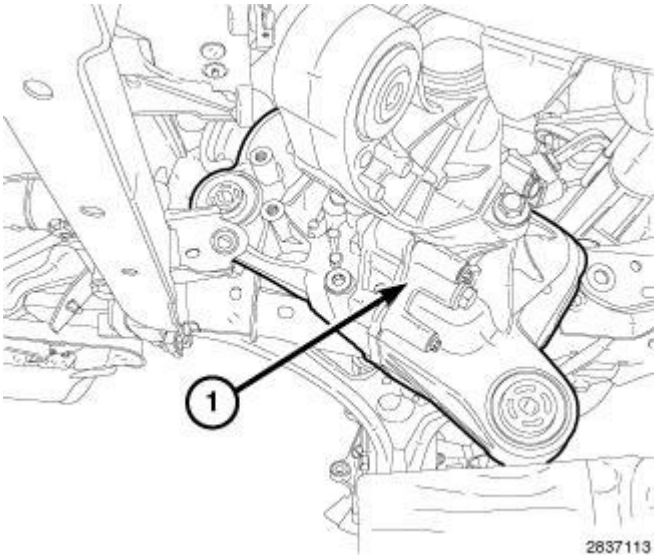

Fig. 575: Front Axle & Axle Bracket
Courtesy of CHRYSLER GROUP, LLC

7. If equipped with AWD, remove the front axle (1). Refer to **REMOVAL** .

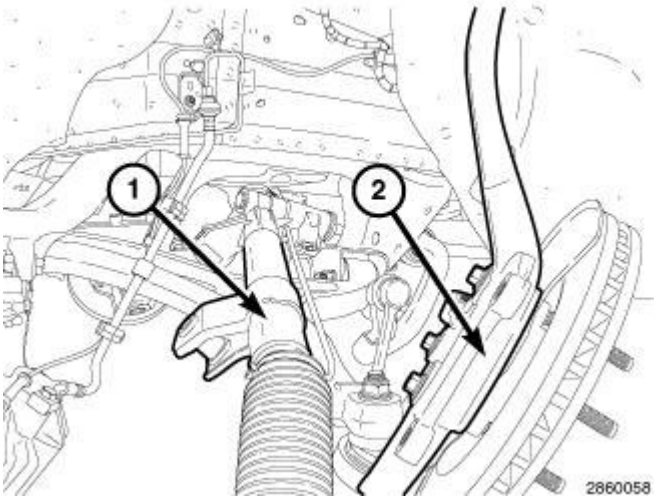

Fig. 576: Steering Gear & Knuckle/Rotor Assembly
Courtesy of CHRYSLER GROUP, LLC

 © 2011 Mitchell Repair Information Company, LLC.

8. Remove the steering gear (1). Refer to **GEAR, REMOVAL** .

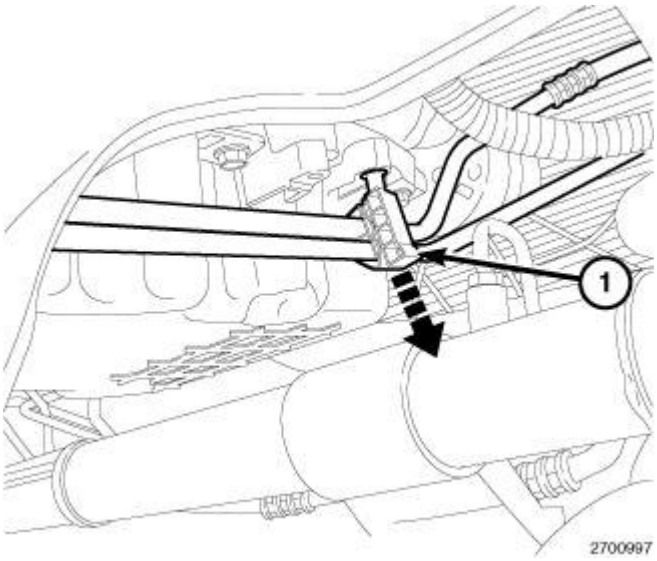

Fig. 577: Transmission Cooler Line Retainer
Courtesy of CHRYSLER GROUP, LLC

9. Unclip the transmission cooler line retainer (1) from the oil pan flange.

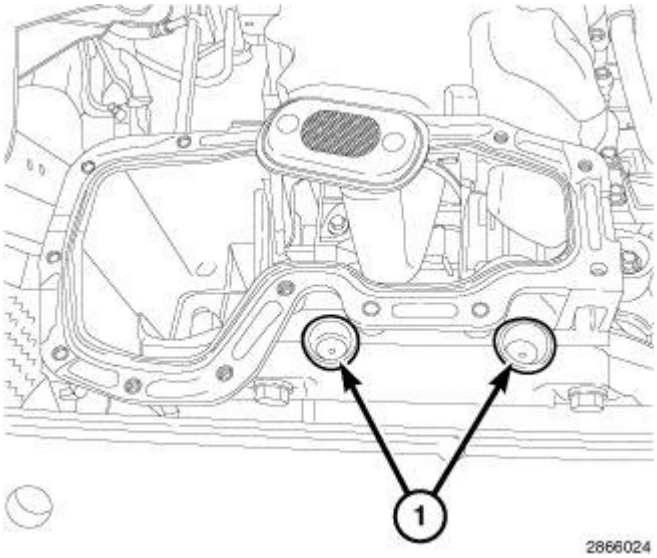

Fig. 578: Rubber Plugs
Courtesy of CHRYSLER GROUP, LLC

10. Remove two rubber plugs (1) covering the rear oil seal retainer flange bolts.

 © 2011 Mitchell Repair Information Company, LLC.

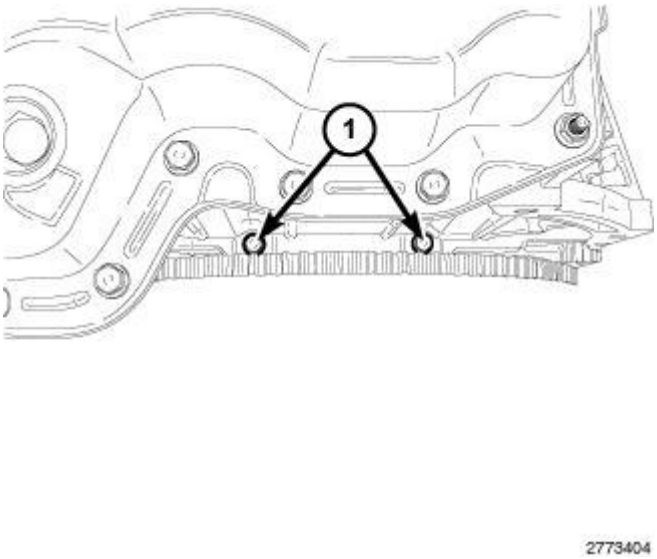

Fig. 579: Rear Oil Seal Retainer Flange Bolts
Courtesy of CHRYSLER GROUP, LLC

CAUTION: There are two hidden M6 bolts that must be removed from the rear of the upper oil pan flange. If these bolts are not removed, the rear oil seal retainer flange will be severely damaged.

11. Remove two M6 bolts (1) from the rear oil seal retainer flange.

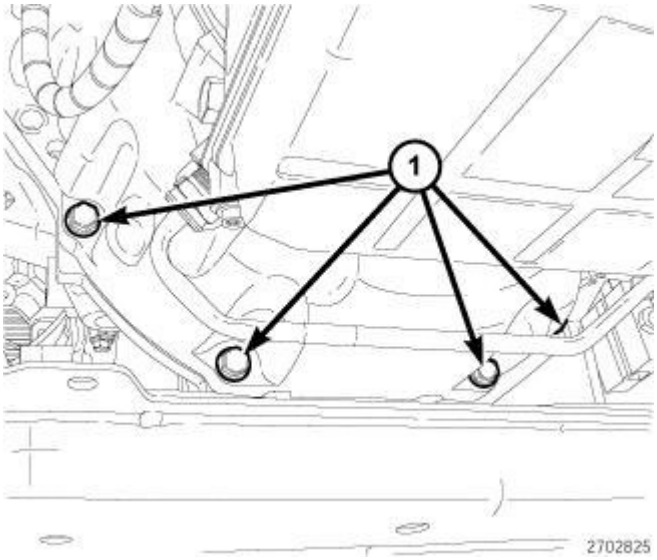

Fig. 580: Transmission-To-Engine Oil Pan Bolts
Courtesy of CHRYSLER GROUP, LLC

12. Remove four transmission to the engine oil pan bolts (1).

 © 2011 Mitchell Repair Information Company, LLC.

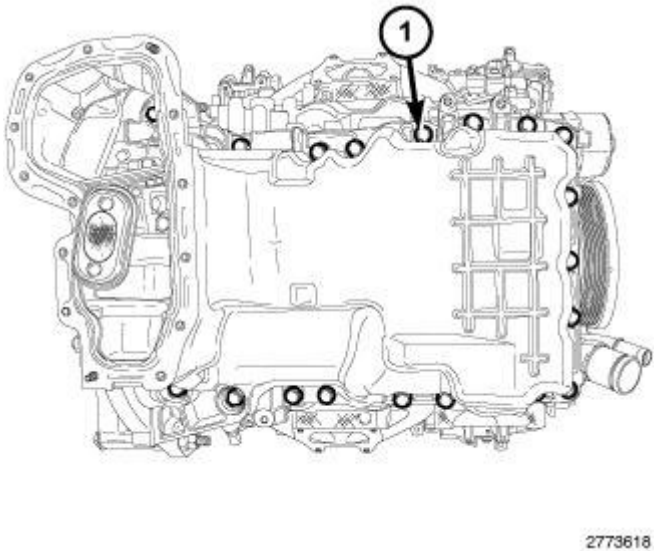

Fig. 581: Oil Pan Mounting Bolts
Courtesy of CHRYSLER GROUP, LLC

13. Remove nineteen M8 oil pan mounting bolts (1).

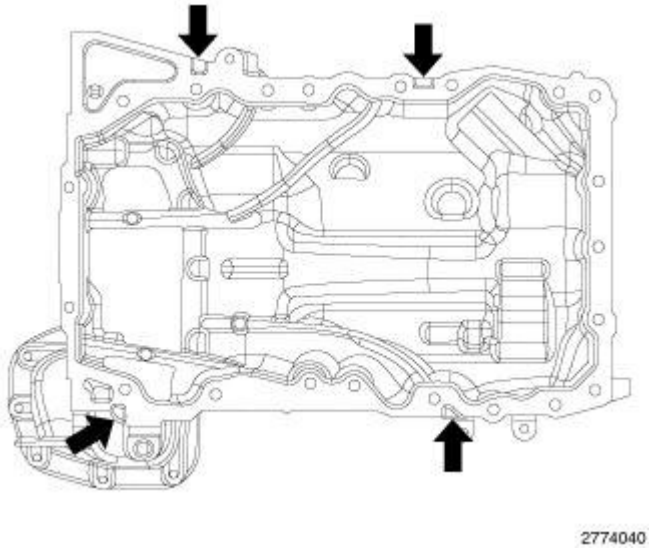

Fig. 582: Pry Points
Courtesy of CHRYSLER GROUP, LLC

14. Using the four pry points indicated in the illustration, carefully remove the upper oil pan.
15. Remove all residual sealant from the upper and lower oil pans, timing chain cover, rear seal retainer and engine block mating surfaces. Refer to **PAN, OIL, CLEANING**.

CLEANING

CLEANING

 © 2011 Mitchell Repair Information Company, LLC.

CAUTION: Clean the upper and lower oil pans, timing chain cover, rear seal retainer and engine block mating surfaces thoroughly with isopropyl alcohol in preparation for sealant application. All surfaces that seal with RTV must be oil and contamination free to ensure proper adhesion of the RTV to the mating surface to prevent leaks.

1. Clean the oil pan in solvent and wipe dry with a clean cloth.

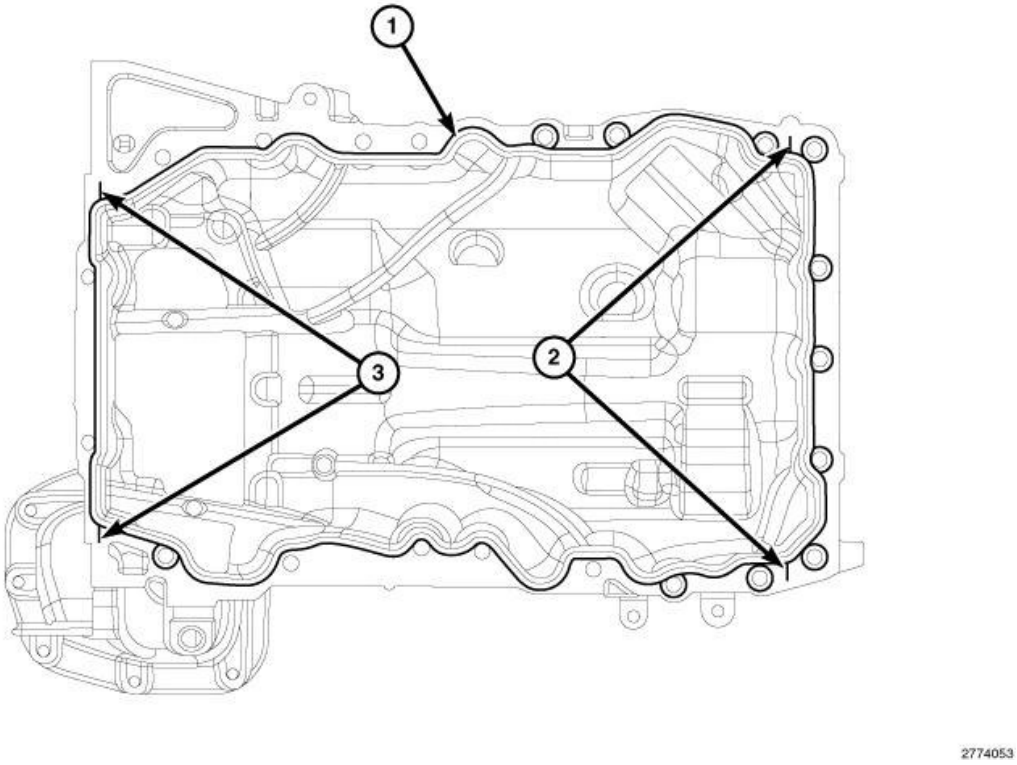

Fig. 583: Mopar® Threebond Engine RTV Sealant Locations
Courtesy of CHRYSLER GROUP, LLC

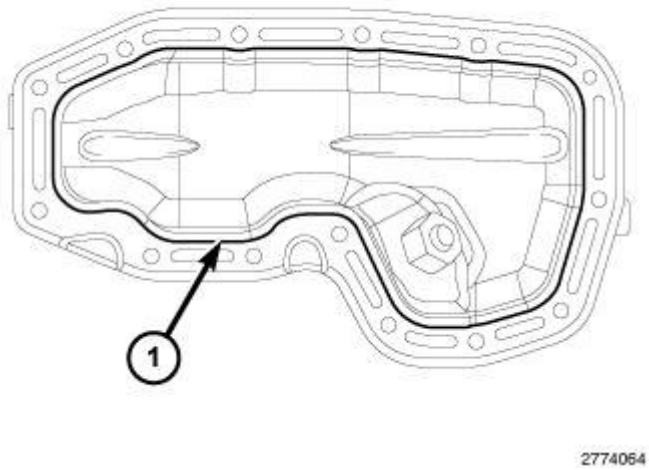

Fig. 584: Mopar® Threebond Engine RTV Sealant Location
Courtesy of CHRYSLER GROUP, LLC

CAUTION: Do not use oil based liquids, wire brushes, abrasive wheels or metal scrapers to clean the engine gasket surfaces. Use only isopropyl (rubbing) alcohol, along with plastic or wooden scrapers. Improper gasket surface preparation may result in engine fluid leakage.

2. Remove all residual sealant (1) from the upper and lower oil pans. Refer to ENGINE **STANDARD PROCEDURE** .

INSTALLATION

LOWER OIL PAN

1. Clean the upper and lower oil pan mating surfaces with isopropyl alcohol in preparation for sealant application.

 © 2011 Mitchell Repair Information Company, LLC.

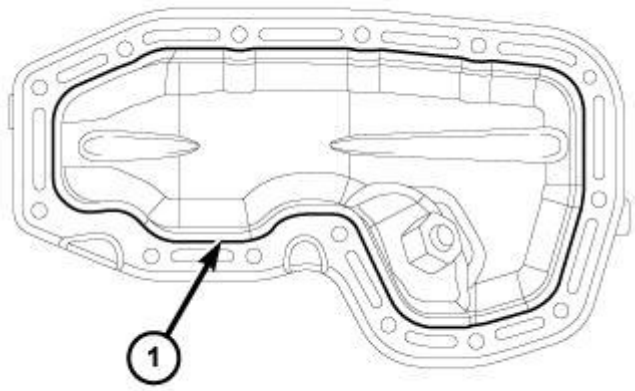

2774064

Fig. 585: Mopar® Threebond Engine RTV Sealant Location
Courtesy of CHRYSLER GROUP, LLC

CAUTION: Engine assembly requires the use of a unique sealant that is compatible with engine oil. Using a sealant other than Mopar® Threebond Engine RTV Sealant may result in engine fluid leakage.

CAUTION: Following the application of Mopar® Threebond Engine RTV Sealant to the gasket surfaces, the components must be assembled within 20 minutes and the attaching fasteners must be tightened to specification within 45 minutes. Prolonged exposure to the air prior to assembly may result in engine fluid leakage.

2. Apply a 2 to 3 mm wide bead of Mopar® Threebond Engine RTV Sealant (1) to the lower oil pan as shown in the illustration.

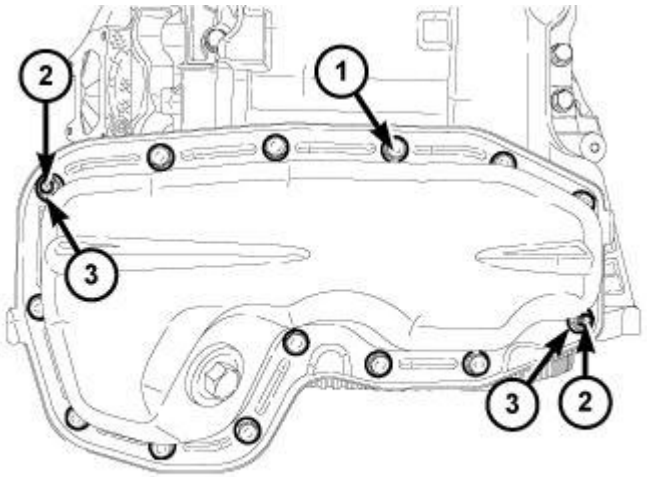

2773382

 © 2011 Mitchell Repair Information Company, LLC.

Fig. 586: Lower Oil Pan & Fasteners
Courtesy of CHRYSLER GROUP, LLC

3. Install two studs (2) into the upper oil pan flange.
4. Install the lower oil pan to the upper oil pan with twelve bolts (1) and two nuts (3) tightened to 10.5 N.m (93 in. lbs.).

CAUTION: Following assembly, the Mopar® Threebond Engine RTV Sealant must be allowed to dry for 45 minutes prior to adding oil and engine operation. Premature exposure to oil prior to drying may result in engine fluid leakage.

5. If removed, install the oil filter and fill the engine crankcase with the proper oil to the correct level. Refer to ENGINE/LUBRICATION/OIL **STANDARD PROCEDURE** .
6. Run the engine until it reaches normal operating temperature.

UPPER

1. Clean the upper and lower oil pans, timing chain cover, rear seal retainer and engine block mating surfaces with isopropyl alcohol in preparation for sealant application.

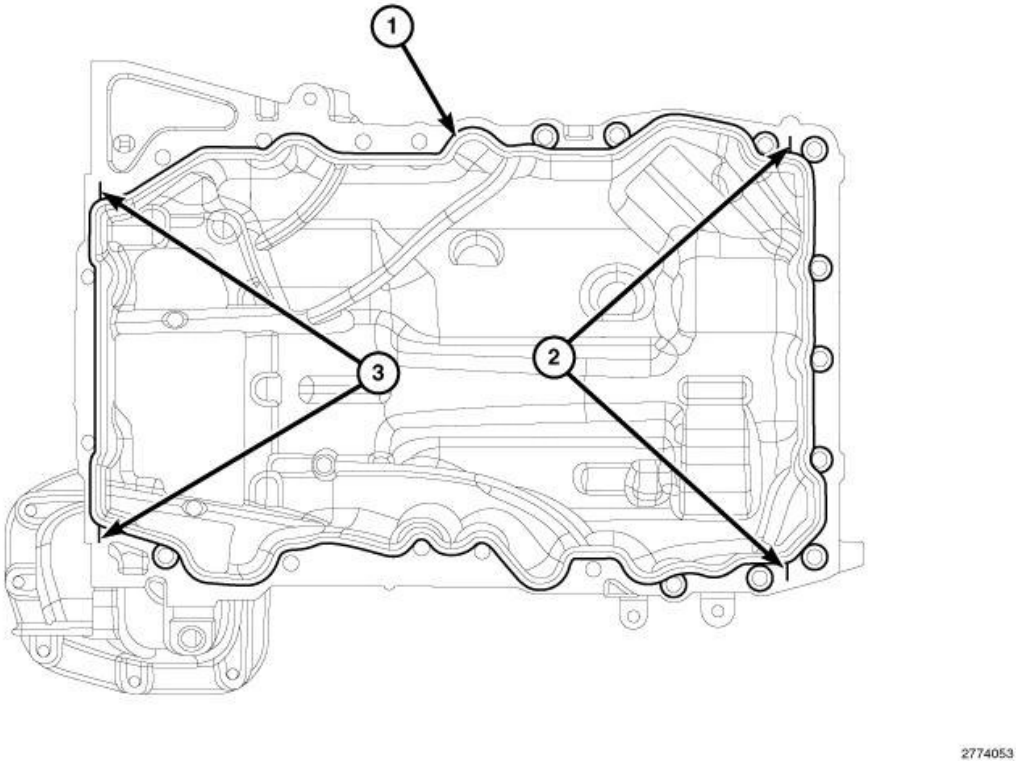

Fig. 587: Mopar® Threebond Engine RTV Sealant Locations
Courtesy of CHRYSLER GROUP, LLC

CAUTION: Engine assembly requires the use of a unique sealant that is

compatible with engine oil. Using a sealant other than Mopar® Threebond Engine RTV Sealant may result in engine fluid leakage.

CAUTION: Following the application of Mopar® Threebond Engine RTV Sealant to the gasket surfaces, the components must be assembled within 20 minutes and the attaching fasteners must be tightened to specification within 45 minutes. Prolonged exposure to the air prior to assembly may result in engine fluid leakage.

2. Apply a 2 to 3 mm wide bead of Mopar® Threebond Engine RTV Sealant to the upper oil pan as shown in the illustration in the following locations:
   - Oil pan to engine block flange (1)
   - Two timing cover to engine block T-joints (2)
   - Two rear seal retainer to engine block T-joints (3)

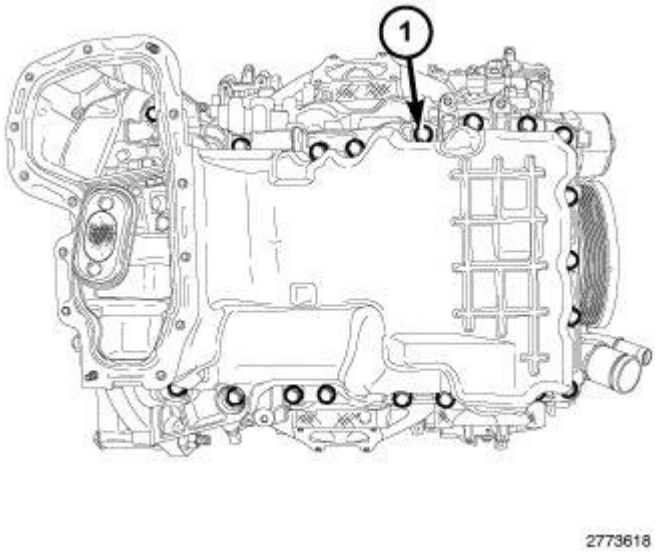

Fig. 588: Oil Pan Mounting Bolts
Courtesy of CHRYSLER GROUP, LLC

CAUTION: Make sure that the rear face of the oil pan is flush to the transmission bell housing before tightening any of the oil pan mounting bolts. A gap between the oil pan and the transmission could crack the oil pan or transmission casting.

3. Install the oil pan to the engine block and flush to the transmission bell housing. Secure the oil pan to the engine block with nineteen M8 oil pan mounting bolts (1) finger tight.

 © 2011 Mitchell Repair Information Company, LLC.

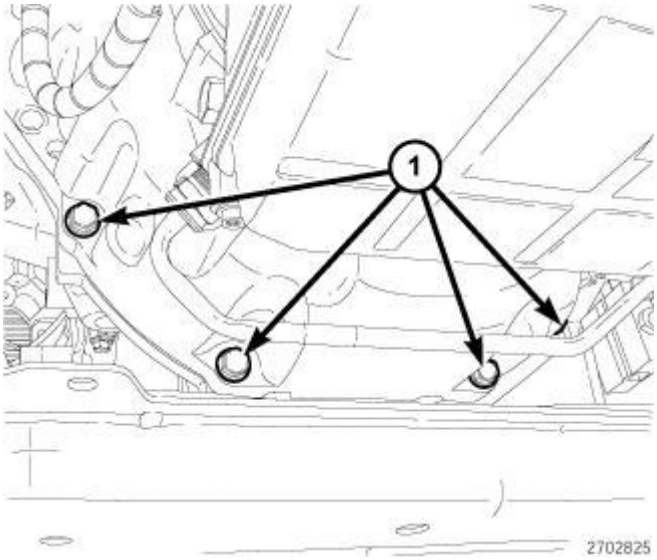

Fig. 589: Transmission-To-Engine Oil Pan Bolts
Courtesy of CHRYSLER GROUP, LLC

4. Install four transmission to the engine oil pan bolts (1) and tighten to 55 N.m (41 ft. lbs.).

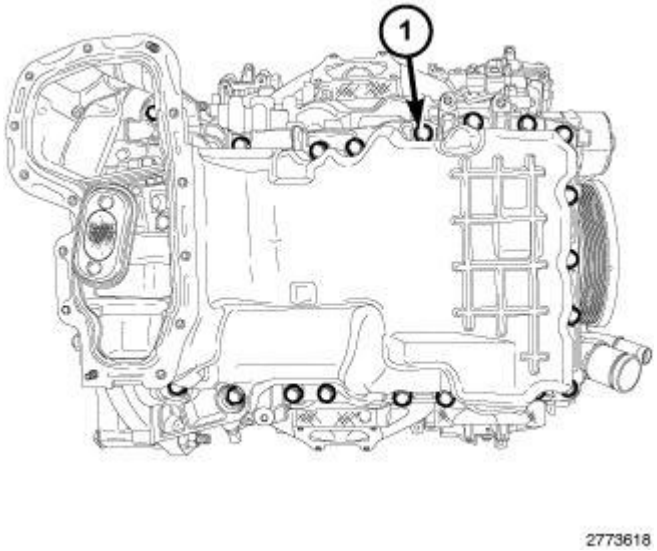

Fig. 590: Oil Pan Mounting Bolts
Courtesy of CHRYSLER GROUP, LLC

5. Tighten the nineteen previously installed M8 oil pan mounting bolts (1) to 25 N.m (18 ft. lbs.).

 © 2011 Mitchell Repair Information Company, LLC.

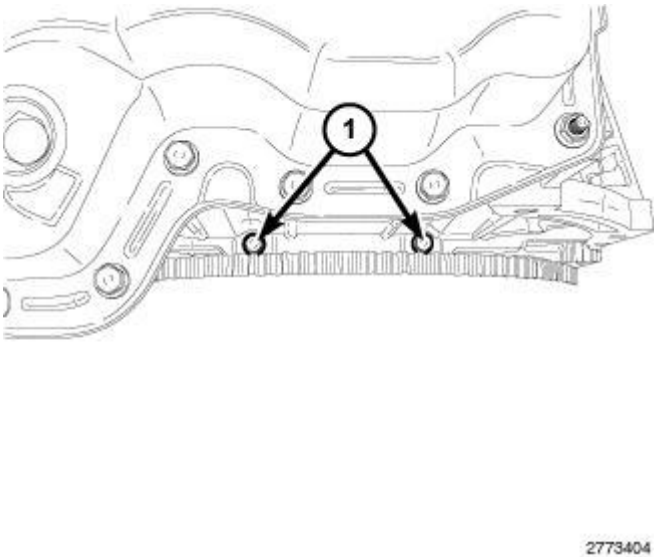

Fig. 591: Rear Oil Seal Retainer Flange Bolts
Courtesy of CHRYSLER GROUP, LLC

6. Install two M6 bolts (1) to the rear oil seal retainer flange and tighten to 12 N.m (106 in. lbs.).

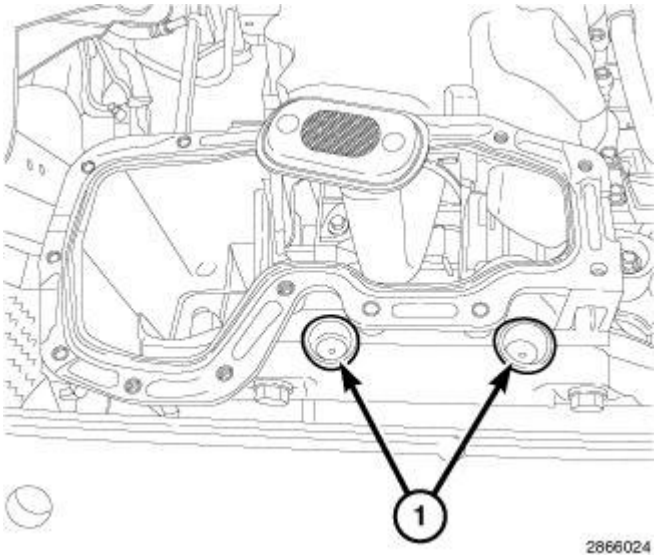

Fig. 592: Rubber Plugs
Courtesy of CHRYSLER GROUP, LLC

7. Install two rubber plugs (1) covering the rear oil seal retainer flange bolts.

 © 2011 Mitchell Repair Information Company, LLC.

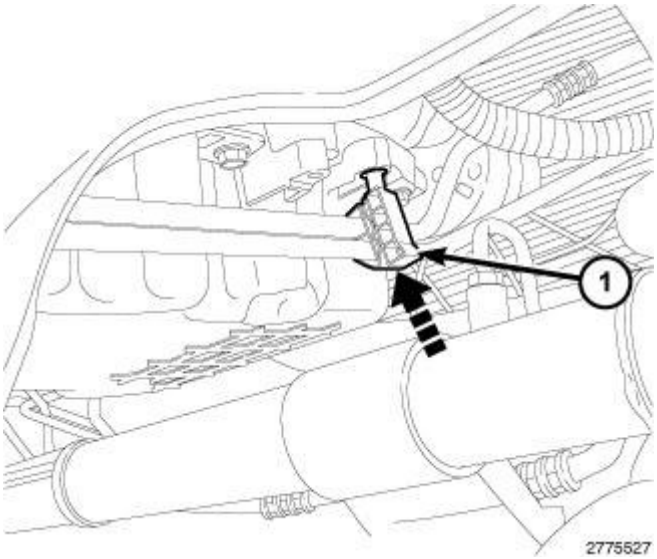

Fig. 593: Transmission Cooler Line Retainer
Courtesy of CHRYSLER GROUP, LLC

8. Clip the transmission cooler line retainer (1) to the oil pan flange.

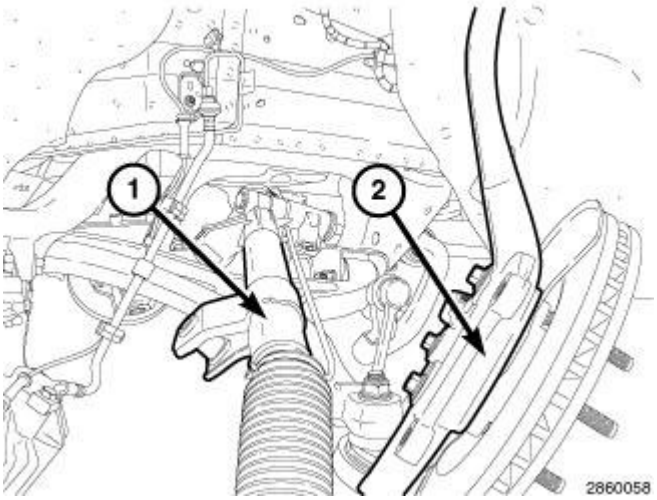

Fig. 594: Steering Gear & Knuckle/Rotor Assembly
Courtesy of CHRYSLER GROUP, LLC

9. Install the steering gear (1). Refer to **GEAR, INSTALLATION** .

 © 2011 Mitchell Repair Information Company, LLC.

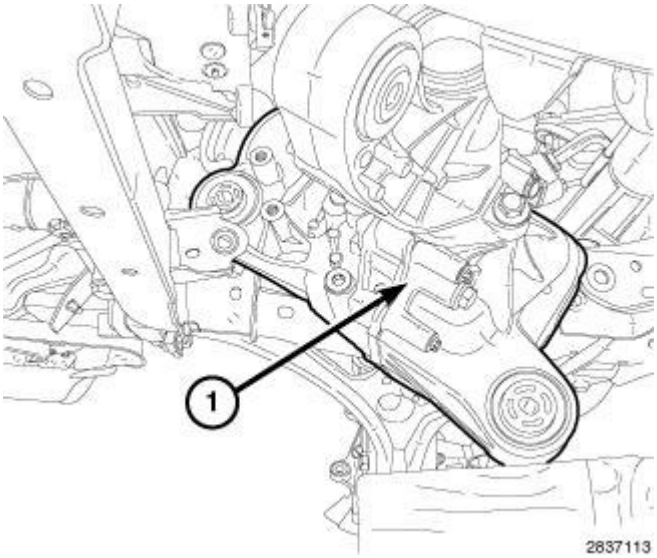

Fig. 595: Front Axle & Axle Bracket
Courtesy of CHRYSLER GROUP, LLC

10. If equipped with AWD, install the front axle (1). Refer to **INSTALLATION** .

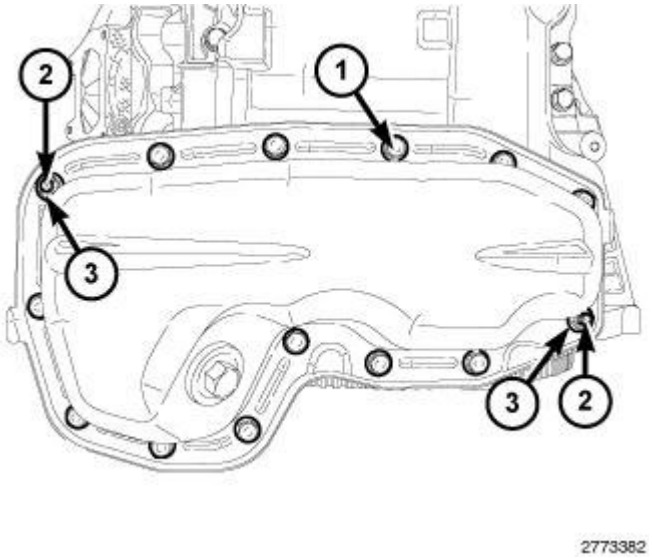

Fig. 596: Lower Oil Pan & Fasteners
Courtesy of CHRYSLER GROUP, LLC

11. Install the lower oil pan. Refer to **PAN, OIL, INSTALLATION**.
12. Install the front skid plate, if equipped. Refer to **PLATE, SKID, FRONT, INSTALLATION** .
13. Lower the vehicle.

 © 2011 Mitchell Repair Information Company, LLC.

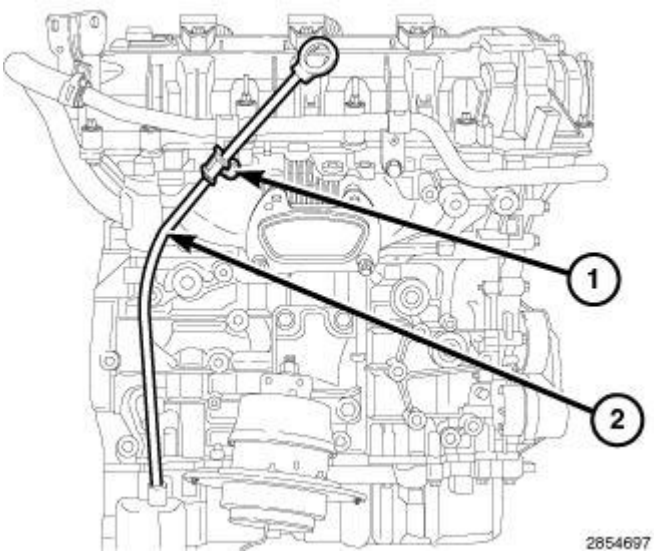

Fig. 597: Oil Level Indicator & Retaining Bolt
Courtesy of CHRYSLER GROUP, LLC

14. Install the oil level indicator (2) with bolt (1) tightened 12 N.m (106 in. lbs.).
15. If removed, install the oil filter and fill the engine crankcase with the proper oil to the correct level. Refer to ENGINE/LUBRICATION/OIL **STANDARD PROCEDURE** .
16. Connect the negative battery cable and tighten nut to 5 N.m (45 in. lbs.).
17. Run the engine until it reaches normal operating temperature.

PICK-UP, OIL PUMP

REMOVAL

REMOVAL

1. Disconnect and isolate the negative battery cable.
2. Remove the oil pan. Refer to **PAN, OIL, REMOVAL**.

 © 2011 Mitchell Repair Information Company, LLC.

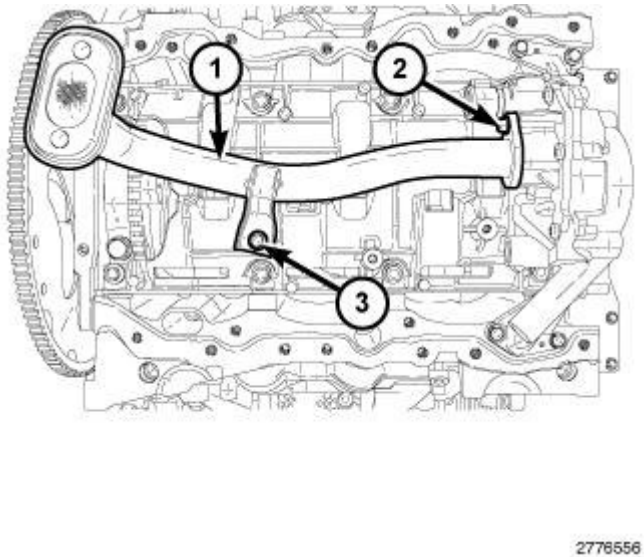

Fig. 598: Oil Pick-Up Tube & Bolts
Courtesy of CHRYSLER GROUP, LLC

3. Remove the bolt (3) from the oil pump pick-up tube support bracket.
4. Remove the bolt (2) from the oil pick-up tube and remove the oil pick-up tube (1) from the oil pump.

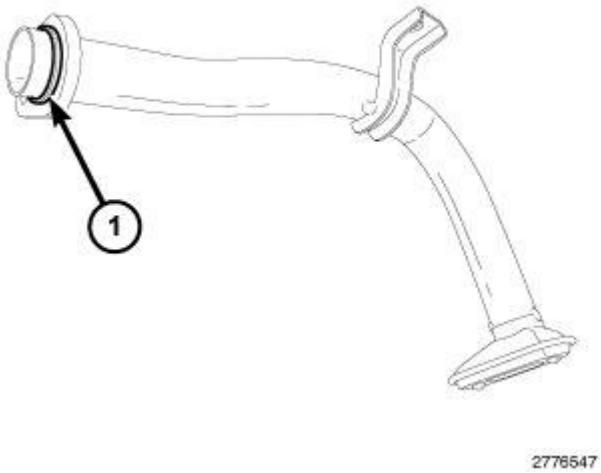

Fig. 599: Oil Pick-Up Tube O-Ring Seal
Courtesy of CHRYSLER GROUP, LLC

5. Remove and discard the O-ring seal (1) from the oil pick-up tube.

INSTALLATION

INSTALLATION

 © 2011 Mitchell Repair Information Company, LLC.

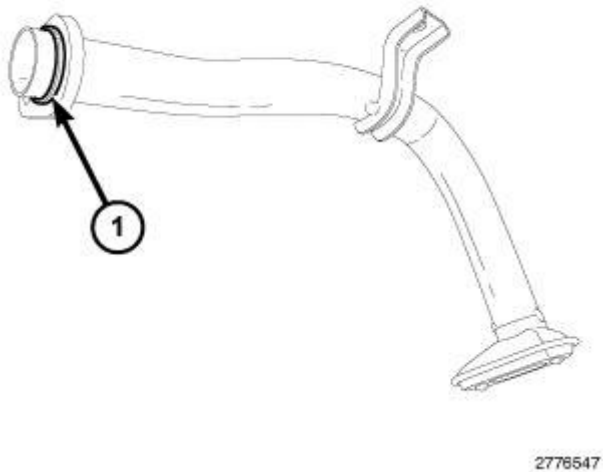

Fig. 600: Oil Pick-Up Tube O-Ring Seal
Courtesy of CHRYSLER GROUP, LLC

1. Lightly lubricate the new O-ring seal (1) with engine oil and install on the oil pick-up tube.

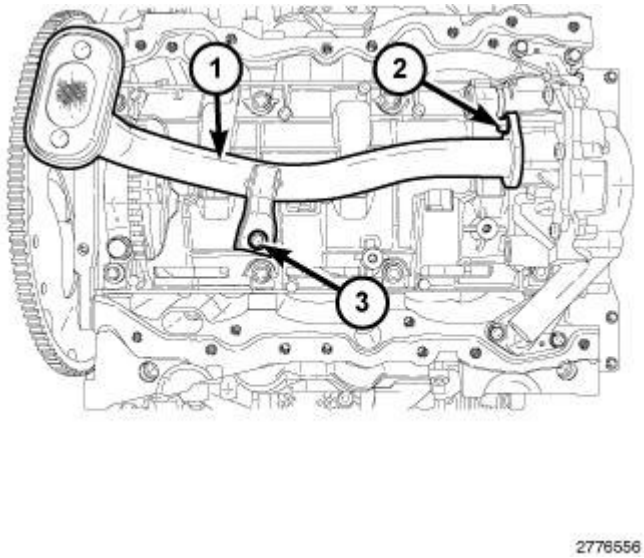

Fig. 601: Oil Pick-Up Tube & Bolts
Courtesy of CHRYSLER GROUP, LLC

2. Install the oil pick-up tube (1) with two bolts (2 and 3). Tighten the bolts to 12 N.m (106 in. lbs.).
3. Install the oil pan. Refer to **PAN, OIL, INSTALLATION**.
4. If removed, install the oil filter and fill the engine crankcase with the proper oil to the correct level. Refer to ENGINE/LUBRICATION/OIL **STANDARD PROCEDURE** .
5. Connect the negative battery cable and tighten nut to 5 N.m (45 in. lbs.).
6. Run the engine until it reaches normal operating temperature.

 © 2011 Mitchell Repair Information Company, LLC.

PUMP, ENGINE OIL

DESCRIPTION

DESCRIPTION

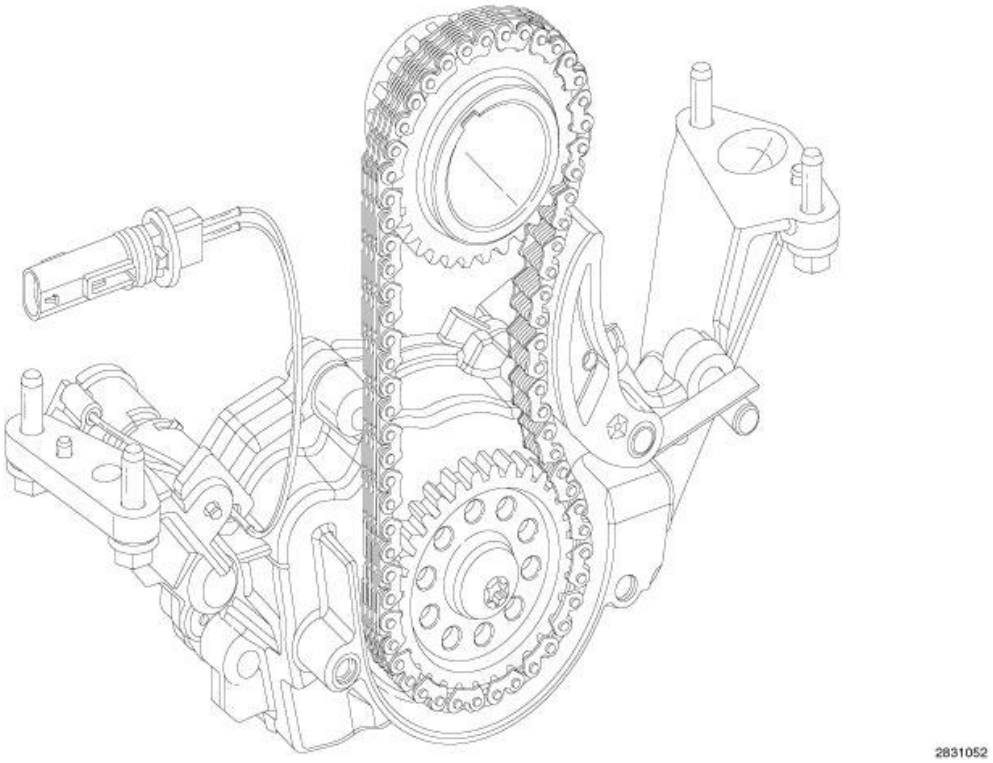

Fig. 602: Oil Pump Chain
Courtesy of CHRYSLER GROUP, LLC

The vane type engine oil pump is mounted to the underside of the cylinder block and is driven by the oil pump chain off the crankshaft at a 1:1 drive ratio. This pump location improves efficiency compared to an on-crankshaft location. The pump is driven with a silent chain which is tensioned using a spring loaded tensioner. The pump is not timed to the engine.

An internal mechanical ball and spring type relief valve prevents excess pressure in the engine by dumping oil into the sump and provides emergency protection at conditions such as a cold start with high engine speed.

The pump has a moving slide mechanism for variable displacement capability and an on-off solenoid for two-stage pressure regulation. The pump and the solenoid are not to be disassembled. Both are non-serviceable components and are to be replaced as a complete assembly.

OPERATION

OPERATION

 © 2011 Mitchell Repair Information Company, LLC.

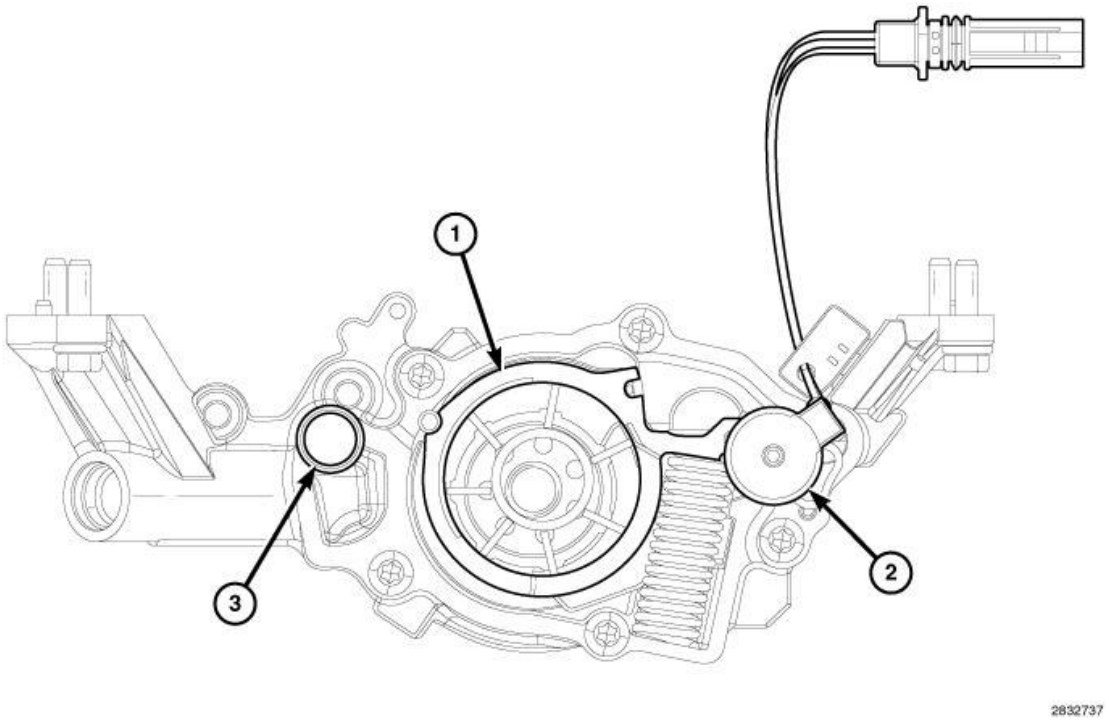

Fig. 603: Moving Element, On/Off Solenoid & Relief Valve
Courtesy of CHRYSLER GROUP, LLC

The engine oil pump features seven vanes and a moving element (1) that continuously adjusts to maintain a regulated oil pressure supply by varying the displacement of the pump. The pump has two regulated pressure stages of operation controlled by an on/off solenoid (2). Low pressure mode regulation (solenoid on) is approximately 200 kPa (29 psi) and high pressure mode regulation (solenoid off) is approximately 450 kPa (65 psi). The Powertrain Control Module (PCM) switches the pump between stages based on engine operating conditions, oil and coolant temperatures, speed and load. Under most typical conditions, the pump will run in low mode from idle up to around 3000 rpm, and switch from low to high mode between 3000 and 4000 rpm.

The maximum oil pressure in the engine is limited to 1000 kPa (145 psi) by the relief valve (3). Pressure in the main oil gallery of the engine can be monitored with diagnostic equipment through the oil pressure sensor mounted on the rear of the oil filter module. The minimum pressure for the engine is 41 kPa (6 psi) at any operating condition. Anything under this pressure could result in damage to critical moving parts.

 © 2011 Mitchell Repair Information Company, LLC.

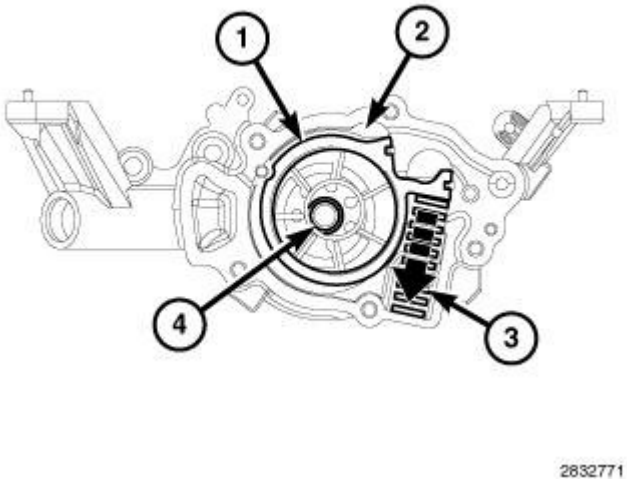

Fig. 604: Moving Element, Main Gallery Oil Pressure, Spring Pressure & Pump Driveshaft
Courtesy of CHRYSLER GROUP, LLC

In high pressure mode regulation (solenoid off) main gallery oil pressure (2) is applied to the moving element (1). The main gallery oil pressure works against spring pressure (3) to move the element to a more concentric location about the pump driveshaft (4) thus reducing displacement and pump output.

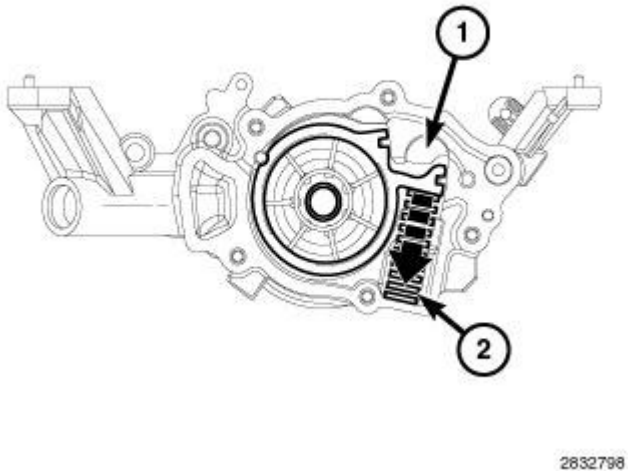

Fig. 605: Chamber & Spring
Courtesy of CHRYSLER GROUP, LLC

In low pressure mode regulation (solenoid on) the energized solenoid opens an additional chamber (1) to main gallery oil pressure increasing the force on the spring (2) to further reduce displacement and output pressure.

REMOVAL

REMOVAL

1. Disconnect and isolate the negative battery cable.
2. Remove the upper oil pan. Refer to **PAN, OIL, REMOVAL**.

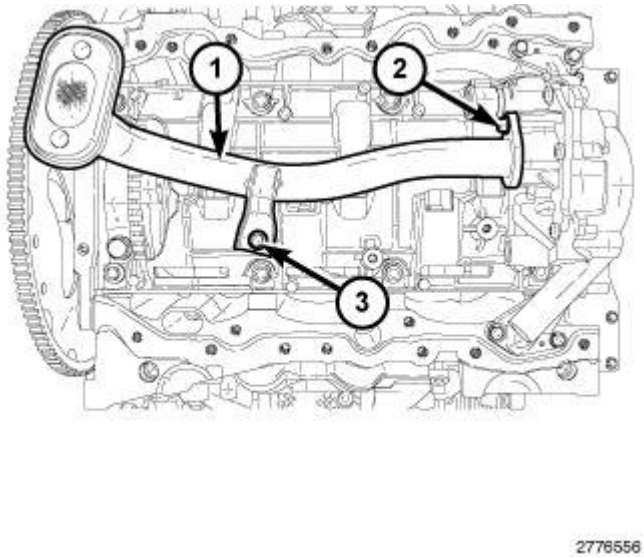

Fig. 606: Oil Pick-Up Tube & Bolts
Courtesy of CHRYSLER GROUP, LLC

3. Remove the oil pump pick-up (1). Refer to **PICK-UP, OIL PUMP, REMOVAL**.

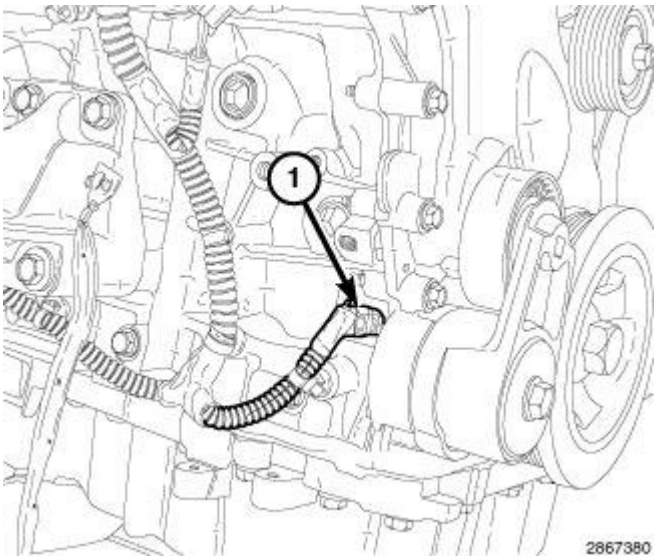

Fig. 607: Oil Pump Solenoid Electrical Connector
Courtesy of CHRYSLER GROUP, LLC

4. Disconnect the engine wire harness from the oil pump solenoid electrical connector (1).

 © 2011 Mitchell Repair Information Company, LLC.

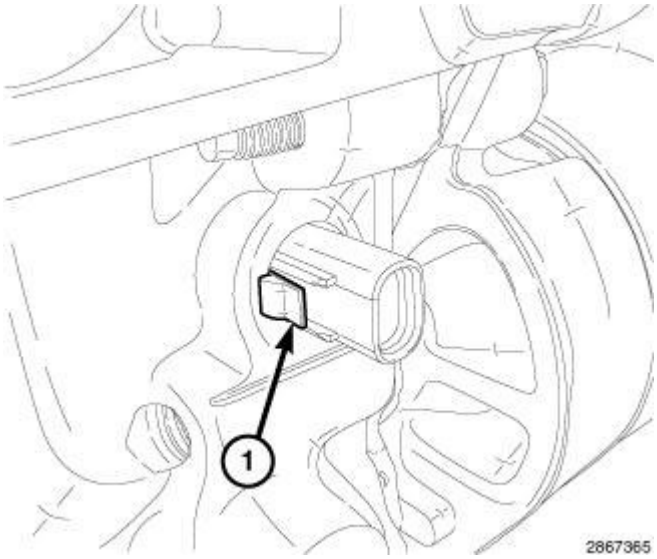

Fig. 608: Oil Pump Solenoid Electrical Connector Retention Lock Tab
Courtesy of CHRYSLER GROUP, LLC

5. Depress the connector retention lock tab (1) to disengage the oil pump solenoid electrical connector from the engine block.

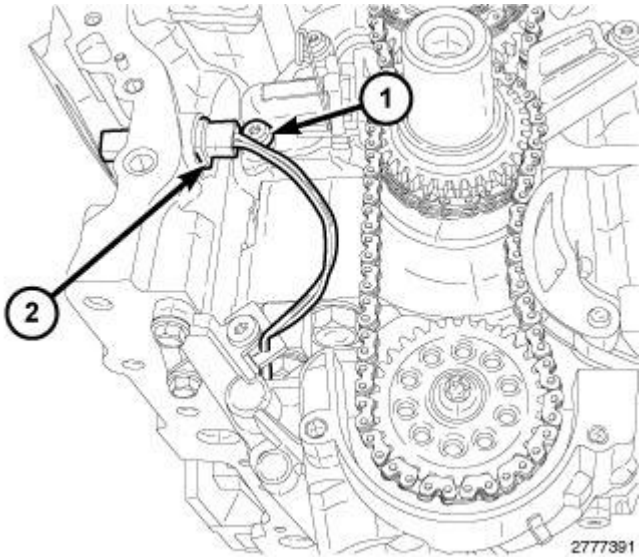

Fig. 609: Oil Pump Solenoid Electrical Connector & Primary Chain Tensioner Mounting Bolt
Courtesy of CHRYSLER GROUP, LLC

NOTE: Illustration shows the engine timing cover removed for clarity.

6. Push the oil pump solenoid electrical connector into the engine block, rotate the connector slightly CW, push it past the primary chain tensioner mounting bolt (1) and into the engine.

 © 2011 Mitchell Repair Information Company, LLC.

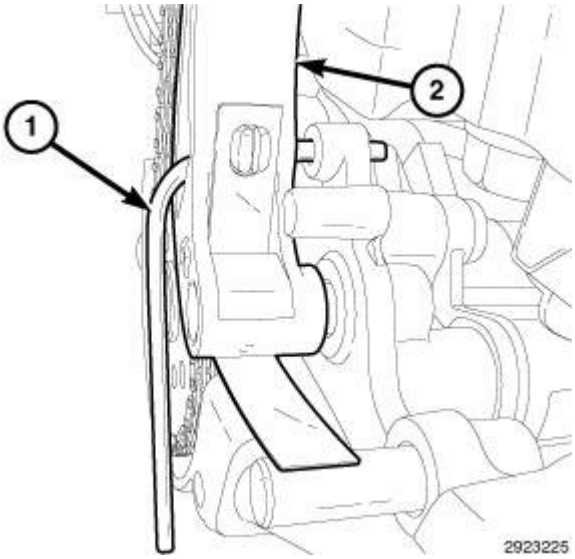

Fig. 610: Oil Pump Chain Tensioner & Retaining Pin
Courtesy of CHRYSLER GROUP, LLC

7. Push back the oil pump chain tensioner (2) and insert a suitable retaining pin (1) such as a 3 mm Allen wrench.

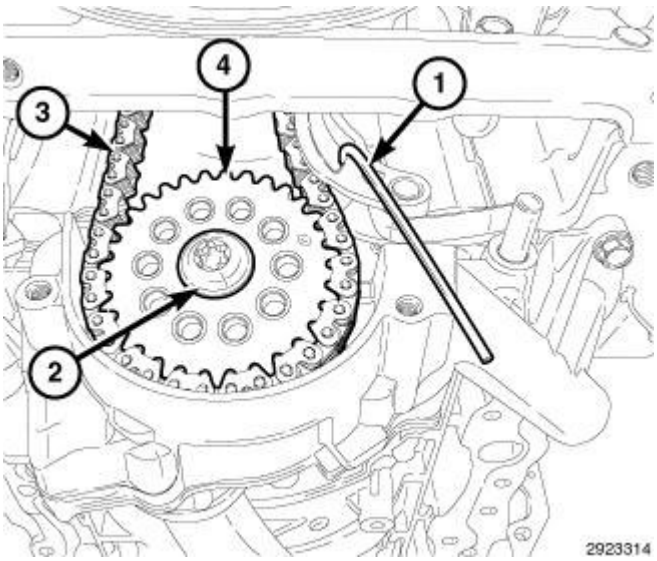

Fig. 611: Retaining Pin, Retaining Bolt, Oil Pump Chain & Sprocket
Courtesy of CHRYSLER GROUP, LLC

CAUTION: Always reinstall timing chains so that they maintain the same direction of rotation. Inverting a previously run chain on a previously run sprocket will result in excessive wear to both the chain and sprocket.

8. Mark the direction of rotation on the oil pump chain (3) and sprocket (4) using a paint pen or equivalent to aid in reassembly.

 © 2011 Mitchell Repair Information Company, LLC.

NOTE: **There are no timing marks on the oil pump gear or chain. Timing of the oil pump is not required.**

9. Remove the oil pump sprocket T45 retaining bolt (2) and remove the oil pump sprocket (4).

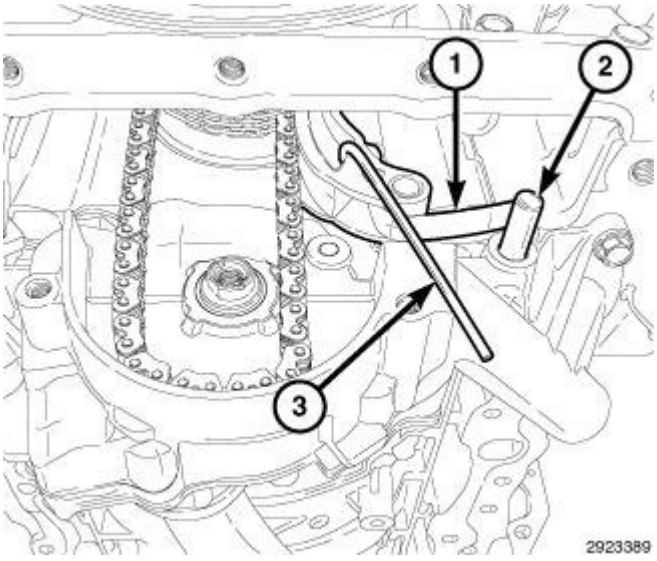

Fig. 612: Retaining Pin, Oil Pump Chain Tensioner Spring & Dowel Pin
Courtesy of CHRYSLER GROUP, LLC

10. Remove the retaining pin (3) and disengage the oil pump chain tensioner spring (1) from the dowel pin (2).
11. Remove the oil pump chain tensioner from the oil pump.

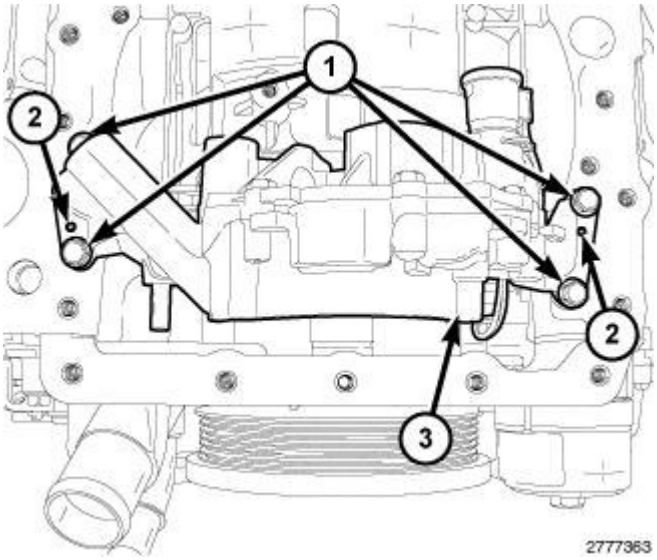

Fig. 613: Oil Pump, Locator Pins & Bolts
Courtesy of CHRYSLER GROUP, LLC

12. Remove the four oil pump bolts (1) and remove the oil pump (3).

 © 2011 Mitchell Repair Information Company, LLC.

INSPECTION

INSPECTION

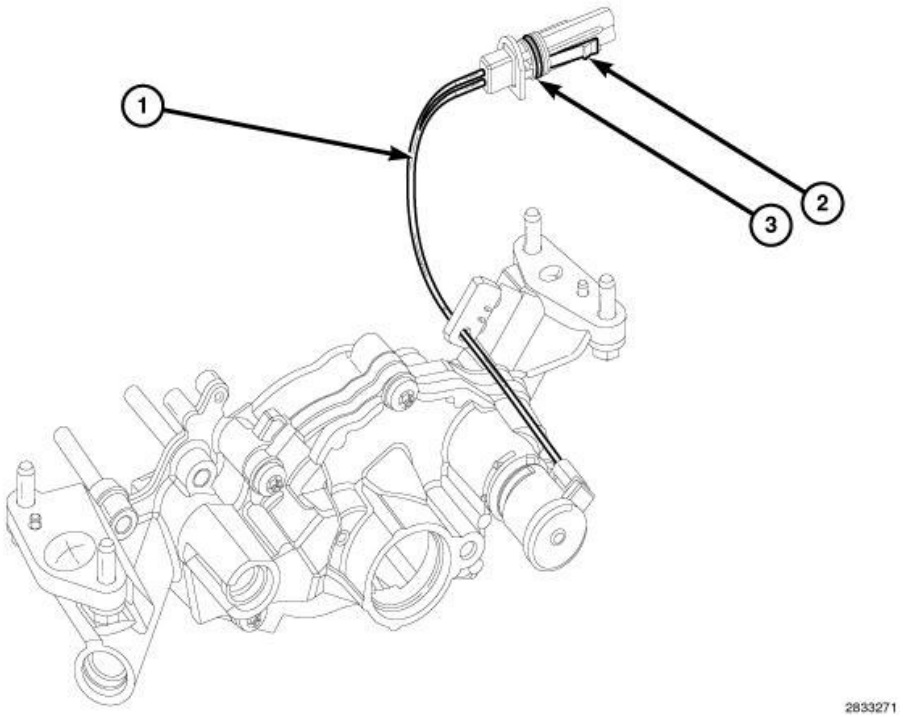

Fig. 614: Solenoid Wires, Connector Retention Lock Tab & O-Ring Seal
Courtesy of CHRYSLER GROUP, LLC

NOTE: The 3.6L Oil pump is released as an assembly. The assembly includes both the pump and the solenoid. There are no serviceable sub-assembly components. In the event the oil pump or solenoid are not functioning or out of specification they must be replaced as an assembly.

1. Inspect the solenoid wires (1) for cuts or chaffing.
2. Inspect the condition of the connector O-ring seal (3).
3. Inspect the connector retention lock tab (2) for fatigue or damage.

INSTALLATION

INSTALLATION

 © 2011 Mitchell Repair Information Company, LLC.

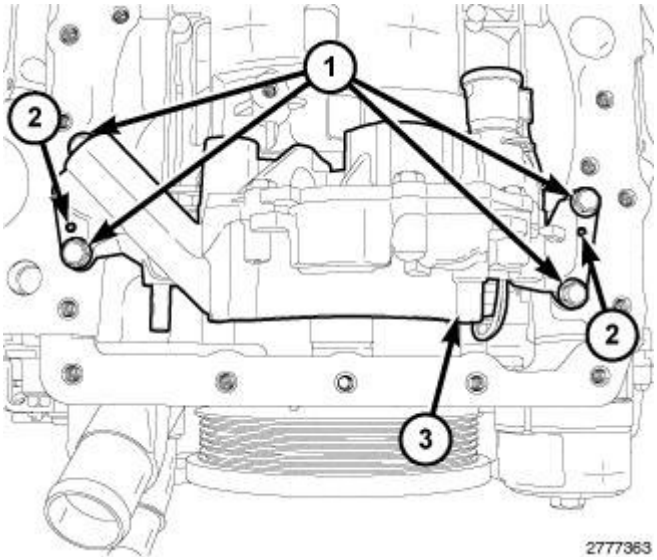

Fig. 615: Oil Pump, Locator Pins & Bolts
Courtesy of CHRYSLER GROUP, LLC

1. Align the locator pins (2) to the engine block and install the oil pump (3) with four bolts (1). Tighten the bolts to 12 N.m (106 in. lbs.).

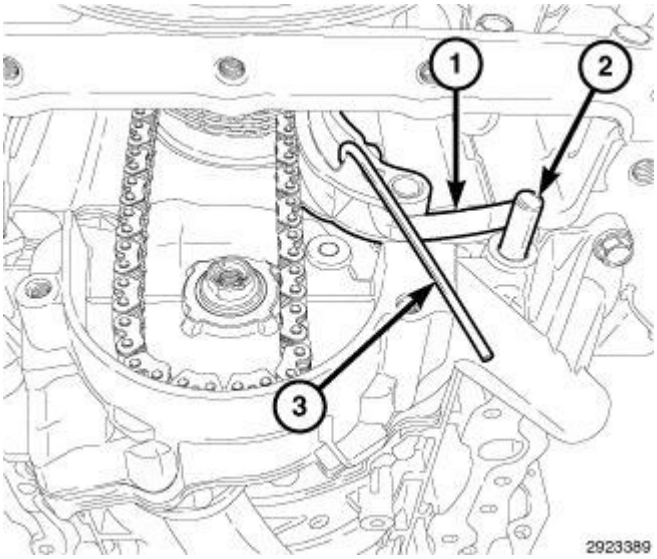

Fig. 616: Retaining Pin, Oil Pump Chain Tensioner Spring & Dowel Pin
Courtesy of CHRYSLER GROUP, LLC

2. Install the oil pump chain tensioner on the oil pump.
3. Position the oil pump chain tensioner spring (1) above the dowel pin (2).
4. Push back the oil pump chain tensioner and insert a suitable retaining pin (3) such as a 3 mm Allen wrench.

 © 2011 Mitchell Repair Information Company, LLC.

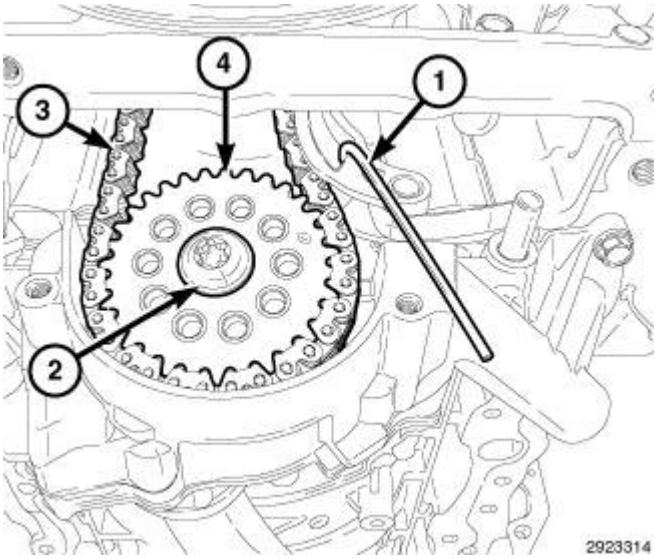

Fig. 617: Retaining Pin, Retaining Bolt, Oil Pump Chain & Sprocket
Courtesy of CHRYSLER GROUP, LLC

NOTE: There are no timing marks on the oil pump gear or chain. Timing of the oil pump is not required.

CAUTION: Always reinstall timing chains so that they maintain the same direction of rotation. Inverting a previously run chain on a previously run sprocket will result in excessive wear to both the chain and sprocket.

5. Place the oil pump sprocket (4) into the oil pump chain (3). Align the oil pump sprocket with the oil pump shaft and install the sprocket. Install the T45 retaining bolt (2) and tighten to 25 N.m (18 ft. lbs.).
6. Remove the retaining pin (1). Verify that the oil pump chain is centered on the tensioner and crankshaft sprocket.
7. Rotate the crankshaft CW one complete revolution to verify proper oil pump chain installation.

 © 2011 Mitchell Repair Information Company, LLC.

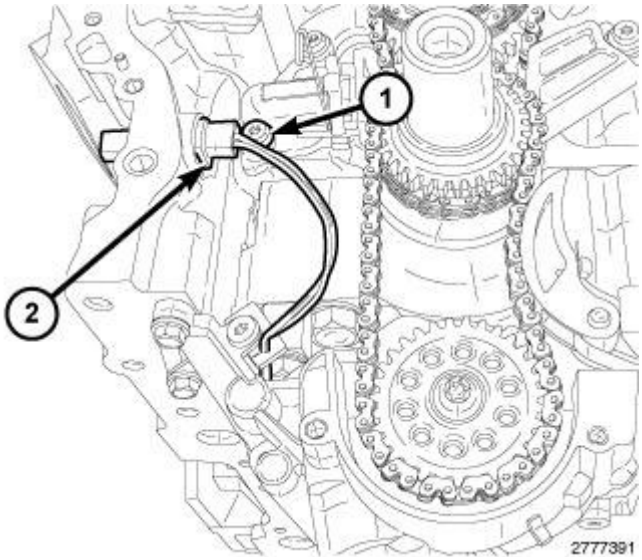

Fig. 618: Oil Pump Solenoid Electrical Connector & Primary Chain Tensioner Mounting Bolt
Courtesy of CHRYSLER GROUP, LLC

NOTE: Illustration shows the engine timing cover removed for clarity.

8. Position the oil pump solenoid electrical connector (2) into the engine block. Rotate the connector so that it can be pushed past the primary chain tensioner mounting bolt (1). Then rotate the connector slightly CCW and push it into the engine block until it locks in place.

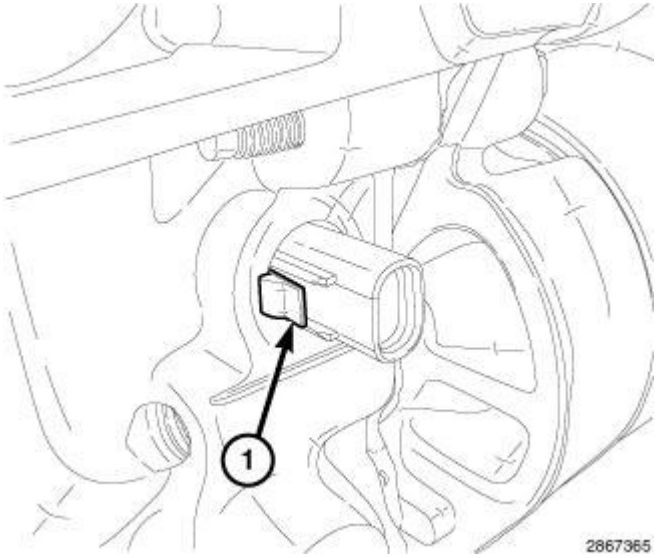

Fig. 619: Oil Pump Solenoid Electrical Connector Retention Lock Tab
Courtesy of CHRYSLER GROUP, LLC

9. Verify that the oil pump solenoid electrical connector retention lock tab (1) is engaged to the engine block.

 © 2011 Mitchell Repair Information Company, LLC.

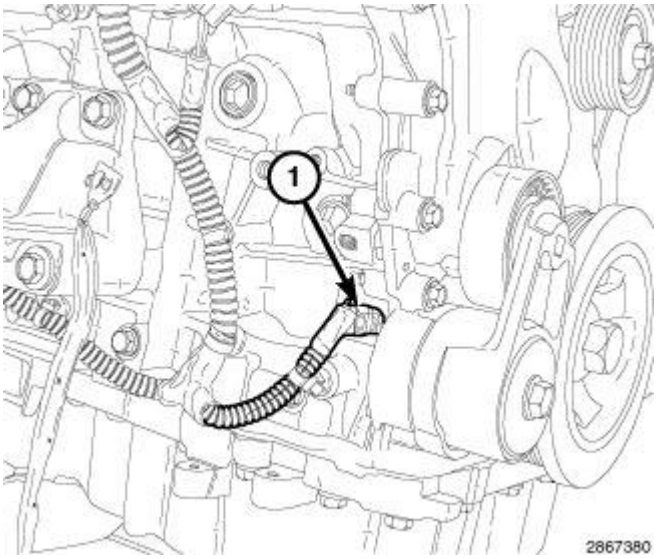

Fig. 620: Oil Pump Solenoid Electrical Connector
Courtesy of CHRYSLER GROUP, LLC

10. Connect the engine wire harness to the oil pump solenoid electrical connector (1).

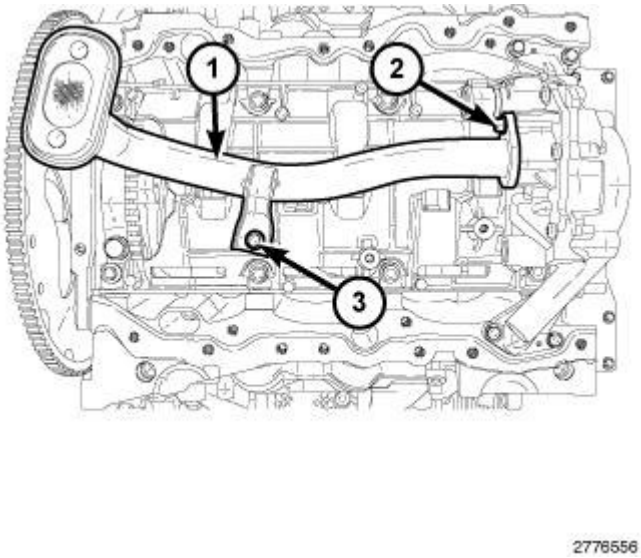

Fig. 621: Oil Pick-Up Tube & Bolts
Courtesy of CHRYSLER GROUP, LLC

11. Install the oil pump pick-up (1). Refer to **PICK-UP, OIL PUMP, INSTALLATION**.
12. Install the oil pan. Refer to **PAN, OIL, INSTALLATION**.
13. If removed, install the oil filter and fill the engine crankcase with the proper oil to the correct level. Refer to ENGINE/LUBRICATION/OIL **STANDARD PROCEDURE** .
14. Connect the negative battery cable and tighten nut to 5 N.m (45 in. lbs.).

CAUTION: A MIL or low oil pressure indicator that remains illuminated for more

 © 2011 Mitchell Repair Information Company, LLC.

than 2 seconds may indicate low or no engine oil pressure. Stop the engine and investigate the cause of the indication.

15. Start and run the engine until it reaches normal operating temperature.

SENSOR, OIL PRESSURE

DESCRIPTION

DESCRIPTION

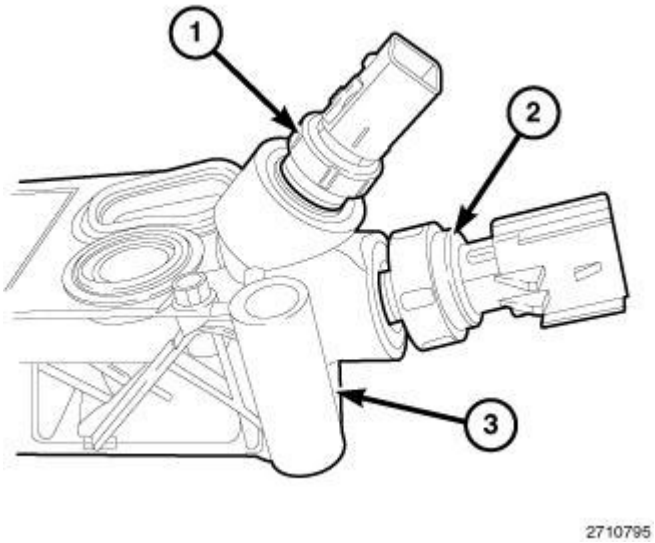

Fig. 622: Oil Temperature Sensor, Oil Pressure Sensor & Oil Filter Housing
Courtesy of CHRYSLER GROUP, LLC

The oil pressure sensor (2) is located on the oil filter housing (3). The oil pressure sensor is a three wire sensor with a tapered threaded sensor port. The sensor port is mounted to the oil filter housing through an access hole. A thread lock patch seals the oil pressure sensor to the oil filter housing.

OPERATION

OPERATION

 © 2011 Mitchell Repair Information Company, LLC.

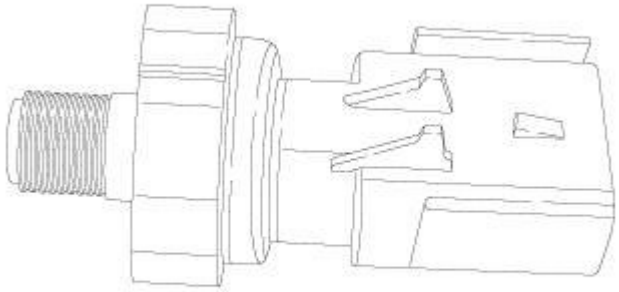

2867304

Fig. 623: Oil Pressure Sensor
Courtesy of CHRYSLER GROUP, LLC

The oil pressure sensor is a silicon based sensing unit that measures the pressure of the engine oil. The Powertrain Control Module (PCM) supplies a 5 volt reference and a ground to the sensor. The input to the PCM occurs on the signal return circuit. The oil pressure sensor is a linear sensor; as pressure changes, voltage changes proportionately and returns a voltage signal to the PCM that reflects oil pressure. The zero pressure reading is 0.5 volt and full scale is 4.5 volt.

REMOVAL

REMOVAL

1. Release fuel system pressure. Refer to **FUEL DELIVERY, GAS, STANDARD PROCEDURE** .
2. Disconnect and isolate the negative battery cable.

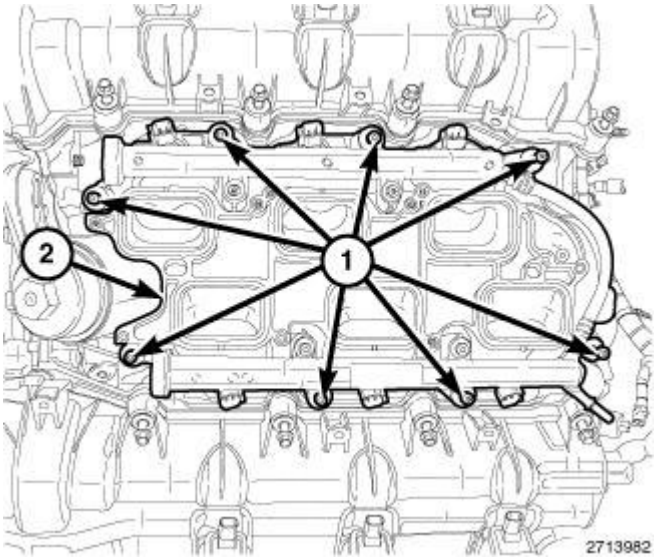

2713982

Fig. 624: Lower Intake Manifold & Attaching Bolts
Courtesy of CHRYSLER GROUP, LLC

3. Remove the air inlet hose, upper intake manifold and lower intake manifold with the fuel injectors and fuel rail (2). Refer to **MANIFOLD, INTAKE, REMOVAL**.

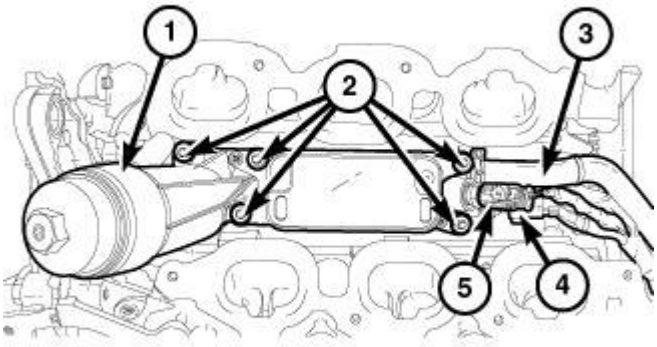

2707704

Fig. 625: Oil Temperature Sensor Electrical Connector, Oil Pressure Sensor Electrical Connector, Oil Filter Housing, Heater Hose & Bolts
Courtesy of CHRYSLER GROUP, LLC

4. Disconnect the oil pressure sensor electrical connector (4).

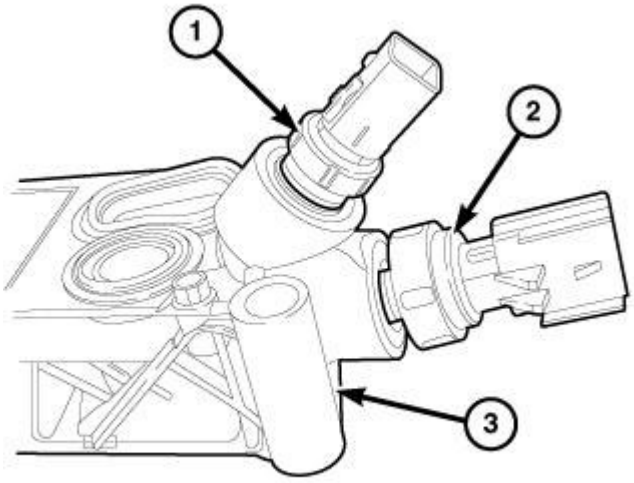

2710795

Fig. 626: Oil Temperature Sensor, Oil Pressure Sensor & Oil Filter Housing
Courtesy of CHRYSLER GROUP, LLC

5. Remove the oil pressure sensor (2) from the oil filter housing (3).

 © 2011 Mitchell Repair Information Company, LLC.

INSTALLATION

INSTALLATION

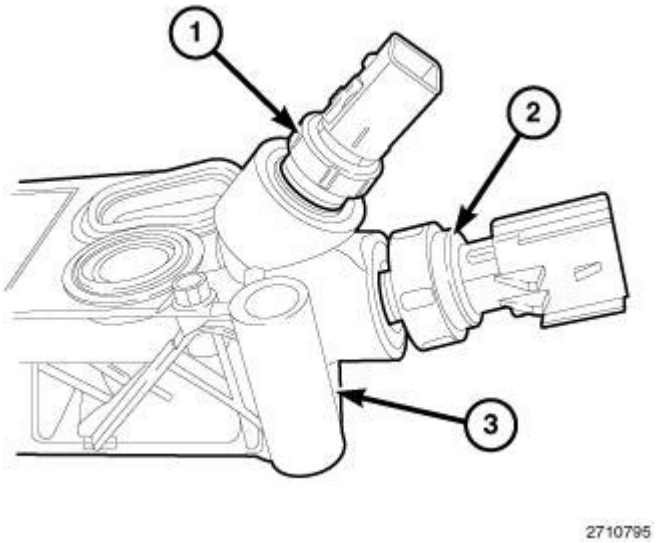

Fig. 627: Oil Temperature Sensor, Oil Pressure Sensor & Oil Filter Housing
Courtesy of CHRYSLER GROUP, LLC

1. Install the oil pressure sensor (2) and tighten to 20 N.m (177 in. lbs.).

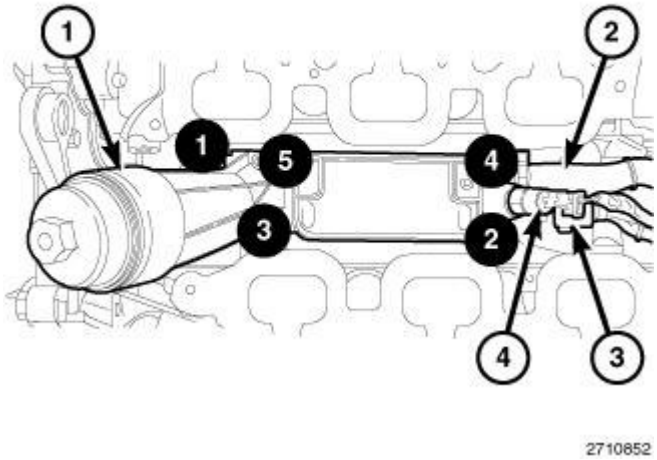

Fig. 628: Heater Hose, Electrical Connectors, Oil Filter Housing & Bolt Tightening Sequence
Courtesy of CHRYSLER GROUP, LLC

2. Connect the oil pressure sensor electrical connector (3).
3. Install the upper and lower intake manifolds and air cleaner housing assembly. Refer to **MANIFOLD, INTAKE, INSTALLATION**.
4. Connect the negative battery cable and tighten nut to 5 N.m (45 in. lbs.).

 © 2011 Mitchell Repair Information Company, LLC.

SENSOR, OIL TEMPERATURE

DESCRIPTION

DESCRIPTION

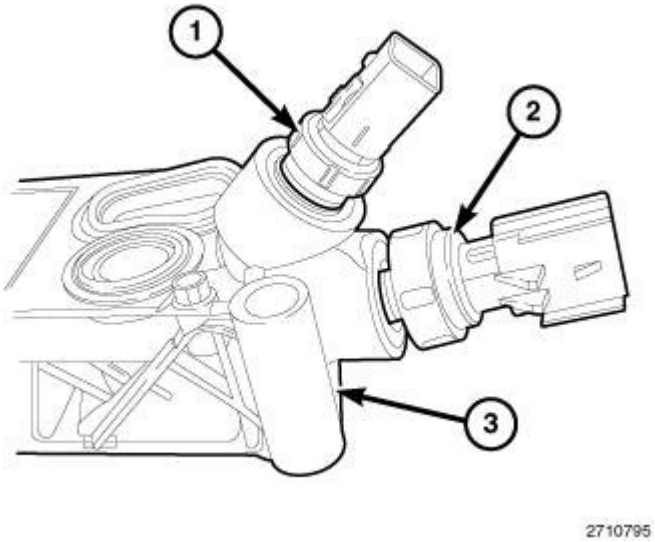

Fig. 629: Oil Temperature Sensor, Oil Pressure Sensor & Oil Filter Housing
Courtesy of CHRYSLER GROUP, LLC

The oil temperature sensor (1) is located on the oil filter housing (3). The oil temperature sensor is a two wire sensor with a tapered threaded sensor probe. The sensor probe is mounted to the oil filter housing through an access hole. A thread lock patch seals the oil temperature sensor to the oil filter housing.

OPERATION

OPERATION

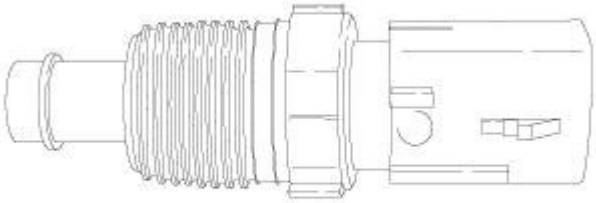

 © 2011 Mitchell Repair Information Company, LLC.

Fig. 630: Oil Temperature Sensor
Courtesy of CHRYSLER GROUP, LLC

The oil temperature sensor is a variable resistor that measures the temperature of the engine oil. The Powertrain Control Module (PCM) supplies a 5 volt reference and a ground to the sensors low reference signal circuit. When the oil temperature is low, the sensor resistance is high. When the oil temperature is high, the sensor resistance is low.

REMOVAL

REMOVAL

1. Release fuel system pressure. Refer to **FUEL DELIVERY, GAS, STANDARD PROCEDURE** .
2. Disconnect and isolate the negative battery cable.

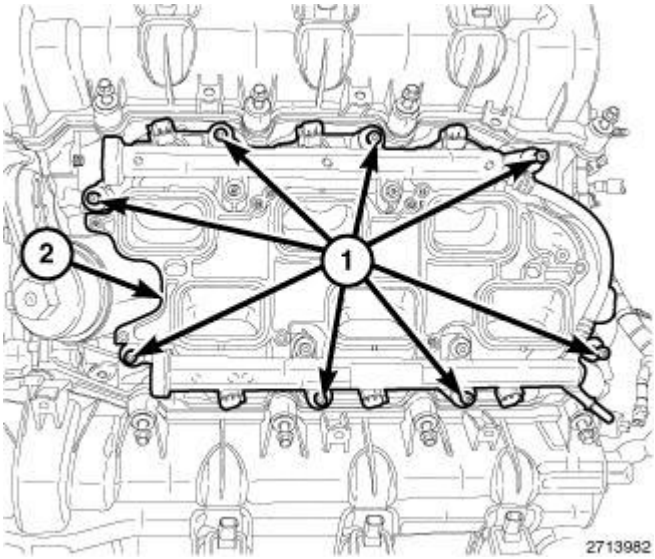

Fig. 631: Lower Intake Manifold & Attaching Bolts
Courtesy of CHRYSLER GROUP, LLC

3. Remove the air inlet hose, upper intake manifold and lower intake manifold with the fuel injectors and fuel rail (2). Refer to **MANIFOLD, INTAKE, REMOVAL**.

 © 2011 Mitchell Repair Information Company, LLC.

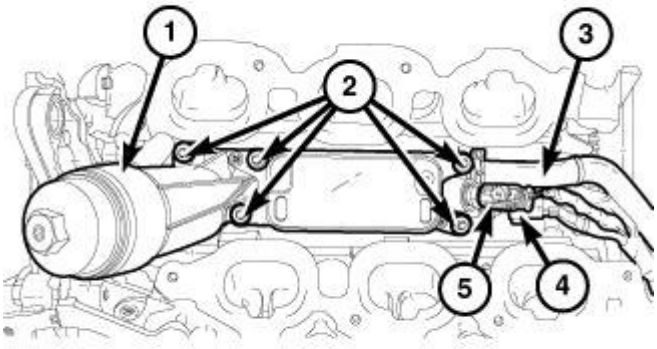

2707704

Fig. 632: Oil Temperature Sensor Electrical Connector, Oil Pressure Sensor Electrical Connector, Oil Filter Housing, Heater Hose & Bolts
Courtesy of CHRYSLER GROUP, LLC

4. Disconnect the oil temperature sensor electrical connector (5).

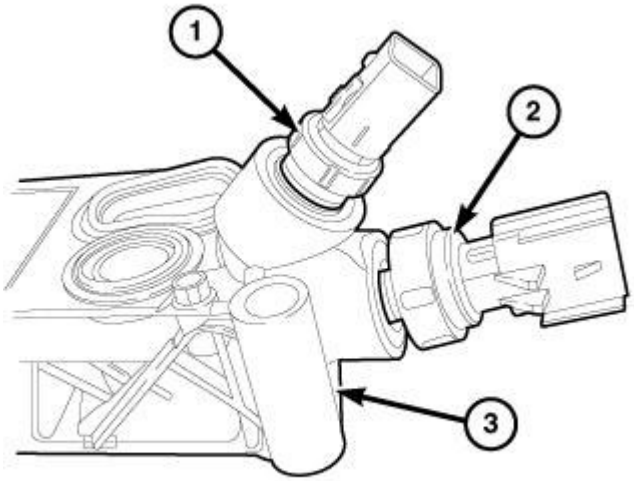

2710795

Fig. 633: Oil Temperature Sensor, Oil Pressure Sensor & Oil Filter Housing
Courtesy of CHRYSLER GROUP, LLC

5. Remove the oil temperature sensor (1) from the oil filter housing (3).

INSTALLATION

INSTALLATION

 © 2011 Mitchell Repair Information Company, LLC.

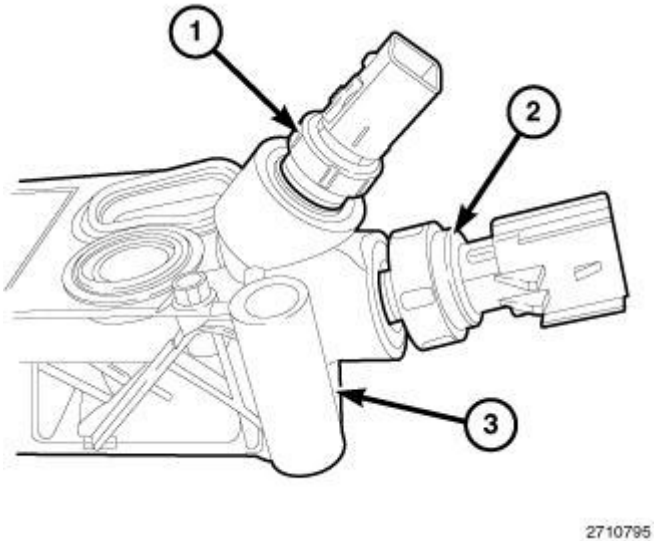

Fig. 634: Oil Temperature Sensor, Oil Pressure Sensor & Oil Filter Housing
Courtesy of CHRYSLER GROUP, LLC

Install the oil temperature sensor (1) and tighten to 20 N.m (177 in. lbs.).

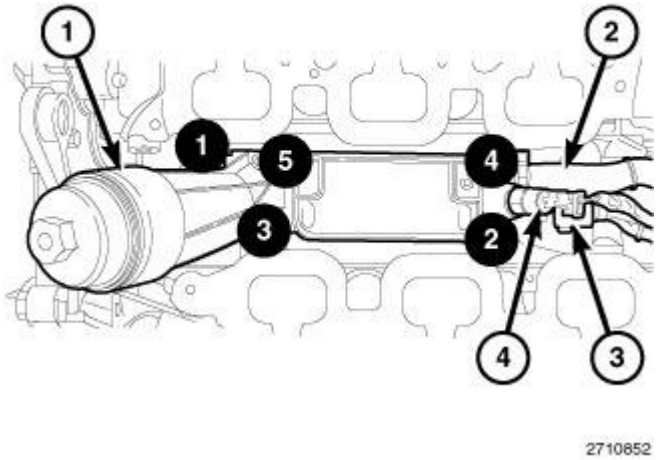

Fig. 635: Heater Hose, Electrical Connectors, Oil Filter Housing & Bolt Tightening Sequence
Courtesy of CHRYSLER GROUP, LLC

1. Connect the oil temperature sensor electrical connector (4).
2. Install the upper and lower intake manifolds and air cleaner housing assembly. Refer to **MANIFOLD, INTAKE, INSTALLATION**.
3. Connect the negative battery cable and tighten nut to 5 N.m (45 in. lbs.).

MANIFOLDS

MANIFOLD, EXHAUST

DESCRIPTION

DESCRIPTION

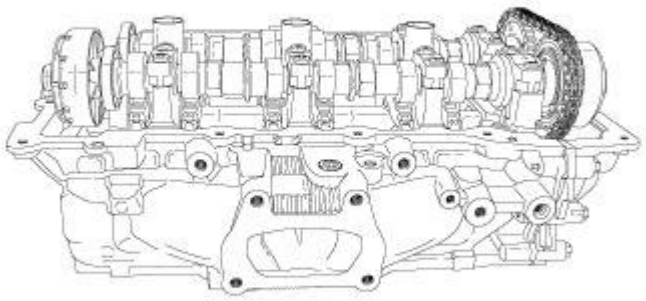

Fig. 636: Aluminum Cylinder Head
Courtesy of CHRYSLER GROUP, LLC

The 3.6L aluminum cylinder heads are a unique design with left and right castings. The exhaust manifolds are integrated into the cylinder heads. If any damaged is found to the exhaust manifold portion, the cylinder head must be removed for repair or replacement. Refer to **CYLINDER HEAD, REMOVAL**.

MANIFOLD, INTAKE

DESCRIPTION

DESCRIPTION

UPPER INTAKE MANIFOLD

CAUTION: If the engine has experienced a catastrophic failure, THE INTAKE MANIFOLD MUST BE REPLACED!

 © 2011 Mitchell Repair Information Company, LLC.

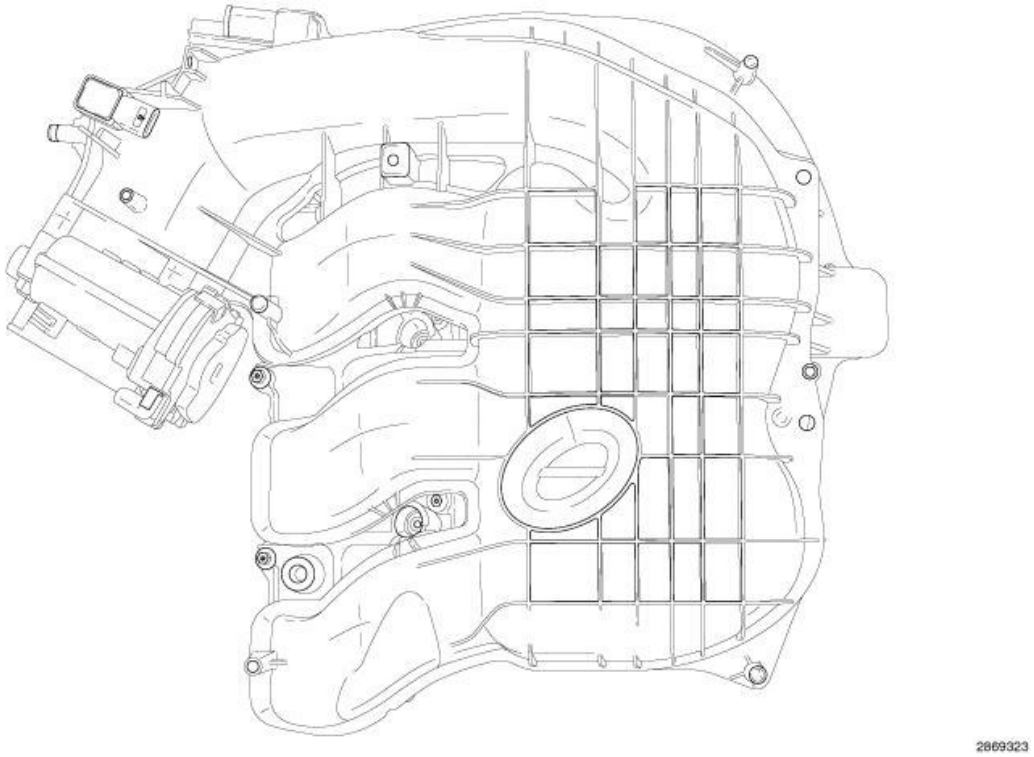

Fig. 637: Upper Intake Manifold Design
Courtesy of CHRYSLER GROUP, LLC

The upper intake manifold is an injection molded nylon composite design. The upper intake manifold is sealed to the lower intake manifold using six individual press-in-place port silicone gaskets. Replace the gaskets whenever the upper intake manifold is removed from the engine. There is a silencer pad positioned between the upper and lower intake manifolds for improved noise, vibration and harshness (NVH). The left cylinder head cover has two alignment posts to aid proper installation of the silencer pad. The seven upper intake manifold fasteners thread directly into the composite lower intake manifold and are a self-taping design. If the upper intake manifold is damaged or cracked, it must be replaced.

The Electronic Throttle Control (ETC) and Manifold Air Pressure (MAP) sensor are attached directly to the upper intake manifold. The upper intake manifold also provides vacuum ports for brake booster, positive crankcase ventilation (PCV) and emissions control.

LOWER INTAKE MANIFOLD

CAUTION: If the engine has experienced a catastrophic failure, THE INTAKE MANIFOLD MUST BE REPLACED!

 © 2011 Mitchell Repair Information Company, LLC.

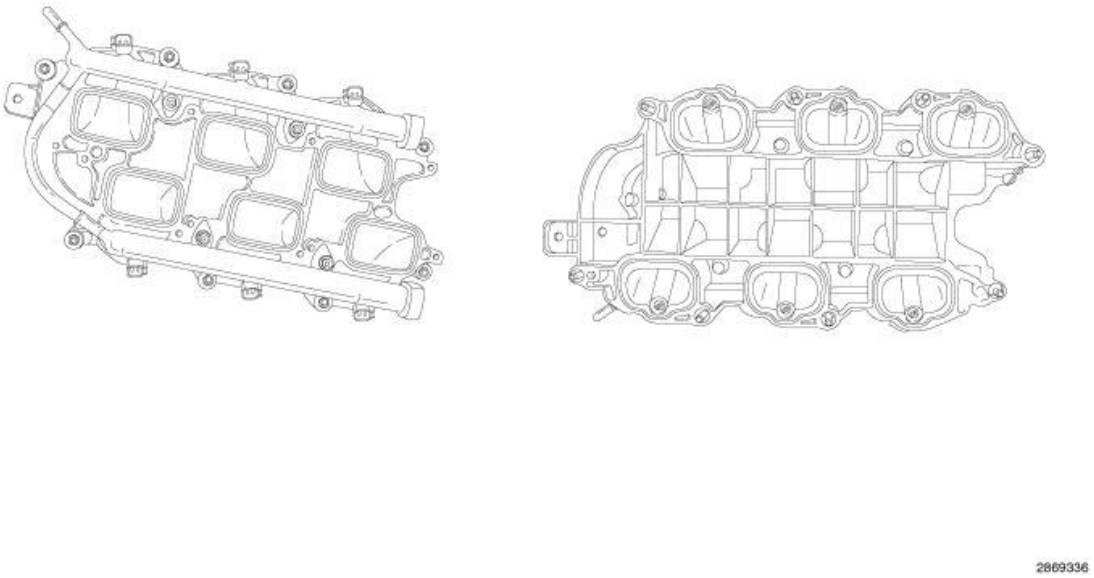

Fig. 638: Lower Intake Manifold Design
Courtesy of CHRYSLER GROUP, LLC

The lower intake manifold is an injection molded nylon composite design. The lower intake manifold is sealed to the cylinder heads using six individual press-in-place port silicone gaskets. Replace the gaskets whenever the lower intake manifold is removed from the engine. The seven upper intake manifold fasteners thread directly into the composite lower intake manifold and are a self-taping design.

The fuel injection fuel rail is also a composite design. The four fuel rail fasteners thread directly into the composite lower intake manifold and are a self-taping design. The lower intake manifold can be serviced without removing the fuel injector rail. The fuel rail and fuel injectors must be installed into the lower intake manifold as an assembly. Do not attempt to install the fuel rail when the injectors are in the manifold. Always install new O-rings on the fuel injectors.

If the lower intake manifold is damaged or cracked, it must be replaced.

DIAGNOSIS AND TESTING

DIAGNOSIS AND TESTING - INTAKE MANIFOLD LEAKS

An intake manifold air leak is characterized by lower than normal manifold vacuum. Also, one or more cylinders may not be functioning.

WARNING: **Use extreme caution when the engine is operating. Do not stand in a direct line with the fan. Do not put your hands near the pulleys, belts or the fan. Do not wear loose clothing.**

 © 2011 Mitchell Repair Information Company, LLC.

1. Start the engine.
2. Spray a small stream of water (spray bottle) at the suspected leak area.
3. If engine RPM'S change, the area of the suspected leak has been found.
4. Repair as required.

REMOVAL

UPPER

1. Disconnect and isolate the negative battery cable.

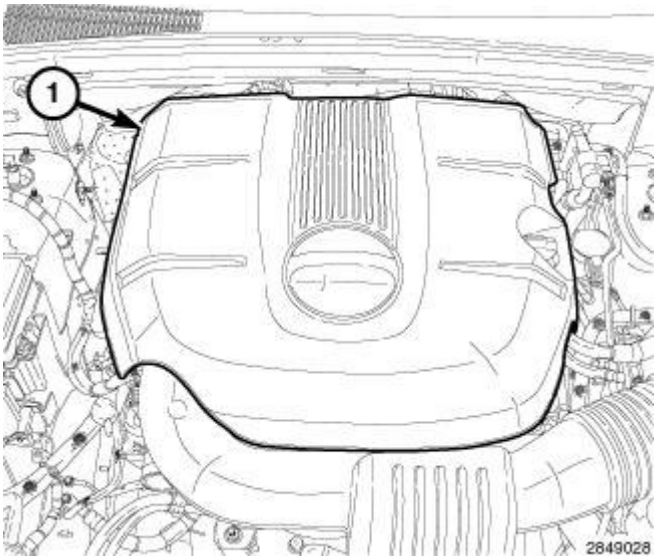

Fig. 639: Engine Cover
Courtesy of CHRYSLER GROUP, LLC

2. Remove the engine cover (1).

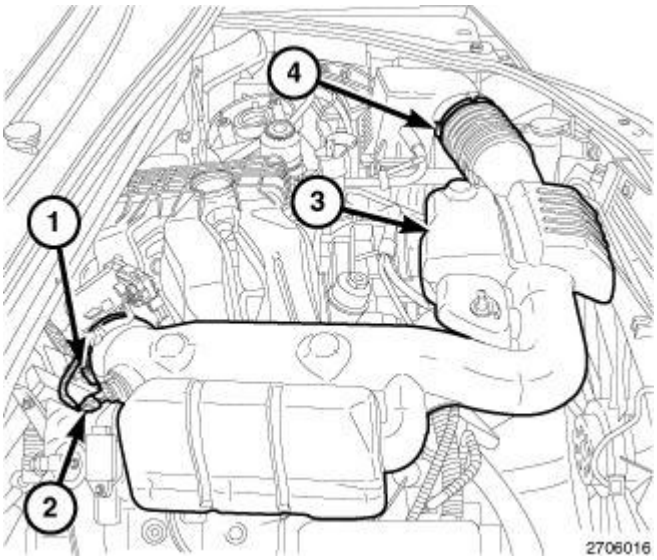

 © 2011 Mitchell Repair Information Company, LLC.

Fig. 640: Air Inlet Hose, Air Temperature (IAT) Sensor Connector & Clamps
Courtesy of CHRYSLER GROUP, LLC

3. Disconnect the electrical connector (2) from the Inlet Air Temperature (IAT) sensor.
4. Loosen the clamp (1) at the throttle body.
5. Loosen the clamp (4) at the air cleaner body.
6. Remove the resonator (3).

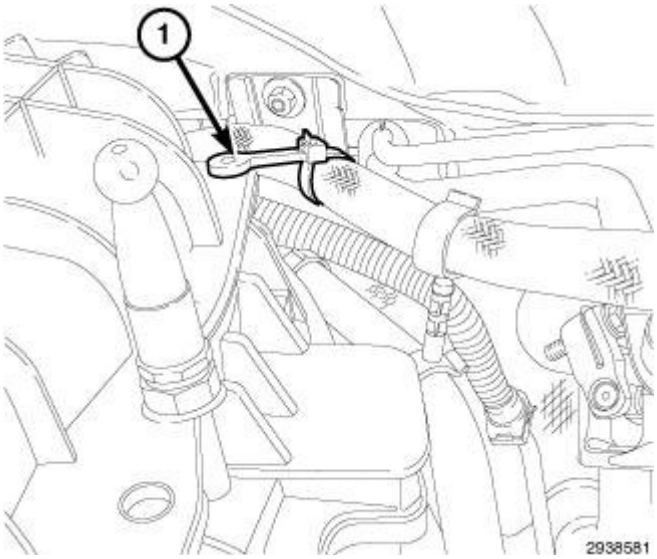

Fig. 641: Brake Booster Hose Retainer
Courtesy of CHRYSLER GROUP, LLC

7. Disengage the brake booster hose retainer (1) from the upper intake manifold.

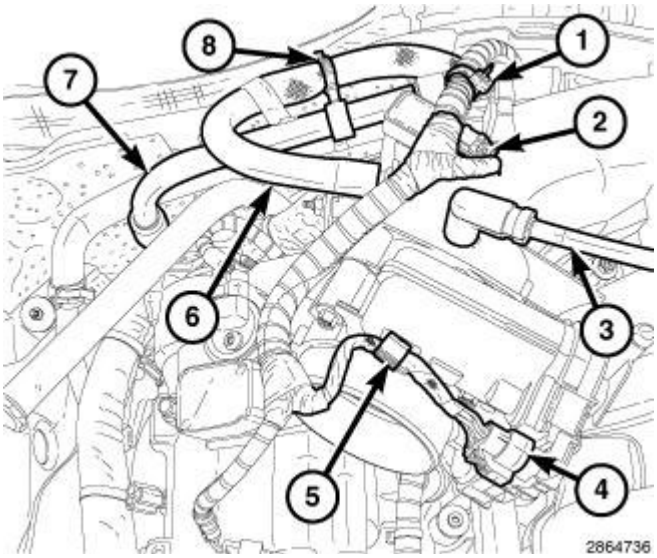

Fig. 642: MAP Sensor, ETC, PCV Hose, Brake Booster Vacuum Hose, EVAP Vapor Purge Line, Clip & Wire Harness Retainer
Courtesy of CHRYSLER GROUP, LLC

 © 2011 Mitchell Repair Information Company, LLC.

8. Disconnect the electrical connectors from the Manifold Absolute Pressure (MAP) sensor (2) and the Electronic Throttle Control (ETC) (4).
9. Disengage the ETC harness from the clip (5) on the throttle body. Disengage the wire harness retainer (1) from the upper intake manifold near the MAP sensor and reposition the wire harness.
10. Disconnect the following hoses from the upper intake manifold:
    - Positive Crankcase Ventilation (PCV) (7)
    - vapor purge (3)
    - brake booster (6)

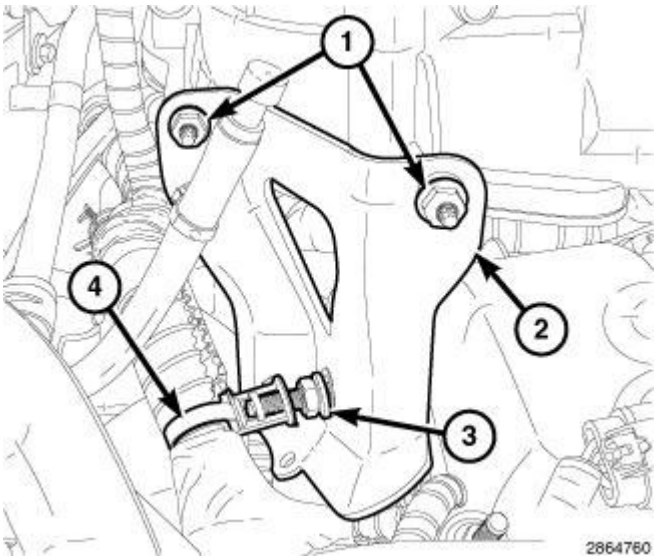

Fig. 643: Upper Intake Manifold Support Bracket, Stud & Fasteners
Courtesy of CHRYSLER GROUP, LLC

11. Disengage the wire harness retainer (4) from the studbolt (3).
12. Remove two nuts (1), loosen the studbolt (3) and reposition the upper intake manifold support bracket (2).

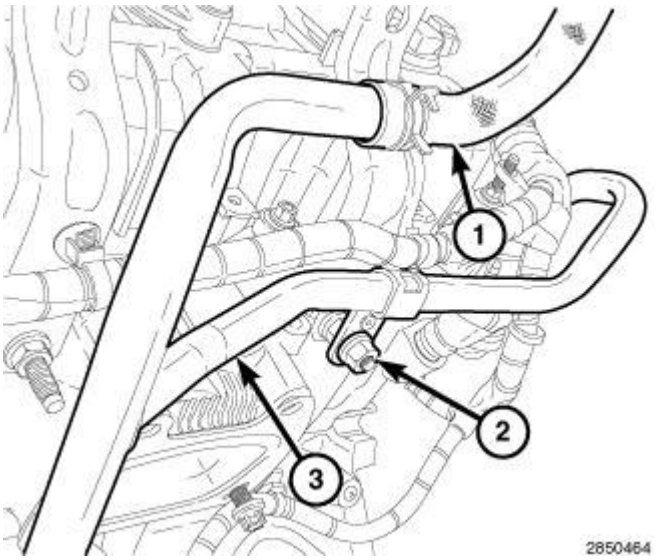

 © 2011 Mitchell Repair Information Company, LLC.

Fig. 644: Heater Core Return Hose, Heater Core Return Tube & Nut
Courtesy of CHRYSLER GROUP, LLC

13. Remove the nut (2) from the support bracket of the heater core return tube (3).

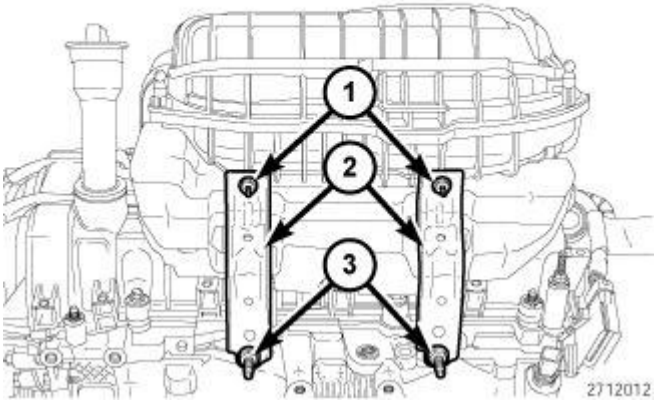

Fig. 645: Nuts, Stud Retainers & Upper Intake Manifold Support Brackets
Courtesy of CHRYSLER GROUP, LLC

14. Remove two nuts (1), loosen two studbolts (3) and reposition the two upper intake manifold support brackets (2).

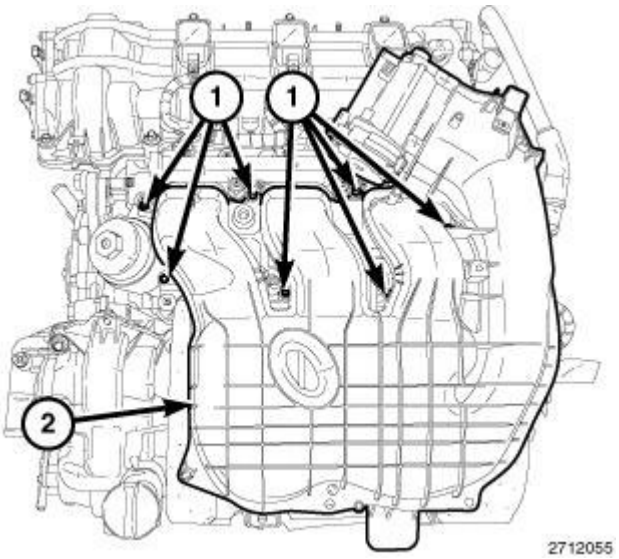

Fig. 646: Upper Intake Manifold & Bolts
Courtesy of CHRYSLER GROUP, LLC

NOTE: **The upper intake manifold attaching bolts are captured in the upper intake manifold. Once loosened, the bolts will have to be lifted out of the lower**

 © 2011 Mitchell Repair Information Company, LLC.

intake manifold and held while removing the upper intake manifold.

NOTE: Exercise care not to inadvertently loosen the two fuel rail attachment bolts that are in close proximity of the upper intake manifold attaching bolts.

15. Remove seven upper intake manifold attaching bolts (1) and remove the upper intake manifold (2).

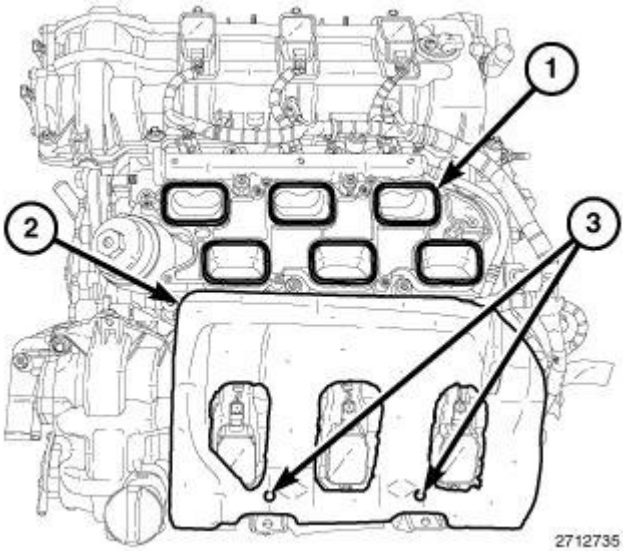

Fig. 647: Intake Ports, Insulator & Alignment Posts
Courtesy of CHRYSLER GROUP, LLC

16. Remove and discard the six upper to lower intake manifold seals (1).
17. Cover the open intake ports to prevent debris from entering the engine.
18. If required, remove the insulator (2) from the LH cylinder head cover.

LOWER

WARNING: The fuel system is under constant pressure even with engine off. Before servicing the fuel rail, fuel system pressure must be released.

1. Release fuel system pressure. Refer to **FUEL DELIVERY, GAS, STANDARD PROCEDURE** .
2. Disconnect and isolate the negative battery cable.

 © 2011 Mitchell Repair Information Company, LLC.

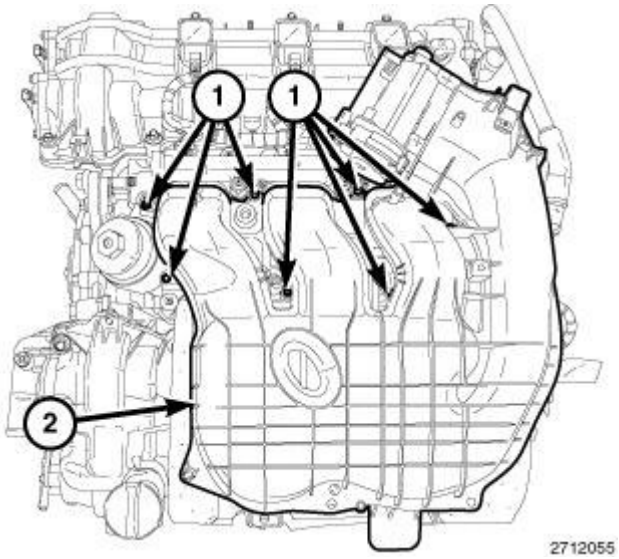

Fig. 648: Upper Intake Manifold & Bolts
Courtesy of CHRYSLER GROUP, LLC

3. Remove the resonator and upper intake manifold (2). Refer to **MANIFOLD, INTAKE, REMOVAL**.

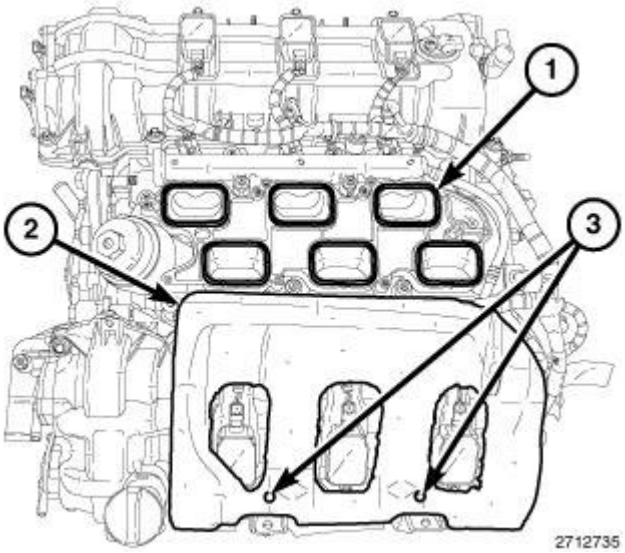

Fig. 649: Intake Ports, Insulator & Alignment Posts
Courtesy of CHRYSLER GROUP, LLC

4. Remove the insulator (2) from the LH cylinder head cover.

 © 2011 Mitchell Repair Information Company, LLC.

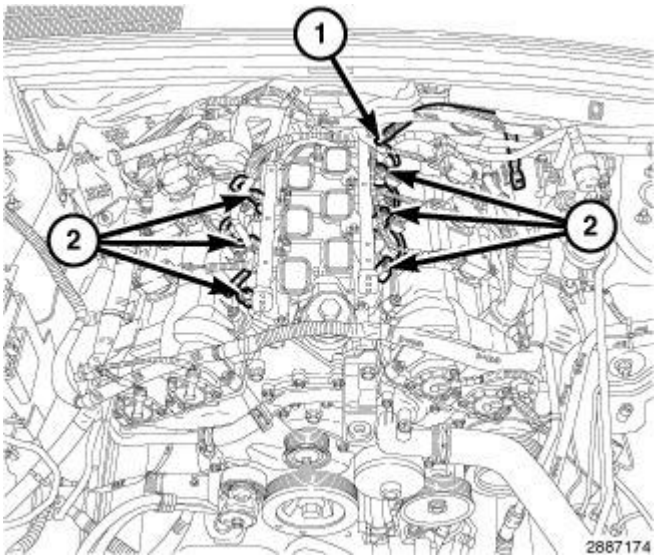

Fig. 650: Fuel Supply Hose & Fuel Injector Electrical Connectors
Courtesy of CHRYSLER GROUP, LLC

5. Disconnect the fuel supply hose (1) from the fuel rail. Refer to **FITTING, QUICK CONNECT, STANDARD PROCEDURE** .
6. Disconnect the fuel injector electrical connectors (2).

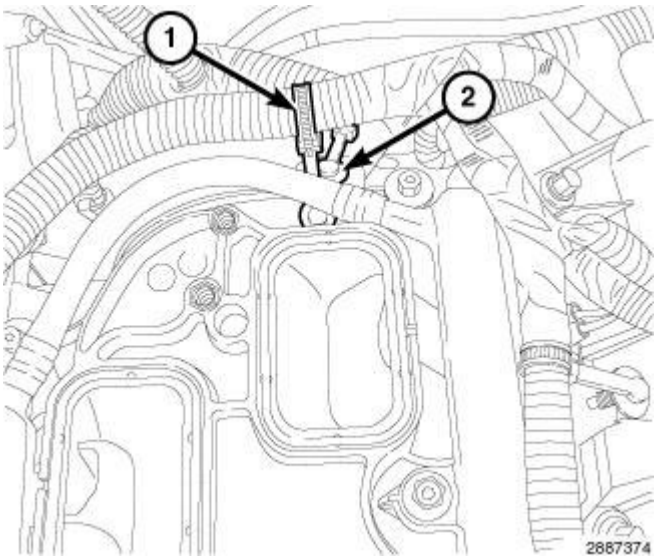

Fig. 651: Injection/Ignition Harness Retainer & Main Wire Harness Retainer
Courtesy of CHRYSLER GROUP, LLC

7. Disengage the injection/ignition harness retainer (1) form the rear of the lower intake manifold.
8. Disengage the main wire harness retainer (2) form the rear of the lower intake manifold.

 © 2011 Mitchell Repair Information Company, LLC.

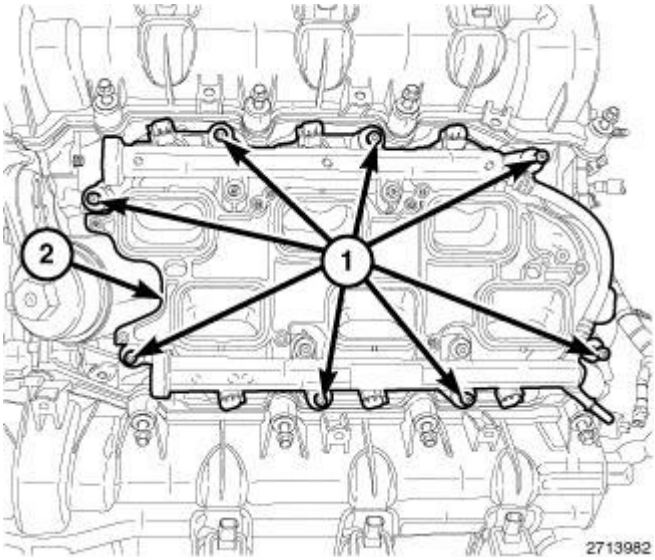

Fig. 652: Lower Intake Manifold & Attaching Bolts
Courtesy of CHRYSLER GROUP, LLC

9. Remove the eight lower intake manifold attaching bolts (1).
10. Remove the lower intake manifold (2) with the fuel injectors and fuel rail.

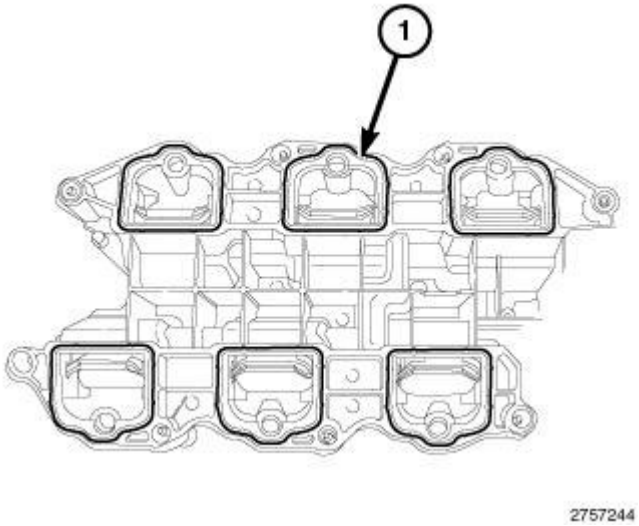

Fig. 653: Lower Intake Manifold To Cylinder Head Seals
Courtesy of CHRYSLER GROUP, LLC

11. Remove and discard the six lower intake manifold to cylinder head seals (1).

 © 2011 Mitchell Repair Information Company, LLC.

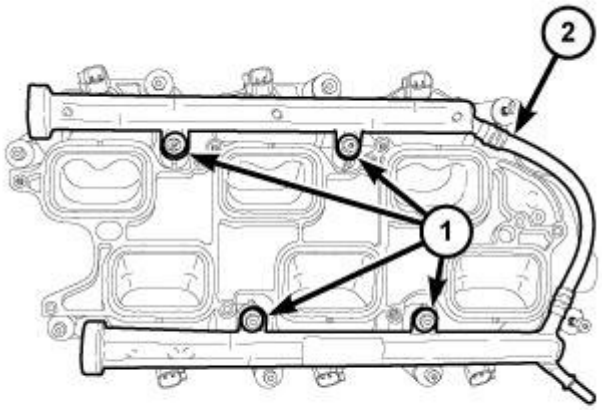

2714021

Fig. 654: Fuel Rail & Retaining Bolts
Courtesy of CHRYSLER GROUP, LLC

12. If required, remove the fuel rail (2) and fuel injectors from the lower intake manifold. Refer to **RAIL, FUEL, REMOVAL** .

INSPECTION

INSPECTION

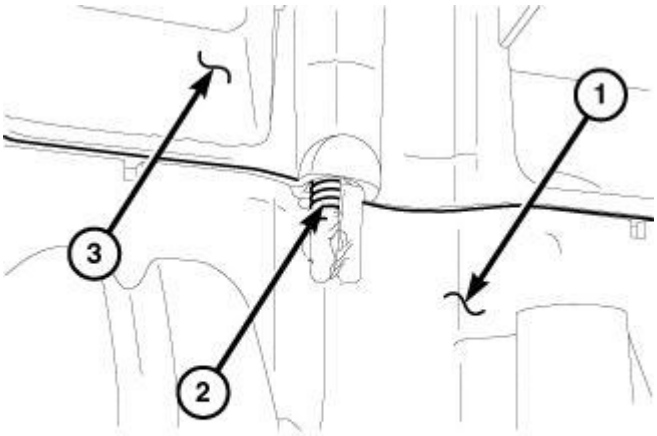

2869717

Fig. 655: Non-Repairable Damage To Lower Intake Manifold Due To Cross Threading Of An Upper Intake Manifold Attaching Bolt
Courtesy of CHRYSLER GROUP, LLC

NOTE: When the upper intake manifold (3) and lower intake manifold (1) are not aligned properly, cross threading of the upper intake manifold attaching bolts can

 © 2011 Mitchell Repair Information Company, LLC.

occur. The illustration shows non-repairable damage to the lower intake manifold (1) due to cross threading of an upper intake manifold attaching bolt (2).

Check both the upper and lower intake manifolds for:

- Damage and cracks
- Gasket surface damage or warping

Check the lower intake manifold for:

- Damaged fuel injector ports

If either the upper or lower manifold exhibits any damaged or warped conditions, replace the manifold.

INSTALLATION

UPPER

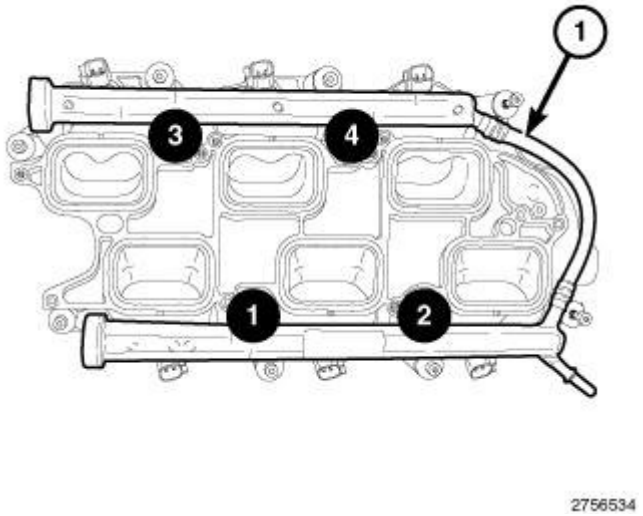

Fig. 656: Fuel Rail Bolt Tightening Sequence
Courtesy of CHRYSLER GROUP, LLC

NOTE: **Prior to installing the upper intake manifold, verify that the four fuel rail bolts were not inadvertently loosened. The bolts must tightened in the sequence shown in the illustration to 7 N.m (62 in. lbs.). Refer to RAIL, FUEL, INSTALLATION .**

 © 2011 Mitchell Repair Information Company, LLC.

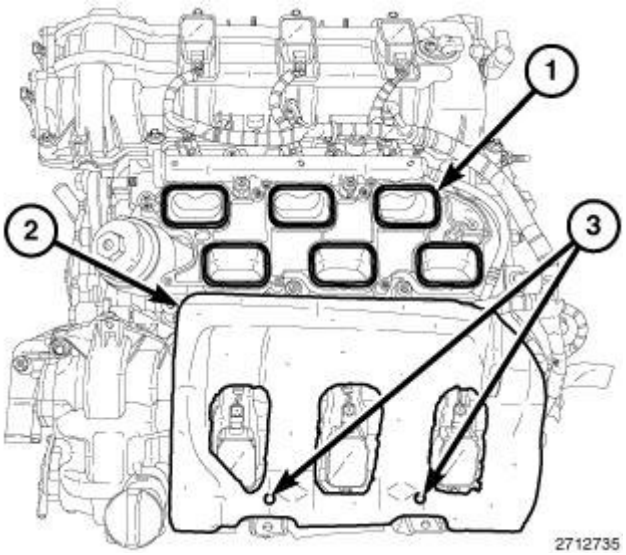

Fig. 657: Intake Ports, Insulator & Alignment Posts
Courtesy of CHRYSLER GROUP, LLC

1. Clean and inspect the sealing surfaces. Install new upper to lower intake manifold seals (1).

NOTE: **Make sure the fuel injectors and wiring harnesses are in the correct position so that they don't interfere with the upper intake manifold installation.**

2. If removed, install the insulator (2) to the two alignment posts (3) on top of the LH cylinder head cover.

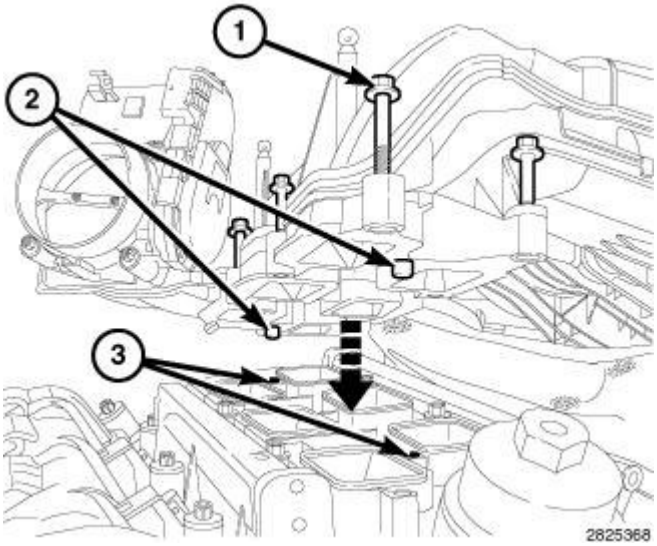

Fig. 658: Upper Intake Attaching Bolts, Locating Posts & Holes
Courtesy of CHRYSLER GROUP, LLC

3. Lift and hold the seven upper intake attaching bolts (1) clear of the mating surface. Back the bolts out slightly or if required, use an elastic band to hold the bolts clear of the mating surface.

 © 2011 Mitchell Repair Information Company, LLC.

4. Position the upper intake manifold (1) onto the lower intake manifold so that the two locating posts (2) on the upper intake manifold align with corresponding holes (3) in the lower intake manifold.

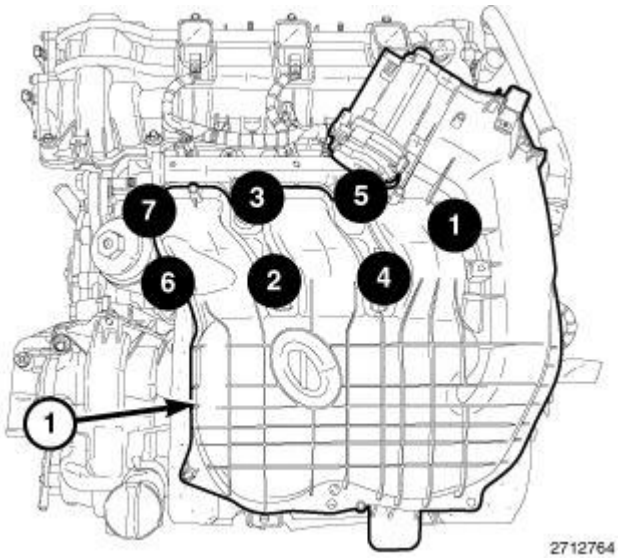

Fig. 659: Upper Intake Manifold Bolt Tightening Sequence
Courtesy of CHRYSLER GROUP, LLC

5. Install the seven upper intake manifold attaching bolts. Tighten the bolts in the sequence shown in the illustration to 8 N.m (71 in. lbs.).

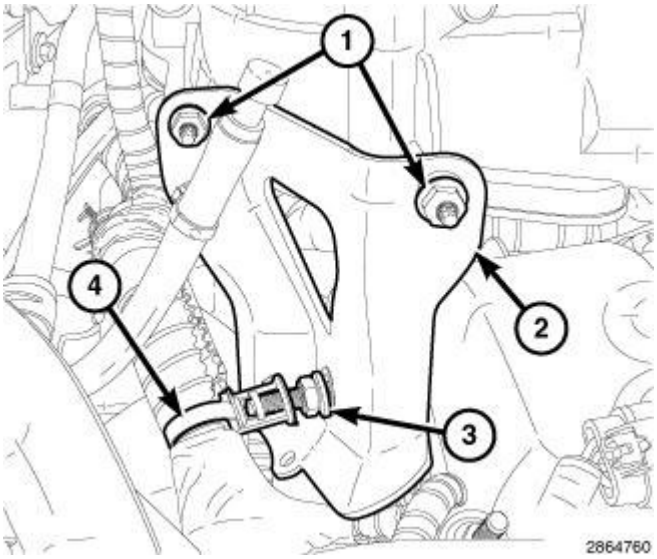

Fig. 660: Upper Intake Manifold Support Bracket, Stud & Fasteners
Courtesy of CHRYSLER GROUP, LLC

6. Install two nuts (1) to the upper intake manifold support bracket (2). Tighten the nuts (1) to 10 N.m (89 in. lbs.) and tighten the studbolt (3) to 20 N.m (177 in. lbs.)
7. Engage the wire harness retainer (4) to the studbolt (3).

 © 2011 Mitchell Repair Information Company, LLC.

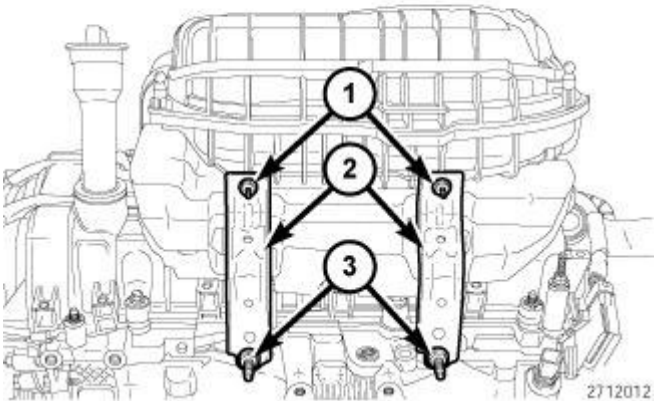

Fig. 661: Nuts, Stud Retainers & Upper Intake Manifold Support Brackets
Courtesy of CHRYSLER GROUP, LLC

8. Install two upper intake manifold support brackets (2) with two studbolts (3) and two nuts (1). Tighten the studbolts (3) to 20 N.m (177 in. lbs.) and tighten the nuts (1) to 10 N.m (89 in. lbs.).

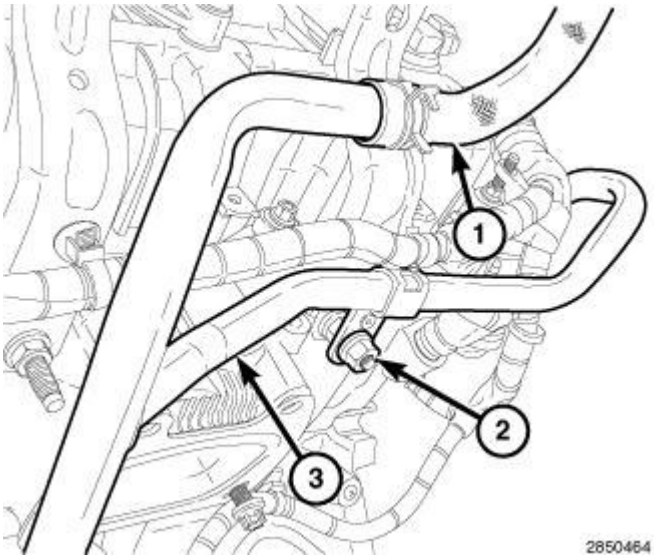

Fig. 662: Heater Core Return Hose, Heater Core Return Tube & Nut
Courtesy of CHRYSLER GROUP, LLC

9. Install the nut (2) to the support bracket of the heater core return tube (3) and tighten to 12 N.m (106 in. lbs.).

 © 2011 Mitchell Repair Information Company, LLC.

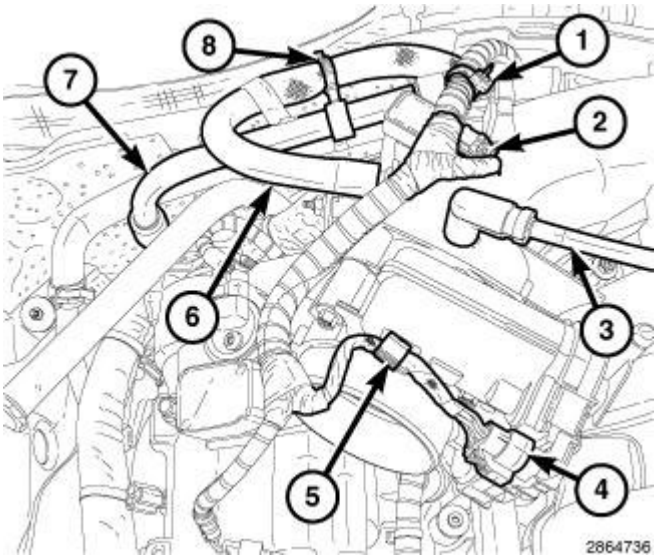

Fig. 663: MAP Sensor, ETC, PCV Hose, Brake Booster Vacuum Hose, EVAP Vapor Purge Line, Clip & Wire Harness Retainer
Courtesy of CHRYSLER GROUP, LLC

10. Connect the following hoses to the upper intake manifold:
    - Positive Crankcase Ventilation (PCV) (7)
    - vapor purge (3)
    - brake booster (6)
11. Connect the electrical connectors to the Manifold Absolute Pressure (MAP) sensor (2) and the Electronic Throttle Control (ETC) (4).
12. Secure the ETC harness to the clip (5) on the throttle body and engage the wire harness retainer (1) to the upper intake manifold near the MAP sensor.

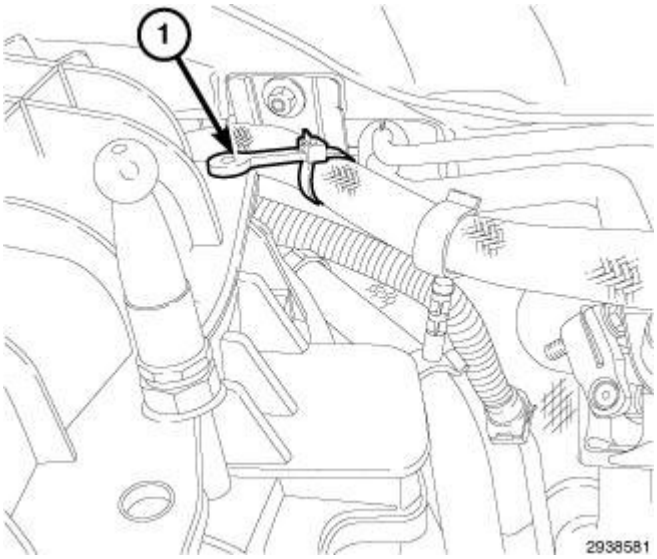

Fig. 664: Brake Booster Hose Retainer
Courtesy of CHRYSLER GROUP, LLC

 © 2011 Mitchell Repair Information Company, LLC.

13. Engage the brake booster hose retainer (1) to the upper intake manifold.

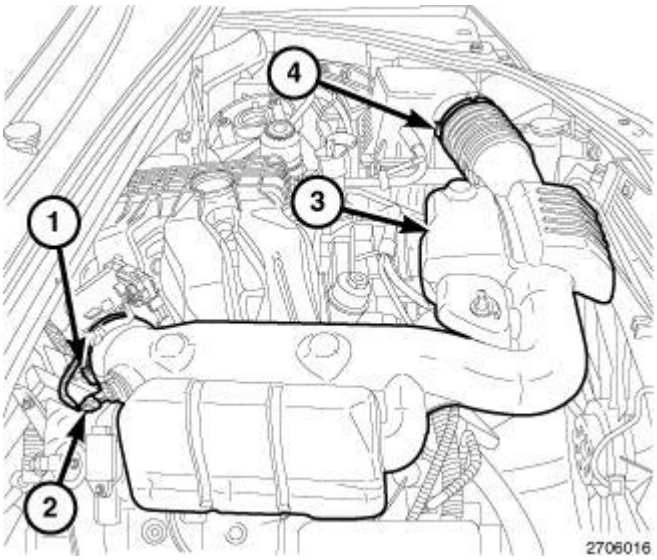

Fig. 665: Air Inlet Hose, Air Temperature (IAT) Sensor Connector & Clamps
Courtesy of CHRYSLER GROUP, LLC

14. Install the resonator (3) to the air cleaner body and the throttle body. Tighten the clamps (1) and (4) to 4 N.m (35 in. lbs.).
15. Connect the electrical connector (2) to the Inlet Air Temperature (IAT) sensor.

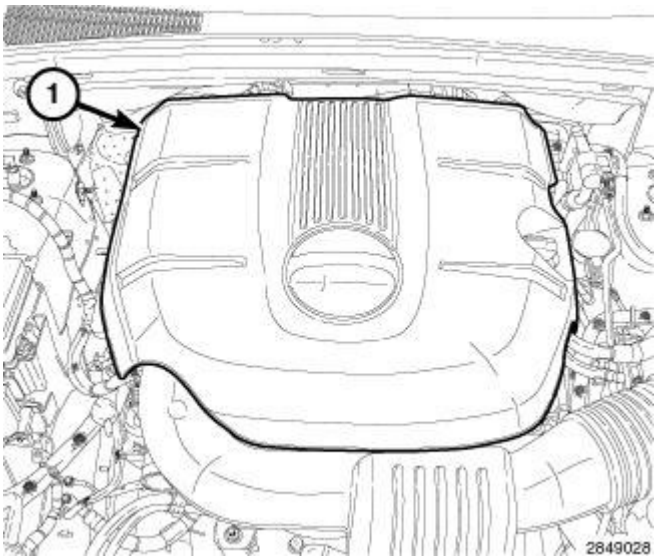

Fig. 666: Engine Cover
Courtesy of CHRYSLER GROUP, LLC

16. Install the engine cover (1).
17. Connect the negative battery cable and tighten nut to 5 N.m (45 in. lbs.).

LOWER

 © 2011 Mitchell Repair Information Company, LLC.

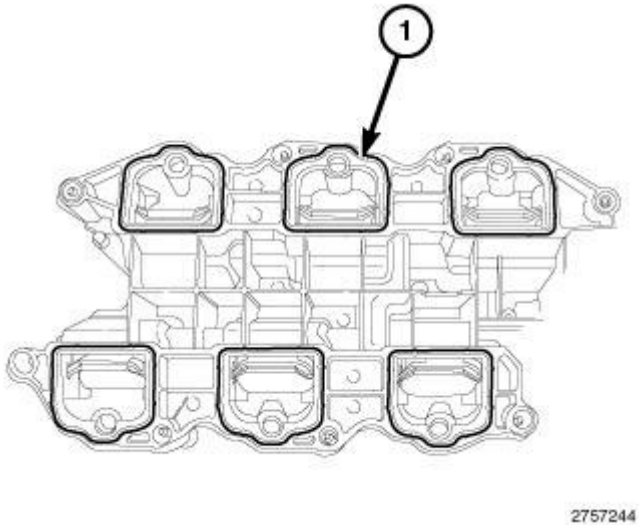

Fig. 667: Lower Intake Manifold To Cylinder Head Seals
Courtesy of CHRYSLER GROUP, LLC

1. Clean and inspect the sealing surfaces. Install new lower intake manifold to cylinder head seals (1).

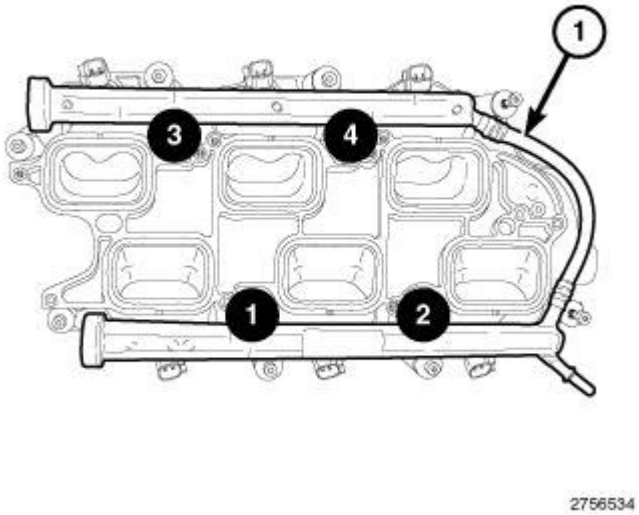

Fig. 668: Fuel Rail Bolt Tightening Sequence
Courtesy of CHRYSLER GROUP, LLC

2. If removed, install the fuel injectors and the fuel rail (1) to the lower intake manifold. Tighten the four bolts in the sequence shown in the illustration to 7 N.m (62 in. lbs.). Refer to **RAIL, FUEL, INSTALLATION** .

 © 2011 Mitchell Repair Information Company, LLC.

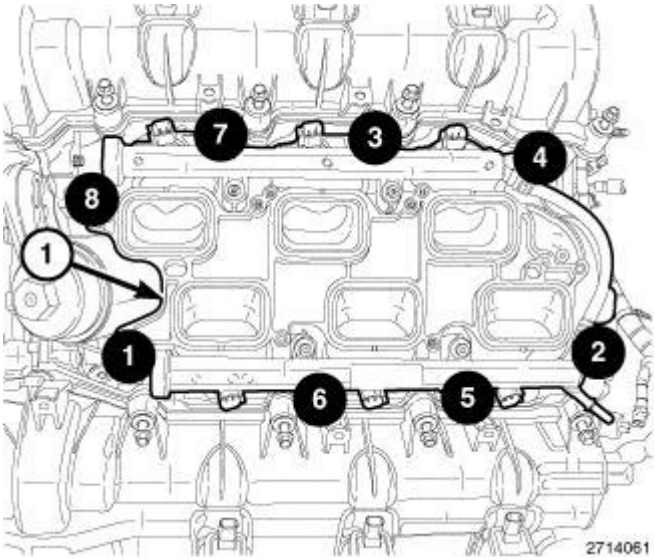

Fig. 669: Intake Manifold Retaining Bolts Tightening Sequence
Courtesy of CHRYSLER GROUP, LLC

3. Position the lower intake manifold (1) on the cylinder head surfaces.
4. Install the manifold attaching bolts and tighten in the sequence shown in the illustration to 8 N.m (71 in. lbs.).

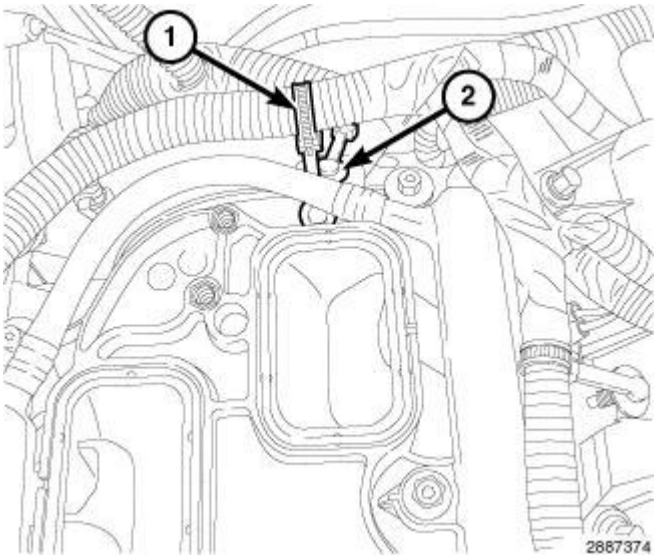

Fig. 670: Injection/Ignition Harness Retainer & Main Wire Harness Retainer
Courtesy of CHRYSLER GROUP, LLC

5. Engage the main wire harness retainer (2) to the rear of the lower intake manifold.
6. Engage the injection/ignition harness retainer (1) to the rear of the lower intake manifold.

 © 2011 Mitchell Repair Information Company, LLC.

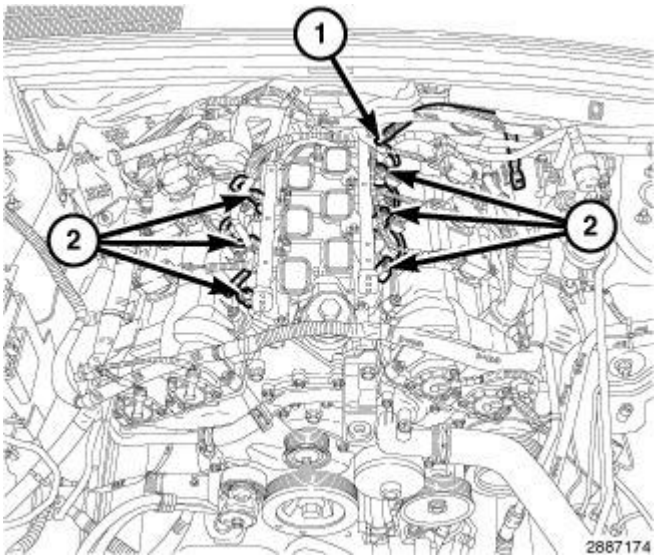

Fig. 671: Fuel Supply Hose & Fuel Injector Electrical Connectors
Courtesy of CHRYSLER GROUP, LLC

7. Connect the fuel injector electrical connectors (2).
8. Connect the fuel supply hose to the fuel rail (1). Refer to **FITTING, QUICK CONNECT, STANDARD PROCEDURE** .

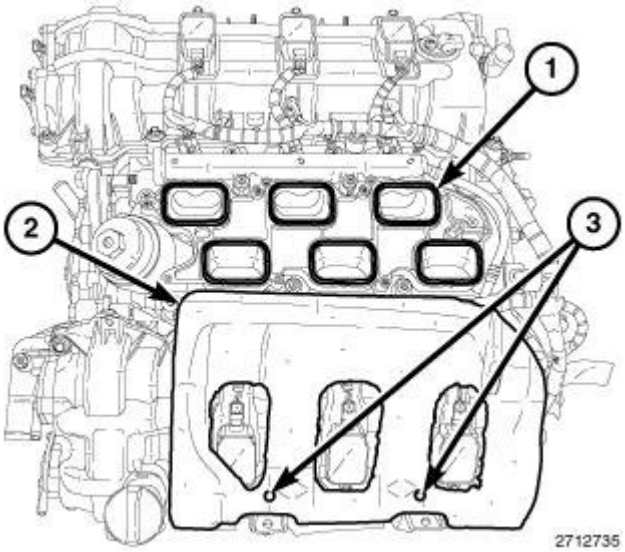

Fig. 672: Intake Ports, Insulator & Alignment Posts
Courtesy of CHRYSLER GROUP, LLC

9. Install the insulator (2) to the two alignment posts (3) on top of the LH cylinder head cover.

 © 2011 Mitchell Repair Information Company, LLC.

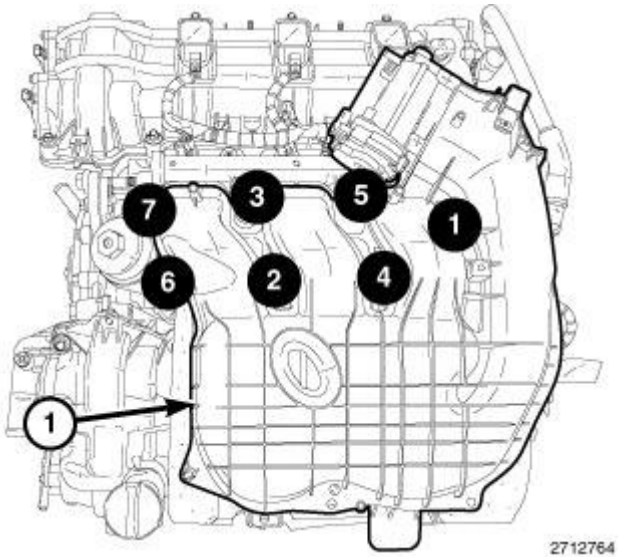

Fig. 673: Upper Intake Manifold Bolt Tightening Sequence
Courtesy of CHRYSLER GROUP, LLC

10. Install the upper intake manifold (1), support brackets and resonator. Refer to **MANIFOLD, INTAKE, INSTALLATION**.
11. Connect the negative battery cable and tighten nut to 5 N.m (45 in. lbs.).
12. Start the engine and check for leaks.

VALVE TIMING

DESCRIPTION

DESCRIPTION

 © 2011 Mitchell Repair Information Company, LLC.

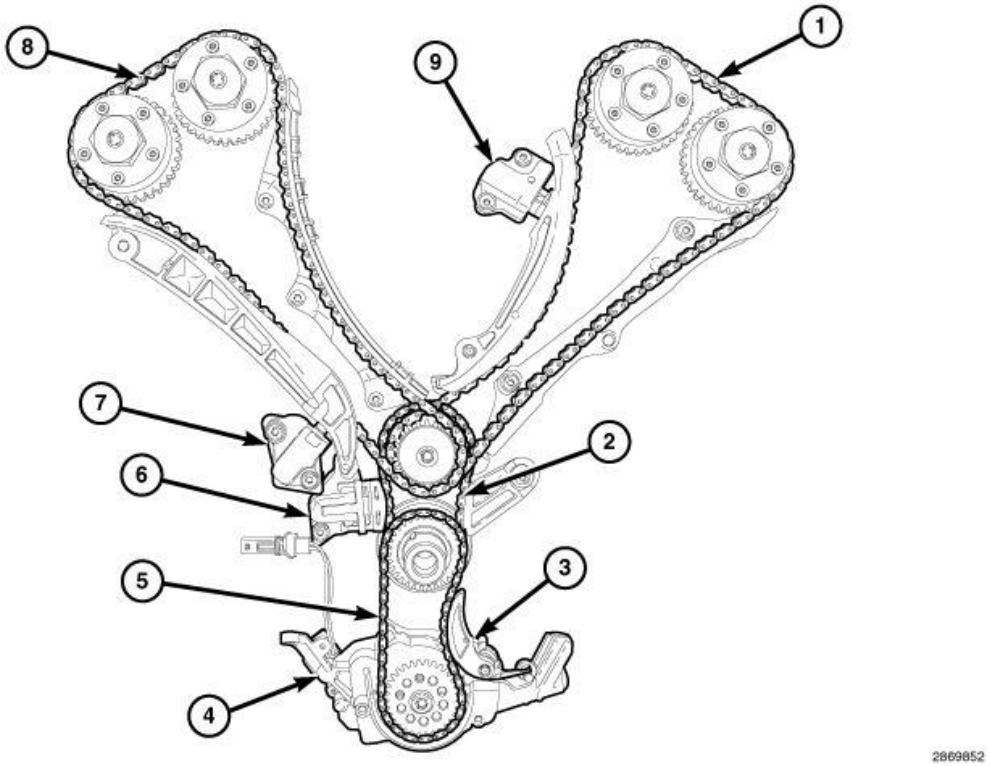

Fig. 674: Valve Timing System Components
Courtesy of CHRYSLER GROUP, LLC

The timing drive uses four silent chains. The silent chain link design improves sprocket engagement and reduces noise, vibration and harshness (NVH). One chain (5) drives the oil pump (4) and three chains drive the camshafts in a two stage design. The left secondary camshaft chain (1) uses an oil pressure controlled chain tensioner (9) with a ratcheting device. The right secondary camshaft chain (8) uses an oil pressure controlled tensioner (7) without a ratchet. The primary chain (2) also uses an oil pressure controlled tensioner (6) without a ratchet. A spring loaded tensioner (3) takes up the slack in the oil pump chain (5). The chain guides and tensioner arms are made of glass filled nylon with nylon wear faces.

OPERATION

OPERATION

 © 2011 Mitchell Repair Information Company, LLC.

Fig. 675: Primary Chain, Idler Sprocket & Crankshaft Sprocket
Courtesy of CHRYSLER GROUP, LLC

The primary timing chain is a silent type. The primary chain drives the 28 tooth idler sprocket directly from a 21 tooth crankshaft sprocket. This results in a 75% speed reduction to the idler sprocket. The idler sprocket assembly connects the primary chain drive and the secondary chain drive. The idler sprocket assembly consists of two integral 22 tooth sprockets a 28 tooth sprocket. The idler sprocket assembly spins on a stationary idler shaft. The idler shaft is a light press-fit into the cylinder block. A large washer on the idler shaft bolt and the rear flange of the idler shaft are used to control sprocket thrust movement. Pressurized oil is routed through the center of the idler shaft to provide lubrication for the bushings used in the idler sprocket assembly. Primary chain motion is controlled by a hydraulic oil damped tensioner and a fixed guide. The tensioner and the guide both use nylon plastic wear faces for low friction and long wear. The primary chain receives oil splash lubrication.

 © 2011 Mitchell Repair Information Company, LLC.

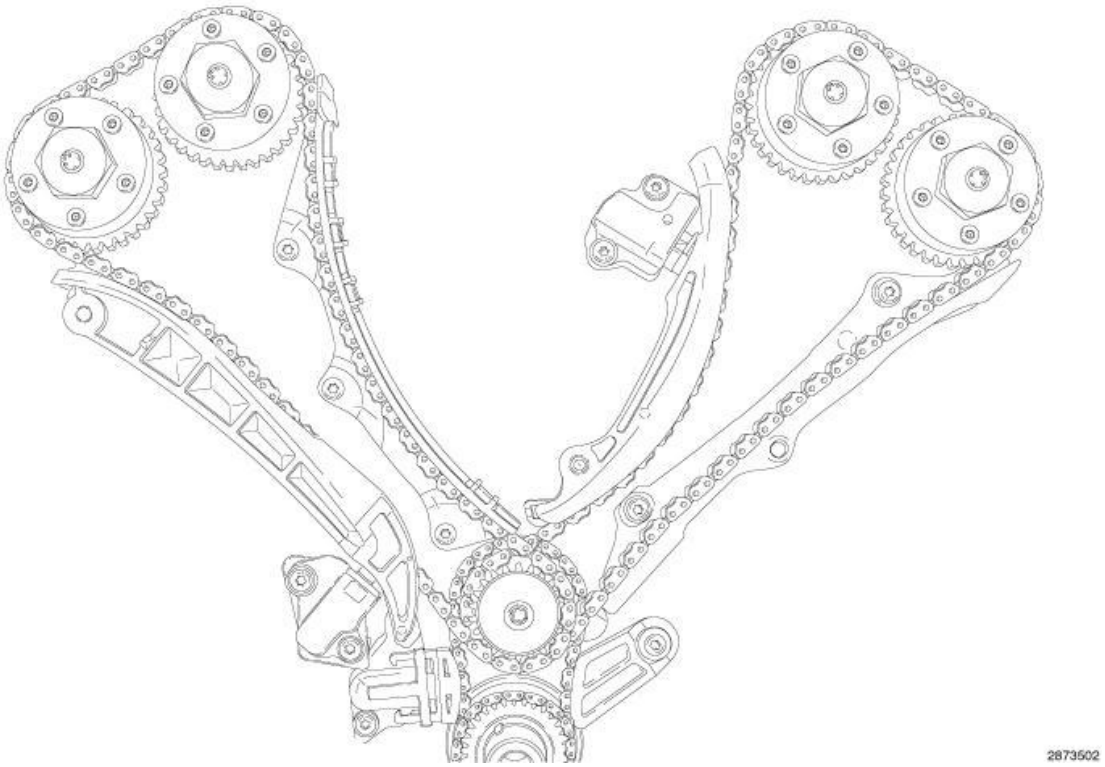

Fig. 676: Secondary Drive Chains
Courtesy of CHRYSLER GROUP, LLC

There are two identical secondary drive chains, both are silent type, one to drive the camshafts in each double overhead cam (DOHC) cylinder head. The secondary chains drive the 33 tooth camshaft sprockets directly from the 22 tooth idler sprockets. This speed reduction combined with the crankshaft to idler sprocket speed reduction produces the required 2:1 camshaft drive ratio. A fixed chain guide and a hydraulic oil damped tensioner are used to maintain tension in each secondary chain system. The left hydraulic secondary chain tensioner is fed from the main oil gallery through the cylinder head. The right hydraulic secondary chain tensioner is fed from the number one main bearing journal. Each tensioner incorporates a controlled leak path through a device known as a vent disc located in the nose of the piston to manage chain loads. Only the left tensioner has a mechanical ratchet system that limits chain slack if the tensioner piston bleeds down after engine shut down. The tensioner arms and guides also utilize nylon wear faces for low friction and long wear. The two secondary timing chains are lubricated by holes in the oil controlled tensioners that spray oil through an opening in the tensioner arms. The holes are protected from clogging by a fine mesh screen which is located on the back of the hydraulic tensioners.

STANDARD PROCEDURE

RESETTING LEFT CAM CHAIN TENSIONER

 © 2011 Mitchell Repair Information Company, LLC.

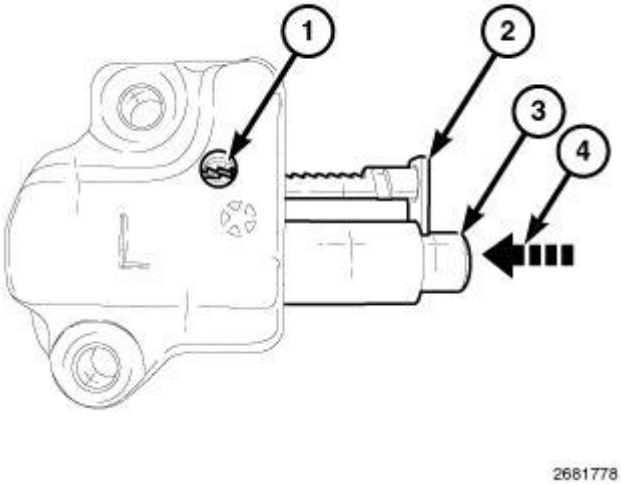

Fig. 677: Left Side Cam Chain Tensioner Ratchet Components
Courtesy of CHRYSLER GROUP, LLC

The left side can chain tensioner used on the 3.6L engine is equipped with a ratchet. The ratchet consists of a rack (2) and a pawl (1). In use, the rack (2) extends with the piston (3) from the tensioner body. The pawl (1) will not allow the rack (2) to retract back into the tensioner body. In order to reset the tensioner, the pawl (1) must be disengaged from the rack (2) so that the piston (3) and rack (2) can be pushed back (4) into the tensioner body.

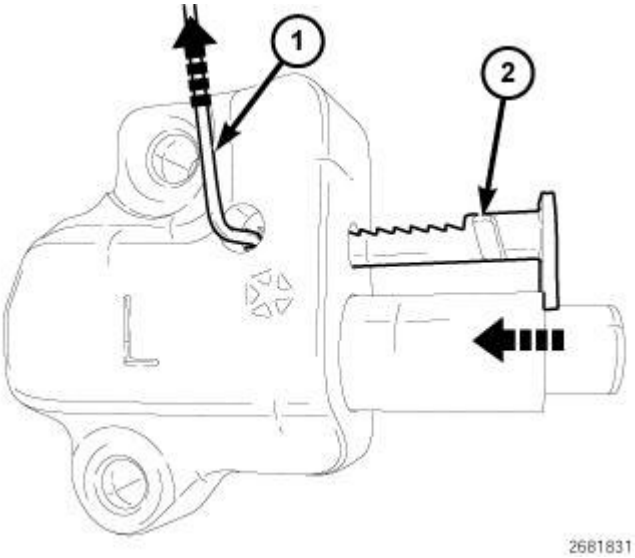

Fig. 678: Locating Slot In Rack & Allen Wrench
Courtesy of CHRYSLER GROUP, LLC

WITH ENGINE TIMING COVER REMOVED

NOTE: The slot (2) in the rack provides an anchor point for a pin that holds the rack in the retracted position.

 © 2011 Mitchell Repair Information Company, LLC.

1. Using a suitable tool, such as an allen wrench (1), lift the pawl off of the rack.
2. While holding the pawl off of the rack, push the rack and the piston into the tensioner body.

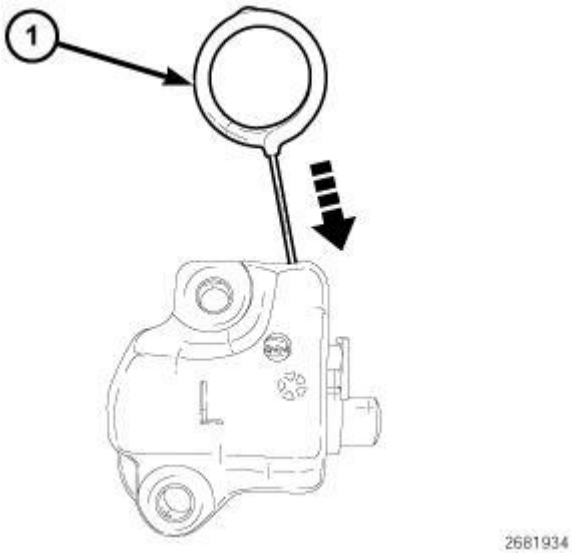

Fig. 679: Inserting Tensioner Pin To Hold Rack & Piston In Retracted Position
Courtesy of CHRYSLER GROUP, LLC

3. When the slot is aligned with the hole in the tensioner body, insert Tensioner Pin (special tool #8514, Pins, Tensioner) (1) to hold the rack and piston in the retracted position.

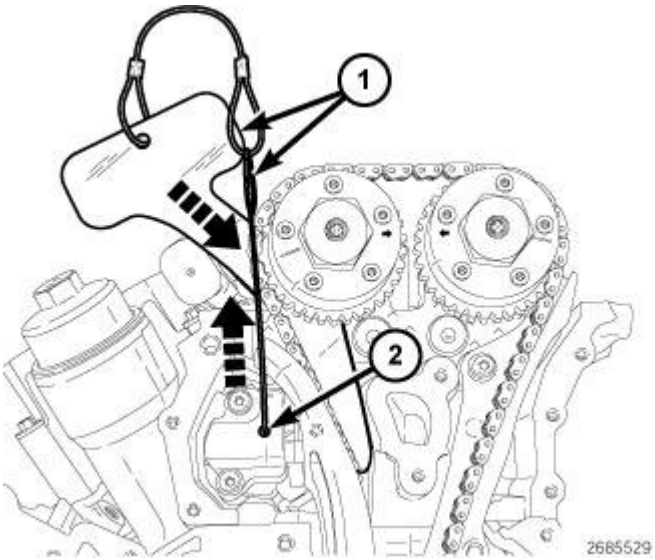

Fig. 680: Pin, Rack & Timing Chain Holder
Courtesy of CHRYSLER GROUP, LLC

WITH ENGINE TIMING COVER INSTALLED

NOTE: Illustration shows timing cover removed for clarity.

 © 2011 Mitchell Repair Information Company, LLC.

1. Using (special tool #10200-3, Pin) (2), lift the pawl off of the rack (3).

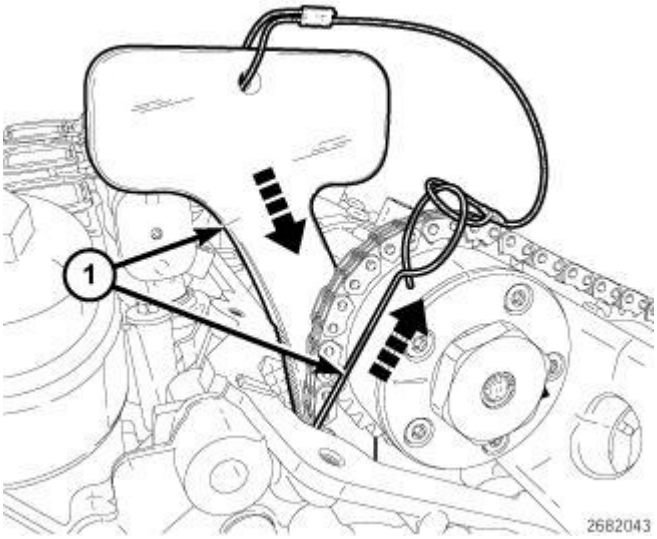

Fig. 681: Positioning Timing Chain Holder To Force Rack & Piston Back Into Tensioner Body
Courtesy of CHRYSLER GROUP, LLC

2. While holding the pawl off of the rack, push (special tool #10200-1, Holder, Timing Chain, Left Side) (1) into place between the cylinder head and the cam chain guide to force the rack and piston back into the tensioner body. The holder must remain in place during service to keep the rack and piston in the retracted position.

MEASURING TIMING CHAIN WEAR

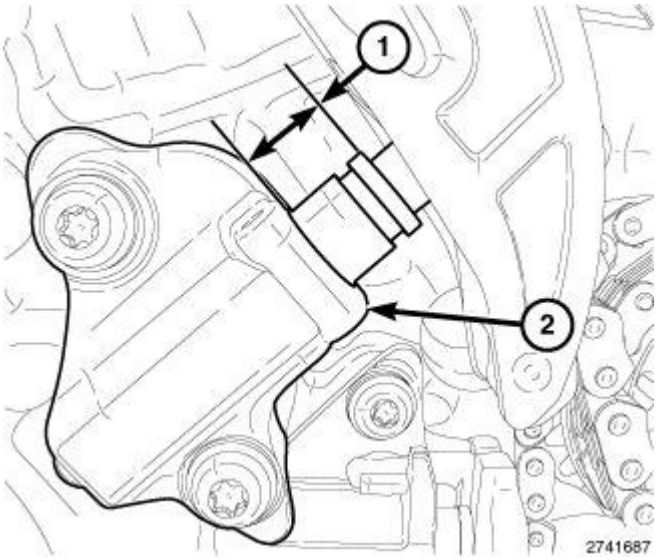

Fig. 682: Piston Extension & RH Cam Chain Tensioner
Courtesy of CHRYSLER GROUP, LLC

1. Remove the engine timing chain cover. Refer to **COVER(S), ENGINE TIMING, REMOVAL**.

 © 2011 Mitchell Repair Information Company, LLC.

2. To determine if the timing chains are worn, rotate the crankshaft clockwise until maximum tensioner piston extension (1) is obtained on the RH cam chain tensioner (2). Measure the distance between the secondary timing chain tensioner housing and the step ledge on the tensioner piston (1). Piston extension (1) must be less than 16 mm (0.630 in.).
3. Piston extension greater than 16 mm (0.630 in.) indicates that all timing chains are worn and require replacement. Refer to **CHAIN AND SPROCKETS, TIMING, REMOVAL**.

ENGINE TIMING VERIFICATION

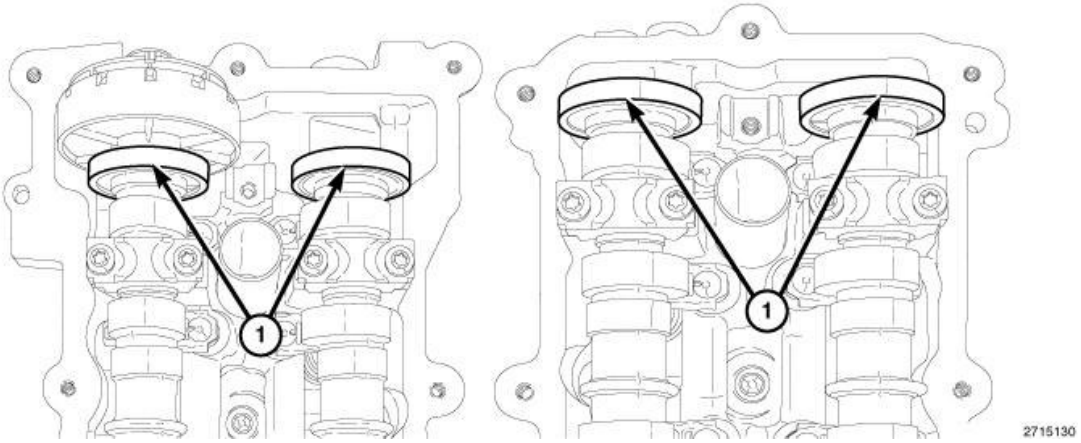

Fig. 683: Magnetic Timing Wheels
Courtesy of CHRYSLER GROUP, LLC

CAUTION: The magnetic timing wheels (1) must not come in contact with magnets (pickup tools, trays, etc.) or any other strong magnetic field. This will destroy the timing wheels ability to correctly relay camshaft position to the camshaft position sensor.

Correct timing is critical for the NON free-wheeling designed, 3.6L engine. Engine timing can be verified by using the following procedures:

1. Remove the upper intake manifold and both cylinder head covers. Refer to **COVER(S), CYLINDER HEAD, REMOVAL**.
2. Remove the spark plugs. Refer to **SPARK PLUG, REMOVAL** .

 © 2011 Mitchell Repair Information Company, LLC.

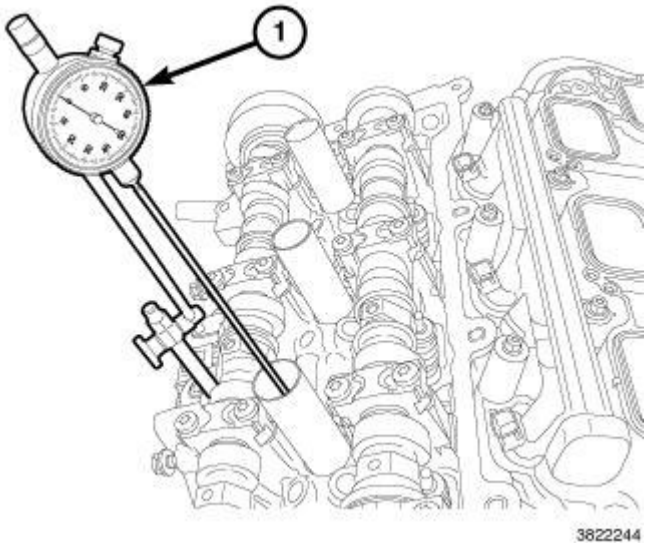

Fig. 684: Mount Dial Indicator Set To Stationary Point On Engine
Courtesy of CHRYSLER GROUP, LLC

CAUTION: When aligning timing marks, always rotate engine by turning the crankshaft. Failure to do so will result in valve and/or piston damage.

3. Mount Dial Indicator Set (special tool #C-3339A, Set, Dial Indicator) (1) to a stationary point on the engine, such as the cylinder head cover mounting surface. Position the indicator probe into the number one cylinder, rotate the crankshaft clockwise (as viewed from the front) to place the number one piston at top-dead-center on the exhaust stroke and set the indicator dial to **ZERO** .

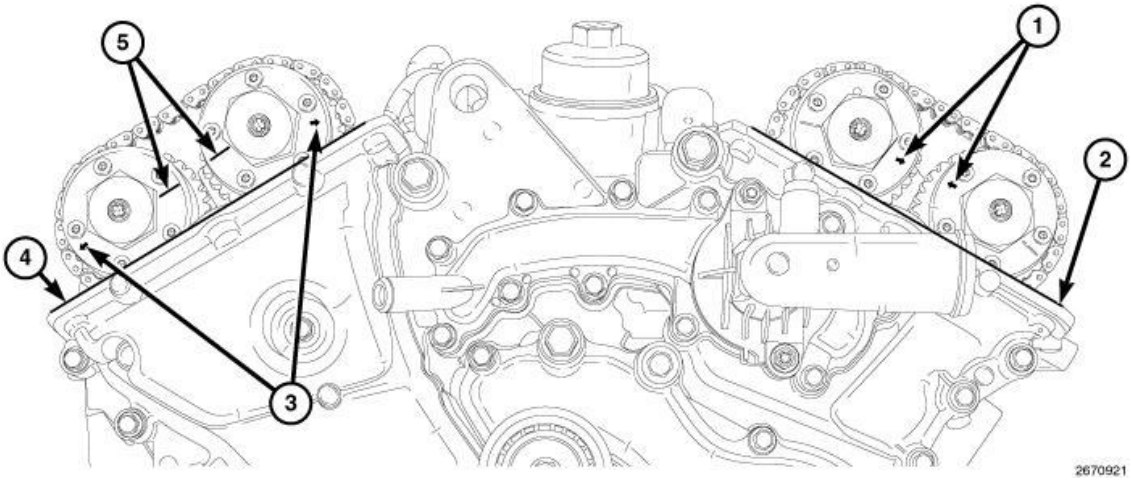

Fig. 685: Arrows, Scribe Lines, & Cam Phasers
Courtesy of CHRYSLER GROUP, LLC

4. While maintaining this alignment, verify that the **ARROWS** (1) on the left side cam phasers point toward each other and are parallel to the cylinder head cover mounting surface (2) and that the right side cam phaser **ARROWS** (3) point away from each other and the **SCRIBE LINES** (5) are parallel to the

 © 2011 Mitchell Repair Information Company, LLC.

cylinder head cover mounting surface (4).

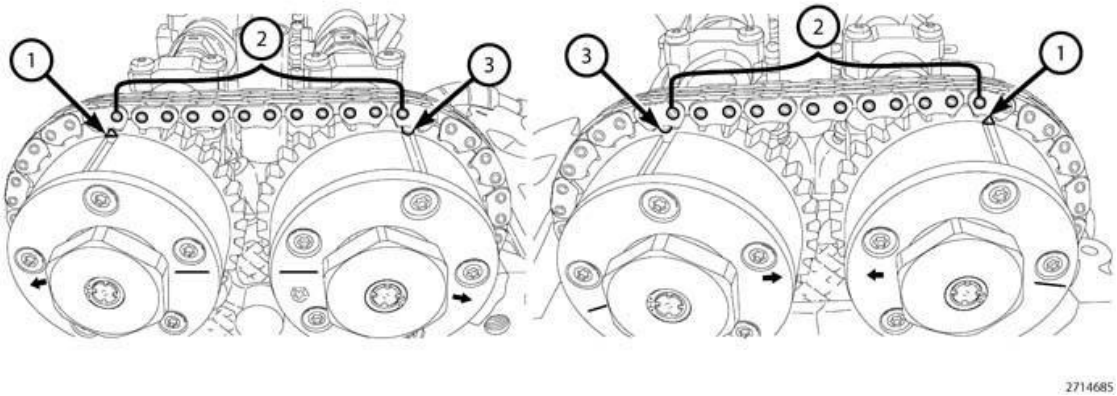

Fig. 686: Chain Pins, Exhaust Cam Phaser Triangle Marking & Circle Marking
Courtesy of CHRYSLER GROUP, LLC

NOTE: The phaser markings (1 and 3) could align with either an external or internal chain link. Either alignment is acceptable as long as there are twelve chain pins between the markings.

5. There should be twelve chain pins (2) **BETWEEN** the exhaust cam phaser triangle marking (1) and the intake cam phaser circle marking (3) as viewed from either the front or rear of the cam phasers.
6. If the engine timing is not correct, proceed to Timing Chain and Sprockets for service procedures. Refer to **CHAIN AND SPROCKETS, TIMING, REMOVAL**.

CHAIN AND SPROCKETS, TIMING

REMOVAL

REMOVAL

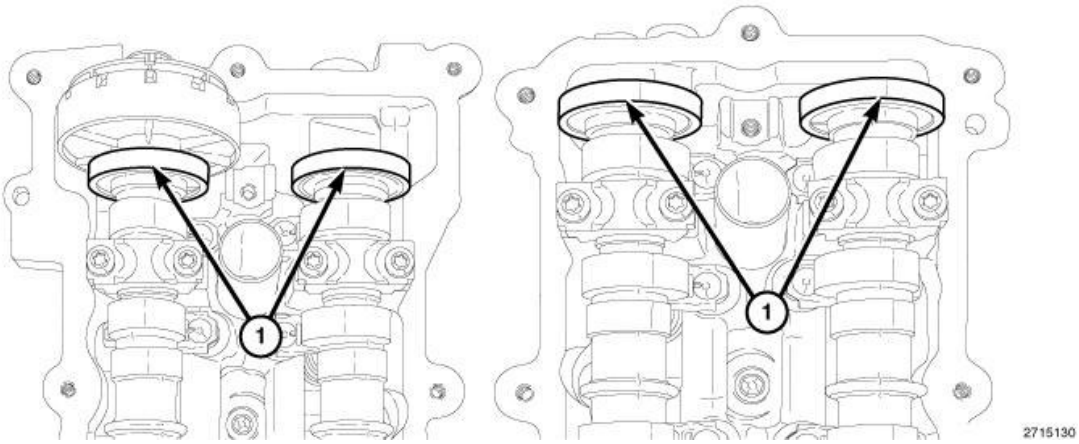

Fig. 687: Magnetic Timing Wheels
Courtesy of CHRYSLER GROUP, LLC

 © 2011 Mitchell Repair Information Company, LLC.

CAUTION: The magnetic timing wheels (1) must not come in contact with magnets (pickup tools, trays, etc.) or any other strong magnetic field. This will destroy the timing wheels ability to correctly relay camshaft position to the camshaft position sensor.

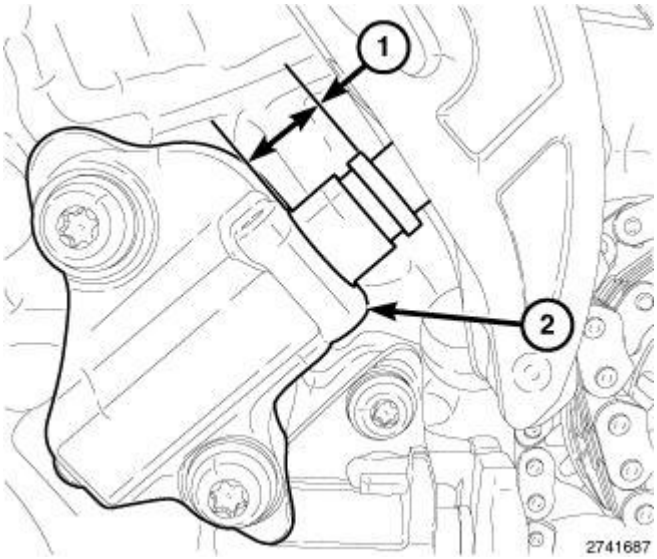

Fig. 688: Piston Extension & RH Cam Chain Tensioner
Courtesy of CHRYSLER GROUP, LLC

CAUTION: When the timing chains are removed and the cylinder heads are still installed, DO NOT rotate the camshafts or crankshaft without first locating the proper crankshaft position. Failure to do so will result in valve and/or piston damage.

NOTE: The Variable Valve Timing (VVT) assemblies (Phasers) and Oil Control Valves (OCVs) can be serviced without removing the engine timing cover. Refer to ASSEMBLY, VARIABLE VALVE TIMING, PHASER / OIL CONTROL VALVE, REMOVAL.

1. Disconnect and isolate the negative battery cable.
2. Remove the air cleaner housing assembly and upper intake manifold. Refer to **MANIFOLD, INTAKE, REMOVAL**.
3. Remove both cylinder head covers. Refer to **COVER(S), CYLINDER HEAD, REMOVAL**
4. Remove the spark plugs. Refer to **SPARK PLUG, REMOVAL** .
5. Raise and support the vehicle. Refer to **HOISTING, STANDARD PROCEDURE** .
6. Drain the cooling system. Refer to **STANDARD PROCEDURE** .
7. Remove the oil pan, accessory drive belts, crankshaft vibration damper and engine timing cover. Refer to **COVER(S), ENGINE TIMING, REMOVAL**.

NOTE: Take this opportunity to measure timing chain wear. Refer to VALVE

 © 2011 Mitchell Repair Information Company, LLC.

TIMING, STANDARD PROCEDURE.

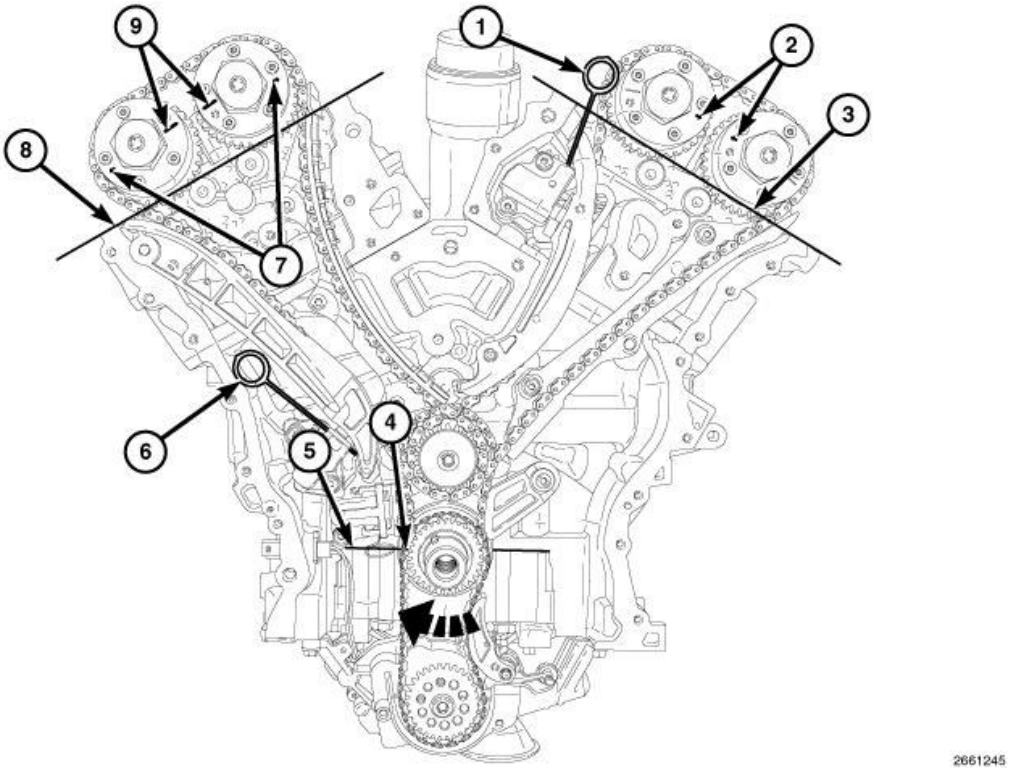

Fig. 689: Rotating Crankshaft Clockwise To Position No. 1 Piston At TDC On Exhaust Stroke
Courtesy of CHRYSLER GROUP, LLC

CAUTION: When aligning timing marks, always rotate engine by turning the crankshaft. Failure to do so will result in valve and/or piston damage.

8. Rotate the crankshaft clockwise (as viewed from the front) to place the number one cylinder piston at top-dead-center on the exhaust stroke by aligning the dimple (4) on the crankshaft with the block/bearing cap junction (5).
9. While maintaining this alignment, verify that the **ARROWS** (2) on the left side cam phasers point toward each other and are parallel to the cylinder head cover mounting surface (3) and that the right side cam phaser **ARROWS** (7) point away from each other and the **SCRIBE LINES** (9) are parallel to the cylinder head cover mounting surface (8).

 © 2011 Mitchell Repair Information Company, LLC.

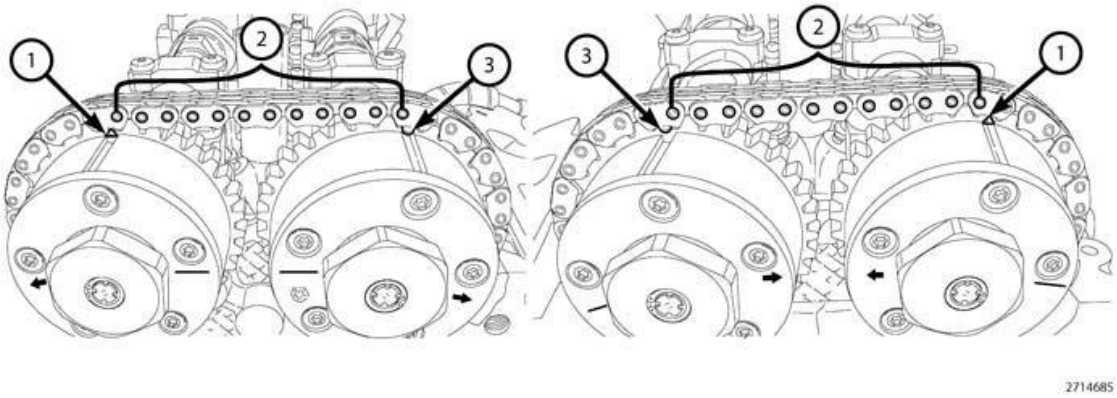

Fig. 690: Chain Pins, Exhaust Cam Phaser Triangle Marking & Circle Marking
Courtesy of CHRYSLER GROUP, LLC

NOTE: The phaser markings (1 and 3) could align with either an external or internal chain link. Either alignment is acceptable as long as there are twelve chain pins between the markings.

10. There should be twelve chain pins (2) **BETWEEN** the exhaust cam phaser triangle marking (1) and the intake cam phaser circle marking (3) as viewed from either the front or rear of the cam phasers.

CAUTION: Always reinstall timing chains so that they maintain the same direction of rotation. Inverting a previously run chain on a previously run sprocket will result in excessive wear to both the chain and sprocket.

11. Mark the direction of rotation on the following timing chains using a paint pen or equivalent to aid in reassembly:
    - Left side cam chain
    - Right side cam chain
    - Oil pump chain
    - Primary chain

 © 2011 Mitchell Repair Information Company, LLC.

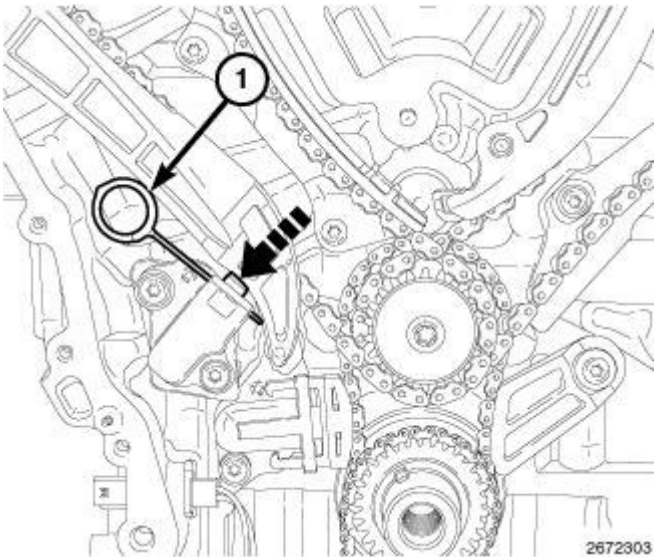

Fig. 691: Resetting Right Cam Chain Tensioner
Courtesy of CHRYSLER GROUP, LLC

12. Reset the right side cam chain tensioner by pushing back the tensioner piston and installing Tensioner Pin (special tool #8514, Pins, Tensioner) (1).

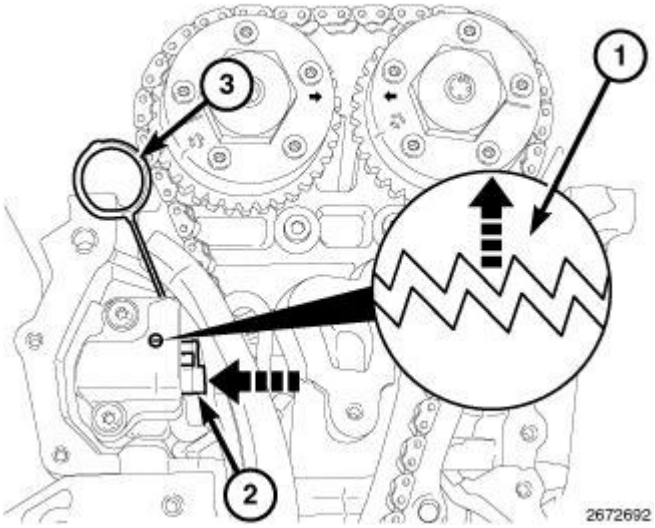

Fig. 692: Resetting Left Cam Chain Tensioner
Courtesy of CHRYSLER GROUP, LLC

13. Reset the left side cam chain tensioner by lifting the pawl (1), pushing back the piston (2) and installing Tensioner Pin (special tool #8514, Pins, Tensioner) (3). Refer to **VALVE TIMING, STANDARD PROCEDURE**.

 © 2011 Mitchell Repair Information Company, LLC.

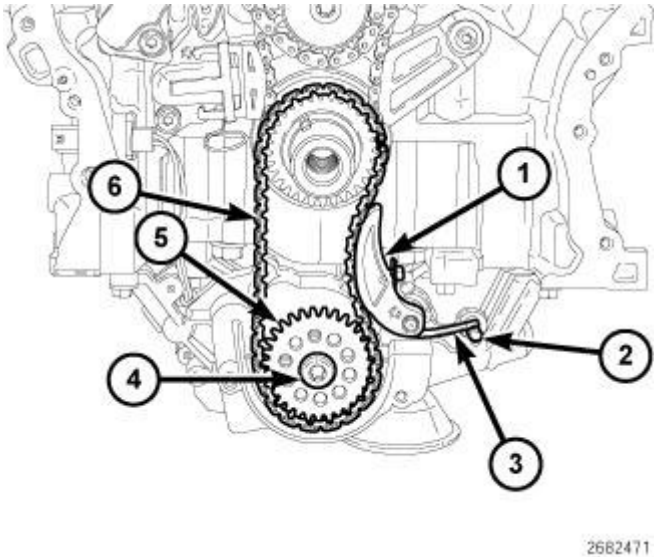

Fig. 693: Oil Pump Chain Tensioner, Spring, Retaining Bolt, Dowel Pin, Oil Pump Sprocket & Oil Pump Chain
Courtesy of CHRYSLER GROUP, LLC

14. Disengage the oil pump chain tensioner spring (3) from the dowel pin (2) and remove the oil pump chain tensioner (1).
15. Remove the oil pump sprocket T45 retaining bolt (4) and remove the oil pump sprocket (5) and oil pump chain (6).

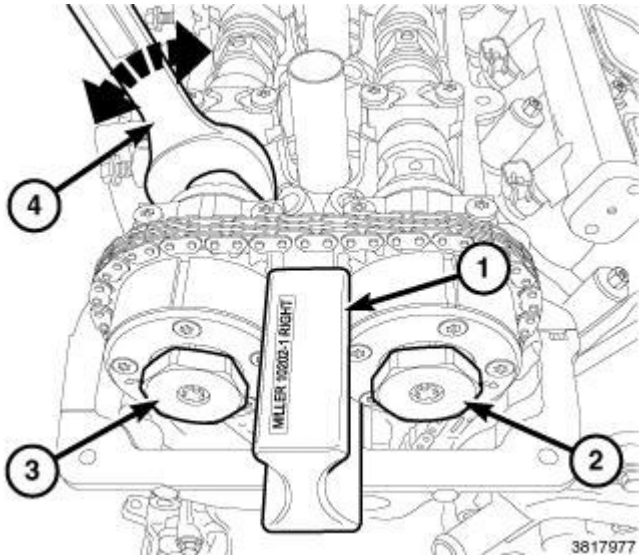

Fig. 694: Camshaft Phaser Lock, Oil Control Valves & Wrench
Courtesy of CHRYSLER GROUP, LLC

NOTE: It may be necessary to rock the camshaft slightly (a few degrees) with a wrench (4) when installing the camshaft phaser lock.

16. Install the (special tool #10202-1, Lock, Camshaft/Phaser, Right Side) (1) with the tool number facing up.

 © 2011 Mitchell Repair Information Company, LLC.

17. Loosen, but do not remove, the exhaust oil control valve (3) and the intake oil control valve (2).
18. Remove the (special tool #10202-1, Lock, Camshaft/Phaser, Right Side) (1).
19. Remove the oil control valve (2) from the right side intake cam phaser.
20. Pull the right side intake cam phaser off of the camshaft and remove the right side cam chain.
21. If required, remove the oil control valve (3) and pull the right side exhaust cam phaser off of the camshaft.

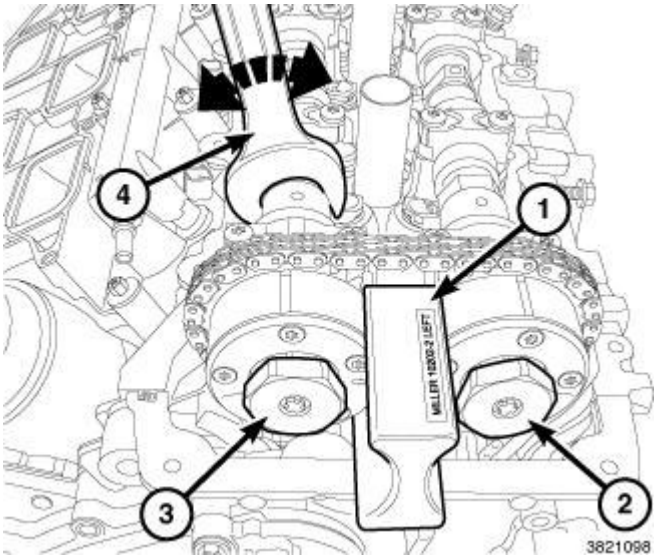

Fig. 695: Camshaft Phaser Lock, Oil Control Valves & Wrench
Courtesy of CHRYSLER GROUP, LLC

NOTE: It may be necessary to rock the camshaft slightly (a few degrees) with a wrench (4) when installing the camshaft phaser lock.

22. Install the (special tool #10202-2, Lock, Camshaft/Phaser, Left Side) (1) with the tool number facing up.
23. Loosen, but do not remove, the exhaust oil control valve (2) and the intake oil control valve (3).
24. Remove the (special tool #10202-2, Lock, Camshaft/Phaser, Left Side) (1).
25. Remove the oil control valve (2) from the left side exhaust cam phaser.
26. Pull the left side exhaust cam phaser off of the camshaft and remove the left side cam chain.
27. If required, remove the oil control valve (3) and pull the left side intake cam phaser off of the camshaft.

 © 2011 Mitchell Repair Information Company, LLC.

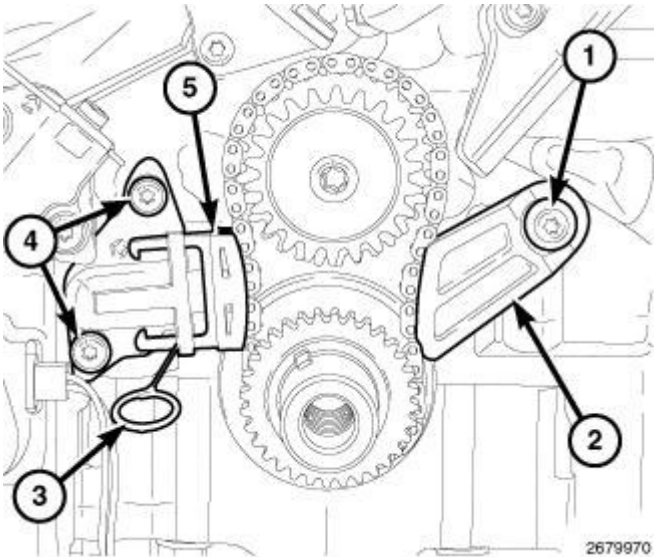

Fig. 696: Primary Chain Tensioner, Tensioner Pin, Primary Chain Guide & Bolts
Courtesy of CHRYSLER GROUP, LLC

28. Reset the primary chain tensioner (5) by pushing back the tensioner piston and installing Tensioner Pin (special tool #8514, Pins, Tensioner) (3). Remove two T30 bolts (4) and remove the primary chain tensioner.
29. Remove the T30 bolt (1) and the primary chain guide (2).

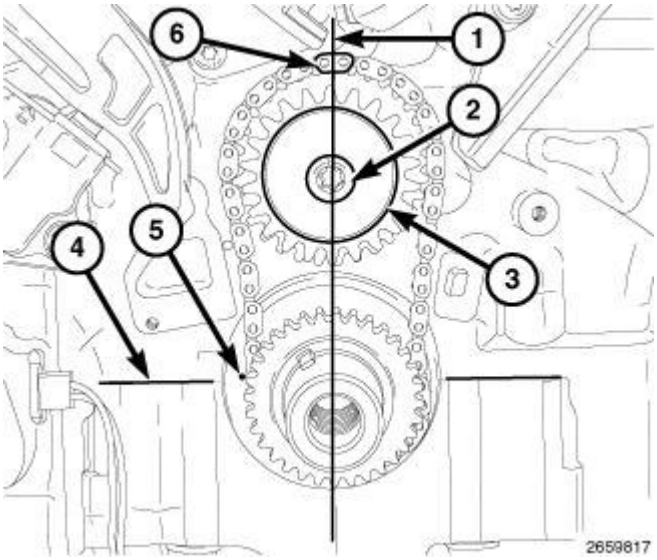

Fig. 697: Timing Chain Plated Link At 12 O'Clock, Washer, Retaining Bolt, Block/Bearing Cap Junction & Dimple
Courtesy of CHRYSLER GROUP, LLC

30. Remove the idler sprocket T45 retaining bolt (2) and washer (3).
31. Remove the primary chain, idler sprocket and crankshaft sprocket as an assembly.

 © 2011 Mitchell Repair Information Company, LLC.

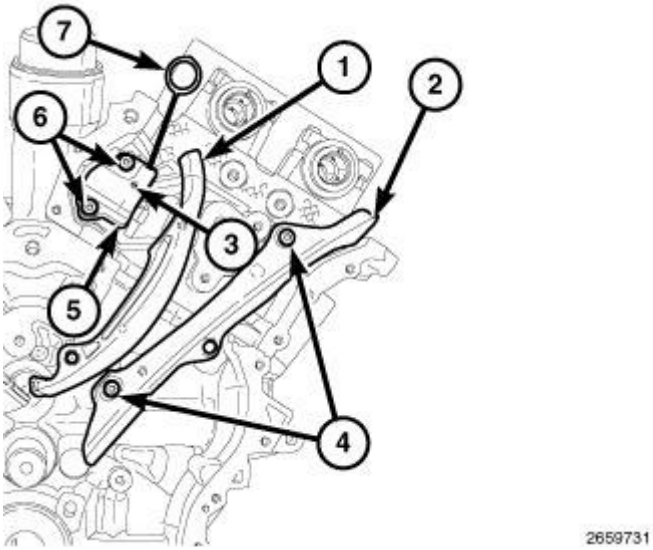

Fig. 698: Left Cam Chain Tensioner, Arm, Guide & Bolts
Courtesy of CHRYSLER GROUP, LLC

32. If required, remove two T30 bolts (6) and the left side cam chain tensioner (5).
33. If required, remove two T30 bolts (4) and the left side cam chain guide (2) and tensioner arm (1).

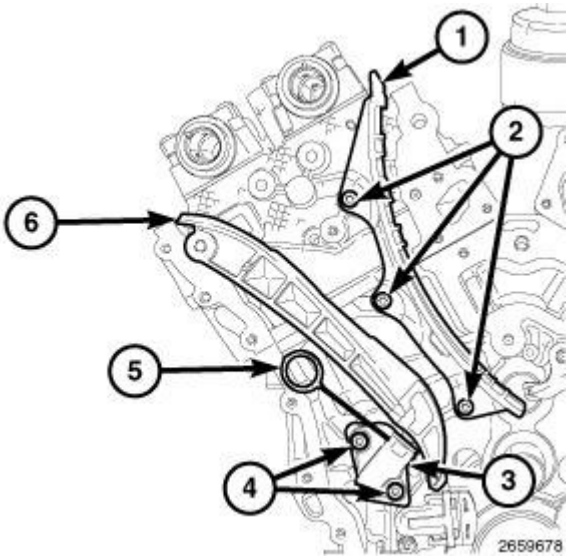

Fig. 699: Right Cam Chain Tensioner, Arm, Guide & Bolts
Courtesy of CHRYSLER GROUP, LLC

34. If required, remove two T30 bolts (4) and the right side cam chain tensioner (3).
35. If required, remove three T30 bolts (2) and the right side cam chain guide (1) and tensioner arm (6).
36. Inspect all sprockets and chain guides. Replace if damaged.

INSPECTION

INSPECTION

 © 2011 Mitchell Repair Information Company, LLC.

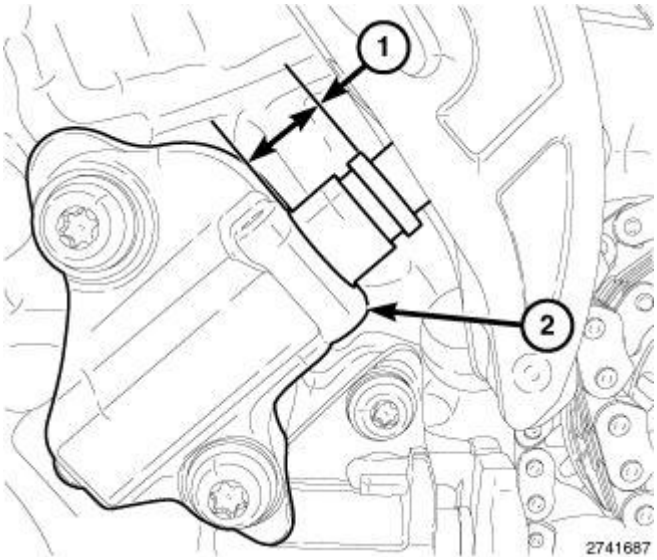

Fig. 700: Piston Extension & RH Cam Chain Tensioner
Courtesy of CHRYSLER GROUP, LLC

Prior to disassembly of the timing chains and sprockets, measure the timing chain wear (1). Refer to **VALVE TIMING, STANDARD PROCEDURE**.

Inspect the following valve timing components:

- Sprockets for excessive tooth wear. Some tooth markings are normal and not a cause for sprocket replacement.
- Idler sprocket assembly bushing and shaft for excessive wear.
- Chain guides and tensioner arms. Replace these parts if grooving in plastic face is more than 1 mm (0.039 in.) deep.
- Secondary chain tensioner piston and ratcheting device. Inspect for evidence of heavy contact between tensioner piston and tensioner arm. If this condition exist the tensioner arm and chain should be replaced.
- Primary chain tensioner plastic faces. Replace as required.

INSTALLATION

INSTALLATION

 © 2011 Mitchell Repair Information Company, LLC.

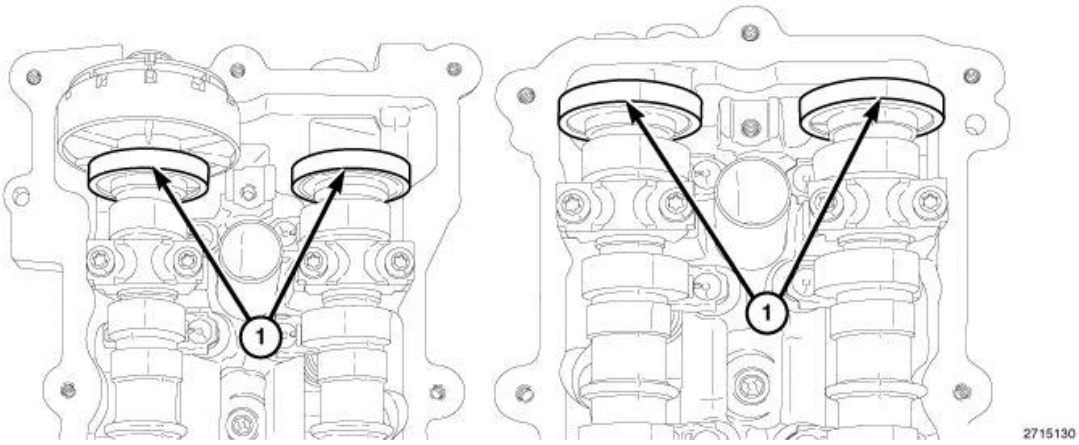

Fig. 701: Magnetic Timing Wheels
Courtesy of CHRYSLER GROUP, LLC

CAUTION: The magnetic timing wheels (1) must not come in contact with magnets (pickup tools, trays, etc.) or any other strong magnetic field. This will destroy the timing wheels ability to correctly relay camshaft position to the camshaft position sensor.

1. Inspect all sprockets and chain guides. Replace if damaged.

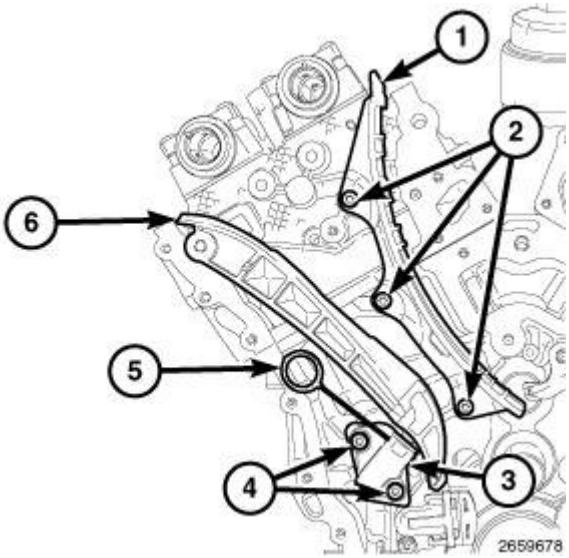

Fig. 702: Right Cam Chain Tensioner, Arm, Guide & Bolts
Courtesy of CHRYSLER GROUP, LLC

2. If removed, install the right side cam chain guide (1) and tensioner arm (6). Tighten attaching T30 bolts (2) to 12 N.m (106 in. lbs.).
3. If removed, install the right side cam chain tensioner (3) to the engine block with two bolts (4). Tighten the T30 bolts (4) to 12 N.m (106 in. lbs.).
4. Reset the right side cam chain tensioner (3) by pushing back the tensioner piston and installing Tensioner Pin (special tool #8514, Pins, Tensioner) (5).

 © 2011 Mitchell Repair Information Company, LLC.

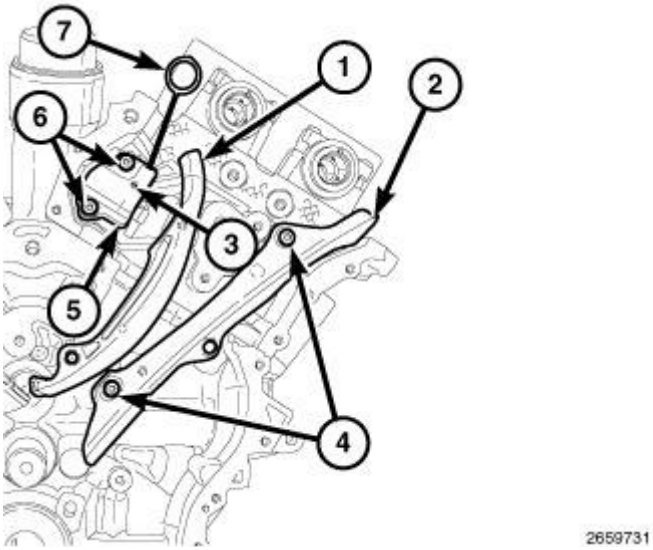

Fig. 703: Left Cam Chain Tensioner, Arm, Guide & Bolts
Courtesy of CHRYSLER GROUP, LLC

5. If removed, install the left side cam chain guide (2) and tensioner arm (1). Tighten attaching T30 bolts (4) to 12 N.m (106 in. lbs.).
6. If removed, install the left side cam chain tensioner (5) to the cylinder head with two bolts (6). Tighten the T30 bolts (6) to 12 N.m (106 in. lbs.).
7. Reset the left side cam chain tensioner (5) by lifting the pawl (3), pushing back the piston and installing Tensioner Pin (special tool #8514, Pins, Tensioner) (7). Refer to **VALVE TIMING, STANDARD PROCEDURE**.

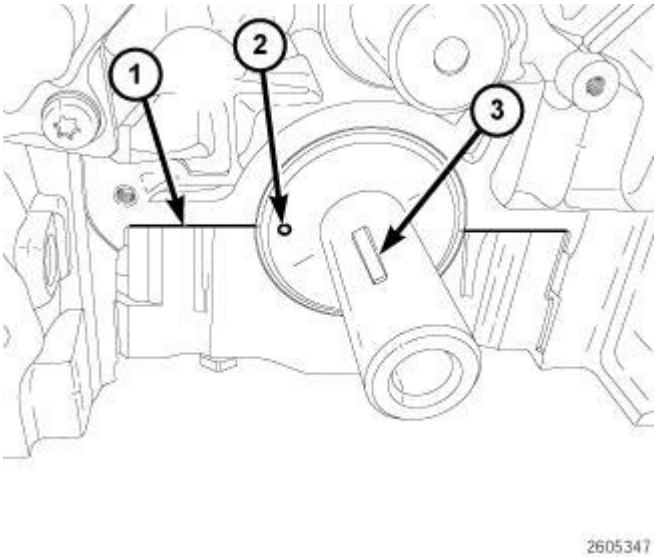

Fig. 704: Crankshaft Key, Dimple & Block/Bearing Cap Junction
Courtesy of CHRYSLER GROUP, LLC

8. Verify that the key (3) is installed in the crankshaft.

 © 2011 Mitchell Repair Information Company, LLC.

CAUTION: Do not rotate the crankshaft more than a few degrees independently of the camshafts. Piston to valve contact could occur resulting in possible valve damage. If the crankshaft needs to be rotated more than a few degrees, first remove the camshafts.

9.
10. Verify that the number one cylinder piston is positioned at top-dead-center by aligning the dimple (2) on the crankshaft with the block/bearing cap junction (1).

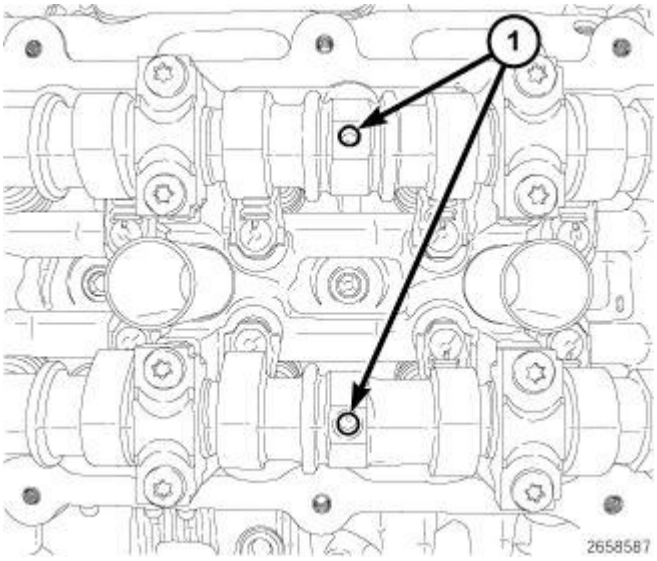

Fig. 705: Positioning Camshaft Alignment Holes Vertically
Courtesy of CHRYSLER GROUP, LLC

CAUTION: Do not rotate the camshafts more than a few degrees independently of the crankshaft. Valve to piston contact could occur resulting in possible valve damage. If the camshafts need to be rotated more than a few degrees, first move the pistons away from the cylinder heads by rotating the crankshaft counterclockwise to a position 30° before-top-dead-center. Once the camshafts are returned to their top-dead-center position, rotate the crankshaft clockwise to return the crankshaft to top-dead-center.

11.
12. Verify that the camshafts are set at top-dead-center by positioning the alignment holes (1) vertically.

 © 2011 Mitchell Repair Information Company, LLC.

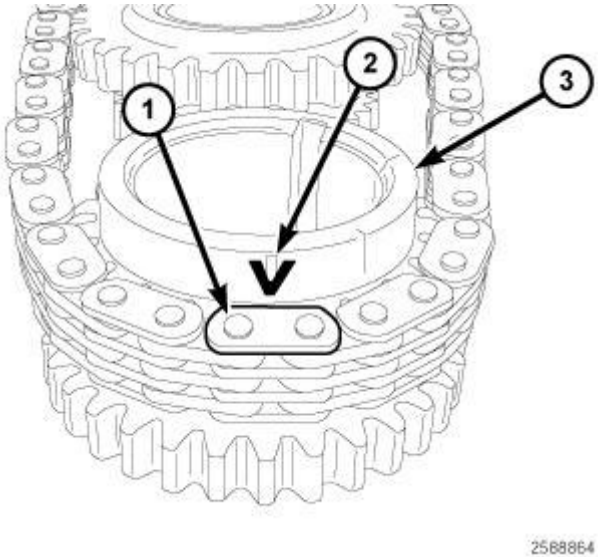

Fig. 706: Aligning Arrow With Plated Link On Primary Chain
Courtesy of CHRYSLER GROUP, LLC

CAUTION: Always reinstall timing chains so that they maintain the same direction of rotation. Inverting a previously run chain on a previously run sprocket will result in excessive wear to both the chain and sprocket.

13. Place the primary chain onto the crankshaft sprocket (3) so that the arrow (2) is aligned with the plated link (1) on the timing chain.

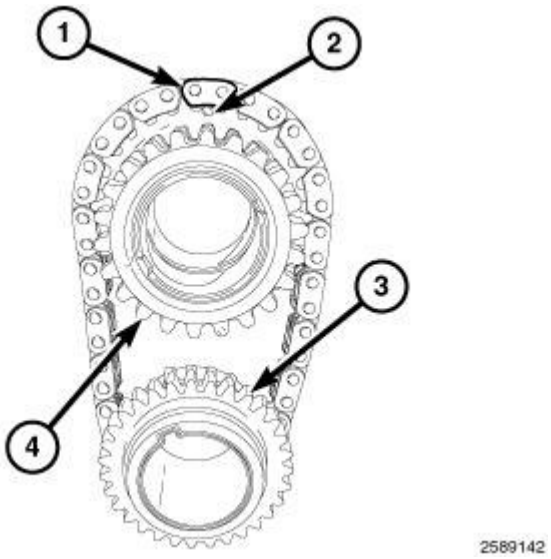

Fig. 707: Placing Idler Sprocket Into Timing Chain So That Dimple Is Aligned With Plated Link On Timing Chain
Courtesy of CHRYSLER GROUP, LLC

14. While maintaining this alignment, invert the crankshaft sprocket and timing chain and place the idler

 © 2011 Mitchell Repair Information Company, LLC.

sprocket (4) into the timing chain so that the dimple (2) is aligned with the plated link (1) on the timing chain.

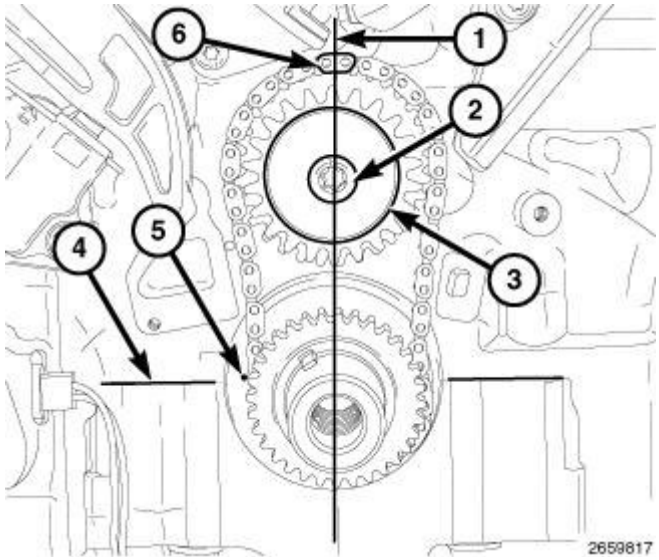

Fig. 708: Timing Chain Plated Link At 12 O'Clock, Washer, Retaining Bolt, Block/Bearing Cap Junction & Dimple
Courtesy of CHRYSLER GROUP, LLC

15. While maintaining this alignment, lubricate the idler sprocket bushing with clean engine oil and install the sprockets and timing chain on the engine. To verify that the timing is still correct, the timing chain plated link (6) should be located at 12:00 (1) when the dimple (5) on the crankshaft is aligned with the block/bearing cap junction (4).
16. Install the idler sprocket retaining bolt (2) and washer (3). Tighten the T45 bolt (2) to 25 N.m (18 ft. lbs.).

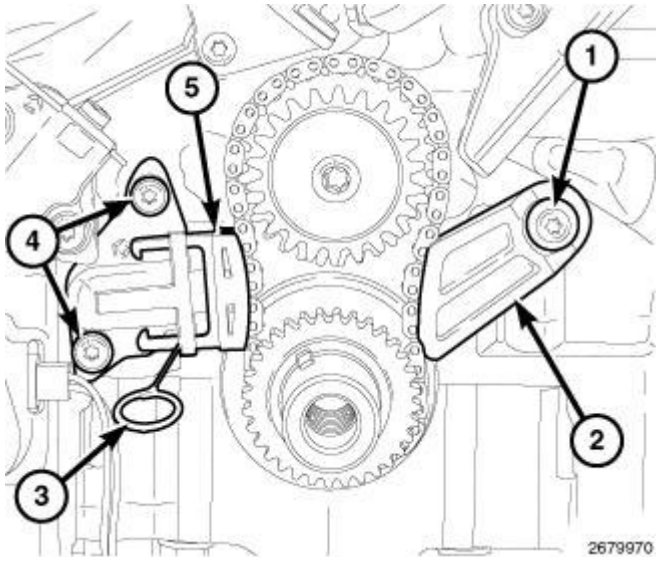

Fig. 709: Primary Chain Tensioner, Tensioner Pin, Primary Chain Guide & Bolts
Courtesy of CHRYSLER GROUP, LLC

 © 2011 Mitchell Repair Information Company, LLC.

17. Install the primary chain guide (2). Tighten attaching T30 bolt (1) to 12 N.m (106 in. lbs.).
18. Reset the primary chain tensioner (5) by pushing back the tensioner piston and installing Tensioner Pin (special tool #8514, Pins, Tensioner) (3).
19. Install the primary chain tensioner (5) to the engine block with two bolts (4). Tighten the T30 bolts (4) to 12 N.m (106 in. lbs.) and remove the Tensioner Pin (special tool #8514, Pins, Tensioner) (3).

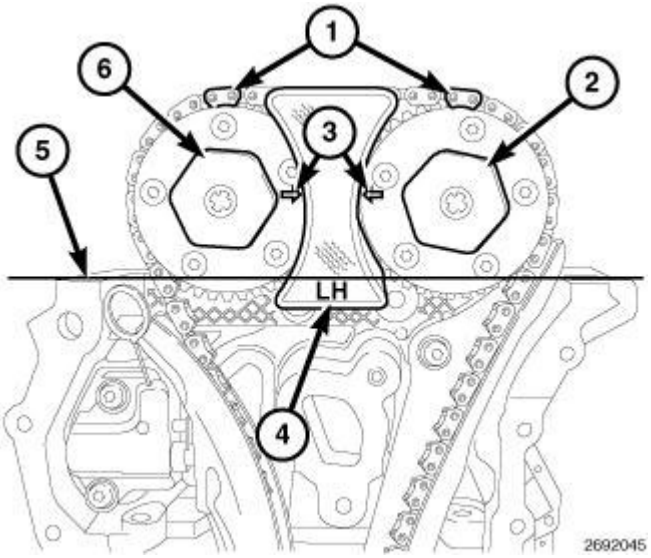

Fig. 710: Phaser Timing Marks, Oil Control Valves & LH Camshaft Phaser Lock
Courtesy of CHRYSLER GROUP, LLC

20. Press the left side intake cam phaser onto the intake camshaft. Install and hand tighten the oil control valve (6).

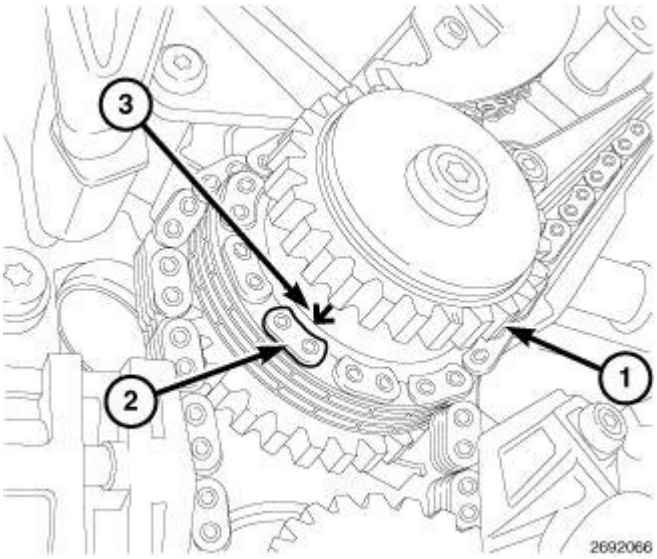

Fig. 711: Idler Sprocket, Plated Link & Arrow
Courtesy of CHRYSLER GROUP, LLC

 © 2011 Mitchell Repair Information Company, LLC.

NOTE: The left side and right side cam chains are identical.

CAUTION: Always reinstall timing chains so that they maintain the same direction of rotation. Inverting a previously run chain on a previously run sprocket will result in excessive wear to both the chain and sprocket.

21. Drape the left side cam chain over the left side intake cam phaser and onto the idler sprocket (1) so that the arrow (3) is aligned with the plated link (2) on the cam chain.

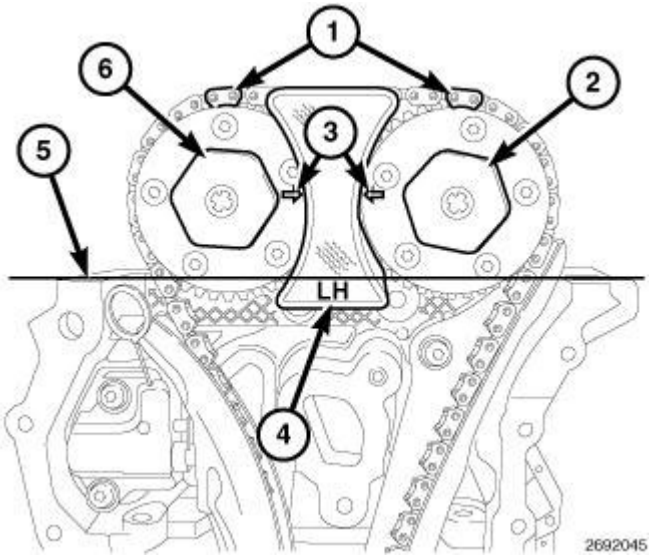

Fig. 712: Phaser Timing Marks, Oil Control Valves & LH Camshaft Phaser Lock
Courtesy of CHRYSLER GROUP, LLC

22. While maintaining this alignment, route the cam chain around the exhaust and intake cam phasers so that the plated links are aligned with the phaser timing marks (1). Position the left side cam phasers so that the arrows (3) point toward each other and are parallel to the cylinder head cover mounting surface (5). Press the exhaust cam phaser onto the exhaust cam, install and hand tighten the oil control valve (2).

NOTE: Minor rotation of a camshaft (a few degrees) may be required to install the camshaft phaser or phaser lock.

23. Install the (special tool #10202-2, Lock, Camshaft/Phaser, Left Side) (4) with the tool number facing up.
24. Tighten the oil control valves (2) and (6) to 150 N.m (110 ft. lbs.).
25. Remove the Camshaft Phaser Lock (4).

 © 2011 Mitchell Repair Information Company, LLC.

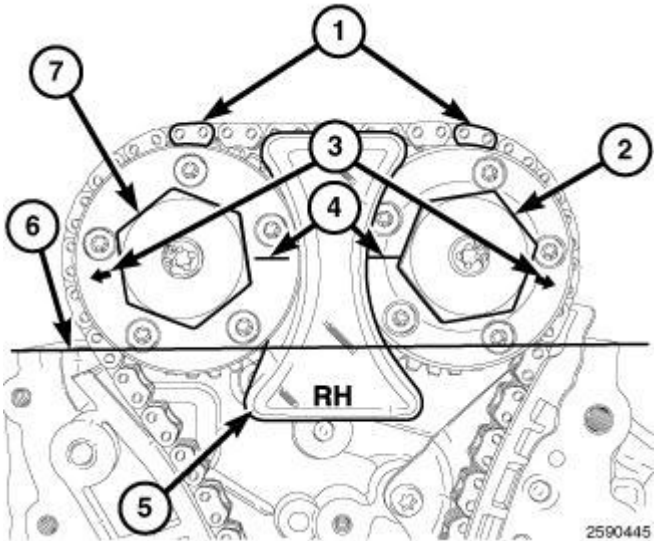

Fig. 713: Phaser Timing Marks, Oil Control Valves & RH Camshaft Phaser Lock
Courtesy of CHRYSLER GROUP, LLC

26. Press the right side exhaust cam phaser onto the exhaust camshaft. Install and hand tighten the oil control valve (7).

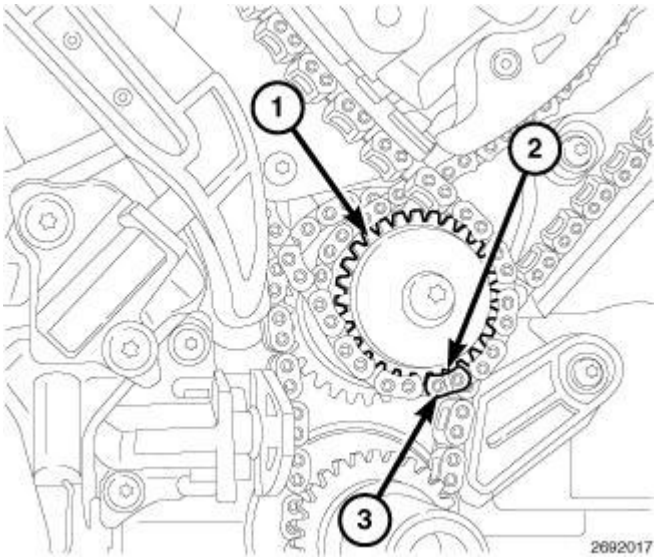

Fig. 714: Idler Sprocket, Dimple & Plated Link
Courtesy of CHRYSLER GROUP, LLC

CAUTION: Always reinstall timing chains so that they maintain the same direction of rotation. Inverting a previously run chain on a previously run sprocket will result in excessive wear to both the chain and sprocket.

27. Drape the right side cam chain over the right side exhaust cam phaser and onto the idler sprocket (1) so that the dimple (2) is aligned with the plated link (3) on the cam chain.

 © 2011 Mitchell Repair Information Company, LLC.

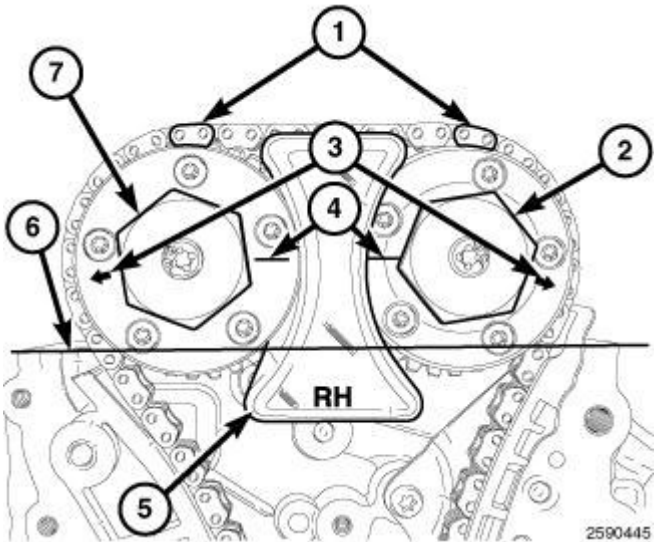

Fig. 715: Phaser Timing Marks, Oil Control Valves & RH Camshaft Phaser Lock
Courtesy of CHRYSLER GROUP, LLC

28. While maintaining this alignment, route the cam chain around the exhaust and intake cam phasers so that the plated links are aligned with the phaser timing marks (1). Position the right side cam phasers so that the arrows (3) point away from each other and the scribe lines (4) are parallel to the cylinder head cover mounting surface (6). Press the intake cam phaser onto the intake cam, install and hand tighten the oil control valve (2).

NOTE: Minor rotation of a camshaft (a few degrees) may be required to install the camshaft phaser or phaser lock.

29. Install the (special tool #10202-1, Lock, Camshaft/Phaser, Right Side) (5) with the tool number facing up.
30. Tighten the oil control valves (2) and (7) to 150 N.m (110 ft. lbs.).
31. Remove the Camshaft Phaser Lock (5).

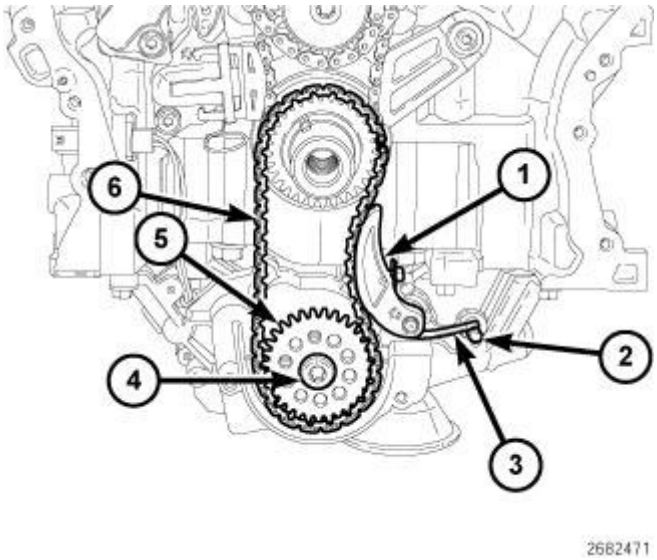

Fig. 716: Oil Pump Chain Tensioner, Spring, Retaining Bolt, Dowel Pin, Oil Pump Sprocket & Oil Pump Chain
Courtesy of CHRYSLER GROUP, LLC

NOTE: There are no timing marks on the oil pump gear or chain.

CAUTION: Always reinstall timing chains so that they maintain the same direction of rotation. Inverting a previously run chain on a previously run sprocket will result in excessive wear to both the chain and sprocket.

32. Place the oil pump sprocket (5) into the oil pump chain (6). Place the oil pump chain onto the crankshaft sprocket while aligning the oil pump sprocket with the oil pump shaft. Install the oil pump sprocket T45 retaining bolt (4) and tighten to 25 N.m (18 ft. lbs.).
33. Install the oil pump chain tensioner (1). Insure that the spring (3) is positioned above the dowel pin (2).

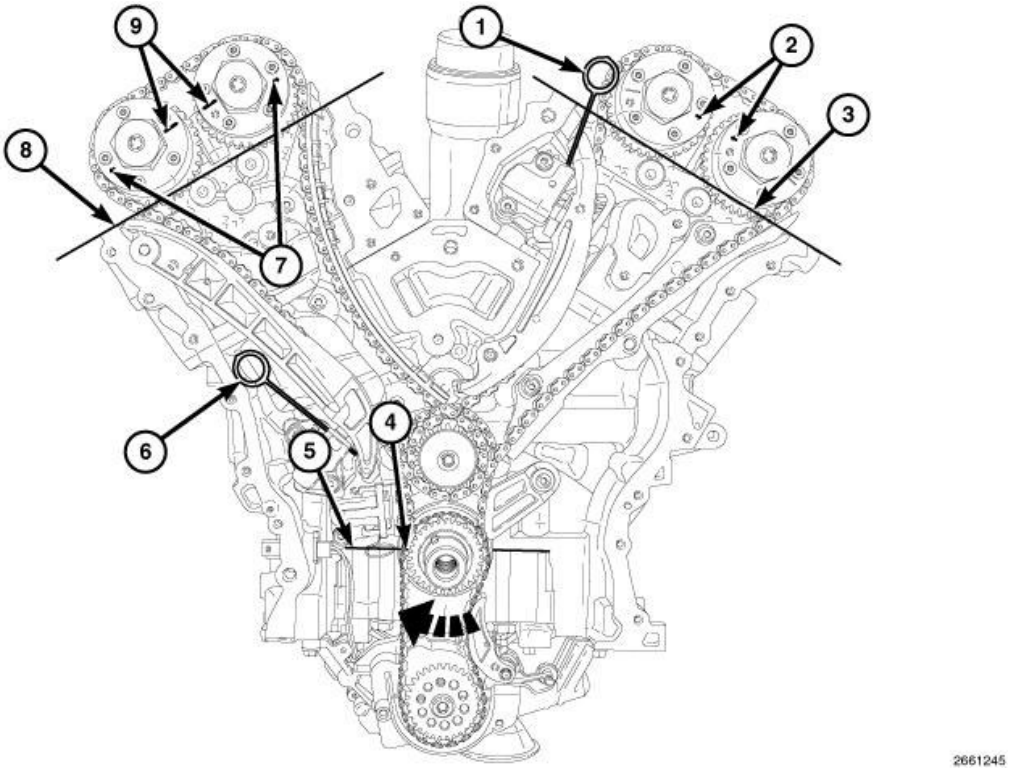

Fig. 717: Rotating Crankshaft Clockwise To Position No. 1 Piston At TDC On Exhaust Stroke
Courtesy of CHRYSLER GROUP, LLC

34. Remove the Tensioner Pins (special tool #8514, Pins, Tensioner) (1) and (6) from the right side and left side cam chain tensioners.
35. Rotate the crankshaft clockwise (as viewed from the front) two complete revolutions stopping when the dimple (4) on the crankshaft is aligned with the block/bearing cap junction (5).
36. While maintaining this alignment, verify that the **ARROWS** (2) on the left side cam phasers point toward each other and are parallel to the cylinder head cover mounting surface (3) and that the right side cam

 © 2011 Mitchell Repair Information Company, LLC.

phaser **ARROWS** (7) point away from each other and the **SCRIBE LINES** (9) are parallel to the cylinder head cover mounting surface (8).

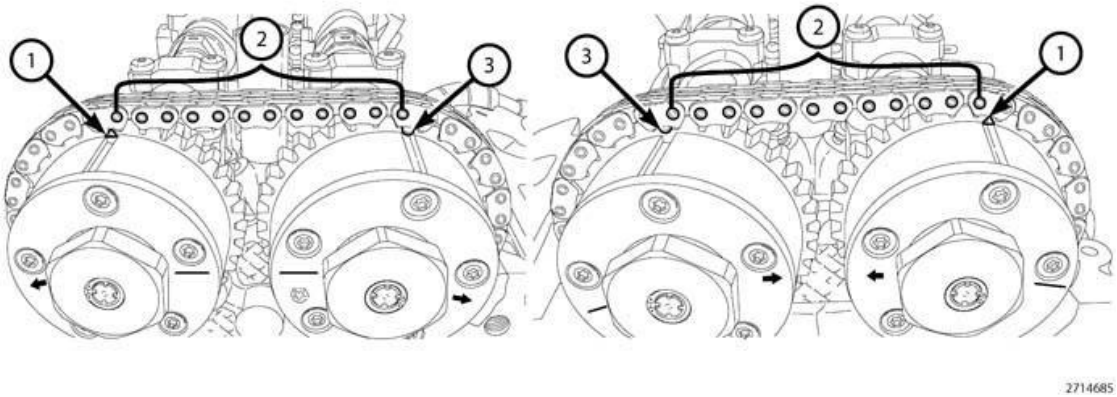

Fig. 718: Chain Pins, Exhaust Cam Phaser Triangle Marking & Circle Marking
Courtesy of CHRYSLER GROUP, LLC

37. There should be 12 chain pins (2) **BETWEEN** the exhaust cam phaser triangle marking (1) and the intake cam phaser circle marking (3) as viewed from either the front or rear of the cam phasers.
38. If the engine timing is not correct, repeat this procedure.
39. Install the engine timing cover, crankshaft vibration damper, accessory drive belts and oil pan. Refer to **COVER(S), ENGINE TIMING, INSTALLATION**.
40. Install the spark plugs. Tighten to 17.5 N.m (13 ft. lbs.). Refer to **SPARK PLUG, INSTALLATION** .
41. Install the cylinder head covers. Refer to **COVER(S), CYLINDER HEAD, INSTALLATION**.
42. Install the upper intake manifold and air cleaner housing assembly. Refer to **MANIFOLD, INTAKE, INSTALLATION**.
43. Fill the engine crankcase with the proper oil to the correct level. Refer to ENGINE/LUBRICATION/OIL **STANDARD PROCEDURE** .
44. Connect the negative battery cable and tighten nut to 5 N.m (45 in. lbs.).
45. Fill the cooling system. Refer to **STANDARD PROCEDURE** .
46. Operate the engine until it reaches normal operating temperature. Check cooling system for correct fluid level. Refer to **STANDARD PROCEDURE** .

NOTE: **The Cam/Crank Variation Relearn procedure must be performed using the scan tool anytime there has been a repair/replacement made to a powertrain system, for example: flywheel, valvetrain, camshaft and/or crankshaft sensors or components.**

COVER(S), ENGINE TIMING

REMOVAL

REMOVAL

1. Disconnect and isolate the negative battery cable.
2. Drain the cooling system. Refer to **STANDARD PROCEDURE** .
3. Remove the electric vacuum pump. Refer to **PUMP, ELECTRIC VACUUM, REMOVAL** .

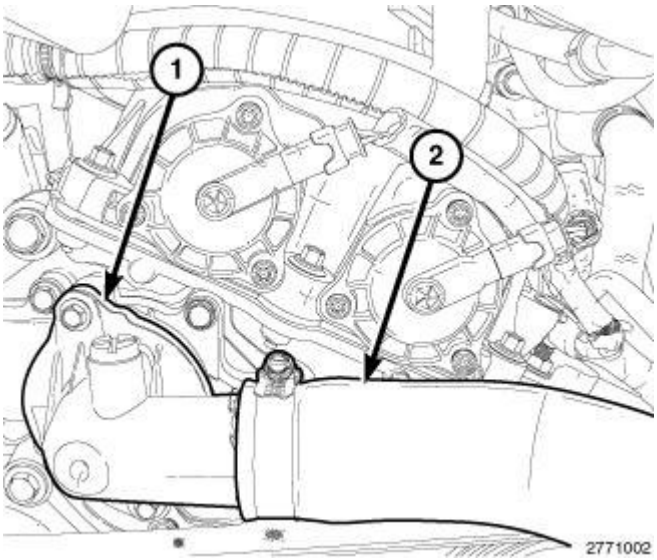

Fig. 719: Upper Radiator Hose & Thermostat Housing
Courtesy of CHRYSLER GROUP, LLC

4. Remove the upper radiator hose (2) and thermostat housing (1). Refer to **THERMOSTAT, REMOVAL** .

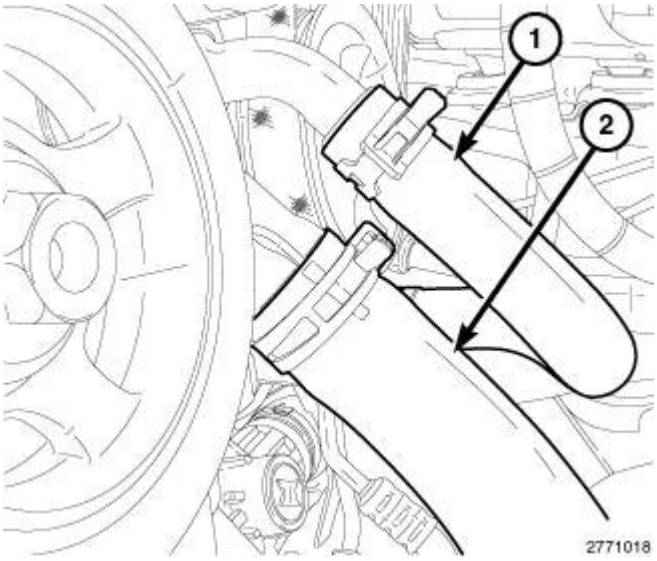

Fig. 720: Radiator Hose & Heater Hose
Courtesy of CHRYSLER GROUP, LLC

5. Remove the heater core return hose (1) from the water pump housing.
6. Remove the lower radiator hose (2) from the water pump housing.

 © 2011 Mitchell Repair Information Company, LLC.

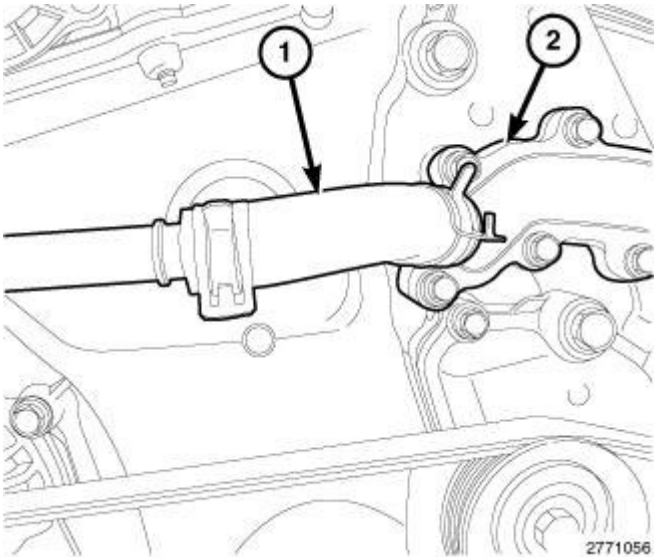

Fig. 721: Heater Core Supply Hose & Coolant Outlet Housing
Courtesy of CHRYSLER GROUP, LLC

7. Remove the heater core supply hose (1) from the coolant outlet housing (2).

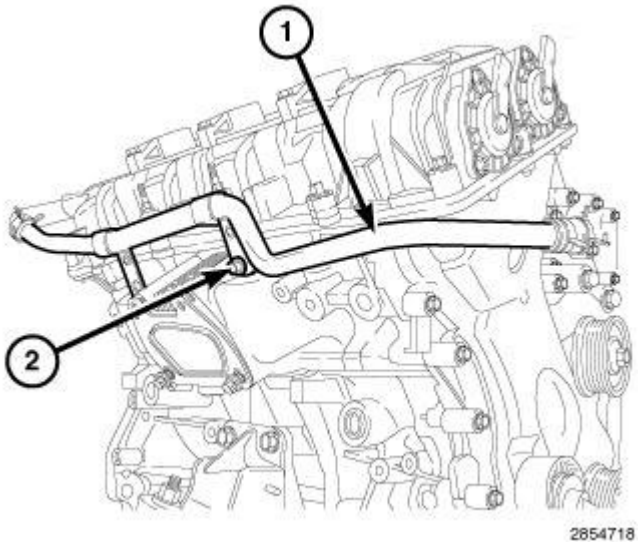

Fig. 722: Heater Core Supply Tube Support Bracket & Retaining Bolt
Courtesy of CHRYSLER GROUP, LLC

8. Remove the bolt (2) and reposition the heater core supply tube (1).

 © 2011 Mitchell Repair Information Company, LLC.

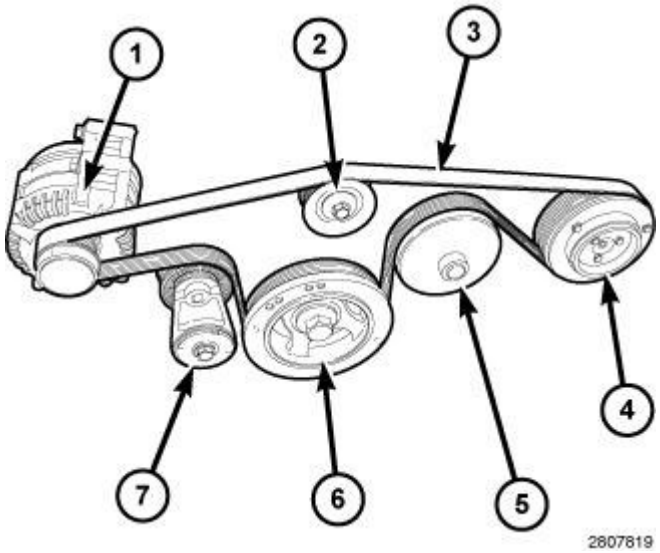

Fig. 723: Idler Pulley, Tensioner Arm, Belt, Idler, Tensioner & Belt Routing
Courtesy of CHRYSLER GROUP, LLC

9. Remove the accessory drive belt (3). Refer to **BELT, SERPENTINE, REMOVAL** .
10. Remove the accessory drive belt tensioner (7). Refer to **TENSIONER, BELT, REMOVAL** .
11. Remove the accessory idler pulley (2). Refer to **PULLEY, IDLER, REMOVAL** .
12. Remove the crankshaft vibration damper (6). Refer to **DAMPER, VIBRATION, REMOVAL**.

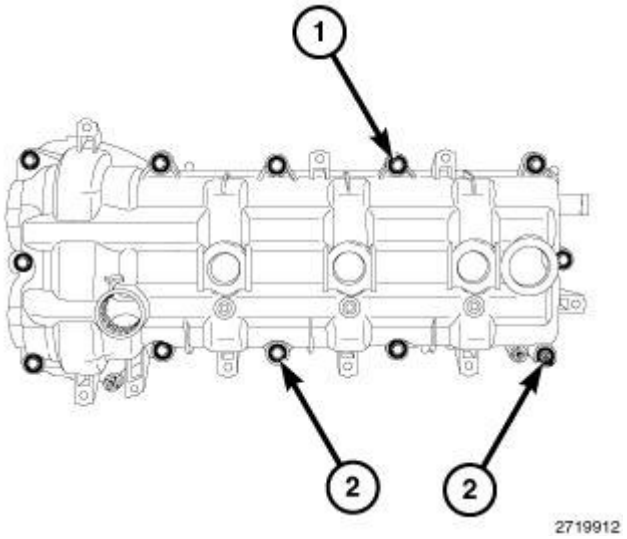

Fig. 724: Cylinder Head Cover Mounting Bolts & Studbolts
Courtesy of CHRYSLER GROUP, LLC

NOTE: **Left cylinder head cover shown in the illustration, right cylinder head cover similar.**

13. Remove the right and left cylinder head covers. Refer to **COVER(S), CYLINDER HEAD,**

 © 2011 Mitchell Repair Information Company, LLC.

REMOVAL.

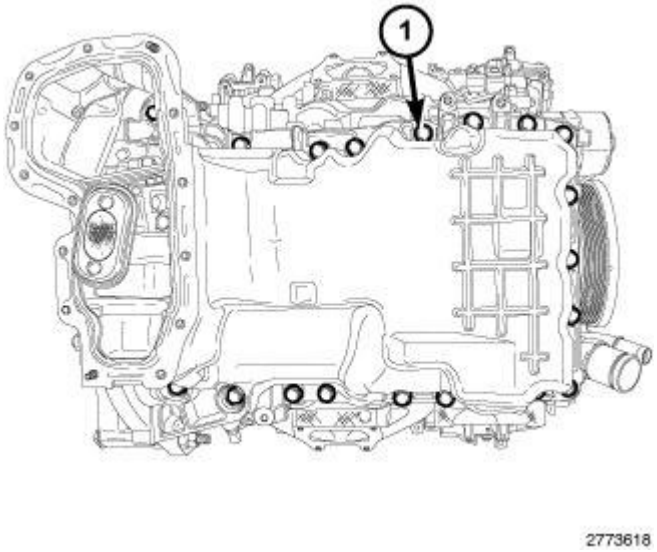

Fig. 725: Oil Pan Mounting Bolts
Courtesy of CHRYSLER GROUP, LLC

14. Remove the upper and lower oil pans. Refer to **PAN, OIL, REMOVAL**.

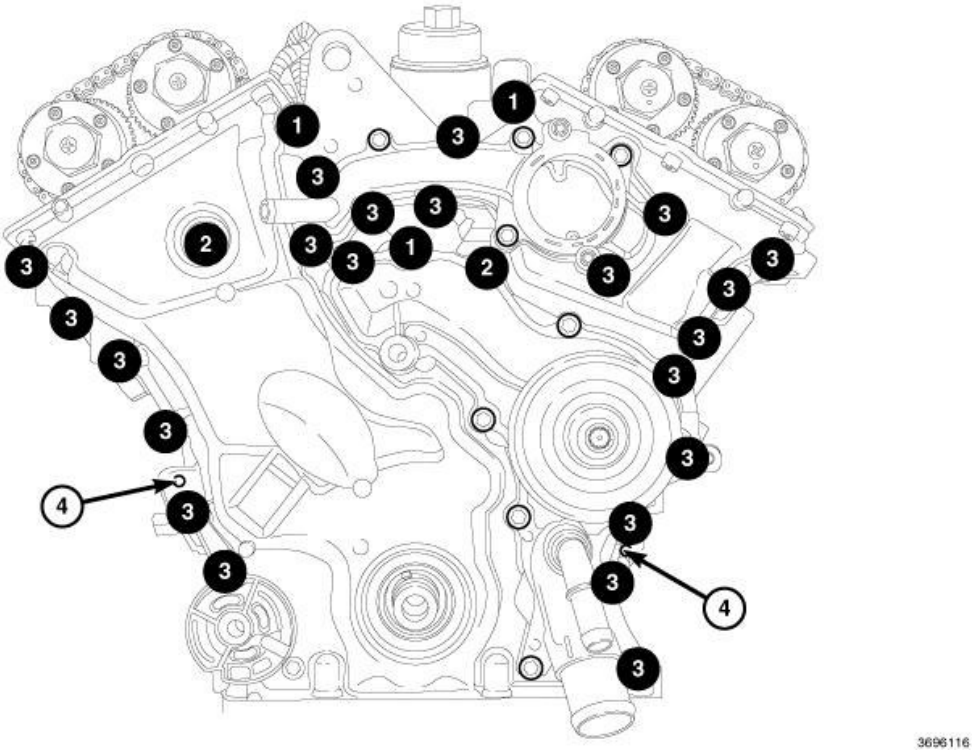

Fig. 726: Timing Cover Bolts
Courtesy of CHRYSLER GROUP, LLC

NOTE: **It is not necessary to remove the water pump or the coolant outlet housing for engine timing cover removal.**

15. Remove the following timing cover attaching bolts:
    - Three M10 bolts (1)
    - Two M8 bolts (2)
    - Twenty-two M6 bolts (3)

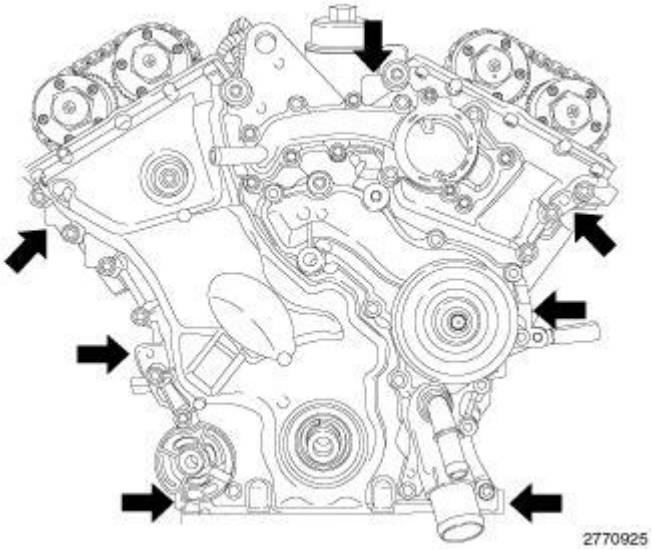

Fig. 727: Timing Cover Removal Pry Points
Courtesy of CHRYSLER GROUP, LLC

16. Using the seven pry points indicated in the illustration, carefully remove the timing cover.

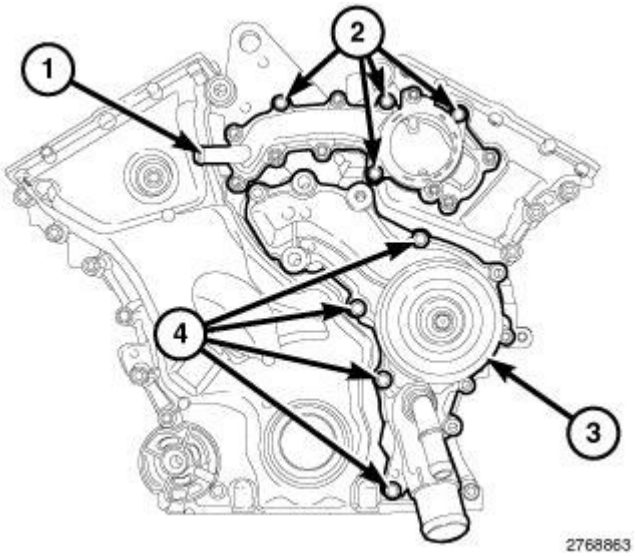

Fig. 728: Coolant Outlet Housing, Water Pump & Bolts
Courtesy of CHRYSLER GROUP, LLC

 © 2011 Mitchell Repair Information Company, LLC.

17. If required, remove the remaining four M6 bolts (2) and the coolant outlet housing (1) from the engine timing cover.
18. If required, remove the remaining four M6 bolts (4) and the water pump (3) from the engine timing cover.

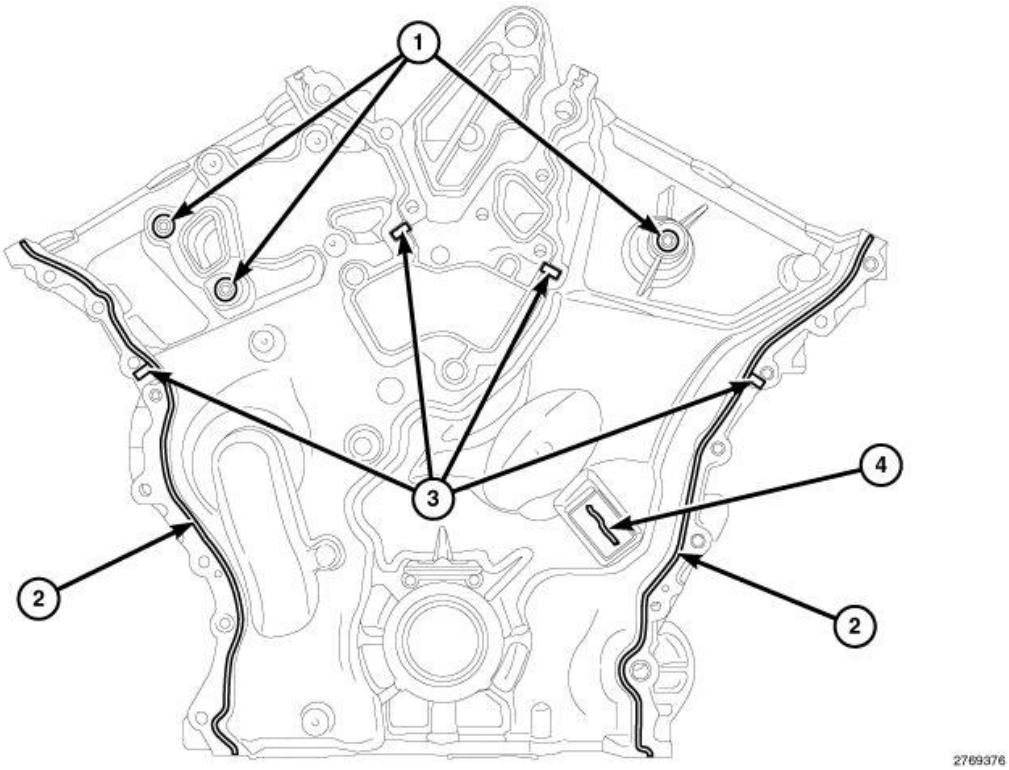

Fig. 729: Sealant At Cylinder Head Bosses, Right & Left Flanges, Cylinder Head-To-Engine Block T-Joints & Cover To Right Cam Chain Tensioner Gap
Courtesy of CHRYSLER GROUP, LLC

CAUTION: Do not use oil based liquids, wire brushes, abrasive wheels or metal scrapers to clean the engine gasket surfaces. Use only isopropyl (rubbing) alcohol, along with plastic or wooden scrapers. Improper gasket surface preparation may result in engine fluid leakage.

19. Remove all residual sealant from the timing chain cover, cylinder head and engine block mating surfaces. Refer to ENGINE **STANDARD PROCEDURE** .

 © 2011 Mitchell Repair Information Company, LLC.

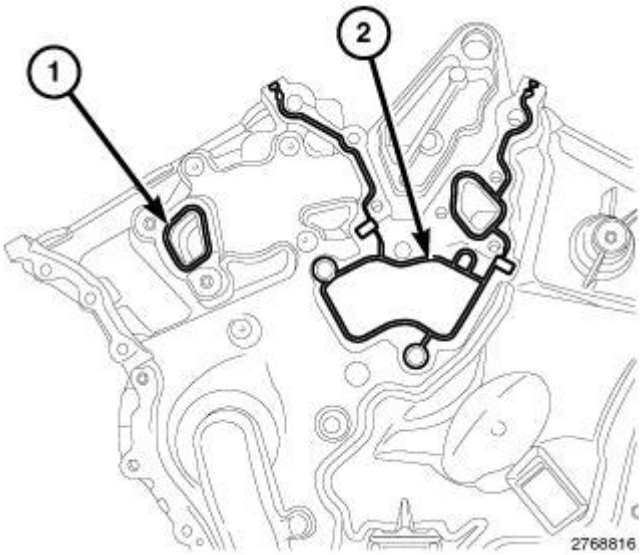

Fig. 730: Coolant Outlet Housing Gasket & Water Pump Gasket
Courtesy of CHRYSLER GROUP, LLC

20. Remove and discard the coolant outlet housing gasket (1) and the water pump gasket (2).

INSTALLATION

INSTALLATION

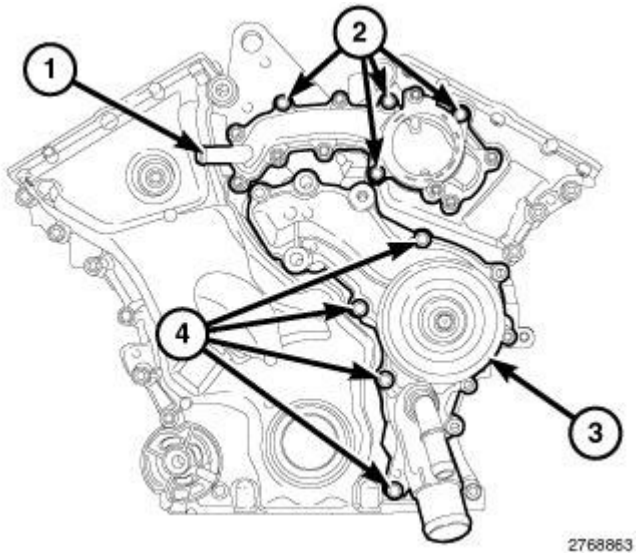

Fig. 731: Coolant Outlet Housing, Water Pump & Bolts
Courtesy of CHRYSLER GROUP, LLC

1. If removed, install the coolant outlet housing (1) to the timing cover with a new gasket using only the four bolts (2) shown in the illustration tightened to 12 N.m (106 in. lbs.).
2. If removed, install the water pump (3) to the timing cover using only the four bolts (4) shown in the illustration tightened to 12 N.m (106 in. lbs.). Refer to **PUMP, WATER, INSTALLATION** .

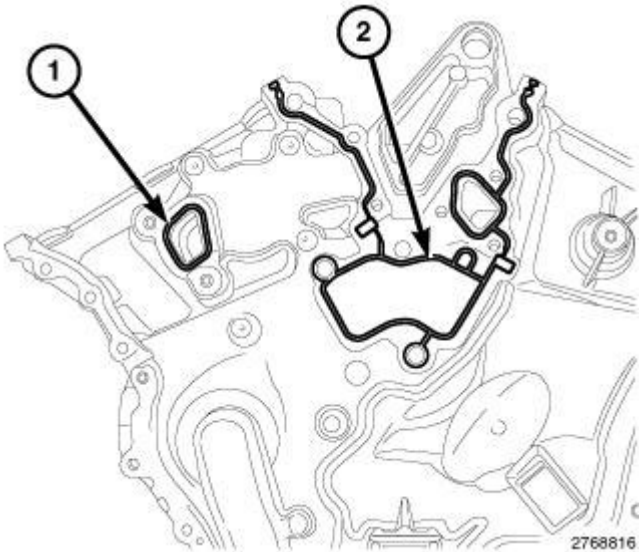

Fig. 732: Coolant Outlet Housing Gasket & Water Pump Gasket
Courtesy of CHRYSLER GROUP, LLC

3. Install the coolant outlet housing gasket (1) and the water pump gasket (2).

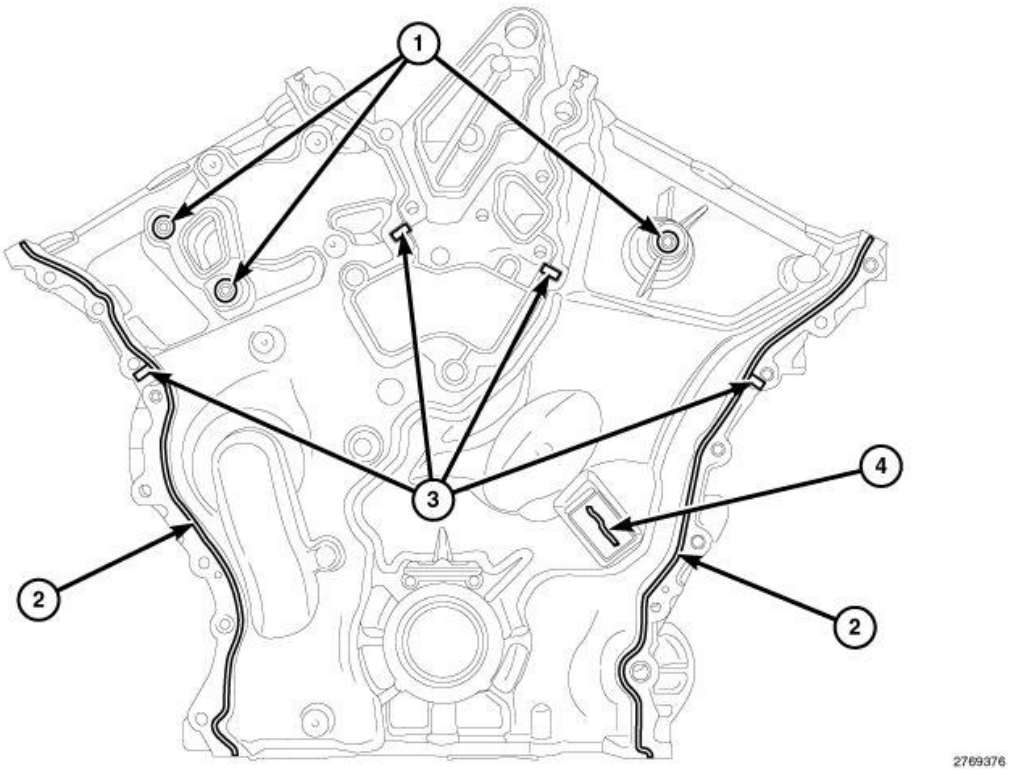

Fig. 733: Sealant At Cylinder Head Bosses, Right & Left Flanges, Cylinder Head-To-Engine Block T-Joints & Cover To Right Cam Chain Tensioner Gap
Courtesy of CHRYSLER GROUP, LLC

4. Clean the engine timing cover, cylinder head and block mating surfaces with isopropyl alcohol in

preparation for sealant application.

CAUTION: Engine assembly requires the use of a unique sealant that is compatible with engine oil. Using a sealant other than Mopar® Threebond Engine RTV Sealant may result in engine fluid leakage.

CAUTION: Following the application of Mopar® Threebond Engine RTV Sealant to the gasket surfaces, the components must be assembled within 20 minutes and the attaching fasteners must be tightened to specification within 45 minutes. Prolonged exposure to the air prior to assembly may result in engine fluid leakage.

5. Apply a 2 to 3 mm wide bead of Mopar® Threebond Engine RTV Sealant to the front cover as shown in the illustration in the following locations:
   - Three cylinder head bosses (1)
   - Right and left flanges (2)
   - Four cylinder head to engine block T-joints (3)
   - Cover to right cam chain tensioner gap (4)
6. Align the locator pins (4) on the engine block to the engine timing cover and install the cover.

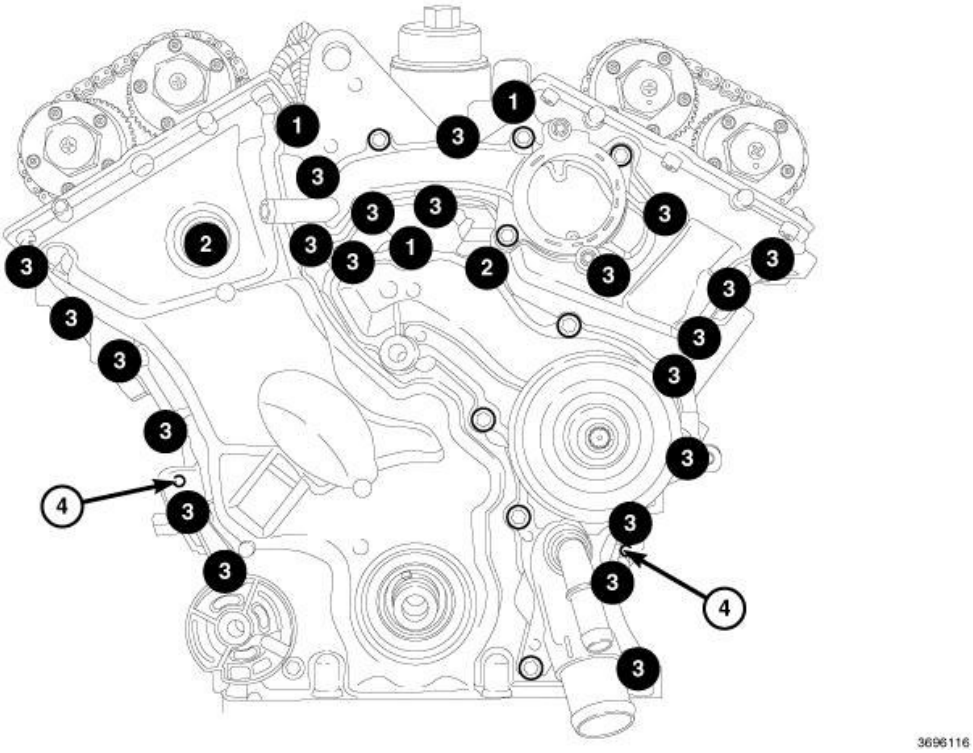

Fig. 734: Timing Cover Bolts
Courtesy of CHRYSLER GROUP, LLC

7. Install and tighten the timing cover attaching bolts:

- Twenty-two M6 bolts (3) to 12 N.m (106 in. lbs.).
- Two M8 bolts (2) to 25 N.m (18 ft. lbs.).
- Three M10 bolts (1) to 55 N.m (41 ft. lbs.)

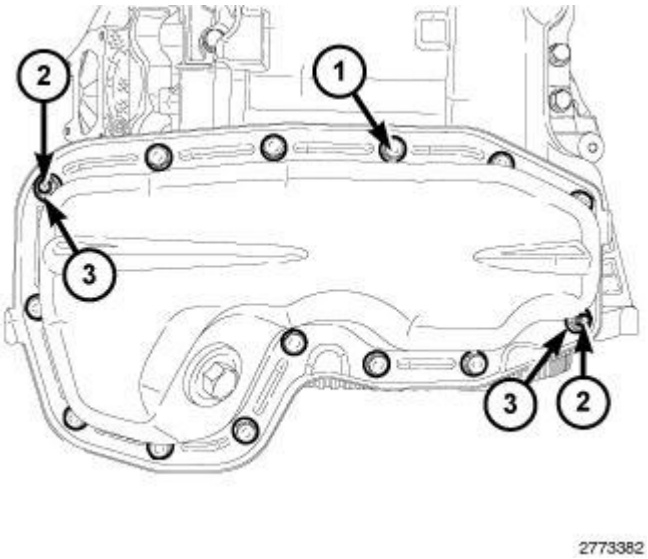

Fig. 735: Lower Oil Pan & Fasteners
Courtesy of CHRYSLER GROUP, LLC

8. Install the upper and lower oil pans. Refer to **PAN, OIL, INSTALLATION**.

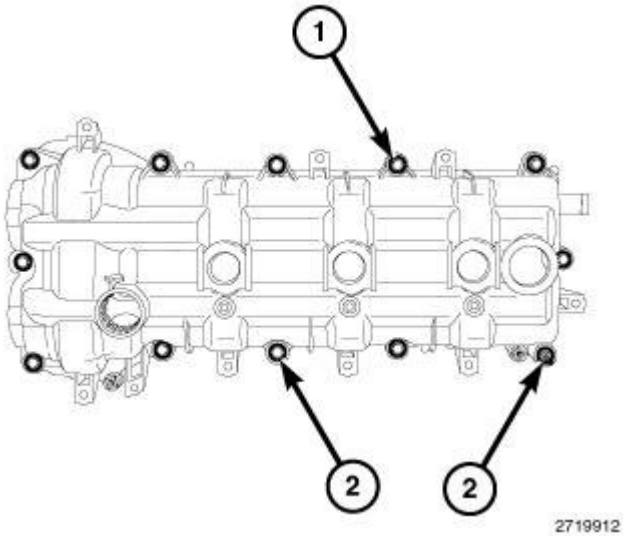

Fig. 736: Cylinder Head Cover Mounting Bolts & Studbolts
Courtesy of CHRYSLER GROUP, LLC

NOTE: **Left cylinder head cover shown in the illustration, right cylinder head cover similar.**

 © 2011 Mitchell Repair Information Company, LLC.

9. Install the right and left cylinder head covers and upper intake manifold. Refer to **COVER(S), CYLINDER HEAD, INSTALLATION**.

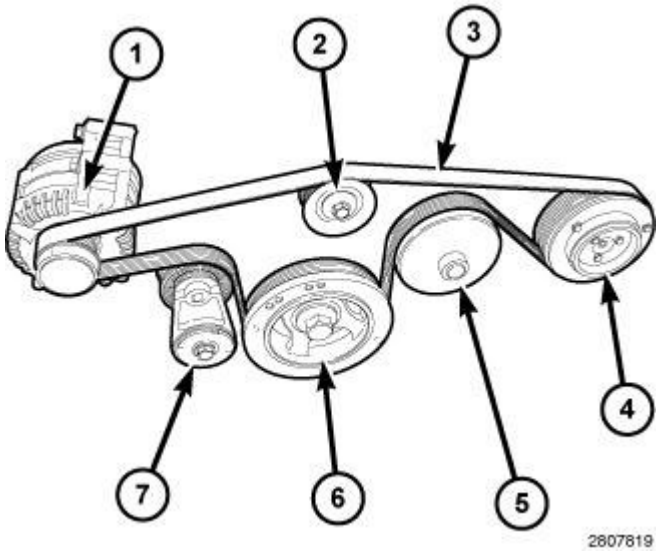

Fig. 737: Idler Pulley, Tensioner Arm, Belt, Idler, Tensioner & Belt Routing
Courtesy of CHRYSLER GROUP, LLC

10. Install the crankshaft vibration damper (6). Refer to **DAMPER, VIBRATION, INSTALLATION**.
11. Install the accessory idler pulley (2). Refer to **PULLEY, IDLER, INSTALLATION** .
12. Install accessory drive belt tensioner (7). Refer to **TENSIONER, BELT, INSTALLATION** .
13. Install the accessory drive belt (3). Refer to **BELT, SERPENTINE, REMOVAL** .

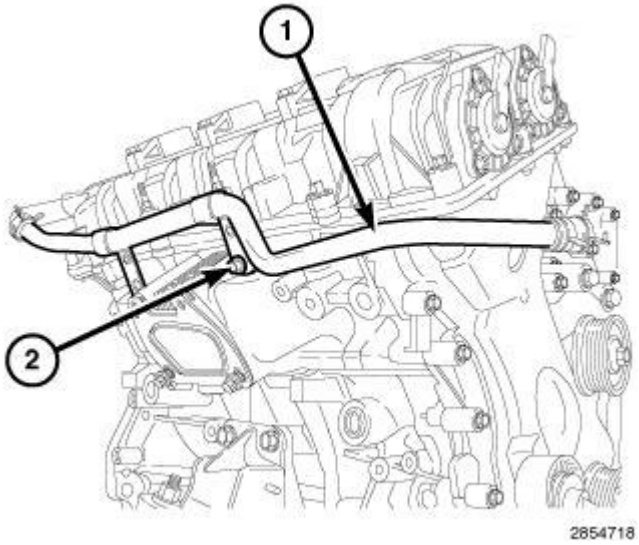

Fig. 738: Heater Core Supply Tube Support Bracket & Retaining Bolt
Courtesy of CHRYSLER GROUP, LLC

14. Install the heater core supply tube (1) with one bolt (2) tightened to 12 N.m (106 in. lbs.).

 © 2011 Mitchell Repair Information Company, LLC.

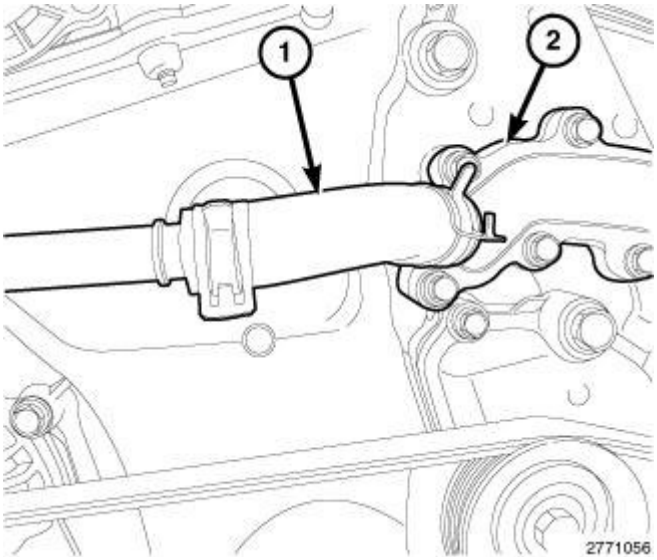

Fig. 739: Heater Core Supply Hose & Coolant Outlet Housing
Courtesy of CHRYSLER GROUP, LLC

15. Install the heater core supply hose (1) to the coolant outlet housing (2).

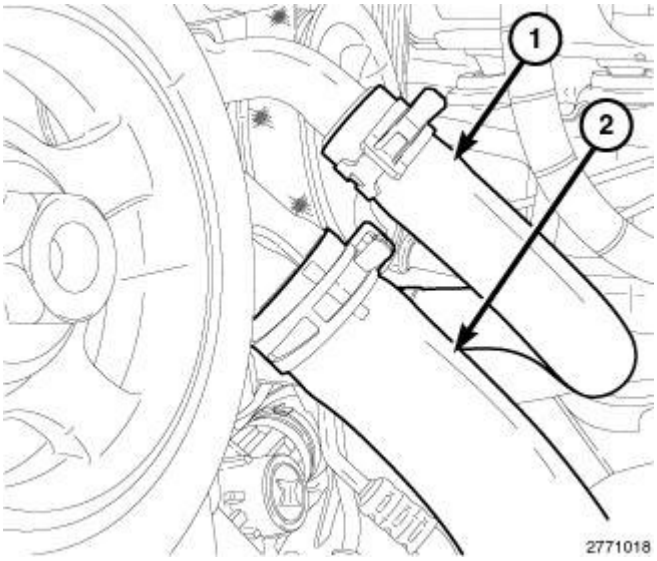

Fig. 740: Radiator Hose & Heater Hose
Courtesy of CHRYSLER GROUP, LLC

16. Install the lower radiator hose (2) to the water pump housing.
17. Install the heater core return hose (1) to the water pump housing.

 © 2011 Mitchell Repair Information Company, LLC.

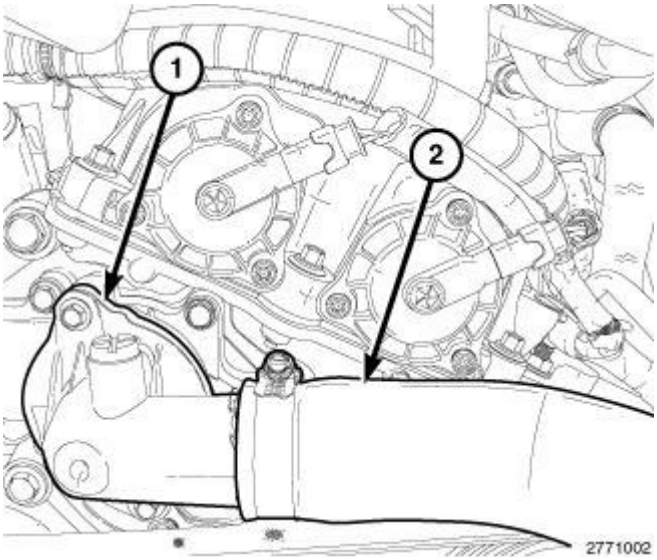

Fig. 741: Upper Radiator Hose & Thermostat Housing
Courtesy of CHRYSLER GROUP, LLC

18. Install the thermostat housing (1) and upper radiator hose (2). Refer to **THERMOSTAT, REMOVAL** .
19. Install the electric vacuum pump. Refer to **PUMP, ELECTRIC VACUUM, INSTALLATION** .
20. If removed, install the oil filter and fill the engine crankcase with the proper oil to the correct level. Refer to ENGINE/LUBRICATION/OIL **STANDARD PROCEDURE** .
21. Connect the negative battery cable and tighten nut to 5 N.m (45 in. lbs.).
22. Fill the cooling system. Refer to **STANDARD PROCEDURE** .
23. Run the engine until it reaches normal operating temperature. Check cooling system for correct fluid level. Refer to **STANDARD PROCEDURE** .

 © 2011 Mitchell Repair Information Company, LLC.