ENGINE

TABLE OF CONTENTS

page

ENGINE 2.4L 1

ENGINE 3.3/3.8L 76

ENGINE 2.4L

TABLE OF CONTENTS

page

ENGINE 2.4L
DESCRIPTION 3
DIAGNOSIS AND TESTING
DIAGNOSIS AND TESTING - ENGINE DIAGNOSIS - INTRODUCTION 3
DIAGNOSIS AND TESTING - ENGINE DIAGNOSIS - PERFORMANCE 4
DIAGNOSIS AND TESTING - ENGINE DIAGNOSIS - MECHANICAL 6
DIAGNOSIS AND TESTING - ENGINE OIL LEAK INSPECTION 8
DIAGNOSIS AND TESTING - CYLINDER COMPRESSION PRESSURE TEST 9
DIAGNOSIS AND TESTING - CYLINDER COMBUSTION PRESSURE LEAKAGE TEST 9
STANDARD PROCEDURE
STANDARD PROCEDURE - ENGINE CORE AND OIL GALLERY PLUGS 10
STANDARD PROCEDURE - REPAIR OF DAMAGED OR WORN THREADS 10
HYDROSTATIC LOCKED ENGINE 10
FORM-IN-PLACE GASKETS AND SEALERS . 11
STANDARD PROCEDURE - ENGINE GASKET SURFACE PREPARATION 11
STANDARD PROCEDURE - MEASURING BEARING CLEARANCE USING PLASTIGAGE 12
REMOVAL - ENGINE ASSEMBLY 12
INSTALLATION - ENGINE ASSEMBLY 14
SPECIFICATIONS
SPECIFICATIONS - 2.4L ENGINE 16
SPECIFICATIONS - TORQUE 20
SPECIAL TOOLS
2.4L ENGINE 21
AIR CLEANER ELEMENT
REMOVAL 24
INSTALLATION 24
AIR CLEANER HOUSING
REMOVAL 25
INSTALLATION 25
CYLINDER HEAD
DESCRIPTION 25
DIAGNOSIS AND TESTING—CYLINDER HEAD GASKET 25
REMOVAL - CYLINDER HEAD 26
CLEANING 26
INSPECTION 27
INSTALLATION - CYLINDER HEAD 27
CAMSHAFT OIL SEAL(S)
REMOVAL 28
INSTALLATION 29
CAMSHAFT(S)
DESCRIPTION 29
OPERATION 29
STANDARD PROCEDURE - MEASURING CAMSHAFT END PLAY 29
REMOVAL 30
CLEANING 30
INSPECTION 30
INSTALLATION 31
CYLINDER HEAD COVER
REMOVAL 31
CLEANING 31
INSPECTION 31
INSTALLATION 32
INTAKE/EXHAUST VALVES & SEATS
DESCRIPTION 33
CLEANING 33
VALVE SPRINGS & SEALS
REMOVAL
REMOVAL - CYLINDER HEAD ON 33
REMOVAL - CYLINDER HEAD OFF 33
INSPECTION 33

INSTALLATION
INSTALLATION - CYLINDER HEAD ON 33
INSTALLATION - CYLINDER HEAD OFF 33
HYDRAULIC LASH ADJUSTERS
DIAGNOSIS AND TESTING - HYDRAULIC LASH ADJUSTER NOISE DIAGNOSIS 34
REMOVAL 35
INSTALLATION 35
ROCKER ARMS
REMOVAL 35
INSPECTION 35
INSTALLATION 35
ENGINE BLOCK
DESCRIPTION 36
STANDARD PROCEDURE - CYLINDER BORE HONING 36
CLEANING 37
INSPECTION 37
CRANKSHAFT
STANDARD PROCEDURE - CRANKSHAFT END PLAY 37
REMOVAL - CRANKSHAFT 37
INSPECTION 38
INSTALLATION - CRANKSHAFT 39
CRANKSHAFT OIL SEAL - FRONT
REMOVAL 41
INSTALLATION 42
CRANKSHAFT OIL SEAL - REAR
REMOVAL 42
INSTALLATION 42
PISTON & CONNECTING ROD
DESCRIPTION 44
STANDARD PROCEDURE - PISTON TO CYLINDER BORE FITTING 44
REMOVAL 44
INSTALLATION 45
CONNECTING ROD BEARINGS
STANDARD PROCEDURE CONNECTING ROD - FITTING 46
PISTON RINGS
STANDARD PROCEDURE PISTON RING - FITTING 47
REMOVAL 47
INSTALLATION 47
VIBRATION DAMPER
REMOVAL 48
INSTALLATION 49
STRUCTURAL COLLAR
REMOVAL 49
INSTALLATION 49
ENGINE MOUNTING
DESCRIPTION 50
FRONT MOUNT
REMOVAL 50
INSTALLATION 50
LEFT MOUNT
REMOVAL 50
INSTALLATION 50
REAR MOUNT
REMOVAL 51
INSTALLATION 52
RIGHT MOUNT
REMOVAL 52
INSTALLATION 52
LUBRICATION
DESCRIPTION 53
OPERATION 53
DIAGNOSIS AND TESTING - CHECKING ENGINE OIL PRESSURE 53
OIL
STANDARD PROCEDURE
ENGINE OIL LEVEL CHECK 54
STANDARD PROCEDURE - ENGINE OIL AND FILTER CHANGE 54
OIL FILTER
DESCRIPTION 54
REMOVAL 54
INSTALLATION 54
OIL PAN
REMOVAL 55
INSTALLATION 55
OIL PRESSURE SWITCH
REMOVAL 56
INSTALLATION 56
OIL PUMP
REMOVAL 56
DISASSEMBLY 57
CLEANING 57
INSPECTION 58
ASSEMBLY 58
INSTALLATION 59
INTAKE MANIFOLD
DESCRIPTION 60
DIAGNOSIS AND TESTING - INTAKE MANIFOLD LEAKS 60
INTAKE MANIFOLD - UPPER
REMOVAL 60
INSPECTION 61
INSTALLATION 61
INTAKE MANIFOLD - LOWER
REMOVAL 62
INSPECTION 62
INSTALLATION 62
EXHAUST MANIFOLD
REMOVAL 63
CLEANING 63
INSPECTION 63
INSTALLATION 63
TIMING BELT COVER(S)
REMOVAL 63
INSTALLATION 64
TIMING BELT AND SPROCKET(S)
REMOVAL
REMOVAL - TIMING BELT 65

REMOVAL - CAMSHAFT SPROCKETS 66
REMOVAL - CRANKSHAFT SPROCKET 66
CLEANING 67
INSTALLATION
INSTALLATION - CRANKSHAFT SPROCKET . 67
INSTALLATION - CAMSHAFT SPROCKETS . . 67
INSTALLATION - TIMING BELT 67
TIMING BELT TENSIONER & PULLEY
REMOVAL 69
INSTALLATION 70
BALANCE SHAFTS AND CARRIER ASSEMBLY
DESCRIPTION 71
OPERATION 71
REMOVAL 71
INSTALLATION 73

ENGINE 2.4L

DESCRIPTION

The 2.4 Liter (148 cu. in.) in-line four cylinder engine is a double over head camshaft with hydraulic lash adjusters and four valve per cylinder design. The engine is free-wheeling; meaning it has provisions for piston-to-valve clearance. However valve-to-valve interference can occur, if camshafts are rotated independently.

The cylinders are numbered from front of the engine to the rear. The firing order is 1–3–4–2.

The engine identification number is located on the rear of the cylinder block (Fig. 1).

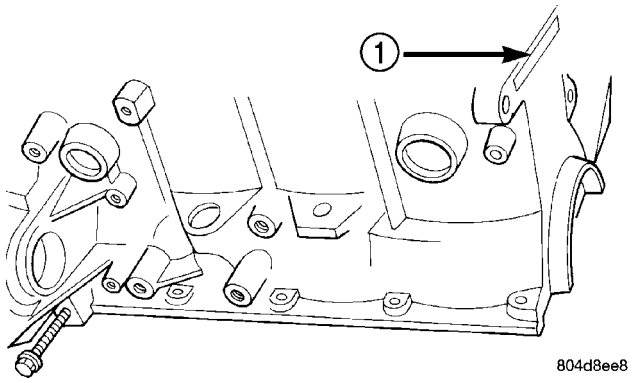

Fig. 1 Engine Identification

1 - ENGINE IDENTIFICATION LOCATION

DIAGNOSIS AND TESTING

DIAGNOSIS AND TESTING - ENGINE DIAGNOSIS - INTRODUCTION

Engine diagnosis is helpful in determining the causes of malfunctions not detected and remedied by routine maintenance.

These malfunctions may be classified as either mechanical (e.g., a strange noise), or performance (e.g., engine idles rough and stalls).

Refer to the Engine Mechanical and the Engine Performance diagnostic charts, for possible causes and corrections of malfunctions (Refer to 9 - ENGINE - DIAGNOSIS AND TESTING - MECHANICAL) (Refer to 9 - ENGINE - DIAGNOSIS AND TESTING - PERFORMANCE).

For fuel system diagnosis, (Refer to 14 - FUEL SYSTEM/FUEL DELIVERY - DIAGNOSIS AND TESTING).

Additional tests and diagnostic procedures may be necessary for specific engine malfunctions that cannot be isolated with the Service Diagnosis charts. Information concerning additional tests and diagnosis is provided within the following:

- Cylinder Compression Pressure Test
- Cylinder Combustion Pressure Leakage Test
- Engine Cylinder Head Gasket Failure Diagnosis
- Intake Manifold Leakage Diagnosis
- Hydraulic Lash Adjuster Noise Diagnosis
- Engine Oil Leak Inspection

ENGINE 2.4L (Continued)

DIAGNOSIS AND TESTING - ENGINE DIAGNOSIS - PERFORMANCE

CONDITION	POSSIBLE CAUSE	CORRECTION
ENGINE WILL NOT START	1. Weak battery.	1. Test battery. Charge or replace as necessary. (Refer to 8 - ELECTRICAL/BATTERY SYSTEM - DIAGNOSIS AND TESTING)
	2. Corroded or loose battery connections.	2. Clean and tighten battery connections. Apply a coat of light mineral grease to terminals.
	3. Faulty starter.	3. Test starting system. (Refer to 8 - ELECTRICAL/STARTING - DIAGNOSIS AND TESTING)
	4. Faulty coil(s) or control unit.	4. Test and replace as needed. (Refer to Appropriate Diagnostic Information)
	5. Incorrect spark plug gap.	5. Set gap. (Refer to 8 - ELECTRICAL/IGNITION CONTROL - SPECIFICATIONS)
	6. Contamination in fuel system.	6. Clean system and replace fuel filter.
	7. Faulty fuel pump.	7. Test fuel pump and replace as needed. (Refer to Appropriate Diagnostic Information)
	8. Incorrect engine timing.	8. Check for a skipped timing belt/chain.
ENGINE STALLS OR IDLES ROUGH	1. Idle speed too low.	1. Test minimum air flow. (Refer to Appropriate Diagnostic Information)
	2. Incorrect fuel mixture.	2. (Refer to Appropriate Diagnostic Information)
	3. Intake manifold leakage.	3. Inspect intake manifold, manifold gasket, and vacuum hoses.
	4. Faulty ignition coil(s).	4. Test and replace as necessary. (Refer to Appropriate Diagnostic Information)

ENGINE 2.4L (Continued)

CONDITION	POSSIBLE CAUSE	CORRECTION
ENGINE LOSS OF POWER	1. Dirty or incorrectly gapped plugs.	1. Clean plugs and set gap.
	2. Contamination in fuel system.	2. Clean system and replace fuel filter.
	3. Faulty fuel pump.	3. Test and replace as necessary. (Refer to Appropriate Diagnostic Information)
	4. Incorrect valve timing.	4. Correct valve timing.
	5. Leaking cylinder head gasket.	5. Replace cylinder head gasket.
	6. Low compression.	6. Test compression of each cylinder.
	7. Burned, warped, or pitted valves.	7. Replace valves.
	8. Plugged or restricted exhaust system.	8. Perform exhaust restriction test. (Refer to 11 - EXHAUST SYSTEM - DIAGNOSIS AND TESTING) Install new parts, as necessary.
	9. Faulty ignition coil(s).	9. Test and replace as necessary. (Refer to Appropriate Diagnostic Information)
ENGINE MISSES ON ACCELERATION	1. Dirty or incorrectly gapped spark plugs.	1. Clean spark plugs and set gap.
	2. Contamination in Fuel System.	2. Clean fuel system and replace fuel filter.
	3. Burned, warped, or pitted valves.	3. Replace valves.
	4. Faulty ignition coil(s).	4. Test and replace as necessary. (Refer to Appropriate Diagnostic Information)
ENGINE MISSES AT HIGH SPEED	1. Dirty or incorrect spark plug gap.	1. Clean spark plugs and set gap.
	2. Faulty ignition coil(s).	2. Test and replace as necessary. (Refer to Appropriate Diagnostic Information)
	3. Dirty fuel injector(s).	3. Test and replace as necessary. (Refer to Appropriate Diagnostic Information)
	4. Contamination in fuel system.	4. Clean system and replace fuel filter.

ENGINE 2.4L (Continued)

DIAGNOSIS AND TESTING - ENGINE DIAGNOSIS - MECHANICAL

CONDITION	POSSIBLE CAUSES	CORRECTION
NOISY VALVES	1. High or low oil level in crankcase.	1. Check and correct engine oil level.
	2. Thin or diluted oil.	2. Change oil to correct viscosity.
	3. Thick oil	3. (a) Change engine oil and filter. (b) Run engine to operating temperature. (c) Change engine oil and filter again.
	4. Low oil pressure.	4. Check and correct engine oil pressure problem.
	5. Dirt in hydraulic lifters/lash adjusters.	5. Replace hydraulic lifters/lash adjusters.
	6. Worn rocker arms.	6. Inspect oil supply to rocker arms.
	7. Worn hydraulic lifters/lash adjusters.	7. Replace hydraulic lifters/lash adjusters.
	8. Worn valve guides.	8. Replace cylinder head assembly.
	9. Excessive runout of valve seats on valve faces.	9. Grind valve seats and valves.
CONNECTING ROD NOISE	1. Insufficient oil supply.	1. Check engine oil level.
	2. Low oil pressure.	2. Check engine oil level. Inspect oil pump relief valve and spring.
	3. Thin or diluted oil.	3. Change oil to correct viscosity.
	4. Thick oil	4. (a) Change engine oil and filter. (b) Run engine to operating temperature. (c) Change engine oil and filter again.
	5. Excessive bearing clearance.	5. Measure bearings for correct clearance. Repair as necessary.
	6. Connecting rod journal out-of-round.	6. Replace crankshaft or grind surface.
	7. Misaligned connecting rods.	7. Replace bent connecting rods.

ENGINE 2.4L (Continued)

CONDITION	POSSIBLE CAUSES	CORRECTION
MAIN BEARING NOISE	1. Insufficient oil supply.	1. Check engine oil level.
	2. Low oil pressure.	2. Check engine oil level. Inspect oil pump relief valve and spring.
	3. Thin or diluted oil.	3. Change oil to correct viscosity.
	4. Thick oil	4. (a) Change engine oil and filter. (b) Run engine to operating temperature. (c) Change engine oil and filter again.
	5. Excessive bearing clearance.	5. Measure bearings for correct clearance. Repair as necessary.
	6. Excessive end play.	6. Check thrust bearing for wear on flanges.
	7. Crankshaft journal out-of-round or worn.	7. Replace crankshaft or grind journals.
	8. Loose flywheel or torque converter.	8. Tighten to correct torque.
OIL PRESSURE DROP	1. Low oil level.	1. Check engine oil level.
	2. Faulty oil pressure sensor/switch.	2. Replace oil pressure sensor/ switch.
	3. Low oil pressure.	3. Check oil pressure sensor/switch and main bearing oil clearance.
	4. Clogged oil filter.	4. Install new oil filter.
	5. Worn parts in oil pump.	5. Replace worn parts or pump.
	6. Thin or diluted oil.	6. Change oil to correct viscosity.
	7. Oil pump relief valve stuck.	7. Remove valve and inspect, clean, or replace.
	8. Oil pump suction tube loose.	8. Remove oil pan and install new tube or clean, if necessary.
	9. Oil pump cover warped or cracked.	9. Install new oil pump.
	10. Excessive bearing clearance.	10. Measure bearings for correct clearance.
OIL LEAKS	1. Misaligned or deteriorated gaskets.	1. Replace gasket(s).
	2. Loose fastener, broken or porous metal part.	2. Tighten, repair or replace the part.
	3. Misaligned or deteriorated cup or threaded plug.	3. Replace as necessary.

ENGINE 2.4L (Continued)

CONDITION	POSSIBLE CAUSES	CORRECTION
OIL CONSUMPTION OR SPARK PLUGS FOULED	1. PCV system malfunction.	1. Check system and repair as necessary. (Refer to 25 - EMISSIONS CONTROL/ EVAPORATIVE EMISSIONS/PCV VALVE - DIAGNOSIS AND TESTING)
	2. Worn, scuffed or broken rings.	2. Hone cylinder bores. Install new rings.
	3. Carbon in oil ring slots.	3. Install new rings.
	4. Rings fitted too tightly in grooves.	4. Remove rings and check grooves. If groove is not proper width, replace piston.
	5. Worn valve guide(s).	5. Replace cylinder head assembly.
	6. Valve stem seal(s) worn or damaged.	6. Replace seal(s).

DIAGNOSIS AND TESTING - ENGINE OIL LEAK INSPECTION

Begin with a thorough visual inspection of the engine, particularly at the area of the suspected leak. If an oil leak source is not readily identifiable, the following steps should be followed:

(1) Do not clean or degrease the engine at this time because some solvents may cause rubber to swell, temporarily stopping the leak.

(2) Add an oil soluble dye (use as recommended by manufacturer). Start the engine and let idle for approximately 15 minutes. Check the oil dipstick to make sure the dye is thoroughly mixed as indicated with a bright yellow color under a black light.

(3) Using a black light, inspect the entire engine for fluorescent dye, particularly at the suspected area of oil leak. If the oil leak is found and identified, repair as necessary.

(4) If dye is not observed, drive the vehicle at various speeds for approximately 24 km (15 miles), and repeat inspection.

(5) **If the oil leak source is not positively identified at this time**, proceed with the air leak detection test method as follows:

- Disconnect the fresh air hose (make-up air) at the cylinder head cover and plug or cap the outlet on the cover.
- Remove the PCV valve hose from the cylinder head cover. Cap or plug the PCV valve outlet on the cover.
- Attach an air hose with pressure gauge and regulator to the dipstick tube.

CAUTION: Do not subject the engine assembly to more than 20.6 kpa (3 PSI) of test pressure.

- Gradually apply air pressure from 1 psi to 2.5 psi maximum while applying soapy water at the suspected source. Adjust the regulator to the suitable test pressure that provides the best bubbles which will pinpoint the leak source. If the oil leak is detected and identified, repair per service manual procedures.
- If the leakage occurs at the crankshaft rear oil seal area, refer to the section, Inspection for Rear Seal Area Leak.

(6) If no leaks are detected, turn off the air supply. Remove the air hose, all plugs, and caps. Install the PCV valve and fresh air hose (make-up air). Proceed to next step.

(7) Clean the oil off the suspect oil leak area using a suitable solvent. Drive the vehicle at various speeds approximately 24 km (15 miles). Inspect the engine for signs of an oil leak by using a black light.

NOTE: If oil leakage is observed at the dipstick tube to block location; remove the tube, clean and reseal using Mopar® Stud & Bearing Mount (press fit tube applications only), and for O-ring style tubes, remove tube and replace the O-ring seal.

INSPECTION FOR REAR SEAL AREA LEAKS

Since it is sometimes difficult to determine the source of an oil leak in the rear seal area of the engine, a more involved inspection is necessary. The following steps should be followed to help pinpoint the source of the leak.

If the leakage occurs at the crankshaft rear oil seal area:

(1) Disconnect the battery.

(2) Raise the vehicle.

ENGINE 2.4L (Continued)

(3) Remove torque converter or clutch housing cover and inspect rear of block for evidence of oil. Use a black light to check for the oil leak. If a leak is present in this area, remove transmission for further inspection.

(a) Circular spray pattern generally indicates seal leakage or crankshaft damage.

(b) Where leakage tends to run straight down, possible causes are a porous block, oil gallery cup plug, bedplate to cylinder block mating surfaces and seal bore. See proper repair procedures for these items.

(4) If no leaks are detected, pressurize the crankcase as previously described.

CAUTION: Do not exceed 20.6 kPa (3 psi).

(5) If the leak is not detected, very slowly turn the crankshaft and watch for leakage. If a leak is detected between the crankshaft and seal while slowly turning the crankshaft, it is possible the crankshaft seal surface is damaged. The seal area on the crankshaft could have minor nicks or scratches that can be polished out with emery cloth.

CAUTION: Use extreme caution when crankshaft polishing is necessary to remove minor nicks and scratches. The crankshaft seal flange is especially machined to complement the function of the rear oil seal.

(6) For bubbles that remain steady with shaft rotation, no further inspection can be done until disassembled.

(7) After the oil leak root cause and appropriate corrective action have been identified, replace component(s) as necessary.

DIAGNOSIS AND TESTING - CYLINDER COMPRESSION PRESSURE TEST

The results of a cylinder compression pressure test can be utilized to diagnose several engine malfunctions.

Ensure the battery is completely charged and the engine starter motor is in good operating condition. Otherwise the indicated compression pressures may not be valid for diagnosis purposes.

(1) Check engine oil level and add oil if necessary.

(2) Drive the vehicle until engine reaches normal operating temperature. Select a route free from traffic and other forms of congestion, observe all traffic laws, and accelerate through the gears several times briskly.

(3) Remove all spark plugs from engine. As spark plugs are being removed, check electrodes for abnormal firing indicators fouled, hot, oily, etc. Record cylinder number of spark plug for future reference.

(4) Remove the Auto Shutdown (ASD) relay from the PDC.

(5) Be sure throttle blade is fully open during the compression check.

(6) Insert compression gauge adaptor Special Tool 8116 or the equivalent, into the #1 spark plug hole in cylinder head. Connect the 0–500 psi (Blue) pressure transducer (Special Tool CH7059) with cable adaptors to the DRBIII®. For Special Tool identification, (Refer to 9 - ENGINE - SPECIAL TOOLS).

(7) Crank engine until maximum pressure is reached on gauge. Record this pressure as #1 cylinder pressure.

(8) Repeat the previous step for all remaining cylinders.

(9) Compression should not be less than 689 kPa (100 psi) and not vary more than 25 percent from cylinder to cylinder.

(10) If one or more cylinders have abnormally low compression pressures, repeat the compression test.

(11) If the same cylinder or cylinders repeat an abnormally low reading on the second compression test, it could indicate the existence of a problem in the cylinder in question. **The recommended compression pressures are to be used only as a guide to diagnosing engine problems. An engine should not be disassembled to determine the cause of low compression unless some malfunction is present.**

DIAGNOSIS AND TESTING - CYLINDER COMBUSTION PRESSURE LEAKAGE TEST

The combustion pressure leakage test provides an accurate means for determining engine condition.

Combustion pressure leakage testing will detect:

- Exhaust and intake valve leaks (improper seating).
- Leaks between adjacent cylinders or into water jacket.
- Any causes for combustion/compression pressure loss.

WARNING: DO NOT REMOVE THE PRESSURE CAP WITH THE SYSTEM HOT AND UNDER PRESSURE BECAUSE SERIOUS BURNS FROM COOLANT CAN OCCUR.

Check the coolant level and fill as required. DO NOT install the pressure cap.

Start and operate the engine until it attains normal operating temperature, then turn the engine OFF.

Clean spark plug recesses with compressed air.

Remove the spark plugs.

Remove the oil filler cap.

Remove the air cleaner.

ENGINE 2.4L (Continued)

Calibrate the tester according to the manufacturer's instructions. The shop air source for testing should maintain 483 kPa (70 psi) minimum, 1,379 kPa (200 psi) maximum, with 552 kPa (80 psi) recommended.

Perform the test procedures on each cylinder according to the tester manufacturer's instructions. While testing, listen for pressurized air escaping through the throttle body, tailpipe and oil filler cap opening. Check for bubbles in the coolant.

All gauge pressure indications should be equal, with no more than 25% leakage per cylinder.

FOR EXAMPLE: At 552 kPa (80 psi) input pressure, a minimum of 414 kPa (60 psi) should be maintained in the cylinder.

STANDARD PROCEDURE

STANDARD PROCEDURE - ENGINE CORE AND OIL GALLERY PLUGS

Using a blunt tool such as a drift and a hammer, strike the bottom edge of the cup plug. With the cup plug rotated, grasp firmly with pliers or other suitable tool and remove plug (Fig. 2).

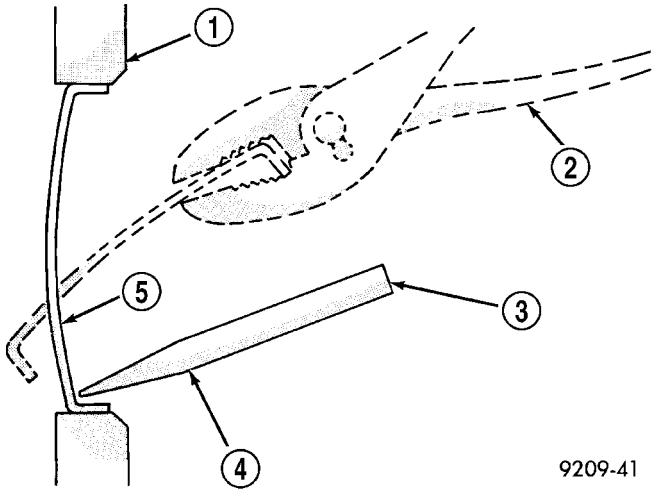

Fig. 2 Core Hole Plug Removal

1 - CYLINDER BLOCK
2 - REMOVE PLUG WITH PLIERS
3 - STRIKE HERE WITH HAMMER
4 - DRIFT PUNCH
5 - CUP PLUG

CAUTION: Do not drive cup plug into the casting as restricted cooling can result and cause serious engine problems.

Thoroughly clean inside of cup plug hole in cylinder block or head. Be sure to remove old sealer. Lightly coat inside of cup plug hole with Mopar® Stud and Bearing Mount. Make certain the new plug is cleaned of all oil or grease. Using proper drive plug, drive plug into hole so that the sharp edge of the plug is at least 0.5 mm (0.020 in.) inside the lead-in chamfer.

It is not necessary to wait for curing of the sealant. The cooling system can be refilled and the vehicle placed in service immediately.

STANDARD PROCEDURE - REPAIR OF DAMAGED OR WORN THREADS

Damaged or worn threads (excluding spark plug and camshaft bearing cap attaching threads) can be repaired. Essentially, this repair consists of drilling out worn or damaged threads, tapping the hole with a special Heli-Coil Tap, (or equivalent) and installing an insert into the tapped hole. This brings the hole back to its original thread size.

CAUTION: Be sure that the tapped holes maintain the original center line.

Heli-Coil tools and inserts are readily available from automotive parts jobbers.

HYDROSTATIC LOCKED ENGINE

When an engine is suspected to be hydrostatically locked, regardless of what caused the problem, the following steps should be used.

CAUTION: DO NOT use starter motor to rotate the engine, severe damage may occur.

(1) Inspect air cleaner, induction system and intake manifold to insure system is dry and clear of foreign material.

(2) Remove negative battery cable.

(3) Place a shop towel around the spark plugs when removing them from the engine. This will catch any fluid that may possibly be in the cylinder under pressure.

(4) With all spark plugs removed, rotate engine crankshaft using a breaker bar and socket.

(5) Identify the fluid in the cylinder(s) (i.e., coolant, fuel, oil or other).

(6) Make sure all fluid has been removed from the cylinders. Inspect engine for damage (i.e., connecting rods, pistons, valves, etc.)

(7) Repair engine or components as necessary to prevent this problem from re-occurring.

CAUTION: Squirt approximately one teaspoon of oil into the cylinders, rotate engine to lubricate the cylinder walls to prevent damage on restart.

(8) Install new spark plugs.

(9) Drain engine oil and remove oil filter.

(10) Install a new oil filter.

ENGINE 2.4L (Continued)

(11) Fill engine with specified amount of approved oil.
(12) Connect negative battery cable.
(13) Start engine and check for any leaks.

FORM-IN-PLACE GASKETS AND SEALERS

There are numerous places where form-in-place gaskets are used on the engine. Care must be taken when applying form-in-place gaskets to assure obtaining the desired results. **Do not use form-in-place gasket material unless specified.** Bead size, continuity, and location are of great importance. Too thin a bead can result in leakage while too much can result in spill-over which can break off and obstruct fluid feed lines. A continuous bead of the proper width is essential to obtain a leak-free gasket.

There are numerous types of form-in-place gasket materials that are used in the engine area. Mopar® Engine RTV GEN II, Mopar® ATF-RTV, and Mopar® Gasket Maker gasket materials, each have different properties and can not be used in place of the other.

MOPAR® ENGINE RTV GEN II is used to seal components exposed to engine oil. This material is a specially designed black silicone rubber RTV that retains adhesion and sealing properties when exposed to engine oil. Moisture in the air causes the material to cure. This material is available in three ounce tubes and has a shelf life of one year. After one year this material will not properly cure. Always inspect the package for the expiration date before use.

MOPAR® ATF RTV is a specifically designed black silicone rubber RTV that retains adhesion and sealing properties to seal components exposed to automatic transmission fluid, engine coolants, and moisture. This material is available in three ounce tubes and has a shelf life of one year. After one year this material will not properly cure. Always inspect the package for the expiration date before use.

MOPAR® GASKET MAKER is an anaerobic type gasket material. The material cures in the absence of air when squeezed between two metallic surfaces. It will not cure if left in the uncovered tube. The anaerobic material is for use between two machined surfaces. Do not use on flexible metal flanges.

MOPAR® BED PLATE SEALANT is a unique (green-in-color) anaerobic type gasket material that is specially made to seal the area between the bed plate and cylinder block without disturbing the bearing clearance or alignment of these components. The material cures slowly in the absence of air when torqued between two metallic surfaces, and will rapidly cure when heat is applied.

MOPAR® GASKET SEALANT is a slow drying, permanently soft sealer. This material is recommended for sealing threaded fittings and gaskets against leakage of oil and coolant. Can be used on threaded and machined parts under all temperatures. This material is used on engines with multi-layer steel (MLS) cylinder head gaskets. This material also will prevent corrosion. Mopar® Gasket Sealant is available in a 13 oz. aerosol can or 4oz./16 oz. can w/applicator.

SEALER APPLICATION

Mopar® Gasket Maker material should be applied sparingly 1 mm (0.040 in.) diameter or less of sealant to one gasket surface. Be certain the material surrounds each mounting hole. Excess material can easily be wiped off. Components should be torqued in place within 15 minutes. The use of a locating dowel is recommended during assembly to prevent smearing material off the location.

Mopar® Engine RTV GEN II or ATF RTV gasket material should be applied in a continuous bead approximately 3 mm (0.120 in.) in diameter. All mounting holes must be circled. For corner sealing, a 3.17 or 6.35 mm (1/8 or 1/4 in.) drop is placed in the center of the gasket contact area. Uncured sealant may be removed with a shop towel. Components should be torqued in place while the sealant is still wet to the touch (within 10 minutes). The usage of a locating dowel is recommended during assembly to prevent smearing material off the location.

Mopar® Gasket Sealant in an aerosol can should be applied using a thin, even coat sprayed completely over both surfaces to be joined, and both sides of a gasket. Then proceed with assembly. Material in a can w/applicator can be brushed on evenly over the sealing surfaces. Material in an aerosol can should be used on engines with multi-layer steel gaskets.

STANDARD PROCEDURE - ENGINE GASKET SURFACE PREPARATION

To ensure engine gasket sealing, proper surface preparation must be performed, especially with the use of aluminum engine components and multi-layer steel cylinder head gaskets.

Never use the following to clean gasket surfaces:

- Metal scraper
- Abrasive pad or paper to clean cylinder block and head
- High speed power tool with an abrasive pad or a wire brush (Fig. 3)

NOTE: Multi-Layer Steel (MLS) head gaskets require a scratch free sealing surface.

Only use the following for cleaning gasket surfaces:

- Solvent or a commercially available gasket remover
- Plastic or wood scraper (Fig. 3)

ENGINE 2.4L (Continued)

• Drill motor with 3M Roloc™ Bristle Disc (white or yellow) (Fig. 3)

CAUTION: Excessive pressure or high RPM (beyond the recommended speed), can damage the sealing surfaces. The mild (white, 120 grit) bristle disc is recommended. If necessary, the medium (yellow, 80 grit) bristle disc may be used on cast iron surfaces with care.

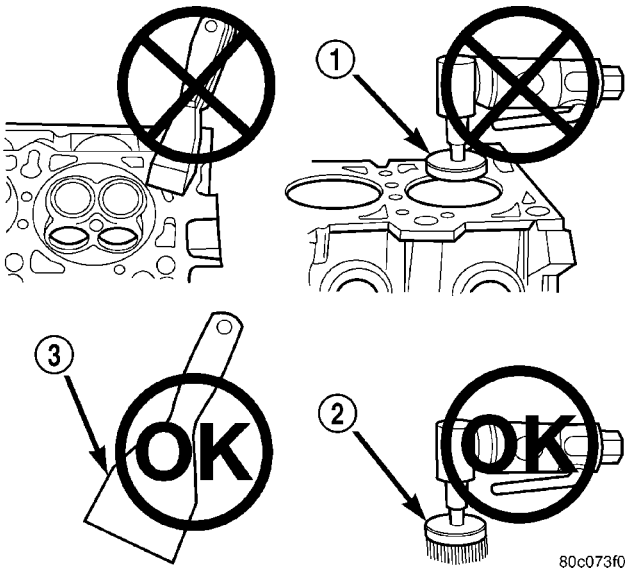

Fig. 3 Proper Tool Usage For Surface Preparation

1 - ABRASIVE PAD
2 - 3M ROLOC™ BRISTLE DISC
3 - PLASTIC/WOOD SCRAPER

STANDARD PROCEDURE - MEASURING BEARING CLEARANCE USING PLASTIGAGE

Engine crankshaft bearing clearances can be determined by use of Plastigage or equivalent. The following is the recommended procedure for the use of Plastigage:

(1) Remove oil film from surface to be checked. Plastigage is soluble in oil.

(2) Place a piece of Plastigage across the entire width of the bearing shell in the cap approximately 6.35 mm (1/4 in.) off center and away from the oil holes (Fig. 4). (In addition, suspected areas can be checked by placing the Plastigage in the suspected area). Torque the bearing cap/bed plate bolts of the bearing being checked to the proper specifications.

(3) Remove the bearing cap and compare the width of the flattened Plastigage with the metric scale provided on the package. Locate the band closest to the same width. This band shows the amount of clearance in thousandths of a millimeter. Differences in readings between the ends indicate the amount of taper present. Record all readings taken. Compare the clearance measurements to specsifications found in the engine specifications table(Refer to

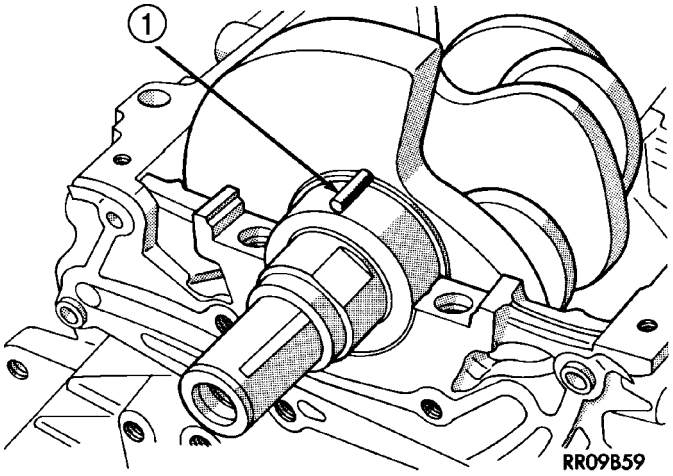

Fig. 4 Plastigage Placed in Lower Shell—Typical

1 - PLASTIGAGE

9 - ENGINE - SPECIFICATIONS). **Plastigage generally is accompanied by two scales. One scale is in inches, the other is a metric scale.**

NOTE: Plastigage is available in a variety of clearance ranges. Use the most appropriate range for the specifications you are checking.

(4) Install the proper crankshaft bearings to achieve the specified bearing clearances.

REMOVAL - ENGINE ASSEMBLY

(1) Perform fuel pressure release procedure (Refer to 14 - FUEL SYSTEM/FUEL DELIVERY - STANDARD PROCEDURE)

(2) Disconnect battery negative cable.

(3) Remove air cleaner housing and inlet tube.

(4) Disconnect the fuel line from fuel rail. (Refer to 14 - FUEL SYSTEM/FUEL DELIVERY/FUEL LINES - STANDARD PROCEDURE)

(5) Disconnect all vacuum hoses.

(6) Drain cooling system. (Refer to 7 - COOLING - STANDARD PROCEDURE)

(7) Remove radiator fans. (Refer to 7 - COOLING/ENGINE/RADIATOR FAN - REMOVAL)

(8) Remove radiator upper and lower hoses.

NOTE: When the transaxle cooler lines are removed from the rolled-groove type fittings at the transaxle, damage to the inner wall of the hose will occur. To prevent prevent potential leakage, the cooler hoses must be cut off flush at the transaxle fitting, and a service cooler hose splice kit must be installed upon reassembly.

ENGINE 2.4L (Continued)

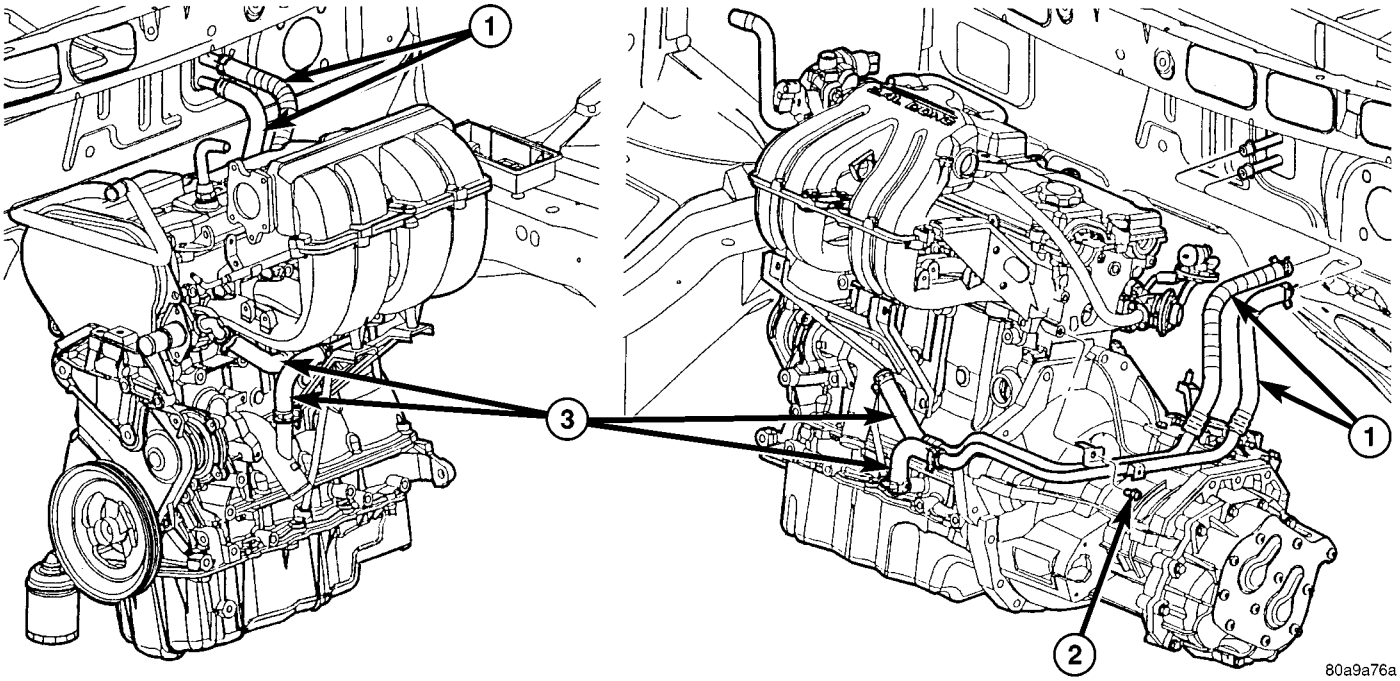

Fig. 5 HEATER HOSES - 2.4L

1 - HEATER HOSES TO HEATER
2 - BOLT - HEATER TUBE SUPPORT
3 - HEATER HOSE TO ENGINE - SUPPLY AND RETURN

(9) Using a blade or suitable hose cutter, cut transaxle oil cooler lines off flush with fittings. Plug cooler lines and fittings to prevent debris from entering transaxle or cooler circuit. A service splice kit will be installed upon reassembly.

(10) Disconnect transmission shift linkage and electrical connectors.

(11) Disconnect throttle body linkage.

(12) Disconnect engine wiring harness.

(13) Disconnect heater hoses from heater (Fig. 5).

(14) Discharge air conditioning system. (Refer to 24 - HEATING & AIR CONDITIONING/PLUMBING - STANDARD PROCEDURE)

(15) Hoist vehicle and remove front wheels and tires.

(16) Remove accessory drive belt splash shield.

(17) Remove accessory drive belts. (Refer to 7 - COOLING/ACCESSORY DRIVE/DRIVE BELTS - REMOVAL)

(18) Remove axle shafts. (Refer to 3 - DIFFERENTIAL & DRIVELINE/HALF SHAFT - REMOVAL)

(19) Drain engine oil and remove oil filter. (Refer to 9 - ENGINE/LUBRICATION/OIL - STANDARD PROCEDURE)

(20) Remove crossmember cradle plate (Fig. 6).

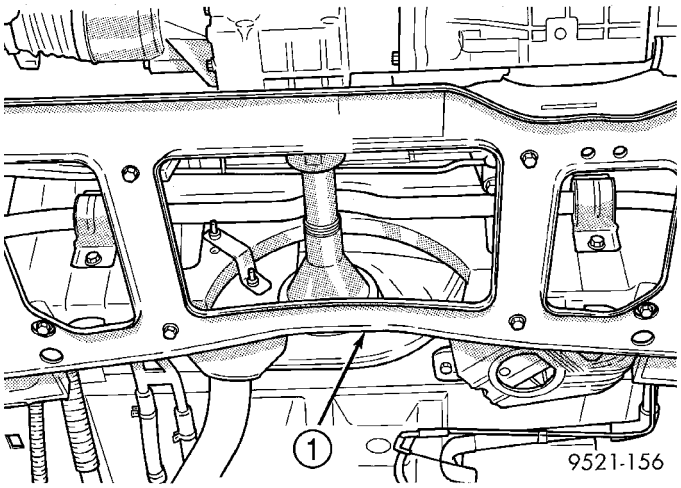

Fig. 6 Crossmember Cradle Plate

1 - CRADLE PLATE

ENGINE 2.4L (Continued)

(21) Disconnect exhaust pipe from manifold (Fig. 7).

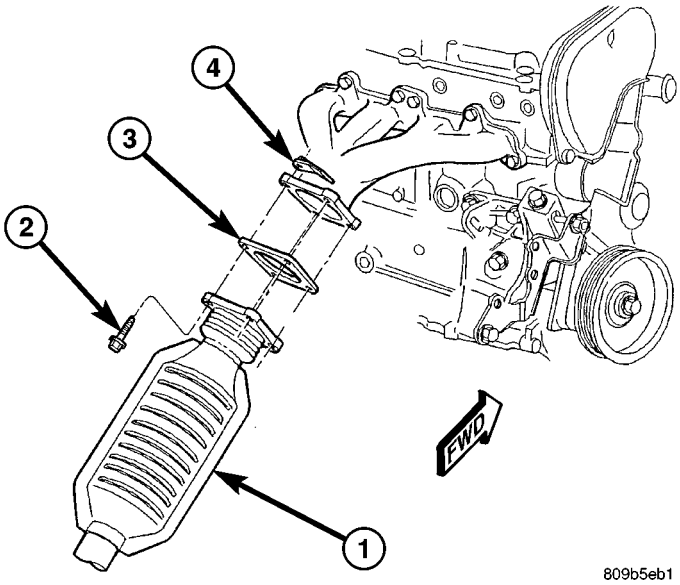

Fig. 7 Catalytic Converter to Exhaust Manifold

1 - CATALYTIC CONVERTER
2 - BOLT
3 - GASKET
4 - FLAG NUT

(22) Remove engine front mount and bracket from engine. (Refer to 9 - ENGINE/ENGINE MOUNTING/FRONT MOUNT - REMOVAL)

(23) Remove structural collar. (Refer to 9 - ENGINE/ENGINE BLOCK/STRUCTURAL COVER - REMOVAL)

(24) Remove rear engine mount bracket. (Refer to 9 - ENGINE/ENGINE MOUNTING/REAR MOUNT - REMOVAL)

(25) Mark flex plate to torque converter and remove torque converter bolts.

(26) Pinch-off power steering supply hose at pump. Remove hose from pump.

(27) Remove and set aside the power steering pump and bracket. Do not disconnect pressure line.

(28) Lower vehicle.

(29) Remove A/C lines at compressor and cap openings.

(30) Remove engine ground straps (strap at engine right mount and at starter).

(31) Raise vehicle enough to allow engine dolly Special Tool 6135, cradle Special Tool 6710 with Posts Special Tool 6848 to be installed under vehicle (Fig. 8).

(32) Loosen cradle posts to allow movement for proper positioning. Locate two rear posts (right side of engine) into the holes on the engine bedplate. Locate the two front posts (left side of engine) on the oil pan rails (Fig. 8). Lower vehicle and position cradle mounts until the engine is resting on mounts. Tighten mounts to cradle frame. This will keep mounts from moving when removing or installing engine and transmission.

(33) Install safety straps around the engine to cradle. Tighten straps and lock.

(34) Lower vehicle so the weight of **ONLY THE ENGINE AND TRANSMISSION** are on the cradle.

(35) Remove engine and transmission mount bolts.

(36) Raise vehicle slowly. It may be necessary to move the engine/transmission assembly with the dolly to allow for removal around the body.

INSTALLATION - ENGINE ASSEMBLY

(1) Position engine and transmission assembly under vehicle and slowly lower the vehicle over the engine and transmission.

(2) Align engine and transmission mounts to attaching points. Install mounting bolts at the right (Fig. 9) and left mounts (Fig. 10).

(3) Remove safety straps.

(4) Slowly raise vehicle enough to remove the engine dolly and cradle Special Tools 6135 and 6710.

(5) Install rear mount bracket and rear mount through bolt. (Refer to 9 - ENGINE/ENGINE MOUNTING/REAR MOUNT - INSTALLATION)

(6) Install the flex plate to torque converter bolts.

(7) Install structural collar. (Refer to 9 - ENGINE/ENGINE BLOCK/STRUCTURAL COVER - INSTALLATION)

(8) Install front mount bracket and front mount through bolt. (Refer to 9 - ENGINE/ENGINE MOUNTING/FRONT MOUNT - INSTALLATION)

(9) Connect exhaust system to manifold (Fig. 7).

(10) Install crossmember cradle plate (Fig. 6).

(11) Install new oil filter.

(12) Install power steering pump and bracket.

(13) Connect power steering supply line to pump and remove pinch-off pliers.

(14) Connect A/C compressor hoses to compressor.

(15) Install accessory drive belts. (Refer to 7 - COOLING/ACCESSORY DRIVE/DRIVE BELTS - INSTALLATION)

(16) Install axle shafts. (Refer to 3 - DIFFERENTIAL & DRIVELINE/HALF SHAFT - INSTALLATION)

(17) Install accessory drive belt splash shield.

(18) Install front wheels and tires.

(19) Remove plugs from transmission cooler hoses and install transaxle oil cooler line service splice kit. Refer to instructions included with kit.

(20) Connect the transaxle shift linkage and electrical connectors.

(21) Connect heater hoses (Fig. 5).

(22) Install ground straps.

(23) Connect all engine and throttle body electrical connections.

ENGINE 2.4L (Continued)

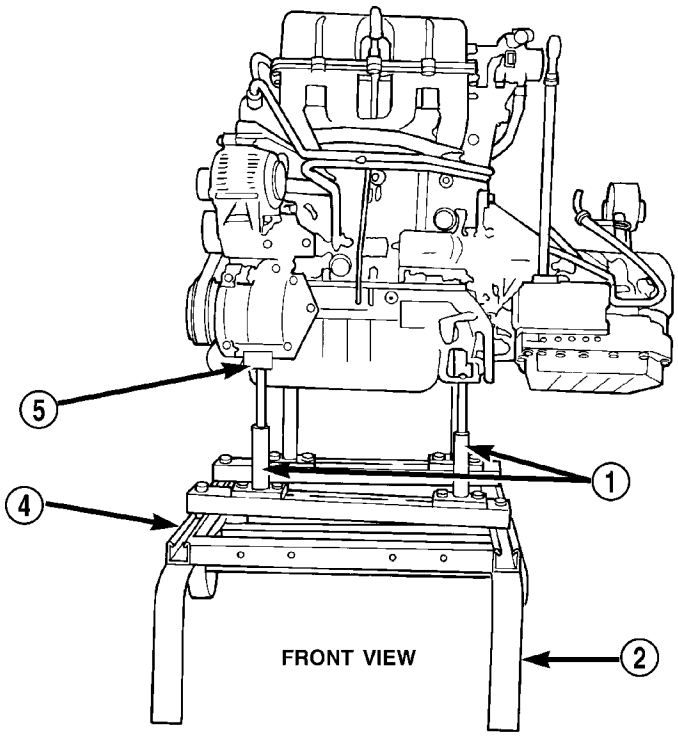

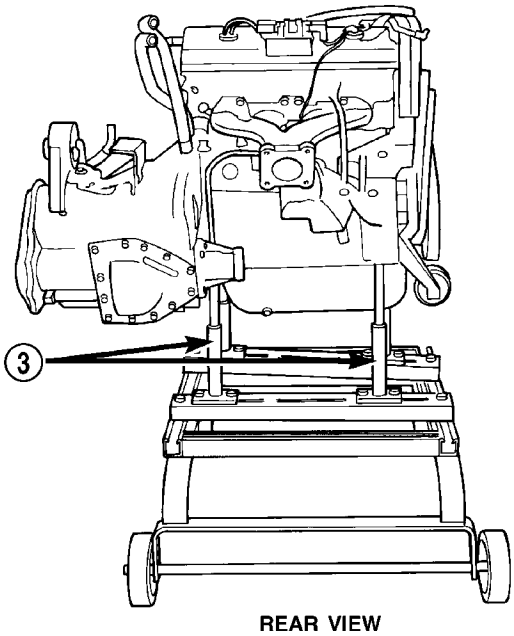

80a624d9

Fig. 8 Positioning Engine Cradle Support Post Mounts

1 - SPECIAL TOOL POSTS 6848
2 - SPECIAL TOOL 6135 DOLLY
3 - SPECIAL TOOL POSTS 6848
4 - SPECIAL TOOL 6710 CRADLE
5 - SPECIAL TOOL 6848 - POST CONTACT ON PAN RAIL

ENGINE 2.4L (Continued)

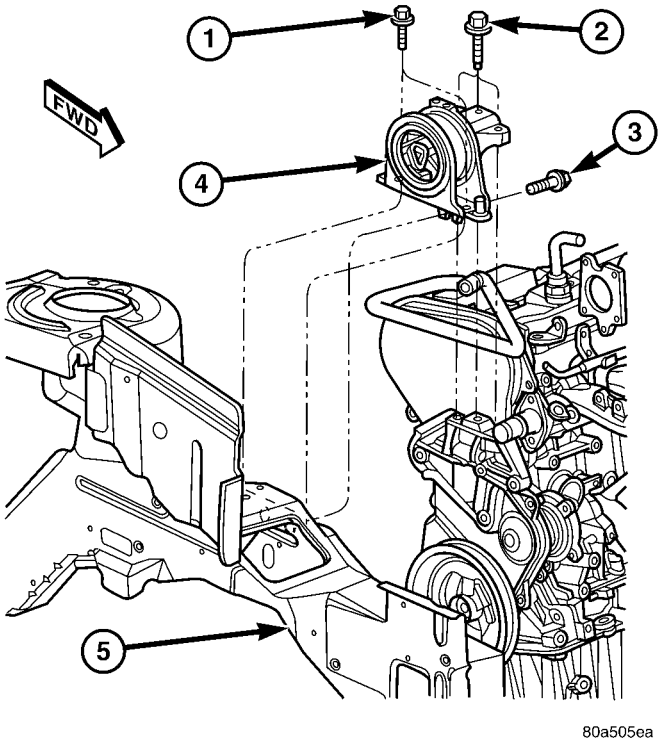

Fig. 9 RIGHT MOUNT TO RAIL AND ENGINE

1 - BOLT - MOUNT TO RAIL 68 N·m (50 ft. lbs.)
2 - BOLT - MOUNT TO ENGINE 54 N·m (40 ft. lbs.)
3 - BOLT - MOUNT TO RAIL (HORIZONTAL) 68 N·m (50 ft. lbs.)
4 - RIGHT ENGINE MOUNT
5 - RIGHT FRAME RAIL

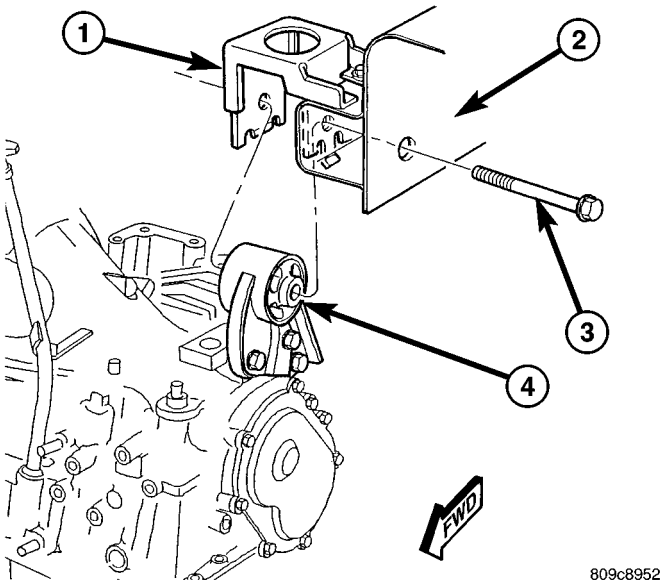

Fig. 10 LEFT MOUNT TO FRAME BRACKET

1 - FRAME BRACKET
2 - FRAME RAIL - LEFT
3 - BOLT
4 - TRANSAXLE MOUNT

(24) Connect all vacuum lines.
(25) Connect the throttle cables.
(26) Connect the fuel line. (Refer to 14 - FUEL SYSTEM/FUEL DELIVERY/QUICK CONNECT FITTING - STANDARD PROCEDURE)
(27) Connect radiator lower and upper hoses.
(28) Install radiator fans. (Refer to 7 - COOLING/ENGINE/RADIATOR FAN - INSTALLATION)
(29) Fill cooling system. (Refer to 7 - COOLING - STANDARD PROCEDURE)
(30) Connect battery cables.
(31) Install air cleaner and inlet hose.
(32) Fill engine crankcase with proper oil to correct level.
(33) Start engine and run until operating temperature is reached.
(34) Adjust transmission linkage, if necessary.

SPECIFICATIONS

SPECIFICATIONS - 2.4L ENGINE

GENERAL SPECIFICATIONS

DESCRIPTION	SPECIFICATION	
Type	In-Line OHV, DOHC	
Number of Cylinders	4	
Firing Order	1-3-4-2	
Compression Ratio	9.5:1	
Max. Variation Between Cylinders	25%	
	Metric	**Standard**
Displacement	2.4 Liters	148 cu. in.
Bore	87.5 mm	3.445 in.
Stroke	101.0 mm	3.976 in.
Compression Pressure	1172-1551 kPa	170-225 psi

CYLINDER BLOCK

DESCRIPTION	SPECIFICATIONS	
	Metric	**Standard**
Cylinder Bore Diameter	87.4924 - 87.5076 mm	3.4446 - 3.4452 in.
Out-of-Round (Max.)	0.051 mm	0.002 in.
Taper (Max.)	0.051 mm	0.002 in.

ENGINE 2.4L (Continued)

PISTONS

DESCRIPTION	SPECIFICATION	
	Metric	Standard
Piston Diameter	87.463 - 87.481 mm	3.4434 -3.4441 in.
Clearance @ 14 mm (0.551 in.) from bottom of skirt	0.024 - 0.057 mm	0.0009 - 0.0022 in.
Weight	331 - 339 grams	11.67- 11.95 oz.
Land Clearance (Diametrical)	0.614 - 0.664 mm	0.024 - 0.026 in.
Piston Length	66.25 mm	2.608 in.
Piston Ring Groove Depth No. 1	4.640 - 4.784 mm	0.182 - 0.188 in.
Piston Ring Groove Depth No. 2	4.575 - 4.719 mm	(0.180 - 0.185 in.)
Piston Ring Groove Depth No. 3	4.097 - 4.236 mm	0.161 - 0.166 in.

PISTON PINS

DESCRIPTION	SPECIFICATION	
	Metric	Standard
Clearance in Piston	0.005 - 0.018 mm	0.0002 - 0.0008 in.
Clearance in Connecting Rod	Interference	
Diameter	21.998 - 22.003 mm	0.8660 - 0.8662 in.
End Play	None	
Length	72.75 - 73.25 mm	2.864 - 2.883 in.

PISTON RINGS

DESCRIPTION	SPECIFICATION	
	Metric	Standard
Ring Gap		
Top Compression Ring	0.25 - 0.51 mm	0.0098 - 0.020 in.
Wear Limit	0.8 mm	0.031 in.
2nd Compression Ring	0.23 - 0.48 mm	0.009 - 0.018 in.
Wear Limit	0.8 mm	0.031 in.
Oil Control Steel Rails	0.25 - 0.64 mm	0.0098 - 0.025 in.
Wear Limit	1.00 mm	0.039 in.
Compression Rings	0.030 - 0.080 mm	0.0011 - 0.0031 in.
Wear Limit	0.10 mm	0.004 in.
Ring Side Clearance - Oil Ring Pack	0.012 - 0.178 mm	0.0004 - 0.0070 in.
Ring Width - Compression Rings	1.47 - 1.50 mm	0.057 - 0.059 in.
Ring Width - Oil Ring Pack	2.72 - 2.88 mm	0.107 - 0.1133 in.

CONNECTING ROD

DESCRIPTION	SPECIFICATION	
	Metric	Standard
Bearing Clearance	0.025 - 0.071 mm	0.0009 - 0.0027 in.
Wear Limit	0.075 mm	0.003 in.
Bore Diameter - Piston Pin	20.96 - 20.98 mm	0.8252 - 0.8260 in.
Bore Diameter - Crankshaft End	53.007 - 52.993 mm	2.0868 - 2.0863 in.
Side Clearance	0.13 - 0.38 mm	0.005 - 0.015 in.
Wear Limit	0.40 mm	0.016 in.
Weight - Total (Less Bearing)	565.8 grams	19.96 oz.

ENGINE 2.4L (Continued)

CRANKSHAFT

DESCRIPTION	SPECIFICATION	
	Metric	Standard
Connecting Rod Journal Diameter	49.984 - 50.000 mm	1.968 - 1.9685 in.
Main Bearing Journal Diameter	59.992 - 60.008 mm	2.362 - 2.3625 in.
Journal Out-of-Round (Max.)	0.0035 mm	0.0003 in.
Journal Taper (Max.)	0.007 mm	0.0001 in.
End Play	0.09 - 0.24 mm	0.0035 - 0.0094 in.
Wear Limit	0.38 mm	0.015 in.
Main Bearing Diametrical Clearance	0.018 - 0.062 mm	0.0007 - 0.0024 in.

HYDRAULIC LASH ADJUSTER

DESCRIPTION	SPECIFICATION	
	Metric	Standard
Body Diameter	15.901 - 15.913 mm	0.626 - 0.6264 in.
Plunger Travel Minimum (Dry)	3.0 mm	0.118 in.

CYLINDER HEAD CAMSHAFT BEARING BORE DIAMETER

DSECRIPTION	SPECIFICATION	
	Metric	Standard
Journals No.1 - 6	26.020 - 26.041 mm	1.024 - 1.025 in.

CAMSHAFT

DESCRIPTION	SPECIFICATION	
	Metric	Standard
Journal Diameter No. 1 - 6	25.951 - 25.970 mm	1.021 - 1.022 in.
Bearing Clearance - Diametrical	0.069 - 0.071 mm	0.0027 - 0.003 in.
End Play	0.05 - 0.17 mm	0.0019 - 0.0066 in.
Lift (Zero Lash)		
Intake	8.25 mm	0.324 in.
Exhaust	6.60 mm	0.259 in.
Intake Valve Timing*		
Closes (ABDC)	51°	
Opens (BTDC)	1°	
Duration	232°	
Exhaust Valve Timing*		
Closes (ATDC)	7°	
Opens (BBDC)	47°	
Duration	234°	
Valve Overlap	8°	

*
All reading in degrees. Timing points @4° from top of ramp.

CYLINDER HEAD

DESCRIPTION	SPECIFICATION	
	Metric	Standard
Material	Cast Aluminum	
Gasket Thickness (Compressed)	0.71 mm	0.028 in.

ENGINE 2.4L (Continued)

VALVE SEAT

DESCRIPTION	SPECIFICATION	
	Metric	Standard
Angle	44.5 - 45°	
Seat Diameter - Intake	34.37 - 34.63 mm	1.353 - 1.363 in.
Seat Diameter - Exhaust	27.06 - 27.32 mm	1.065 - 1.075 in.
Runout (Max.)	0.05 mm	0.002 in.
Valve Seat Width - Intake and Exhaust	0.9 - 1.3 mm	0.035 - 0.051 in.
Service Limit - Intake	2.0 mm	0.079 in.
Service Limit - Exhaust	2.5 mm	0.098 in.

VALVE GUIDE

DESCRIPTION	SPECIFICATION	
	Metric	Standard
Diameter I.D.	5.975 - 6.000 mm	0.235 - 0.236 in.
Guide Bore Diameter	11.0 - 11.02 mm	0.4330 - 0.4338 in.
Guide Height (spring seat to guide tip)	13.25 - 13.75 mm	0.521 - 0.541 in.

VALVES

DESCRIPTION	SPECIFICATION	
	Metric	Standard
Face Angle - Intake and Exhaust	44.5 - 45°	
Head Diameter - Intake	34.67 - 34.93 mm	1.364 - 1.375 in.
Head Diameter - Exhaust	28.32 - 28.52 mm	1.114 - 1.122 in.
Valve Length (Overall)		
Intake	112.76 - 113.32 mm	4.439 - 4.461 in.
Exhaust	110.89 - 111.69 mm	4.365 - 4.397 in.
Valve Stem Diameter		
Intake	5.934 - 5.952 mm	0.2337 - 0.2344 in.
Exhaust	5.906 - 5.924 mm	0.2326 - 0.2333 in.

VALVE MARGIN

DESCRIPTION	SPECIFICATION	
	Metric	Standard
Intake	1.2 - 1.7 mm	0.047 - 0.066 in.
Service Limit	0.95 mm	.0037 in.
Exhaust	0.985 - 1.315 mm	0.038 - 0.051 in.
Service Limit	1.05 mm	.039 in.

VALVE STEM TIP

DESCRIPTION	SPECIFICATION	
	Metric	Standard
Intake	48.04 mm	1.891 in.
Exhaust	47.99 mm	1.889 in.

VALVE STEM TO GUIDE CLEARANCE

DESCRIPTION	SPECIFICATION	
	Metric	Standard
Intake	0.048 - 0.066 mm	0.0018 - 0.0025 in.
Max. Allowable	0.076 mm	0.003 in.
Service Limit	0.25 mm	0.010 in.
Exhaust	0.0736 - 0.094 mm	0.0029 - 0.0037 in.
Max. Allowable	0.101 mm	0.004 in.
Service Limit	0.25 mm	0.010 in.

ENGINE 2.4L (Continued)

VALVE SPRINGS

DESCRIPTION	SPECIFICATION	
	Metric	Standard
Free Length (Approx.)	48.4 mm	1.905 in.
Nominal Force (Valve Closed)	338 N @ 38.0 mm	75.98 lbs. @ 1.496 in.
Nominal Force (Valve Open)	607 N @ 29.75 mm	136 lbs. @ 1.172 in.
Installed Height	38.00 mm	1.496 in.
Number of Coils	7.82	
Wire Diameter	3.86 mm	1.496 in

OIL PUMP

DESCRIPTION	SPECIFICATION	
	Metric	Standard
Clearance Over Rotors (Max.)	0.10 mm	0.004 in.
Cover Out-of-Flat (Max.)	0.025 mm	0.001 in.
Inner Rotor Thickness (Min.)	9.40 mm	0.370 in.
Outer Rotor Thickness (Min.)	9.40 mm	0.370 in.
Outer Rotor Clearance (Max.)	0.039 mm	0.015 in.
Outer Rotor Diameter (Min.)	79.95 mm	3.148 in.
Tip Clearance Between Rotors (Max.)	0.20 mm	0.008 in.

OIL PRESSURE

DESCRIPTION	SPECIFICATION	
	Metric	Standard
At Curb Idle Speed*	25 kPa	4 psi
At 3000 rpm	170 - 550 kPa	25 - 80 psi
CAUTION: *If pressure is ZERO at curb idle, DO NOT run engine at 3000 rpm.		

SPECIFICATIONS - TORQUE

DESCRIPTION	N·m	Ft. Lbs.	In. Lbs.
Balance Shaft Carrier to Block—Bolts	54	40	—
Balance Shaft Gear Cover—Double Ended Fastener	12	—	105
Balance Shaft Sprocket—Bolt	28	—	250
Balance Shaft Chain Tensioner—Bolts	12	—	105
Balance Shaft Carrier Cover—Bolts	12	—	105
Camshaft Sprocket—Bolt	101	75	—
Connecting Rod Cap—Bolts	27 +¼ turn	20 +¼ turn	—
Crankshaft Main Bearing Cap/Bedplate			
—M8 Bolts	28		250
—M11 Bolts	41 +¼ Turn	30 +¼ Turn	—
Crankshaft Damper	136	100	—
Cylinder Head—Bolts	(Refer to 9 - ENGINE/ CYLINDER HEAD - INSTALLATION)		
Cylinder Head Cover—Bolts	12	—	105
Flex Plate to Crankshaft	95	70	—
Engine Mount Bracket Right—Bolts	61	45	—
Engine Mounting—Bolts	(Refer to 9 ENGINE/ ENGINE MOUNTING)		
Exhaust Manifold to Cylinder Head—Bolts	19	—	170
Exhaust Manifold Heat Shield—Bolts	12	—	105
Intake Manifold - Lower —Bolts	28	—	250
Intake Manifold - Upper—Bolts	28	—	250
Oil Filter	12	—	105
Oil Pan—Bolts	12	—	105
Oil Pan Drain—Plug	28	20	—
Oil Pressure Switch	21	—	190

ENGINE 2.4L (Continued)

DESCRIPTION	N·m	Ft. Lbs.	In. Lbs.
Oil Pump to Block—Bolts	28	20	—
Oil Pump Cover Plate—Bolts	12	—	105
Oil Pump Pick-up Tube—Bolt	28	20	—
Oil Pump Relief Valve—Cap	41	30	—
Spark Plugs	18	13	—
Structural Collar	(Refer to 9 - ENGINE/ ENGINE BLOCK/ STRUCTURAL COVER - INSTALLATION)		
Timing Belt Covers			
- Front Covers to Rear Cover—Bolts	6	—	50
- Rear Cover—M6 Bolts	12	—	105
—M8 Bolts	28	—	250
Timing Belt Idler Pulley	61	45	—
Timing Belt Tensioner Lock Bolt	25	—	220
Timing Belt Tensioner Assembly—Bolts	61	45	—

SPECIAL TOOLS

2.4L ENGINE

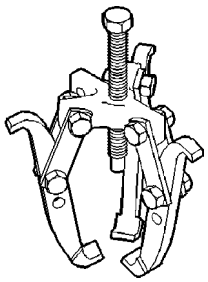

Puller 1026

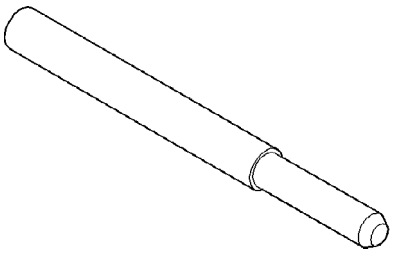

Crankshaft Damper Removal Insert 6827A

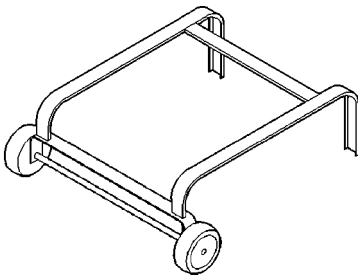

Dolly 6135

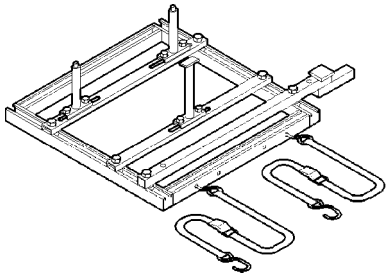

Cradle 6710A

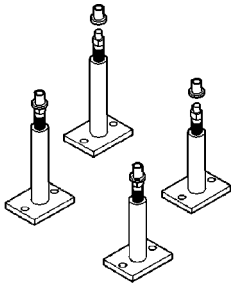

Post Kit Engine Cradle 6848

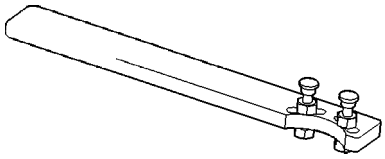

Camshaft Sprocket Holder 6847

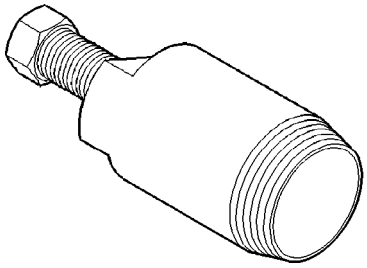

Camshaft Seal Remover C-4679A

ENGINE 2.4L (Continued)

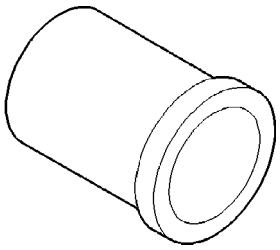

Camshaft Seal Installer MD-998306

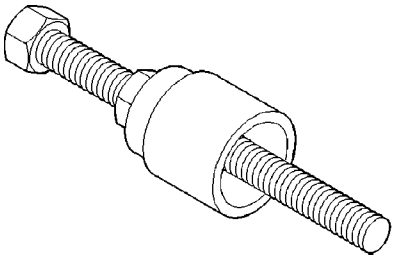

Crankshaft Damper/Sprocket Installer 6792

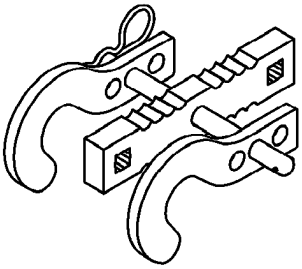

Valve Spring Compressor 8215-A

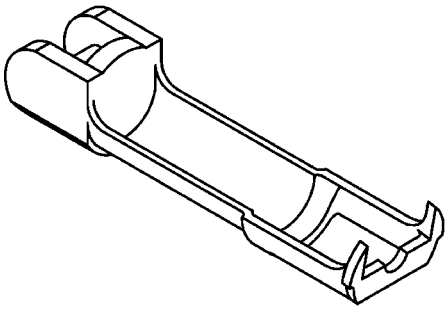

Adaptor 8436

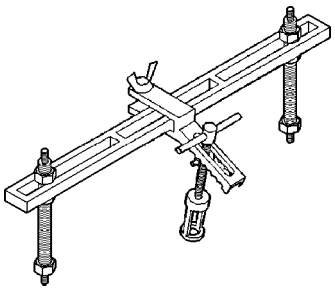

Valve Spring Compressor MD998772A

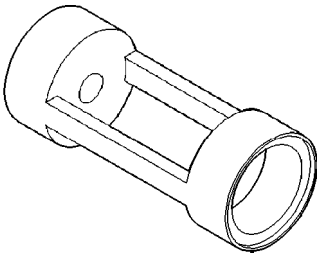

Valve Spring Compressor Adapter 6779

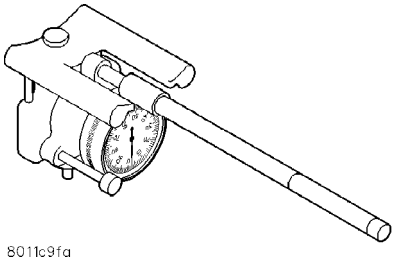

Indicator, Cylinder Bore C-119

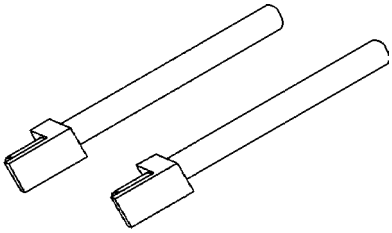

Connecting Rod Guides 8189

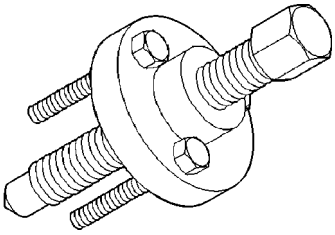

Crankshaft Sprocket Remover 6793

ENGINE 2.4L (Continued)

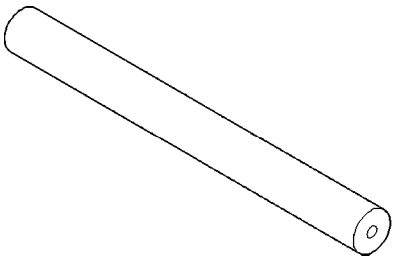

Crankshaft Sprocket Remover Insert C-4685-C2

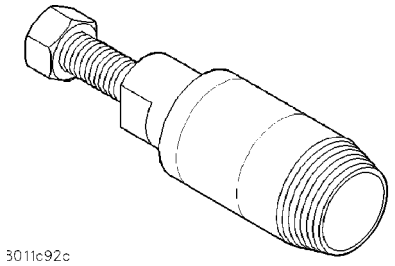

Front Crankshaft Oil Seal Remover 6771

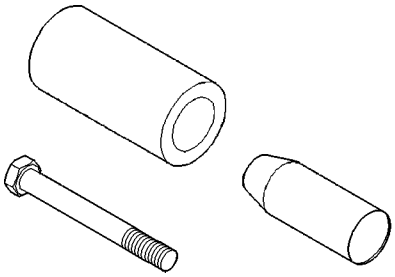

Front Crankshaft Oil Seal Installer 6780

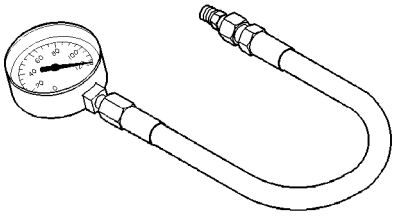

Oil Pressure Gauge C-3292

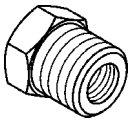

Adapter 8406

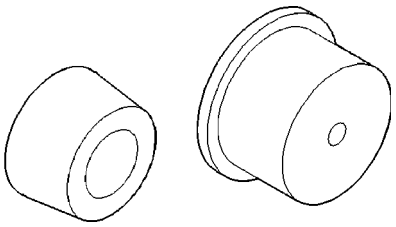

Rear Crankshaft Oil Seal Installer 6926

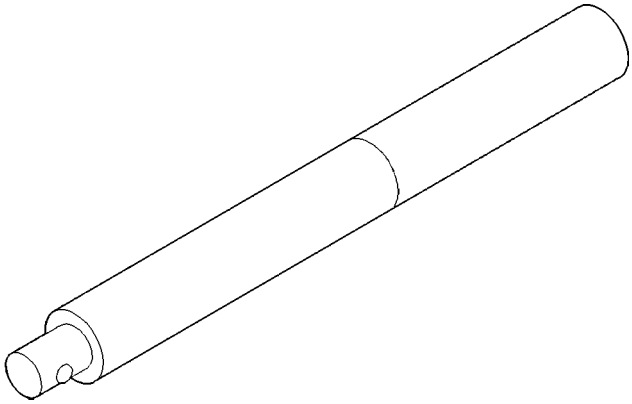

Driver Handle C-4171

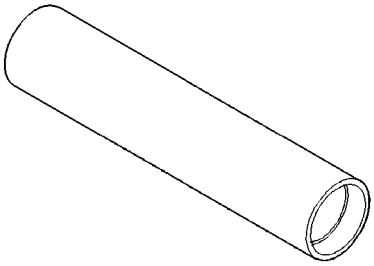

Balance Shaft Sprocket Installer 6052

ENGINE 2.4L (Continued)

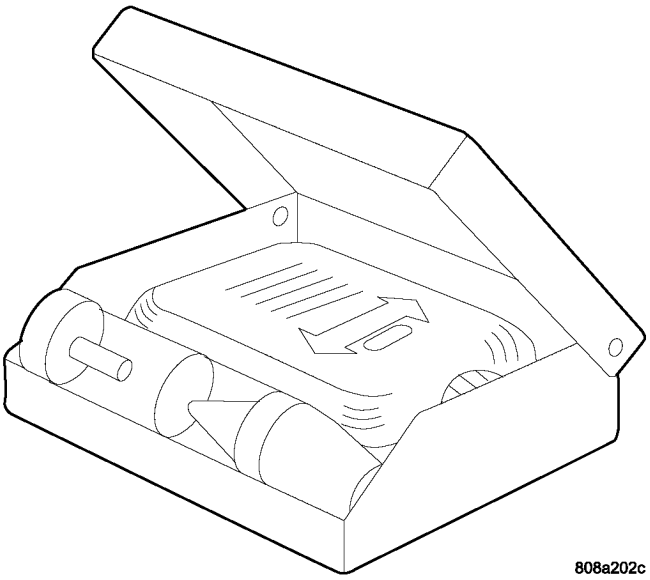

Combustion Leak Tester C-3685-A

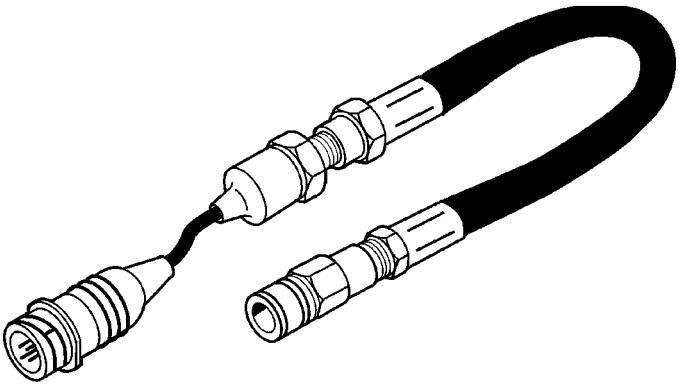

Pressure Transducer CH7059

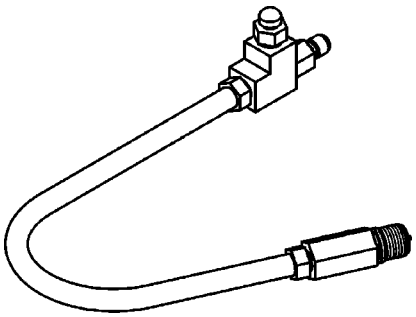

Cylinder Compression Pressure Adaptor 8116

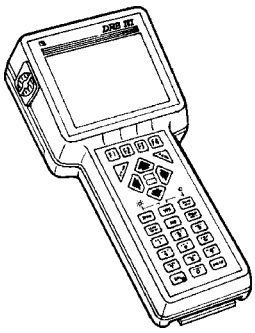

DRB III® with PEP Module OT-CH6010A

AIR CLEANER ELEMENT

REMOVAL

(1) Unsnap 2 clips.

(2) Lift cover and pull toward the engine and remove cover tabs from air box.

(3) Lift cover and remove the element (Fig. 11).

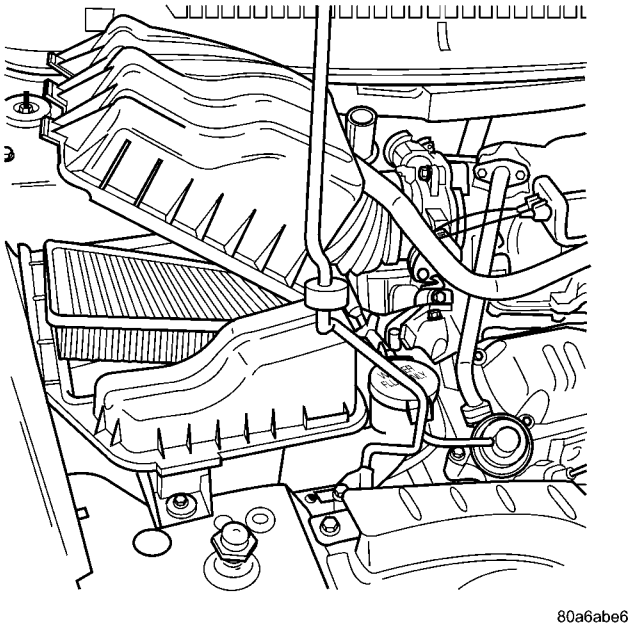

Fig. 11 Air Box Cover

INSTALLATION

(1) Install the air filter element into air box (Fig. 11).

(2) Move cover so that the tabs insert into the air box.

(3) Push cover down and snap the 2 clips.

AIR CLEANER HOUSING

REMOVAL

(1) Disconnect the negative battery cable.

(2) Disconnect the inlet air temperature sensor (Fig. 12).

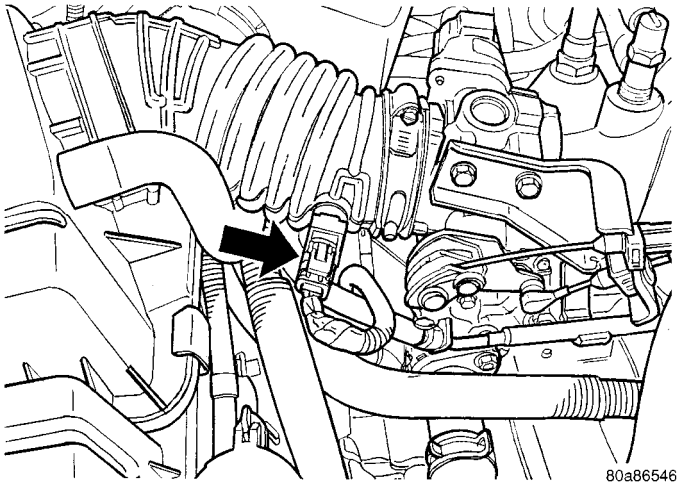

Fig. 12 IAT Sensor 2.4L

(3) Remove the inlet hose to throttle body (Fig. 11).

(4) Remove the bolt for air box at upper radiator cross member.

(5) Pull air box up and off over the single locating pin.

(6) Remove air box from vehicle

INSTALLATION

(1) Install air box into vehicle and onto the locating pin.

(2) Install bolt to hold air box to the upper radiator cross member.

(3) Install the inlet hose to the throttle body.

(4) Connect the inlet air temperature sensor (Fig. 12).

(5) Connect the negative battery cable.

CYLINDER HEAD

DESCRIPTION

The cross flow designed, aluminum cylinder head contains dual over-head camshafts with four valves per cylinder (Fig. 13). The valves are arranged in two in-line banks. The intake valves face toward the front of the vehicle. The exhaust valves face the dash panel. The cylinder head incorporates powdered metal valve guides and seats. The cylinder head is sealed to the block using a multi-layer steel head gasket and retaining bolts.

Integral oil galleries provide lubrication passages to the hydraulic lash adjusters, camshafts, and valve mechanisms.

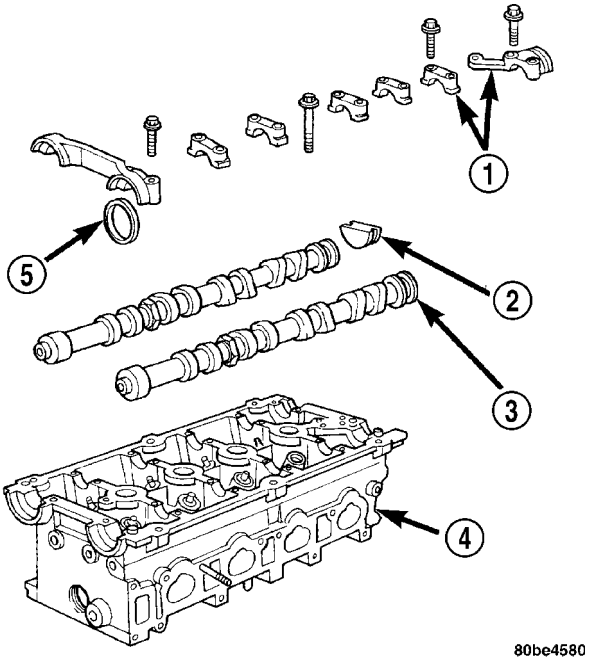

Fig. 13 Cylinder Head and Camshafts

1 - CAMSHAFT BEARING CAPS
2 - PLUG
3 - CAMSHAFT
4 - CYLINDER HEAD
5 - CAMSHAFT OIL SEAL

DIAGNOSIS AND TESTING—CYLINDER HEAD GASKET

A cylinder head gasket leak can be located between adjacent cylinders or between a cylinder and the adjacent water jacket.

Possible indications of the cylinder head gasket leaking between adjacent cylinders are:

- Loss of engine power
- Engine misfiring
- Poor fuel economy

Possible indications of the cylinder head gasket leaking between a cylinder and an adjacent water jacket are:

- Engine overheating
- Loss of coolant
- Excessive steam (white smoke) emitting from exhaust
- Coolant foaming

CYLINDER HEAD (Continued)

CYLINDER-TO-CYLINDER LEAKAGE TEST

To determine if an engine cylinder head gasket is leaking between adjacent cylinders, follow the procedures in Cylinder Compression Pressure Test (Refer to 9 - ENGINE - DIAGNOSIS AND TESTING). An engine cylinder head gasket leaking between adjacent cylinders will result in approximately a 50–70% reduction in compression pressure.

CYLINDER-TO-WATER JACKET LEAKAGE TEST

WARNING: USE EXTREME CAUTION WHEN THE ENGINE IS OPERATING WITH COOLANT PRESSURE CAP REMOVED.

VISUAL TEST METHOD

With the engine cool, remove the coolant pressure cap. Start the engine and allow it to warm up until thermostat opens.

If a large combustion/compression pressure leak exists, bubbles will be visible in the coolant.

COOLING SYSTEM TESTER METHOD

WARNING: WITH COOLING SYSTEM TESTER IN PLACE, PRESSURE WILL BUILD UP FAST. EXCESSIVE PRESSURE BUILT UP, BY CONTINUOUS ENGINE OPERATION, MUST BE RELEASED TO A SAFE PRESSURE POINT. NEVER PERMIT PRESSURE TO EXCEED 138 kPa (20 psi).

Install Cooling System Tester 7700 or equivalent to pressure cap neck. Start the engine and observe the tester's pressure gauge. If gauge pulsates with every power stroke of a cylinder a combustion pressure leak is evident.

CHEMICAL TEST METHOD

Combustion leaks into the cooling system can also be checked by using Bloc-Chek Kit C-3685-A or equivalent. Perform test following the procedures supplied with the tool kit.

REMOVAL - CYLINDER HEAD

(1) Perform fuel system pressure release procedure **before attempting any repairs.** (Refer to 14 - FUEL SYSTEM/FUEL DELIVERY - SPECIFICATIONS)

(2) Disconnect battery negative cable.

(3) Drain cooling system. (Refer to 7 - COOLING - STANDARD PROCEDURE)

(4) Remove air filter housing and inlet tube.

(5) Remove upper intake manifold. (Refer to 9 - ENGINE/MANIFOLDS/INTAKE MANIFOLD - REMOVAL)

(6) Remove heater tube support bracket from cylinder head.

(7) Disconnect radiator upper and heater supply hoses from intake manifold water outlet connections.

(8) Remove accessory drive belts. (Refer to 7 - COOLING/ACCESSORY DRIVE/DRIVE BELTS - REMOVAL)

(9) Raise vehicle and remove exhaust pipe from manifold.

(10) Remove power steering pump reservoir and line support bracket from lower intake manifold and set aside. Do not disconnect lines.

(11) Remove ignition coil and wires from engine.

(12) Disconnect cam sensor and fuel injector wiring connectors.

(13) Remove timing belt and camshaft sprockets. (Refer to 9 - ENGINE/VALVE TIMING/TIMING BELT/CHAIN AND SPROCKETS - REMOVAL)

(14) Remove timing belt idler pulley and rear timing belt cover. (Refer to 9 - ENGINE/VALVE TIMING/TIMING BELT / CHAIN COVER(S) - REMOVAL)

(15) Remove cylinder head cover. (Refer to 9 - ENGINE/CYLINDER HEAD/CYLINDER HEAD COVER(S) - REMOVAL)

(16) Remove camshafts (Refer to 9 - ENGINE/CYLINDER HEAD/CAMSHAFT(S) - REMOVAL).

NOTE: Identify rocker arm position to ensure correct re-installation in original position, if reused.

(17) Remove rocker arms. (Refer to 9 - ENGINE/CYLINDER HEAD/ROCKER ARMS - REMOVAL)

(18) Remove cylinder head bolts in REVERSE sequence of tightening (Fig. 19).

(19) Remove cylinder head from engine block.

(20) Inspect and clean cylinder head. (Refer to 9 - ENGINE/CYLINDER HEAD - INSPECTION) (Refer to 9 - ENGINE/CYLINDER HEAD - CLEANING)

CLEANING

To ensure engine gasket sealing, proper surface preparation must be performed, especially with the use of aluminum engine components and multi-layer steel cylinder head gaskets.

NOTE: Multi-Layer Steel (MLS) head gaskets require a scratch free sealing surface.

Remove all gasket material from cylinder head and block (Refer to 9 - ENGINE - STANDARD PROCEDURE). Be careful not to gouge or scratch the aluminum head sealing surface.

Clean all engine oil passages.

CYLINDER HEAD (Continued)

INSPECTION

(1) Cylinder head must be flat within 0.1 mm (0.004 in.) (Fig. 14).

(2) Inspect camshaft bearing journals for scoring.

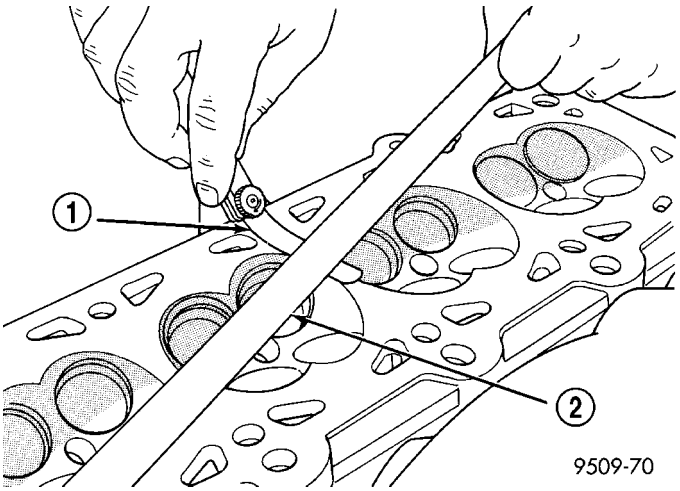

Fig. 14 Checking Cylinder Head Flatness

1 - FEELER GAUGE
2 - STRAIGHT EDGE

(3) Remove carbon and varnish deposits from inside of valve guides with a reliable guide cleaner.

(4) Using a small hole gauge and a micrometer, measure valve guides in 3 places top, middle and bottom (Fig. 15). (Refer to 9 - ENGINE - SPECIFICATIONS) Replace guides if they are not within specification.

(5) Check valve guide height (Fig. 16).

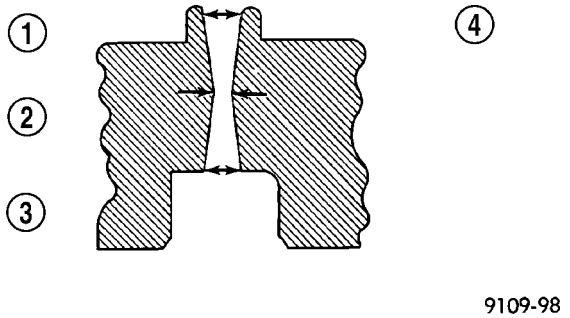

Fig. 15 Checking Wear on Valve Guide—Typical

1 - TOP
2 - MIDDLE
3 - BOTTOM
4 - CUT AWAY VIEW OF VALVE GUIDE MEASUREMENT LOCATIONS

INSTALLATION - CYLINDER HEAD

NOTE: The Cylinder head bolts should be examined BEFORE reuse. If the threads are necked down, the bolts must be replaced (Fig. 17).

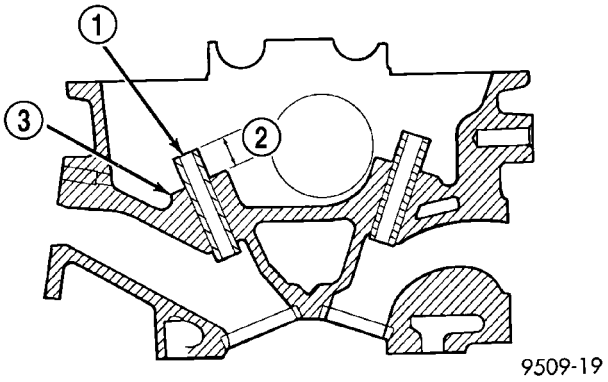

Fig. 16 Valve Guide Height

1 - VALVE GUIDE
2 - 13.25 - 13.75 MM (0.521 - 0.541 IN.)
3 - SPRING SEAT

Necking can be checked by holding a scale or straight edge against the threads. If all the threads do not contact the scale, the bolt should be replaced.

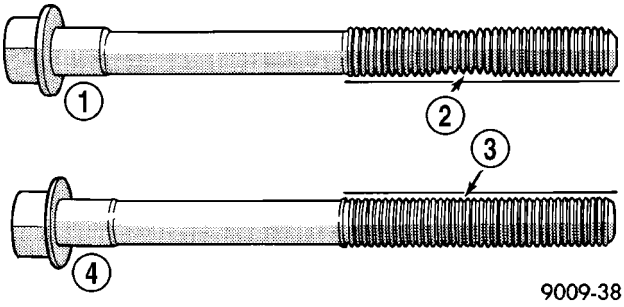

Fig. 17 Checking Bolts for Stretching (Necking)

1 - STRETCHED BOLT
2 - THREADS ARE NOT STRAIGHT ON LINE
3 - THREADS ARE STRAIGHT ON LINE
4 - UNSTRETCHED BOLT

(1) Before installing the bolts, the threads should be coated with engine oil.

(2) Position cylinder head gasket on engine block (Fig. 18).

(3) Install cylinder head on engine block.

(4) Tighten the cylinder head bolts in the sequence shown in (Fig. 19). Using the 4 step torque turn method, tighten according to the following values:

- First All to 34 N·m (25 ft. lbs.)
- Second All to 68 N·m (50 ft. lbs.)
- Third All to 68 N·m (50 ft. lbs.)

CAUTION: Do not use a torque wrench for the following step.

- Fourth Turn an additional 1/4 Turn,

CYLINDER HEAD (Continued)

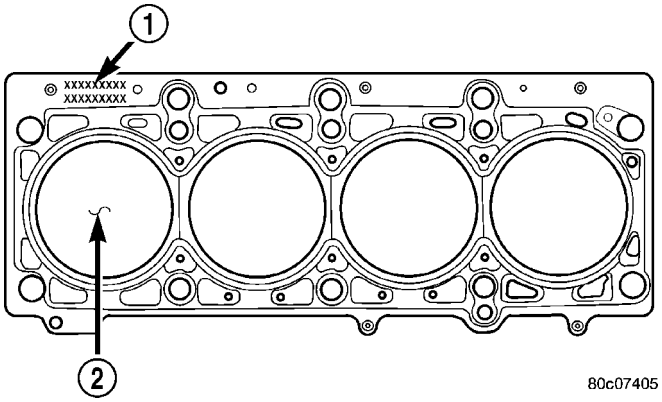

Fig. 18 Cylinder Head Gasket Positioning

1 - PART NUMBER FACES UP
2 - NO. 1 CYLINDER

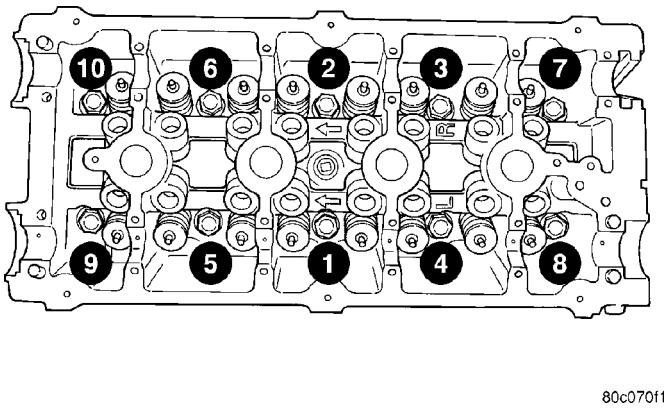

Fig. 19 Cylinder Head Tightening Sequence

(5) Install rocker arms. (Refer to 9 - ENGINE/CYLINDER HEAD/ROCKER ARMS - INSTALLATION)

(6) Install camshafts. (Refer to 9 - ENGINE/CYLINDER HEAD/CAMSHAFT(S) - INSTALLATION).

(7) Install cylinder head cover. (Refer to 9 - ENGINE/CYLINDER HEAD/CYLINDER HEAD COVER(S) - INSTALLATION)

(8) Install timing belt rear cover and timing belt idler pulley. (Refer to 9 - ENGINE/VALVE TIMING/TIMING BELT / CHAIN COVER(S) - INSTALLATION)

(9) Install timing belt and camshaft sprockets. (Refer to 9 - ENGINE/VALVE TIMING/TIMING BELT/CHAIN AND SPROCKETS - INSTALLATION)

(10) Connect cam sensor and fuel injectors wiring connectors.

(11) Install ignition coil and wires. Connect ignition coil wiring connector.

(12) Install power steering pump reservoir and line support bracket to cylinder head.

(13) Raise vehicle and install the exhaust pipe to the manifold.

(14) Install accessory drive belts. (Refer to 7 - COOLING/ACCESSORY DRIVE/DRIVE BELTS - INSTALLATION)

(15) Install heater tube support bracket to cylinder head.

(16) Connect radiator upper and heater hoses to intake manifold water outlet connections.

(17) Install upper intake manifold. (Refer to 9 - ENGINE/MANIFOLDS/INTAKE MANIFOLD - INSTALLATION)

(18) Using new gaskets, install EGR tube and tighten fasteners to 11 N·m (95 in. lbs.).

(19) Install air inlet tube and housing.

(20) Connect all vacuum lines, electrical wiring, ground straps and fuel line.

(21) Fill cooling system. (Refer to 7 - COOLING - STANDARD PROCEDURE)

(22) Connect battery negative cable.

CAMSHAFT OIL SEAL(S)

REMOVAL

(1) Remove timing belt (Refer to 9 - ENGINE/VALVE TIMING/TIMING BELT AND SPROCKETS - REMOVAL).

(2) Hold each camshaft sprocket with Special Tool 6847 while removing center bolt (Fig. 20).

(3) Remove camshaft sprockets.

(4) Remove rear timing belt cover (Refer to 9 - ENGINE/VALVE TIMING/TIMING BELT COVER(S) - REMOVAL).

(5) Remove camshaft seal using Special Tool C-4679A (Fig. 21).

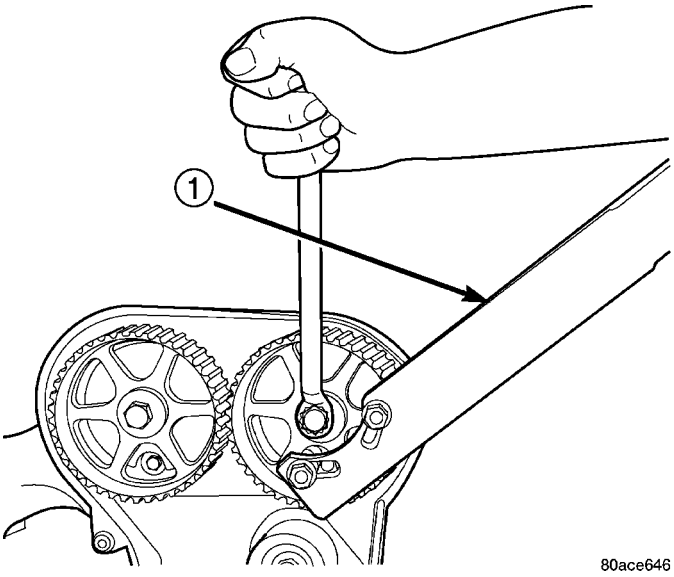

Fig. 20 Camshaft Sprocket - Removal/Installation

1 - SPECIAL TOOL 6847

CAMSHAFT OIL SEAL(S) (Continued)

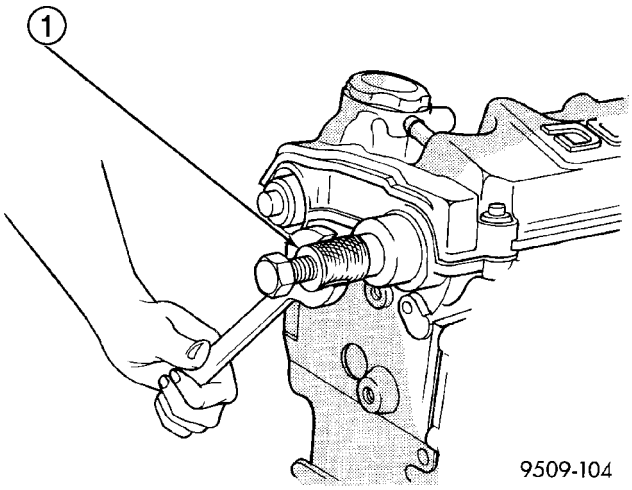

Fig. 21 Camshaft Oil Seal - Removal With C-4679A

1 - SPECIAL TOOL C-4679

CAUTION: Do not nick shaft seal surface or seal bore.

INSTALLATION

(1) Shaft seal surface must be free of varnish, dirt or nicks. Polish with 400 grit paper if necessary.

(2) Install camshaft seals into cylinder head using Special Tool MD-998306 until flush with head (Fig. 22).

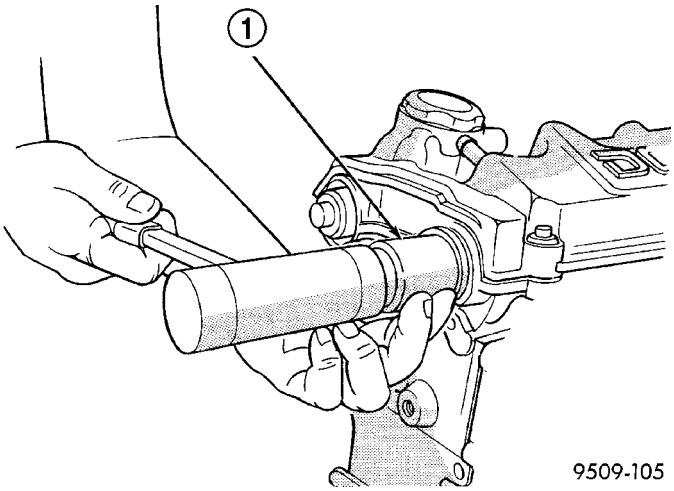

Fig. 22 Camshaft Seal - Installation

1 - SPECIAL TOOL MD-998306

(3) Install timing belt rear cover (Refer to 9 - ENGINE/VALVE TIMING/TIMING BELT COVER(S) - INSTALLATION).

(4) Install camshaft sprockets. Hold each sprocket with Special Tool 6847 and tighten center bolt to 101 N·m (75 ft. lbs.) (Fig. 20).

(5) Install timing belt and front covers (Refer to 9 - ENGINE/VALVE TIMING/TIMING BELT AND SPROCKETS - INSTALLATION) (Refer to 9 - ENGINE/VALVE TIMING/TIMING BELT COVER(S) - INSTALLATION).

CAMSHAFT(S)

DESCRIPTION

Both camshafts have six bearing journal surfaces and two cam lobes per cylinder (Fig. 23). Flanges at the rear journals control camshaft end play. Provision for a cam position sensor is located on the intake camshaft on the rear of the cylinder head. A hydrodynamic oil seal is used for oil control at the front of the camshaft.

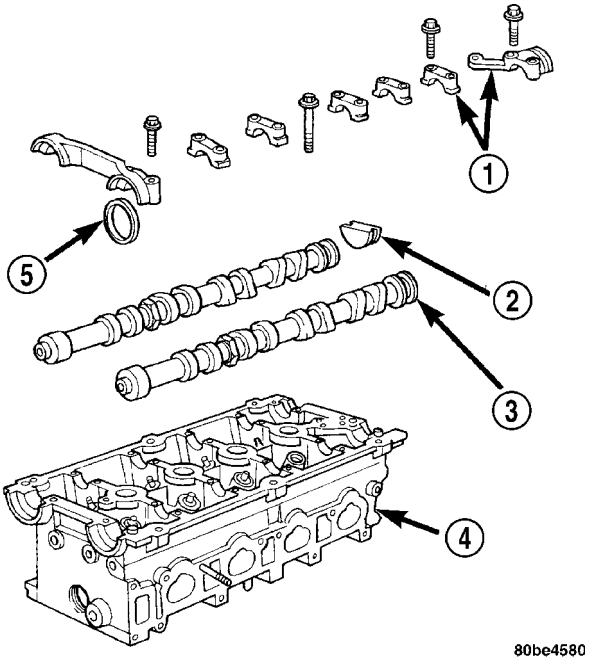

Fig. 23 Camshafts

1 - CAMSHAFT BEARING CAPS
2 - PLUG
3 - CAMSHAFT
4 - CYLINDER HEAD
5 - CAMSHAFT OIL SEAL

OPERATION

The camshaft is driven by the crankshaft via drive sprockets and belt. The camshaft has precisely machined lobes to provide accurate valve timing and duration.

STANDARD PROCEDURE - MEASURING CAMSHAFT END PLAY

(1) Oil camshaft journals and install camshaft **WITHOUT** rocker arms. Install rear cam caps and tighten screws to specified torque.

(2) Using a suitable tool, move camshaft as far rearward as it will go.

CAMSHAFT(S) (Continued)

(3) Zero dial indicator (Fig. 24).

(4) Move camshaft as far forward as it will go.

(5) Record reading on dial indicator. For end play specification, (Refer to 9 - ENGINE - SPECIFICATIONS).

(6) If end play is excessive, check cylinder head and camshaft for wear; replace as necessary.

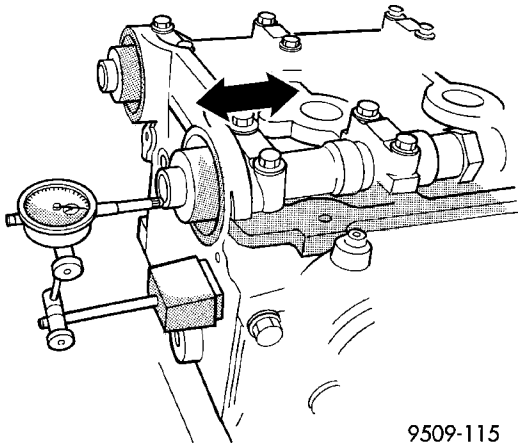

Fig. 24 Camshaft End Play - Typical

REMOVAL

(1) Remove cylinder head cover (Refer to 9 - ENGINE/CYLINDER HEAD/CYLINDER HEAD COVER - REMOVAL).

(2) Remove camshaft position sensor and camshaft target magnet (Refer to 8 - ELECTRICAL/IGNITION CONTROL/CAMSHAFT POSITION SENSOR - REMOVAL).

(3) Remove timing belt (Refer to 9 - ENGINE/VALVE TIMING/TIMING BELT AND SPROCKETS - REMOVAL).

(4) Remove camshaft sprockets and timing belt rear cover (Refer to 9 - ENGINE/VALVE TIMING/TIMING BELT COVER(S) - REMOVAL).

(5) Bearing caps are identified for location. Remove the outside bearing caps first (Fig. 25).

(6) Loosen the camshaft bearing cap attaching fasteners in sequence shown (Fig. 26) one camshaft at a time.

CAUTION: Camshafts are not interchangeable. The intake cam number 6 thrust bearing face spacing is wider.

(7) Identify the camshafts before removing from the head. The camshafts are not interchangeable.

(8) Remove camshafts from cylinder head.

NOTE: If removing rocker arms, identify for reinstallation in the original position.

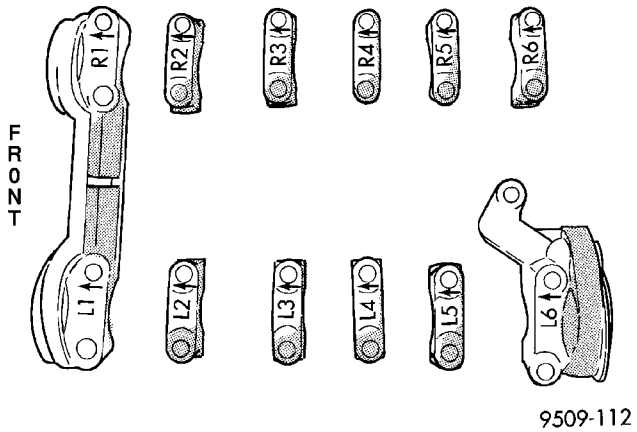

Fig. 25 Camshaft Bearing Cap Identification

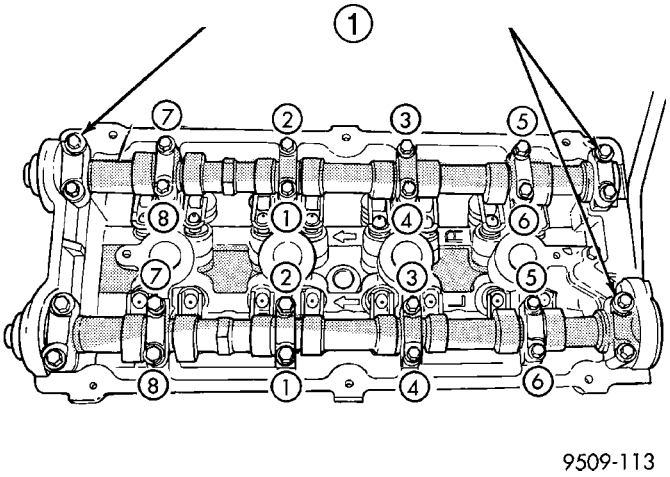

Fig. 26 Camshaft Bearing Cap - Removal

1 - REMOVE OUTSIDE BEARING CAPS FIRST

CLEANING

Clean camshaft with a suitable solvent.

INSPECTION

(1) Inspect camshaft bearing journals for damage and binding (Fig. 27). If journals are binding, check the cylinder head for damage. Also check cylinder head oil holes for clogging.

(2) Check the cam lobe and bearing surfaces for abnormal wear and damage. Replace camshaft if defective.

NOTE: If camshaft is replaced due to lobe wear or damage, always replace the rocker arms.

(3) Measure the lobe actual wear (unworn area - wear zone = actual wear) (Fig. 27) and replace camshaft if out of limit. Standard value is 0.0254 mm (0.001 in.), wear **limit** is 0.254 mm (0.010 in.).

CAMSHAFT(S) (Continued)

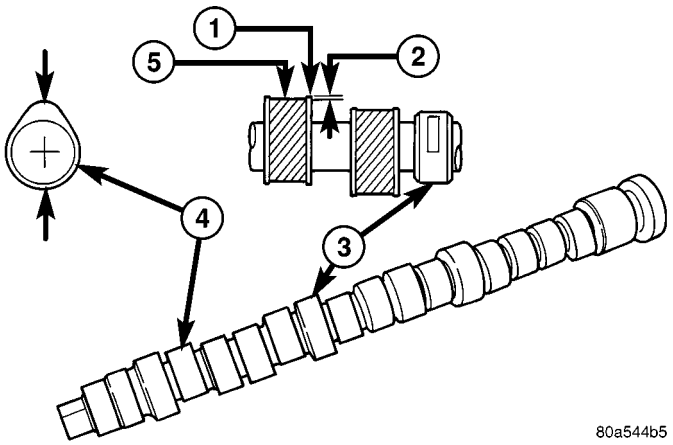

Fig. 27 Checking Camshaft(s) for Wear

1 - UNWORN AREA
2 - ACTUAL WEAR
3 - BEARING JOURNAL
4 - LOBE
5 - WEAR ZONE

INSTALLATION

CAUTION: Ensure that NONE of the pistons are at top dead center when installing the camshafts.

(1) Lubricate all camshaft bearing journals, rocker arms and camshaft lobes.

(2) Install all rocker arms in original positions, if reused.

(3) Position camshafts on cylinder head bearing journals. Install right and left camshaft bearing caps No. 2 – 5 and right No. 6. Tighten M6 fasteners to 12 N·m (105 in. lbs.) in sequence shown in (Fig. 28).

(4) Apply Mopar® Gasket Maker to No. 1 and No. 6 bearing caps (Fig. 29). Install bearing caps and tighten M8 fasteners to 28 N·m (250 in. lbs.).

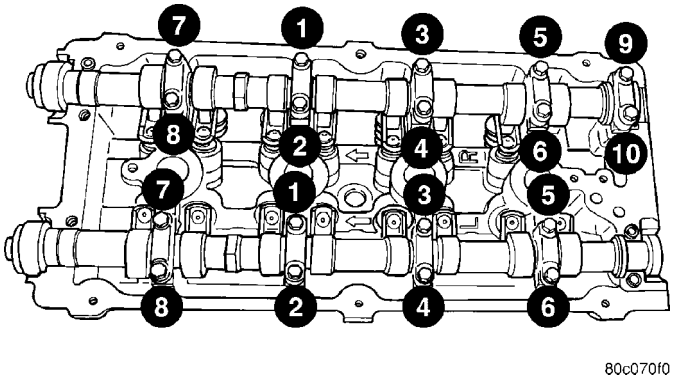

Fig. 28 Camshaft Bearing Cap Tightening Sequence

NOTE: Bearing end caps must be installed before seals can be installed.

(5) Install camshaft oil seals (Refer to 9 - ENGINE/CYLINDER HEAD/CAMSHAFT OIL SEAL(S) - INSTALLATION).

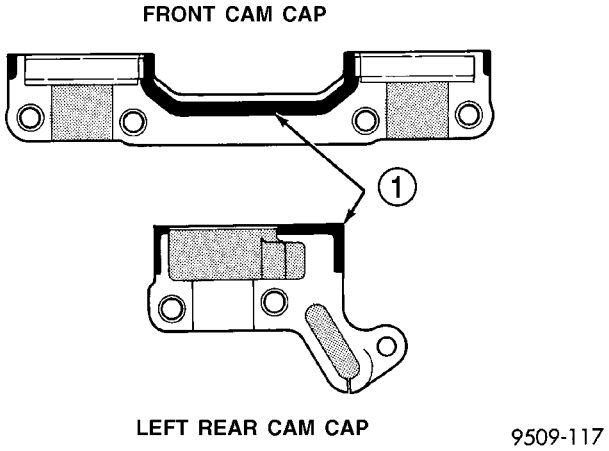

Fig. 29 Camshaft Bearing Cap Sealing

1 - 1.5 mm (.060 in.) DIAMETER BEAD OF MOPAR GASKET MAKER

(6) Install camshaft target magnet and camshaft position sensor.

(7) Install cylinder head cover (Refer to 9 - ENGINE/CYLINDER HEAD/CYLINDER HEAD COVER - INSTALLATION).

(8) Install timing belt rear cover and camshaft sprockets (Refer to 9 - ENGINE/VALVE TIMING/ TIMING BELT COVER(S) - INSTALLATION).

(9) Install timing belt (Refer to 9 - ENGINE/ VALVE TIMING/TIMING BELT AND SPROCKETS - INSTALLATION).

CYLINDER HEAD COVER

REMOVAL

(1) Remove upper intake manifold. (Refer to 9 - ENGINE/MANIFOLDS/INTAKE MANIFOLD - REMOVAL)

(2) Remove upper manifold support bracket.

(3) Remove ignition coil and spark plug wires.

(4) Disconnect PCV and make-up air hoses from cylinder head cover.

(5) Remove cylinder head cover bolts.

(6) Remove cylinder head cover from cylinder head.

CLEANING

Clean cylinder head and cover mating surfaces using a suitable solvent.

INSPECTION

Inspect cover rails for flatness.

CYLINDER HEAD COVER (Continued)

INSTALLATION

NOTE: Replace spark plug well seals and bolt assemblies when installing a new cylinder head cover gasket.

(1) Install new cylinder head cover gaskets and spark plug well seals (Fig. 30).

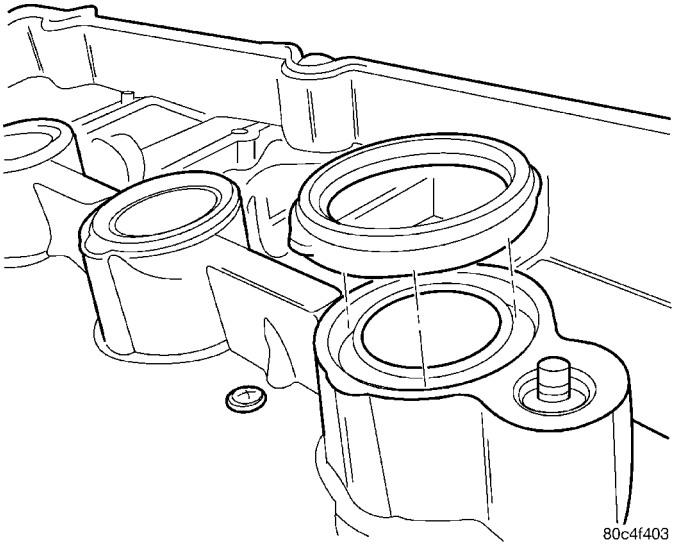

Fig. 30 Spark Plug Well Seals

(2) Replace cylinder head cover bolt assemblies.

CAUTION: Do not allow oil or solvents to contact the timing belt as they can deteriorate the rubber and cause tooth skipping.

(3) Apply Mopar® Engine RTV GEN II at the camshaft cap corners and at the top edges of the 1/2 round seal (Fig. 31).

(4) Install cylinder head cover assembly to cylinder head. Install all bolts, ensuring the single (1) stud used to attach the upper intake manifold support bracket is located in the #8 location as shown in torque sequence diagram (Fig. 32). Tighten bolts in sequence shown in (Fig. 32). Using a 3 step torque method as follows:

(a) Tighten all bolts to 4.5 N·m (40 in. lbs.).
(b) Tighten all bolts to 9.0 N·m (80 in. lbs.).
(c) Tighten all bolts to 12 N·m (105 in. lbs.).

(5) Install ignition coil and spark plug wires. Tighten fasteners to 12 N·m (105 in. lbs.).

(6) If the PCV valve was removed, apply Mopar® Thread Sealant with Teflon to threads and install valve to cylinder head cover. Tighten PCV valve to 8 N·m (70 in. lbs.).

(7) Connect PCV and make-up air hoses to cylinder head cover.

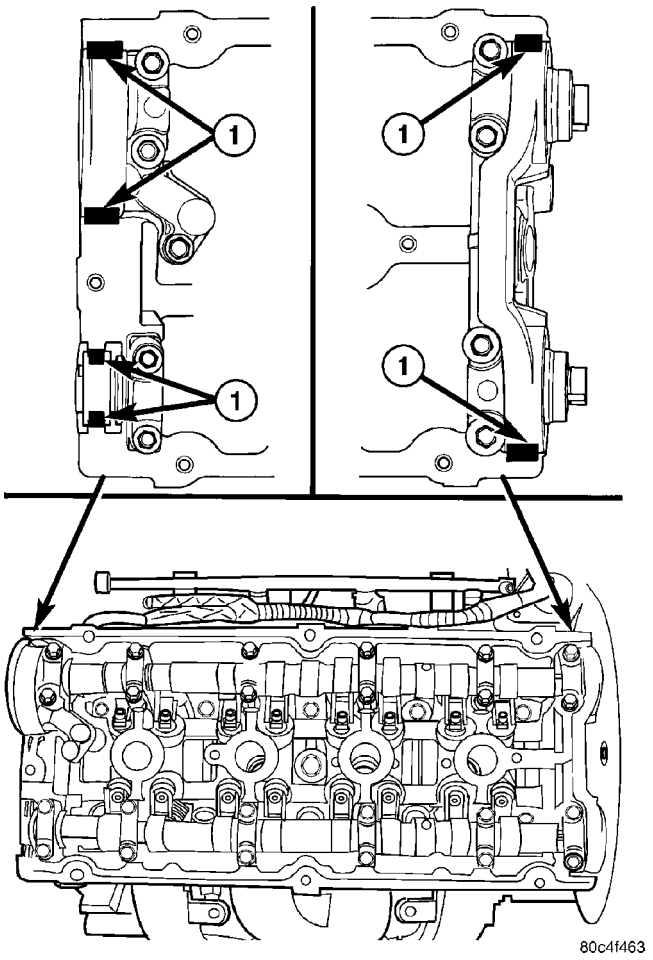

Fig. 31 Sealer Locations

1 – SEALER LOCATION

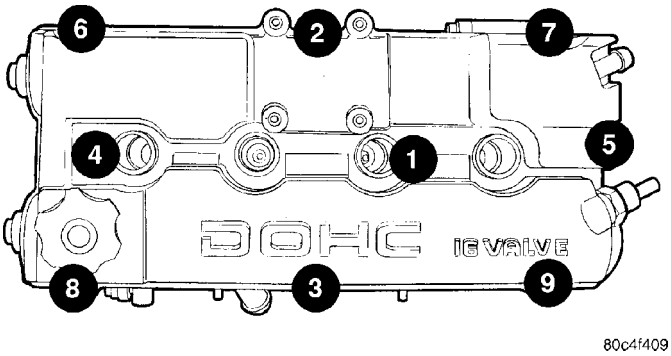

Fig. 32 Cylinder Head Cover Tightening Sequence (Typical Cover Shown)

(8) Install upper intake manifold. (Refer to 9 - ENGINE/MANIFOLDS/INTAKE MANIFOLD - INSTALLATION)

INTAKE/EXHAUST VALVES & SEATS

DESCRIPTION

The valves are made of heat resistant steel. They have chrome plated stems to prevent scuffing. Viton rubber valve stem seals are integral with the spring seats. The valves have three-bead lock keepers to retain springs and to promote valve rotation.

CLEANING

(1) Clean all valves thoroughly and discard burned, warped and cracked valves.

VALVE SPRINGS & SEALS

REMOVAL

REMOVAL - CYLINDER HEAD ON

(1) Remove cylinder head cover (Refer to 9 - ENGINE/CYLINDER HEAD/CYLINDER HEAD COVER(S) - REMOVAL).

(2) Remove camshafts (Refer to 9 - ENGINE/CYLINDER HEAD/CAMSHAFT(S) - REMOVAL).

(3) Rotate crankshaft until piston is at TDC on compression.

(4) With air hose attached to adapter tool installed in spark plug hole, apply 90-120 psi air pressure.

(5) Using Special Tool MD-998772-A with adapter 6779 (Fig. 33), compress valve springs and remove valve locks.

(6) Remove valve spring(s).

(7) Remove valve stem seal(s) by a using valve stem seal tool (Fig. 35).

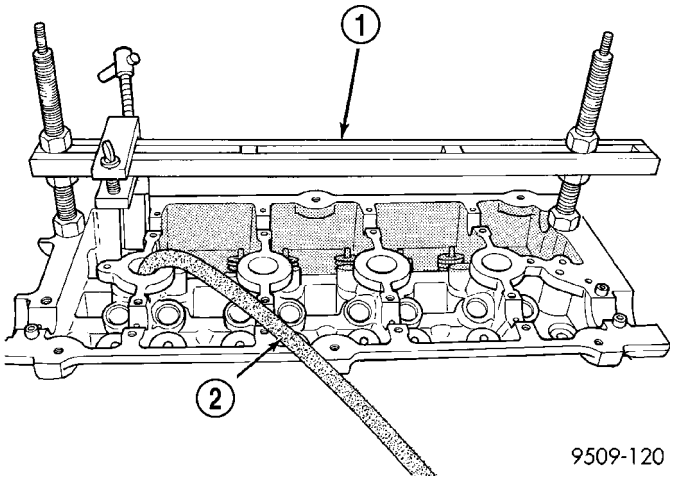

Fig. 33 Valve Spring - Removal/Installation

1 - VALVE SPRING COMPRESSOR MD 998772A
2 - AIR HOSE

REMOVAL - CYLINDER HEAD OFF

(1) With cylinder head removed from cylinder block, compress valve springs using a universal valve spring compressor.

(2) Remove valve retaining locks, valve spring retainers, valve stem seals and valve springs.

(3) Before removing valves, **remove any burrs from valve stem lock grooves to prevent damage to the valve guides.** Identify valves, locks and retainers to insure installation in original location.

(4) Inspect the valves. (Refer to 9 - ENGINE/CYLINDER HEAD/VALVE SPRINGS - INSPECTION)

INSPECTION

(1) Whenever valves have been removed for inspection, reconditioning or replacement, valve springs should be tested for correct tension. Discard the springs that do not meet specifications. The following specifications apply to both intake and exhaust valves springs:

- Valve Closed Nominal Tension—76 lbs. @ 38.0 mm (1.50 in.)
- Valve Open Nominal Tension—136 lbs. @ 29.75 mm (1.17 in.)

(2) Inspect each valve spring for squareness with a steel square and surface plate, test springs from both ends. If the spring is more than 1.5 mm (1/16 inch) out of square, install a new spring.

INSTALLATION

INSTALLATION - CYLINDER HEAD ON

(1) Install valve seal/valve spring seat assembly (Fig. 34). Push the assembly down to seat it onto the valve guide.

(2) Install valve spring and retainer, use Special Tool MD-998772-A with adapter 6779 to compress valve springs only enough to install locks (Fig. 33). Correct alignment of tool is necessary to avoid nicking valve stems.

(3) Remove air hose and install spark plugs.

(4) Install camshafts (Refer to 9 - ENGINE/CYLINDER HEAD/CAMSHAFT(S) - INSTALLATION).

(5) Install cylinder head cover (Refer to 9 - ENGINE/CYLINDER HEAD/CYLINDER HEAD COVER - INSTALLATION).

INSTALLATION - CYLINDER HEAD OFF

(1) Coat valve stems with clean engine oil and insert in cylinder head.

(2) Install new valve stem seals on all valves using a valve stem seal tool (Fig. 35). The valve stem seals should be pushed firmly and squarely over valve guide.

VALVE SPRINGS & SEALS (Continued)

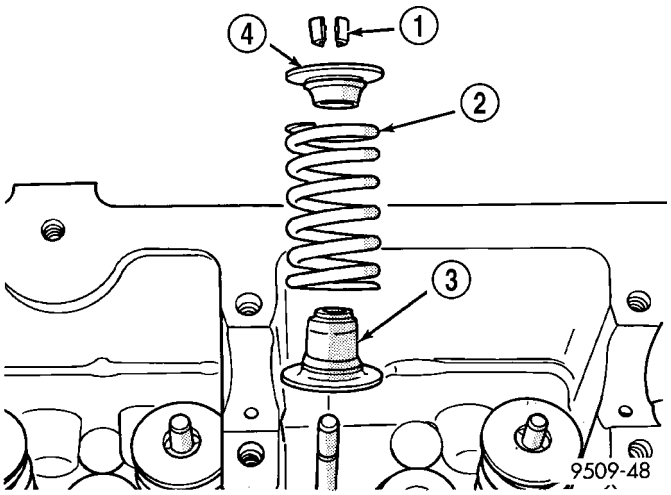

Fig. 34 Valve Stem Seal/Valve Spring Seat

1 - VALVE RETAINING LOCKS
2 - VALVE SPRING
3 - VALVE SEAL AND VALVE SPRING SEAT ASSEMBLY
4 - VALVE SPRING RETAINER

CAUTION: When oversize valves are used, the corresponding oversize valve seal must also be used. Excessive guide wear may result if oversize seals are not used with oversize valves.

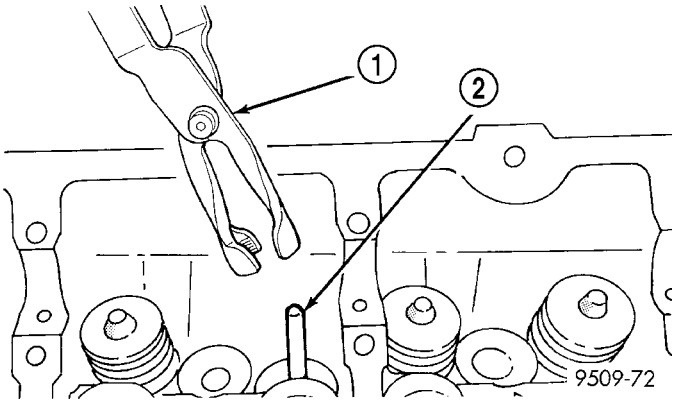

Fig. 35 Valve Stem Oil Seal Tool

1 - VALVE SEAL TOOL
2 - VALVE STEM

(3) Install valve springs and retainers. Compress valve springs only enough to install locks, taking care not to misalign the direction of compression. Nicked valve stems may result from misalignment of the valve spring compressor.

CAUTION: When depressing the valve spring retainers with valve spring compressor the locks can become dislocated. Ensure both locks are in the correct location after removing tool.

(4) Check the valve spring installed height B after refacing the valve and seat (Fig. 36). Make sure measurements are taken from top of spring seat to the bottom surface of spring retainer. If height is greater than 38.75 mm (1.525 in.), install a 0.762 mm (0.030 in.) spacer under the valve spring seat to bring spring height back within specification.

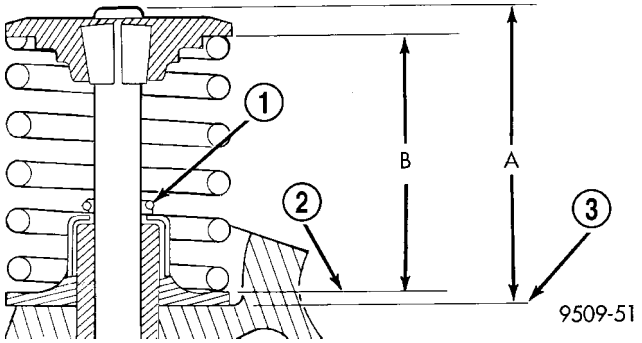

Fig. 36 Checking Spring Installed Height and Valve Tip Height Dimensions

1 - GARTER SPRING
2 - VALVE SPRING SEAT
3 - CYLINDER HEAD SURFACE

HYDRAULIC LASH ADJUSTERS

DIAGNOSIS AND TESTING - HYDRAULIC LASH ADJUSTER NOISE DIAGNOSIS

A tappet-like noise may be produced from several items. Check the following items.

(1) Engine oil level too high or too low. This may cause aerated oil to enter the adjusters and cause them to be spongy.

(2) Insufficient running time after rebuilding cylinder head. Low speed running up to 1 hour may be required.

(3) During this time, turn engine off and let set for a few minutes before restarting. Repeat this several times after engine has reached normal operating temperature.

(4) Low oil pressure.

(5) The oil restrictor (integral to the head gasket) in the vertical oil passage to the cylinder head is plugged with debris.

(6) Air ingested into oil due to broken or cracked oil pump pick up.

(7) Worn valve guides.

(8) Rocker arm ears contacting valve spring retainer.

(9) Rocker arm loose, adjuster stuck or at maximum extension and still leaves lash in the system.

(10) Faulty lash adjuster.

• Check lash adjusters for sponginess while installed in cylinder head. Depress part of rocker arm over adjuster. Normal adjusters should feel very firm. Spongy adjusters can be bottomed out easily.

HYDRAULIC LASH ADJUSTERS (Continued)

- Remove suspected lash adjusters, and replace as necessary.

REMOVAL

NOTE: This procedure is for in-vehicle service with camshafts installed.

(1) Remove cylinder head cover. (Refer to 9 - ENGINE/CYLINDER HEAD/CYLINDER HEAD COVER(S) - REMOVAL)
(2) Remove rocker arm. (Refer to 9 - ENGINE/CYLINDER HEAD/ROCKER ARMS - REMOVAL)
(3) Remove hydraulic lash adjuster (Fig. 37).
(4) Repeat removal procedure for each hydraulic lash adjuster.
(5) If reusing, mark each hydraulic lash adjuster for reassembly in original position. Lash adjusters are serviced as an assembly.

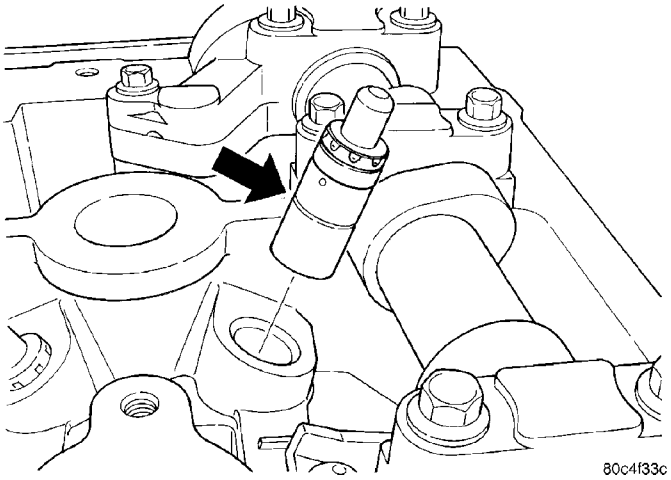

Fig. 37 Hydraulic Lash Adjuster

INSTALLATION

(1) Install hydraulic lash adjuster (Fig. 37). Ensure the lash adjusters are at least partially full of engine oil. This is indicated by little or no plunger travel when the lifter is depressed.
(2) Install rocker arm. (Refer to 9 - ENGINE/CYLINDER HEAD/ROCKER ARMS - INSTALLATION)
(3) Repeat installation procedure for each hydraulic lash adjuster.
(4) Install cylinder head cover. (Refer to 9 - ENGINE/CYLINDER HEAD/CYLINDER HEAD COVER(S) - INSTALLATION)

ROCKER ARMS

REMOVAL

NOTE: This procedure is for in-vehicle service with camshafts installed.

(1) Remove cylinder head cover. (Refer to 9 - ENGINE/CYLINDER HEAD/CYLINDER HEAD COVER(S) - REMOVAL)
(2) Remove spark plugs.
(3) Rotate engine until the camshaft lobe, on the follower being removed, is positioned on its base circle (heel). Also, the piston should be a minimum of 6.3 mm (0.25 in) below TDC position.

CAUTION: If cam follower assemblies are to be reused, always mark position for reassembly in their original positions.

(4) Using Special Tools 8215A and 8436 slowly depress valve assembly until rocker arm can be removed (Fig. 38).
(5) Repeat removal procedure for each rocker arm.

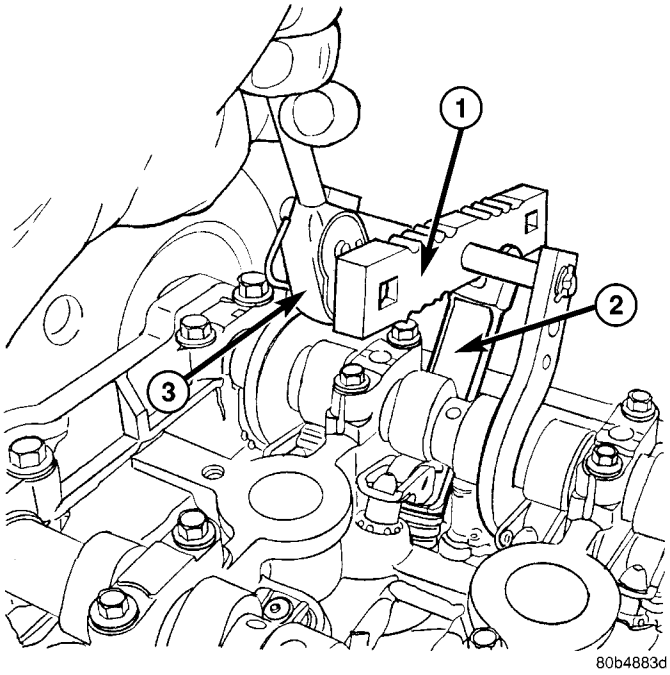

Fig. 38 Rocker Arm - Removal/Installation

1 - SPECIAL TOOL 8215A
2 - SPECIAL TOOL 8436
3 - 3/8″ DRIVE RACHET

INSPECTION

Inspect the rocker arm for wear or damage (Fig. 39). Replace as necessary.

INSTALLATION

(1) Lubricate rocker arm with clean engine oil.
(2) Using Special Tools 8215A and 8436 slowly depress valve assembly until rocker arm can be installed on the hydraulic lifter and valve stem (Fig. 38).
(3) Repeat installation procedure for each rocker arm.

ROCKER ARMS (Continued)

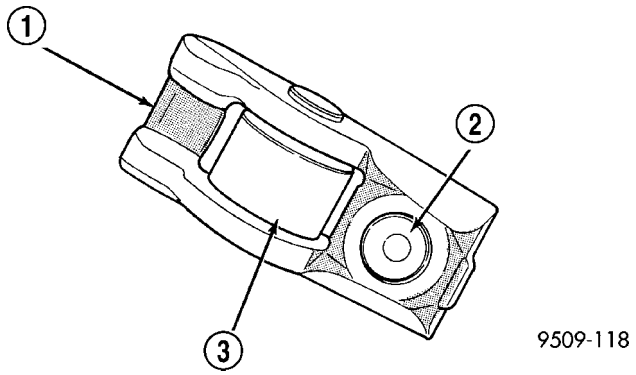

Fig. 39 Rocker Arm

1 - TIP
2 - LASH ADJUSTER POCKET
3 - ROLLER

(4) Install spark plugs.

(5) Install cylinder head cover. (Refer to 9 - ENGINE/CYLINDER HEAD/CYLINDER HEAD COVER(S) - INSTALLATION)

ENGINE BLOCK

DESCRIPTION

The cast iron cylinder block is a two-piece assembly, consisting of the cylinder block and bed plate (Fig. 40). The bed plate incorporates the main bearing caps and bolts to the cylinder block. This design offers a much stronger lower end and increased cylinder block rigidity. The rear oil seal retainer is integral with the block. The bed plate and block are serviced as an assembly.

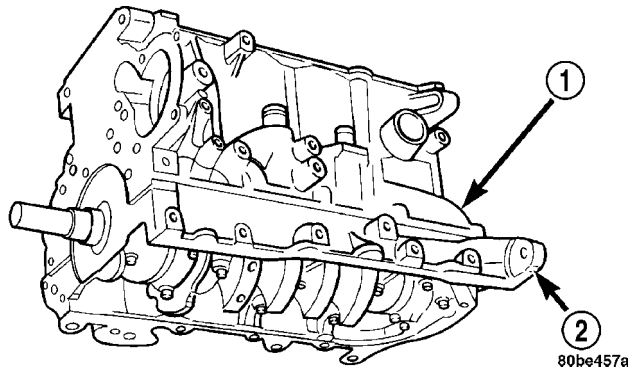

Fig. 40 Cylinder Block and Bed plate

1 - CYLINDER BLOCK
2 - BED PLATE

STANDARD PROCEDURE - CYLINDER BORE HONING

(1) Used carefully, the cylinder bore resizing hone, recommended tool C-823 or equivalent, equipped with 220 grit stones, is the best tool for this honing procedure. In addition to deglazing, it will reduce taper and out-of-round as well as removing light scuffing, scoring or scratches. Usually a few strokes will clean up a bore and maintain the required limits.

(2) Deglazing of the cylinder walls may be done using a cylinder surfacing hone, recommended tool C-3501 or equivalent, equipped with 280 grit stones, if the cylinder bore is straight and round. 20–60 strokes depending on the bore condition, will be sufficient to provide a satisfactory surface. Use a light honing oil. **Do not use engine or transmission oil, mineral spirits or kerosene.** Inspect cylinder walls after each 20 strokes.

(3) Honing should be done by moving the hone up and down fast enough to get a cross-hatch pattern. When hone marks **intersect** at 40-60 degrees, the cross hatch angle is most satisfactory for proper seating of rings (Fig. 41).

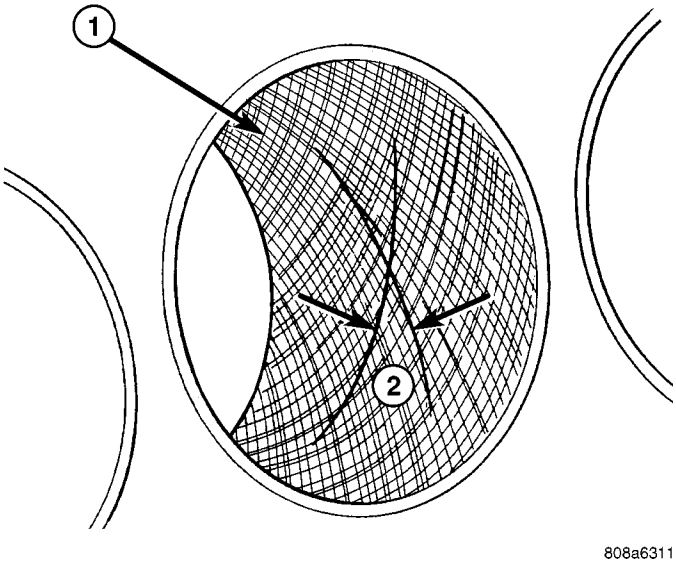

Fig. 41 Cylinder Bore Cross-Hatch Pattern

1 - CROSS-HATCH PATTERN
2 - 40°–60°

(4) A controlled hone motor speed between 200–300 RPM is necessary to obtain the proper cross-hatch angle. The number of up and down strokes per minute can be regulated to get the desired 40–60 degree angle. Faster up and down strokes increase the cross-hatch angle.

(5) After honing, it is necessary that the block be cleaned again to remove all traces of abrasive.

ENGINE BLOCK (Continued)

CAUTION: Ensure all abrasives are removed from engine parts after honing. It is recommended that a solution of soap and hot water be used with a brush and the parts then thoroughly dried. The bore can be considered clean when it can be wiped clean with a white cloth and cloth remains clean. Oil the bores after cleaning to prevent rusting.

CLEANING

Clean cylinder block thoroughly using a suitable cleaning solvent.

INSPECTION

ENGINE BLOCK

(1) Clean cylinder block thoroughly and check all core hole plugs for evidence of leaking.

(2) If new core plugs are to be installed, (Refer to 9 - ENGINE - STANDARD PROCEDURE - ENGINE CORE AND OIL GALLERY PLUGS).

(3) Examine block and cylinder bores for cracks or fractures.

(4) Check block deck surfaces for flatness. Deck surface must be within service limit of 0.1 mm (0.004 in.).

CYLINDER BORE

NOTE: The cylinder bores should be measured at normal room temperature, 21°C (70°F).

The cylinder walls should be checked for out-of-round and taper with Tool C119 or equivalent (Fig. 42) (Refer to 9 - ENGINE - SPECIFICATIONS). If the cylinder walls are badly scuffed or scored, the cylinder block should be replaced, and new pistons and rings fitted.

Measure the cylinder bore at three levels in directions A and B (Fig. 42). Top measurement should be 10 mm (3/8 in.) down and bottom measurement should be 10 mm (3/8 in.) up from bottom of bore. (Refer to 9 - ENGINE - SPECIFICATIONS).

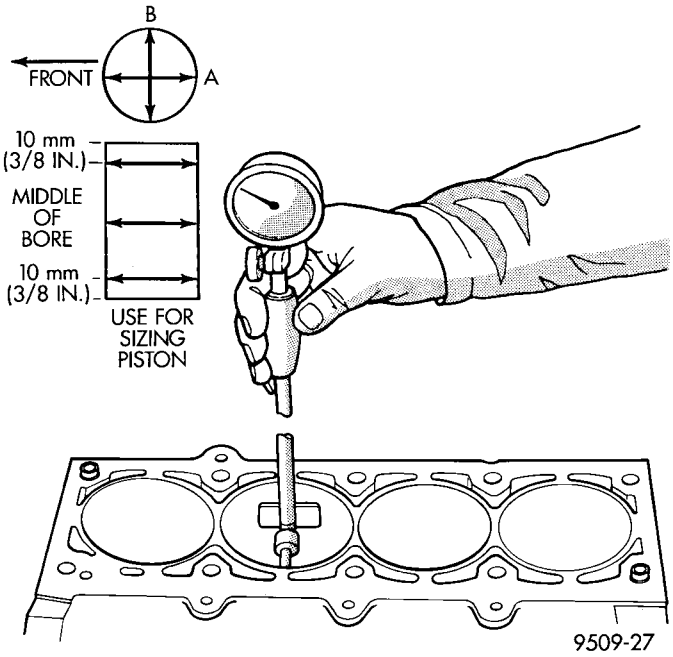

Fig. 42 Checking Cylinder Bore Size

(4) Move crankshaft all the way to the front and read the dial indicator. Refer to Engine Specifications.

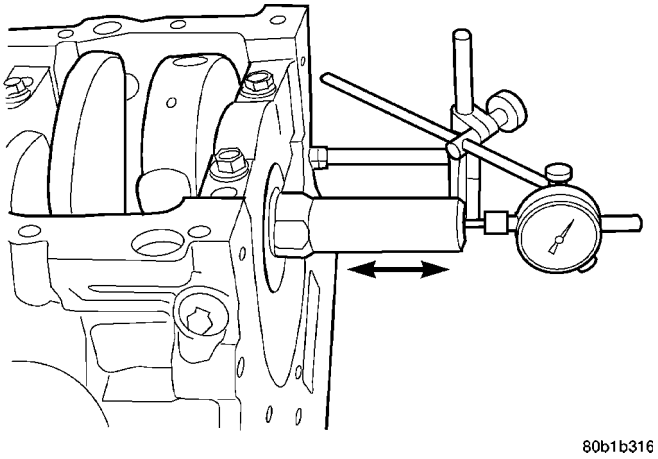

Fig. 43 Checking Crankshaft End Play - Typical

CRANKSHAFT

STANDARD PROCEDURE - CRANKSHAFT END PLAY

(1) Using Dial Indicator C-3339 and Mounting Post L-4438, attach to front of engine, locating probe perpendicular on nose of crankshaft (Fig. 43).

(2) Move crankshaft all the way to the rear of its travel.

(3) Zero the dial indicator.

REMOVAL - CRANKSHAFT

NOTE: Crankshaft can not be removed when engine is in vehicle.

(1) Remove engine assembly from vehicle (Refer to 9 - ENGINE - REMOVAL).

(2) Separate transaxle from engine.

(3) Remove drive plate/flex plate.

(4) Remove crankshaft rear oil seal (Refer to 9 - ENGINE/ENGINE BLOCK/CRANKSHAFT OIL SEAL - REAR - REMOVAL).

(5) Mount engine on a suitable repair stand.

CRANKSHAFT (Continued)

(6) Drain engine oil and remove oil filter.

(7) Remove crankshaft vibration damper (Refer to 9 - ENGINE/ENGINE BLOCK/VIBRATION DAMPER - REMOVAL).

(8) Remove engine mount support bracket.

(9) Remove front timing belt covers (Refer to 9 - ENGINE/VALVE TIMING/TIMING BELT COVER(S) - REMOVAL).

(10) Remove the timing belt (Refer to 9 - ENGINE/VALVE TIMING/TIMING BELT AND SPROCKETS - REMOVAL).

(11) Remove the rear timing belt cover (Refer to 9 - ENGINE/VALVE TIMING/TIMING BELT COVER(S) - REMOVAL).

(12) Remove the oil pan (Refer to 9 - ENGINE/LUBRICATION/OIL PAN - REMOVAL).

(13) Remove oil pump pick-up tube.

(14) Remove the crankshaft sprocket and oil pump (Refer to 9 - ENGINE/LUBRICATION/OIL PUMP - REMOVAL).

(15) Remove balance shafts and housing assembly (Refer to 9 - ENGINE/VALVE TIMING/BALANCE SHAFT - REMOVAL).

(16) Remove crankshaft position sensor.

NOTE: If piston/connecting rod replacement is necessary, remove cylinder head (Refer to 9 - ENGINE/CYLINDER HEAD - REMOVAL).

(17) Using a permanent ink or paint marker, identify cylinder number on each connecting rod cap (Fig. 44).

CAUTION: DO NOT use a number stamp or a punch to mark connecting rods. Damage to connecting rod could occur.

(18) Remove all connecting rod bolts and caps. Care should be taken not to damage the fracture rod and cap surfaces.

NOTE: Do not reuse connecting rod bolts.

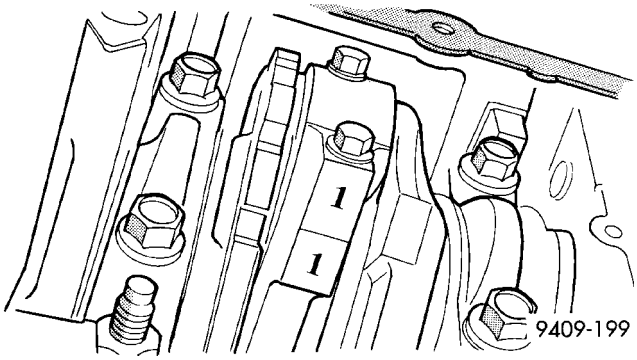

Fig. 44 Identify Connecting Rod to Cylinder-Typical

(19) Remove all bed plate bolts from the engine block (Fig. 45).

(20) Using a mallet gently tap the bed plate loose from the engine block dowel pins.

CAUTION: Do not pry up on one side of the bed plate. Damage may occur to cylinder block to bed plate alignment and thrust bearing.

(21) Bed plate should be removed evenly from the cylinder block dowel pins to prevent damage to the dowel pins and thrust bearing.

CAUTION: Use extreme care when handling crankshaft. Tone wheel damage can occur if crankshaft is mis-handled.

(22) Lift out crankshaft from cylinder block. Do not damage the main bearings or journals when removing the crankshaft.

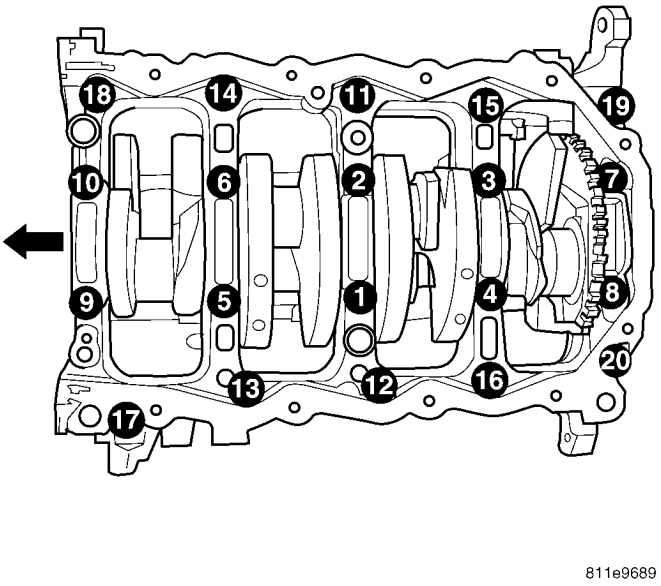

Fig. 45 Bed Plate Bolt Removal Sequence

(23) Remove the target ring mounting screws and discard.

(24) Remove the target ring from the crankshaft.

INSPECTION

For crankshaft specifications (Refer to 9 - ENGINE - SPECIFICATIONS).

The crankshaft journals should be checked for excessive wear, taper and scoring (Fig. 46). Limits of taper or out of round on any crankshaft journals should be held to 0.025 mm (0.001 in.). Journal grinding should not exceed 0.305 mm (0.012 in.) under the standard journal diameter. DO NOT grind

CRANKSHAFT (Continued)

thrust faces of No. 3 main bearing. DO NOT nick crank pin or bearing fillets. After grinding, remove rough edges from crankshaft oil holes and clean out all passages.

CAUTION: With the nodular cast iron crankshafts, it is important that the final paper or cloth polish be in the same direction as normal rotation in the engine.

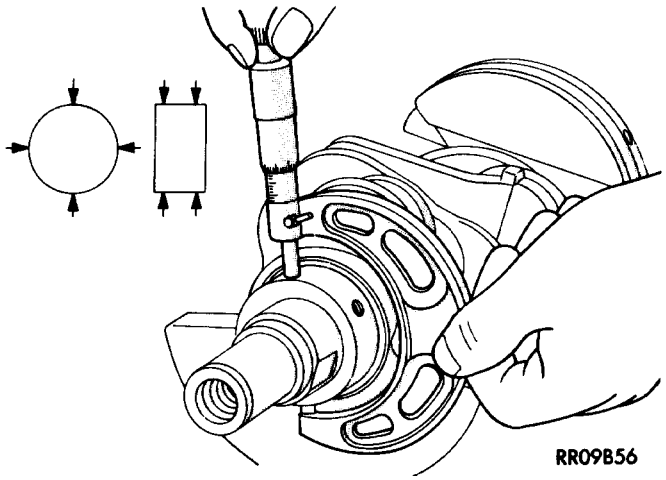

Fig. 46 Crankshaft Journal Measurements - Typical

INSTALLATION - CRANKSHAFT

CRANKSHAFT MAIN BEARING LOCATION

The crankshaft is supported in five main bearings. All upper bearing shells in the crankcase have oil grooves and holes. All lower bearing shells **except** for the thrust bearing half have oil grooves and holes (Fig. 47). Crankshaft end play is controlled by a flanged bearing on the number three main bearing journal.

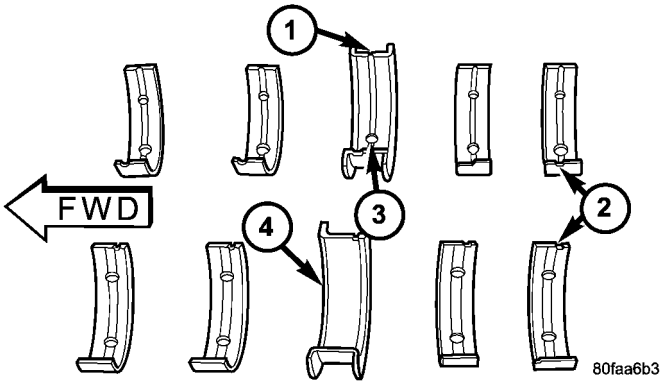

Fig. 47 Main Bearing Identification

1 - OIL GROOVE
2 - MAIN BEARINGS
3 - OIL HOLE
4 - LOWER THRUST BEARING PLAIN (NO OIL HOLE OR GROOVE)

(1) Install the main bearing upper shells with the lubrication groove and oil hole in the engine block (Fig. 48).

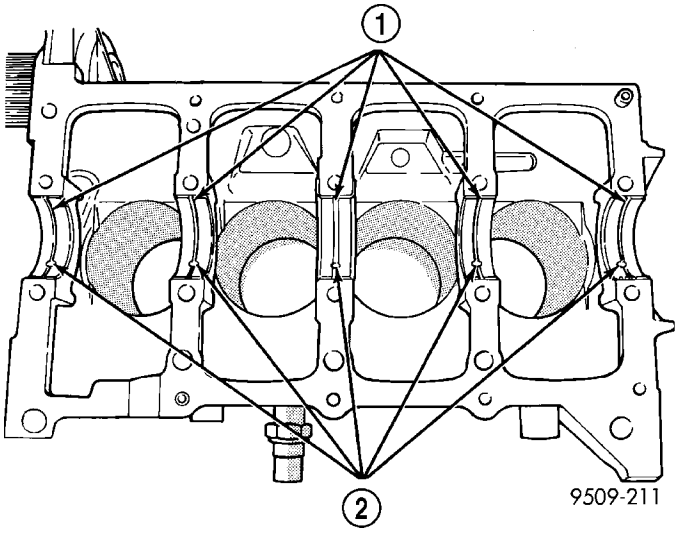

Fig. 48 Installing Main Bearing Upper Shell

1 - LUBRICATION GROOVES
2 - OIL HOLES

(2) Make certain oil holes in block line up with oil hole in bearings and bearing tabs seat in the block tab slots.

NOTE: If the crankshaft is sent out for machine work, it must be balenced as an assembly with the target ring installed.

(3) Clean crankshaft and target ring with MOPAR® brake parts cleaner and dry with compressed air to ensure that the crankshaft mating surface and target ring mounting holes are free from oil and lock patch debris.

NOTE: Always use NEW mounting screws whether installing original or new target ring.

(4) Install **NEW** mounting screws finger tight starting with the #1 location. (Fig. 49) Make sure engagment occurs with the shoulder of the screw and mounting hole before starting all other screws.

(5) Torque all mounting screws with T30 torx bit to 13 Nm (110 in-lbs) following the torque sequence.

CAUTION: Use extreme care when handling crankshaft. Tone wheel damage can occur if crankshaft is mis-handled.

CAUTION: Do not get oil on the bed plate mating surface. It will affect the ability of the sealer to seal the bed plate to cylinder block.

CRANKSHAFT (Continued)

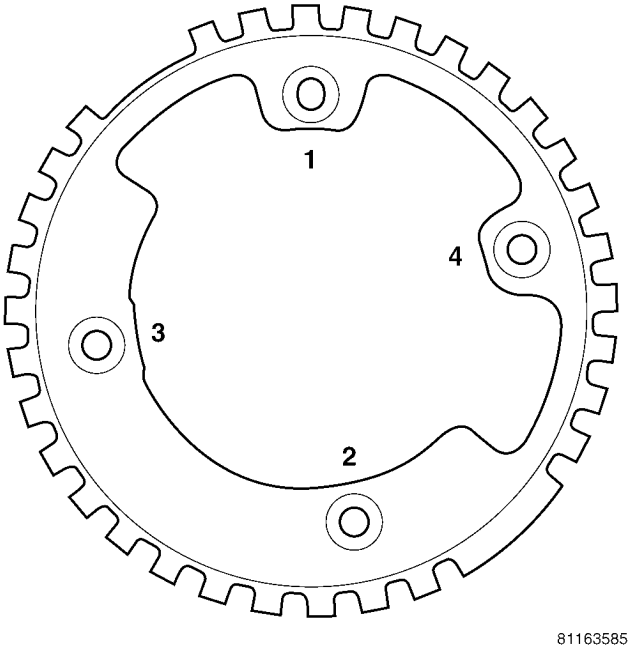

Fig. 49 Target Ring Torque Sequence

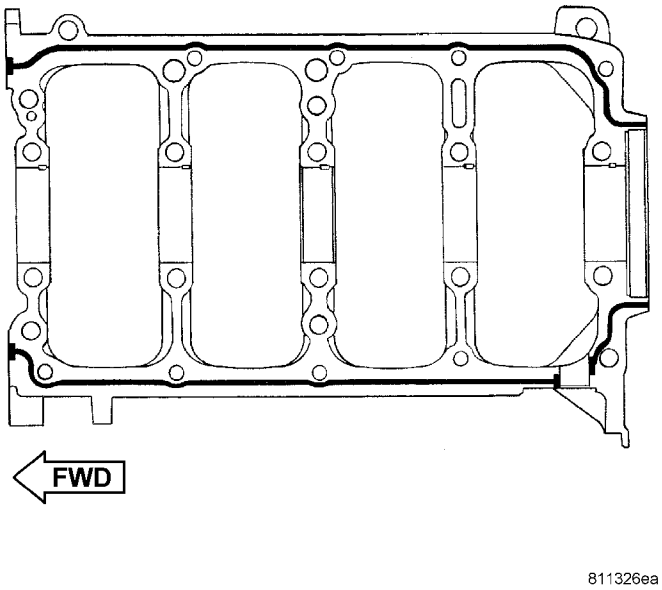

Fig. 50 Bed Plate Sealing

(6) Oil the bearings and journals. Install crankshaft in the engine block.

CAUTION: Use only Mopar® Bed Plate Sealant on the bed plate or damage may occur to the engine.

(7) Install lower main bearings into main bearing cap/bed plate. Make certain the bearing tabs are seated into the bed plate slots and apply oil.

(8) Apply 1.5 to 2.0 mm (0.059 to 0.078 in.) bead of Mopar® Bed Plate Sealant to bed plate as shown in (Fig. 50).

(9) Install the main bearing/bed plate into engine block.

(10) Before installing the bolts the threads should be oiled with clean engine oil, wipe off any excess oil.

(11) Install main bearing bed plate to engine block bolts 11, 17, and 20 finger tight. Tighten these bolts down together until the bed plate contacts the cylinder block.

(12) To ensure correct thrust bearing alignment, perform the following steps:

- Step 1: Rotate crankshaft until number 4 piston is at TDC.
- Step 2: Move crankshaft rearward to limits of travel.
- Step 3: Then, move crankshaft forward to limits of travel.
- Step 4: Wedge an appropriate tool between the rear of the cylinder block **(NOT BED PLATE)** and the rear crankshaft counterweight. This will hold the crankshaft in it's furthest forward position.

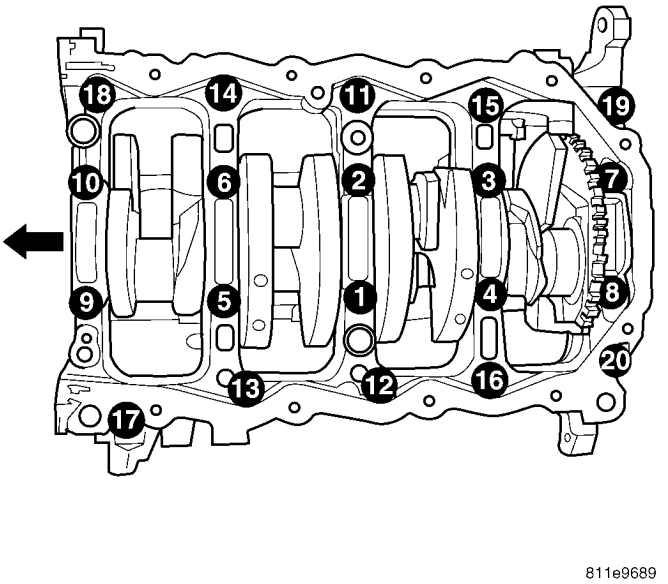

Fig. 51 Main Bearing Caps/Bed Plate Bolt Torque Sequence

- Step 5: Install and tighten bolts (1–10) in sequence shown in (Fig. 51) to 41 N·m (30 ft. lbs.).
- Step 6: Remove wedge tool used to hold crankshaft.

(13) Tighten bolts (1–10) again to 41 N·m (30 ft. lbs.) in sequence shown in (Fig. 51).

CAUTION: Do Not use a torque wrench for the following step.

CRANKSHAFT (Continued)

(14) Turn bolts (1–10) an additional 1/4 turn in sequence shown in (Fig. 51).

(15) Install main bearing bed plate to engine block bolts (11–20), and torque each bolt to 28 N·m (250 in. lbs.) in sequence shown in. (Fig. 51)

(16) Tighten bolts (11–20) again to 28 N·m (250 in. lbs.) in sequence shown in (Fig. 51).

(17) After the main bearing bed plate is installed, check the crankshaft turning torque. The turning torque should not exceed 5.6 N·m (50 in. lbs.).

(18) Check crankshaft end play (Refer to 9 - ENGINE/ENGINE BLOCK/CRANKSHAFT - STANDARD PROCEDURE).

(19) Install connecting rod bearings and caps. **Do Not Reuse Connecting Rod Bolts.** Torque connecting rod bolts to 27 N·m (20 ft. lbs.) plus 1/4 turn.

(20) Install balance shafts and housing assembly (Refer to 9 - ENGINE/VALVE TIMING/BALANCE SHAFT - INSTALLATION).

(21) Install the oil pump (Refer to 9 - ENGINE/LUBRICATION/OIL PUMP - INSTALLATION).

(22) Install oil pump pick-up tube. Torque fastener to 28 N·m (20 ft.. lbs.).

(23) Install the oil pan (Refer to 9 - ENGINE/LUBRICATION/OIL PAN - INSTALLATION).

(24) Install crankshaft position sensor.

(25) Install cylinder head if it was removed (Refer to 9 - ENGINE/CYLINDER HEAD - INSTALLATION).

(26) Install the timing belt rear cover (Refer to 9 - ENGINE/VALVE TIMING/TIMING BELT COVER(S) - INSTALLATION).

(27) Install crankshaft sprocket (Refer to 9 - ENGINE/VALVE TIMING/TIMING BELT AND SPROCKETS - INSTALLATION).

(28) Install the timing belt (Refer to 9 - ENGINE/VALVE TIMING/TIMING BELT AND SPROCKETS - INSTALLATION).

(29) Install the timing belt front covers (Refer to 9 - ENGINE/VALVE TIMING/TIMING BELT COVER(S) - INSTALLATION).

(30) Install engine mount support bracket.

(31) Install **NEW** oil filter.

(32) Install crankshaft rear oil seal (Refer to 9 - ENGINE/ENGINE BLOCK/CRANKSHAFT OIL SEAL - REAR - INSTALLATION).

(33) Install flex plate. Apply Mopar® Lock & Seal Adhesive to bolt threads and tighten to 95 N·m (70 ft. lbs.).

(34) Attach transaxle to engine. Tighten attaching bolts to 101 N·m (75 ft. lbs.).

(35) Install the engine assembly (Refer to 9 - ENGINE - INSTALLATION).

CRANKSHAFT OIL SEAL - FRONT

REMOVAL

(1) Remove the crankshaft vibration damper. (Refer to 9 - ENGINE/ENGINE BLOCK/VIBRATION DAMPER - REMOVAL)

(2) Remove timing belt. (Refer to 9 - ENGINE/VALVE TIMING/TIMING BELT/CHAIN AND SPROCKETS - REMOVAL)

(3) Remove crankshaft sprocket using Special Tool 6793 and insert C-4685-C2 (Fig. 52).

CAUTION: Do not nick shaft seal surface or seal bore.

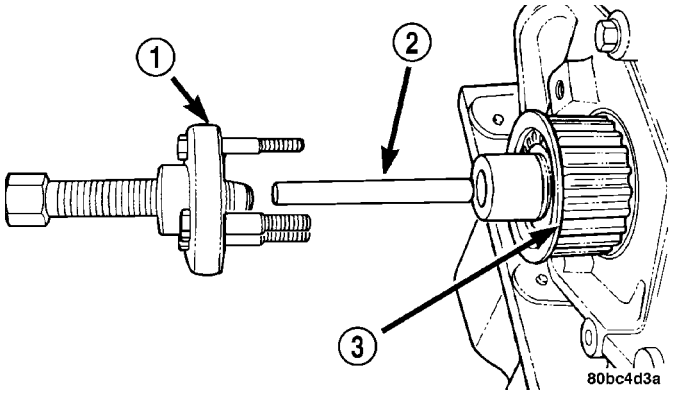

Fig. 52 Crankshaft Sprocket - Removal

1 - SPECIAL TOOL 6793
2 - SPECIAL TOOL C-4685–C2
3 - CRANKSHAFT SPROCKET

(4) Using Tool 6771 to remove front crankshaft oil seal (Fig. 53). Be careful not to damage the seal surface of cover.

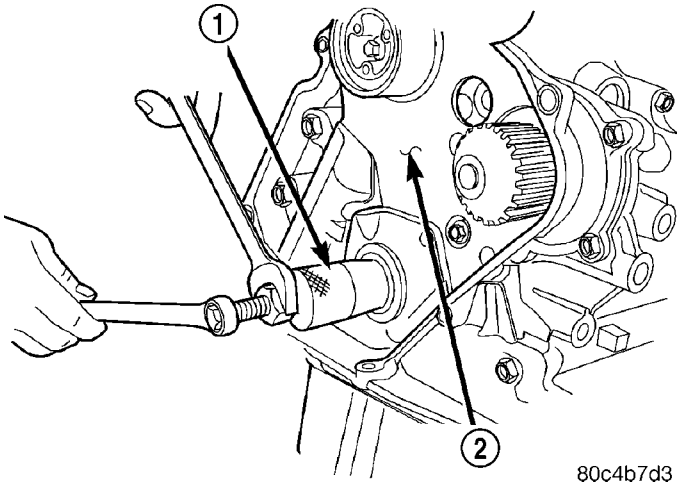

Fig. 53 Front Crankshaft Oil Seal - Removal

1 - SPECIAL TOOL 6771
2 - REAR TIMING BELT COVER

CRANKSHAFT OIL SEAL - FRONT (Continued)

INSTALLATION

(1) Install new seal by using Special Tool 6780 (Fig. 54).

(2) Place seal into opening with seal spring towards the inside of engine. Install seal until flush with cover.

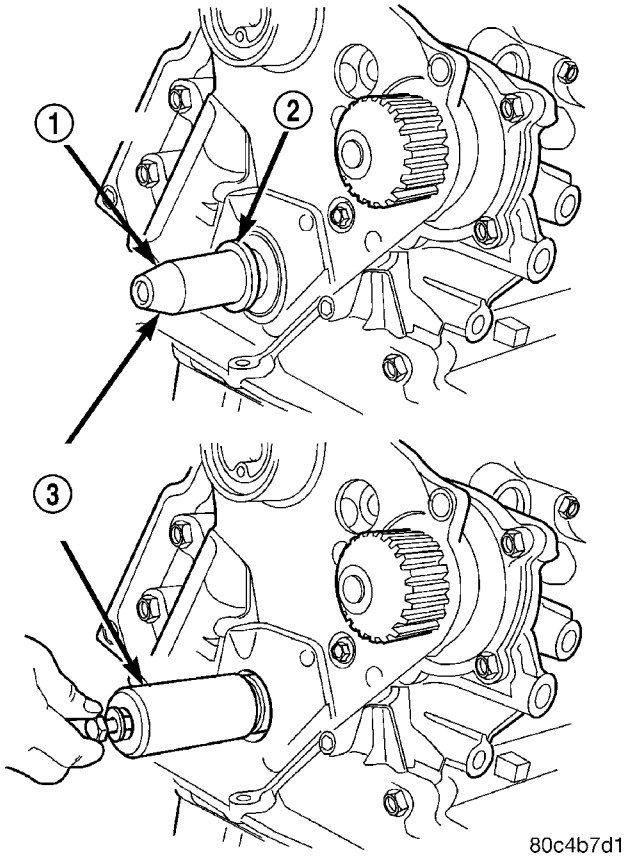

Fig. 54 Crankshaft Front Oil Seal - Installation

1 - PROTECTOR
2 - SEAL
3 - SPECIAL TOOL 6780

(3) Install crankshaft sprocket using Special Tool 6792 (Fig. 55).

(4) Install timing belt. (Refer to 9 - ENGINE/ VALVE TIMING/TIMING BELT/CHAIN AND SPROCKETS - INSTALLATION)

(5) Install crankshaft vibration damper. (Refer to 9 - ENGINE/ENGINE BLOCK/VIBRATION DAMPER - INSTALLATION)

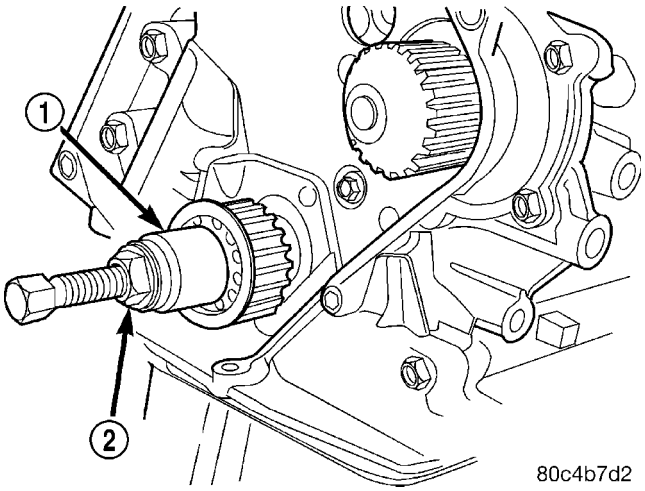

Fig. 55 Crankshaft Sprocket - Installation

1 - SPECIAL TOOL 6792
2 - TIGHTEN NUT TO INSTALL

CRANKSHAFT OIL SEAL - REAR

REMOVAL

(1) Remove transaxle. Refer to TRANSMISSION/ TRANSAXLE - REMOVAL for procedure.

(2) Remove flex plate.

(3) Insert a 3/16 flat bladed screwdriver between the dust lip and the metal case of the crankshaft seal. Angle the screwdriver (Fig. 56)through the dust lip against metal case of the seal. Pry out seal.

CAUTION: Do not permit the screwdriver blade to contact crankshaft seal surface. Contact of the screwdriver blade against crankshaft edge (chamfer) is permitted.

INSTALLATION

CAUTION: If a burr or scratch is present on the crankshaft edge (chamfer), cleanup with 400 grit sand paper to prevent seal damage during installation of new seal.

CRANKSHAFT OIL SEAL - REAR (Continued)

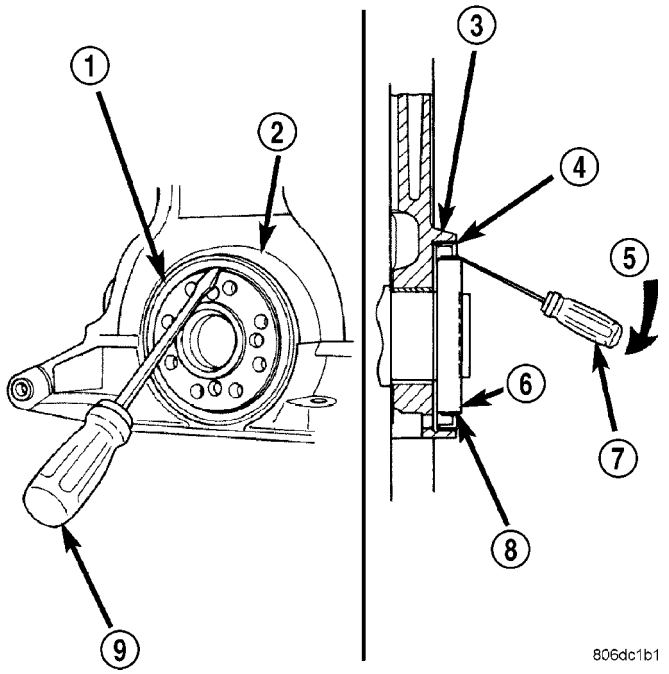

Fig. 56 Rear Crankshaft Oil Seal - Removal

1 - REAR CRANKSHAFT SEAL
2 - ENGINE BLOCK
3 - ENGINE BLOCK
4 - REAR CRANKSHAFT SEAL METAL CASE
5 - PRY IN THIS DIRECTION
6 - CRANKSHAFT
7 - SCREWDRIVER
8 - REAR CRANKSHAFT SEAL DUST LIP
9 - SCREWDRIVER

NOTE: When installing seal, no lube on seal is needed.

(1) Place Special Tool 6926-1 Seal Guide on crankshaft (Fig. 57).

(2) Position seal over guide tool (Fig. 57). Guide tool should remain on crankshaft during installation of seal. Ensure that the lip of the seal is facing towards the crankcase during installation.

CAUTION: If the seal is driven into the block past flush, this may cause an oil leak.

(3) Drive the seal into the block using Special Tool 6926-2 and handle C-4171 (Fig. 58) until the tool bottoms out against the block (Fig. 59).

(4) Install flex plate. Apply Mopar® Lock & Seal Adhesive to bolt threads and tighten bolts to 95 N·m (70 ft. lbs.).

(5) Install transaxle. Refer to TRANSMISSION/TRANSAXLE - INSTALLATION for procedure.

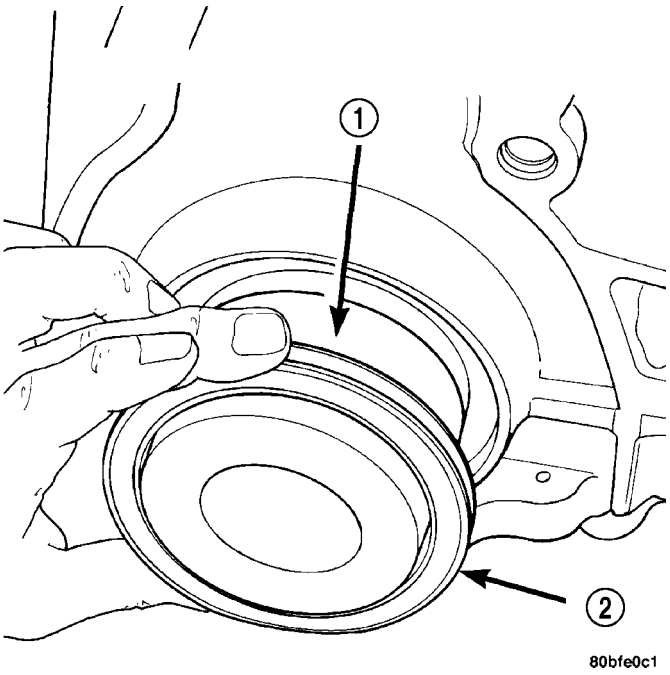

Fig. 57 Rear Crankshaft Seal and Special Tool 6926-1

1 - SPECIAL TOOL 6926–1 PILOT
2 - SEAL

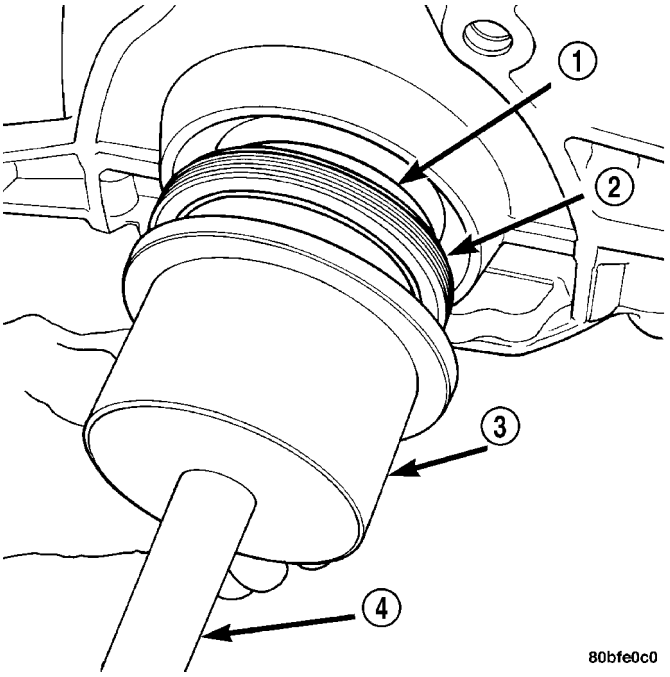

Fig. 58 Crankshaft Seal and Special Tools 6926-2 & C-4171

1 - SPECIAL TOOL 6926–1 PILOT
2 - SEAL
3 - SPECIAL TOOL 6926–2 INSTALLER
4 - SPECIAL TOOL C-4171

CRANKSHAFT OIL SEAL - REAR (Continued)

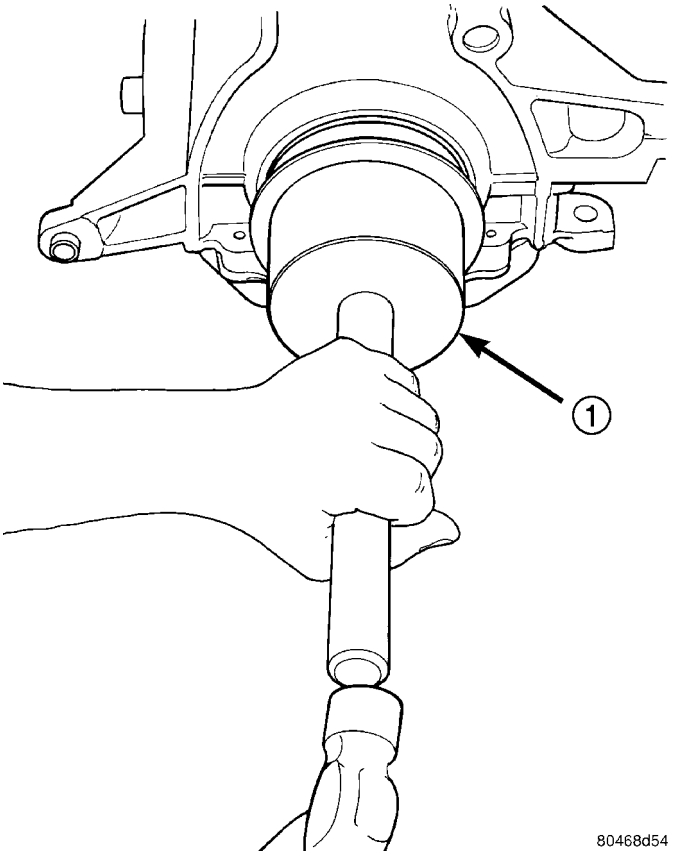

Fig. 59 Rear Crankshaft Seal - Installation

1 - SPECIAL TOOL 6926–2 INSTALLER

PISTON & CONNECTING ROD

DESCRIPTION

The pistons are made of a cast aluminum alloy. The pistons have pressed-in pins attached to forged powdered metal connecting rods. The pistons pin is offset 1 mm (0.0394 in.) towards the thrust side of the piston. The connecting rods are a cracked cap design and are not repairable. Hex head cap screws are used to provide alignment and durability in the assembly. The pistons and connecting rods are serviced as an assembly.

STANDARD PROCEDURE - PISTON TO CYLINDER BORE FITTING

NOTE: Pistons and cylinder bores should be measured at normal room temperature, 21°C (70°F).

Piston and cylinder wall must be clean and dry. Piston diameter should be measured 90 degrees to piston pin.

Piston measurement should be taken approximately 14 mm (0.551 in.) from the bottom of the skirt as shown in (Fig. 60)

Cylinder bores should be measured halfway down the cylinder bore and transverse (measurement location B) to the engine crankshaft center line shown in (Fig. 61). Refer to for Engine Specifications (Refer to 9 - ENGINE - SPECIFICATIONS). Correct piston to bore clearance must be established in order to assure quiet and economical operation.

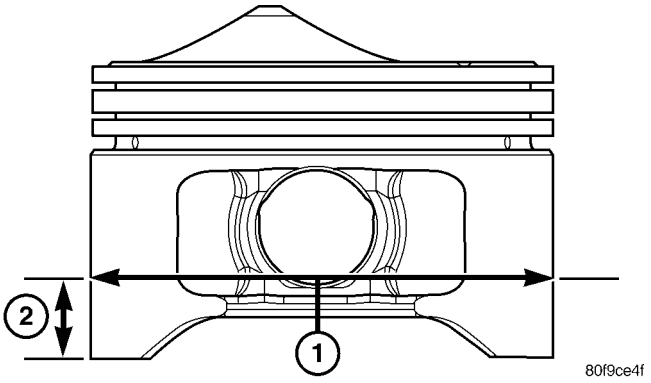

Fig. 60 Piston Measurement

1 - PISTON DIAMETER
2 - 14 mm (0.551 in.)

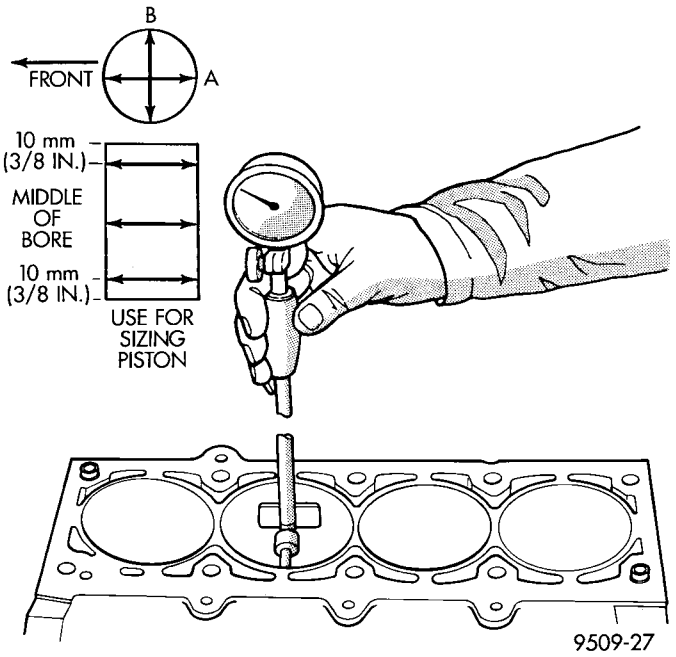

Fig. 61 Checking Cylinder Bore

REMOVAL

(1) Remove cylinder head (Refer to 9 - ENGINE/CYLINDER HEAD - REMOVAL).

(2) Remove oil pan (Refer to 9 - ENGINE/LUBRICATION/OIL PAN - REMOVAL).

(3) Remove Balance Shaft Carrier Assembly (Refer to 9 - ENGINE/VALVE TIMING/BALANCE SHAFT CARRIER - REMOVAL).

PISTON & CONNECTING ROD (Continued)

(4) Remove top ridge of cylinder bores with a reliable ridge reamer before removing pistons from cylinder block. **Be sure to keep tops of pistons covered during this operation**.

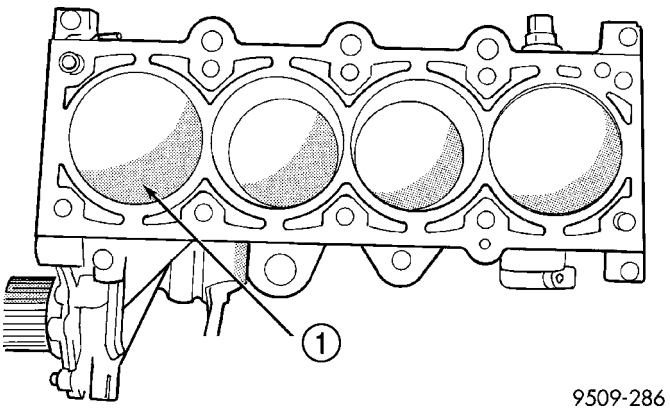

Fig. 62 Piston Markings

1 - DIRECTIONAL ARROW WILL BE IMPRINTED IN THIS AREA

(5) Pistons have a directional stamping in the front half of the piston facing towards the **front** of engine (Fig. 62).

(6) Pistons and connecting rods must be removed from top of cylinder block. Rotate crankshaft so that each connecting rod is centered in cylinder bore.

(7) Using a permanent ink or paint marker, identify cylinder number on each connecting rod cap (Fig. 63).

CAUTION: DO NOT use a number stamp or a punch to mark connecting rods. Damage to connecting rod could occur.

(8) Remove connecting rod bolts and cap. Care should be taken not to damage the fracture rod and cap surfaces.

NOTE: Do not reuse connecting rod bolts.

CAUTION: Care must be taken not to damage the fractured rod and cap joint surfaces, as engine damage many occur.

(9) To protect crankshaft journal and fractured rod surfaces, install Special Tool 8189, connecting rod guides onto connecting rod (Fig. 64). Carefully push each piston and rod assembly out of cylinder bore.

(10) Remove Special Tool 8189, connecting rod guides and re-install bearing cap on the mating rod.

NOTE: Piston and rods are serviced as an assembly.

(11) Repeat procedure for each piston and connecting rod assembly.

(12) Remove piston rings (Refer to 9 - ENGINE/ENGINE BLOCK/PISTON RINGS - REMOVAL).

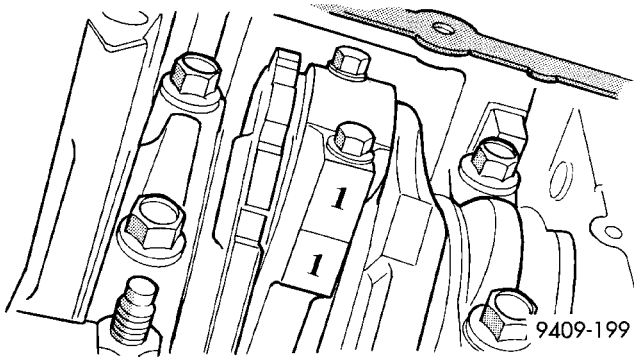

Fig. 63 Identify Connectng Rod to Cylinder - Typical

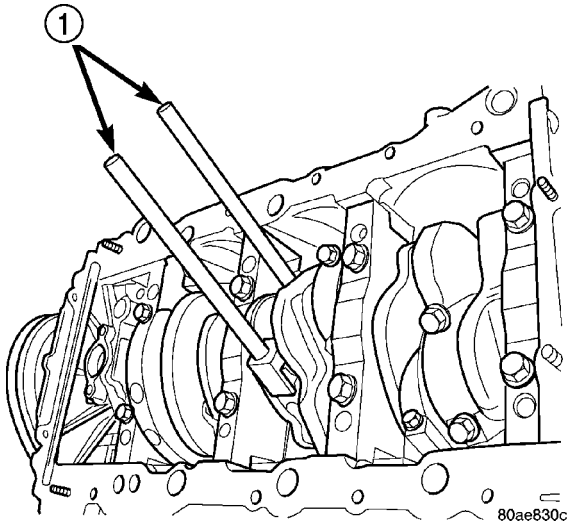

Fig. 64 Connecting Rod Guides - Typical

1 - SPECIAL TOOL 8189 CONNECTING ROD GUIDES

INSTALLATION

(1) Install piston rings on piston (Refer to 9 - ENGINE/ENGINE BLOCK/PISTON RINGS - INSTALLATION)

(2) Before installing pistons and connecting rod assemblies into the bore, be sure that compression ring gaps are staggered so that neither is in line with oil ring rail gap (Fig. 65).

(3) Before installing the ring compressor, make sure the oil ring expander ends are butted and the rail gaps located as shown in (Fig. 65). As viewed from top.

(4) Immerse the piston head and rings in clean engine oil, slide the ring compressor, over the piston (Fig. 66). **Be sure position of rings does not change during this operation** .

(5) The directional stamp on the piston should face toward the front of the engine (Fig. 62).

PISTON & CONNECTING ROD (Continued)

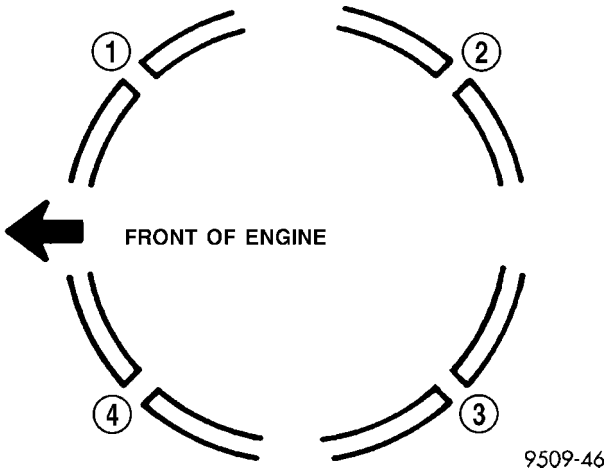

Fig. 65 Piston Ring End Gap Position

1 - GAP OF LOWER SIDE RAIL
2 - NO. 1 RING GAP
3 - GAP OF UPPER SIDE RAIL
4 - NO. 2 RING GAP AND SPACER EXPANDER GAP

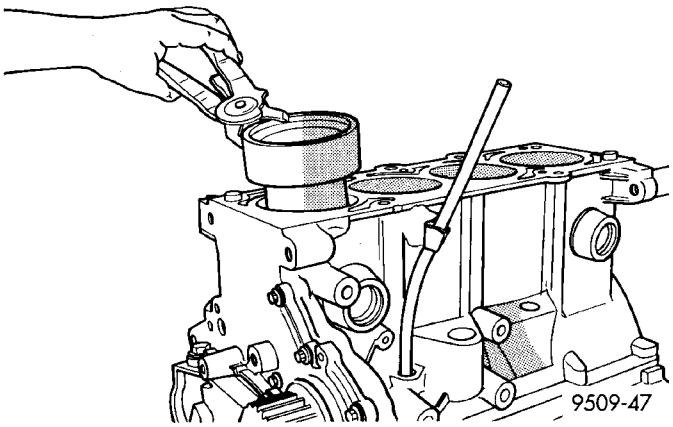

Fig. 66 Piston—Installation

(6) Rotate crankshaft so that the connecting rod journal is on the center of the cylinder bore. Lubricate connecting rod journal with clean engine oil.

(7) Install connecting rod upper bearing half into connecting rod. Install Special Tool 8189, connecting rod guides onto connecting rod (Fig. 64).

(8) Tap the piston down in cylinder bore, using a hammer handle. At the same time, guide connecting rod into position on connecting rod journal.

(9) Remove Special Tool 8189, connecting rod guides.

NOTE: The connecting rod cap bolts should not be reused.

(10) Before installing the **NEW** bolts, the threads should be coated with clean engine oil.

(11) Install connecting rod lower bearing half into connecting rod cap. Install connecting rod cap.

(12) Install each bolt finger tight then alternately torque each bolt to assemble the cap properly.

(13) Tighten the connecting rod bolts using the 2 step torque-turn method. Tighten according to the following values:

CAUTION: Do not use a torque wrench for the second step.

1. Tighten the bolts to 27 N·m (20 ft. lbs.).
2. Tighten the connecting rod bolts an additional **1/4 TURN.**

(14) Using a feeler gauge, check connecting rod side clearance (Fig. 67). (Refer to 9 - ENGINE - SPECIFICATIONS) for connecting rod side clearance.

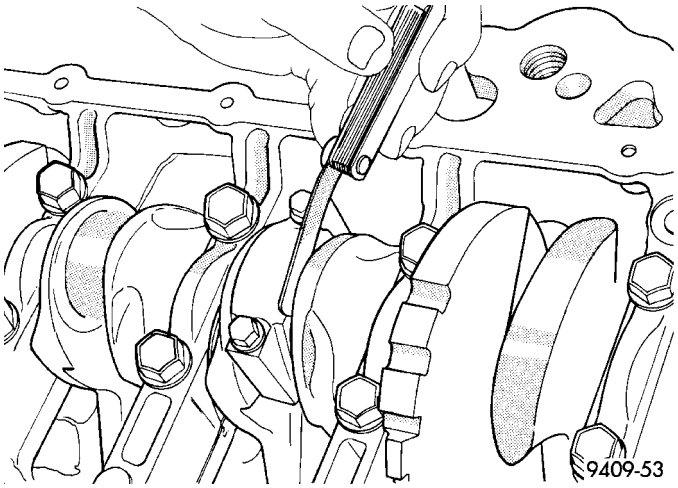

Fig. 67 Checking Connecting Rod Side Clearance - Typical

(15) Install Balance Shaft Carrier Assembly (Refer to 9 - ENGINE/VALVE TIMING/BALANCE SHAFT CARRIER - INSTALLATION).

(16) Install oil pan (Refer to 9 - ENGINE/LUBRICATION/OIL PAN - INSTALLATION).

(17) Install cylinder head (Refer to 9 - ENGINE/CYLINDER HEAD - INSTALLATION).

CONNECTING ROD BEARINGS

STANDARD PROCEDURE

CONNECTING ROD - FITTING

(1) For measuring connecting rod bearing clearance procedure and use of Plastigage(Refer to 9 - ENGINE - STANDARD PROCEDURE). For bearing clearance refer to Engine Specifications. (Refer to 9 - ENGINE - SPECIFICATIONS)

CONNECTING ROD BEARINGS (Continued)

NOTE: The rod bearing bolts should not be reused.

(2) Before installing the **NEW** bolts the threads should be oiled with clean engine oil.

(3) Install each bolt finger tight then alternately torque each bolt to assemble the cap properly.

(4) Tighten the connecting rod bolts using the 2 step torque-turn method. Tighten according to the following values:

CAUTION: Do not use a torque wrench for the second step.

1. Tighten the bolts to 27 N·m (20 ft. lbs.).
2. Tighten the connecting rod bolts an additional **1/4 TURN.**

(5) Using a feeler gauge, check connecting rod side clearance (Fig. 68). Refer to clearance specifications (Refer to 9 - ENGINE - SPECIFICATIONS).

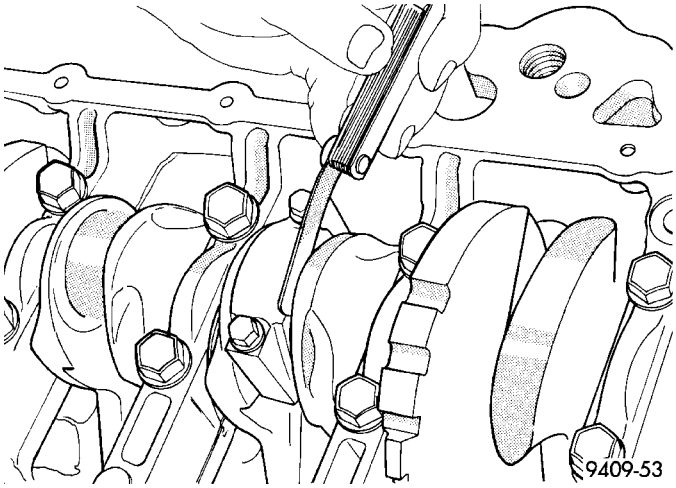

Fig. 68 Connecting Rod Side Clearance - Typical

PISTON RINGS

STANDARD PROCEDURE

PISTON RING - FITTING

(1) Wipe cylinder bore clean. Insert ring and push down with piston to ensure it is square in bore. The ring gap measurement must be made with the ring positioning at least 12 mm (0.50 inch) from bottom of cylinder bore. Check gap with feeler gauge (Fig. 69). Refer to Engine Specifications.

(2) Check piston ring to groove side clearance (Fig. 70). Refer to Engine Specifications.

REMOVAL

(1) Using a suitable ring expander, remove upper and intermediate piston rings (Fig. 71).

(2) Remove the upper oil ring side rail, lower oil ring side rail and then oil ring expander from piston.

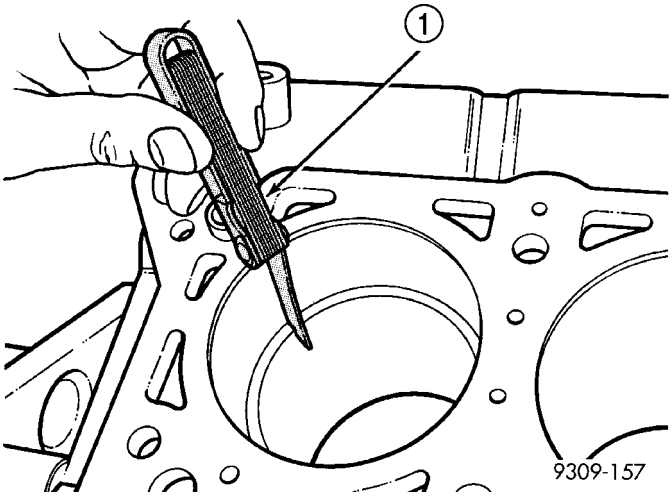

Fig. 69 Piston Ring Gap

1 - FEELER GAUGE

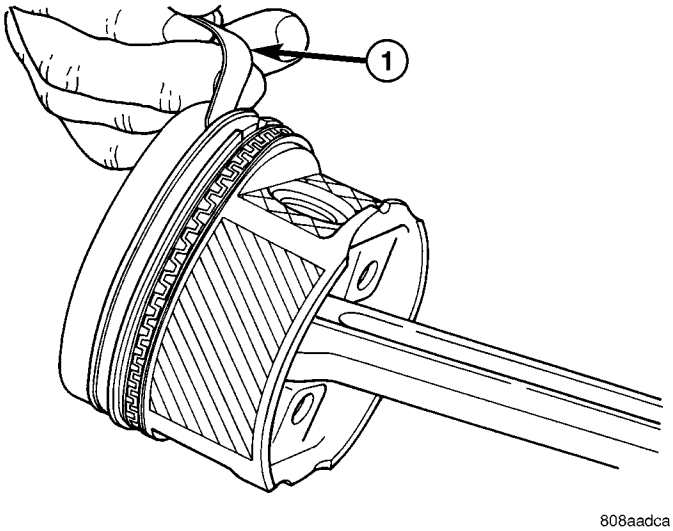

Fig. 70 Piston Ring Side Clearance

1 - FEELER GAUGE

(3) Clean ring grooves of any carbon deposits.

INSTALLATION

NOTE: The identification mark on face of upper and intermediate piston rings must point toward top of piston.

Install rings with manufacturers identification mark facing up, to the top of the piston (Fig. 72).

CAUTION: Install piston rings in the following order:

1. Oil ring expander.
2. Upper oil ring side rail.
3. Lower oil ring side rail.

PISTON RINGS (Continued)

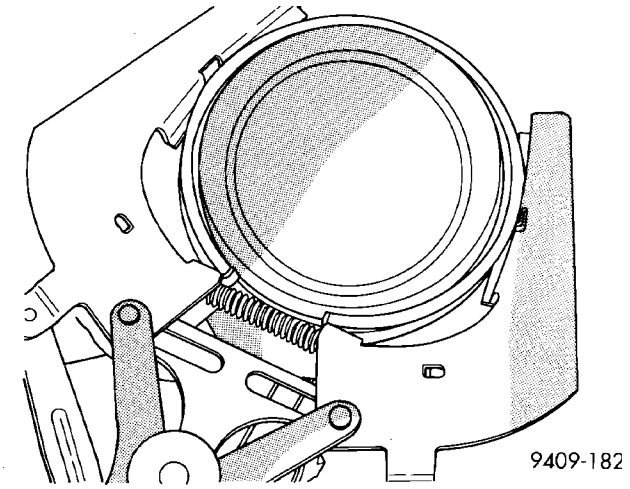

Fig. 71 Piston Rings—Removing and Installing

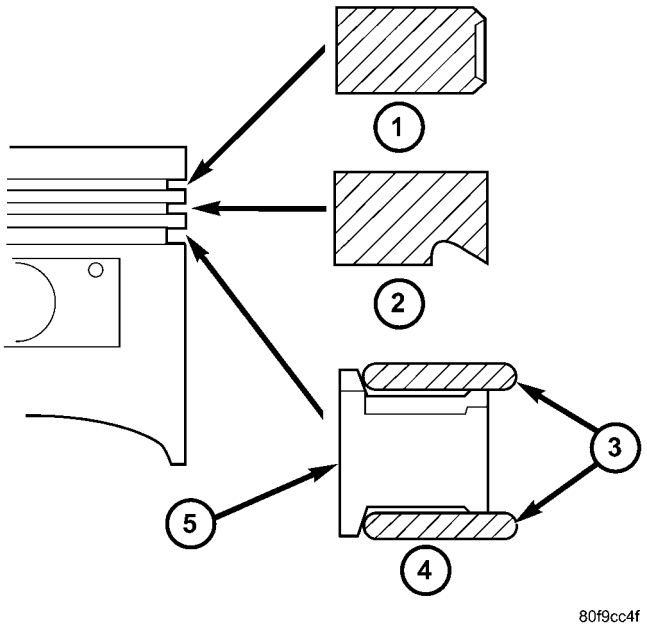

Fig. 72 Piston Ring Installation

1 - NO. 1 PISTON RING
2 - NO. 2 PISTON RING
3 - SIDE RAIL
4 - OIL RING
5 - SPACER EXPANDER

4. No. 2 Intermediate piston ring.
5. No. 1 Upper piston ring.

(1) Install oil ring expander (Fig. 72).

(2) Install upper side rail first and then the lower side rail. Install the side rails by placing one end between the piston ring groove and the oil ring expander. Hold end firmly and press down the portion to be installed until side rail is in position. **Do not use a piston ring expander (Fig. 73).**

(3) Install No. 2 piston ring and then No. 1 piston ring (Fig. 72).

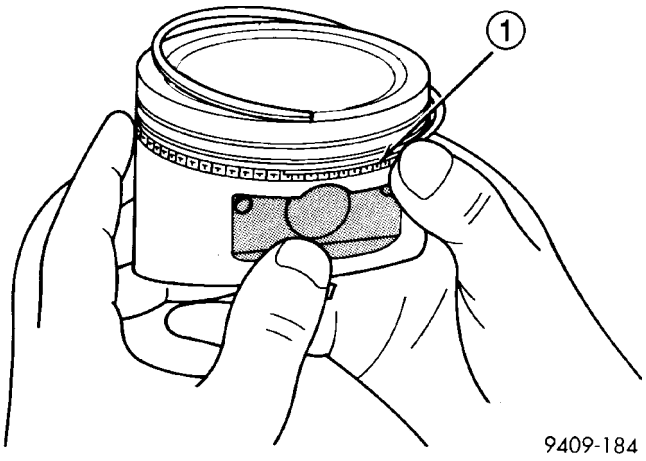

Fig. 73 Installing Side Rail

1 - SIDE RAIL END

(4) Position piston ring end gaps as shown in (Fig. 74).

(5) Position oil ring expander gap at least 45° from the side rail gaps but **not** on the piston pin center or on the thrust direction. Staggering ring gap is important for oil control.

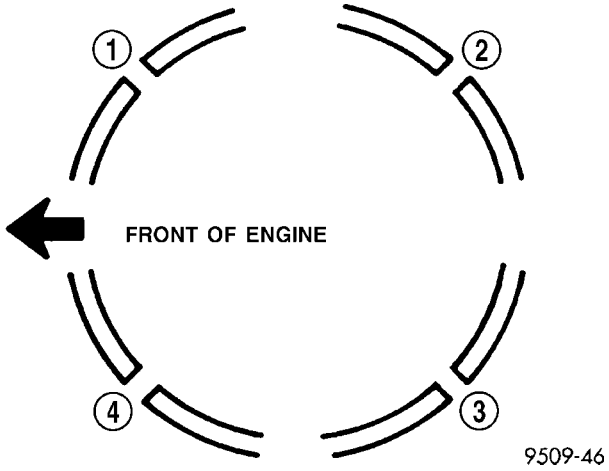

Fig. 74 Piston Ring End Gap Position

1 - GAP OF LOWER SIDE RAIL
2 - NO. 1 RING GAP
3 - GAP OF UPPER SIDE RAIL
4 - NO. 2 RING GAP AND SPACER EXPANDER GAP

VIBRATION DAMPER

REMOVAL

(1) Remove accesory drive belts. (Refer to 7 - COOLING/ACCESSORY DRIVE/DRIVE BELTS - REMOVAL)

(2) Remove crankshaft damper bolt.

(3) Remove damper using Special Tool 3-Jaw Puller 1026 and Insert 6827–A (Fig. 75).

VIBRATION DAMPER (Continued)

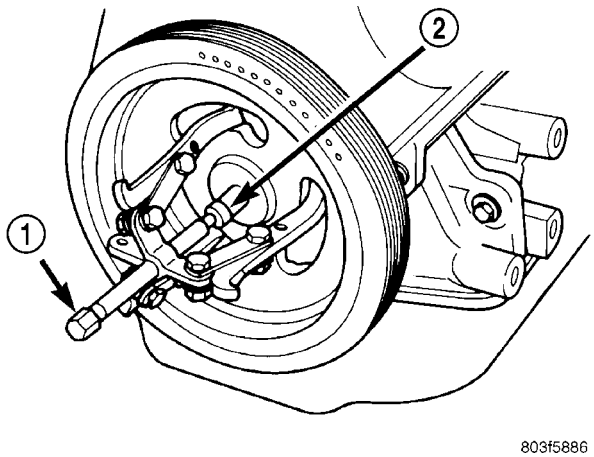

Fig. 75 Crankshaft Vibration Damper - Removal

1 - SPECIAL TOOL 1026 3-JAW PULLER
2 - SPECIAL TOOL 6827–A INSERT

INSTALLATION

(1) Install crankshaft vibration damper using M12 1.75 x 150 mm bolt, washer, thrust bearing and nut from Special Tool 6792 (Fig. 76).

(2) Install crankshaft vibration damper bolt and tighten to 142 N·m (105 ft. lbs.).

(3) Install accessory drive belts. (Refer to 7 - COOLING/ACCESSORY DRIVE/DRIVE BELTS - INSTALLATION)

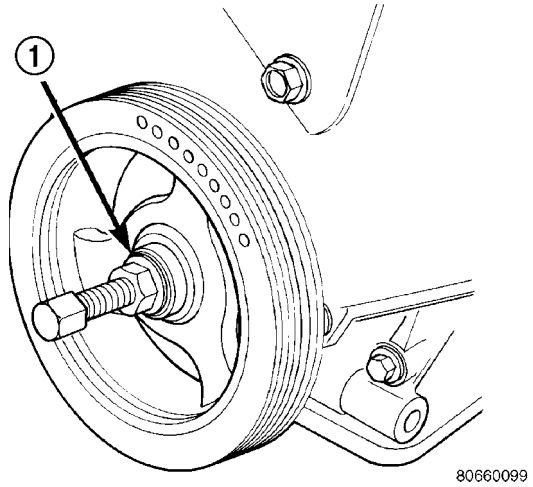

Fig. 76 Crankshaft Vibration Damper - Installation

1 - M12–1.75 × 150 MM BOLT, WASHER AND THRUST BEARING FROM SPECIAL TOOL 6792

STRUCTURAL COLLAR

REMOVAL

(1) Raise vehicle on hoist.

(2) Remove engine front mount bracket and front insulator mount. (Refer to 9 - ENGINE/ENGINE MOUNTING/FRONT MOUNT - REMOVAL)

(3) Remove structural collar attaching bolts (Fig. 77).

(4) Remove collar.

INSTALLATION

CAUTION: Torque procedure for the structural collar must be followed or damage could occur to oil pan and collar.

(1) Perform the following steps for installing structural collar. Refer to (Fig. 77):

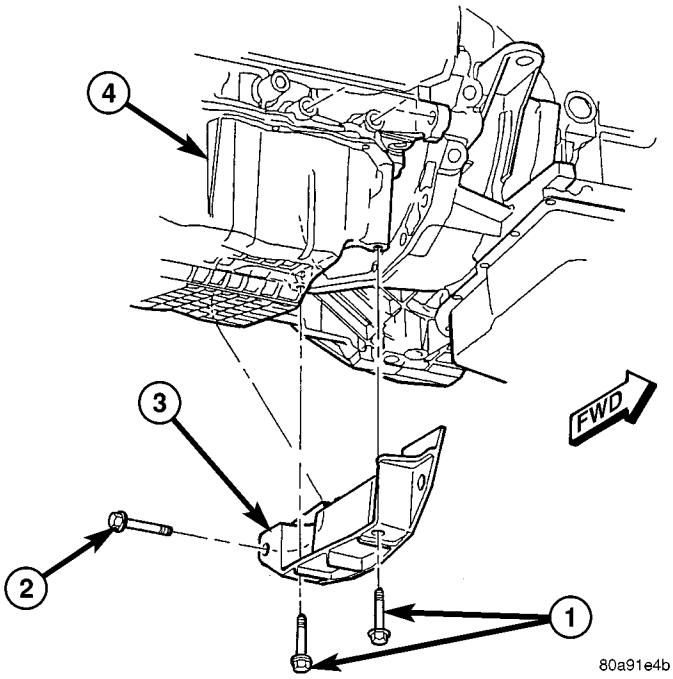

Fig. 77 Structural Collar

1 - BOLT - COLLAR TO OIL PAN
2 - BOLT - COLLAR TO TRANSAXLE
3 - STRUCTURAL COLLAR
4 - OIL PAN

- Step 1: Position collar between transaxle and oil pan. Install collar to transaxle bolt, **hand start only**.
- Step 2: Install collar to oil pan bolts, **hand snug only.**
- Step 3: Final torque collar to transaxle bolts to 101 N·m (75 ft. lbs.)
- Step 4: Final torque collar to oil pan bolts to 54 N·m (40 ft. lbs.).

(2) Install engine front mount bracket and insulator. (Refer to 9 - ENGINE/ENGINE MOUNTING/FRONT MOUNT - INSTALLATION)

(3) Lower vehicle.

ENGINE MOUNTING

DESCRIPTION

The engine mounting system consist of four mounts; right and a left side support the powertrain, and a front and a rear mount control powertrain torque. The right side mount is a hydro-type (Fig. 78), all others are of molded rubber material.

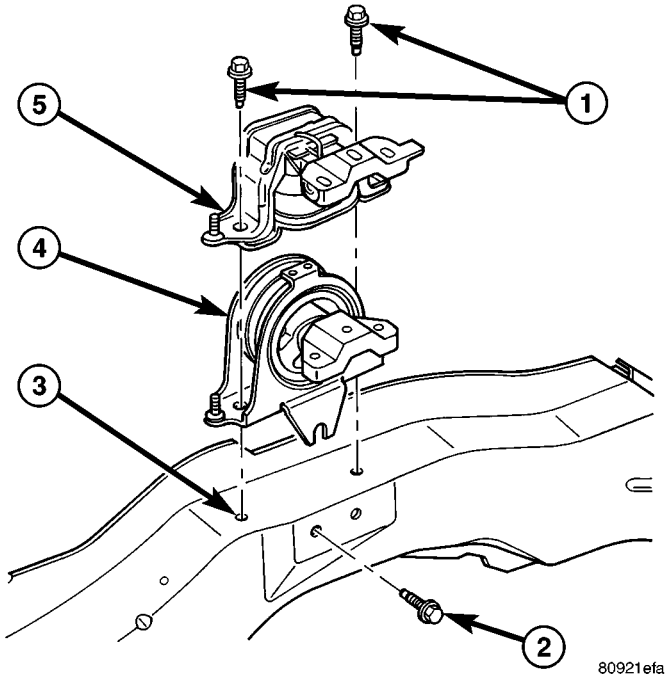

Fig. 78 Engine Hydro-type Mount - Right Side

1 - BOLT
2 - BOLT
3 - FRAME RAIL
4 - RIGHT MOUNT - 2.4L ENGINE
5 - RIGHT MOUNT - 3.3/3.8L ENGINE

FRONT MOUNT

REMOVAL

(1) Raise vehicle on hoist.

(2) Remove the front engine mount through bolt from the insulator (Fig. 79).

(3) Remove the engine front mount bolts and remove the insulator assembly (Fig. 79).

(4) Remove the front mounting bracket from engine, if necessary (Fig. 79).

INSTALLATION

(1) Install the front mount bracket to engine, if removed (Fig. 79).

(2) Install the insulator mount assembly (Fig. 79).

(3) Install the front engine mount through bolt to the insulator (Fig. 79).

(4) Lower the vehicle.

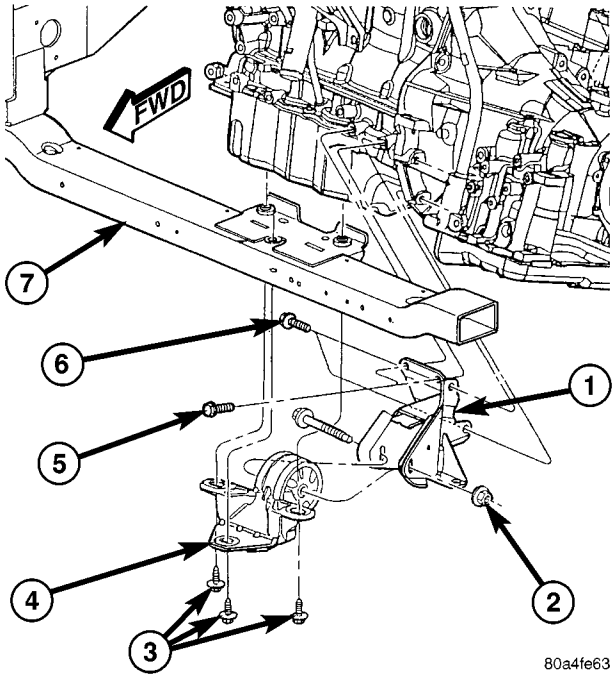

Fig. 79 Front Mount and Bracket

1 - BRACKET - FRONT MOUNT
2 - NUT - 68 N·m (50 ft. lbs.)
3 - BOLT - 54 N·m (40 ft. lbs.)
4 - MOUNT - FRONT INSULATOR
5 - BOLT - 68 N·m (50 ft. lbs.)
6 - BOLT - 68 N·m (50 ft. lbs.)
7 - FRONT CROSSMEMBER

LEFT MOUNT

REMOVAL

(1) Raise the vehicle on hoist.

(2) Remove the left front wheel.

(3) Remove the left mount through bolt access cover.

(4) Support the transaxle with a suitable jack.

(5) Remove the engine front mount through bolt to allow left mount removal clearance (Fig. 79).

(6) Remove the left mount through frame rail bolt (Fig. 80).

(7) Lower transaxle for access to horizontal bolts.

(8) Remove the horizontal bolts from the mount to the transaxle (Fig. 81).

NOTE: To remove mount, additional lowering of transaxle may be required.

(9) Remove left mount.

INSTALLATION

(1) Install left mount on transaxle (Fig. 81).

(2) Raise transaxle with jack until left mount is in position.

(3) Install left mount through bolt (Fig. 80).

LEFT MOUNT (Continued)

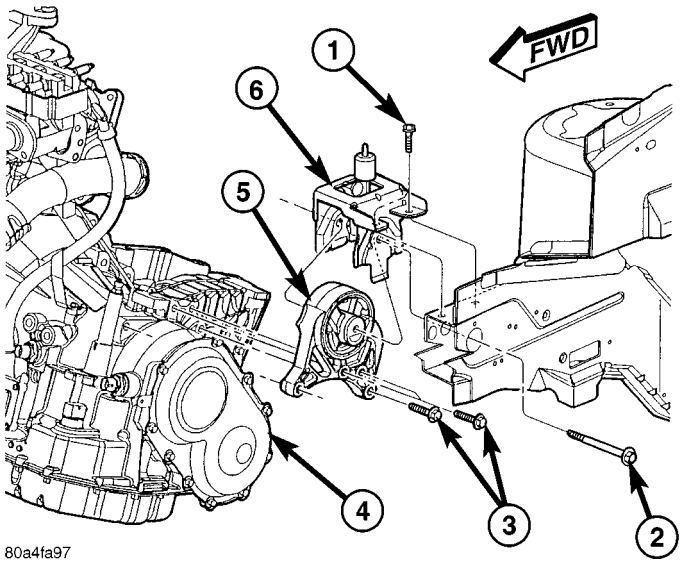

Fig. 80 Left Mount To Bracket

1 - BOLT - BRACKET TO FRAME RAIL 68 N·m (50 ft. lbs.)
2 - BOLT - MOUNT TO RAIL THRU 75 N·m (55 ft. lbs.)
3 - BOLT - LEFT MOUNT TO TRANSAXLE 54 N·m (40 ft. lbs.)
4 - TRANSAXLE
5 - MOUNT - LEFT
6 - BRACKET - LEFT MOUNT

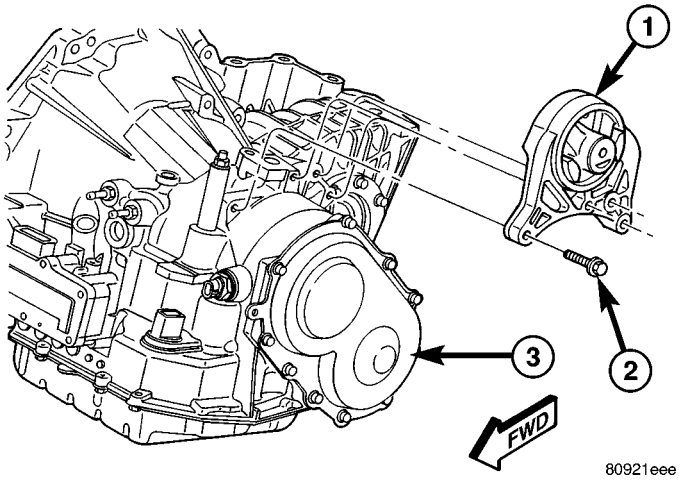

Fig. 81 Left Mount - 41TE Transaxle

1 - LEFT MOUNT ASSEMBLY
2 - BOLT - 54 N·m (40 ft. lbs.)
3 - TRANSAXLE - 41TE

(4) Install left mount through bolt access cover.
(5) Install front mount through bolt (Fig. 79).
(6) Install left front wheel.
(7) Lower vehicle.

REAR MOUNT

REMOVAL

(1) Raise vehicle on hoist.
(2) Remove the rear mount heat shield (Fig. 82).

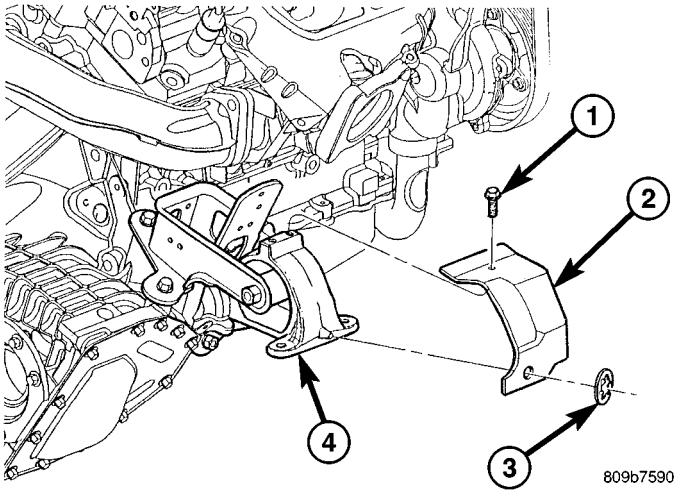

Fig. 82 Rear Mount Heat Shield

1 - BOLT - HEAT SHIELD 11 N·m (100 in. lbs.)
2 - HEAT SHIELD
3 - CLIP
4 - REAR MOUNT

(3) Remove the through bolt from the mount and rear mount bracket (Fig. 83).
(4) Remove the mount bolts (Fig. 83).
(5) Remove the rear mount (Fig. 83).

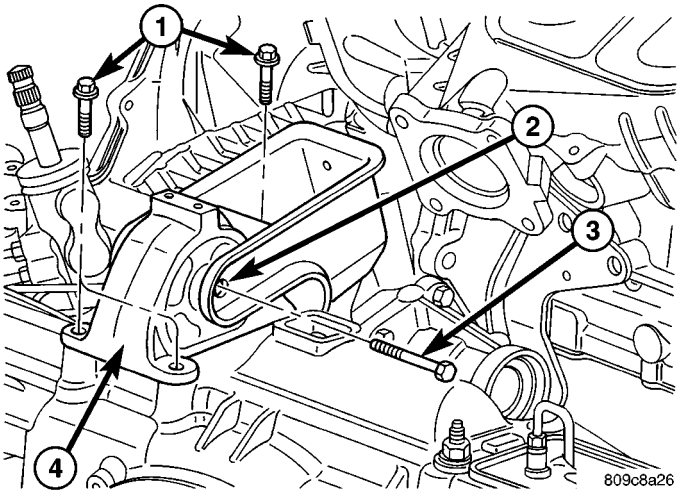

Fig. 83 Rear Mount

1 - BOLT 54 N·m (40 ft. lbs.)
2 - REAR MOUNT BRACKET
3 - THRU-BOLT 54 N·m (40 ft. lbs.)
4 - REAR MOUNT

(6) For rear mount bracket removal, remove the bolts attaching bracket to transaxle (Fig. 84).
(7) Remove rear mount bracket.

REAR MOUNT (Continued)

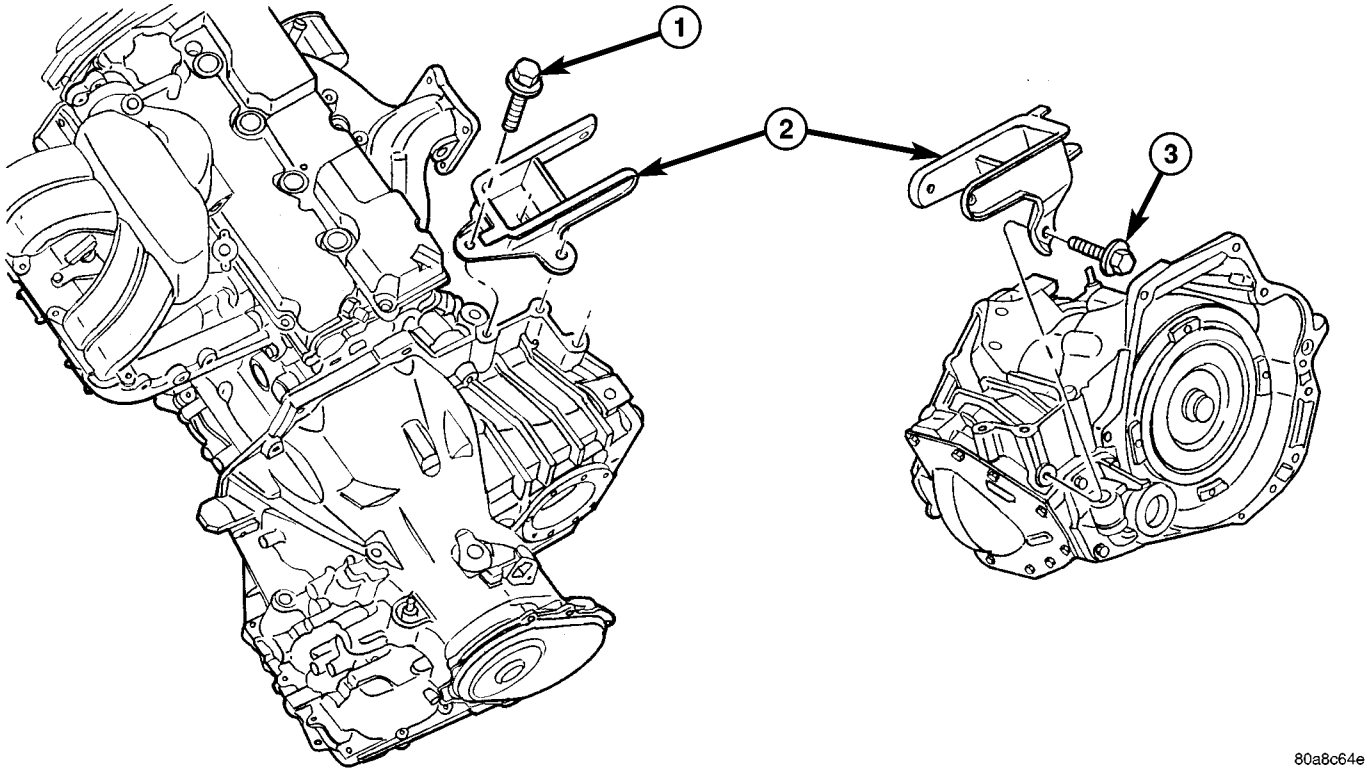

Fig. 84 Rear Mount Bracket - (all engines)

1 - BOLT - VERTICAL 102 N·m (75 ft. lbs.)
2 - BRACKET - REAR MOUNT
3 - BOLT - HORIZONTAL 102 N·m (75 ft. lbs.)

INSTALLATION

(1) Install rear mount bracket, if removed (Fig. 84).

(2) Install the rear mount and bolts (Fig. 83). Tighten bolts to 54 N·m (40 ft. lbs.).

(3) Install the mount through bolt to the mount and bracket (Fig. 83). Tighten through bolt to 54 N·m (40 ft. lbs.).

(4) Install the rear mount heat shield (Fig. 82).

(5) Lower vehicle on hoist.

RIGHT MOUNT

REMOVAL

(1) Remove air cleaner housing lid and clean air hose from throttle body.

(2) Remove air cleaner element and housing.

(3) Disconnect make-up air hose from cylinder head cover.

(4) Remove the load on the right engine mount by carefully supporting the engine assembly with a floor jack.

(5) Disconnect electrical harness support clips from engine mount bracket.

(6) Remove the vertical bolts attaching the engine mount to the frame rail (Fig. 85).

(7) Loosen the horizontal bolt attaching the engine mount to the frame rail (Fig. 85).

(8) Remove the bolts attaching the engine mount to the engine bracket (Fig. 85).

(9) Remove the right engine mount (Fig. 85).

INSTALLATION

(1) Position right engine mount and install frame rail to mount vertical bolts (Fig. 85).

(2) Tighten engine right mount to rail horizontal bolt (Fig. 85).

(3) Install mount to engine bracket bolts (Fig. 85).

(4) Connect electrical harness support clips to engine mount bracket.

(5) Remove jack from under engine.

(6) Connect make-up air hose to cylinder head cover.

(7) Install air cleaner housing and element.

(8) Install air cleaner housing lid and clean air tube to throttle body.

RIGHT MOUNT (Continued)

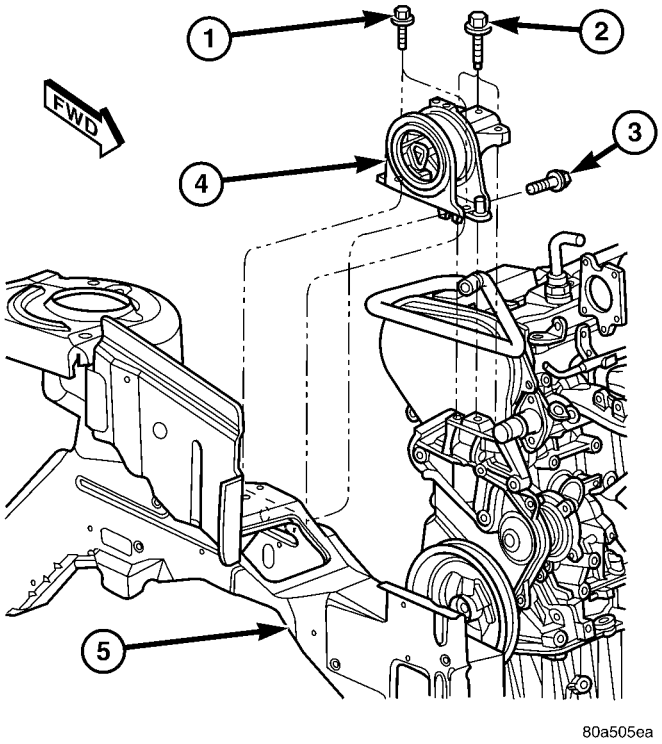

Fig. 85 Right Mount to Rail and Engine

1 - BOLT - MOUNT TO RAIL 68 N·m (50 ft. lbs.)
2 - BOLT - MOUNT TO ENGINE 54 N·m (40 ft. lbs.)
3 - BOLT - MOUNT TO RAIL (HORIZONTAL) 68 N·m (50 ft. lbs.)
4 - RIGHT ENGINE MOUNT
5 - RIGHT FRAME RAIL

LUBRICATION

DESCRIPTION

The lubrication system is a full-flow filtration, pressure feed type. The oil pump is mounted in the front engine cover and driven by the crankshaft.

OPERATION

Engine oil drawn up through the pickup tube and is pressurized by the oil pump and routed through the full-flow filter to the main oil gallery running the length of the cylinder block. A diagonal hole in each bulkhead feeds oil to each main bearing. Drilled passages within the crankshaft route oil from main bearing journals to connecting rod journals. Balance shaft lubrication is provided through an oil passage from the number one main bearing cap through the balance shaft carrier support leg. This passage directly supplies oil to the front bearings and internal machined passages in the shafts that routes oil from front to the rear shaft bearing journals. A vertical hole at the number five bulkhead routes pressurized oil through a restrictor (integral to the cylinder head gasket) up past a cylinder head bolt to an oil gallery running the length of the cylinder head. The camshaft journals are partially slotted to allow a predetermined amount of pressurized oil to pass into the bearing cap cavities. Lubrication of the camshaft lobes are provided by small holes in the camshaft bearing caps that are directed towards each lobe. Oil returning to the pan from pressurized components supplies lubrication to the valve stems. Cylinder bores and wrist pins are splash lubricated from directed slots on the connecting rod thrust collars (Fig. 86).

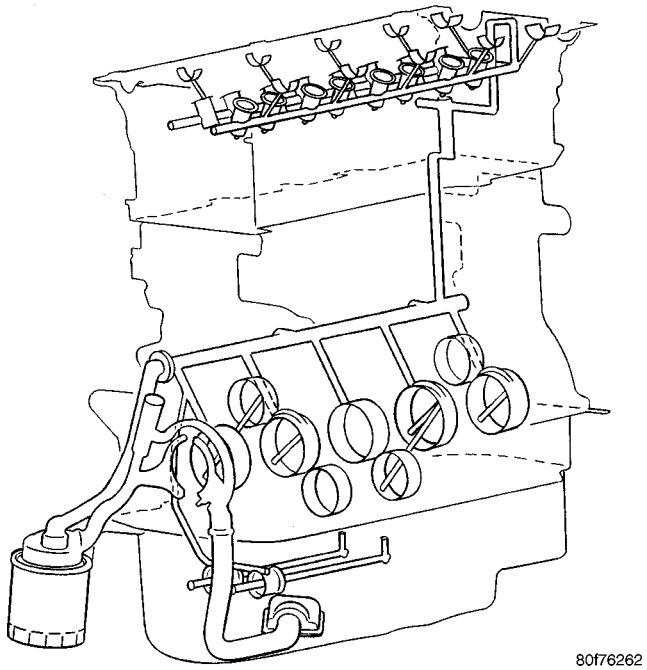

Fig. 86 Engine Lubrication System

DIAGNOSIS AND TESTING - CHECKING ENGINE OIL PRESSURE

(1) Disconnect and remove oil pressure switch. (Refer to 9 - ENGINE/LUBRICATION/OIL PRESSURE SENSOR/SWITCH - REMOVAL)

(2) Install Special Tools C-3292 Gauge with 8406 Adaptor fitting.

(3) Start engine and record oil pressure. Refer to Specifications for correct oil pressure requirements. (Refer to 9 - ENGINE - SPECIFICATIONS)

CAUTION: If oil pressure is 0 at idle, do not perform the 3000 RPM test

(4) If oil pressure is 0 at idle. Shut off engine, check for pressure relief valve stuck open, a clogged oil pick-up screen or a damaged oil pick-up tube O-ring.

(5) After test is complete, remove test gauge and fitting.

(6) Install oil pressure switch and connector. (Refer to 9 - ENGINE/LUBRICATION/OIL PRESSURE SENSOR/SWITCH - INSTALLATION)

OIL

STANDARD PROCEDURE

ENGINE OIL LEVEL CHECK

The best time to check engine oil level is after it has sat overnight, or if the engine has been running, allow the engine to be shut off for at least 5 minutes before checking oil level.

Checking the oil while the vehicle is on level ground will improve the accuracy of the oil level reading. Remove dipstick and observe oil level. Add oil only when the level is at or below the ADD mark (Fig. 87).

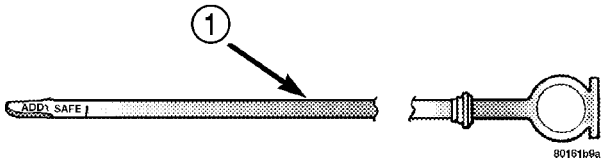

Fig. 87 Oil Level

1 - ENGINE OIL LEVEL DIPSTICK

STANDARD PROCEDURE - ENGINE OIL AND FILTER CHANGE

Change engine oil at mileage and time intervals described in the Maintenance Schedule. (Refer to LUBRICATION & MAINTENANCE/MAINTENANCE SCHEDULES - DESCRIPTION)

WARNING: NEW OR USED ENGINE OIL CAN BE IRRITATING TO THE SKIN. AVOID PROLONGED OR REPEATED SKIN CONTACT WITH ENGINE OIL. CONTAMINANTS IN USED ENGINE OIL, CAUSED BY INTERNAL COMBUSTION, CAN BE HAZARDOUS TO YOUR HEALTH. THOROUGHLY WASH EXPOSED SKIN WITH SOAP AND WATER. DO NOT WASH SKIN WITH GASOLINE, DIESEL FUEL, THINNER, OR SOLVENTS, HEALTH PROBLEMS CAN RESULT. DO NOT POLLUTE, DISPOSE OF USED ENGINE OIL PROPERLY. CONTACT YOUR DEALER OR GOVERNMENT AGENCY FOR LOCATION OF COLLECTION CENTER IN YOUR AREA.

Run engine until achieving normal operating temperature.

(1) Position the vehicle on a level surface and turn engine off.

(2) Remove oil fill cap.

(3) Hoist and support vehicle on safety stands. Refer to Hoisting and Jacking Recommendations. (Refer to LUBRICATION & MAINTENANCE/HOISTING - STANDARD PROCEDURE)

(4) Place a suitable drain pan under crankcase drain.

(5) Remove drain plug from crankcase and allow oil to drain into pan. Inspect drain plug threads for stretching or other damage. Replace drain plug and gasket if damaged.

(6) Remove oil filter. (Refer to 9 - ENGINE/LUBRICATION/OIL FILTER - REMOVAL)

(7) Install and tighten drain plug in crankcase.

(8) Install new oil filter. (Refer to 9 - ENGINE/LUBRICATION/OIL FILTER - INSTALLATION)

(9) Lower vehicle and fill crankcase with specified type and amount of engine oil. (Refer to LUBRICATION & MAINTENANCE/FLUID TYPES - DESCRIPTION)

(10) Install oil fill cap.

(11) Start engine and inspect for leaks.

(12) Stop engine and inspect oil level.

NOTE: Care should be exercised when disposing used engine oil after it has been drained from a vehicle engine. Refer to the WARNING listed above.

OIL FILTER

DESCRIPTION

The engine oil filter (Fig. 88) is a high quality full-flow, disposable type. Replace the oil filter with a Mopar® or the equivalent.

REMOVAL

(1) Raise vehicle on hoist.

(2) Position an oil collecting container under oil filter location.

CAUTION: When servicing the oil filter avoid deforming the filter can by installing the remove/install tool band strap against the can to base lock seam. The lock seam joining the can to the base is reinforced by the base plate.

(3) Using a suitable filter wrench, turn oil filter (Fig. 88) counterclockwise to remove.

INSTALLATION

(1) Clean and check filter mounting surface. The surface must be smooth, flat and free of debris or pieces of gasket.

(2) Lubricate new oil filter gasket with clean engine oil.

OIL FILTER (Continued)

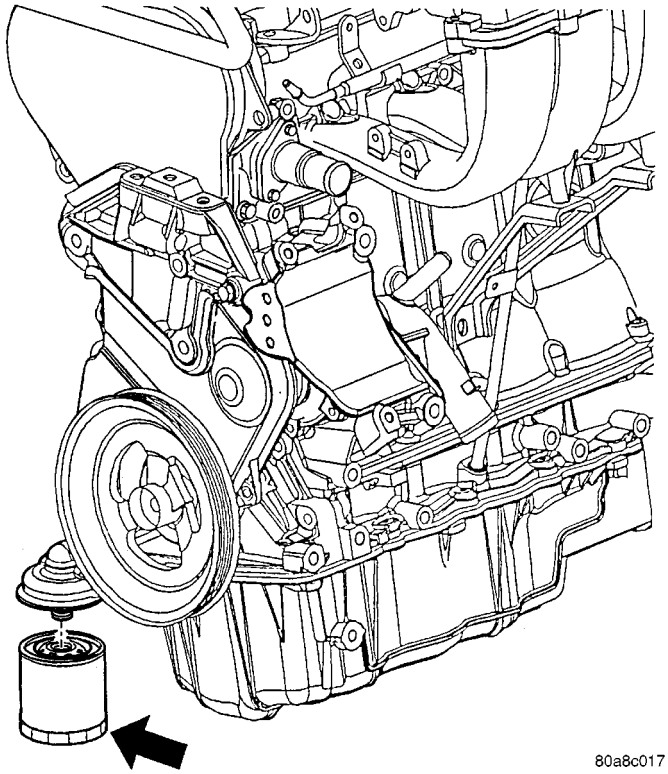

Fig. 88 Oil Filter

(3) Screw oil filter (Fig. 88) on until the gasket contacts base. Tighten to 12 N·m (105 in. lbs.).

OIL PAN

REMOVAL

(1) Disconnect negative battery cable.
(2) Raise vehicle on hoist and drain engine oil.
(3) Remove structural collar. (Refer to 9 - ENGINE/ENGINE BLOCK/STRUCTURAL COVER - REMOVAL)
(4) Remove air conditioning compressor bracket to oil pan bolt.

NOTE: The oil pan is sealed with rtv and may need to be pryed apart.

(5) Remove bolts attaching oil pan.
(6) Insert pry bar at specified locations (Fig. 89) (Fig. 90) (Fig. 91) and gently pry oil pan away from the engine.
(7) Clean oil pan and block surfaces.Clean cured RTV from oil pan and bed plate with a plastic or brass scraper.
(8) Clean all sealing surfaces with MOPAR® Brake Parts Cleaner.
(9) Inspect surfaces for damage, replace as needed.

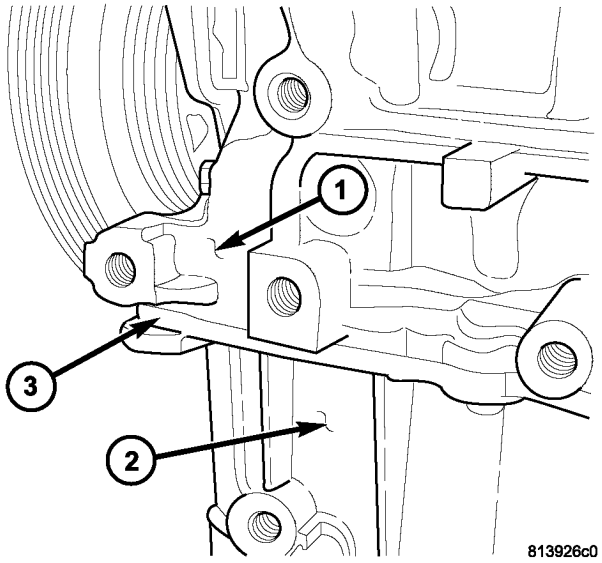

Fig. 89 Left Front Pry Point

1 - BED PLATE
2 - OIL PAN
3 - PRY POINT

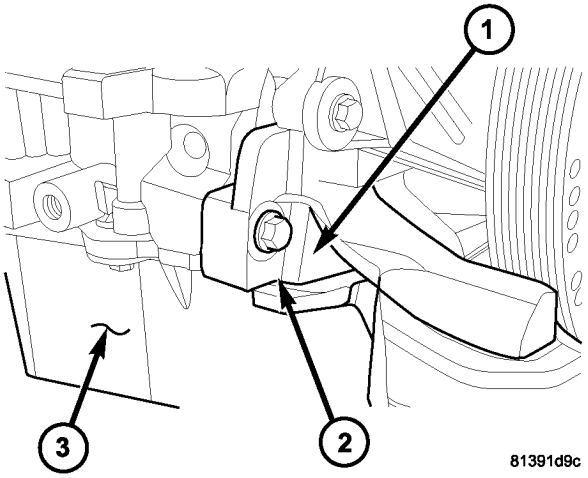

Fig. 90 Right Front Pry Point

1 - OIL FILTER ADAPTER
2 - PRY POINT
3 - OIL PAN

INSTALLATION

NOTE: You must assemble oil pan to bed plate before RTV “skins over”. If RTV skins before assembly, parts must be cleaned and a new bead of RTV applied.

OIL PAN (Continued)

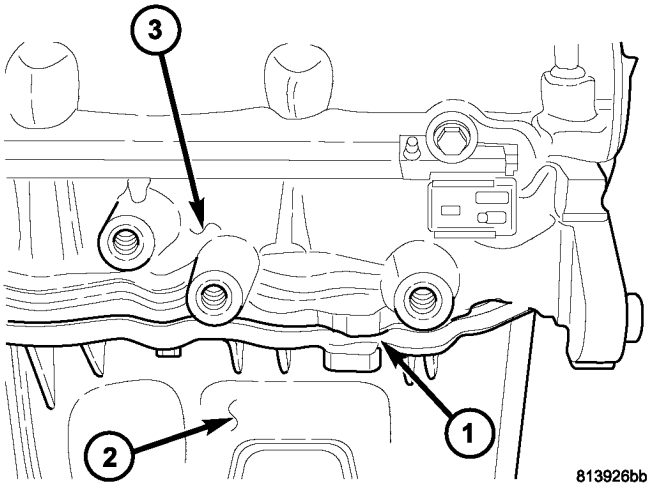

Fig. 91 Left Rear Pry Point

1 - PPRY POINT
2 - OIL PAN
3 - BED PLATE

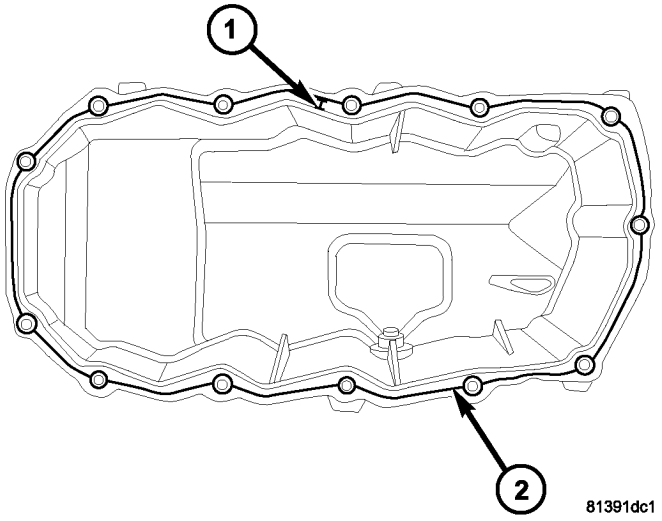

Fig. 92 Oil Pan Sealing

1 - 1 mm FROM CHAMFER
2 - RTV BEAD

(1) Apply 3 - 4 mm diameter bead of MOPAR® Engine RTV around the perimeter of the oil pan flange, 1 mm away from the chamfer on the inner edge of the oil pan (Fig. 92).

(2) Position oil pan on bedplate.

(3) Install oil pan attatching bolts and tighten to 12 N·m (105 in. lbs.).

(4) Install air conditioning compressor bracket to oil pan bolt.

(5) Install structural collar (Refer to 9 - ENGINE/ENGINE BLOCK/STRUCTURAL COVER - INSTALLATION).

(6) Lower vehicle and fill engine crankcase with proper oil to correct level.

(7) Connect negative battery cable.

(8) Start engine and check for leaks.

OIL PRESSURE SWITCH

REMOVAL

(1) Raise vehicle.

(2) Position oil collecting container under pressure switch location.

(3) Disconnect oil pressure switch electrical connector and remove switch (Fig. 93).

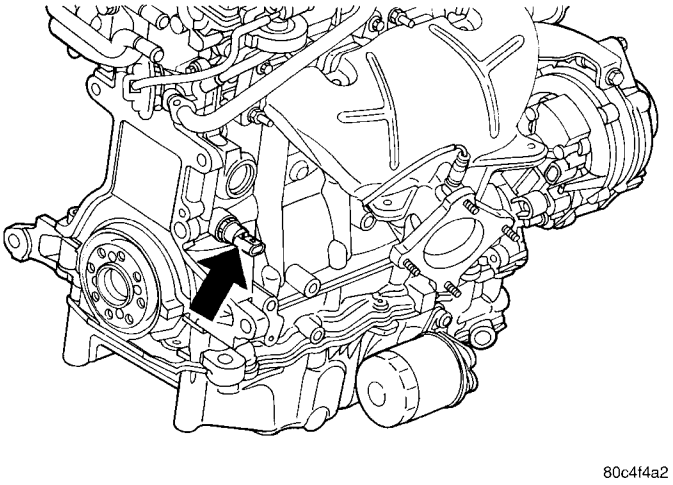

Fig. 93 Engine Oil Pressure Switch

INSTALLATION

(1) Install oil pressure switch. Torque switch to 21 N·m (190 in. lbs.) (Fig. 93).

(2) Connect electrical connector

(3) Lower vehicle.

(4) Start engine and allow to run a minimum of 2 minutes.

(5) Shut engine off and check engine oil level. Adjust level as necessary.

OIL PUMP

REMOVAL

(1) Disconnect negative cable from battery.

(2) Remove timing belt (Refer to 9 - ENGINE/VALVE TIMING/TIMING BELT AND SPROCKETS - REMOVAL).

(3) Remove timing belt rear cover (Refer to 9 - ENGINE/VALVE TIMING/TIMING BELT COVER(S) - REMOVAL).

OIL PUMP (Continued)

(4) Remove oil pan (Refer to 9 - ENGINE/LUBRICATION/OIL PAN - REMOVAL).

(5) Remove crankshaft sprocket using Special Tools 6793 and C-4685-C2 (Fig. 94).

(6) Remove crankshaft key (Fig. 95).

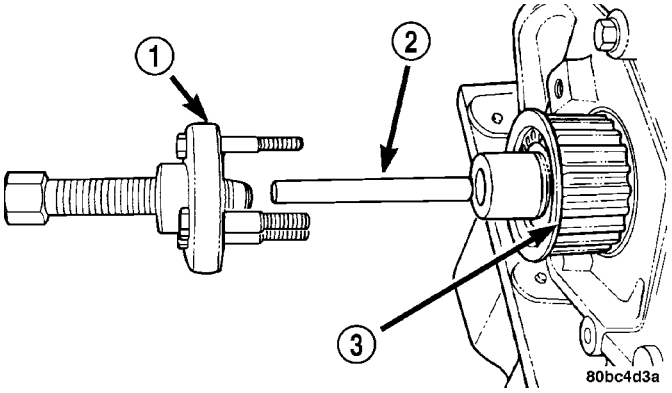

Fig. 94 Crankshaft Sprocket - Removal

1 - SPECIAL TOOL 6793
2 - SPECIAL TOOL C-4685–C2
3 - CRANKSHAFT SPROCKET

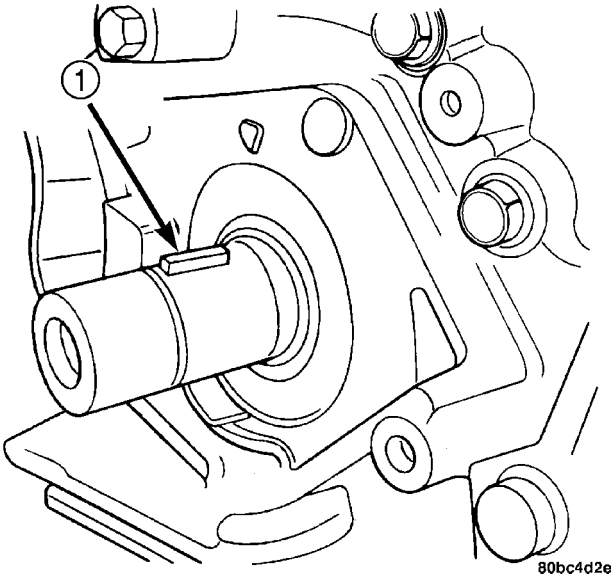

Fig. 95 Crankshaft Key

1 - CRANKSHAFT KEY

(7) Remove oil pick-up tube.

(8) Remove oil pump (Fig. 96) and front crankshaft seal.

DISASSEMBLY

(1) To remove the relief valve, proceed as follows:

(a) Remove the threaded plug and gasket from the oil pump (Fig. 97).

(b) Remove spring and relief valve (Fig. 97).

(2) Remove oil pump cover fasteners, and lift off cover (Fig. 98).

(3) Remove pump rotors (Fig. 98).

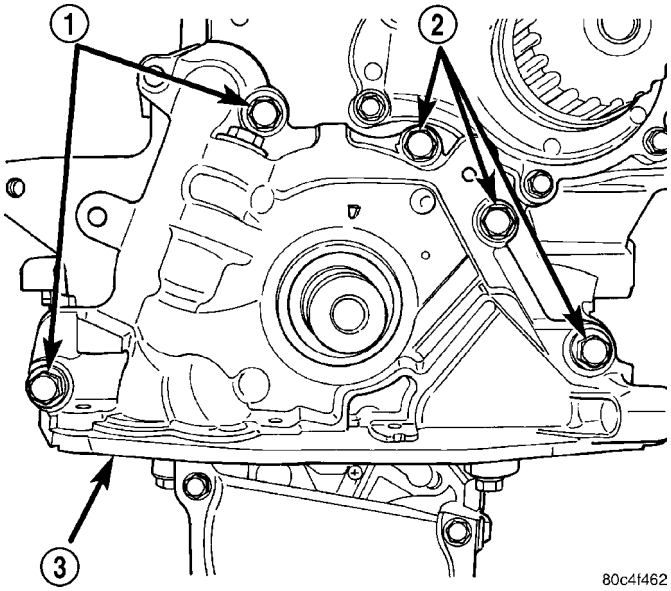

Fig. 96 Oil Pump

1 - BOLTS
2 - BOLTS
3 - OIL PUMP

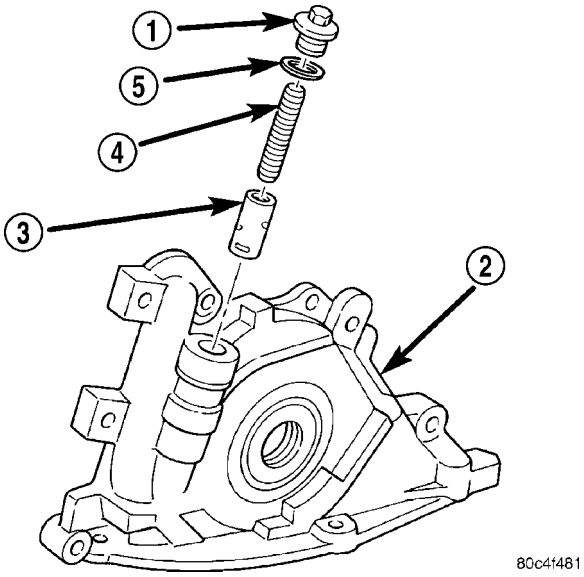

Fig. 97 Oil Pressure Relief Valve

1 - PLUG
2 - OIL PUMP BODY
3 - RELIEF VALVE
4 - SPRING
5 - SEAL

(4) Wash all parts in a suitable solvent and inspect carefully for damage or wear.

CLEANING

(1) Clean all parts thoroughly in a suitable solvent.

OIL PUMP (Continued)

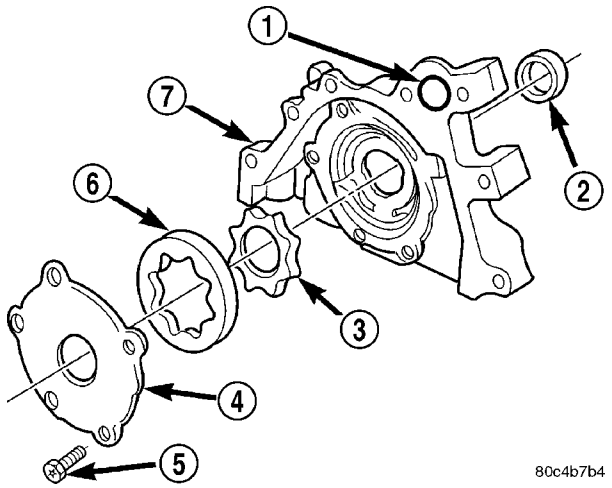

Fig. 98 Oil Pump

1 - O-RING
2 - SEAL
3 - INNER ROTOR
4 - OIL PUMP COVER
5 - FASTENER
6 - OUTER ROTOR
7 - OIL PUMP BODY

INSPECTION

(1) Inspect the mating surfaces of the oil pump cover. Surface should be smooth. Replace pump cover if scratched or grooved.

(2) Lay a straightedge across the pump cover surface (Fig. 99). If a 0.025 mm (0.001 in.) feeler gauge can be inserted between cover and straight edge, cover should be replaced.

(3) Measure thickness and diameter of outer rotor. If outer rotor thickness measures 9.40 mm (0.370 in.) or less (Fig. 100), or if the diameter is 79.95 mm (3.148 in.) or less, replace outer rotor.

(4) If inner rotor measures 9.40 mm (0.370 in.) or less replace inner rotor (Fig. 101).

ASSEMBLY

(1) Assemble pump, using new parts as required. **Install the inner rotor with chamfer facing the cast iron oil pump cover.**

(2) Prime oil pump before installation by filling rotor cavity with engine oil.

(3) Install cover and tighten fasteners to 12 N·m (105 in. lbs.) (Fig. 98).

CAUTION: Oil pump pressure relief valve must be installed as shown in (Fig. 97) or serious engine damage may occur.

(4) Install relief valve, spring, gasket and cap as shown in (Fig. 97). Tighten cap to 41 N·m (30 ft. lbs.).

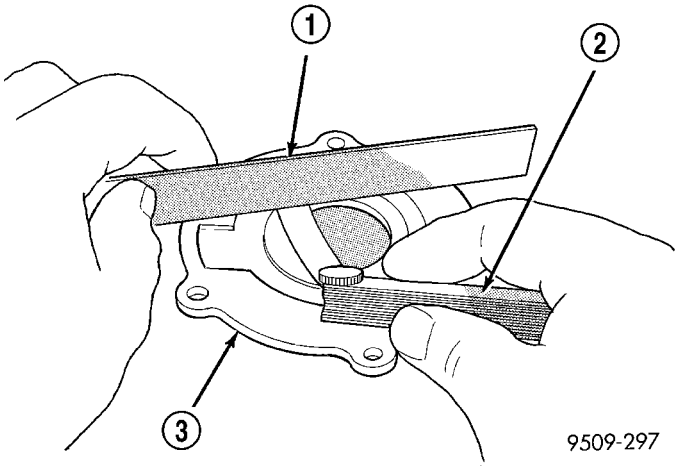

Fig. 99 Checking Oil Pump Cover Flatness

1 - STRAIGHT EDGE
2 - FEELER GAUGE
3 - OIL PUMP COVER

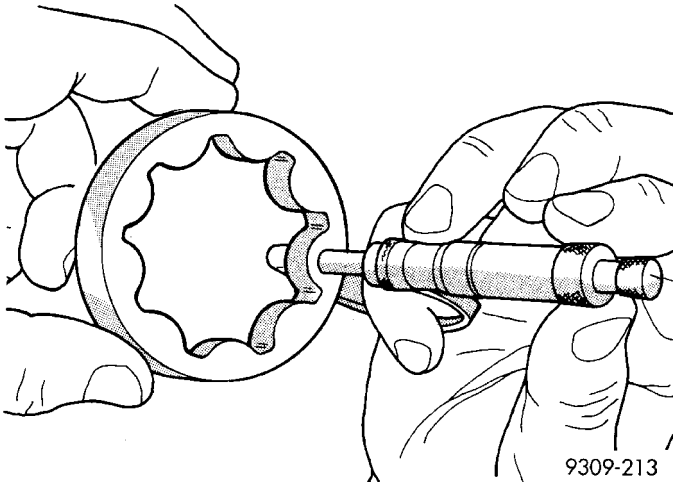

Fig. 100 Measuring Outer Rotor Thickness

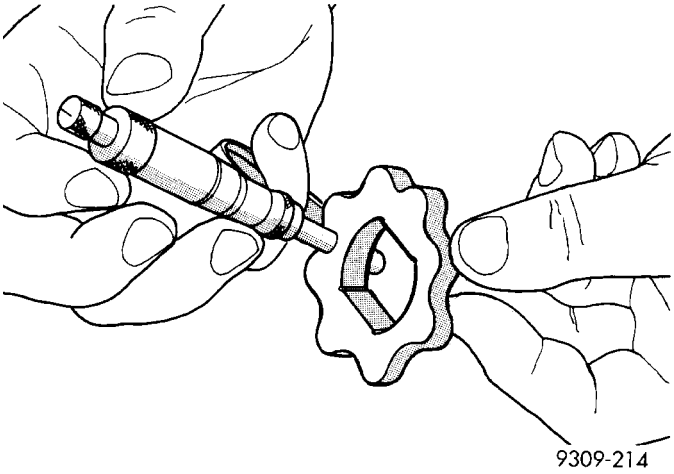

Fig. 101 Measuring Inner Rotor Thickness

OIL PUMP (Continued)

INSTALLATION

(1) Make sure all surfaces are clean and free of oil and dirt.

(2) Apply Mopar® Gasket Maker to oil pump as shown in (Fig. 102). Install O-ring into oil pump body discharge passage.

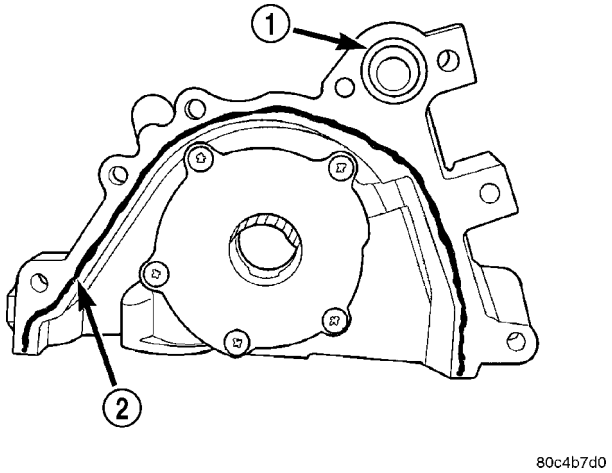

Fig. 102 Oil Pump Sealing

1 - O-RING
2 - SEALER LOCATION

(3) Prime oil pump with engine oil before installation.

(4) Align oil pump rotor flats with flats on crankshaft. Install the oil pump to the block (Fig. 96).

CAUTION: To align, the front crankshaft seal MUST be out of pump, or damage may result.

(5) Install new front crankshaft seal using Special Tool 6780 (Fig. 103).

(6) Install crankshaft key (Fig. 95).

CAUTION: The crankshaft sprocket is set to a predetermined depth from the factory for correct timing belt tracking. If removed, use of Special Tool 6792 is required to set the sprocket to original installation depth. An incorrectly installed sprocket will result in timing belt and engine damage.

(7) Install crankshaft sprocket using Special Tool 6792 (Fig. 104).

(8) Install oil pump pick-up tube.

(9) Install oil pan (Refer to 9 - ENGINE/LUBRICATION/OIL PAN - INSTALLATION).

(10) Install timing belt rear cover (Refer to 9 - ENGINE/VALVE TIMING/TIMING BELT COVER(S) - INSTALLATION).

(11) Install timing belt (Refer to 9 - ENGINE/VALVE TIMING/TIMING BELT AND SPROCKETS - INSTALLATION).

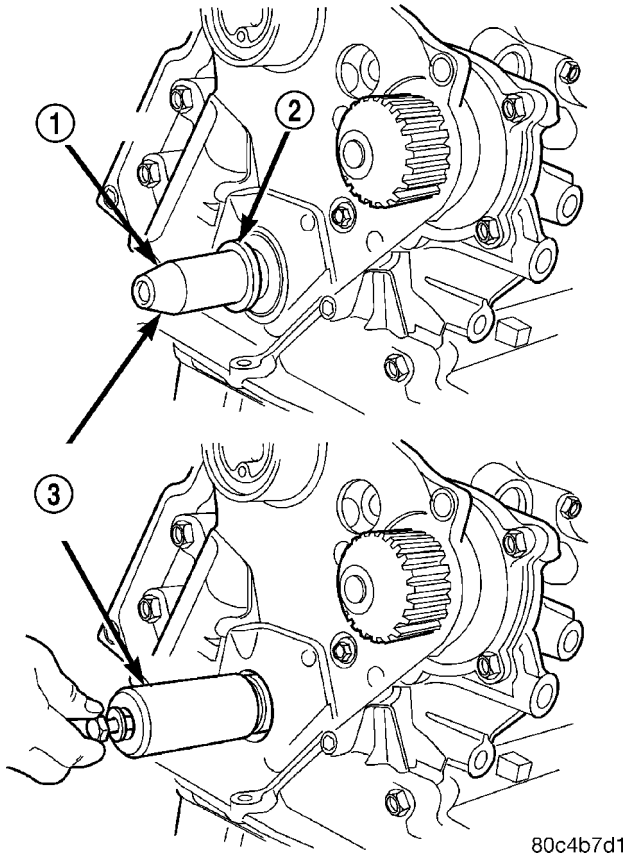

Fig. 103 Front Crankshaft Seal - Installation

1 - PROTECTOR
2 - SEAL
3 - SPECIAL TOOL 6780

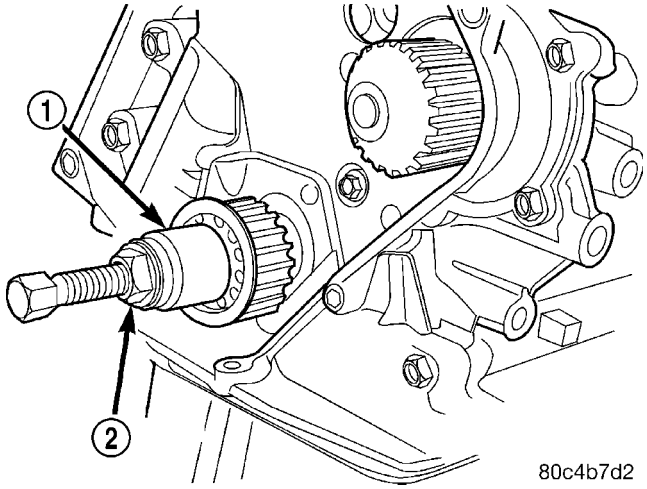

Fig. 104 Crankshaft Sprocket - Installation

1 - SPECIAL TOOL 6792
2 - TIGHTEN NUT TO INSTALL

INTAKE MANIFOLD

DESCRIPTION

The intake manifold is a two piece aluminum casting (Fig. 105) that attaches to the cylinder head with fasteners. The manifold is a long branch design to enhance low and mid-range torque

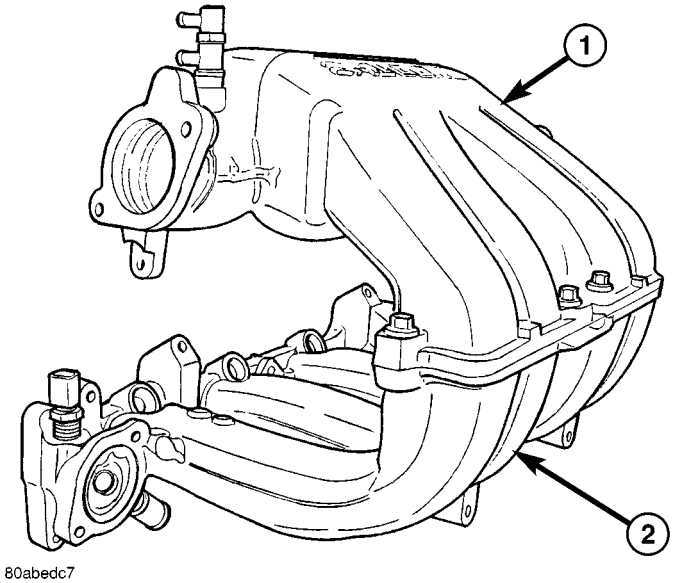

Fig. 105 Intake Manifold - Upper and Lower

1 - UPPER INTAKE MANIFOLD
2 - LOWER INTAKE MANIFOLD

DIAGNOSIS AND TESTING - INTAKE MANIFOLD LEAKS

An intake manifold air leak is characterized by lower than normal manifold vacuum. Also, one or more cylinders may not be functioning.

WARNING: USE EXTREME CAUTION WHEN THE ENGINE IS OPERATING. DO NOT STAND IN A DIRECT LINE WITH THE FAN. DO NOT PUT YOUR HANDS NEAR THE PULLEYS, BELTS OR THE FAN. DO NOT WEAR LOOSE CLOTHING.

(1) Start the engine.
(2) Spray a small stream of water (Spray Bottle) at the suspected leak area.
(3) If engine RPM'S change, the area of the suspected leak has been found.
(4) Repair as required.

INTAKE MANIFOLD - UPPER

REMOVAL

(1) Disconnect negative cable from battery.
(2) Disconnect connector from inlet air temperature sensor (Fig. 106).

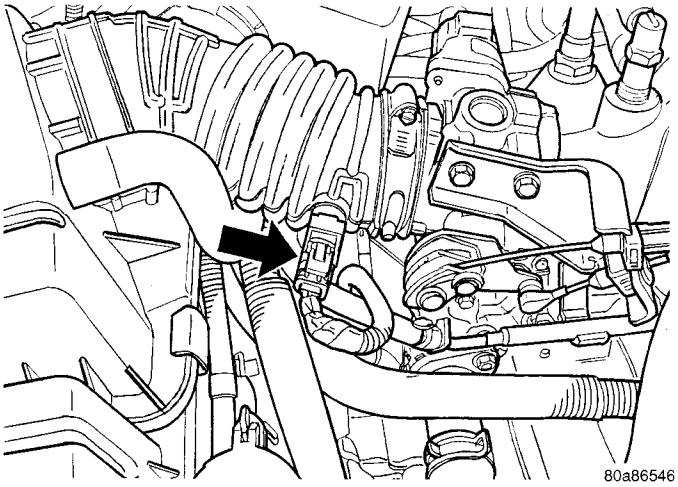

Fig. 106 Inlet Air Temperature Sensor - 2.4L

(3) Disconnect air intake tube at throttle body and remove upper air cleaner housing.
(4) Disconnect connector from throttle position sensor (TPS) (Fig. 108).
(5) Disconnect connector from idle air control (IAC) motor (Fig. 108).
(6) Disconnect connector from MAP sensor (Fig. 107).

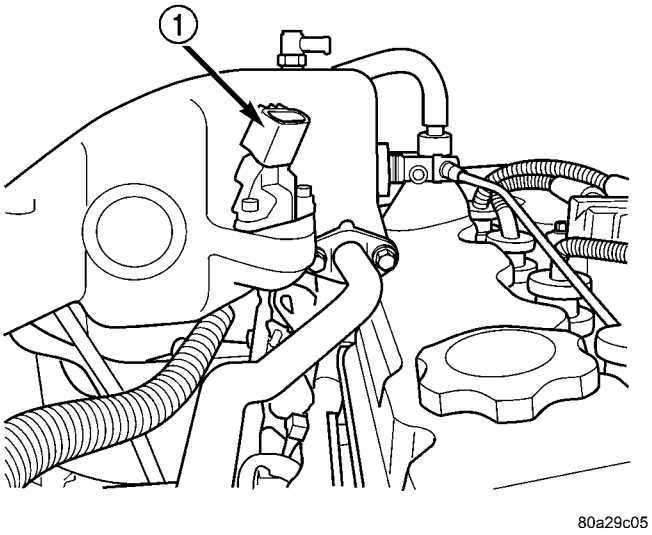

Fig. 107 Map Sensor - 2.4L

1 - MAP SENSOR

(7) Remove vacuum lines for purge solenoid and PCV valve at intake manifold.
(8) Remove vacuum lines for power brake booster, LDP, EGR transducer, and speed control vacuum reservoir (if equipped) at upper intake manifold fittings.

INTAKE MANIFOLD - UPPER (Continued)

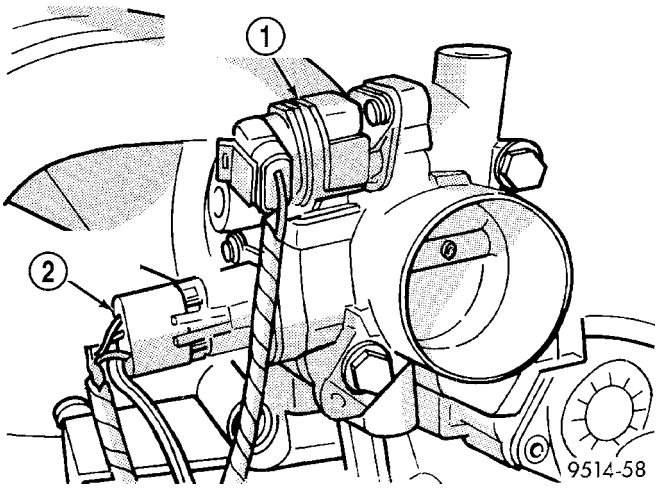

Fig. 108 Throttle Body Electrical Connectors - Typical

1 - IDLE AIR CONTROL MOTOR CONNECTOR
2 - TPS CONNECTOR

(9) Disconnect throttle and speed control (if equipped) cables from throttle lever and bracket. (Refer to 14 - FUEL SYSTEM/FUEL INJECTION/ THROTTLE CONTROL CABLE - REMOVAL)

(10) Remove the EGR tube. (Refer to 25 - EMISSIONS CONTROL/EXHAUST GAS RECIRCULATION/TUBE - REMOVAL)

(11) Remove the upper manifold support bracket bolt to manifold (Fig. 109).

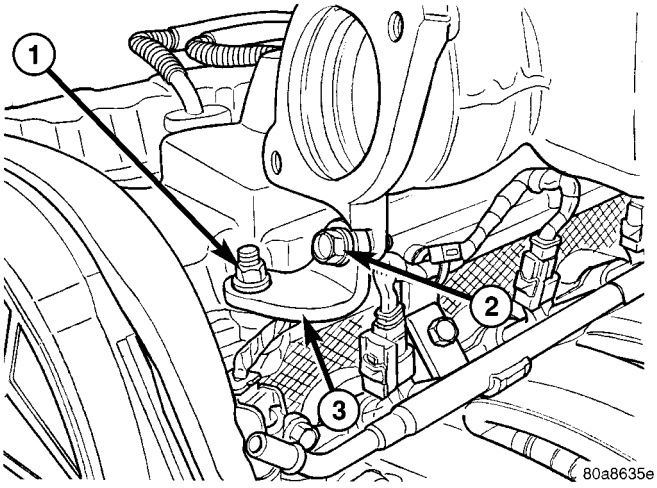

Fig. 109 Upper Intake Manifold Support Bracket

1 - NUT - BRACKET TO CYLINDER HEAD COVER
2 - BOLT - BRACKET TO UPPER INTAKE MANIFOLD
3 - UPPER INTAKE MANIFOLD SUPPORT BRACKET

(12) Remove engine oil dipstick from tube.

(13) Remove upper intake manifold bolts (Fig. 110). Remove upper intake manifold.

CAUTION: Cover intake manifold to prevent foreign material from entering engine.

INSPECTION

(1) Check manifold surfaces for flatness with straight edge. Surface must be flat within 0.15 mm per 300 mm (0.006 in. per foot) of manifold length.

(2) Inspect manifold for cracks or distortion. Replace manifold if necessary.

INSTALLATION

(1) Clean manifold sealing surfaces.

(2) Apply a 1.5 mm (0.060 in.) bead Mopar® Gasket Maker to the perimeter of the lower intake manifold runner openings.

(3) Install upper intake manifold and tighten fasteners to 28 N·m (250 in. lbs.) in sequence shown in (Fig. 110). Repeat this procedures until all fasteners are at specified torque.

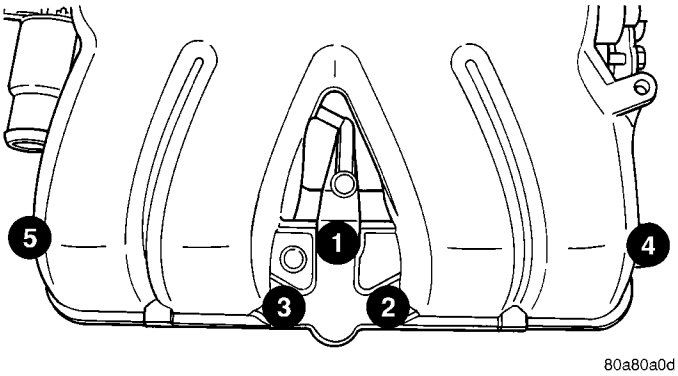

Fig. 110 Upper Intake Manifold Tightening Sequence - 2.4L

(4) Install engine oil dipstick.

(5) Install upper bolt in intake manifold to front support bracket (Fig. 109). Torque to 28 N·m (250 in. lbs.).

(6) Install EGR tube. (Refer to 25 - EMISSIONS CONTROL/EXHAUST GAS RECIRCULATION/ TUBE - INSTALLATION)

(7) Install throttle cables in bracket.

(8) Connect throttle and speed control (if equipped) cables to throttle lever.

(9) Connect vacuum lines for power brake booster, LDP, EGR transducer, and speed control vacuum reservoir (if equipped) at upper intake manifold fittings.

(10) Connect vacuum lines for purge solenoid and PCV valve.

(11) Connect electrical connectors for MAP sensor, throttle position sensor (TPS), and idle air control (IAC) motor.

(12) Install air cleaner upper housing and air intake tube to throttle body.

(13) Connect inlet air temperature sensor connector (Fig. 106).

(14) Connect negative cable to battery.

INTAKE MANIFOLD - LOWER

REMOVAL

(1) Perform fuel system pressure release procedure **before attempting any repairs.** (Refer to 14 - FUEL SYSTEM/FUEL DELIVERY - STANDARD PROCEDURE)

(2) Remove upper intake manifold. (Refer to 9 - ENGINE/MANIFOLDS/INTAKE MANIFOLD - REMOVAL)

CAUTION: Cover intake manifold openings to prevent foreign material from entering engine.

(3) Disconnect fuel line. (Refer to 14 - FUEL SYSTEM/FUEL DELIVERY/QUICK CONNECT FITTING - STANDARD PROCEDURE)

(4) Drain the cooling system. (Refer to 7 - COOLING - STANDARD PROCEDURE)

(5) Remove heater supply and radiator upper hoses at intake manifold.

(6) Disconnect coolant temperature sensor/fuel injector wire harness connector.

(7) Remove lower intake manifold support bracket upper bolts (Fig. 111).

(8) Loosen the lower intake manfold support bracket lower bolt (Fig. 111).

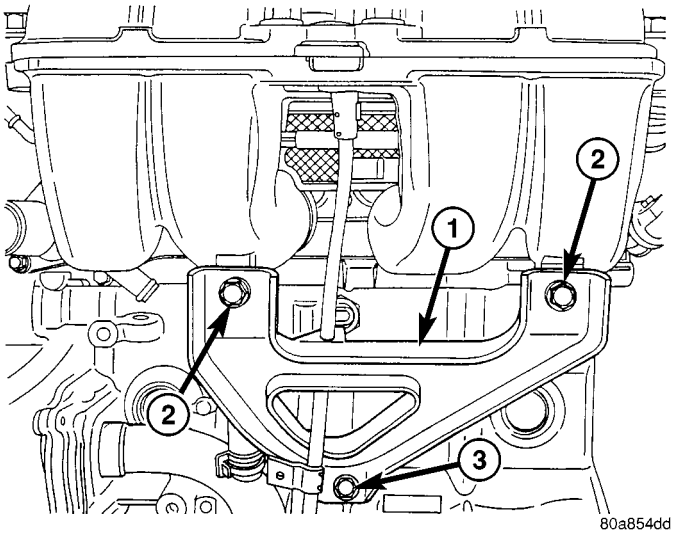

Fig. 111 Lower Intake Manifold Support Bracket

1 - SUPPORT BRACKET
2 - BOLTS - UPPER TO MANIFOLD
3 - BOLT - LOWER TO ENGINE BLOCK

(9) Disconnect fuel injector harness.

(10) Remove the bolts attaching the power steering reservoir to manifold. Set reservoir aside. **Do not** disconnect line from reservoir.

(11) Remove lower intake manifold fasteners (Fig. 112). Remove the manifold from engine.

(12) Inspect the manifold. (Refer to 9 - ENGINE/MANIFOLDS/INTAKE MANIFOLD - INSPECTION)

INSPECTION

(1) Check manifold surfaces for flatness with straight edge. Surface must be flat within 0.15 mm per 300 mm (0.006 in. per foot) of manifold length.

(2) Inspect manifold for cracks or distortion. Replace manifold if necessary.

INSTALLATION

If the following items were removed, install and torque to specifications:

- Fuel rail bolts - 22 N·m (200 in. lbs.)
- Coolant outlet connector bolts - 28 N·m (250 in. lbs.)
- Coolant temperature sensor - 7 N·m (60 in. lbs.)

(1) Position a new gasket on cylinder head and install lower manifold.

(2) Install and tighten intake manifold fasteners to 28 N·m (250 in. lbs.) in the sequence shown in (Fig. 112). Repeat procedure until all bolts are at specified torque.

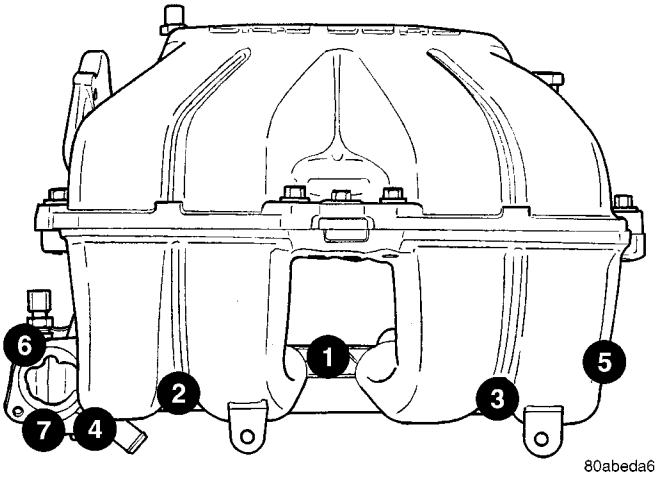

Fig. 112 Lower Intake Manifold Tightening Sequence

(3) Install lower intake manifold support bracket bolts (Fig. 111) and tighten to:

- Bolts to intake 28 N·m (250 in. lbs.)
- Bolt to engine block 54 N·m (40 ft. lbs.)

(4) Position power steering reservoir on manifold and install bolts.

(5) Connect the fuel line. (Refer to 14 - FUEL SYSTEM/FUEL DELIVERY/QUICK CONNECT FITTING - STANDARD PROCEDURE)

(6) Connect coolant temperature sensor/fuel injector wiring harness electrical connector.

(7) Install the radiator upper and heater supply hoses.

INTAKE MANIFOLD - LOWER (Continued)

(8) Install the upper intake manifold. (Refer to 9 - ENGINE/MANIFOLDS/INTAKE MANIFOLD - INSTALLATION)

(9) Fill the cooling system. (Refer to 7 - COOLING - STANDARD PROCEDURE)

EXHAUST MANIFOLD

REMOVAL

(1) Raise vehicle and disconnect exhaust pipe from the exhaust manifold.

(2) Disconnect upstream oxygen sensor connector at the rear of exhaust manifold.

(3) Remove the bolts attaching the manifold to the cylinder head.

(4) Remove exhaust manifold.

(5) Inspect the manifold. (Refer to 9 - ENGINE/MANIFOLDS/EXHAUST MANIFOLD - INSPECTION)

CLEANING

(1) Discard gasket (if equipped) and clean all surfaces of manifold and cylinder head.

INSPECTION

(1) Inspect manifold gasket surfaces for flatness with straight edge. Surface must be flat within 0.15 mm per 300 mm (0.006 in. per foot) of manifold length.

(2) Inspect manifolds for cracks or distortion. Replace manifold as necessary.

INSTALLATION

(1) Install exhaust manifold with a new gasket. Tighten attaching nuts in the sequence shown in (Fig. 113) to 19 N·m (170 in. lbs.).

(2) Attach exhaust pipe to exhaust manifold and tighten fasteners to 37 N·m (27 ft. lbs.).

(3) Install and connect the oxygen sensor. (Refer to 14 - FUEL SYSTEM/FUEL INJECTION/O2 SENSOR - COMPONENT LOCATION)

TIMING BELT COVER(S)

REMOVAL

FRONT COVER - UPPER

(1) Remove upper timing belt cover fasteners (Fig. 114) and remove cover.

FRONT COVER - LOWER

(1) Remove crankshaft vibration damper (Refer to 9 - ENGINE/ENGINE BLOCK/VIBRATION DAMPER - REMOVAL).

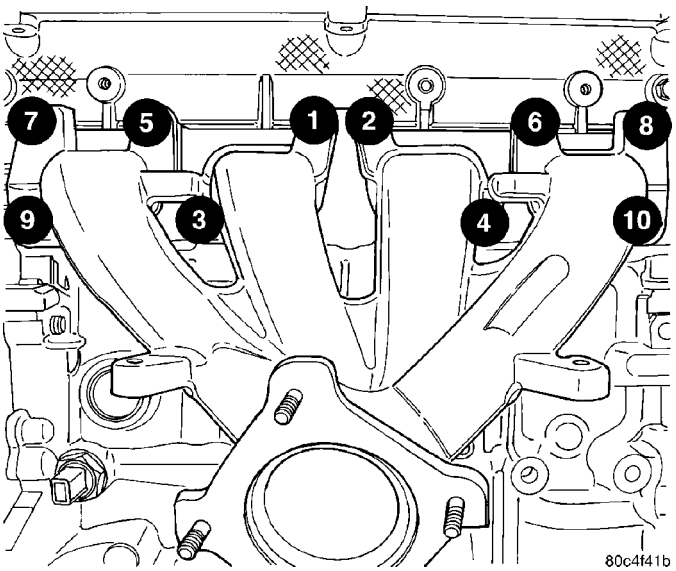

Fig. 113 Exhaust Manifold Tightening Sequence

(2) Remove generator drive belt tensioner assembly (Refer to 7 - COOLING/ACCESSORY DRIVE/BELT TENSIONERS - REMOVAL).

(3) Remove timing belt front cover bolts (Fig. 114) and remove covers.

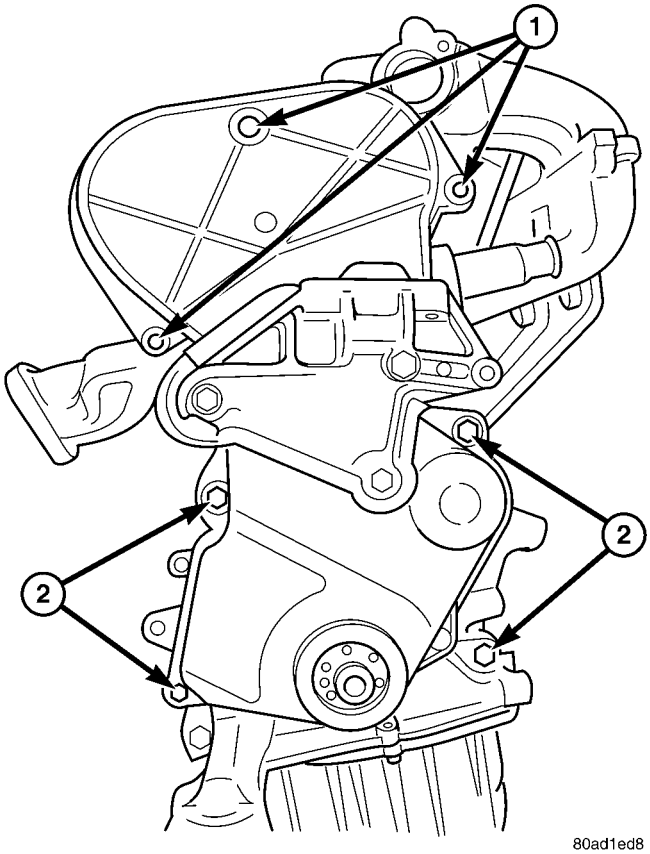

Fig. 114 Front Timing Belt Covers

1 - BOLTS - UPPER FRONT COVER 6 N·m (50 in. lbs.)
2 - BOLTS - LOWER FRONT COVER 6 N·m (50 in. lbs.)

TIMING BELT COVER(S) (Continued)

REAR COVER

(1) Remove front covers.
(2) Remove engine mount bracket (Fig. 115).

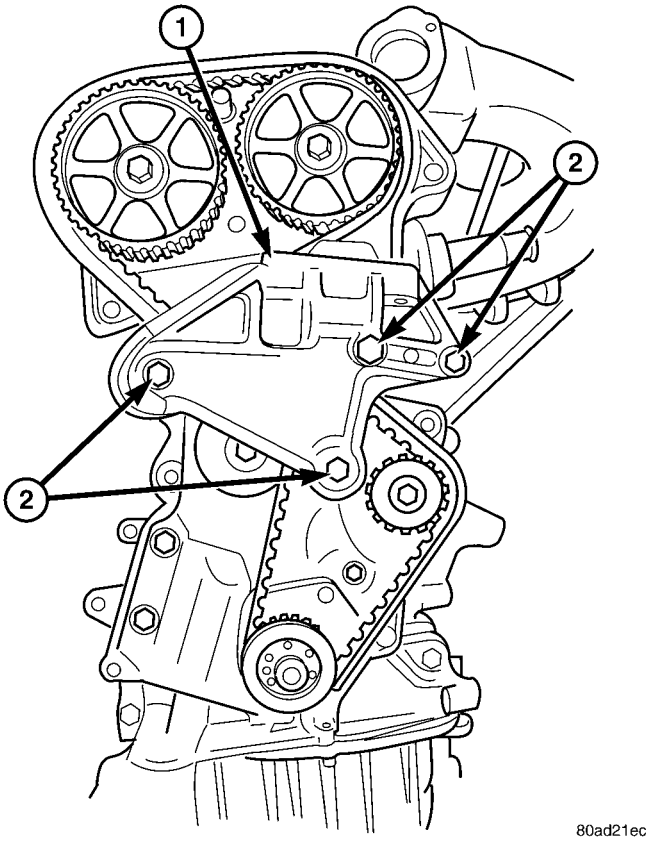

Fig. 115 Engine Mount Bracket

1 - ENGINE MOUNT BRACKET
2 - BOLTS - 61 N·m (45 ft. lbs.)

(3) Remove timing belt (Refer to 9 - ENGINE/VALVE TIMING/TIMING BELT AND SPROCKETS - REMOVAL).
(4) Remove camshaft sprockets. Hold camshaft sprocket with Special Tool 6847 while removing center bolt (Fig. 116).
(5) Remove timing belt idler pulley (Fig. 117).
(6) Remove rear cover fasteners and remove cover from engine (Fig. 118).

INSTALLATION

FRONT COVER - UPPER

(1) Install timing belt cover. Torque fasteners to 6 N·m (50 in. lbs.) (Fig. 114).

FRONT COVER - LOWER

(1) Install timing belt front covers (Fig. 114). Tighten fasteners to 6 N·m (50 in. lbs.).

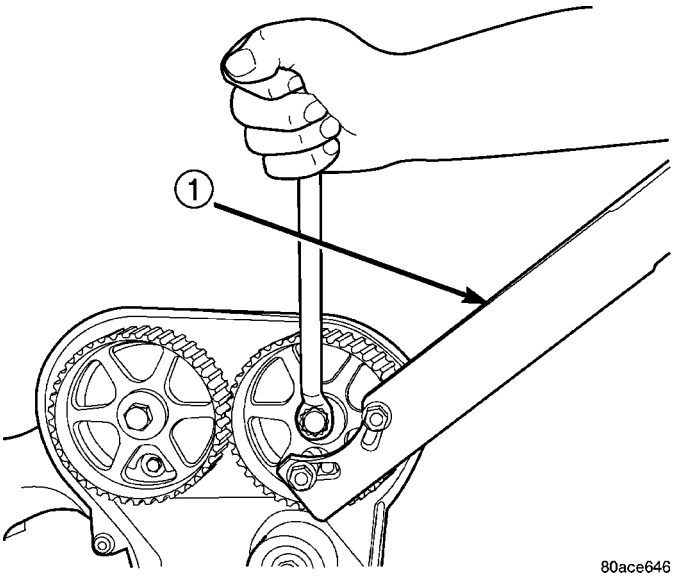

Fig. 116 Camshaft Sprocket - Removal/Installation

1 - SPECIAL TOOL 6847

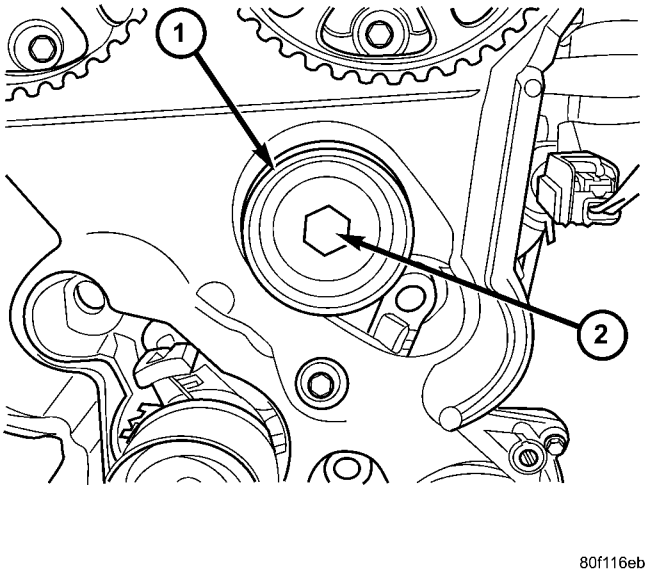

Fig. 117 Timing Belt Idler Pulley

1 - IDLER PULLEY
2 - BOLT

(2) Install generator drive belt tensioner (Refer to 7 - COOLING/ACCESSORY DRIVE/BELT TENSIONERS - INSTALLATION).
(3) Install crankshaft vibration damper (Refer to 9 - ENGINE/ENGINE BLOCK/VIBRATION DAMPER - INSTALLATION).

TIMING BELT COVER(S) (Continued)

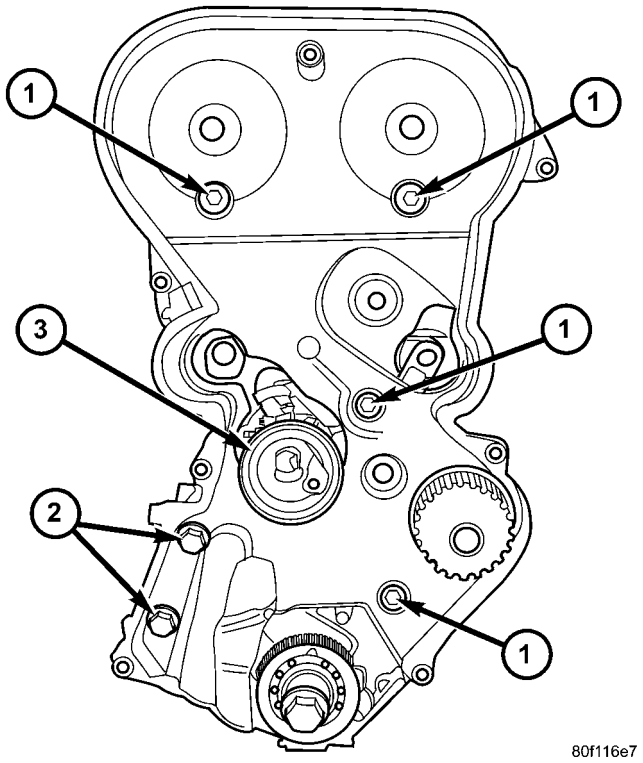

Fig. 118 Rear Timing Belt Cover Fasteners

1 - M6 BOLTS - 12 N·m (105 in. lbs.)
2 - M8 BOLTS - 28 N·m (250 in. lbs.)
3 - TIMING BELT TENSIONER

REAR COVER

(1) Install rear timing belt cover and fasteners. Torque fasteners to specified values (Fig. 118).

CAUTION: Do not use an impact wrench for tightening camshaft sprocket bolt. Damage to the timing locating pin can occur. Hand tighten using a wrench ONLY.

(2) Install camshaft sprockets. Hold sprockets with Special Tool 6848 and tighten center bolt to 101 N·m (75 ft. lbs.) (Fig. 116).

(3) Install timing belt idler pulley and tighten mounting bolt to 61 N·m (45 ft. lbs.) (Fig. 117).

(4) Install timing belt (Refer to 9 - ENGINE/VALVE TIMING/TIMING BELT AND SPROCKETS - INSTALLATION).

(5) Install engine mount bracket and tighten bolts to 61 N·m (45 ft. lbs.) (Fig. 115).

(6) Install front covers.

TIMING BELT AND SPROCKET(S)

REMOVAL

REMOVAL - TIMING BELT

(1) Remove air cleaner upper cover, housing, and clean air tube.

(2) Remove make-up air hose from cylinder head cover.

(3) Raise vehicle on hoist.

(4) Remove right front wheel.

(5) Remove right inner splash shield.

(6) Remove accessory drive belts (Refer to 7 - COOLING/ACCESSORY DRIVE/DRIVE BELTS - REMOVAL).

(7) Remove crankshaft vibration damper (Refer to 9 - ENGINE/ENGINE BLOCK/VIBRATION DAMPER - REMOVAL).

(8) Remove air conditioner/generator belt tensioner and pulley assembly (Refer to 7 - COOLING/ACCESSORY DRIVE/BELT TENSIONERS - REMOVAL).

(9) Remove timing belt lower front cover bolts and remove cover (Refer to 9 - ENGINE/VALVE TIMING/TIMING BELT COVER(S) - REMOVAL).

(10) Lower vehicle.

(11) Remove bolts attaching timing belt upper front cover and remove cover (Refer to 9 - ENGINE/VALVE TIMING/TIMING BELT COVER(S) - REMOVAL).

(12) Remove right engine mount (Refer to 9 - ENGINE/ENGINE MOUNTING/RIGHT MOUNT - REMOVAL).

(13) Remove engine mount bracket (Fig. 119).

CAUTION: When aligning crankshaft and camshaft timing marks always rotate engine from crankshaft. Camshaft should not be rotated after timing belt is removed. Damage to valve components may occur. Always align timing marks before removing timing belt.

(14) Before the removal of the timing belt, rotate crankshaft until the TDC mark on oil pump housing aligns with the TDC mark on crankshaft sprocket (trailing edge of sprocket tooth) (Fig. 120).

NOTE: The crankshaft sprocket TDC mark is located on the trailing edge of the sprocket tooth. Failure to align trailing edge of sprocket tooth to TDC mark on oil pump housing will cause the camshaft timing marks to be misaligned.

(15) Loosen timing belt tensioner lock bolt (Fig. 121).

TIMING BELT AND SPROCKET(S) (Continued)

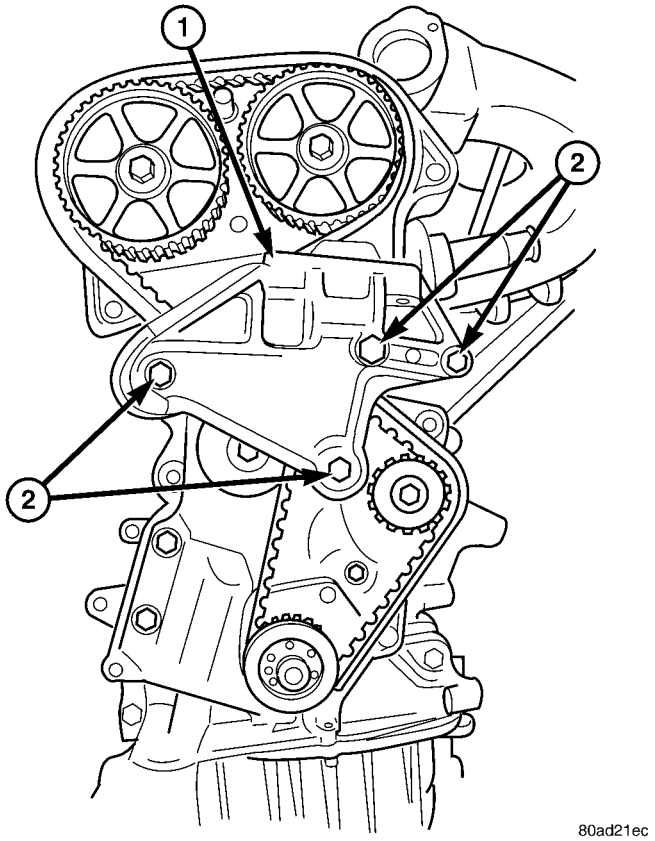

Fig. 119 Engine Mount Bracket

1 - ENGINE MOUNT BRACKET
2 - BOLTS - 61 N·m (45 ft. lbs.)

(16) Insert a 6 mm Allen wrench into the hexagon opening located on the top plate of the belt tensioner pulley (Fig. 121). Rotate the top plate **CLOCKWISE** until there is enough slack in timing belt to allow for removal.

(17) Remove timing belt.

CAUTION: If timing belt was damaged due to incorrect tracking (alignment), the belt tensioner pulley and bracket must be replaced as an assembly (Refer to 9 - ENGINE/VALVE TIMING/TIMING BELT TENSIONER & PULLEY - REMOVAL).

REMOVAL - CAMSHAFT SPROCKETS

(1) Disconnect negative battery cable.

(2) Remove timing belt (Refer to 9 - ENGINE/VALVE TIMING/TIMING BELT AND SPROCKETS - REMOVAL).

(3) Hold camshaft sprockets with Special Tool 6847 while removing center bolts (Fig. 122).

REMOVAL - CRANKSHAFT SPROCKET

(1) Disconnect negative battery cable.

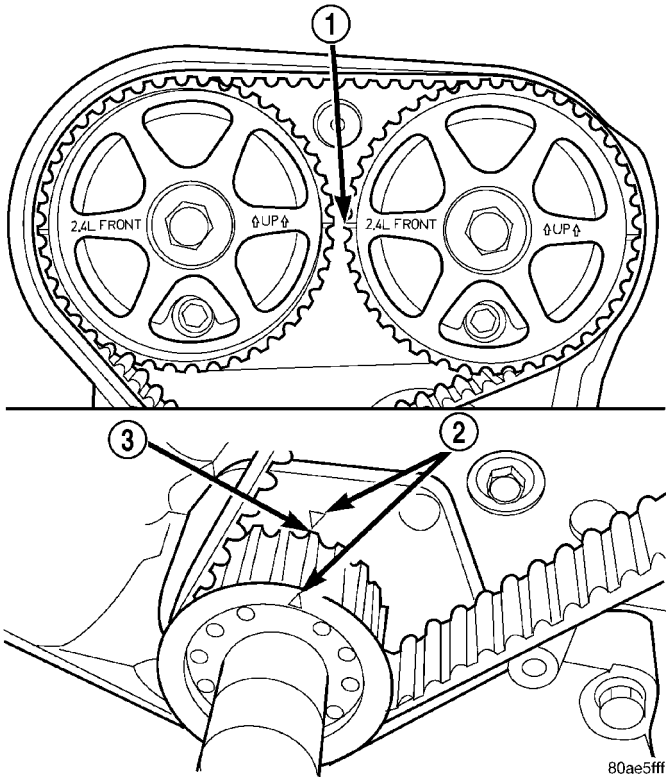

Fig. 120 Crankshaft and Camshaft Timing

1 - CAMSHAFT TIMING MARKS
2 - CRANKSHAFT TDC MARKS
3 - TRAILING EDGE OF SPROCKET TOOTH

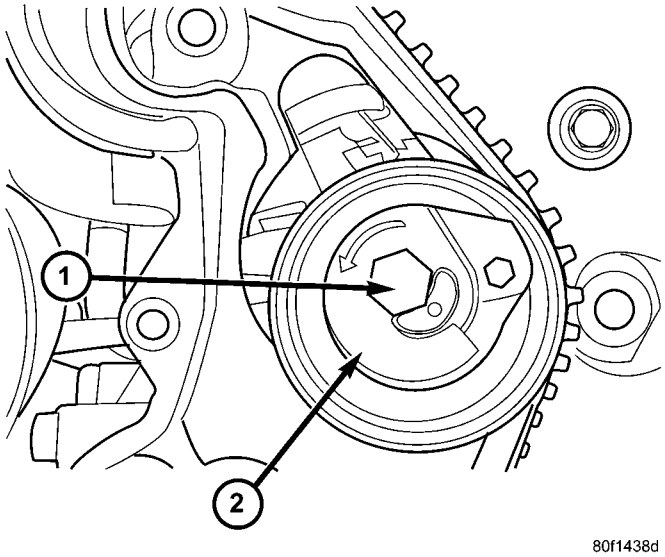

Fig. 121 Timing Belt Tensioner

1 - LOCK BOLT
2 - TOP PLATE

(2) Remove timing belt (Refer to 9 - ENGINE/VALVE TIMING/TIMING BELT AND SPROCKETS - REMOVAL).

TIMING BELT AND SPROCKET(S) (Continued)

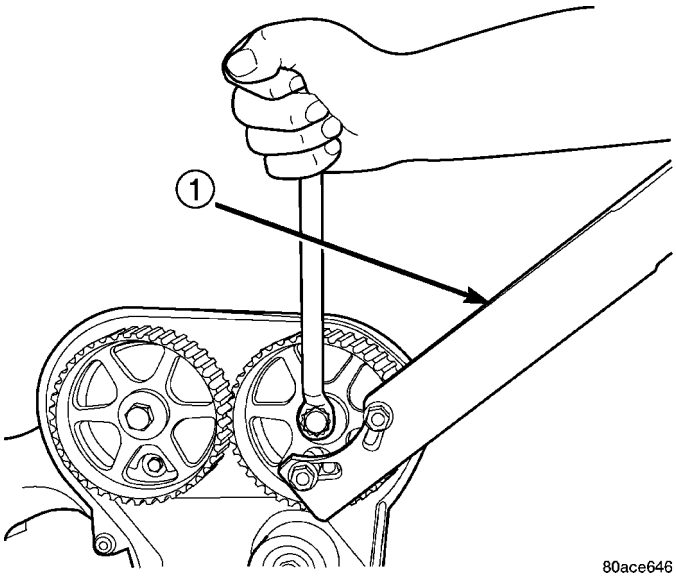

Fig. 122 Camshaft Sprocket - Removal/Installation

1 - SPECIAL TOOL 6847

(3) Remove crankshaft sprocket using Special Tools 6793 and insert C-4685-C2 (Fig. 123).

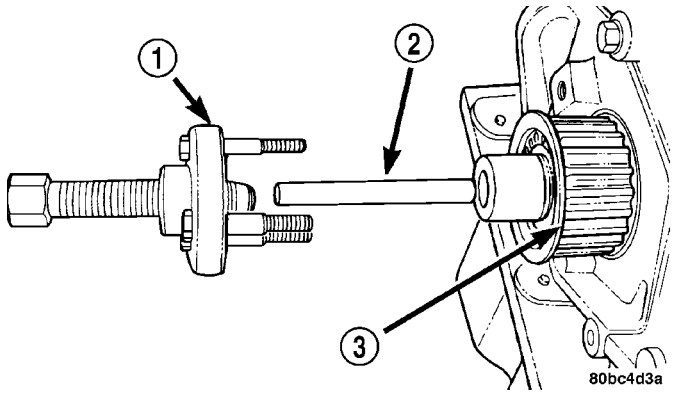

Fig. 123 Crankshaft Sprocket - Removal

1 - SPECIAL TOOL 6793
2 - SPECIAL TOOL C-4685–C2
3 - CRANKSHAFT SPROCKET

CLEANING

Do Not attempt to clean a timing belt. If contamination from oil, grease, or coolants have occurred, the timing belt should be replaced.

Clean all sprockets using a suitable solvent. Clean all sprocket grooves of any debris.

INSTALLATION

INSTALLATION - CRANKSHAFT SPROCKET

CAUTION: The crankshaft sprocket is set to a predetermined depth from the factory for correct timing belt tracking. If removed, use of Special Tool 6792 is required to set the sprocket to original installation depth. An incorrectly installed sprocket will result in timing belt and engine damage.

(1) Install crankshaft sprocket using Special Tool 6792 (Fig. 124).

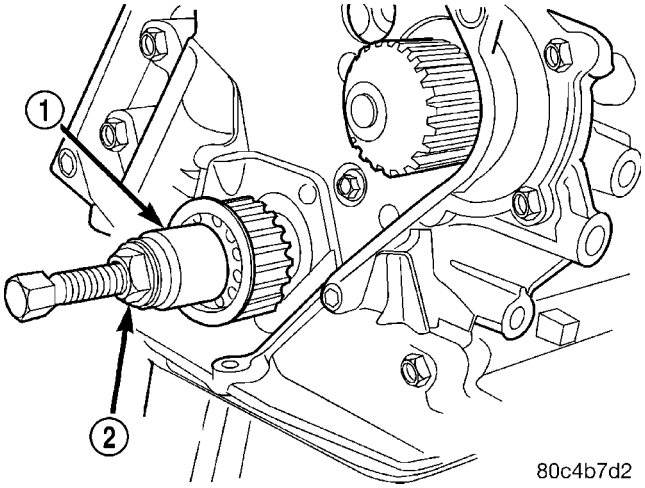

Fig. 124 Crankshaft Sprocket - Installation

1 - SPECIAL TOOL 6792
2 - TIGHTEN NUT TO INSTALL

(2) Install timing belt. (Refer to 9 - ENGINE/VALVE TIMING/TIMING BELT/CHAIN AND SPROCKETS - INSTALLATION)

INSTALLATION - CAMSHAFT SPROCKETS

(1) Install camshaft sprockets. Hold camshaft sprockets with Special Tool 6847 while tightening center bolts to 115 N·m (85 ft. lbs.) (Fig. 122).

(2) Install timing belt (Refer to 9 - ENGINE/VALVE TIMING/TIMING BELT AND SPROCKETS - INSTALLATION).

(3) Connect negative battery cable.

INSTALLATION - TIMING BELT

(1) Set crankshaft sprocket to TDC by aligning the sprocket with the arrow on the oil pump housing.

(2) Set camshafts timing marks so that the exhaust camshaft sprocket is a 1/2 notch below the intake camshaft sprocket (Fig. 125).

CAUTION: Ensure that the arrows on both camshaft sprockets are facing up.

(3) Install timing belt. Starting at the crankshaft, go around the water pump sprocket, idler pulley, camshaft sprockets and then around the tensioner (Fig. 126).

(4) Move the exhaust camshaft sprocket counterclockwise (Fig. 126) to align marks and take up belt slack.

TIMING BELT AND SPROCKET(S) (Continued)

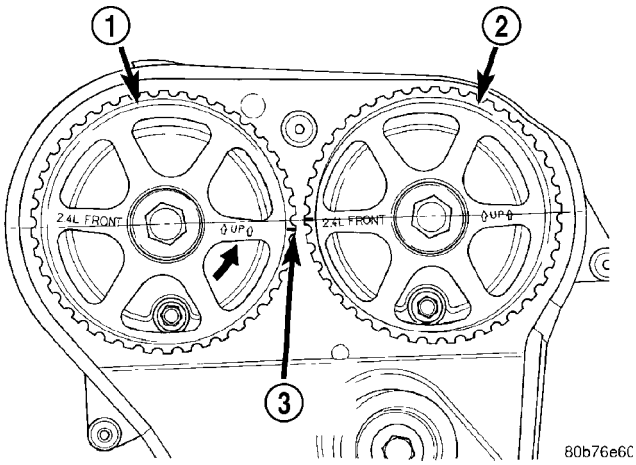

Fig. 125 Camshaft Sprocket Alignment

1 - CAMSHAFT SPROCKET-EXHAUST
2 - CAMSHAFT SPROCKET-INTAKE
3 - 1/2 NOTCH LOCATION

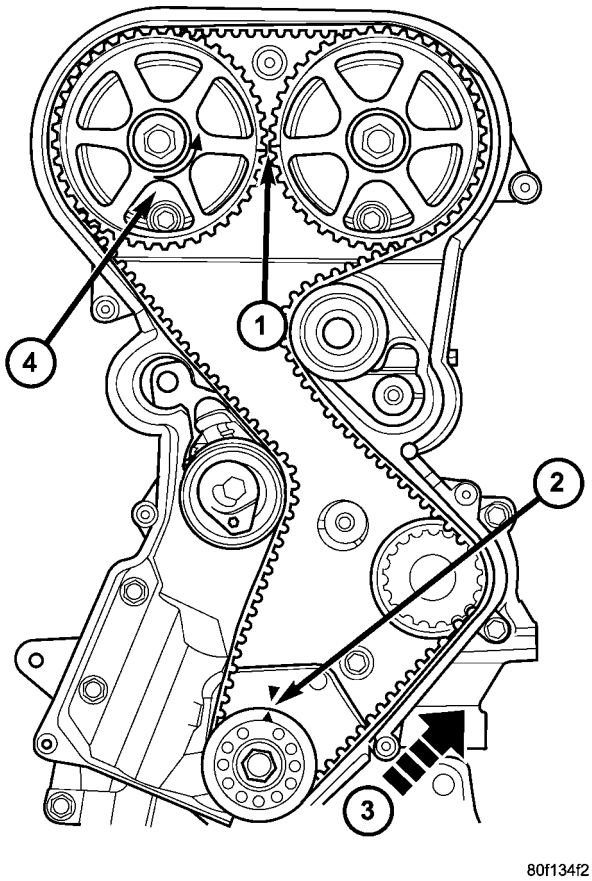

Fig. 126 Timing Belt Installation

1 - CAMSHAFT TIMING MARKS 1/2 NOTCH LOCATION
2 - CRANKSHAFT AT TDC
3 - INSTALL BELT IN THIS DIRECTION
4 - ROTATE CAMSHAFT SPROCKET TO TAKE UP BELT SLACK

(5) Insert a 6 mm Allen wrench into the hexagon opening located on the top plate of the belt tensioner pulley. Rotate the top plate **COUNTERCLOCKWISE**. The tensioner pulley will move against the belt and the tensioner setting notch will eventually start to move clockwise. Watching the movement of the setting notch, continue rotating the top plate counterclockwise until the setting notch is aligned with the spring tang (Fig. 127). Using the allen wrench to prevent the top plate from moving, torque the tensioner lock bolt to 25 N·m (220 in. lbs.). Setting notch and spring tang should remain aligned after lock nut is torqued.

(6) Remove allen wrench and torque wrench.

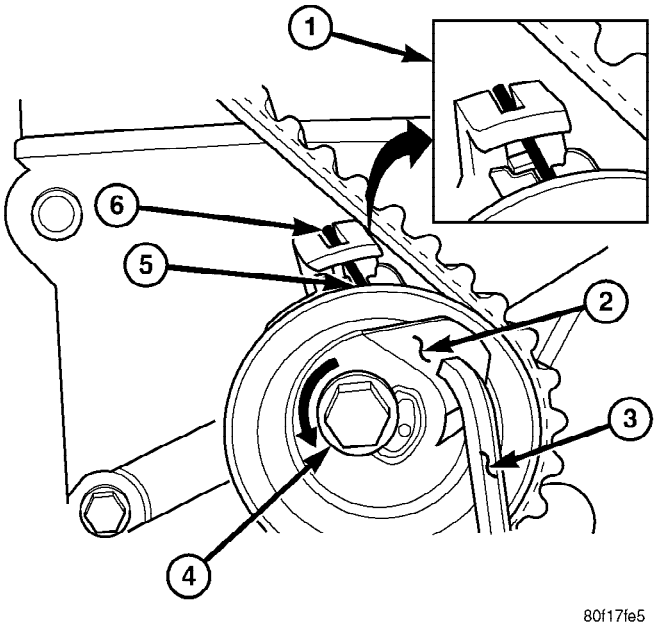

Fig. 127 Timing Belt Tension Adjustment

1 - ALIGN SETTING NOTCH WITH SPRING TANG
2 - TOP PLATE
3 - 6mm ALLEN WRENCH
4 - LOCK BOLT
5 - SETTING NOTCH
6 - SPRING TANG

NOTE: Repositioning the crankshaft to the TDC position must be done only during the CLOCKWISE rotation movement. If TDC is missed, rotate a further two revolutions until TDC is achieved. DO NOT rotate crankshaft counterclockwise as this will make verification of proper tensioner setting impossible.

TIMING BELT AND SPROCKET(S) (Continued)

(7) Rotate the crankshaft CLOCKWISE two complete revolutions manually for seating of the belt, until the crankshaft is repositioned at the TDC position. Verify that the camshaft and crankshaft timing marks are in proper position (Fig. 128).

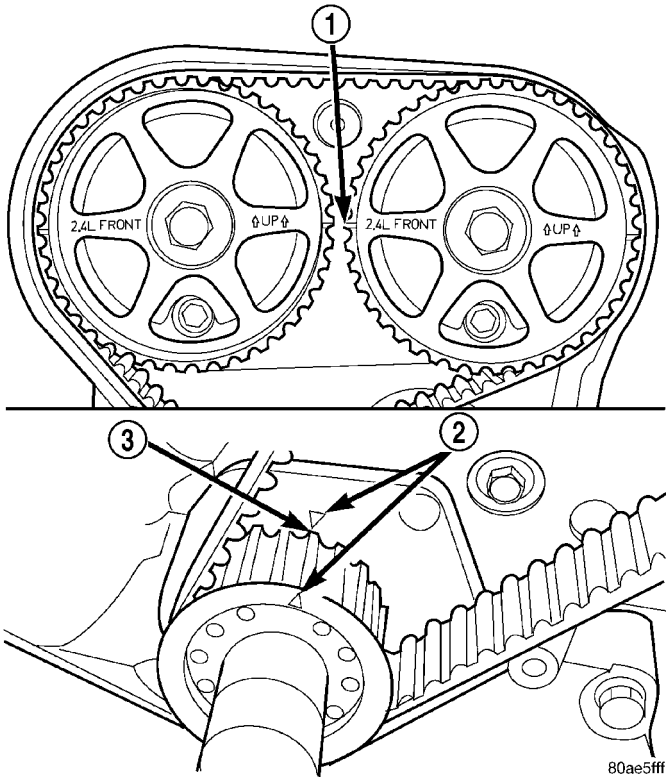

Fig. 128 Crankshaft and Camshaft Timing

1 - CAMSHAFT TIMING MARKS
2 - CRANKSHAFT TDC MARKS
3 - TRAILING EDGE OF SPROCKET TOOTH

(8) Check if the spring tang is within the tolerance window (Fig. 129). If the spring tang is within the tolerance window, the installation process is complete and nothing further is required. If the spring tang is not within the tolerance window, repeat Steps 5 through 7.

(9) Install engine mount bracket to engine (Fig. 119).

(10) Install timing belt front covers and bolts (Refer to 9 - ENGINE/VALVE TIMING/TIMING BELT COVER(S) - INSTALLATION).

(11) Install air conditioning/generator belt tensioner and pulley (Refer to 7 - COOLING/ACCESSORY DRIVE/BELT TENSIONERS - INSTALLATION).

(12) Install right engine mount (Refer to 9 - ENGINE/ENGINE MOUNTING/RIGHT MOUNT - INSTALLATION).

(13) Install crankshaft vibration damper (Refer to 9 - ENGINE/ENGINE BLOCK/VIBRATION DAMPER - INSTALLATION).

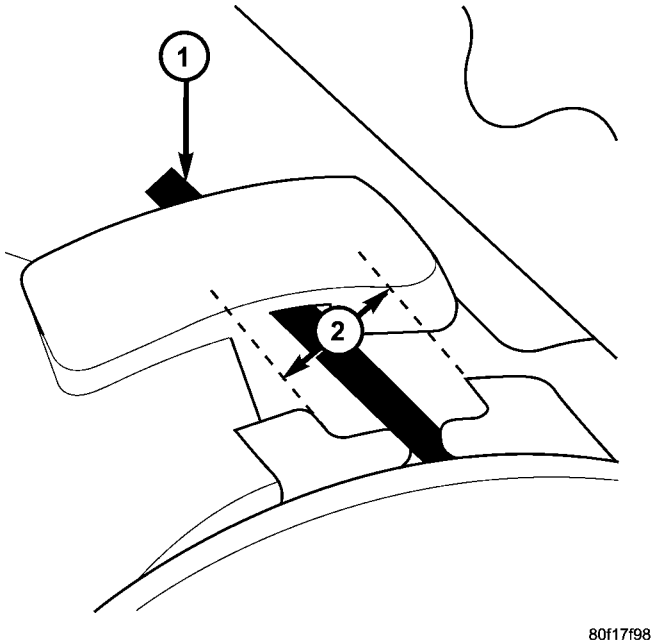

Fig. 129 Timing Belt Tension Verification

1 - SPRING TANG
2 - TOLERANCE WINDOW

(14) Install accessory drive belts (Refer to 7 - COOLING/ACCESSORY DRIVE/DRIVE BELTS - INSTALLATION).

(15) Install drive belt splash shield.

(16) Install right front wheel.

(17) Connect make-up air hose to cylinder head cover.

(18) Install air cleaner housing, upper cover, and clean air tube.

TIMING BELT TENSIONER & PULLEY

REMOVAL

(1) Remove the timing belt (Refer to 9 - ENGINE/VALVE TIMING/TIMING BELT AND SPROCKETS - REMOVAL).

(2) Remove timing belt idler pulley (Fig. 130).

(3) Hold camshaft sprocket with Special Tool 6847 while removing bolt (Fig. 131). Remove both cam sprockets.

(4) Remove rear timing belt cover fasteners and remove cover from engine (Fig. 132).

(5) Remove lower bolt attaching timing belt tensioner assembly to engine and remove tensioner **as an assembly** (Fig. 133).

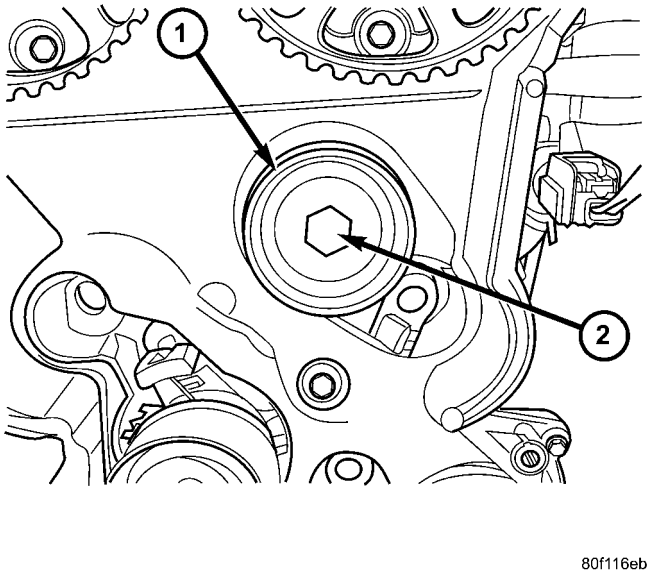

Fig. 130 Timing Belt Idler Pulley

1 - IDLER PULLEY
2 - BOLT

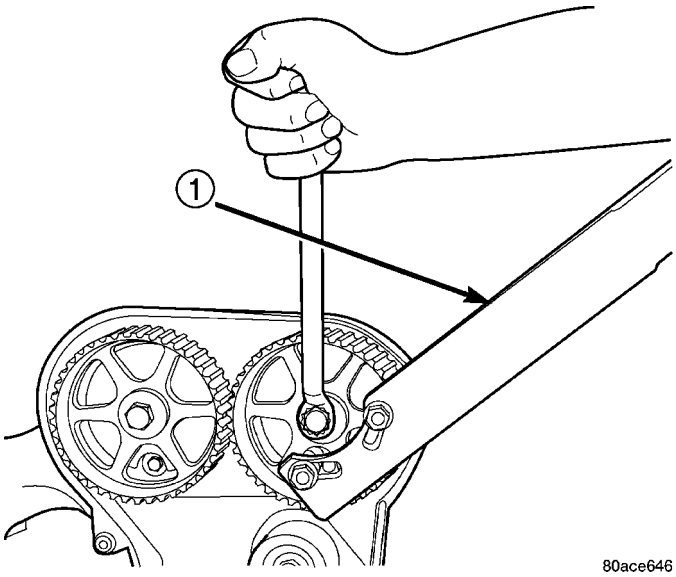

Fig. 131 Camshaft Sprocket - Removal/Installation

1 - SPECIAL TOOL 6847

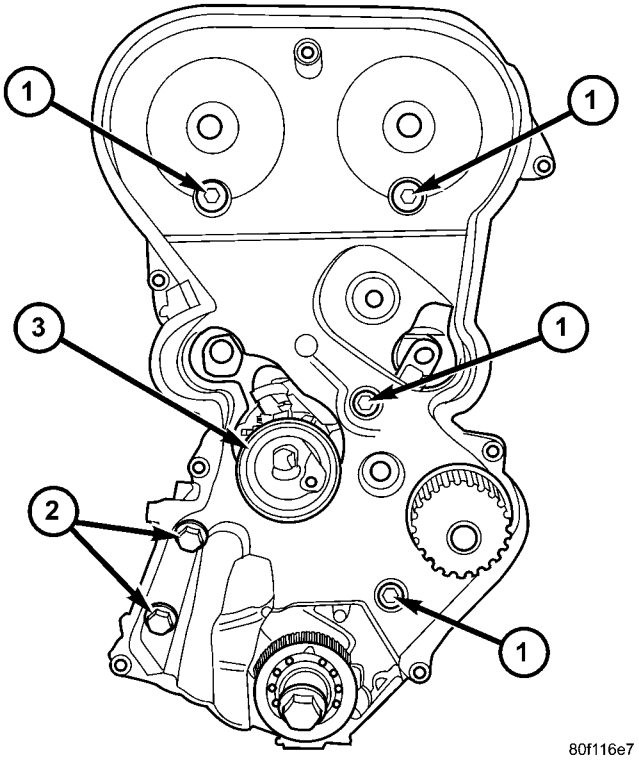

Fig. 132 Rear Timing Belt Cover Fasteners

1 - M6 BOLTS - 12 N·m (105 in. lbs.)
2 - M8 BOLTS - 28 N·m (250 in. lbs.)
3 - TIMING BELT TENSIONER

INSTALLATION

(1) Align timing belt tensioner assembly to engine and install lower mounting bolt **but do not tighten** (Fig. 133). To properly align tensioner assembly—install one of the engine bracket mounting bolts (M10) 5 to 7 turns into the tensioner's upper mounting location (Fig. 133).

(2) Torque the tensioner's lower mounting bolt to 61 N·m (45 ft. lbs.). Remove the upper bolt used for tensioner alignment.

(3) Install rear timing belt cover and fasteners. Torque fasteners to values specified in (Fig. 132).

(4) Install timing belt idler pulley and torque mounting bolt to 61 N·m (45 ft. lbs.) (Fig. 130).

(5) Install camshaft sprockets. Use Special Tool 6847 to hold sprockets (Fig. 131), torque bolts to 101 N·m (75 ft. lbs.).

(6) Install the timing belt (Refer to 9 - ENGINE/VALVE TIMING/TIMING BELT AND SPROCKETS - INSTALLATION).

TIMING BELT TENSIONER & PULLEY (Continued)

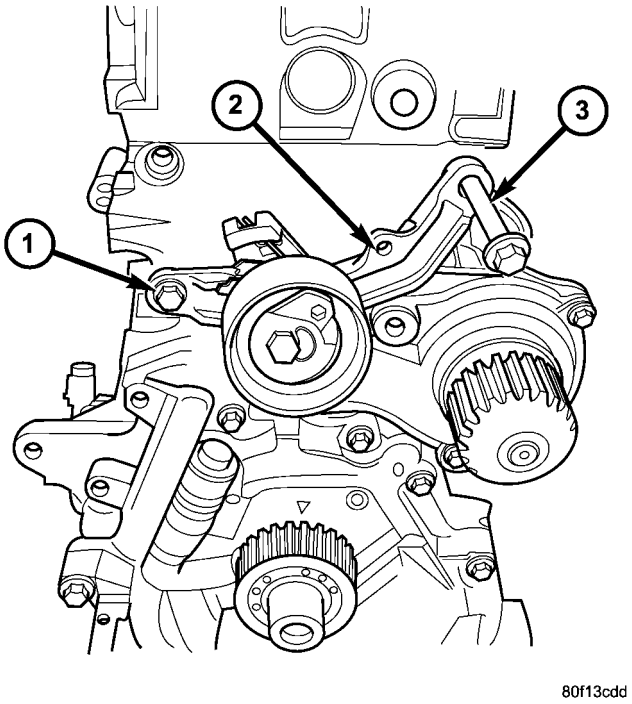

Fig. 133 Timing Belt Tensioner/Bracket Assembly

1 - BOLT
2 - TENSIONER ASSEMBLY
3 - BOLT-INSTALL FOR PROPER ALIGNMENT

BALANCE SHAFTS AND CARRIER ASSEMBLY

DESCRIPTION

The 2.4L engine is equipped with two nodular cast iron balance shafts installed in a cast aluminum carrier attached to the lower cylinder block (Fig. 134).

OPERATION

The balance shafts are driven by the crankshaft via a roller chain and sprockets. The balance shafts are connected by helical gears. The dual counter rotating shafts decrease second order vertical shaking forces caused by component movement.

REMOVAL

BALANCE SHAFTS/CHAIN/SPROCKETS

NOTE: For service procedures requiring only temporary relocation of carrier assembly refer to BALANCE SHAFT CARRIER procedure below.

(1) Drain engine oil.
(2) Remove the oil pan and pick-up tube (Refer to 9 - ENGINE/LUBRICATION/OIL PAN - REMOVAL).
(3) If replacing crankshaft sprocket, remove oil pump (Refer to 9 - ENGINE/LUBRICATION/OIL PUMP - REMOVAL).
(4) Remove chain cover, guide and tensioner. Discard pivot screw and adjuster screw. (Fig. 135).
(5) Remove screw retaining balance shaft drive sprocket (Fig. 136). Remove chain and sprocket.
(6) Using two wide pry bars, work the crankshaft sprocket back and forth until it is off the crankshaftshaft.
(7) Remove gear cover retaining stud (double ended to also retain chain guide). Remove cover and balance shaft gears (Fig. 137).
(8) Remove rear cover and balance shafts (Fig. 138).
(9) Remove four carrier to crankcase attaching bolts to separate carrier from engine bedplate.

BALANCE SHAFT CARRIER

The following components will remain intact during carrier removal: Gear cover, gears, balance shafts and the rear cover (Fig. 134).
(1) Drain engine oil.
(2) Remove the oil pan and pick-up tube (Refer to 9 - ENGINE/LUBRICATION/OIL PAN - REMOVAL).
(3) Remove chain cover, guide and tensioner (Fig. 135).
(4) Remove screw retaining balance shaft drive sprocket (Fig. 136).
(5) Move balance shaft inboard through drive chain sprocket. Sprocket will hang in lower chain loop.
(6) Remove carrier to crankcase attaching bolts to remove carrier.

BALANCE SHAFTS AND CARRIER ASSEMBLY (Continued)

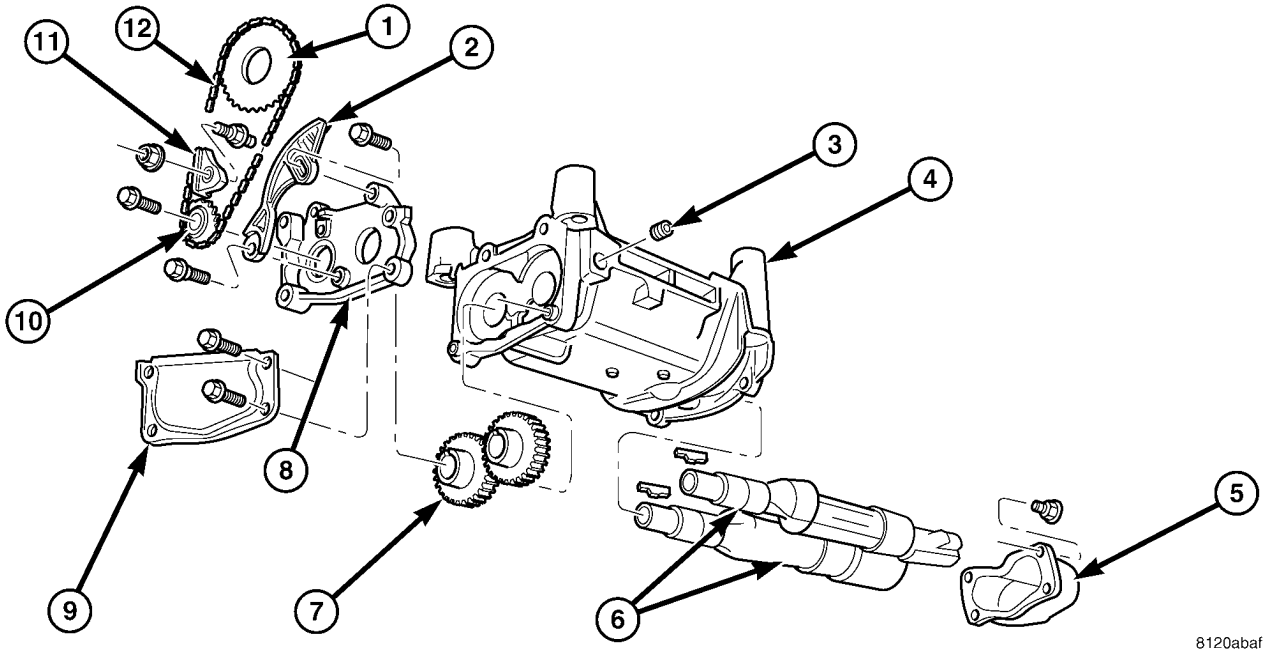

Fig. 134 Balance Shafts and Carrier Assembly

1 - SPROCKET
2 - TENSIONER
3 - PLUG
4 - CARRIER
5 - REAR COVER
6 - BALANCE SHAFTS
7 - GEARS
8 - GEAR COVER
9 - CHAIN COVER
10 - SPROCKET
11 - GUIDE
12 - CHAIN

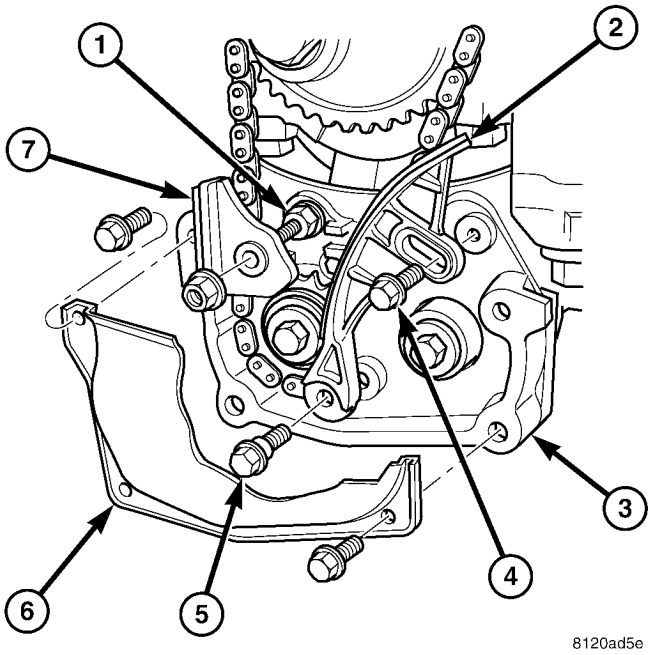

Fig. 135 Chain Cover, Guide and Tensioner

1 - STUD
2 - TENSIONER (ADJUSTER)
3 - GEAR COVER
4 - ADJUSTER SCREW
5 - SHOULDERED PIVOT SCREW
6 - CHAIN COVER (CUTAWAY)
7 - GUIDE

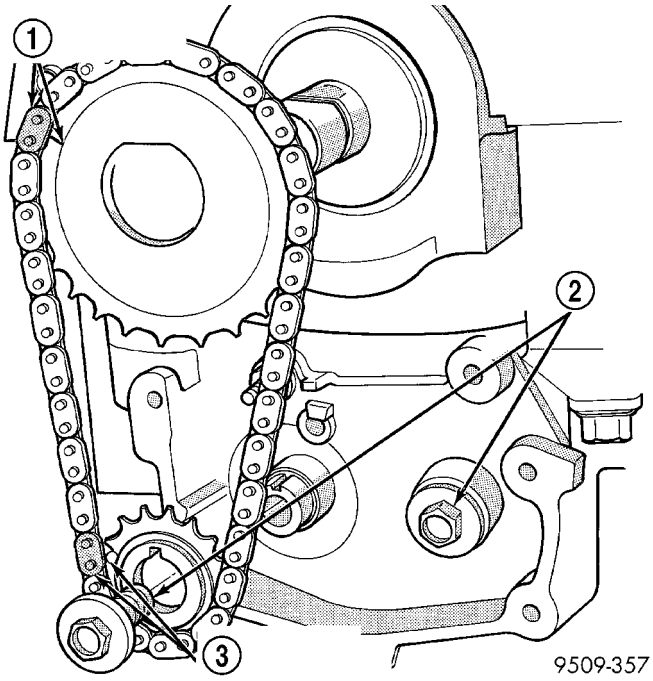

Fig. 136 Drive Chain and Sprockets

1 - NICKEL PLATED LINK AND MARK
2 - GEAR/SPROCKET SCREWS
3 - NICKEL PLATED LINK AND DOT

BALANCE SHAFTS AND CARRIER ASSEMBLY (Continued)

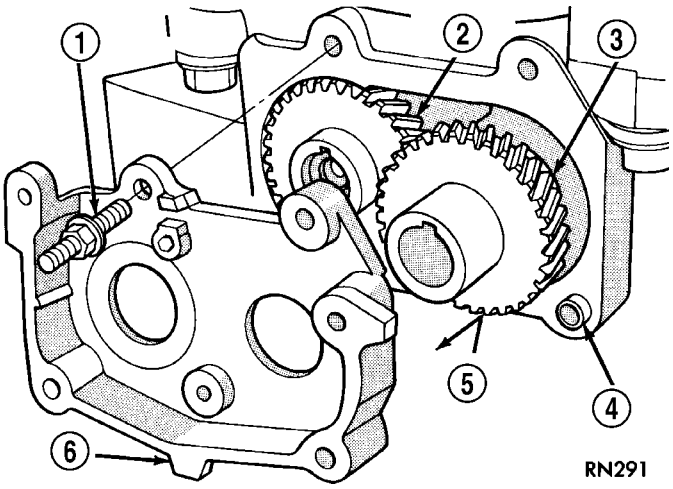

Fig. 137 Gear Cover and Gears

1 - STUD (DOUBLE ENDED)
2 - DRIVE GEAR
3 - DRIVEN GEAR
4 - CARRIER DOWEL
5 - GEAR(S)
6 - GEAR COVER

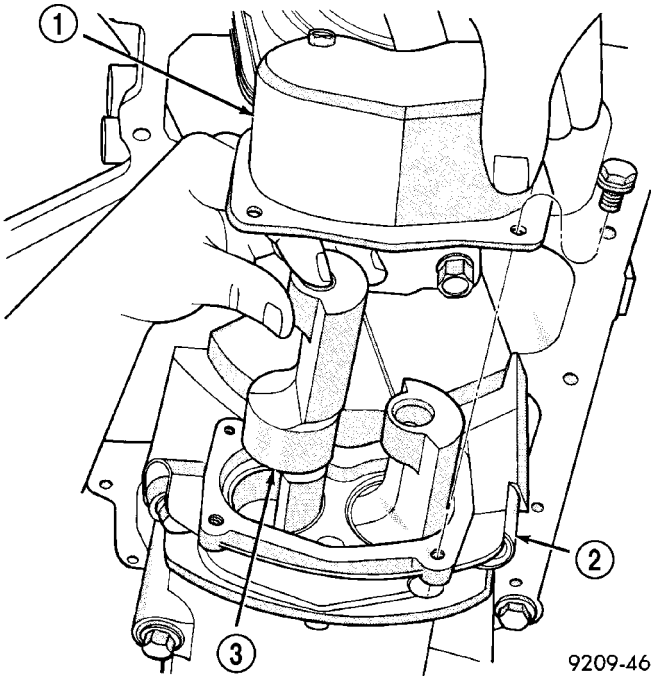

Fig. 138 Balance Shaft - Removal/Installation

1 - REAR COVER
2 - CARRIER
3 - BALANCE SHAFT

INSTALLATION

BALANCE SHAFT INSTALLATION/TIMING

Balance shaft and carrier assembly installation is the reverse of the removal procedure. **During installation crankshaft-to-balance shaft timing must be established. Refer to Timing procedure in this section.**

(1) With balance shafts installed in carrier (Fig. 134) position carrier on crankcase and install four attaching bolts and tighten to 54 N·m (40 ft. lbs.).

(2) Turn balance shafts until both shaft key ways are up, parallel to vertical centerline of engine. Install short hub drive gear on sprocket driven shaft and long hub gear on gear driven shaft. After installation gear and balance shaft keyways must be up with gear timing marks meshed as shown in (Fig. 139).

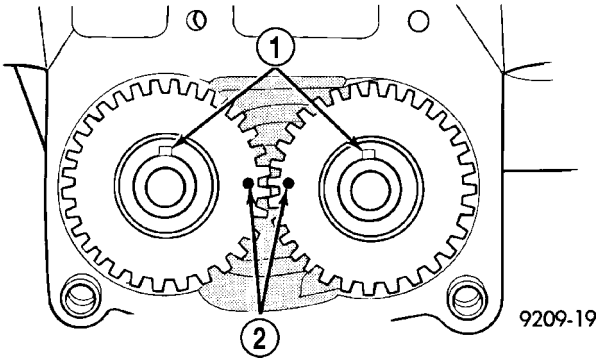

Fig. 139 Gear Timing

1 - KEY WAYS UP
2 - GEAR ALIGNMENT DOTS

(3) Install gear cover and tighten double ended stud/washer fastener to 12 N·m (105 in. lbs.).

(4) Align flat on balance shaft drive sprocket to the flat on crankshaft (Fig. 140).

(5) Install balance shaft drive sprocket on crankshaft using Special Tool 6052 (Fig. 141).

BALANCE SHAFTS AND CARRIER ASSEMBLY (Continued)

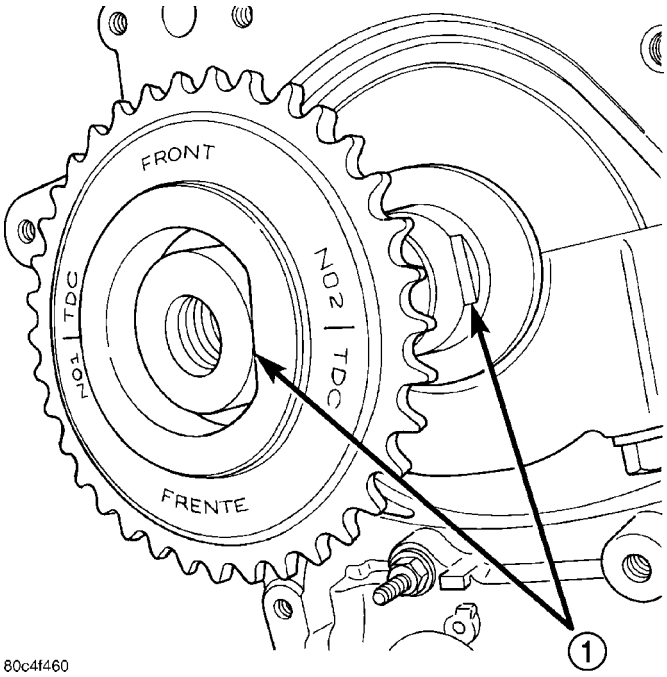

Fig. 140 Balance Shaft Sprocket Alignment to Crankshaft

1 - ALIGN FLATS

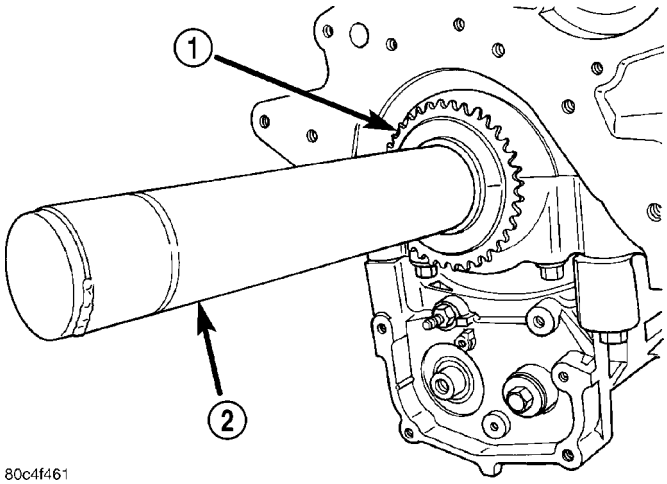

Fig. 141 Balance Shaft Drive

1 - SPROCKET
2 - SPECIAL TOOL 6052

(6) Turn crankshaft until number 1 cylinder is at top dead center (TDC). The timing marks on the chain sprocket should line up with the parting line on the left side of number one main bearing cap. (Fig. 142).

(7) Place chain over crankshaft sprocket so that the plated link of the chain is over the number 1 cylinder timing mark on the balance shaft crankshaft sprocket (Fig. 142).

(8) Place balance shaft sprocket into the timing chain (Fig. 142) and align the timing mark on the sprocket (dot) with the (lower) plated link on the chain.

NOTE: The lower plated link is 8 links from the upper link.

(9) With balance shaft keyways pointing up (12 o'clock) slide the balance shaft sprocket onto the nose of the balance shaft. The balance shaft may have to be pushed in slightly to allow for clearance.

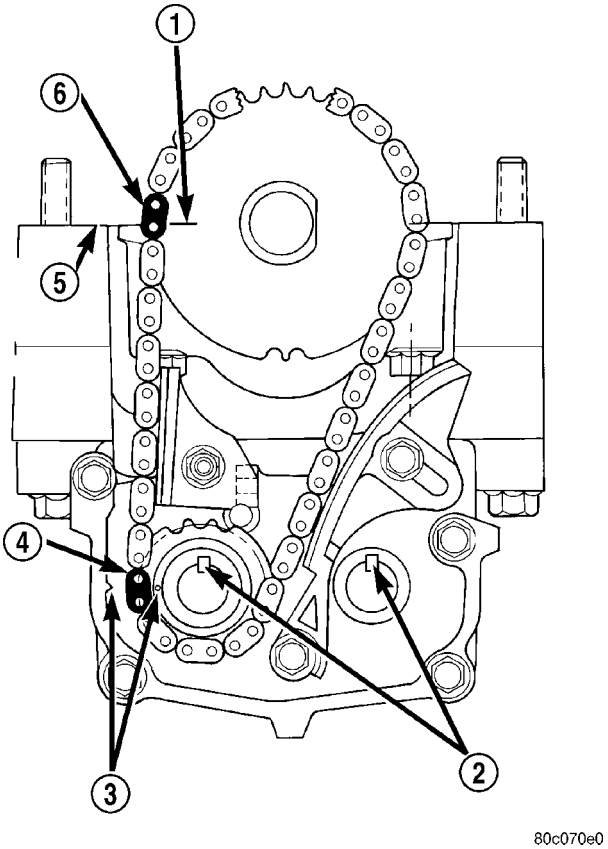

Fig. 142 Balance Shaft Timing

1 - MARK ON SPROCKET
2 - KEYWAYS UP
3 - ALIGN MARKS
4 - PLATED LINK
5 - PARTING LINE (BEDPLATE TO BLOCK)
6 - PLATED LINK

BALANCE SHAFTS AND CARRIER ASSEMBLY (Continued)

NOTE: THE TIMING MARK ON THE SPROCKET, THE (LOWER) NICKEL PLATED LINK, AND THE ARROW ON THE SIDE OF THE GEAR COVER SHOULD LINE UP WHEN THE BALANCE SHAFTS ARE TIMED CORRECTLY.

(10) If the sprockets are timed correctly, install the balance shaft bolts and tighten to 28 N·m (250 in. lbs.). A wood block placed between crankcase and crankshaft counterbalance will prevent crankshaft and gear rotation.

(11) **CHAIN TENSIONING:**

(a) Install chain tensioner loosely assembled with **new** shouldered pivot screw and adjuster screw.

(b) Position guide on double ended stud making sure tab on the guide fits into slot on the gear cover. Install and tighten nut/washer assembly to 12 N·m (105 in. lbs.).

(c) Place a shim 1 mm (0.039 in.) thick x 70 mm (2.75 in.) long between tensioner and chain. Push tensioner and shim up against the chain. **Apply firm pressure 2.5–3 Kg (5.5–6.6 lbs.) directly behind the adjustment slot to take up all slack.** Chain must have shoe radius contact as shown in (Fig. 143).

(d) With the load applied, tighten top tensioner bolt first, then bottom pivot bolt. Tighten bolts to 12 N·m (105 in. lbs.). Remove shim.

(e) Install carrier covers and tighten screws to 12 N·m (105 in. lbs.).

(12) If removed, install oil pump (Refer to 9 - ENGINE/LUBRICATION/OIL PUMP - INSTALLATION).

(13) Install pick-up tube and oil pan (Refer to 9 - ENGINE/LUBRICATION/OIL PAN - INSTALLATION).

(14) Fill engine crankcase with proper oil to correct level.

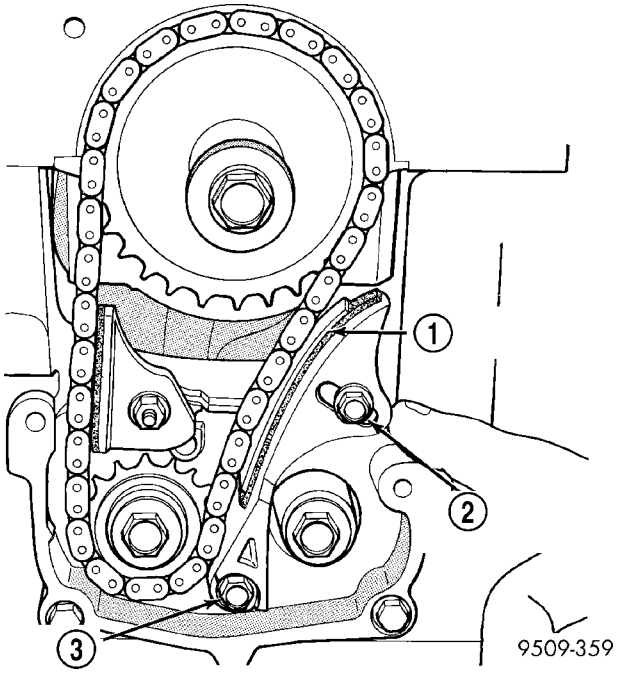

Fig. 143 Chain Tension Adjustment

1 - 1MM (0.039 IN.) SHIM
2 - TENSIONER (ADJUSTER) BOLT
3 - PIVOT BOLT