2012 ENGINE

Engine Mechanical - 5.3L, 6.0L, 6.2L - Repair Instructions - On Vehicle - Avalanche, Escalade, Suburban, Tahoe & Yukon

REPAIR INSTRUCTIONS - ON VEHICLE

DRIVE BELT REPLACEMENT - ACCESSORY

Removal Procedure

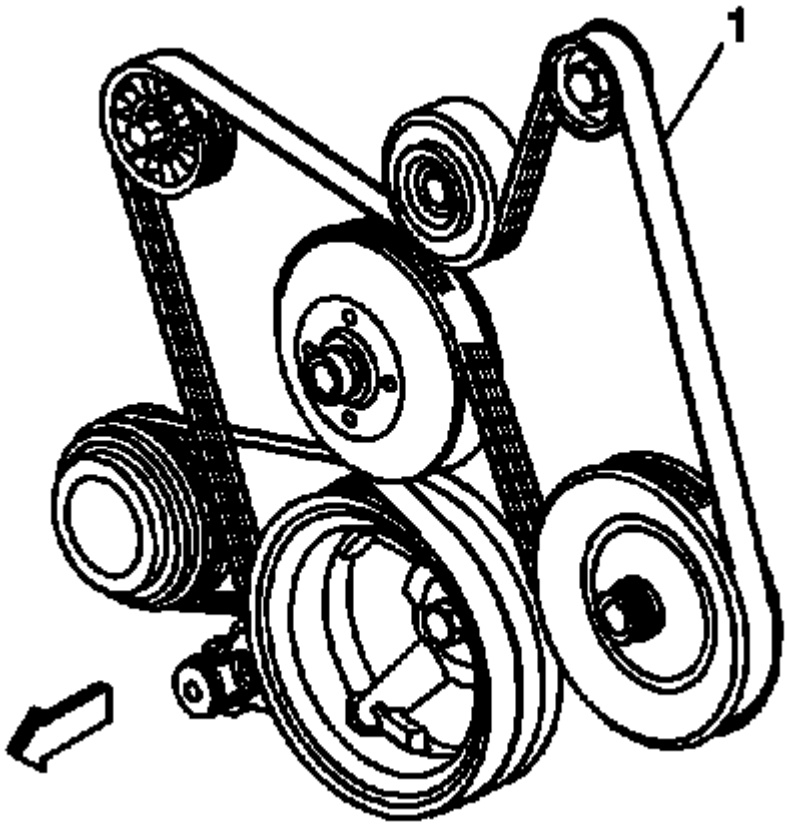

Fig. 1: View Of Accessory Drive Belt Routing
Courtesy of GENERAL MOTORS COMPANY

1. Open the hood.
2. Remove the air cleaner outlet duct. Refer to **Air Cleaner Resonator Outlet Duct Replacement** .
3. Install a breaker bar with hex-head socket to the drive belt tensioner bolt.
4. Rotate the drive belt tensioner clockwise in order to relieve tension on the belt.
5. Remove the drive belt (1) from the pulleys and the drive belt tensioner.
6. Slowly release the tension on the drive belt tensioner.

7. Remove the breaker bar and socket and from the drive belt tensioner bolt.
8. Clean and inspect the belt surfaces of all the pulleys.

Installation Procedure

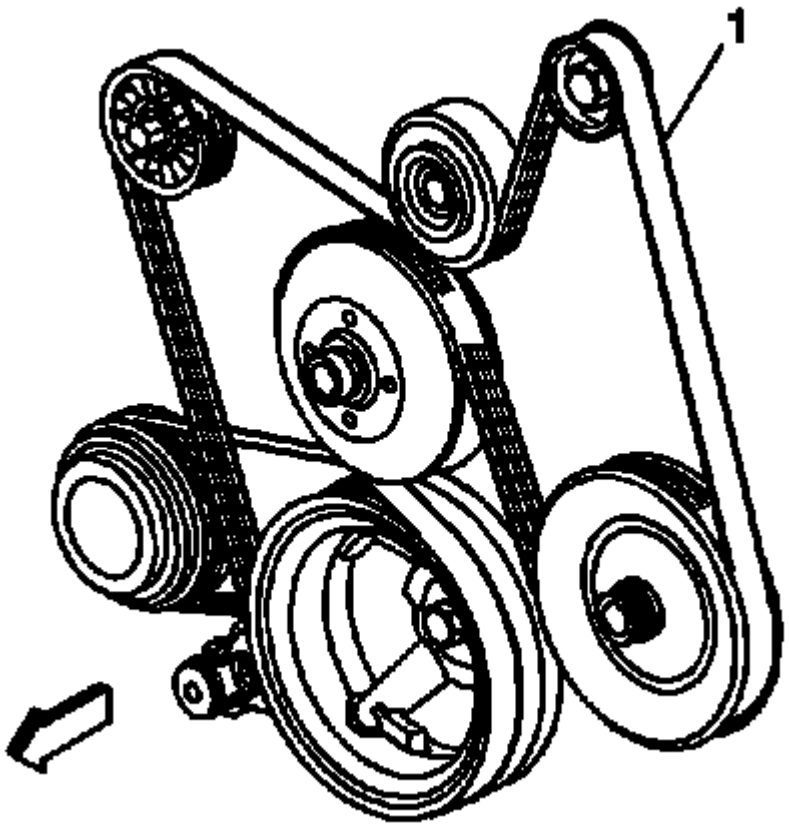

Fig. 2: View Of Accessory Drive Belt Routing
Courtesy of GENERAL MOTORS COMPANY

1. Route the drive belt (1) around all the pulleys except the idler pulley.
2. Install the breaker bar with hex-head socket to the belt tensioner bolt.
3. Rotate the belt tensioner clockwise in order to relieve the tension on the tensioner.
4. Install the drive belt under the idler pulley.
5. Slowly release the tension on the belt tensioner.
6. Remove the breaker bar and socket from the belt tensioner bolt.
7. Inspect the drive belt for proper installation and alignment.
8. Install the air cleaner outlet duct. Refer to **Air Cleaner Resonator Outlet Duct Replacement** .
9. Start the vehicle and inspect the drive belt for proper operation.
10. Close the hood.

AIR CONDITIONING COMPRESSOR BELT REPLACEMENT (V8)

Removal Procedure

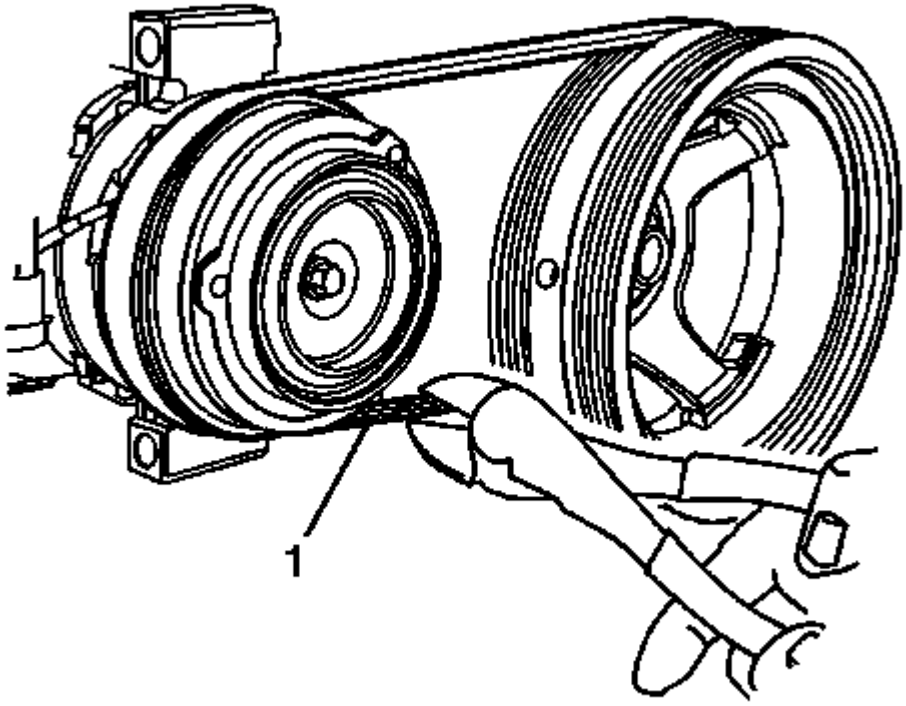

Fig. 3: Removing Belt
Courtesy of GENERAL MOTORS COMPANY

1. Remove the accessory drive belt. Refer to **Drive Belt Replacement - Accessory**.
2. Remove the skid plate. Refer to **Engine Shield Replacement** .
3. Cut the belt (1) from air conditioning (A/C) and crankshaft pulleys.

Installation Procedure

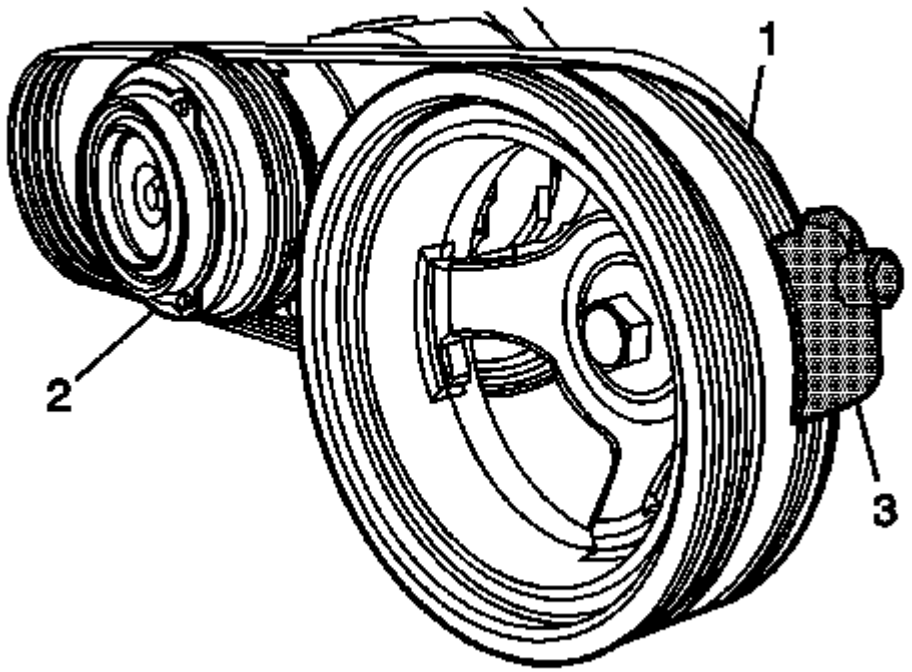

Fig. 4: InstallingBelt
Courtesy of GENERAL MOTORS COMPANY

NOTE: The OEM replacement stretchy belt is packaged with a disposable installation tool.

1. Position the belt behind the rear face of the balancer (1) and off of the A/C pulley (2).
2. Install the belt installation tool (3) onto the balancer.

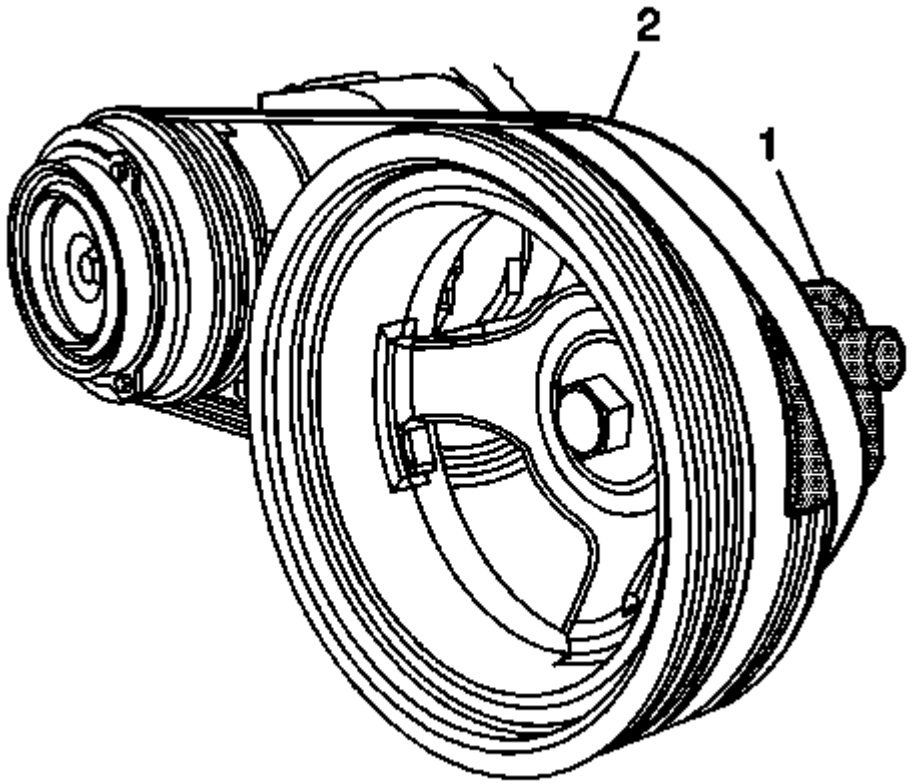

Fig. 5: Belt Installation Tool
Courtesy of GENERAL MOTORS COMPANY

3. Slide the belt installation tool (1) upward, installing the belt (2) onto the belt installation tool.
4. Slide the belt installation tool downward, positioning the belt onto the A/C pulley, applying light tension to the belt.

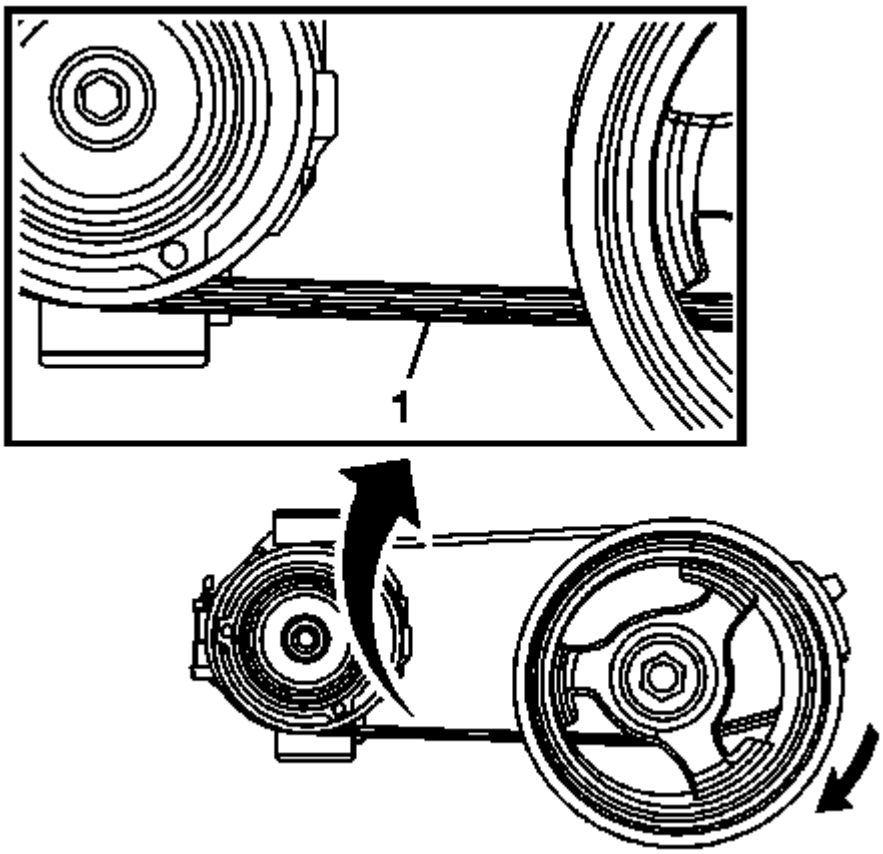

Fig. 6: Locating Lower Portion Of Belt & Ribbed Area Facing Forward
Courtesy of GENERAL MOTORS COMPANY

5. Position the lower portion of the belt (1) with the ribbed area facing forward.

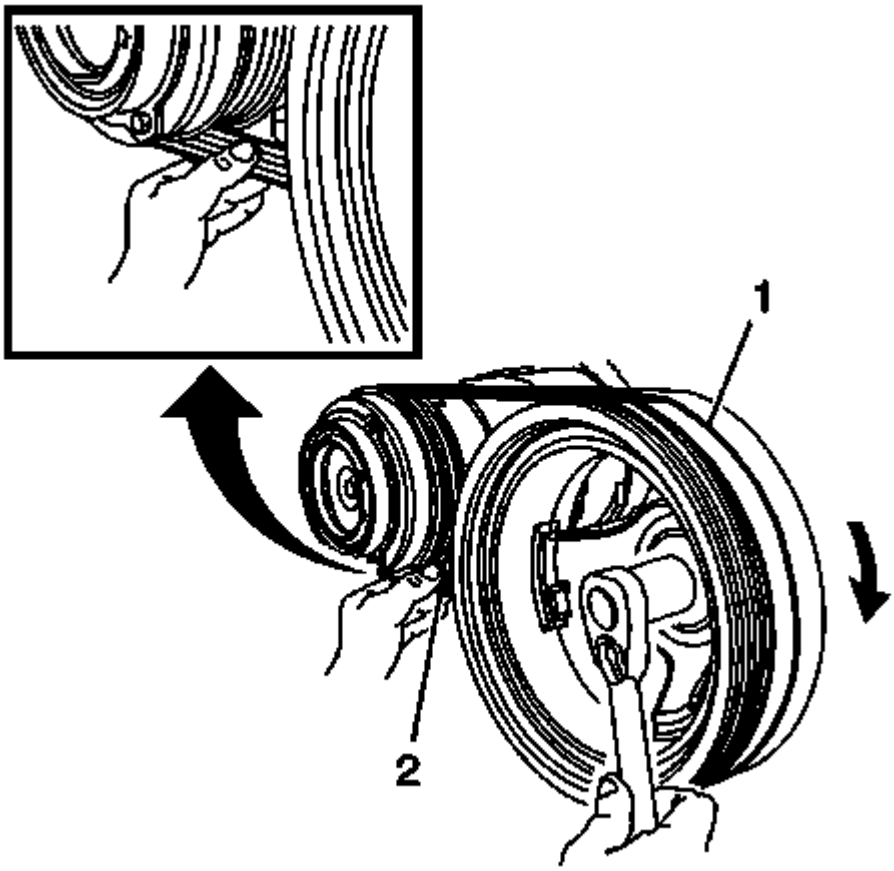

Fig. 7: Rotating Crankshaft Pulley
Courtesy of GENERAL MOTORS COMPANY

6. Slowly rotate the crankshaft pulley (1) in a clockwise direction while using finger pressure to pull the belt (2) forward. Ensure that the ribbed area of the belt remains facing forward and the belt aligns properly to the A/C pulley.

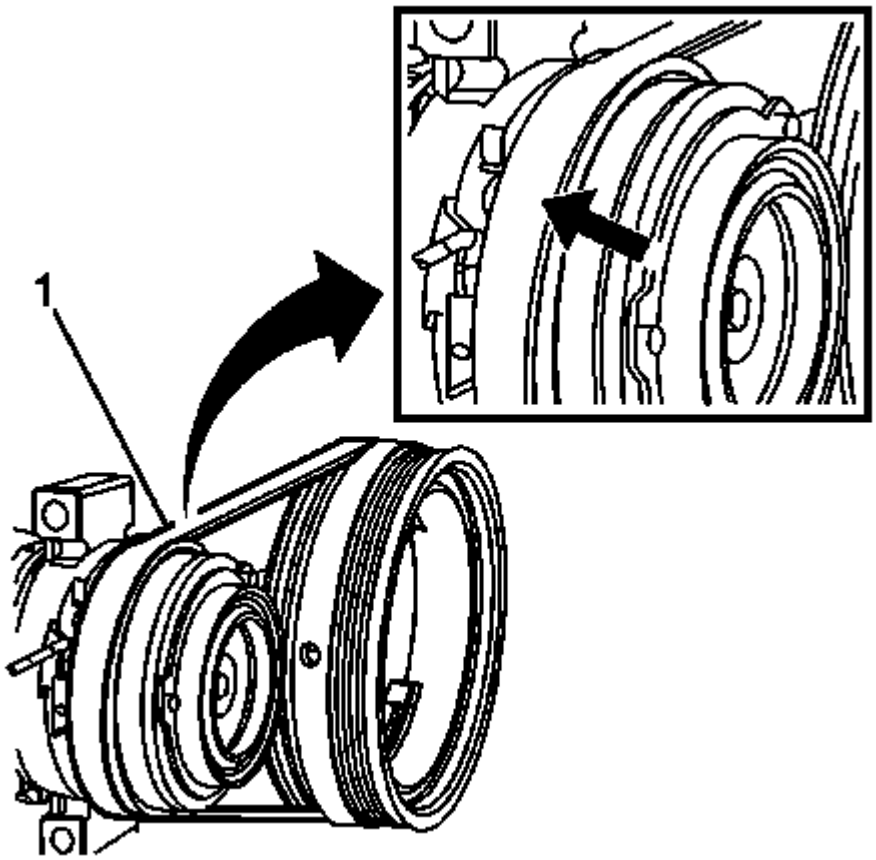

Fig. 8: Drive Belt Alignment
Courtesy of GENERAL MOTORS COMPANY

7. Inspect the drive belt (1) for proper installation and alignment.

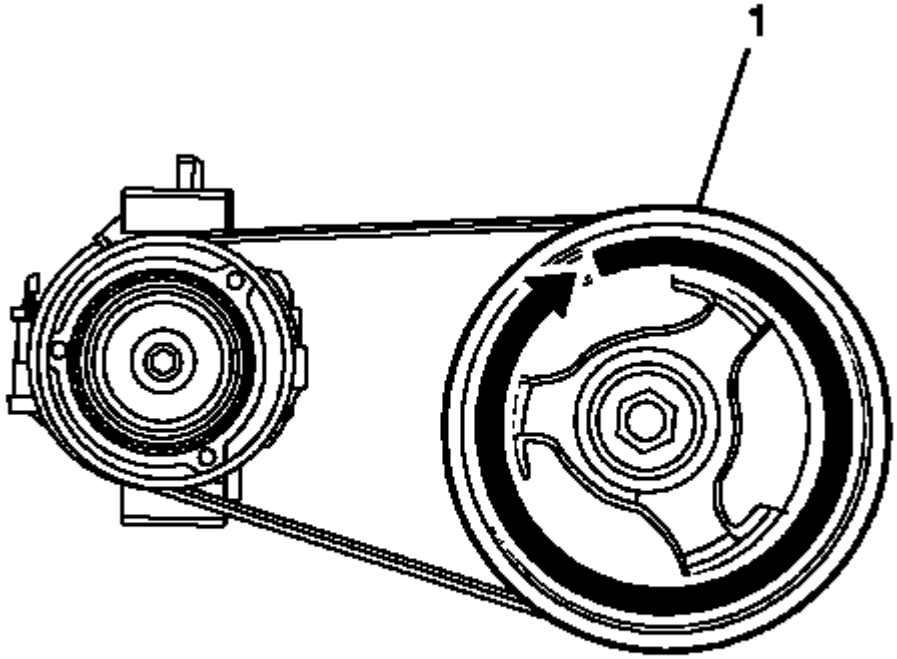

Fig. 9: A/C Compressor Drive Belt
Courtesy of GENERAL MOTORS COMPANY

8. Rotate the balancer (1) and additional 360 degrees to ensure proper belt installation.
9. Install the skid plate. Refer to **Engine Shield Replacement** .
10. Install the accessory drive belt. Refer to **Drive Belt Replacement - Accessory**.

DRIVE BELT IDLER PULLEY REPLACEMENT

Removal Procedure

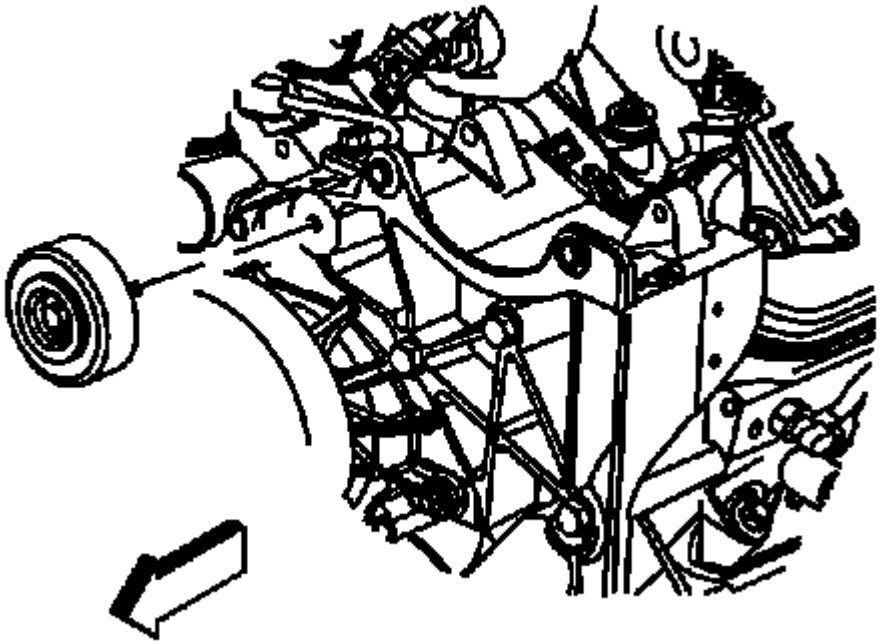

Fig. 10: View Of Drive Belt Idler Pulley
Courtesy of GENERAL MOTORS COMPANY

1. Remove the accessory drive belt. Refer to **Drive Belt Replacement - Accessory**.
2. Loosen the drive belt idler pulley bolt and remove the idler pulley.

Installation Procedure

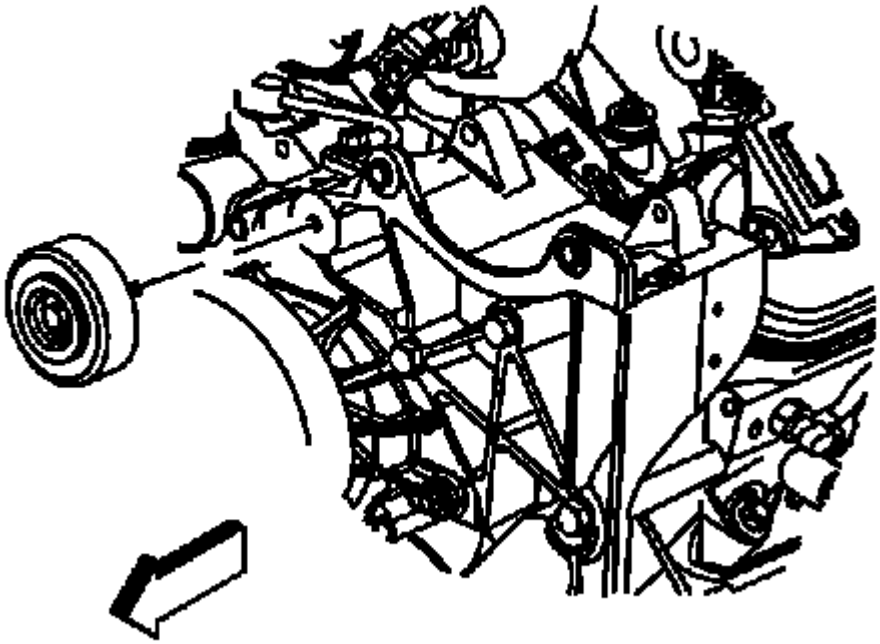

Fig. 11: View Of Drive Belt Idler Pulley
Courtesy of GENERAL MOTORS COMPANY

1. Position the drive belt idler pulley to the generator bracket and tighten the idler pulley bolt finger tight.

   CAUTION: Refer to Fastener Caution .

2. Tighten the drive belt idler pulley bolt.

   Tighten

   Tighten the bolt to 50 N.m (37 lb ft).

3. Install the accessory drive belt. Refer to **Drive Belt Replacement - Accessory**.

DRIVE BELT TENSIONER REPLACEMENT - ACCESSORY

Removal Procedure

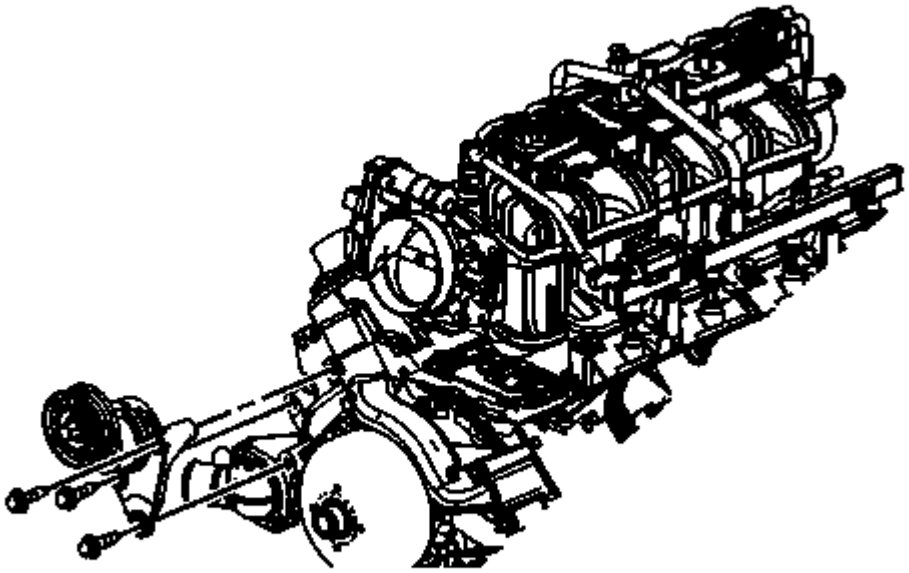

Fig. 12: View Of Drive Belt Tensioner & Bolts
Courtesy of GENERAL MOTORS COMPANY

1. Remove the accessory drive belt. Refer to **Drive Belt Replacement - Accessory**.
2. Remove the drive belt tensioner bolts.
3. Remove the drive belt tensioner.

Installation Procedure

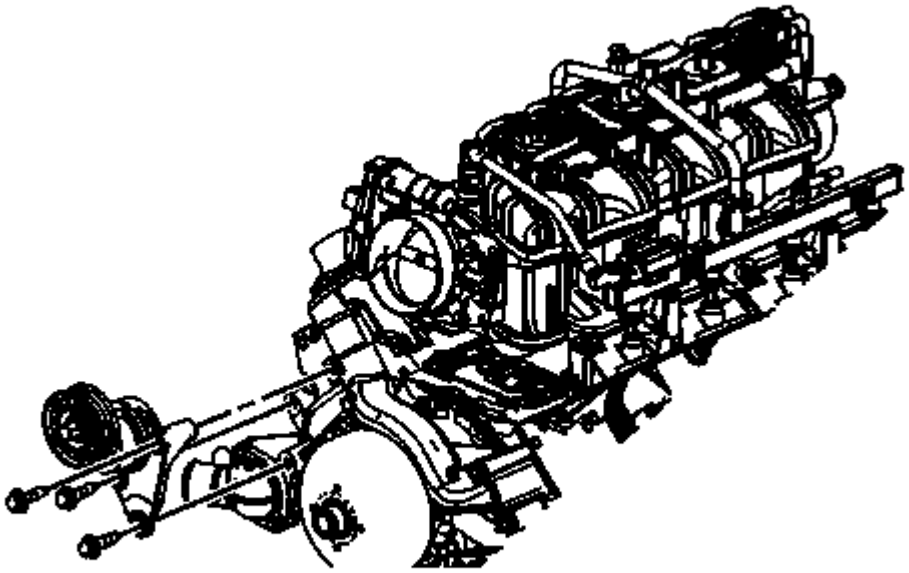

Fig. 13: View Of Drive Belt Tensioner & Bolts
Courtesy of GENERAL MOTORS COMPANY

1. Position the drive belt tensioner to the water pump.

   CAUTION: Refer to Fastener Caution .

2. Install and tighten the drive belt tensioner bolts.

   Tighten

   Tighten the bolts to 50 N.m (37 lb ft).

3. Install the accessory drive belt. Refer to **Drive Belt Replacement - Accessory**.

ENGINE MOUNT INSPECTION

CAUTION: Broken or deteriorated mounts can cause misalignment and destruction of certain drive train components. When a single mount breaks, the remaining mounts are subjected to abnormally high stresses.

CAUTION: When raising or supporting the engine for any reason, do not use a jack under the oil pan, any sheet metal, or the crankshaft pulley. Due to the small clearance between the oil pan and the oil pump screen, jacking against the oil pan may cause the pan to be bent against the pump screen. This will result in a damaged oil pickup unit.

Visual/Physical Inspection

1. Support the powertrain using the appropriate support method; refer to the powertrain mount replacement procedure. Raising the powertrain removes the weight from the engine mount and creates slight tension in the rubber.
2. Clean the mount and surrounding area to ensure good visibility of the mount condition.
3. Verify all attaching fasteners are present and at the correct torque. Refer to **Engine Mount Replacement - Left Side (L96)**, **Engine Mount Replacement - Left Side (except L96)**, and/or **Engine Mount Replacement - Right Side (L96)**, **Engine Mount Replacement - Right Side (except L96)** for any torque sequencing and/or torque specifications.

NOTE: Observe the engine mount while raising the engine. If the engine mount exhibits any of the following conditions the mount may require replacement. Refer to Engine Mount Replacement - Left Side (L96), Engine Mount Replacement - Left Side (except L96), and/or Engine Mount Replacement - Right Side (L96), Engine Mount Replacement - Right Side (except L96).

4. Slightly raise the engine approximately 5-7 mm.
5. Inspect the mount for any of the following conditions:
   - Hard rubber surfaces - covered with extreme heat check cracks.
   - Rubber separation from the metal plate of the engine mount.
   - Rubber is split through the center of the engine mount.

NOTE: Before replacing any engine mount due to suspected fluid loss, verify that the source of the fluid is from the engine mount, and not the engine or an external source.

   - If equipped with a hydraulic mount, inspect for GLYCOL™ fluid leaking from the engine mount.

ENGINE MOUNT REPLACEMENT - LEFT SIDE (L96)

Removal Procedure

CAUTION: When raising or supporting the engine for any reason, do not use a jack under the oil pan, any sheet metal, or the crankshaft pulley. Due to the small clearance between the oil pan and the oil pump screen, jacking against the oil pan may cause the pan to be bent against the pump screen. This will result in a damaged oil pickup unit.

1. Remove the left engine mount bracket. Refer to **Engine Mount Bracket Replacement - Left Side (L96)**.

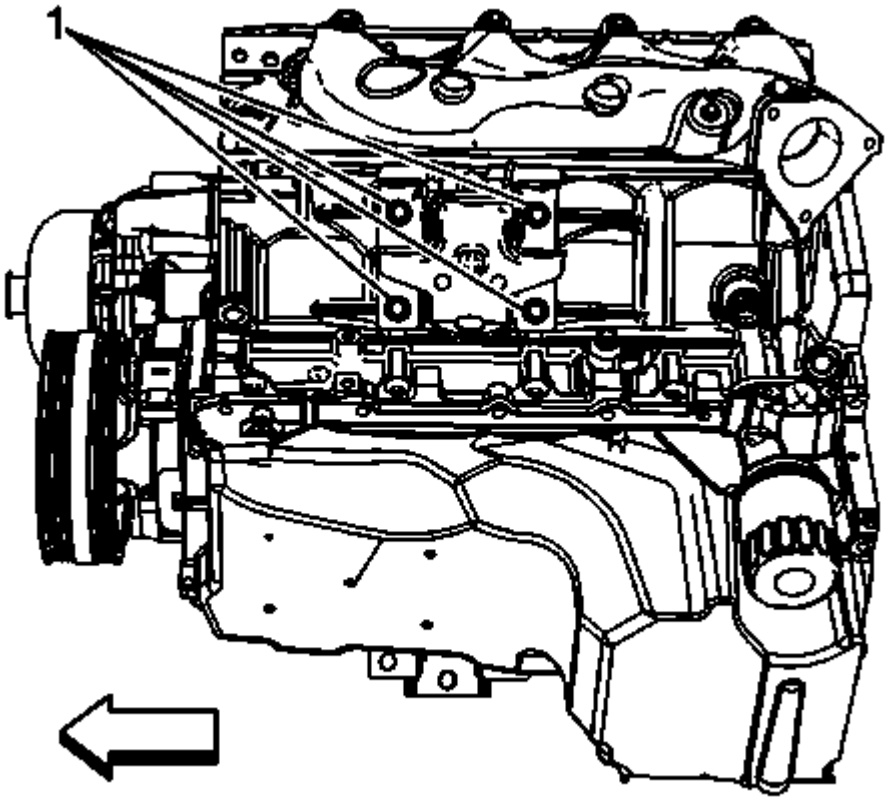

Fig. 14: View Of Engine Mount To Engine Bolts
Courtesy of GENERAL MOTORS COMPANY

2. Working through the wheelhouse opening, remove the engine mount to engine block bolts (1).
3. Using the adjustable jack, raise the engine slightly until there is enough clearance to remove the engine mount.

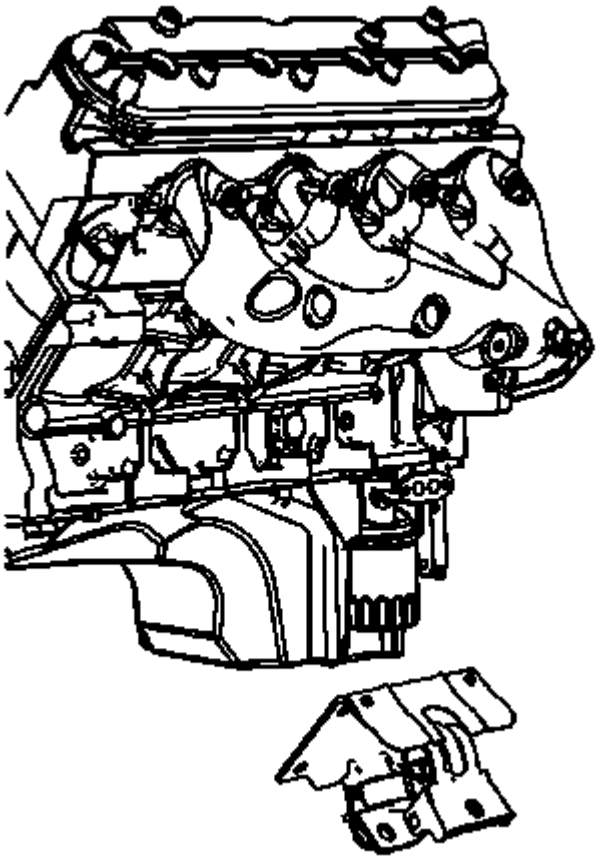

Fig. 15: View Of Engine Mount
Courtesy of GENERAL MOTORS COMPANY

4. Remove the engine mount through the rear of the wheel well opening.

Installation Procedure

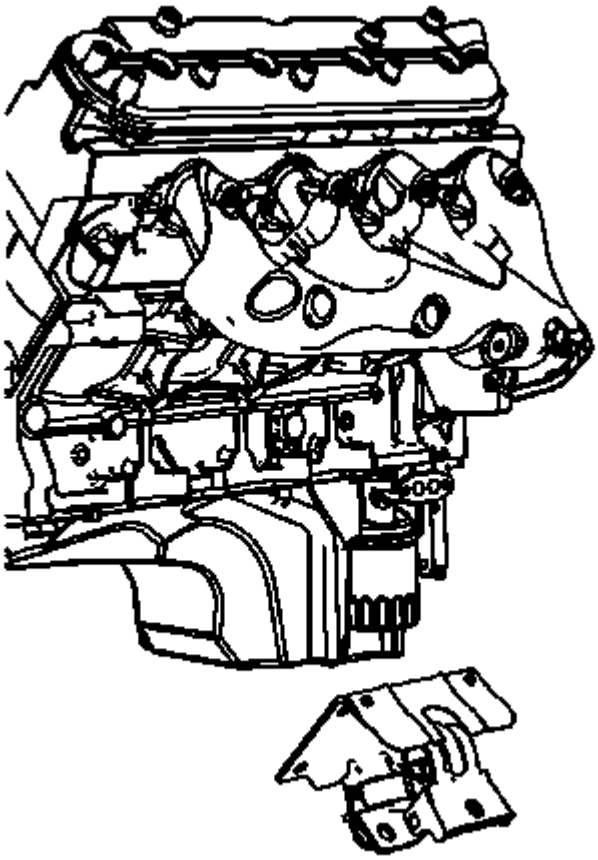

Fig. 16: View Of Engine Mount
Courtesy of GENERAL MOTORS COMPANY

1. Position the engine mount to the engine block.

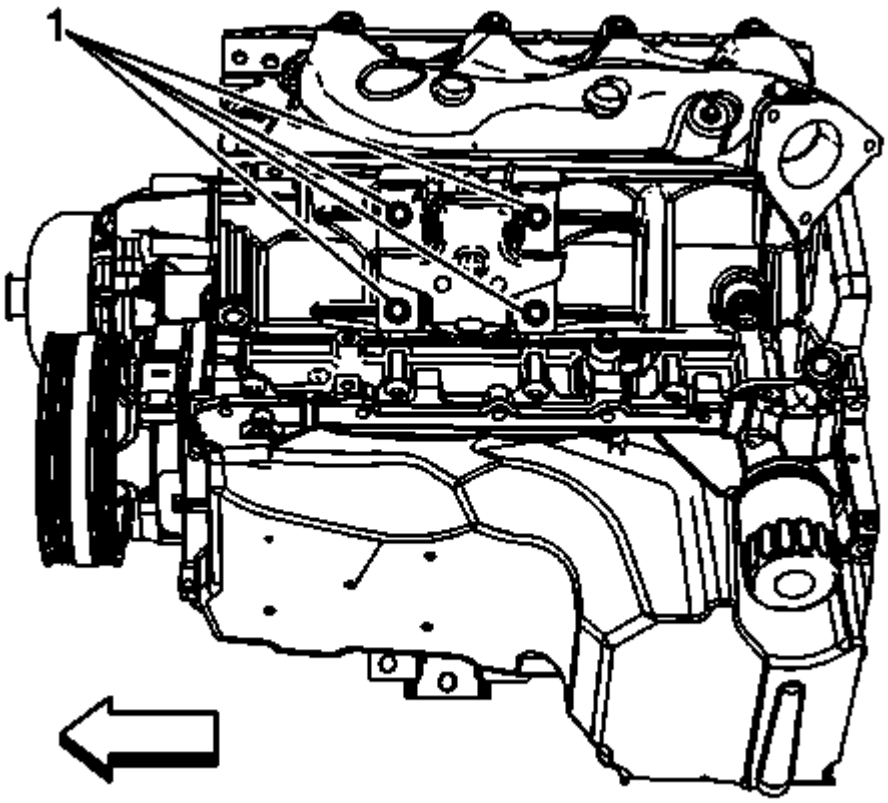

Fig. 17: View Of Engine Mount To Engine Bolts
Courtesy of GENERAL MOTORS COMPANY

CAUTION: Refer to Fastener Caution .

2. Working through the wheelhouse opening, install the engine mount to engine block bolts (1) and tighten to 50 N.m (37 lb ft).
3. Install the engine mount bracket. Refer to **Engine Mount Bracket Replacement - Left Side (L96)**.

ENGINE MOUNT REPLACEMENT - LEFT SIDE (EXCEPT L96)

Removal Procedure

CAUTION: When raising or supporting the engine for any reason, do not use a jack under any sheet metal, or the crankshaft pulley, or damage may occur.

1. Disconnect the negative battery cable. Refer to **Battery Negative Cable Disconnection and Connection** .
2. Remove the upper intake manifold sight shield. Refer to **Upper Intake Manifold Sight Shield**

Replacement.

3. Raise and support the vehicle. Refer to **Lifting and Jacking the Vehicle** .
4. Remove the left wheelhouse liner. Refer to **Front Wheelhouse Liner Replacement - Left Side** .

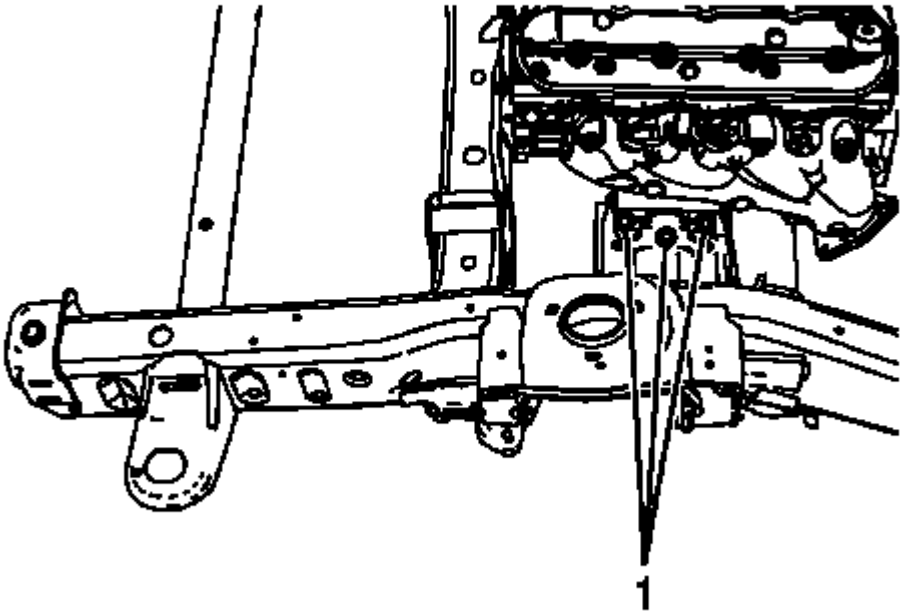

Fig. 18: View Of Engine Mount To Frame Bolts
Courtesy of GENERAL MOTORS COMPANY

5. Remove the engine mount to frame bolts (1)
6. Remove exhaust manifold heat shield. Refer to **Exhaust Manifold Heat Shield Replacement - Left Side** .
7. Remove the upper (long) and lower (double joint) I-shaft. Refer to **Upper Intermediate Steering Shaft Replacement** .
8. Position an adjustable jack and a block of wood under the engine oil pan and raise the engine slightly.

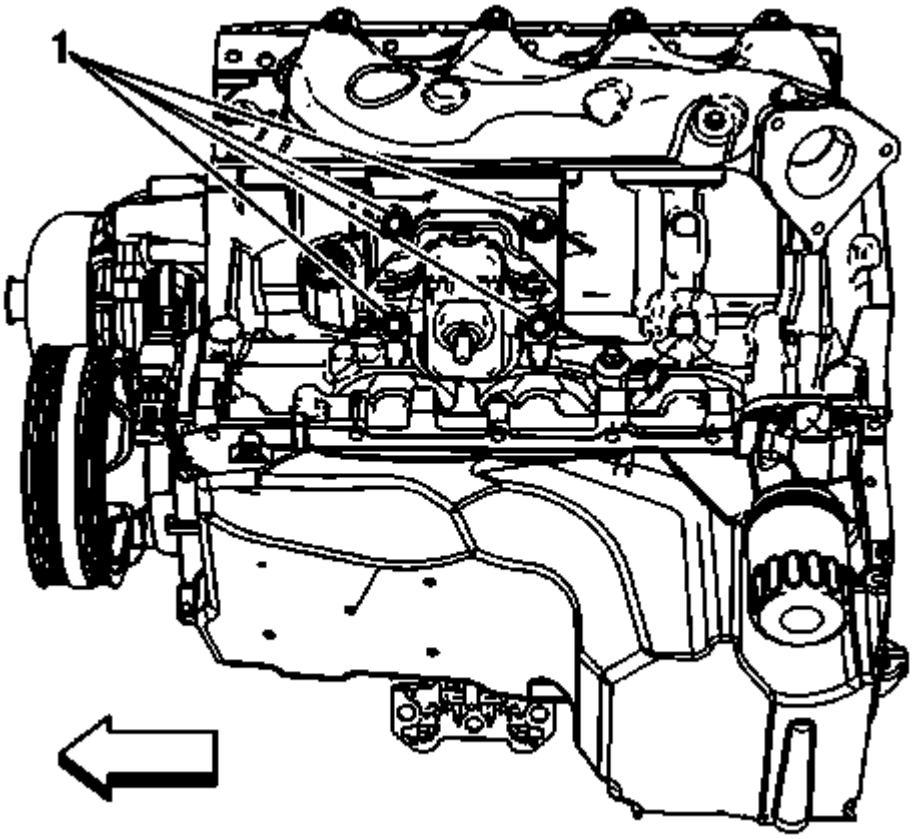

Fig. 19: View Of Engine Mount To Engine Bolts
Courtesy of GENERAL MOTORS COMPANY

9. If equipped, remove the electronic suspension front position sensor attachment bolt and reposition. Refer to **Electronic Suspension Front Position Sensor Replacement** .
10. Working through the wheelhouse opening, remove the engine mount to engine block bolts (1).

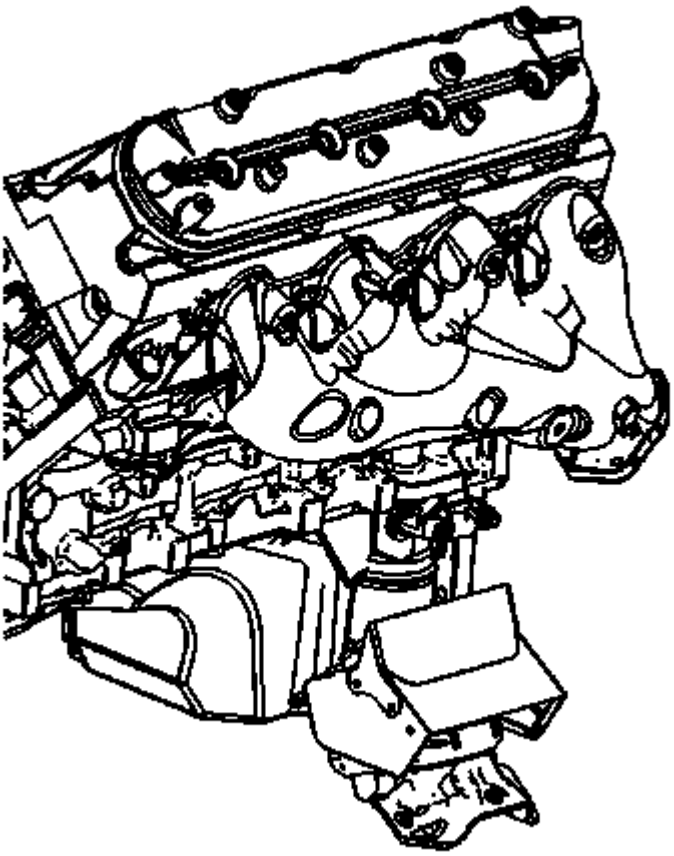

Fig. 20: View Of Engine Mount
Courtesy of GENERAL MOTORS COMPANY

11. Remove the engine mount toward the front of the vehicle.

Installation Procedure

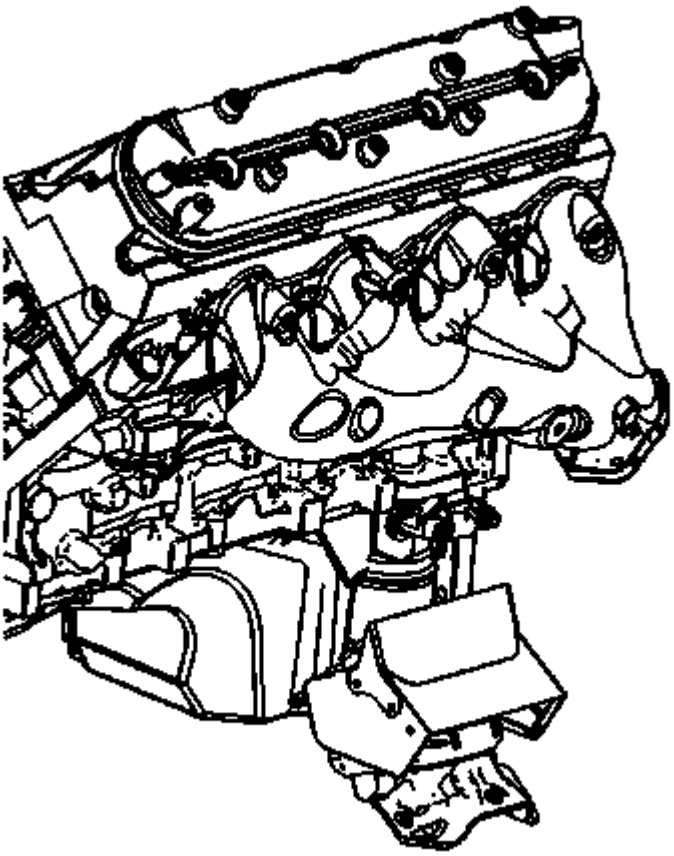

Fig. 21: View Of Engine Mount
Courtesy of GENERAL MOTORS COMPANY

1. Position the engine mount to the engine block.

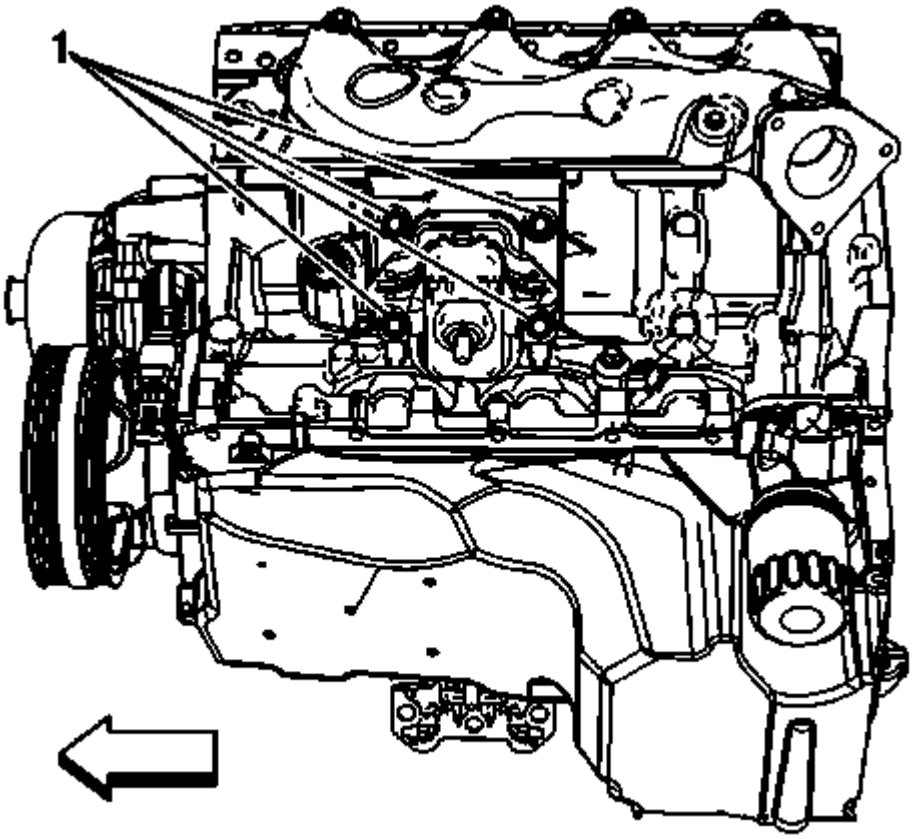

Fig. 22: View Of Engine Mount To Engine Bolts
Courtesy of GENERAL MOTORS COMPANY

CAUTION: Refer to Fastener Caution .

2. Working through the wheelhouse opening, install the engine mount to engine block bolts (1) and tighten to 50 (37 lb ft).
3. If removed, install the electronic suspension front position sensor attachment bolt and reposition. Refer to **Electronic Suspension Front Position Sensor Replacement** .
4. Using the adjustable jack, lower the engine until the engine mount is sitting flush on the frame.
5. Remove the adjustable jack and block of wood from the engine oil pan.

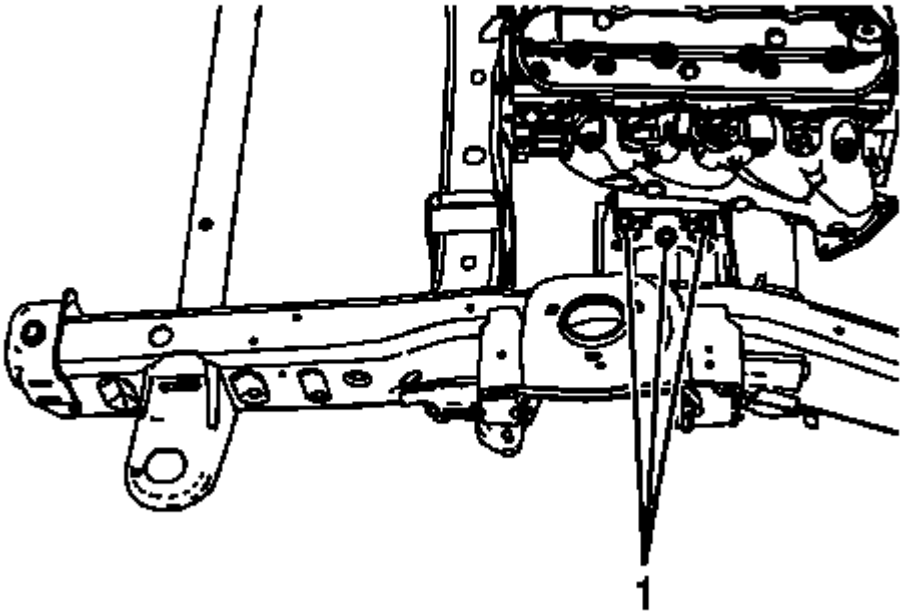

Fig. 23: View Of Engine Mount To Frame Bolts
Courtesy of GENERAL MOTORS COMPANY

6. Clean the threads of the engine mount to frame bolts using denatured alcohol or equivalent.
7. Apply threadlocker or equivalent to the threads of the engine mount to engine mount bracket bolts. Refer to **Adhesives, Fluids, Lubricants, and Sealers** .
8. Install the engine mount to frame bolts and tighten to 65 N.m (48 lb ft).
9. Install the upper (long) and lower (double joint) I-shaft. Refer to **Upper Intermediate Steering Shaft Replacement** .
10. Install exhaust manifold heat shield. Refer to **Exhaust Manifold Heat Shield Replacement - Left Side** .
11. Install the left wheelhouse liner. Refer to **Front Wheelhouse Liner Replacement - Left Side** .
12. Lower the vehicle.
13. Install the intake manifold sight shield. Refer to **Upper Intake Manifold Sight Shield Replacement**.
14. Connect the negative battery cable. Refer to **Battery Negative Cable Disconnection and Connection** .

ENGINE MOUNT BRACKET REPLACEMENT - LEFT SIDE (L96)

Removal Procedure

CAUTION: When raising or supporting the engine for any reason, do not use a jack

under any sheet metal, or the crankshaft pulley, or damage may occur.

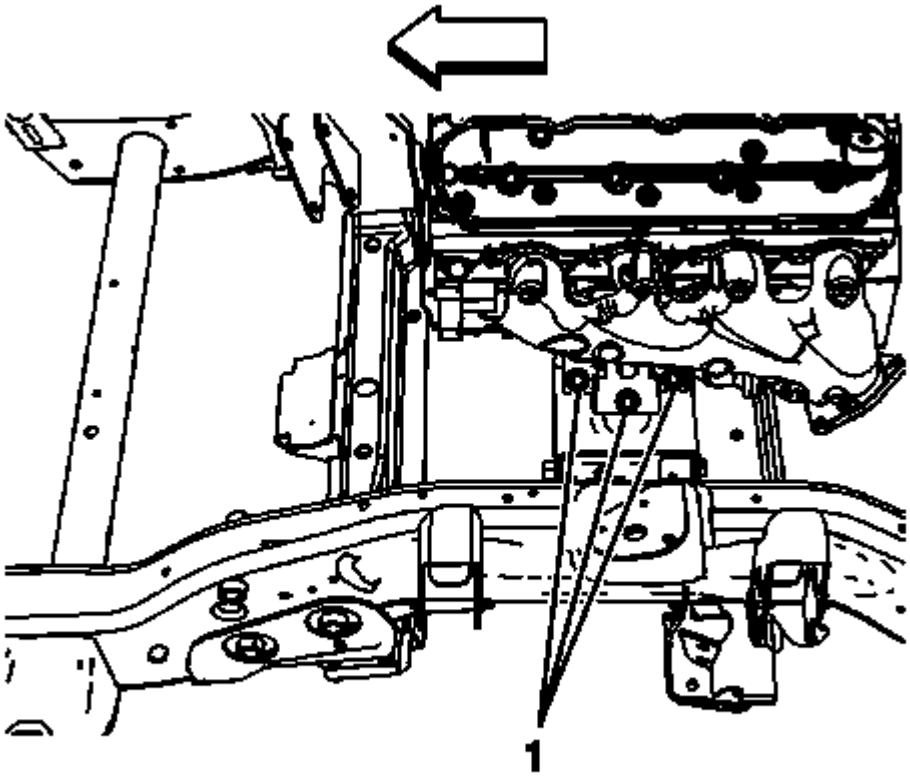

Fig. 24: View Of Engine Mount Bracket Bolts
Courtesy of GENERAL MOTORS COMPANY

1. Disconnect the negative battery cable. Refer to **Battery Negative Cable Disconnection and Connection** .
2. Remove the upper intake manifold sight shield. Refer to **Upper Intake Manifold Sight Shield Replacement**.
3. Raise and support the vehicle. Refer to **Lifting and Jacking the Vehicle** .
4. Remove the left wheel house liner. Refer to **Front Wheelhouse Liner Replacement - Left Side** .
5. Remove the engine mount to engine mount bracket bolts (1).
6. Position an adjustable jack and a block of wood under the engine oil pan.
7. Raise the engine slightly.

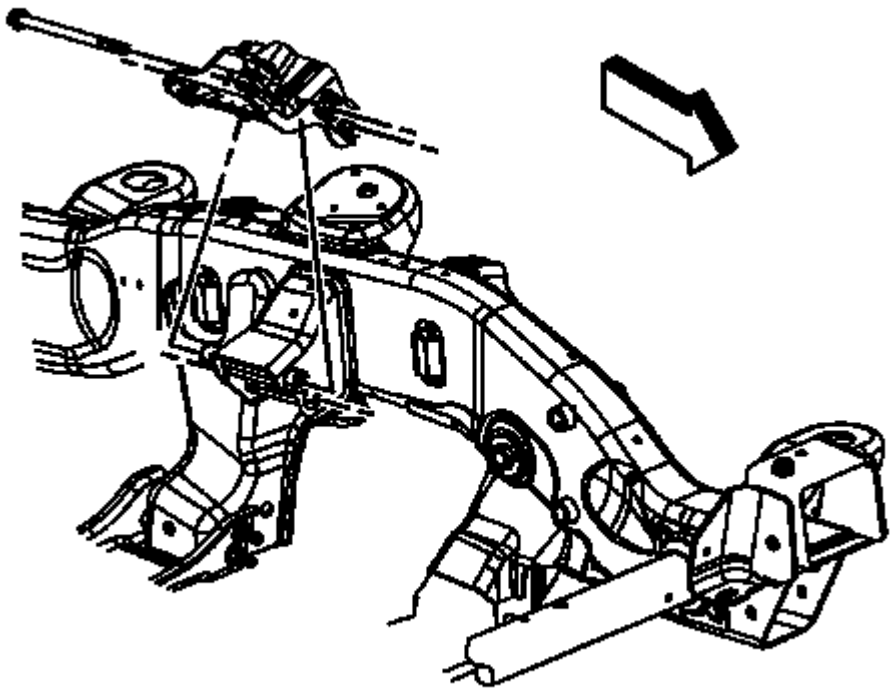

Fig. 25: View Of Engine Mount Bracket & Bolts
Courtesy of GENERAL MOTORS COMPANY

8. Remove the engine mount bracket through bolts.
9. Remove the engine mount bracket.

Installation Procedure

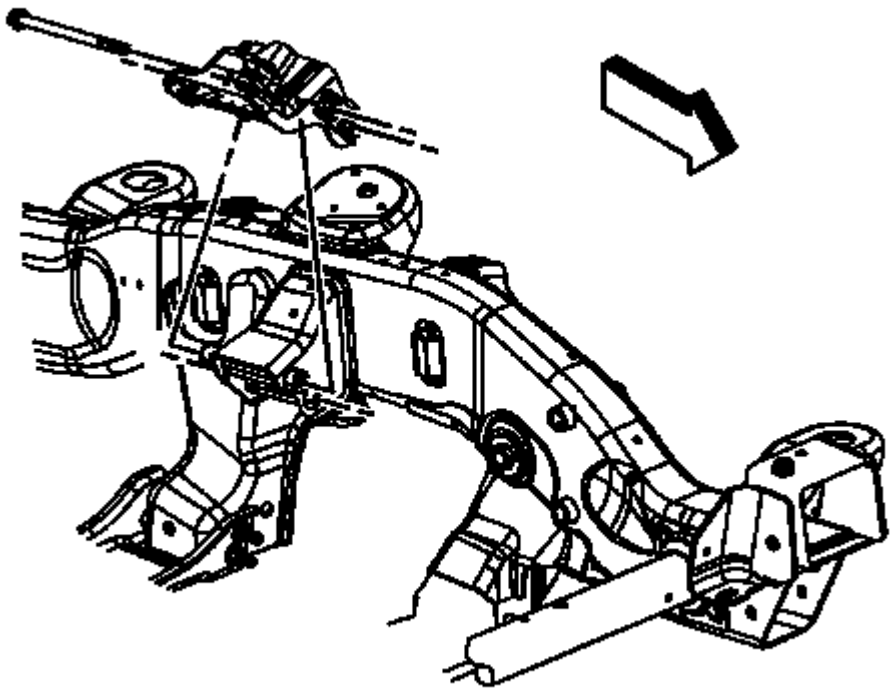

Fig. 26: View Of Engine Mount Bracket & Bolts
Courtesy of GENERAL MOTORS COMPANY

1. Position the engine mount bracket onto the frame.
2. Clean the threads of the engine mount bracket through bolts using denatured alcohol or equivalent.
3. Apply threadlocker or equivalent to the threads of the engine mount bracket through bolts. Refer to **Adhesives, Fluids, Lubricants, and Sealers** .
4. Install the engine mount bracket through bolts and tighten to 100 N.m (74 lb ft).
5. Using the adjustable jack, lower the engine until the engine mounts are sitting flush on the engine mount brackets.
6. Remove the adjustable jack and block of wood from the engine oil pan.

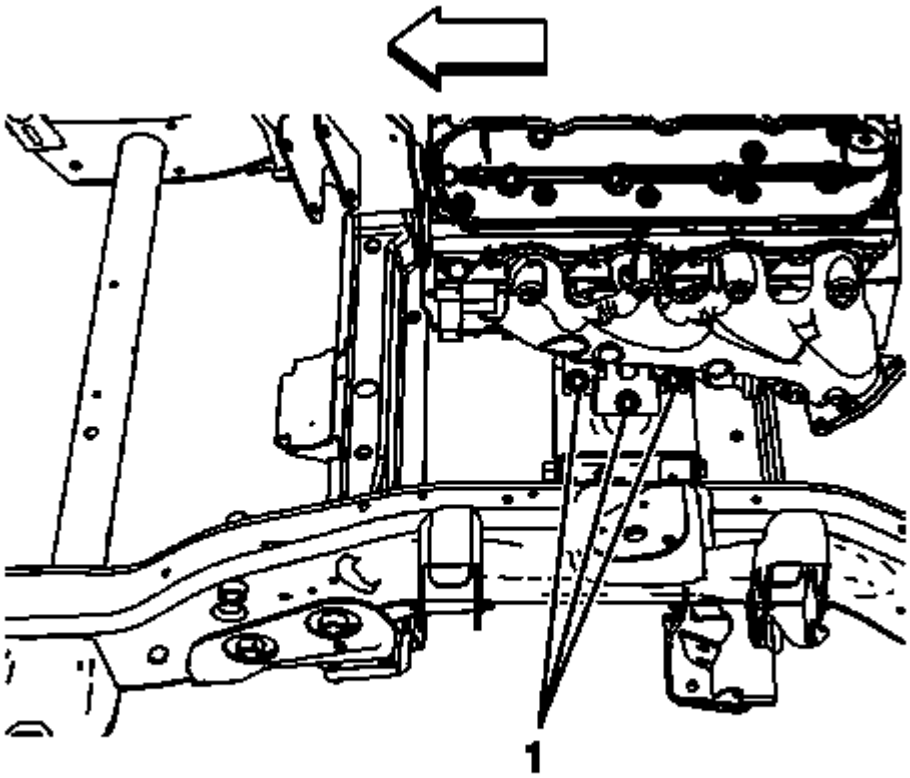

Fig. 27: View Of Engine Mount Bracket Bolts
Courtesy of GENERAL MOTORS COMPANY

7. Clean the threads of the engine mount to engine mount bracket bolts using denatured alcohol or equivalent.
8. Apply threadlocker or equivalent to the threads of the engine mount to engine mount bracket bolts. Refer to **Adhesives, Fluids, Lubricants, and Sealers** .
9. Install the engine mount to engine mount bracket bolts and tighten to 65 N.m (48 lb ft).
10. Install the left wheelhouse liner. Refer to **Front Wheelhouse Liner Replacement - Left Side** .
11. Lower the vehicle.
12. Install the upper intake manifold sight shield. Refer to **Upper Intake Manifold Sight Shield Replacement**.
13. Connect the negative battery cable. Refer to **Battery Negative Cable Disconnection and Connection** .

ENGINE MOUNT REPLACEMENT - RIGHT SIDE (L96)

Removal Procedure

CAUTION: When raising or supporting the engine for any reason, do not use a jack under any sheet metal, or the crankshaft pulley, or damage may occur.

1. Remove the right engine mount bracket. Refer to **Engine Mount Bracket Replacement - Right Side (L96)**.

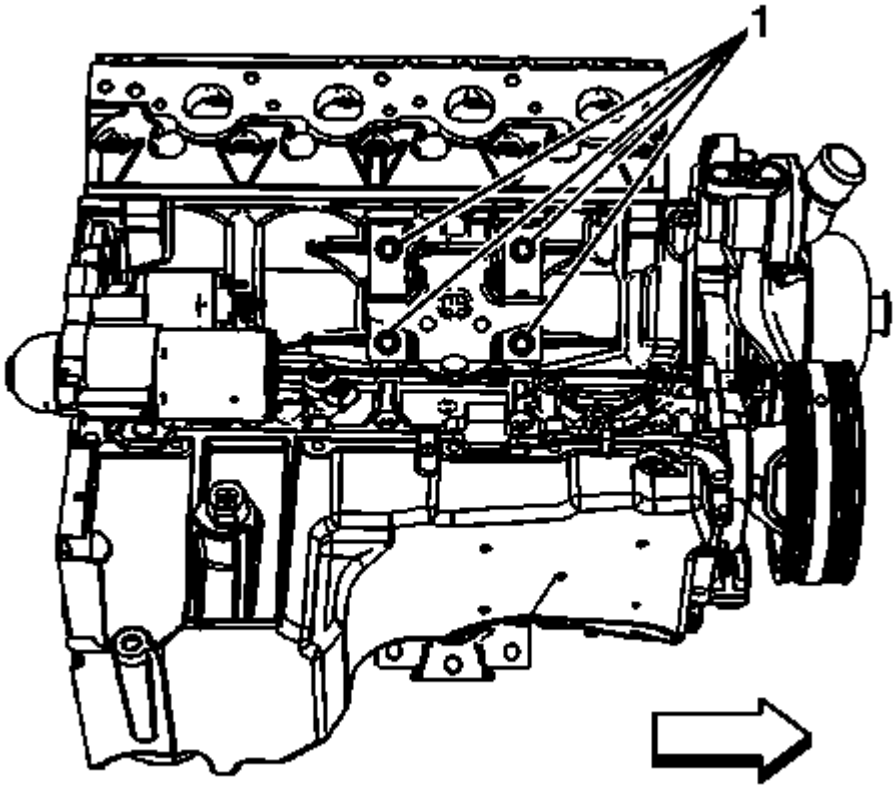

Fig. 28: View Of Engine Mount To Engine Bolts
Courtesy of GENERAL MOTORS COMPANY

2. Working through the wheelhouse opening, remove the engine mount to engine block bolts (1).
3. Using the adjustable jack, raise the engine slightly until there is enough clearance to remove the engine mount.

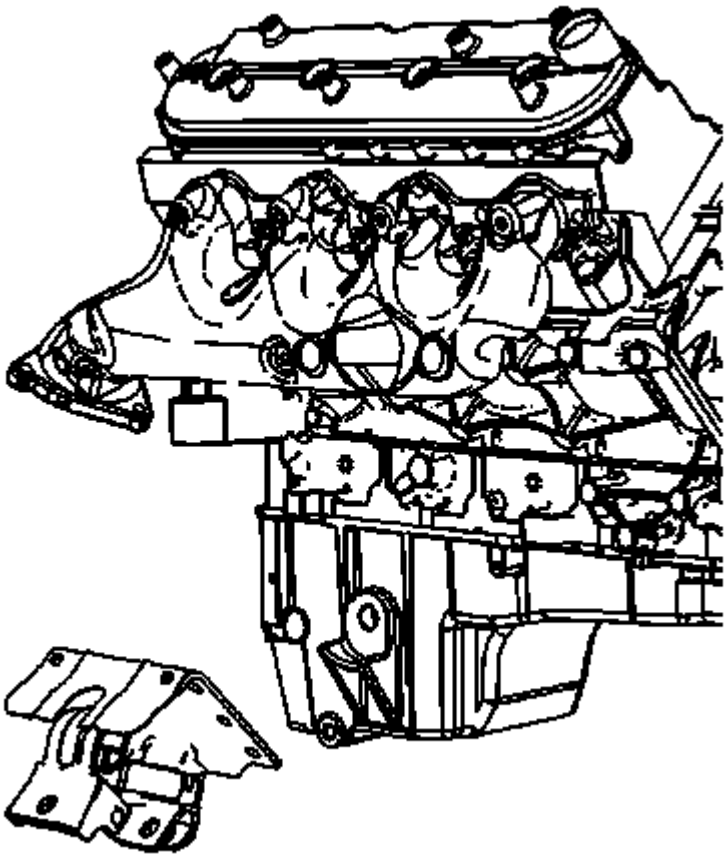

Fig. 29: View Of Engine Mount
Courtesy of GENERAL MOTORS COMPANY

4. Remove the engine mount through the rear of the wheel well opening.

Installation Procedure

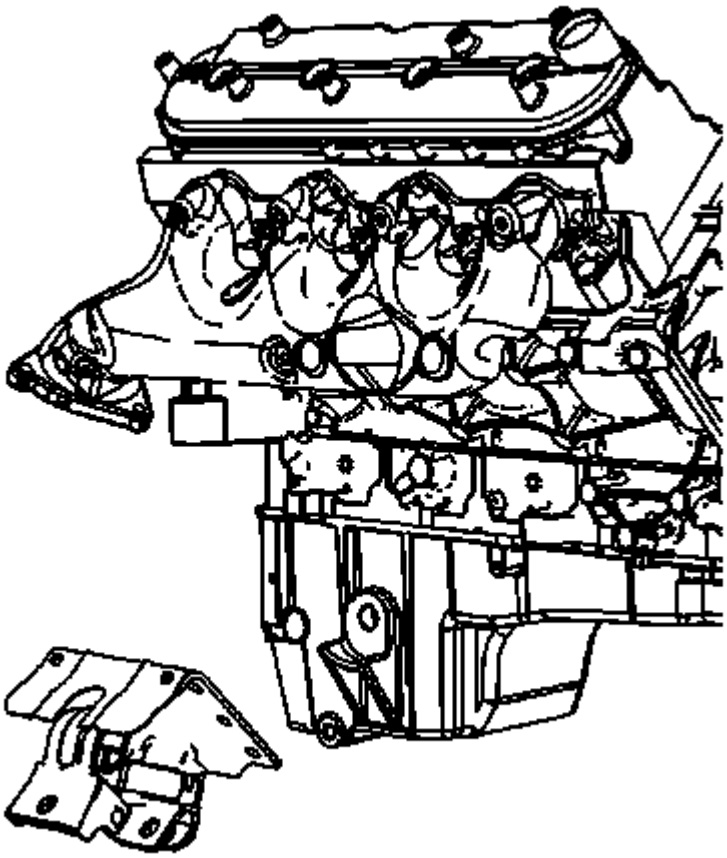

Fig. 30: View Of Engine Mount
Courtesy of GENERAL MOTORS COMPANY

1. Position the engine mount to the engine block.

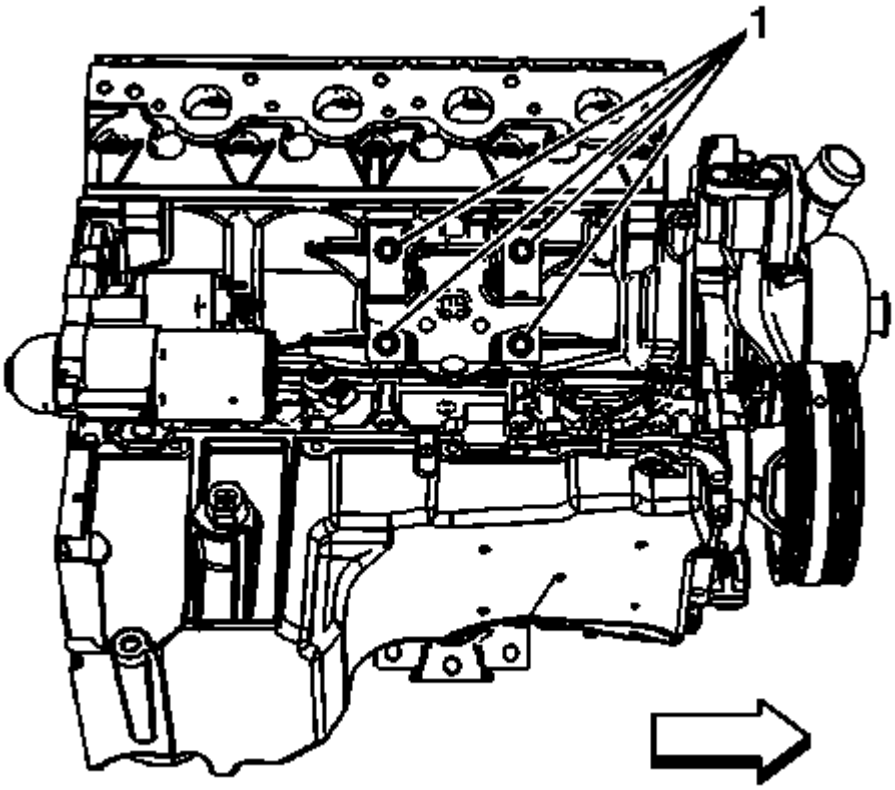

Fig. 31: View Of Engine Mount To Engine Bolts
Courtesy of GENERAL MOTORS COMPANY

CAUTION: Refer to Fastener Caution .

2. Working through the wheelhouse opening, install the engine mount to engine block bolts (1).

   Tighten

   Tighten the bolts to 50 N.m (37 lb ft).

3. Install the right engine mount bracket. Refer to **Engine Mount Bracket Replacement - Right Side (L96)**.

ENGINE MOUNT REPLACEMENT - RIGHT SIDE (EXCEPT L96)

Removal Procedure

CAUTION: When raising or supporting the engine for any reason, do not use a jack under any sheet metal, or the crankshaft pulley, or damage may occur.

1. Disconnect the negative battery cable. Refer to **Battery Negative Cable Disconnection and Connection** .
2. Remove the upper intake manifold sight shield. Refer to **Upper Intake Manifold Sight Shield Replacement**.
3. Raise and support the vehicle. Refer to **Lifting and Jacking the Vehicle** .
4. Remove the right wheelhouse liner. Refer to **Front Wheelhouse Liner Replacement - Right Side** .
5. Remove the battery cable attachment on the frame.
6. If equipped, remove the electronic suspension front position sensor attachment bolt and reposition. Refer to **Electronic Suspension Front Position Sensor Replacement** .
7. Remove exhaust manifold heat shield. Refer to **Exhaust Manifold Heat Shield Replacement - Right Side** .
8. Remove the starter. Refer to **Starter Replacement** .

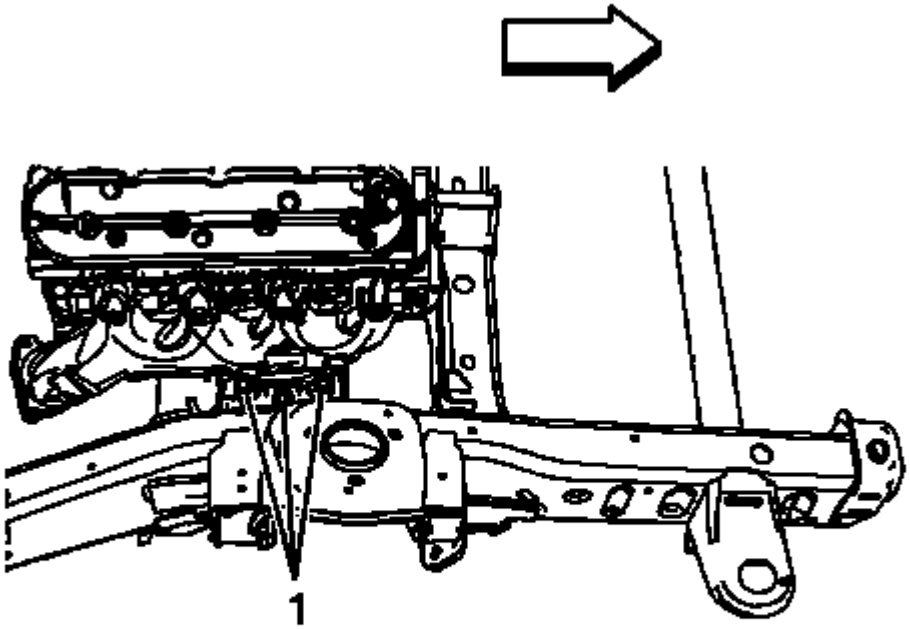

Fig. 32: View Of Engine Mount To Frame Bolts
Courtesy of GENERAL MOTORS COMPANY

9. Remove the engine mount to frame bolts (1).
10. Position an adjustable jack and a block of wood under the engine oil pan and slightly raise the engine.

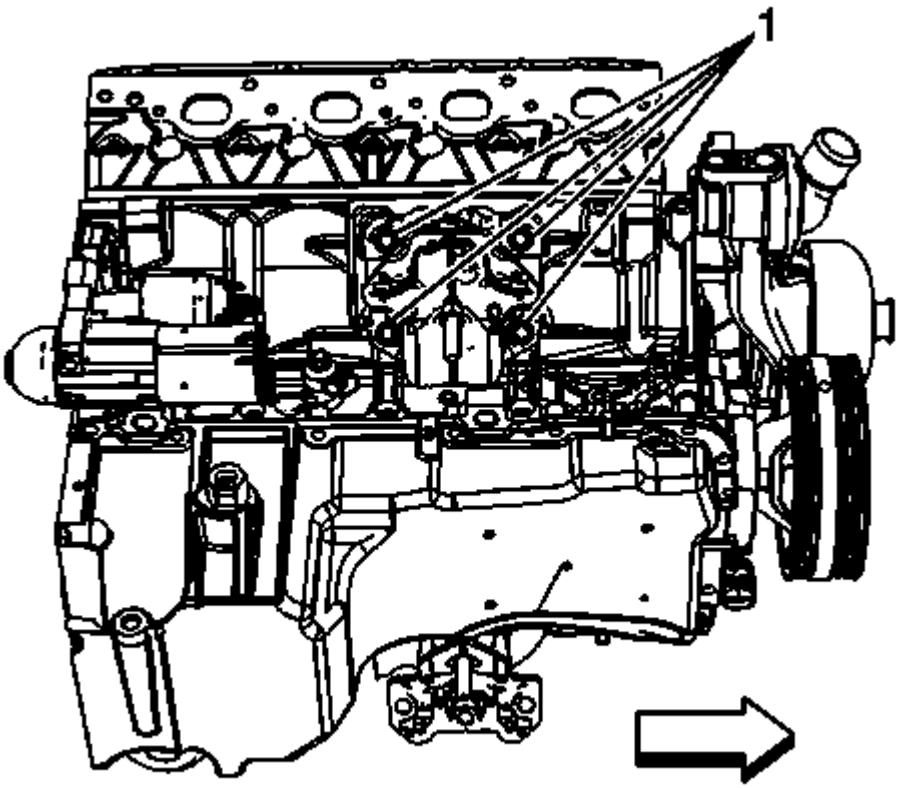

Fig. 33: View Of Engine Mount To Engine Bolts
Courtesy of GENERAL MOTORS COMPANY

11. Working through the wheelhouse opening, remove the engine mount to engine block bolts (1).

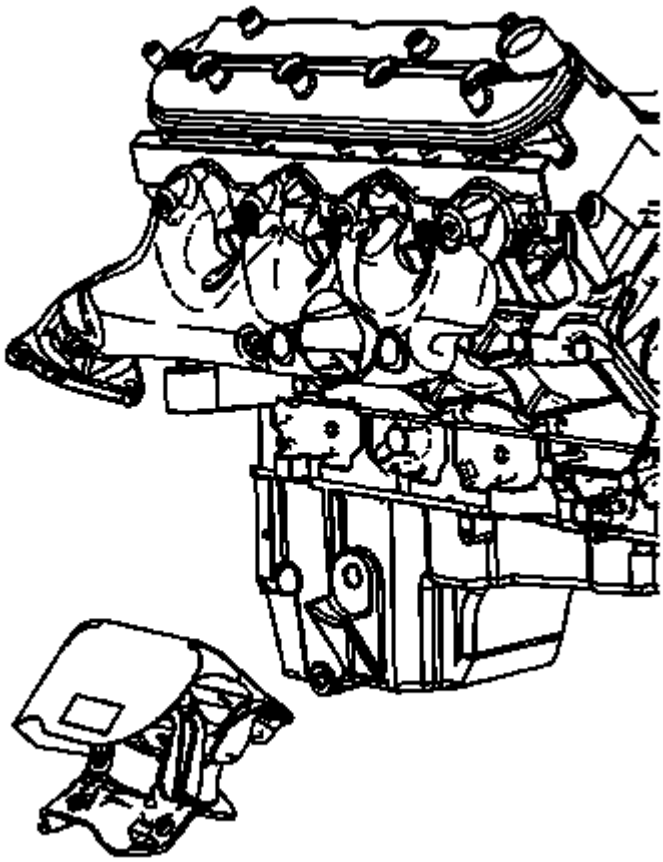

Fig. 34: View Of Engine Mount
Courtesy of GENERAL MOTORS COMPANY

12. Remove the engine mount through the rear of the wheelhouse opening.

Installation Procedure

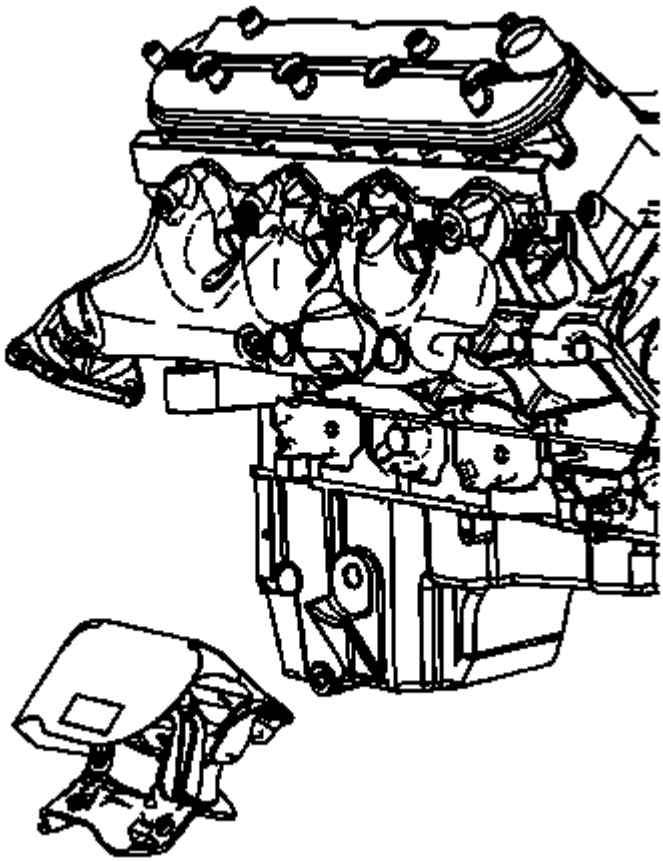

Fig. 35: View Of Engine Mount
Courtesy of GENERAL MOTORS COMPANY

1. Position the engine mount to the engine block.

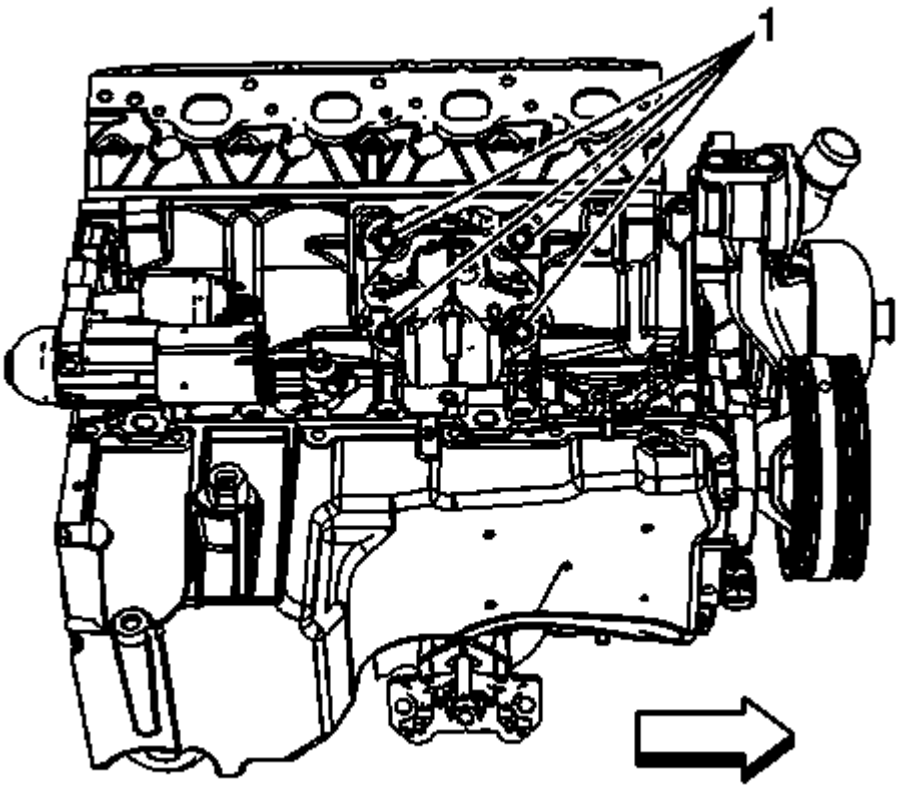

Fig. 36: View Of Engine Mount To Engine Bolts
Courtesy of GENERAL MOTORS COMPANY

CAUTION: Refer to Fastener Caution .

2. Working through the wheelhouse opening, install the engine mount to engine block bolts (1) and tighten to 50 (37 lb ft).
3. Using the adjustable jack, lower the engine until the engine mount is sitting flush on the frame.
4. Remove the adjustable jack and block of wood from the engine oil pan.

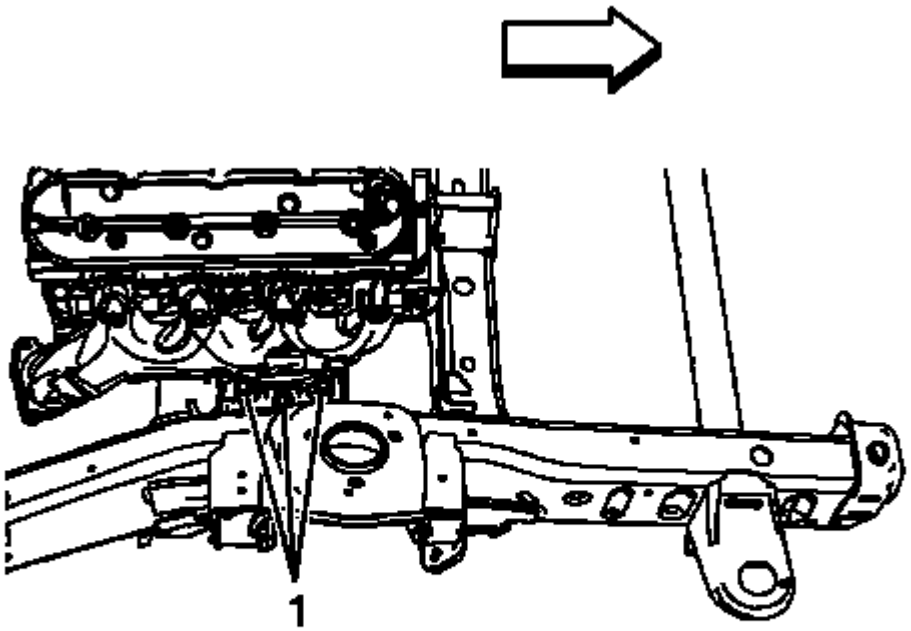

Fig. 37: View Of Engine Mount To Frame Bolts
Courtesy of GENERAL MOTORS COMPANY

5. Clean the threads of the engine mount to engine mount bracket bolts using denatured alcohol or equivalent.
6. Apply threadlocker or equivalent to the threads of the engine mount to engine mount bracket bolts. Refer to **Adhesives, Fluids, Lubricants, and Sealers** .
7. Install the engine mount to engine mount bracket bolts and tighten to 65 N.m (48 lb ft).
8. Install the starter. Refer to **Starter Replacement**
9. Install exhaust manifold heat shield. Refer to **Exhaust Manifold Heat Shield Replacement - Right Side** .
10. If equipped, remove the electronic suspension front position sensor attachment bolt and reposition. Refer to **Electronic Suspension Front Position Sensor Replacement** .
11. Install the battery cable attachment on the frame.
12. Install the right wheelhouse liner. Refer to **Front Wheelhouse Liner Replacement - Right Side** .
13. Lower the vehicle.
14. Install the upper intake manifold sight shield. Refer to **Upper Intake Manifold Sight Shield Replacement**.
15. Connect the negative battery cable. Refer to **Battery Negative Cable Disconnection and Connection** .

ENGINE MOUNT BRACKET REPLACEMENT - RIGHT SIDE (L96)

Removal Procedure

CAUTION: When raising or supporting the engine for any reason, do not use a jack under any sheet metal, or the crankshaft pulley, or damage may occur.

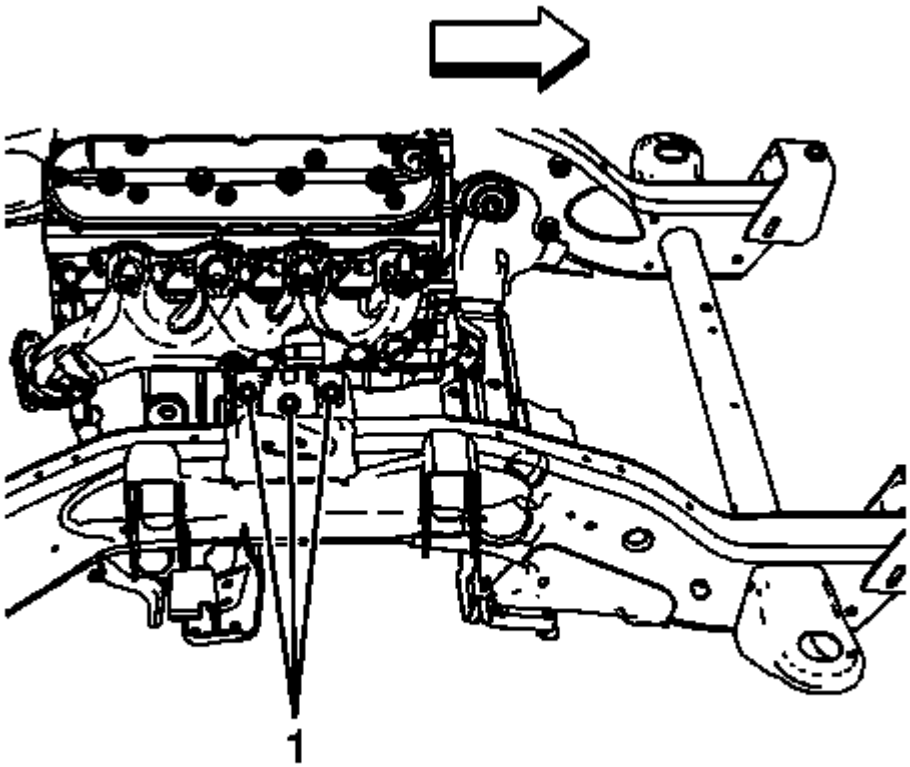

Fig. 38: View Of Engine Mount To Frame Bolts
Courtesy of GENERAL MOTORS COMPANY

1. Disconnect the negative battery cable. Refer to **Battery Negative Cable Disconnection and Connection** .
2. Remove the upper intake manifold sight shield. Refer to **Upper Intake Manifold Sight Shield Replacement**.
3. Raise and support the vehicle. Refer to **Lifting and Jacking the Vehicle** .
4. Remove the right wheel house liner. Refer to **Front Wheelhouse Liner Replacement - Right Side** .
5. Remove the engine mount to engine mount bracket bolts (1).
6. Position an adjustable jack and a block of wood under the engine oil pan.
7. Raise the engine slightly.

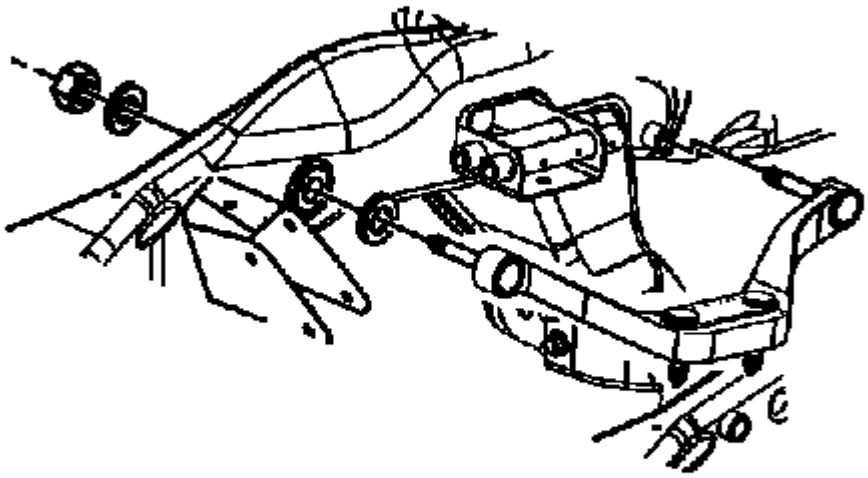

Fig. 39: Front Axle Mounting Bracket - Front Drive Axle (8.25 S4WD and 9.25 Axles)
Courtesy of GENERAL MOTORS COMPANY

8. If the vehicle is equipped with four wheel drive (4WD), go to step 9. Otherwise, go to step 13.
9. Support the differential carrier with a transmission jack.
10. Remove the axle to right side axle support bracket mounting nuts and washers.
11. Remove the right side axle support bracket to vehicle frame nuts and washers.
12. Using the jack, lower the differential carrier slightly to allow the axle support bracket studs clearance for removal. Carefully pry downward on the axle if necessary to provide needed clearance and remove the support mount.

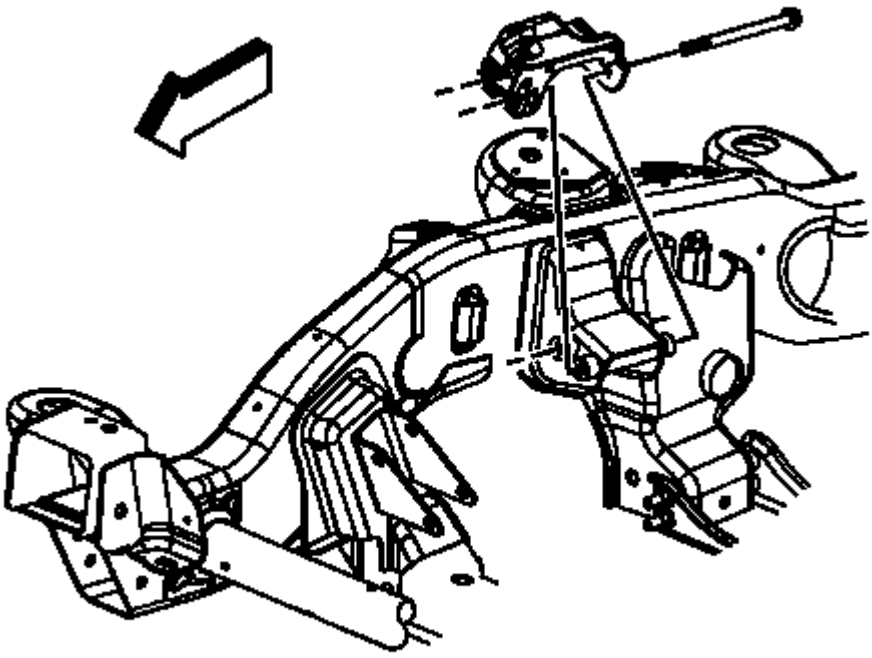

Fig. 40: View Of Engine Mount Bracket & Bolts
Courtesy of GENERAL MOTORS COMPANY

13. Remove the engine mount bracket through bolts.
14. Remove the engine mount bracket.

Installation Procedure

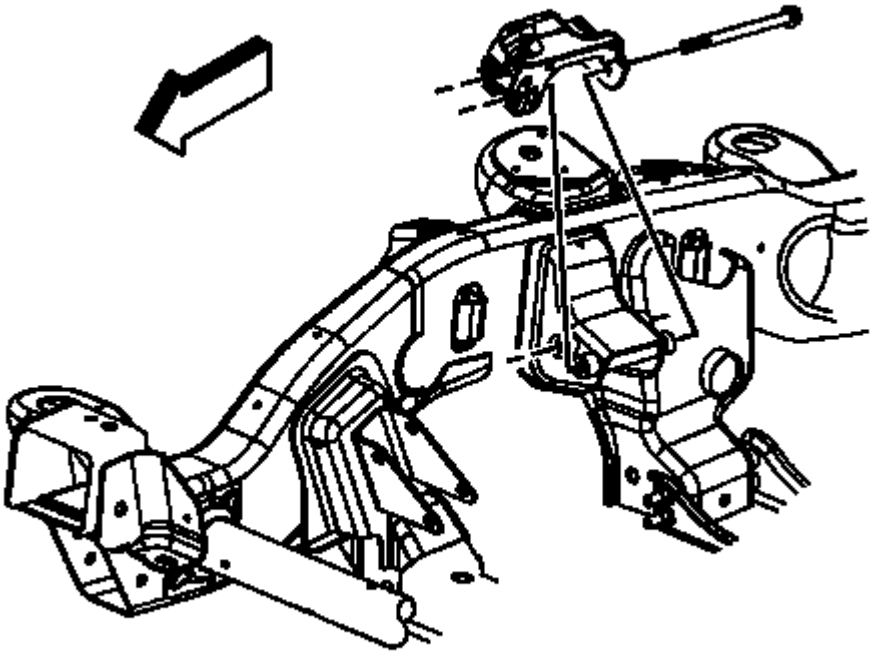

Fig. 41: View Of Engine Mount Bracket & Bolts
Courtesy of GENERAL MOTORS COMPANY

1. Position the engine mount bracket onto the frame.
2. Clean the threads of the engine mount bracket through bolts using denatured alcohol or equivalent.
3. Apply threadlocker or equivalent to the threads of the engine mount bracket through bolts. Refer to **Adhesives, Fluids, Lubricants, and Sealers** .
4. Install the engine mount bracket through bolts and tighten to 100 N.m (74 lb ft).

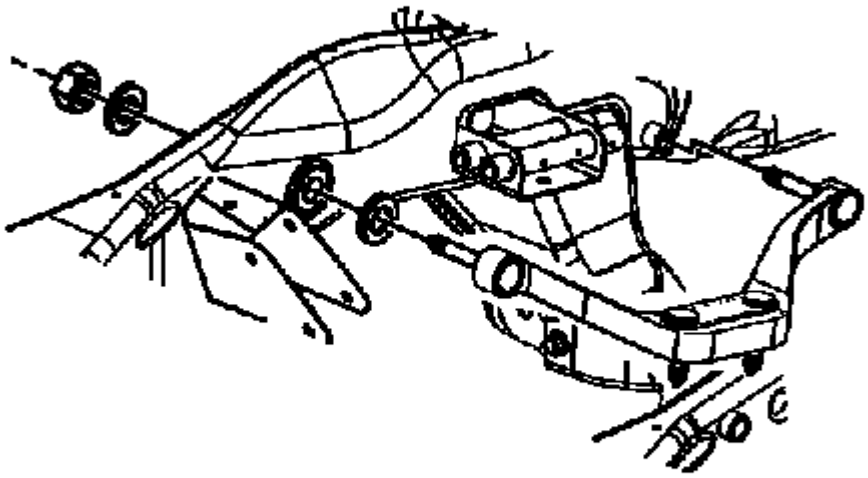

Fig. 42: Front Axle Mounting Bracket - Front Drive Axle (8.25 S4WD and 9.25 Axles)
Courtesy of GENERAL MOTORS COMPANY

5. If the vehicle is equipped with four wheel drive (4WD), go to step 6. Otherwise, go to step 12.
6. Position the axle support bracket studs to the vehicle frame. If necessary, carefully pry downward on the axle to provide needed clearance and install the support mount.
7. Install the right side axle support bracket to vehicle frame nuts and washers. Tighten the nuts to 100 N.m (74 lb ft).
8. Install the right differential carrier mounting nuts and washers. Tighten the nuts to 100 N.m (74 lb ft).
9. Remove the jack from the differential carrier.
10. Using the adjustable jack, lower the engine until the engine mounts are sitting flush on the engine mount brackets.
11. Remove the adjustable jack and block of wood from the engine oil pan.

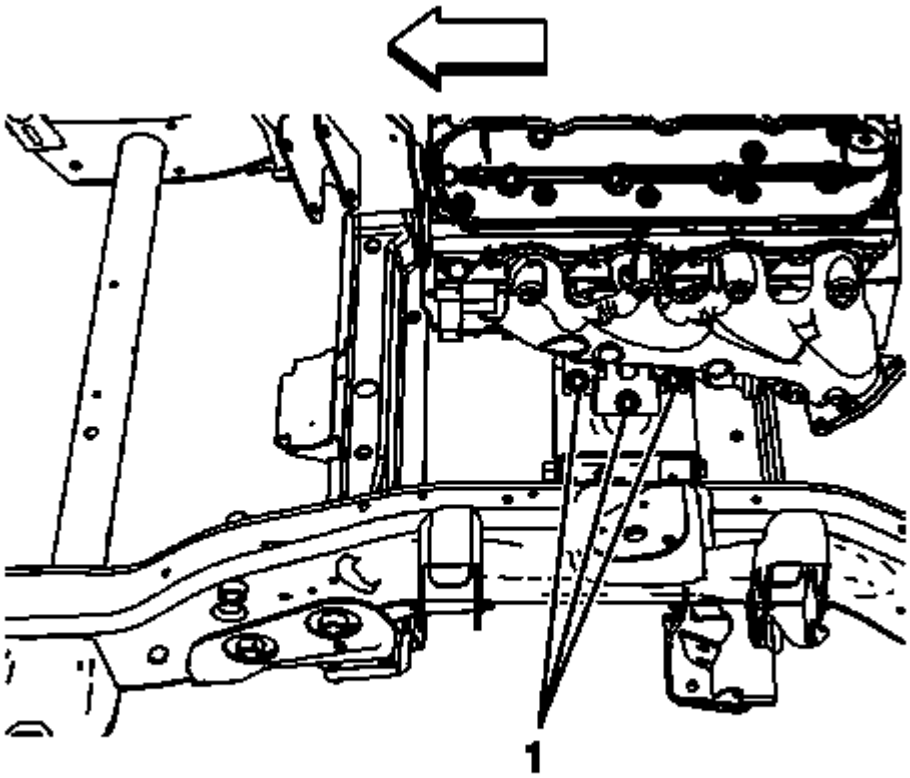

Fig. 43: View Of Engine Mount Bracket Bolts
Courtesy of GENERAL MOTORS COMPANY

12. Clean the threads of the engine mount to engine mount bracket bolts using denatured alcohol or equivalent.
13. Apply threadlocker or equivalent to the threads of the engine mount to engine mount bracket bolts. Refer to **Adhesives, Fluids, Lubricants, and Sealers** .
14. Install the engine mount to engine mount bracket bolts (1) and tighten to 65 N.m (48 lb ft).
15. Install the right wheelhouse liner. Refer to **Front Wheelhouse Liner Replacement - Right Side** .
16. Lower the vehicle.
17. Install the upper intake manifold sight shield. Refer to **Upper Intake Manifold Sight Shield Replacement**.
18. Connect the negative battery cable. Refer to **Battery Negative Cable Disconnection and Connection** .

UPPER INTAKE MANIFOLD SIGHT SHIELD REPLACEMENT

Removal Procedure

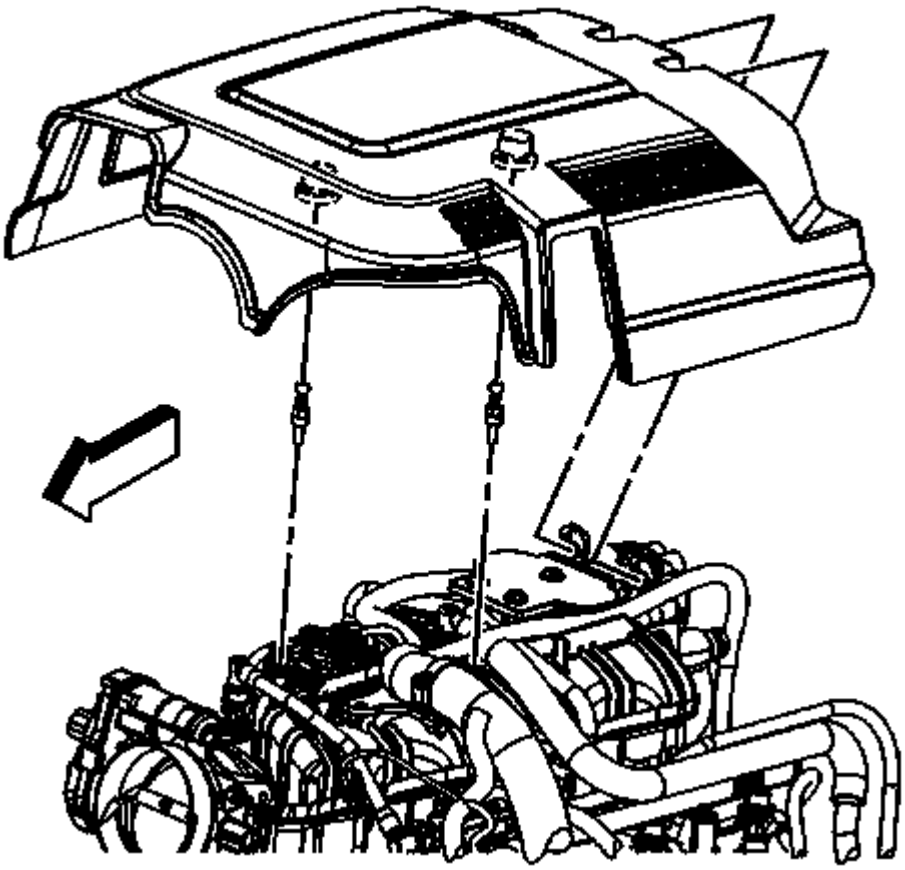

Fig. 44: View Of Upper Intake Manifold Sight Shield
Courtesy of GENERAL MOTORS COMPANY

1. Open the hood.
2. Grasp the front of the intake manifold sight shield and lift up disengaging the grommets from the studs.
3. Remove the intake manifold sight shield from the retainer slots.

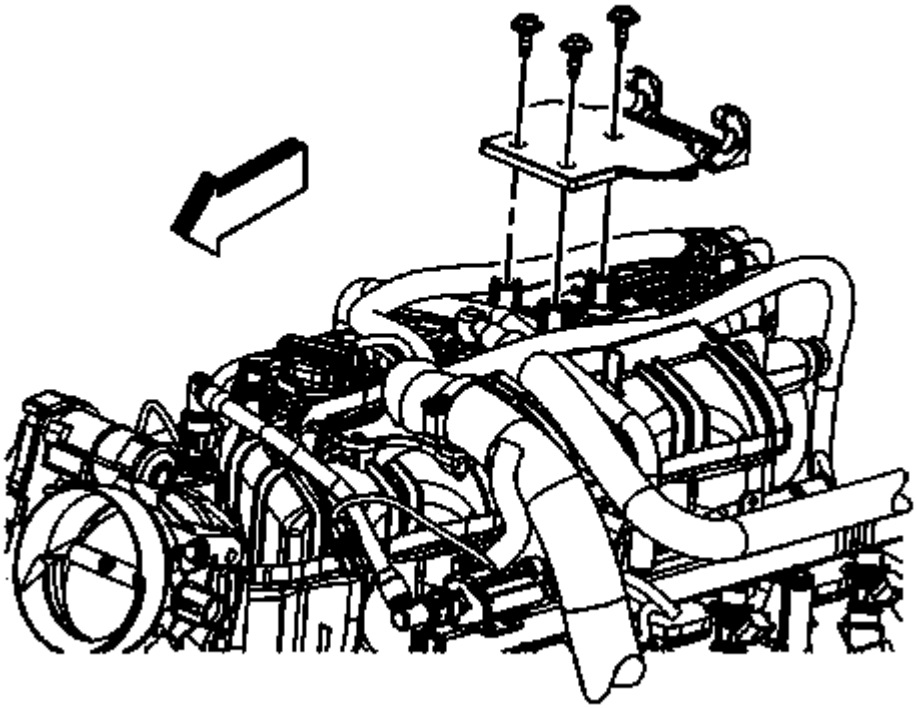

Fig. 45: View Of Intake Manifold Sight Shield Retainer & Bolts
Courtesy of GENERAL MOTORS COMPANY

4. Remove the intake manifold sight shield retainer bolts and retainer, if required.

Installation Procedure

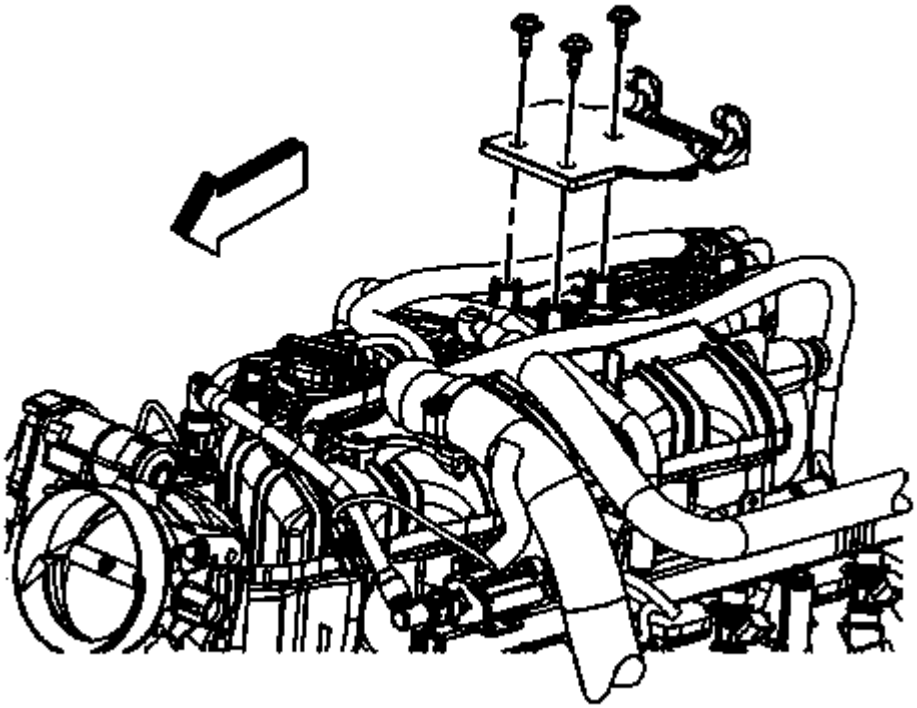

Fig. 46: View Of Intake Manifold Sight Shield Retainer & Bolts
Courtesy of GENERAL MOTORS COMPANY

CAUTION: Refer to Fastener Caution .

1. Position the intake manifold sight shield on top of the intake manifold, aligning the holes, if required.
2. Install the intake manifold sight shield retainer bolts, if required.

Tighten

Tighten the bolts to 5 N.m (44 lb in).

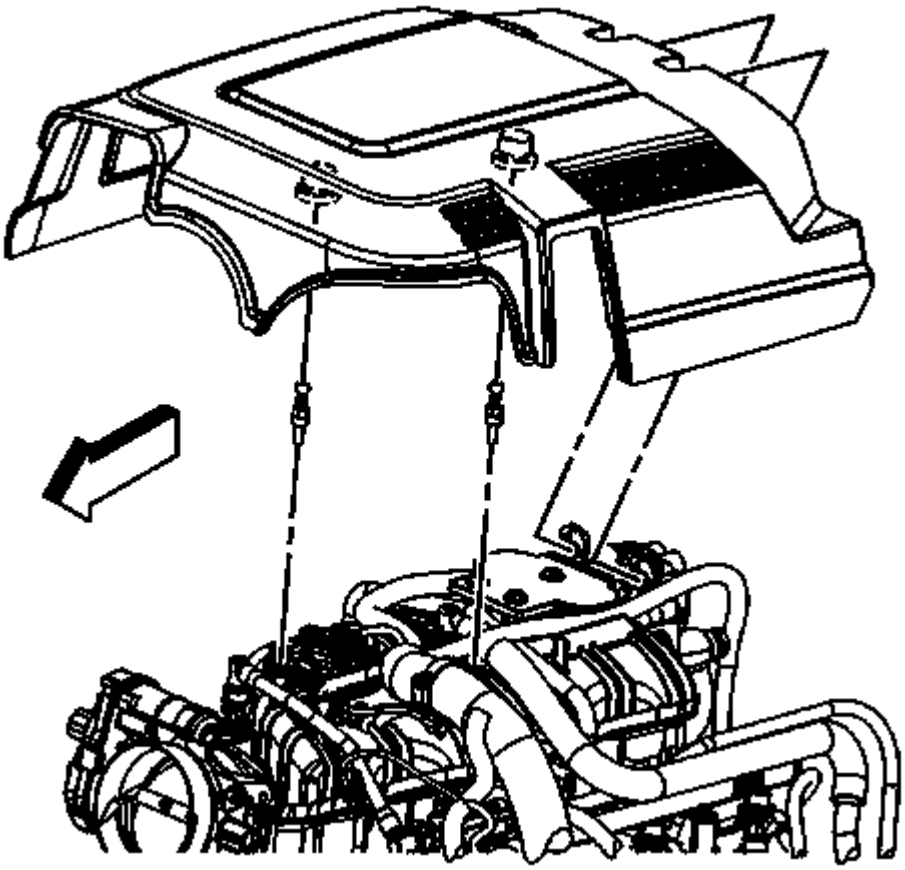

Fig. 47: View Of Upper Intake Manifold Sight Shield
Courtesy of GENERAL MOTORS COMPANY

3. Install the intake manifold sight shield tabs into the slots in the retainer.
4. Align the intake manifold sight shield grommets with the studs.
5. Gently push down on the intake manifold sight shield over the grommets, seating the intake manifold sight shield.
6. Close the hood.

POSITIVE CRANKCASE VENTILATION HOSE/PIPE/TUBE REPLACEMENT

Removal Procedure

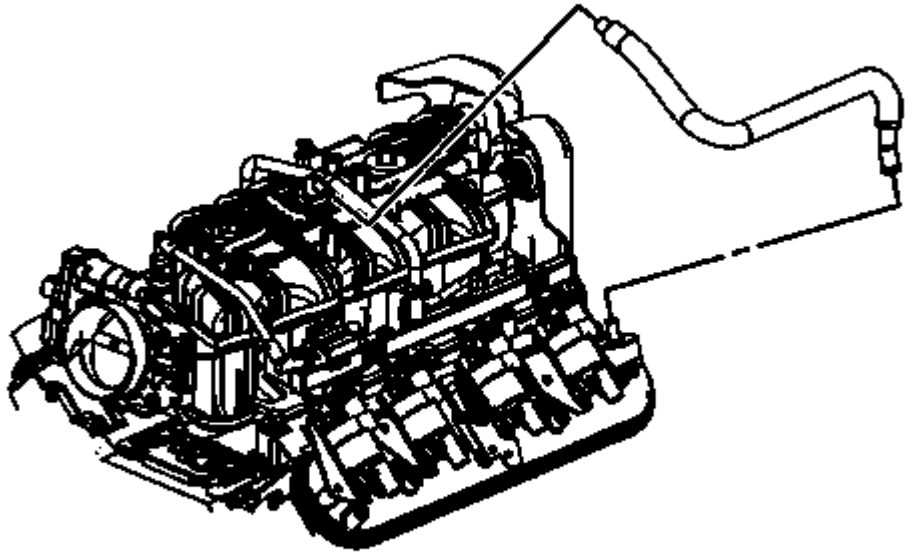

Fig. 48: View Of PCV Hose
Courtesy of GENERAL MOTORS COMPANY

1. Remove the intake manifold sight shield. Refer to **Upper Intake Manifold Sight Shield Replacement**.
2. Remove the positive crankcase ventilation (PCV) hose from the intake manifold fitting and left valve rocker arm cover, if required.

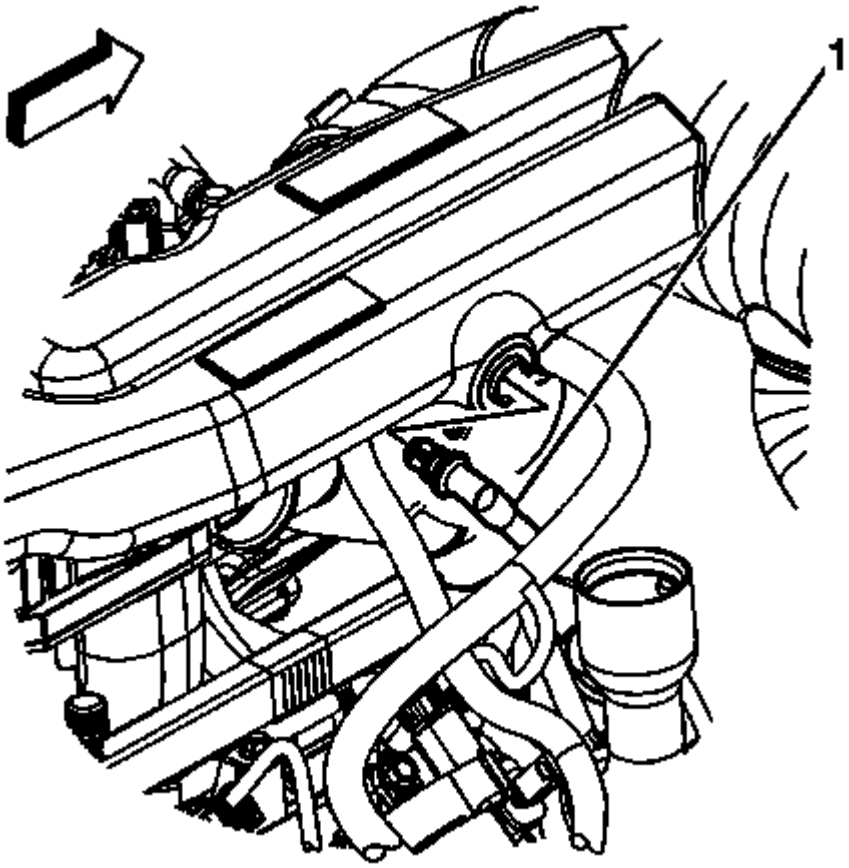

Fig. 49: View Of PCV Tube
Courtesy of GENERAL MOTORS COMPANY

3. Remove the PCV tube (1) from the air cleaner outlet duct, if required.

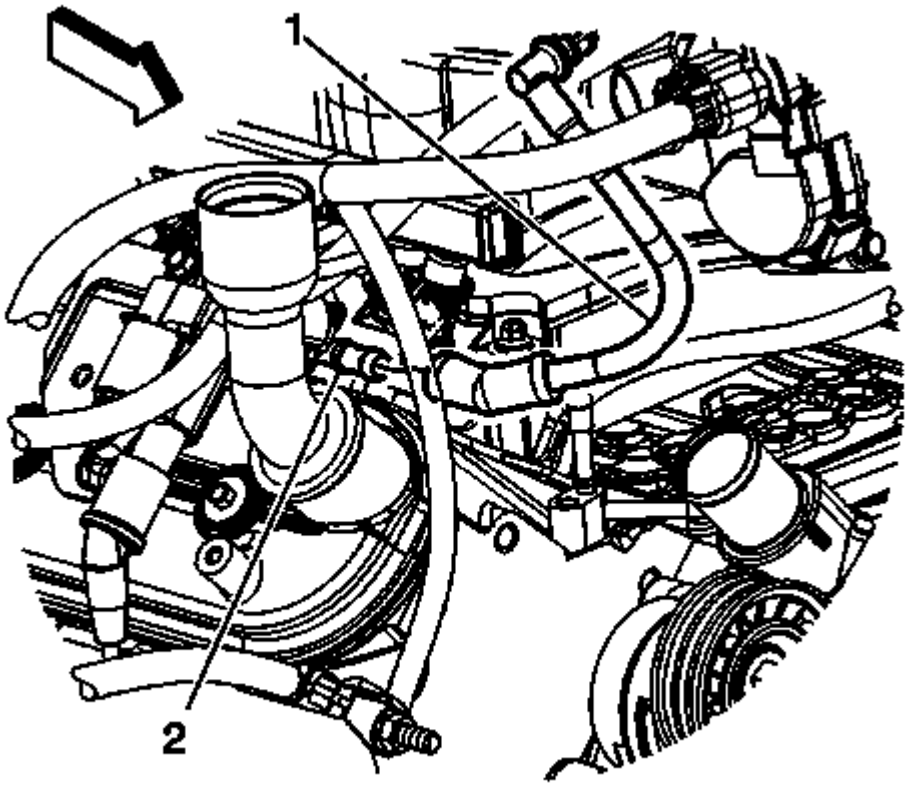

Fig. 50: View Of PCV Tube & Right Valve Rocker Arm Cover Fitting
Courtesy of GENERAL MOTORS COMPANY

4. Remove the PCV tube (1) from the right valve rocker arm cover fitting (2), if required.
5. Remove the appropriate PCV hose/tube from the vehicle.

Installation Procedure

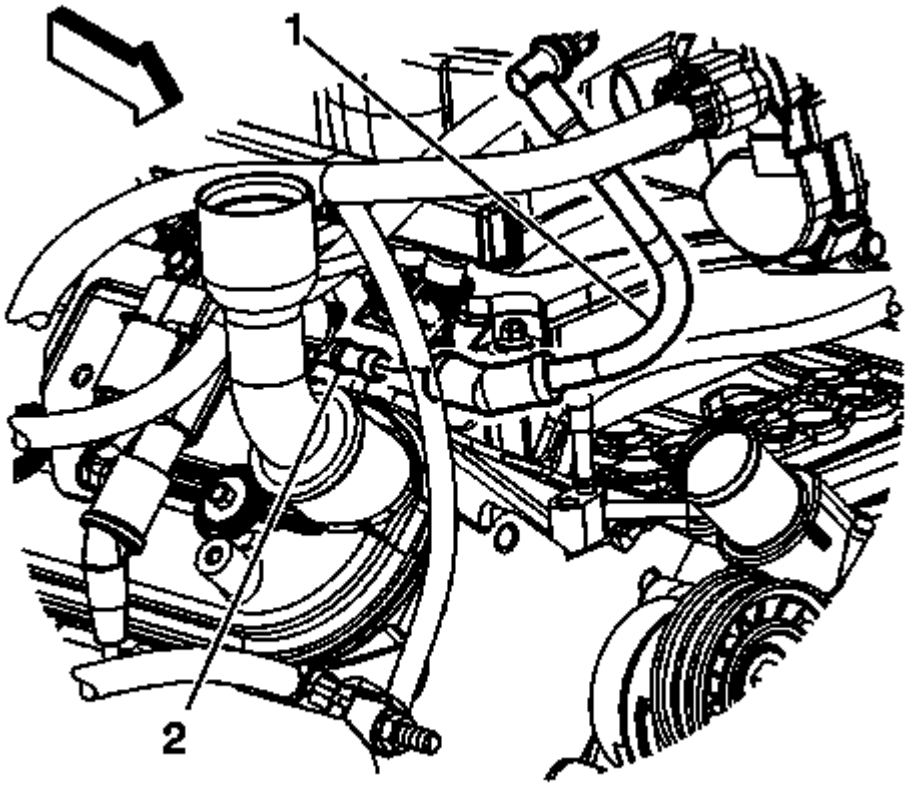

Fig. 51: View Of PCV Tube & Right Valve Rocker Arm Cover Fitting
Courtesy of GENERAL MOTORS COMPANY

1. Install the appropriate PCV hose/tube to the vehicle.
2. Install the PCV tube (1) to the right valve rocker arm cover fitting (2), if required.

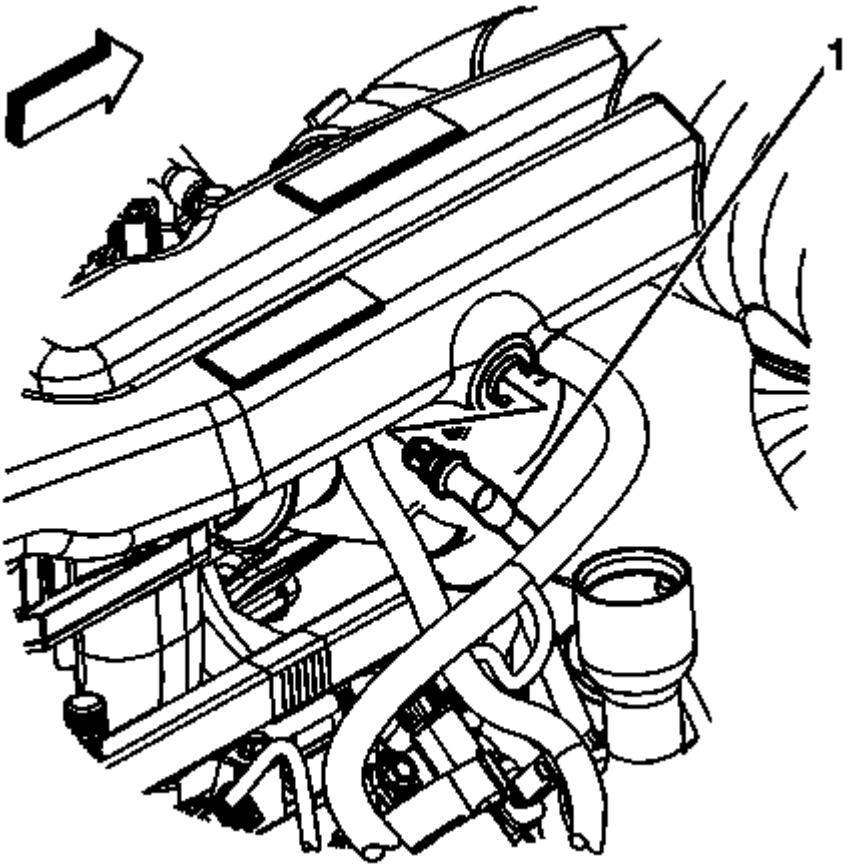

Fig. 52: View Of PCV Tube
Courtesy of GENERAL MOTORS COMPANY

IMPORTANT: Route the PCV tube between the engine harness and generator battery jumper cable.

3. Install the PCV tube (1) to the air cleaner outlet duct, if required.

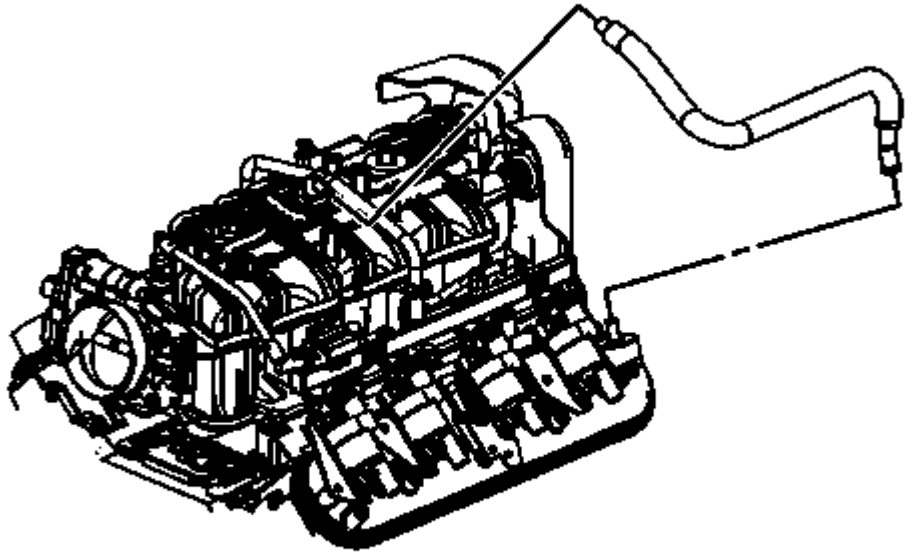

Fig. 53: View Of PCV Hose
Courtesy of GENERAL MOTORS COMPANY

4. Install the PCV hose to the intake manifold fitting and left valve rocker arm cover, if required.
5. Install the intake manifold sight shield. Refer to **Upper Intake Manifold Sight Shield Replacement**.

INTAKE MANIFOLD REPLACEMENT (RPOS LY2, LY6)

Removal Procedure

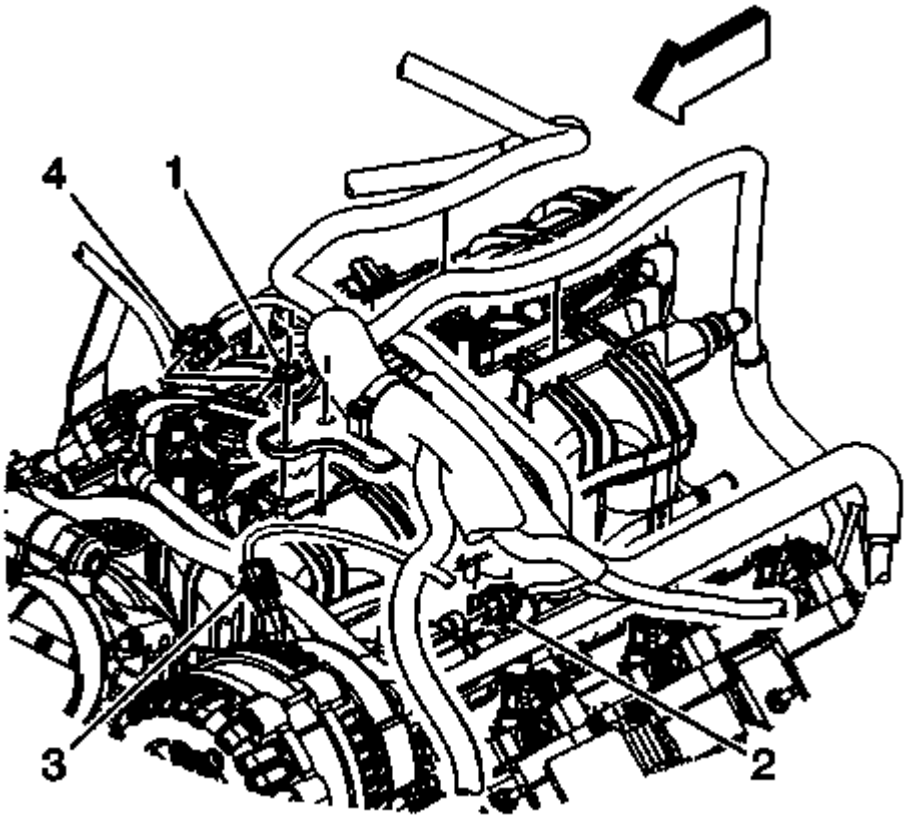

Fig. 54: View Of Engine Harness Retainer Nut & Electrical Connectors
Courtesy of GENERAL MOTORS COMPANY

1. Remove the air cleaner outlet duct. Refer to **Air Cleaner Resonator Outlet Duct Replacement** .
2. Remove the generator. Refer to **Generator Replacement** .
3. Remove the engine harness retainer nut (1).
4. Remove the engine harness retainer from the stud and locator pin.
5. Disconnect the engine harness electrical connector (2) from the evaporative emission (EVAP) canister purge solenoid.
6. Disconnect the engine wiring harness electrical connector (4) from the manifold absolute pressure (MAP) sensor.

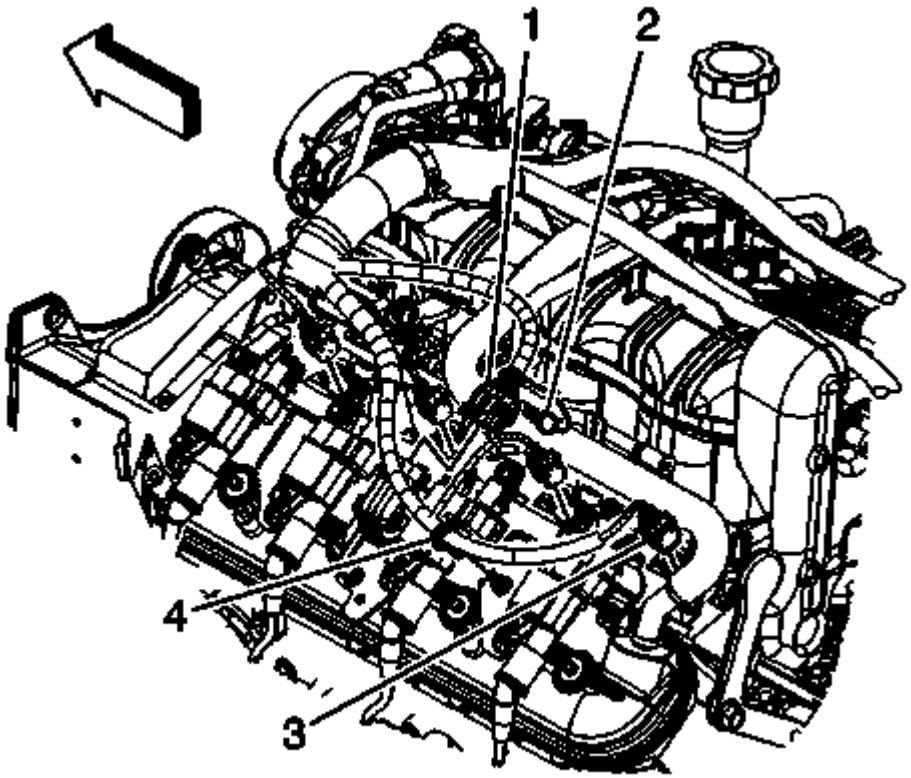

Fig. 55: View Of CPA Retainer, Electrical Connectors & Engine Harness Clips
Courtesy of GENERAL MOTORS COMPANY

7. Remove the connector position assurance (CPA) retainer (1).
8. Disconnect the engine harness electrical connector (1) from the ignition coil harness electrical connector.
9. Disconnect the engine harness electrical connectors (3) from the left side fuel injectors.
10. Remove the engine harness clip (4) from the ignition coil bracket stud.

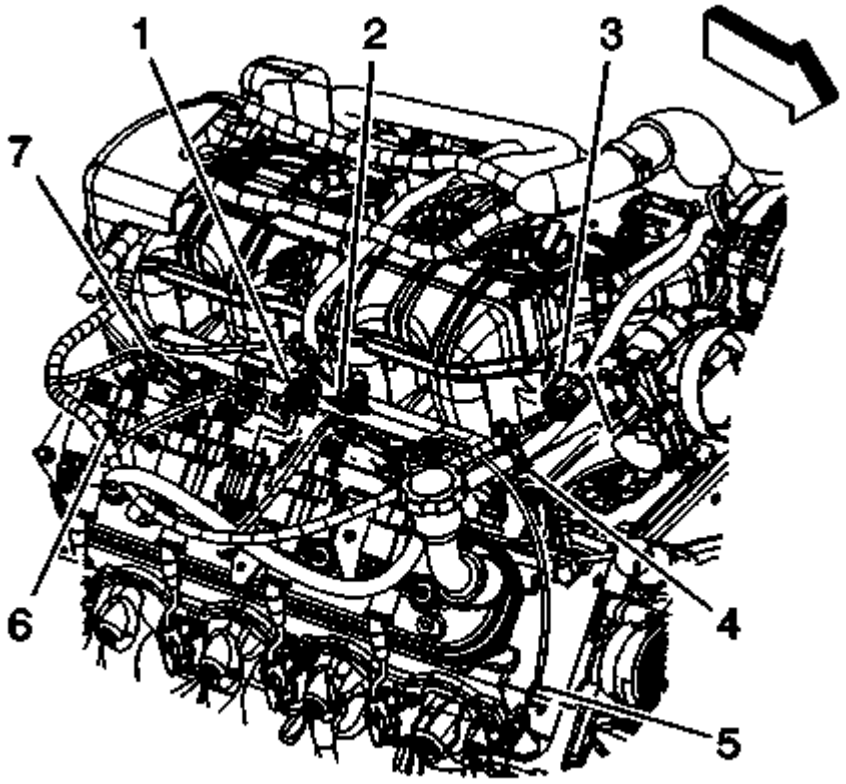

Fig. 56: View Of CPA Retainer, Engine Harness Electrical Connectors & Harness Clips
Courtesy of GENERAL MOTORS COMPANY

11. Remove the CPA retainer (2).
12. Disconnect the engine harness electrical connector (1) from the ignition coil harness electrical connector.
13. Disconnect the engine harness electrical connector (3) from the throttle actuator.
14. Remove the engine harness clip (4) from the generator battery jumper cable.
15. Remove the engine harness clip (6) from the ignition coil bracket stud.
16. Disconnect the engine harness electrical connectors (7) from the right side fuel injectors.

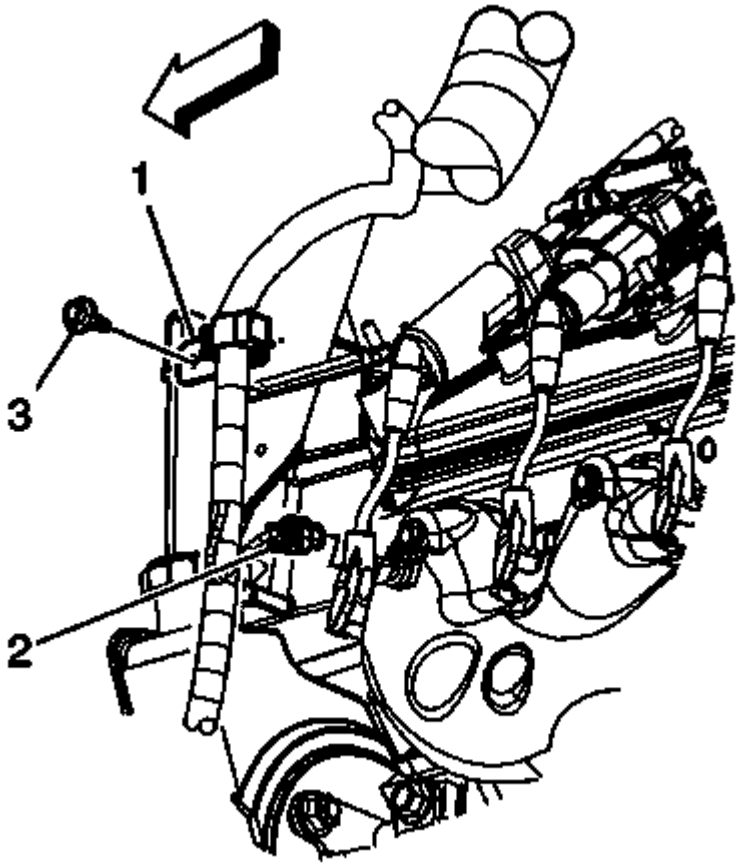

Fig. 57: View Of Engine Wiring Harness, Clip, Bolt & Connector
Courtesy of GENERAL MOTORS COMPANY

17. Remove the engine harness clip (1) bolt (3).
18. Disconnect the engine harness electrical connector (2) from the engine coolant temperature (ECT) sensor.
19. Gather the engine harness branches and tie the harness up out of the way to the cowl panel.

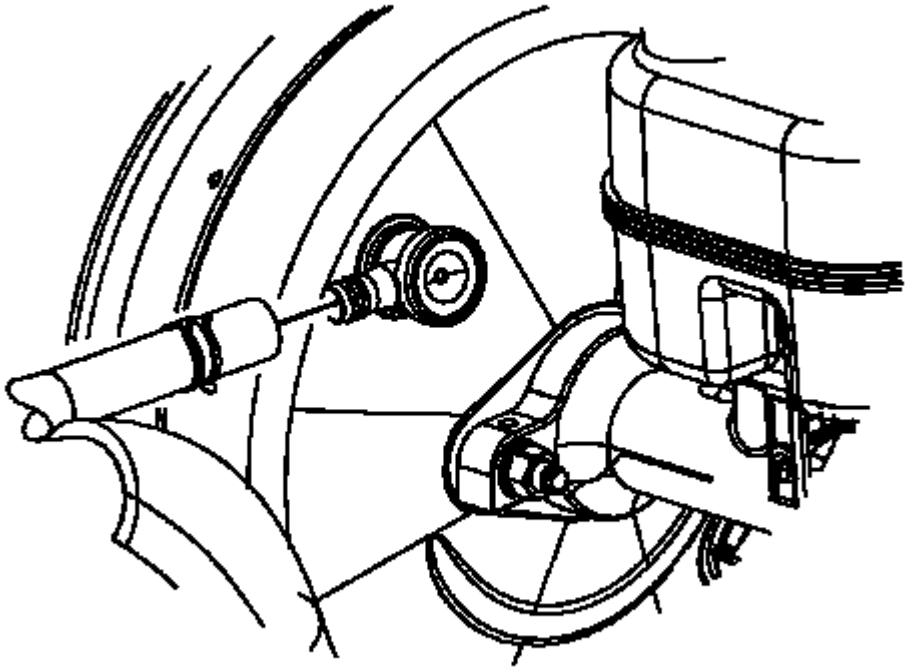

Fig. 58: View Of Brake Booster Vacuum Hose & Booster Fitting
Courtesy of GENERAL MOTORS COMPANY

20. Reposition the brake booster vacuum hose clamp at the booster.
21. Remove the brake booster vacuum hose from the booster fitting.
22. Secure the brake booster vacuum hose to the intake manifold.

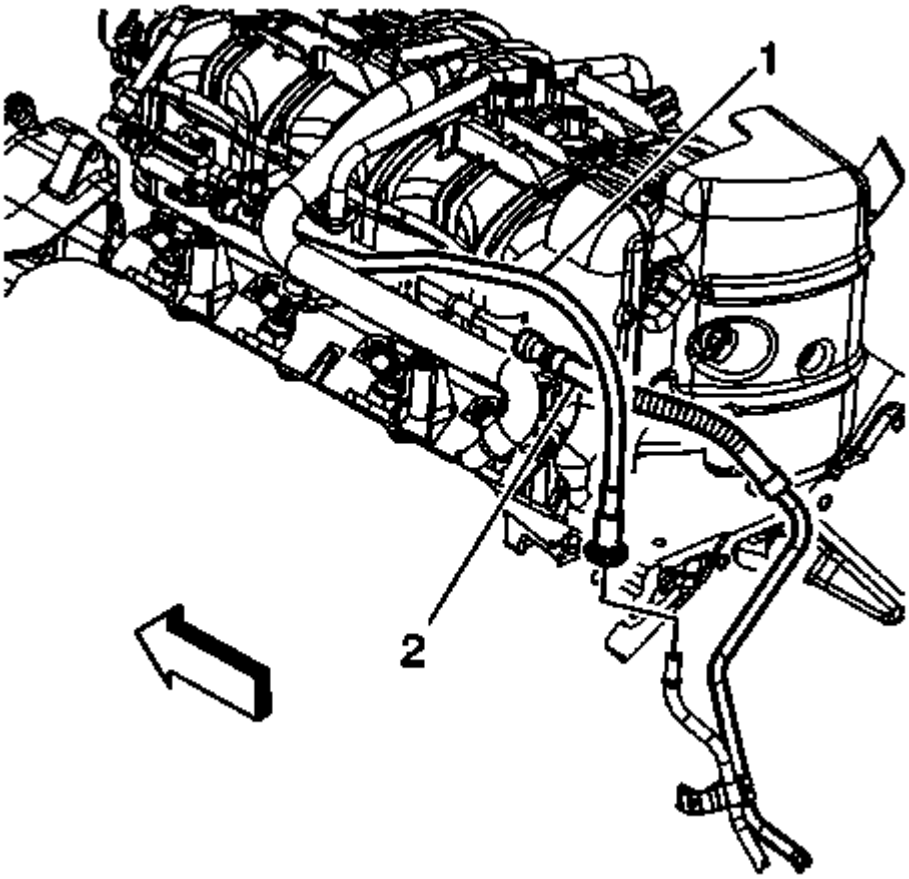

Fig. 59: View Of EVAP Canister Purge Tube & Quick Connect Fitting
Courtesy of GENERAL MOTORS COMPANY

23. Disconnect the EVAP canister purge tube (1) quick connect fitting from the EVAP canister purge solenoid. Refer to **Plastic Collar Quick Connect Fitting Service** .
24. Disconnect the fuel feed line quick connect fitting (2) from the fuel rail. Refer to **Metal Collar Quick Connect Fitting Service** .

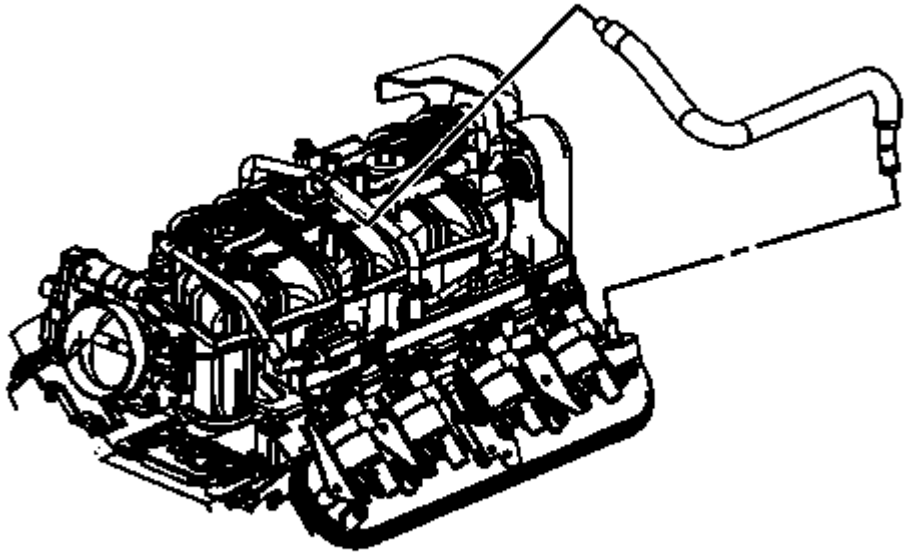

Fig. 60: View Of PCV Hose
Courtesy of GENERAL MOTORS COMPANY

25. Remove the positive crankcase ventilation (PCV) hose from the intake manifold fitting.
26. Position the hose out of the way.

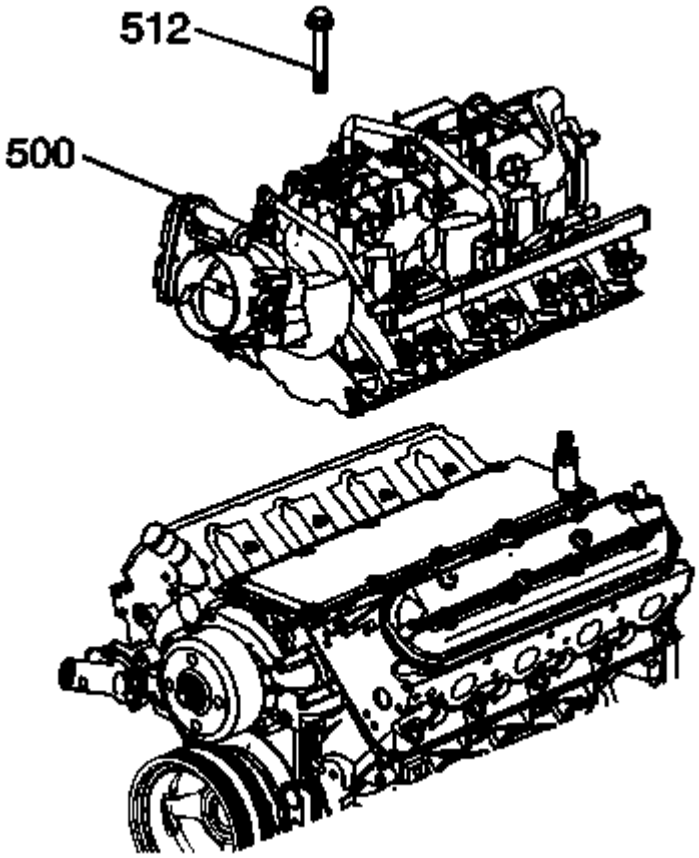

Fig. 61: Intake Manifold & Bolts
Courtesy of GENERAL MOTORS COMPANY

27. Loosen the intake manifold bolts (512).

NOTE: **The aid of an assistant may be helpful in holding the engine harness up out of the way so the upper intake manifold cover does not get caught against the engine harness.**

28. Remove the intake manifold (500).
29. Cover the cylinder head passages in order to prevent dirt or debris from entering the passages.

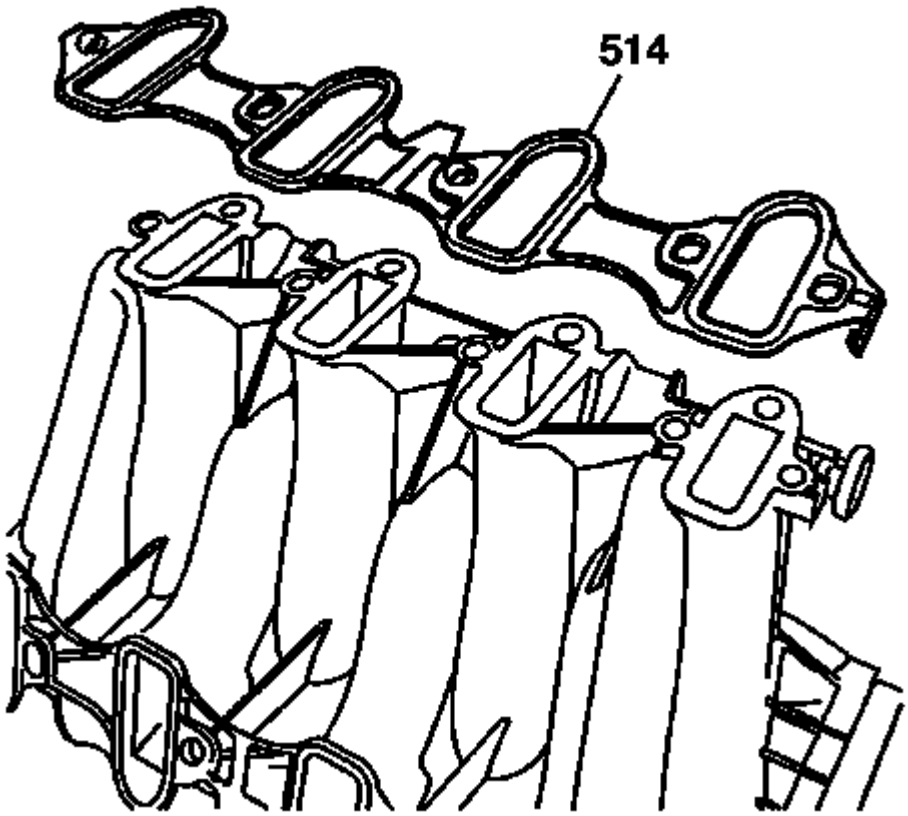

Fig. 62: View Of Intake Manifold-To-Cylinder Head Gasket
Courtesy of GENERAL MOTORS COMPANY

30. Remove and discard the intake manifold gaskets (514).

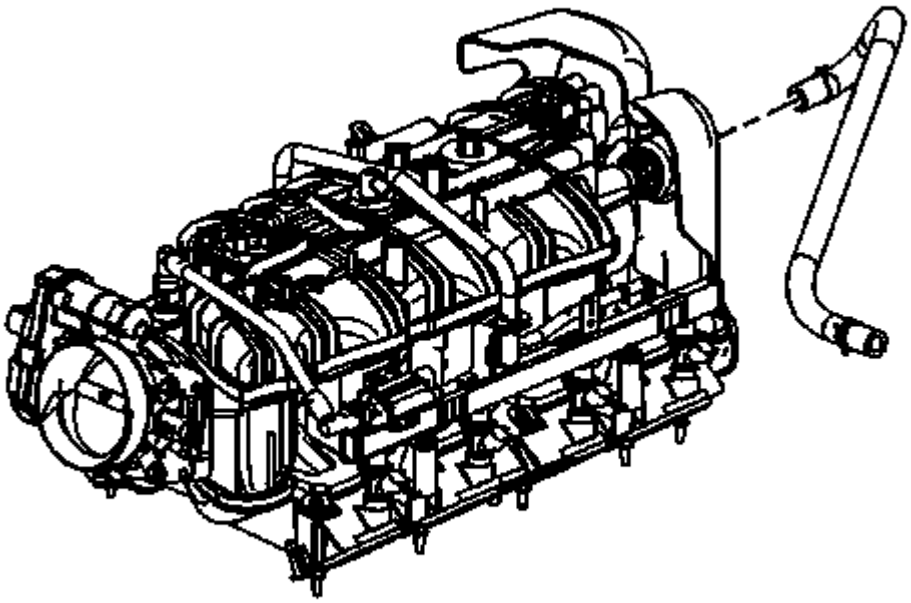

Fig. 63: View Of Vacuum Brake Booster Hose
Courtesy of GENERAL MOTORS COMPANY

31. If replacing the intake manifold, perform the following steps, otherwise proceed to step 21 of the installation procedure.
32. Place the intake manifold on a clean work surface.
33. Reposition the brake booster vacuum hose clamp at the intake manifold.
34. Remove the brake booster vacuum hose from the intake manifold nipple.

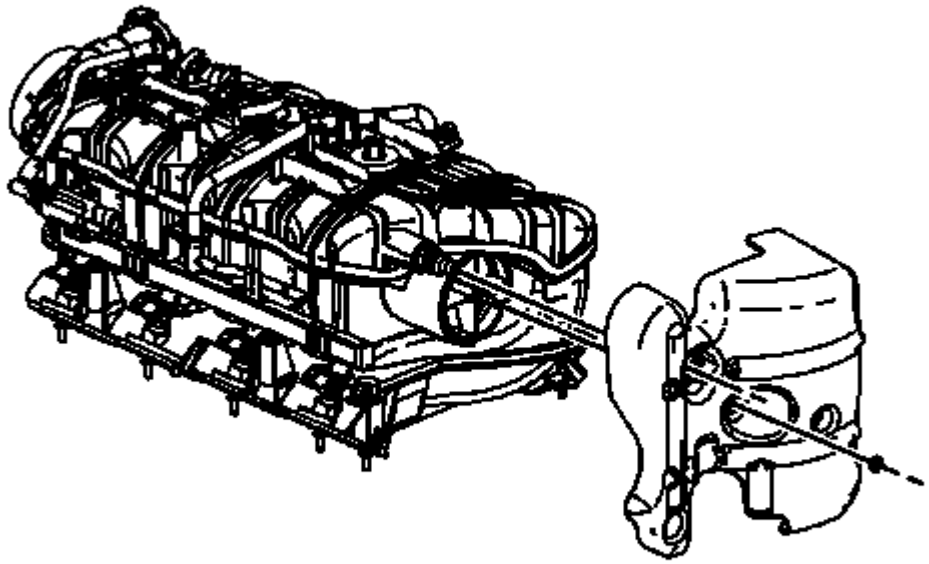

Fig. 64: View Of Upper Intake Manifold Cover & Nut
Courtesy of GENERAL MOTORS COMPANY

35. Remove the upper intake manifold cover nut.
36. Remove the upper intake manifold cover.

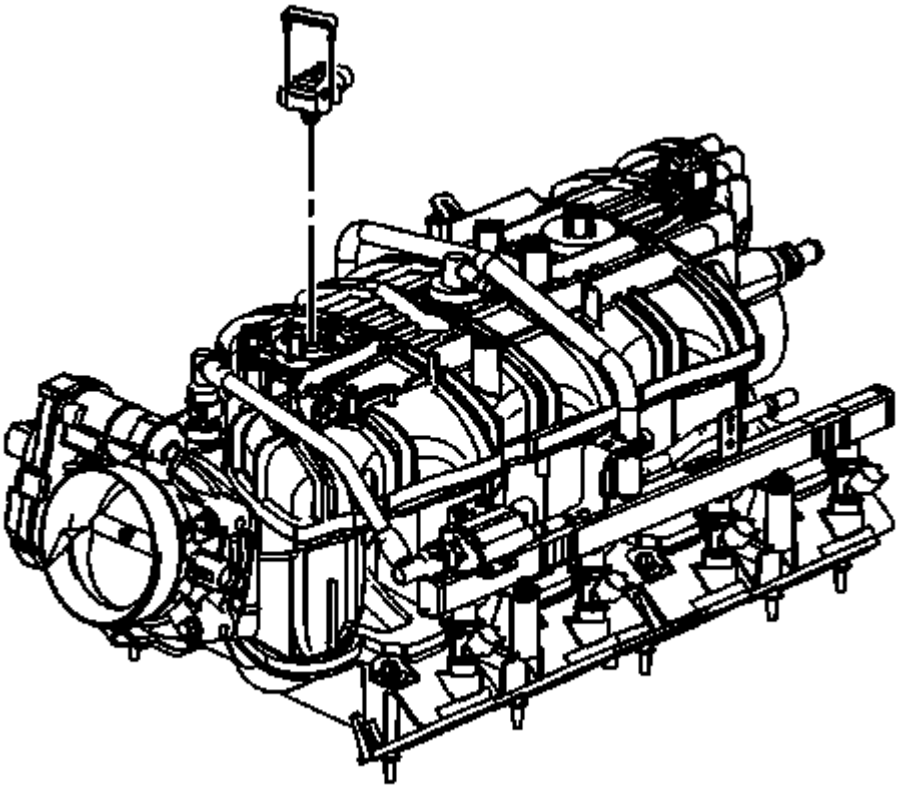

Fig. 65: View Of MAP Sensor & Retainer
Courtesy of GENERAL MOTORS COMPANY

37. Remove the manifold absolute pressure (MAP) sensor retainer.
38. Remove the MAP sensor.

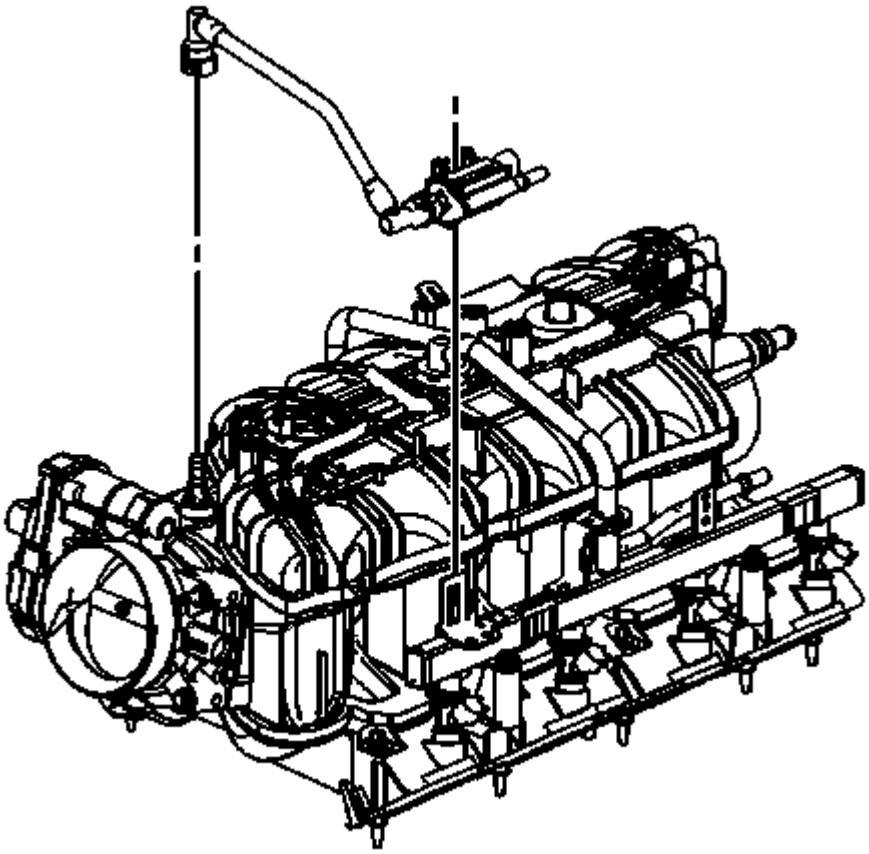

Fig. 66: View Of EVAP Tube & Purge Solenoid
Courtesy of GENERAL MOTORS COMPANY

39. Disconnect the EVAP tube quick connect fitting at the intake manifold. Refer to **Plastic Collar Quick Connect Fitting Service** .
40. Disengage the retainer securing the EVAP canister purge solenoid to the fuel rail.
41. Remove the EVAP tube and purge solenoid.

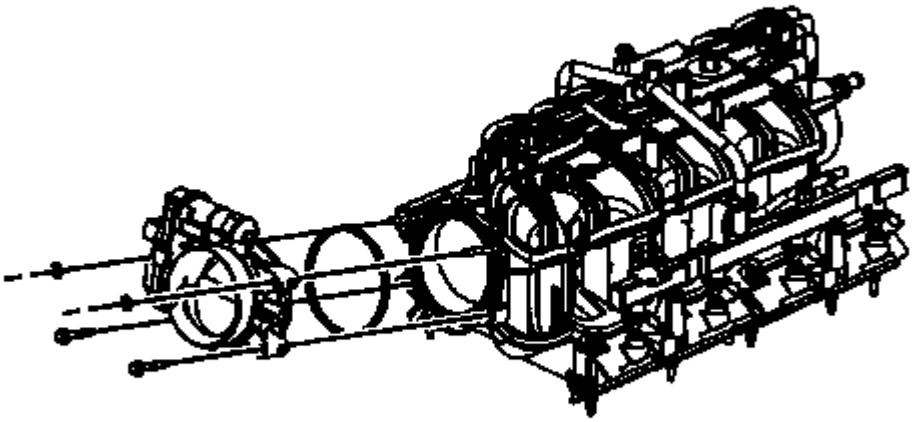

Fig. 67: View Of Throttle Body, Gasket & Bolts/Nuts
Courtesy of GENERAL MOTORS COMPANY

42. Remove the throttle body bolts/nuts.
43. Remove the throttle body.
44. Remove and discard the throttle body gasket.

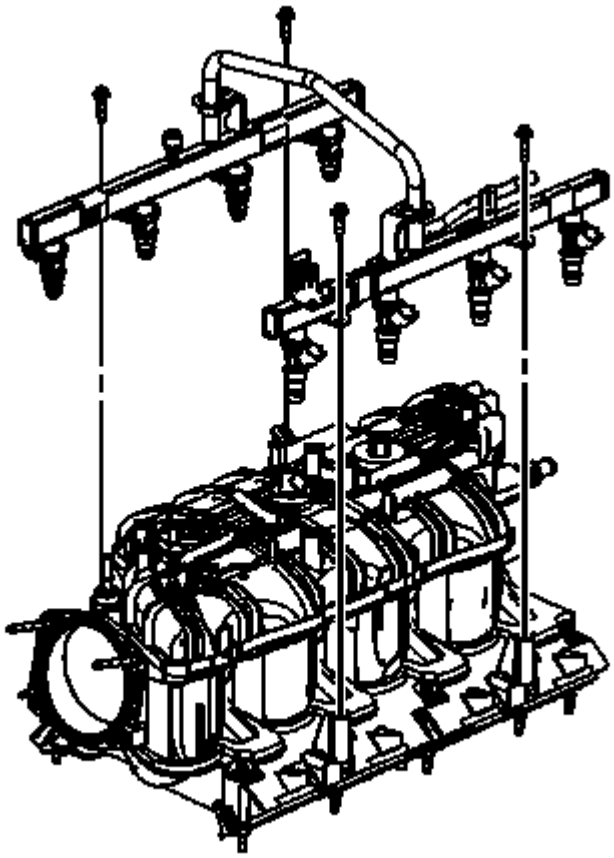

Fig. 68: View Of Fuel Rail & Bolts
Courtesy of GENERAL MOTORS COMPANY

45. Remove the fuel rail bolts.

NOTE: **Lift evenly on both sides of the fuel rail until all injectors are removed from their bores.**

46. Remove the fuel rail.
47. Remove and discard the fuel injector lower O-ring seals.

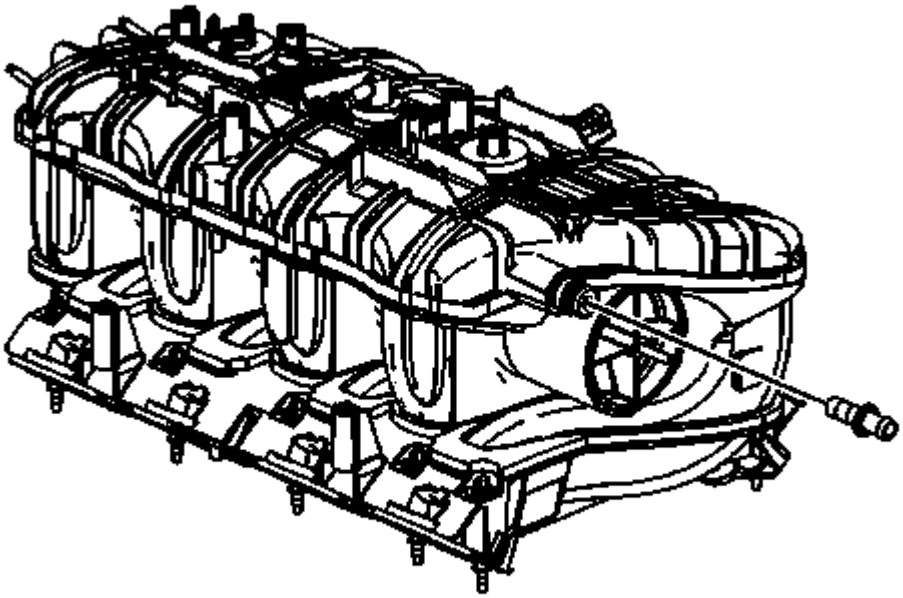

Fig. 69: View Of Brake Booster Vacuum Hose Nipple
Courtesy of GENERAL MOTORS COMPANY

NOTE: Evenly push in the RED collar in order to remove the nipple.

48. Remove the brake booster vacuum hose nipple.

Installation Procedure

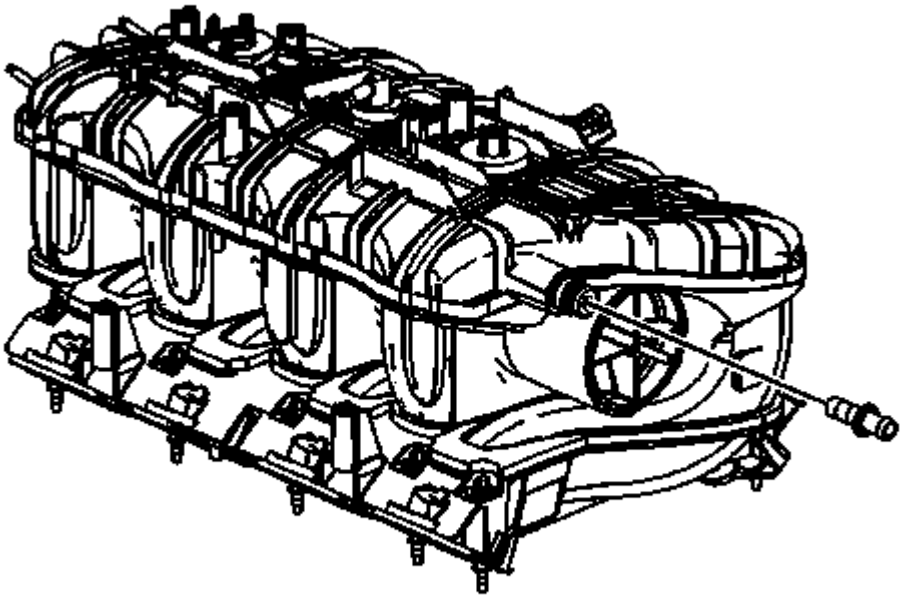

Fig. 70: View Of Brake Booster Vacuum Hose Nipple
Courtesy of GENERAL MOTORS COMPANY

1. If the intake manifold was replaced perform the following steps, otherwise proceed to step 21.

NOTE: Evenly push in the RED collar in order to install the nipple.

2. Install the brake booster vacuum hose nipple to the NEW intake manifold.

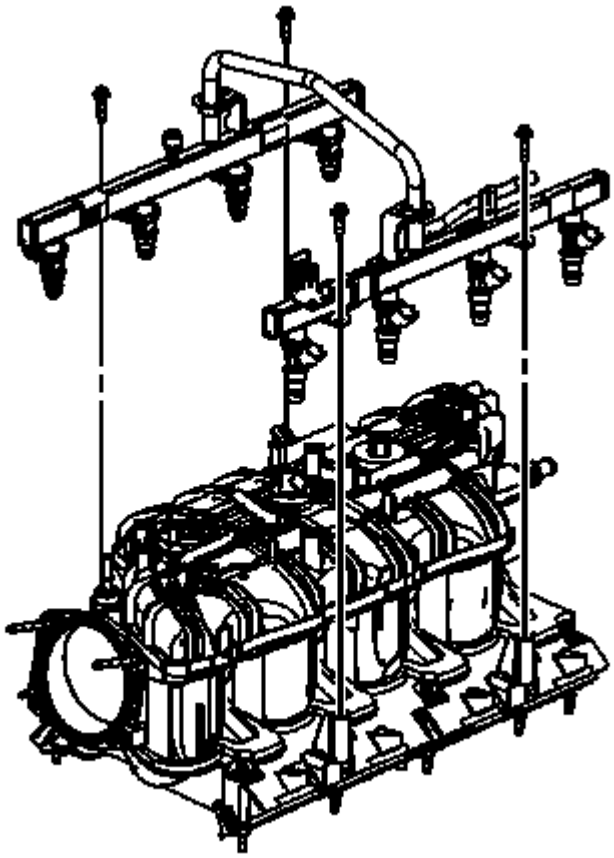

Fig. 71: View Of Fuel Rail & Bolts
Courtesy of GENERAL MOTORS COMPANY

3. Install NEW fuel injector lower O-ring seals onto the injectors.
4. Lubricate the NEW O-ring seals with clean engine oil.

NOTE: Push down firmly on both sides of the rail until all the injectors have been seated into their bores.

5. Install the fuel rail.

CAUTION: Refer to Fastener Caution .

6. Install the fuel rail bolts and tighten to 10 N.m (89 lb in).

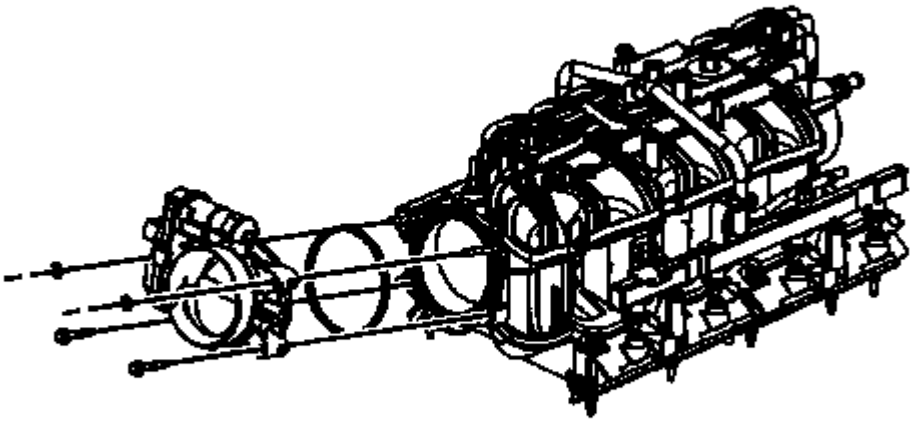

Fig. 72: View Of Throttle Body, Gasket & Bolts/Nuts
Courtesy of GENERAL MOTORS COMPANY

7. Install a NEW throttle body gasket to the intake manifold.
8. Install the throttle body.
9. Install the throttle body bolts/nuts and tighten to 10 N.m (89 lb in).

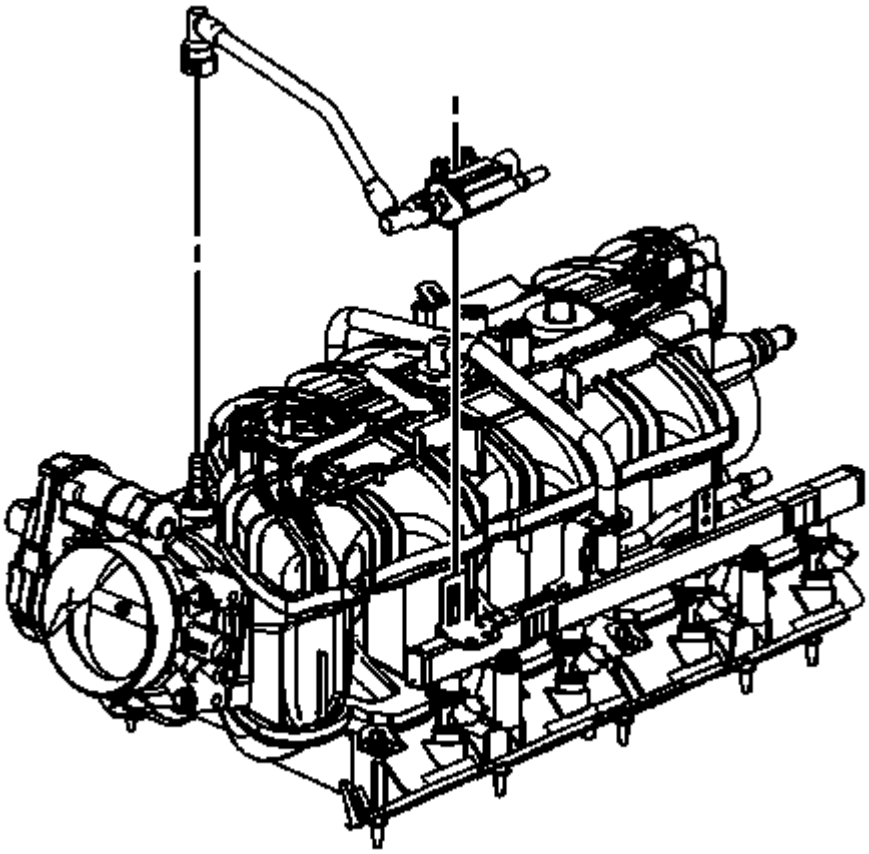

Fig. 73: View Of EVAP Tube & Purge Solenoid
Courtesy of GENERAL MOTORS COMPANY

10. Install the EVAP tube and purge solenoid.
11. Install the EVAP canister purge solenoid to the fuel rail bracket and engage the retainer.
12. Connect the EVAP tube quick connect fitting at the intake manifold. Refer to **Plastic Collar Quick Connect Fitting Service** .

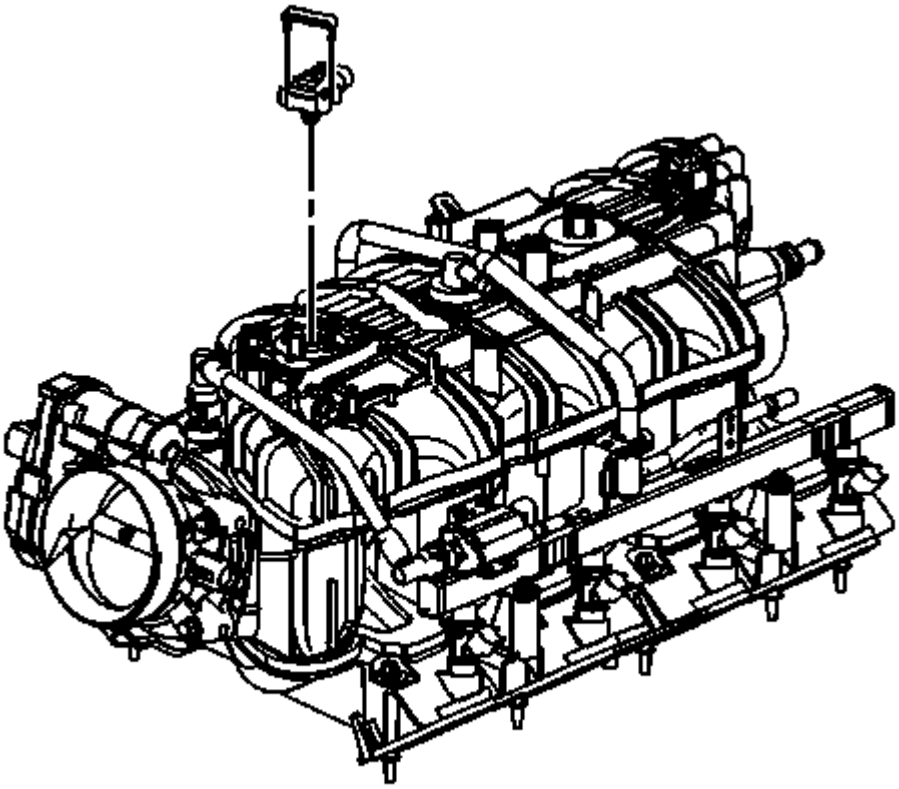

Fig. 74: View Of MAP Sensor & Retainer
Courtesy of GENERAL MOTORS COMPANY

13. Lubricate the MAP sensor seal with clean engine oil.
14. Install the MAP sensor.
15. Install the MAP sensor retainer.

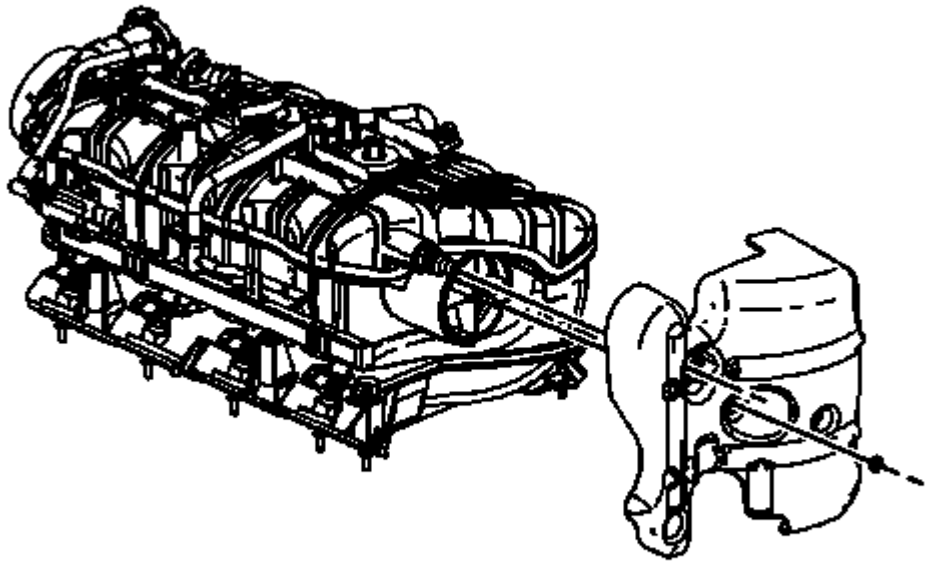

Fig. 75: View Of Upper Intake Manifold Cover & Nut
Courtesy of GENERAL MOTORS COMPANY

16. Install the upper intake manifold cover.
17. Install the upper intake manifold cover nut until snug

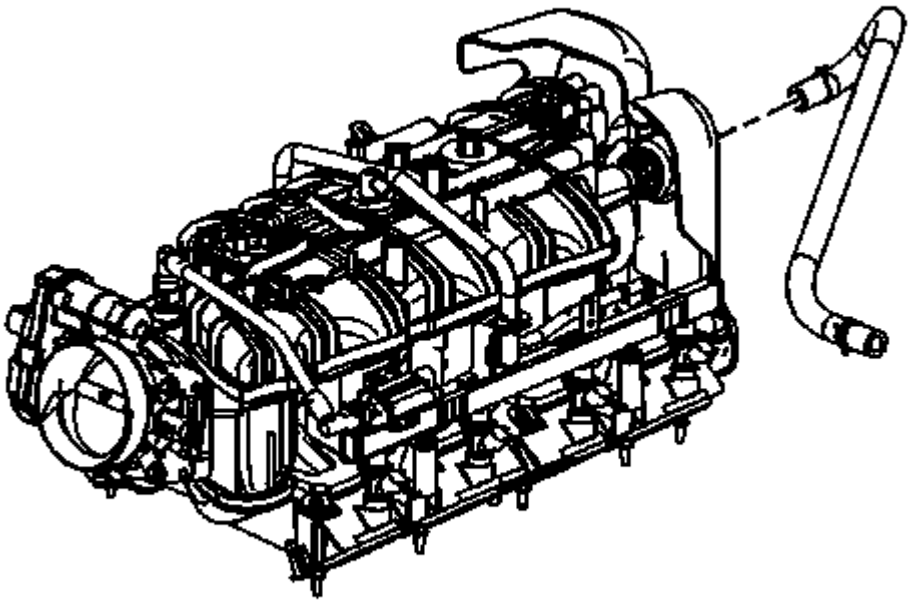

Fig. 76: View Of Vacuum Brake Booster Hose
Courtesy of GENERAL MOTORS COMPANY

18. Install the brake booster vacuum hose to the intake manifold nipple.
19. Position the brake booster vacuum hose clamp at the intake manifold.
20. Secure the brake booster vacuum hose to the intake manifold.

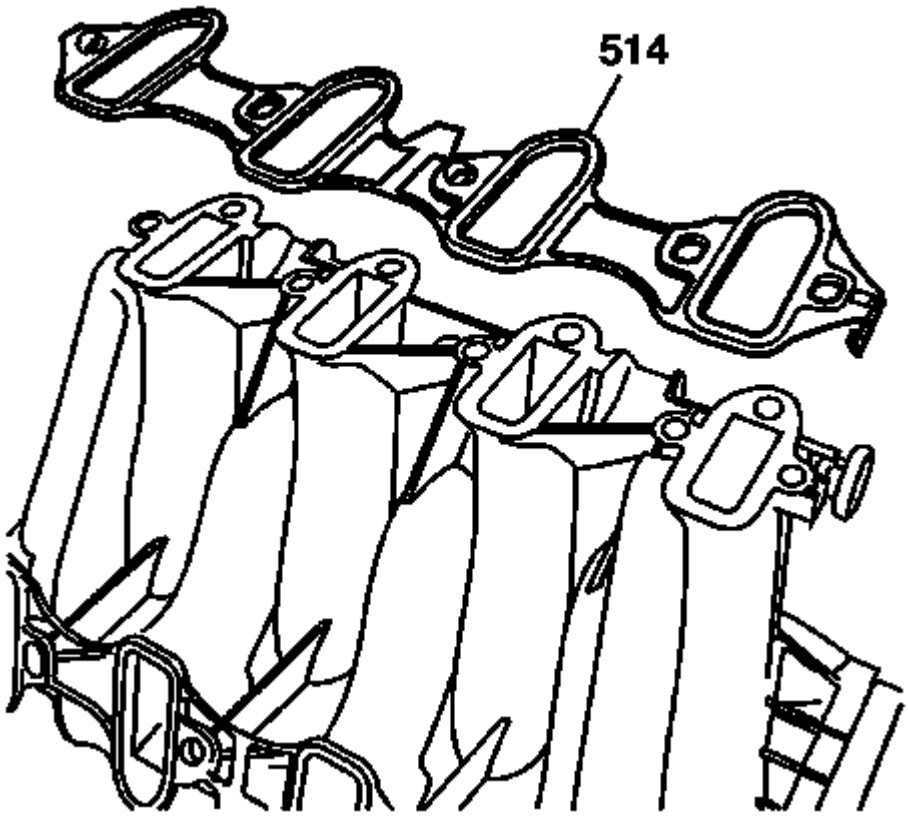

Fig. 77: View Of Intake Manifold-To-Cylinder Head Gasket
Courtesy of GENERAL MOTORS COMPANY

21. Install NEW intake manifold gaskets (514) to the intake manifold.
22. Remove the covers from the cylinder head passages.

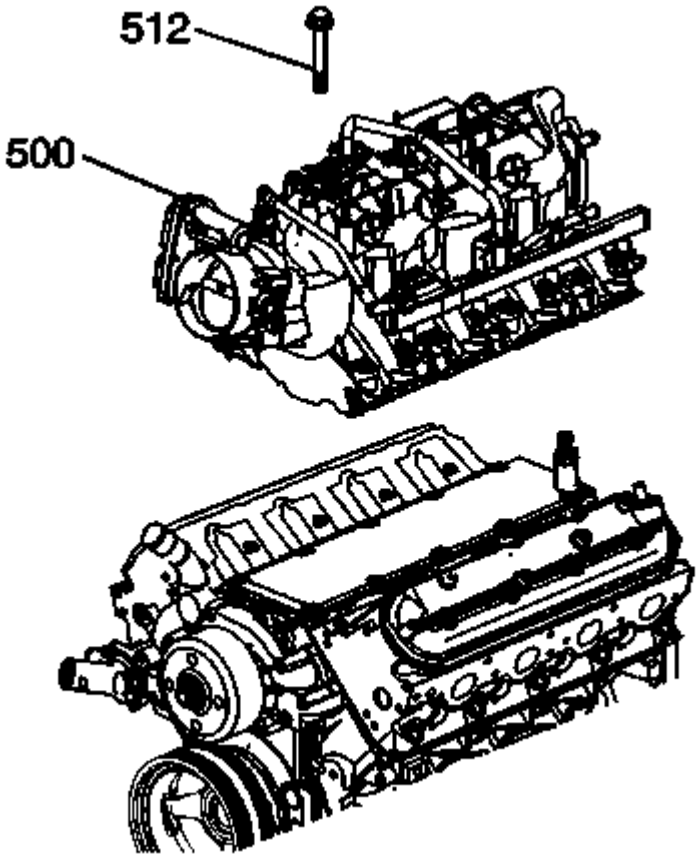

Fig. 78: Intake Manifold & Bolts
Courtesy of GENERAL MOTORS COMPANY

23. Install the intake manifold (500).

NOTE: **The aid of an assistant may be helpful in holding the engine harness up out of the way so the upper intake manifold cover does not get caught against the engine harness.**

24. Tighten the intake manifold bolts (512) until snug.

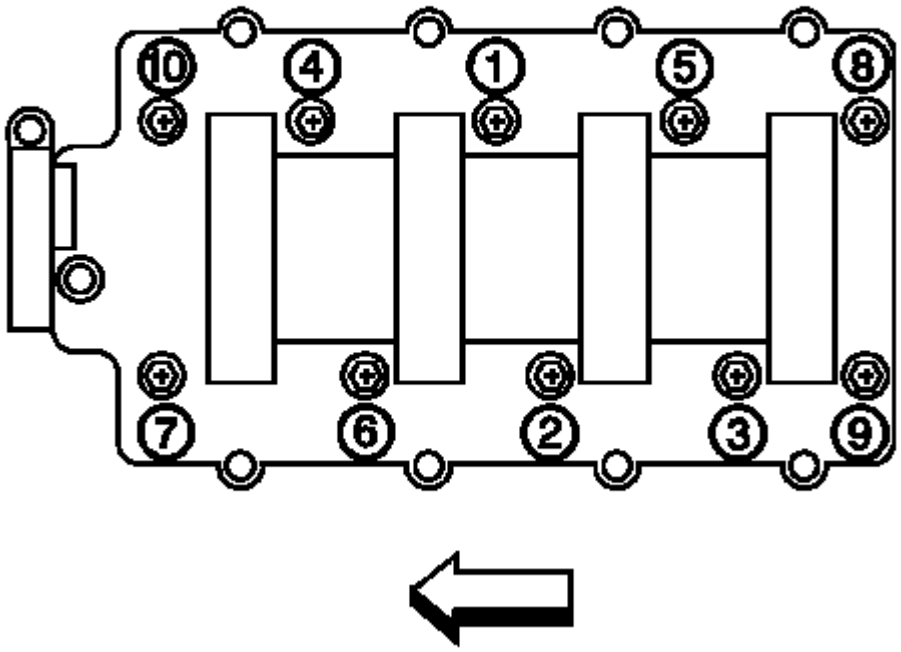

Fig. 79: Identifying Intake Manifold Bolt Tightening Sequence
Courtesy of GENERAL MOTORS COMPANY

25. Tighten the intake manifold bolts to specifications.
    - Tighten the bolts a first pass in the sequence shown to 5 N.m (44 lb in).
    - Tighten the bolts a final pass in the sequence shown to 10 N.m (89 lb in).

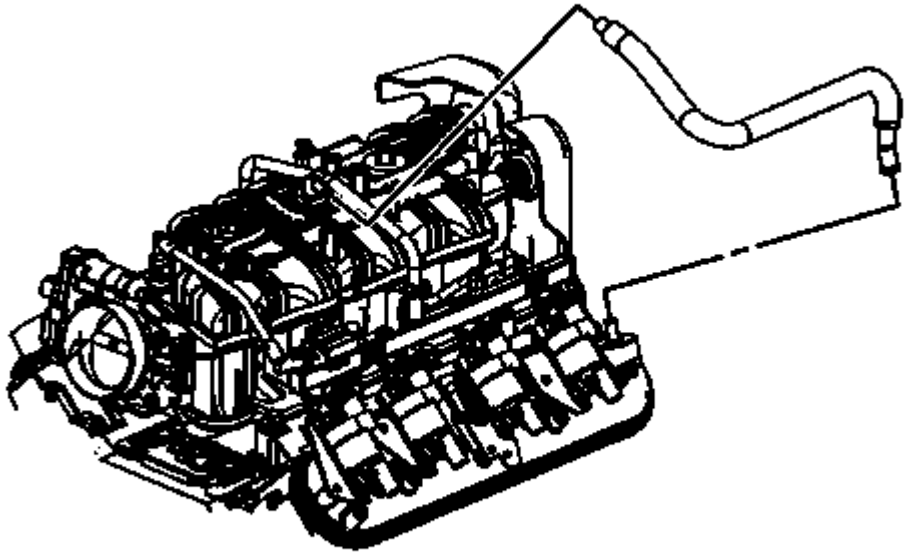

Fig. 80: View Of PCV Hose
Courtesy of GENERAL MOTORS COMPANY

26. Position and install the PCV hose to the intake manifold fitting.

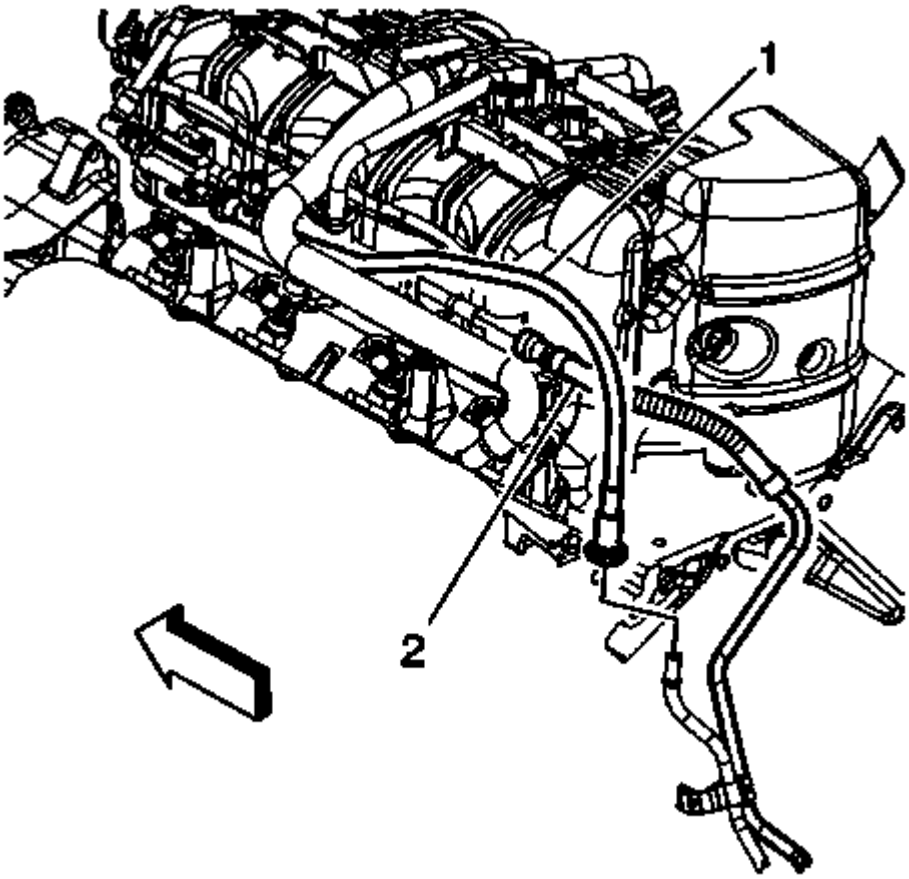

Fig. 81: View Of EVAP Canister Purge Tube & Quick Connect Fitting
Courtesy of GENERAL MOTORS COMPANY

27. Connect the fuel feed line quick connect fitting (2) to the fuel rail. Refer to **Metal Collar Quick Connect Fitting Service** .
28. Connect the EVAP canister purge tube (1) quick connect fitting to the EVAP canister purge solenoid. Refer to **Plastic Collar Quick Connect Fitting Service** .

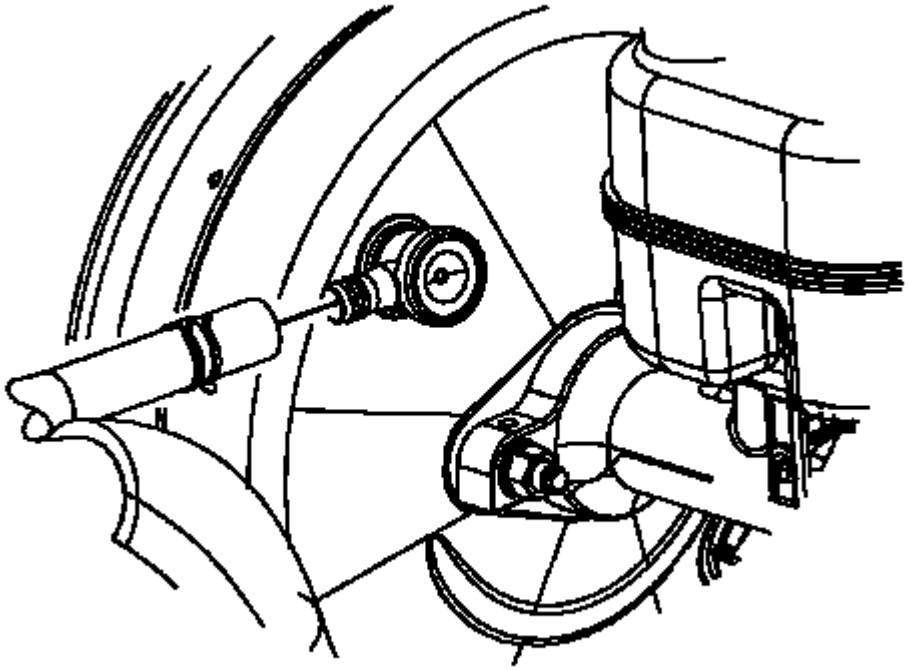

Fig. 82: View Of Brake Booster Vacuum Hose & Booster Fitting
Courtesy of GENERAL MOTORS COMPANY

29. Unsecure the brake booster vacuum hose from the intake manifold.
30. Install the brake booster vacuum hose to the booster fitting.
31. Position the brake booster vacuum hose clamp at the booster.

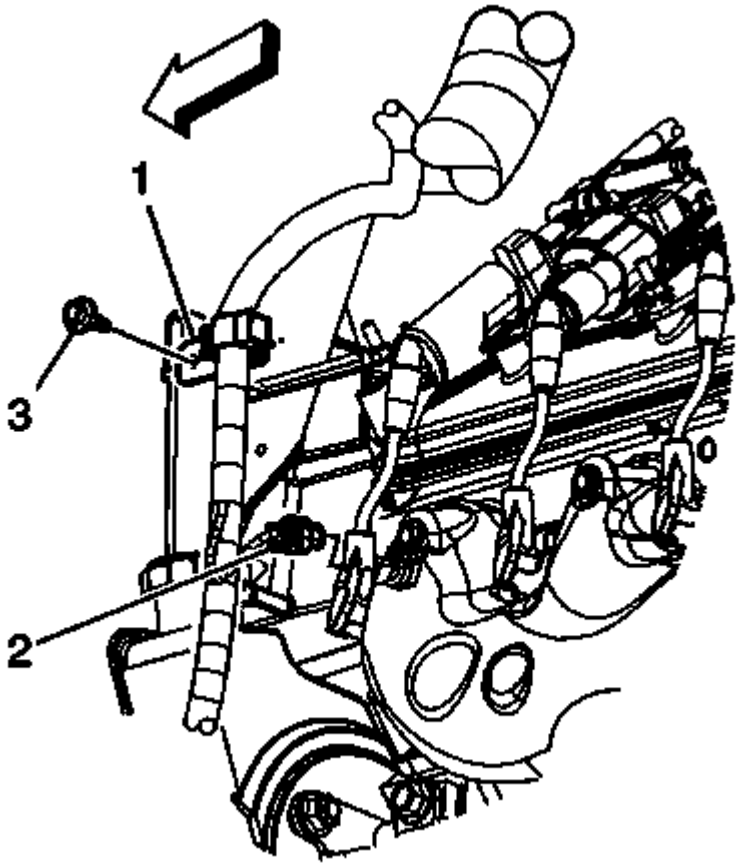

Fig. 83: View Of Engine Wiring Harness, Clip, Bolt & Connector
Courtesy of GENERAL MOTORS COMPANY

32. Untie the engine harness branches from the cowl panel and position over the engine.
33. Connect the engine harness electrical connector (2) to the ECT sensor.
34. Position the engine harness clip (1) to the generator bracket and install the bolt (3).

    Tighten the bolt to 9 N.m (80 lb in).

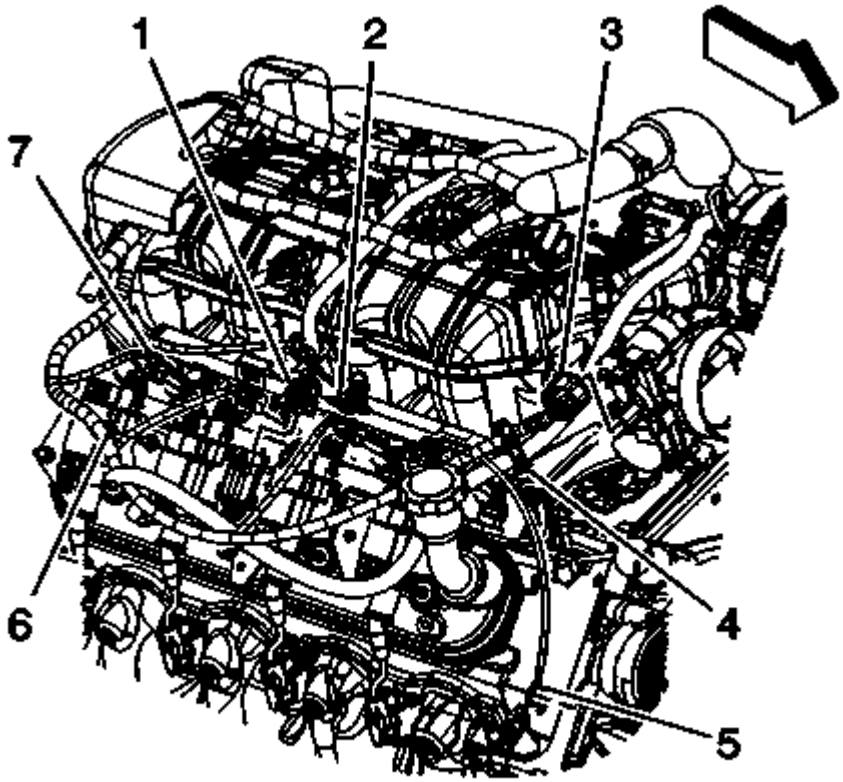

Fig. 84: View Of CPA Retainer, Engine Harness Electrical Connectors & Harness Clips
Courtesy of GENERAL MOTORS COMPANY

35. Connect the engine harness electrical connectors (7) to the right side fuel injectors.
36. Install the engine harness clip (6) to the ignition coil bracket stud.
37. Install the engine harness clip (4) to the generator battery jumper cable.
38. Connect the engine harness electrical connector (3) to the throttle actuator.
39. Connect the engine harness electrical connector (1) to the ignition coil harness electrical connector.
40. Install the CPA retainer (2).

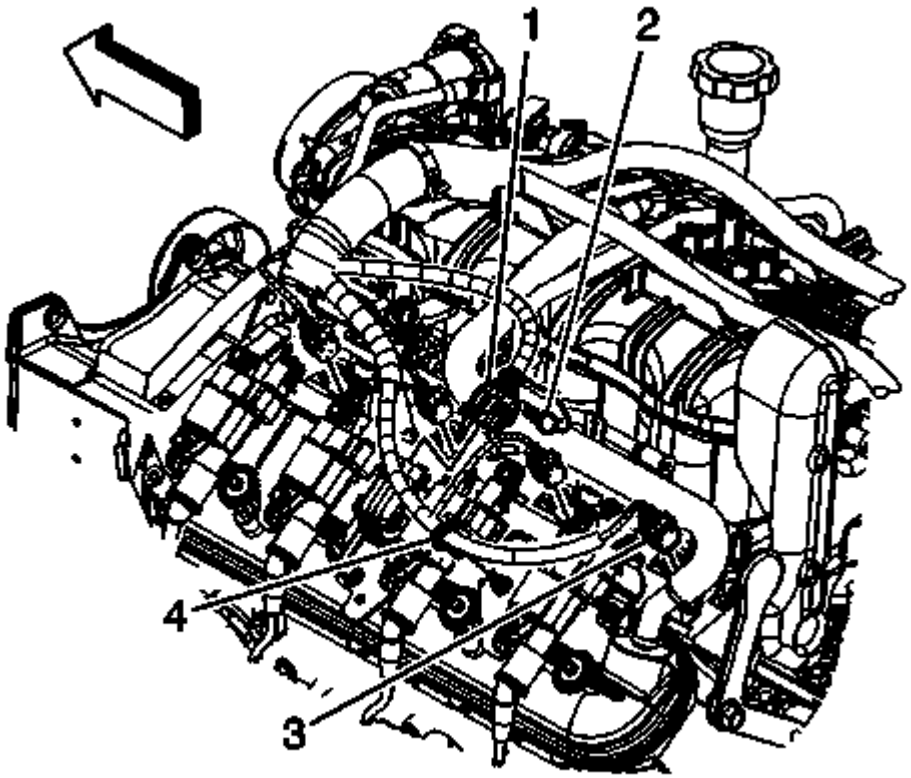

Fig. 85: View Of CPA Retainer, Electrical Connectors & Engine Harness Clips
Courtesy of GENERAL MOTORS COMPANY

41. Install the engine harness clip (4) to the ignition coil bracket stud.
42. Connect the engine harness electrical connectors (3) to the left side fuel injectors.
43. Connect the engine harness electrical connector (1) to the ignition coil harness electrical connector.
44. Install the CPA retainer (1).

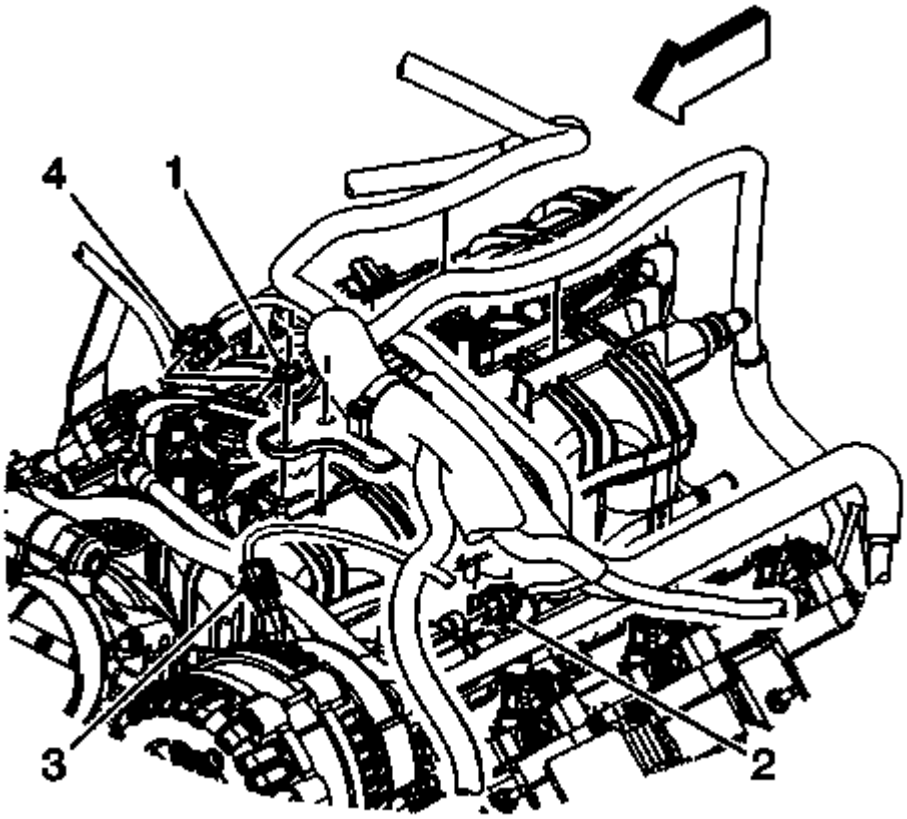

Fig. 86: View Of Engine Harness Retainer Nut & Electrical Connectors
Courtesy of GENERAL MOTORS COMPANY

45. Connect the engine wiring harness electrical connector (4) to the MAP sensor.
46. Connect the engine harness electrical connector (2) to the EVAP canister purge solenoid.
47. Install the engine harness retainer to the stud and locator pin.
48. Install the engine harness retainer nut (1) and tighten to 5 N.m (44 lb in).
49. Install the generator. Refer to **Generator Replacement** .
50. Install the air cleaner outlet duct. Refer to **Air Cleaner Resonator Outlet Duct Replacement** .

INTAKE MANIFOLD REPLACEMENT (RPOS LC9, LMG, LY5, L76)

Removal Procedure

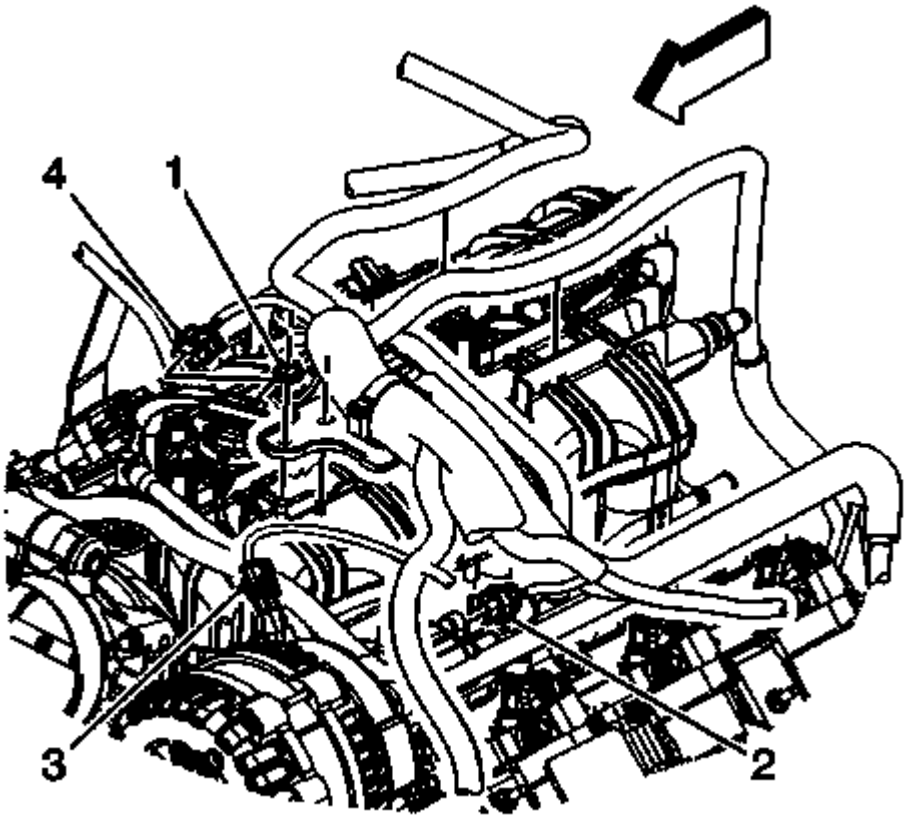

Fig. 87: View Of Engine Harness Retainer Nut & Electrical Connectors
Courtesy of GENERAL MOTORS COMPANY

1. Remove the air cleaner outlet duct. Refer to **Air Cleaner Resonator Outlet Duct Replacement** .
2. Remove the generator. Refer to **Generator Replacement** .
3. Remove the engine harness retainer nut (1).
4. Remove the engine harness retainer from the stud and locator.
5. Disconnect the engine harness electrical connector (2) from the evaporative emission (EVAP) canister purge solenoid.
6. Disconnect the engine wiring harness electrical connector (4) from the manifold absolute pressure (MAP) sensor.

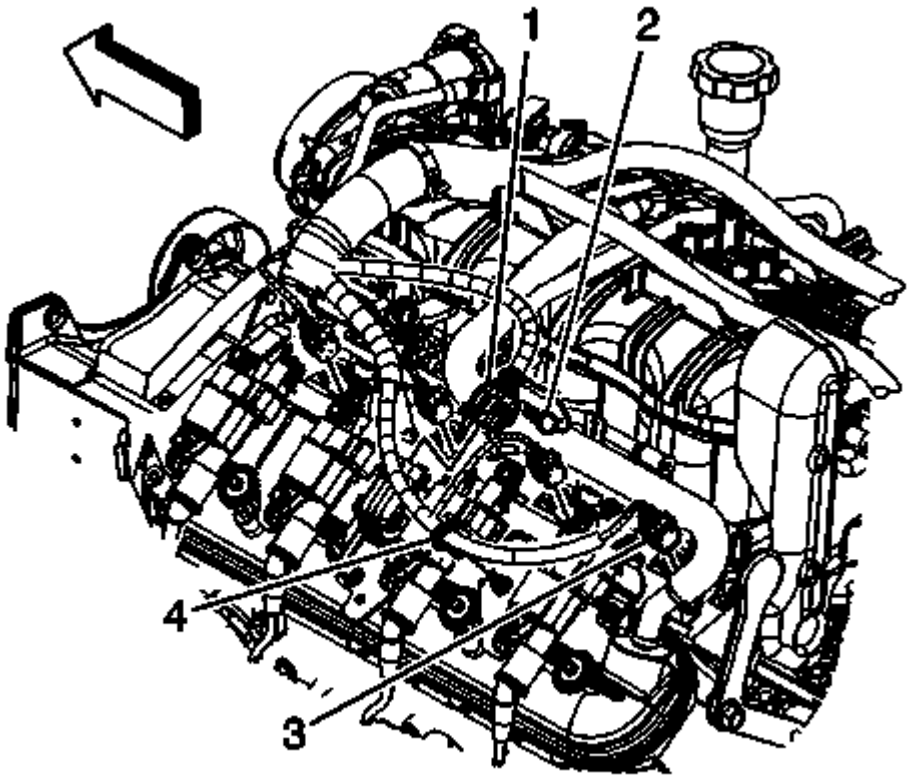

Fig. 88: View Of CPA Retainer, Electrical Connectors & Engine Harness Clips
Courtesy of GENERAL MOTORS COMPANY

7. Remove the connector position assurance (CPA) retainer (1).
8. Disconnect the engine harness electrical connector (1) from the ignition coil harness electrical connector.
9. Disconnect the engine harness electrical connectors (3) from the left side fuel injectors.
10. Remove the engine harness clip (4) from the ignition coil bracket stud.

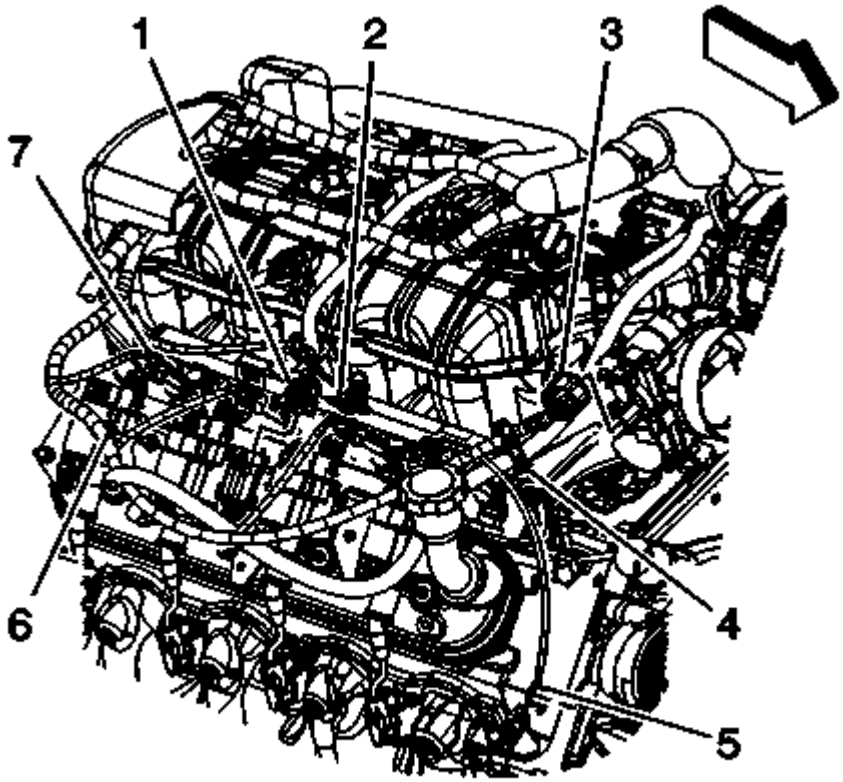

Fig. 89: View Of CPA Retainer, Engine Harness Electrical Connectors & Harness Clips
Courtesy of GENERAL MOTORS COMPANY

11. Remove the CPA retainer (2).
12. Disconnect the engine harness electrical connector (1) from the ignition coil harness electrical connector.
13. Disconnect the engine harness electrical connector (3) from the throttle actuator.
14. Remove the engine harness clip (4) from the generator battery jumper cable.
15. Remove the engine harness clip (6) from the ignition coil bracket stud.
16. Disconnect the engine harness electrical connectors (7) from the right side fuel injectors.

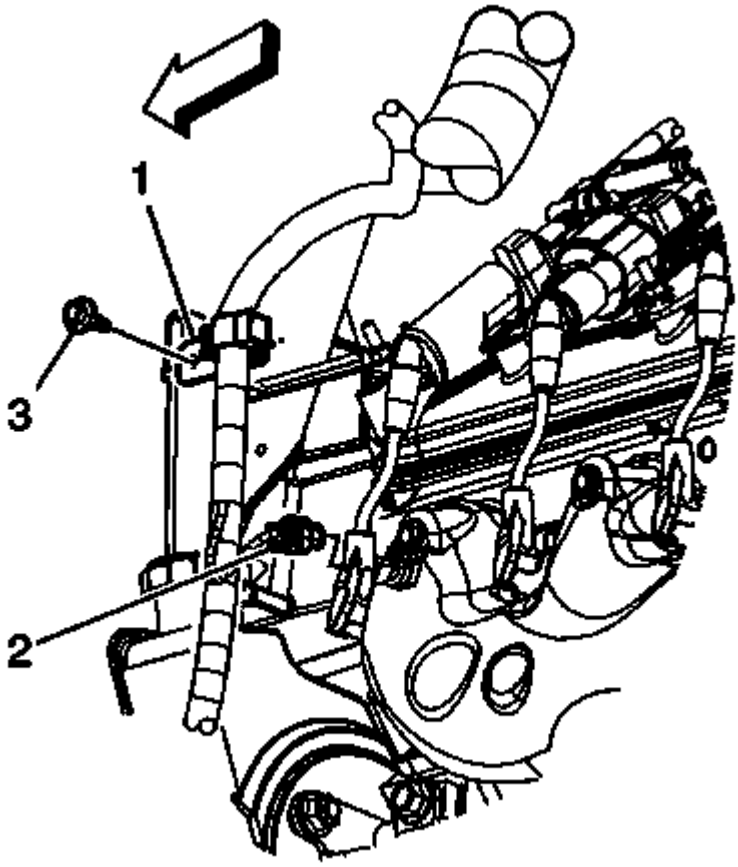

Fig. 90: View Of Engine Wiring Harness, Clip, Bolt & Connector
Courtesy of GENERAL MOTORS COMPANY

17. Remove the engine harness clip (1) bolt (3).
18. Disconnect the engine harness electrical connector (2) from the engine coolant temperature (ECT) sensor.
19. Gather the engine harness branches and tie the harness up out of the way to the cowl panel.

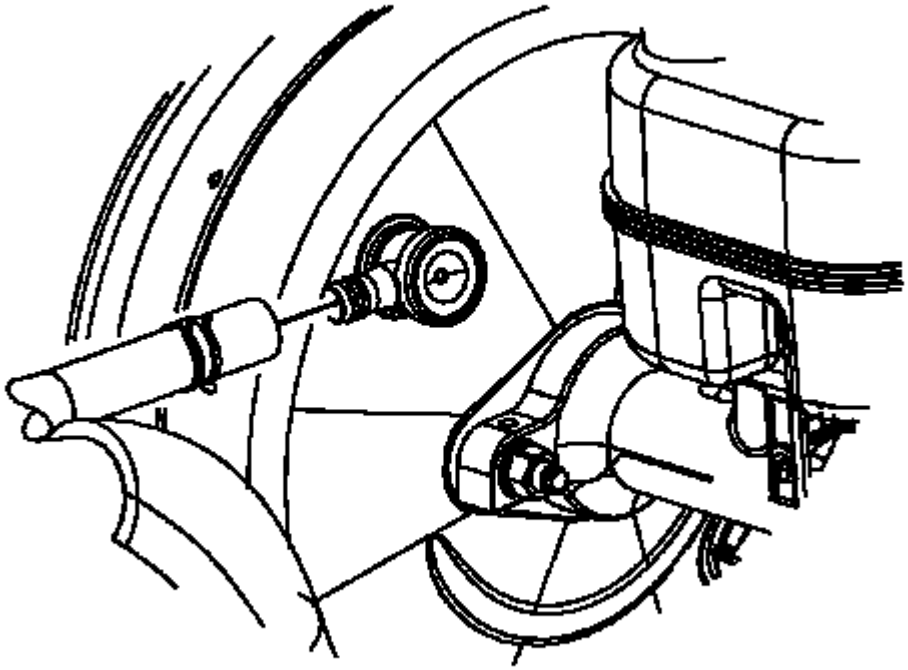

Fig. 91: View Of Brake Booster Vacuum Hose & Booster Fitting
Courtesy of GENERAL MOTORS COMPANY

20. Reposition the brake booster vacuum hose clamp at the booster.
21. Remove the brake booster vacuum hose from the booster fitting.
22. Secure the brake booster vacuum hose to the intake manifold.

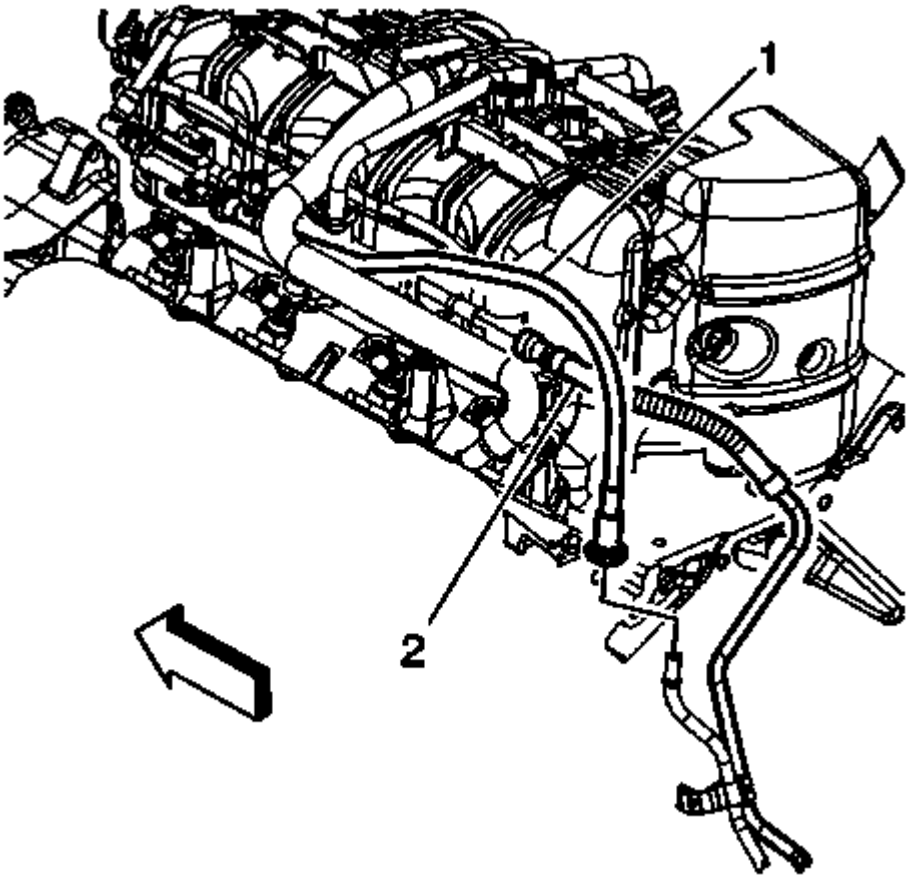

Fig. 92: View Of EVAP Canister Purge Tube & Quick Connect Fitting
Courtesy of GENERAL MOTORS COMPANY

23. Disconnect the EVAP canister purge tube (1) quick connect fitting from the EVAP canister purge solenoid. Refer to **Plastic Collar Quick Connect Fitting Service** .
24. Disconnect the fuel feed line quick connect fitting (2) from the fuel rail. Refer to **Metal Collar Quick Connect Fitting Service** .

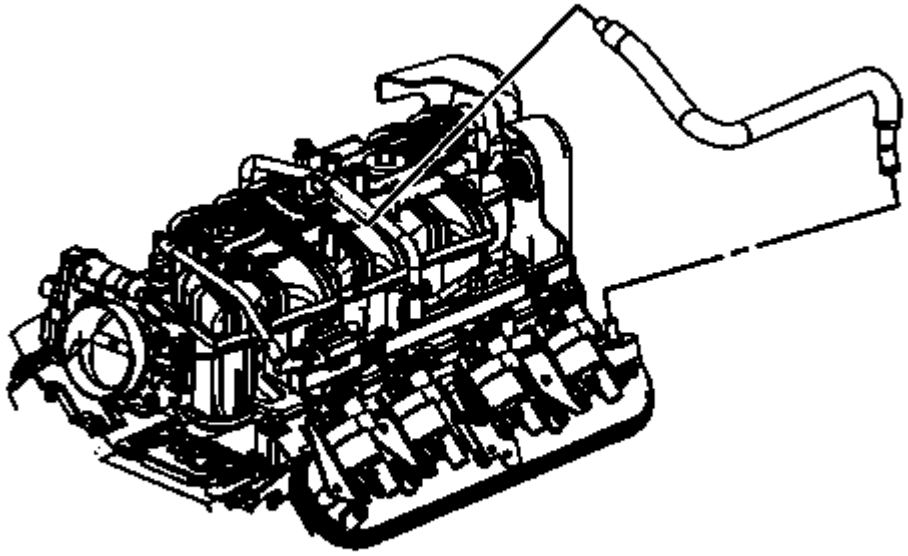

Fig. 93: View Of PCV Hose
Courtesy of GENERAL MOTORS COMPANY

25. Remove the positive crankcase ventilation (PCV) hose from the intake manifold fitting.

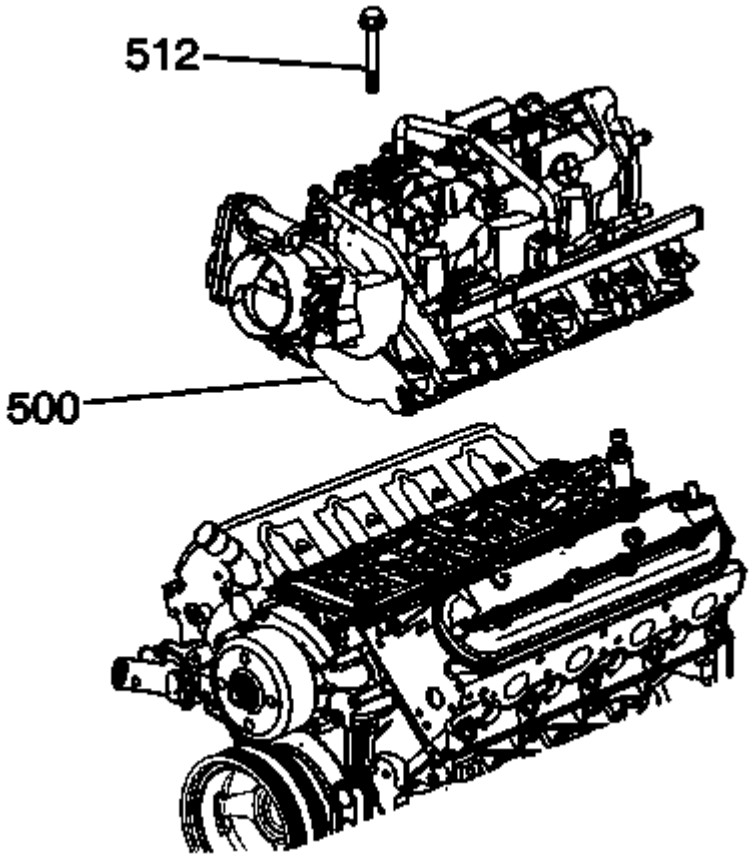

Fig. 94: Intake Manifold
Courtesy of GENERAL MOTORS COMPANY

26. Loosen the intake manifold bolts.
27. Remove the intake manifold (500).

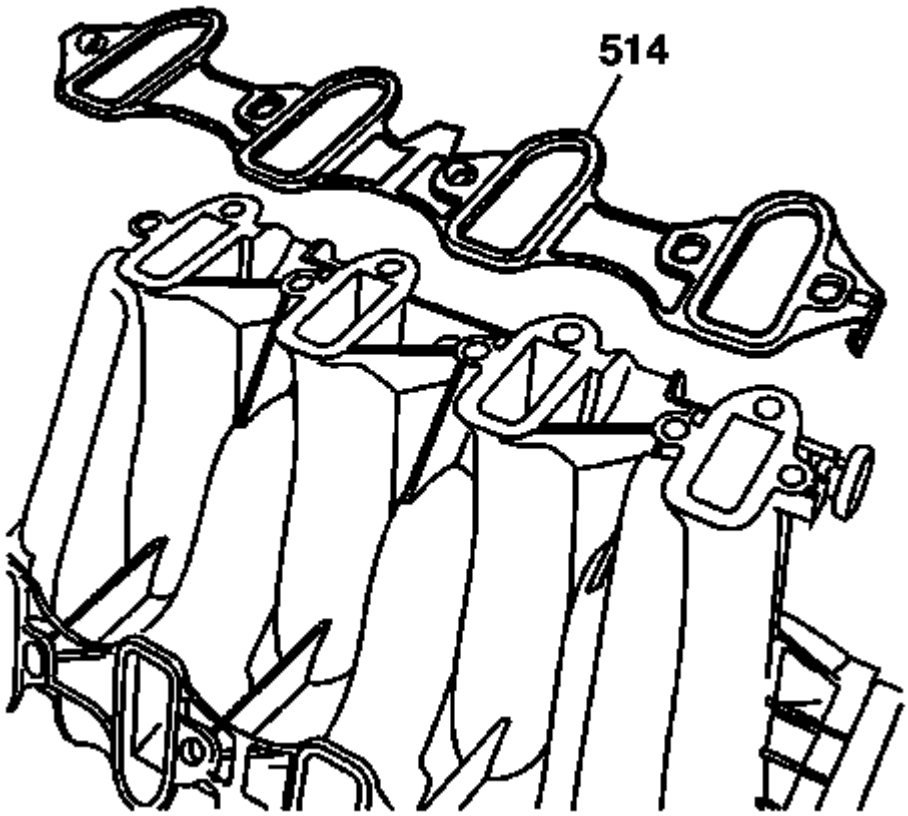

Fig. 95: View Of Intake Manifold-To-Cylinder Head Gasket
Courtesy of GENERAL MOTORS COMPANY

28. Remove and discard the intake manifold gaskets (514).
29. Cover the cylinder head passages in order to prevent dirt or debris from entering the passages.

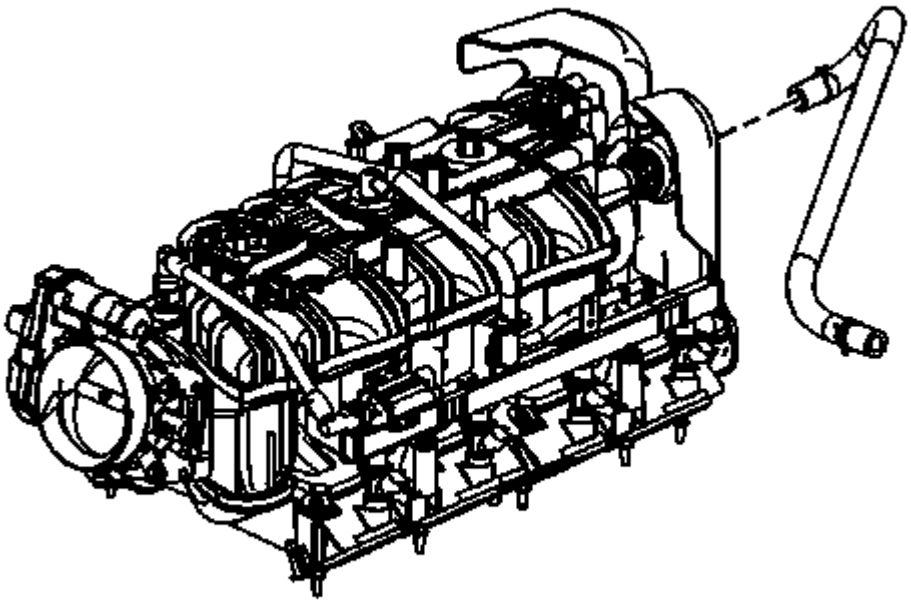

Fig. 96: View Of Vacuum Brake Booster Hose
Courtesy of GENERAL MOTORS COMPANY

30. If replacing the intake manifold, perform the following steps, otherwise proceed to step 21 of the installation procedure.
31. Place the intake manifold on a clean work surface.
32. Reposition the brake booster vacuum hose clamp at the intake manifold.
33. Remove the brake booster vacuum hose from the intake manifold nipple.

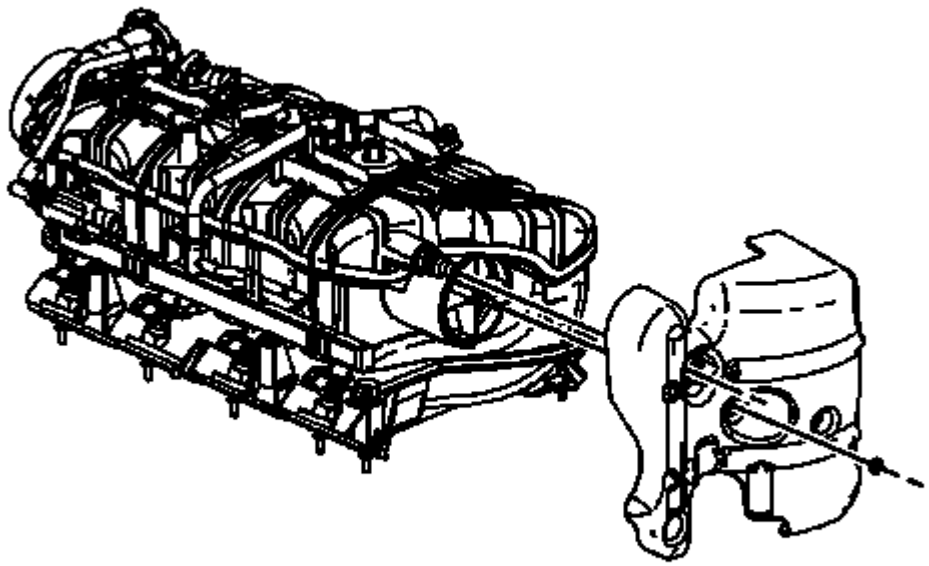

Fig. 97: View Of Upper Intake Manifold Cover & Nut
Courtesy of GENERAL MOTORS COMPANY

34. Remove the upper intake manifold cover nut.
35. Remove the upper intake manifold cover.

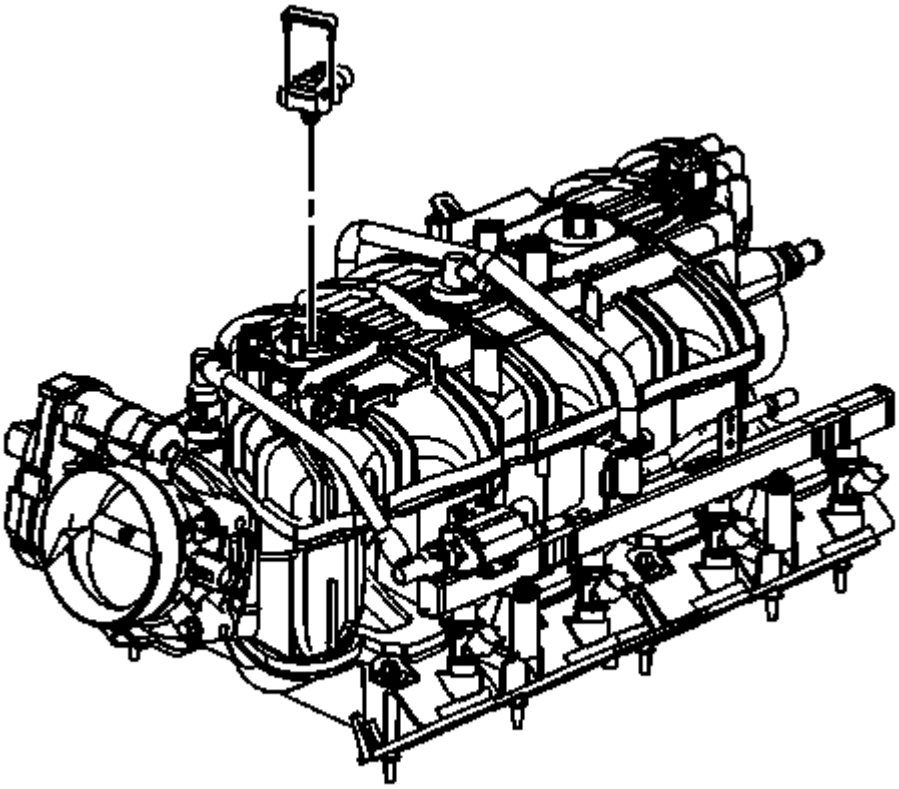

Fig. 98: View Of MAP Sensor & Retainer
Courtesy of GENERAL MOTORS COMPANY

36. Remove the manifold absolute pressure (MAP) sensor retainer.
37. Remove the MAP sensor.

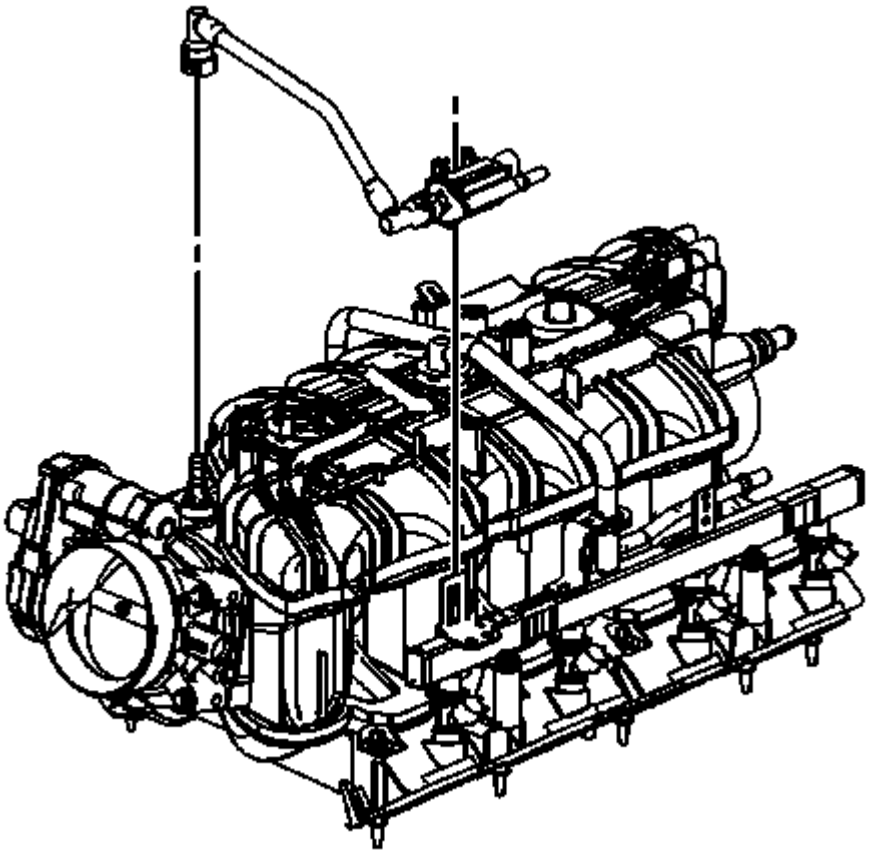

Fig. 99: View Of EVAP Tube & Purge Solenoid
Courtesy of GENERAL MOTORS COMPANY

38. Disconnect the EVAP tube quick connect fitting at the intake manifold. Refer to **Plastic Collar Quick Connect Fitting Service** .
39. Disengage the retainer securing the EVAP canister purge solenoid to the fuel rail.
40. Remove the EVAP tube and purge solenoid.

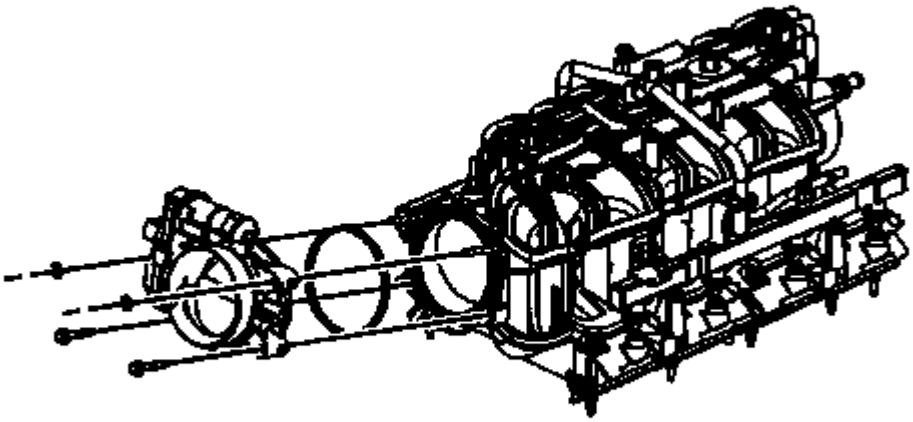

Fig. 100: View Of Throttle Body, Gasket & Bolts/Nuts
Courtesy of GENERAL MOTORS COMPANY

41. Remove the throttle body bolts/nuts.
42. Remove the throttle body.
43. Remove and discard the throttle body gasket.

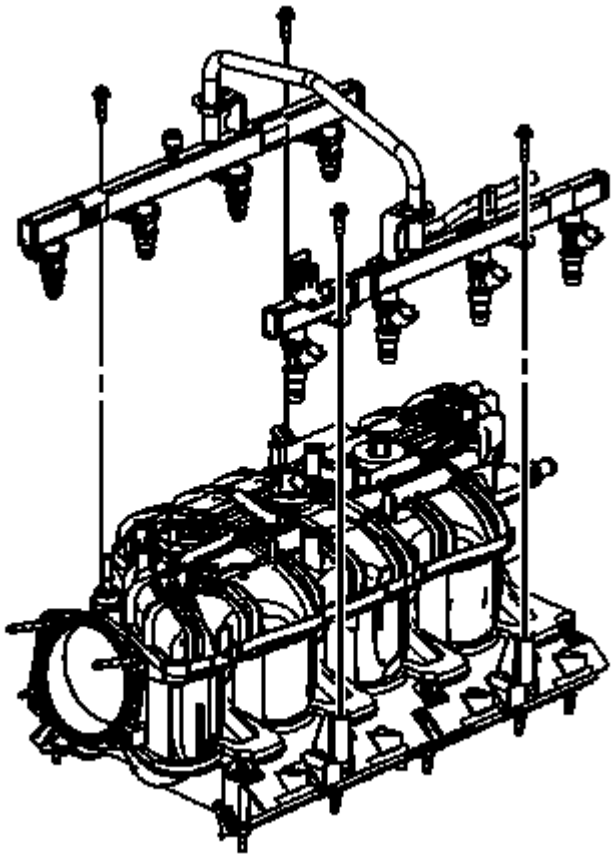

Fig. 101: View Of Fuel Rail & Bolts
Courtesy of GENERAL MOTORS COMPANY

44. Remove the fuel rail bolts.

NOTE: **Lift evenly on both sides of the fuel rail until all injectors are removed from their bores.**

45. Remove the fuel rail.
46. Remove and discard the fuel injector lower O-ring seals.

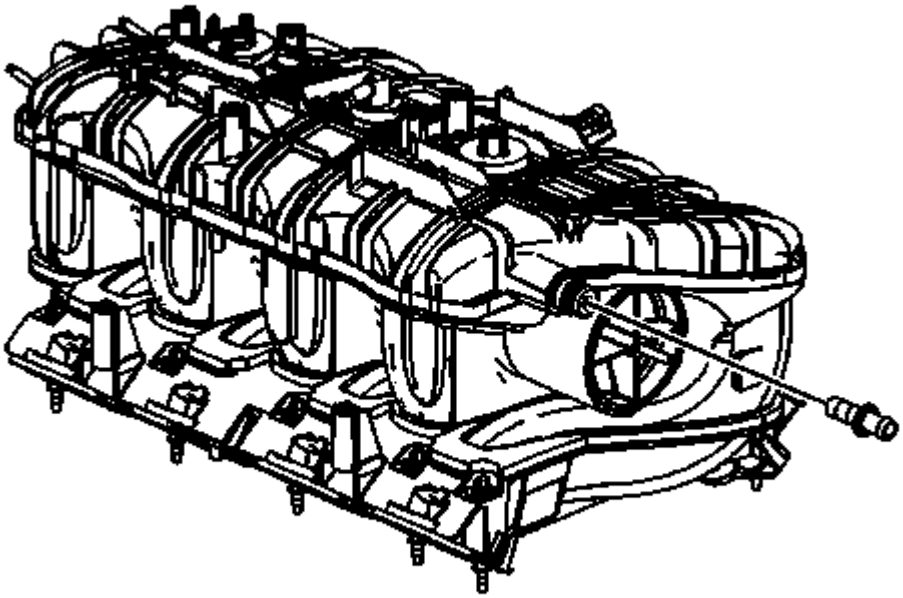

Fig. 102: View Of Brake Booster Vacuum Hose Nipple
Courtesy of GENERAL MOTORS COMPANY

NOTE: Evenly push in the RED collar in order to remove the nipple.

47. Remove the brake booster vacuum hose nipple.

Installation Procedure

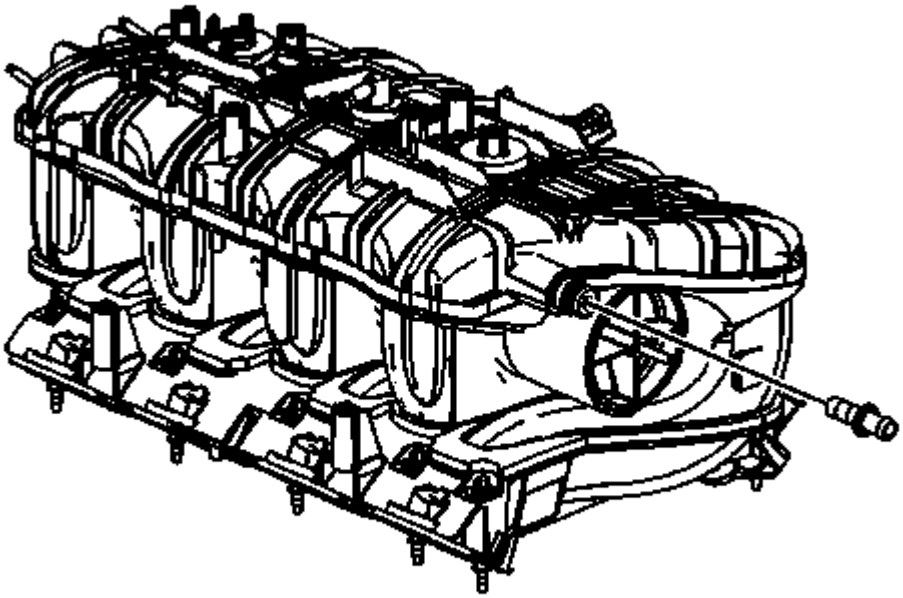

Fig. 103: View Of Brake Booster Vacuum Hose Nipple
Courtesy of GENERAL MOTORS COMPANY

1. If the intake manifold was replaced perform the following steps, otherwise proceed to step 21.

NOTE: Evenly push in the RED collar in order to install the nipple.

2. Install the brake booster vacuum hose nipple to the NEW intake manifold.

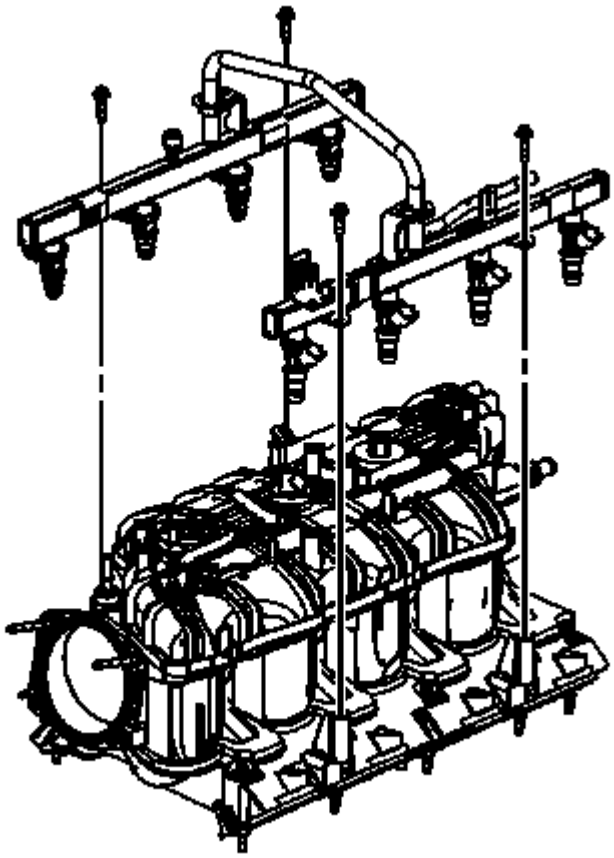

Fig. 104: View Of Fuel Rail & Bolts
Courtesy of GENERAL MOTORS COMPANY

3. Install NEW fuel injector lower O-ring seals onto the injectors.
4. Lubricate the NEW O-ring seals with clean engine oil.

NOTE: **Push down firmly on both sides of the rail until all the injectors have been seated into their bores.**

5. Install the fuel rail.

CAUTION: Refer to Fastener Caution .

6. Install the fuel rail bolts and tighten to 10 N.m (89 lb in).

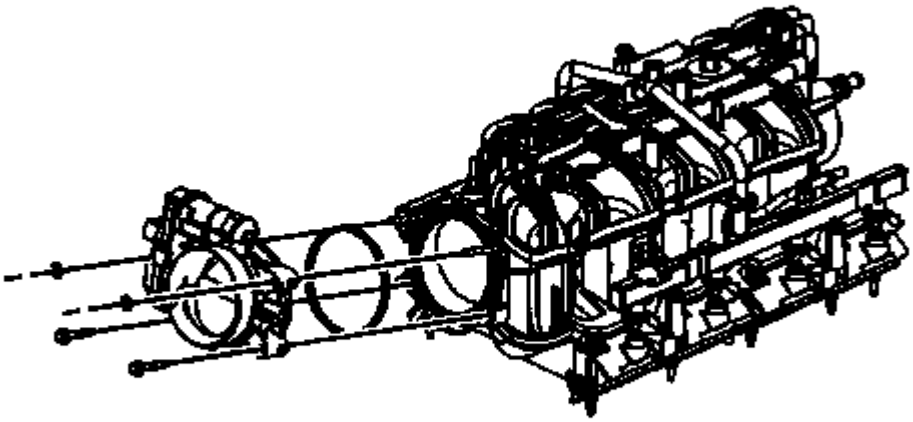

Fig. 105: View Of Throttle Body, Gasket & Bolts/Nuts
Courtesy of GENERAL MOTORS COMPANY

7. Install a NEW throttle body gasket to the intake manifold.
8. Install the throttle body.
9. Install the throttle body bolts/nuts and tighten to 10 N.m (89 lb in).

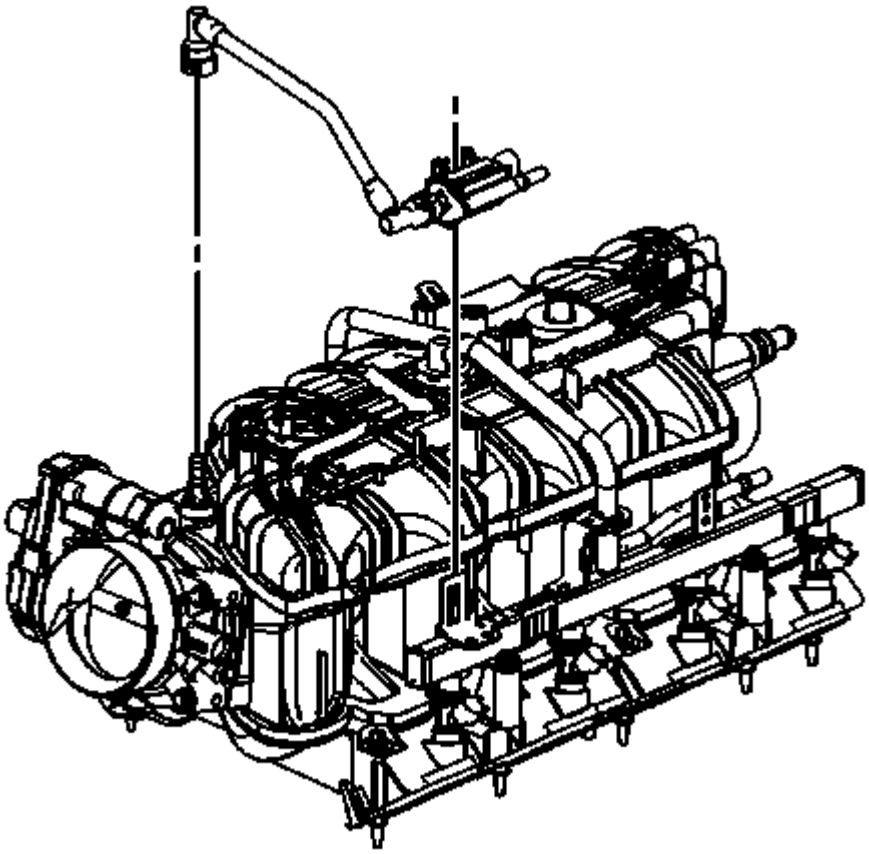

Fig. 106: View Of EVAP Tube & Purge Solenoid
Courtesy of GENERAL MOTORS COMPANY

10. Install the EVAP tube and purge solenoid.
11. Install the EVAP canister purge solenoid to the fuel rail bracket and engage the retainer.
12. Connect the EVAP tube quick connect fitting at the intake manifold. Refer to **Plastic Collar Quick Connect Fitting Service** .

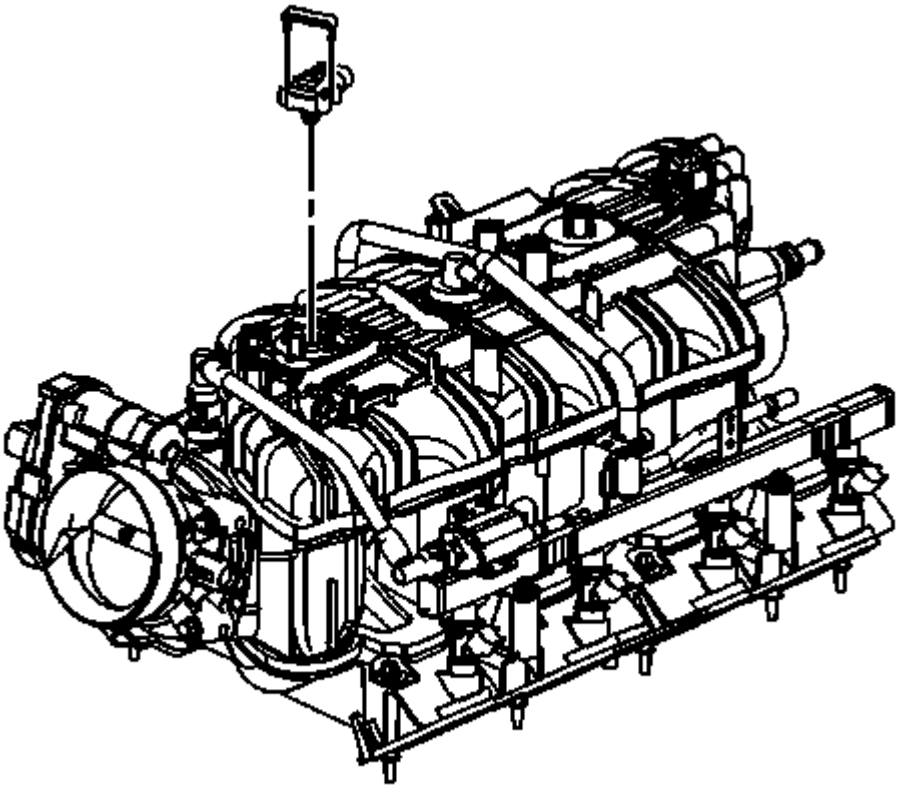

Fig. 107: View Of MAP Sensor & Retainer
Courtesy of GENERAL MOTORS COMPANY

13. Lubricate the MAP sensor seal with clean engine oil.
14. Install the MAP sensor.
15. Install the MAP sensor retainer.

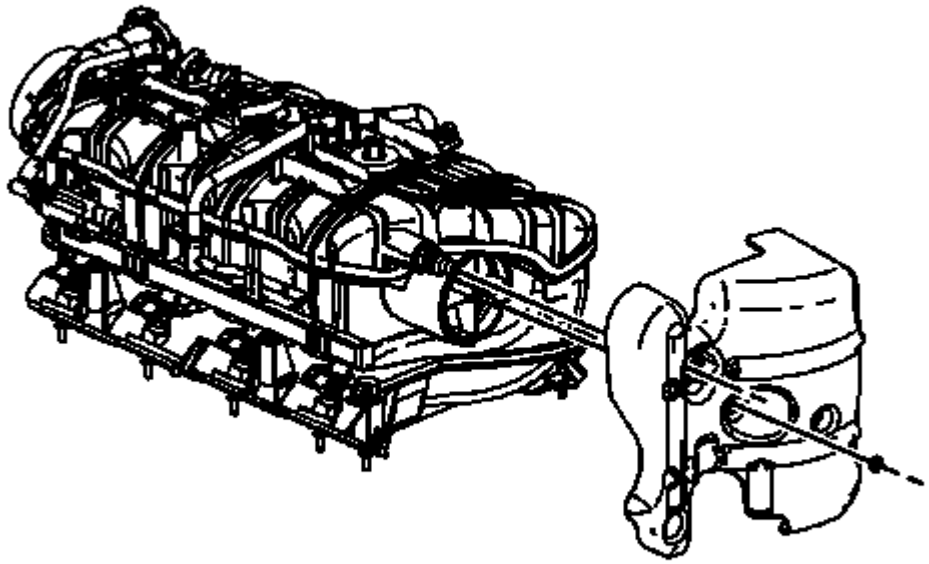

Fig. 108: View Of Upper Intake Manifold Cover & Nut
Courtesy of GENERAL MOTORS COMPANY

16. Install the upper intake manifold cover.
17. Install the upper intake manifold cover nut until snug

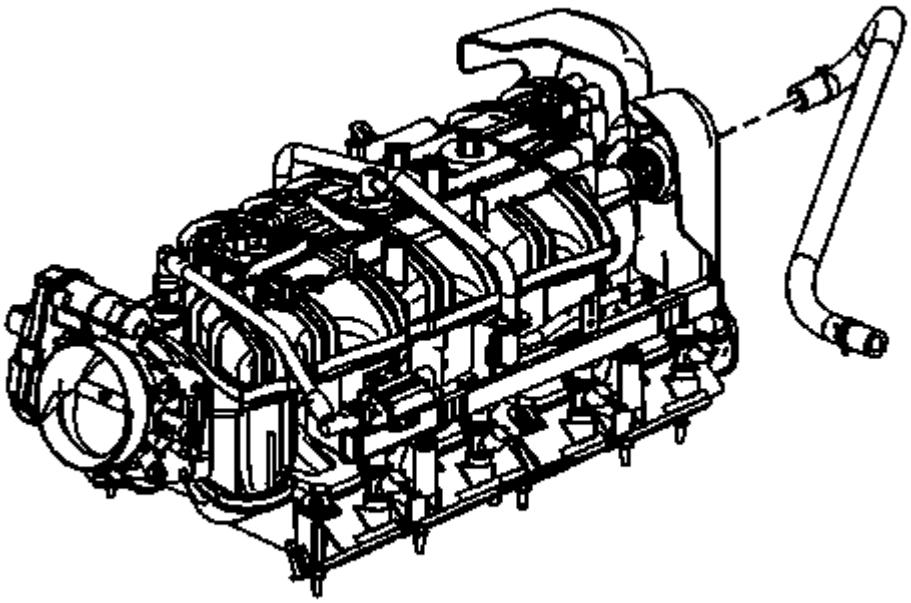

Fig. 109: View Of Vacuum Brake Booster Hose
Courtesy of GENERAL MOTORS COMPANY

18. Install the brake booster vacuum hose to the intake manifold nipple.
19. Position the brake booster vacuum hose clamp at the intake manifold.
20. Secure the brake booster vacuum hose to the intake manifold.

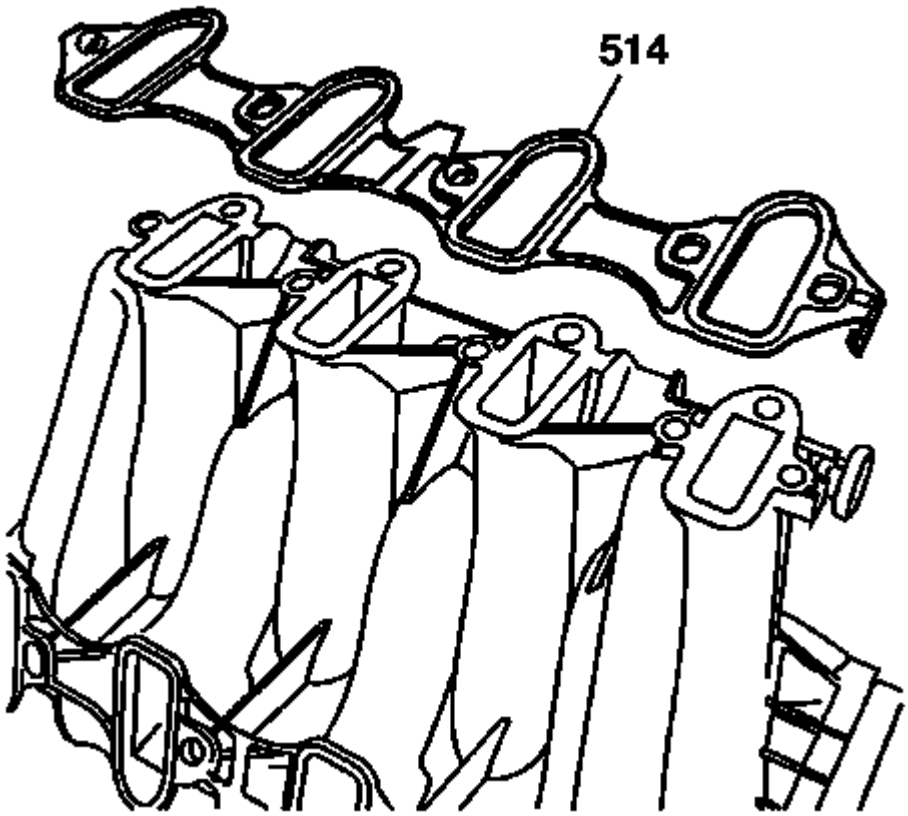

Fig. 110: View Of Intake Manifold-To-Cylinder Head Gasket
Courtesy of GENERAL MOTORS COMPANY

21. Install NEW intake manifold gaskets (514) to the intake manifold.
22. Remove the covers from the cylinder head passages.

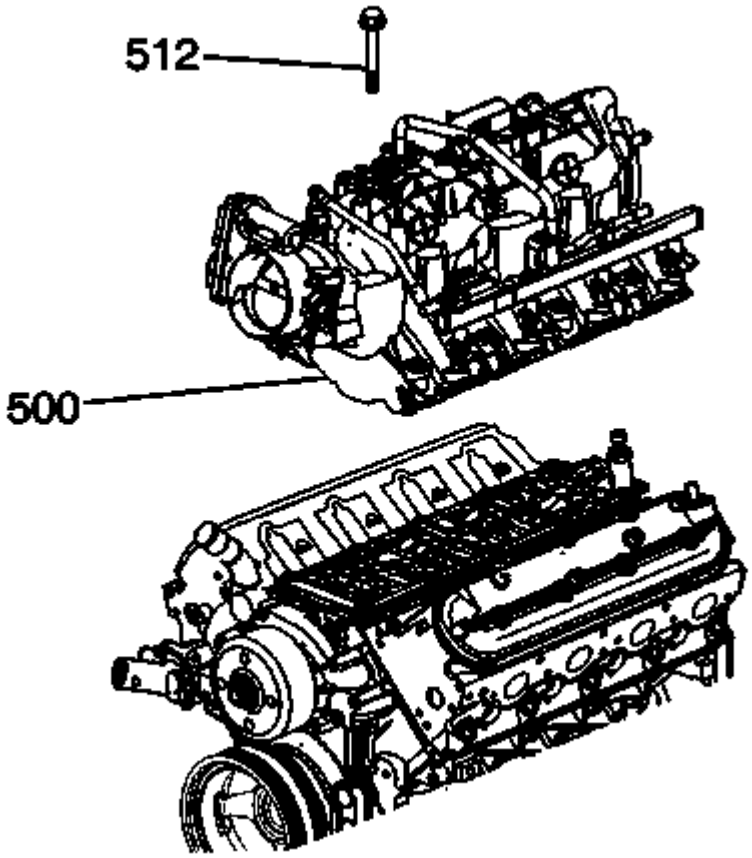

Fig. 111: Intake Manifold
Courtesy of GENERAL MOTORS COMPANY

23. Install the intake manifold (500).

NOTE: **The aid of an assistant may be helpful in holding the engine harness up out of the way so the upper intake manifold cover does not get caught against the engine harness.**

24. Tighten the intake manifold bolts (512) until snug.

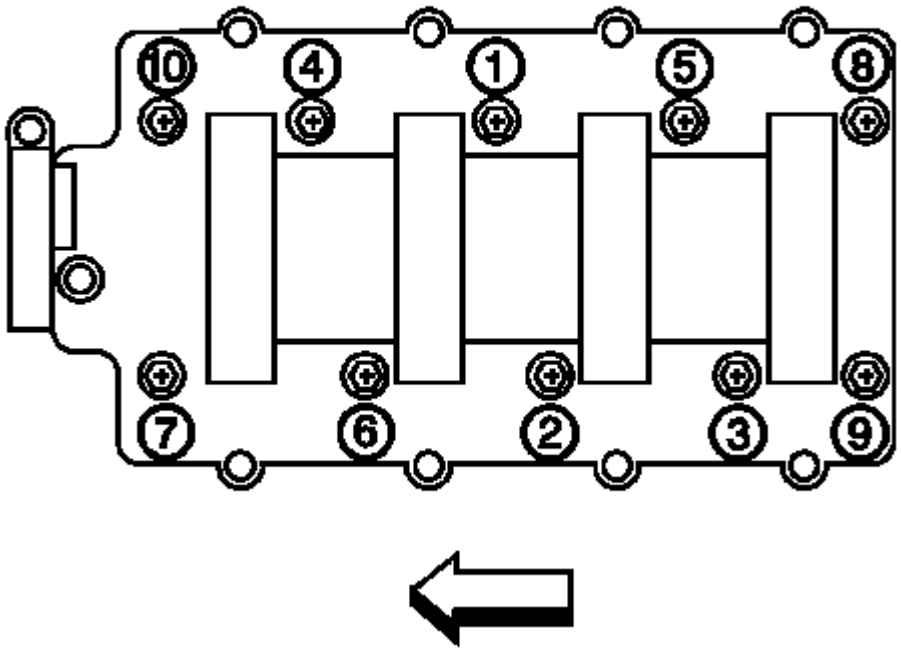

Fig. 112: Identifying Intake Manifold Bolt Tightening Sequence
Courtesy of GENERAL MOTORS COMPANY

25. Tighten the intake manifold bolts to specifications.
    - Tighten the bolts a first pass in the sequence shown to 5 N.m (44 lb in).
    - Tighten the bolts a final pass in the sequence shown to 10 N.m (89 lb in).

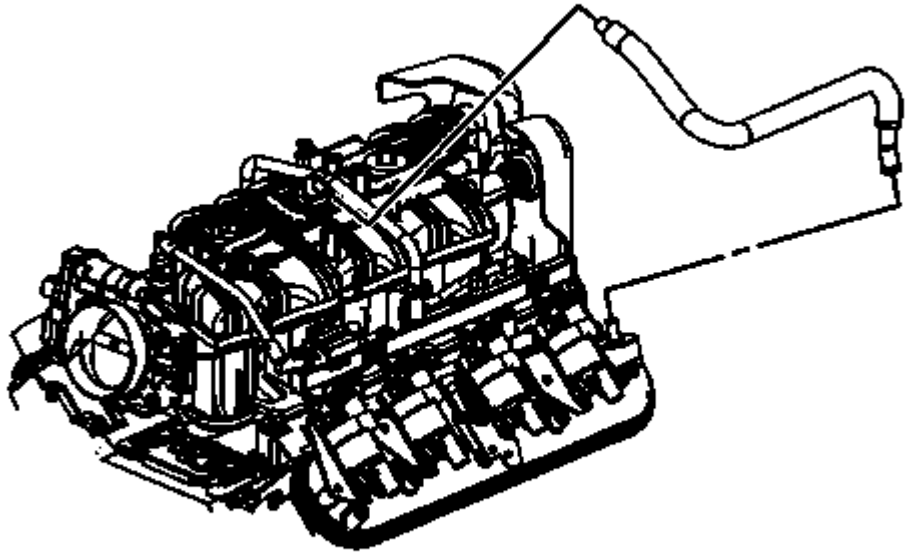

Fig. 113: View Of PCV Hose
Courtesy of GENERAL MOTORS COMPANY

26. Position and install the PCV hose to the intake manifold fitting.

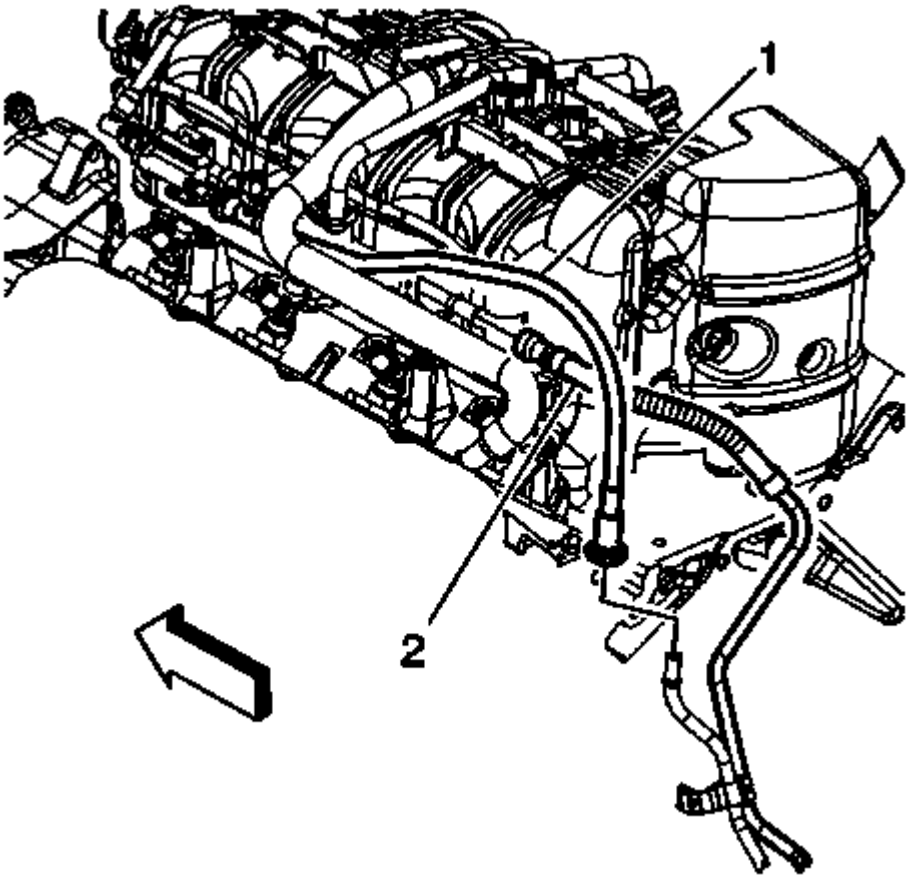

Fig. 114: View Of EVAP Canister Purge Tube & Quick Connect Fitting
Courtesy of GENERAL MOTORS COMPANY

27. Connect the fuel feed line quick connect fitting (2) to the fuel rail. Refer to **Metal Collar Quick Connect Fitting Service** .
28. Connect the EVAP canister purge tube (1) quick connect fitting to the EVAP canister purge solenoid. Refer to **Plastic Collar Quick Connect Fitting Service** .

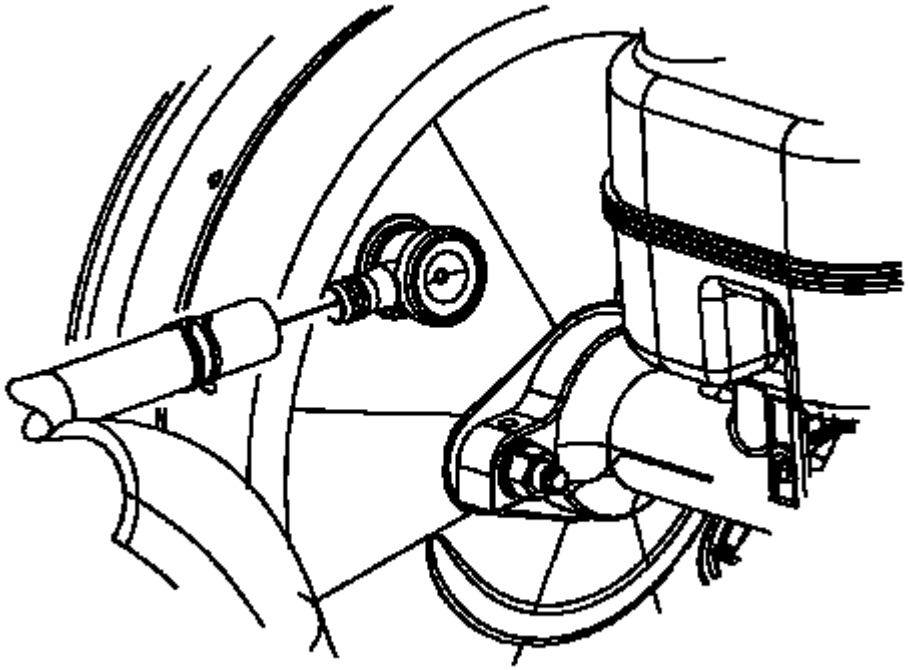

Fig. 115: View Of Brake Booster Vacuum Hose & Booster Fitting
Courtesy of GENERAL MOTORS COMPANY

29. Unsecure the brake booster vacuum hose from the intake manifold.
30. Install the brake booster vacuum hose to the booster fitting.
31. Position the brake booster vacuum hose clamp at the booster.

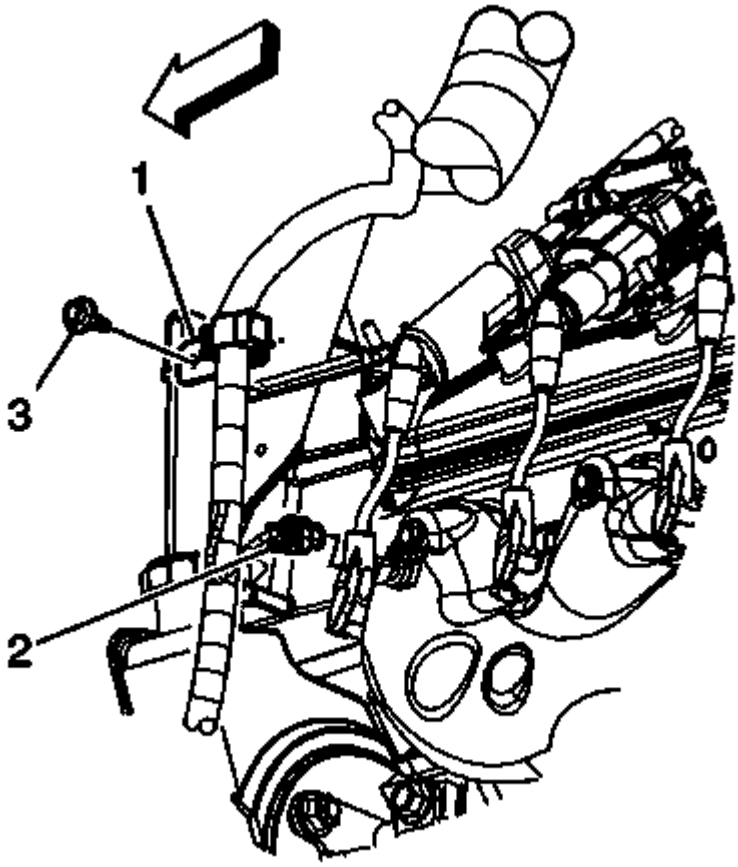

Fig. 116: View Of Engine Wiring Harness, Clip, Bolt & Connector
Courtesy of GENERAL MOTORS COMPANY

32. Untie the engine harness branches from the cowl panel and position over the engine.
33. Connect the engine harness electrical connector (2) to the ECT sensor.
34. Position the engine harness clip (1) to the generator bracket and install the bolt (3).

    Tighten the bolt to 9 N.m (80 lb in).

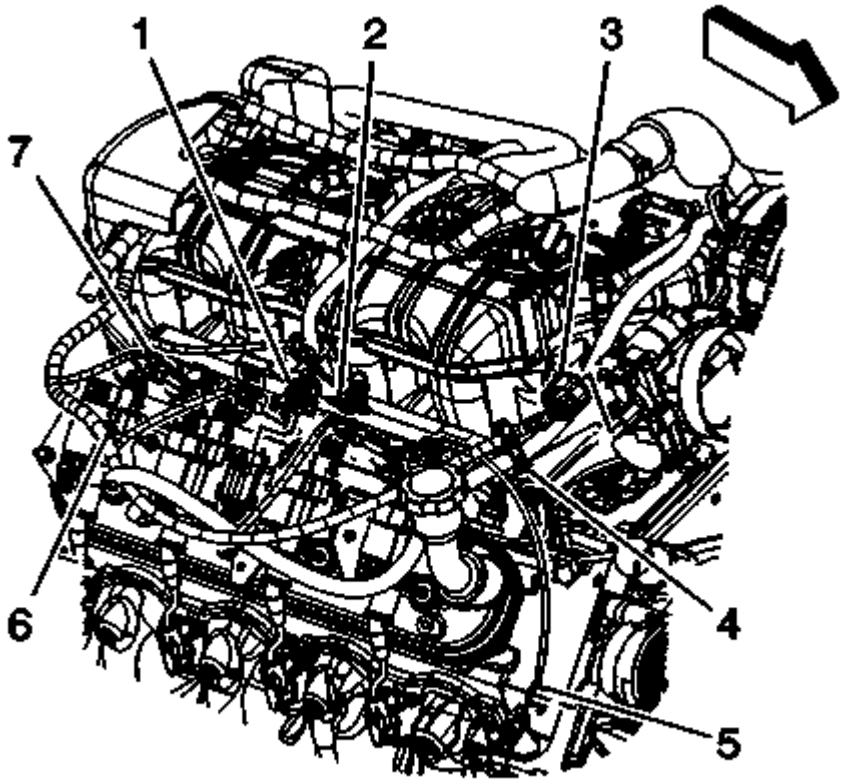

Fig. 117: View Of CPA Retainer, Engine Harness Electrical Connectors & Harness Clips
Courtesy of GENERAL MOTORS COMPANY

35. Connect the engine harness electrical connectors (7) to the right side fuel injectors.
36. Install the engine harness clip (6) to the ignition coil bracket stud.
37. Install the engine harness clip (4) to the generator battery jumper cable.
38. Connect the engine harness electrical connector (3) to the throttle actuator.
39. Connect the engine harness electrical connector (1) to the ignition coil harness electrical connector.
40. Install the CPA retainer (2).

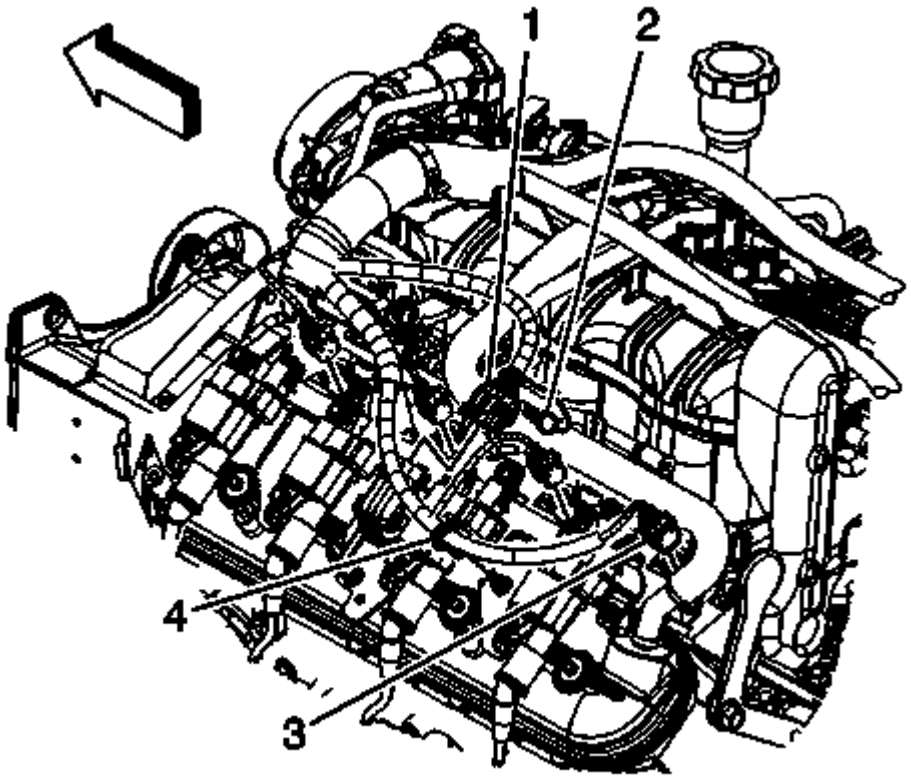

Fig. 118: View Of CPA Retainer, Electrical Connectors & Engine Harness Clips
Courtesy of GENERAL MOTORS COMPANY

41. Install the engine harness clip (4) to the ignition coil bracket stud.
42. Connect the engine harness electrical connectors (3) to the left side fuel injectors.
43. Connect the engine harness electrical connector (1) to the ignition coil harness electrical connector.
44. Install the CPA retainer (1).

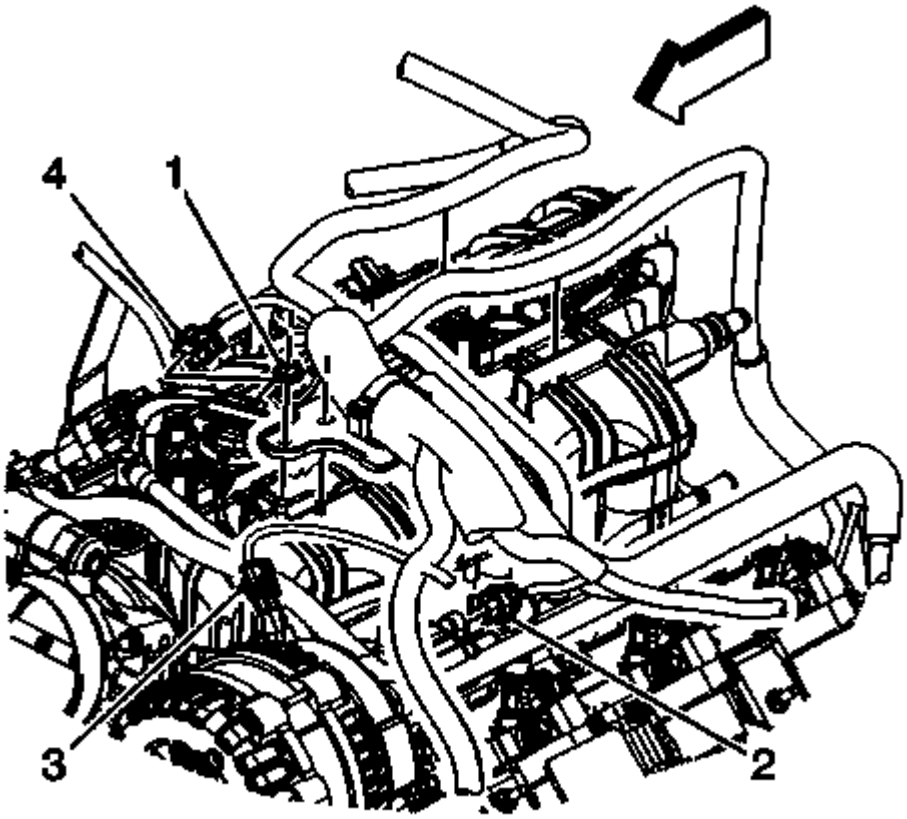

Fig. 119: View Of Engine Harness Retainer Nut & Electrical Connectors
Courtesy of GENERAL MOTORS COMPANY

45. Connect the engine wiring harness electrical connector (4) to the MAP sensor.
46. Connect the engine harness electrical connector (2) to the EVAP canister purge solenoid.
47. Install the engine harness retainer to the stud and locator pin.
48. Install the engine harness retainer nut (1) and tighten to 5 N.m (44 lb in).
49. Install the generator. Refer to **Generator Replacement** .
50. Install the air cleaner outlet duct. Refer to **Air Cleaner Resonator Outlet Duct Replacement** .

INTAKE MANIFOLD REPLACEMENT (EXCEPT RPOS LY2, LY6, LC9, LMG, LY5)

Removal Procedure

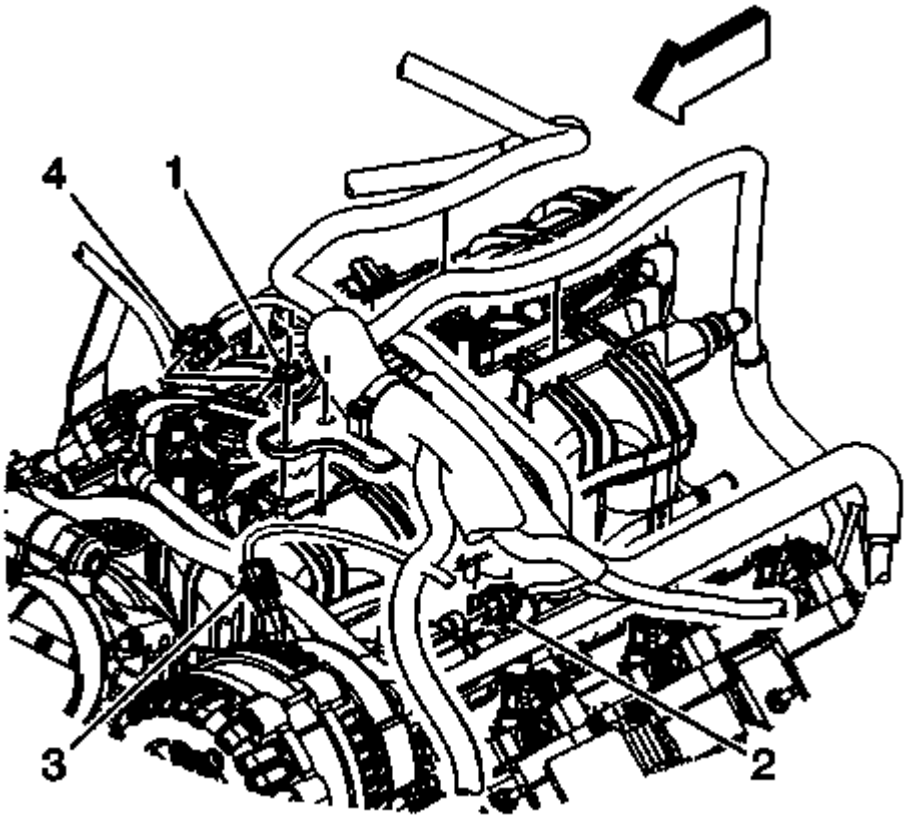

Fig. 120: View Of Engine Harness Retainer Nut & Electrical Connectors
Courtesy of GENERAL MOTORS COMPANY

1. Remove the air cleaner outlet duct. Refer to **Air Cleaner Resonator Outlet Duct Replacement** .
2. Remove the generator. Refer to **Generator Replacement** .
3. Remove the engine harness retainer nut (1).
4. Remove the engine harness retainer from the stud and locator pin.
5. Disconnect the engine harness electrical connector (2) from the evaporative emission (EVAP) canister purge solenoid.
6. Disconnect the engine wiring harness electrical connector (4) from the manifold absolute pressure (MAP) sensor.

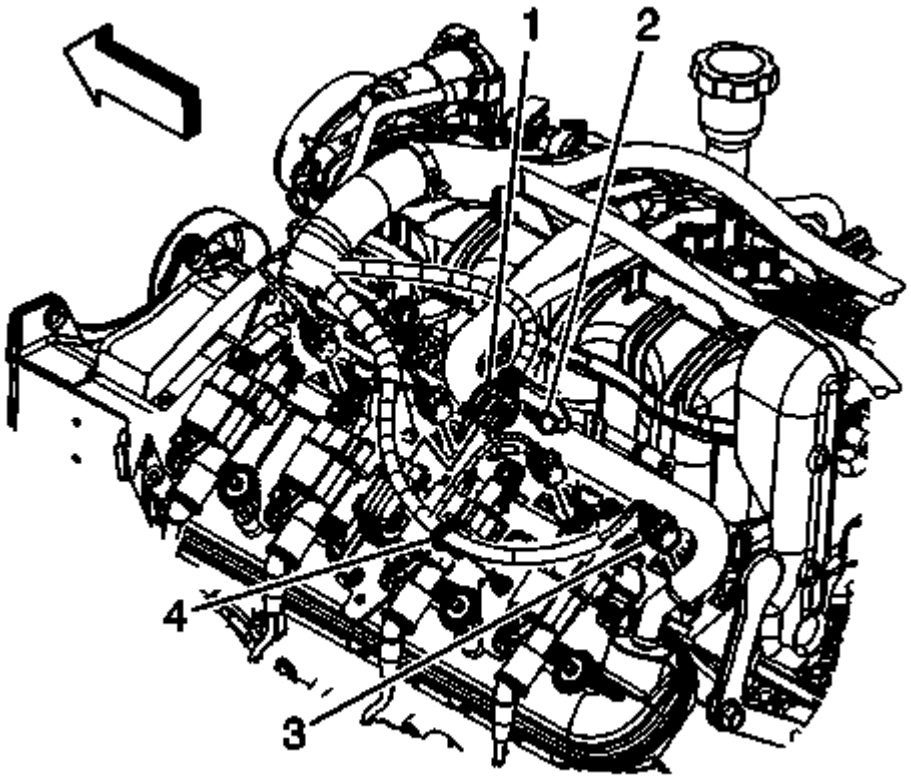

Fig. 121: View Of CPA Retainer, Electrical Connectors & Engine Harness Clips
Courtesy of GENERAL MOTORS COMPANY

7. Remove the connector position assurance (CPA) retainer (1).
8. Disconnect the engine harness electrical connector (1) from the ignition coil harness electrical connector.
9. Disconnect the engine harness electrical connectors (3) from the left side fuel injectors.
10. Remove the engine harness clip (4) from the ignition coil bracket stud.

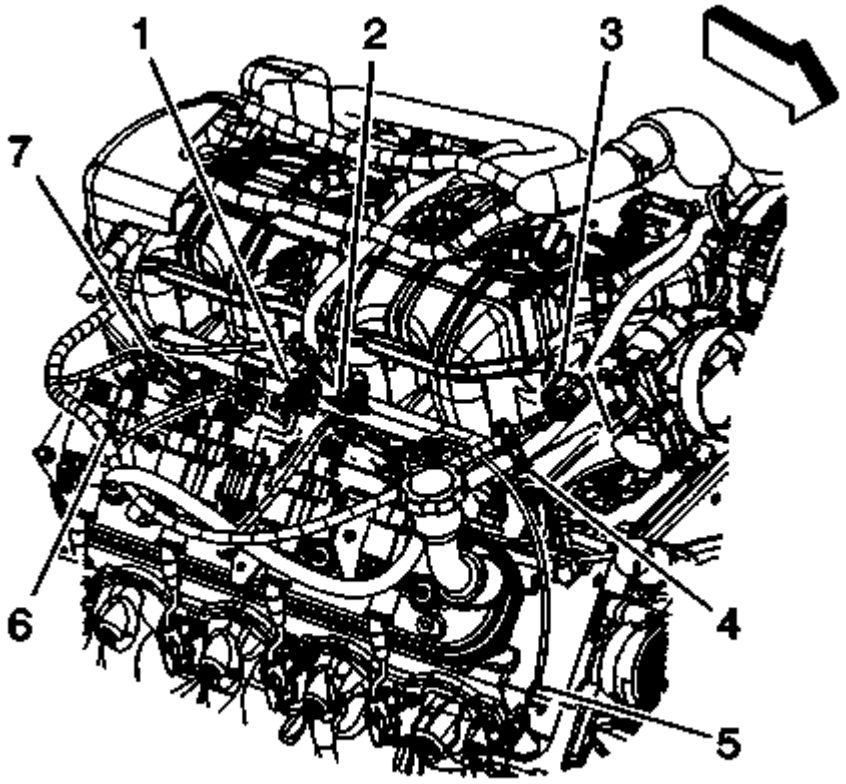

Fig. 122: View Of CPA Retainer, Engine Harness Electrical Connectors & Harness Clips
Courtesy of GENERAL MOTORS COMPANY

11. Remove the CPA retainer (2).
12. Disconnect the engine harness electrical connector (1) from the ignition coil harness electrical connector.
13. Disconnect the engine harness electrical connector (3) from the throttle actuator.
14. Remove the engine harness clip (4) from the generator battery jumper cable.
15. Remove the engine harness clip (6) from the ignition coil bracket stud.
16. Disconnect the engine harness electrical connectors (7) from the right side fuel injectors.

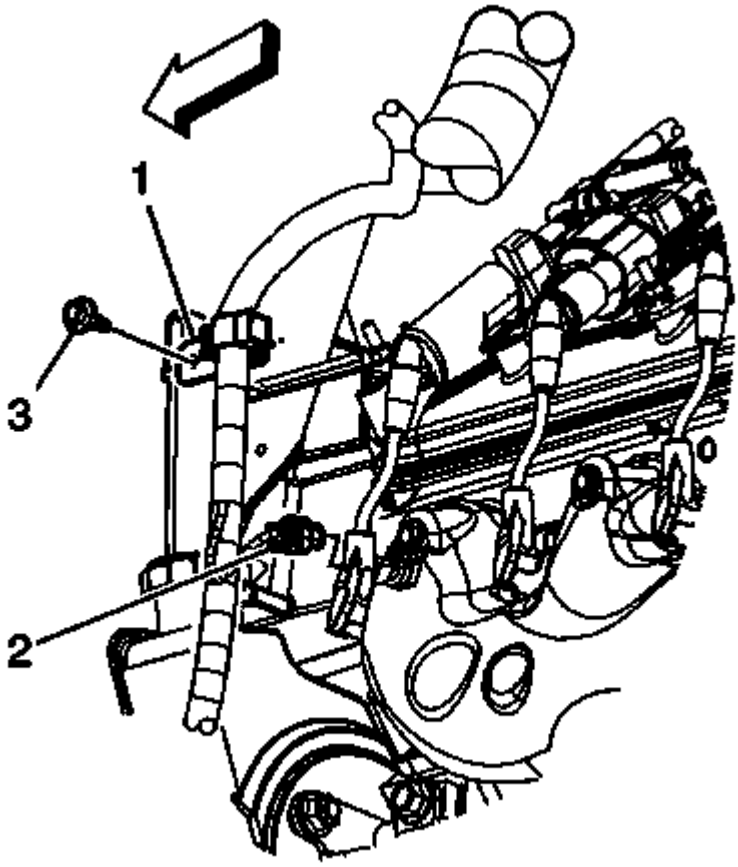

Fig. 123: View Of Engine Wiring Harness, Clip, Bolt & Connector
Courtesy of GENERAL MOTORS COMPANY

17. Remove the engine harness clip (1) bolt (3).
18. Disconnect the engine harness electrical connector (2) from the engine coolant temperature (ECT) sensor.
19. Gather the engine harness branches and tie the harness up out of the way to the cowl panel.

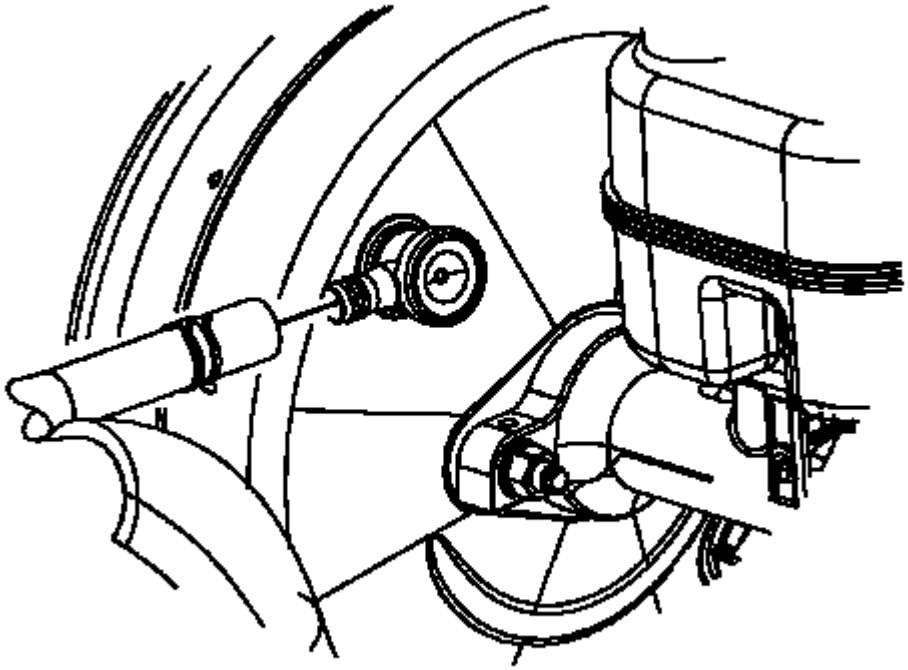

Fig. 124: View Of Brake Booster Vacuum Hose & Booster Fitting
Courtesy of GENERAL MOTORS COMPANY

20. Reposition the brake booster vacuum hose clamp at the booster.
21. Remove the brake booster vacuum hose from the booster fitting.
22. Secure the brake booster vacuum hose to the intake manifold.

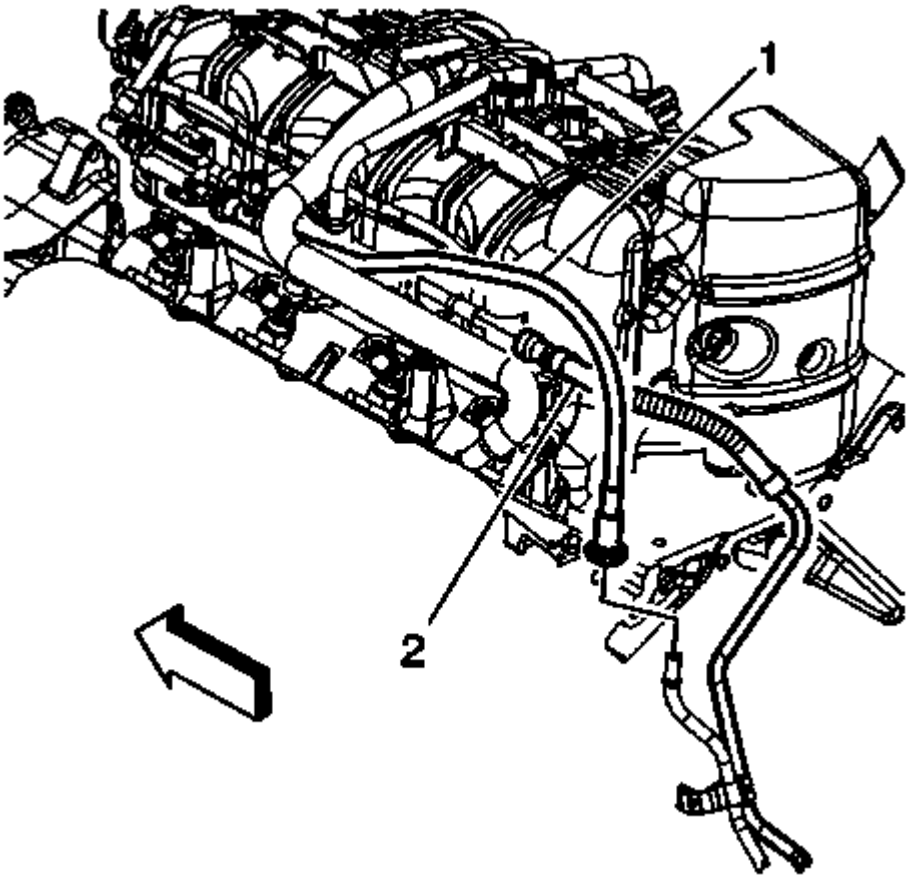

Fig. 125: View Of EVAP Canister Purge Tube & Quick Connect Fitting
Courtesy of GENERAL MOTORS COMPANY

23. Disconnect the EVAP canister purge tube (1) quick connect fitting from the EVAP canister purge solenoid. Refer to **Plastic Collar Quick Connect Fitting Service** .
24. Disconnect the fuel feed line quick connect fitting (2) from the fuel rail. Refer to **Metal Collar Quick Connect Fitting Service** .

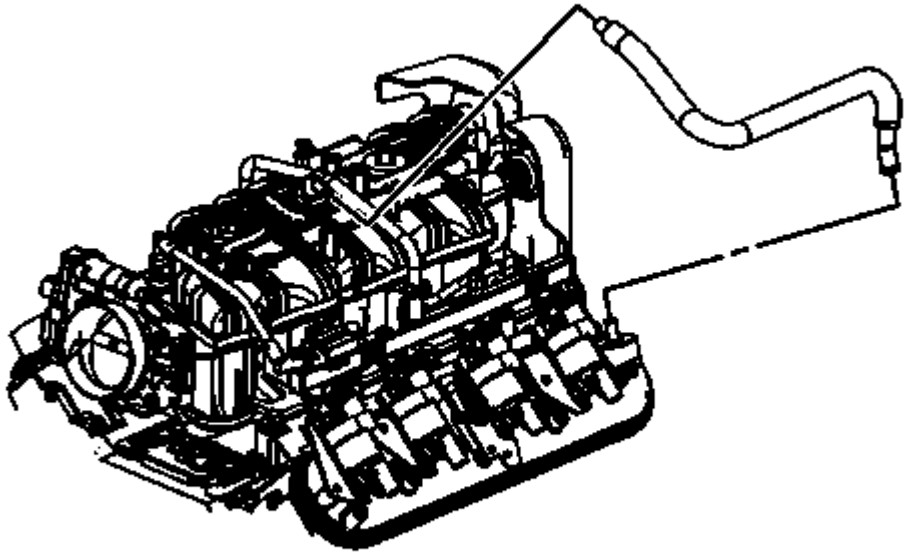

Fig. 126: View Of PCV Hose
Courtesy of GENERAL MOTORS COMPANY

25. Remove the positive crankcase ventilation (PCV) hose from the intake manifold fitting.
26. Position the hose out of the way.

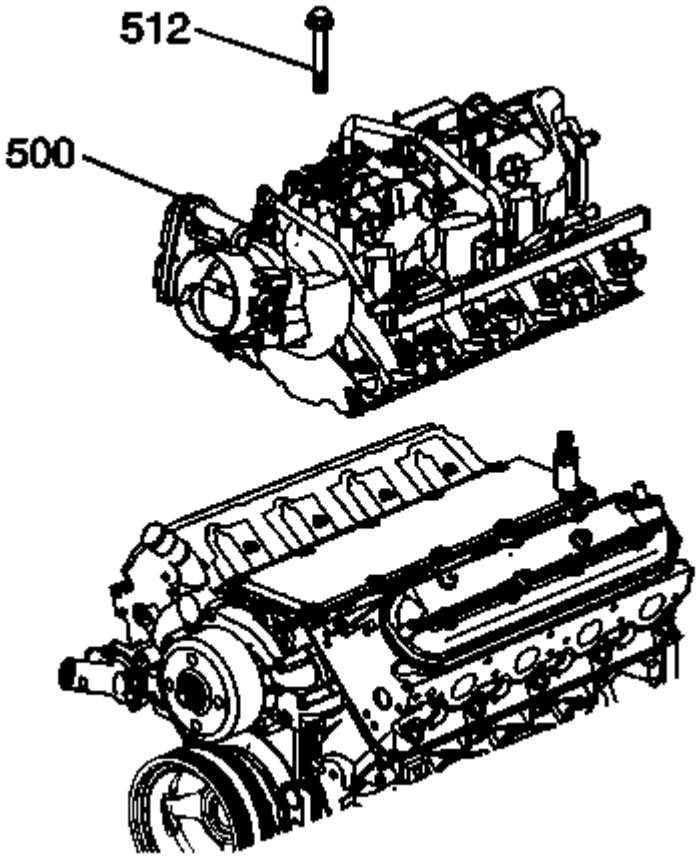

Fig. 127: Intake Manifold & Bolts
Courtesy of GENERAL MOTORS COMPANY

27. Loosen the intake manifold bolts (512).

NOTE: **The aid of an assistant may be helpful in holding the engine harness up out of the way so the upper intake manifold cover does not get caught against the engine harness.**

28. Remove the intake manifold (500).
29. Cover the cylinder head passages in order to prevent dirt or debris from entering the passages.

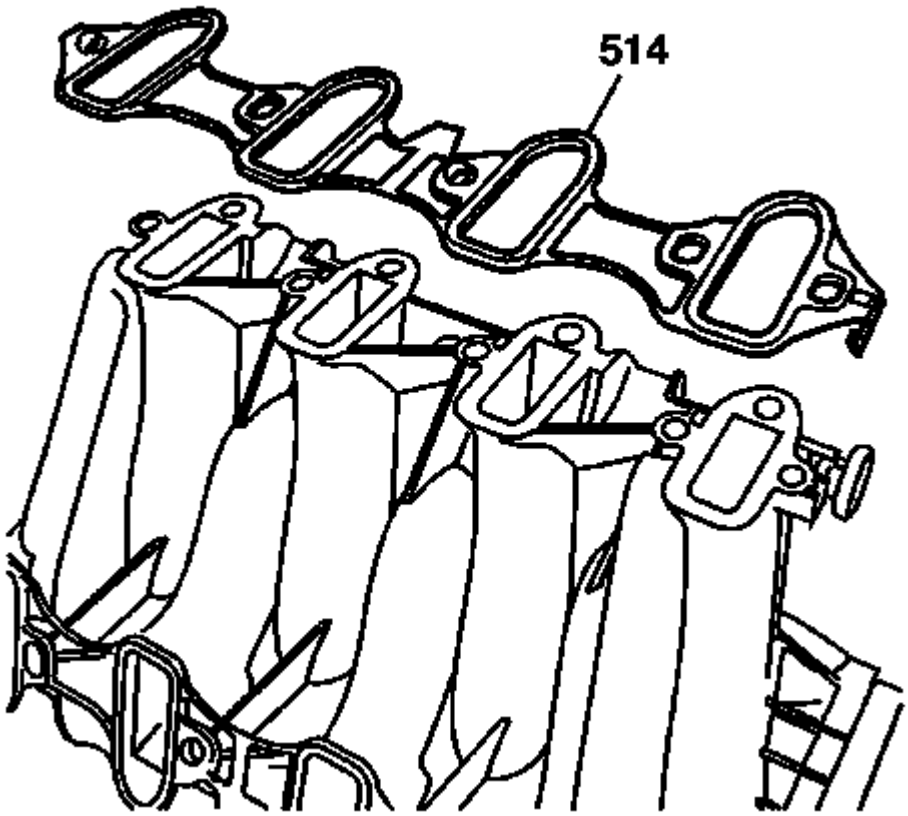

Fig. 128: View Of Intake Manifold-To-Cylinder Head Gasket
Courtesy of GENERAL MOTORS COMPANY

30. Remove and discard the intake manifold gaskets (514).

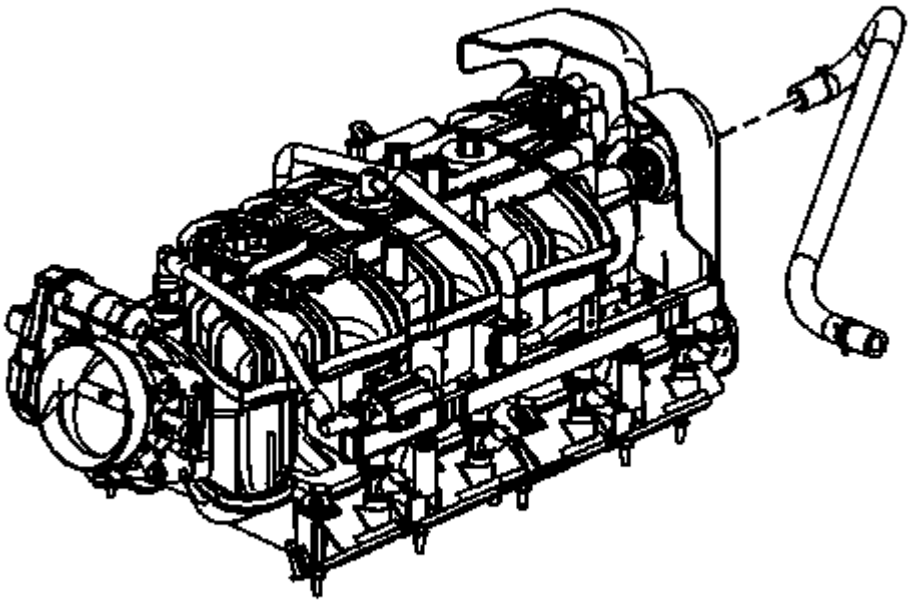

Fig. 129: View Of Vacuum Brake Booster Hose
Courtesy of GENERAL MOTORS COMPANY

31. If replacing the intake manifold, perform the following steps, otherwise proceed to step 21 of the installation procedure.
32. Place the intake manifold on a clean work surface.
33. Reposition the brake booster vacuum hose clamp at the intake manifold.
34. Remove the brake booster vacuum hose from the intake manifold nipple.

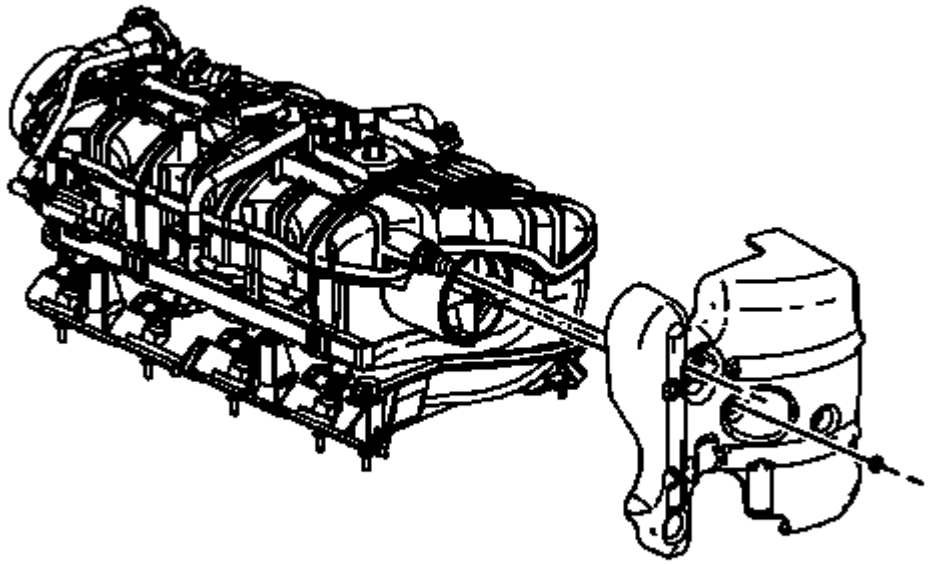

Fig. 130: View Of Upper Intake Manifold Cover & Nut
Courtesy of GENERAL MOTORS COMPANY

35. Remove the upper intake manifold cover nut.
36. Remove the upper intake manifold cover.

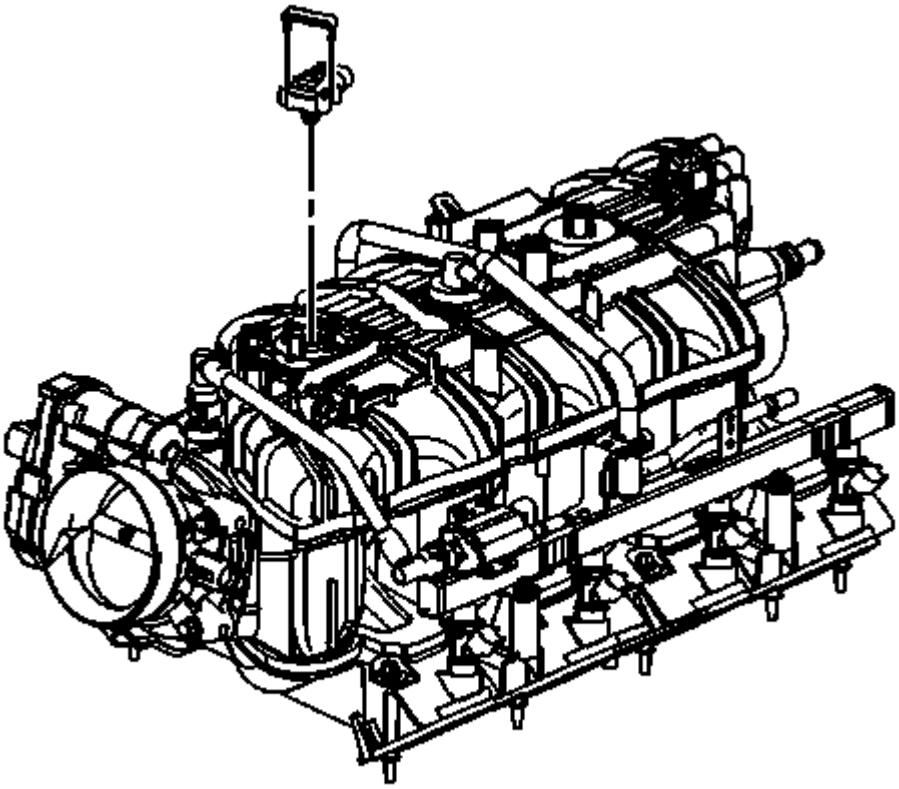

Fig. 131: View Of MAP Sensor & Retainer
Courtesy of GENERAL MOTORS COMPANY

37. Remove the manifold absolute pressure (MAP) sensor retainer.
38. Remove the MAP sensor.

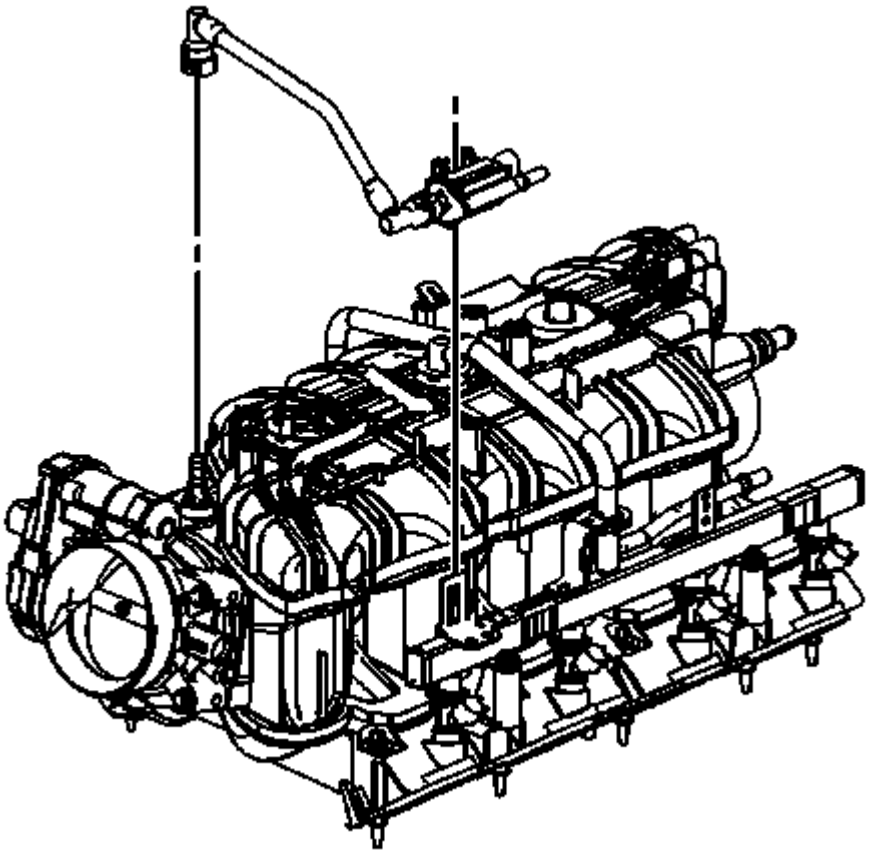

Fig. 132: View Of EVAP Tube & Purge Solenoid
Courtesy of GENERAL MOTORS COMPANY

39. Disconnect the EVAP tube quick connect fitting at the intake manifold. Refer to **Plastic Collar Quick Connect Fitting Service** .
40. Disengage the retainer securing the EVAP canister purge solenoid to the fuel rail.
41. Remove the EVAP tube and purge solenoid.

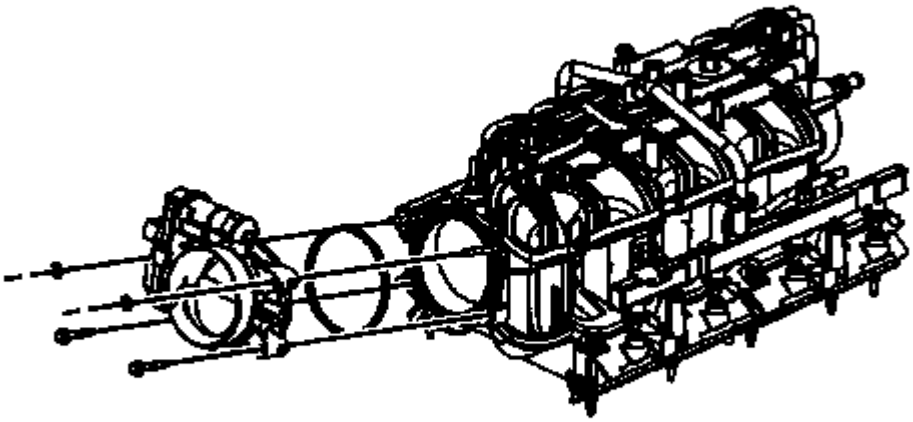

Fig. 133: View Of Throttle Body, Gasket & Bolts/Nuts
Courtesy of GENERAL MOTORS COMPANY

42. Remove the throttle body bolts/nuts.
43. Remove the throttle body.
44. Remove and discard the throttle body gasket.

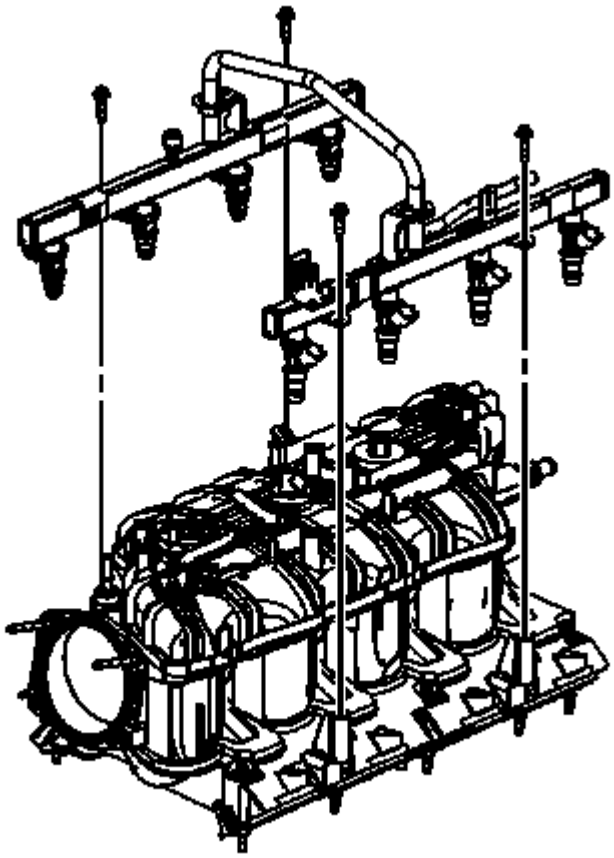

Fig. 134: View Of Fuel Rail & Bolts
Courtesy of GENERAL MOTORS COMPANY

45. Remove the fuel rail bolts.

NOTE: **Lift evenly on both sides of the fuel rail until all injectors are removed from their bores.**

46. Remove the fuel rail.
47. Remove and discard the fuel injector lower O-ring seals.

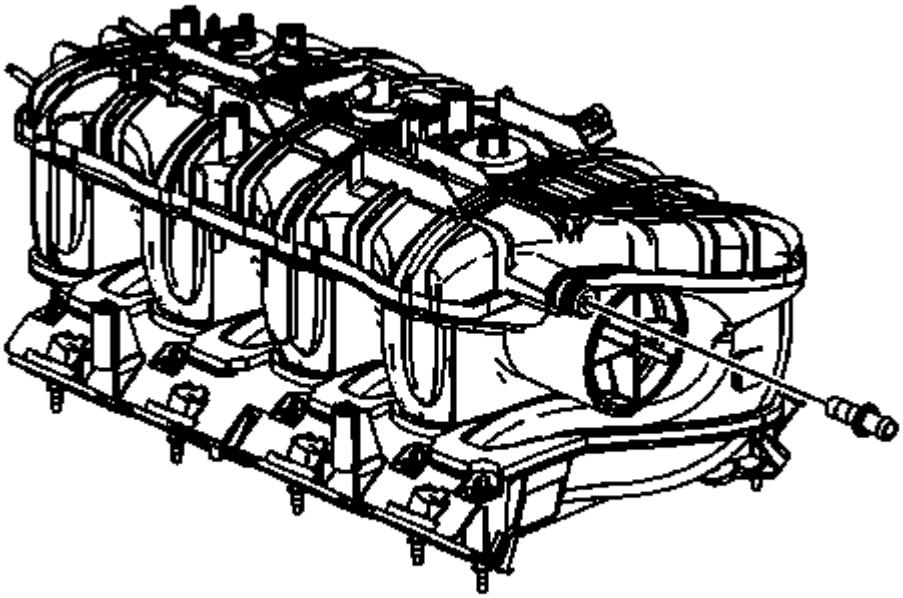

Fig. 135: View Of Brake Booster Vacuum Hose Nipple
Courtesy of GENERAL MOTORS COMPANY

NOTE: Evenly push in the RED collar in order to remove the nipple.

48. Remove the brake booster vacuum hose nipple.

Installation Procedure

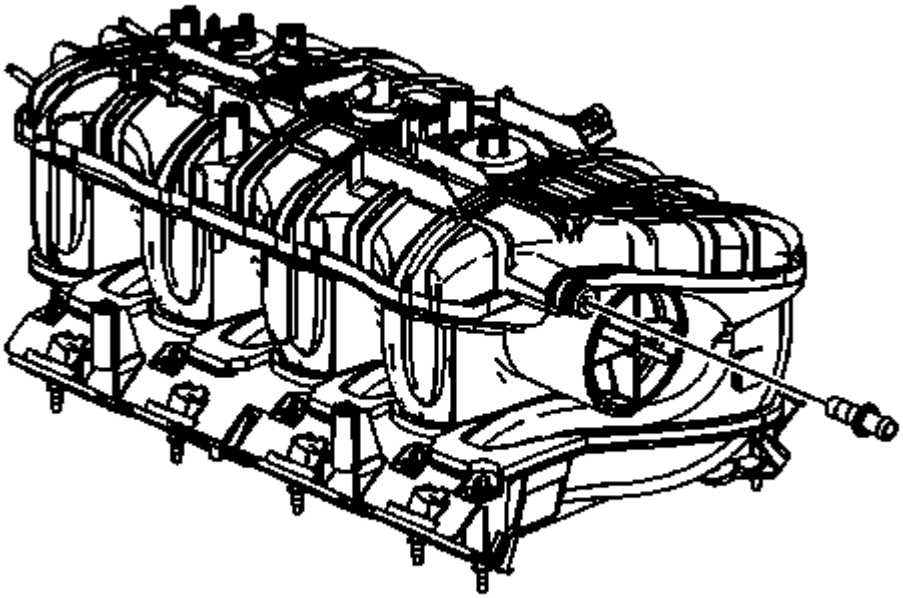

Fig. 136: View Of Brake Booster Vacuum Hose Nipple
Courtesy of GENERAL MOTORS COMPANY

1. If the intake manifold was replaced perform the following steps, otherwise proceed to step 21.

NOTE: Evenly push in the RED collar in order to install the nipple.

2. Install the brake booster vacuum hose nipple to the NEW intake manifold.

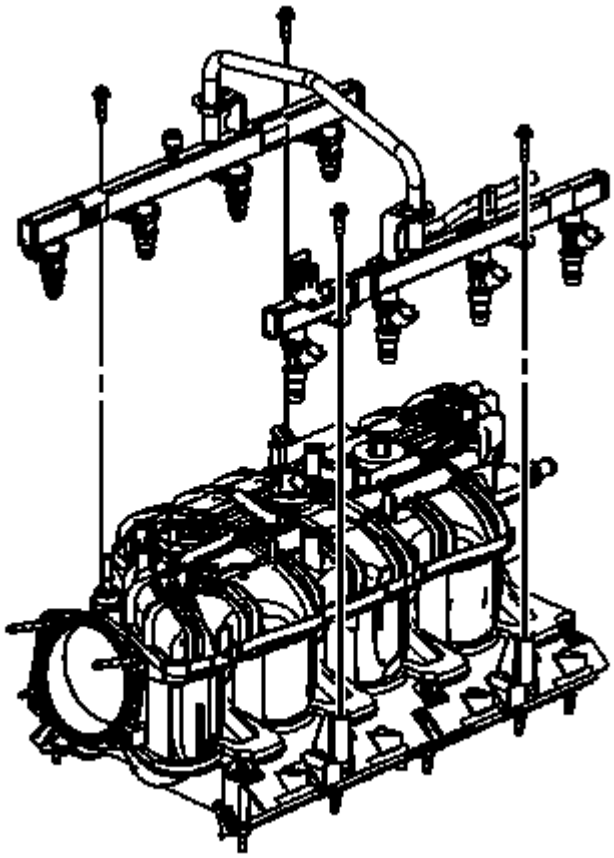

Fig. 137: View Of Fuel Rail & Bolts
Courtesy of GENERAL MOTORS COMPANY

3. Install NEW fuel injector lower O-ring seals onto the injectors.
4. Lubricate the NEW O-ring seals with clean engine oil.

NOTE: **Push down firmly on both sides of the rail until all the injectors have been seated into their bores.**

5. Install the fuel rail.

CAUTION: Refer to Fastener Caution .

6. Install the fuel rail bolts and tighten to 10 N.m (89 lb in).

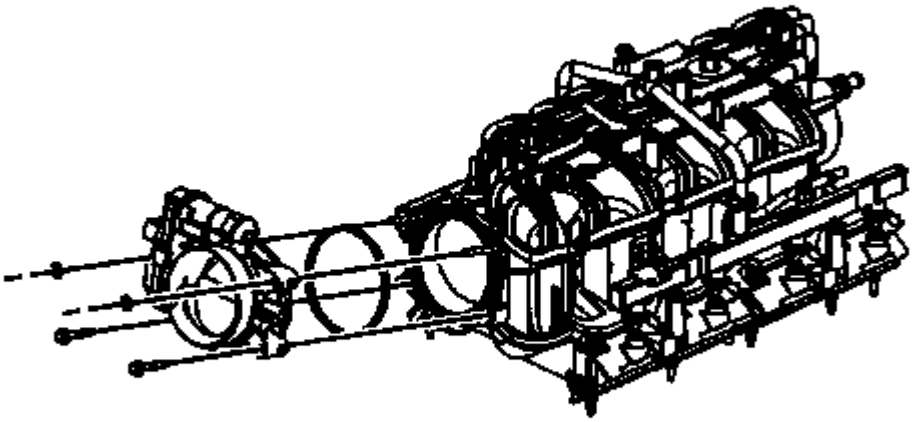

Fig. 138: View Of Throttle Body, Gasket & Bolts/Nuts
Courtesy of GENERAL MOTORS COMPANY

7. Install a NEW throttle body gasket to the intake manifold.
8. Install the throttle body.
9. Install the throttle body bolts/nuts and tighten to 10 N.m (89 lb in).

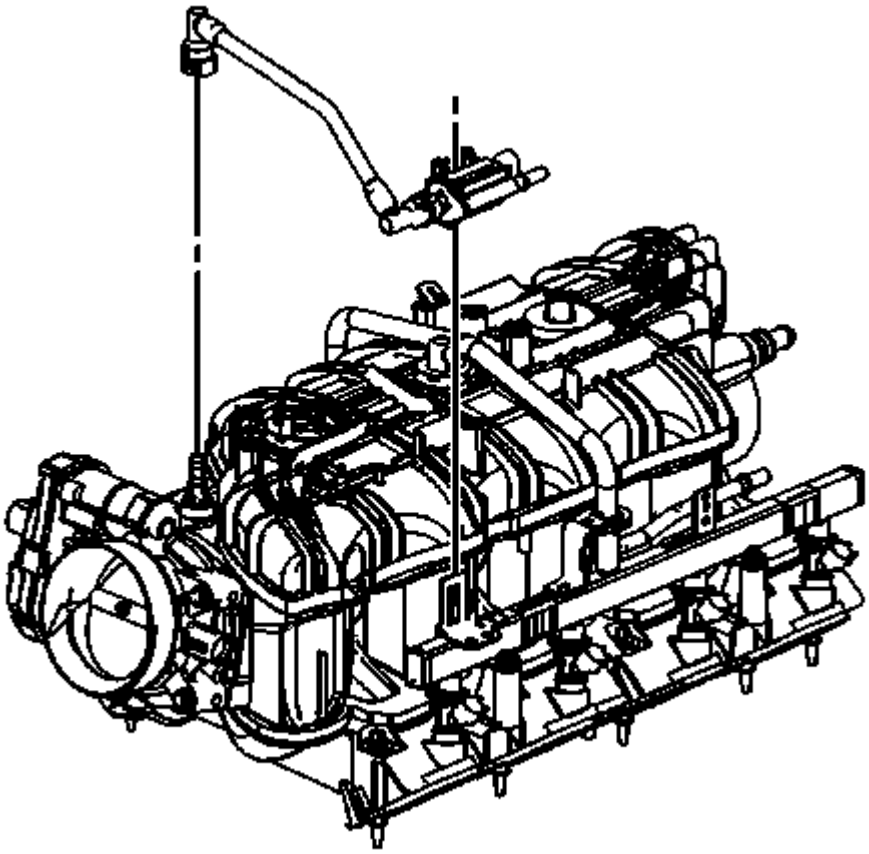

Fig. 139: View Of EVAP Tube & Purge Solenoid
Courtesy of GENERAL MOTORS COMPANY

10. Install the EVAP tube and purge solenoid.
11. Install the EVAP canister purge solenoid to the fuel rail bracket and engage the retainer.
12. Connect the EVAP tube quick connect fitting at the intake manifold. Refer to **Plastic Collar Quick Connect Fitting Service** .

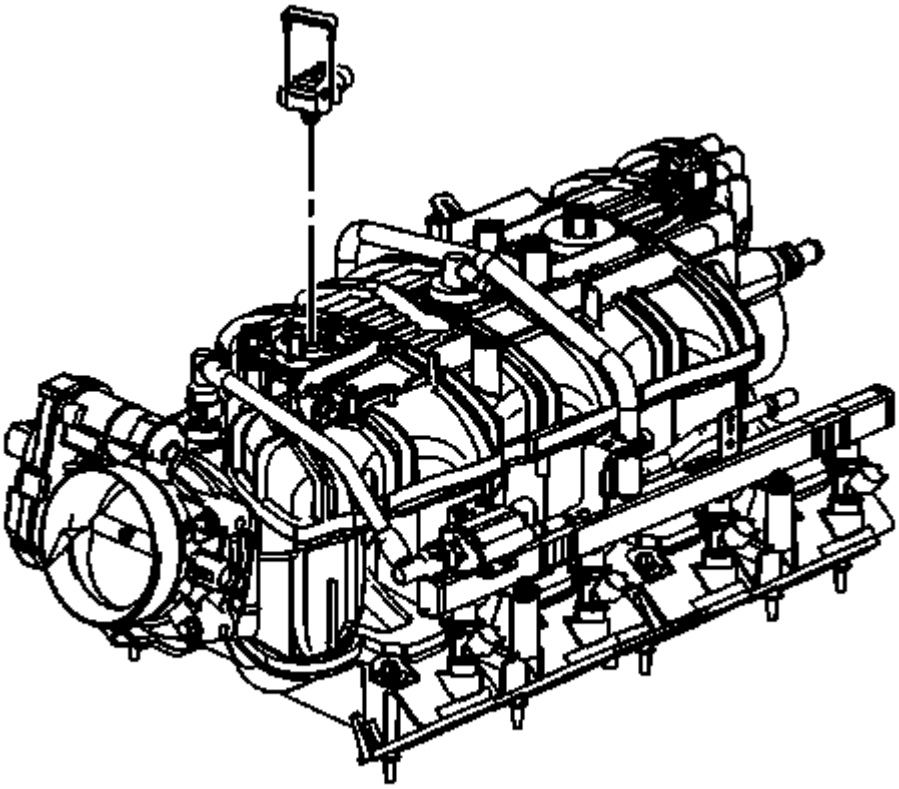

Fig. 140: View Of MAP Sensor & Retainer
Courtesy of GENERAL MOTORS COMPANY

13. Lubricate the MAP sensor seal with clean engine oil.
14. Install the MAP sensor.
15. Install the MAP sensor retainer.

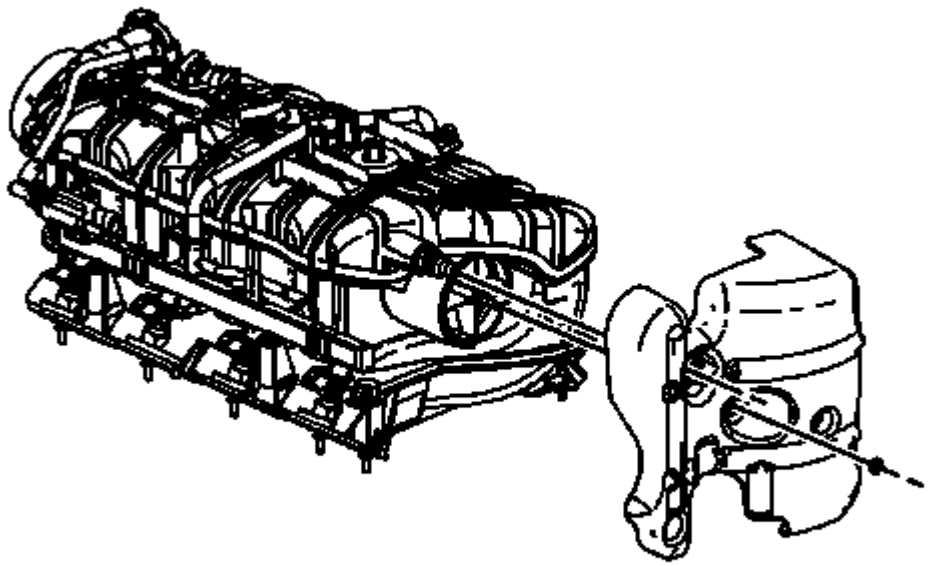

Fig. 141: View Of Upper Intake Manifold Cover & Nut
Courtesy of GENERAL MOTORS COMPANY

16. Install the upper intake manifold cover.
17. Install the upper intake manifold cover nut until snug

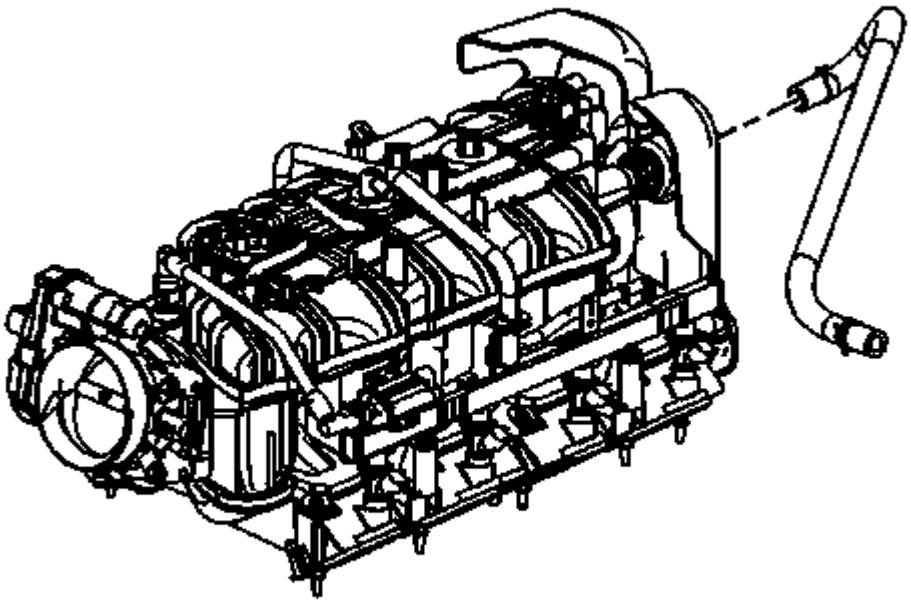

Fig. 142: View Of Vacuum Brake Booster Hose
Courtesy of GENERAL MOTORS COMPANY

18. Install the brake booster vacuum hose to the intake manifold nipple.
19. Position the brake booster vacuum hose clamp at the intake manifold.
20. Secure the brake booster vacuum hose to the intake manifold.

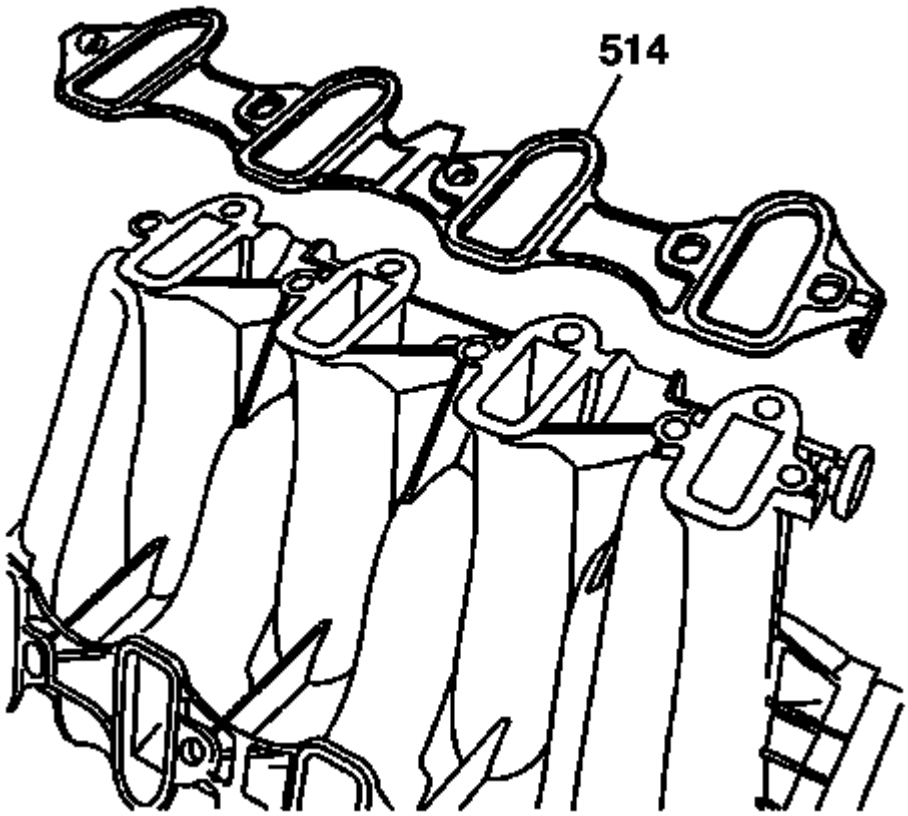

Fig. 143: View Of Intake Manifold-To-Cylinder Head Gasket
Courtesy of GENERAL MOTORS COMPANY

21. Install NEW intake manifold gaskets (514) to the intake manifold.
22. Remove the covers from the cylinder head passages.

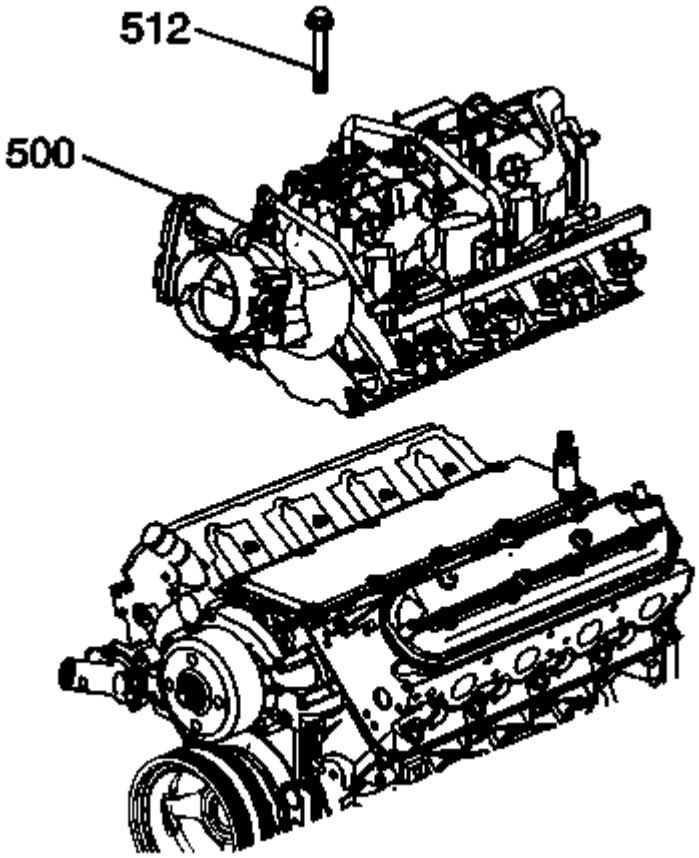

Fig. 144: Intake Manifold & Bolts
Courtesy of GENERAL MOTORS COMPANY

23. Install the intake manifold (500).

NOTE: **The aid of an assistant may be helpful in holding the engine harness up out of the way so the upper intake manifold cover does not get caught against the engine harness.**

24. Tighten the intake manifold bolts (512) until snug.

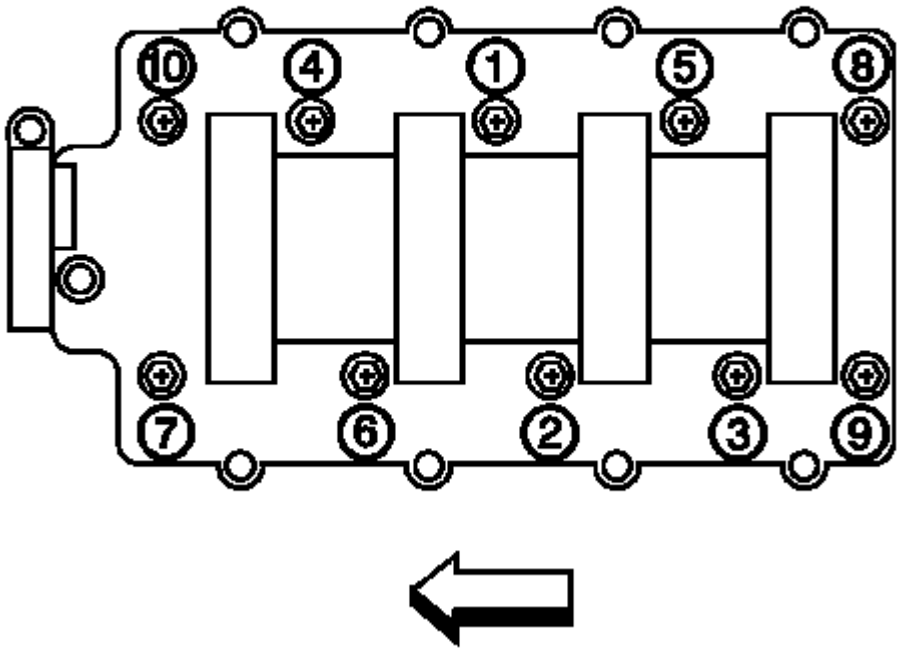

Fig. 145: Identifying Intake Manifold Bolt Tightening Sequence
Courtesy of GENERAL MOTORS COMPANY

25. Tighten the intake manifold bolts to specifications.
    - Tighten the bolts a first pass in the sequence shown to 5 N.m (44 lb in).
    - Tighten the bolts a final pass in the sequence shown to 10 N.m (89 lb in).

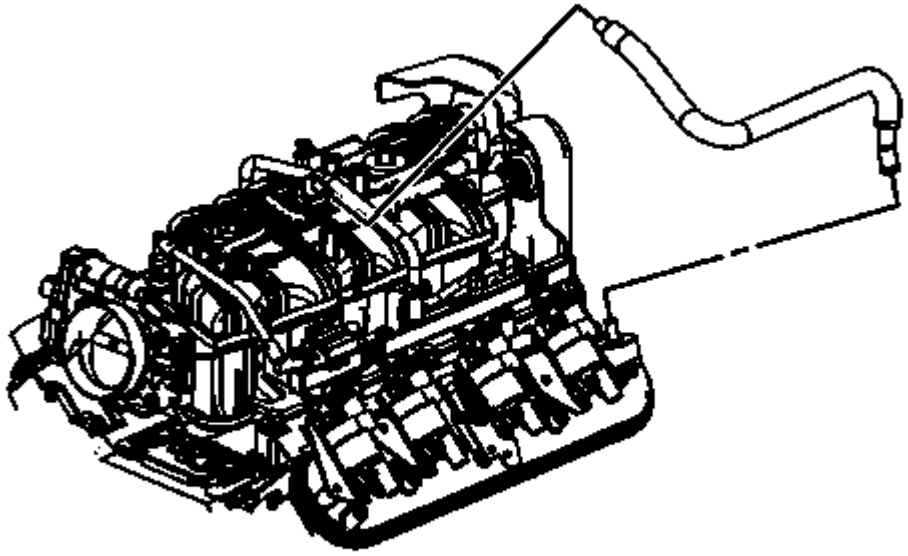

Fig. 146: View Of PCV Hose
Courtesy of GENERAL MOTORS COMPANY

26. Position and install the PCV hose to the intake manifold fitting.

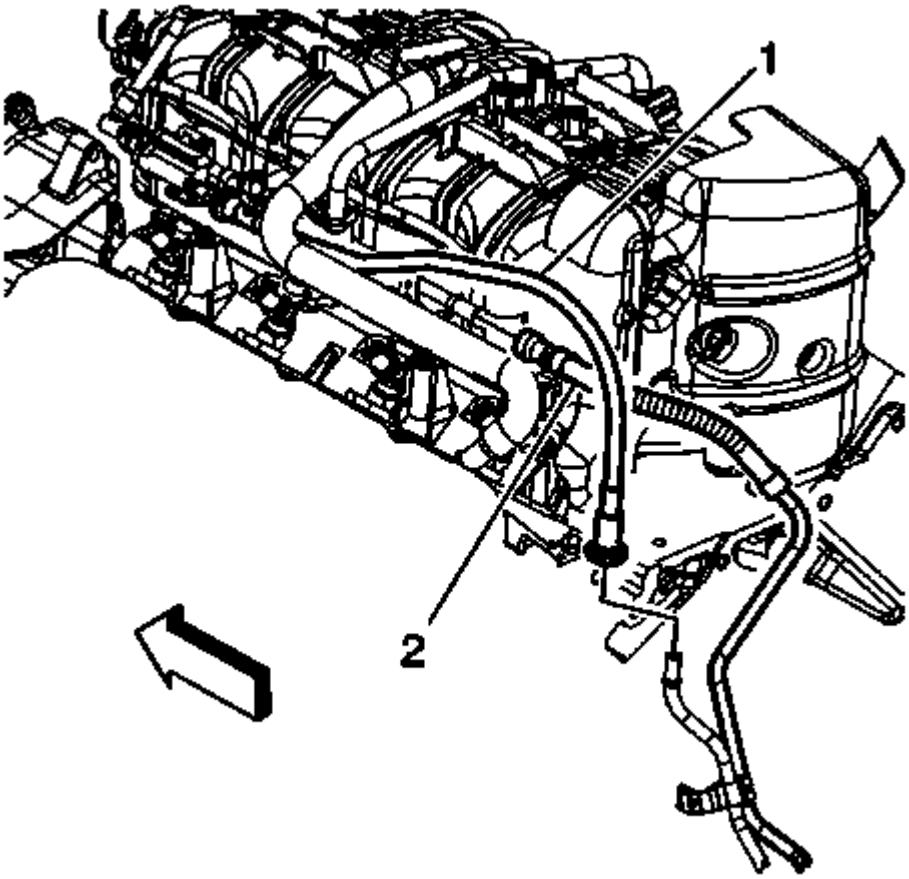

Fig. 147: View Of EVAP Canister Purge Tube & Quick Connect Fitting
Courtesy of GENERAL MOTORS COMPANY

27. Connect the fuel feed line quick connect fitting (2) to the fuel rail. Refer to **Metal Collar Quick Connect Fitting Service** .
28. Connect the EVAP canister purge tube (1) quick connect fitting to the EVAP canister purge solenoid. Refer to **Plastic Collar Quick Connect Fitting Service** .

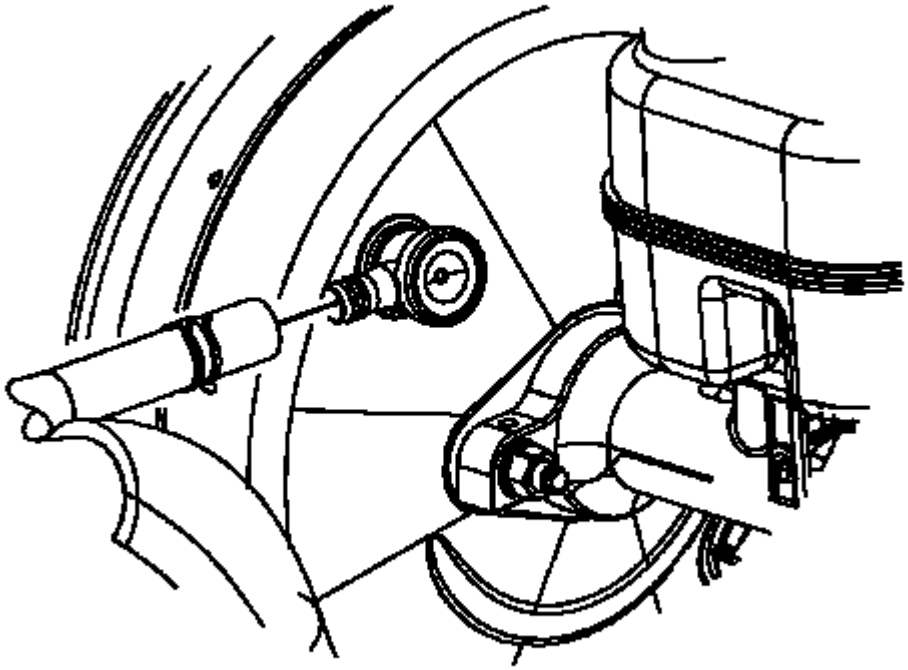

Fig. 148: View Of Brake Booster Vacuum Hose & Booster Fitting
Courtesy of GENERAL MOTORS COMPANY

29. Unsecure the brake booster vacuum hose from the intake manifold.
30. Install the brake booster vacuum hose to the booster fitting.
31. Position the brake booster vacuum hose clamp at the booster.

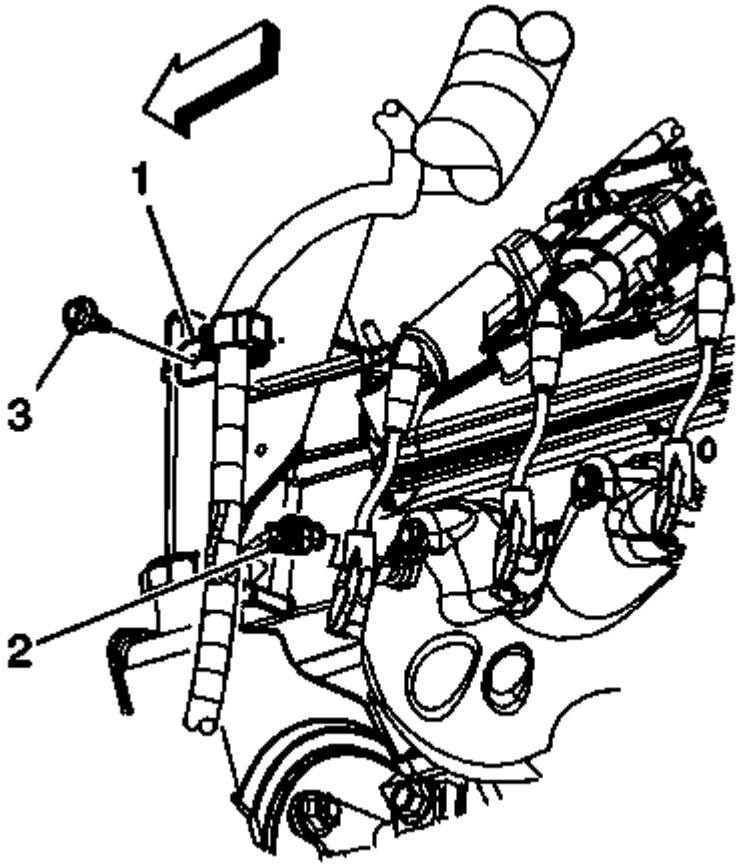

Fig. 149: View Of Engine Wiring Harness, Clip, Bolt & Connector
Courtesy of GENERAL MOTORS COMPANY

32. Untie the engine harness branches from the cowl panel and position over the engine.
33. Connect the engine harness electrical connector (2) to the ECT sensor.
34. Position the engine harness clip (1) to the generator bracket and install the bolt (3).

    Tighten the bolt to 9 N.m (80 lb in).

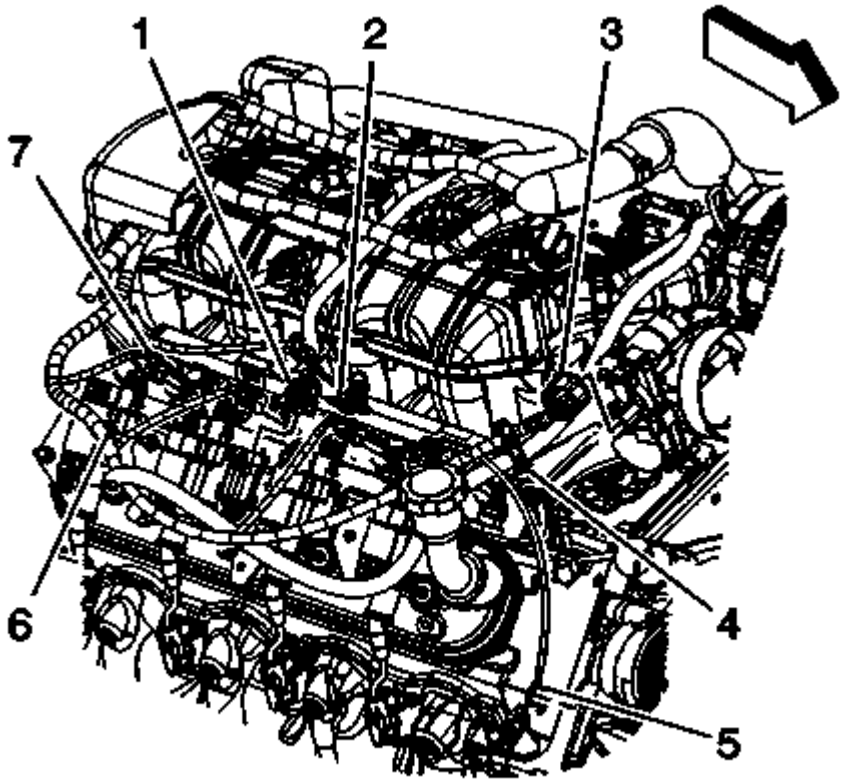

Fig. 150: View Of CPA Retainer, Engine Harness Electrical Connectors & Harness Clips
Courtesy of GENERAL MOTORS COMPANY

35. Connect the engine harness electrical connectors (7) to the right side fuel injectors.
36. Install the engine harness clip (6) to the ignition coil bracket stud.
37. Install the engine harness clip (4) to the generator battery jumper cable.
38. Connect the engine harness electrical connector (3) to the throttle actuator.
39. Connect the engine harness electrical connector (1) to the ignition coil harness electrical connector.
40. Install the CPA retainer (2).

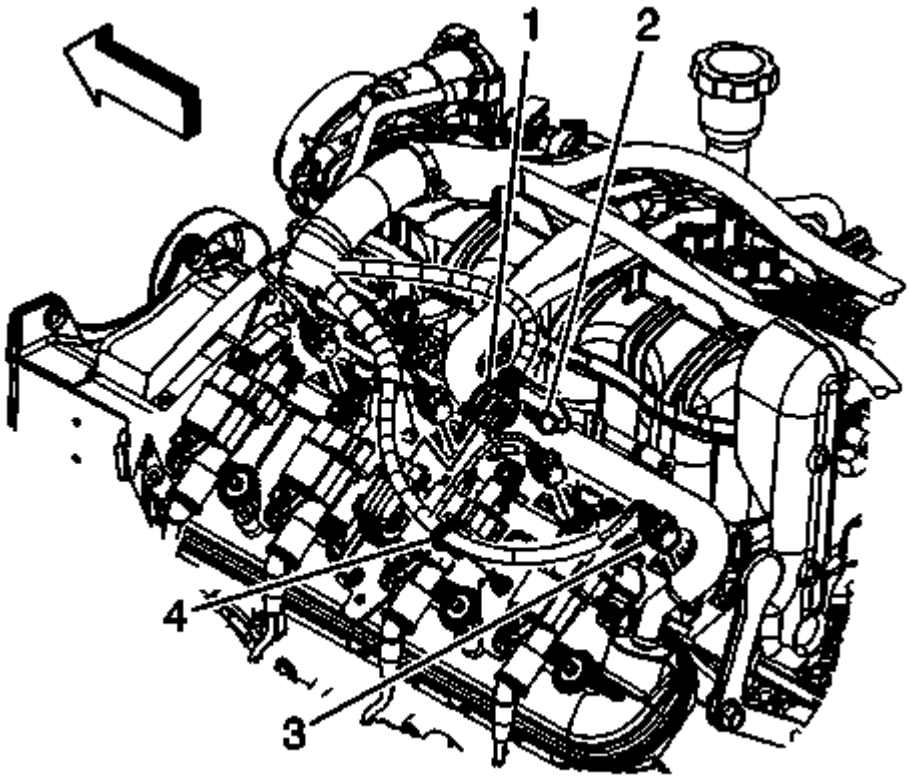

Fig. 151: View Of CPA Retainer, Electrical Connectors & Engine Harness Clips
Courtesy of GENERAL MOTORS COMPANY

41. Install the engine harness clip (4) to the ignition coil bracket stud.
42. Connect the engine harness electrical connectors (3) to the left side fuel injectors.
43. Connect the engine harness electrical connector (1) to the ignition coil harness electrical connector.
44. Install the CPA retainer (1).

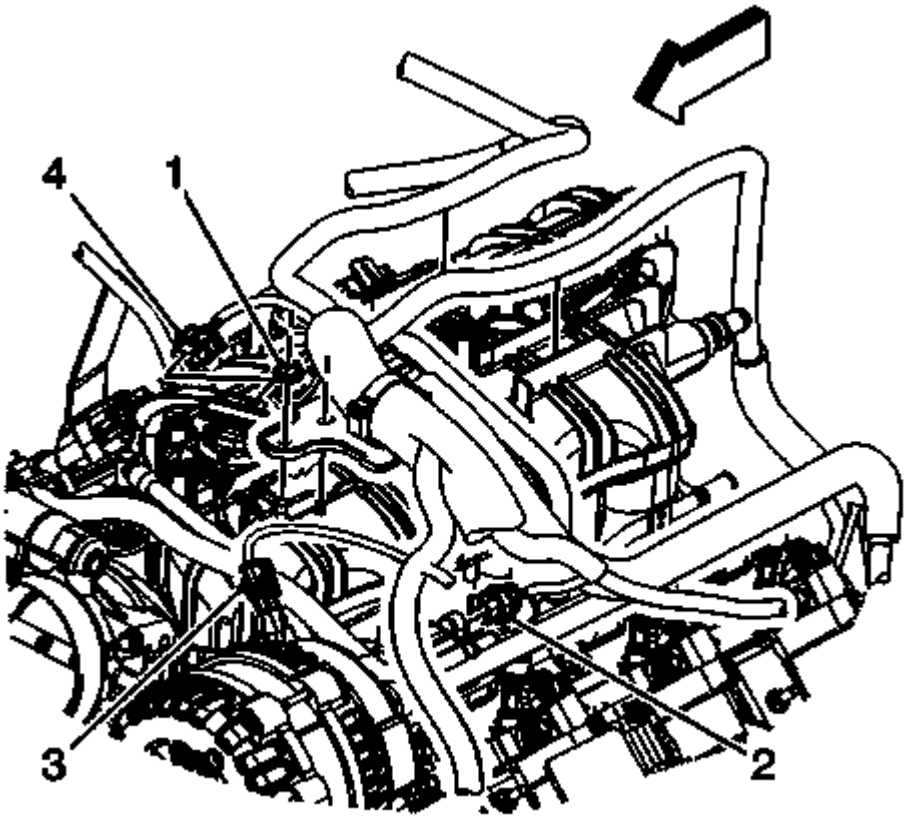

Fig. 152: View Of Engine Harness Retainer Nut & Electrical Connectors
Courtesy of GENERAL MOTORS COMPANY

45. Connect the engine wiring harness electrical connector (4) to the MAP sensor.
46. Connect the engine harness electrical connector (2) to the EVAP canister purge solenoid.
47. Install the engine harness retainer to the stud and locator pin.
48. Install the engine harness retainer nut (1) and tighten to 5 N.m (44 lb in).
49. Install the generator. Refer to **Generator Replacement** .
50. Install the air cleaner outlet duct. Refer to **Air Cleaner Resonator Outlet Duct Replacement** .

UPPER INTAKE MANIFOLD COVER REPLACEMENT

Removal Procedure

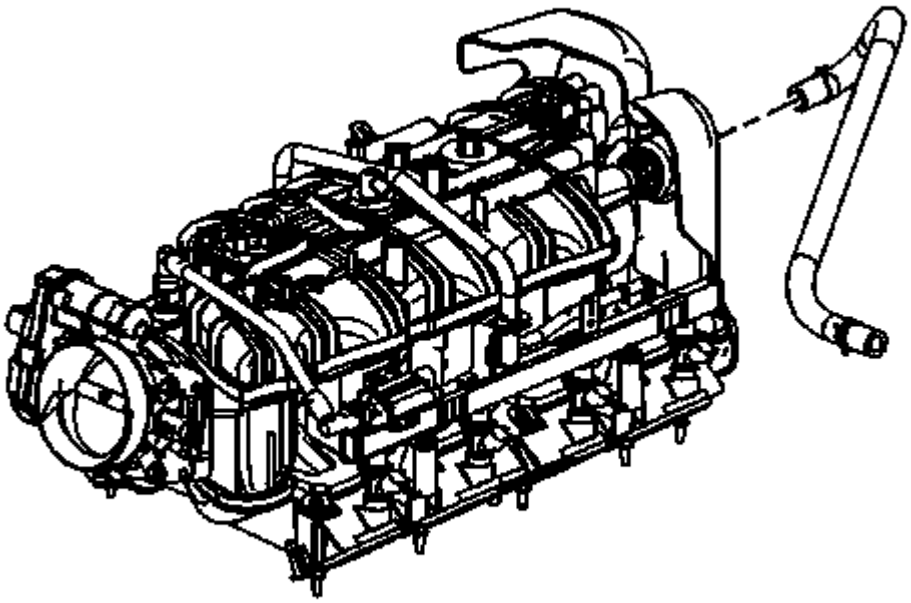

Fig. 153: View Of Vacuum Brake Booster Hose
Courtesy of GENERAL MOTORS COMPANY

1. Remove the intake manifold. Refer to **Intake Manifold Replacement (RPOs LC9, LMG, LY5, L76)**, **Intake Manifold Replacement (RPOs LY2, LY6)**, **Intake Manifold Replacement (Except RPOs LY2, LY6, LC9, LMG, LY5)**.
2. Reposition the brake booster vacuum hose clamp at the intake manifold.
3. Remove the brake booster vacuum hose from the intake manifold nipple.

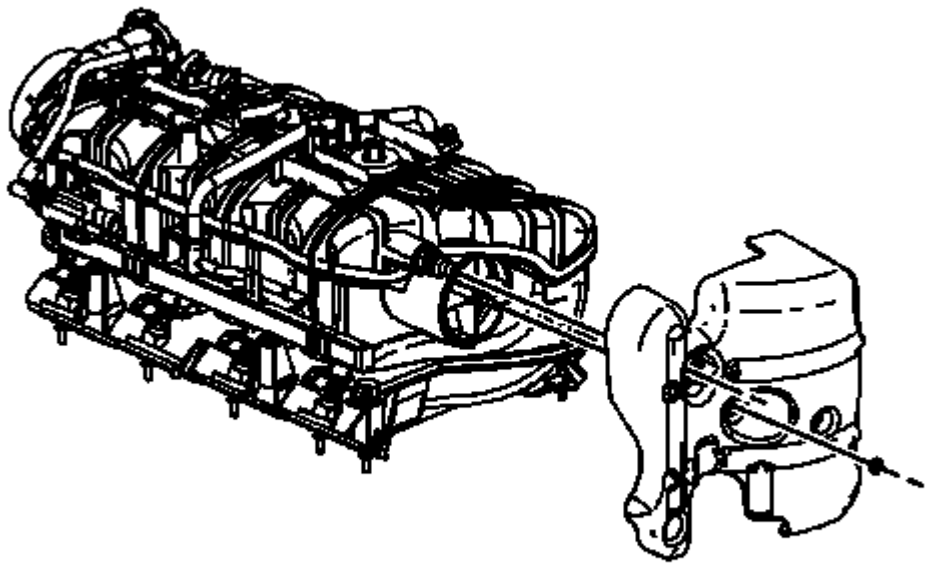

Fig. 154: View Of Upper Intake Manifold Cover & Nut
Courtesy of GENERAL MOTORS COMPANY

4. Remove the upper intake manifold cover nut.
5. Remove the upper intake manifold cover.

Installation Procedure

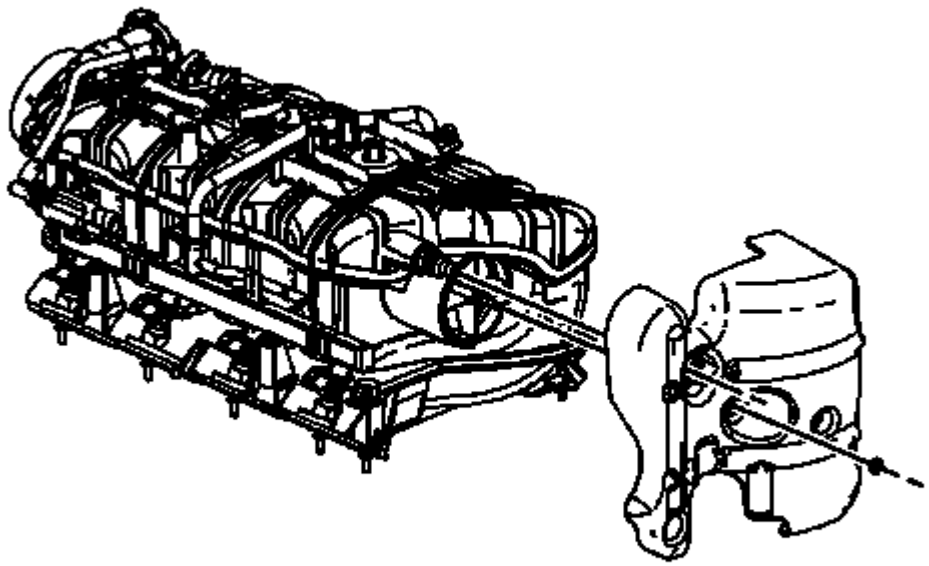

Fig. 155: View Of Upper Intake Manifold Cover & Nut
Courtesy of GENERAL MOTORS COMPANY

1. Install the upper intake manifold cover.
2. Install the upper intake manifold cover nut until snug

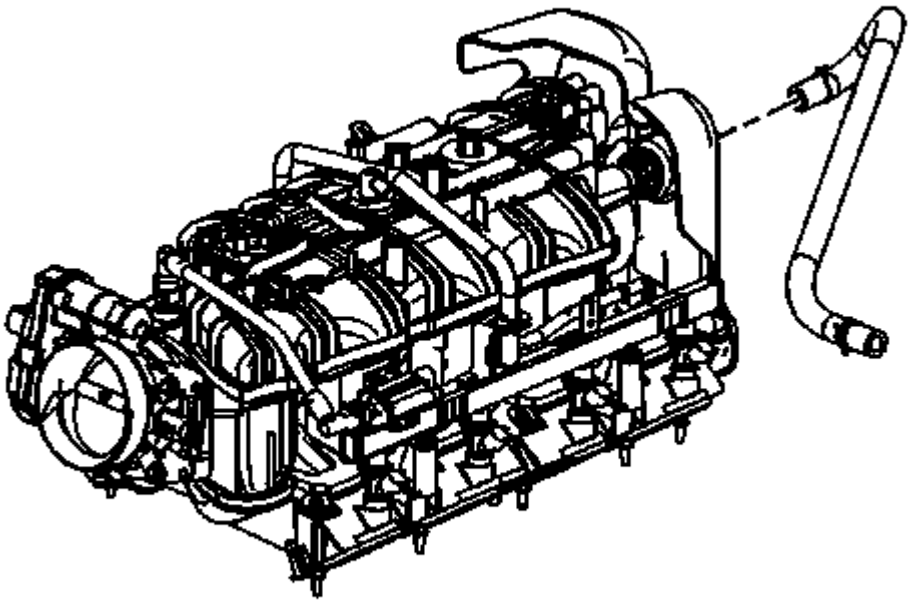

Fig. 156: View Of Vacuum Brake Booster Hose
Courtesy of GENERAL MOTORS COMPANY

3. Install the brake booster vacuum hose to the intake manifold nipple.
4. Position the brake booster vacuum hose clamp at the intake manifold.
5. Install the intake manifold. Refer to **Intake Manifold Replacement (RPOs LC9, LMG, LY5, L76)**, **Intake Manifold Replacement (RPOs LY2, LY6)**, **Intake Manifold Replacement (Except RPOs LY2, LY6, LC9, LMG, LY5)**.

ENGINE BLOCK VALLEY COVER REPLACEMENT

Removal Procedure

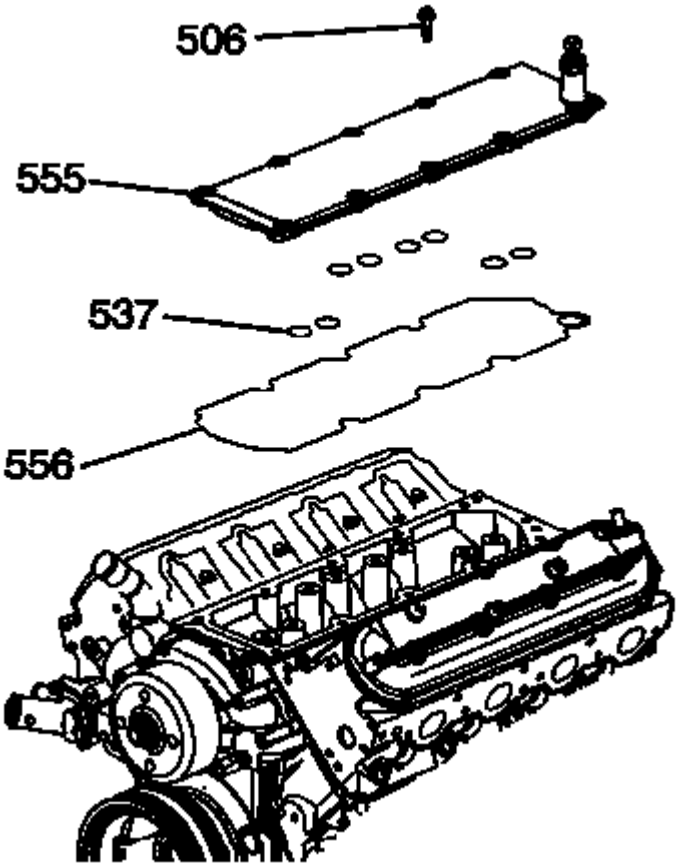

Fig. 157: Removing/Installing Engine Valley Cover
Courtesy of GENERAL MOTORS COMPANY

1. Remove the intake manifold. Refer to **Intake Manifold Replacement (RPOs LC9, LMG, LY5, L76)**, **Intake Manifold Replacement (RPOs LY2, LY6)**, **Intake Manifold Replacement (Except RPOs LY2, LY6, LC9, LMG, LY5)**.
2. Remove the engine valley cover bolts (506).
3. Remove the engine valley cover (555) and gasket (556).
4. Remove the O-ring seals (537) from the cover.

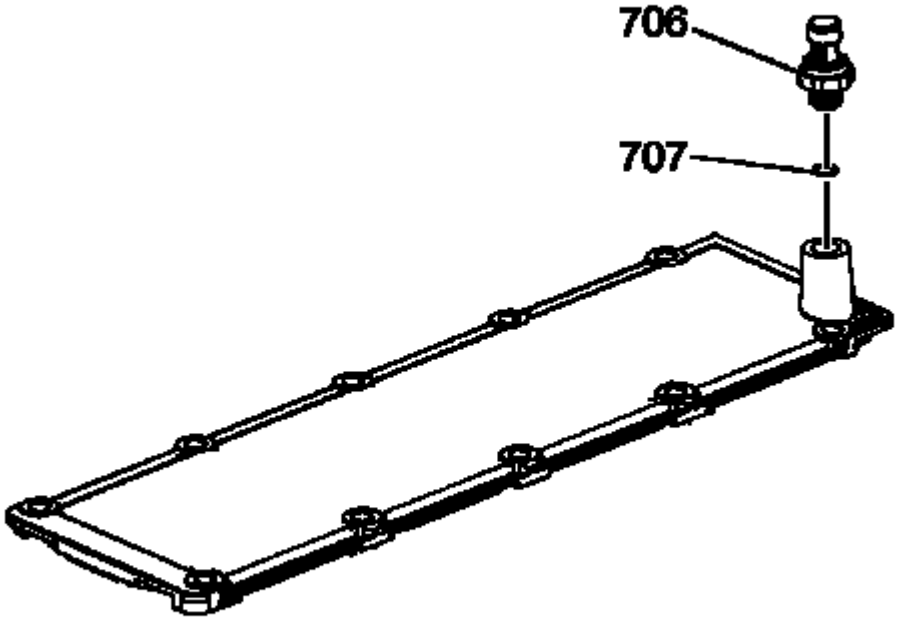

Fig. 158: Removing/Installing Oil Pressure Sensor & Washer
Courtesy of GENERAL MOTORS COMPANY

5. Remove the oil pressure sensor (706) and washer (707).

Installation Procedure

NOTE: All gasket surfaces should be free of oil or other foreign material during assembly.

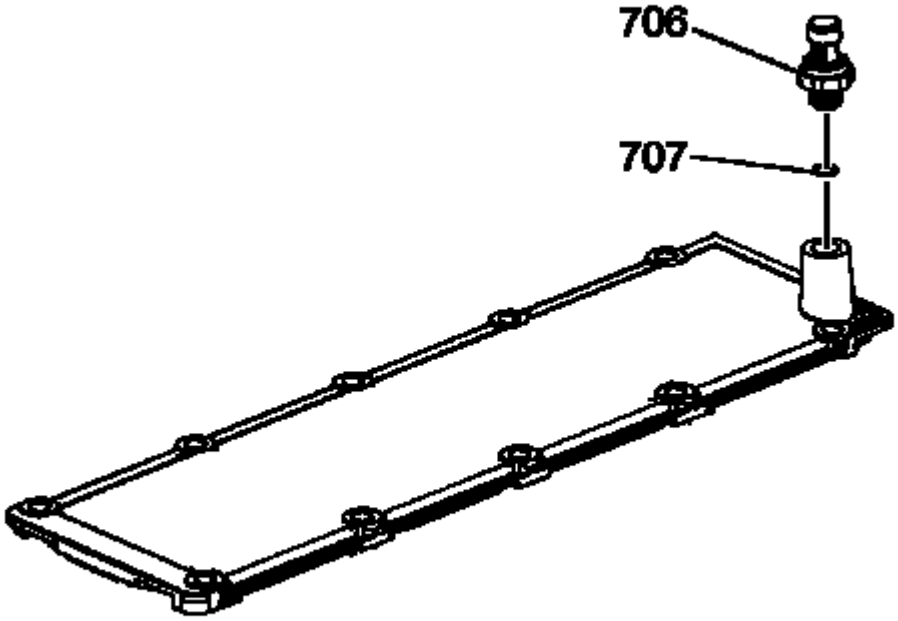

Fig. 159: Removing/Installing Oil Pressure Sensor & Washer
Courtesy of GENERAL MOTORS COMPANY

1. Apply sealant GM P/N 12346004 (Canadian P/N 10953480) or equivalent, to the threads of the oil pressure sensor.

   CAUTION: Refer to Fastener Caution .

2. Install a NEW washer (707) and the oil pressure sensor (706).

   Tighten

   Tighten the sensor to 35 N.m (26 lb ft).

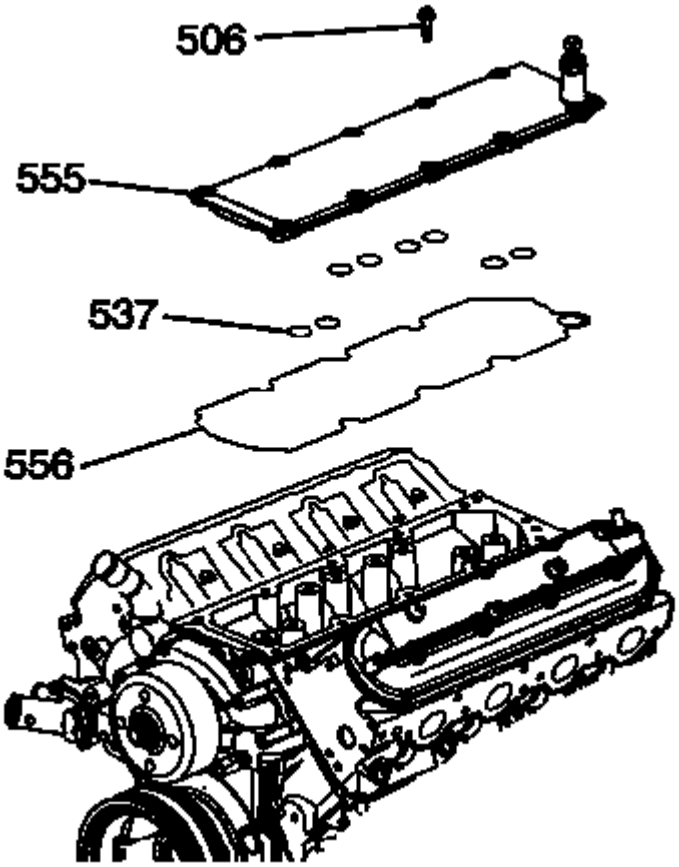

Fig. 160: Removing/Installing Engine Valley Cover
Courtesy of GENERAL MOTORS COMPANY

3. Lubricate the O-ring seals with clean engine oil.
4. Install the O-ring seals (537) to the cover.
5. Set the engine valley cover (555) onto the engine.
6. Install the engine valley cover bolts (506).

   Tighten

   Tighten the bolts to 25 N.m (18 lb ft).

7. Install the intake manifold. Refer to **Intake Manifold Replacement (RPOs LC9, LMG, LY5, L76)**, **Intake Manifold Replacement (RPOs LY2, LY6)**, **Intake Manifold Replacement (Except RPOs LY2, LY6, LC9, LMG, LY5)**.

VALVE LIFTER OIL MANIFOLD REPLACEMENT

Removal Procedure

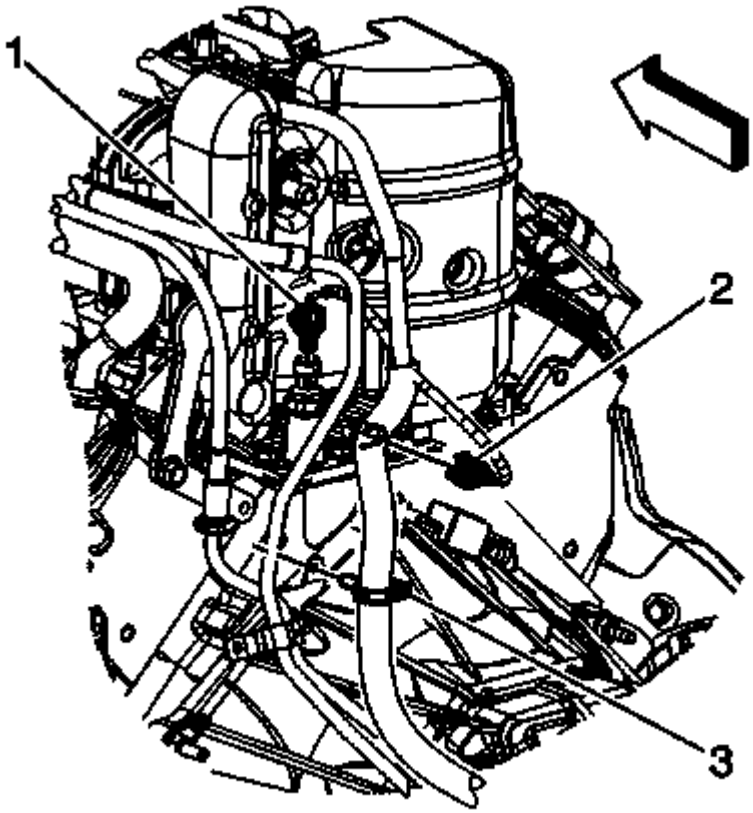

Fig. 161: View Of Engine Harness Electrical Connectors & Inlet Hose Clamp
Courtesy of GENERAL MOTORS COMPANY

1. Remove the intake manifold. Refer to **Intake Manifold Replacement (RPOs LC9, LMG, LY5, L76)**, **Intake Manifold Replacement (RPOs LY2, LY6)**, **Intake Manifold Replacement (Except RPOs LY2, LY6, LC9, LMG, LY5)**.
2. Disconnect the engine harness electrical connector (1) from the oil pressure sensor.

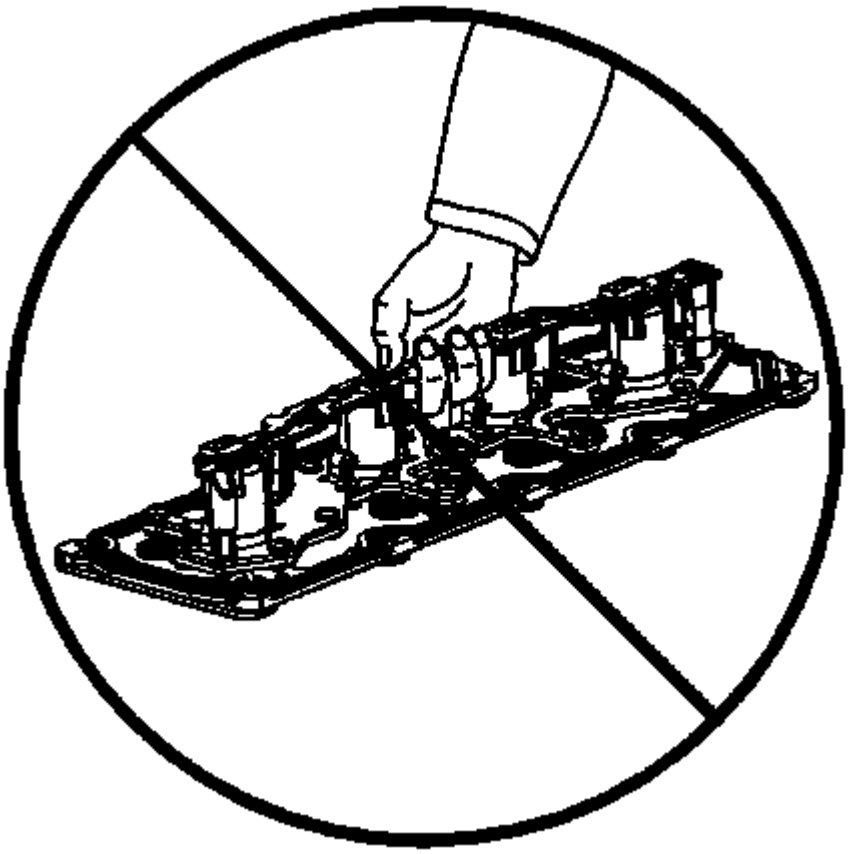

Fig. 162: Valve Lifter Oil Manifold
Courtesy of GENERAL MOTORS COMPANY

3. DO NOT lift the valve lifter oil manifold by the electrical lead frame.

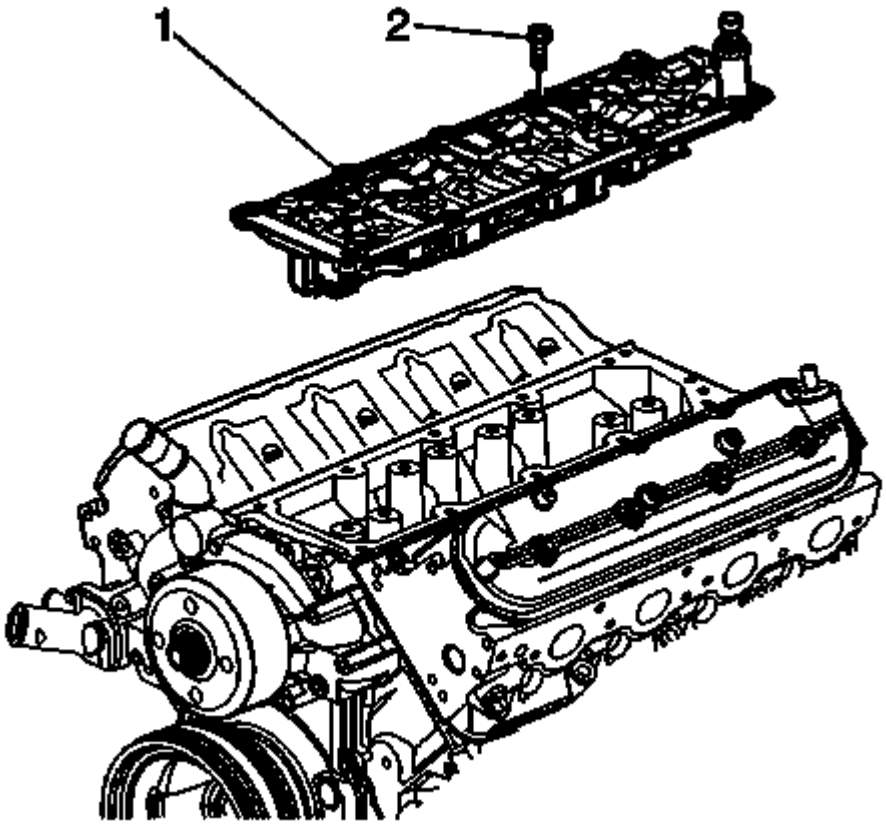

Fig. 163: Valve Lifter Oil Manifold
Courtesy of GENERAL MOTORS COMPANY

4. Remove the valve lifter oil manifold bolts (2).
5. Remove the valve lifter oil manifold (1).

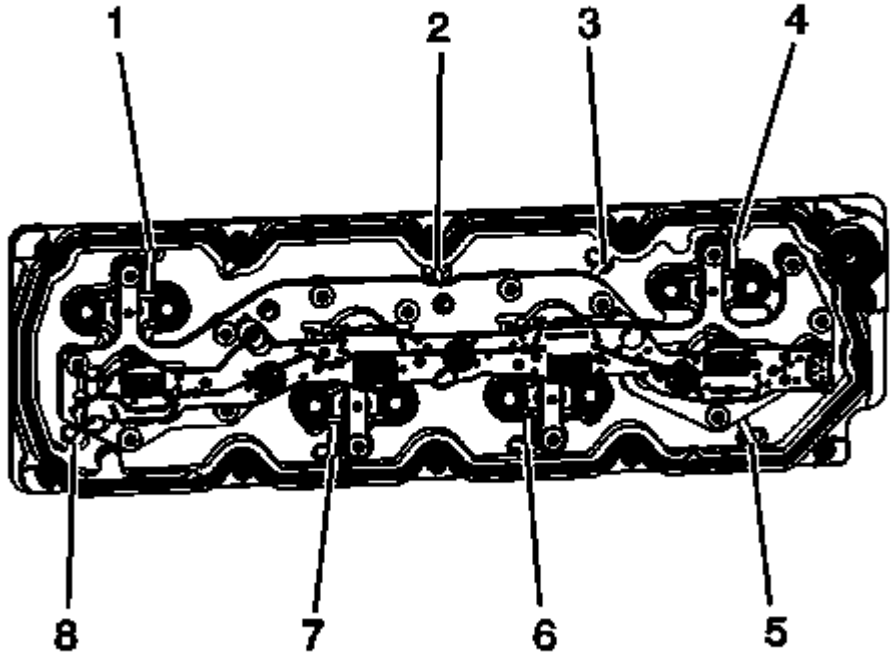

Fig. 164: Gasket Retaining Strap Locations
Courtesy of GENERAL MOTORS COMPANY

NOTE: **Remove only the outer gasket from the manifold. Do not disassemble any of the internal components of the manifold in an attempt to remove the 8 inner sealing gaskets. If the inner gaskets are cut or damaged, replace the manifold as an assembly. Only use a wire-cutter type tool in order to minimize the amount of debris. Do not use a rotary-type cutting tool on the retaining straps.**

6. Identify the 8 gasket retaining strap locations (1-8).

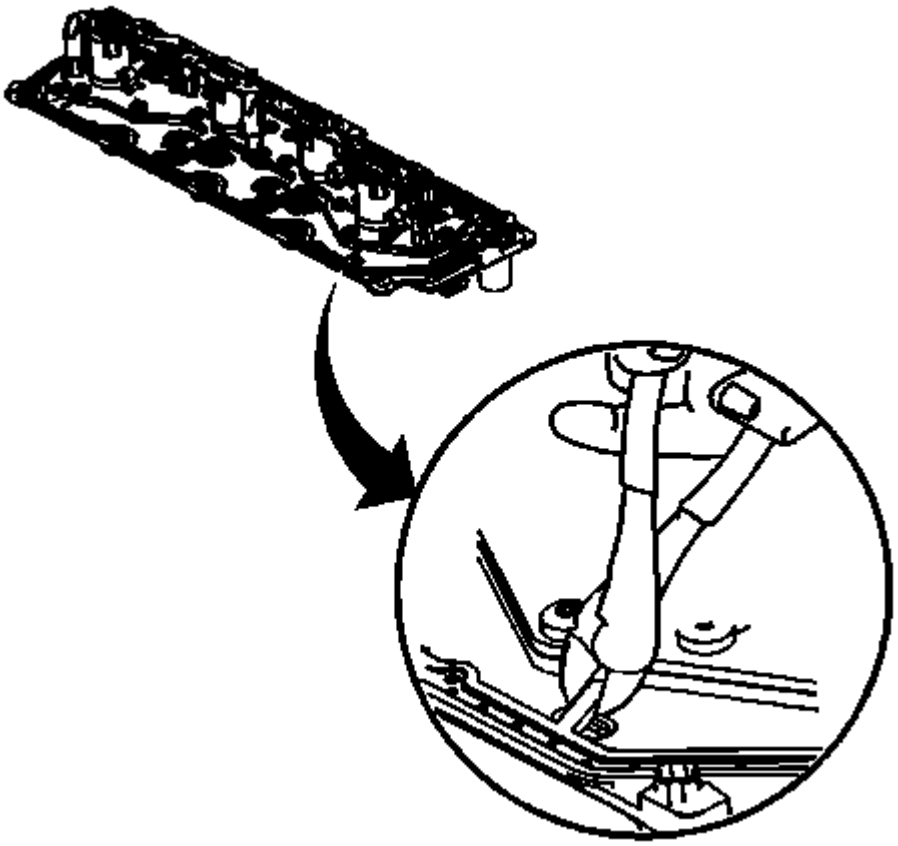

Fig. 165: Retaining Strap
Courtesy of GENERAL MOTORS COMPANY

7. Using a cutter type tool, cut the 8 retaining straps.

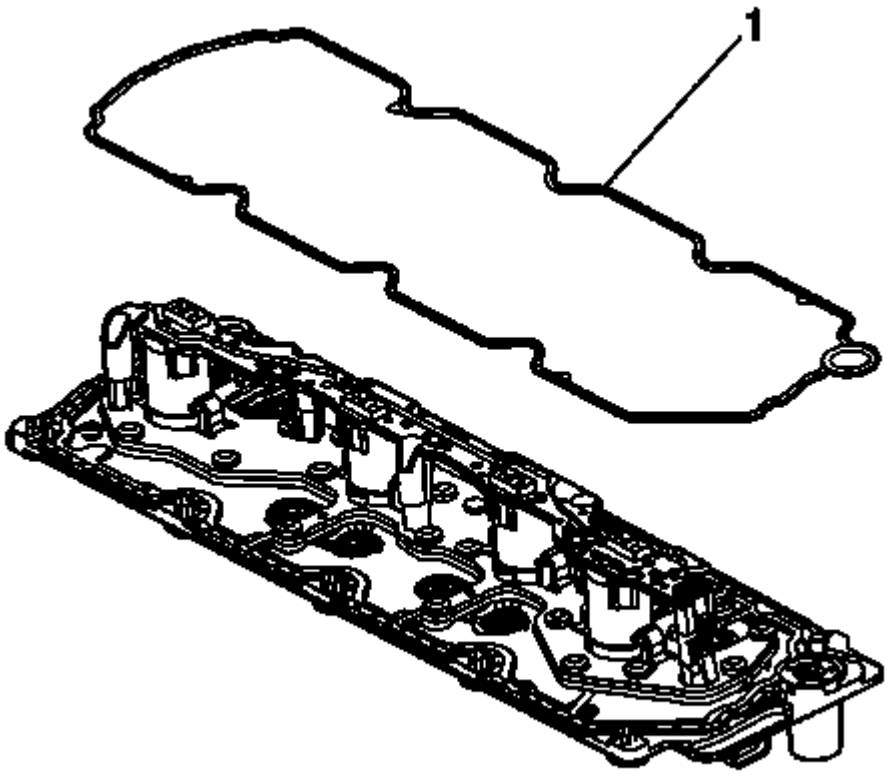

Fig. 166: Identifying Valve Cover Outer Gasket
Courtesy of GENERAL MOTORS COMPANY

8. Remove the outer gasket (1) from the valve lifter oil manifold.

Installation Procedure

NOTE: All gasket surfaces should be free of oil or other foreign material during assembly.

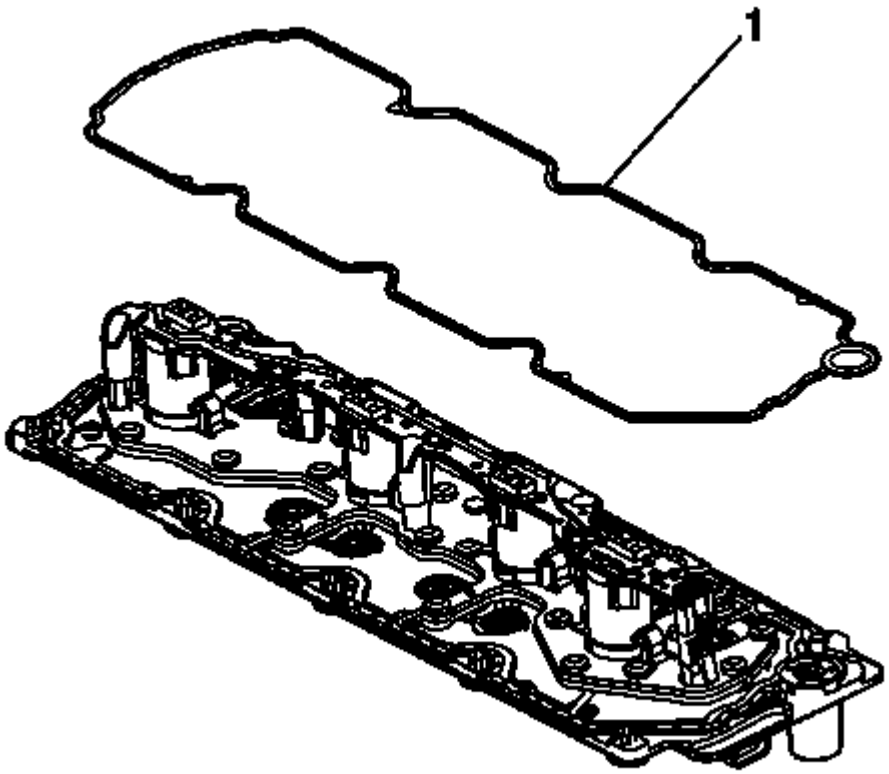

Fig. 167: Identifying Valve Cover Outer Gasket
Courtesy of GENERAL MOTORS COMPANY

1. Place the service gasket (1) onto the valve lifter oil manifold.

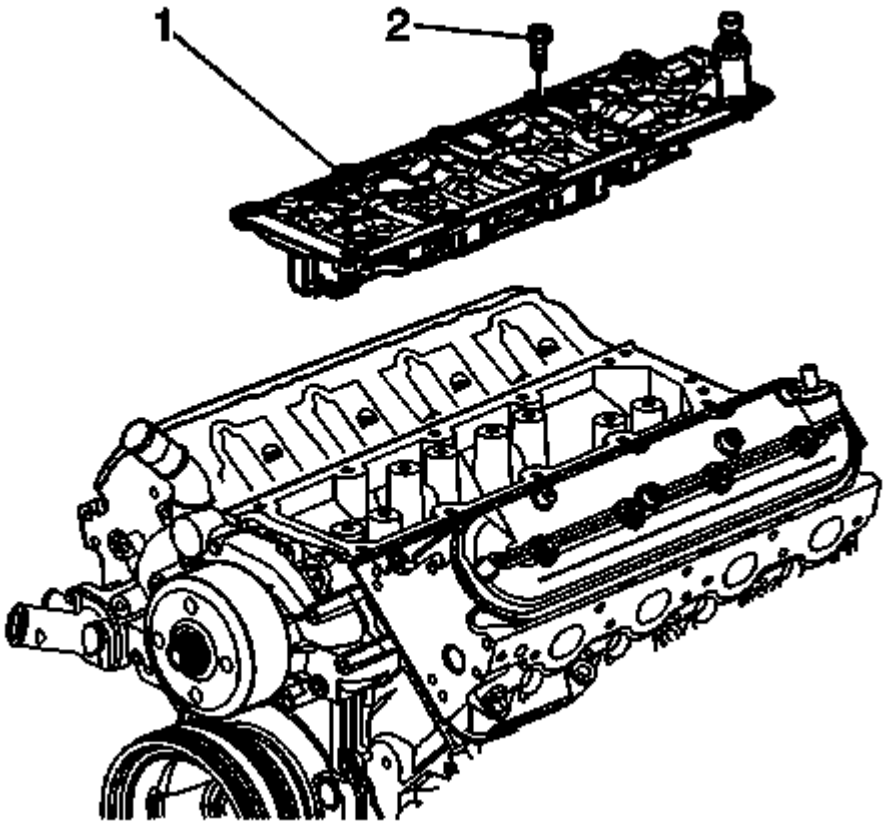

Fig. 168: Valve Lifter Oil Manifold
Courtesy of GENERAL MOTORS COMPANY

2. Install the valve lifter oil manifold (1) to the engine.

CAUTION: Refer to Fastener Caution .

3. Install the valve lifter oil manifold bolts (2).

Tighten

Tighten the bolts to 25 N.m (18 lb ft).

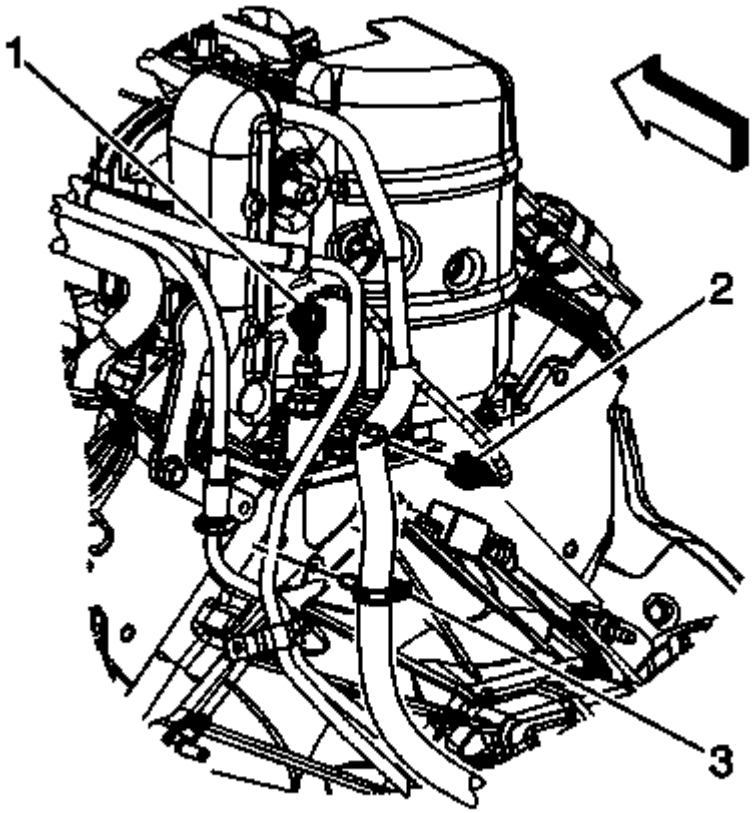

Fig. 169: View Of Engine Harness Electrical Connectors & Inlet Hose Clamp
Courtesy of GENERAL MOTORS COMPANY

4. Connect the engine harness electrical connector (1) to the oil pressure sensor.
5. Install the intake manifold. Refer to **Intake Manifold Replacement (RPOs LC9, LMG, LY5, L76)**, **Intake Manifold Replacement (RPOs LY2, LY6)**, **Intake Manifold Replacement (Except RPOs LY2, LY6, LC9, LMG, LY5)**.

VALVE LIFTER OIL FILTER REPLACEMENT

Removal Procedure

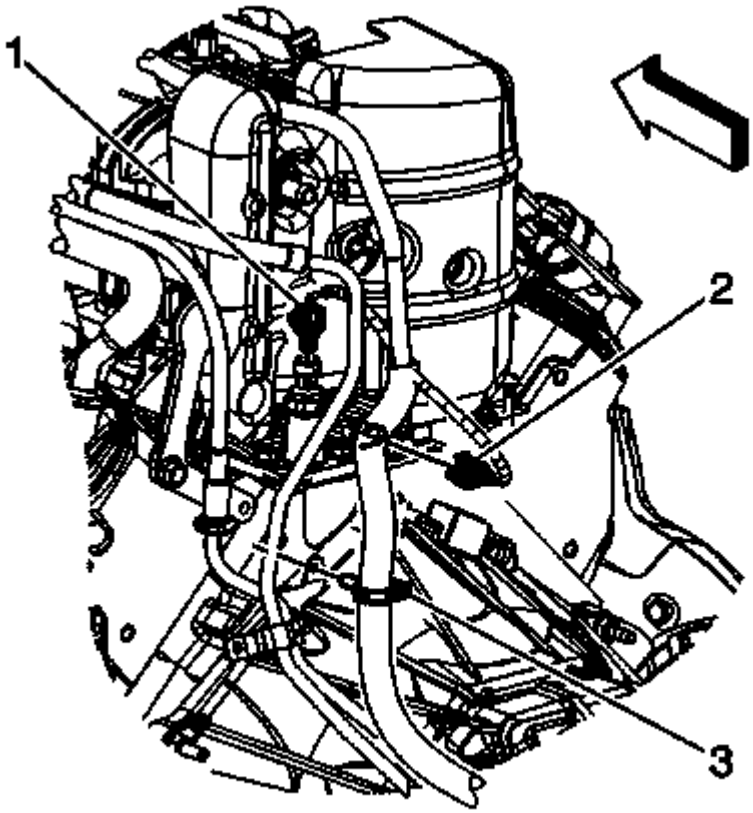

Fig. 170: View Of Engine Harness Electrical Connectors & Inlet Hose Clamp
Courtesy of GENERAL MOTORS COMPANY

1. Remove the intake manifold. Refer to **Intake Manifold Replacement (RPOs LC9, LMG, LY5, L76)**, **Intake Manifold Replacement (RPOs LY2, LY6)**, **Intake Manifold Replacement (Except RPOs LY2, LY6, LC9, LMG, LY5)**.
2. Disconnect the engine harness electrical connector (1) from the oil pressure sensor.

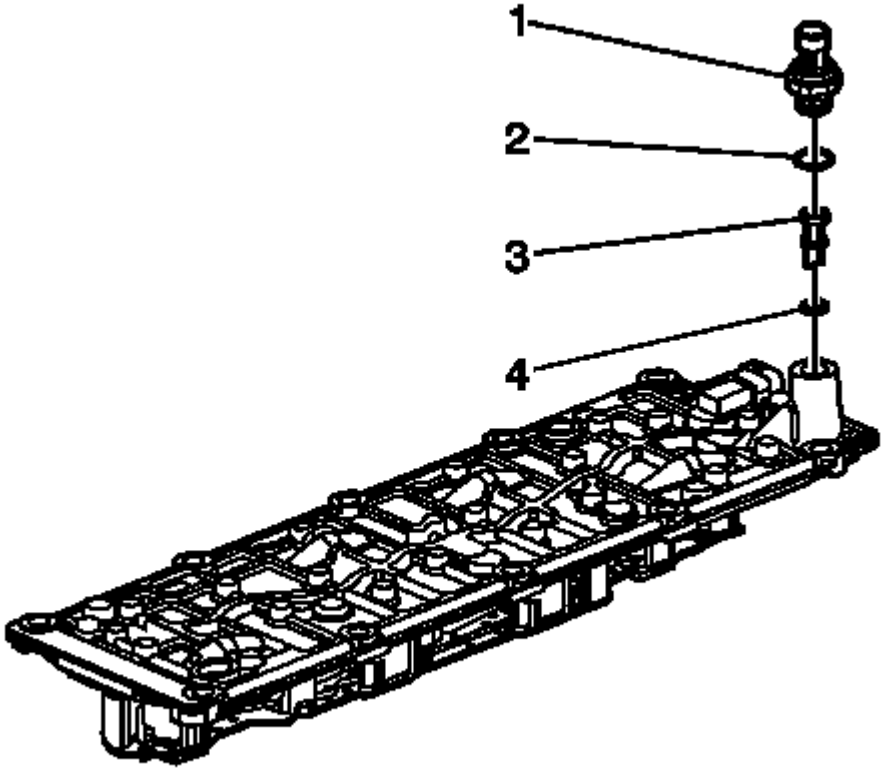

Fig. 171: View Of Oil Pressure Sensor
Courtesy of GENERAL MOTORS COMPANY

3. Remove the oil pressure sensor (1) and washer (2).
4. Remove and discard the valve lifter oil filter (3).
5. Remove and discard the valve lifter oil filter O-ring seal (4).

Installation Procedure

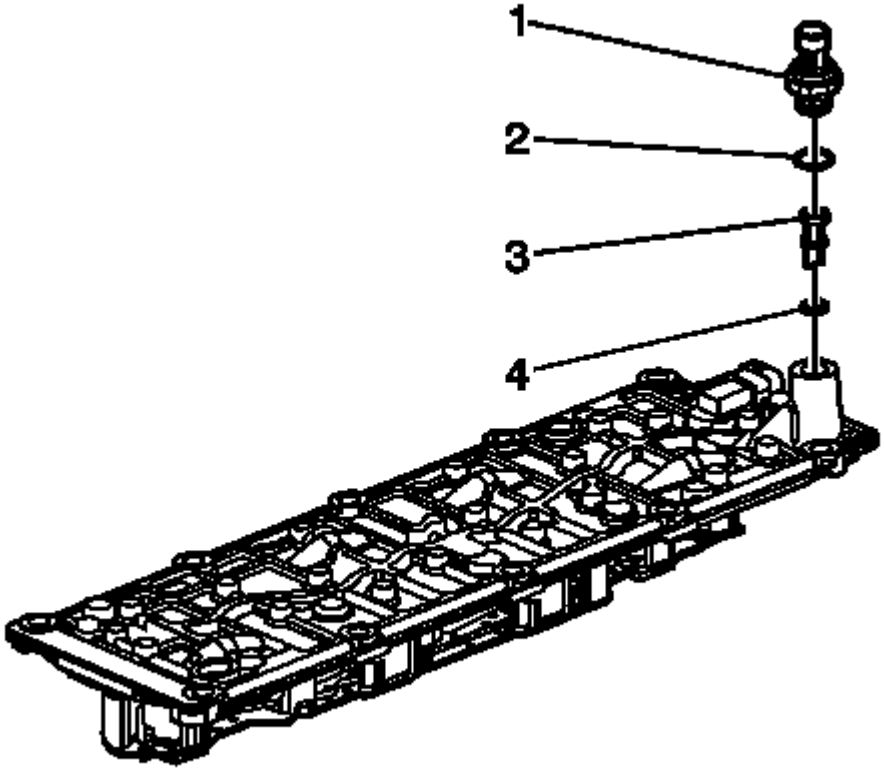

Fig. 172: View Of Oil Pressure Sensor
Courtesy of GENERAL MOTORS COMPANY

1. Install a NEW valve lifter oil filter O-ring seal (4) into the valve lifter oil manifold.
2. Install the NEW valve lifter oil filter (3).
3. Apply sealant GM P/N 12346004 (Canadian P/N 10953480) or equivalent to the threads of the oil pressure sensor.

CAUTION: Refer to Fastener Caution .

4. Install the oil pressure sensor washer (2) and sensor (1).

Tighten

Tighten the sensor to 35 N.m (26 lb ft).

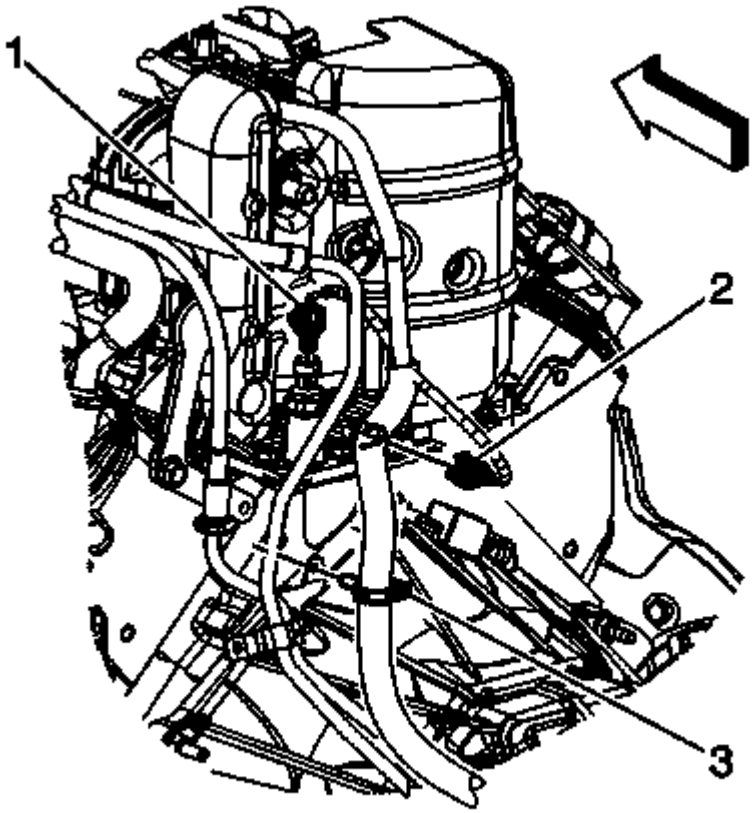

Fig. 173: View Of Engine Harness Electrical Connectors & Inlet Hose Clamp
Courtesy of GENERAL MOTORS COMPANY

5. Connect the engine harness electrical connector (1) to the oil pressure sensor.
6. Install the intake manifold. Refer to **Intake Manifold Replacement (RPOs LC9, LMG, LY5, L76)**, **Intake Manifold Replacement (RPOs LY2, LY6)**, **Intake Manifold Replacement (Except RPOs LY2, LY6, LC9, LMG, LY5)**.

VALVE ROCKER ARM COVER REPLACEMENT - LEFT SIDE

Removal Procedure

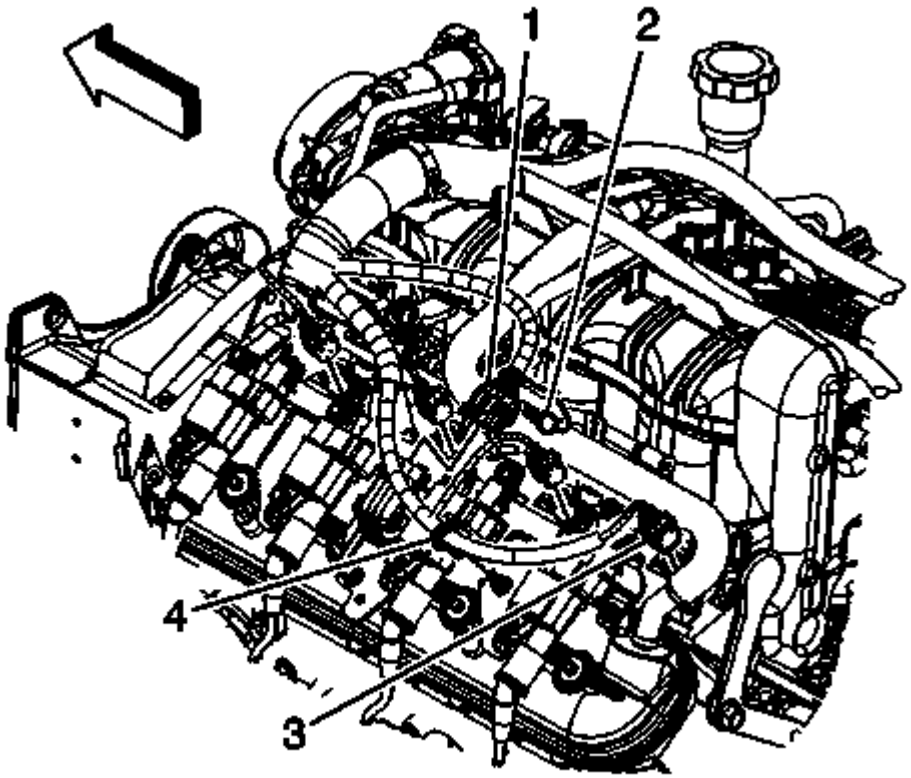

Fig. 174: View Of CPA Retainer, Electrical Connectors & Engine Harness Clips
Courtesy of GENERAL MOTORS COMPANY

1. Remove the intake manifold cover. Refer to **Upper Intake Manifold Sight Shield Replacement**.
2. Remove the connector position assurance (CPA) retainer (2).
3. Disconnect the engine harness electrical connector (1) from the ignition coil wire harness.
4. Remove the engine harness clip (4) from the ignition coil bracket stud.
5. Reposition the engine harness, as necessary.

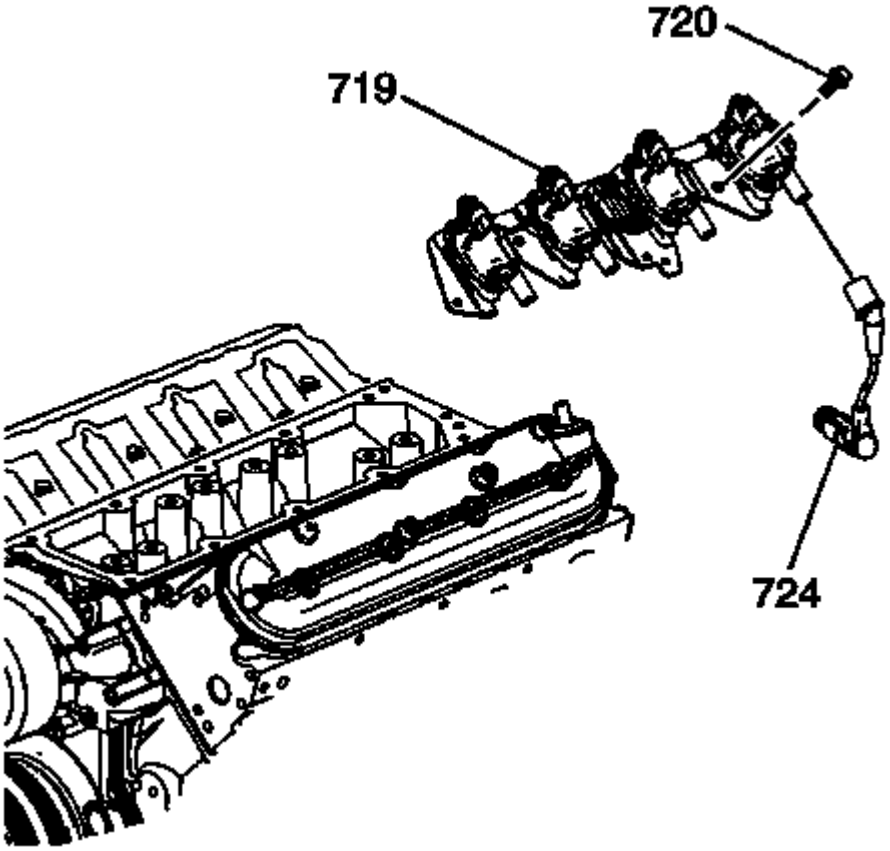

Fig. 175: Ignition Coils & Bracket
Courtesy of GENERAL MOTORS COMPANY

6. Remove the spark plug wires (724) from the ignition coils.
   - Twist each plug wire 1/2 turn.
   - Pull only on the boot in order to remove the wire from the ignition coil.
7. Remove the ignition coil bracket studs (720).
8. Remove the ignition coil bracket (719).

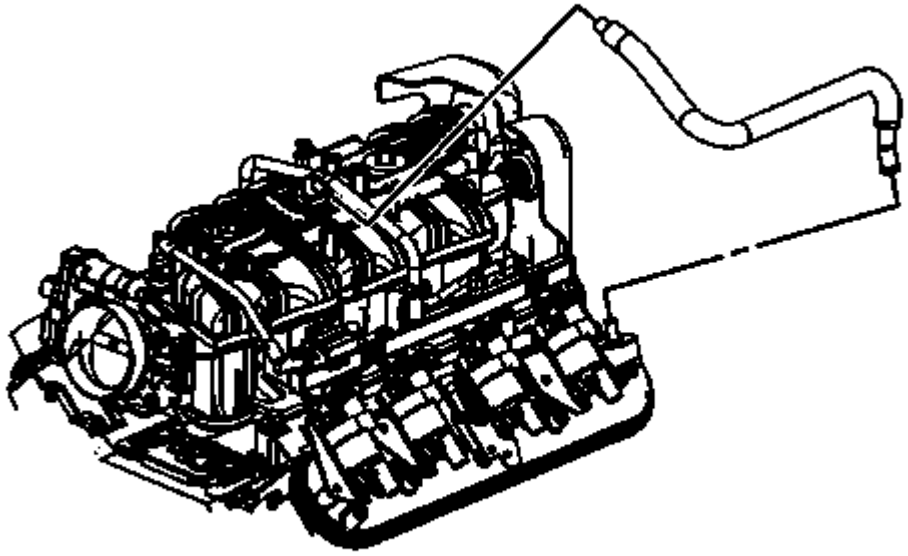

Fig. 176: View Of PCV Hose
Courtesy of GENERAL MOTORS COMPANY

9. Remove the positive crankcase ventilation (PCV) hose.

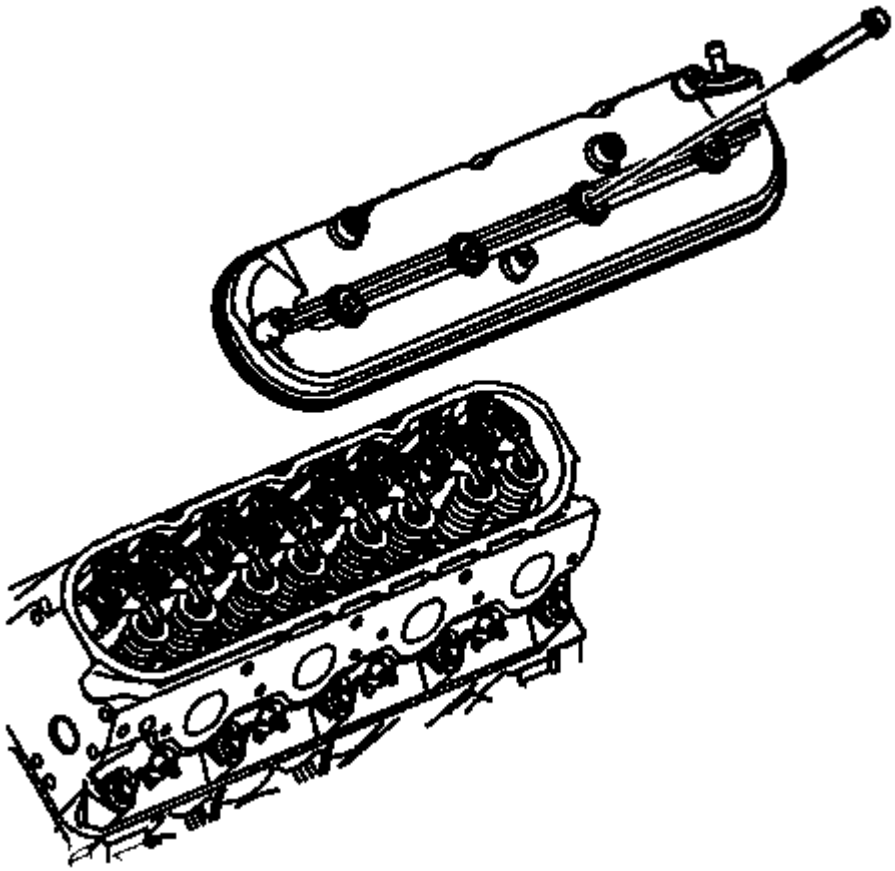

Fig. 177: View Of Valve Rocker Arm Cover
Courtesy of GENERAL MOTORS COMPANY

10. Loosen the valve rocker arm cover bolts.
11. Remove the valve rocker arm cover.

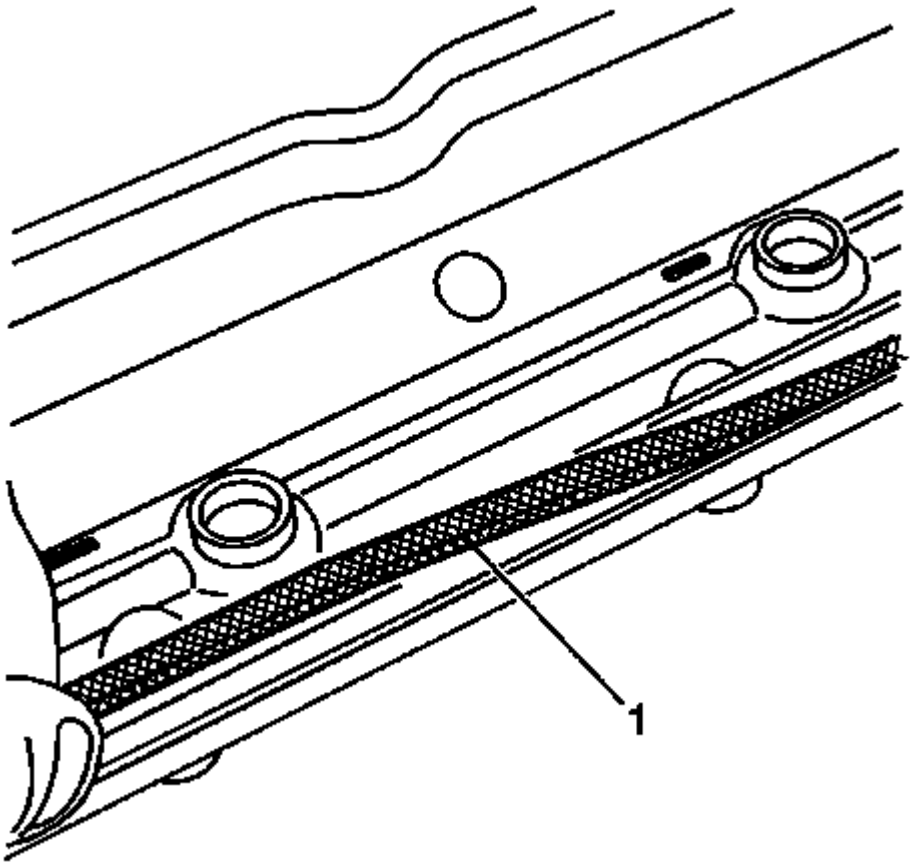

Fig. 178: Rocker Arm Cover Gasket
Courtesy of GENERAL MOTORS COMPANY

12. Remove and discard the old gasket (1).

Installation Procedure

NOTE:

- **All gasket surfaces should be free of oil an/or other foreign material during assembly.**
- **DO NOT reuse the valve rocker arm cover gasket.**
- **If the PCV valve grommet has been removed from the rocker cover, install a NEW grommet during assembly.**

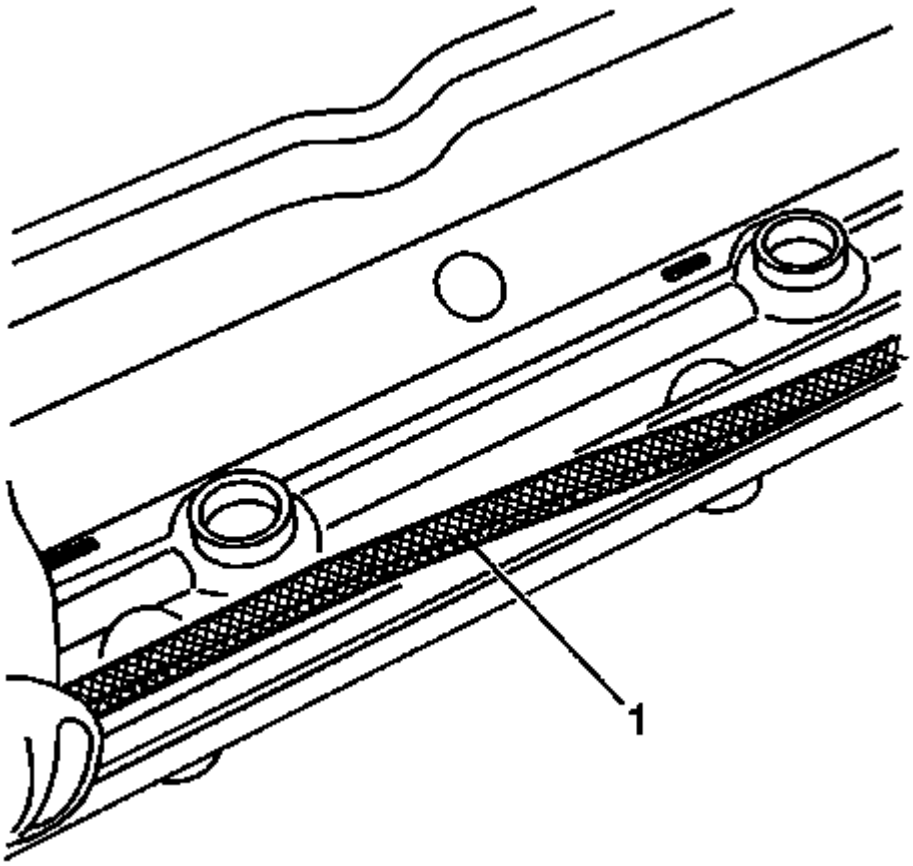

Fig. 179: Rocker Arm Cover Gasket
Courtesy of GENERAL MOTORS COMPANY

1. Install a NEW rocker cover gasket (1).

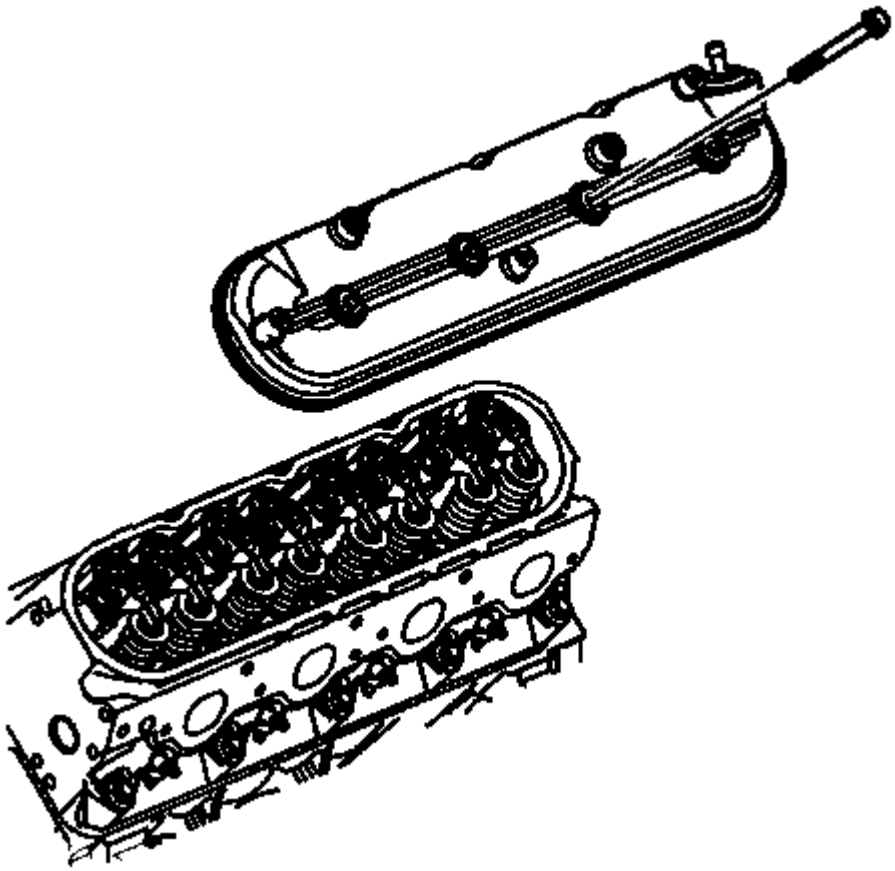

Fig. 180: View Of Valve Rocker Arm Cover
Courtesy of GENERAL MOTORS COMPANY

2. Install the valve rocker arm cover.

CAUTION: Refer to Fastener Caution .

3. Tighten the rocker arm cover bolts.

Tighten

Tighten the bolts to 12 N.m (106 lb in).

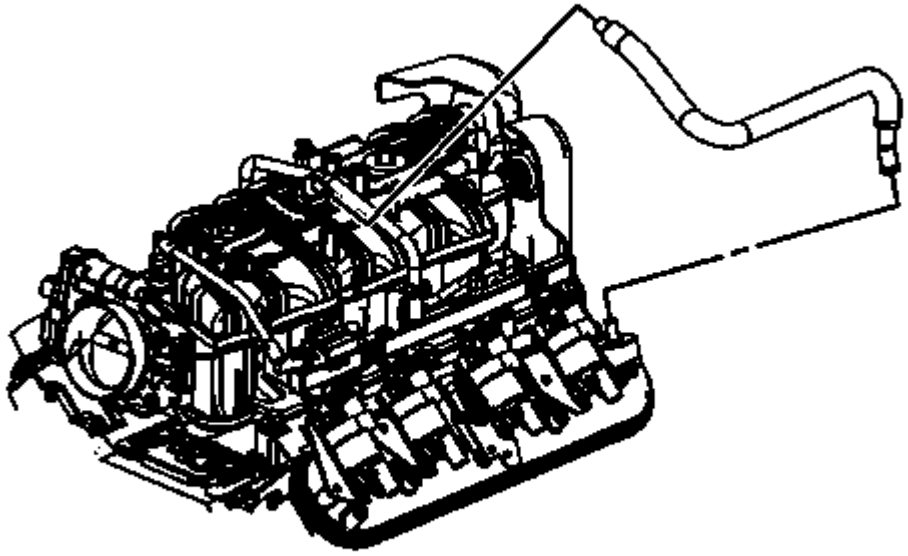

Fig. 181: View Of PCV Hose
Courtesy of GENERAL MOTORS COMPANY

4. Install the PCV hose.

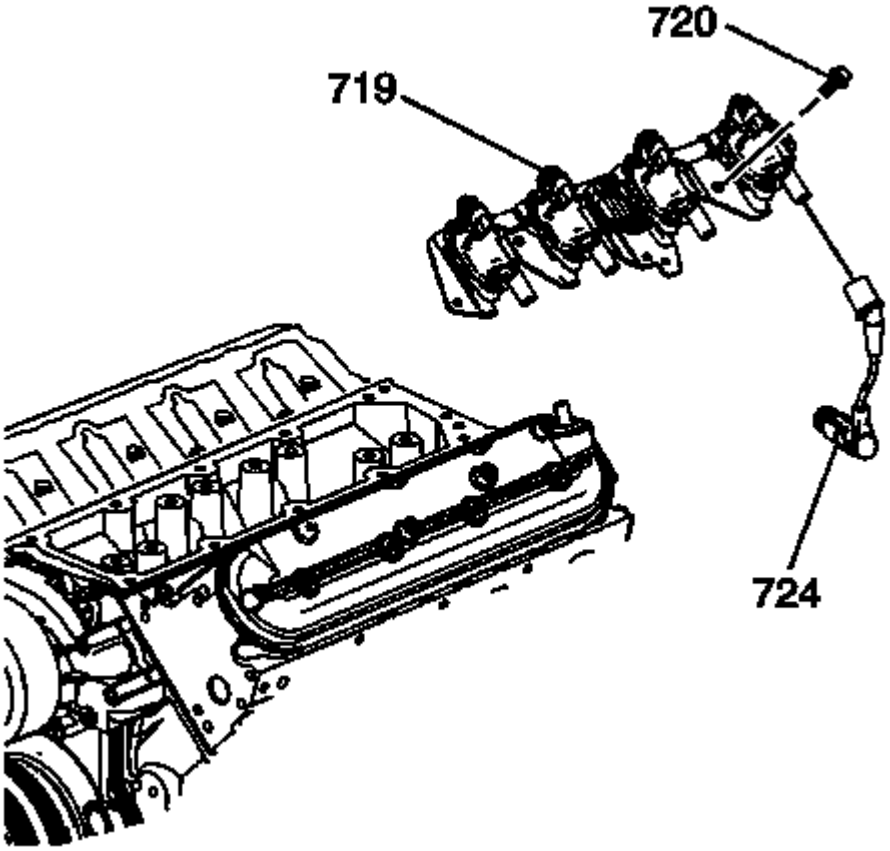

Fig. 182: Ignition Coils & Bracket
Courtesy of GENERAL MOTORS COMPANY

5. Apply threadlock to the threads of the ignition coil bracket studs. Refer to **Adhesives, Fluids, Lubricants, and Sealers** .
6. Position the ignition coil bracket (719) onto the rocker cover.
7. Install the ignition coil bracket studs (720).

   Tighten

   Tighten the studs to 12 N.m (106 lb in).

8. Install the spark plug wires (724) to the ignition coils.

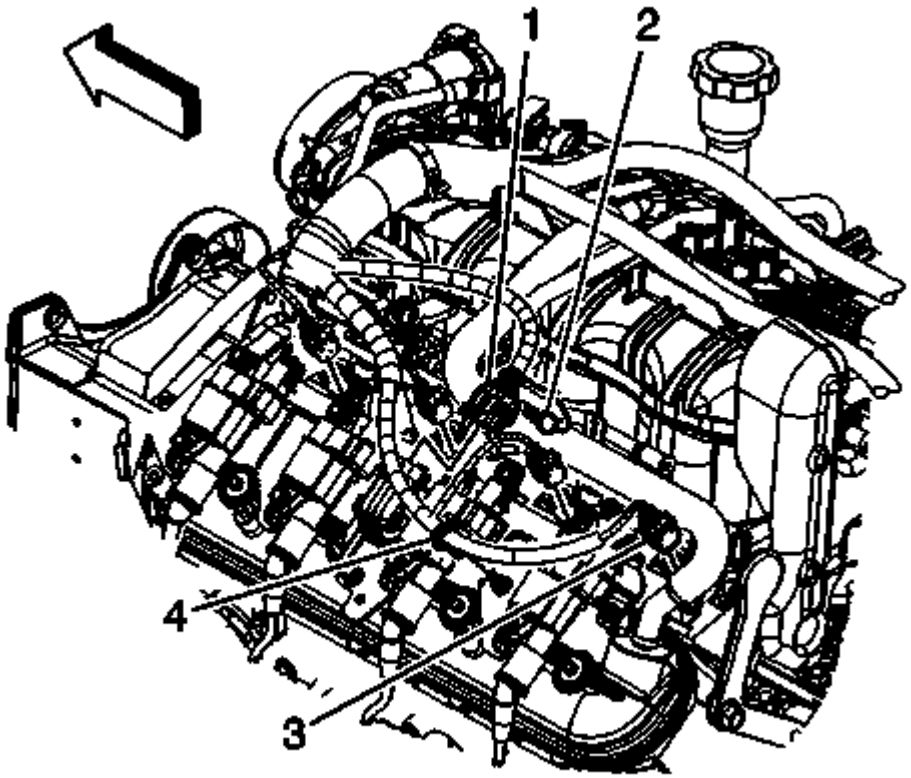

Fig. 183: View Of CPA Retainer, Electrical Connectors & Engine Harness Clips
Courtesy of GENERAL MOTORS COMPANY

9. Position the engine harness, as necessary.
10. Install the engine harness clip (4) to the ignition coil bracket stud.
11. Connect the engine harness electrical connector (1) to the ignition coil wire harness.
12. Install the CPA retainer (2).
13. Install the intake manifold cover. Refer to **Upper Intake Manifold Sight Shield Replacement**.

VALVE ROCKER ARM COVER REPLACEMENT - RIGHT SIDE

Removal Procedure

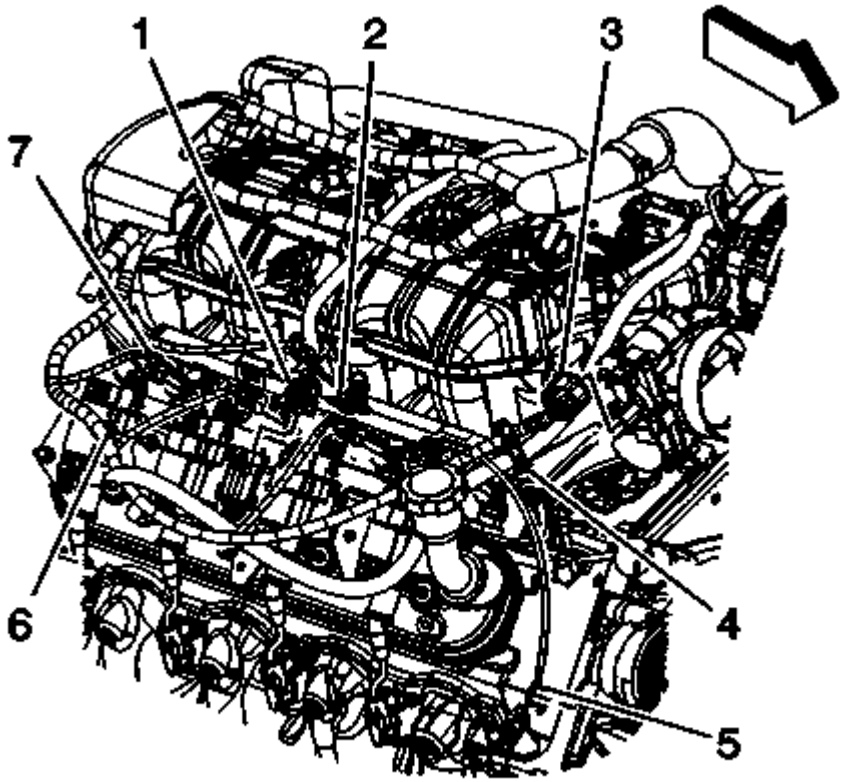

Fig. 184: View Of CPA Retainer, Engine Harness Electrical Connectors & Harness Clips
Courtesy of GENERAL MOTORS COMPANY

1. Remove the intake manifold cover. Refer to **Upper Intake Manifold Sight Shield Replacement**.
2. Remove the connector position assurance (CPA) retainer (2).
3. Disconnect the engine harness electrical connector (1) from the ignition coil wire harness.
4. Remove the engine wiring harness (electronic throttle control branch) clip (6) from the ignition coil bracket stud.
5. Reposition the engine wiring harness (electronic throttle control branch) as necessary.

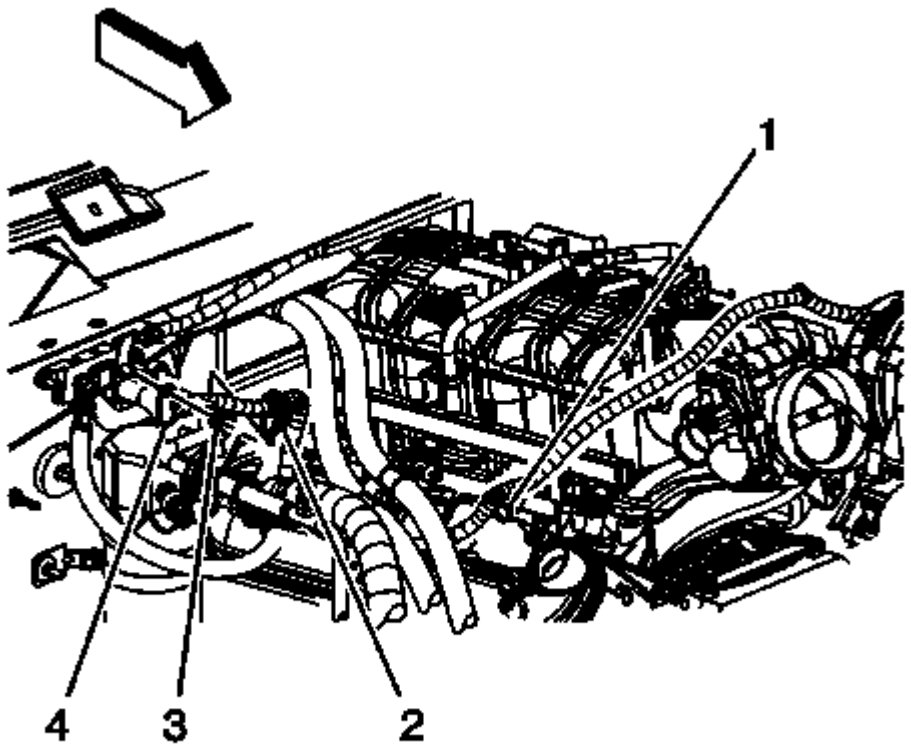

Fig. 185: View Of Generator Battery Jumper Cable & Components
Courtesy of GENERAL MOTORS COMPANY

6. Remove the generator battery cable clip (1) from the ignition coil bracket stud.
7. Reposition the generator battery cable as necessary.

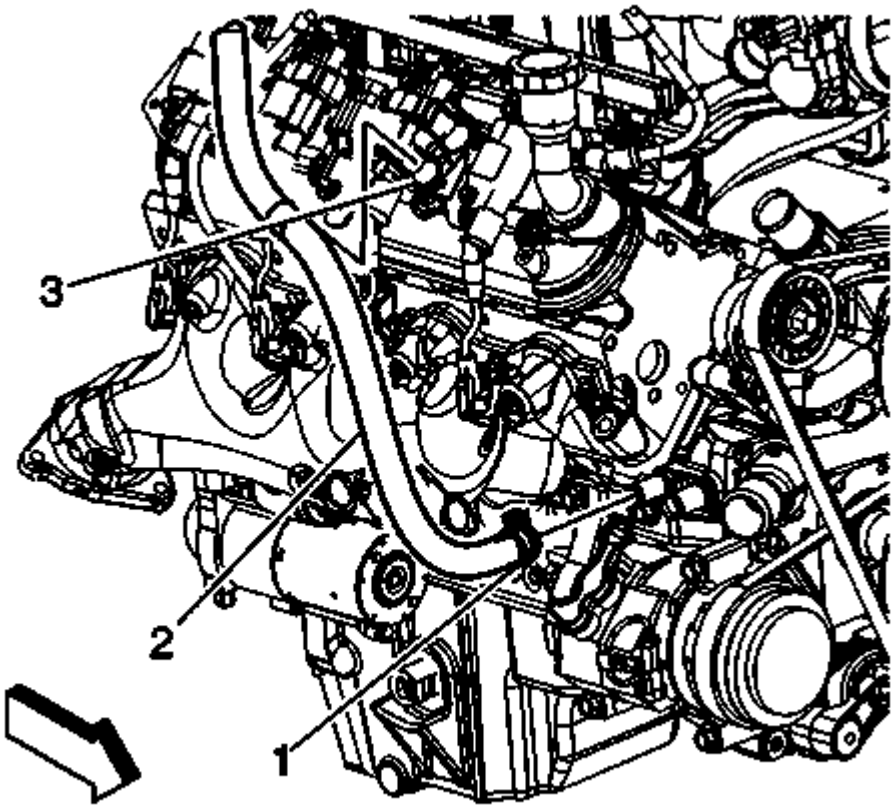

Fig. 186: View Of Heater Inlet Hose, Clamp & Waterpump
Courtesy of GENERAL MOTORS COMPANY

8. Remove the heater inlet hose (2) from the heater hose bracket (3).

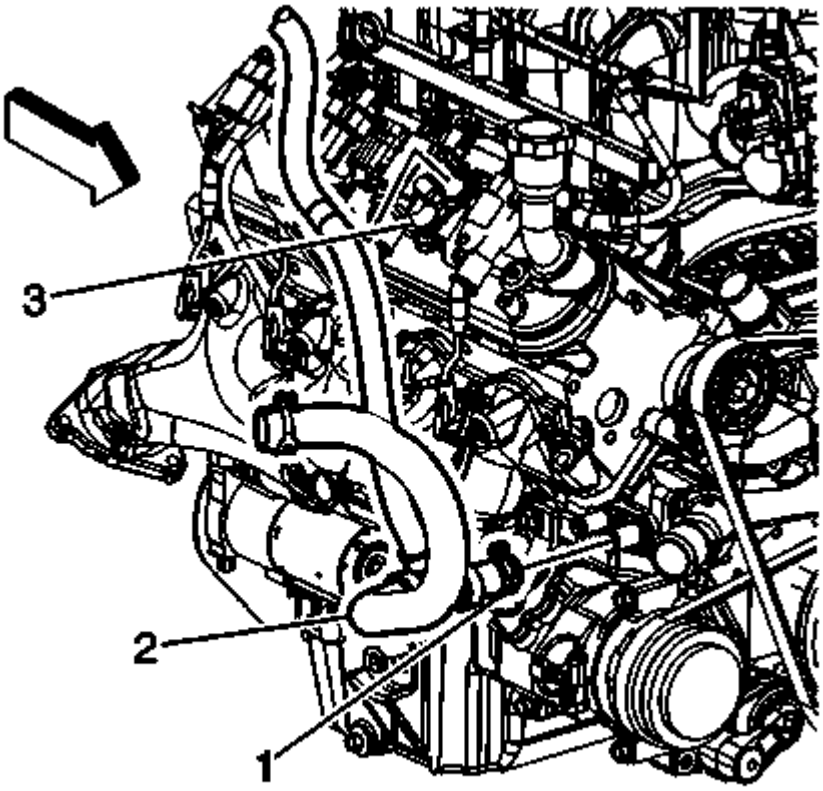

Fig. 187: View Of Radiator Surge Tank Outlet Hose, Clamp & Water Pump
Courtesy of GENERAL MOTORS COMPANY

9. Remove the surge tank outlet hose (2) from the heater hose bracket (3).

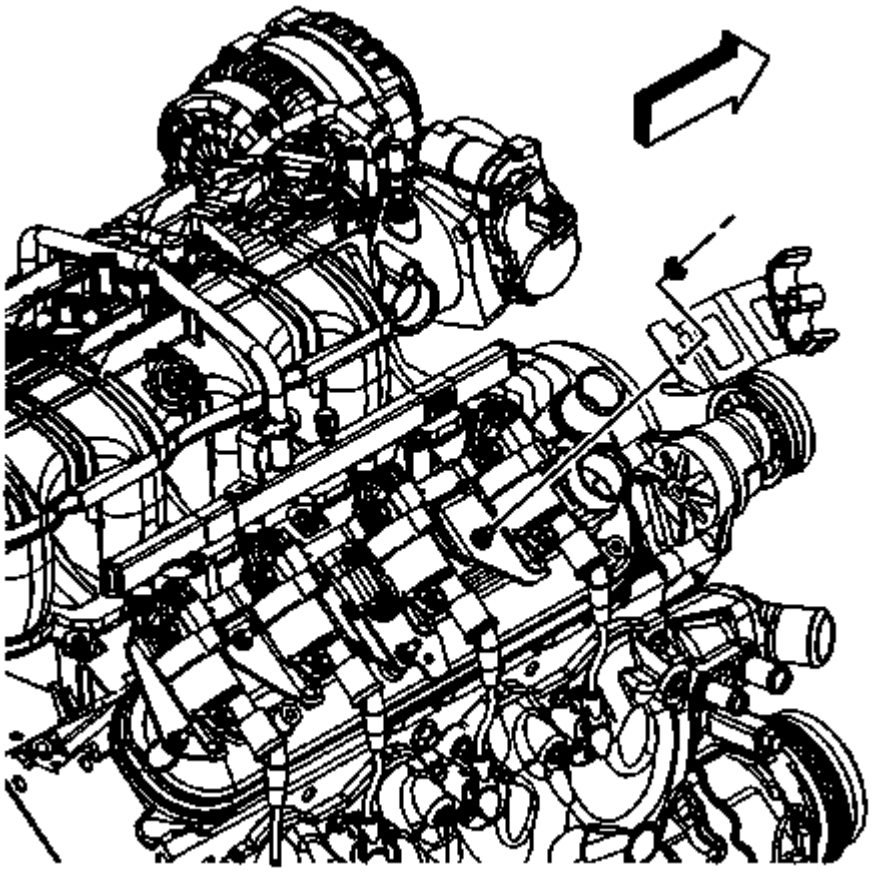

Fig. 188: View Of Heater Hose Bracket & Nut
Courtesy of GENERAL MOTORS COMPANY

10. Remove the heater hose bracket nut and bracket

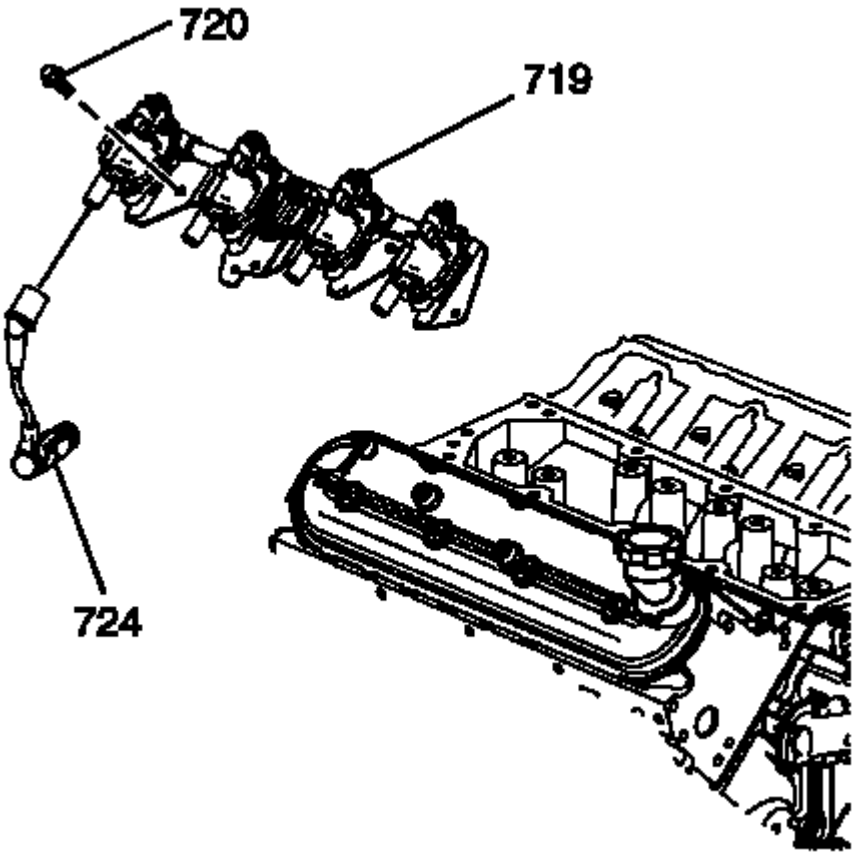

Fig. 189: Ignition Coils & Bracket
Courtesy of GENERAL MOTORS COMPANY

11. Remove the spark plug wires (724) from the ignition coils.
    - Twist each plug wire 1/2 turn.
    - Pull only on the boot in order to remove the wire from the ignition coil.
12. Remove the ignition coil bracket studs (720).
13. Remove the ignition coil bracket (719).

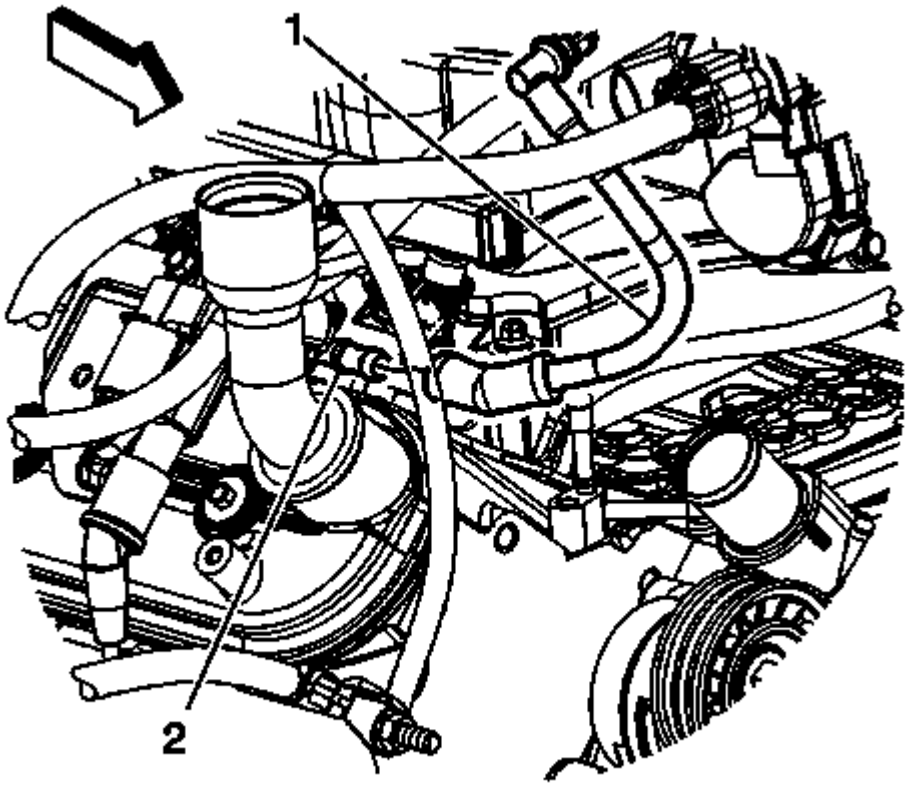

Fig. 190: View Of PCV Tube & Right Valve Rocker Arm Cover Fitting
Courtesy of GENERAL MOTORS COMPANY

14. Remove the positive crankcase ventilation (PCV) tube (1) from the valve rocker cover (2).

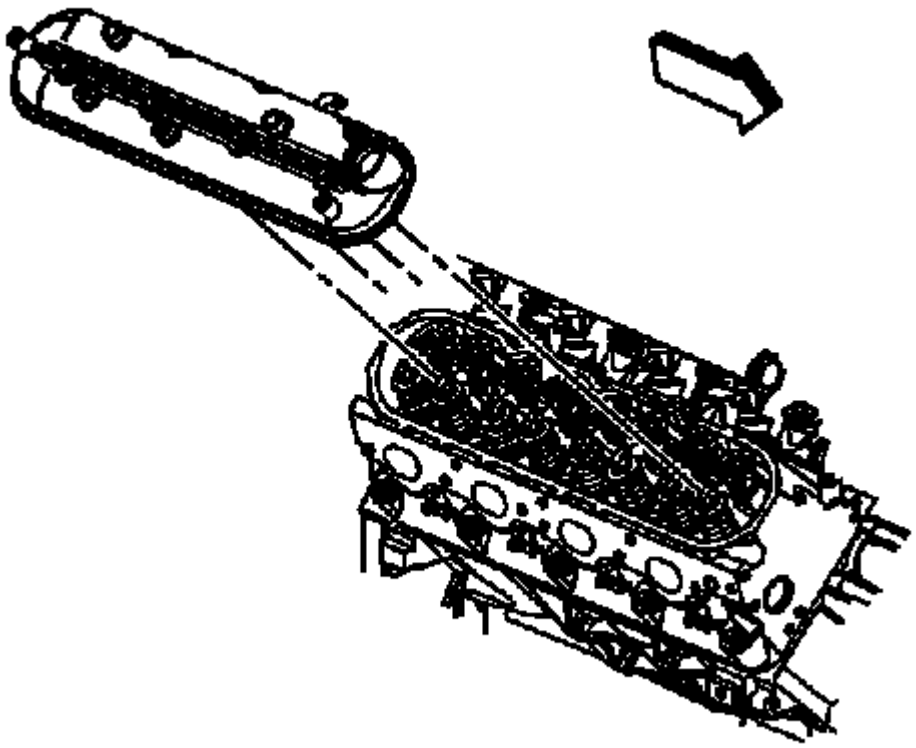

Fig. 191: View Of Valve Rocker Arm Cover (Right)
Courtesy of GENERAL MOTORS COMPANY

15. Loosen the valve rocker arm cover bolts.
16. Remove the valve rocker arm cover.

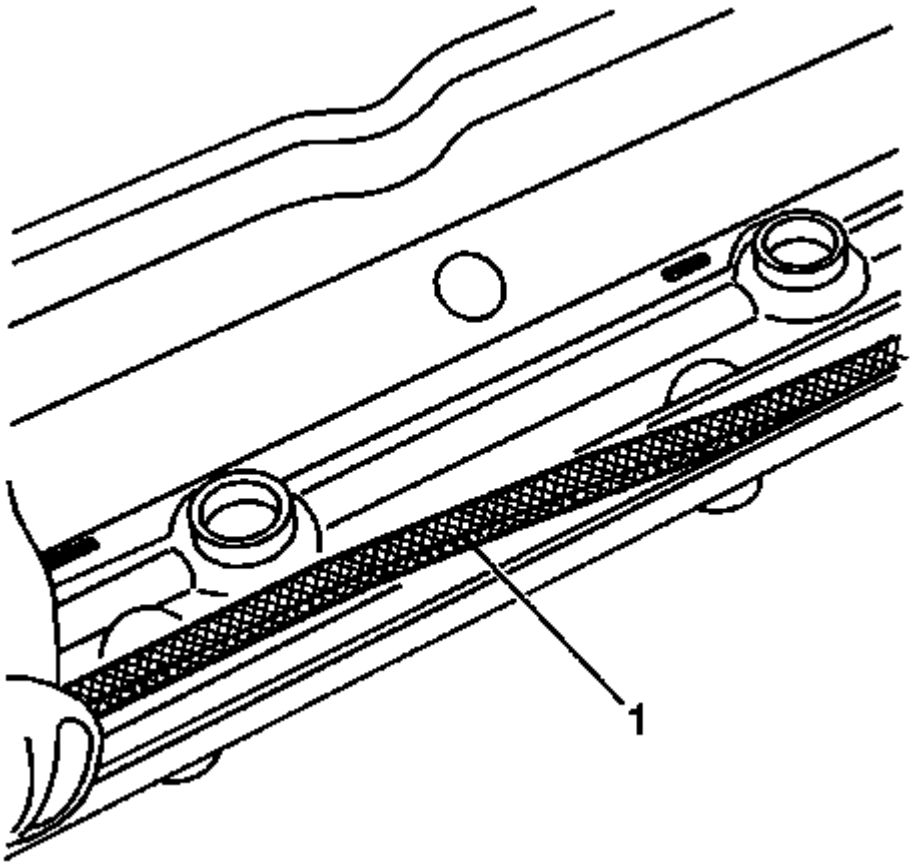

Fig. 192: Rocker Arm Cover Gasket
Courtesy of GENERAL MOTORS COMPANY

17. Remove and discard the old gasket (1).

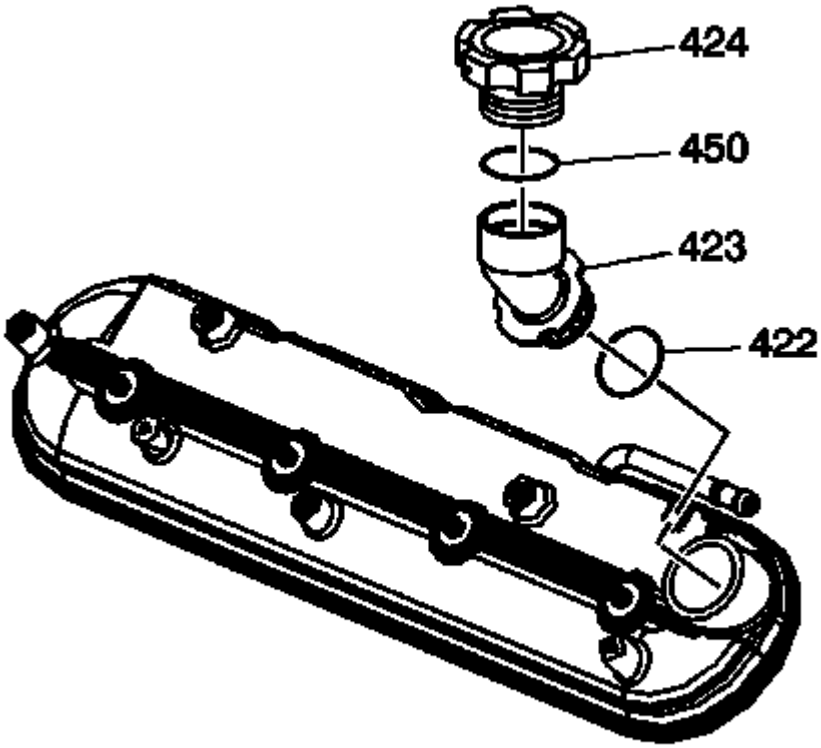

Fig. 193: Oil Fill Cap & Oil Fill Tube
Courtesy of GENERAL MOTORS COMPANY

18. Remove the oil fill cap (424) from the oil fill tube (423), if necessary.
19. Remove and discard the oil fill tube, if necessary.

Installation Procedure

NOTE:

- **All gasket surfaces should be free of oil or other foreign material during assembly.**
- **DO NOT reuse the valve rocker arm cover gasket.**
- **If the oil fill tube has been removed from the rocker arm cover, install a NEW fill tube during assembly.**

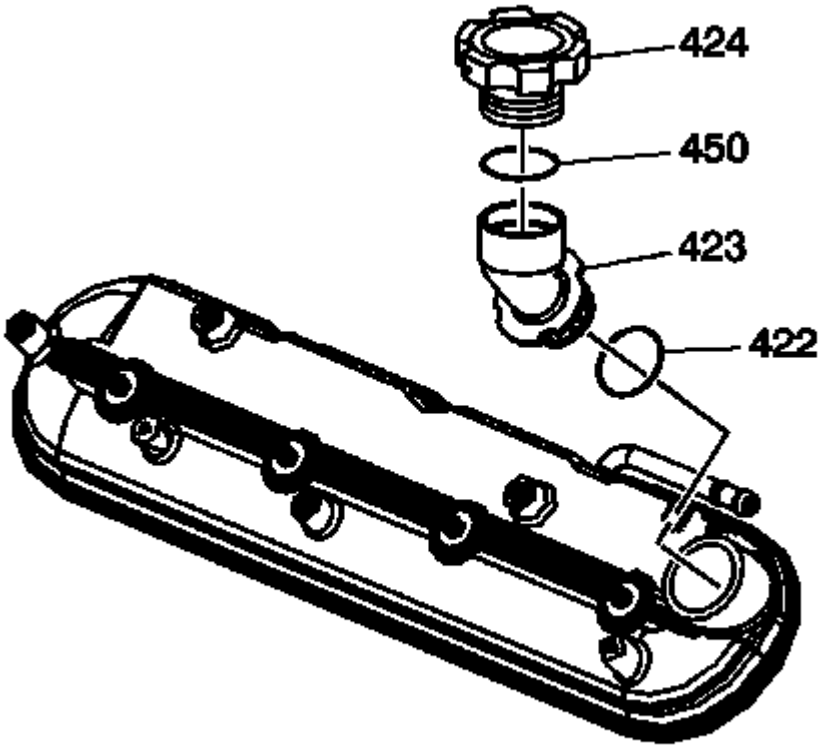

Fig. 194: Oil Fill Cap & Oil Fill Tube
Courtesy of GENERAL MOTORS COMPANY

1. Lubricate the O-ring seal (422) of the NEW oil fill tube with clean engine oil.
2. Insert the NEW oil fill tube (423) into the rocker arm cover.

   Rotate the tube clockwise until locked in the proper position.

3. Install the oil fill cap (424) into the tube.

   Rotate the cap clockwise until locked in the proper position.

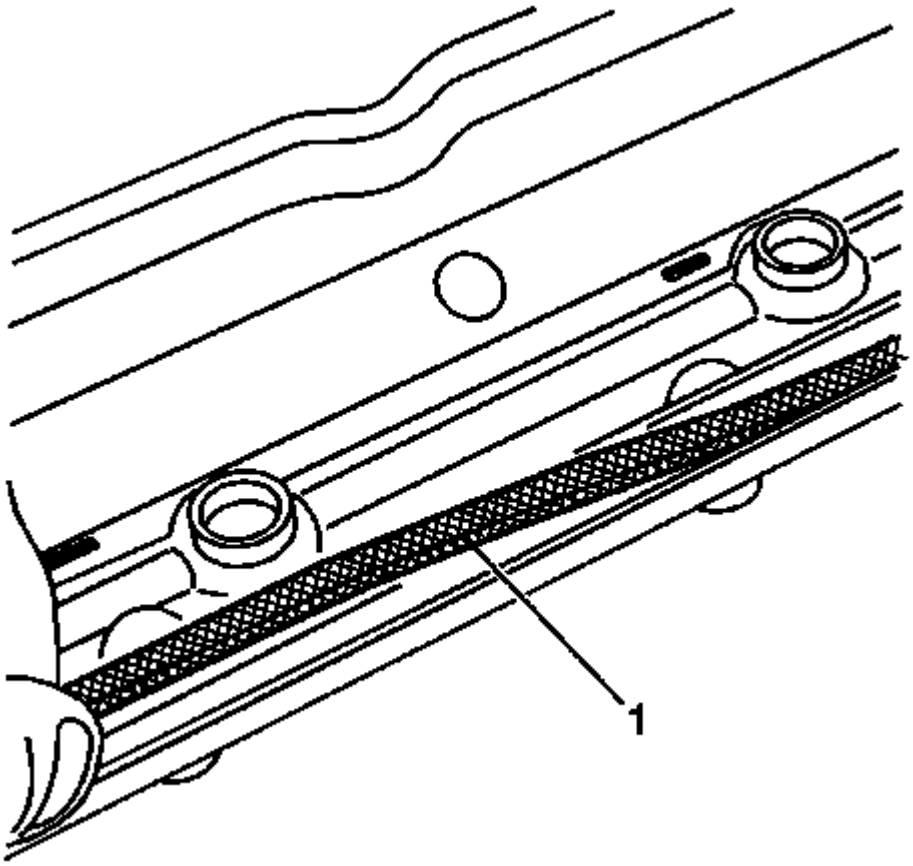

Fig. 195: Rocker Arm Cover Gasket
Courtesy of GENERAL MOTORS COMPANY

4. Install a NEW rocker cover gasket (1) into the valve rocker arm cover lip.

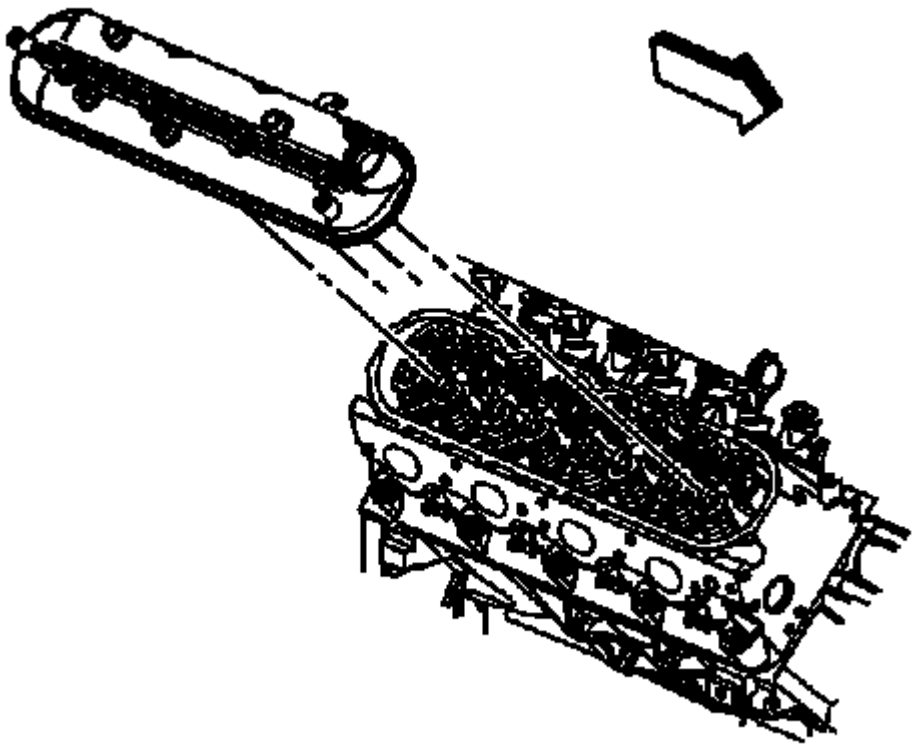

Fig. 196: View Of Valve Rocker Arm Cover (Right)
Courtesy of GENERAL MOTORS COMPANY

5. Install the valve rocker arm cover.

CAUTION: Refer to Fastener Caution .

6. Tighten the rocker arm cover bolts.

Tighten

Tighten the bolts to 12 N.m (106 lb in).

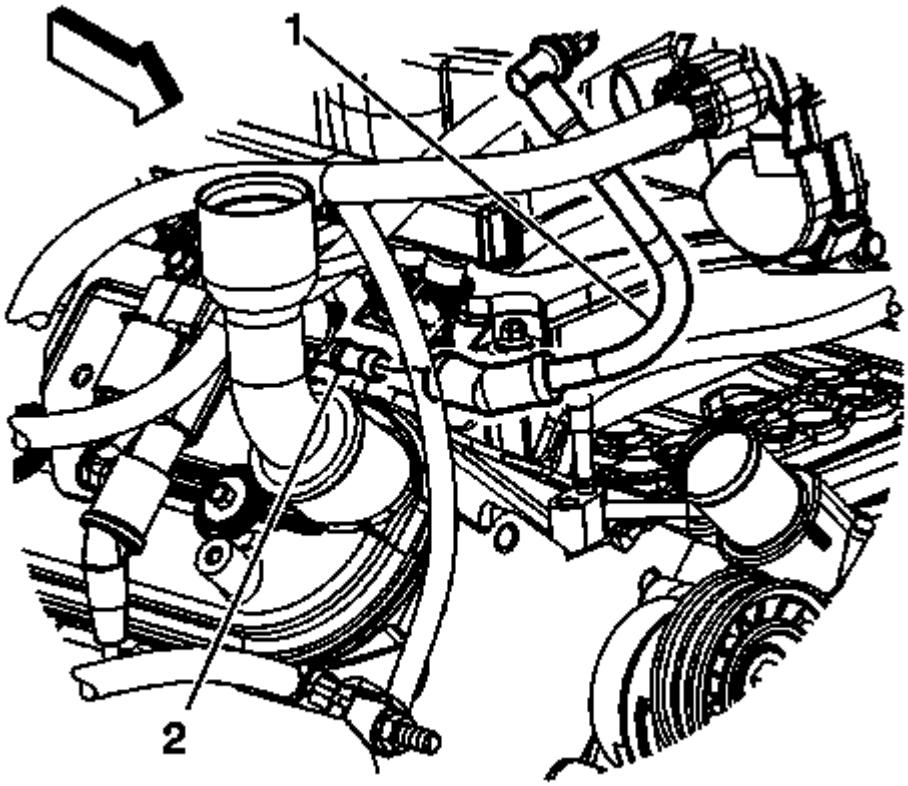

Fig. 197: View Of PCV Tube & Right Valve Rocker Arm Cover Fitting
Courtesy of GENERAL MOTORS COMPANY

7. Install the PCV tube (1) to the valve rocker cover (2).

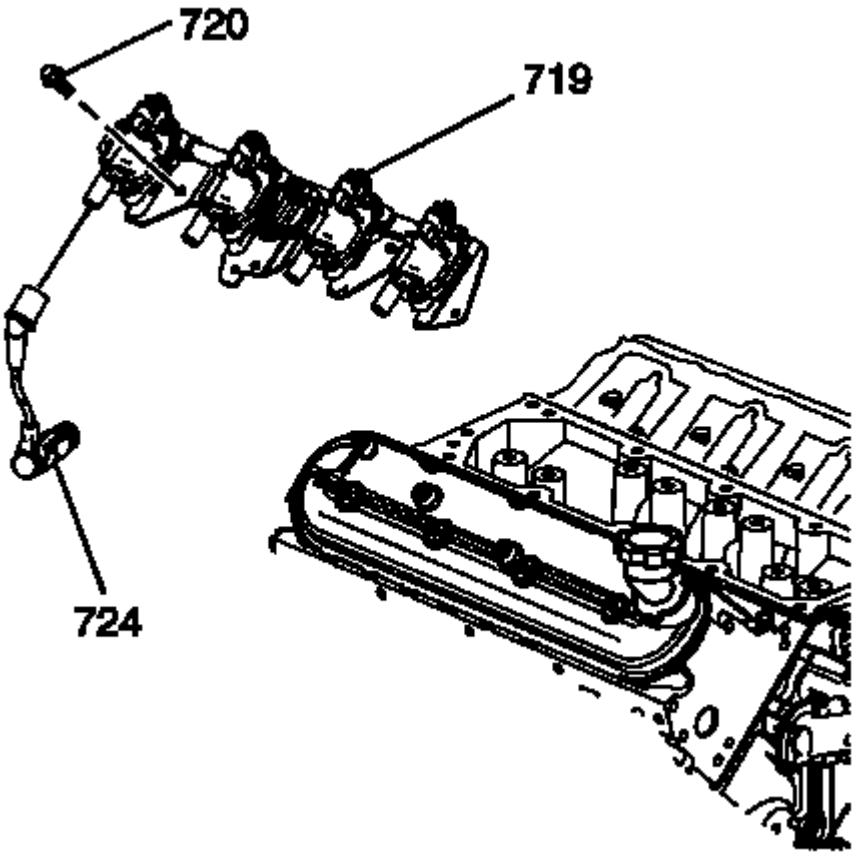

Fig. 198: Ignition Coils & Bracket
Courtesy of GENERAL MOTORS COMPANY

8. Apply threadlock GM P/N 12345382 (Canadian P/N 10953489), or equivalent to the threads of the ignition coil bracket studs.
9. Position the ignition coil bracket (719) onto the rocker cover.
10. Install the ignition coil bracket studs (720).

Tighten

Tighten the studs to 12 N.m (106 lb in).

11. Install the spark plug wires (724) to the ignition coils.

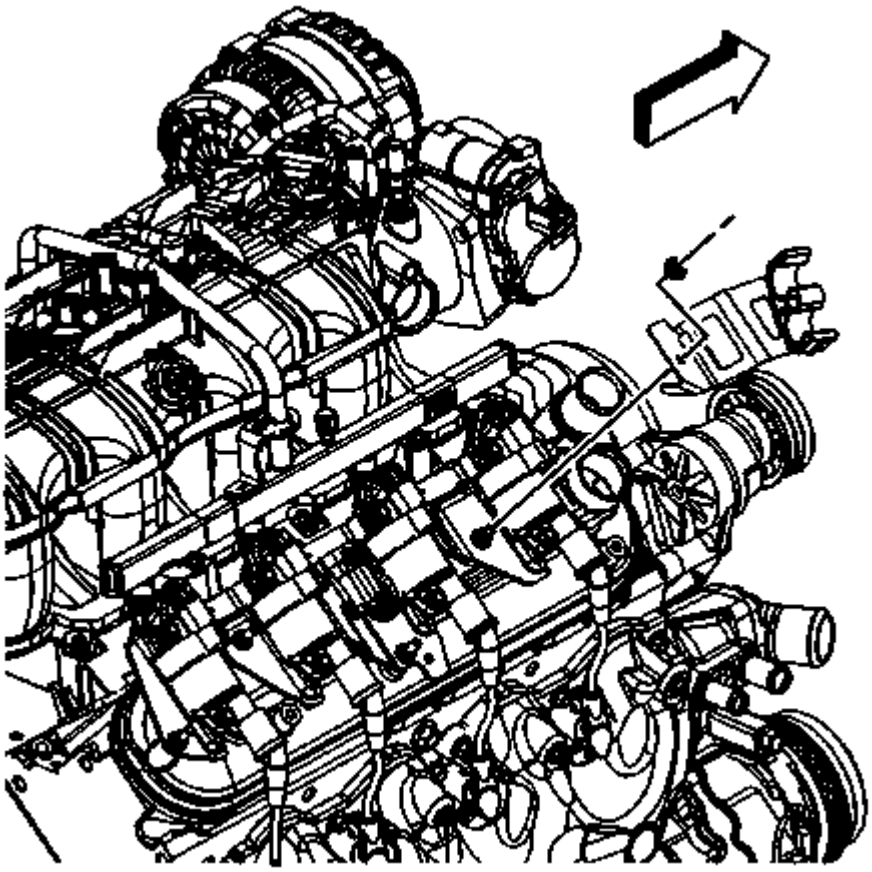

Fig. 199: View Of Heater Hose Bracket & Nut
Courtesy of GENERAL MOTORS COMPANY

12. Install the heater hose bracket and nut.

    Tighten

    Tighten the nut to 9 N.m (80 lb in).

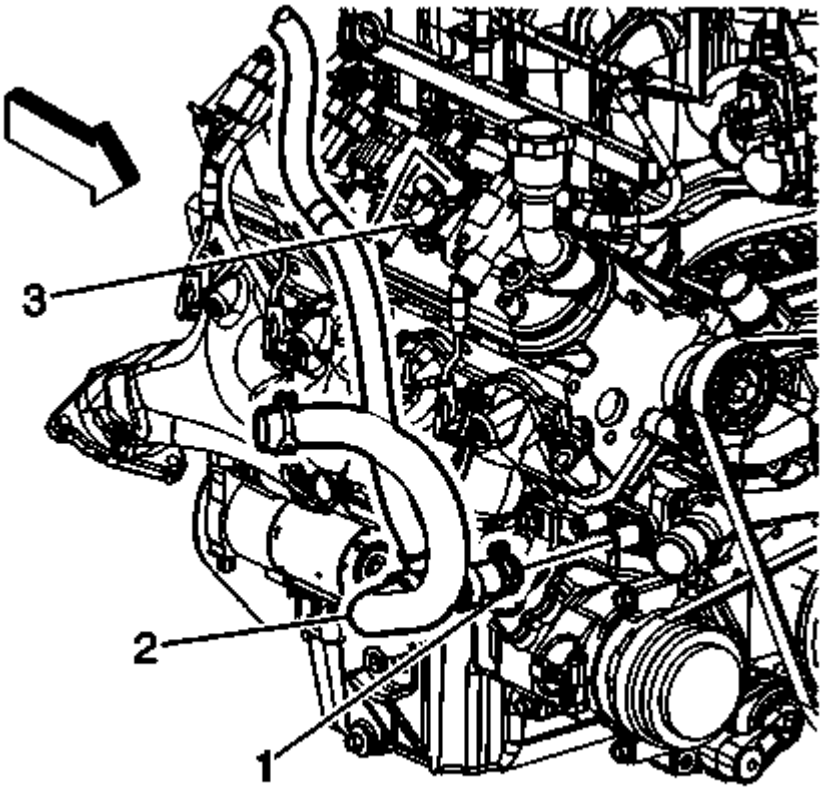

Fig. 200: View Of Radiator Surge Tank Outlet Hose, Clamp & Water Pump
Courtesy of GENERAL MOTORS COMPANY

13. Install the surge tank outlet hose (2) to the heater hose bracket (3).

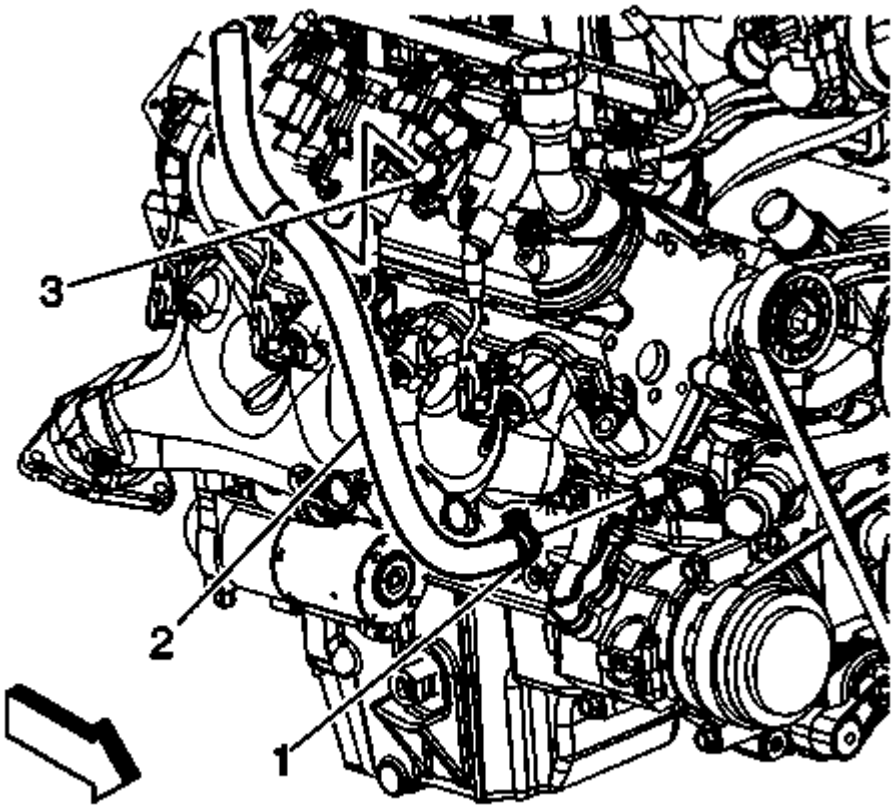

Fig. 201: View Of Heater Inlet Hose, Clamp & Waterpump
Courtesy of GENERAL MOTORS COMPANY

14. Install the heater inlet hose (2) to the heater hose bracket (3).

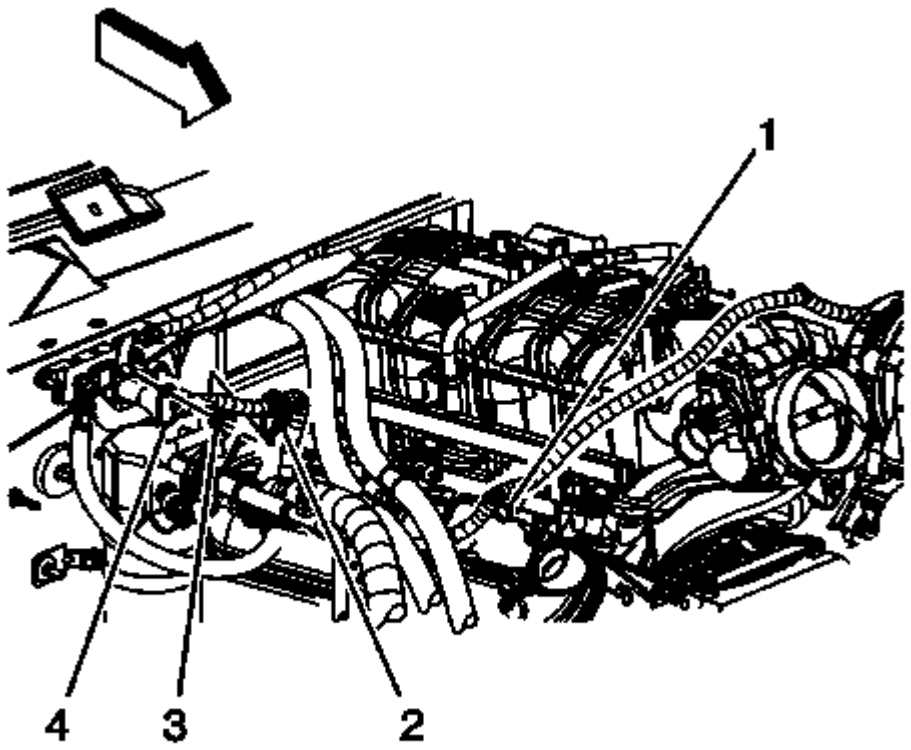

Fig. 202: View Of Generator Battery Jumper Cable & Components
Courtesy of GENERAL MOTORS COMPANY

15. Position the generator battery cable as necessary.
16. Install the generator battery cable clip (1) to the ignition coil bracket stud.

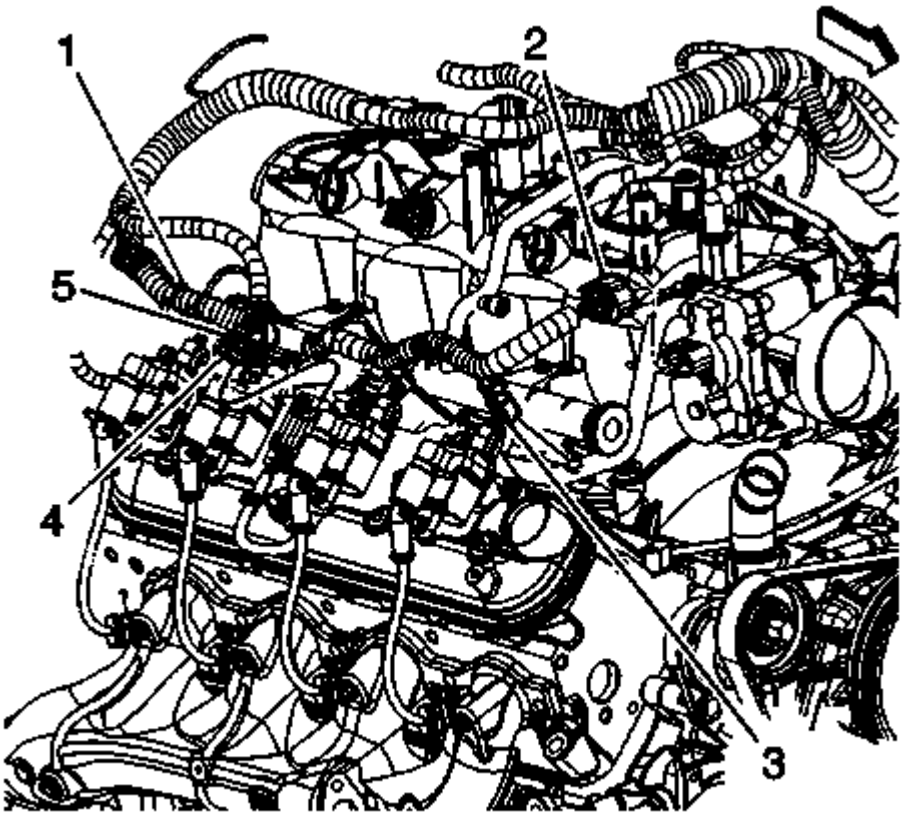

Fig. 203: Identifying Right Side Main Electrical Connectors
Courtesy of GENERAL MOTORS COMPANY

17. Position the engine wiring harness (electronic throttle control branch) as necessary.
18. Install the engine wiring harness (electronic throttle control branch) clip (6) to the ignition coil bracket stud.
19. Connect the engine harness electrical connector (1) to the ignition coil wire harness.
20. Install the CPA retainer (2).
21. Install the intake manifold cover. Refer to **Upper Intake Manifold Sight Shield Replacement**.

VALVE ROCKER ARM AND PUSH ROD REPLACEMENT

Removal Procedure

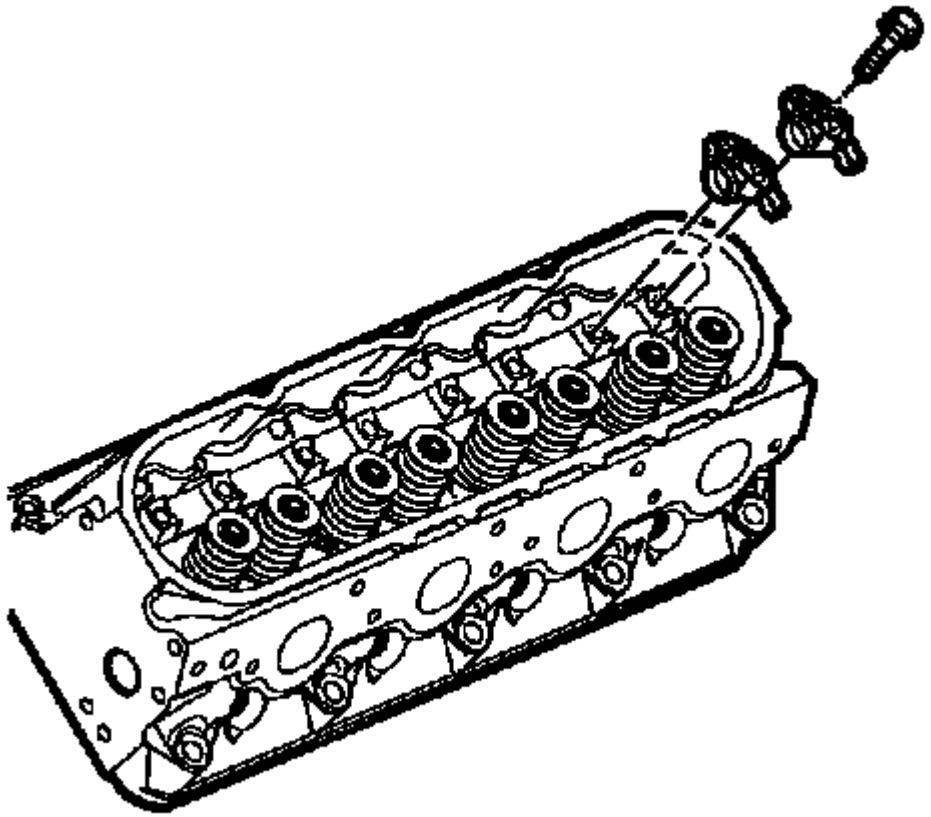

Fig. 204: View Of Rocker Arms & Bolts
Courtesy of GENERAL MOTORS COMPANY

1. Remove the rocker arm cover. Refer to **Valve Rocker Arm Cover Replacement - Left Side**, or **Valve Rocker Arm Cover Replacement - Right Side**.

   NOTE: The engine firing order is 1, 8, 7, 2, 6, 5, 4, 3. Cylinders 1, 3, 5 and 7 are the left bank.

2. Remove the number one cylinder spark plug. Refer to **Spark Plug Replacement** .

   NOTE: Place the rocker arms, pushrods, and pivot support, in a rack so that they can be installed in the same location from which they were removed.

3. Remove the rocker arm bolts.
4. Remove the rocker arms.

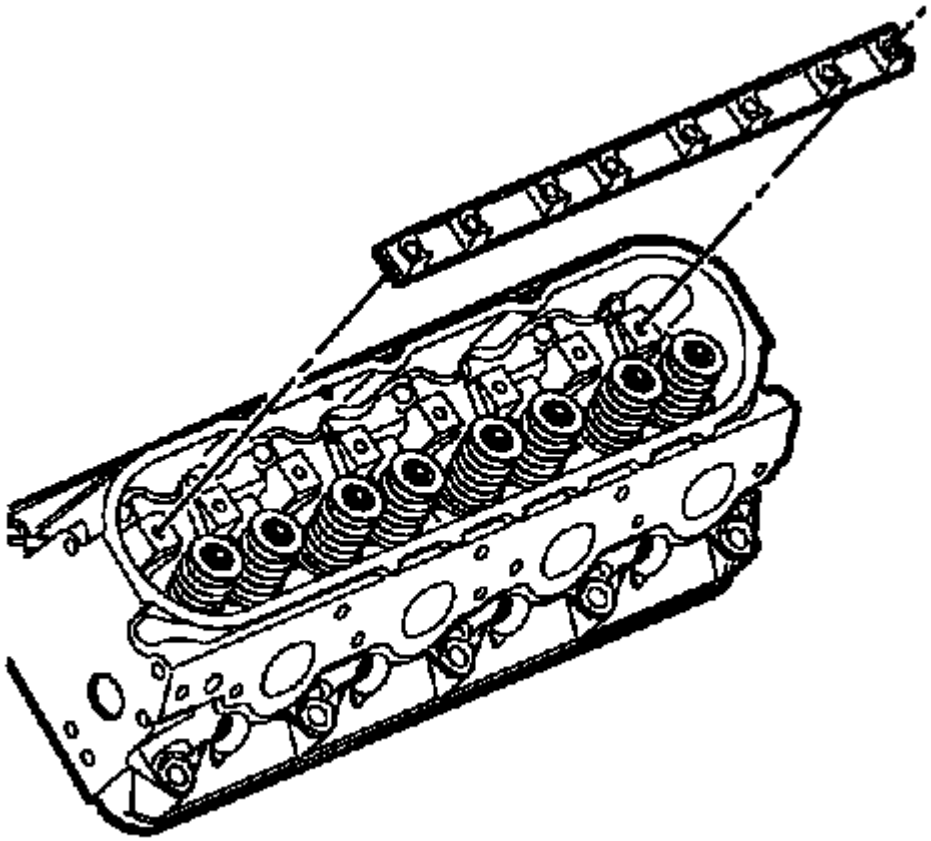

Fig. 205: View Of Valve Rocker Arm Pivot Support
Courtesy of GENERAL MOTORS COMPANY

5. Remove the rocker arm pivot support.

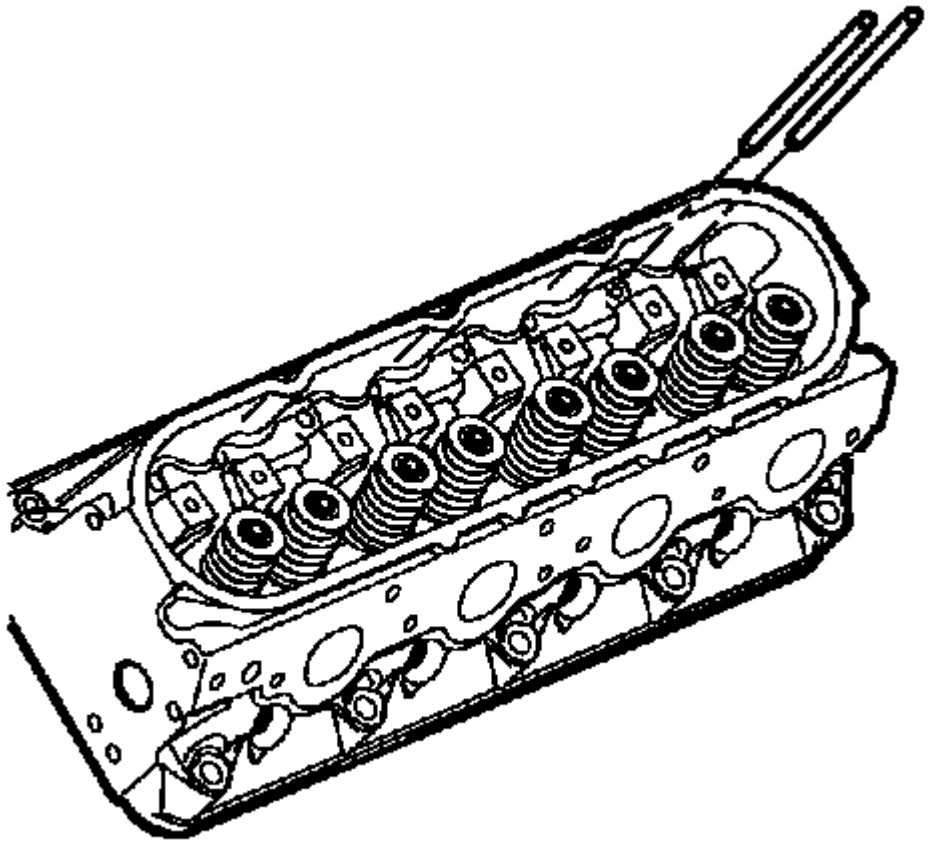

Fig. 206: View Of Pushrods
Courtesy of GENERAL MOTORS COMPANY

6. Remove the pushrods.
7. Clean and inspect the rocker arms and pushrods, if required. Refer to **Valve Rocker Arm and Push Rod Cleaning and Inspection** .

Installation Procedure

NOTE: When reusing the valve train components, always install the components to the original location and position.

Valve lash is net build, no valve adjustment is required.

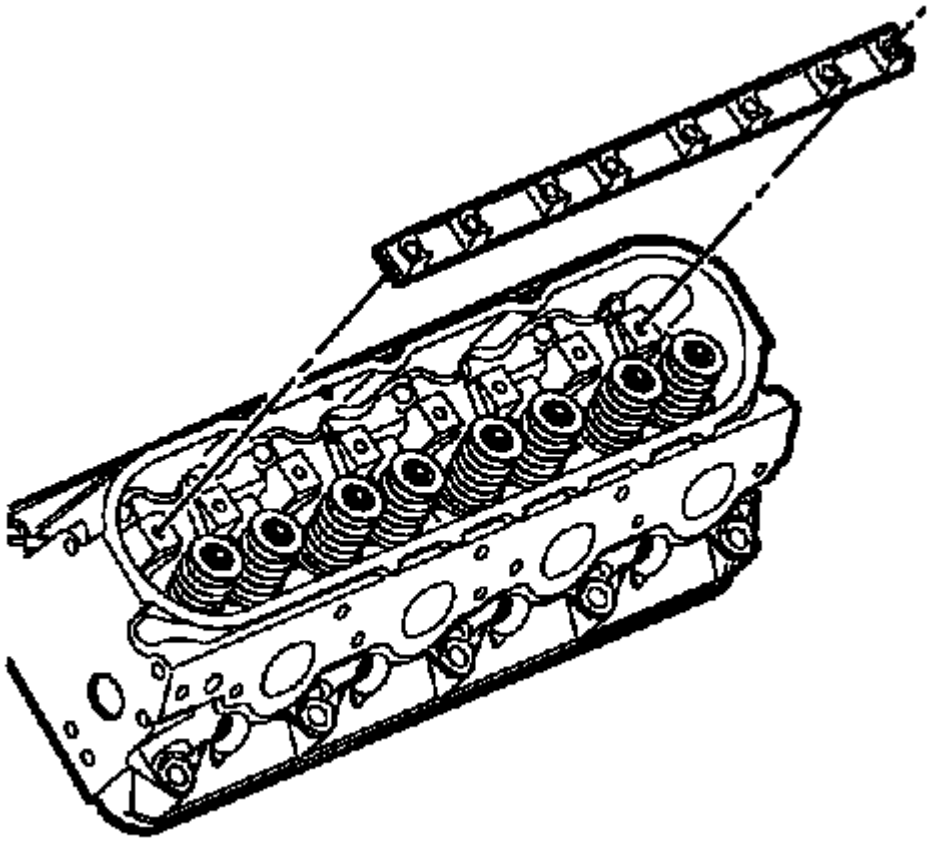

Fig. 207: View Of Valve Rocker Arm Pivot Support
Courtesy of GENERAL MOTORS COMPANY

1. Lubricate the rocker arms and pushrods with clean engine oil.
2. Lubricate the flange of the rocker arm bolts with clean engine oil. Lubricate the flange or washer surface of the bolt that will contact the rocker arm.
3. Install the rocker arm pivot support.

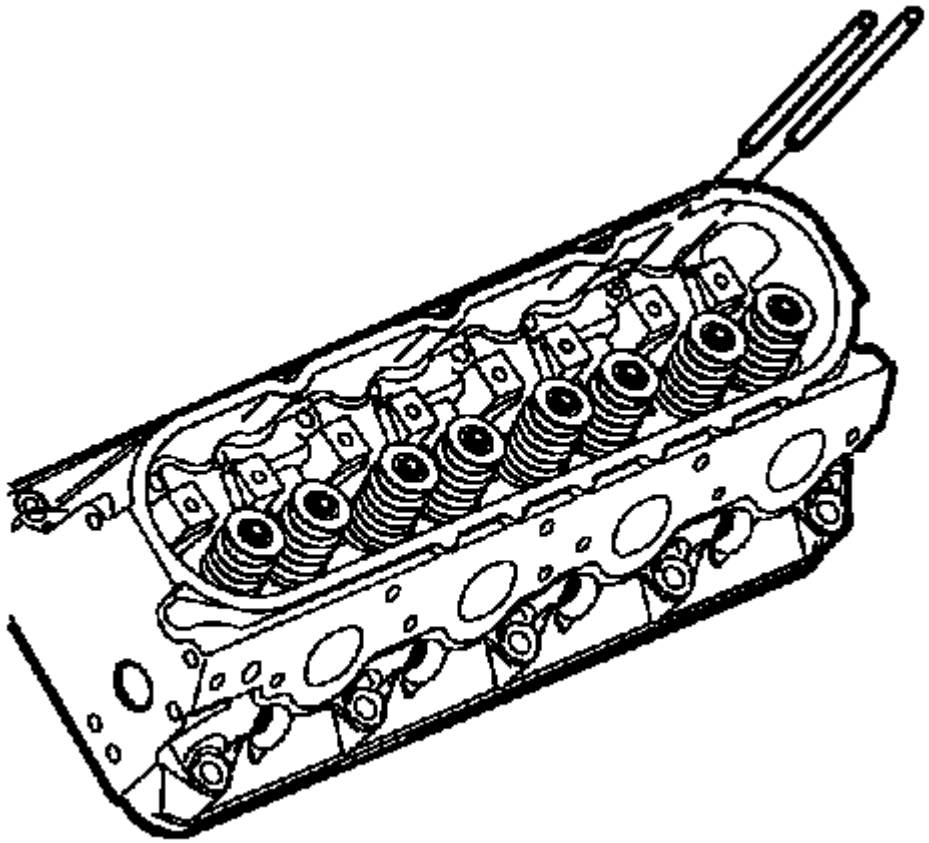

Fig. 208: View Of Pushrods
Courtesy of GENERAL MOTORS COMPANY

NOTE: Make sure that the pushrods seat properly to the valve lifter sockets.

4. Install the pushrods.

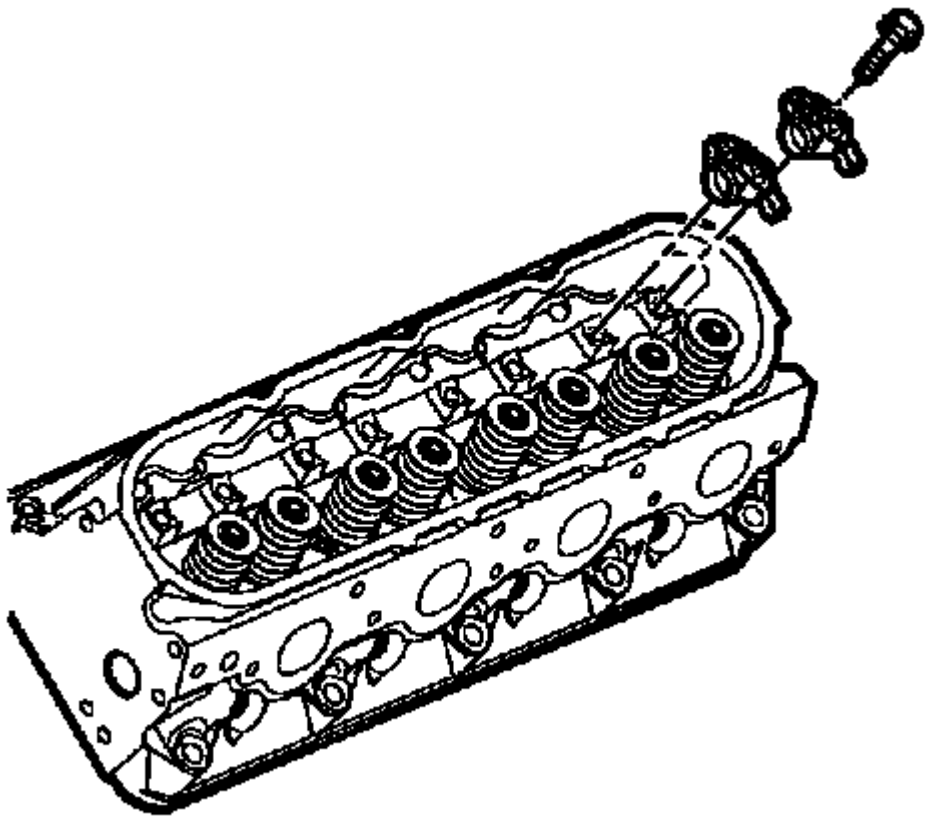

Fig. 209: View Of Rocker Arms & Bolts
Courtesy of GENERAL MOTORS COMPANY

NOTE: Make sure that the pushrods seat properly to the ends of the rocker arms. DO NOT tighten the rocker arm bolts at this time.

5. Install the rocker arms and bolts.

NOTE: The engine firing order is 1, 8, 7, 2, 6, 5, 4, 3. Cylinders 1, 3, 5 and 7 are the left bank. Cylinders 2, 4, 6 and 8 are the right bank.

6. Rotate the crankshaft until the number one piston is at top dead center (TDC) of the compression stroke. In this position, the number one cylinder rocker arms will be off lobe lift.

CAUTION: Refer to Fastener Caution .

7. With the engine in the number one firing position, tighten the following rocker arm bolts:

Tighten

- Tighten cylinders 1, 2, 7 and 8 exhaust valve rocker arm bolts to 30 N.m (22 lb ft).
- Tighten cylinders 1, 3, 4 and 5 intake valve rocker arm bolts to 30 N.m (22 lb ft).

8. Rotate the crankshaft 360 degrees.
9. Tighten the following rocker arm bolts:

Tighten

- Tighten cylinders 3, 4, 5 and 6 exhaust valve rocker arm bolts to 30 N.m (22 lb ft).
- Tighten cylinders 2, 6, 7 and 8 intake valve rocker arm bolts to 30 N.m (22 lb ft).

10. Install the number one cylinder spark plug. Refer to **Spark Plug Replacement** .
11. Install the rocker arm cover. Refer to **Valve Rocker Arm Cover Replacement - Left Side**, or **Valve Rocker Arm Cover Replacement - Right Side**.

VALVE STEM OIL SEAL AND VALVE SPRING REPLACEMENT

Special Tools

- **J 22794** Spark Plug Port Adapter
- **J 38606** Valve Spring Compressor

Removal Procedure

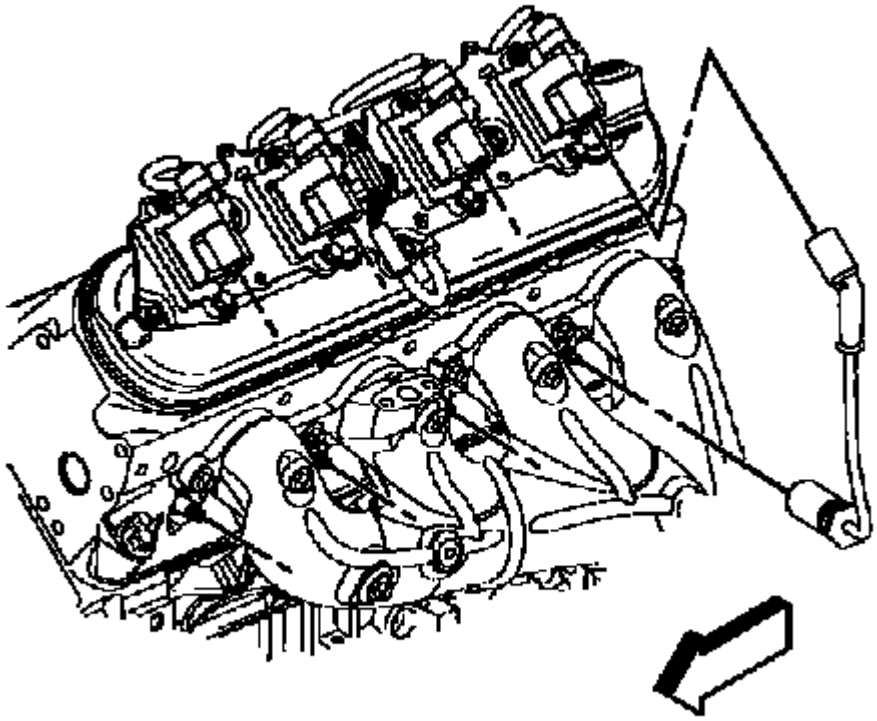

Fig. 210: View Of Spark Plug Wire & Boot
Courtesy of GENERAL MOTORS COMPANY

1. Remove the rocker arm. Refer to **Valve Rocker Arm and Push Rod Replacement**.
2. Disconnect the spark plug wire at the spark plug.
   - Twist each plug wire boot 1/2 turn.
   - Pull only on the boot in order to remove the wire from the spark plug.

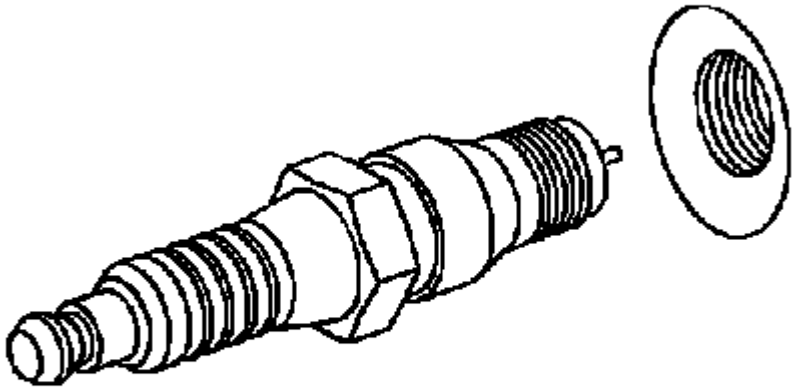

Fig. 211: View Of Spark Plug And Sparkplug Seat
Courtesy of GENERAL MOTORS COMPANY

NOTE: Remove the spark plugs from the cylinder head with the engine at room temperature.

3. Loosen the spark plug 1 or 2 turns.
4. Brush or air blast away any dirt or debris from around the spark plug.
5. Remove the spark plug.

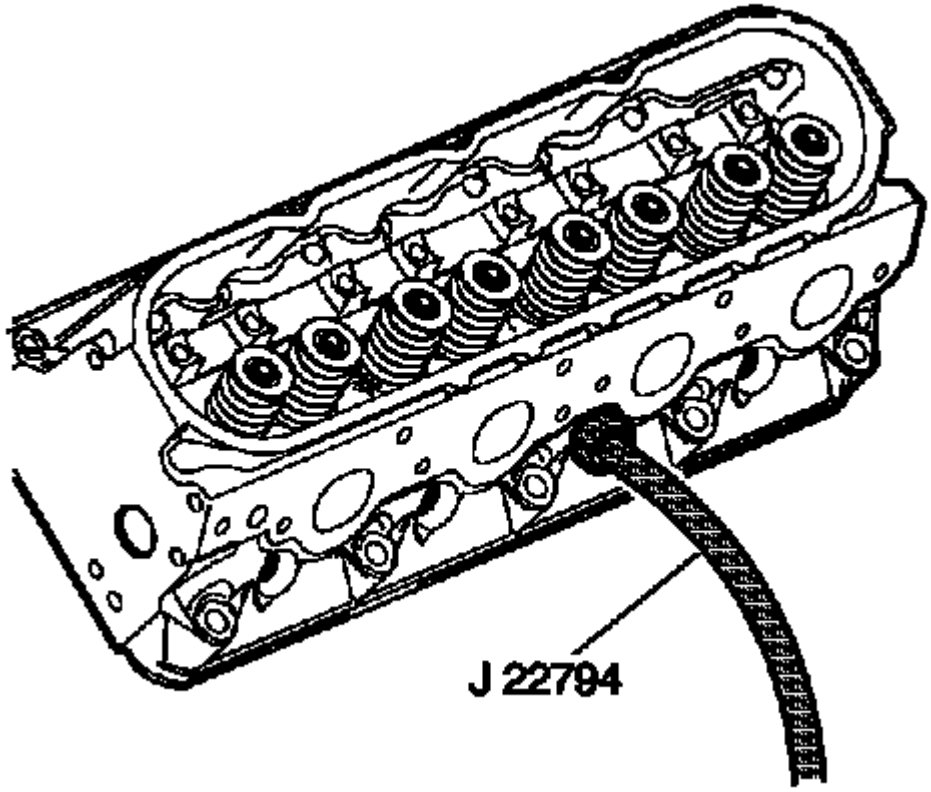

Fig. 212: Applying Compressed Air To J 22794
Courtesy of GENERAL MOTORS COMPANY

6. Install the **J 22794** spark plug port adapter into the spark plug hole.
7. Attach an air hose to the **J 22794** spark plug port adapter.
8. Apply compressed air to the **J 22794** spark plug port adapter in order to hold the valves in place.

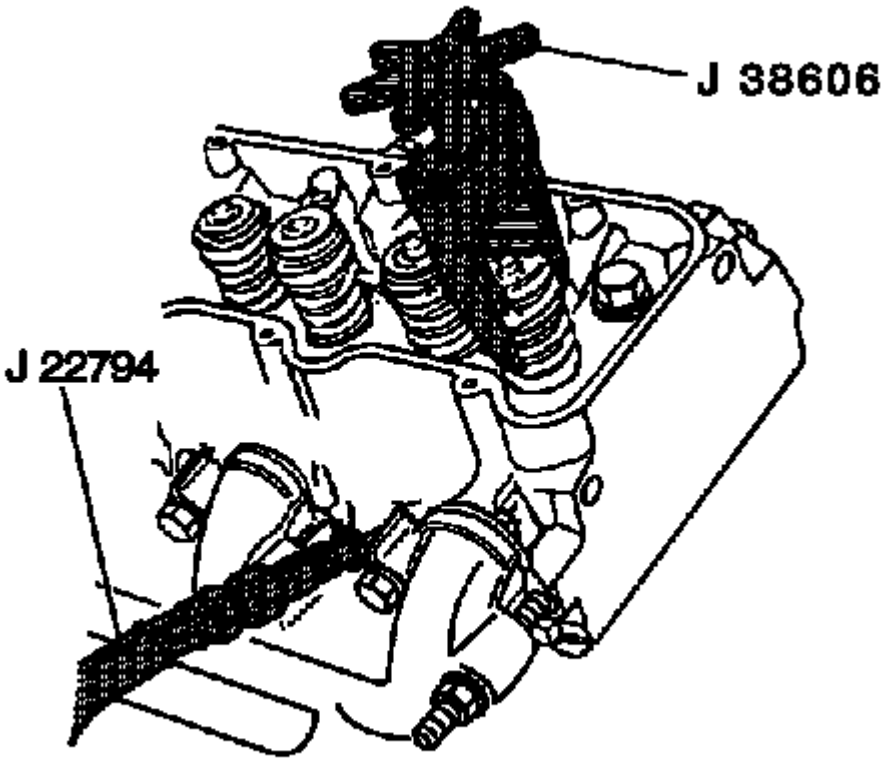

Fig. 213: Compress Valve Spring (Cylinder Head Installed) Using Special Tools
Courtesy of GENERAL MOTORS COMPANY

9. Use the **J 38606** valve spring compressor in order to compress the valve spring.

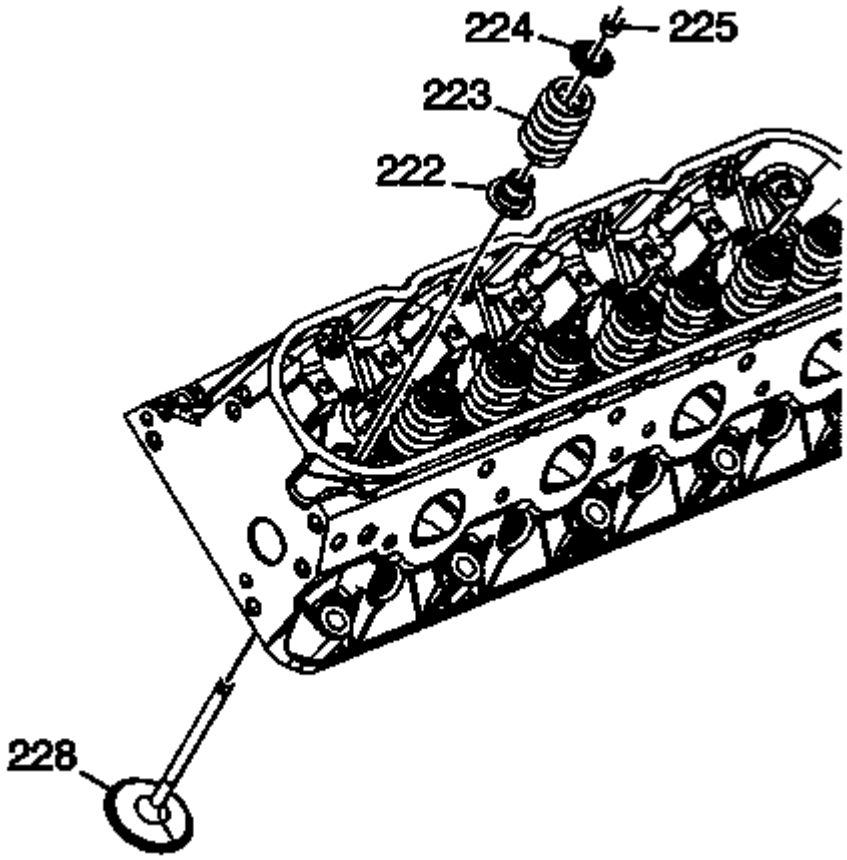

Fig. 214: Valve Stem Keys, Valve Spring Cap & Valve Spring
Courtesy of GENERAL MOTORS COMPANY

10. Remove the valve stem keys (225).
11. Carefully release the valve spring tension.
12. Remove the **J 38606** valve spring compressor.
13. Remove the valve spring cap (224).
14. Remove the valve spring (223).
15. Remove the valve stem oil seal (222).
16. Remove the valve (228).

Installation Procedure

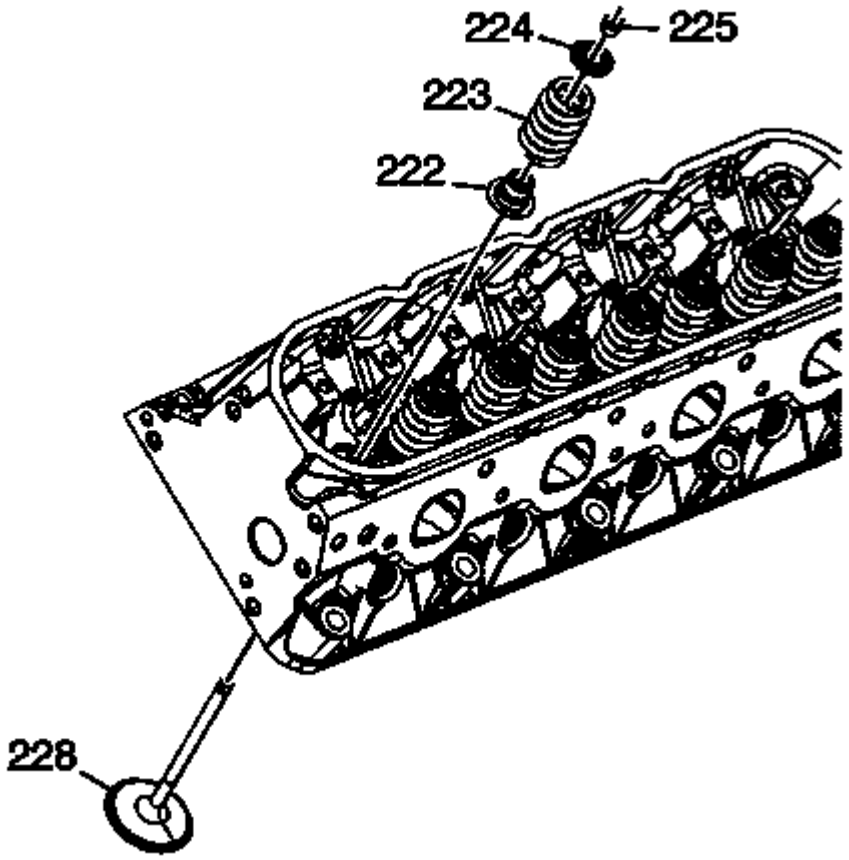

Fig. 215: Valve Stem Keys, Valve Spring Cap & Valve Spring
Courtesy of GENERAL MOTORS COMPANY

1. Clean the cylinder head valve spring seat area.
2. Lubricate the valve guide and valve stem oil seal with clean engine oil.
3. Install the valves (228) into the proper port.
4. Install the valve stem oil seal (222).
5. Install the valve spring (223).
6. Install the valve spring cap (224).

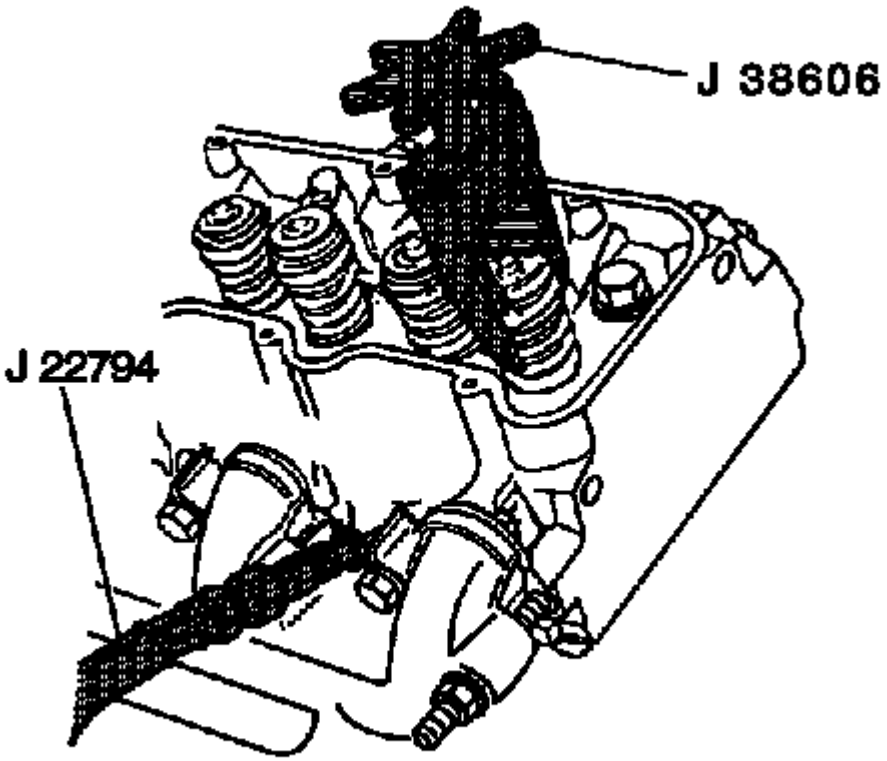

Fig. 216: Compress Valve Spring (Cylinder Head Installed) Using Special Tools
Courtesy of GENERAL MOTORS COMPANY

7. Compress the valve spring using the **J 38606** valve spring compressor.
8. Install the valve keys.
   - Use grease in order to hold the valve keys in place.
   - Make sure the keys seat properly in the groove of the valve stem.
   - Carefully release the valve spring pressure, making sure the valve keys stay in place.
   - Remove the **J 38606** valve spring compressor.
   - Tap the end of the valve stem with a plastic faced hammer to seat the keys, if necessary.

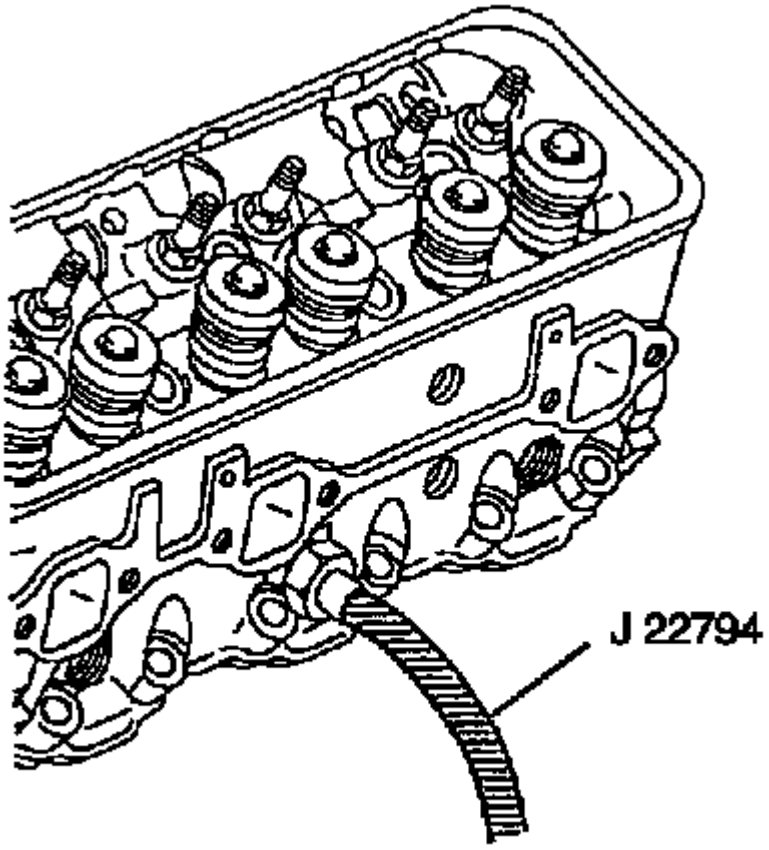

Fig. 217: View Of J 22794
Courtesy of GENERAL MOTORS COMPANY

9. Remove the **J 22794** spark plug port adapter from the spark plug port.

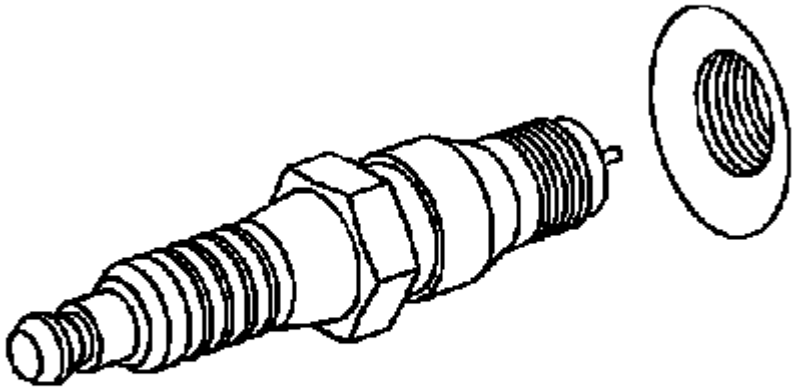

Fig. 218: View Of Spark Plug And Sparkplug Seat
Courtesy of GENERAL MOTORS COMPANY

CAUTION: Refer to Fastener Caution .

10. Hand start the spark plug.

    Tighten

    Tighten the spark plug to 15 N.m (11 lb ft).

11. Install the spark plug wires at the ignition coil.
12. Install the spark plug wire to the spark plug.
13. Inspect the wires for proper installation:
    - Push sideways on each boot in order to check for proper installation.
    - Reinstall any loose boot.
14. Install the rocker arm. Refer to **Valve Rocker Arm and Push Rod Replacement**.

OIL LEVEL INDICATOR TUBE REPLACEMENT

Removal Procedure

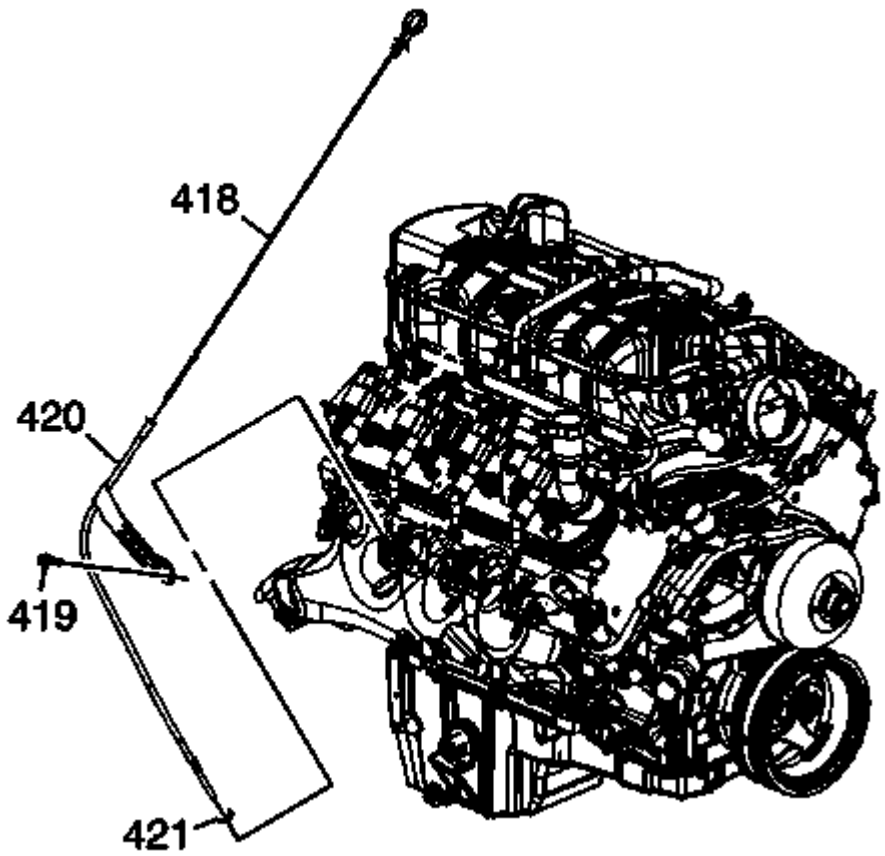

Fig. 219: View Of Oil Level Indicator, Tube Bolt, Indicator Tube & O-Ring Seal
Courtesy of GENERAL MOTORS COMPANY

1. Remove the oil level indicator (418).
2. Remove the oil level indicator tube bolt (419).
3. Remove the oil level indicator tube (420) from the engine block.

NOTE: The O-ring seal may be reused if not cut or damaged.

4. Inspect the O-ring seal for cuts or damage.
5. Remove the O-ring seal (421) from the tube, if required.

Installation Procedure

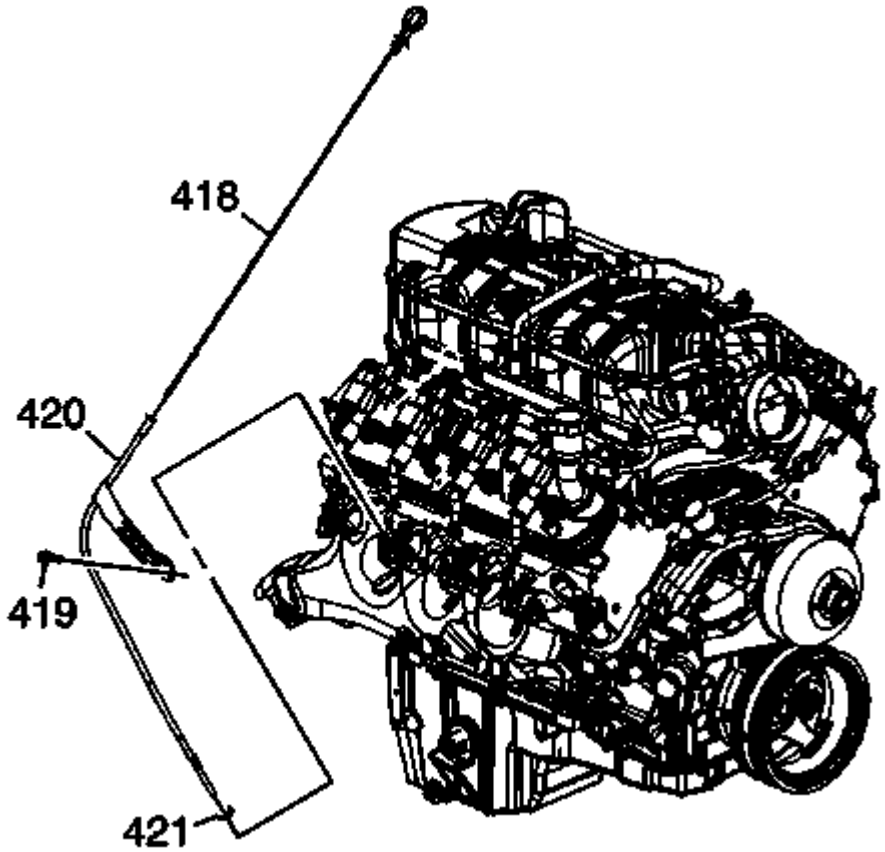

Fig. 220: View Of Oil Level Indicator, Tube Bolt, Indicator Tube & O-Ring Seal
Courtesy of GENERAL MOTORS COMPANY

1. Lubricate the O-ring seal (421) with clean engine oil.
2. Install a NEW O-ring seal onto the oil level indicator tube, if required.
3. Install the oil level indicator tube (420) between the exhaust manifold and engine block.
4. Raise and suitably support the vehicle. Refer to **Lifting and Jacking the Vehicle** .
5. Insert the oil level indicator tube into the block. The tube must be installed with the collar flush to the block.
6. Lower the vehicle.

CAUTION: Refer to Fastener Caution .

7. Install the oil level indicator tube bolt (419).

Tighten

Tighten the bolt to 25 N.m (18 lb ft).

8. Install the oil level indicator (418).

CYLINDER HEAD REPLACEMENT - LEFT SIDE

Special Tools

- **J 42385-200** Common Thread Repair Kit
- **J 45059** Angle Meter

Removal Procedure

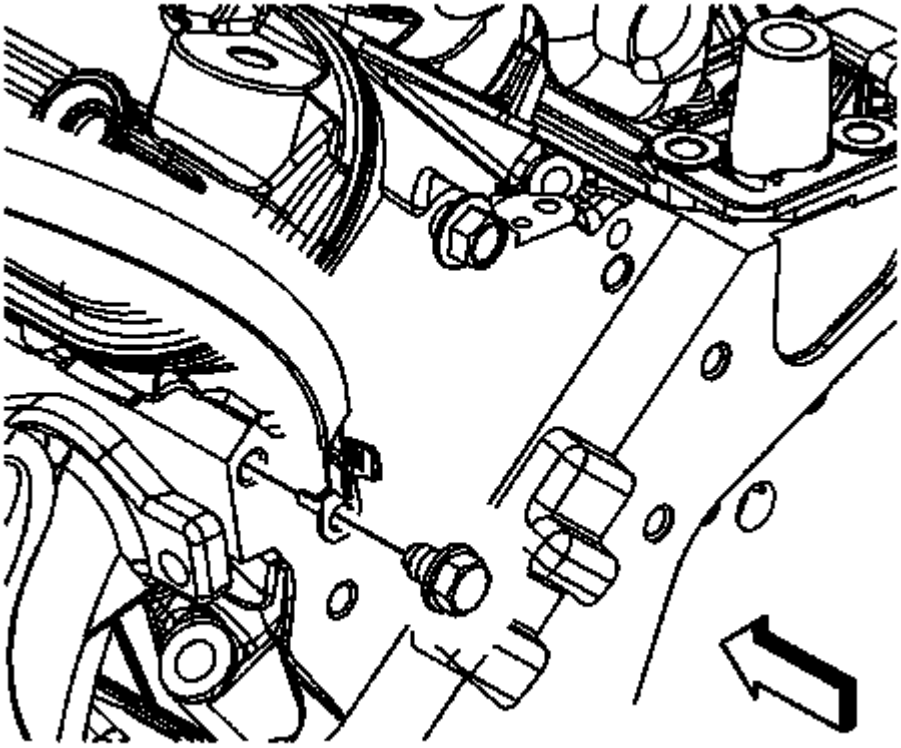

Fig. 221: View Of Engine Ground Strap & Bolt
Courtesy of GENERAL MOTORS COMPANY

1. Remove the generator bracket. Refer to **Generator Replacement** .
2. Remove the intake manifold. Refer to **Intake Manifold Replacement (RPOs LC9, LMG, LY5, L76)**, **Intake Manifold Replacement (RPOs LY2, LY6)**, **Intake Manifold Replacement (Except RPOs LY2, LY6, LC9, LMG, LY5)**.
3. Remove the coolant air bleed pipe. Refer to **Engine Coolant Air Bleed Pipe Replacement (with AFM)** , **Engine Coolant Air Bleed Pipe Replacement (without AFM)** .
4. Remove the left exhaust manifold. Refer to **Exhaust Manifold Replacement - Left Side** .

5. Remove the pushrods. Refer to **Valve Rocker Arm and Push Rod Replacement**.
6. Remove the engine ground strap bolt from the rear of the cylinder head.
7. Remove the ground strap from the cylinder head.

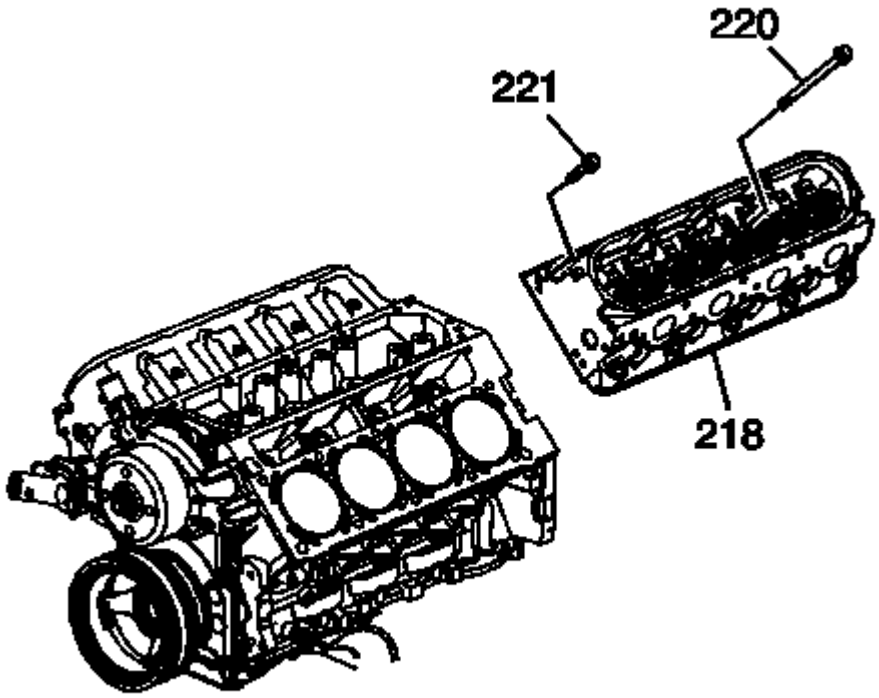

Fig. 222: View Of Cylinder Head & Bolts
Courtesy of GENERAL MOTORS COMPANY

NOTE: The cylinder head bolts are of a torque-to-yield design and are NOT to be reused.

8. Remove and discard the cylinder head bolts (220, 221).

CAUTION: After removal, place the cylinder head on 2 wood blocks in order to prevent damage to the sealing surfaces.

9. Remove the cylinder head (218).

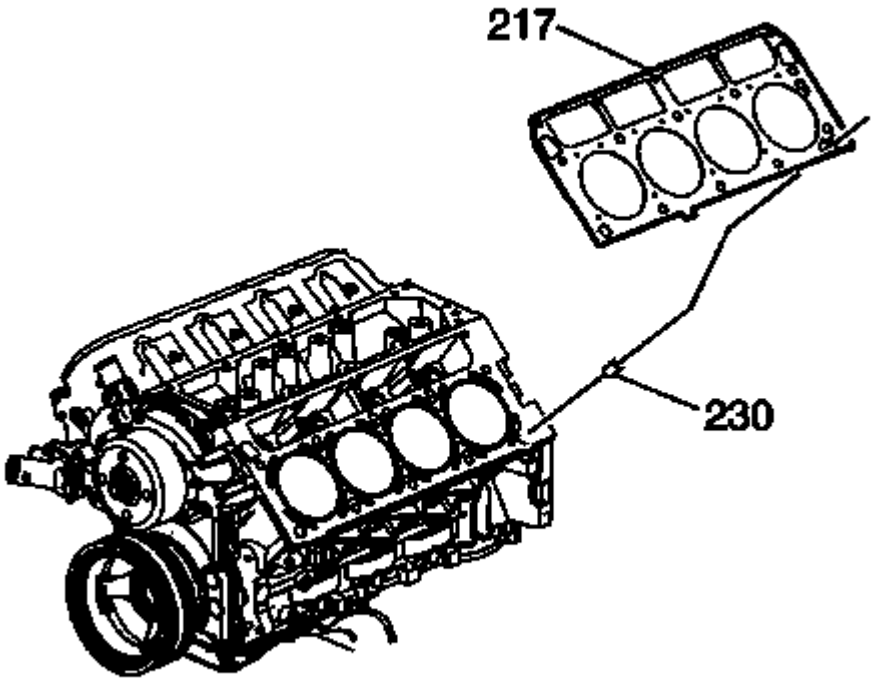

Fig. 223: View Of Cylinder Head Gasket & Locating Pins
Courtesy of GENERAL MOTORS COMPANY

10. Remove and discard the cylinder head gasket (217).
11. If required, clean and inspect the cylinder head. Refer to **Cylinder Head Cleaning and Inspection** .

Installation Procedure

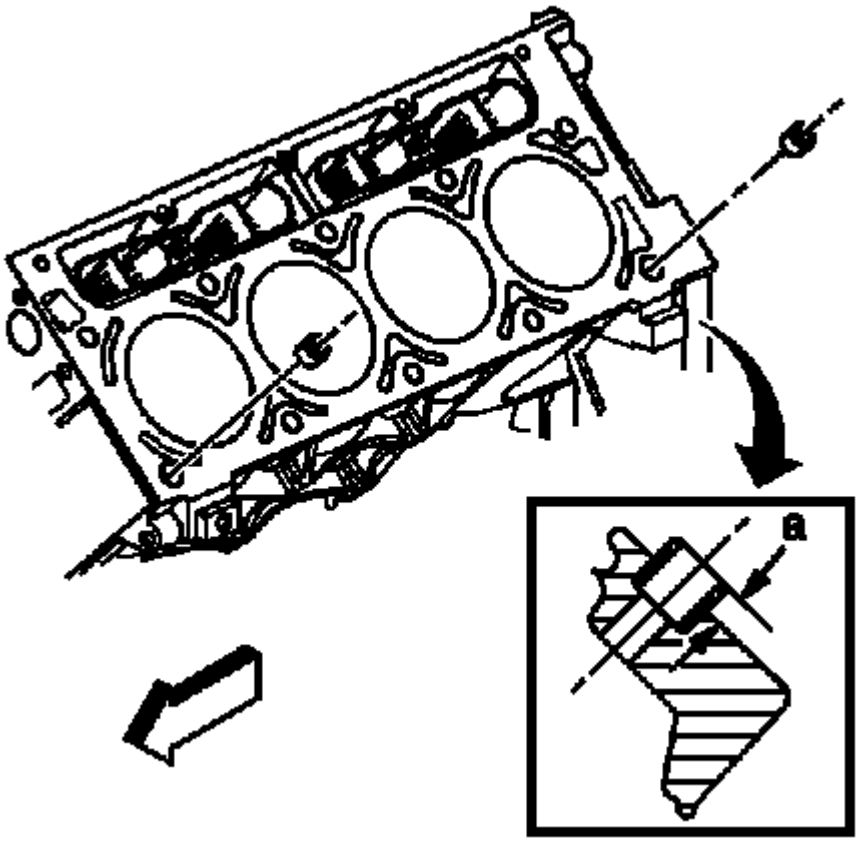

Fig. 224: Checking Cylinder Head Bolt Holes
Courtesy of GENERAL MOTORS COMPANY

WARNING: **Wear safety glasses in order to avoid eye damage.**

CAUTION: **Clean all dirt, debris, and coolant from the engine block cylinder head bolt holes. Failure to remove all foreign material may result in damaged threads, improperly tightened fasteners or damage to components.**

NOTE: **If installing a new cylinder head it is necessary to install a new engine coolant air bleed plug into the rear coolant passage of the cylinder head. Refer to Cylinder Head Assemble .**

NOTE:

- **Do not reuse the cylinder head bolts. Install NEW cylinder head bolts during assembly.**
- **Do not use any type of sealant on the cylinder head gasket (unless specified).**

1. Clean the engine block cylinder head bolt holes, if required. Thread repair tool J 42385-107, found in **J 42385-200** common thread repair kit may be used to clean the threads of old threadlocking material.
2. Spray cleaner GM P/N 12346139, P/N 12377981 (Canadian P/N 10953463), or equivalent into the hole.
3. Clean the cylinder head bolt holes with compressed air.
4. Check the cylinder head locating pins for proper installation (a) 8.3 mm (0.327 in).

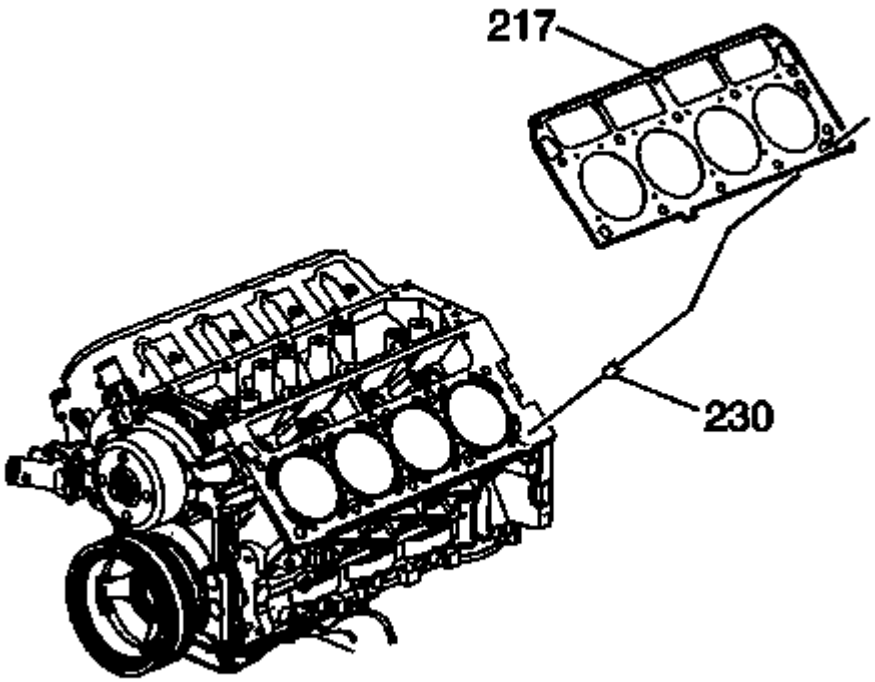

Fig. 225: View Of Cylinder Head Gasket & Locating Pins
Courtesy of GENERAL MOTORS COMPANY

NOTE: When properly installed, with FRONT on the left side, the tab on the cylinder head gasket should be located left of center.

5. Install the NEW cylinder head gasket (217) onto the locating pins.

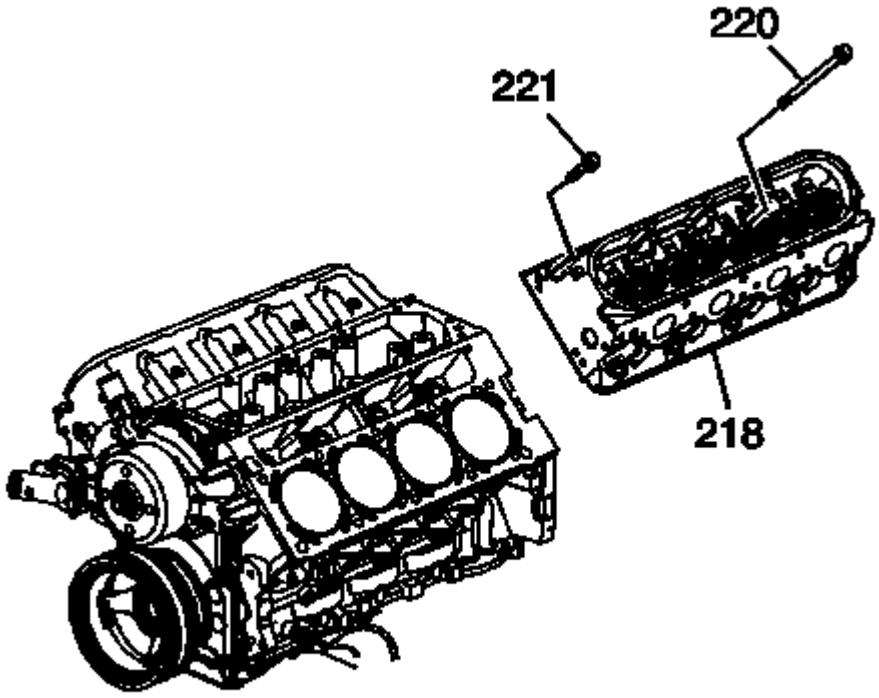

Fig. 226: View Of Cylinder Head & Bolts
Courtesy of GENERAL MOTORS COMPANY

6. Install the cylinder head (218) onto the locating pins.
7. Install the NEW cylinder head bolts (220, 221).

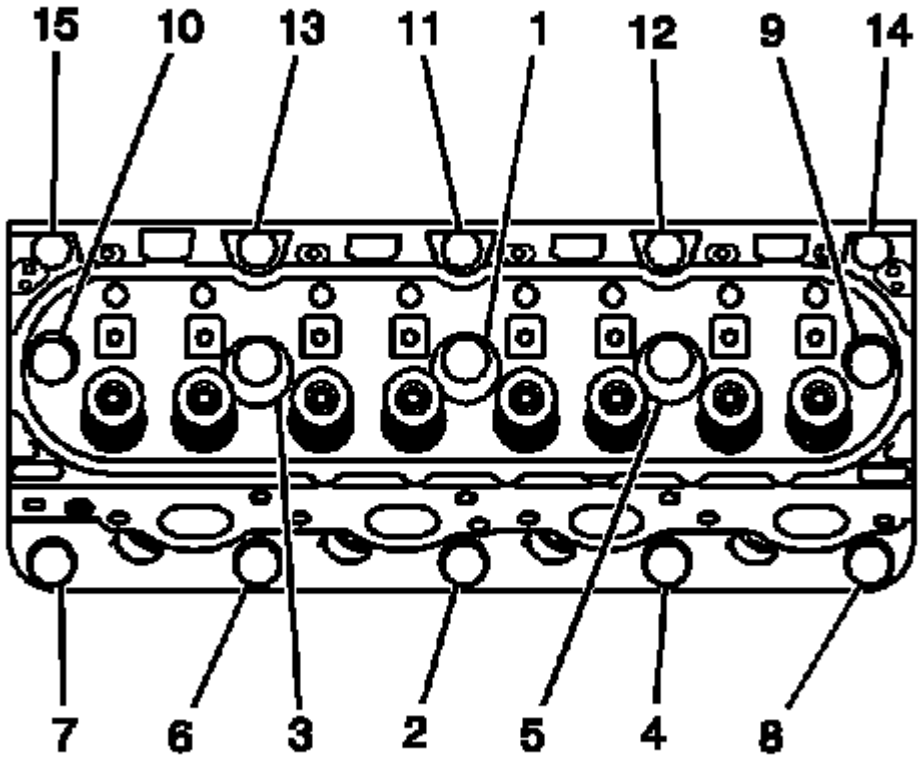

Fig. 227: Tightening Sequence For Cylinder Head Bolts
Courtesy of GENERAL MOTORS COMPANY

CAUTION: Refer to Fastener Caution .

8. Tighten the cylinder head bolts.
   1. Tighten the M11 cylinder head bolts (1-10) a first pass in sequence to 30 (22 lb ft).
   2. Tighten the M11 cylinder head bolts (1-10) a second pass in sequence to 90 degrees using **J 45059** angle meter.
   3. Tighten the M11 cylinder head bolts (1-10) a final pass to 70 degrees using **J 45059** angle meter.
   4. Tighten the M8 cylinder head bolts (11-15) to 30 (22 lb ft). Begin with the center bolt (11) and alternating side-to-side, work outward tightening all of the bolts.

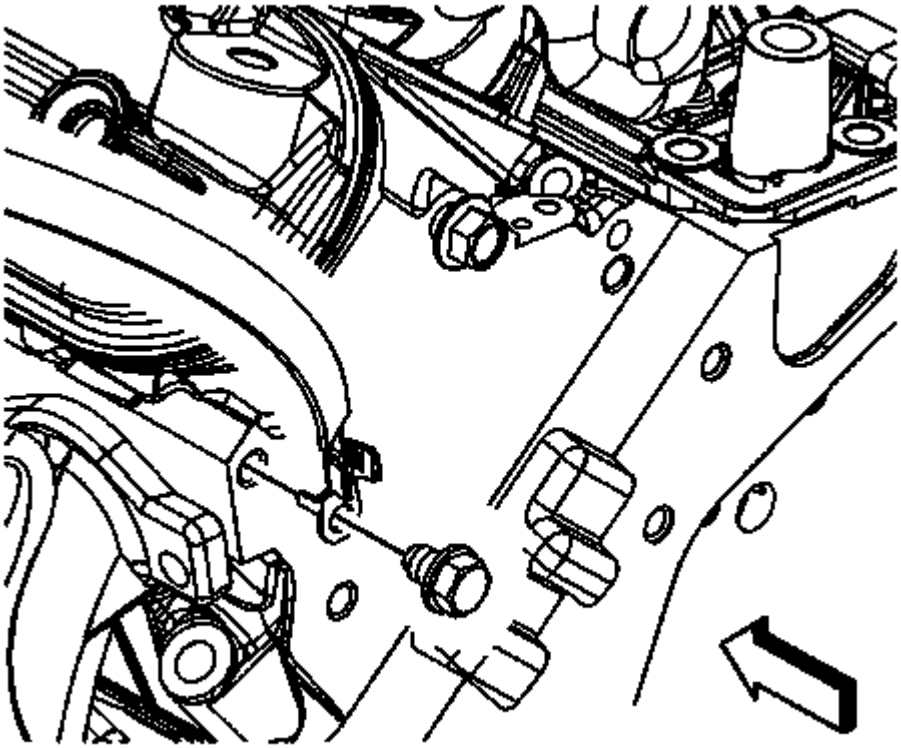

Fig. 228: View Of Engine Ground Strap & Bolt
Courtesy of GENERAL MOTORS COMPANY

9. Position the ground strap to the rear of the left cylinder head.
10. Install the engine ground strap bolt to the rear of the left cylinder head and tighten the bolt to 16 (12 lb ft).
11. Install the pushrods. Refer to **Valve Rocker Arm and Push Rod Replacement**.
12. Install the left exhaust manifold. Refer to **Exhaust Manifold Replacement - Left Side** .
13. Install the coolant air bleed pipe. Refer to **Engine Coolant Air Bleed Pipe Replacement (with AFM)** , **Engine Coolant Air Bleed Pipe Replacement (without AFM)** .
14. Install the intake manifold. Refer to **Intake Manifold Replacement (RPOs LC9, LMG, LY5, L76)**, **Intake Manifold Replacement (RPOs LY2, LY6)**, **Intake Manifold Replacement (Except RPOs LY2, LY6, LC9, LMG, LY5)**.
15. Install the generator bracket. Refer to **Generator Replacement** .

CYLINDER HEAD REPLACEMENT - RIGHT SIDE

Special Tools

- **J 42385-200** Common Thread Repair Kit
- **J 45059** Angle Meter

Removal Procedure

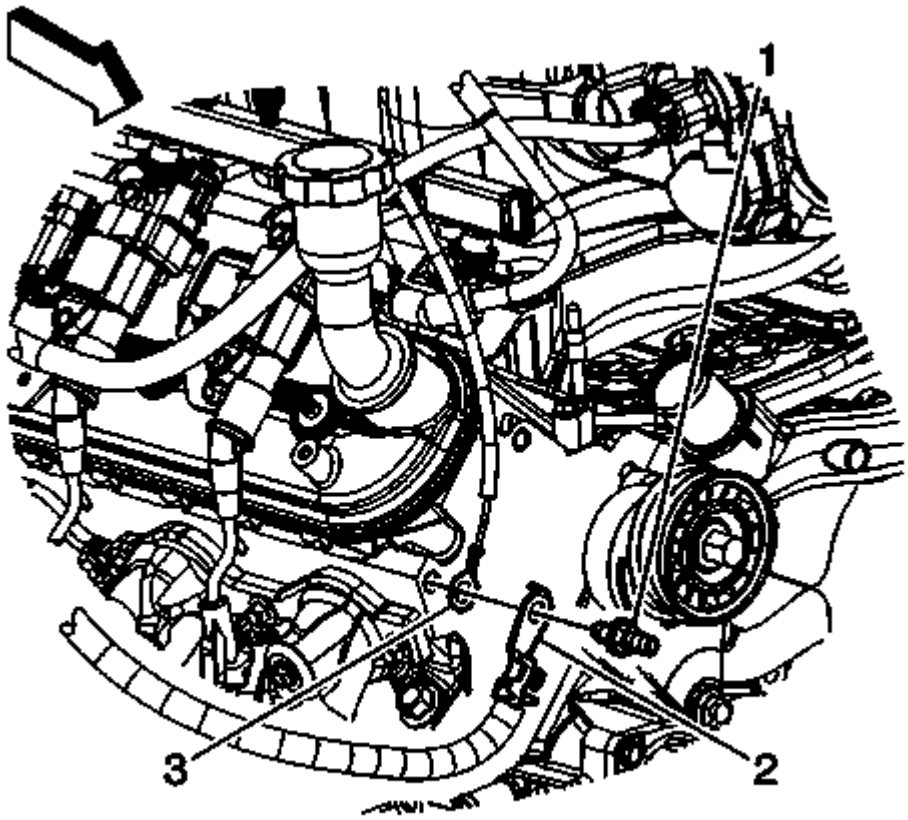

Fig. 229: View Of Battery Cable Terminals & Stud
Courtesy of GENERAL MOTORS COMPANY

1. Remove the oil level indicator. Refer to **Oil Level Indicator Tube Replacement**.
2. Remove the intake manifold. Refer to **Intake Manifold Replacement (RPOs LC9, LMG, LY5, L76)**, **Intake Manifold Replacement (RPOs LY2, LY6)**, **Intake Manifold Replacement (Except RPOs LY2, LY6, LC9, LMG, LY5)**.
3. Remove the coolant air bleed pipe. Refer to **Engine Coolant Air Bleed Pipe Replacement (with AFM)** , **Engine Coolant Air Bleed Pipe Replacement (without AFM)** .
4. Remove the right exhaust manifold. Refer to **Exhaust Manifold Replacement - Right Side** .
5. Remove the pushrods. Refer to **Valve Rocker Arm and Push Rod Replacement**.
6. Remove the negative battery cable stud (1) from the front of the right cylinder head.
7. Remove the negative battery cable terminal (2) and the engine harness terminal (3) from the cylinder head.

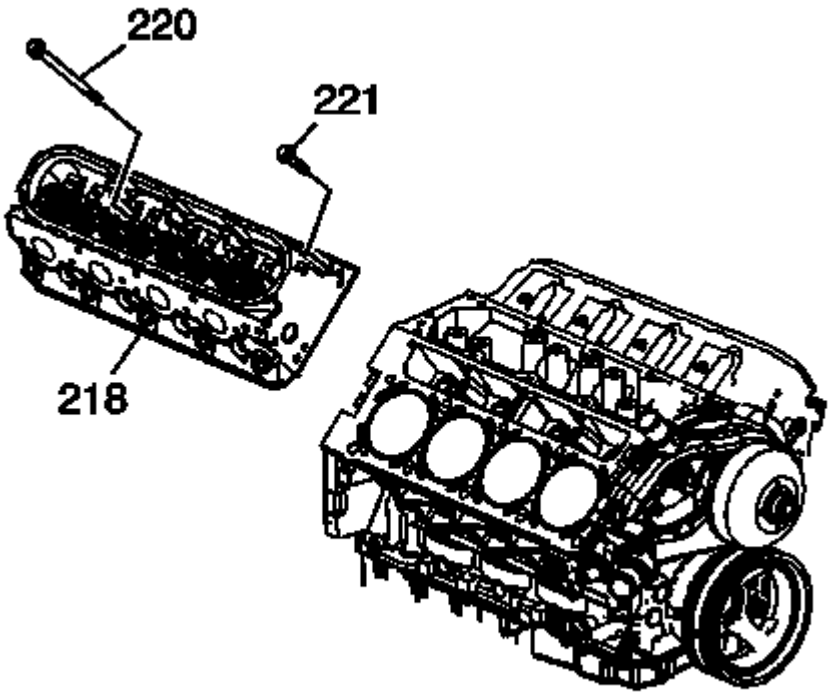

Fig. 230: View Of Cylinder Head & Bolts
Courtesy of GENERAL MOTORS COMPANY

NOTE: The cylinder head bolts are of a torque-to-yield design and are NOT to be reused.

8. Remove and discard the cylinder head bolts (220, 221).

CAUTION: After removal, place the cylinder head on 2 wood blocks in order to prevent damage to the sealing surfaces.

9. Remove the cylinder head (218).

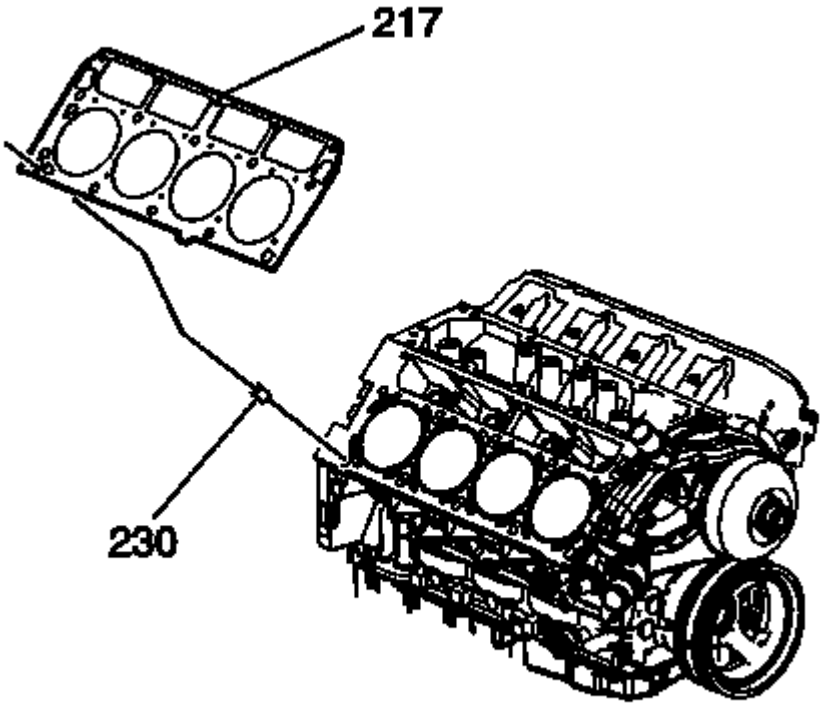

Fig. 231: View Of Cylinder Head Gasket & Locating Pins
Courtesy of GENERAL MOTORS COMPANY

10. Remove and discard the cylinder head gasket (217).
11. If required, clean and inspect the cylinder head. Refer to **Cylinder Head Cleaning and Inspection** .

Installation Procedure

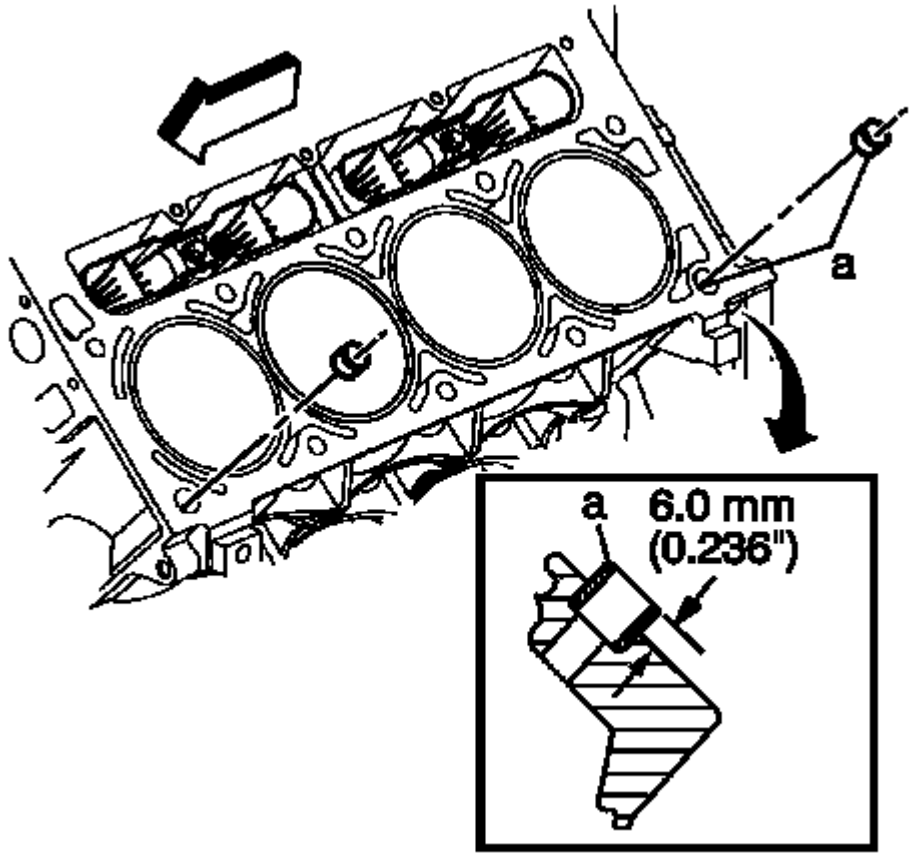

Fig. 232: Identifying Cylinder Head Locating Pins Installation Position
Courtesy of GENERAL MOTORS COMPANY

WARNING: Wear safety glasses in order to avoid eye damage.

CAUTION: Clean all dirt, debris, and coolant from the engine block cylinder head bolt holes. Failure to remove all foreign material may result in damaged threads, improperly tightened fasteners or damage to components.

NOTE: If installing a new cylinder head it is necessary to install a new engine coolant air bleed plug into the rear coolant passage of the cylinder head. Refer to Cylinder Head Assemble .

NOTE:

- **Do not reuse the cylinder head bolts. Install NEW cylinder head bolts during assembly.**
- **Do not use any type of sealant on the cylinder head gasket (unless specified).**

1. Clean the engine block cylinder head bolt holes, if required. Thread repair tool J 42385-107, found in **J 42385-200** common thread repair kit may be used to clean the threads of old threadlocking material.
2. Spray cleaner GM P/N 12346139, P/N 12377981 (Canadian P/N 10953463), or equivalent into the hole.
3. Clean the cylinder head bolt holes with compressed air.
4. Check the cylinder head locating pins for proper installation (a) 8.3 mm (0.327 in).

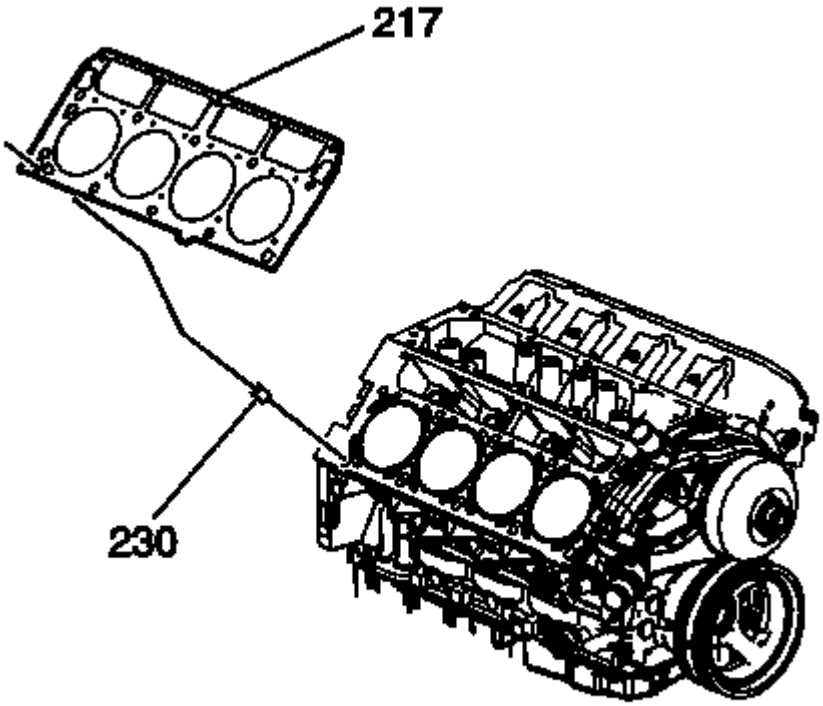

Fig. 233: View Of Cylinder Head Gasket & Locating Pins
Courtesy of GENERAL MOTORS COMPANY

NOTE: When properly installed, with FRONT on the right side, the tab on the cylinder head gasket should be located right of center.

5. Install the NEW cylinder head gasket (217) onto the locating pins.

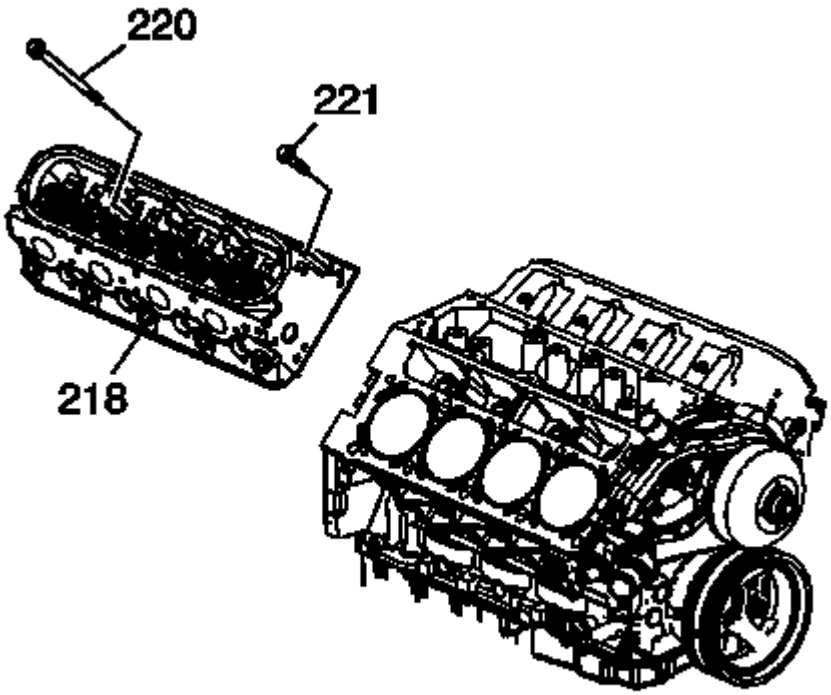

Fig. 234: View Of Cylinder Head & Bolts
Courtesy of GENERAL MOTORS COMPANY

6. Install the cylinder head (218) onto the locating pins.
7. Install the NEW cylinder head bolts (220, 221).

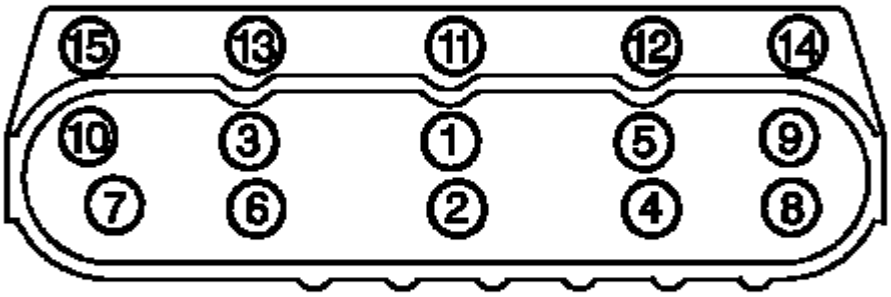

Fig. 235: Cylinder Head Bolt Tightening Sequence
Courtesy of GENERAL MOTORS COMPANY

CAUTION: Refer to Fastener Caution .

8. Tighten the cylinder head bolts.
    1. Tighten the M11 cylinder head bolts (1-10) a first pass in sequence to 30 (22 lb ft).
    2. Tighten the M11 cylinder head bolts (1-10) a second pass in sequence to 90 degrees using **J 45059** angle meter.
    3. Tighten the M11 cylinder head bolts (1-10) a final pass to 70 degrees in sequence using **J 45059** angle meter.
    4. Tighten the M8 cylinder head bolts (11-15) to 30 (22 lb ft). Begin with the center bolt (11) and alternating side-to-side, work outward tightening all of the bolts.

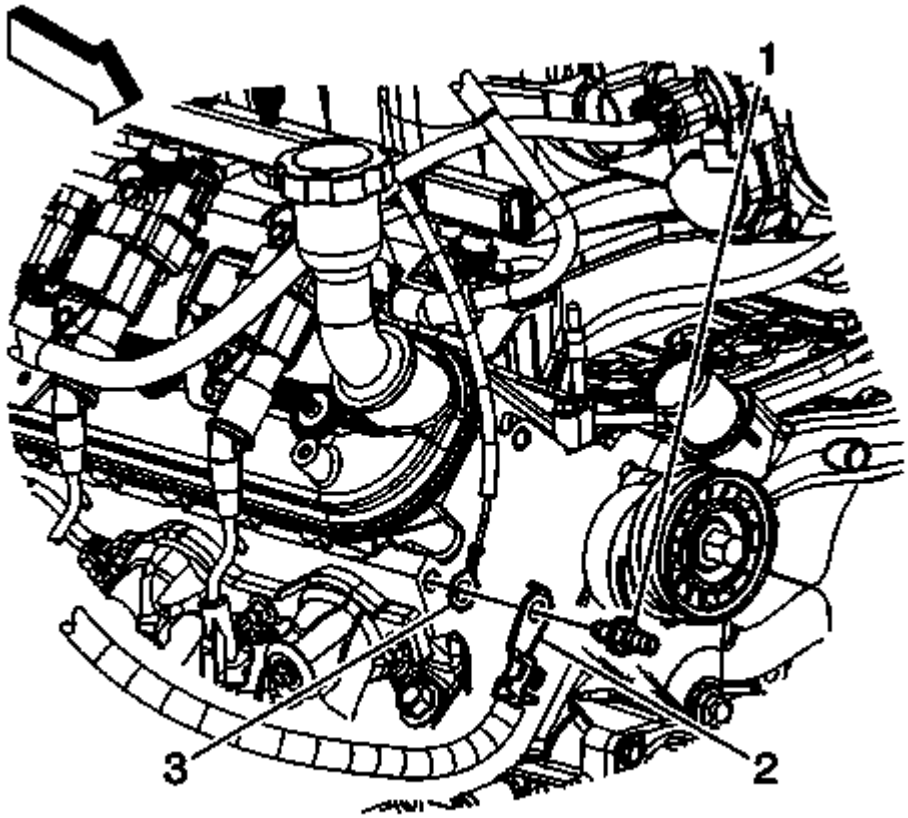

Fig. 236: View Of Battery Cable Terminals & Stud
Courtesy of GENERAL MOTORS COMPANY

9. Ensure that the engine harness terminal (3) is positioned behind the negative battery cable terminal (2).
10. Position the negative battery cable terminal (2) to the cylinder head.
11. Install the negative battery cable stud (1) to the front of the right cylinder head and tighten the stud to 25 (18 lb ft).
12. Install the pushrods. Refer to **Valve Rocker Arm and Push Rod Replacement**.
13. Install the right exhaust manifold. Refer to **Exhaust Manifold Replacement - Right Side** .
14. Install the coolant air bleed pipe. Refer to **Engine Coolant Air Bleed Pipe Replacement (with AFM)** , **Engine Coolant Air Bleed Pipe Replacement (without AFM)** .
15. Install the intake manifold. Refer to **Intake Manifold Replacement (RPOs LC9, LMG, LY5, L76)**, **Intake Manifold Replacement (RPOs LY2, LY6)**, **Intake Manifold Replacement (Except RPOs LY2, LY6, LC9, LMG, LY5)**.
16. Install the oil level indicator. Refer to **Oil Level Indicator Tube Replacement**.

VALVE LIFTER REPLACEMENT (WITHOUT AFM)

Removal Procedure

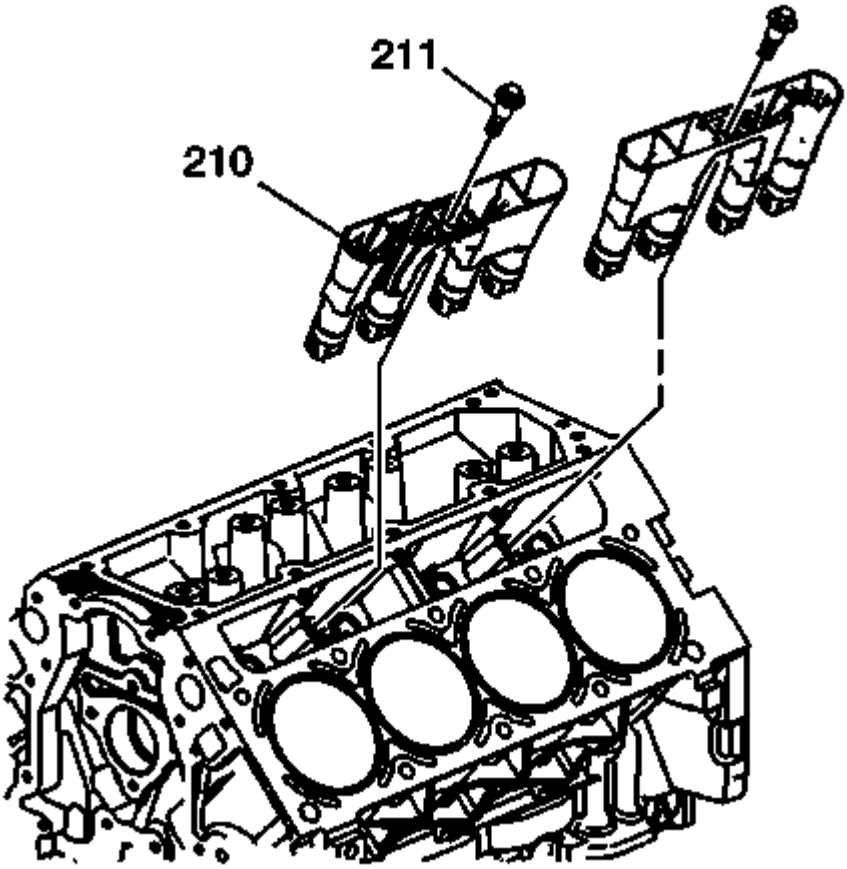

Fig. 237: Valve Lifter Guides, Cylinder Head & Bolts
Courtesy of GENERAL MOTORS COMPANY

1. Remove the cylinder head and gasket. Refer to **Cylinder Head Replacement - Left Side**, or **Cylinder Head Replacement - Right Side**.
2. Remove the valve lifter guide bolts (211).
3. Remove the valve lifter guides (210) with the lifters. Note the installed position of the guides. The notched area of the guides is to align with the locating tab on the engine block.

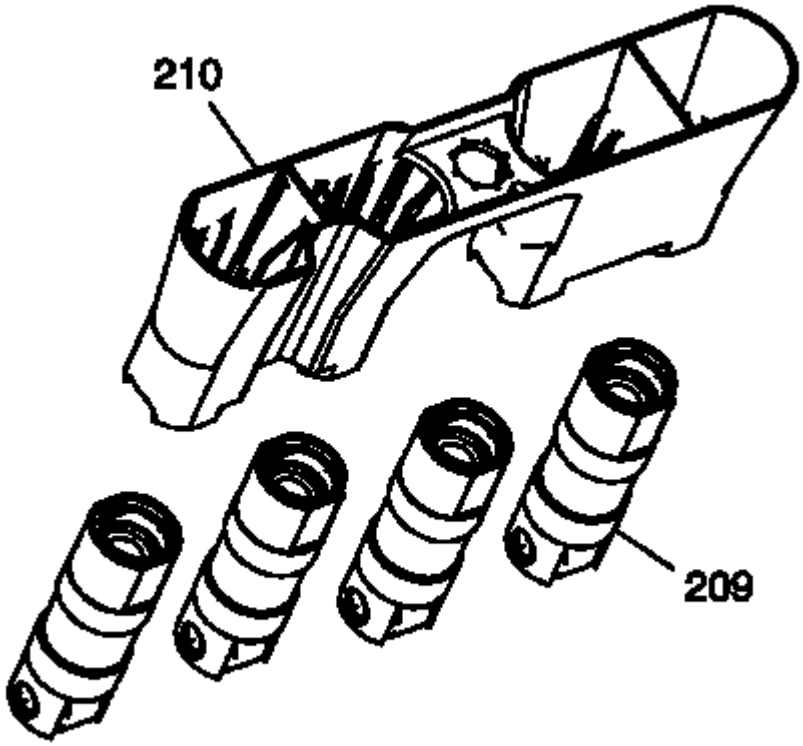

Fig. 238: Valve Lifter Guides & Bolts
Courtesy of GENERAL MOTORS COMPANY

4. Remove the valve lifters (209) from the guide (210).
5. Organize or mark the components so that they can be installed in the same location from which they were removed, if required.
6. Clean and inspect the valve lifters, if required. Refer to **Valve Lifter and Guide Cleaning and Inspection** .

Installation Procedure

Note:

- If camshaft replacement is required, the valve lifters must also be replaced.
- When reusing valve lifters, install the lifters to their original locations

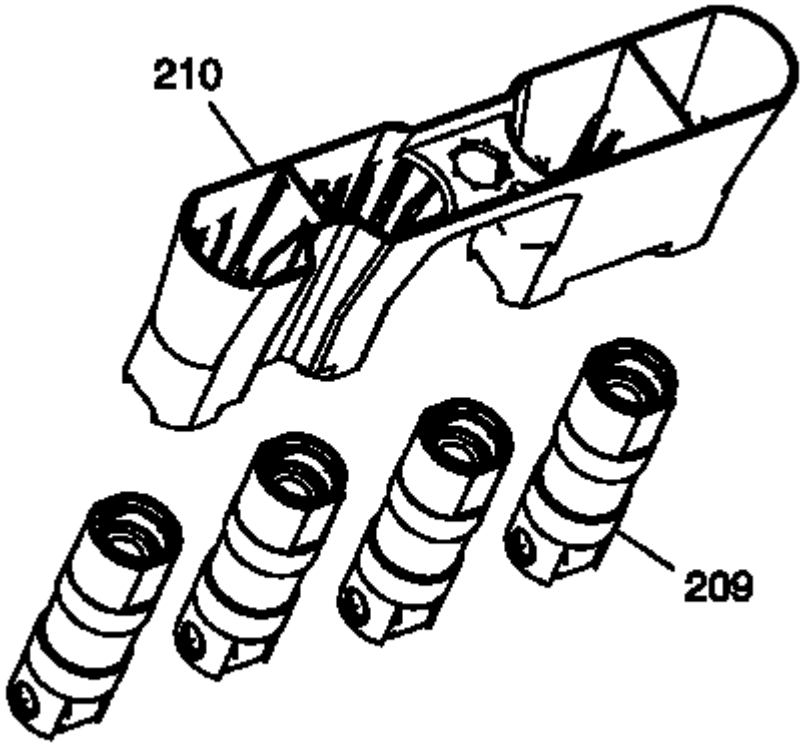

Fig. 239: Valve Lifter Guides & Bolts
Courtesy of GENERAL MOTORS COMPANY

1. Lubricate the valve lifters (209) and engine block valve lifter bores with clean engine oil.
2. Insert the valve lifters into the lifter guides (210). Align the flat area on the top of the lifter with the flat area in the lifter guide bore. Push the lifter completely into the guide bore.

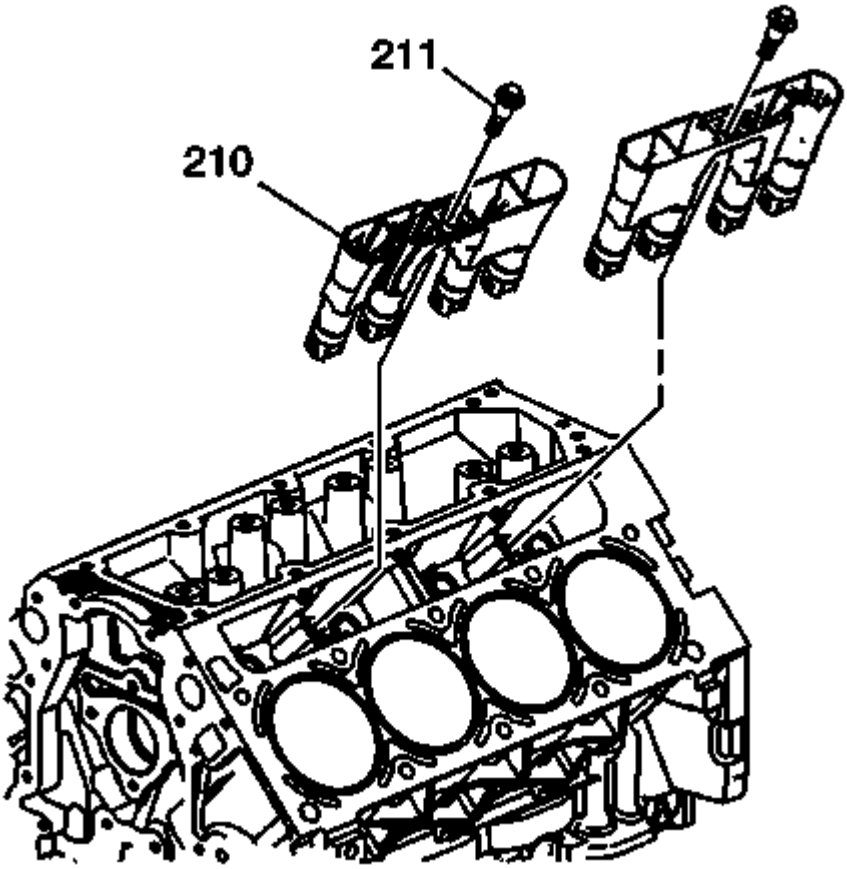

Fig. 240: Valve Lifter Guides, Cylinder Head & Bolts
Courtesy of GENERAL MOTORS COMPANY

3. Install the valve lifters and guide (210) to the engine block.

CAUTION: Refer to Fastener Caution .

4. Install the valve lifter guide bolts.

   Tighten

   Tighten the bolt to 12 N.m (106 lb in).

5. Install the cylinder head and gasket. Refer to **Cylinder Head Replacement - Left Side**, or **Cylinder Head Replacement - Right Side**.

VALVE LIFTER REPLACEMENT (WITH AFM)

Removal Procedure

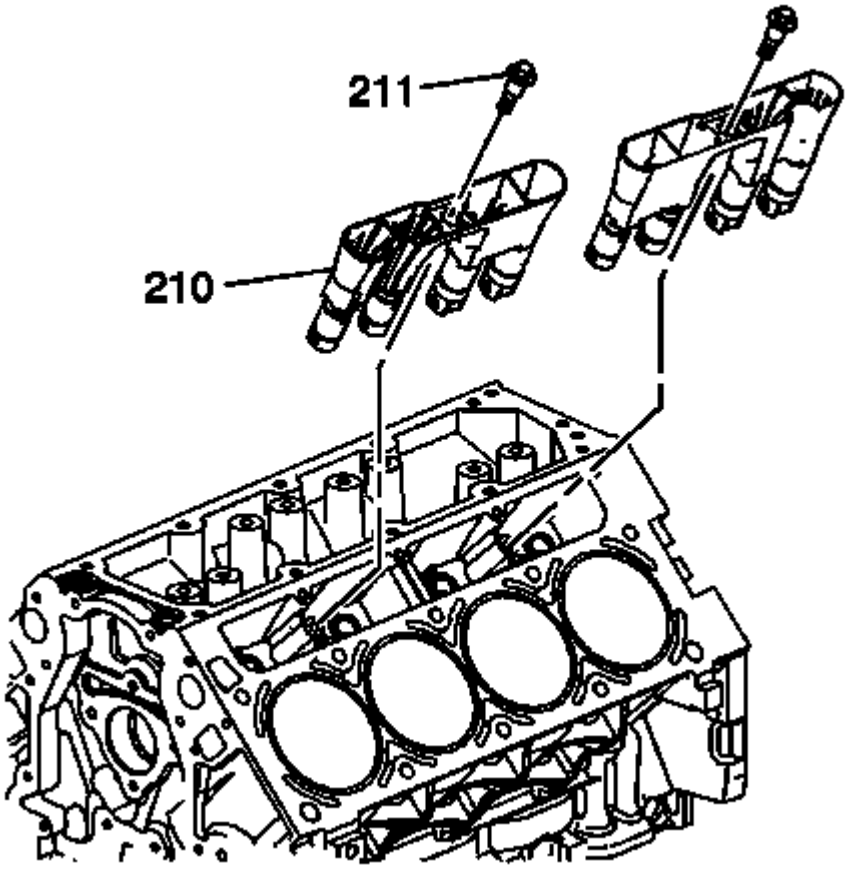

Fig. 241: View Of Lifter Guides & Lifters
Courtesy of GENERAL MOTORS COMPANY

1. Remove the cylinder head and gasket. Refer to **Cylinder Head Replacement - Left Side**
2. Remove the cylinder head and gasket. Refer to **Cylinder Head Replacement - Right Side**.
3. Remove the valve lifter guide bolts (211).
4. Remove the valve lifter guides (210) with the lifters. Note the installed position of the guides. The notched area of the guides is to align with the locating tab on the engine block.

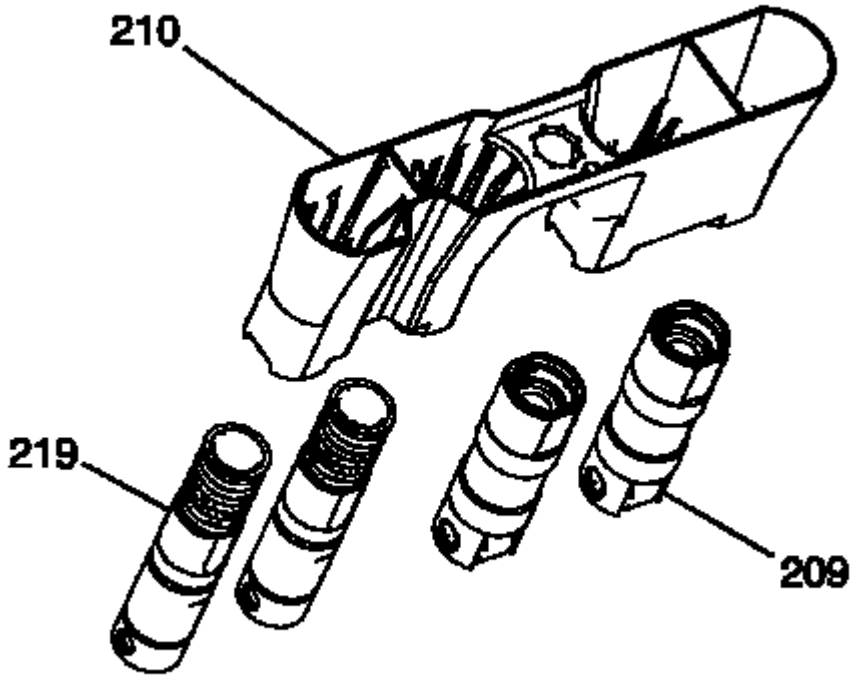

Fig. 242: Exploded View Of Lifter Guides & Lifters
Courtesy of GENERAL MOTORS COMPANY

5. Remove the valve lifters (209, 219) from the guide (210).

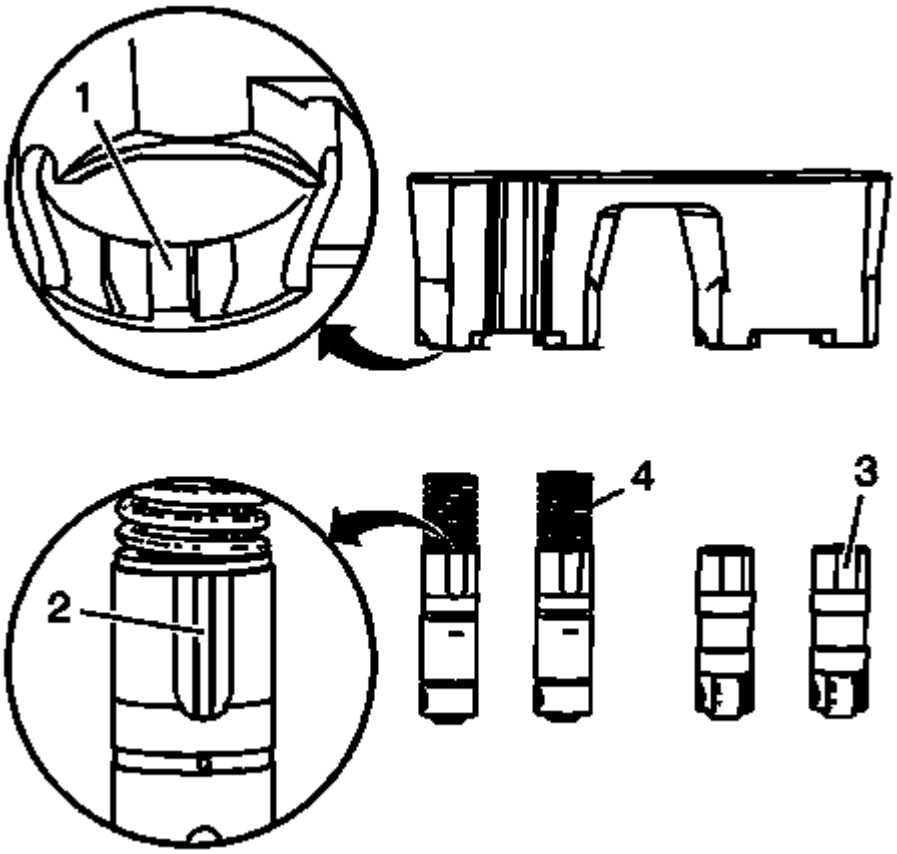

Fig. 243: Inserting Valve Lifters Into Lifter Guides
Courtesy of GENERAL MOTORS COMPANY

NOTE: **The active fuel management lifters are installed into the guide by aligning the notched area of the guide (1) with the raised surface on the side of the lifter (2).**

6. Organize or mark the components so that they can be installed in the same location from which they were removed, if required.
7. Clean and inspect the valve lifters, if required. Refer to **Valve Lifter and Guide Cleaning and Inspection**

Installation Procedure

NOTE:

- **If camshaft replacement is required, the valve lifters must also be replaced.**
- **When reusing valve lifters, install the lifters to their original locations.**
- **Each of the 4 valve guide assemblies will contain 2 active fuel management valve lifters and 2 non active fuel management valve lifters.**
- **With the lifters and guides properly installed, cylinders 1, 4, 6, and 7 lifter**

bores will each contain 2 active fuel management valve lifters.

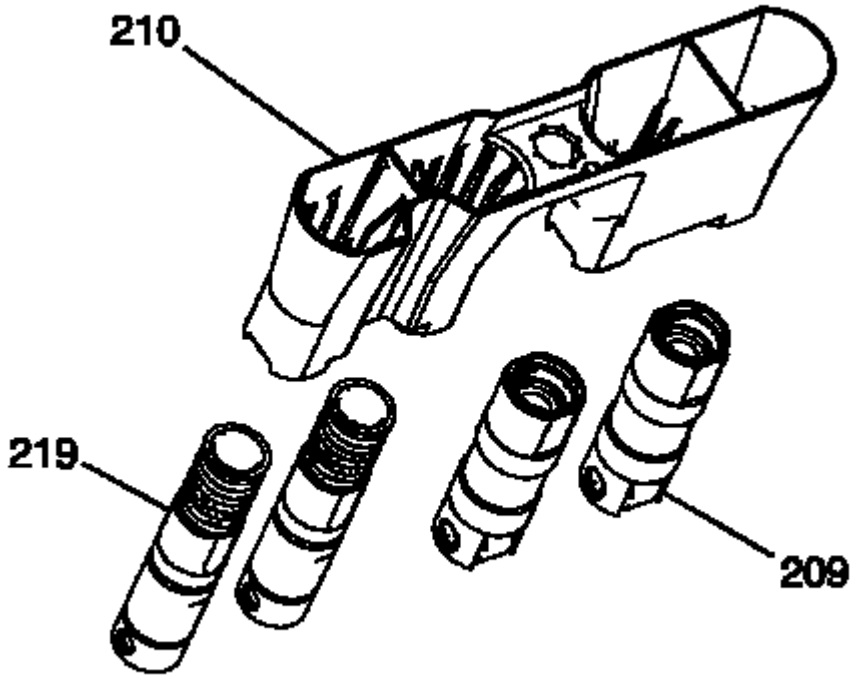

Fig. 244: Exploded View Of Lifter Guides & Lifters
Courtesy of GENERAL MOTORS COMPANY

1. Lubricate the valve lifters (209, 219) and engine block valve lifter bores with clean engine oil.

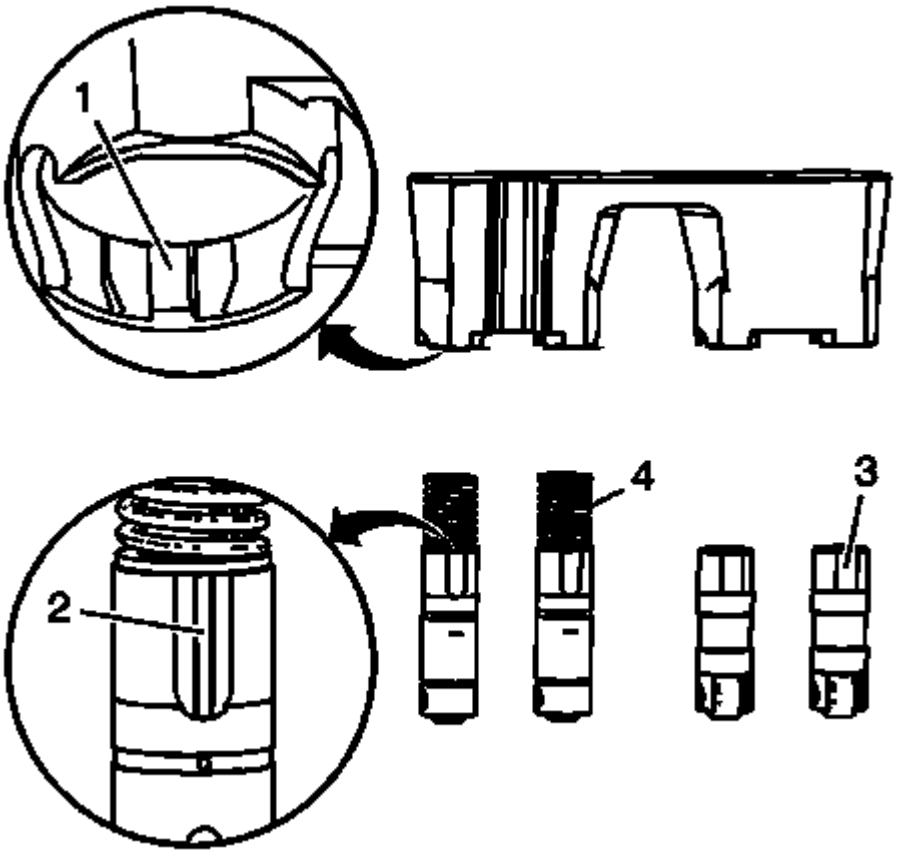

Fig. 245: Inserting Valve Lifters Into Lifter Guides
Courtesy of GENERAL MOTORS COMPANY

2. Insert the valve lifters into the lifter guides.
   - Align the flat area (3) on the top of the non active fuel management lifter with the flat area in the lifter guide bore. Push the lifter completely into the guide bore.
   - The active fuel management lifters are to be installed into the guide, with the notch in the guide (1) aligned with the raised area (2) of the lifter.

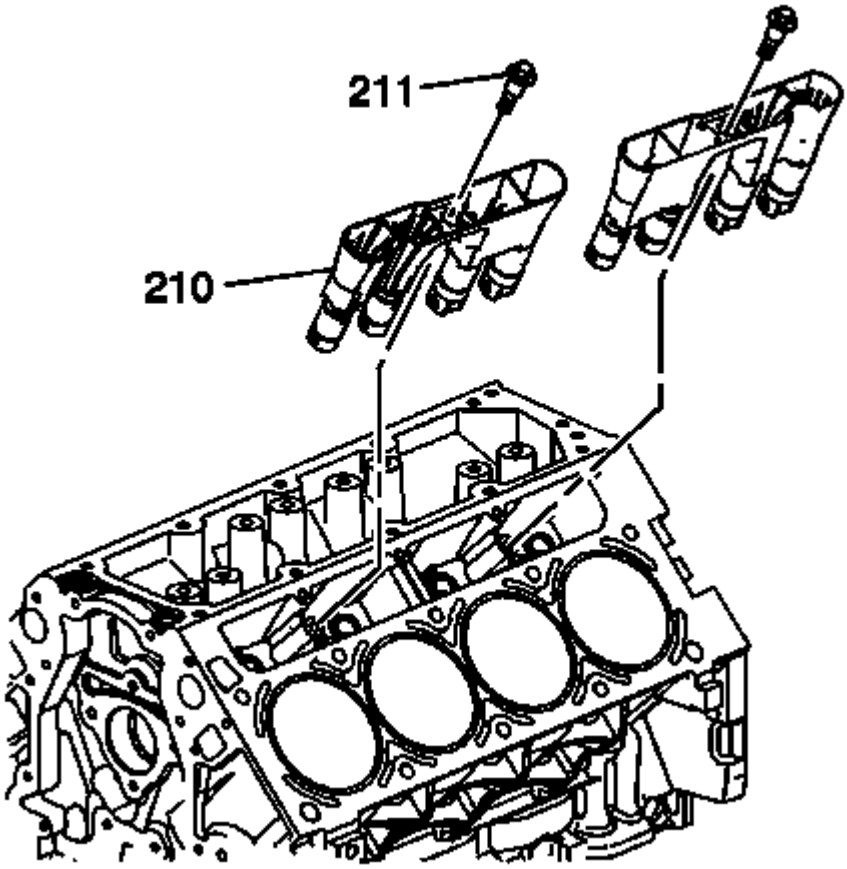

Fig. 246: View Of Lifter Guides & Lifters
Courtesy of GENERAL MOTORS COMPANY

3. Install the valve lifters and guide (210) to the engine block.

CAUTION: Refer to Fastener Caution

4. Install the valve lifter guide bolts (211).

   Tighten

   Tighten the bolt to 12 N.m (106 lb in).

5. Install the cylinder head and gasket. Refer to **Cylinder Head Replacement - Left Side**
6. Install the cylinder head and gasket. Refer to **Cylinder Head Replacement - Right Side**

CRANKSHAFT BALANCER REPLACEMENT

Special Tools

- **J 41478** Crankshaft Front Oil Seal Installer
- **J 41665** Crankshaft Balancer and Sprocket Installer
- **J 41816** Crankshaft Balancer Remover
- **J 41816-2** Crankshaft End Protector
- **J 41816-A** Crankshaft Balancer Remover
- **J 42386-A** Flywheel Holding Tool
- **J 45059** Angle Meter

Removal Procedure

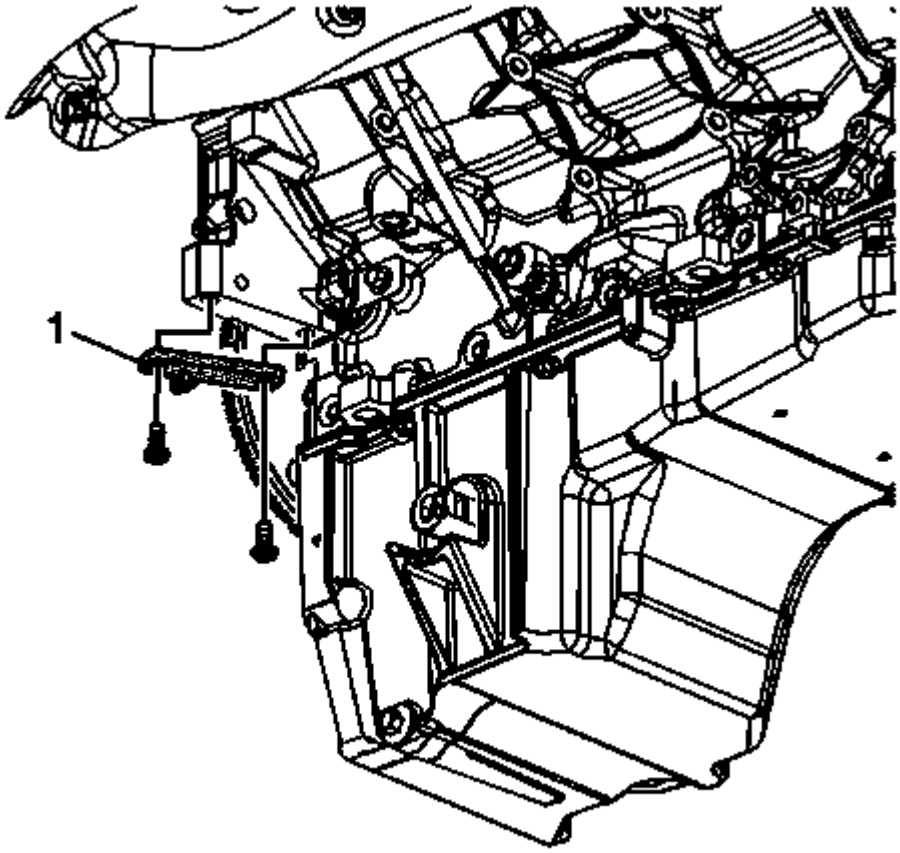

Fig. 247: View Of Special Tool & Bolts
Courtesy of GENERAL MOTORS COMPANY

1. Remove the air conditioning (A/C) drive belt. Refer to **Air Conditioning Compressor Belt Replacement (V8)**.
2. Remove the cooling fan and shroud. Refer to **Cooling Fan and Shroud Replacement (Non-HP2)** , **Cooling Fan and Shroud Replacement (HP2)** .
3. Remove the starter motor. Refer to **Starter Replacement** .

CAUTION: Refer to Fastener Caution .

NOTE: Ensure that the teeth of the J 42386-A flywheel holding tool mesh with the teeth of the engine flywheel.

4. Install the **J 42386-A** flywheel holding tool (1) and bolts. Use one M10-1.5 x 120 mm and one M10-1.5 x 45 mm bolt for proper tool operation. Tighten the **J 42386-A** flywheel holding tool bolts to 50 (37 lb ft).

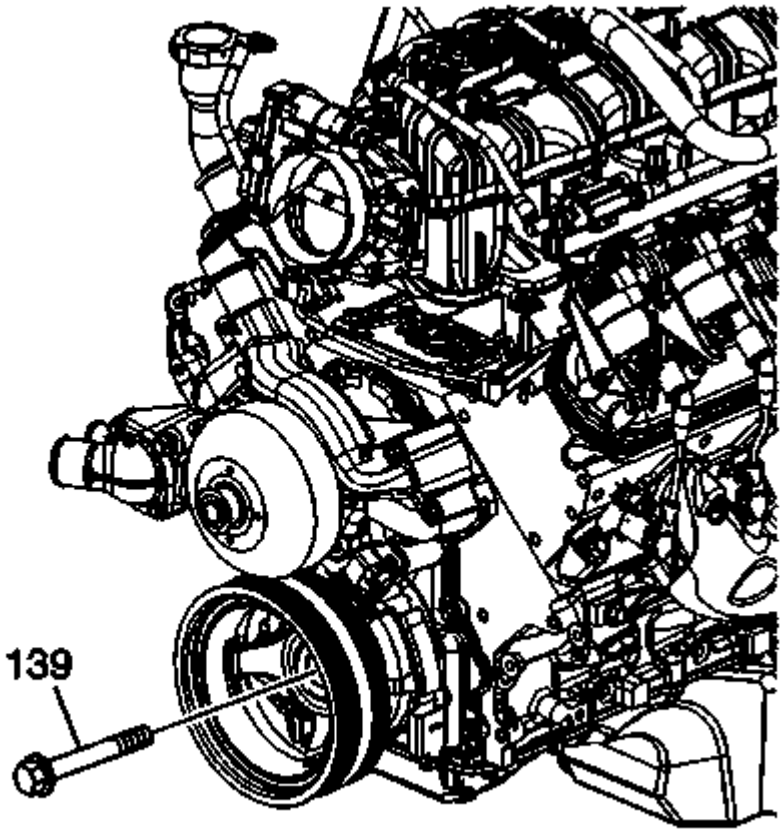

Fig. 248: View Of Crankshaft Balancer Bolt
Courtesy of GENERAL MOTORS COMPANY

5. Remove the crankshaft balancer bolt (139). Do not discard the crankshaft balancer bolt at this time. The old balancer bolt will be used during the balancer installation procedure.

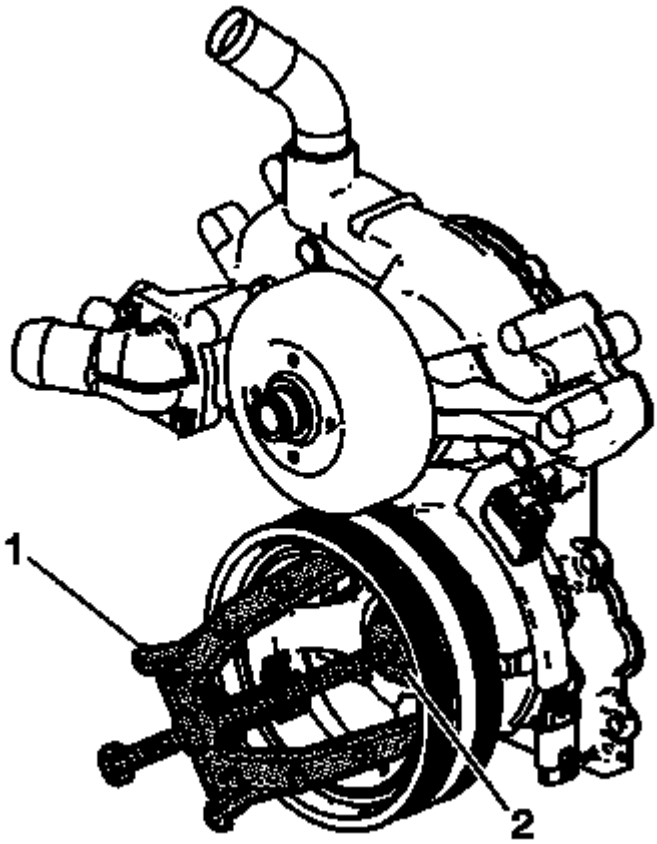

Fig. 249: Removing Crankshaft Balancer
Courtesy of GENERAL MOTORS COMPANY

6. Install the **J 41816** crankshaft balancer remover (1) and **J 41816-2** crankshaft end protector (2) to the crankshaft balancer.

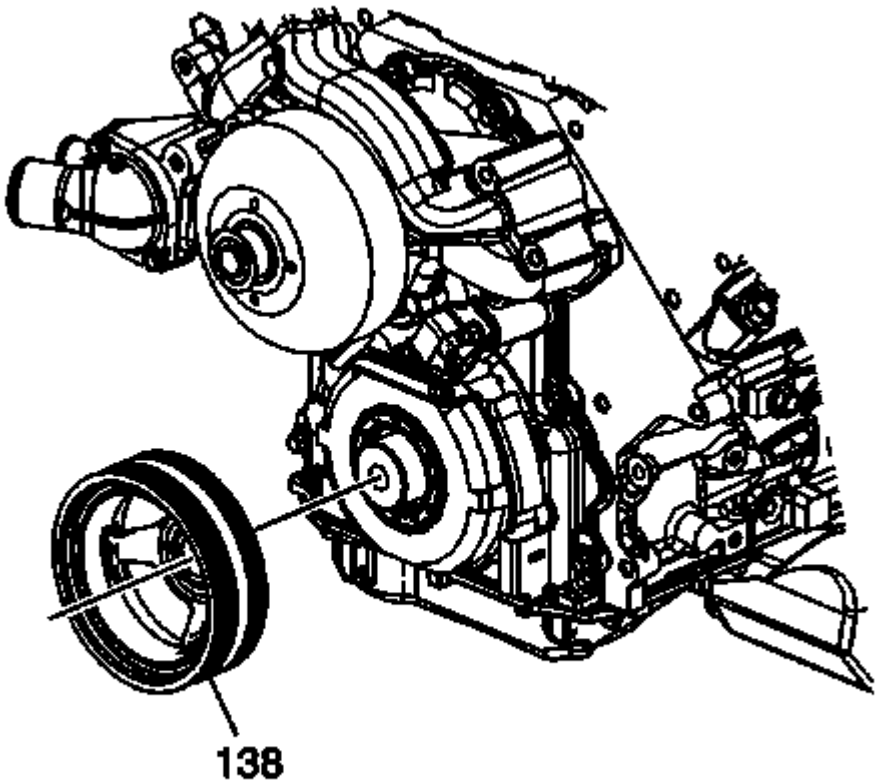

Fig. 250: View Of Crankshaft Balancer
Courtesy of GENERAL MOTORS COMPANY

NOTE: **The crankshaft balancer is balanced as an individual component. It is not necessary to mark the balancer prior to removal.**

7. Use the **J 41816** crankshaft balancer remover and the **J 41816-2** crankshaft end protector to remove the crankshaft balancer (138).
8. Remove the **J 41816** crankshaft balancer remover and the **J 41816-2** crankshaft end protector from the crankshaft balancer.

Installation Procedure

NOTE:

- **The crankshaft balancer installation and bolt tightening involves a four stage tightening process. The first pass ensures that the balancer is installed completely onto the crankshaft. The second, third, and fourth passes tighten the NEW bolt to the proper torque.**
- **The used crankshaft balancer bolt will be used ONLY during the first pass of the balancer installation procedure. Install a NEW bolt and tighten as described in the second, third and fourth passes of the balancer bolt**

tightening procedure.

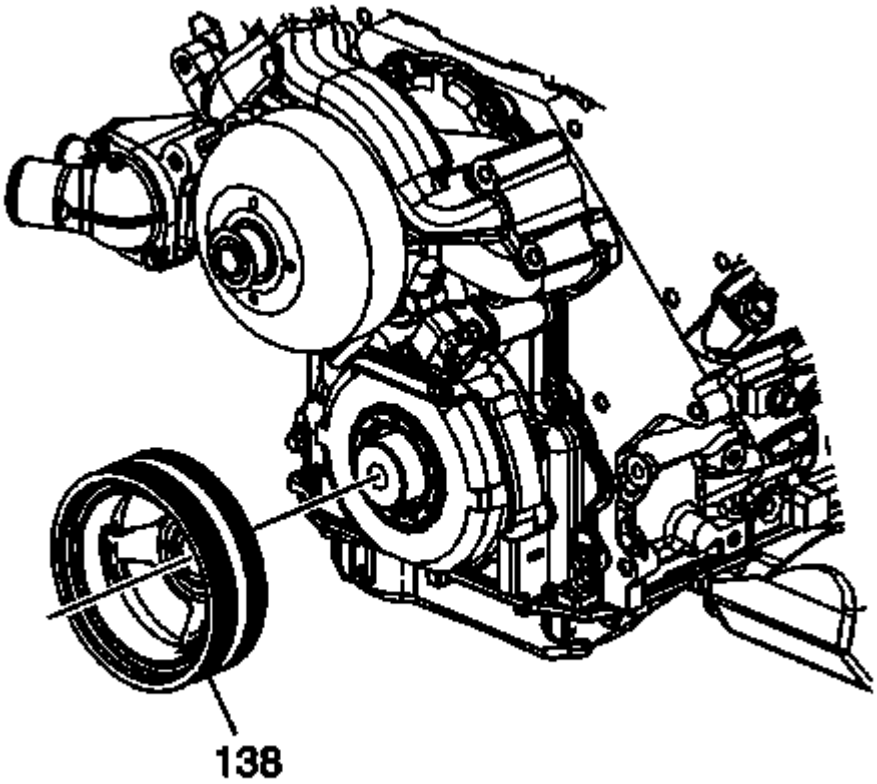

Fig. 251: View Of Crankshaft Balancer
Courtesy of GENERAL MOTORS COMPANY

NOTE: The balancer should be positioned onto the end of the crankshaft as straight as possible prior to tool installation.

1. Position the crankshaft balancer (138) onto the end of the crankshaft.

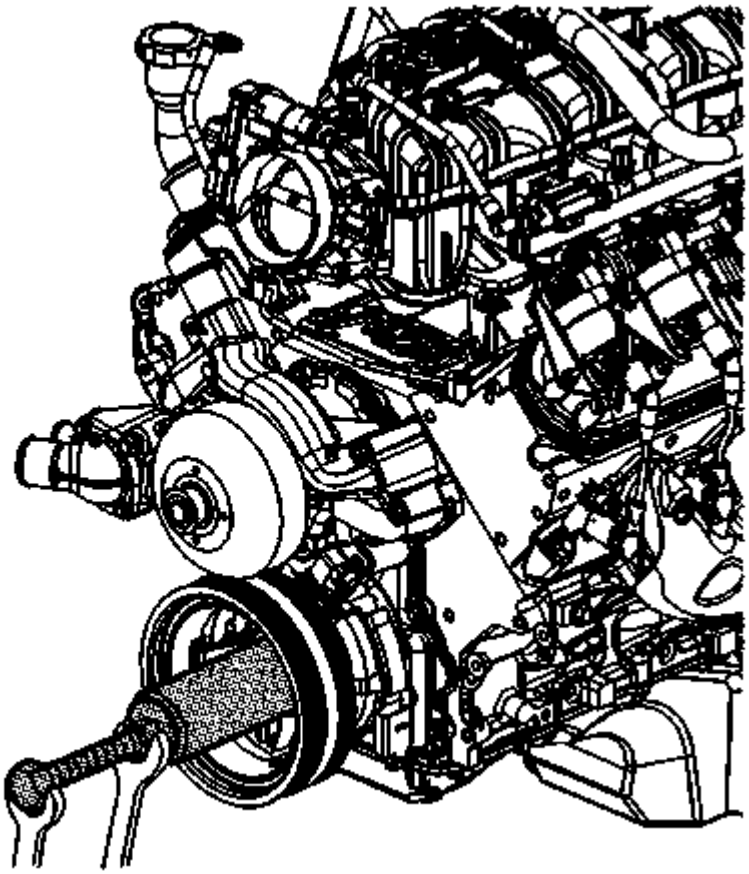

Fig. 252: View Of Balancer Installation Special Tools
Courtesy of GENERAL MOTORS COMPANY

2. Install the **J 41665** crankshaft balancer and sprocket installer and the threaded rod from the **J 41478** crankshaft front oil seal installer to crankshaft balancer and install the balancer.
    1. Assemble the threaded rod, nut, washer and installer. Insert the smaller end of the installer into the front of the balancer.
    2. Use a wrench and hold the hex end of the threaded rod.
    3. Use a second wrench and rotate the installation tool nut clockwise until the balancer is started onto the crankshaft.
    4. Remove the tool and reverse the installation tool.

       Position the larger end of the installer against the front of the balancer.

    5. Use a wrench and hold the hex end of the threaded rod.
    6. Use a second wrench and rotate the installation tool nut clockwise until the balancer is installed onto the crankshaft.
    7. Remove the **J 41665** crankshaft balancer and sprocket installer and the threaded rod.

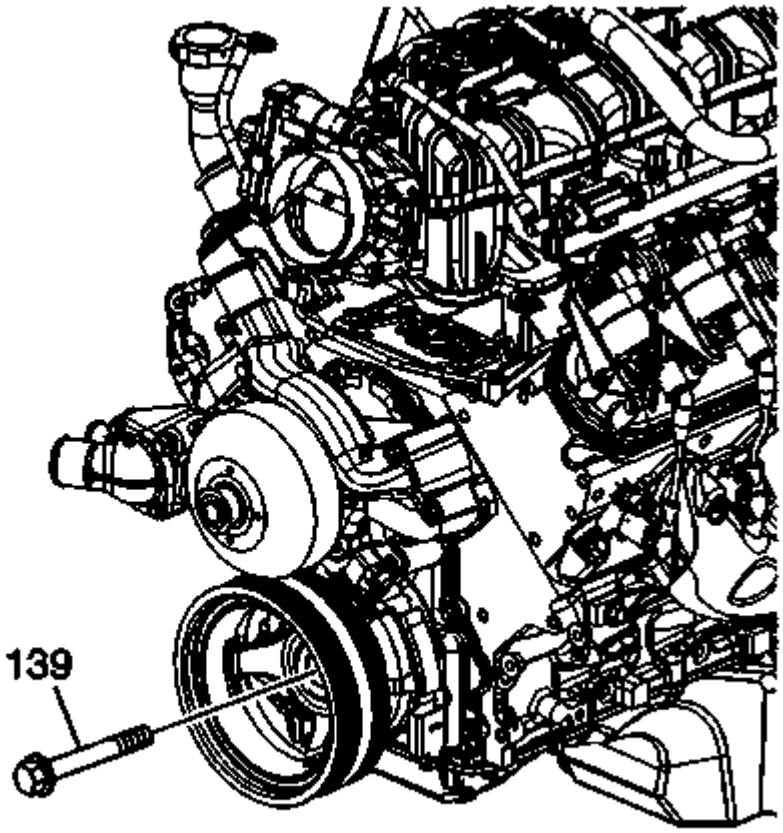

Fig. 253: View Of Crankshaft Balancer Bolt
Courtesy of GENERAL MOTORS COMPANY

3. Install the USED crankshaft balancer bolt (139). Tighten the USED bolt to 330 (240 lb ft).
4. Remove the USED crankshaft balancer bolt.

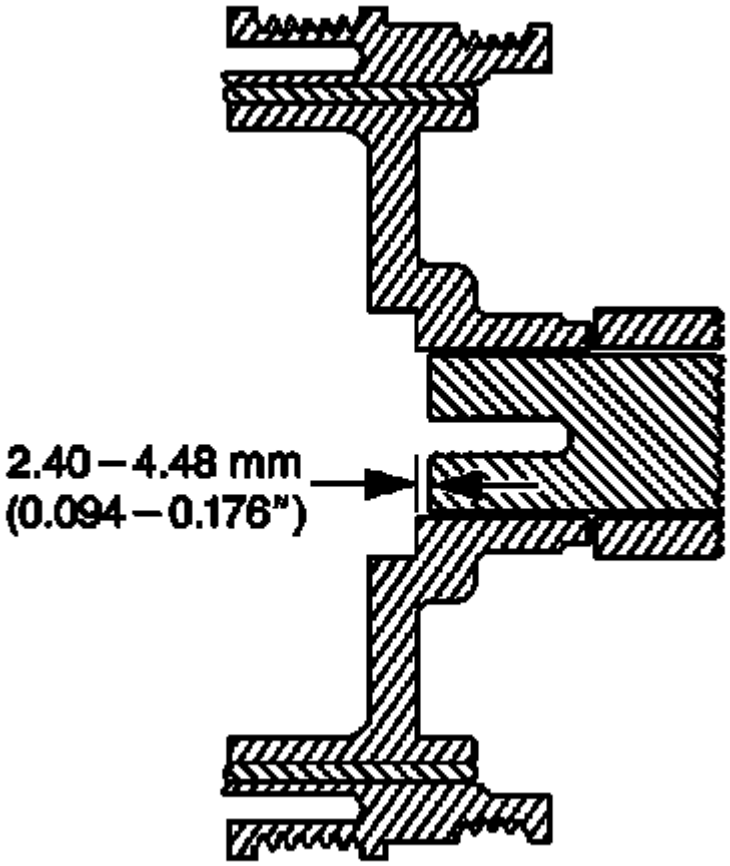

Fig. 254: Identifying Hub To Crankshaft Distance
Courtesy of GENERAL MOTORS COMPANY

NOTE: The nose of the crankshaft should be recessed 2.4-4.48 mm (0.094-0.176 in) into the balancer bore.

5. Measure for a correctly installed balancer. If the balancer is not installed to the proper dimension, install the **J 41665** crankshaft balancer and sprocket installer and repeat the installation procedure.

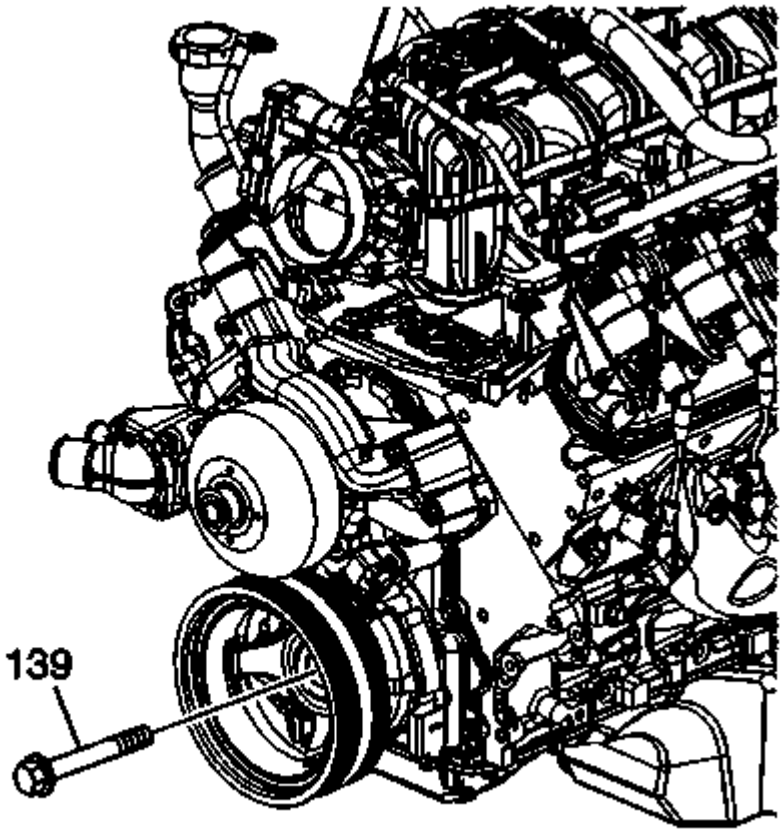

Fig. 255: View Of Crankshaft Balancer Bolt
Courtesy of GENERAL MOTORS COMPANY

6. Install the NEW crankshaft balancer bolt (139).
    1. Tighten the bolt a first pass to 150 (110 lb ft).
    2. Loosen 360 degrees.
    3. Tighten the bolt a first pass to 80 (59 lb ft).
    4. Tighten the bolt a final pass to 125 degrees using **J 45059** angle meter.

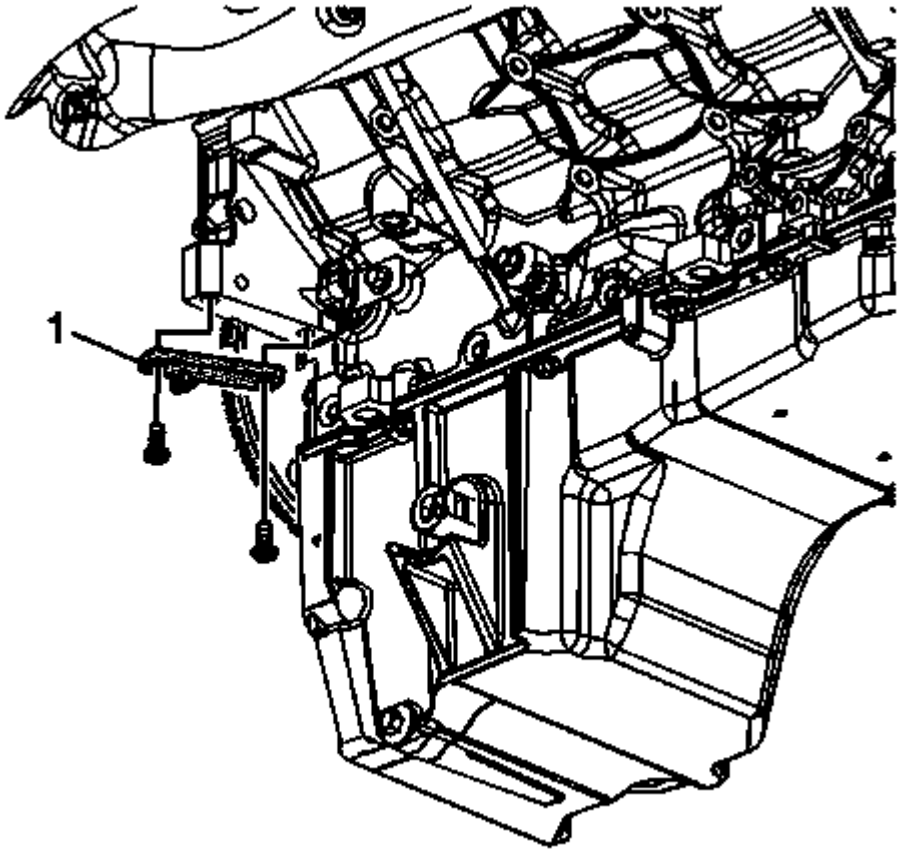

Fig. 256: View Of Special Tool & Bolts
Courtesy of GENERAL MOTORS COMPANY

7. Remove the **J 42386-A** flywheel holding tool (1) and bolts.
8. Install the starter motor. Refer to **Starter Replacement** .
9. Install the cooling fan and shroud. Refer to **Cooling Fan and Shroud Replacement (Non-HP2)** , **Cooling Fan and Shroud Replacement (HP2)** .
10. Install the A/C drive belt. Refer to **Air Conditioning Compressor Belt Replacement (V8)**.
11. Perform the crankshaft position (CKP) system variation learn procedure. Refer to **Crankshaft Position System Variation Learn** .

CRANKSHAFT FRONT OIL SEAL REPLACEMENT (WITH LY6)

Special Tools

J 41478 Crankshaft Front Oil Seal Installer

Removal Procedure

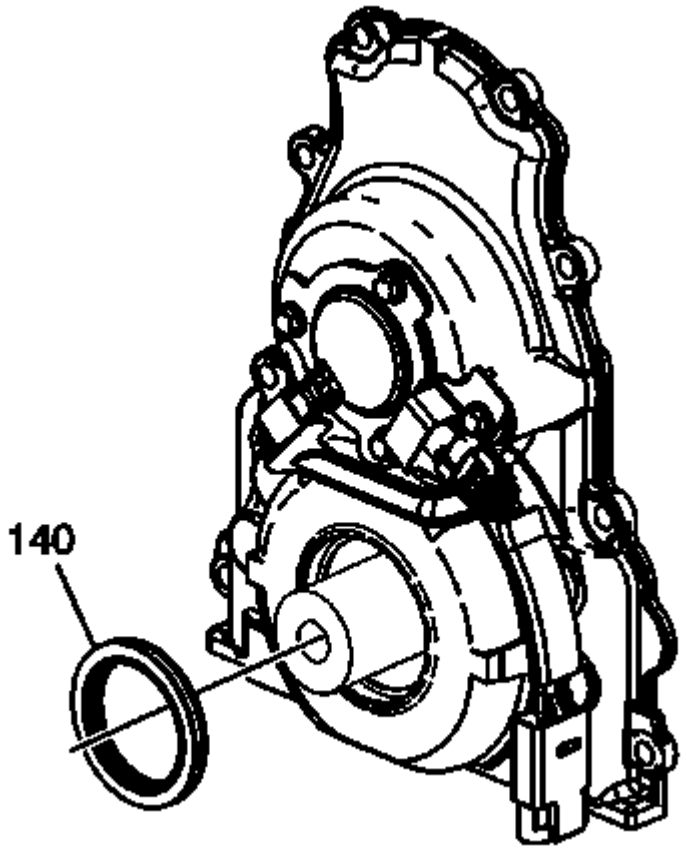

Fig. 257: View Of Outer Edge Of The Oil Seal
Courtesy of GENERAL MOTORS COMPANY

1. Remove the crankshaft balancer. Refer to **Crankshaft Balancer Replacement**.
2. Remove the crankshaft front oil seal (140) from the front cover.

Installation Procedure

NOTE:

- **Do not lubricate the oil seal sealing surface.**
- **Do not reuse the crankshaft front oil seal.**

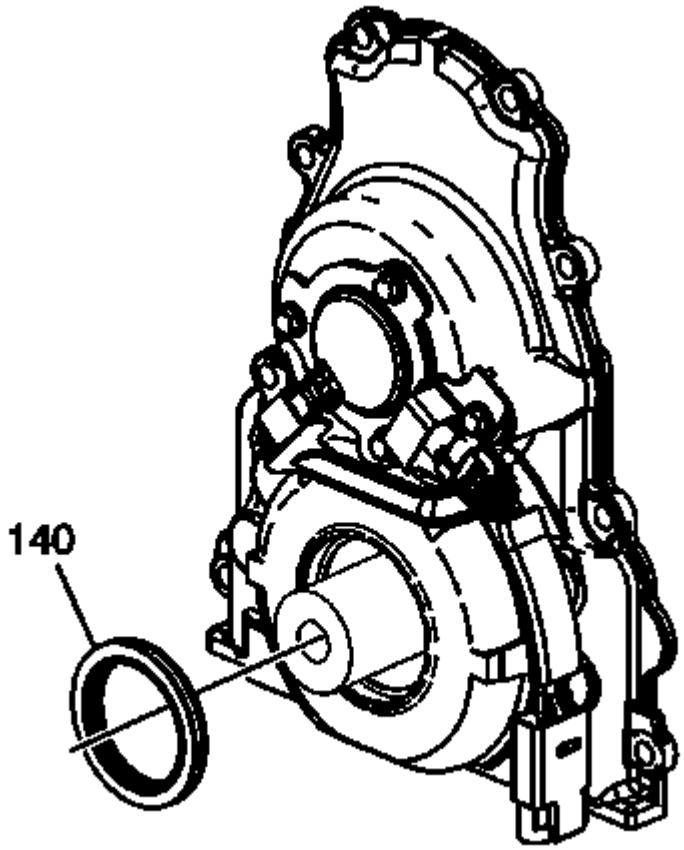

Fig. 258: View Of Outer Edge Of The Oil Seal
Courtesy of GENERAL MOTORS COMPANY

1. Lubricate the outer edge of the oil seal (140) with clean engine oil.
2. Lubricate the front cover oil seal bore with clean engine oil.

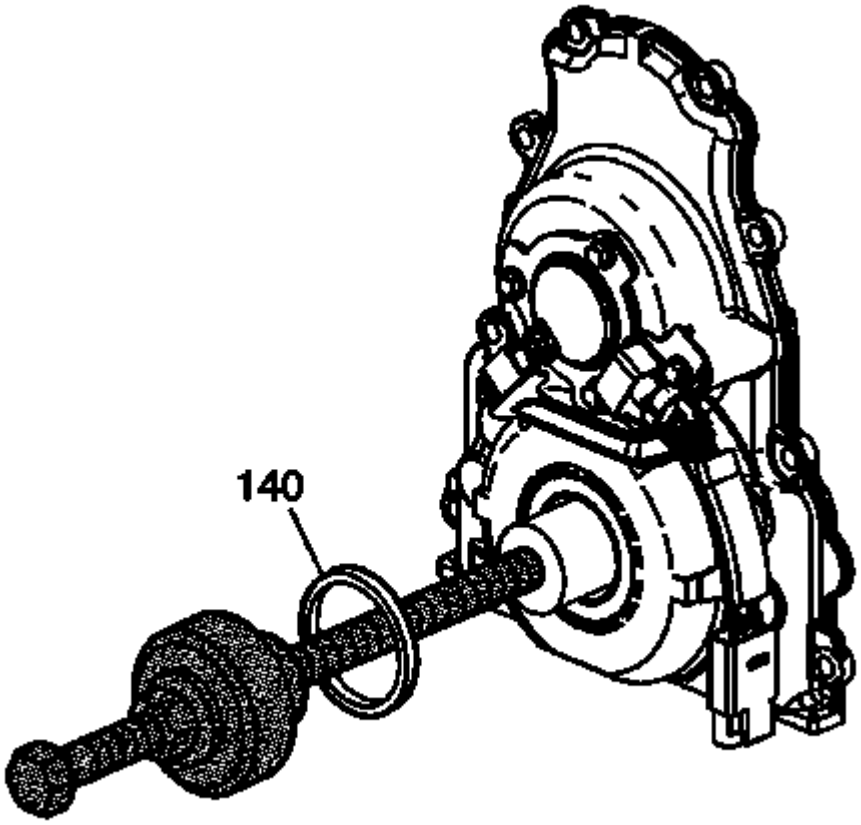

Fig. 259: View Of Front Oil Seal & Special Tool
Courtesy of GENERAL MOTORS COMPANY

3. Install the crankshaft front oil seal (140) onto the **J 41478** Crankshaft Front Oil Seal Installer guide.
4. Install the **J 41478** Crankshaft Front Oil Seal Installer threaded rod (with nut, washer, guide, and oil seal) into the end of the crankshaft.
5. Use the **J 41478** Crankshaft Front Oil Seal Installer in order to install the oil seal into the cover bore.
    1. Use a wrench and hold the hex on the installer bolt.
    2. Use a second wrench and rotate the installer nut clockwise until the seal bottoms in the cover bore.
    3. Remove the **J 41478** Crankshaft Front Oil Seal Installer.
    4. Inspect the oil seal for proper installation. The oil seal should be installed evenly and completely into the front cover bore.
6. Install the crankshaft balancer. Refer to **Crankshaft Balancer Replacement**.

CAMSHAFT POSITION ACTUATOR MAGNET REPLACEMENT

Removal Procedure

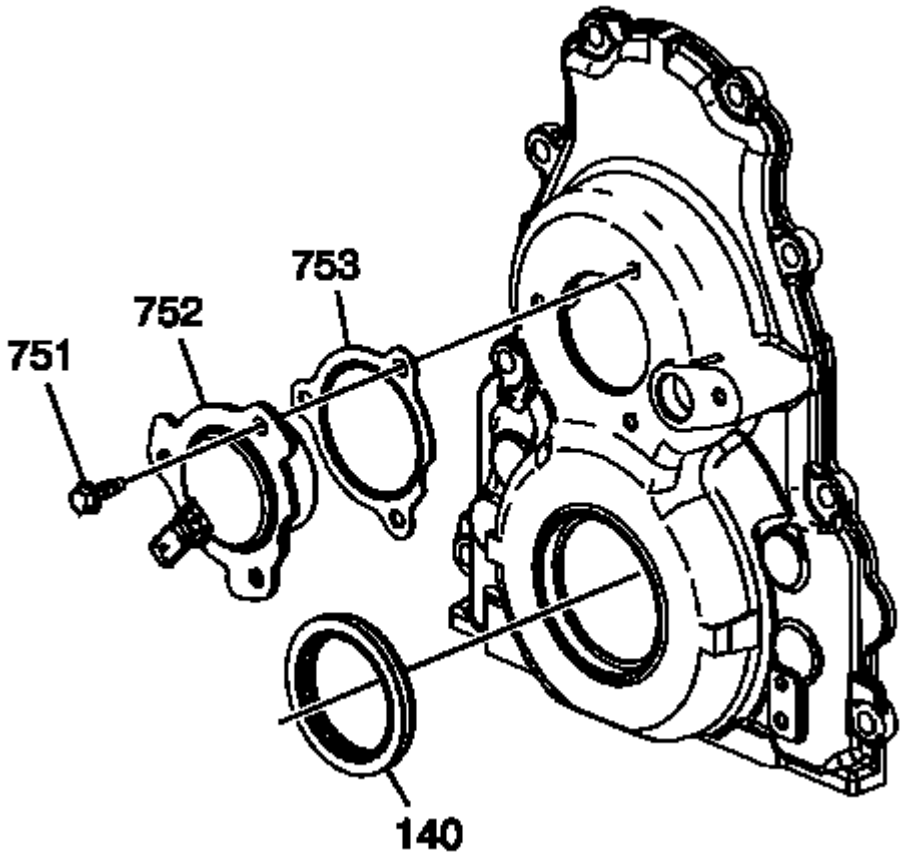

Fig. 260: View Of CMP Actuator Magnet, Bolts, Gasket & Oil Seal
Courtesy of GENERAL MOTORS COMPANY

1. Remove the water pump. Refer to **Water Pump Replacement** .
2. Disconnect the engine harness electrical connector from the camshaft position (CMP) actuator magnet.
3. Remove the CMP actuator magnet bolts (751) and magnet (752).
4. Remove and discard the CMP actuator magnet gasket (753).

Installation Procedure

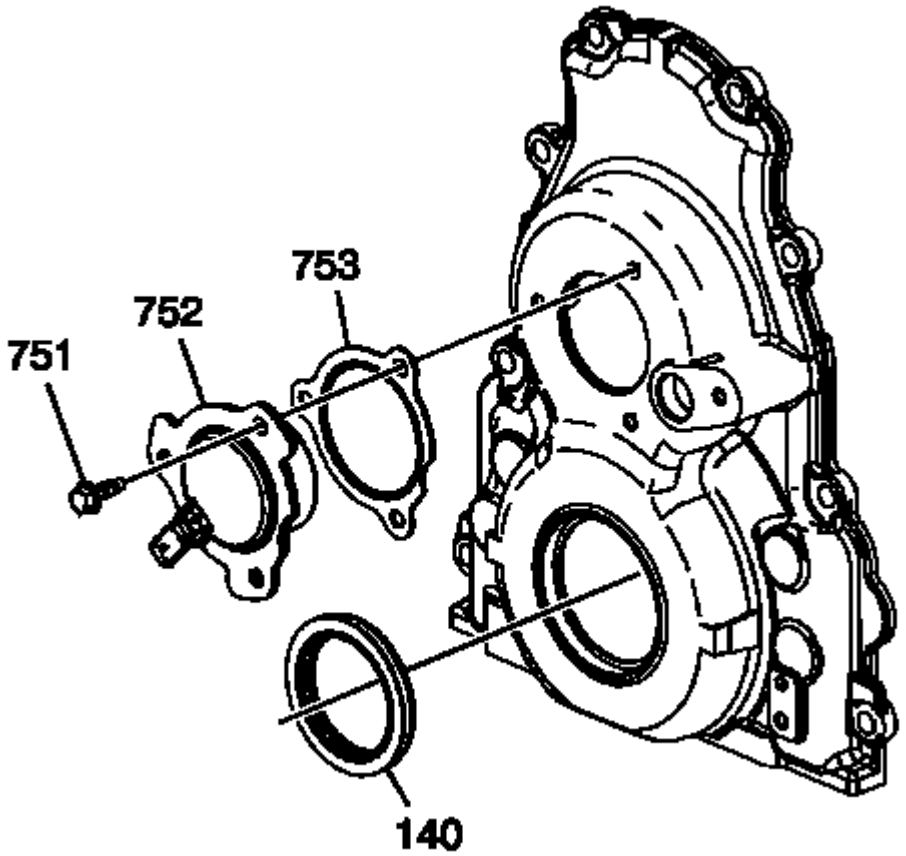

Fig. 261: View Of CMP Actuator Magnet, Bolts, Gasket & Oil Seal
Courtesy of GENERAL MOTORS COMPANY

NOTE: The gasket surface should be free of oil or other foreign material during assembly.

1. Install a NEW CMP actuator magnet gasket (753) onto the CMP actuator magnet.
2. Install the CMP actuator magnet (752) to the front cover.

CAUTION: Refer to Fastener Caution .

3. Install the CMP actuator magnet bolts (751) and tighten to 12 N.m (106 lb in).
4. Connect the engine harness electrical connector to the CMP actuator magnet.
5. Install the water pump. Refer to **Water Pump Replacement** .

ENGINE FRONT COVER REPLACEMENT

Special Tools

J 41476 Front and Rear Cover Alignment Tool

Removal Procedure

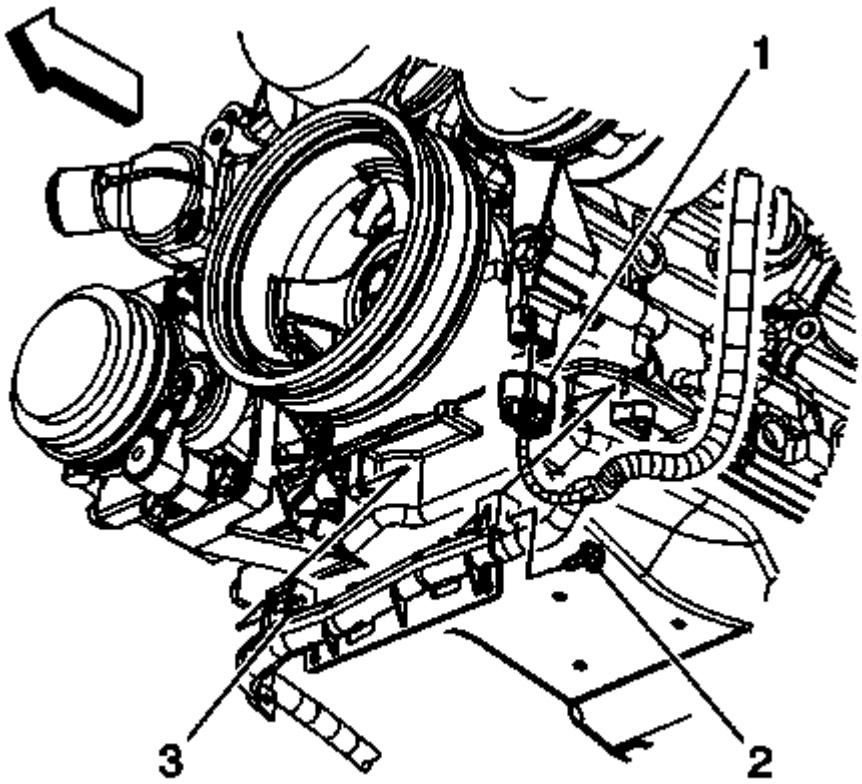

Fig. 262: View Of Electrical Connector, Cable Channel Bolt & Pin
Courtesy of GENERAL MOTORS COMPANY

1. Remove the water pump. Refer to **Water Pump Replacement** .
2. Remove the crankshaft balancer. Refer to **Crankshaft Balancer Replacement**.
3. Disconnect the engine harness electrical connector (1) from the camshaft position (CMP) sensor wire harness electrical connector.

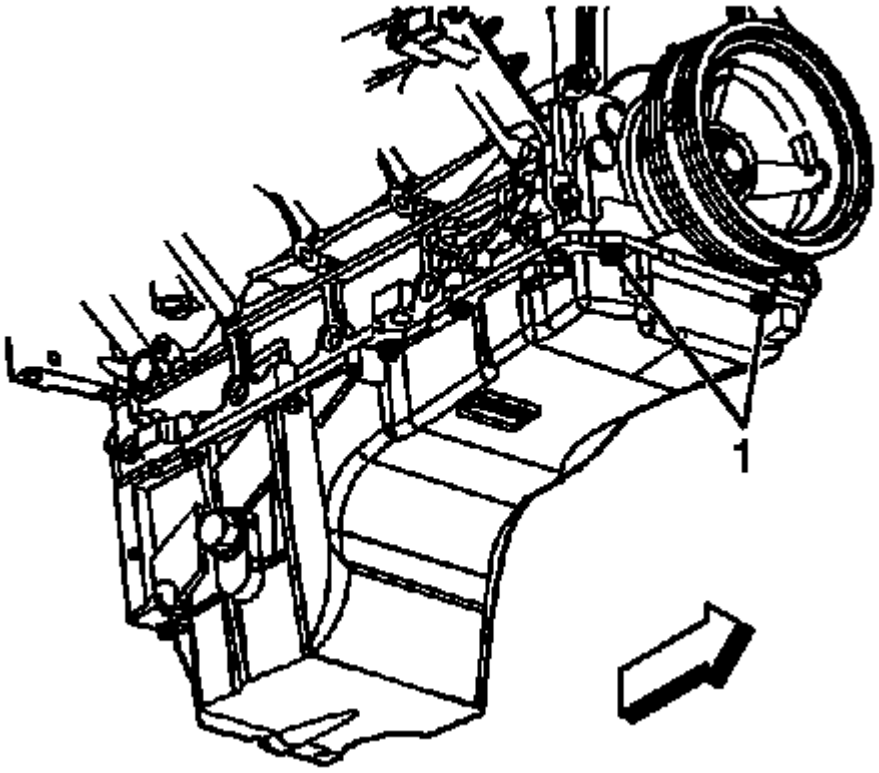

Fig. 263: View Of Oil Pan-To-Front Cover Bolts
Courtesy of GENERAL MOTORS COMPANY

4. Remove the oil pan-to-front cover bolts (1).

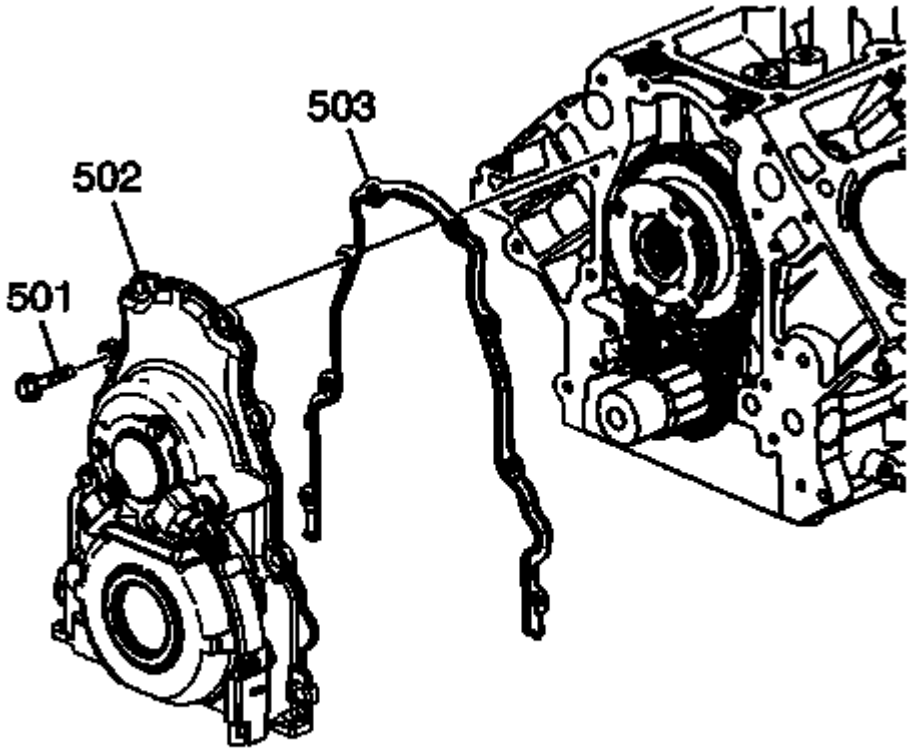

Fig. 264: View Of Front Cover, Bolts & Gasket
Courtesy of GENERAL MOTORS COMPANY

5. Remove the front cover bolts (501).
6. Remove the front cover (502) and gasket (503).
7. Discard the front cover gasket.
8. Remove the crankshaft front oil seal.

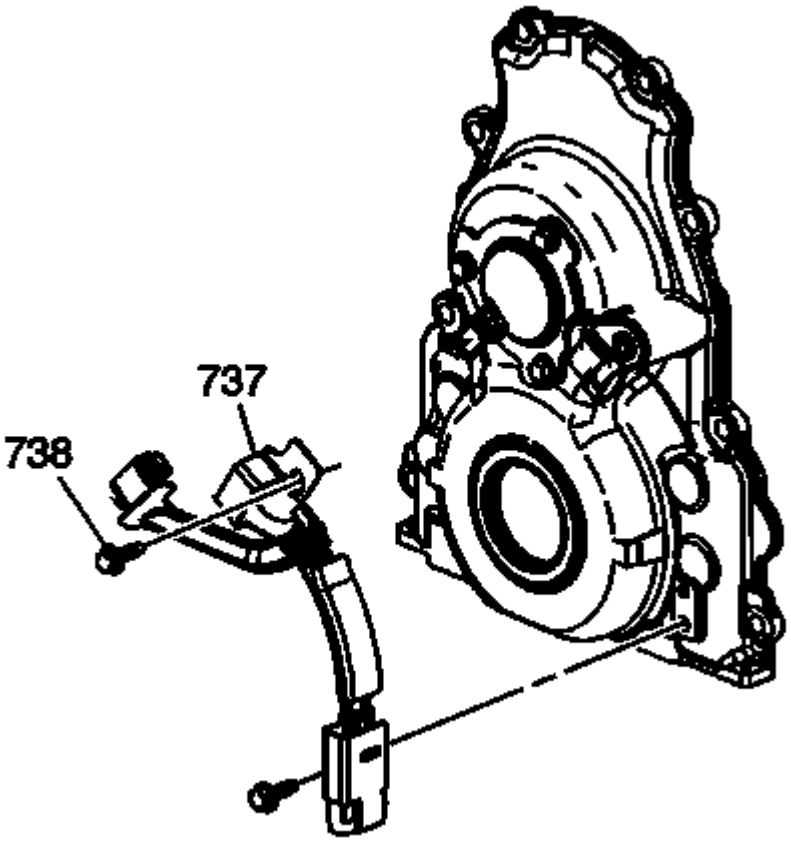

Fig. 265: View Of CMP Sensor Wire Harness & Bolts
Courtesy of GENERAL MOTORS COMPANY

9. If replacing the engine front cover perform the following steps, otherwise proceed to step 10 of the installation procedure.
10. Remove the CMP sensor wire harness bolts (738).
11. Disconnect the CMP sensor wire harness from the CMP sensor.
12. Remove the CMP sensor wire harness (737).

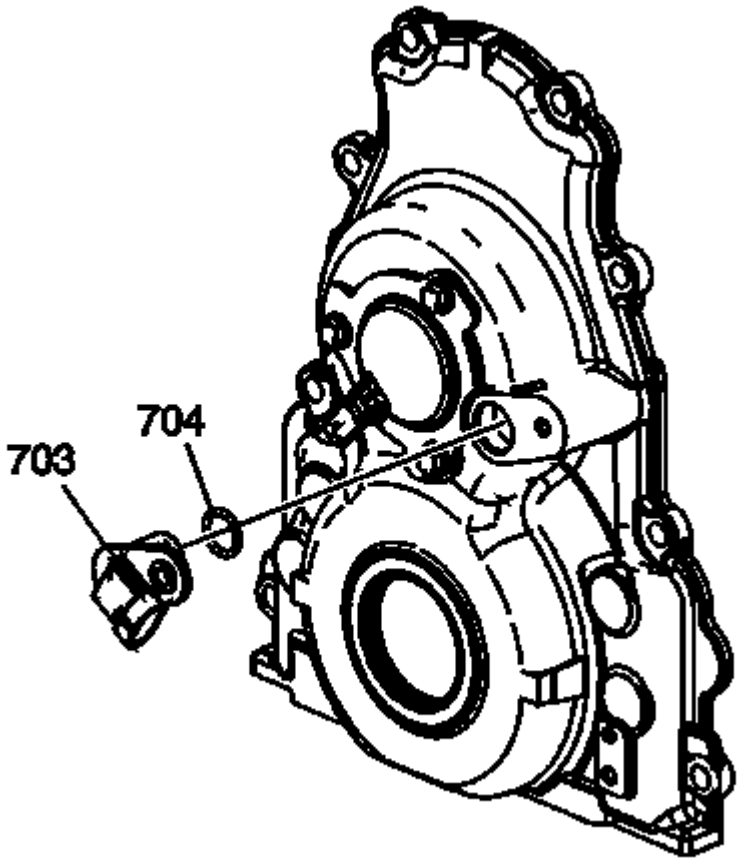

Fig. 266: View Of CMP Sensor & O-Ring
Courtesy of GENERAL MOTORS COMPANY

13. Remove the CMP sensor (703).

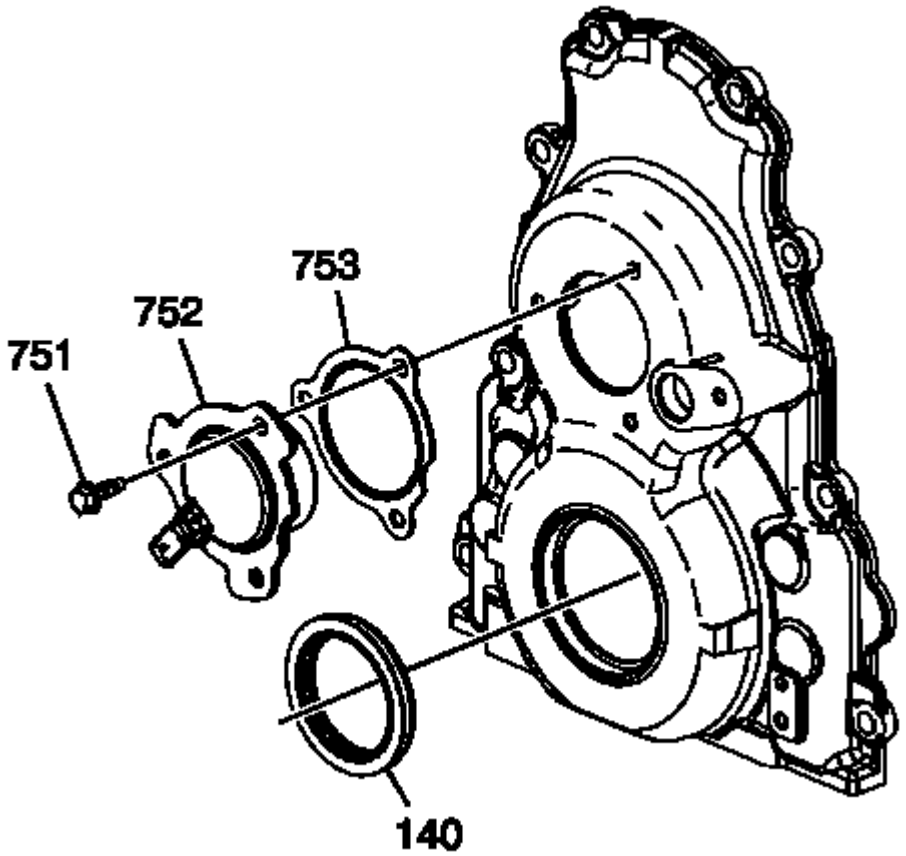

Fig. 267: View Of CMP Actuator Magnet, Bolts, Gasket & Oil Seal
Courtesy of GENERAL MOTORS COMPANY

14. Remove the CMP actuator magnet bolts (751), and magnet (752).
15. Remove and discard the CMP actuator magnet gasket (753).

Installation Procedure

NOTE:

- **Do not reuse the crankshaft oil seal or front cover gasket.**
- **Do not apply any type of sealant to the front cover gasket, unless specified.**
- **The special tool in this procedure is used to properly center the front crankshaft front oil seal.**
  - **All gasket surfaces should be free of oil or other foreign material during assembly.**
  - **The crankshaft front oil seal MUST be centered in relation to the crankshaft.**
  - **An improperly aligned front cover may cause premature front oil seal wear and/or engine oil leaks.**

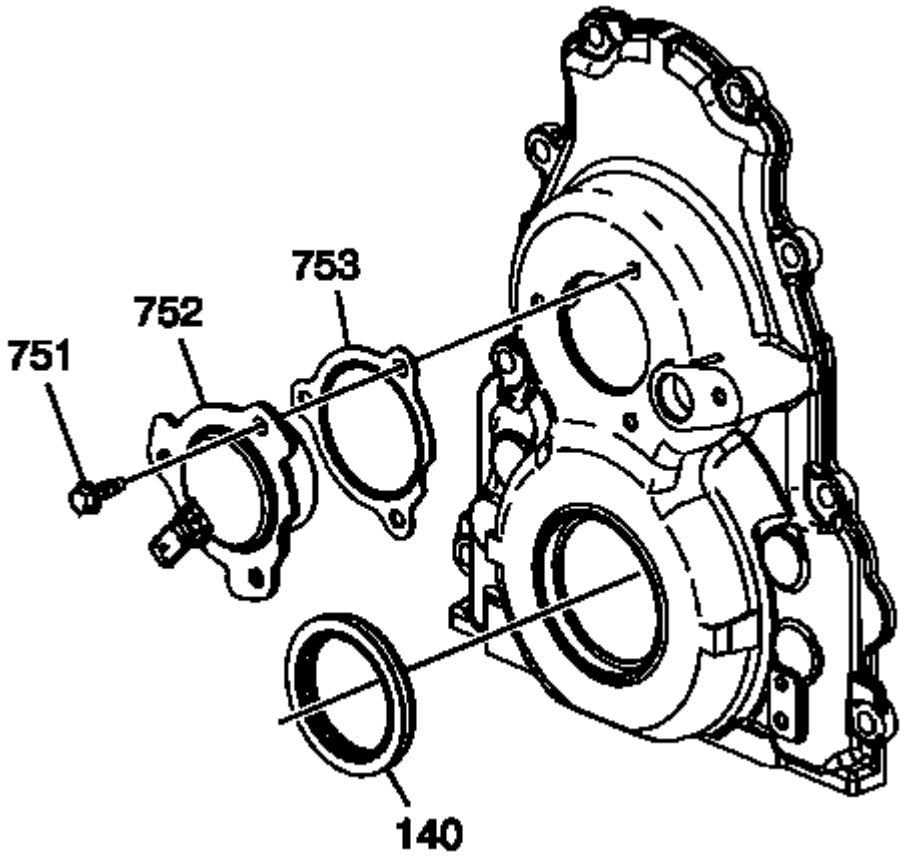

Fig. 268: View Of CMP Actuator Magnet, Bolts, Gasket & Oil Seal
Courtesy of GENERAL MOTORS COMPANY

1. If replacing the front cover perform the following steps, otherwise proceed to step 10.
2. Install a NEW CMP actuator magnet gasket (753) onto the magnet.

CAUTION: Refer to Fastener Caution .

3. Install the CMP actuator magnet (752) and bolts (751).

Tighten

Tighten the bolts to 12 (106 lb in).

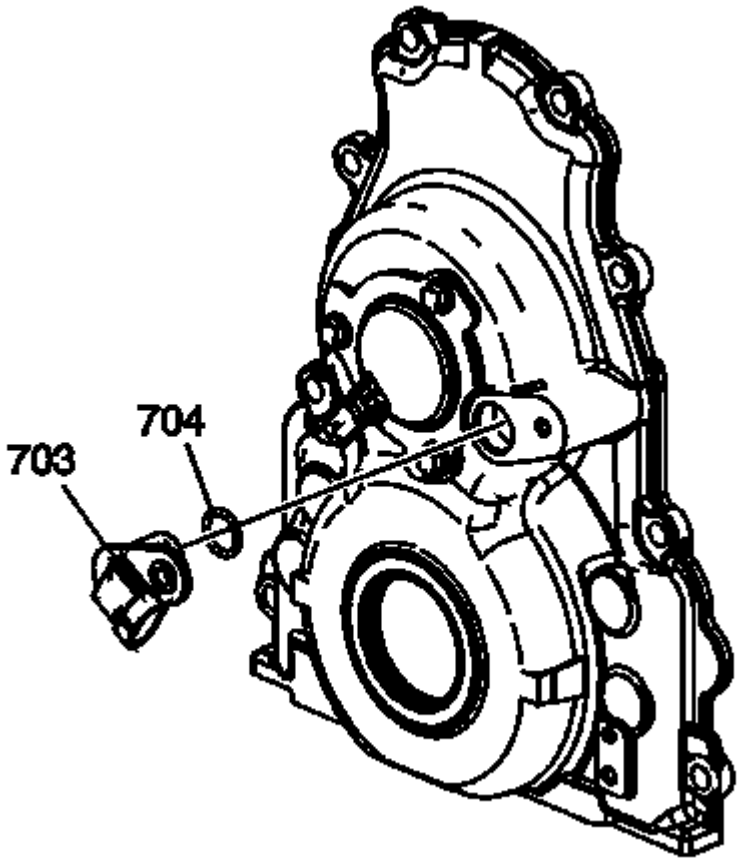

Fig. 269: View Of CMP Sensor & O-Ring
Courtesy of GENERAL MOTORS COMPANY

4. Inspect the CMP sensor O-ring seal for cuts or damage. If the seal is not cut or damaged, it may be reused.
5. Lubricate the O-ring seal (704) with clean engine oil.
6. Install the CMP sensor (703).

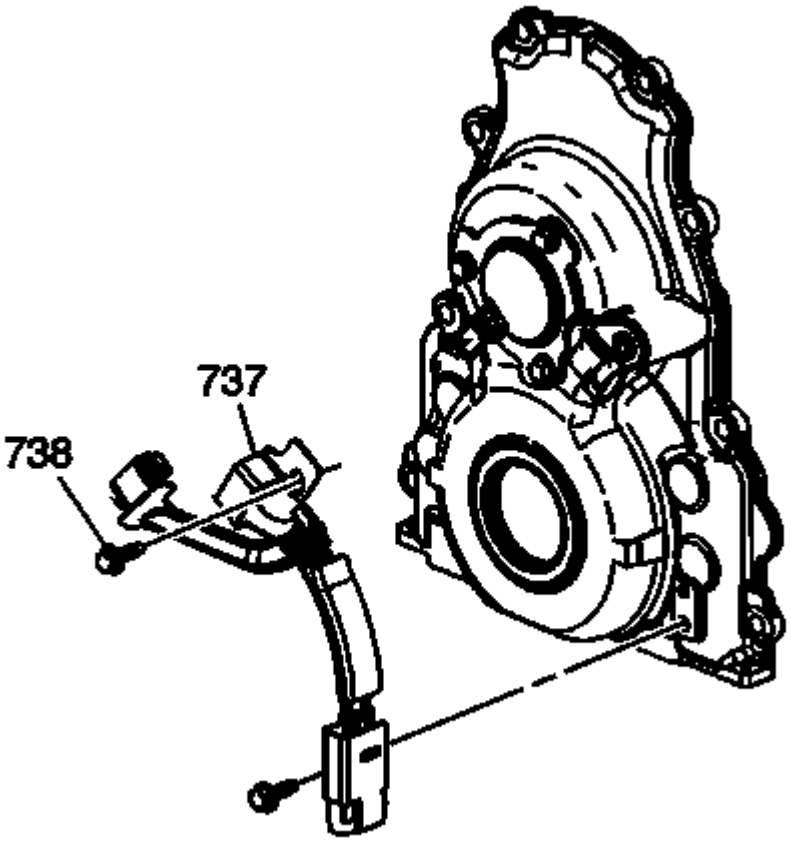

Fig. 270: View Of CMP Sensor Wire Harness & Bolts
Courtesy of GENERAL MOTORS COMPANY

7. Position the CMP sensor wire harness (737) to the front cover
8. Connect the CMP sensor wire harness to the CMP sensor.
9. Install the CMP sensor wire harness bolts (738).

Tighten

Tighten the bolts to 12 (106 lb in).

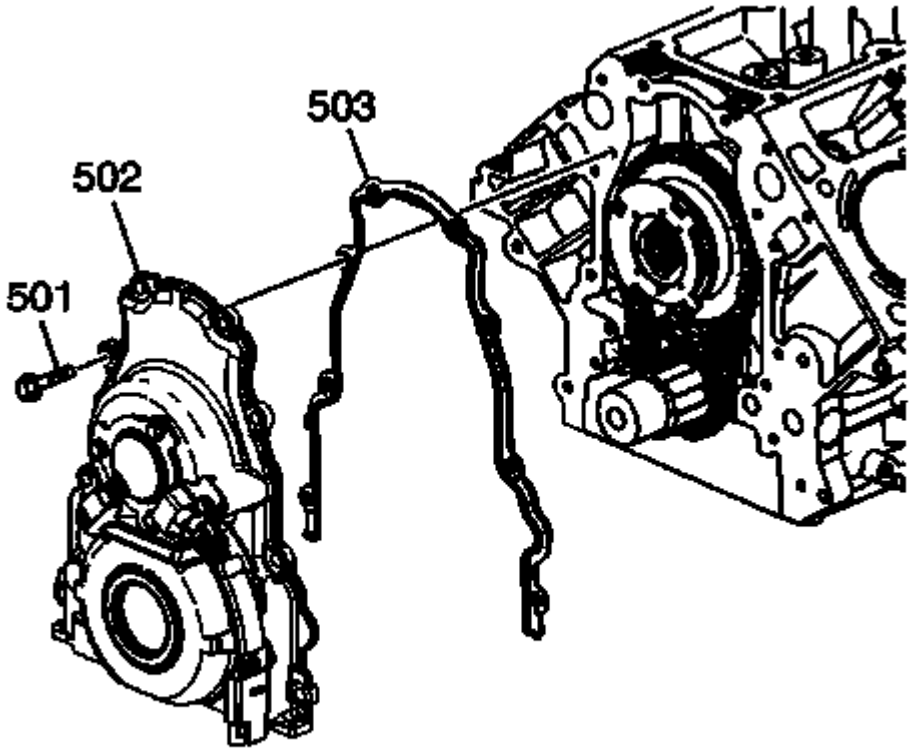

Fig. 271: View Of Front Cover, Bolts & Gasket
Courtesy of GENERAL MOTORS COMPANY

10. Apply a 5 mm (0.20 in) bead of sealant, 20 mm (0.80 in) long to the oil pan to engine block junction. Refer to **Adhesives, Fluids, Lubricants, and Sealers** .
11. Position the NEW engine front cover gasket (503) and front cover (502) to the engine.
12. Install the front cover bolts (501) until snug. Do not overtighten.

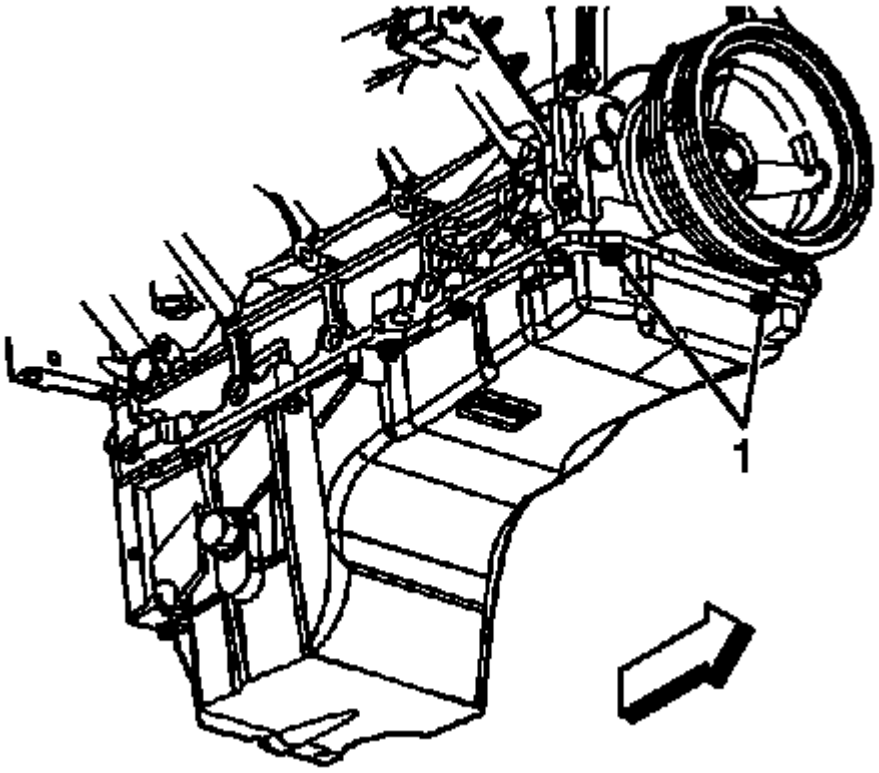

Fig. 272: View Of Oil Pan-To-Front Cover Bolts
Courtesy of GENERAL MOTORS COMPANY

13. Install the oil pan-to-front cover bolts (1) until snug. Do not over tighten.

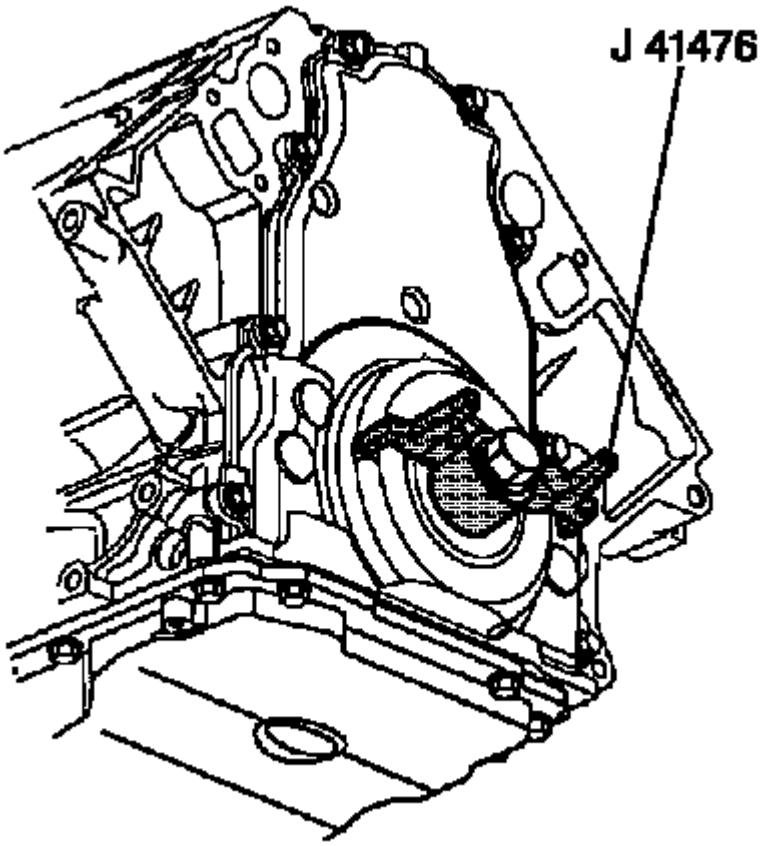

Fig. 273: View of J 41476 Installed To Front Cover
Courtesy of GENERAL MOTORS COMPANY

14. Install **J 41476** front and rear cover alignment tool to the front cover.
15. Align the tapered legs of the **J 41476** front and rear cover alignment tool with the machined alignment surfaces on the front cover.
16. Install the crankshaft balancer bolt until snug. Do not overtighten.

Tighten

1. Tighten the oil pan to front cover bolts to 25 (18 lb ft).
2. Tighten the engine front cover bolts to 25 (18 lb ft).

17. Remove the **J 41476** front and rear cover alignment tool.

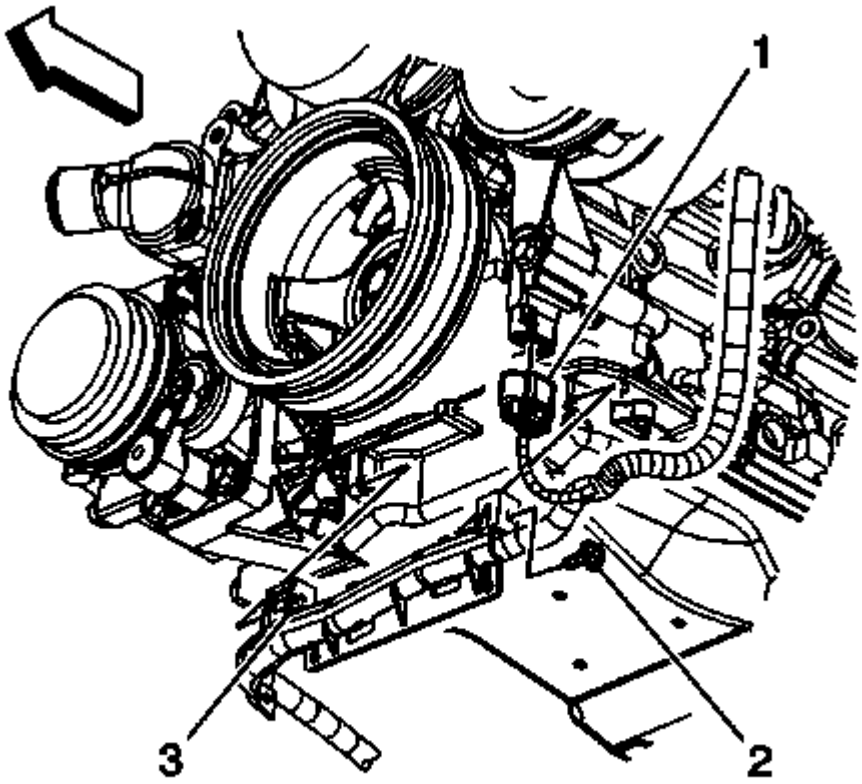

Fig. 274: View Of Electrical Connector, Cable Channel Bolt & Pin
Courtesy of GENERAL MOTORS COMPANY

18. Connect the engine harness electrical connector (1) to the CMP sensor wire harness electrical connector.
19. Install a NEW crankshaft front oil seal. Refer to **Crankshaft Front Oil Seal Replacement (With LY6)**.
20. Install the water pump. Refer to **Water Pump Replacement** .

CAMSHAFT POSITION ACTUATOR SOLENOID VALVE REPLACEMENT

Special Tools

- **J 42386-A** Flywheel Holding Tool
- **J 45059** Angle Meter

For equivalent regional tools, refer to **Special Tools** .

Removal Procedure

1. Remove the starter. Refer to **Starter Replacement** .

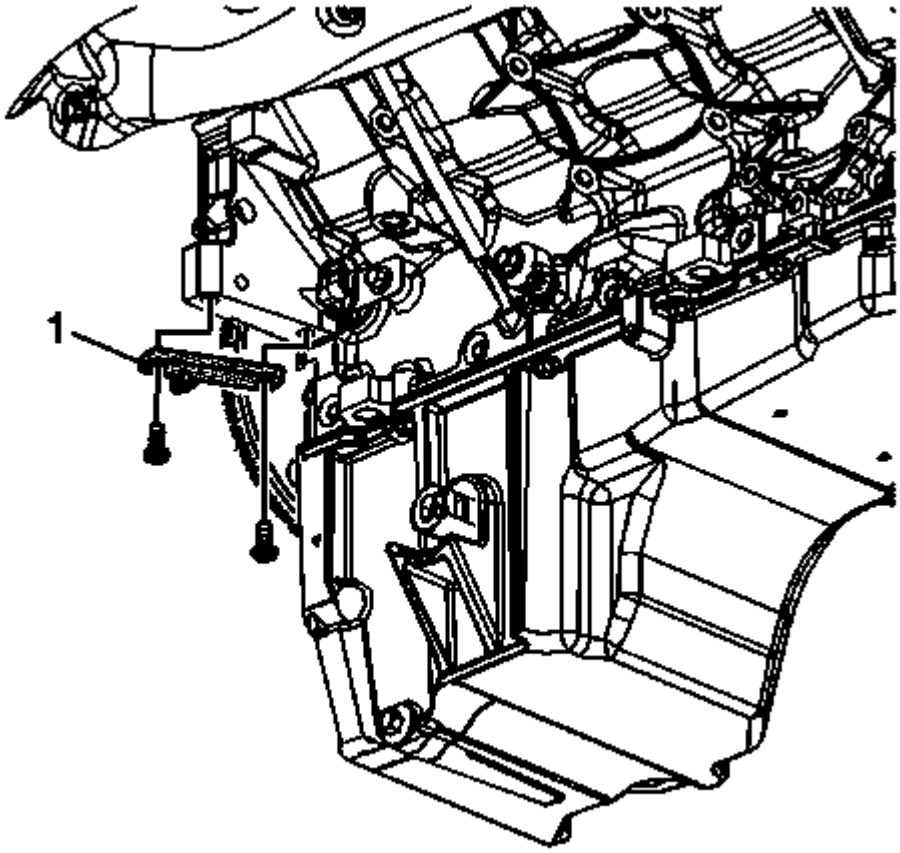

Fig. 275: View Of Special Tool & Bolts
Courtesy of GENERAL MOTORS COMPANY

CAUTION: Refer to Fastener Caution .

2. Install the **J 42386-A** holding tool (1) and bolts. Use 1 M10 - 1.5 x 120 mm and 1 M10 - 1.5 x 45 mm bolt for proper tool operation. Tighten the **J 42386-A** holding tool bolts to 50 N.m (37 lb ft).
3. Remove the camshaft position (CMP) actuator magnet. Refer to **Camshaft Position Actuator Magnet Replacement**.

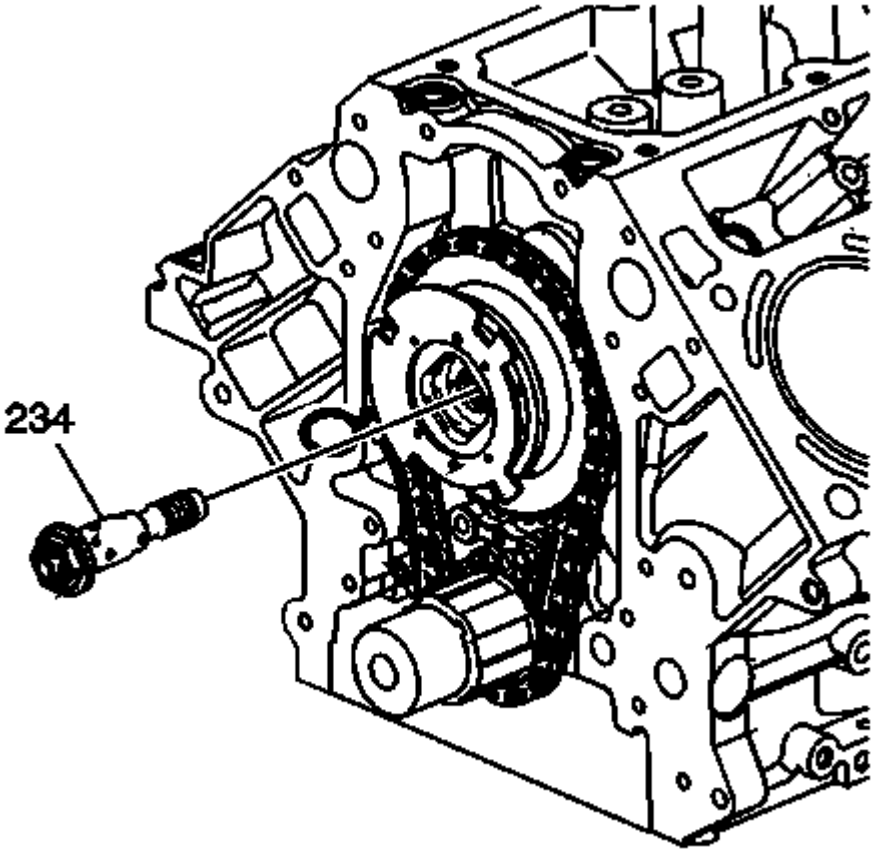

Fig. 276: View Of CMP Actuator Solenoid Valve
Courtesy of GENERAL MOTORS COMPANY

WARNING: **Refer to Camshaft Position Actuator Removal and Installation Warning .**

4. Remove the CMP actuator solenoid valve (234).
5. Discard the solenoid valve.

Installation Procedure

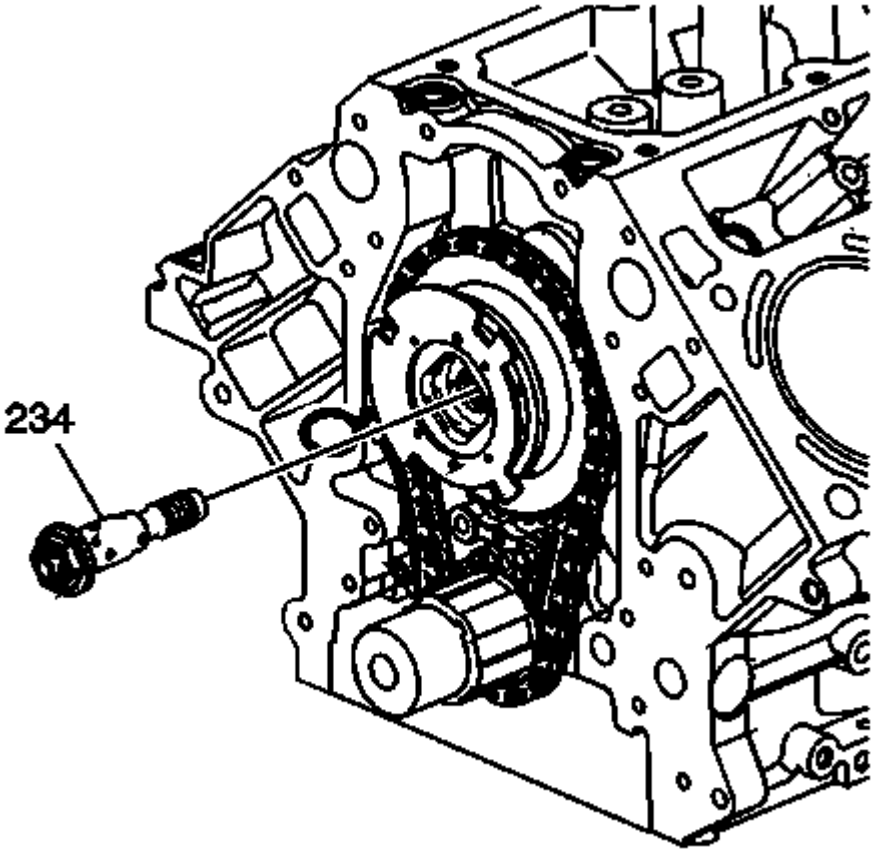

Fig. 277: View Of CMP Actuator Solenoid Valve
Courtesy of GENERAL MOTORS COMPANY

1. Install a NEW CMP actuator solenoid valve (234).

   With the CMP actuator properly positioned onto the camshaft, the CMP actuator solenoid valve can be threaded completely into the camshaft using light hand pressure. Tighten by hand until snug.

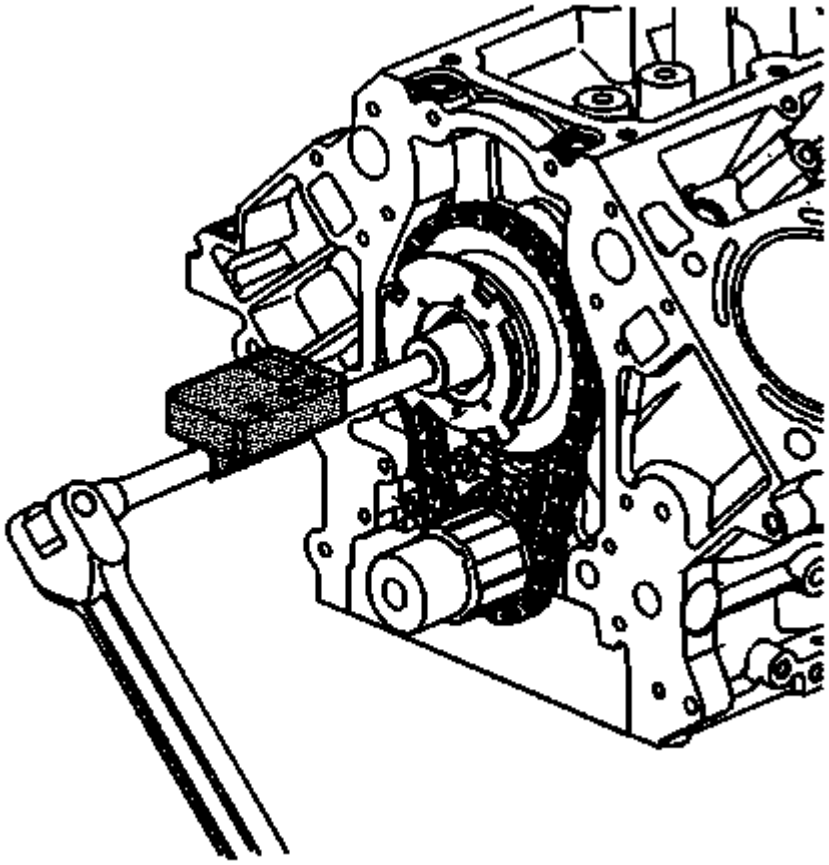

Fig. 278: Tightening CMP Actuator Solenoid Valve
Courtesy of GENERAL MOTORS COMPANY

2. Tighten the CMP actuator solenoid valve.
    1. Tighten the CMP actuator solenoid valve a first pass to 65 N.m (48 lb ft).
    2. Tighten the CMP actuator solenoid valve a final pass an additional 90 degrees using the **J 45059** meter.

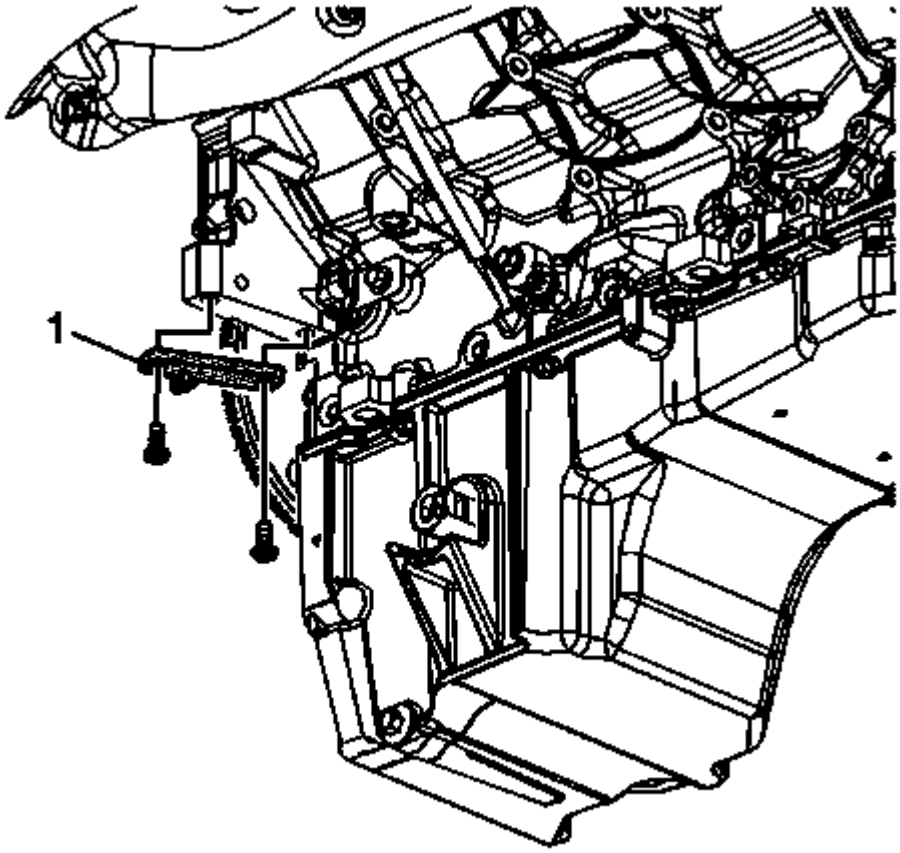

Fig. 279: View Of Special Tool & Bolts
Courtesy of GENERAL MOTORS COMPANY

3. Remove the **J 42386-A** holding tool (1).
4. Install the CMP actuator magnet. Refer to **Camshaft Position Actuator Magnet Replacement**.
5. Install the starter. Refer to **Starter Replacement** .

CAMSHAFT POSITION ACTUATOR REPLACEMENT

Special Tools

- **EN 46330** Timing Belt Tensioner Retaining Pin
- **J 45059** Angle Meter

Removal Procedure

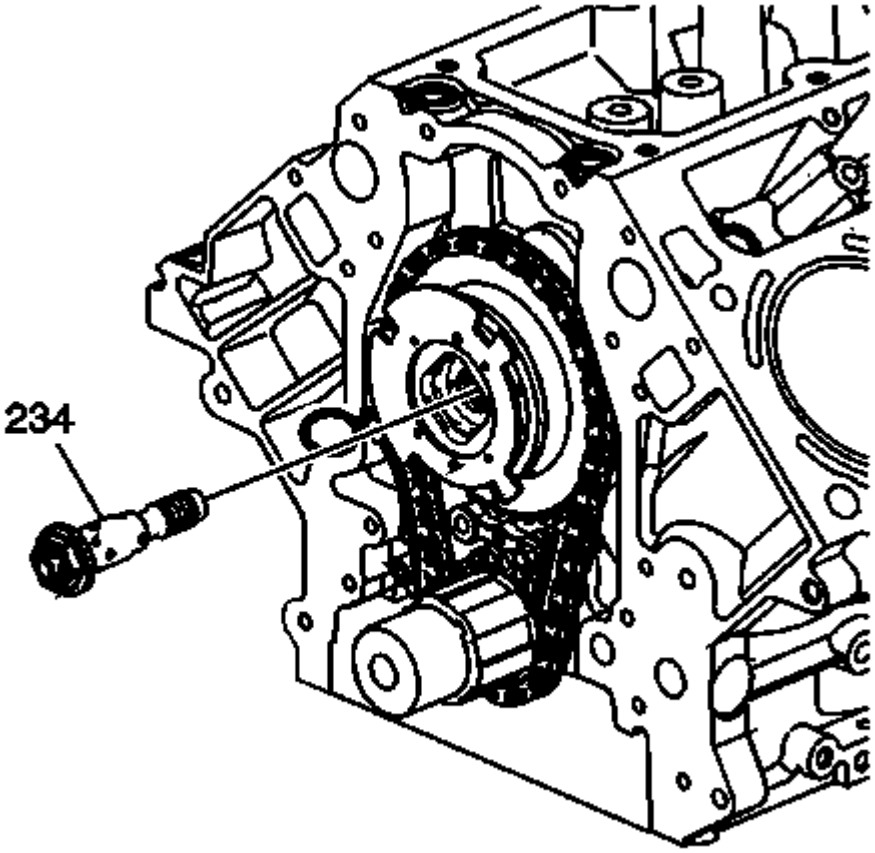

Fig. 280: View Of CMP Actuator Solenoid Valve
Courtesy of GENERAL MOTORS COMPANY

1. Remove the oil pump. Refer to **Oil Pump, Screen, and Crankshaft Oil Deflector Replacement**.
2. Remove and discard the camshaft position (CMP) actuator solenoid valve (234).

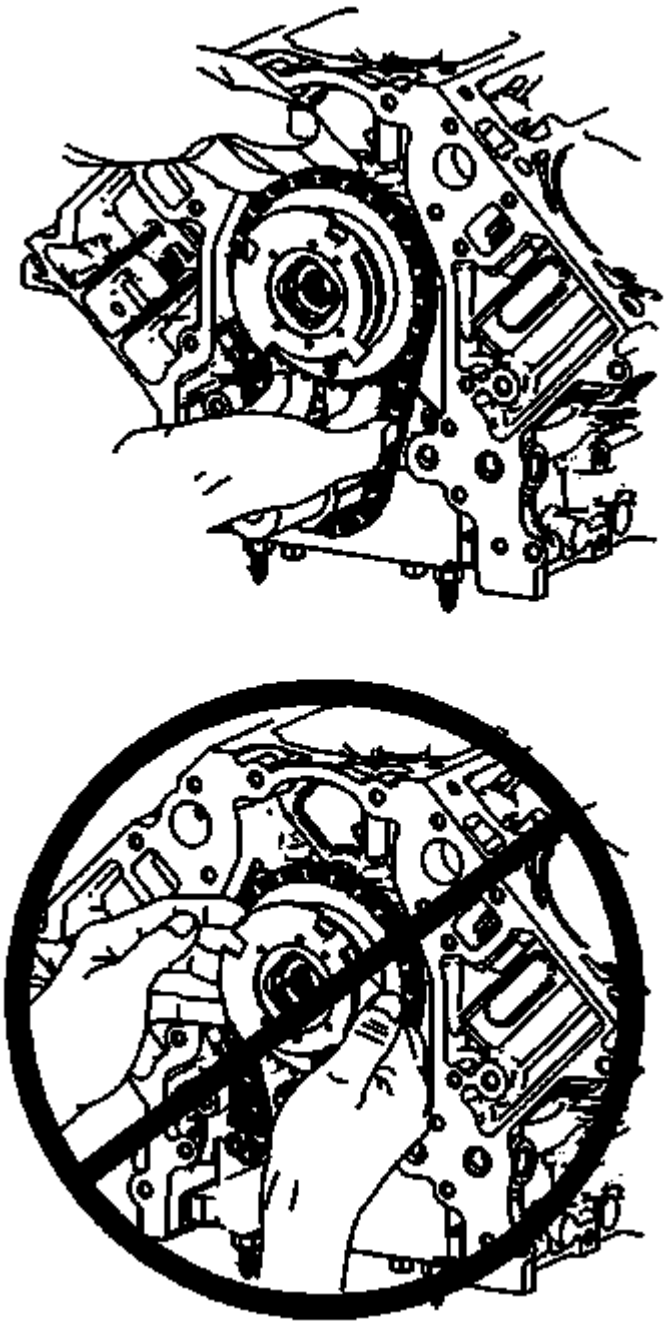

Fig. 281: View Of Proper CMP Actuator Removal
Courtesy of GENERAL MOTORS COMPANY

WARNING: Do not push or pull on the reluctor wheel of the camshaft position (CMP) actuator during removal or installation. The reluctor wheel is retained to the front of the CMP actuator by 3 roll pins. Pushing or pulling on the wheel may dislodge the wheel from the front of the actuator. The actuator return spring is under tension and may rotate the dislodged reluctor wheel, causing personal injury.

3. Loosen and separate the CMP actuator and timing chain from the camshaft. Position your fingers behind the actuator sprocket and pull the actuator away from the front of the camshaft. Never pull on the reluctor wheel when attempting to remove the actuator.

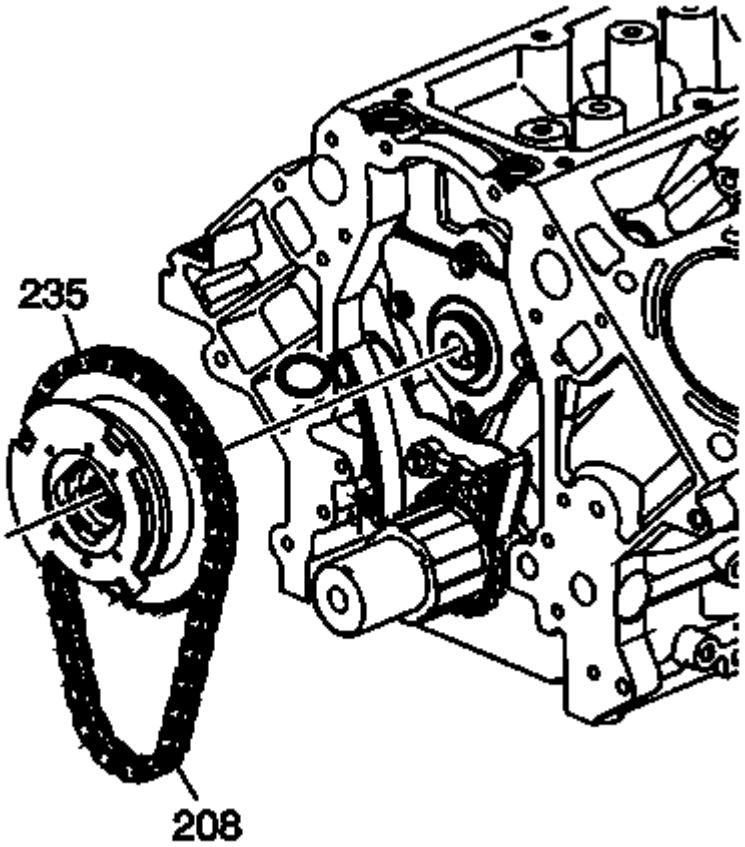

Fig. 282: View Of CMP Actuator & Timing Chain
Courtesy of GENERAL MOTORS COMPANY

4. Remove the CMP actuator (235) and timing chain (208).

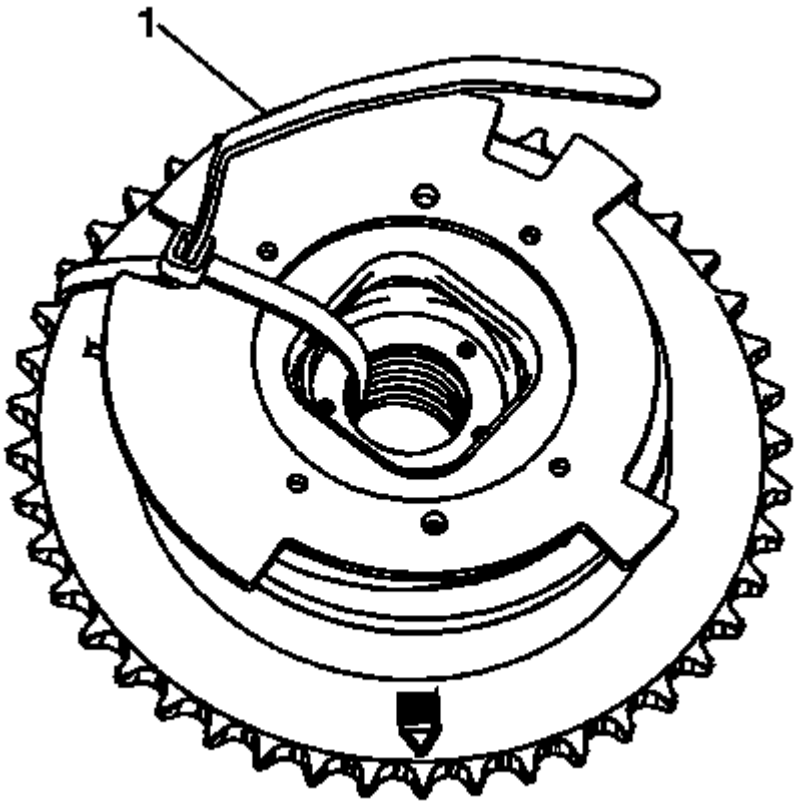

Fig. 283: View Of Tie Strap Through Center Of Actuator
Courtesy of GENERAL MOTORS COMPANY

5. Insert and secure a tie strap (1) through the center of the actuator and over the reluctor wheel.

Installation Procedure

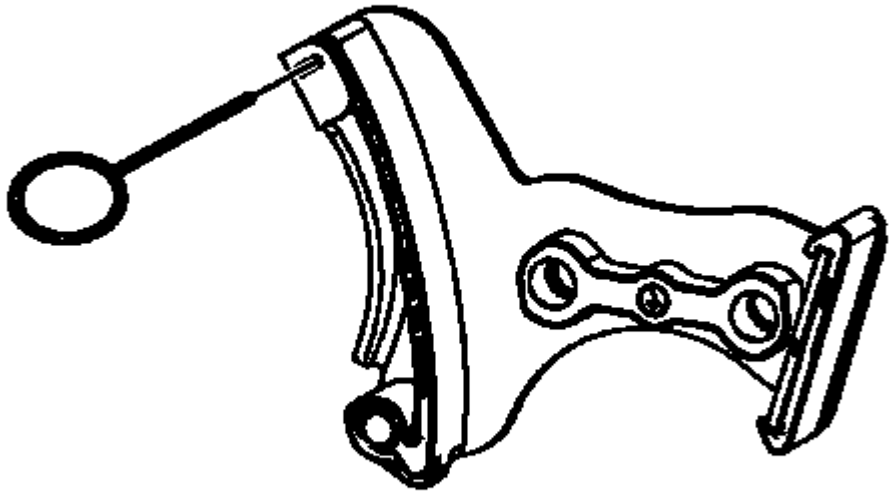

Fig. 284: View Of Compressed Tensioner
Courtesy of GENERAL MOTORS COMPANY

1. Compress the timing chain tensioner guide and install the **EN 46330** Timing Belt Tensioner Retaining Pin.

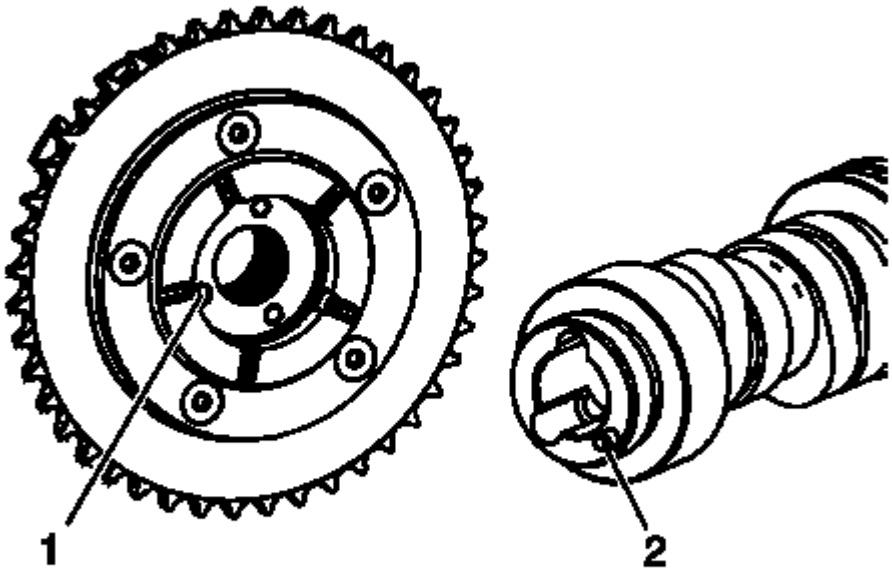

Fig. 285: Identifying Alignment Hole & Locating Pin
Courtesy of GENERAL MOTORS COMPANY

NOTE:

- **Properly locate the CMP actuator on the locating pin of the camshaft.**
- **The sprocket teeth and timing chain must mesh.**
- **The camshaft and the crankshaft sprocket alignment marks MUST be aligned properly.**
- **DO NOT use the CMP solenoid valve again. Install a NEW valve during assembly.**

2. Identify the alignment hole (1) in the rear face of the CMP actuator and the locating pin (2) on the front face of the camshaft.

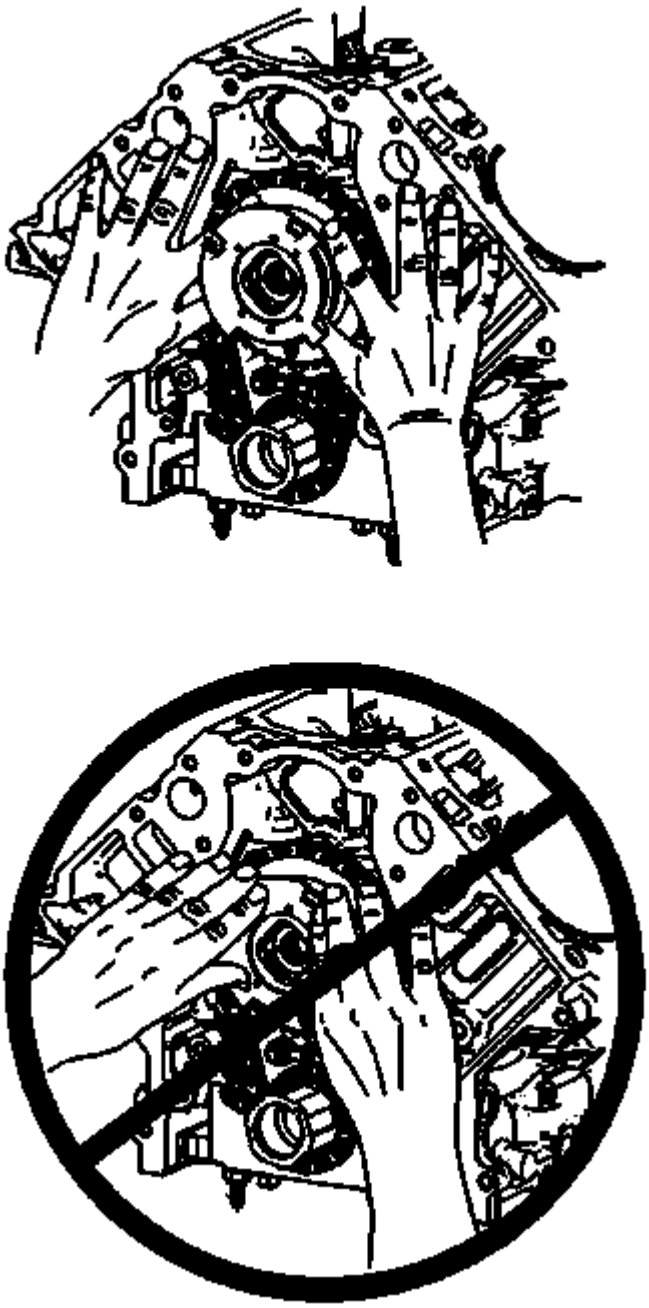

Fig. 286: Proper Installation Of CMP Actuator
Courtesy of GENERAL MOTORS COMPANY

WARNING: **Do not push or pull on the reluctor wheel of the camshaft position (CMP) actuator during removal or installation. The reluctor wheel is retained to the front of the CMP actuator by 3 roll pins. Pushing or pulling on the wheel may dislodge the wheel from the front of the actuator. The actuator return spring is under tension and may rotate the dislodged reluctor wheel, causing personal injury.**

3. Install the CMP actuator and timing chain. Align the hole in the rear face of the CMP actuator with the locating pin on the front face of the camshaft. If necessary, rotate the camshaft or crankshaft sprockets in order to align the timing marks. Use care to install the actuator completely onto the front of the camshaft. Position your fingers onto the face of the actuator sprocket and push the actuator onto the front of the camshaft. Never push on the reluctor wheel when attempting to install the actuator.

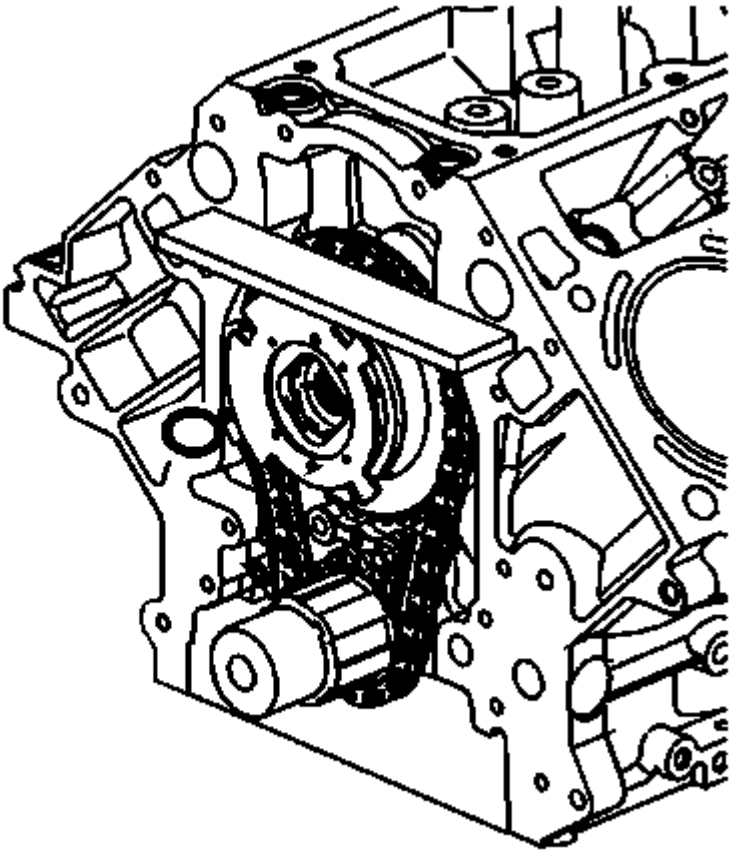

Fig. 287: Inspecting For Proper Installation Of CMP Actuator & Timing Chain
Courtesy of GENERAL MOTORS COMPANY

4. Place a straight edge across the front face of the engine block and inspect for proper installation of the CMP actuator and timing chain. With the CMP actuator properly and completely installed onto the front of the camshaft, the timing chain will not protrude beyond the front face of the engine block.

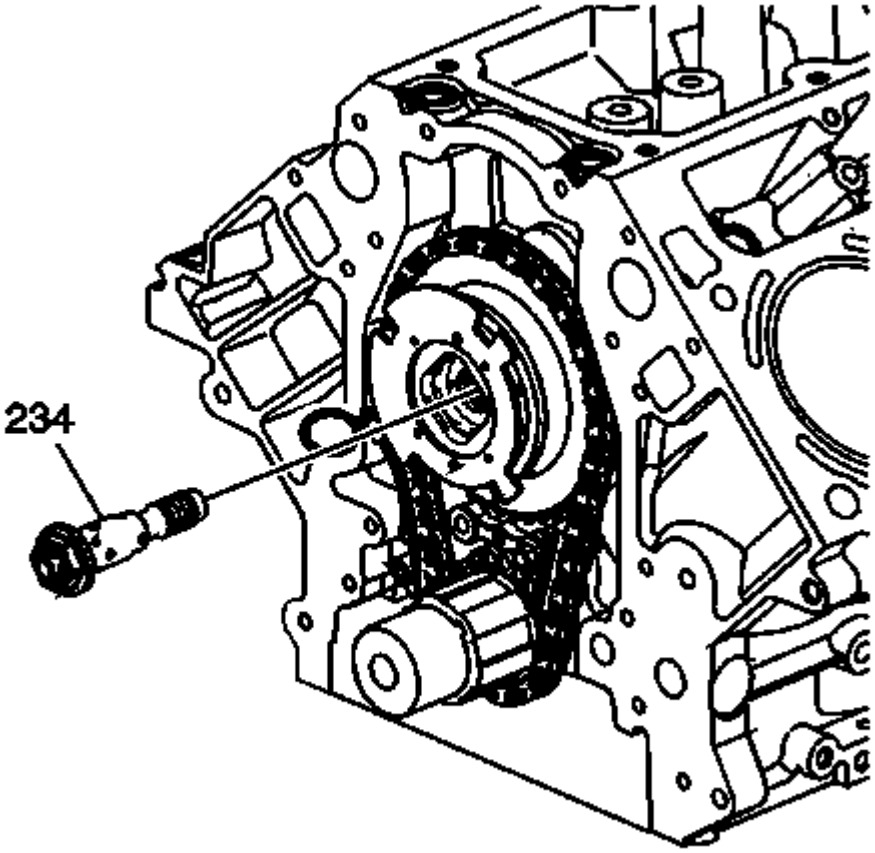

Fig. 288: View Of CMP Actuator Solenoid Valve
Courtesy of GENERAL MOTORS COMPANY

5. Install a NEW CMP actuator solenoid valve (234). With the CMP actuator properly positioned onto the camshaft, the CMP actuator solenoid valve can be threaded completely into the camshaft using light hand pressure. Tighten by hand until snug.

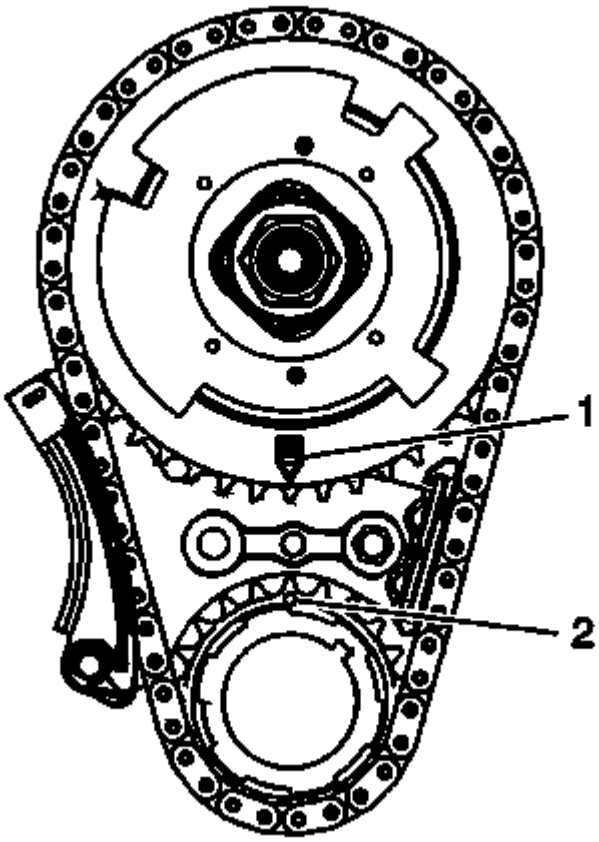

Fig. 289: View Of CMP Actuator Alignment Mark & Crankshaft Sprocket Alignment Mark
Courtesy of GENERAL MOTORS COMPANY

6. Inspect the sprockets for proper alignment. The mark on the CMP actuator sprocket (1) should be located in the 6 o'clock position and the mark on the crankshaft sprocket (2) should be located in the 12 o'clock position.

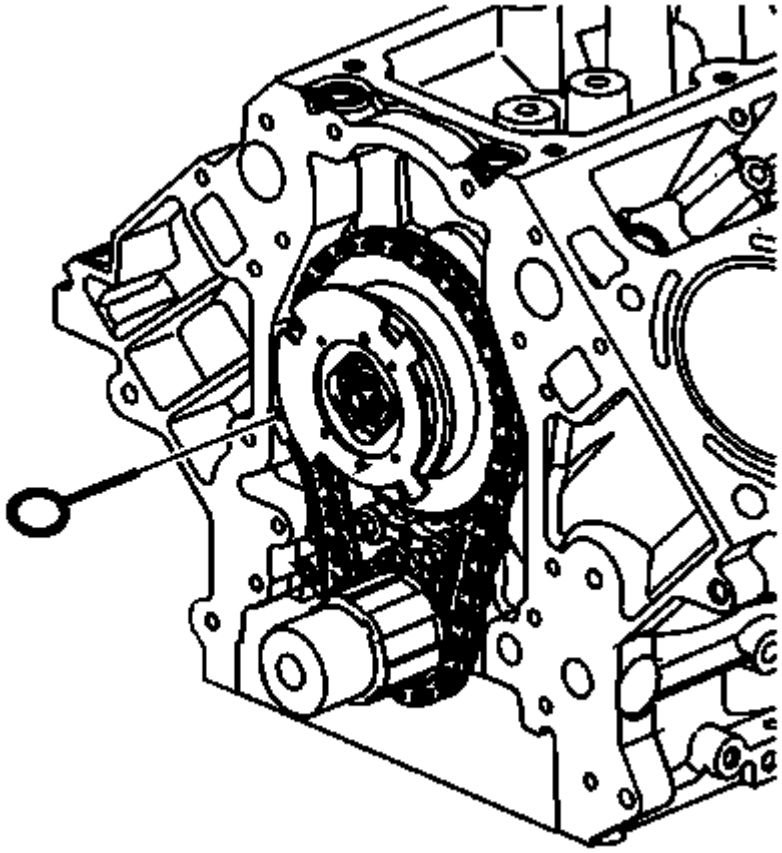

Fig. 290: View Of Special Tool EN 46330
Courtesy of GENERAL MOTORS COMPANY

7. Remove the **EN 46330** Timing Belt Tensioner Retaining Pin.

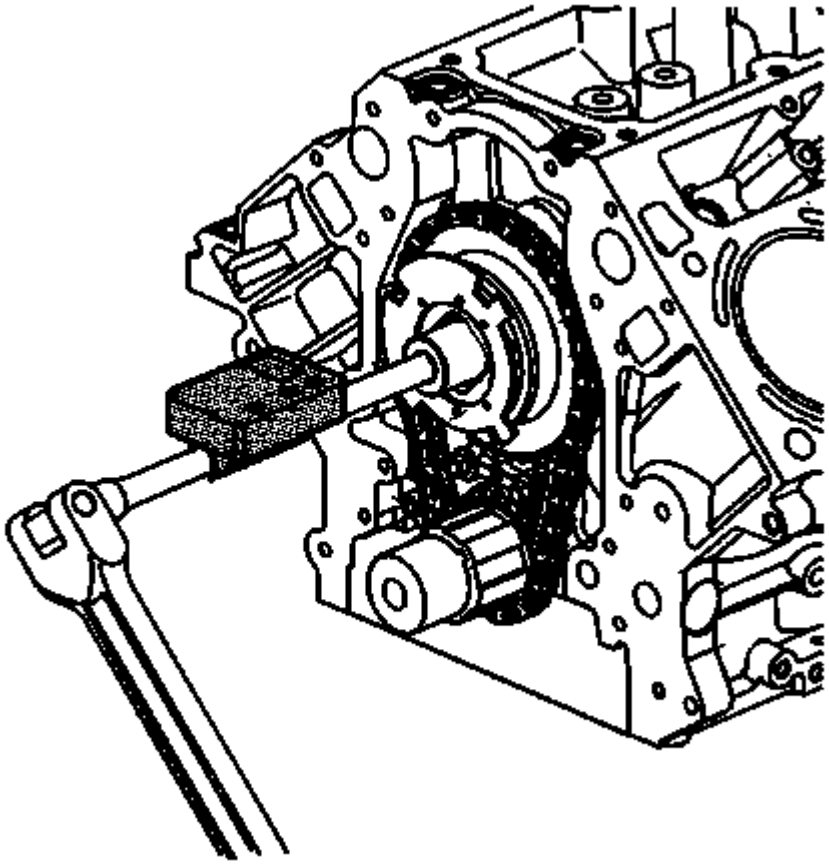

Fig. 291: Tightening CMP Actuator Solenoid Valve
Courtesy of GENERAL MOTORS COMPANY

CAUTION: Refer to Fastener Caution .

8. Tighten the CMP actuator solenoid valve.
    1. Tighten the valve a first pass to 65 N.m (48 lb ft).
    2. Tighten the valve a final pass and additional 90 degrees using **J 45059** Angle Meter.
9. Install the oil pump. Refer to **Oil Pump, Screen, and Crankshaft Oil Deflector Replacement**.

CRANKSHAFT REAR OIL SEAL REPLACEMENT

Special Tools

J 41479 Crankshaft Rear Oil Seal Installer

Removal Procedure

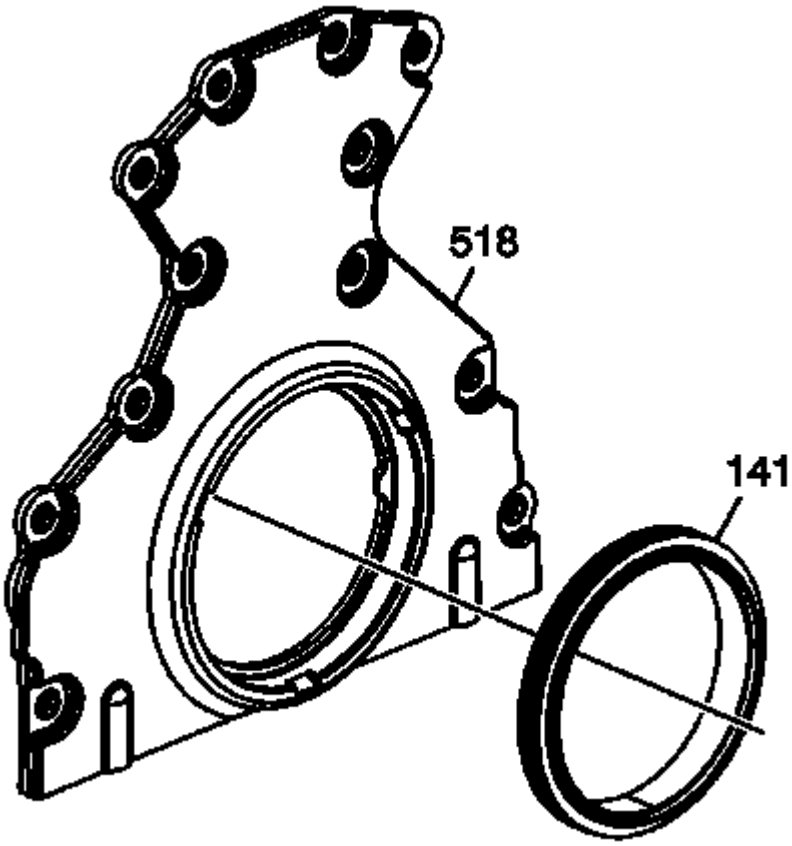

Fig. 292: Crankshaft Rear Oil Seal & Housing
Courtesy of GENERAL MOTORS COMPANY

1. If equipped with an automatic transmission, remove the automatic transmission flexplate. Refer to **Automatic Transmission Flex Plate Replacement**.
2. If equipped with a manual transmission, remove the flywheel. Refer to the appropriate article .
3. Remove and discard the crankshaft rear oil seal (141).

Installation Procedure

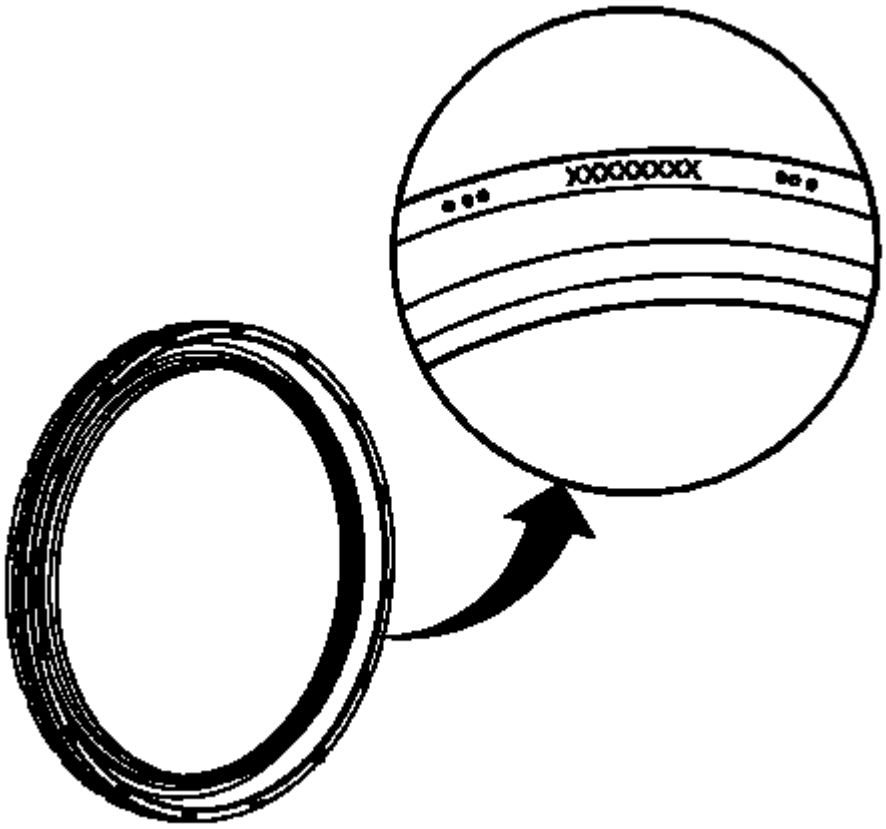

Fig. 293: Identifying Oil Seal
Courtesy of GENERAL MOTORS COMPANY

IMPORTANT: For proper orientation, note the installation direction of the oil seal. The oil seal is a reverse-lip design. The part number is applied to the outside face of the seal, as shown.

1. Inspect the seal and identify the part number markings for proper orientation.

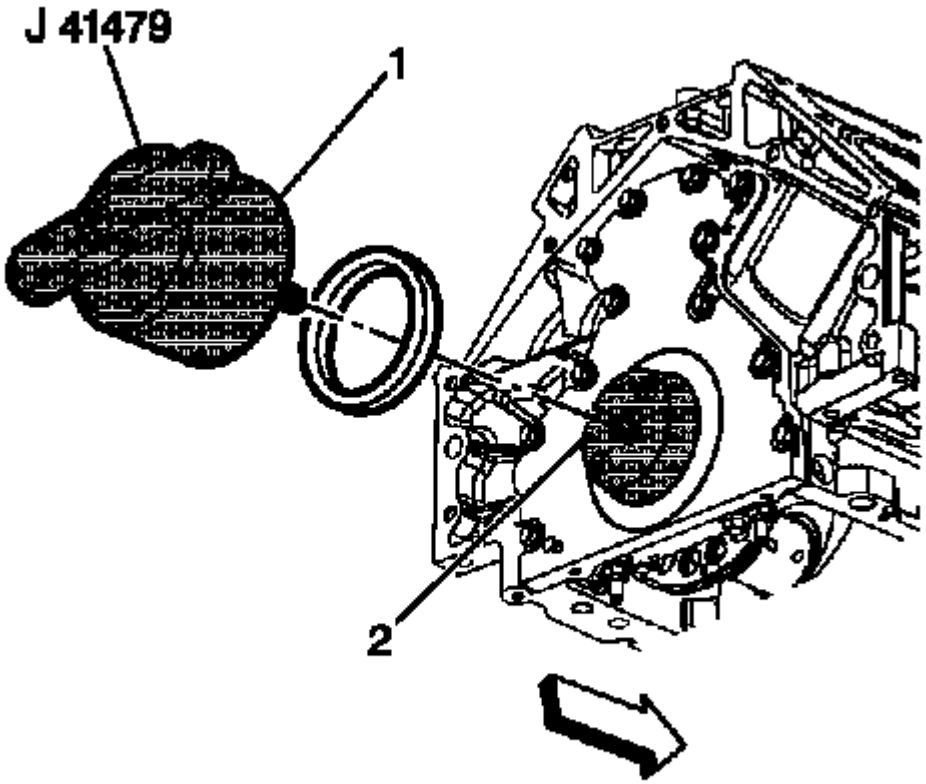

Fig. 294: Installing Crankshaft Rear Oil Seal Using J 41479
Courtesy of GENERAL MOTORS COMPANY

2. Install the **J 41479** crankshaft rear oil seal installer cone (2) and bolts onto the rear of the crankshaft.
3. Tighten the bolts until snug. Do not overtighten.
4. Install the rear oil seal onto the tapered cone (2) and push the seal to the rear seal bore. Install the oil seal with the part number markings facing away from the engine.
5. Thread the **J 41479** crankshaft rear oil seal installer threaded rod into the tapered cone until the tool (1) contacts the oil seal.
6. Align the oil seal into the tool (1).
7. Rotate the handle of the tool (1) clockwise until the seal enters the rear cover and bottoms into the cover bore.
8. Remove the **J 41479** crankshaft rear oil seal installer.
9. If equipped with a manual transmission, install the flywheel. Refer to appropriate articles .
10. If equipped with an automatic transmission, install the automatic transmission flexplate. Refer to **Automatic Transmission Flex Plate Replacement**.

CRANKSHAFT REAR OIL SEAL HOUSING REPLACEMENT

Special Tools

- **J-41476** Front and Rear Cover Alignment Tool
- **J-41479-2A** Crankshaft Rear Oil Seal Installation Guide

Removal Procedure

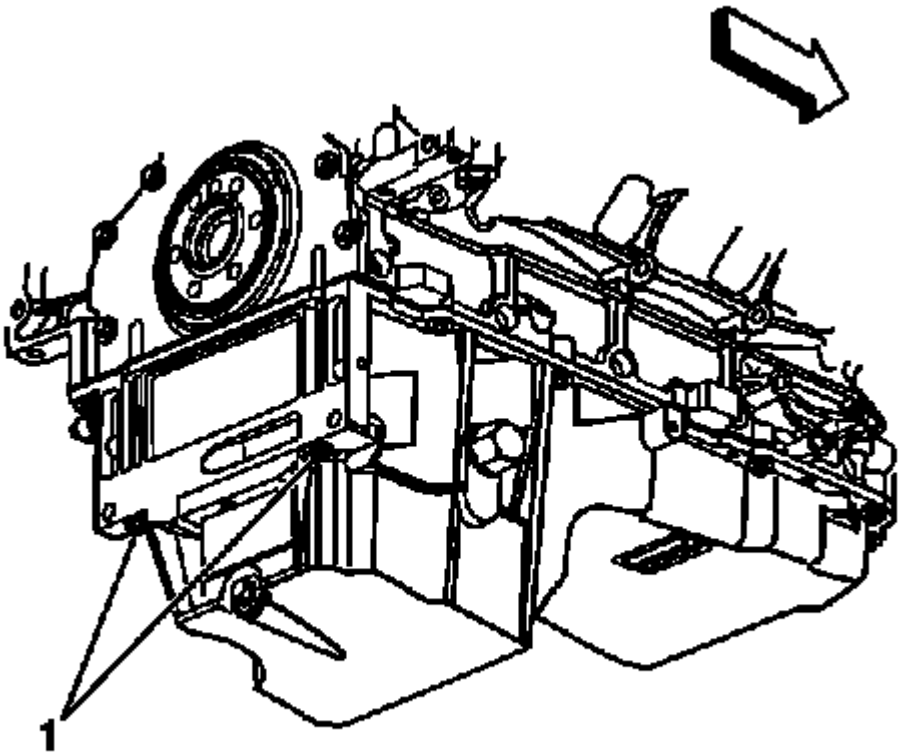

Fig. 295: View Of Oil Pan-To-Rear Cover Bolts
Courtesy of GENERAL MOTORS COMPANY

1. If equipped with an automatic transmission, remove the automatic transmission flexplate. Refer to **Automatic Transmission Flex Plate Replacement**.
2. If equipped with a manual transmission, remove the flywheel. Refer to appropriate article. .
3. Remove the oil pan-to-rear oil seal housing bolts (1).

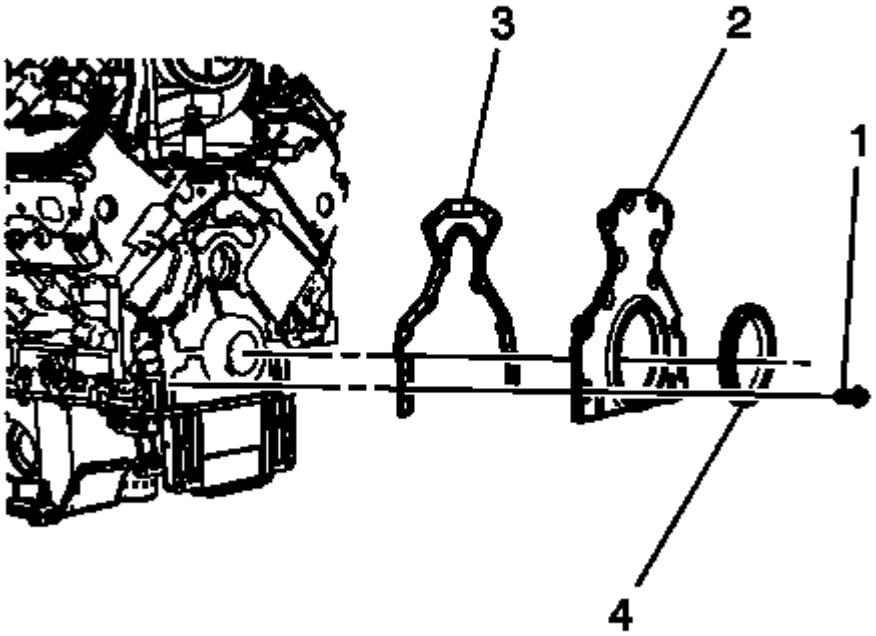

Fig. 296: Identifying Rear Oil Seal Housing Components
Courtesy of GENERAL MOTORS COMPANY

4. Remove the rear oil seal housing bolts (1).
5. Remove the rear oil seal housing (2) and gasket (3). Discard the gasket.
6. Remove and discard the rear oil seal (4).

Installation Procedure

NOTE:

- **Do not reuse the crankshaft oil seal or rear cover gasket.**
- **Do not apply any type of sealant to the rear cover gasket, unless specified.**
- **The special tool in this procedure is used to properly center the crankshaft rear oil seal.**
- **All gasket surfaces should be free of oil or other foreign material during assembly.**
- **The crankshaft rear oil seal MUST be centered in relation to the crankshaft.**
- **An improperly aligned rear cover may cause premature rear oil seal**

wear and/or engine assembly oil leaks.

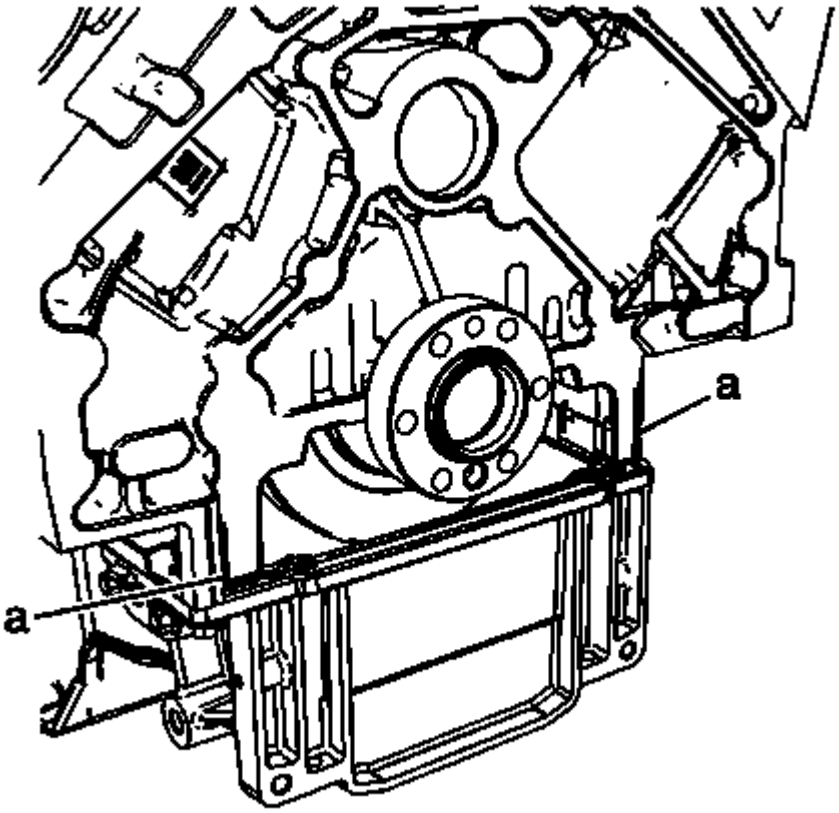

Fig. 297: Locating Joints At Rear Of Block/Pan
Courtesy of GENERAL MOTORS COMPANY

1. Apply a 5 mm (0.2 in) bead of sealant, 20 mm (0.8 in) to the 2 joints (a) at the rear of the block/pan. Refer to **Adhesives, Fluids, Lubricants, and Sealers** .

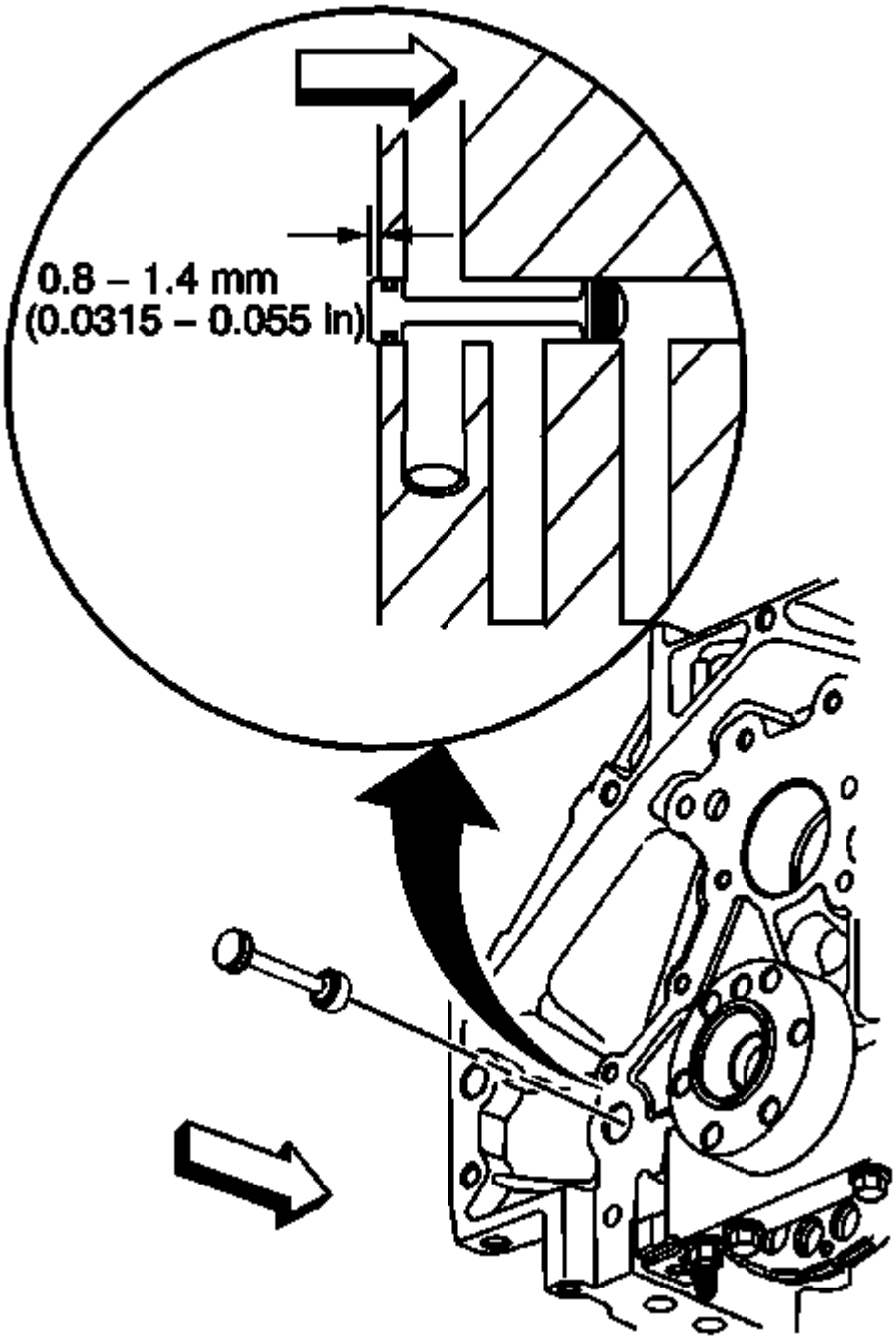

Fig. 298: View Of Engine Block Rear Oil Gallery Plug
Courtesy of GENERAL MOTORS COMPANY

2. Inspect the rear oil gallery plug for proper installation.

Installation Procedure - Cover with Seal

1. Install the **J-41479-2A** guide cone and bolts onto the rear of the crankshaft.

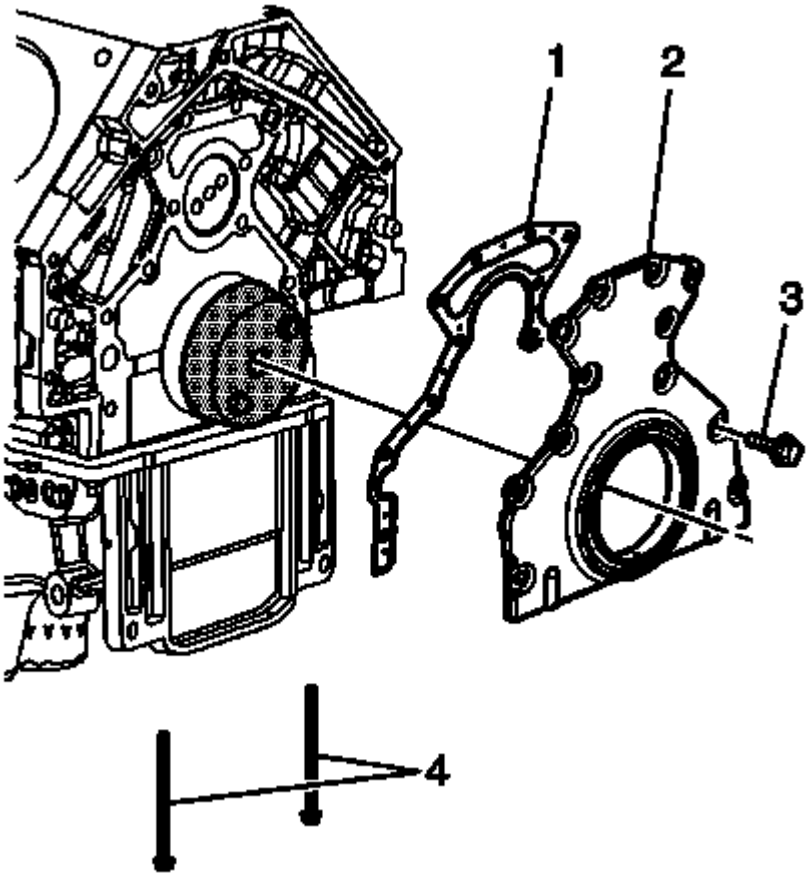

Fig. 299: Identifying Rear Housing Components
Courtesy of GENERAL MOTORS COMPANY

2. Install the NEW rear housing gasket (1), rear housing with seal (2), rear housing-to-engine bolts (3) and oil pan-to-rear housing bolts (4).

CAUTION: Refer to Fastener Caution .

3. Tighten the rear housing-to-engine bolts (3) until snug. Do not overtighten.
4. Tighten the oil pan-to-rear housing bolts (4) to 12 N.m (106 lb in).
5. Tighten the rear housing-to-engine bolts (3) to 30 N.m (22 lb ft).
6. Remove the **J-41479-2A** guide.
7. If equipped with a manual transmission, install the flywheel. Refer to the appropriate article. .
8. If equipped with an automatic transmission, install the automatic transmission flexplate. Refer to **Automatic Transmission Flex Plate Replacement**.

Installation Procedure - Cover without Seal

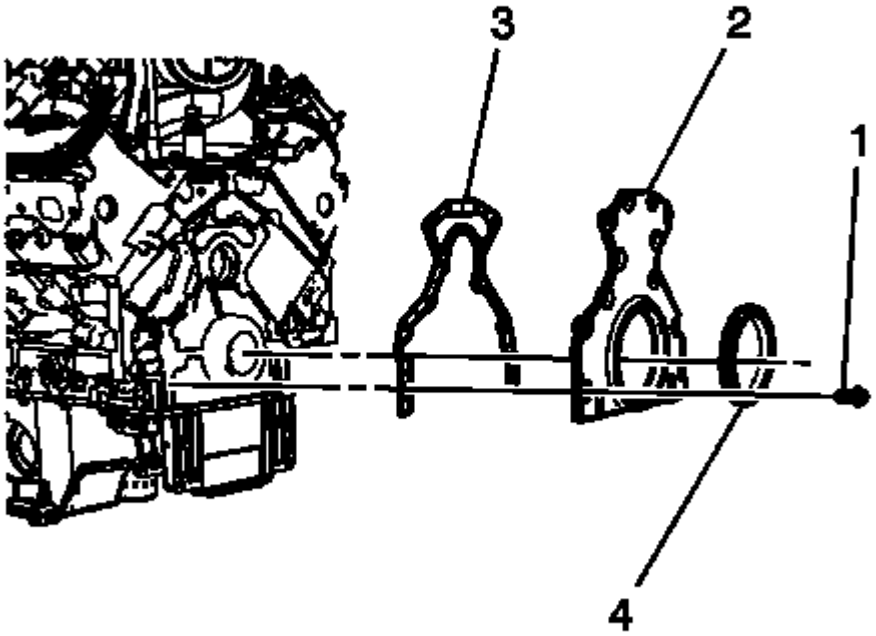

Fig. 300: Identifying Rear Oil Seal Housing Components
Courtesy of GENERAL MOTORS COMPANY

1. Position a NEW rear oil seal housing gasket (3) and the housing (2) to the engine.
2. Install the rear oil seal housing bolts (1) until snug. Do not overtighten.
3. Rotate the crankshaft until 2 opposing flywheel bolts holes are parallel to the oil pan surface.

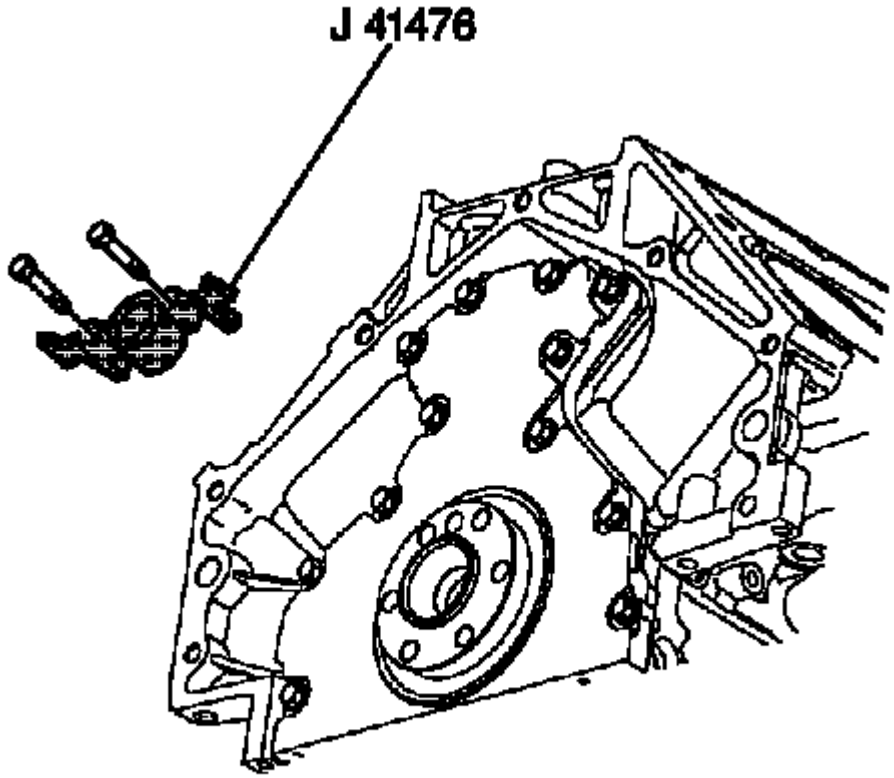

Fig. 301: View Of J 41476
Courtesy of GENERAL MOTORS COMPANY

NOTE: **The tapered legs of the alignment tool must enter the rear cover oil seal bore.**

4. Install the **J-41476** tool and bolts onto the rear of the crankshaft.
5. Tighten the **J-41476** tool bolts until snug. Do not overtighten.

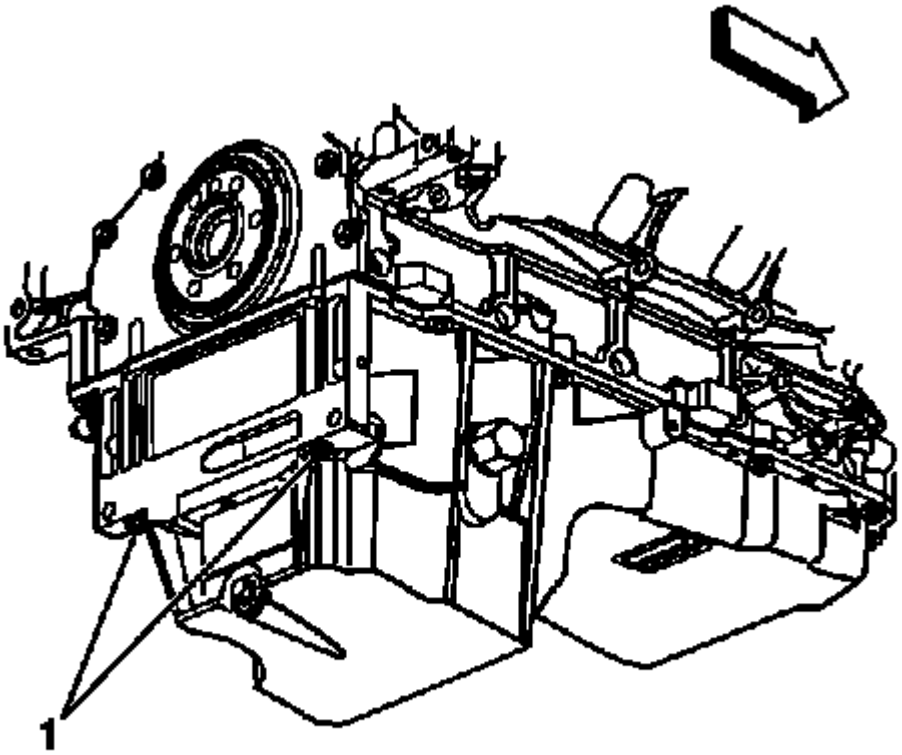

Fig. 302: View Of Oil Pan-To-Rear Cover Bolts
Courtesy of GENERAL MOTORS COMPANY

6. Install the oil pan-to-rear oil seal housing bolts (1).
    1. Tighten the oil pan-to-rear cover bolts to 12 N.m (106 lb in).
    2. Tighten the rear oil seal housing-to-engine bolts to 30 N.m (22 lb ft).
7. Remove the **J-41476** tool.
8. Install a NEW crankshaft rear oil seal. Refer to **Crankshaft Rear Oil Seal Replacement**.
9. If equipped with a manual transmission, install the flywheel. Refer to the appropriate article. .
10. If equipped with an automatic transmission, install the automatic transmission flexplate. Refer to **Automatic Transmission Flex Plate Replacement**.

OIL FILTER ADAPTER REPLACEMENT

Removal Procedure

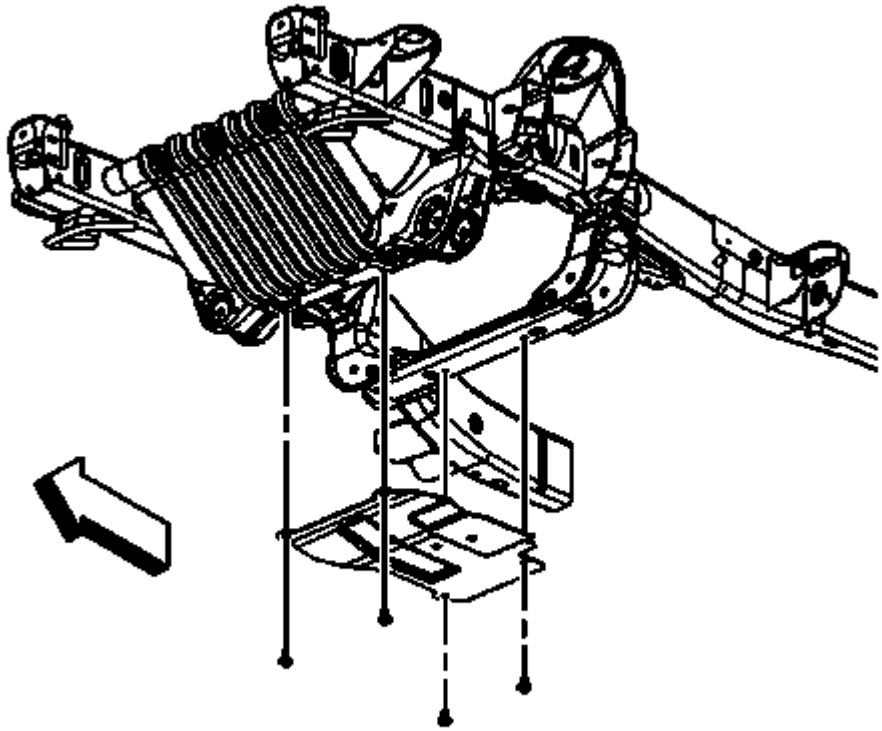

Fig. 303: View Of Oil Pan Skid Plate & Bolts
Courtesy of GENERAL MOTORS COMPANY

1. Raise and support the vehicle. Refer to **Lifting and Jacking the Vehicle** .
2. For 1500 series vehicles, remove the oil pan skid plate bolts and skid plate, if equipped.

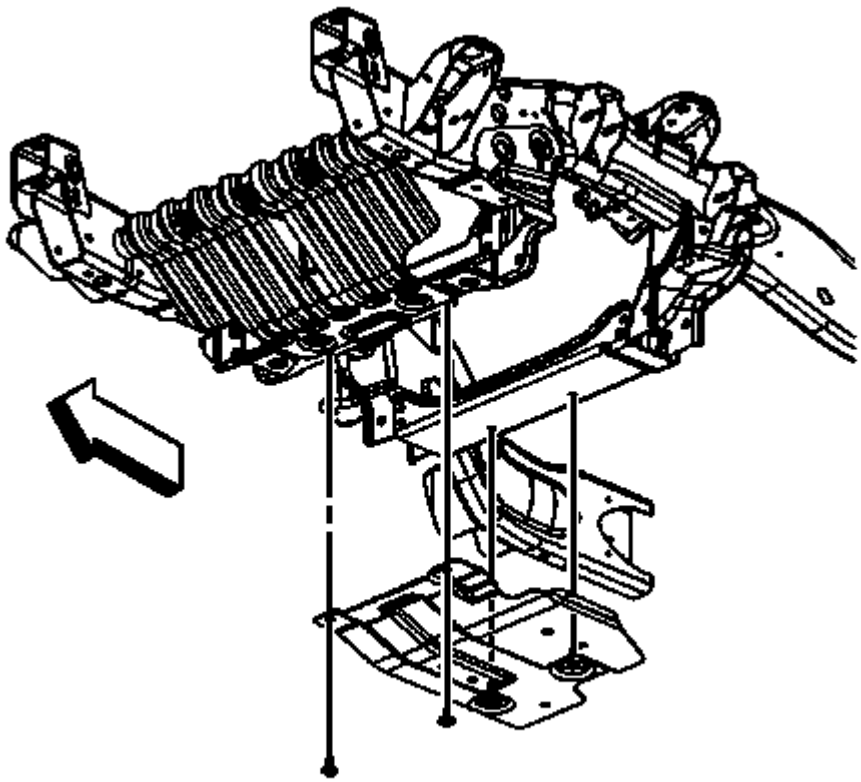

Fig. 304: View Of Oil Pan Skid Plate & Bolts
Courtesy of GENERAL MOTORS COMPANY

3. For 2500 series vehicles, loosen the 2 rear oil pan skid plate bolts, remove the 2 front oil pan skid plate bolts and skid plate, if equipped.

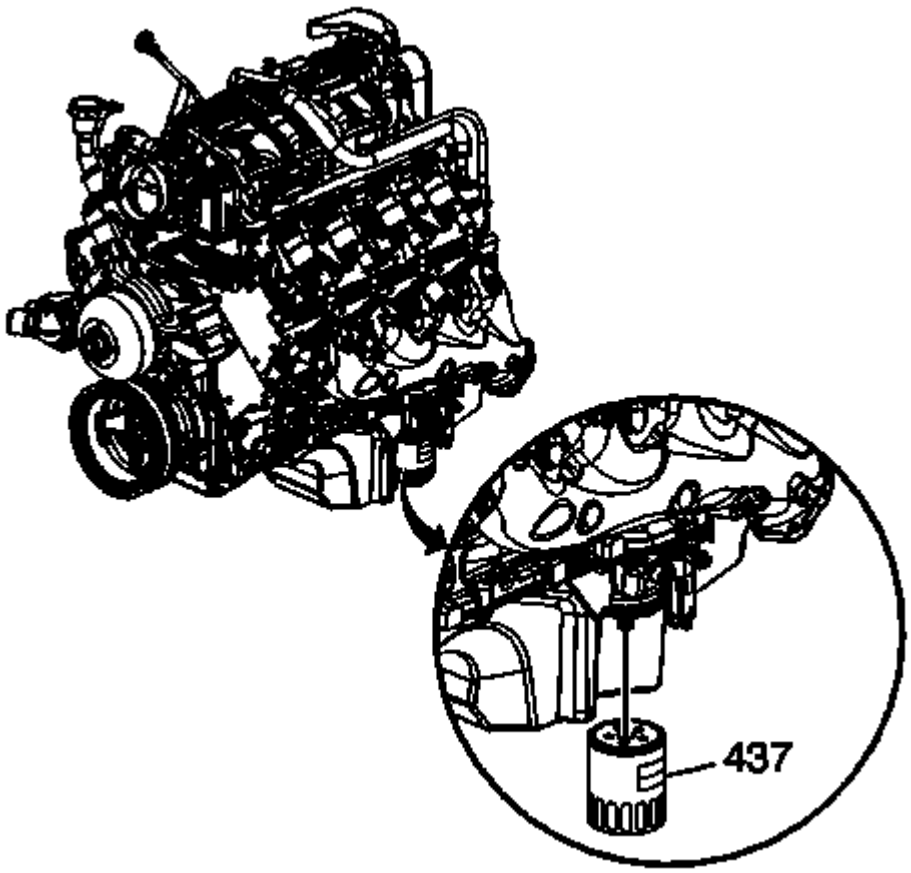

Fig. 305: View Of Engine Oil Filter
Courtesy of GENERAL MOTORS COMPANY

4. Place a suitable drain pan under the oil filter.
5. Remove the oil filter (437).

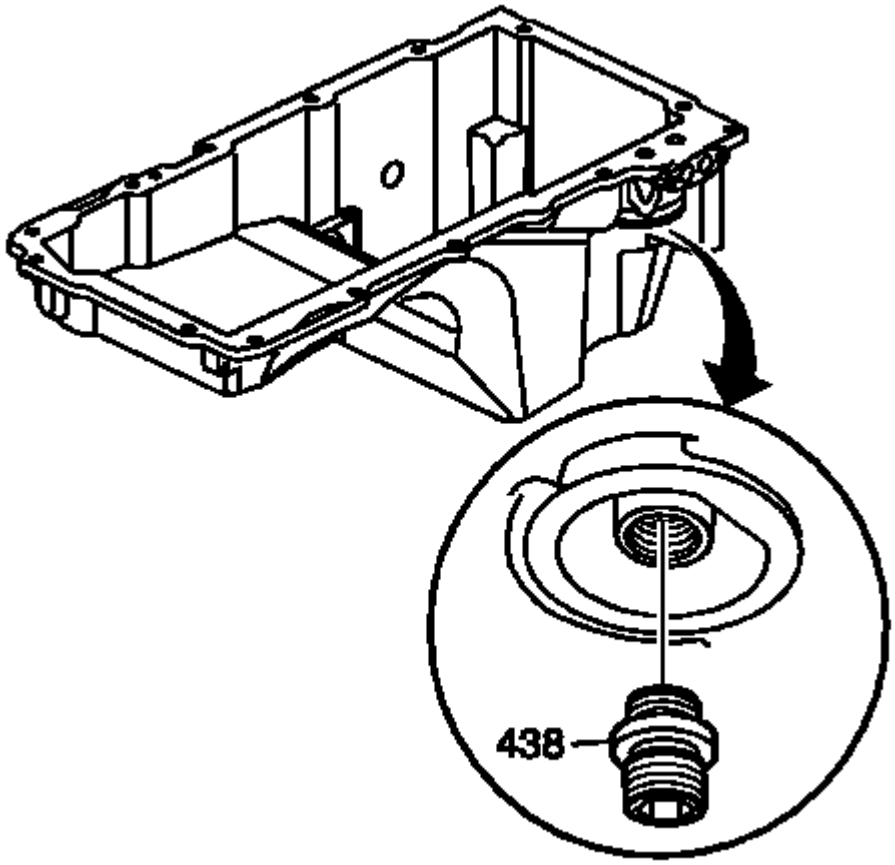

Fig. 306: View Of Oil Filter Fitting
Courtesy of GENERAL MOTORS COMPANY

6. Remove the oil filter adapter (438).

Installation Procedure

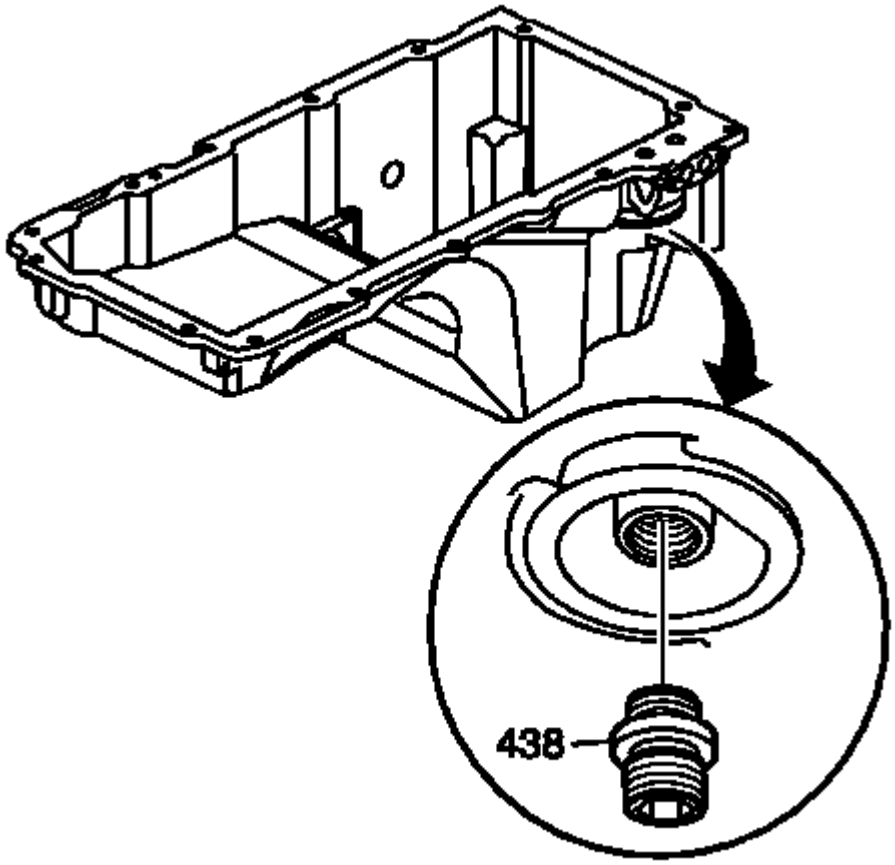

Fig. 307: View Of Oil Filter Fitting
Courtesy of GENERAL MOTORS COMPANY

CAUTION: Refer to Fastener Caution .

1. Install the oil filter adapter (438).

   Tighten

   Tighten the adapter to 55 N.m (40 lb ft).

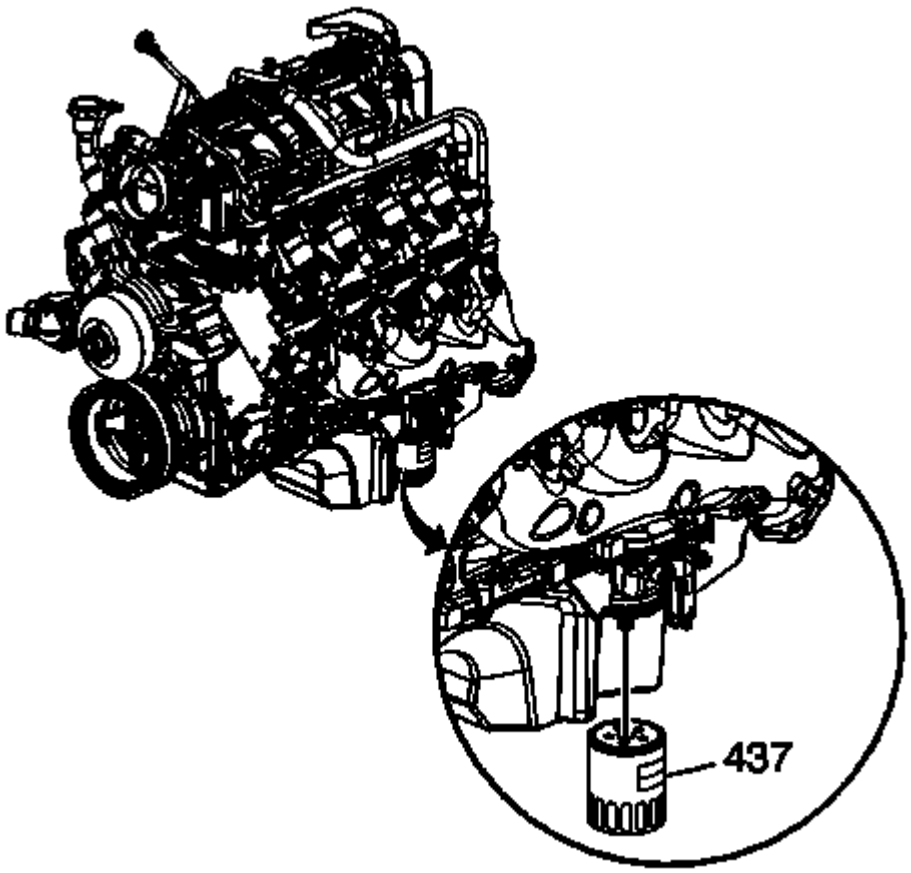

Fig. 308: View Of Engine Oil Filter
Courtesy of GENERAL MOTORS COMPANY

2. Lubricate the oil filter seal with clean engine oil.
3. Install the oil filter (437).

Tighten

Tighten the filter to 30 N.m (22 lb ft).

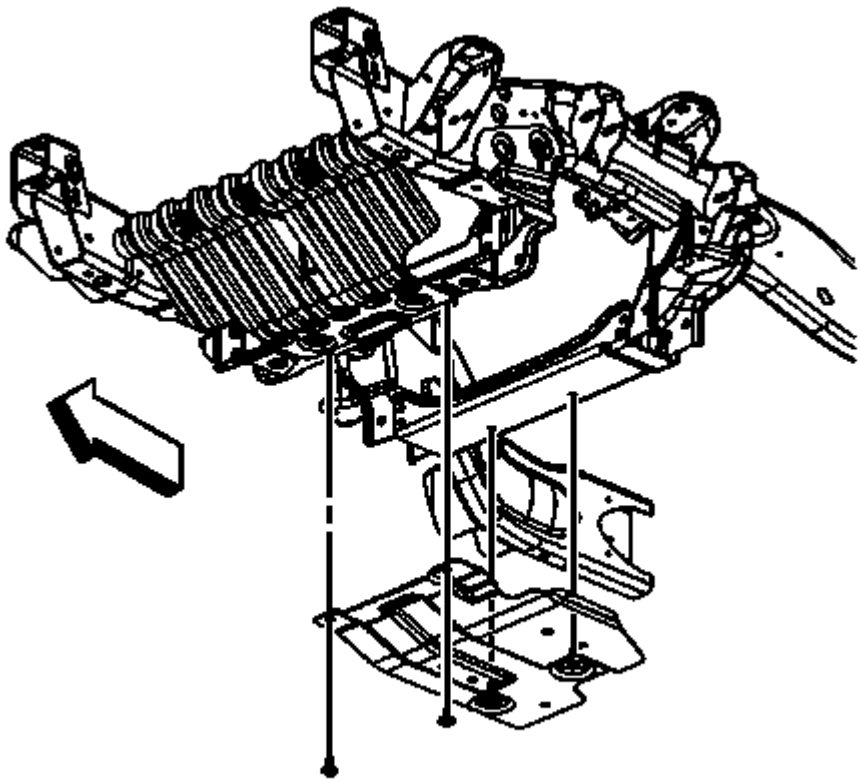

Fig. 309: View Of Oil Pan Skid Plate & Bolts
Courtesy of GENERAL MOTORS COMPANY

4. For 2500 series vehicles, position the oil pan skid plate and tighten until snug the 2 rear oil pan skid plate bolts, install the 2 front oil pan skid plate bolts, if equipped.

   Tighten

   Tighten the bolts to 28 N.m (21 lb ft).

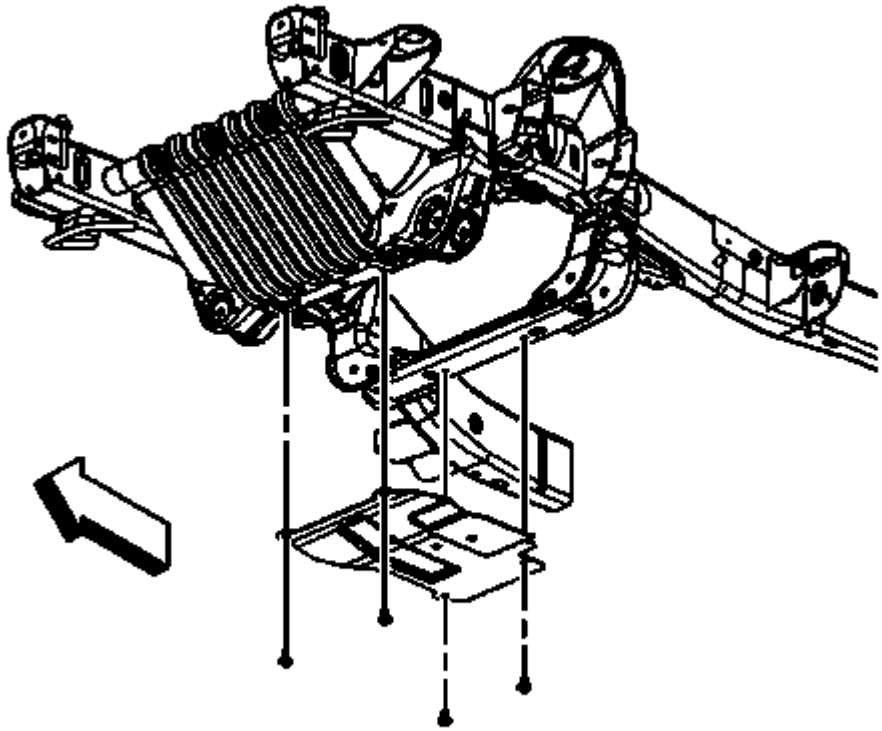

Fig. 310: View Of Oil Pan Skid Plate & Bolts
Courtesy of GENERAL MOTORS COMPANY

5. For 1500 series vehicles, position the oil pan skid plate and install the oil pan skid plate bolts, if equipped.

   Tighten

   Tighten the bolts to 28 N.m (21 lb ft).

6. Lower the vehicle.
7. Refill the engine oil. Refer to **Approximate Fluid Capacities** , and/or **Fluid and Lubricant Recommendations** .
8. Start the engine and inspect for leaks.

OIL PAN COVER REPLACEMENT

Removal Procedure

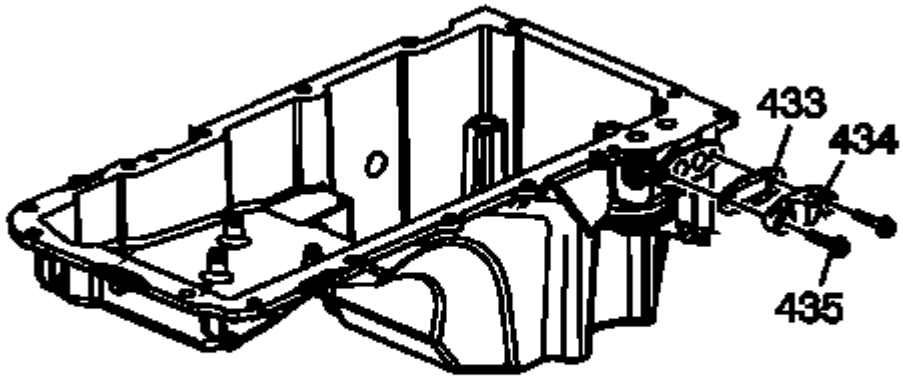

Fig. 311: View Of Oil Pan Cover, Bolts & Gasket
Courtesy of GENERAL MOTORS COMPANY

1. Raise and suitably support the vehicle. Refer to **Lifting and Jacking the Vehicle** .
2. Remove the oil pan cover bolts (435), cover (434), and gasket (433). Discard the gasket.

Installation Procedure

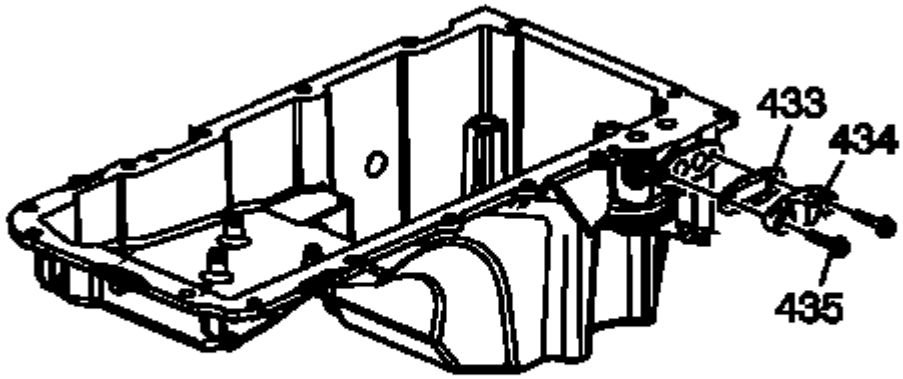

Fig. 312: View Of Oil Pan Cover, Bolts & Gasket
Courtesy of GENERAL MOTORS COMPANY

CAUTION: Refer to Fastener Caution .

1. Position a NEW oil pan cover gasket (433) and the cover (434) to the oil pan and install the bolts (435). Tighten the bolts to 9 N.m (80 lb in).
2. Lower the vehicle.

OIL PAN REPLACEMENT (4WD)

Removal Procedure

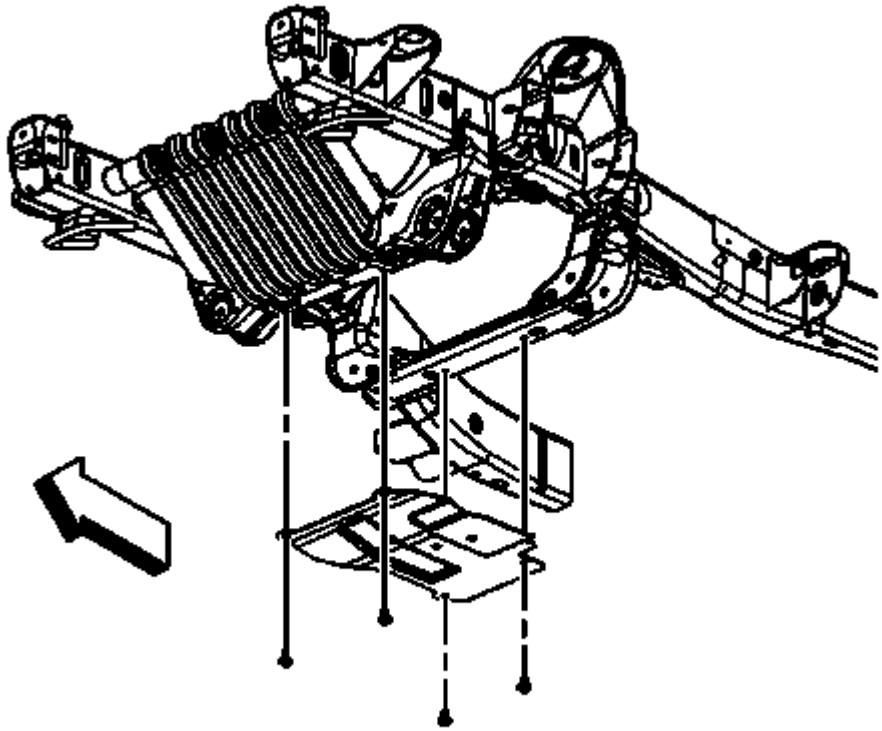

Fig. 313: View Of Oil Pan Skid Plate & Bolts
Courtesy of GENERAL MOTORS COMPANY

1. Raise and support the vehicle. Refer to **Lifting and Jacking the Vehicle** .
2. For 1500 series vehicles, remove the oil pan skid plate bolts and skid plate, if equipped.

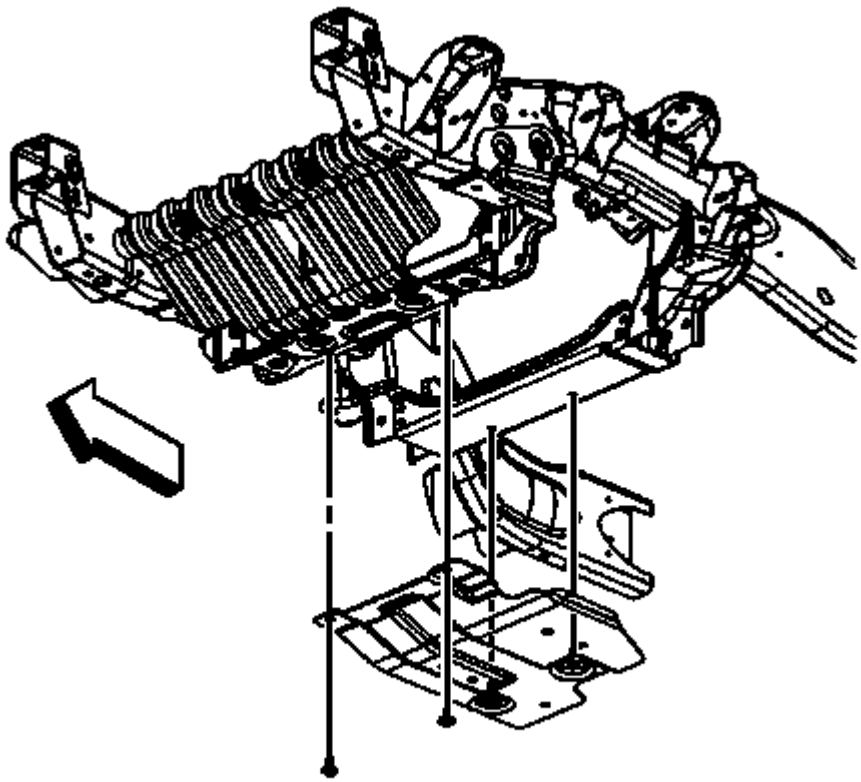

Fig. 314: View Of Oil Pan Skid Plate & Bolts
Courtesy of GENERAL MOTORS COMPANY

3. For 2500 series vehicles, loosen the 2 rear oil pan skid plate bolts, remove the 2 front oil pan skid plate bolts and skid plate, if equipped.
4. Remove the front differential carrier. Refer to **Differential Carrier Assembly Replacement (9.25 inch)** .
5. Unbolt the steering rack and hang downward.

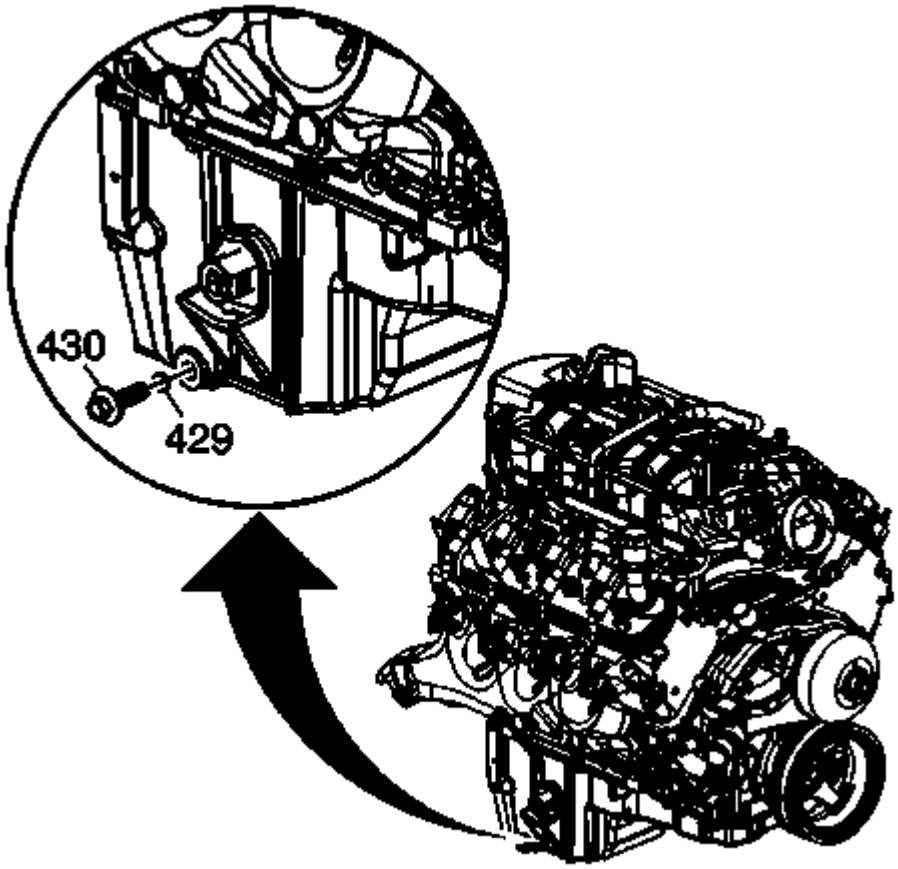

Fig. 315: View Of Oil Pan Drain Plug & Seal
Courtesy of GENERAL MOTORS COMPANY

6. Place a suitable drain pan under the oil pan drain plug.
7. Remove the oil pan drain plug (430).
8. Allow the oil pan to drain completely.
9. Re-install the oil pan drain plug until snug.

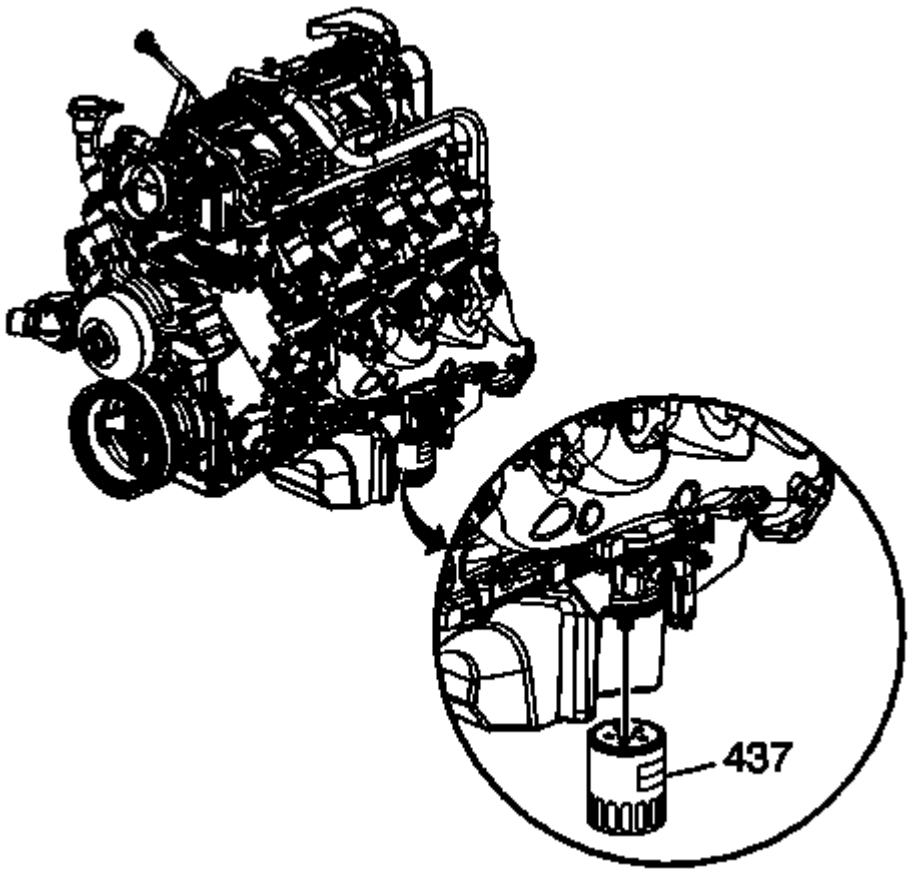

Fig. 316: View Of Engine Oil Filter
Courtesy of GENERAL MOTORS COMPANY

10. Place the drain pan under the oil filter.
11. Remove the oil filter (437).
12. Allow the oil to drain completely.
13. Re-install the oil filter until snug.

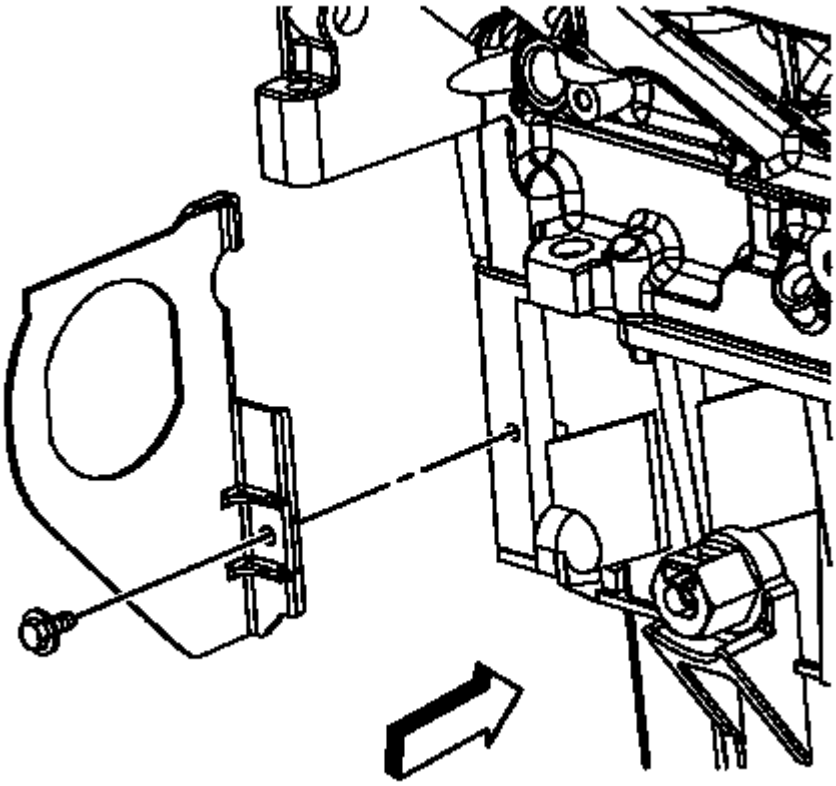

Fig. 317: View Of Right Side Transmission Cover Bolt
Courtesy of GENERAL MOTORS COMPANY

14. Remove the right side transmission cover bolt.

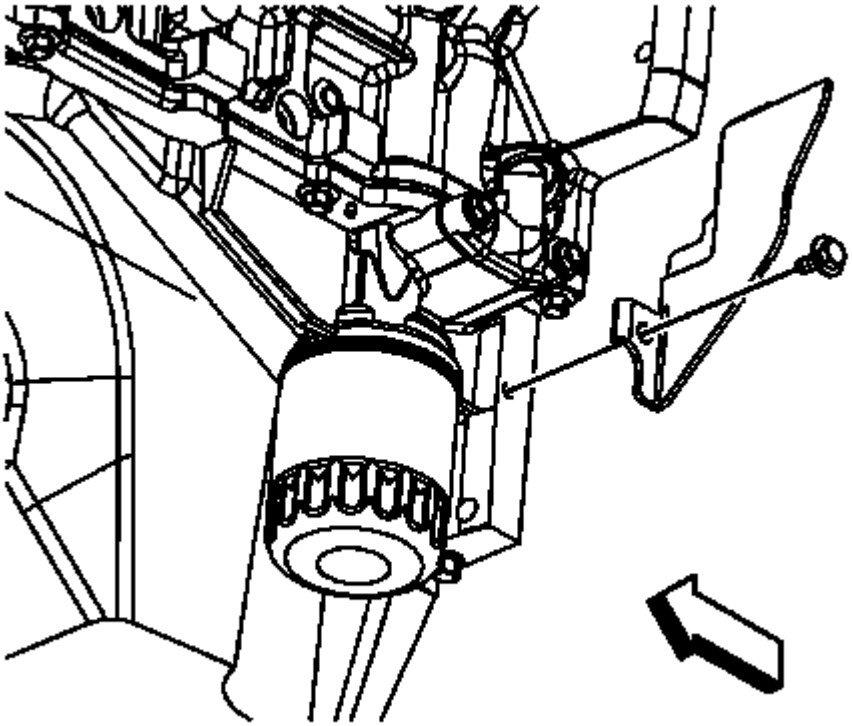

Fig. 318: View Of Left Side Transmission Cover Bolt
Courtesy of GENERAL MOTORS COMPANY

15. Remove the left side transmission cover bolt and cover.

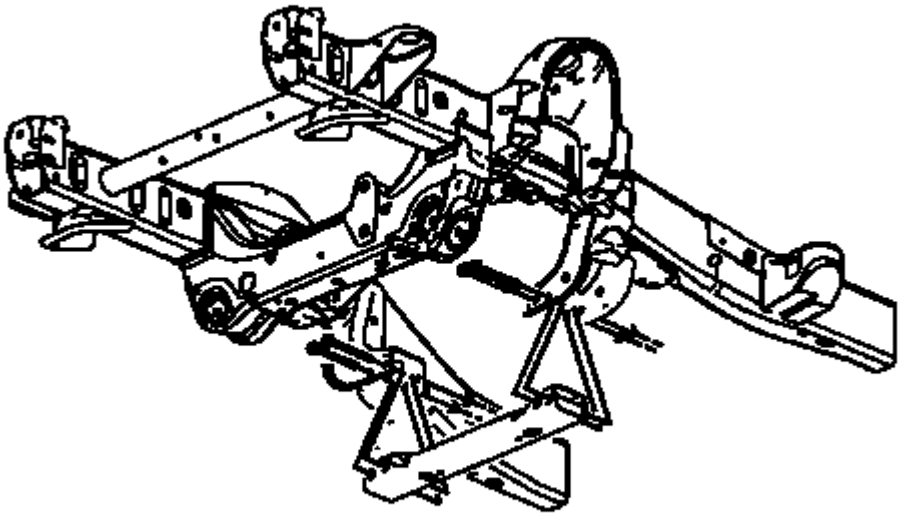

Fig. 319: View Of Vehicle Crossbar, Bolts & Nuts
Courtesy of GENERAL MOTORS COMPANY

16. For 1500 series vehicles, remove the crossbar bolts/nuts and crossbar.

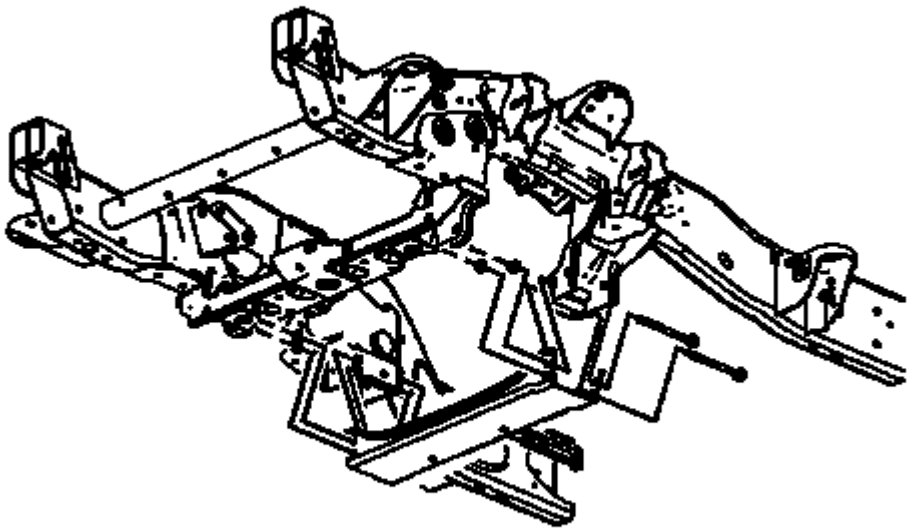

Fig. 320: View Of Vehicle Crossbar, Bolts & Nuts
Courtesy of GENERAL MOTORS COMPANY

17. For 2500 series vehicles, remove the crossbar bolts/nuts and crossbar.

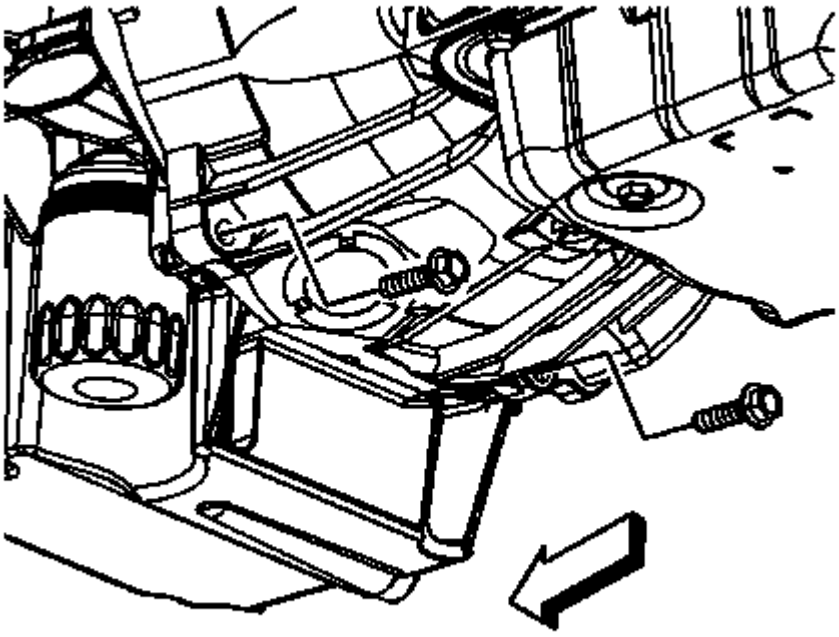

Fig. 321: View Of Lower Transmission Bolts
Courtesy of GENERAL MOTORS COMPANY

18. For vehicles with a 4L60-E/4L70-E automatic transmission, remove the 2 lower transmission bolts.

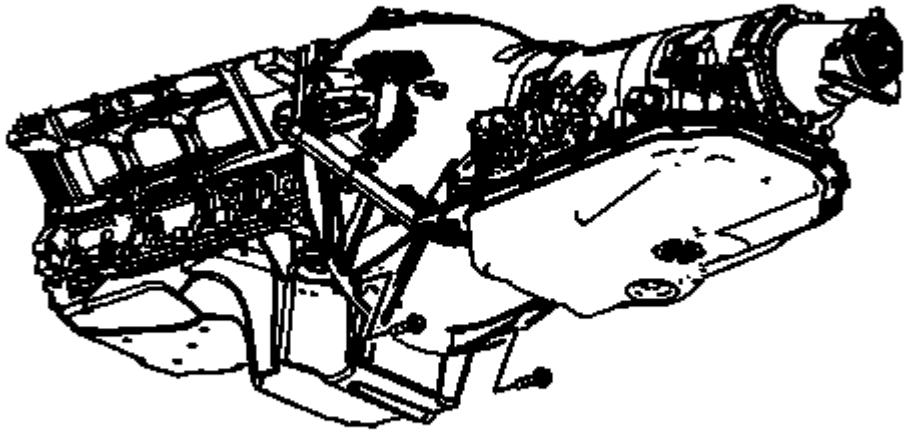

Fig. 322: View Of Lower Transmission Bolts
Courtesy of GENERAL MOTORS COMPANY

19. For vehicles with a 4L80-E automatic transmission, remove the 2 lower transmission bolts.

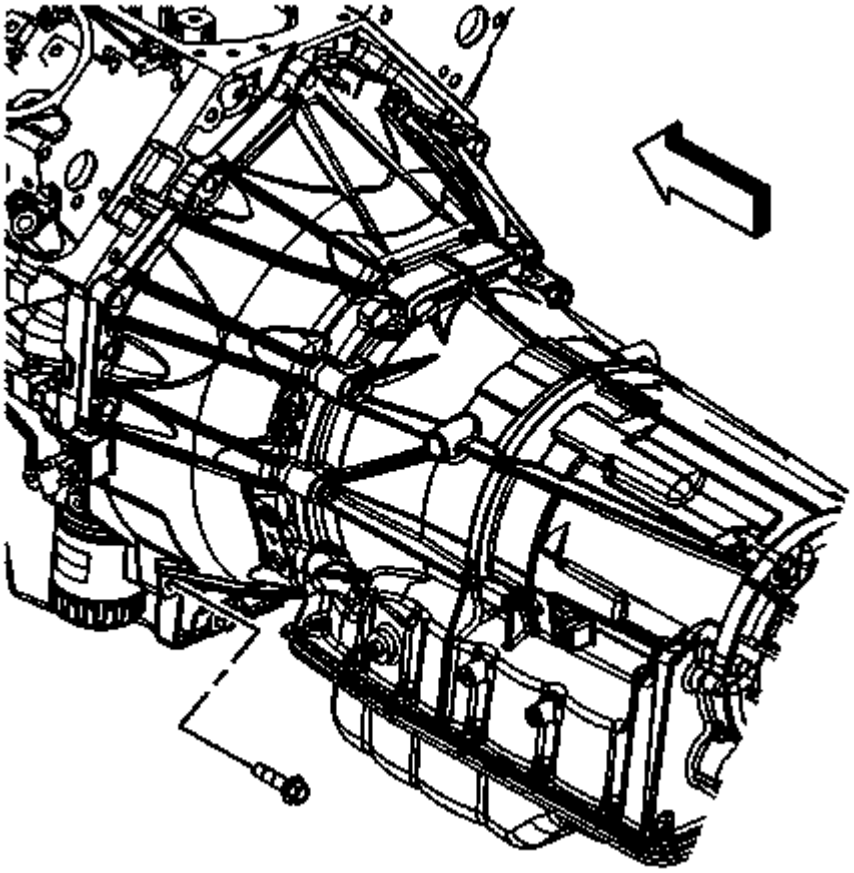

Fig. 323: View Of Lower Transmission Bolt
Courtesy of GENERAL MOTORS COMPANY

20. For vehicles with a 6L80-E automatic transmission, remove the lower left transmission bolt.

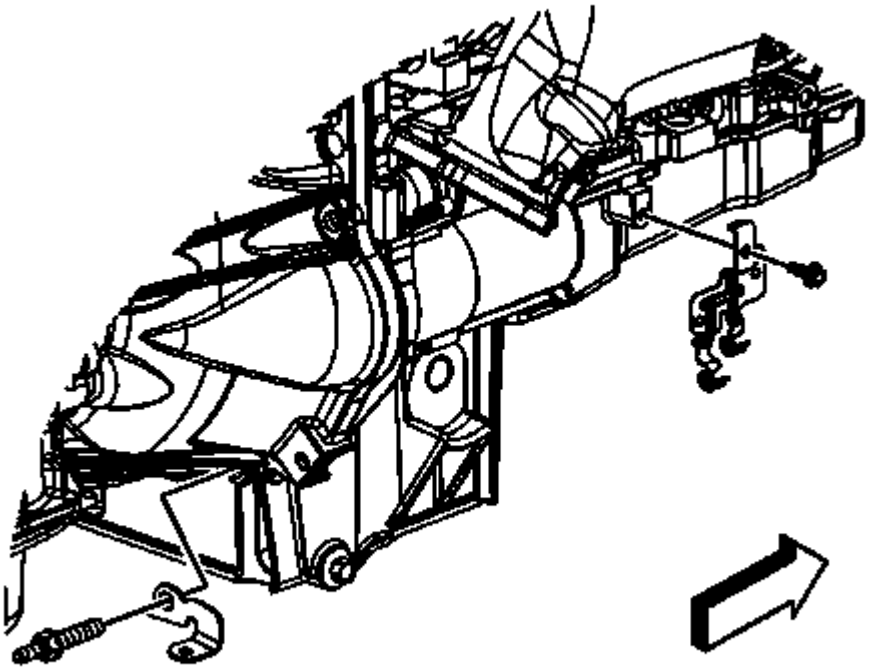

Fig. 324: View Of Lower Transmission Stud
Courtesy of GENERAL MOTORS COMPANY

21. For vehicles with a 6L80-E automatic transmission, remove the lower right transmission stud.

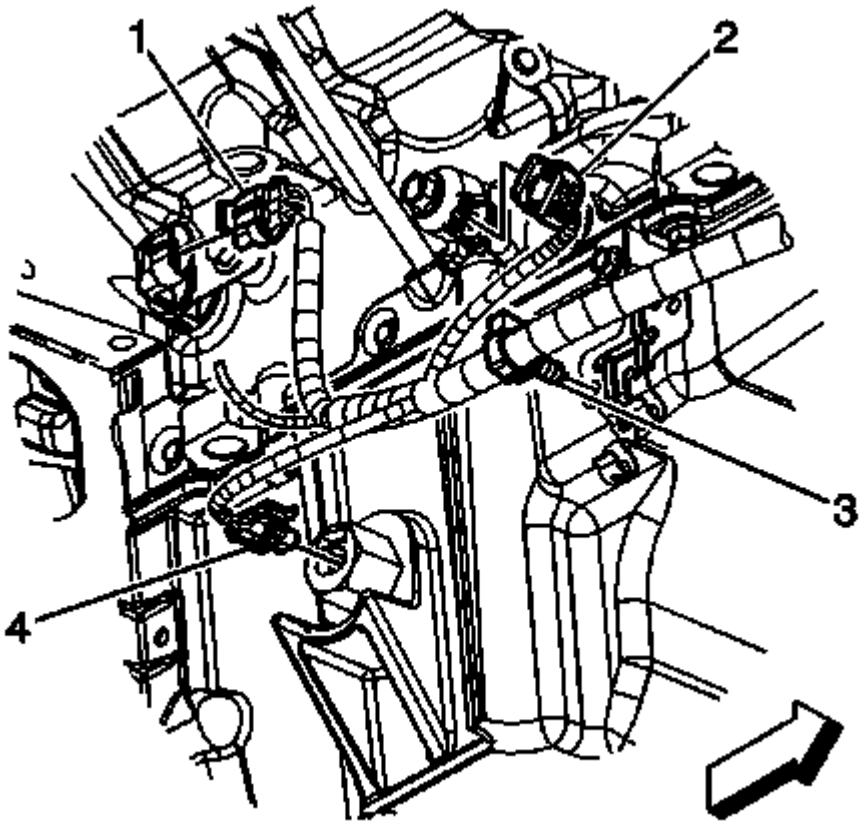

Fig. 325: View Of Engine Wiring Harness Electrical Connector & Components
Courtesy of GENERAL MOTORS COMPANY

22. Disconnect the engine harness electrical connector (4) from the oil level sensor.
23. Remove the engine harness clip (3) from the transmission oil cooler line bracket.

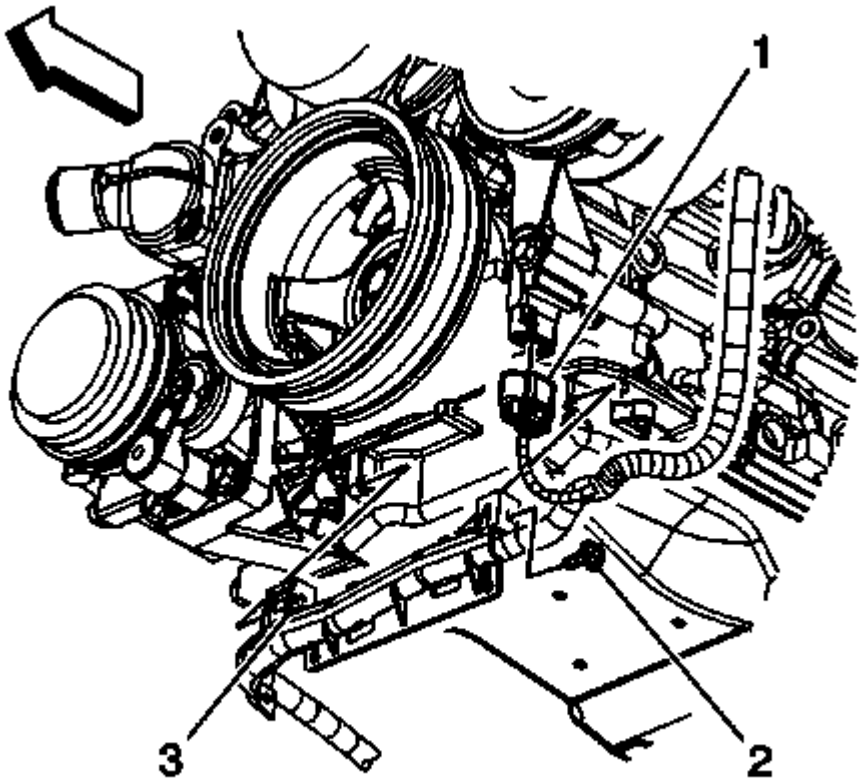

Fig. 326: View Of Electrical Connector, Cable Channel Bolt & Pin
Courtesy of GENERAL MOTORS COMPANY

24. Remove the battery cable channel bolt (2).
25. Slide the channel pin (3) out of the oil pan tab.

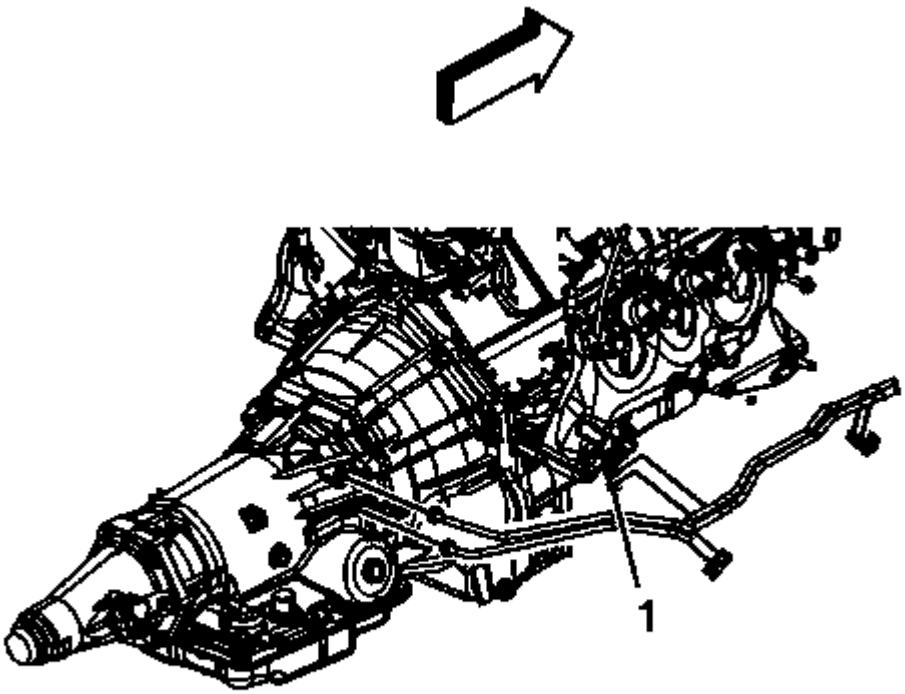

Fig. 327: View Of Oil Cooler Line Clip
Courtesy of GENERAL MOTORS COMPANY

26. For vehicles with a 4L60-E/4L70-E automatic transmission, remove the oil cooler lines from the clip (1), if equipped.

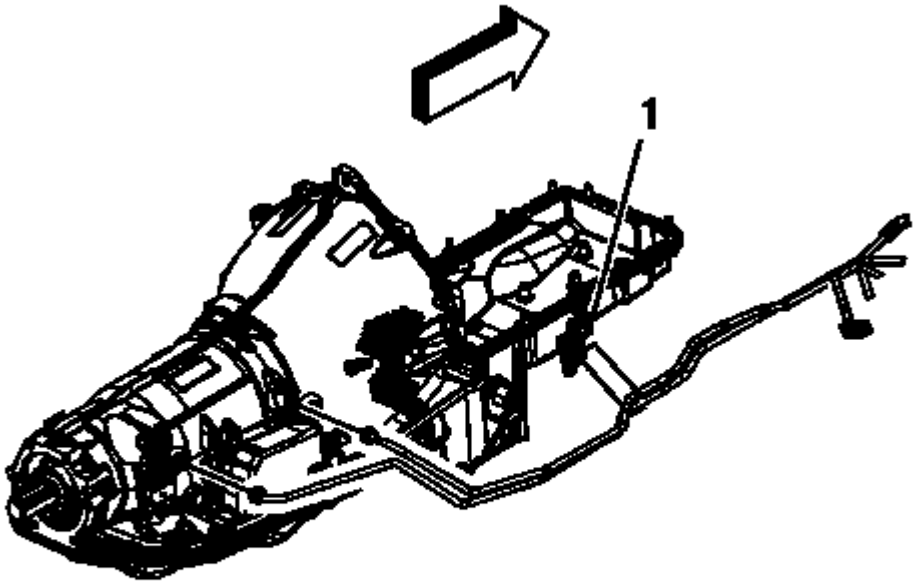

Fig. 328: View Of Oil Cooler Line Clip
Courtesy of GENERAL MOTORS COMPANY

27. For vehicles with a 4L80-E automatic transmission, remove the oil cooler lines from the clip (1), if equipped.

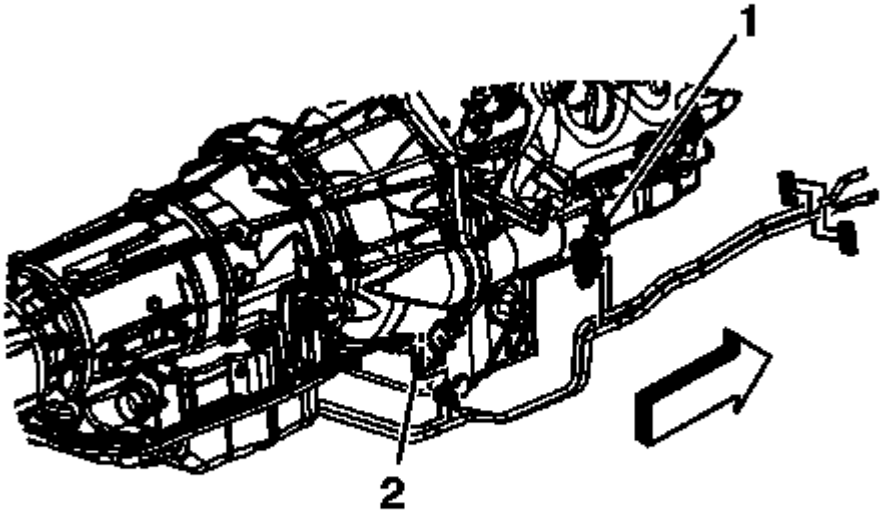

Fig. 329: View Of Oil Cooler Line Clip
Courtesy of GENERAL MOTORS COMPANY

28. For vehicles with a 6L80-E automatic transmission, remove the oil cooler lines from the clip (1).

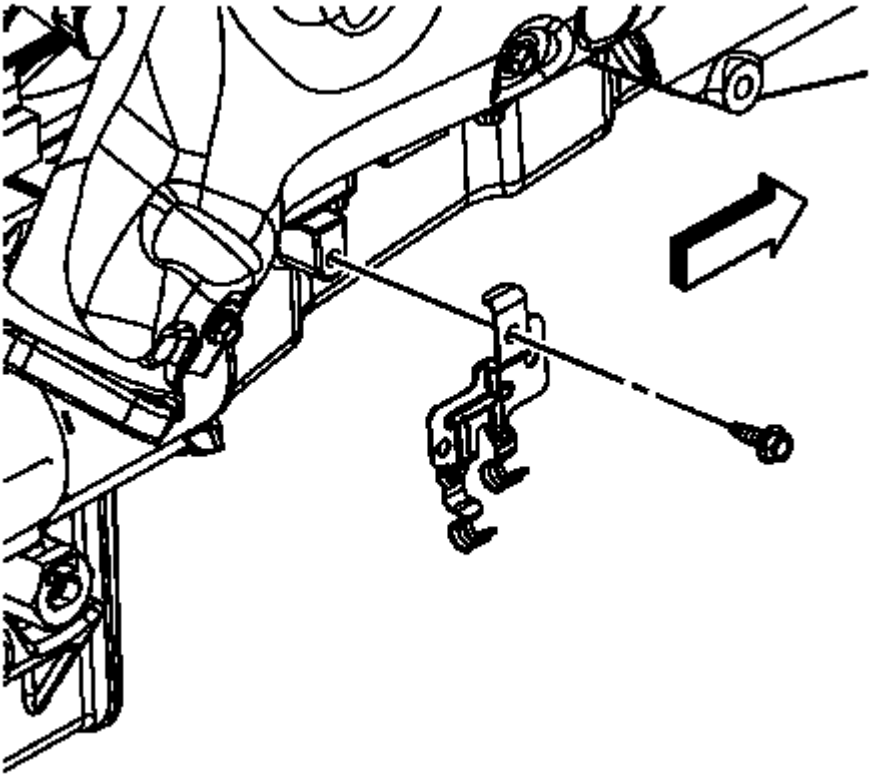

Fig. 330: View Of Oil Cooler Line Clip & Bolt
Courtesy of GENERAL MOTORS COMPANY

29. Remove the transmission oil cooler line clip bolt and clip from the oil pan.

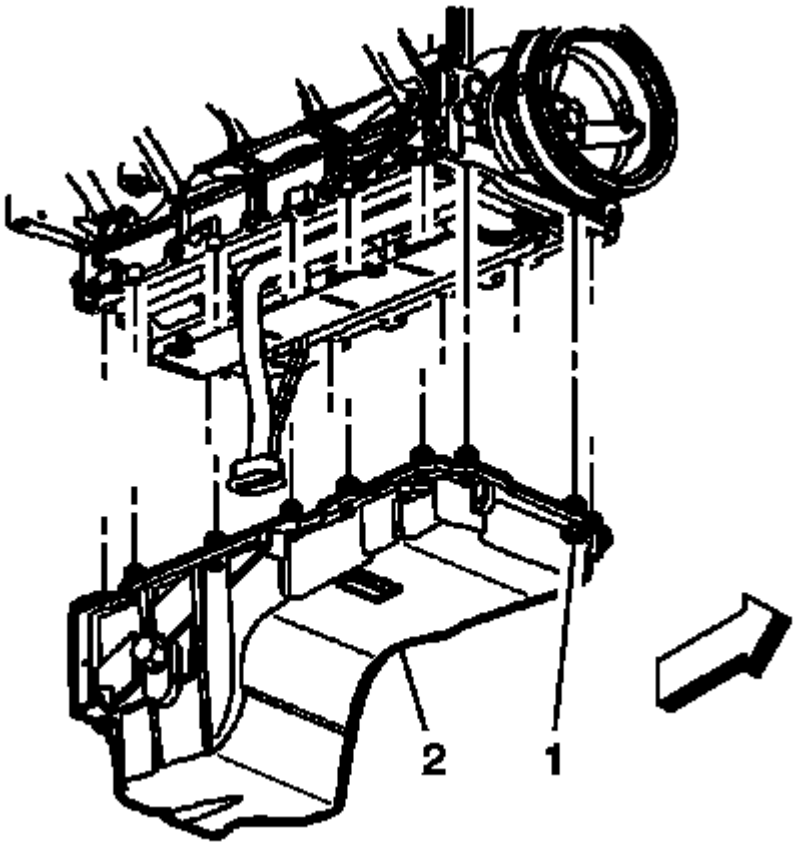

Fig. 331: View Of Oil Pan & Bolts
Courtesy of GENERAL MOTORS COMPANY

30. Remove the oil pan bolts.
31. Remove the oil pan.

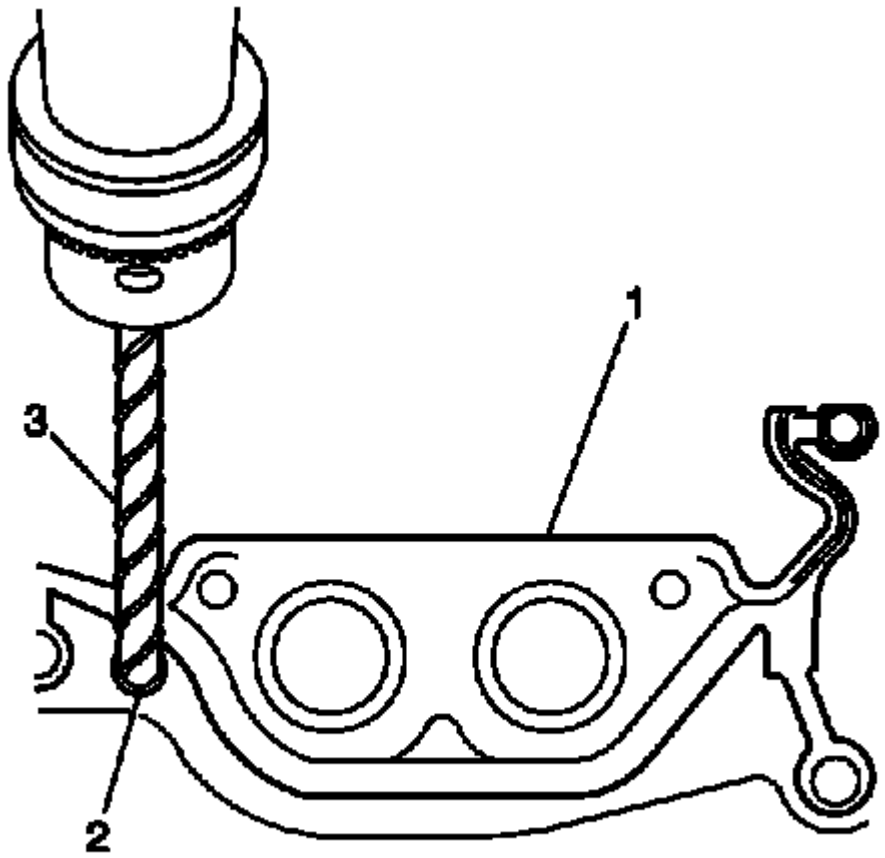

Fig. 332: Drilling Oil Pan Gasket Retaining Rivets
Courtesy of GENERAL MOTORS COMPANY

32. If reusing the oil pan perform the following steps, otherwise proceed to step 3 of the installation procedure.

NOTE: **DO NOT allow foreign material to enter the oil passages of the oil pan, cap or cover the openings as required.**

33. Drill out the oil pan gasket rivets (2), if necessary.
34. Remove the oil pan gasket (1) from the pan.
35. Discard the oil pan gasket.
36. Discard the rivets, if necessary.

Installation Procedure

NOTE:

- **The alignment of the structural oil pan is critical. The rear bolt hole locations of the oil pan provide mounting points for the transmission bellhousing. To ensure the rigidity of the powertrain and correct**

transmission alignment, it is important that the rear of the block and the rear of the oil pan must NEVER protrude beyond the engine block and transmission bellhousing plane.

- **Do not reuse the oil pan gasket.**
- **It is not necessary to rivet the NEW gasket to the oil pan.**

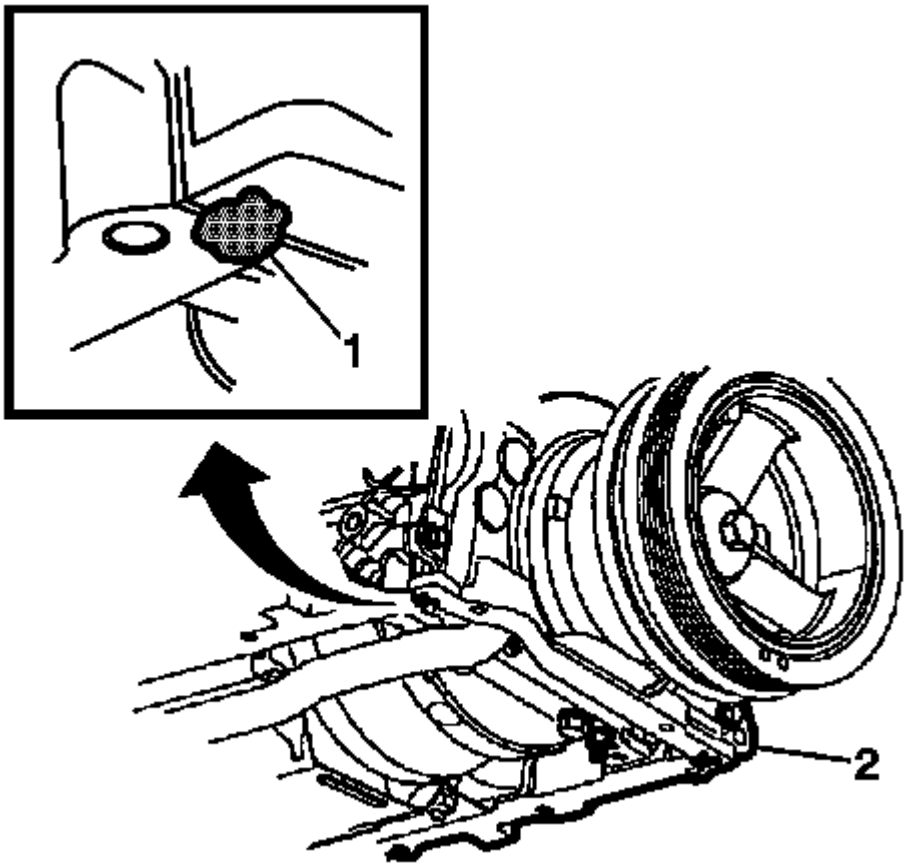

Fig. 333: View Of Sealant Applied To Front Oil Pan-To-Engine Block Junction
Courtesy of GENERAL MOTORS COMPANY

1. If reusing the oil pan perform the following step, otherwise proceed to step 3.

NOTE: **Be sure to align the oil gallery passages in the oil pan and engine block properly with the oil pan gasket.**

2. Place a NEW oil pan gasket onto the oil pan.
3. Apply a 5 mm (0.20 in) bead of sealant, 20 mm (0.80 in) long to the engine block. Apply the sealant directly onto the tabs of the front cover gasket that protrudes into the oil pan surface. Refer to **Adhesives, Fluids, Lubricants, and Sealers** .

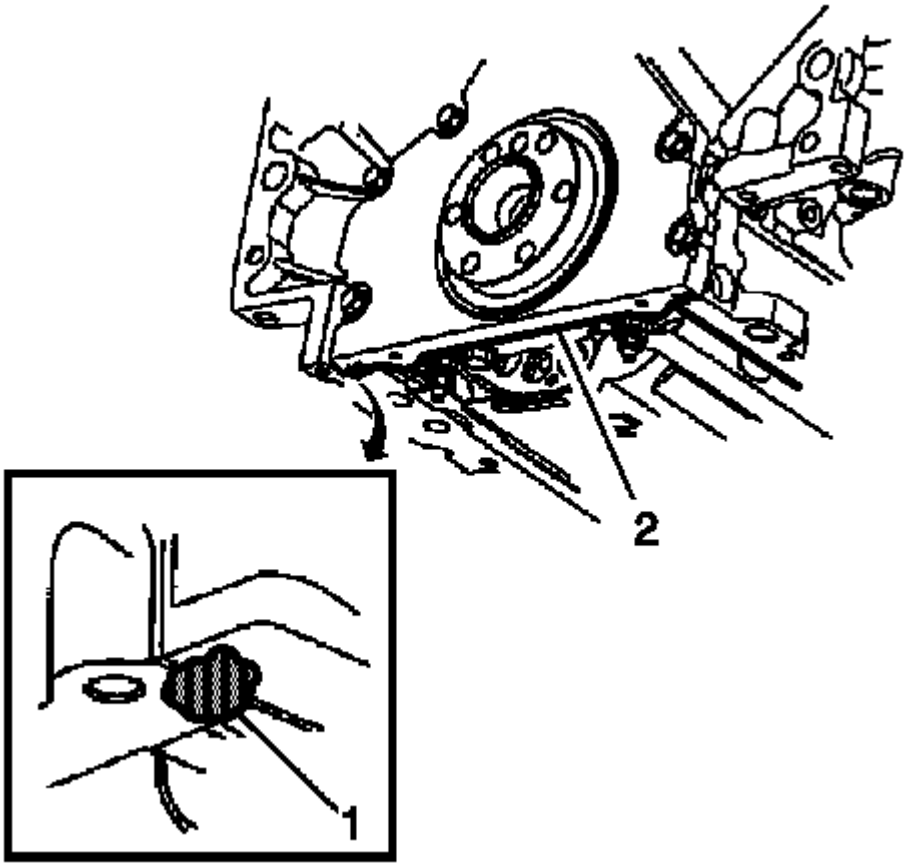

Fig. 334: View Of Sealant Applied To Rear Oil Pan-To-Engine Block Junction
Courtesy of GENERAL MOTORS COMPANY

4. Apply a 5 mm (0.20 in) bead of sealant, 20 mm (0.8 in) long to the engine block. Apply the sealant directly onto the tabs of the rear cover gasket that protrudes into the oil pan surface. Refer to **Adhesives, Fluids, Lubricants, and Sealers** .

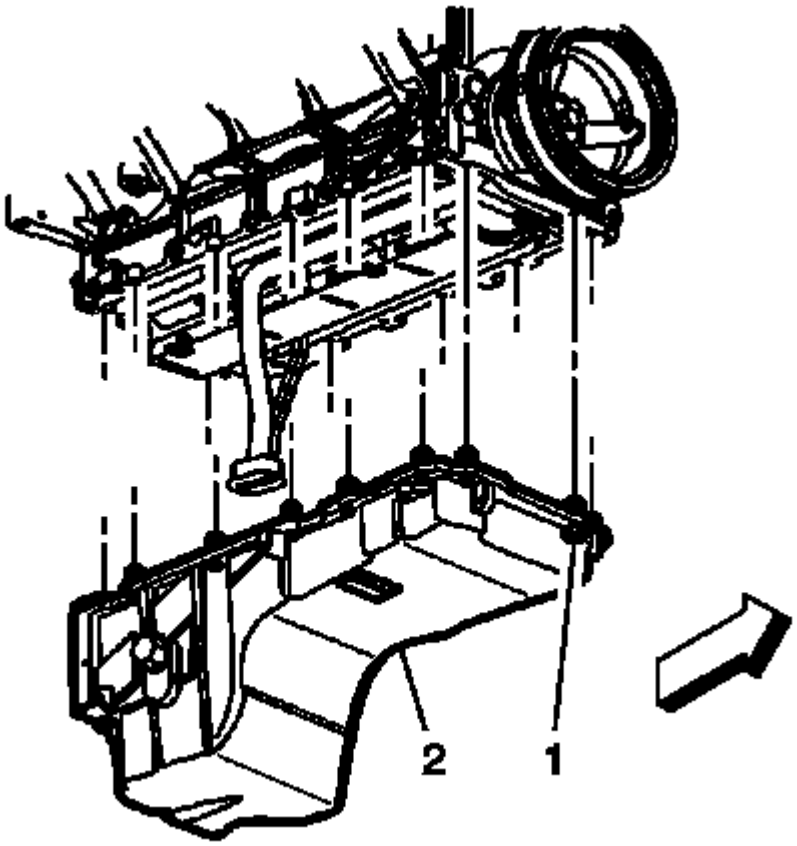

Fig. 335: View Of Oil Pan & Bolts
Courtesy of GENERAL MOTORS COMPANY

5. Install 1 oil pan bolt into a oil pan bolt hole and up through the gasket.
6. Position and install the oil pan and the rest of the oil pan bolts.
7. Tighten the oil pan bolts until snug.

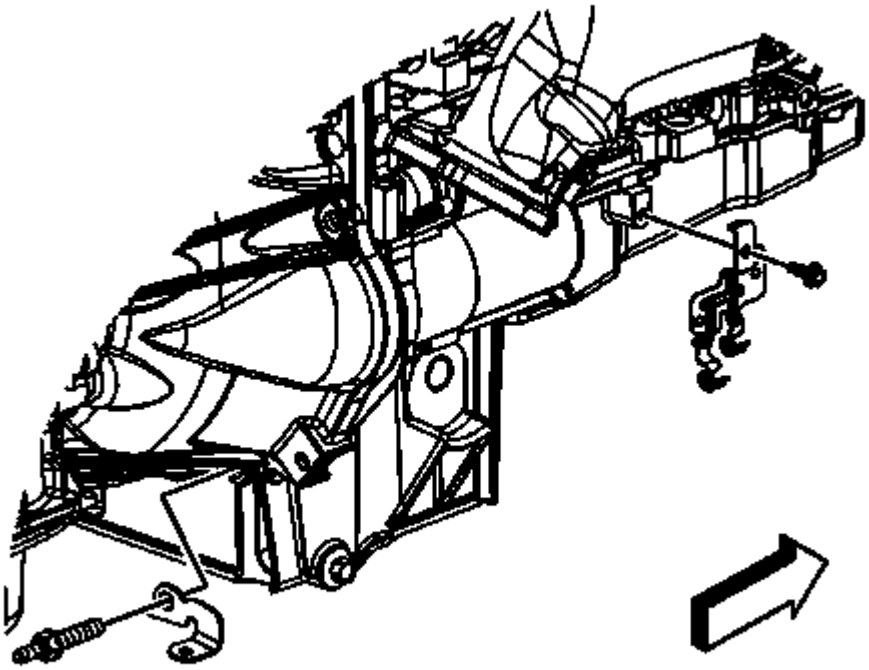

Fig. 336: View Of Lower Transmission Stud
Courtesy of GENERAL MOTORS COMPANY

8. For vehicles with a 6L80-E automatic transmission, position the oil cooler bracket and install the lower right transmission stud until snug.

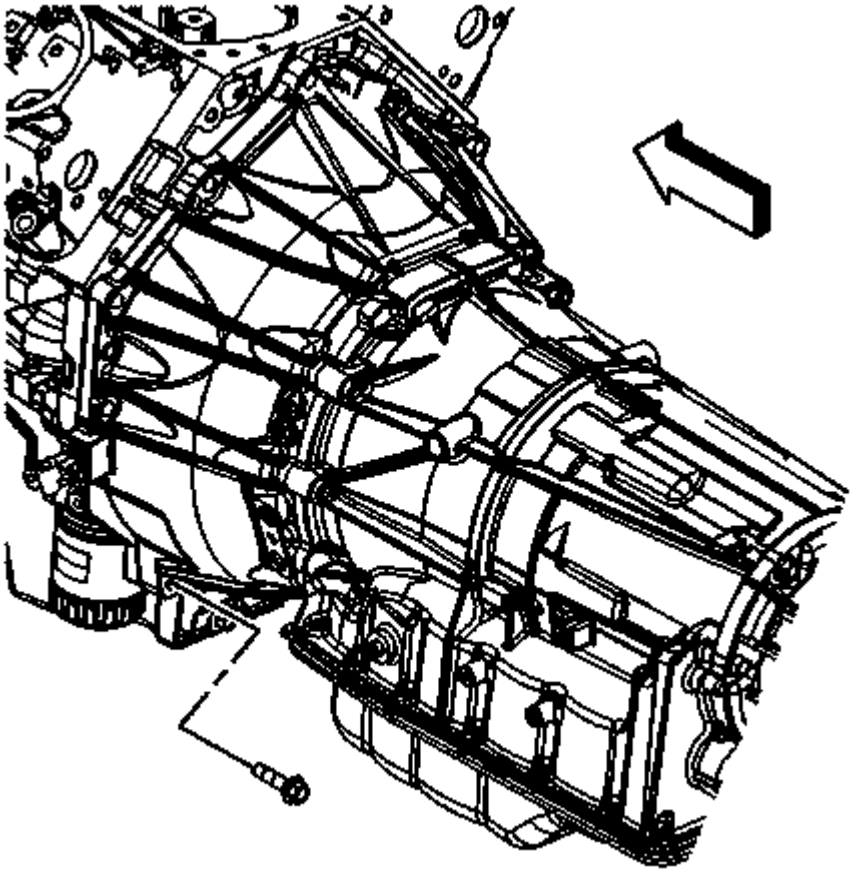

Fig. 337: View Of Lower Transmission Bolt
Courtesy of GENERAL MOTORS COMPANY

9. For vehicles with a 6L80-E automatic transmission, install the lower left transmission bolt until snug.

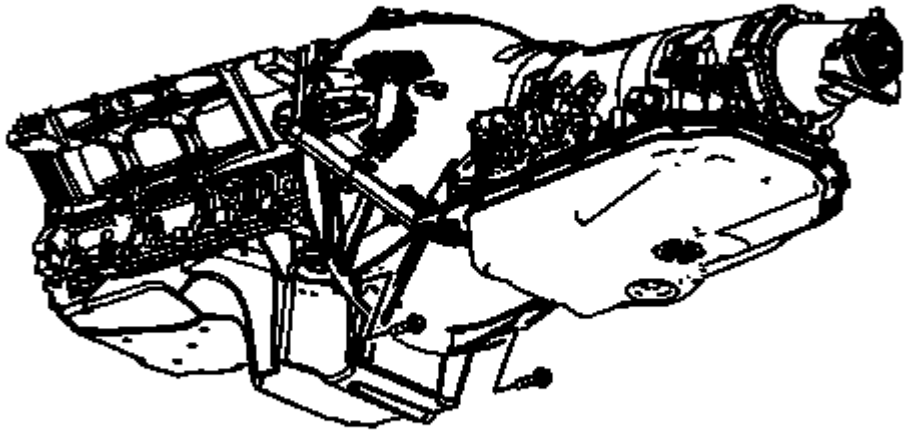

Fig. 338: View Of Lower Transmission Bolts
Courtesy of GENERAL MOTORS COMPANY

10. For vehicles with a 4L80-E automatic transmission, install the 2 lower transmission bolts until snug.

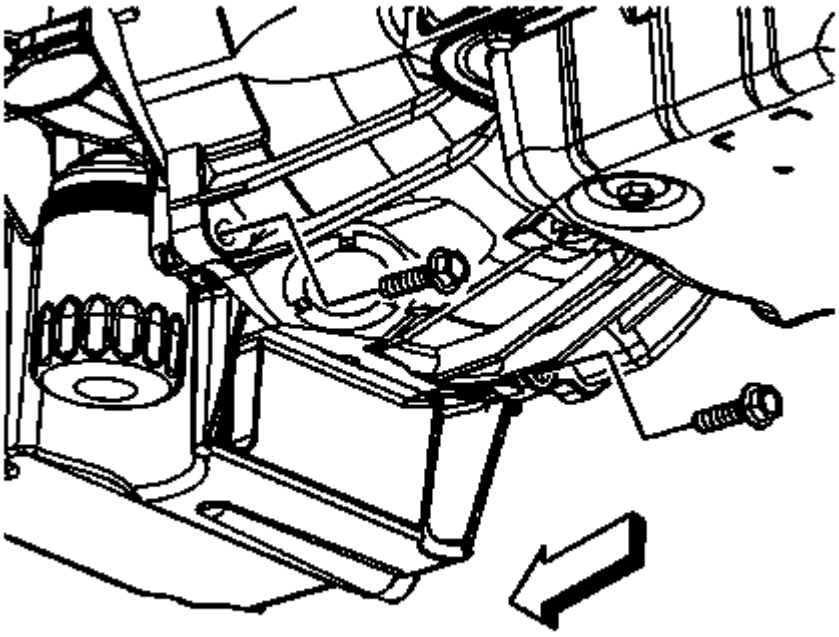

Fig. 339: View Of Lower Transmission Bolts
Courtesy of GENERAL MOTORS COMPANY

CAUTION: Refer to Fastener Caution .

11. For vehicles with a 4L60-E/4L70-E automatic transmission, install the 2 lower transmission bolts until snug.
    1. Tighten the oil pan and oil pan-to-oil pan front cover bolts to 25 N.m (18 lb ft).
    2. Tighten the oil pan-to-rear cover bolts to 12 N.m (106 lb in).
    3. Tighten the transmission bolts/stud to 50 N.m (37 lb ft).

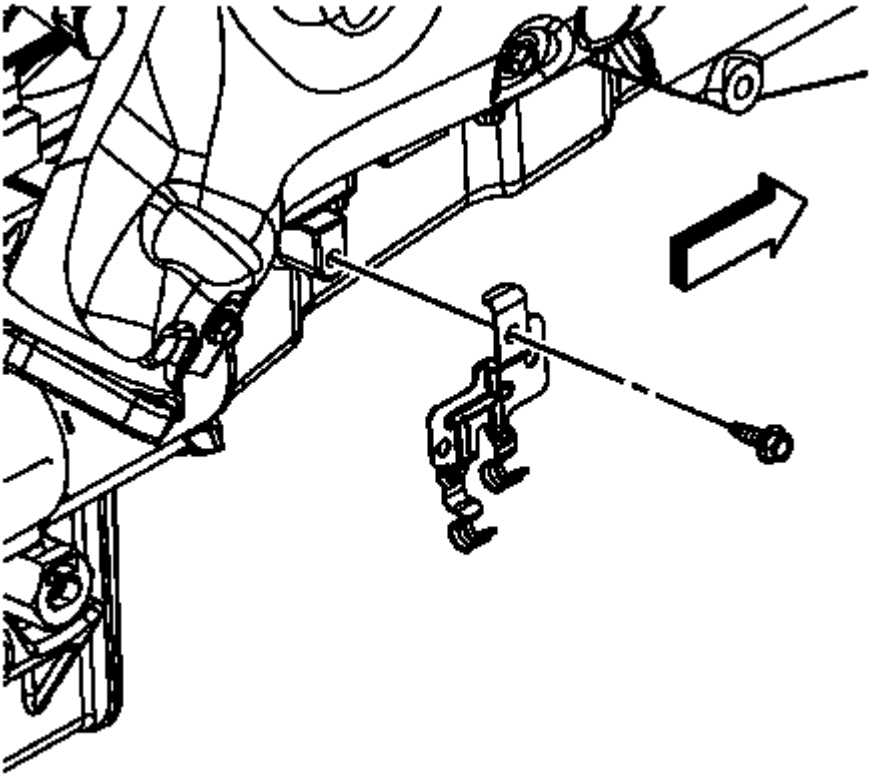

Fig. 340: View Of Oil Cooler Line Clip & Bolt
Courtesy of GENERAL MOTORS COMPANY

12. Position the transmission oil cooler line clip and install the bolt to the oil pan. Tighten the bolt to 9 N.m (80 lb in).

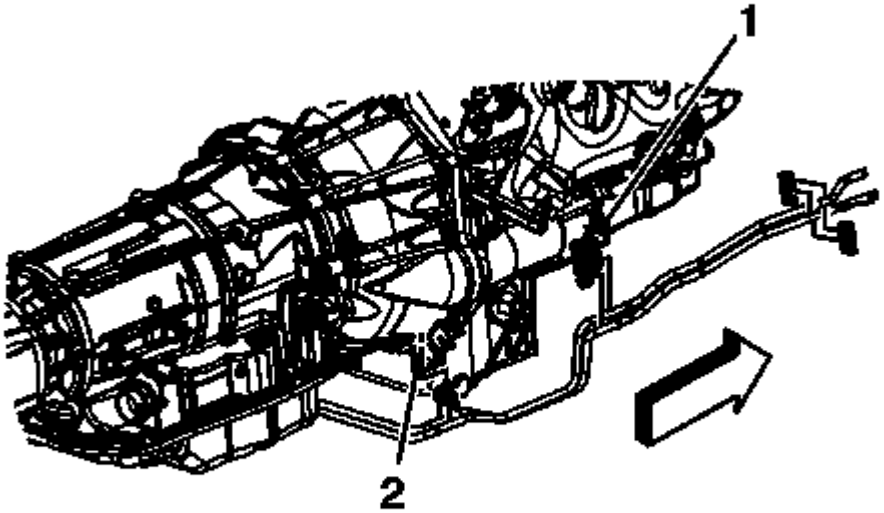

Fig. 341: View Of Oil Cooler Line Clip
Courtesy of GENERAL MOTORS COMPANY

13. For vehicles with a 6L80-E automatic transmission, install the oil cooler lines to the clip (1).

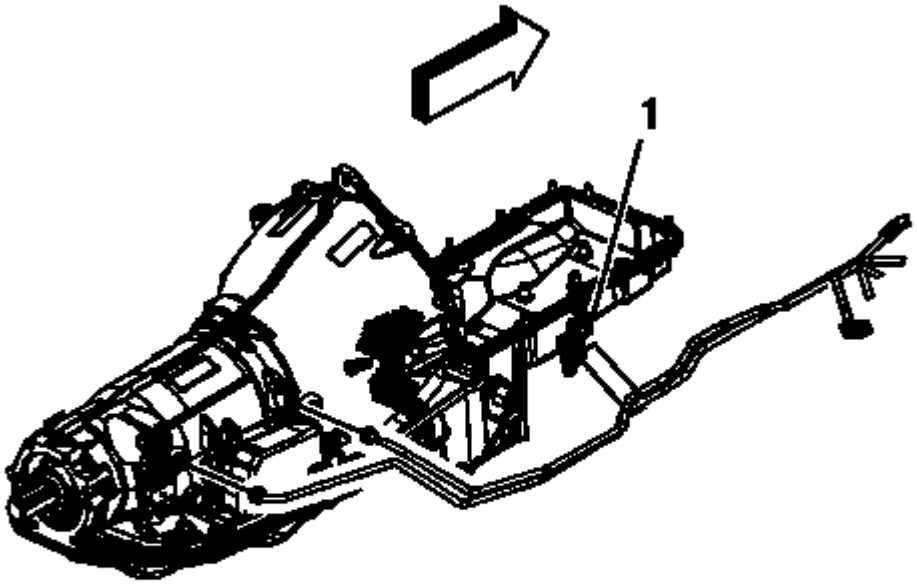

Fig. 342: View Of Oil Cooler Line Clip
Courtesy of GENERAL MOTORS COMPANY

14. For vehicles with a 4L80-E automatic transmission, install the oil cooler lines to the clip (1), if equipped.

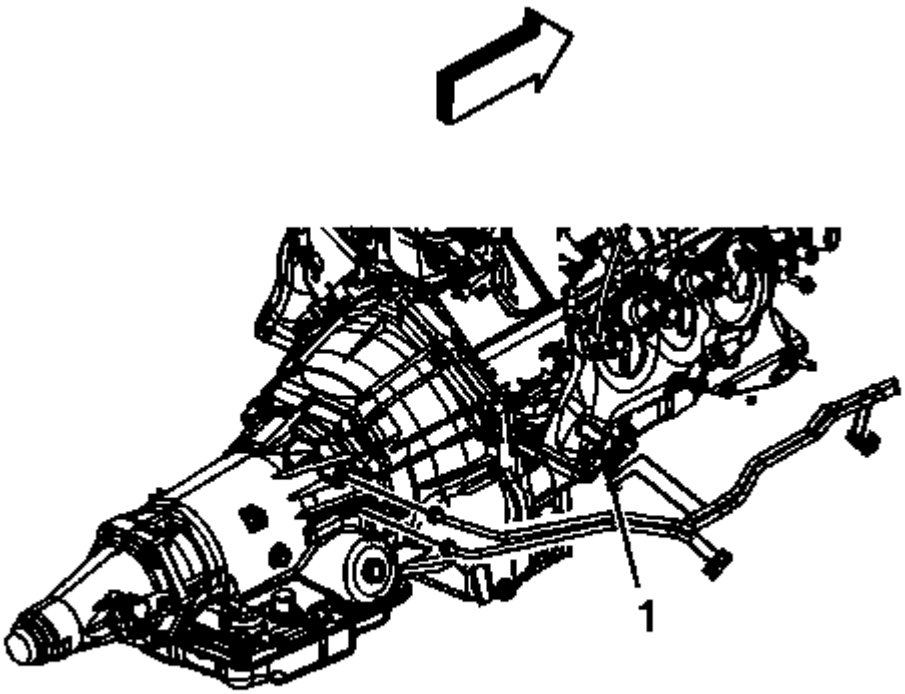

Fig. 343: View Of Oil Cooler Line Clip
Courtesy of GENERAL MOTORS COMPANY

15. For vehicles with a 4L60-E/4L70-E automatic transmission, install the oil cooler lines to the clip (1), if equipped.

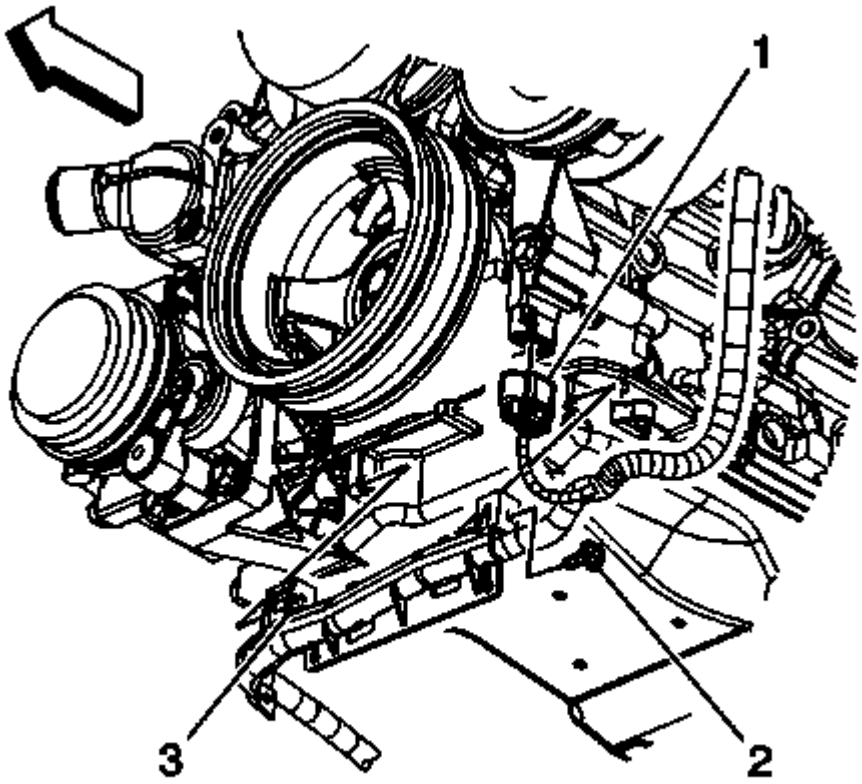

Fig. 344: View Of Electrical Connector, Cable Channel Bolt & Pin
Courtesy of GENERAL MOTORS COMPANY

16. Position the channel and slide the channel pin (3) into the oil pan tab.
17. Install the battery cable channel bolt (2) and tighten to 12 N.m (106 lb in).

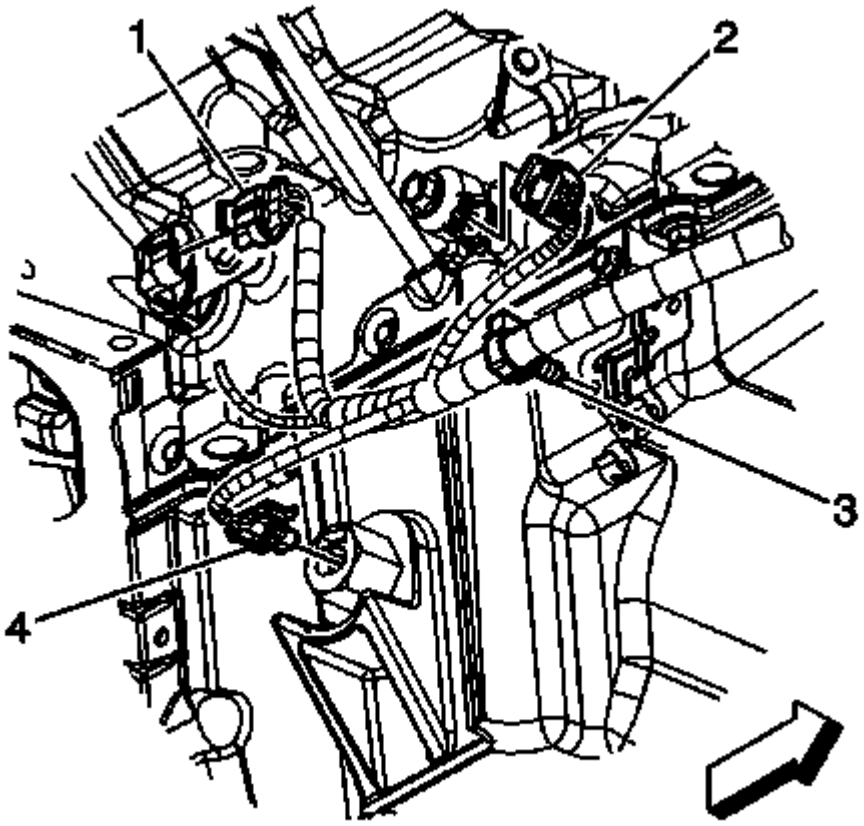

Fig. 345: View Of Engine Wiring Harness Electrical Connector & Components
Courtesy of GENERAL MOTORS COMPANY

18. Connect the engine harness electrical connector (4) to the oil level sensor.
19. Install the engine harness clip (3) to the transmission oil cooler line bracket.

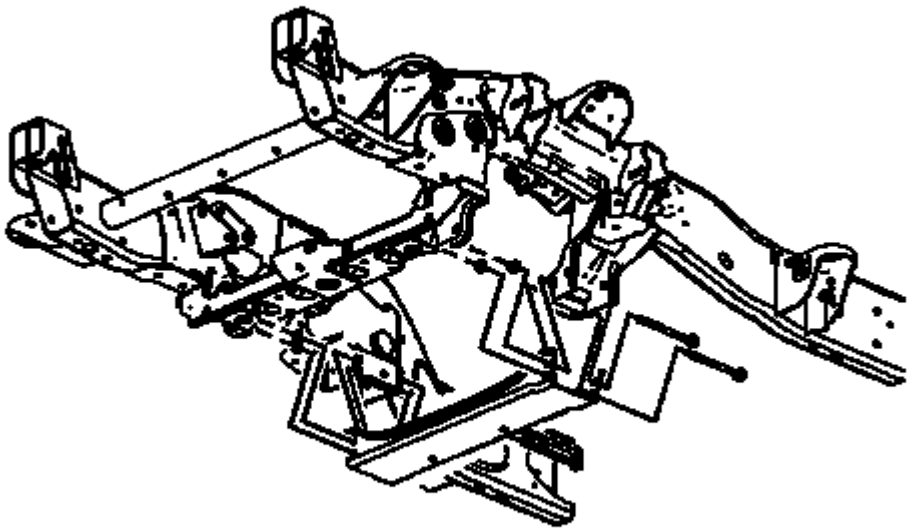

Fig. 346: View Of Vehicle Crossbar, Bolts & Nuts
Courtesy of GENERAL MOTORS COMPANY

20. For both the 1500 and 2500 series, perform the following steps prior to installing the crossbar bolts.
    1. Remove all traces of the original adhesive patch.
    2. Clean the threads of the bolts with denatured alcohol or equivalent and allow to dry.
    3. Apply threadlock GM P/N 12345493 (Canadian P/N 10953488) or equivalent to the bolt threads.
21. For 2500 series vehicles, install the crossbar and crossbar bolts/nuts. Tighten the nuts to 120 N.m (89 lb ft).

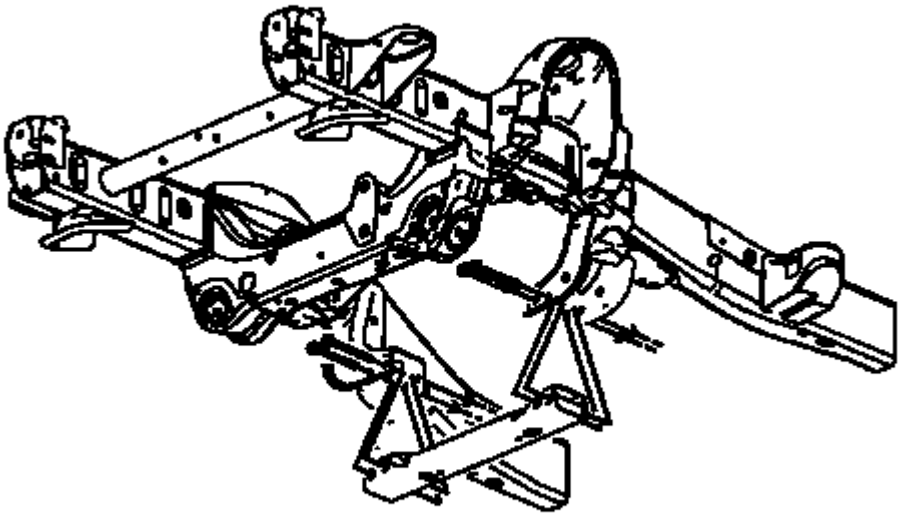

Fig. 347: View Of Vehicle Crossbar, Bolts & Nuts
Courtesy of GENERAL MOTORS COMPANY

22. For 1500 series vehicles, install the crossbar and crossbar bolts/nuts. Tighten the nuts to 100 N.m (74 lb ft).

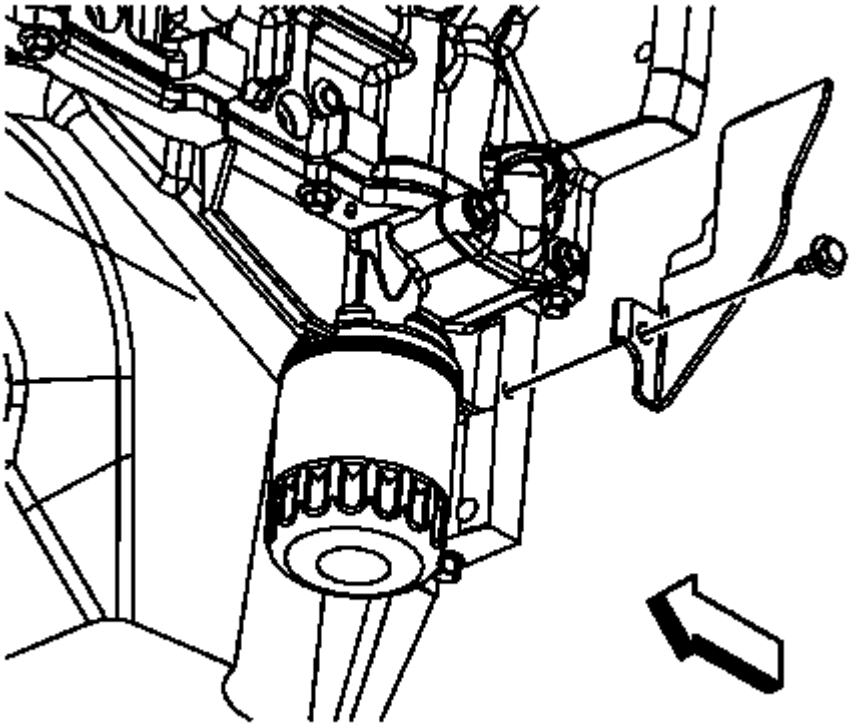

Fig. 348: View Of Left Side Transmission Cover Bolt
Courtesy of GENERAL MOTORS COMPANY

23. Position the left side oil pan closeout cover and install the cover bolt. Tighten the bolt to 9 N.m (80 lb in).

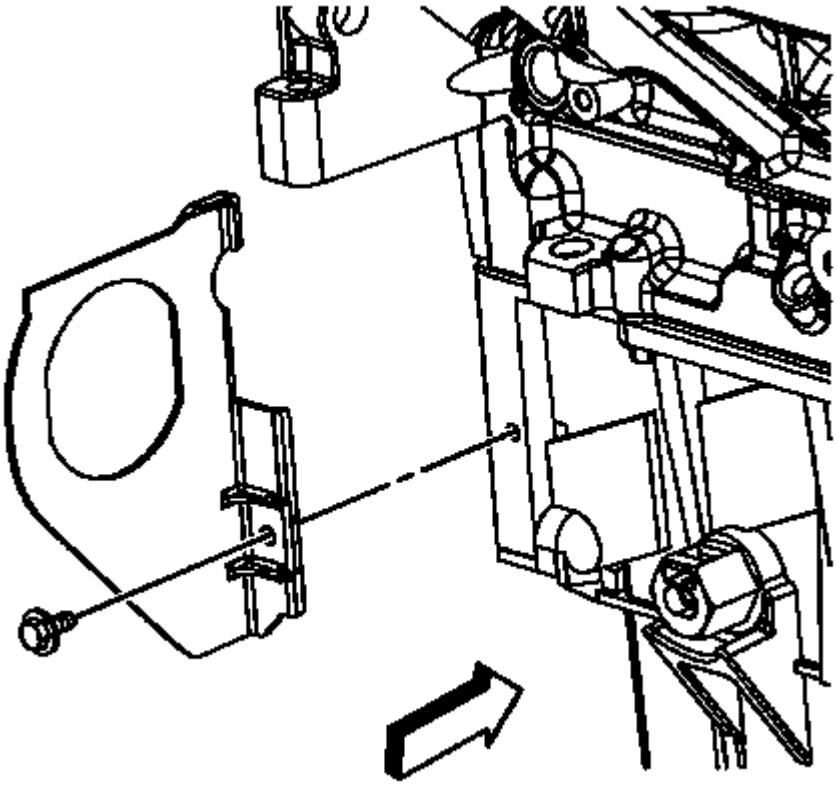

Fig. 349: View Of Right Side Transmission Cover Bolt
Courtesy of GENERAL MOTORS COMPANY

24. Install the right side oil pan closeout cover bolt and tighten to 9 N.m (80 lb in).

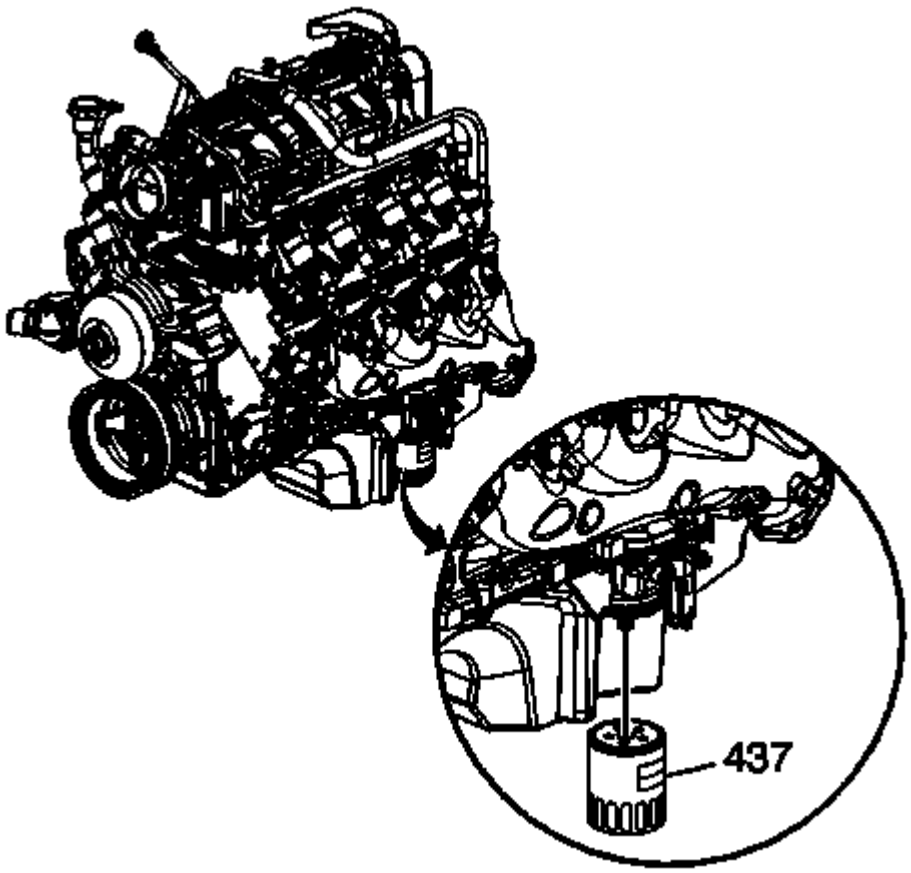

Fig. 350: View Of Engine Oil Filter
Courtesy of GENERAL MOTORS COMPANY

25. If reusing the old oil pan remove the old oil filter and install a NEW oil filter.
26. Lubricate the NEW oil filter seal with clean engine oil.
27. Install the NEW oil filter (437) and tighten to 30 N.m (22 lb ft).

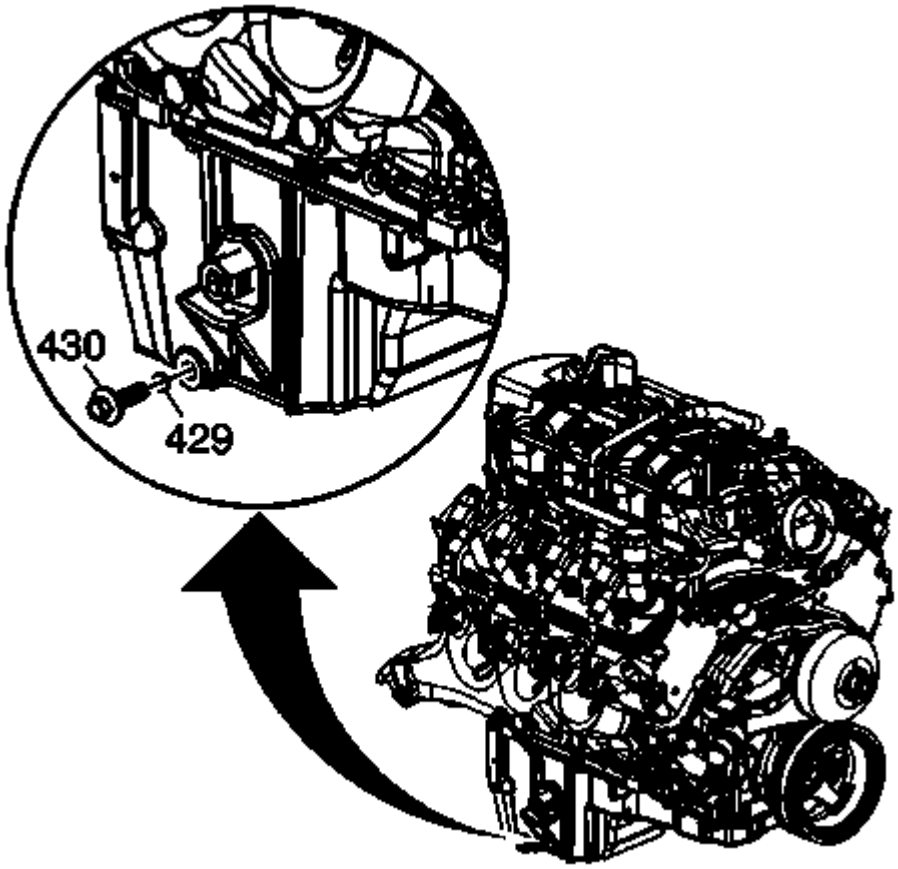

Fig. 351: View Of Oil Pan Drain Plug & Seal
Courtesy of GENERAL MOTORS COMPANY

28. Ensure that the oil pan drain plug (430) is tight. Tighten the drain plug to 25 N.m (18 lb ft).
29. Install the front differential carrier. Refer to **Differential Carrier Assembly Replacement (9.25 inch)** .
30. Raise the steering rack in place and install the steering rack bolts.
    1. Tighten the left side steering rack bolts to 200 N.m (148 lb ft).
    2. Tighten the right side steering rack bolts to 100 N.m (74 lb ft).

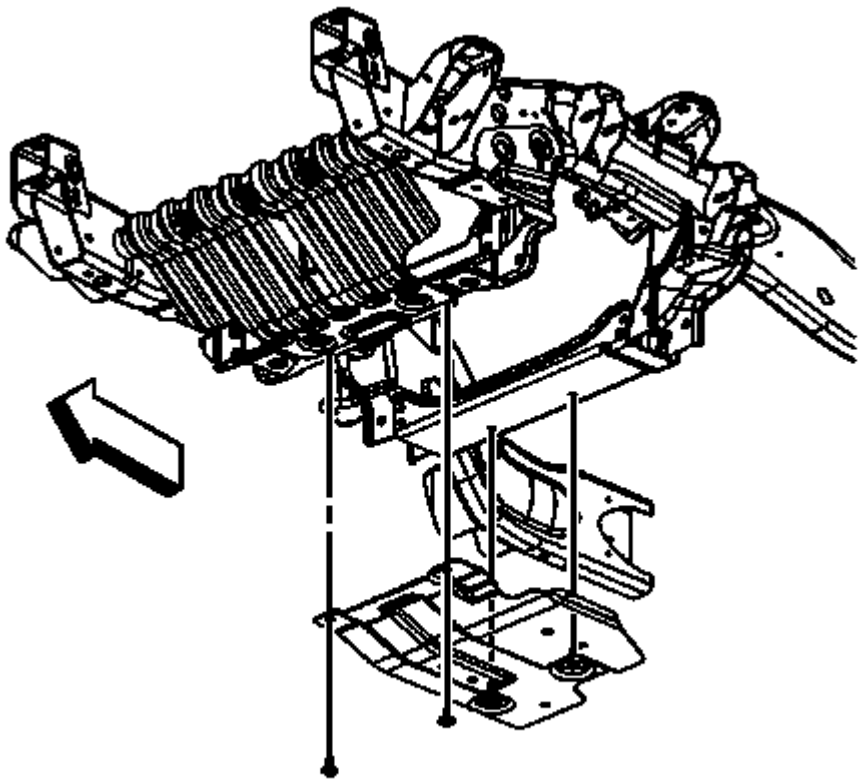

Fig. 352: View Of Oil Pan Skid Plate & Bolts
Courtesy of GENERAL MOTORS COMPANY

31. For 2500 series vehicles, position the oil pan skid plate and tighten until snug the 2 rear oil pan skid plate bolts, install the 2 front oil pan skid plate bolts, if equipped. Tighten the bolts to 28 N.m (21 lb ft).

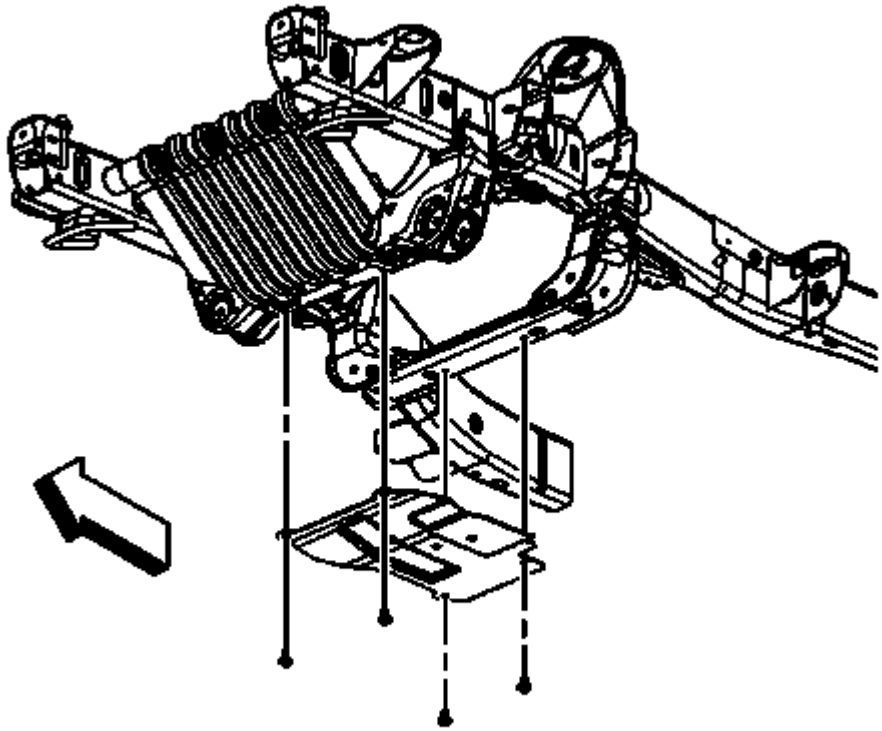

Fig. 353: View Of Oil Pan Skid Plate & Bolts
Courtesy of GENERAL MOTORS COMPANY

32. For 1500 series vehicles, position the oil pan skid plate and install the oil pan skid plate bolts, if equipped. Tighten the bolts to 28 N.m (21 lb ft).
33. Lower the vehicle.
34. Fill the engine with NEW engine oil. Refer to **Fluid and Lubricant Recommendations** , and **Approximate Fluid Capacities** .
35. Start the engine and inspect for leaks.

OIL PAN REPLACEMENT (2WD)

Removal Procedure

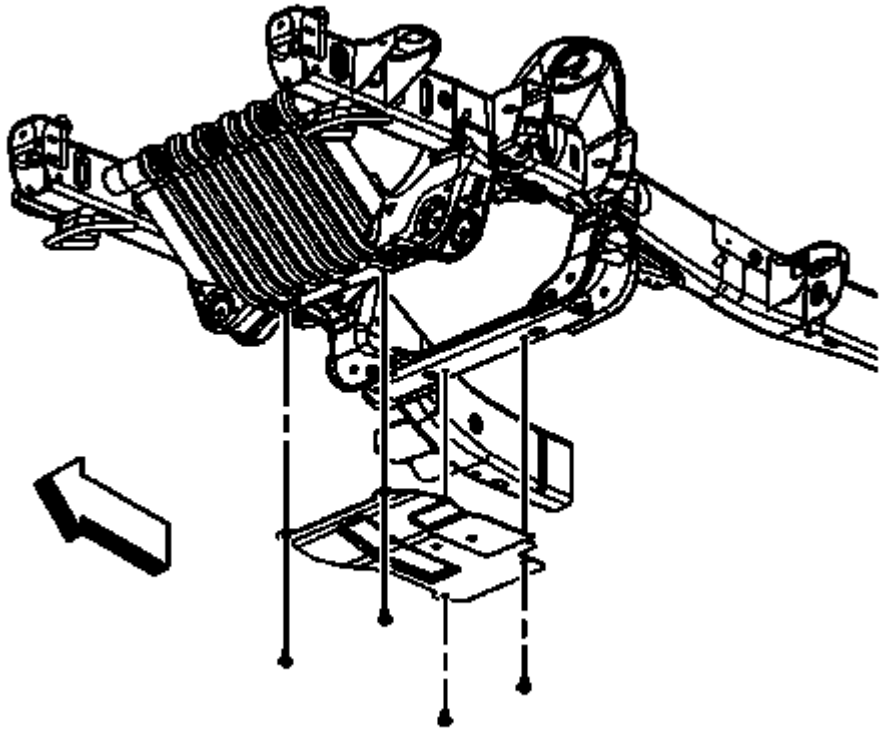

Fig. 354: View Of Oil Pan Skid Plate & Bolts
Courtesy of GENERAL MOTORS COMPANY

1. Raise and support the vehicle. Refer to **Lifting and Jacking the Vehicle** .
2. For 1500 series vehicles, remove the oil pan skid plate bolts and skid plate, if equipped.

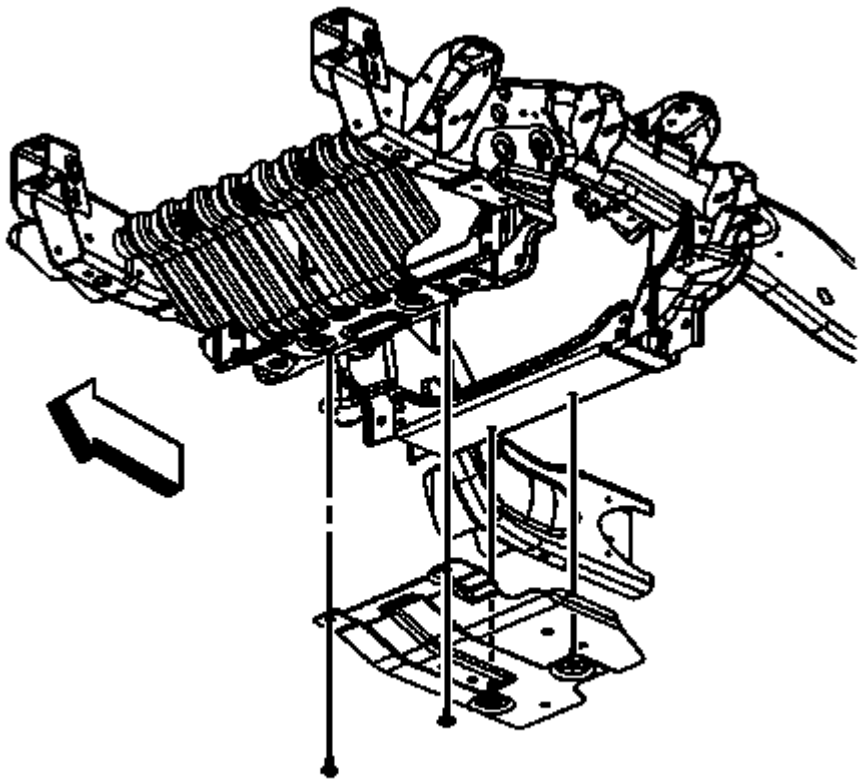

Fig. 355: View Of Oil Pan Skid Plate & Bolts
Courtesy of GENERAL MOTORS COMPANY

3. For 2500 series vehicles, loosen the 2 rear oil pan skid plate bolts, remove the 2 front oil pan skid plate bolts and skid plate, if equipped.
4. Unbolt the steering rack and hang downward.

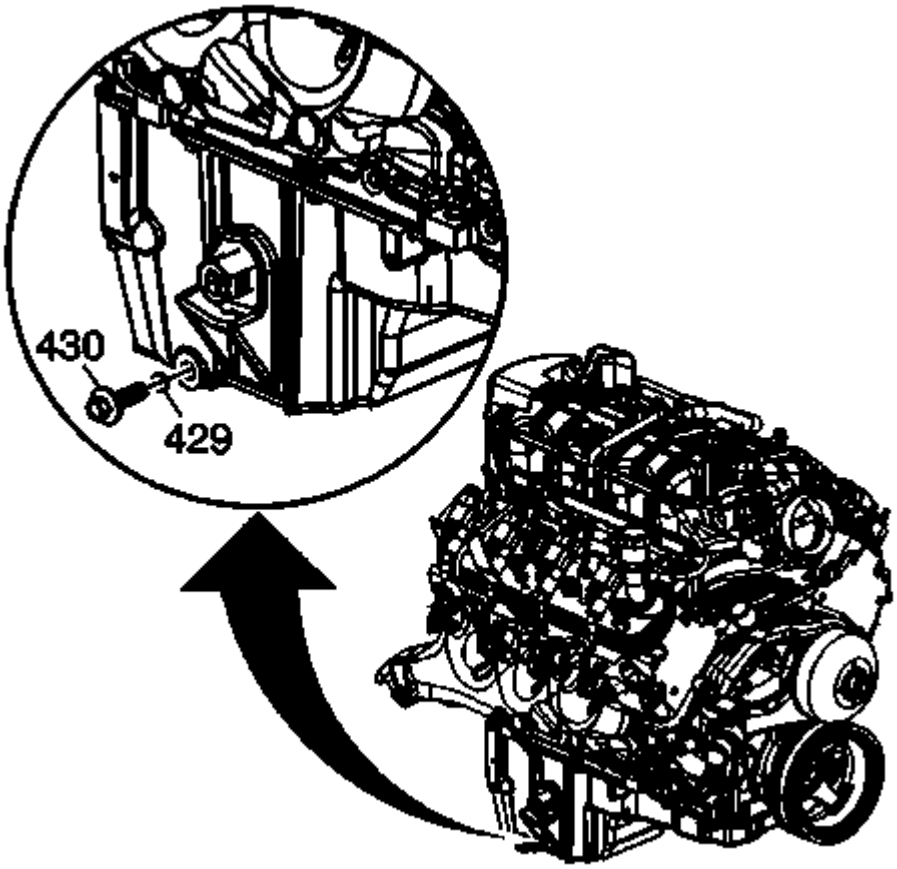

Fig. 356: View Of Oil Pan Drain Plug & Seal
Courtesy of GENERAL MOTORS COMPANY

5. Place a suitable drain pan under the oil pan drain plug.
6. Remove the oil pan drain plug (430).
7. Allow the oil pan to drain completely.
8. Re-install the oil pan drain plug until snug.

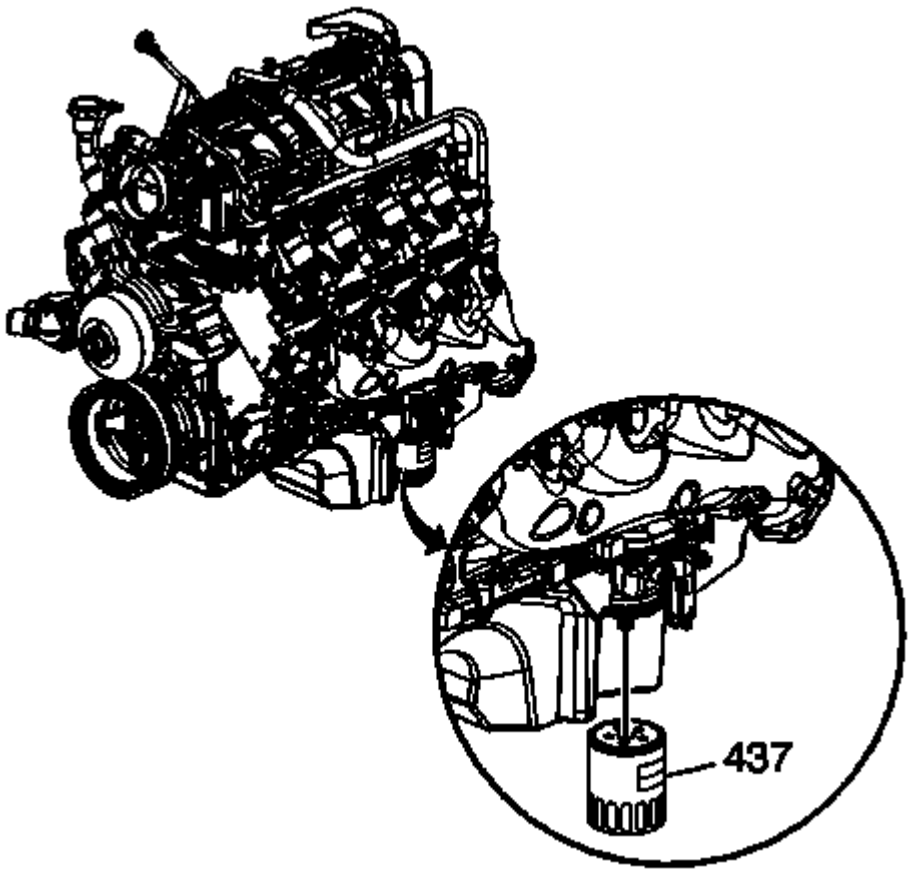

Fig. 357: View Of Engine Oil Filter
Courtesy of GENERAL MOTORS COMPANY

9. Place the drain pan under the oil filter.
10. Remove the oil filter (437).
11. Allow the oil to drain completely.
12. Re-install the oil filter until snug.

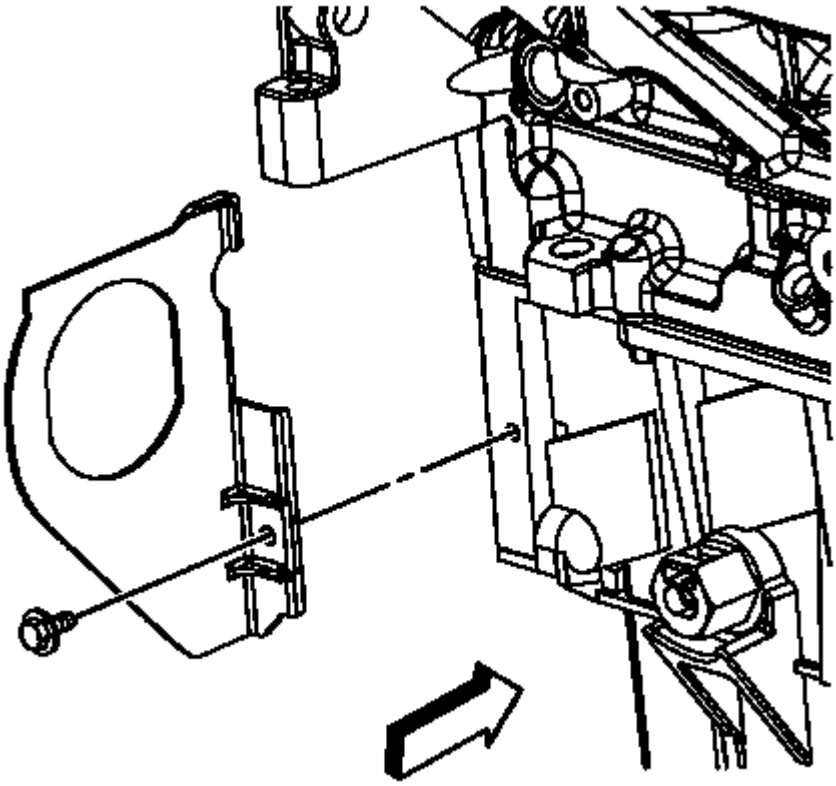

Fig. 358: View Of Right Side Transmission Cover Bolt
Courtesy of GENERAL MOTORS COMPANY

13. Remove the right side transmission cover bolt.

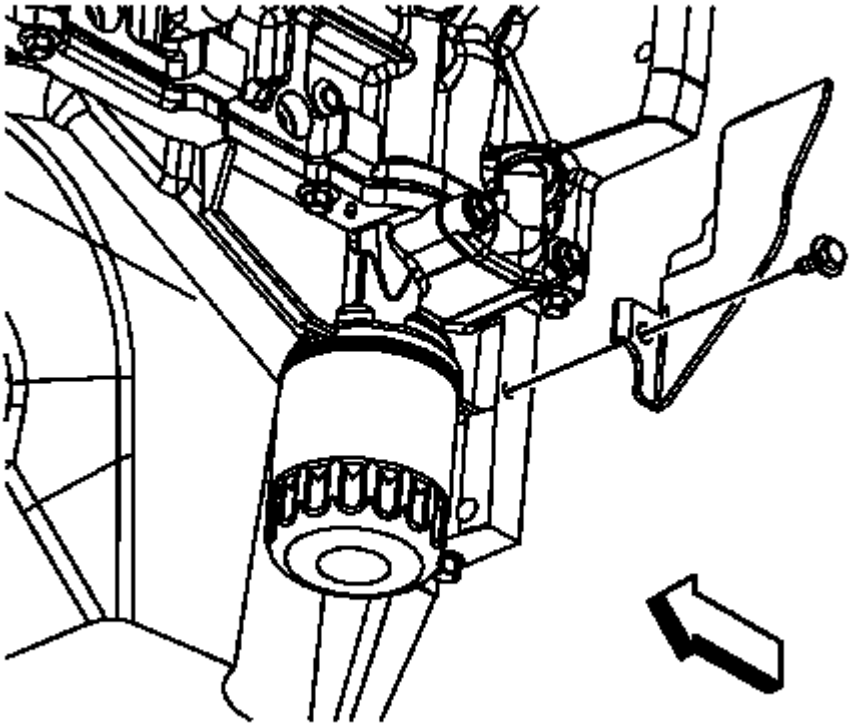

Fig. 359: View Of Left Side Transmission Cover Bolt
Courtesy of GENERAL MOTORS COMPANY

14. Remove the left side transmission cover bolt and cover.

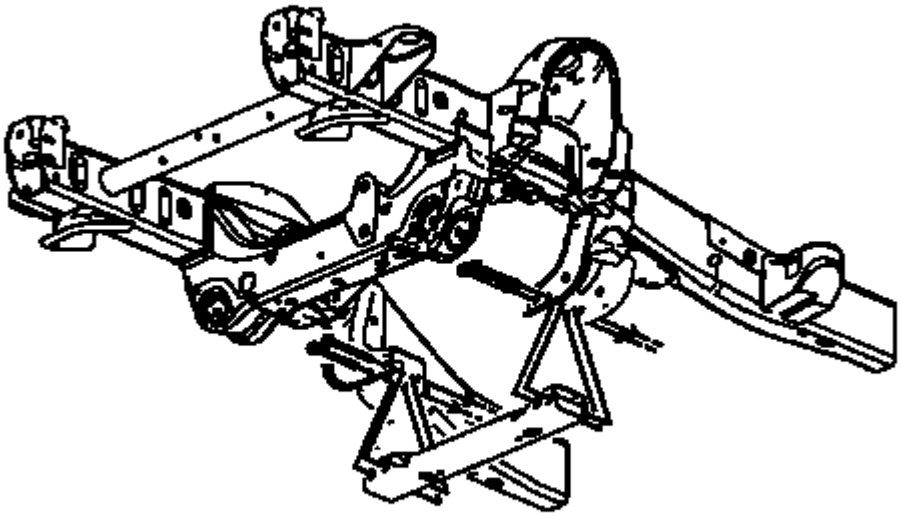

Fig. 360: View Of Vehicle Crossbar, Bolts & Nuts
Courtesy of GENERAL MOTORS COMPANY

15. For 1500 series vehicles, remove the crossbar bolts/nuts and crossbar.

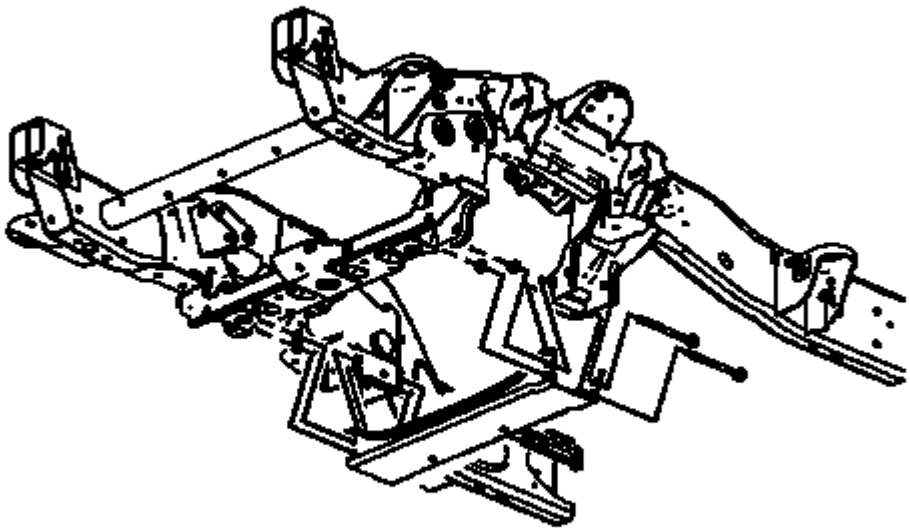

Fig. 361: View Of Vehicle Crossbar, Bolts & Nuts
Courtesy of GENERAL MOTORS COMPANY

16. For 2500 series vehicles, remove the crossbar bolts/nuts and crossbar.

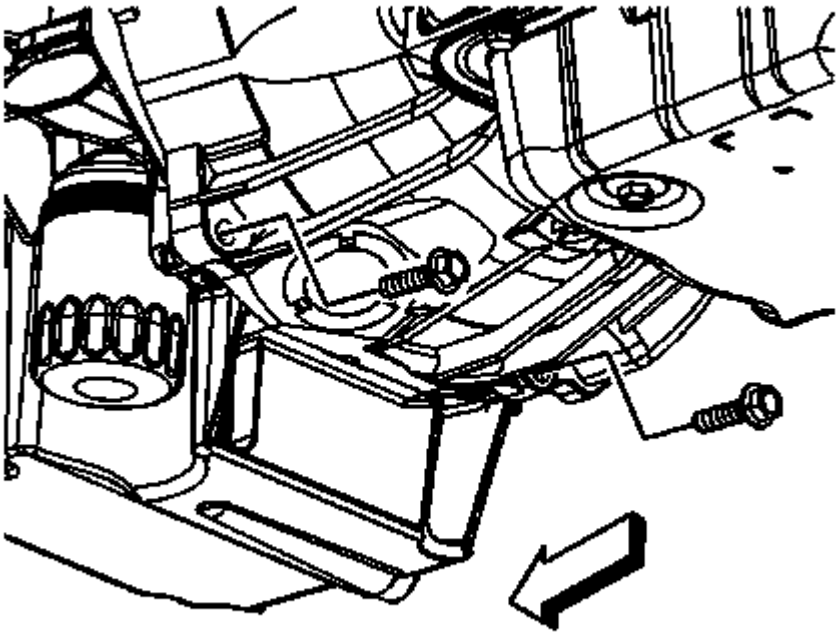

Fig. 362: View Of Lower Transmission Bolts
Courtesy of GENERAL MOTORS COMPANY

17. For vehicles with a 4L60-E/4L70-E automatic transmission, remove the 2 lower transmission bolts.

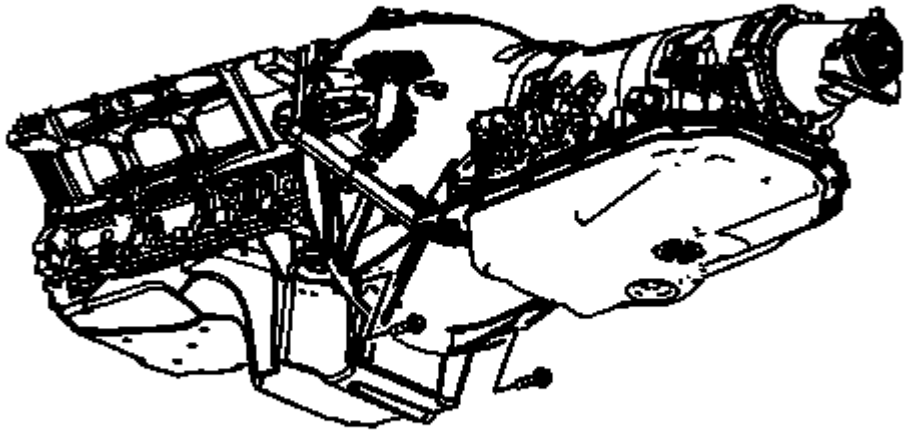

Fig. 363: View Of Lower Transmission Bolts
Courtesy of GENERAL MOTORS COMPANY

18. For vehicles with a 4L80-E automatic transmission, remove the 2 lower transmission bolts.

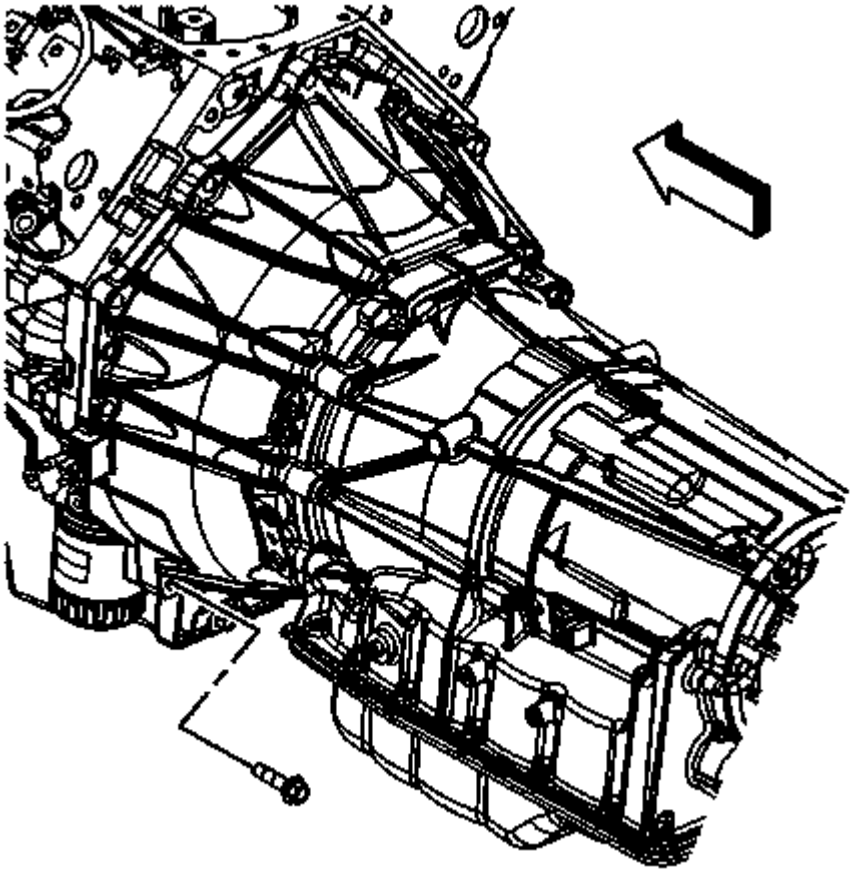

Fig. 364: View Of Lower Transmission Bolt
Courtesy of GENERAL MOTORS COMPANY

19. For vehicles with a 6L80-E automatic transmission, remove the lower left transmission bolt.

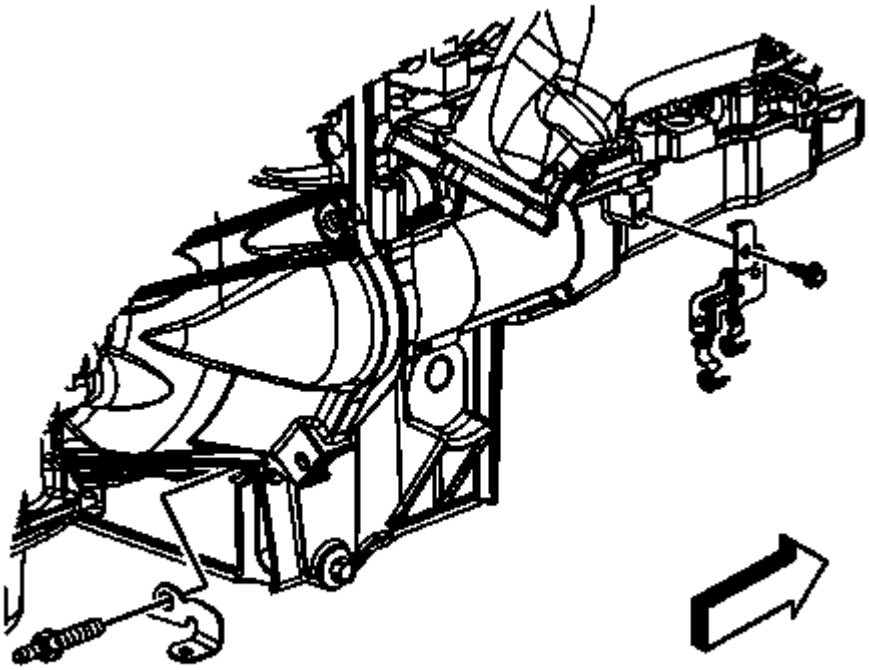

Fig. 365: View Of Lower Transmission Stud
Courtesy of GENERAL MOTORS COMPANY

20. For vehicles with a 6L80-E automatic transmission, remove the lower right transmission stud.

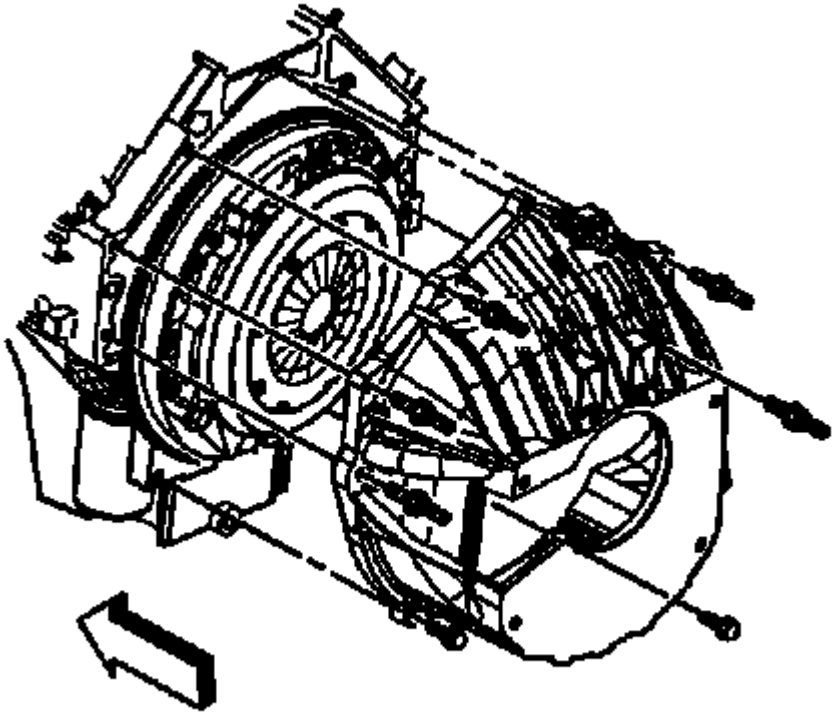

Fig. 366: Removing The Clutch Housing Bolts/Studs
Courtesy of GENERAL MOTORS COMPANY

21. For vehicles equipped with a manual transmission, remove the lower clutch housing to oil pan bolts.

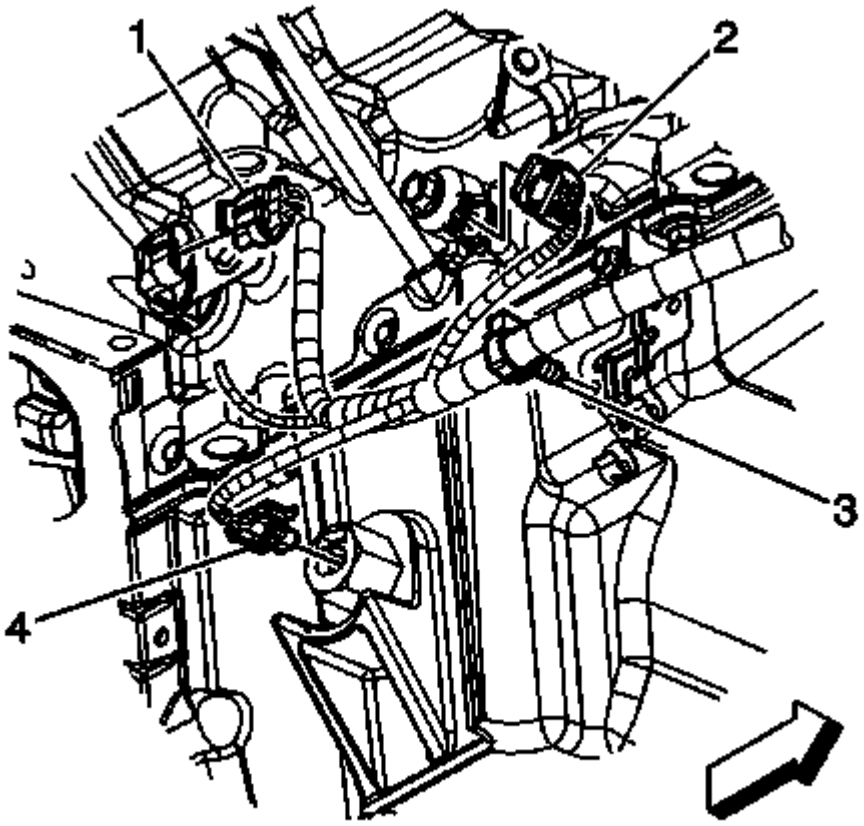

Fig. 367: View Of Engine Wiring Harness Electrical Connector & Components
Courtesy of GENERAL MOTORS COMPANY

22. Disconnect the engine harness electrical connector (4) from the oil level sensor.
23. Remove the engine harness clip (3) from the transmission oil cooler line bracket.

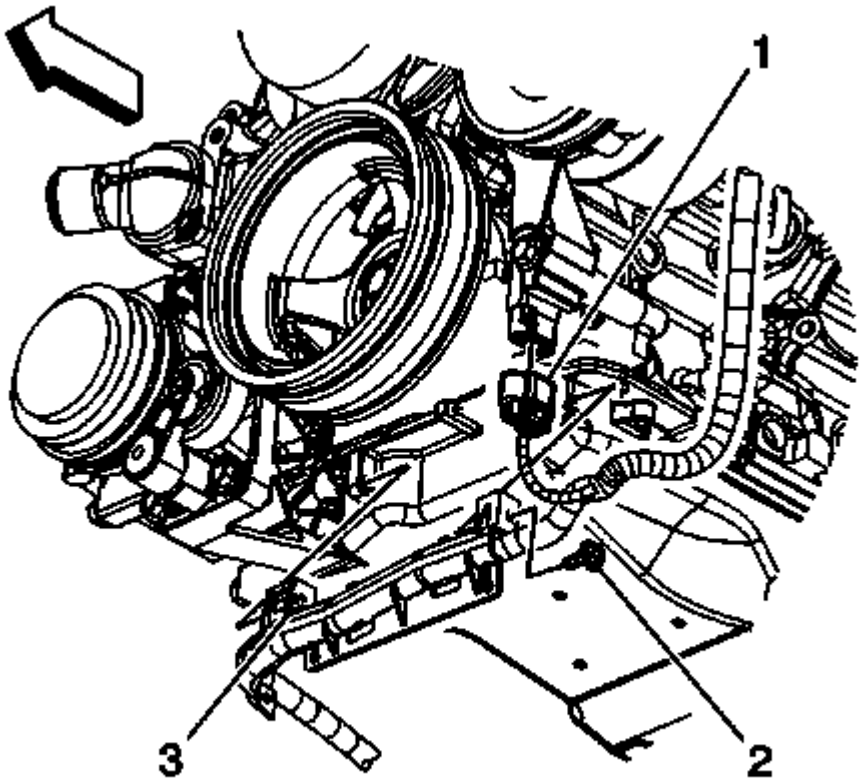

Fig. 368: View Of Electrical Connector, Cable Channel Bolt & Pin
Courtesy of GENERAL MOTORS COMPANY

24. Remove the battery cable channel bolt (2).
25. Slide the channel pin (3) out of the oil pan tab.

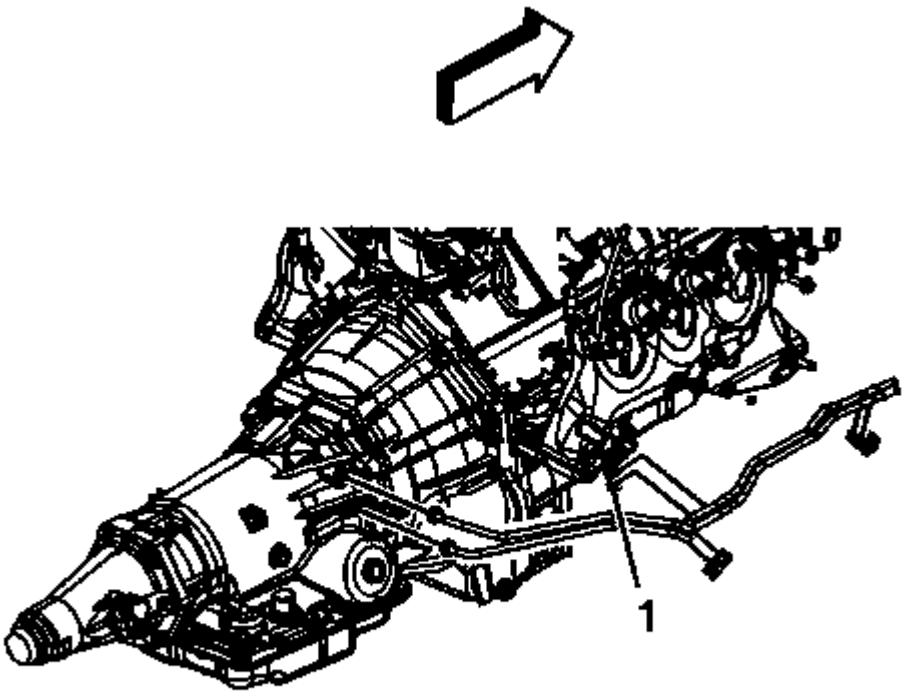

Fig. 369: View Of Oil Cooler Line Clip
Courtesy of GENERAL MOTORS COMPANY

26. For vehicles with a 4L60-E/4L70-E automatic transmission, remove the oil cooler lines from the clip (1), if equipped.

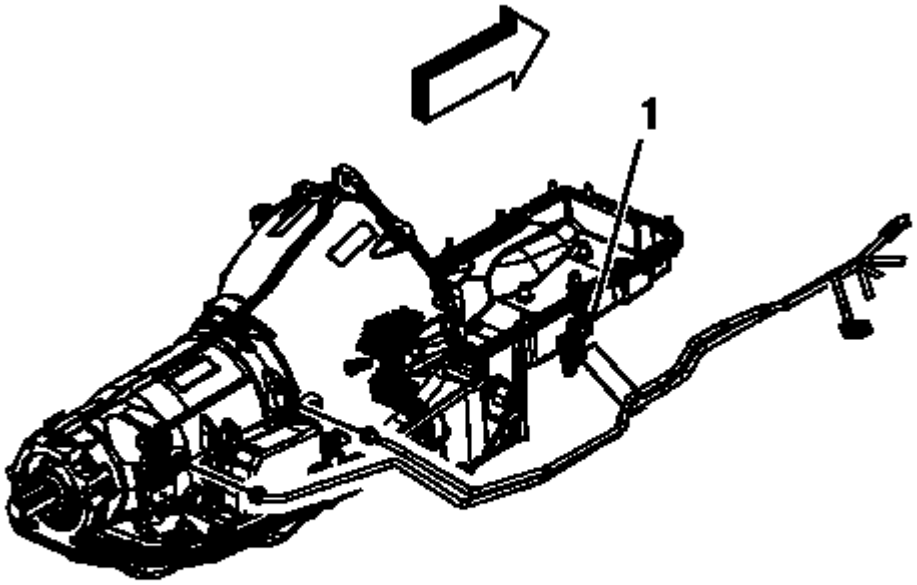

Fig. 370: View Of Oil Cooler Line Clip
Courtesy of GENERAL MOTORS COMPANY

27. For vehicles with a 4L80-E automatic transmission, remove the oil cooler lines from the clip (1), if equipped.

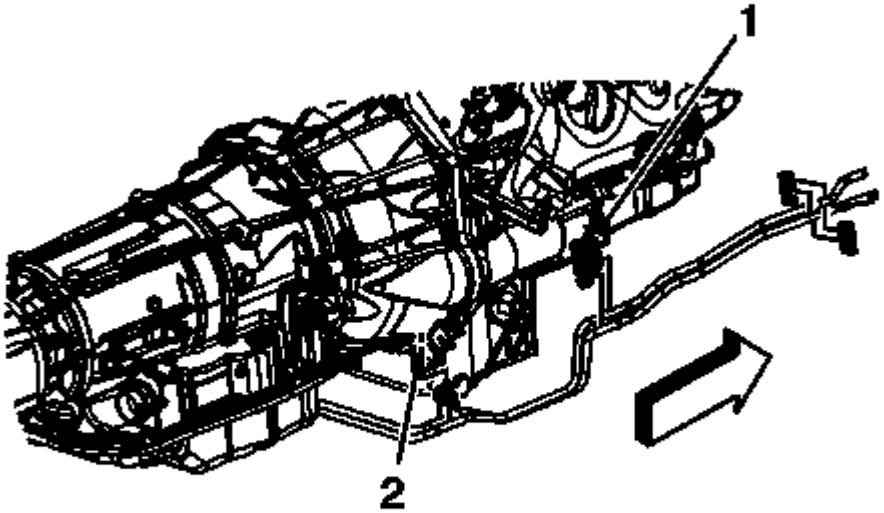

Fig. 371: View Of Oil Cooler Line Clip
Courtesy of GENERAL MOTORS COMPANY

28. For vehicles with a 6L80-E automatic transmission, remove the oil cooler lines from the clip (1).

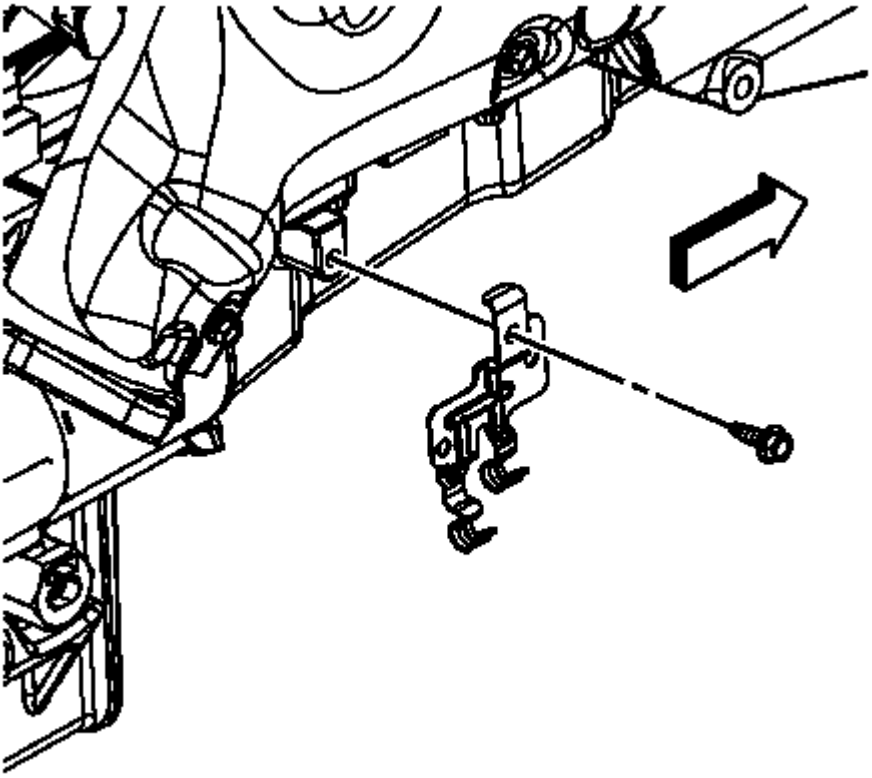

Fig. 372: View Of Oil Cooler Line Clip & Bolt
Courtesy of GENERAL MOTORS COMPANY

29. Remove the transmission oil cooler line clip bolt and clip from the oil pan.

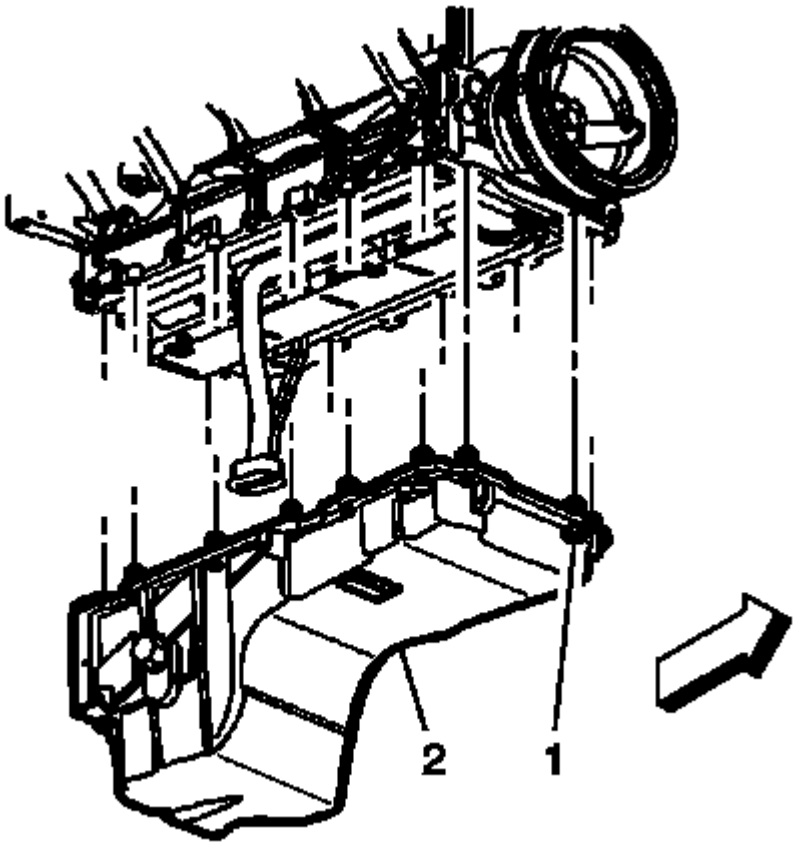

Fig. 373: View Of Oil Pan & Bolts
Courtesy of GENERAL MOTORS COMPANY

30. Remove the oil pan bolts.
31. Remove the oil pan.

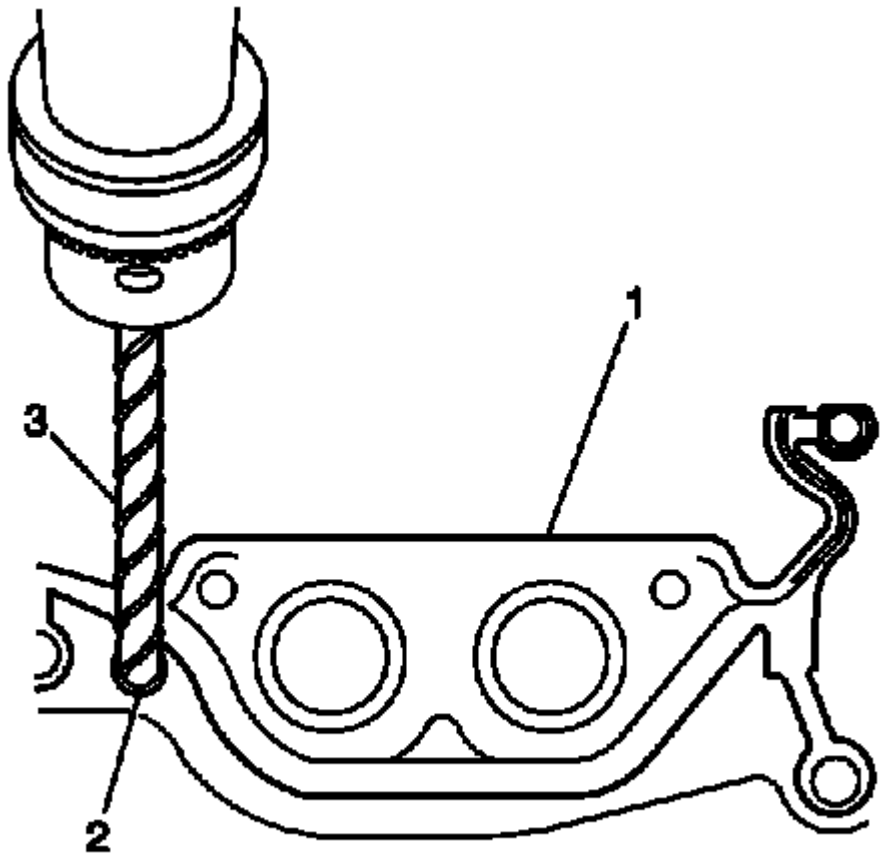

Fig. 374: Drilling Oil Pan Gasket Retaining Rivets
Courtesy of GENERAL MOTORS COMPANY

32. If reusing the oil pan perform the following steps, otherwise proceed to step 3 of the installation procedure.

NOTE: **DO NOT allow foreign material to enter the oil passages of the oil pan, cap or cover the openings as required.**

33. Drill out the oil pan gasket rivets (2), if necessary.
34. Remove the oil pan gasket (1) from the pan.
35. Discard the oil pan gasket.
36. Discard the rivets, if necessary.

Installation Procedure

NOTE:

- **The alignment of the structural oil pan is critical. The rear bolt hole locations of the oil pan provide mounting points for the transmission bellhousing. To ensure the rigidity of the powertrain and correct**

transmission alignment, it is important that the rear of the block and the rear of the oil pan must NEVER protrude beyond the engine block and transmission bellhousing plane.

- **Do not reuse the oil pan gasket.**
- **It is not necessary to rivet the NEW gasket to the oil pan.**

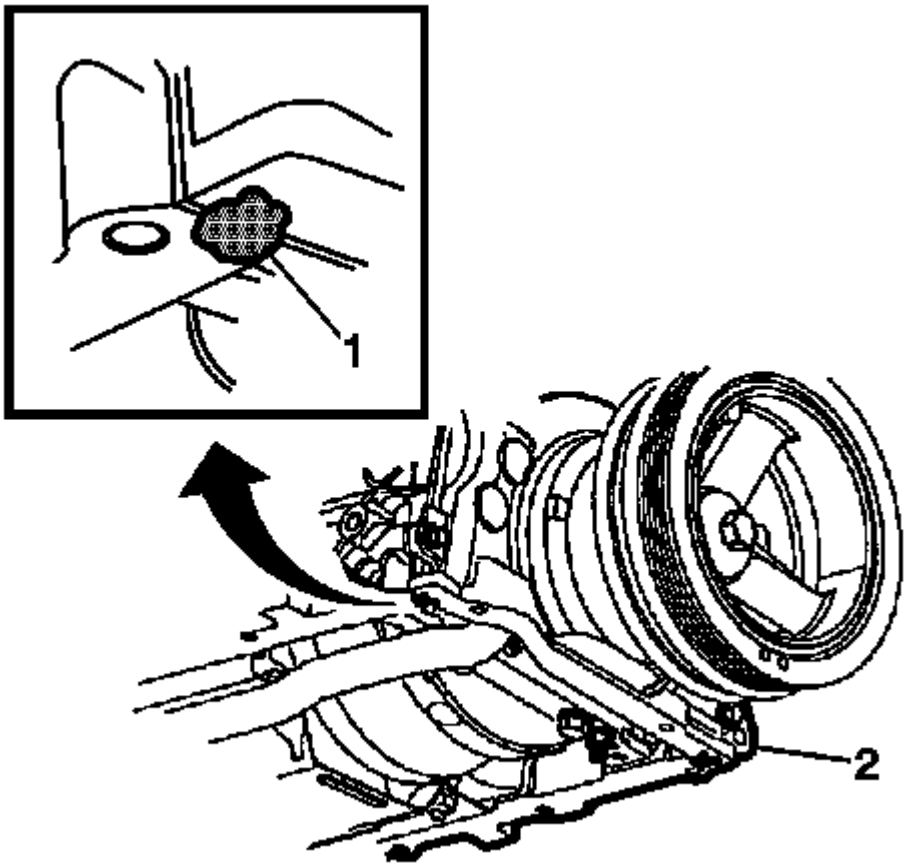

Fig. 375: View Of Sealant Applied To Front Oil Pan-To-Engine Block Junction
Courtesy of GENERAL MOTORS COMPANY

1. If reusing the oil pan perform the following step, otherwise proceed to step 3.

NOTE: **Be sure to align the oil gallery passages in the oil pan and engine block properly with the oil pan gasket.**

2. Place a NEW oil pan gasket onto the oil pan.
3. Apply a 5 mm (0.20 in) bead of sealant, 20 mm (0.80 in) long to the engine block. Apply the sealant directly onto the tabs of the front cover gasket that protrudes into the oil pan surface. Refer to **Adhesives, Fluids, Lubricants, and Sealers** .

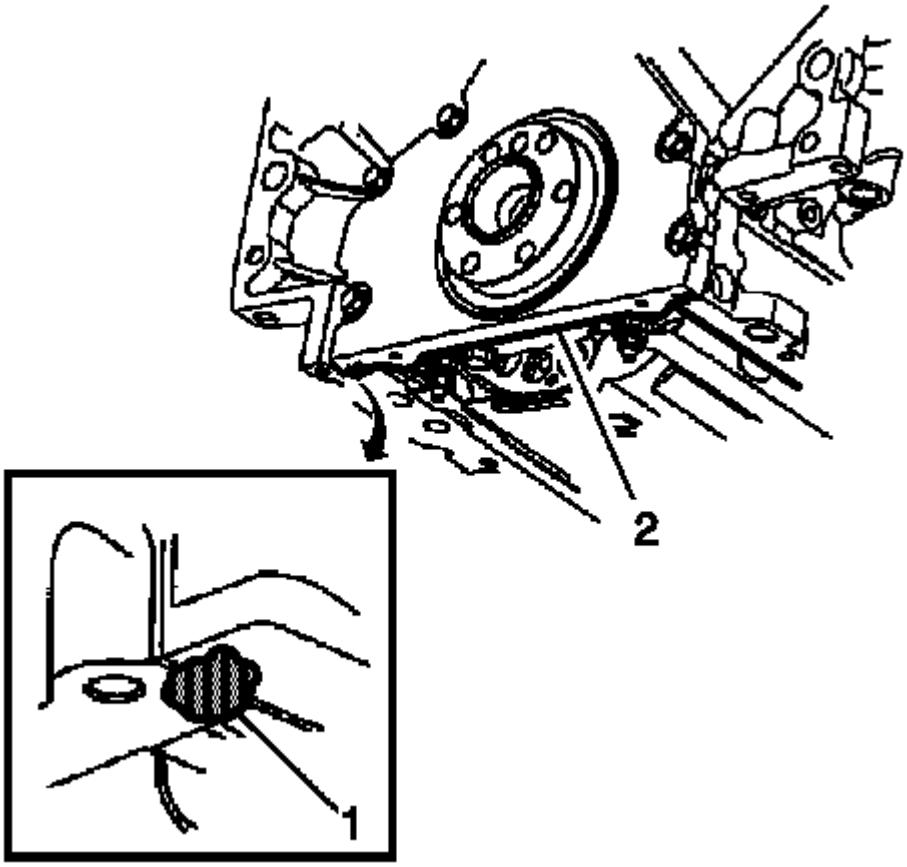

Fig. 376: View Of Sealant Applied To Rear Oil Pan-To-Engine Block Junction
Courtesy of GENERAL MOTORS COMPANY

4. Apply a 5 mm (0.20 in) bead of sealant, 20 mm (0.8 in) long to the engine block. Apply the sealant directly onto the tabs of the rear cover gasket that protrudes into the oil pan surface. Refer to **Adhesives, Fluids, Lubricants, and Sealers** .

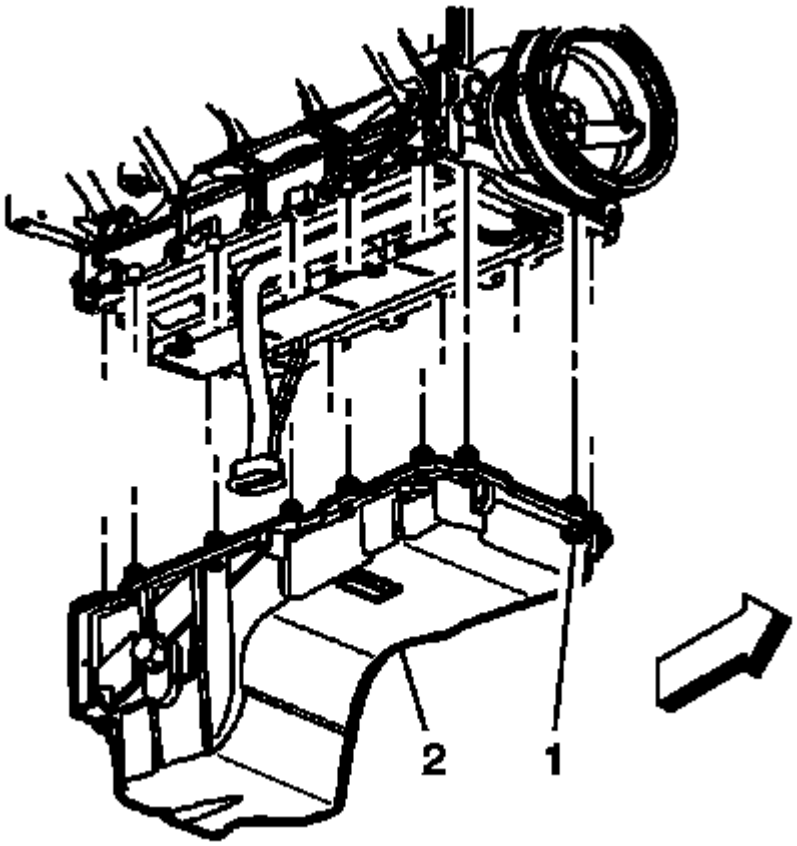

Fig. 377: View Of Oil Pan & Bolts
Courtesy of GENERAL MOTORS COMPANY

5. Install 1 oil pan bolt into a oil pan bolt hole and up through the gasket.
6. Position and install the oil pan and the rest of the oil pan bolts.
7. Tighten the oil pan bolts until snug.

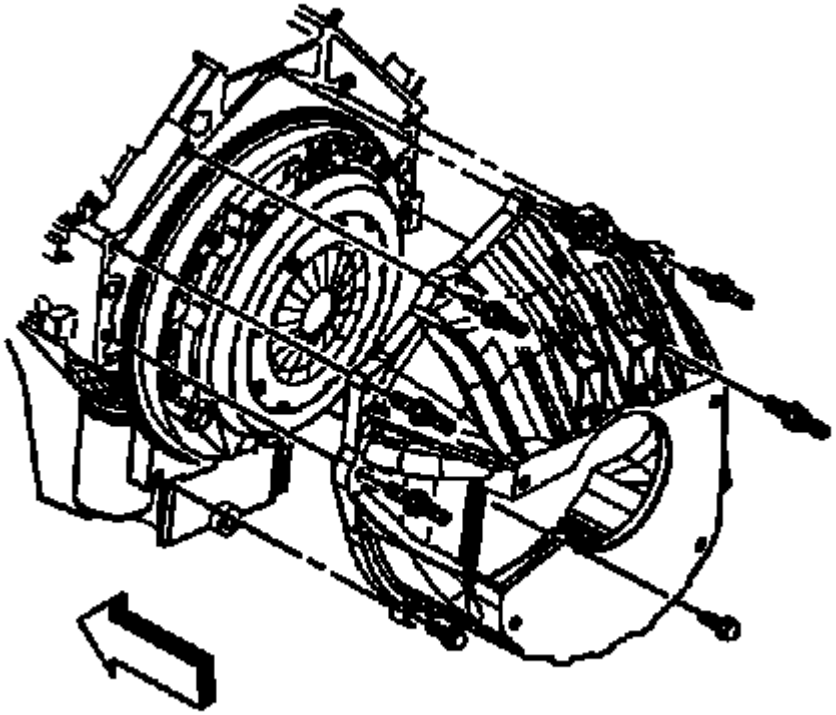

Fig. 378: Removing The Clutch Housing Bolts/Studs
Courtesy of GENERAL MOTORS COMPANY

8. For vehicles equipped with a manual transmission, install the lower clutch housing to oil pan bolts until snug.

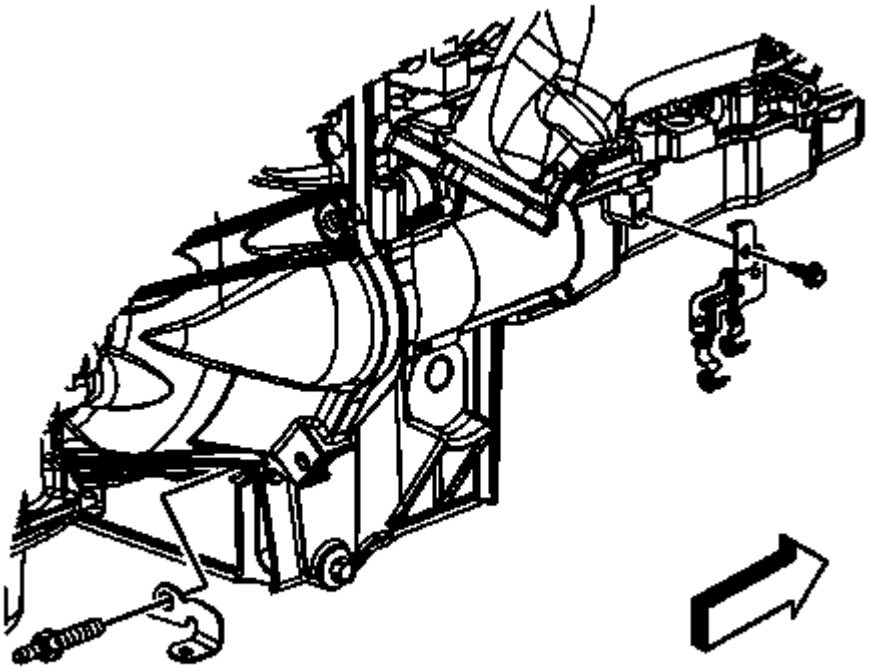

Fig. 379: View Of Lower Transmission Stud
Courtesy of GENERAL MOTORS COMPANY

9. For vehicles with a 6L80-E automatic transmission, position the oil cooler bracket and install the lower right transmission stud until snug.

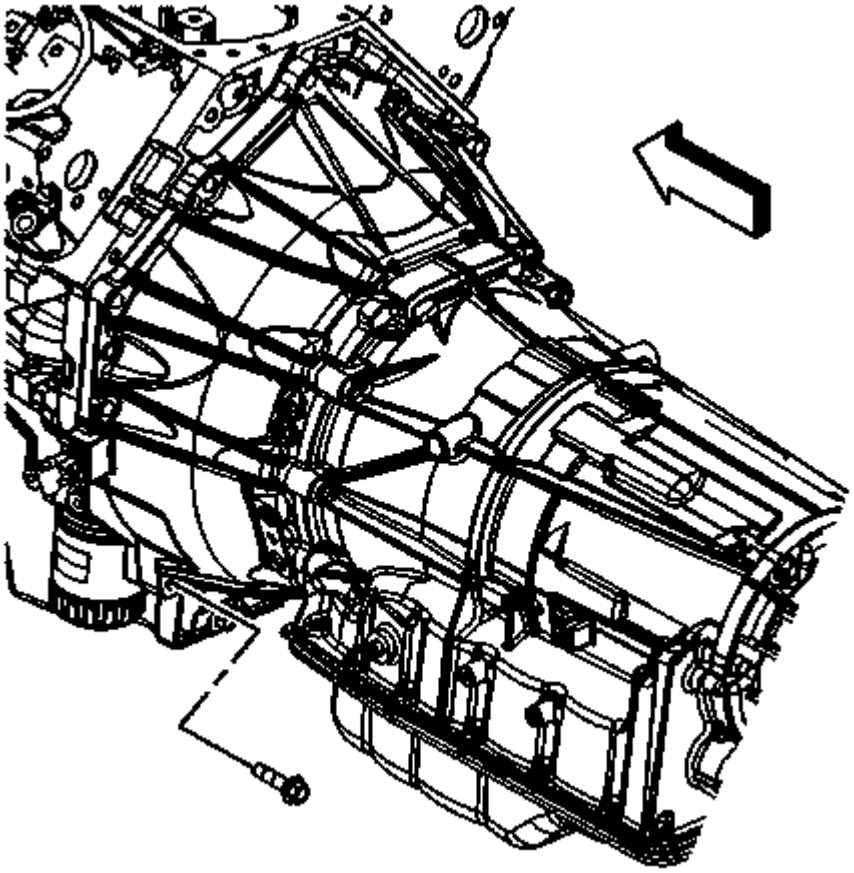

Fig. 380: View Of Lower Transmission Bolt
Courtesy of GENERAL MOTORS COMPANY

10. For vehicles with a 6L80-E automatic transmission, install the lower left transmission bolt until snug.

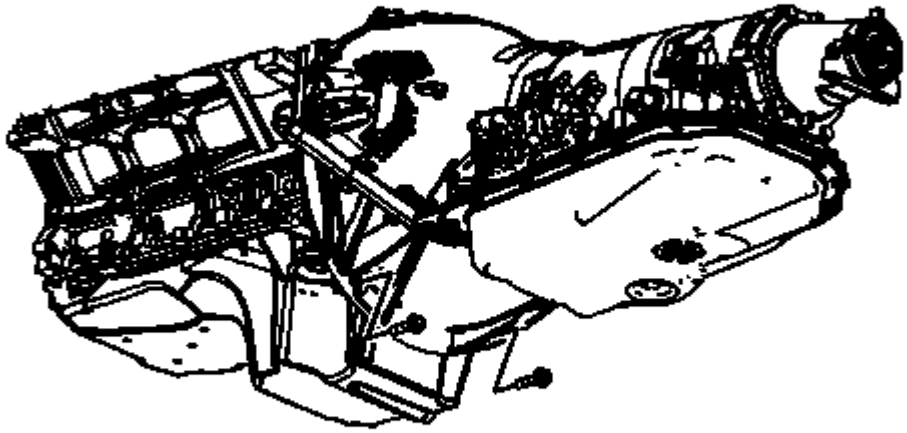

Fig. 381: View Of Lower Transmission Bolts
Courtesy of GENERAL MOTORS COMPANY

11. For vehicles with a 4L80-E automatic transmission, install the 2 lower transmission bolts until snug.

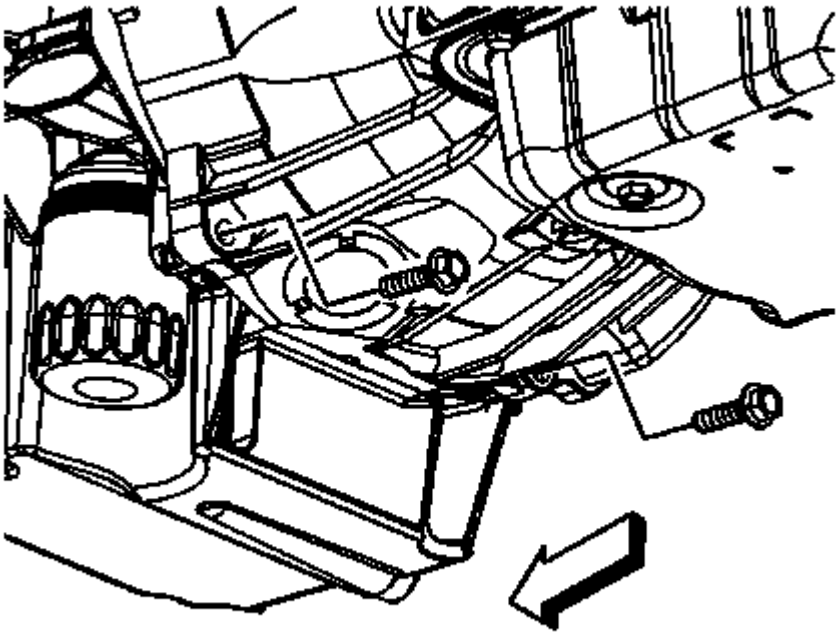

Fig. 382: View Of Lower Transmission Bolts
Courtesy of GENERAL MOTORS COMPANY

CAUTION: Refer to Fastener Caution .

12. For vehicles with a 4L60-E/4L70-E automatic transmission, install the 2 lower transmission bolts until snug.

Tighten

1. Tighten the oil pan and oil pan-to-oil pan front cover bolts to 25 N.m (18 lb ft).
2. Tighten the oil pan-to-rear cover bolts to 12 N.m (106 lb in).
3. Tighten the transmission bolts/stud to 50 N.m (37 lb ft).

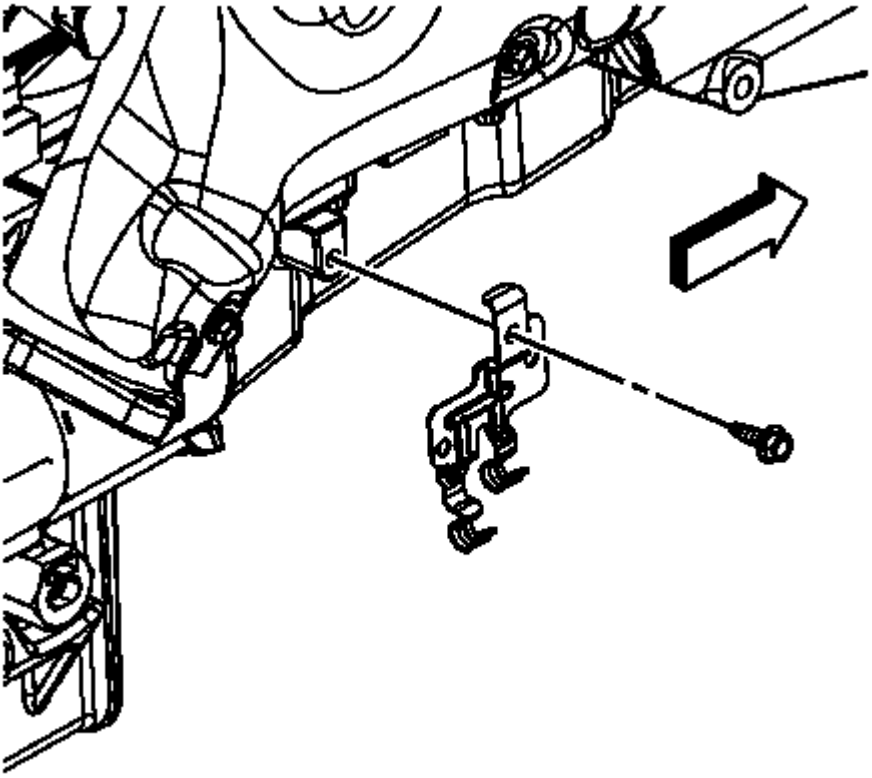

Fig. 383: View Of Oil Cooler Line Clip & Bolt
Courtesy of GENERAL MOTORS COMPANY

13. Position the transmission oil cooler line clip and install the bolt to the oil pan.

    Tighten

    Tighten the bolt to 9 N.m (80 lb in).

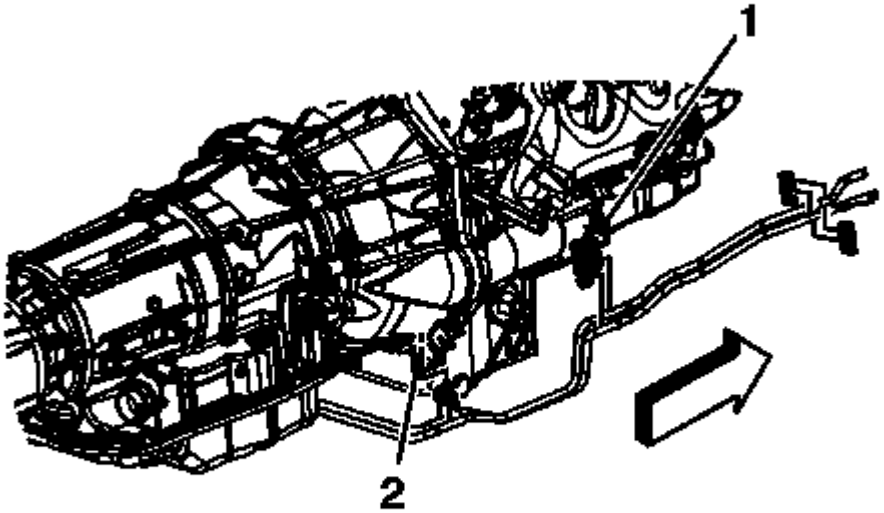

Fig. 384: View Of Oil Cooler Line Clip
Courtesy of GENERAL MOTORS COMPANY

14. For vehicles with a 6L80-E automatic transmission, install the oil cooler lines to the clip (1).

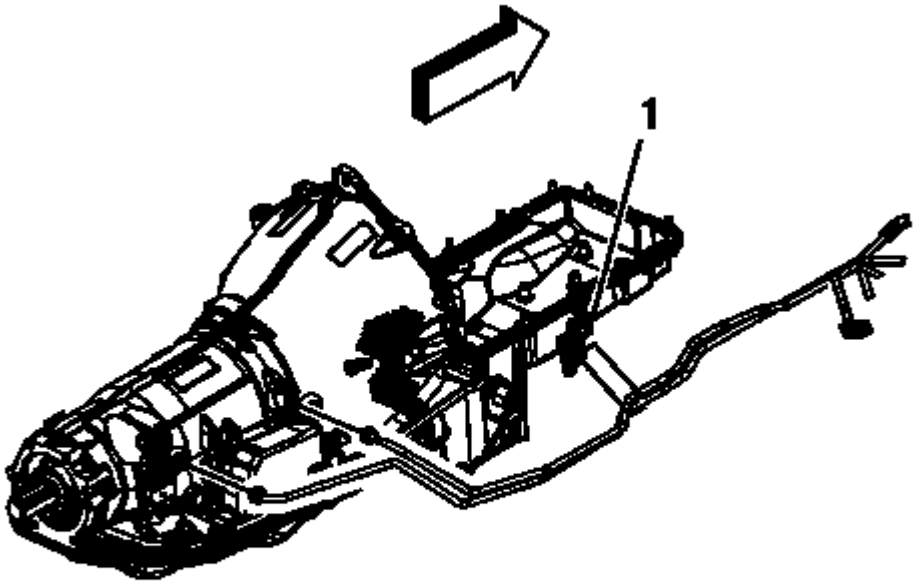

Fig. 385: View Of Oil Cooler Line Clip
Courtesy of GENERAL MOTORS COMPANY

15. For vehicles with a 4L80-E automatic transmission, install the oil cooler lines to the clip (1), if equipped.

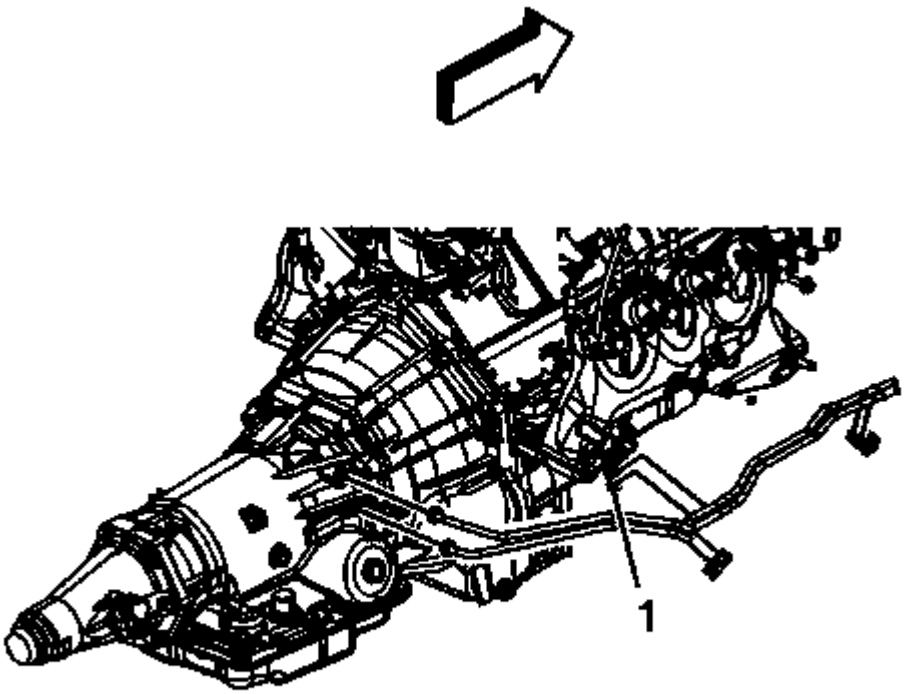

Fig. 386: View Of Oil Cooler Line Clip
Courtesy of GENERAL MOTORS COMPANY

16. For vehicles with a 4L60-E/4L70-E automatic transmission, install the oil cooler lines to the clip (1), if equipped.

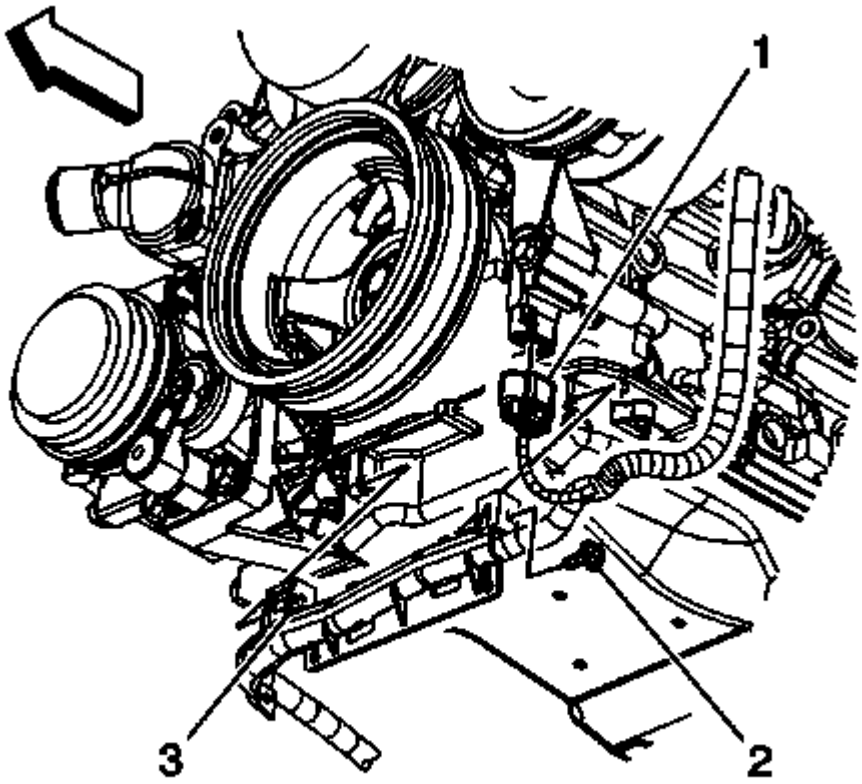

Fig. 387: View Of Electrical Connector, Cable Channel Bolt & Pin
Courtesy of GENERAL MOTORS COMPANY

17. Position the channel and slide the channel pin (3) into the oil pan tab.
18. Install the battery cable channel bolt (2).

Tighten

Tighten the bolt to 12 N.m (106 lb in).

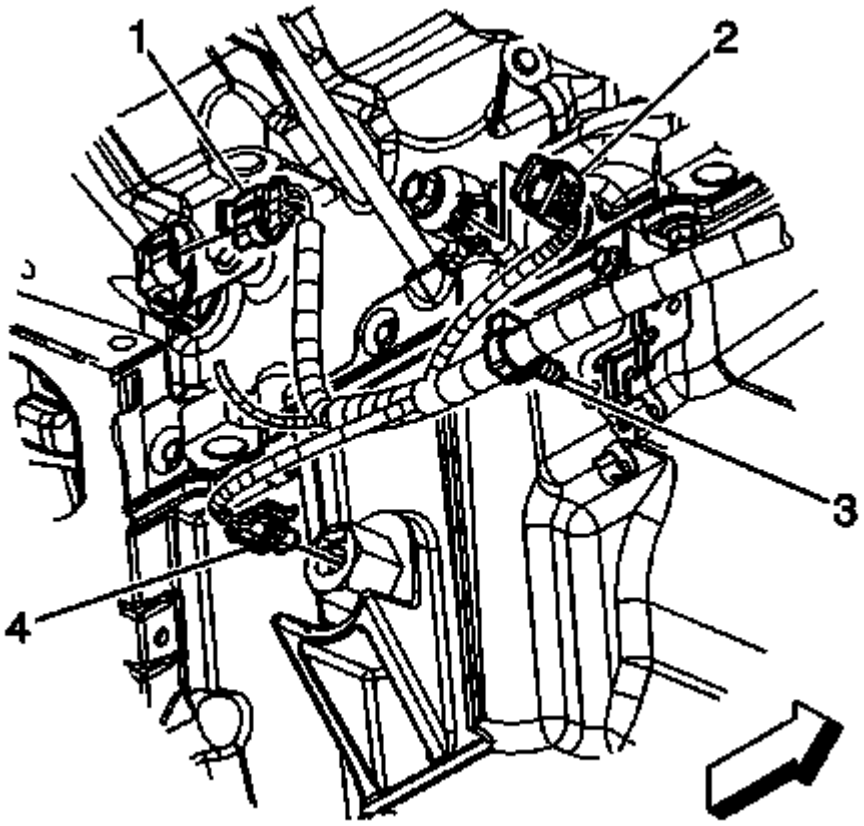

Fig. 388: View Of Engine Wiring Harness Electrical Connector & Components
Courtesy of GENERAL MOTORS COMPANY

19. Connect the engine harness electrical connector (4) to the oil level sensor.
20. Install the engine harness clip (3) to the transmission oil cooler line bracket.

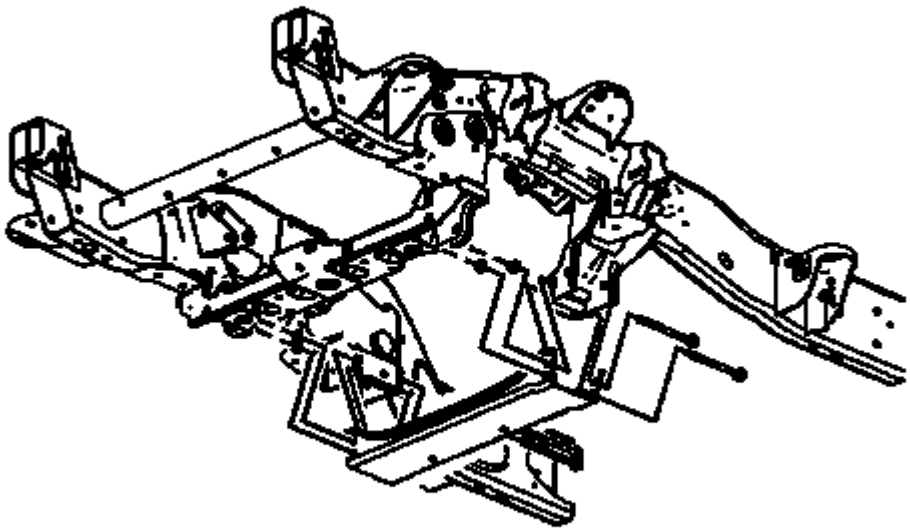

Fig. 389: View Of Vehicle Crossbar, Bolts & Nuts
Courtesy of GENERAL MOTORS COMPANY

21. For both the 1500 and 2500 series, perform the following steps prior to installing the crossbar bolts.
    1. Remove all traces of the original adhesive patch.
    2. Clean the threads of the bolts with denatured alcohol or equivalent and allow to dry.
    3. Apply threadlock GM P/N 12345493 (Canadian P/N 10953488) or equivalent to the bolt threads.
22. For 2500 series vehicles, install the crossbar and crossbar bolts/nuts.

Tighten

Tighten the nuts to 120 N.m (89 lb ft).

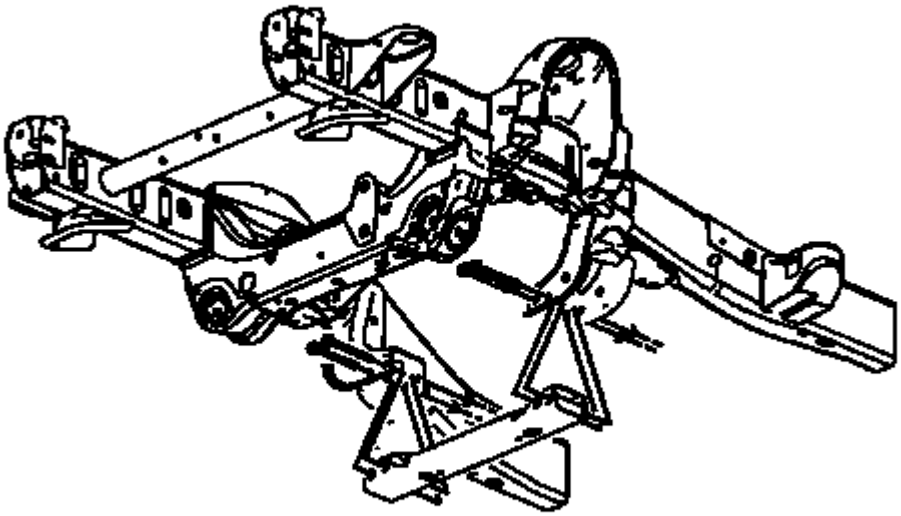

Fig. 390: View Of Vehicle Crossbar, Bolts & Nuts
Courtesy of GENERAL MOTORS COMPANY

23. For 1500 series vehicles, install the crossbar and crossbar bolts/nuts.

    Tighten

    Tighten the nuts to 100 N.m (74 lb ft).

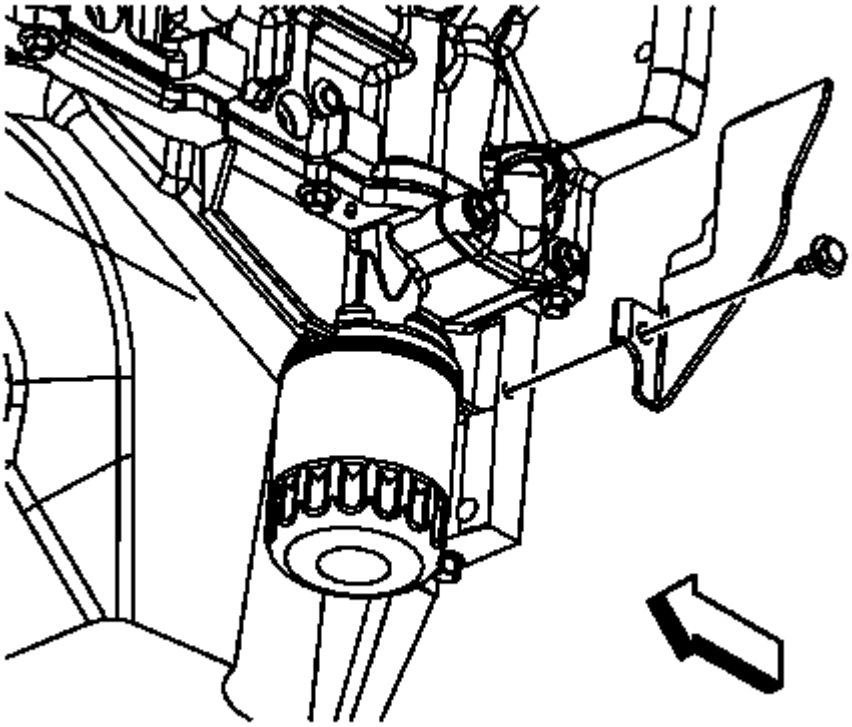

Fig. 391: View Of Left Side Transmission Cover Bolt
Courtesy of GENERAL MOTORS COMPANY

24. Position the left side transmission cover and install the cover bolt.

    Tighten

    Tighten the bolt to 12 N.m (106 lb in).

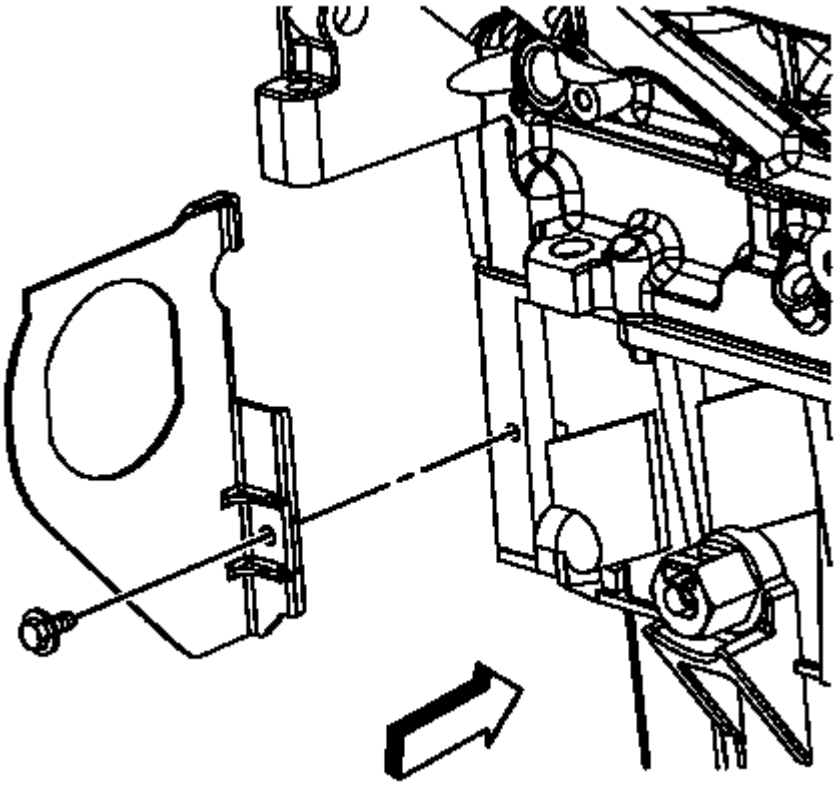

Fig. 392: View Of Right Side Transmission Cover Bolt
Courtesy of GENERAL MOTORS COMPANY

25. Install the right side transmission cover bolt.

    Tighten

    Tighten the bolt to 12 N.m (106 lb in).

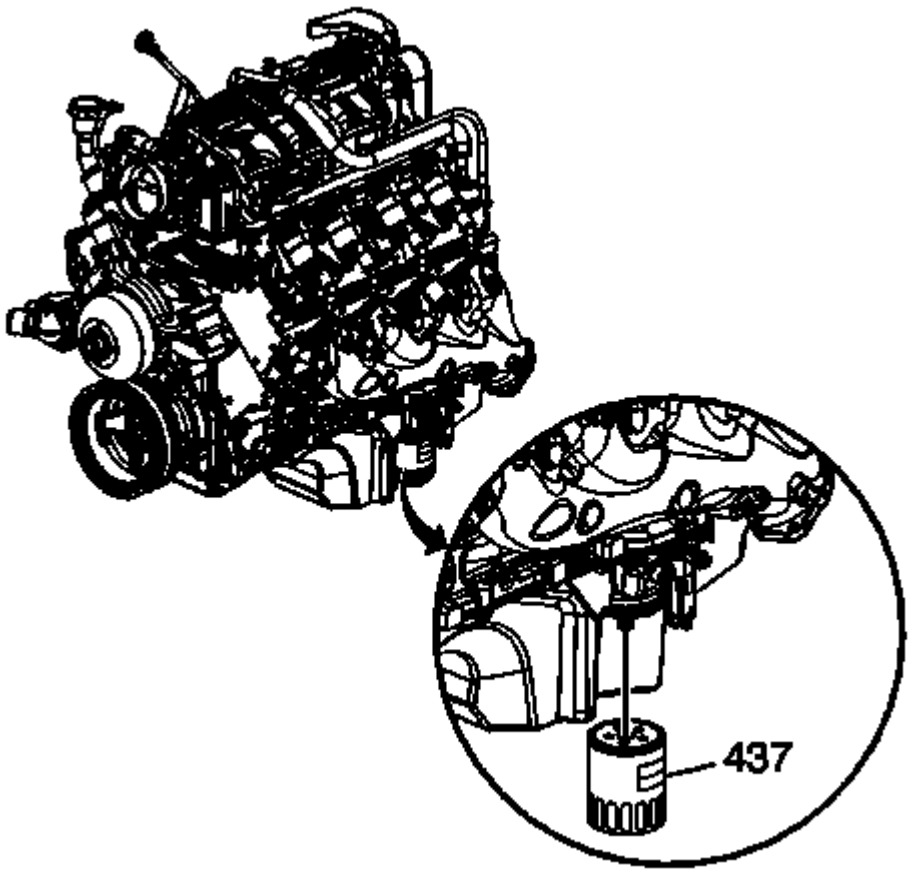

Fig. 393: View Of Engine Oil Filter
Courtesy of GENERAL MOTORS COMPANY

26. If reusing the old oil pan remove the old oil filter and install a NEW oil filter.
27. Lubricate the NEW oil filter seal with clean engine oil.
28. Install the NEW oil filter (437).

Tighten

Tighten the oil filter to 30 N.m (22 lb ft).

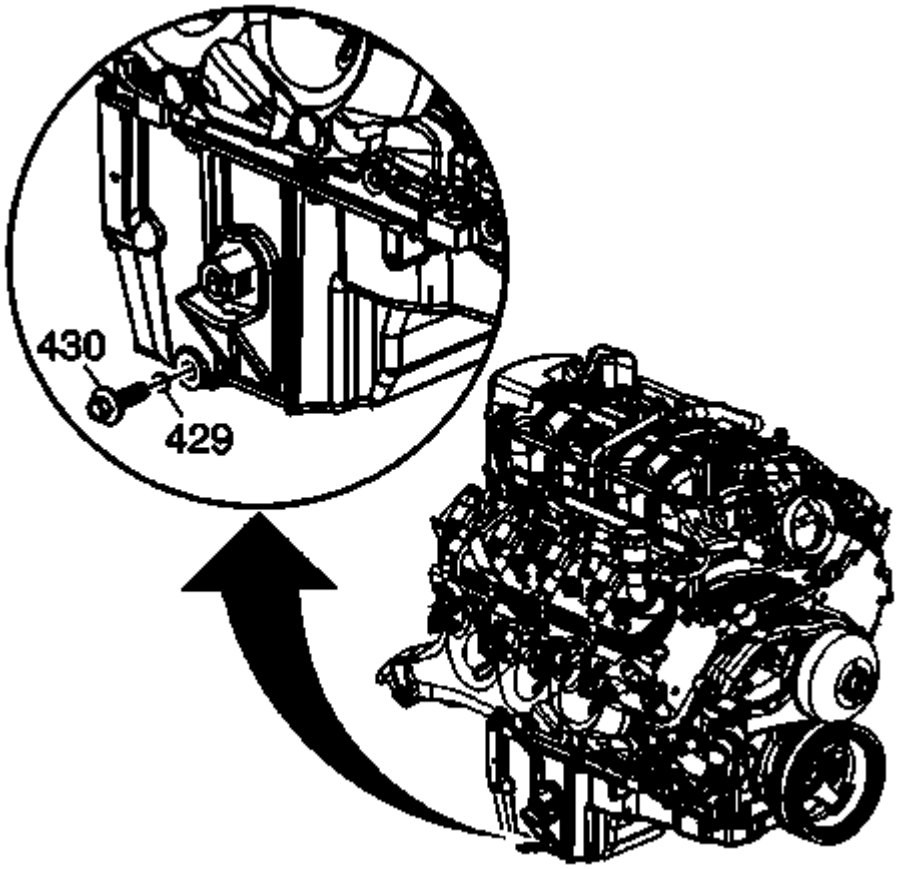

Fig. 394: View Of Oil Pan Drain Plug & Seal
Courtesy of GENERAL MOTORS COMPANY

29. Ensure that the oil pan drain plug (430) is tight.

    Tighten

    Tighten the drain plug to 25 N.m (18 lb ft).

30. Raise the steering rack in place and install the steering rack bolts.

    Tighten

    - Tighten the left side steering rack bolts to 200 N.m (148 lb ft).
    - Tighten the right side steering rack bolts to 100 N.m (74 lb ft).

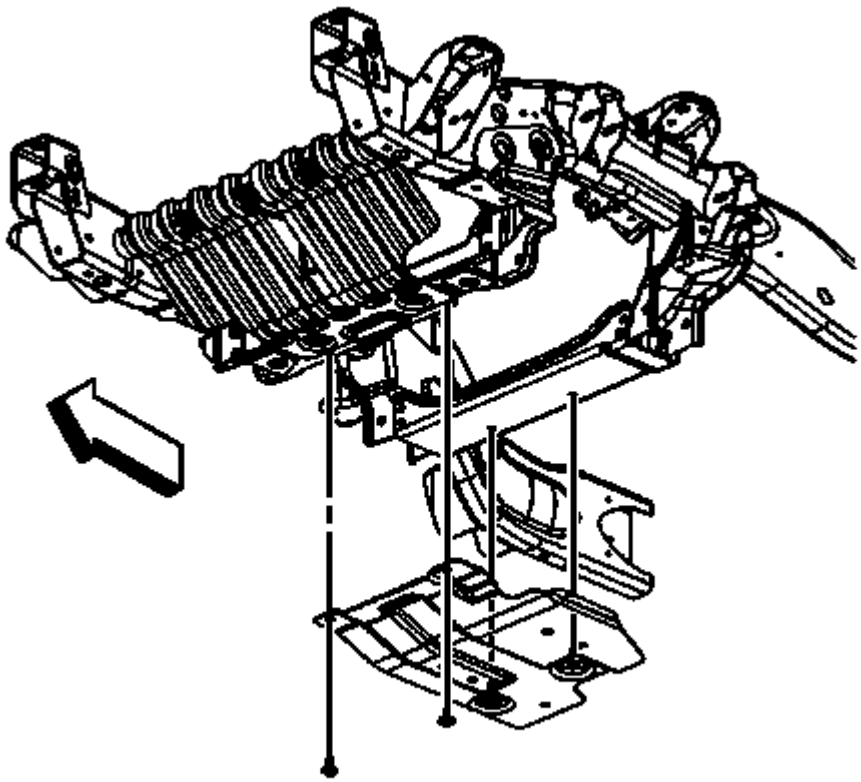

Fig. 395: View Of Oil Pan Skid Plate & Bolts
Courtesy of GENERAL MOTORS COMPANY

31. For 2500 series vehicles, position the oil pan skid plate and tighten until snug the 2 rear oil pan skid plate bolts, install the 2 front oil pan skid plate bolts, if equipped.

Tighten

Tighten the bolts to 28 N.m (21 lb ft).

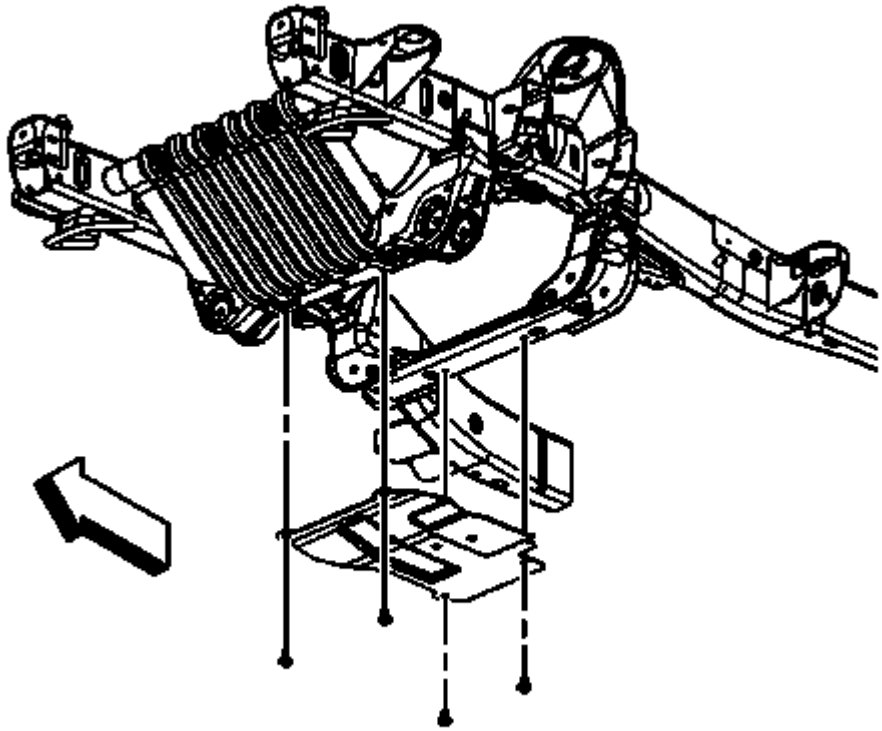

Fig. 396: View Of Oil Pan Skid Plate & Bolts
Courtesy of GENERAL MOTORS COMPANY

32. For 1500 series vehicles, position the oil pan skid plate and install the oil pan skid plate bolts, if equipped.

    Tighten

    Tighten the bolts to 28 N.m (21 lb ft).

33. Lower the vehicle.
34. Fill the engine with NEW engine oil. Refer to **Fluid and Lubricant Recommendations** , and **Approximate Fluid Capacities** .
35. Start the engine and inspect for leaks.

OIL PRESSURE RELIEF VALVE REPLACEMENT

Removal Procedure

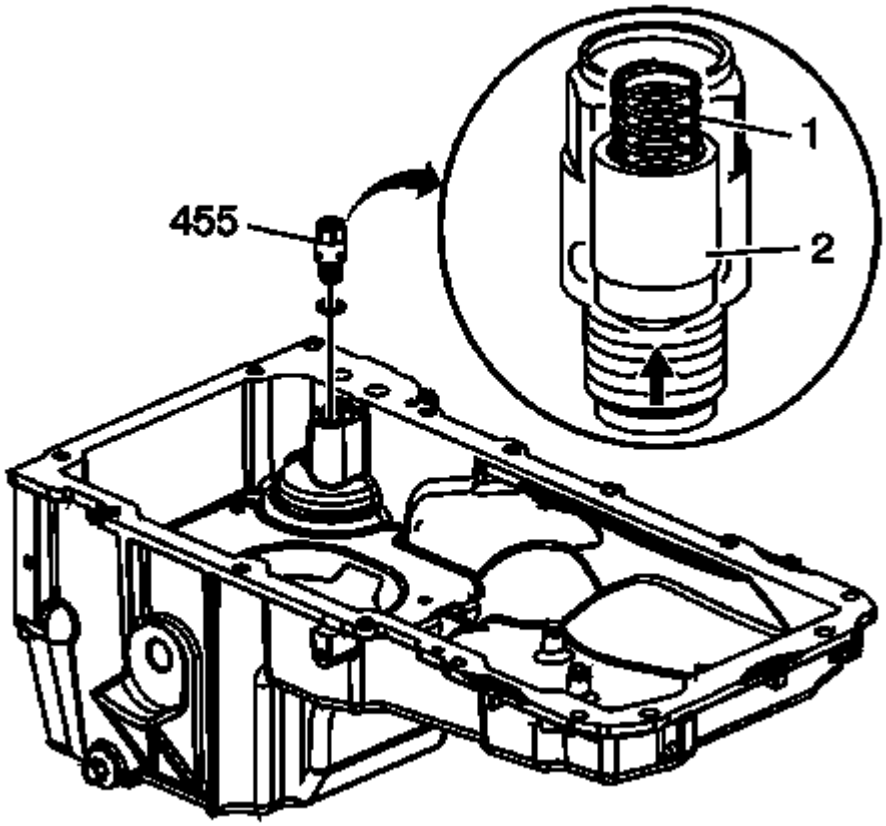

Fig. 397: View Of Oil Pressure Relief Valve Components
Courtesy of GENERAL MOTORS COMPANY

1. Remove the oil pan. Refer to **Oil Pan Replacement (4WD)**, **Oil Pan Replacement (2WD)**.
2. Place the oil pan on a clean work surface.
3. Remove the oil pressure relief valve (455) and washer.

Installation Procedure

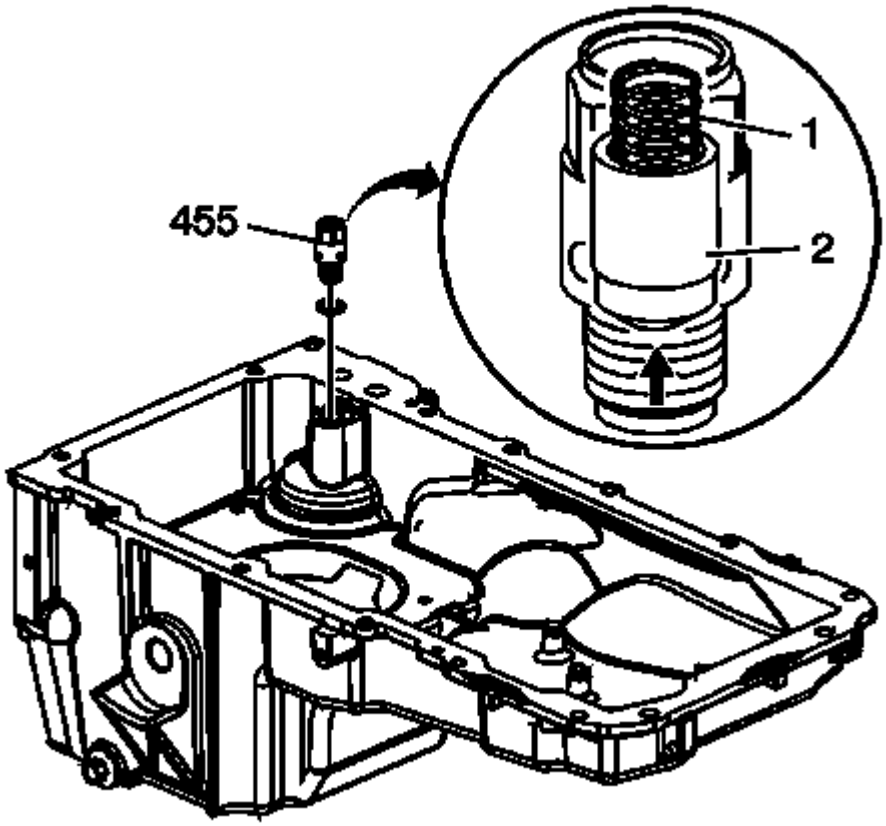

Fig. 398: View Of Oil Pressure Relief Valve Components
Courtesy of GENERAL MOTORS COMPANY

1. Inspect the NEW oil pressure relief valve for proper operation. Lightly depress the ball (2). The valve spring (1) should seat the ball to the proper closed position.
2. Install the NEW oil pressure relief valve (455) and washer.
3. Install the oil pan. Refer to **Oil Pan Replacement (4WD)**, **Oil Pan Replacement (2WD)**.

ENGINE OIL PRESSURE SENSOR AND/OR SWITCH REPLACEMENT

Special Tools

J 41712 Oil Pressure Switch Socket

Removal Procedure

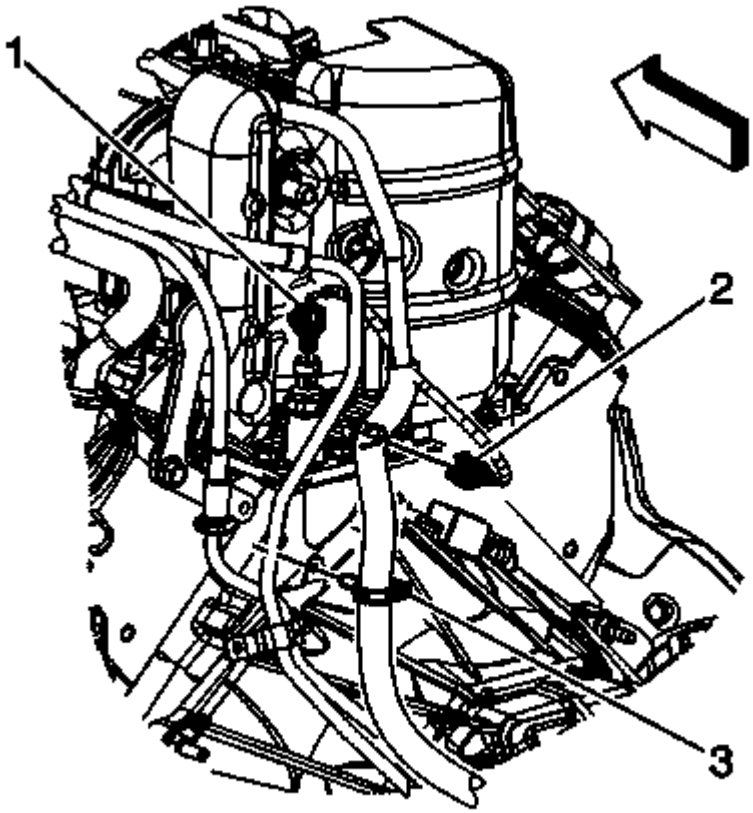

Fig. 399: View Of Engine Harness Electrical Connectors & Inlet Hose Clamp
Courtesy of GENERAL MOTORS COMPANY

1. Remove the intake manifold. Refer to **Intake Manifold Replacement (RPOs LC9, LMG, LY5, L76)**, **Intake Manifold Replacement (RPOs LY2, LY6)**, **Intake Manifold Replacement (Except RPOs LY2, LY6, LC9, LMG, LY5)**.
2. Disconnect the engine harness electrical connector (1) from the oil pressure sensor.

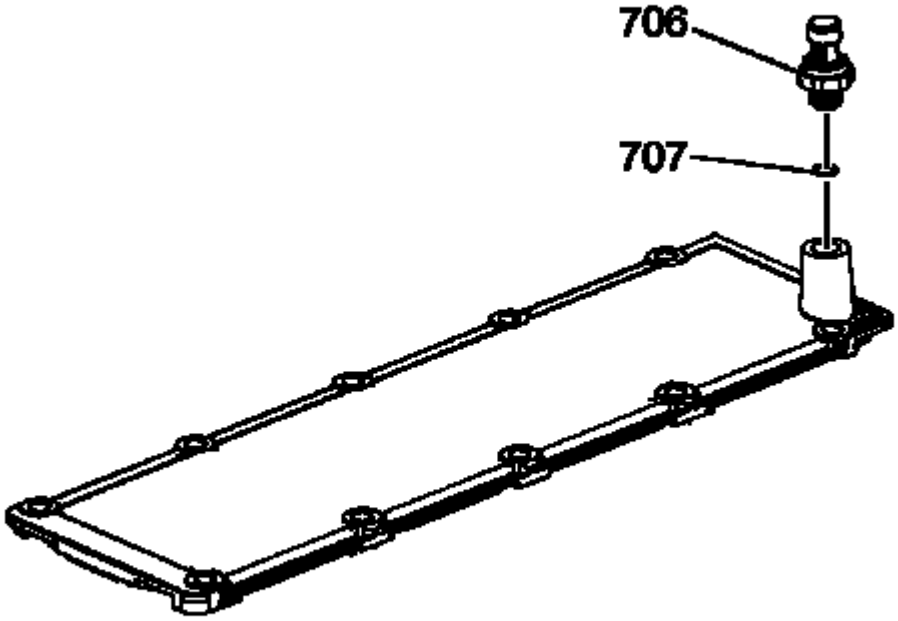

Fig. 400: Removing/Installing Oil Pressure Sensor & Washer
Courtesy of GENERAL MOTORS COMPANY

3. If not equipped with active fuel management perform the following step, using **J 41712** oil pressure switch socket or equivalent, remove the oil pressure sensor (706) and washer (707).

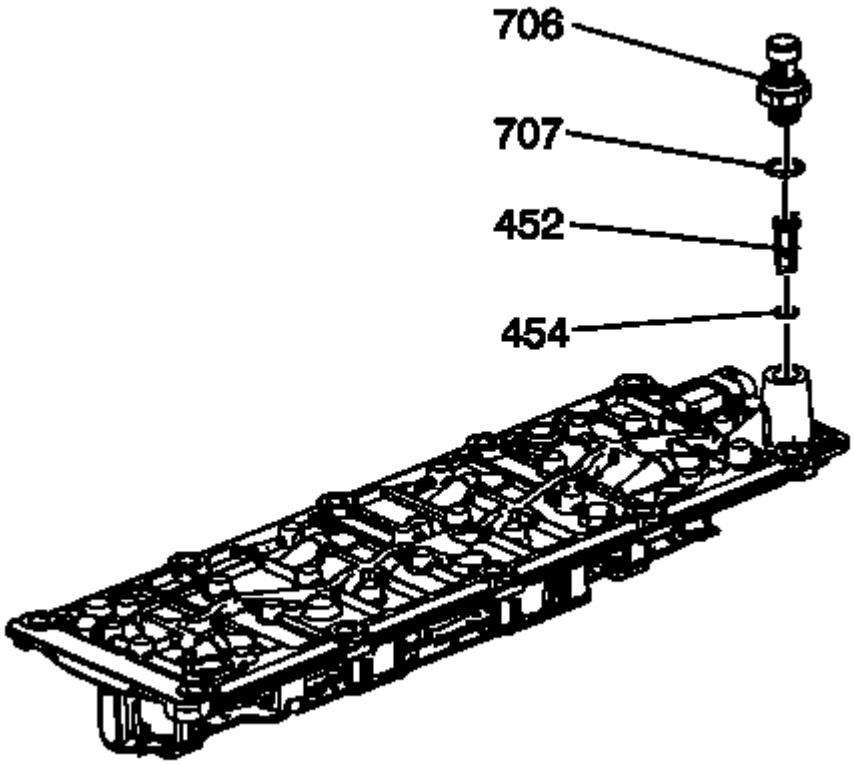

Fig. 401: View Of Oil Pressure Sensor, Washer And Valve Lifter Oil Filter
Courtesy of GENERAL MOTORS COMPANY

4. If equipped with active fuel management perform the following step, using **J 41712** oil pressure switch socket or equivalent, remove the oil pressure sensor (706) and washer (707).

Installation Procedure

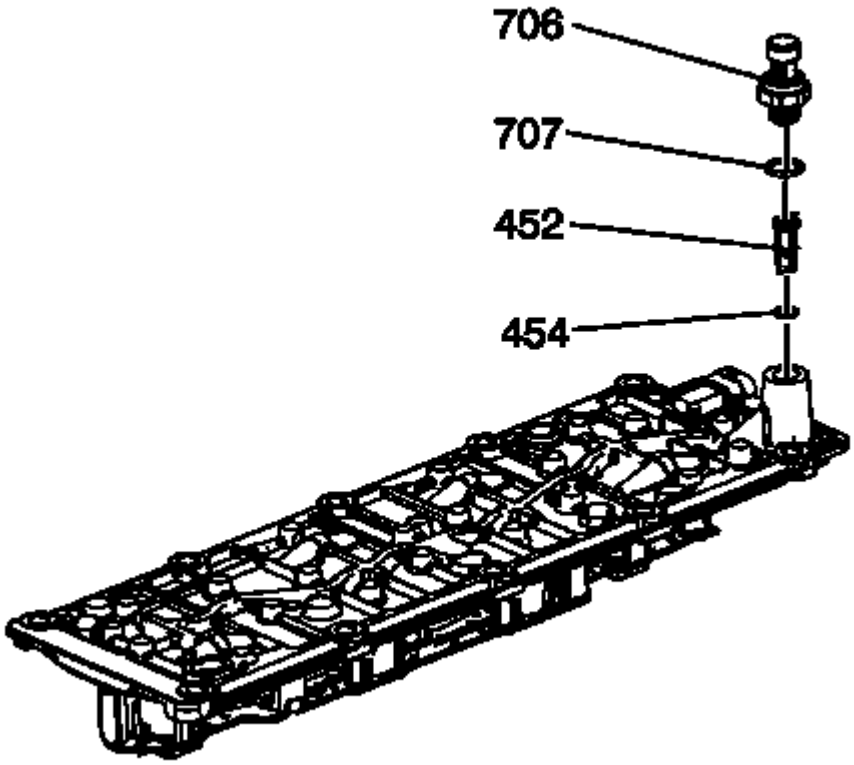

Fig. 402: View Of Oil Pressure Sensor, Washer And Valve Lifter Oil Filter
Courtesy of GENERAL MOTORS COMPANY

1. Apply sealant to the threads of the NEW oil pressure sensor. Refer to **Adhesives, Fluids, Lubricants, and Sealers** .

   CAUTION: Refer to Fastener Caution .

2. If equipped with active fuel management perform the following step, using **J 41712** oil pressure switch socket or equivalent. Install the oil pressure sensor (706) and washer (707).

   Tighten the sensor to 35 N.m (26 lb ft).

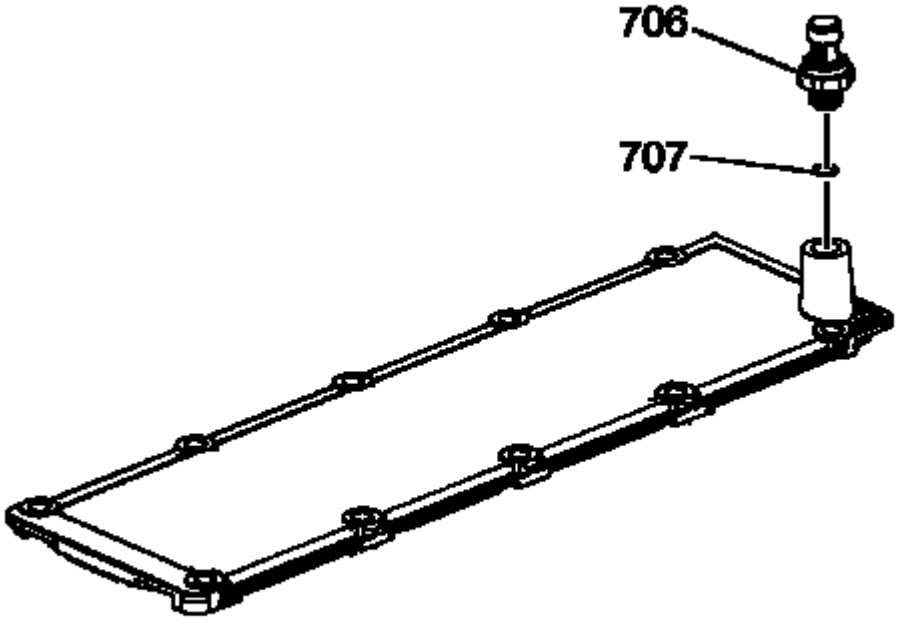

Fig. 403: Removing/Installing Oil Pressure Sensor & Washer
Courtesy of GENERAL MOTORS COMPANY

3. If not equipped with active fuel management, perform the following step, using **J 41712** oil pressure switch socket or equivalent. Install the oil pressure sensor (706) and washer (707).

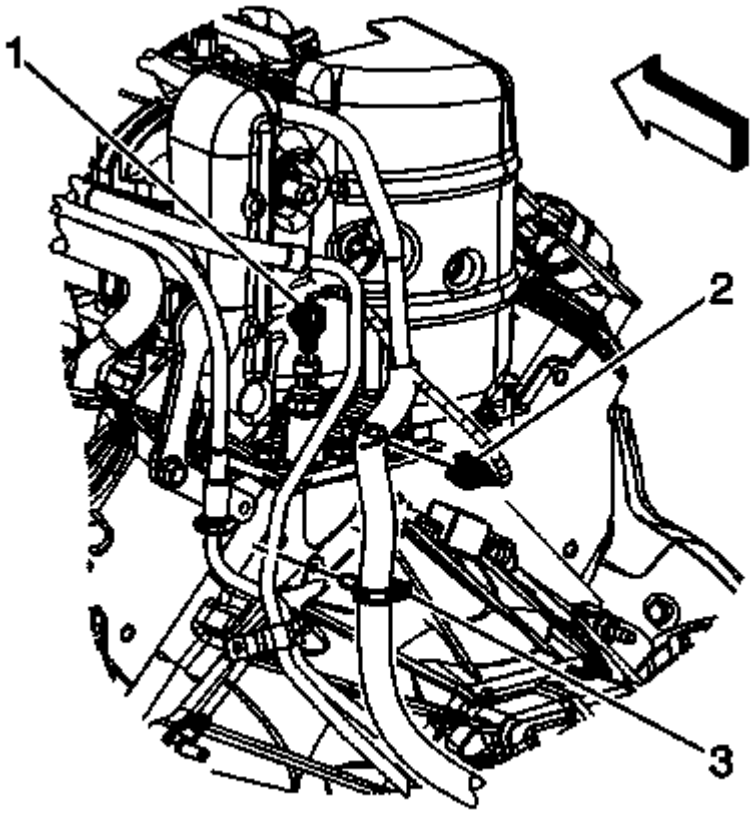

Fig. 404: View Of Engine Harness Electrical Connectors & Inlet Hose Clamp
Courtesy of GENERAL MOTORS COMPANY

4. Connect the engine harness electrical connector (1) to the oil pressure sensor. Tighten the sensor to 35 N.m (26 lb ft).
5. Install the intake manifold. Refer to **Intake Manifold Replacement (RPOs LC9, LMG, LY5, L76)**, **Intake Manifold Replacement (RPOs LY2, LY6)**, **Intake Manifold Replacement (Except RPOs LY2, LY6, LC9, LMG, LY5)**.

OIL PUMP, SCREEN, AND CRANKSHAFT OIL DEFLECTOR REPLACEMENT

Removal Procedure

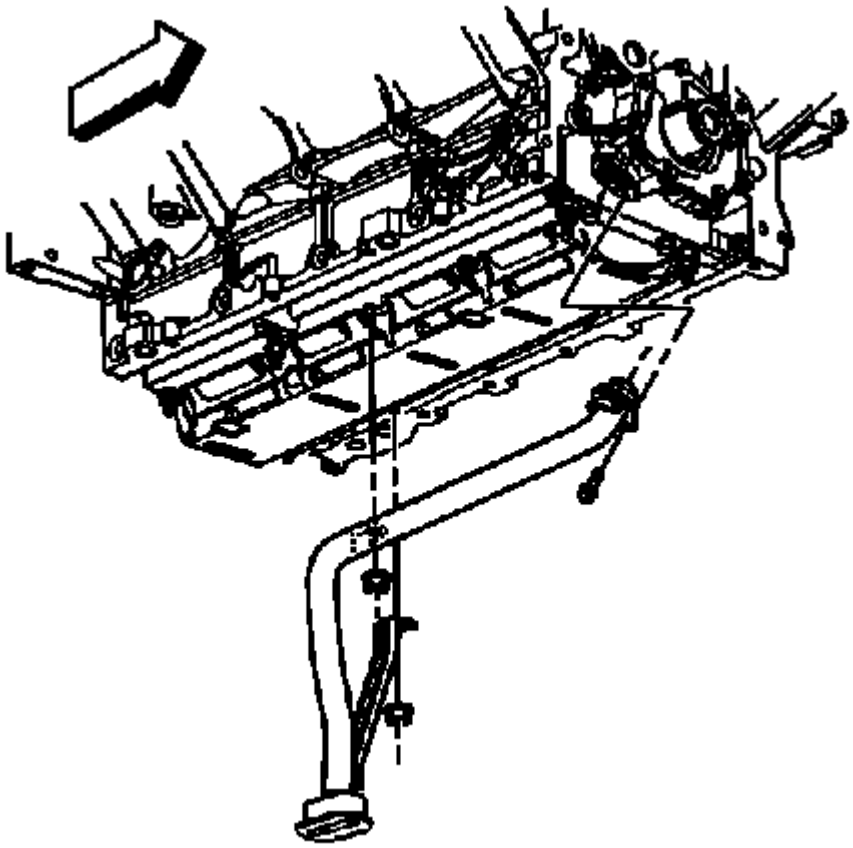

Fig. 405: View Of Oil Pump Screen & O-Ring Seal
Courtesy of GENERAL MOTORS COMPANY

1. Remove the oil pan. Refer to **Oil Pan Replacement (4WD)**, **Oil Pan Replacement (2WD)**.
2. Remove the engine front cover. Refer to **Engine Front Cover Replacement**.
3. Remove the oil pump screen bolt and nuts.
4. Remove the oil pump screen with O-ring seal.
5. Remove the O-ring seal from the pump screen.
6. Discard the O-ring seal.

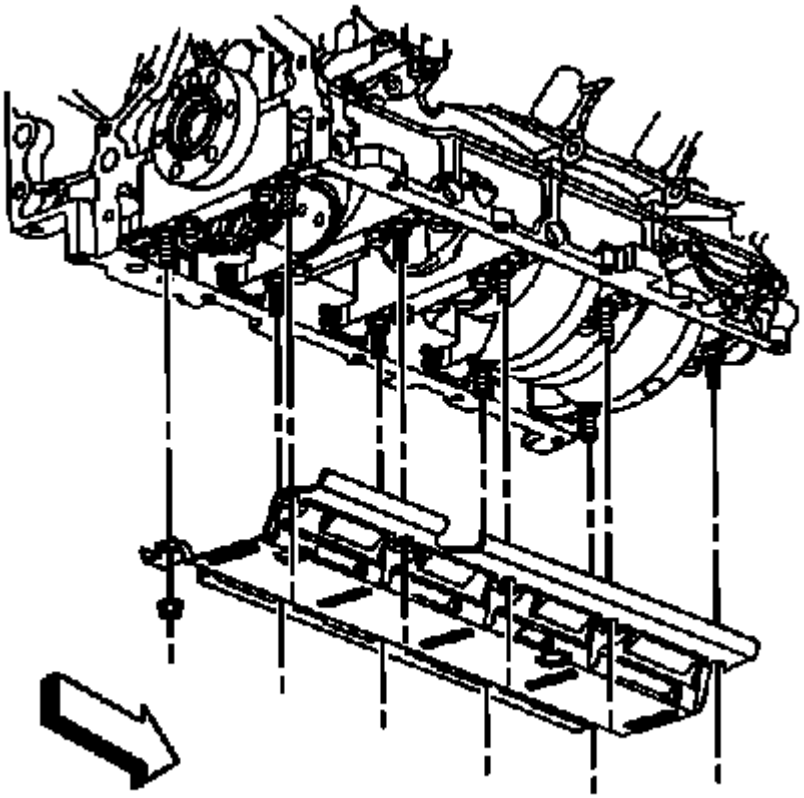

Fig. 406: View Of Crankshaft Oil Deflector & Nuts
Courtesy of GENERAL MOTORS COMPANY

7. Remove the remaining crankshaft oil deflector nuts.
8. Remove the crankshaft oil deflector.

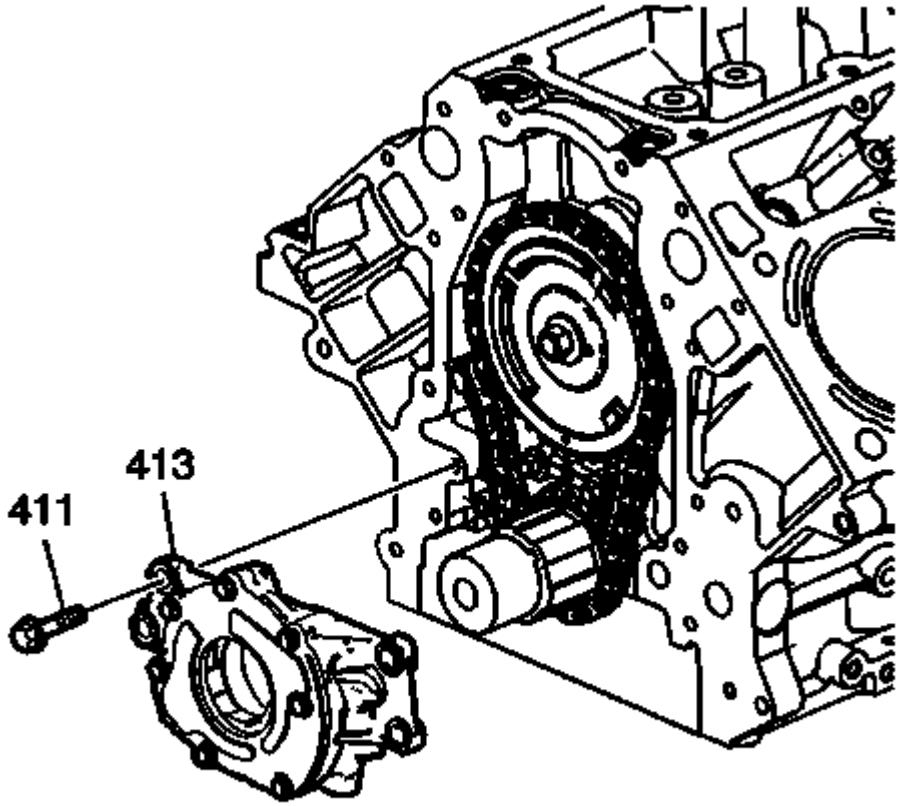

Fig. 407: View Of Oil Pump & Bolts
Courtesy of GENERAL MOTORS COMPANY

9. Remove the oil pump bolts (411).

NOTE: **Do not allow dirt or debris to enter the oil pump assembly, cap end as necessary.**

10. Remove the oil pump (413).

Installation Procedure

NOTE: **Inspect the engine block oil galley passages. These areas must be free and clear of debris or restrictions.**

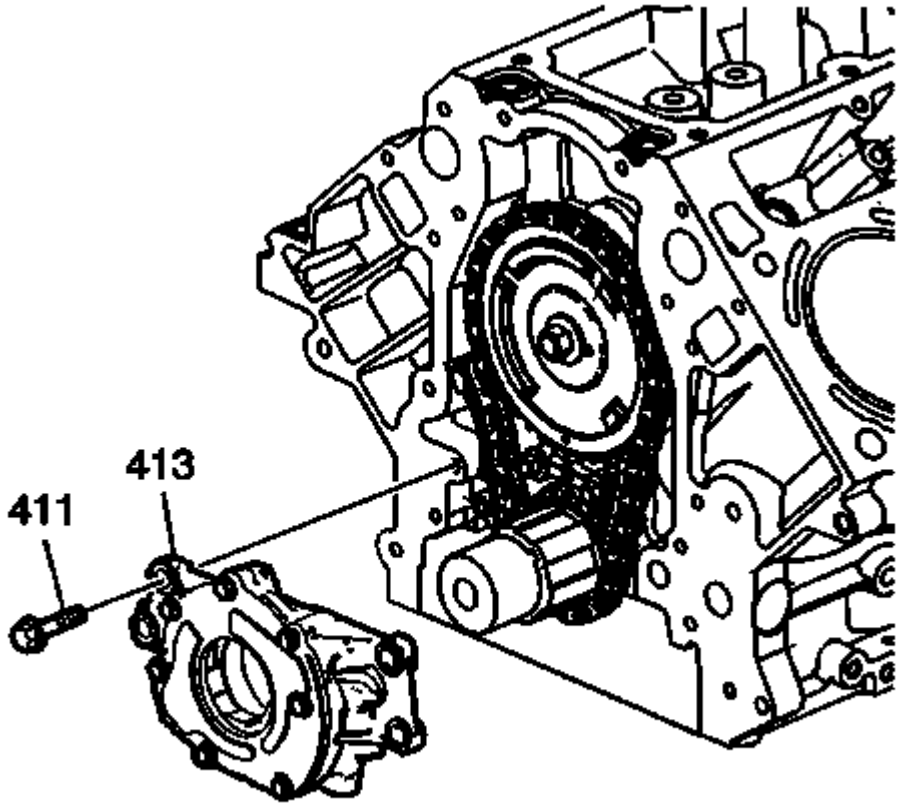

Fig. 408: View Of Oil Pump & Bolts
Courtesy of GENERAL MOTORS COMPANY

1. Align the splined surfaces of the crankshaft sprocket and the oil pump drive gear and install the oil pump (413).
2. Install the oil pump (413) onto the crankshaft sprocket until the pump housing contacts the face of the engine block.

CAUTION: Refer to Fastener Caution .

3. Install the oil pump bolts (411).

Tighten

Tighten the bolts to 25 N.m (18 lb ft).

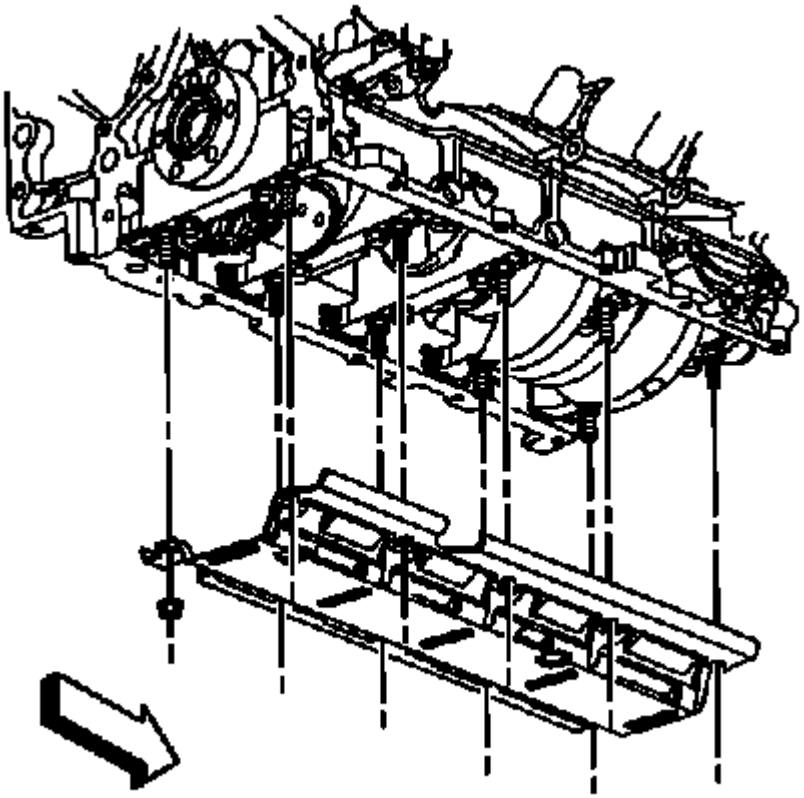

Fig. 409: View Of Crankshaft Oil Deflector & Nuts
Courtesy of GENERAL MOTORS COMPANY

4. Position the crankshaft oil deflector and install the nuts until snug.

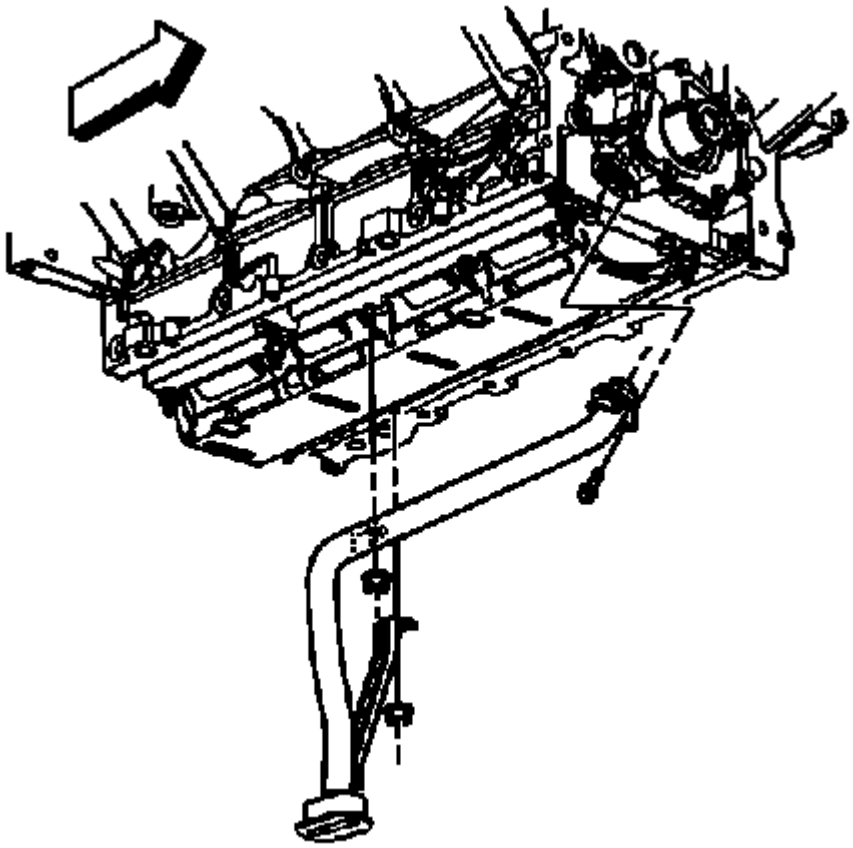

Fig. 410: View Of Oil Pump Screen & O-Ring Seal
Courtesy of GENERAL MOTORS COMPANY

5. Lubricate a NEW oil pump screen O-ring seal with clean engine oil.
6. Install the NEW O-ring seal onto the oil pump screen.

NOTE: **Push the oil pump screen tube completely into the oil pump prior to tightening the bolt. Do not allow the bolt to pull the tube into the pump.**

7. Align the oil pump screen mounting brackets with the correct crankshaft bearing cap studs.
8. Install the oil pump screen.
9. Install the oil pump screen bolt and nuts.

Tighten

1. Tighten the bolt to 12 N.m (106 lb in).
2. Tighten the nuts to 25 N.m (18 lb ft).

10. Install the engine front cover. Refer to **Engine Front Cover Replacement**.
11. Install the oil pan. Refer to **Oil Pan Replacement (4WD)**, **Oil Pan Replacement (2WD)**.

TIMING CHAIN, CRANKSHAFT SPROCKET, CAMSHAFT POSITION ACTUATOR, AND SOLENOID VALVE REPLACEMENT (L99)

Special Tools

- **EN 46330** Timing Chain Tensioner Retaining Pin
- **J 8433** Puller Bar
- **J 41478** Crankshaft Front Oil Seal Installer
- **J 41558** Crankshaft Sprocket Remover
- **J 41665** Crankshaft Balancer and Sprocket Installer
- **J 41816-2** Crankshaft End Protector
- **J 42386-A** Flywheel Holding Tool

Removal Procedure

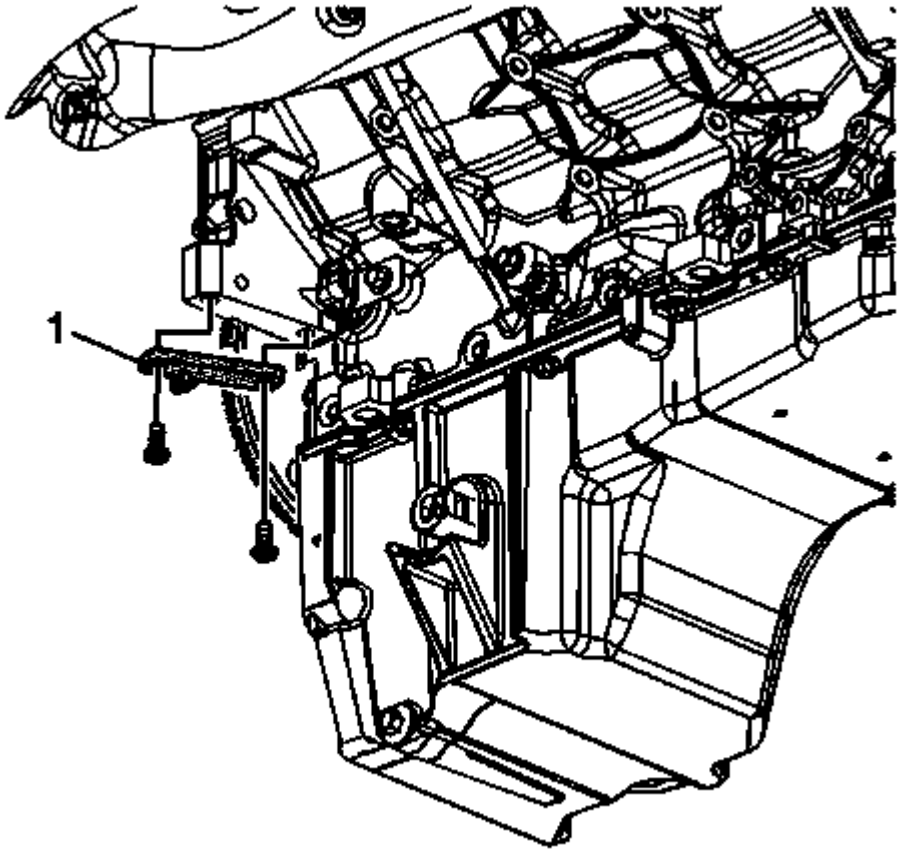

Fig. 411: View Of Special Tool & Bolts
Courtesy of GENERAL MOTORS COMPANY

1. Remove the oil pump. Refer to **Oil Pump, Screen, and Crankshaft Oil Deflector Replacement**.
2. Remove the starter motor. Refer to **Starter Replacement** .

CAUTION: Refer to Fastener Caution .

NOTE: Ensure that the teeth of the J 42386-A flywheel holding tool mesh with the teeth of the engine flywheel.

3. Install the **J 42386-A** flywheel holding tool (1) and bolts. Use one M10-1.5 x 120 mm and one M10-1.5 x 45 mm bolt for proper tool operation.

   Tighten

   Tighten the **J 42386-A** flywheel holding tool bolts to 50 (37 lb ft).

4. Remove the camshaft position actuator. Refer to **Camshaft Position Actuator Replacement**.

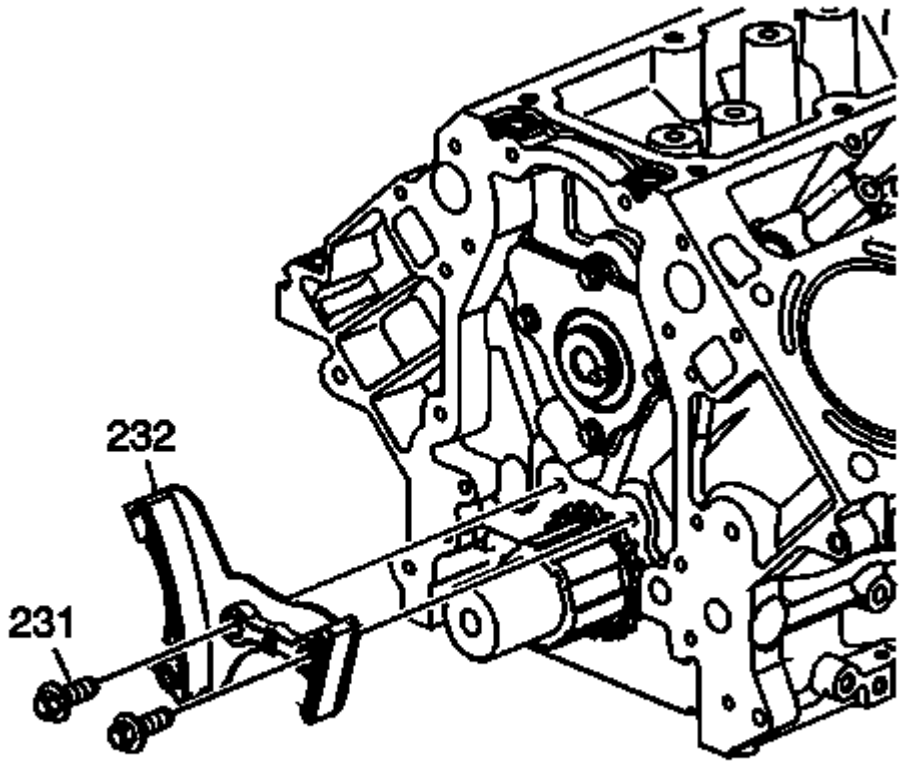

Fig. 412: View Of Timing Chain Tensioner & Bolts
Courtesy of GENERAL MOTORS COMPANY

5. Remove the timing chain tension bolts (231) and tensioner (232).

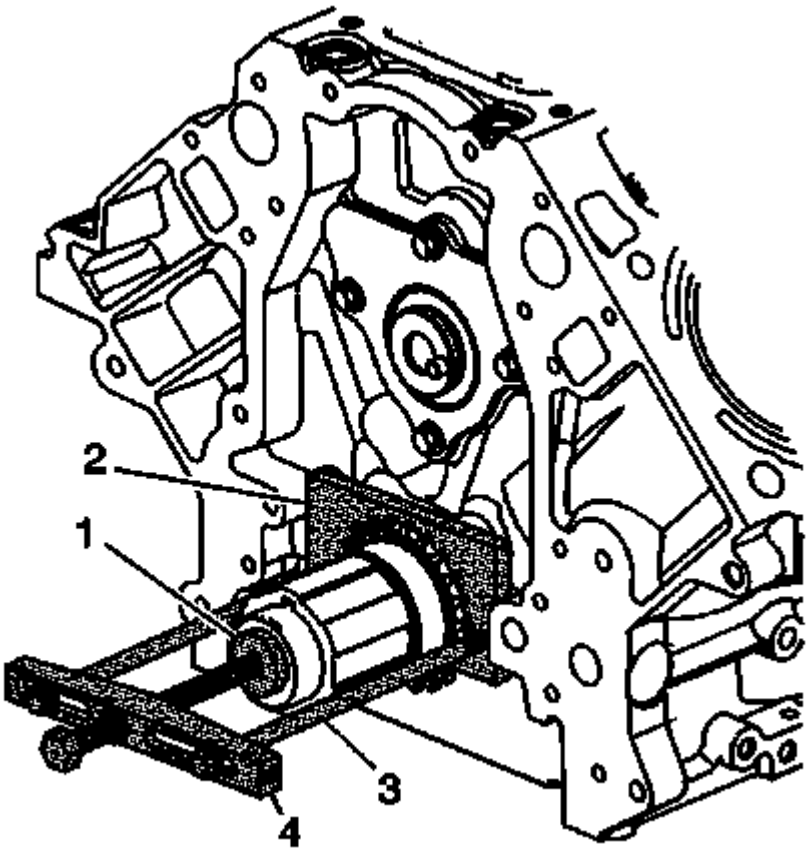

Fig. 413: View Of Crankshaft Sprocket Special Tools
Courtesy of GENERAL MOTORS COMPANY

6. Using the **J 41816-2** crankshaft end protector (1), the **J 41558** crankshaft sprocket remover (2), bolts (3) and the **J 8433** puller bar (4) in order to remove the crankshaft sprocket.

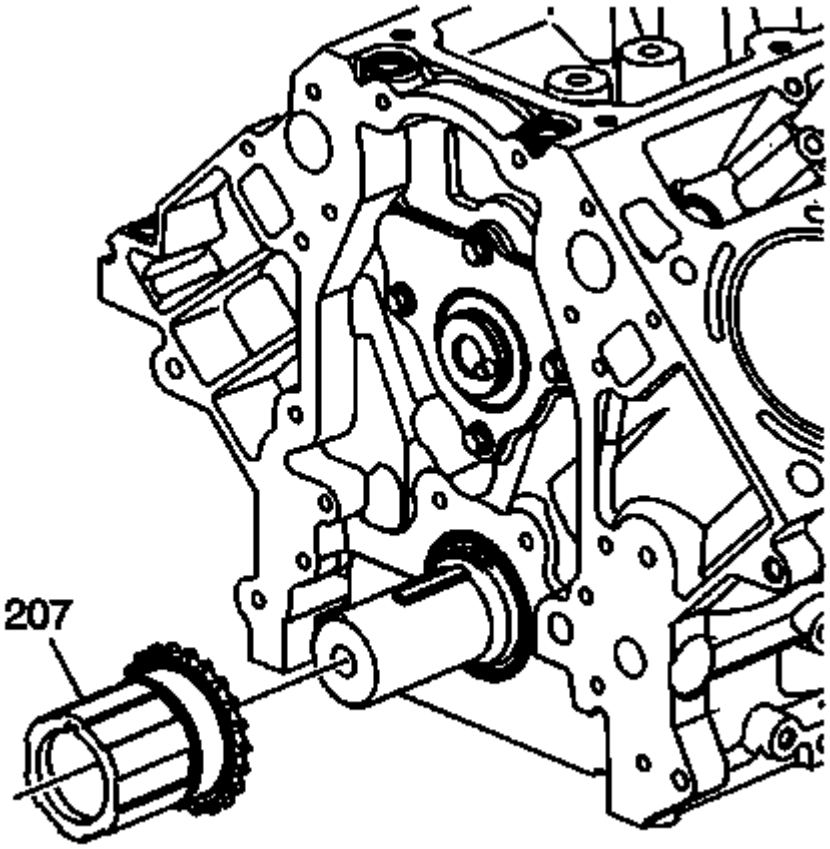

Fig. 414: View Of Crankshaft Sprocket
Courtesy of GENERAL MOTORS COMPANY

7. Remove the crankshaft sprocket (207).

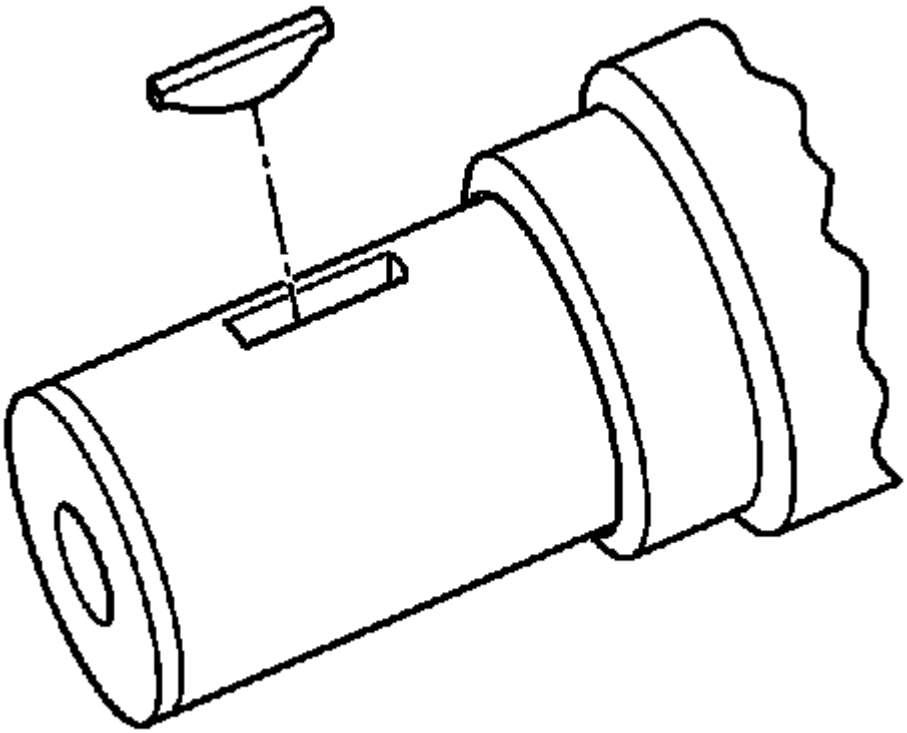

Fig. 415: View Of Crankshaft Key & Keyway
Courtesy of GENERAL MOTORS COMPANY

8. Remove the crankshaft sprocket key, if required.

Installation Procedure

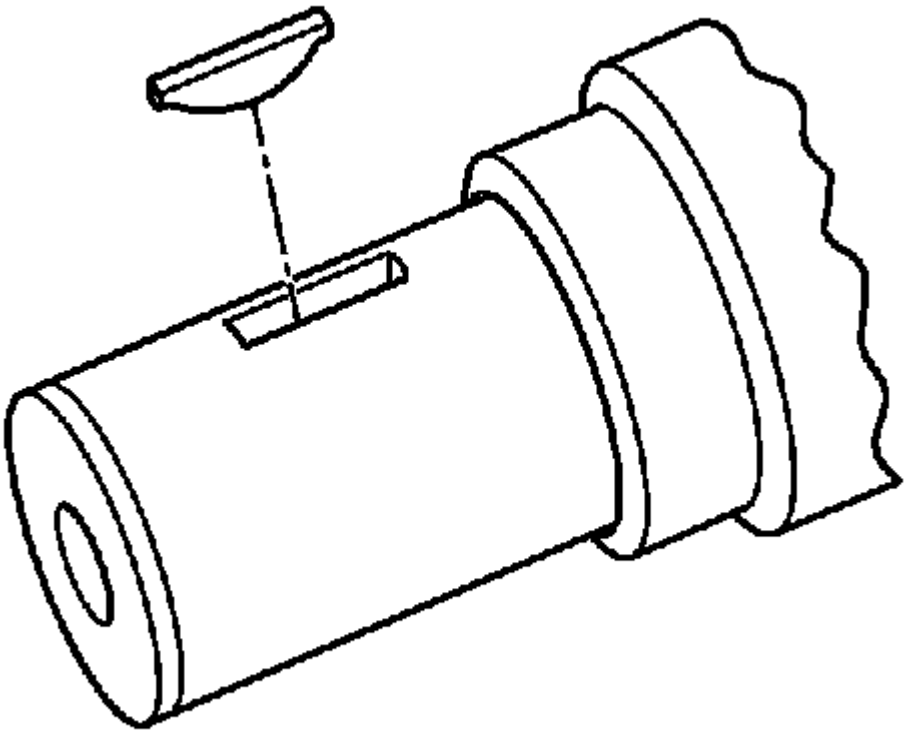

Fig. 416: View Of Crankshaft Key & Keyway
Courtesy of GENERAL MOTORS COMPANY

1. Install the key into the crankshaft keyway, if previously removed.

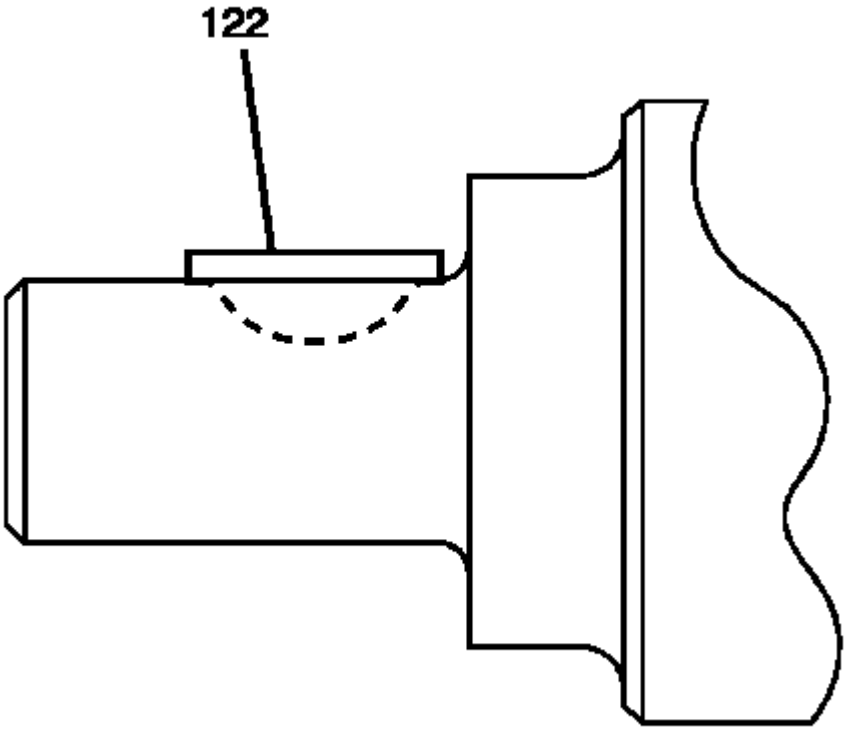

Fig. 417: View Of Installed Crankshaft Key
Courtesy of GENERAL MOTORS COMPANY

2. Tap the key (122) into the keyway until both ends of the key bottom onto the crankshaft.

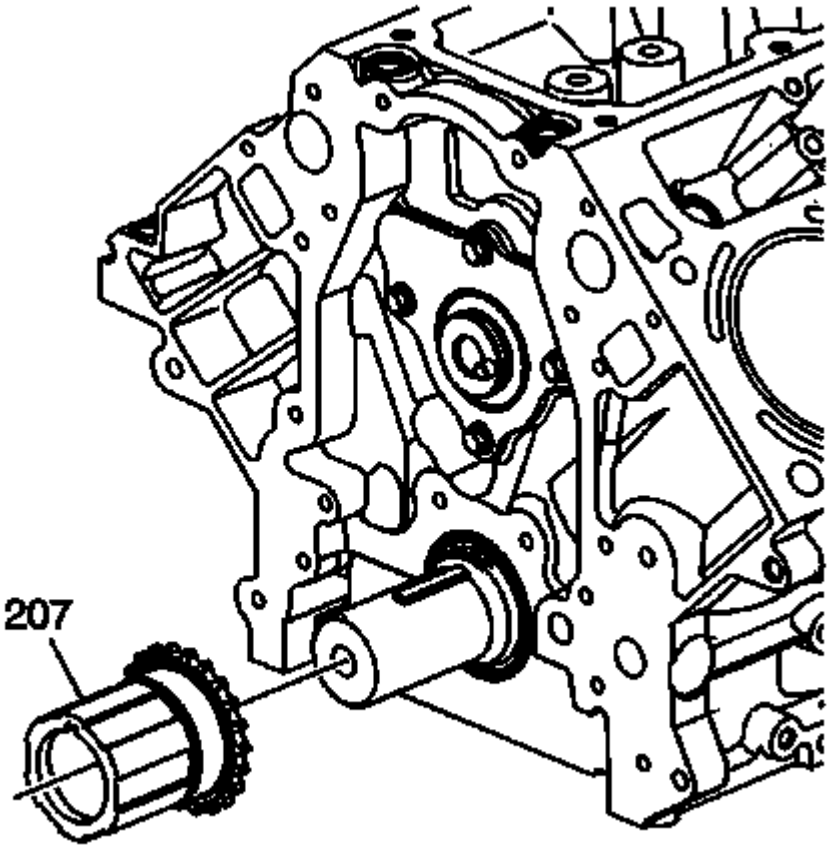

Fig. 418: View Of Crankshaft Sprocket
Courtesy of GENERAL MOTORS COMPANY

3. Install the crankshaft sprocket (207) onto the front of the crankshaft. Align the crankshaft key with the crankshaft sprocket keyway.

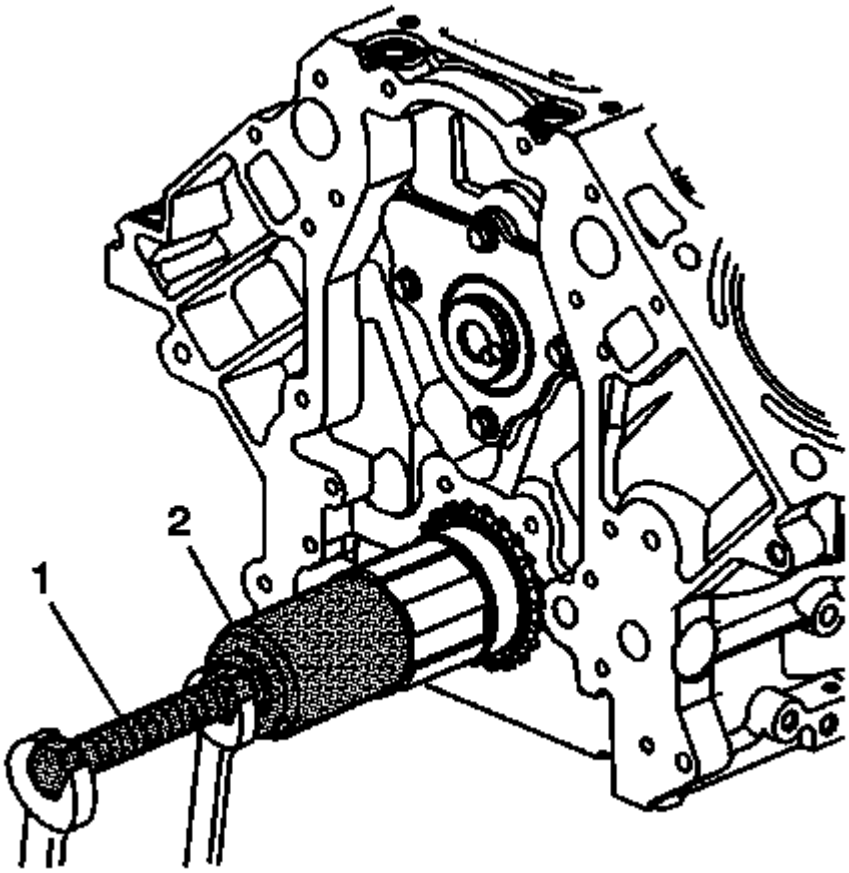

Fig. 419: View Of Crankshaft Sprocket & Installer
Courtesy of GENERAL MOTORS COMPANY

4. Use the **J 41478** crankshaft front oil seal installer (1) and the **J 41665** crankshaft balancer and sprocket installer (2) in order to install the crankshaft sprocket. Install the sprocket onto the crankshaft until fully seated against the crankshaft flange.

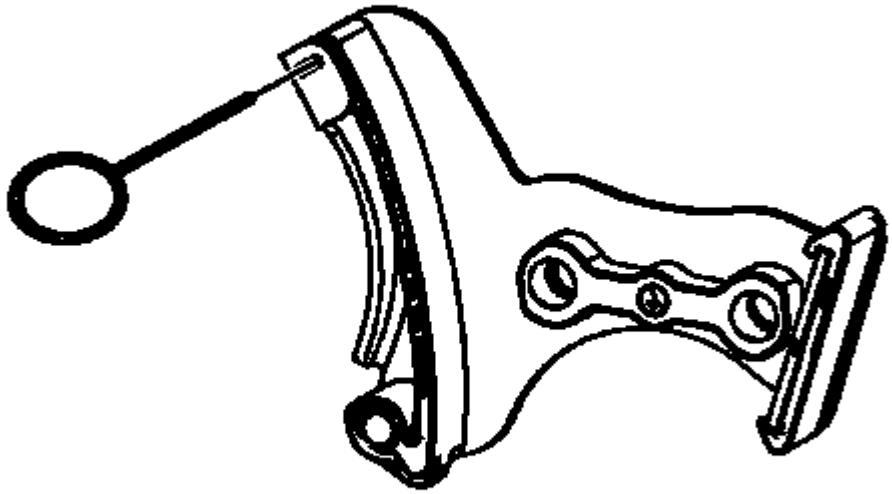

Fig. 420: View Of Compressed Tensioner
Courtesy of GENERAL MOTORS COMPANY

5. Compress the timing chain tensioner guide and install the **EN 46330** timing belt tensioner retaining pin.

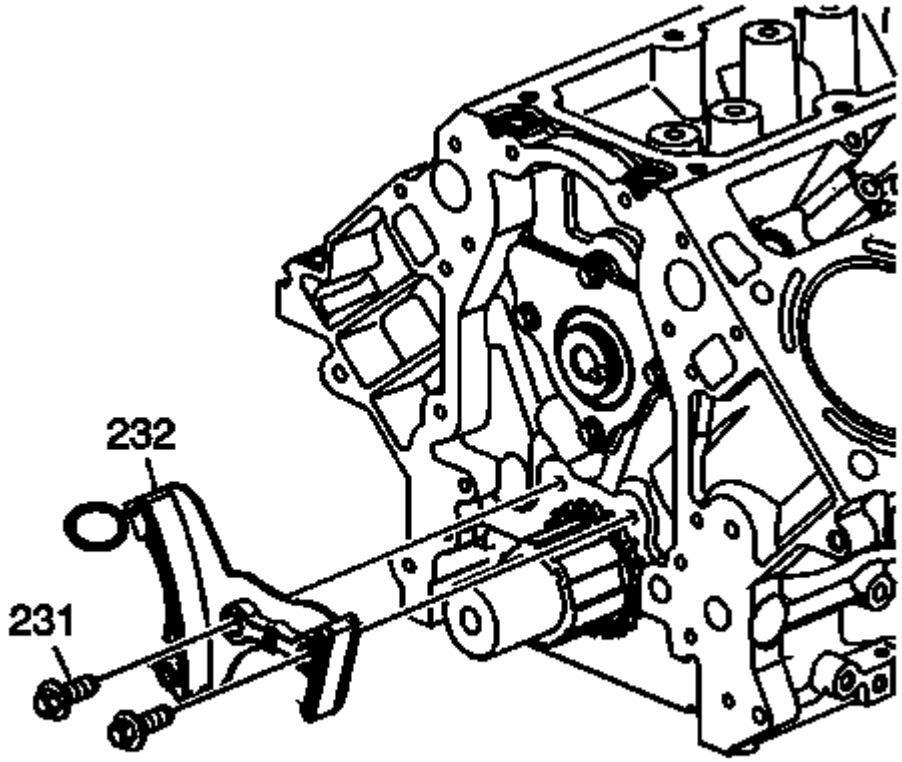

Fig. 421: View Of Timing Chain Tensioner
Courtesy of GENERAL MOTORS COMPANY

6. Install the timing chain tensioner (232) and bolts (231).

   Tighten

   Tighten the bolts to 25 (18 lb ft).

7. Install the camshaft position actuator. Refer to **Camshaft Position Actuator Replacement**.

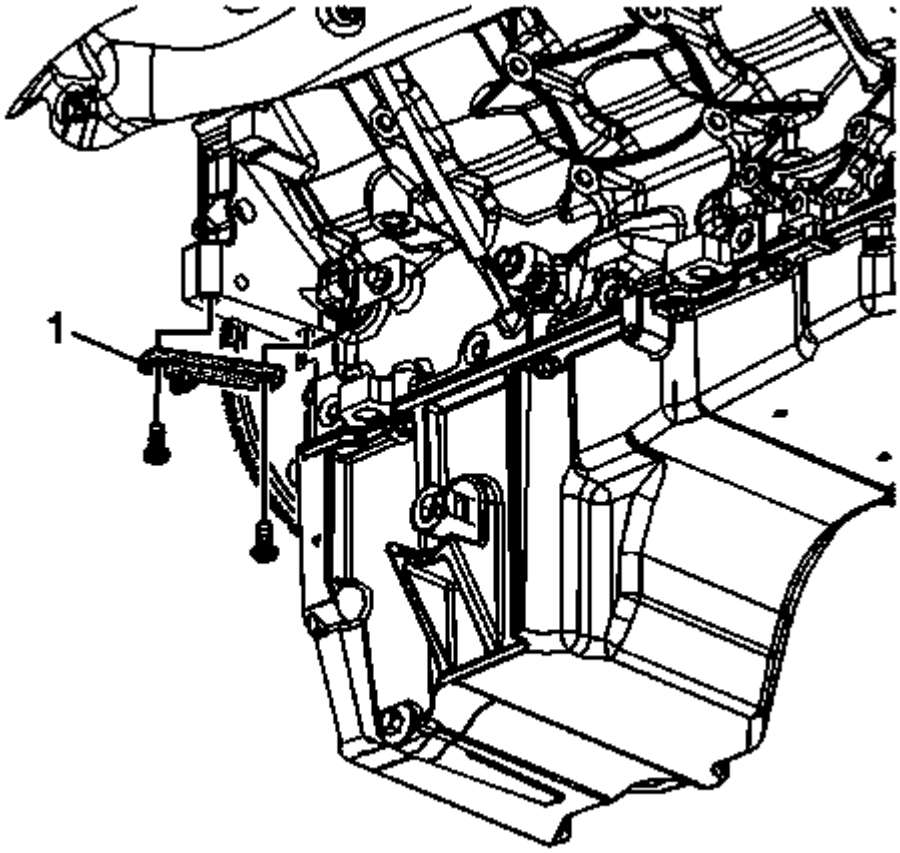

Fig. 422: View Of Special Tool & Bolts
Courtesy of GENERAL MOTORS COMPANY

8. Remove the **J 42386-A** flywheel holding tool (1) and bolts.
9. Install the starter motor. Refer to **Starter Replacement** .
10. Install the oil pump. Refer to **Oil Pump, Screen, and Crankshaft Oil Deflector Replacement**.

CAMSHAFT REPLACEMENT

Special Tools

- **EN 46330** Timing Belt Tensioner Retaining Pin
- **J 45059** Angle Meter

Removal Procedure

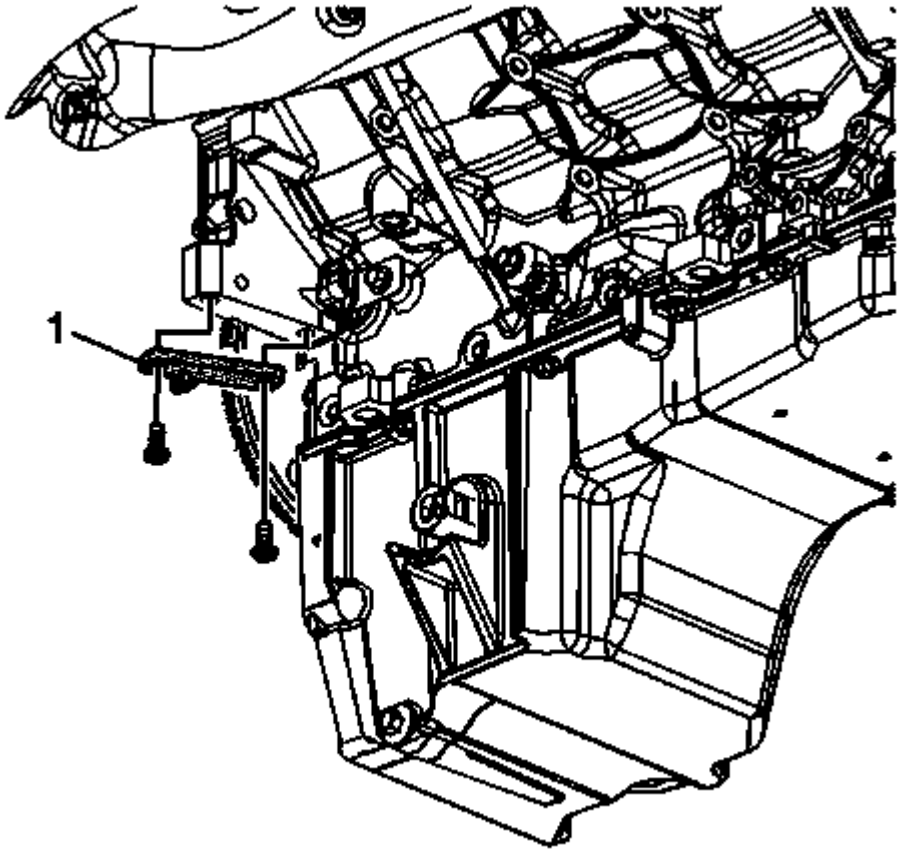

Fig. 423: View Of Special Tool & Bolts
Courtesy of GENERAL MOTORS COMPANY

1. Remove the radiator Refer to **Radiator Replacement (Non HP2)** , **Radiator Replacement (HP2)** .
2. Remove the a/c condenser. Refer to **Air Conditioning Condenser Replacement (Gas)** .
3. Remove the valve lifters. Refer to **Valve Lifter Replacement (Without AFM)**, **Valve Lifter Replacement (With AFM)**
4. Remove the Timing Chain, Camshaft Position Actuator, and Solenoid Valve. Refer to **Timing Chain, Crankshaft Sprocket, Camshaft Position Actuator, and Solenoid Valve Replacement (L99)**

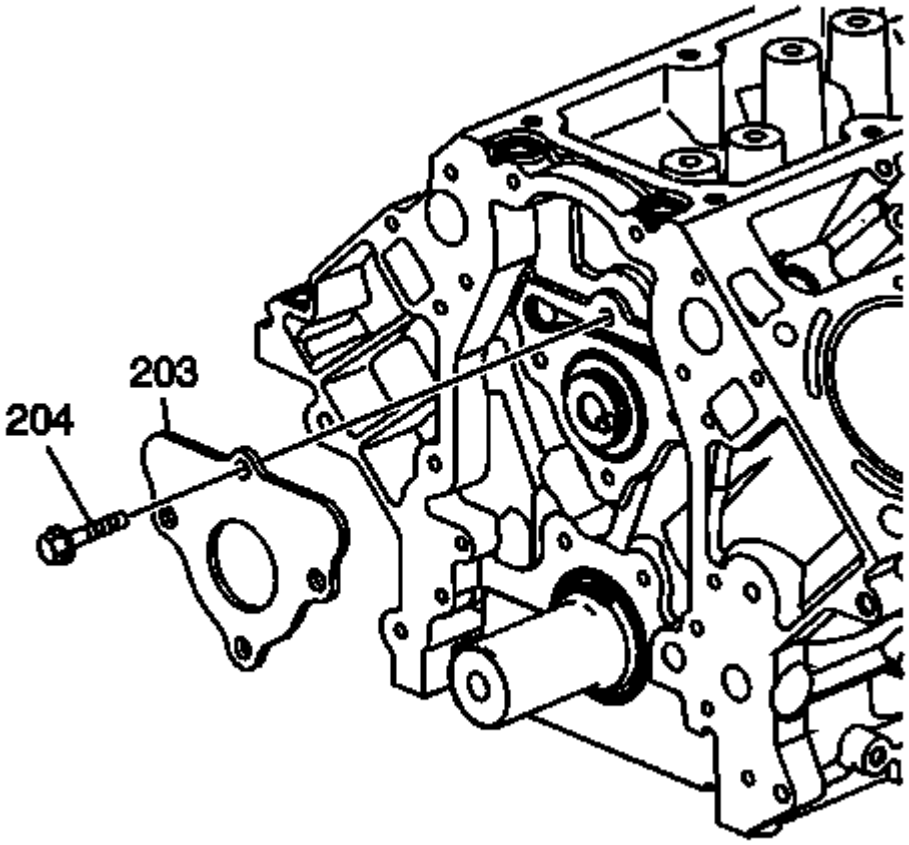

Fig. 424: View Of Camshaft Retainer & Retainer Bolt
Courtesy of GENERAL MOTORS COMPANY

5. Remove the camshaft retainer bolts (204) and retainer (203).

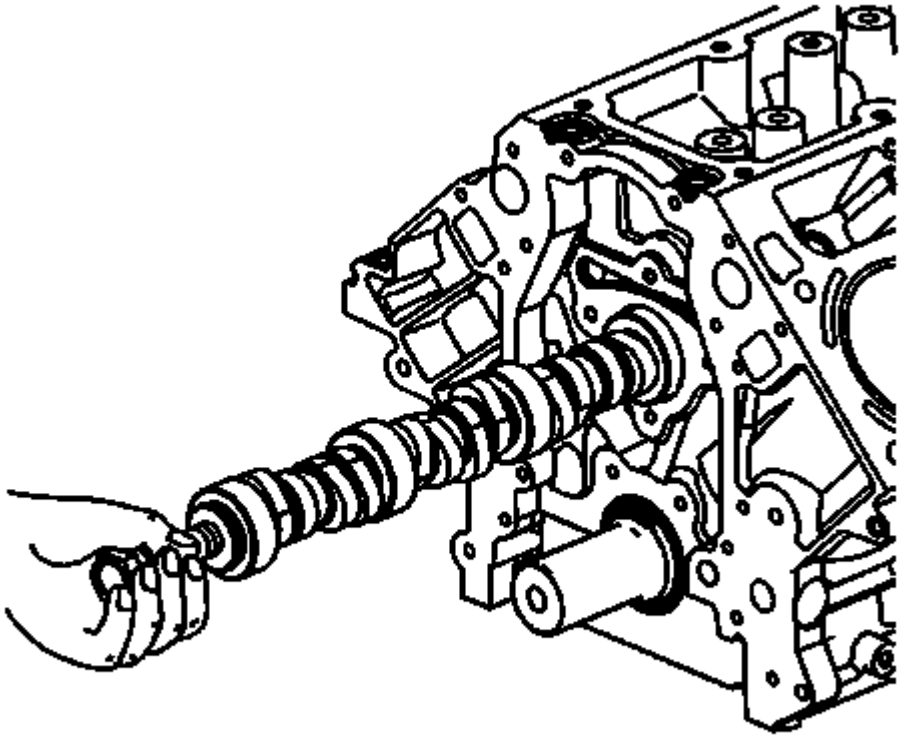

Fig. 425: View Of Camshaft
Courtesy of GENERAL MOTORS COMPANY

CAUTION: All camshaft journals are the same diameter, so care must be used in removing or installing the camshaft to avoid damage to the camshaft bearings.

6. Install a bolt into the camshaft.
7. Using the bolt as a handle, carefully rotate and pull the camshaft out of the engine block.
8. Clean and inspect the camshaft and bearings. Refer to **Camshaft and Bearings Cleaning and Inspection** .

Installation Procedure

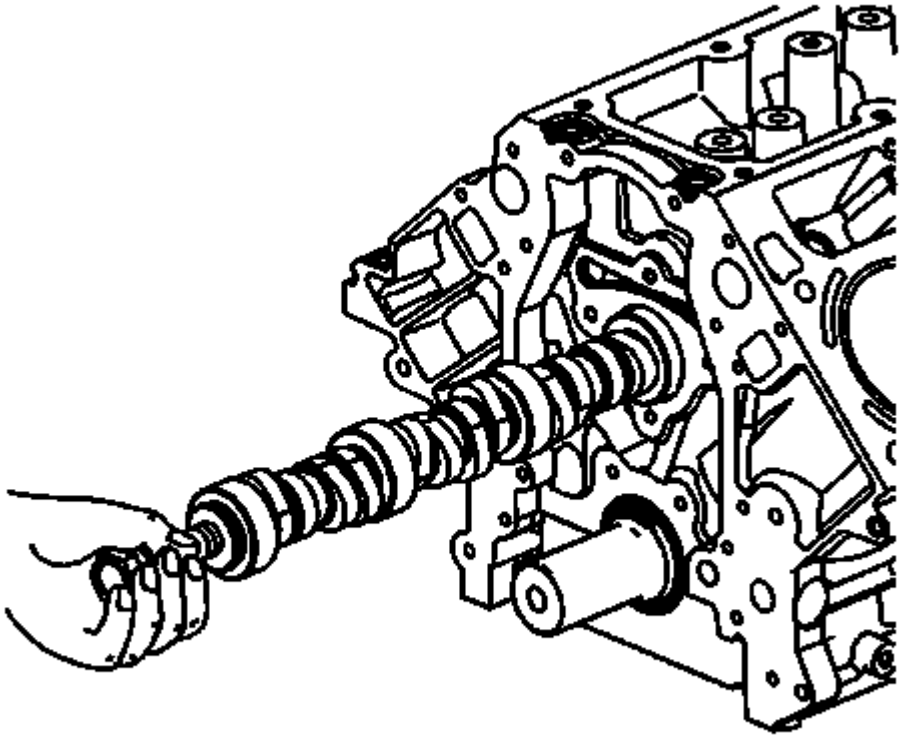

Fig. 426: View Of Camshaft
Courtesy of GENERAL MOTORS COMPANY

NOTE: If camshaft replacement is required, the valve lifters must also be replaced.

1. Lubricate the camshaft journals and the bearings with clean engine oil.

CAUTION: All camshaft journals are the same diameter, so care must be used in removing or installing the camshaft to avoid damage to the camshaft bearings.

2. Using the bolt as a handle, carefully install the camshaft into the engine block.
3. Remove the bolt from the front of the camshaft.

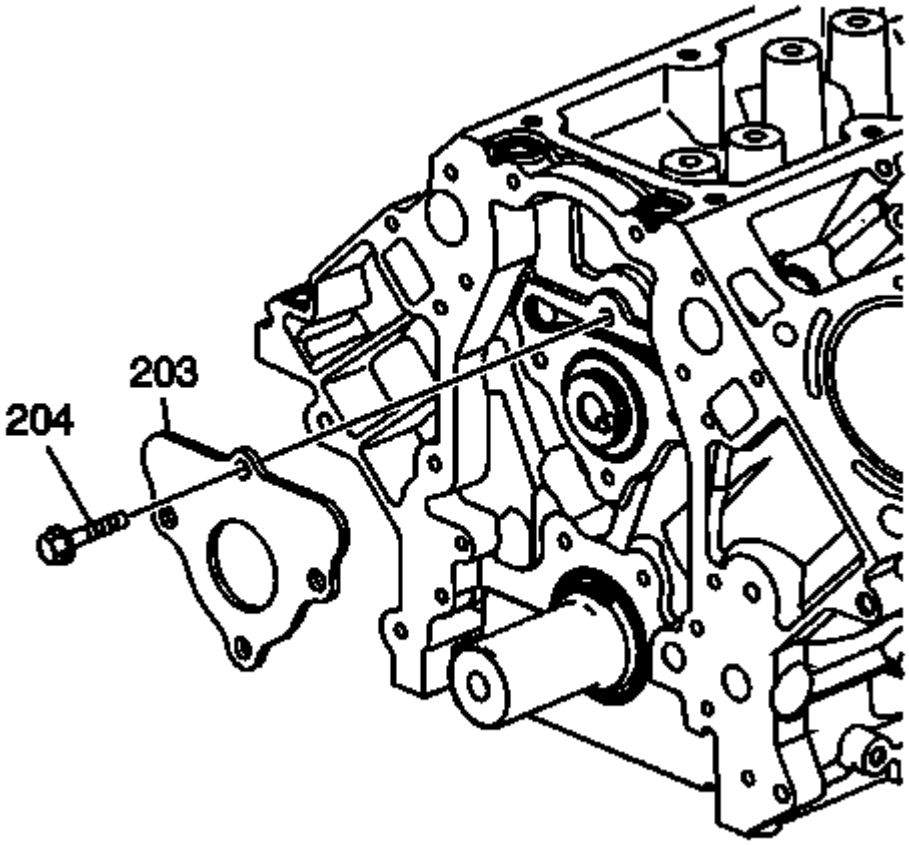

Fig. 427: View Of Camshaft Retainer & Retainer Bolt
Courtesy of GENERAL MOTORS COMPANY

NOTE: **Install the retainer with the sealing gasket facing the engine block.**

The gasket surface on the engine block should be clean and free of dirt and/or debris.

4. Install the camshaft retainer (203) and bolts (204).

CAUTION: Refer to Fastener Caution .

5. Tighten the camshaft retainer bolts.

Tighten

- Tighten the first design hex head bolts (3) to 25 N.m (18 lb ft).
- Tighten the second design TORX® head bolts (4) to 15 N.m (11 lb ft).

6. Install the Timing Chain, Camshaft Position Actuator, and Solenoid Valve. Refer to **Timing Chain,**

Crankshaft Sprocket, Camshaft Position Actuator, and Solenoid Valve Replacement (L99)

7. Install the valve lifters. Refer to **Valve Lifter Replacement (Without AFM)**, **Valve Lifter Replacement (With AFM)**.
8. Install the a/c condenser. Refer to **Air Conditioning Condenser Replacement (Gas)** .
9. Install the radiator. Refer to **Radiator Replacement (Non HP2)** , **Radiator Replacement (HP2)** .

AUTOMATIC TRANSMISSION FLEX PLATE REPLACEMENT

Removal Procedure

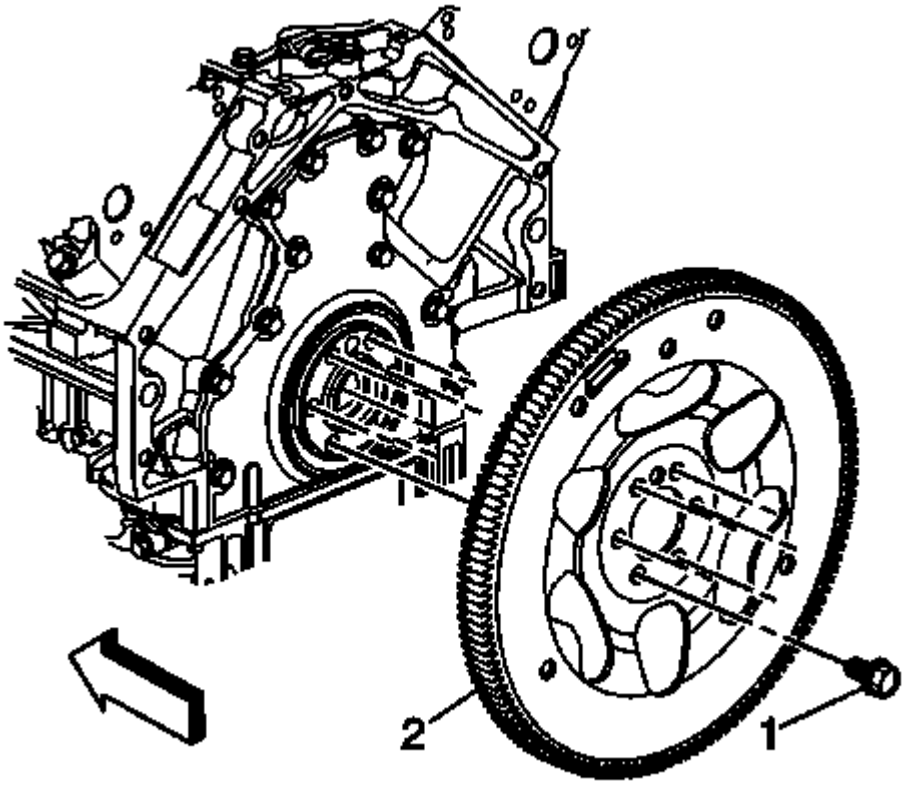

Fig. 428: View Of Engine Flywheel & Bolts
Courtesy of GENERAL MOTORS COMPANY

1. Remove the automatic transmission. Refer to **Transmission Replacement** for the 6L45/6L50/6L80/6L90 transmission.

NOTE: Note the position and direction of the engine flywheel before removal.

2. Remove the flywheel bolts.
3. Remove the flywheel.

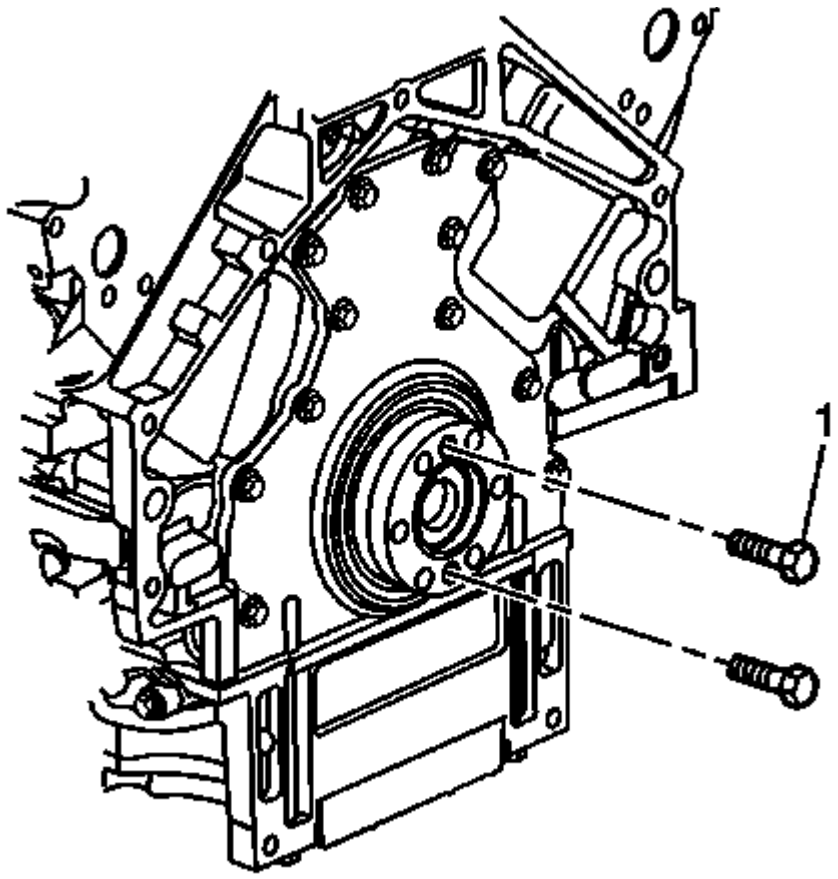

Fig. 429: View Of Bolts & Spacer
Courtesy of GENERAL MOTORS COMPANY

4. Install two M11x1.5 mm bolts (1) to the threaded holes of the spacer, if applicable.
5. Rotate the bolts clockwise to remove the spacer.

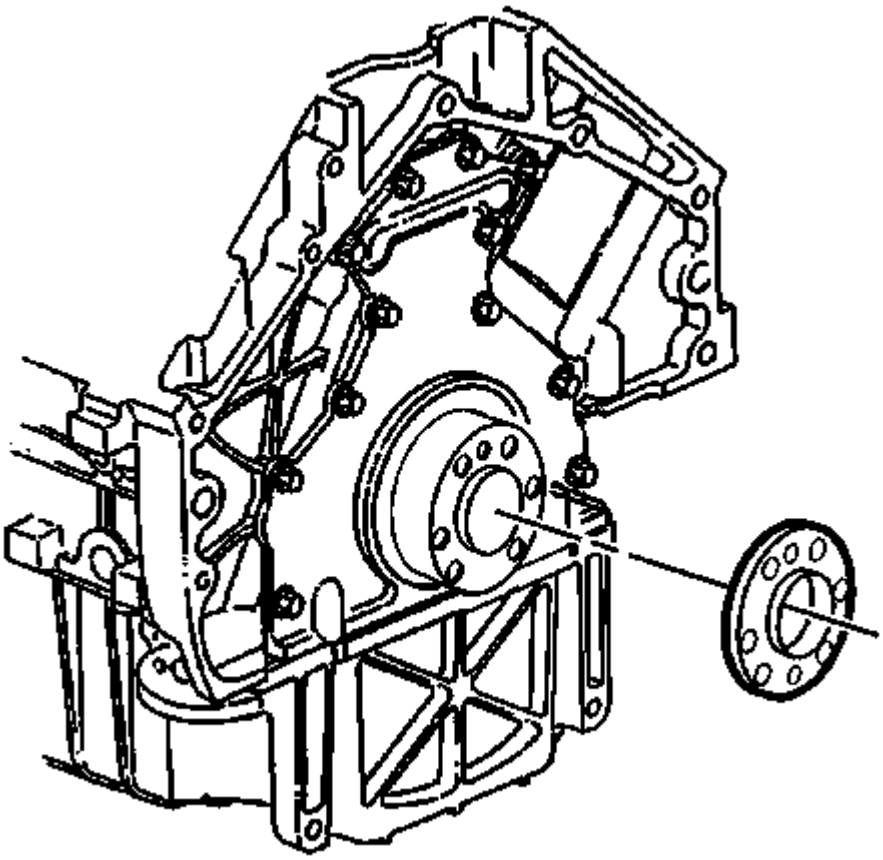

Fig. 430: View Of Spacer & Crankshaft Rear
Courtesy of GENERAL MOTORS COMPANY

6. Remove the spacer from the rear of the crankshaft, if applicable.

Installation Procedure

NOTE:

- **The flywheel does not use a locating pin for alignment and will not initially seat against the crankshaft flange or spacer, if applicable, but will be pulled onto the crankshaft by the engine flywheel bolts. This procedure requires a three stage tightening process.**
- **Certain applications (6.0L) require a spacer and longer bolts for proper flywheel position.**

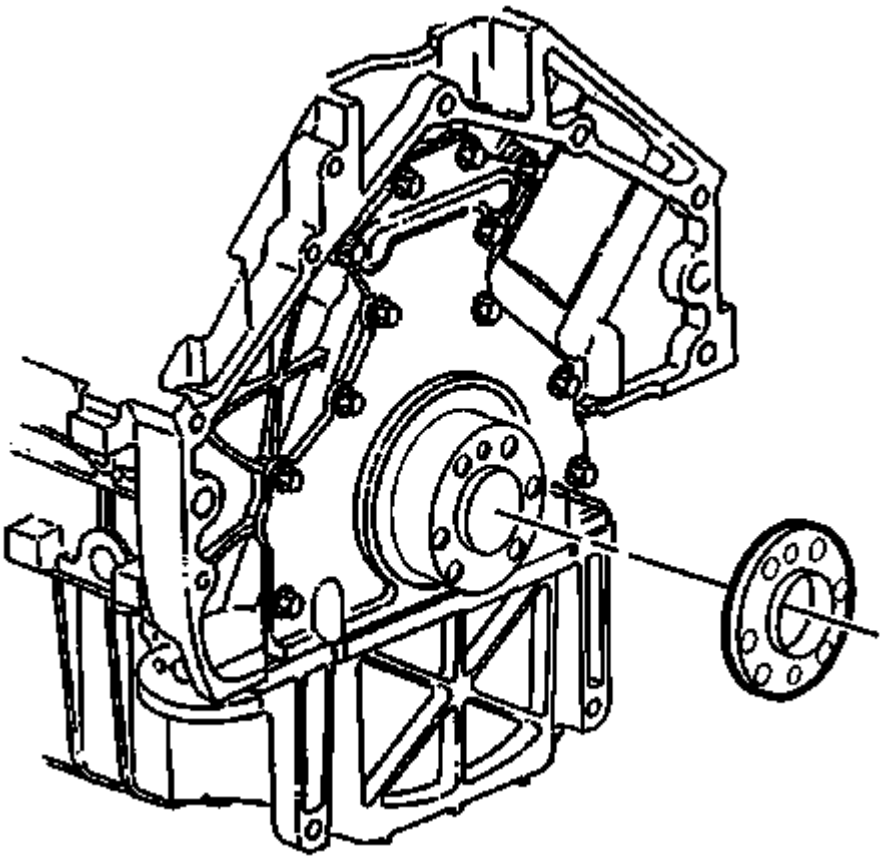

Fig. 431: View Of Spacer & Crankshaft Rear
Courtesy of GENERAL MOTORS COMPANY

1. Install the spacer, if applicable, onto the rear of the crankshaft.

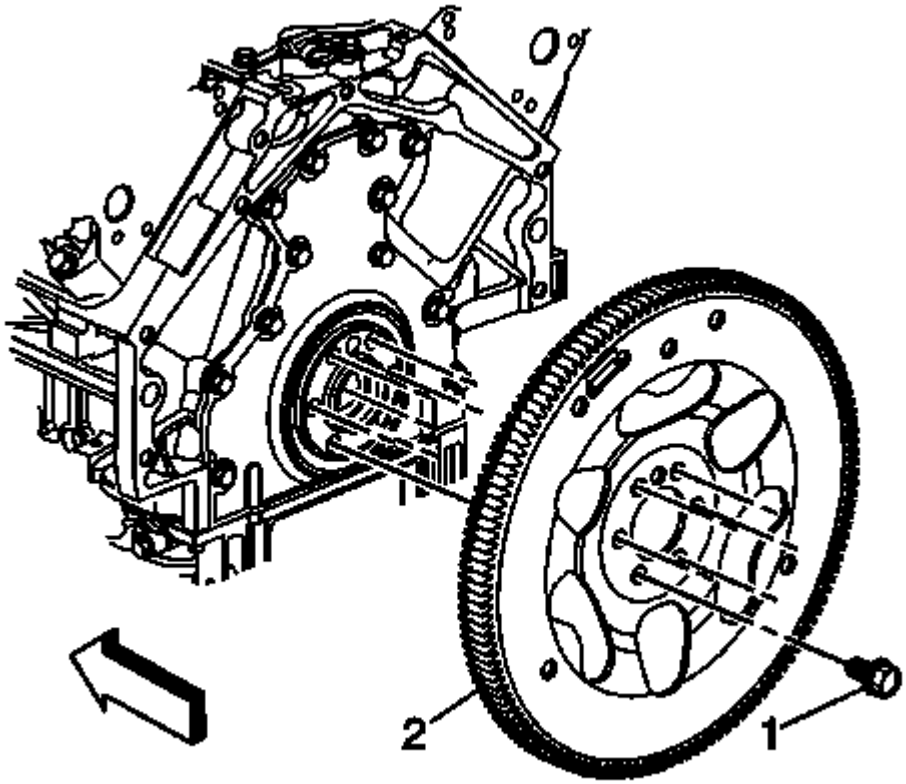

Fig. 432: View Of Engine Flywheel & Bolts
Courtesy of GENERAL MOTORS COMPANY

NOTE: Longer flywheel bolts must be used on applications using a flywheel spacer.

2. Install the flywheel and bolts to the crankshaft.
3. Apply threadlock to the threads of the flywheel bolts. Refer to **Adhesives, Fluids, Lubricants, and Sealers** for the correct part number.

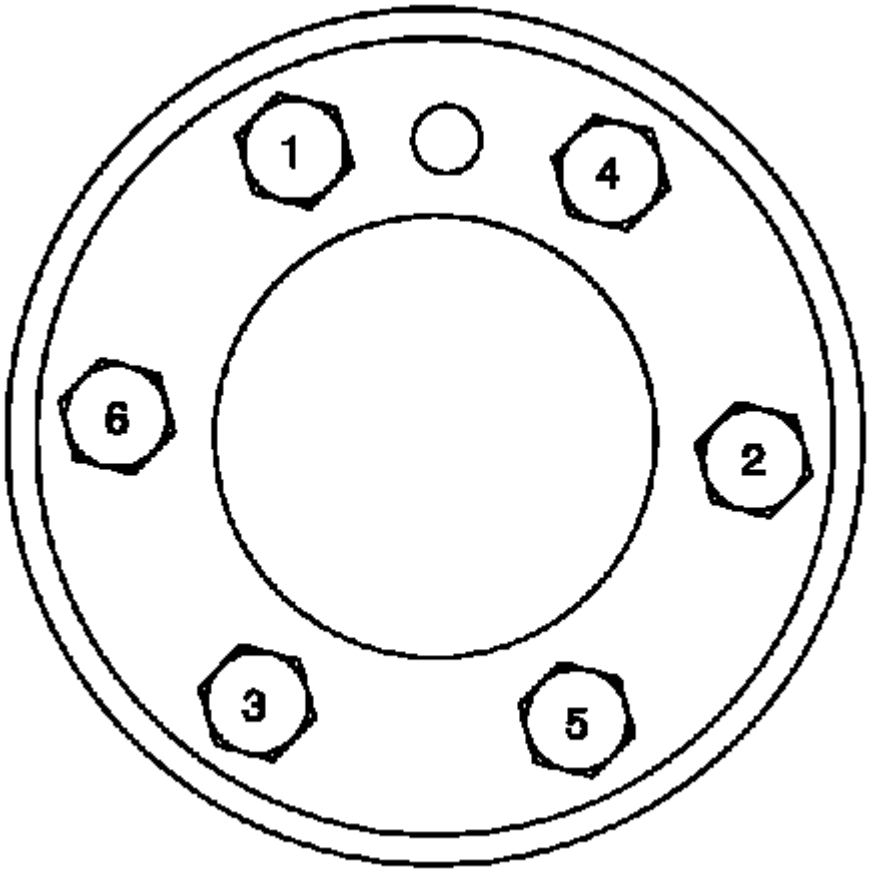

Fig. 433: Identifying Flywheel Bolt Tightening Sequence
Courtesy of GENERAL MOTORS COMPANY

CAUTION: Refer to Fastener Caution .

4. Tighten the flywheel bolts.
   - Tighten the bolts (1-6) a first pass in sequence to 20 N.m (15 lb ft).
   - Tighten the bolts (1-6) a second pass in sequence to 50 N.m (37 lb ft).
   - Tighten the bolts (1-6) a final pass in sequence to 100 N.m (74 lb ft).
5. Install the automatic transmission. Refer to **Transmission Replacement** for the 6L45/6L50/6L80/6L90 transmission.

ENGINE REPLACEMENT

Special Tools

- **J 21366** Converter Holding Strap
- **J 41798** Engine Lifting Brackets

Removal Procedure

1. Place the hood in the service position. Refer to **Hood Service Positioning** .
2. Remove the hood latch. Refer to **Hood Primary and Secondary Latch Replacement** .
3. Remove the front end upper tie bar. Refer to **Front End Upper Tie Bar Replacement** .
4. Remove the intake manifold. Refer to **Intake Manifold Replacement (RPOs LC9, LMG, LY5, L76)**, **Intake Manifold Replacement (RPOs LY2, LY6)**, **Intake Manifold Replacement (Except RPOs LY2, LY6, LC9, LMG, LY5)**.

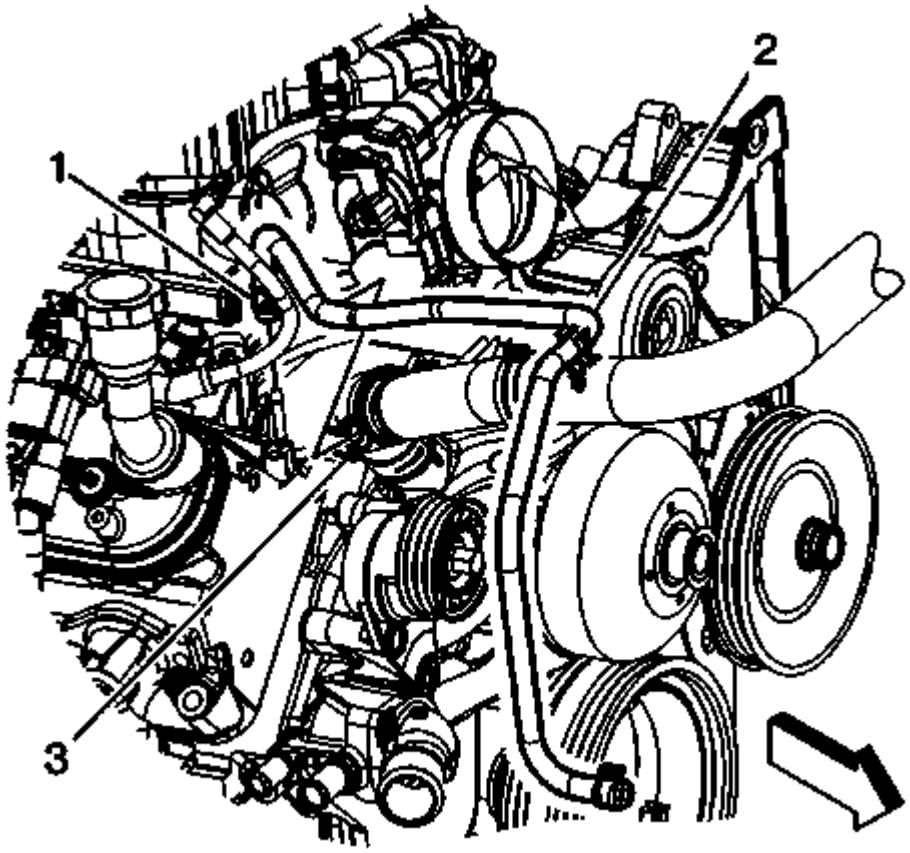

Fig. 434: View Of Radiator Vent Inlet Hose & Clamps
Courtesy of GENERAL MOTORS COMPANY

5. Remove the radiator vent inlet hose (2) from the radiator inlet hose clip (3).
6. Reposition the radiator vent inlet hose clamp (1) at the air bleed pipe.
7. Remove the radiator vent inlet hose (2) from the air bleed pipe and reposition.

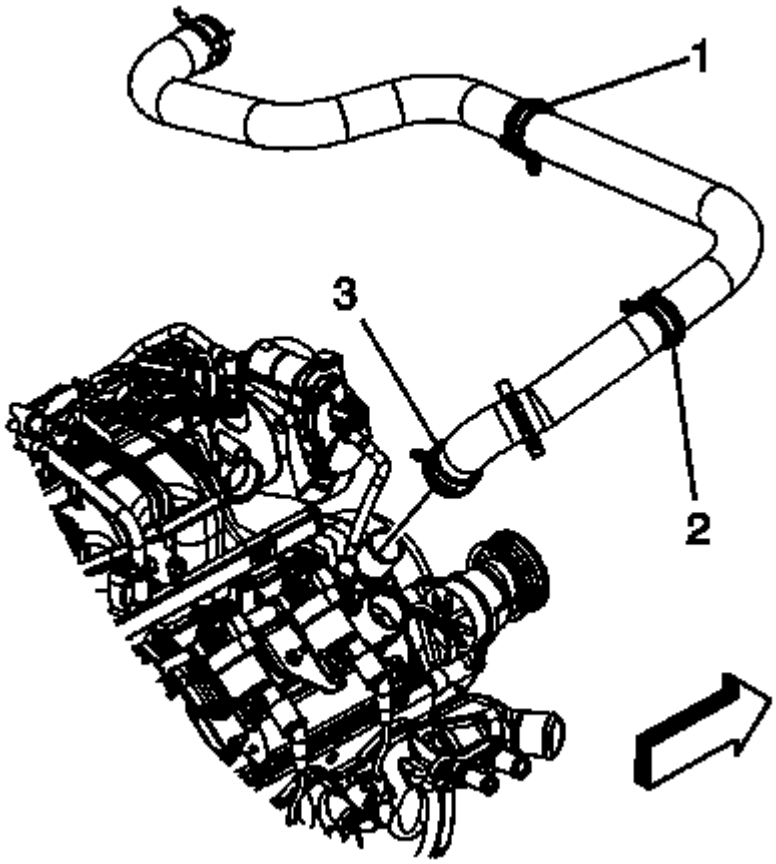

Fig. 435: View Of Radiator Vent Inlet Hose Clamp At Water Pump
Courtesy of GENERAL MOTORS COMPANY

8. Reposition the radiator inlet hose clamp (3) at the water pump.
9. Remove the radiator inlet hose from the water pump.

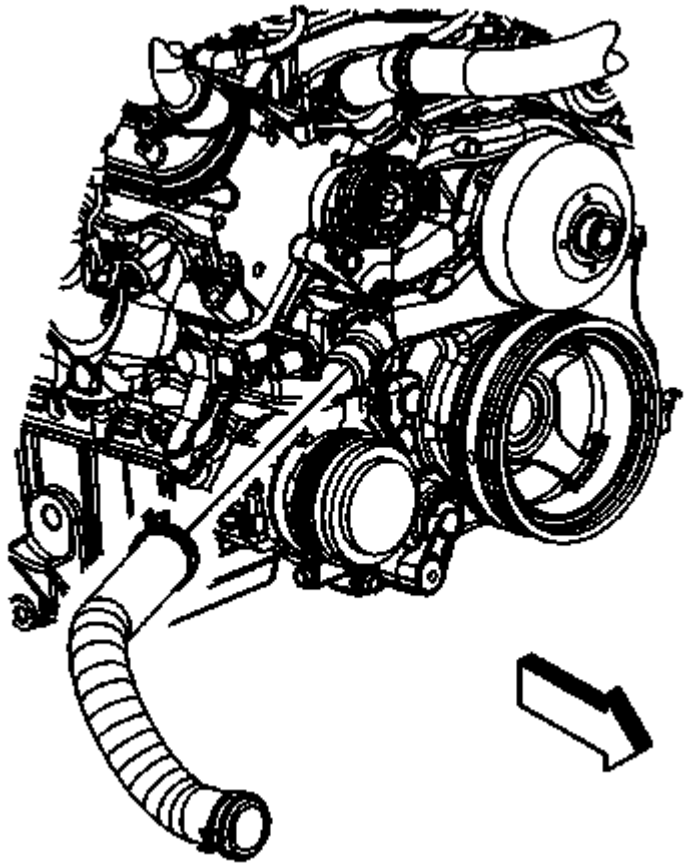

Fig. 436: View Of Radiator Outlet Hose
Courtesy of GENERAL MOTORS COMPANY

10. Reposition the radiator outlet hose clamp at the water pump.
11. Remove the radiator outlet hose from the water pump.
12. Remove the heater hoses. Refer to **Heater Inlet Hose Replacement (Non-HP2)** , **Heater Inlet Hose Replacement (Pump to Engine-HP2)** , **Heater Inlet Hose Replacement (Pump to Heater Core-HP2)** , and **Heater Outlet Hose Replacement (Non-HP2)** .

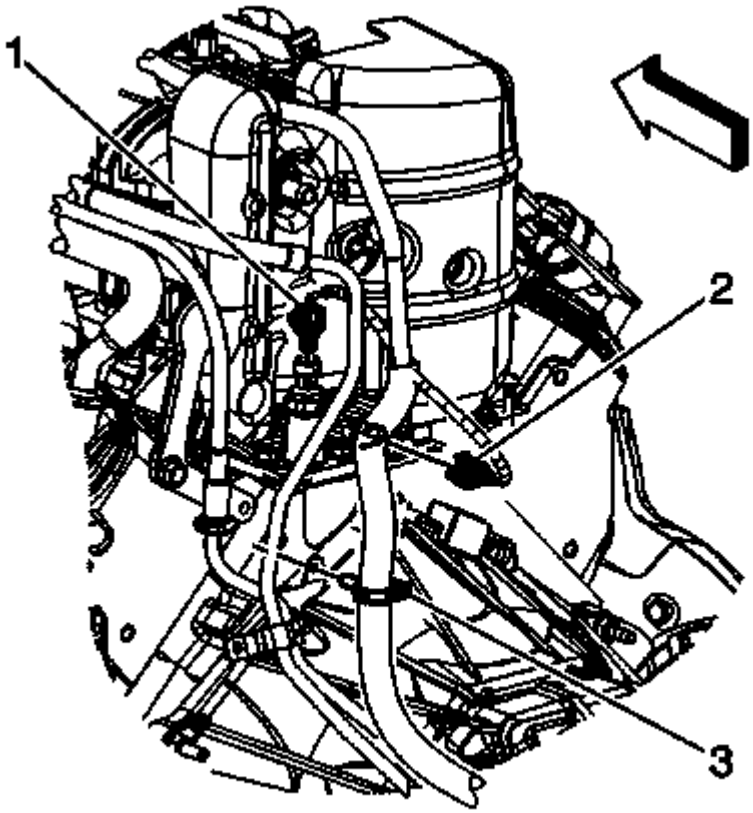

Fig. 437: View Of Engine Harness Electrical Connectors & Inlet Hose Clamp
Courtesy of GENERAL MOTORS COMPANY

13. Disconnect the engine harness electrical connector (1) from the oil pressure sensor.
14. Disconnect the engine harness electrical connector (2) from the lifter oil manifold.

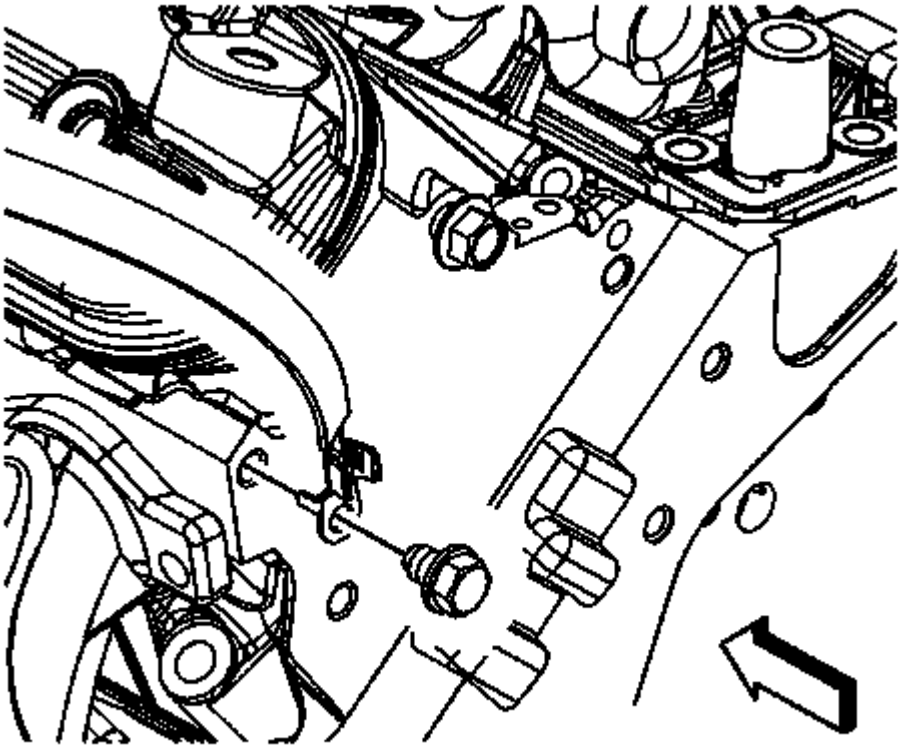

Fig. 438: View Of Engine Ground Strap & Bolt
Courtesy of GENERAL MOTORS COMPANY

15. Remove the engine ground strap bolt from the rear of the left cylinder head and cowl and reposition.

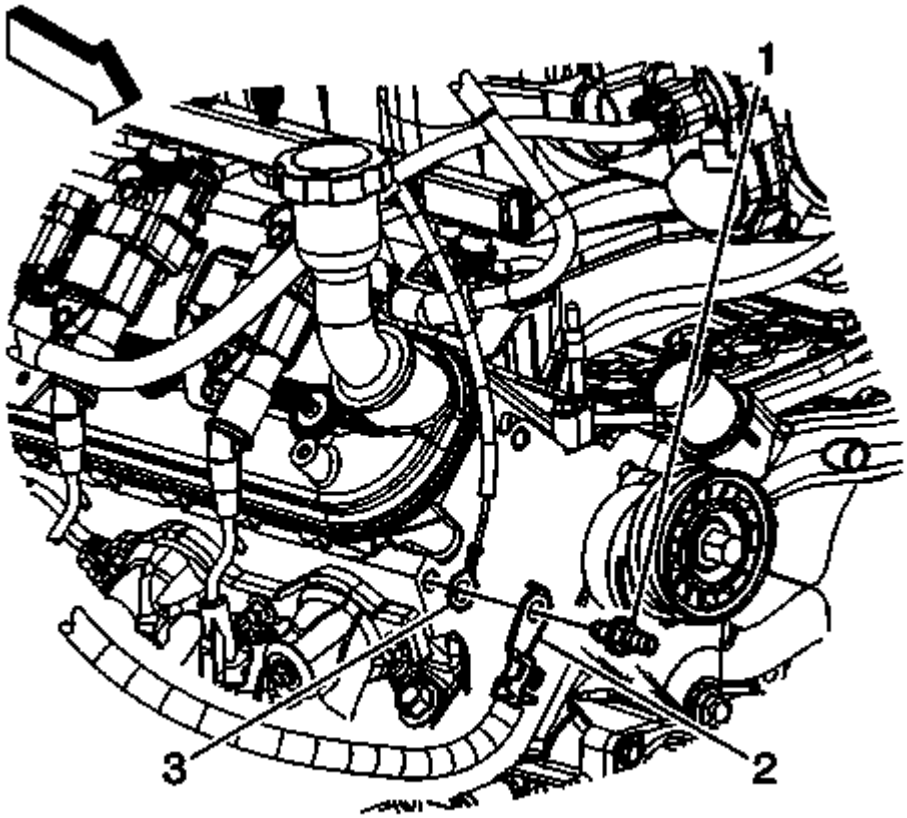

Fig. 439: View Of Battery Cable Terminals & Stud
Courtesy of GENERAL MOTORS COMPANY

16. Remove the negative battery cable stud (1) from the right cylinder head.
17. Remove the negative battery cable terminal (2) and the engine harness ground (3) from the right cylinder head.
18. Raise and support the vehicle. Refer to **Lifting and Jacking the Vehicle** .

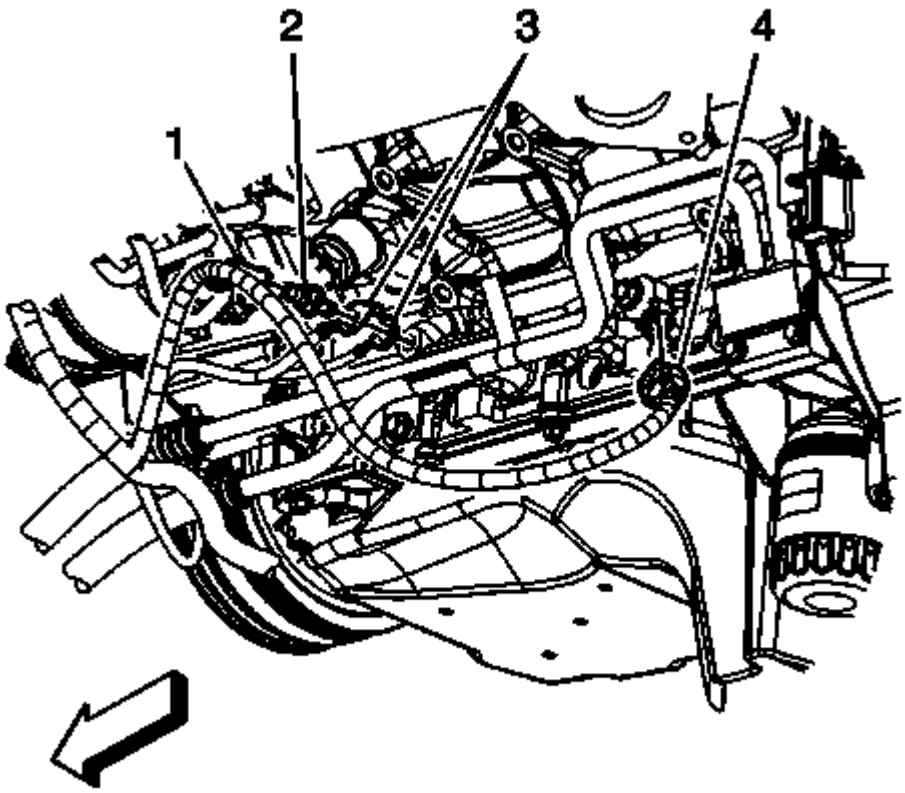

Fig. 440: View Of Engine Harness Components
Courtesy of GENERAL MOTORS COMPANY

19. Remove the engine harness clip (1) from the ground stud.
20. Remove the engine harness ground stud (2) from the engine block.
21. Remove the engine harness grounds (3) from the engine block.
22. Disconnect the engine harness electrical connector (4) from the knock sensor.

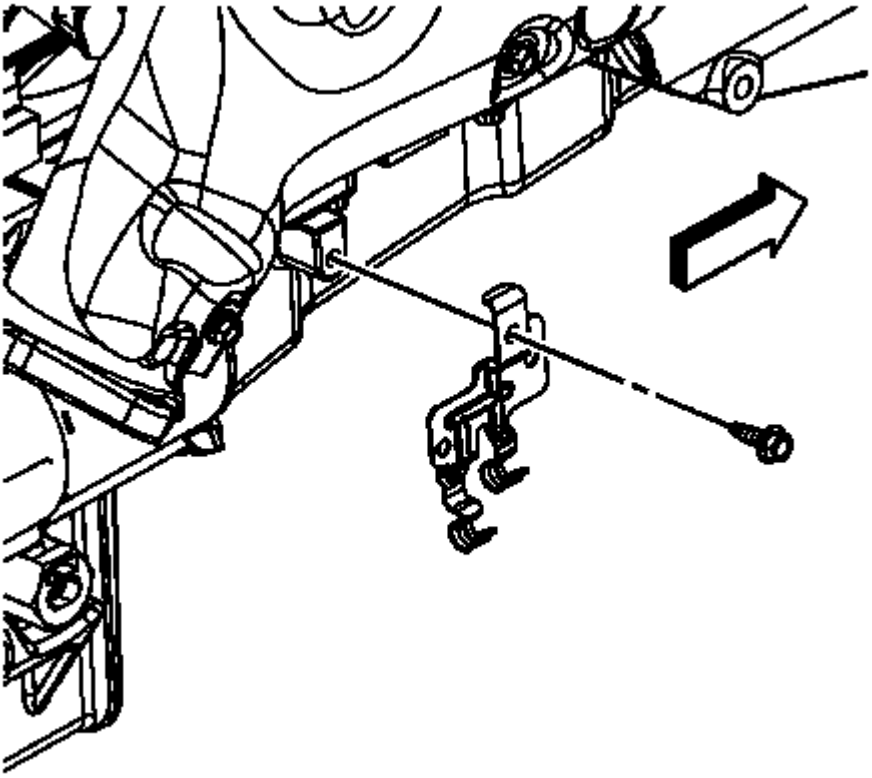

Fig. 441: View Of Oil Cooler Line Clip & Bolt
Courtesy of GENERAL MOTORS COMPANY

23. Remove the transmission oil cooler line clip bolt from the oil pan, if equipped.

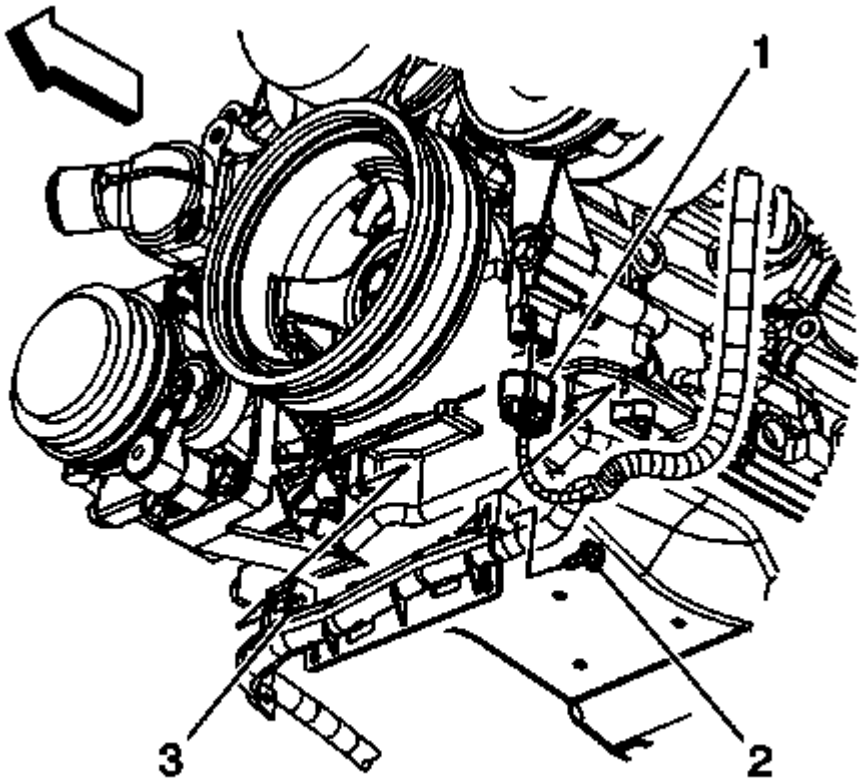

Fig. 442: View Of Electrical Connector, Cable Channel Bolt & Pin
Courtesy of GENERAL MOTORS COMPANY

24. Disconnect the engine harness electrical connector (1) from the camshaft position (CMP) sensor wire harness.
25. Remove the battery cable channel bolt (2).
26. Slide the channel pin (3) out of the oil pan tab.

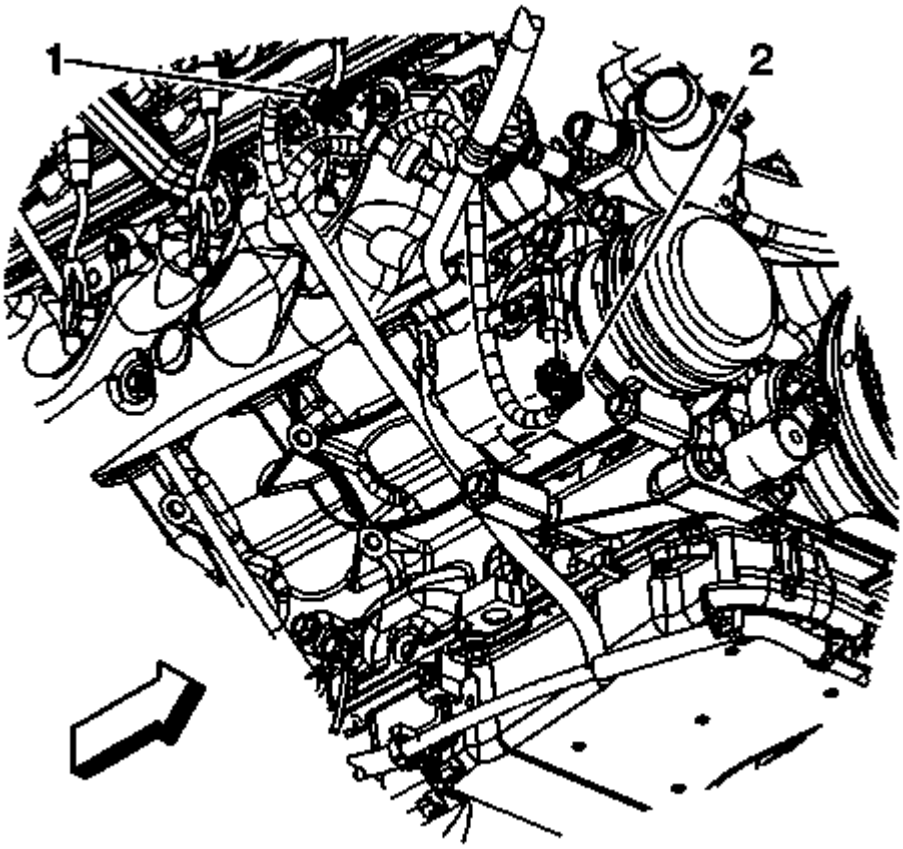

Fig. 443: View Of Electrical Connectors
Courtesy of GENERAL MOTORS COMPANY

27. Disconnect the engine harness electrical connector (1) from the A/C refrigerant pressure sensor.
28. Remove the starter motor. Refer to **Starter Replacement** .

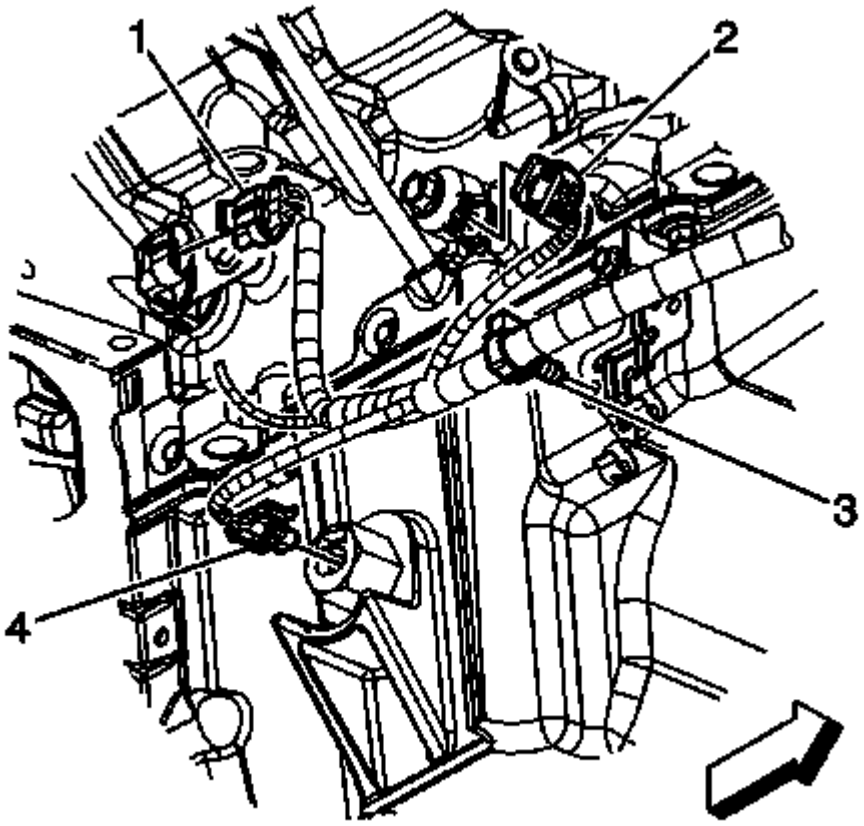

Fig. 444: View Of Engine Wiring Harness Electrical Connector & Components
Courtesy of GENERAL MOTORS COMPANY

29. Disconnect the engine harness electrical connector (1) from the crankshaft position (CKP) sensor.
30. Disconnect the engine harness electrical connector (2) from the knock sensor.
31. Disconnect the engine harness electrical connector (4) from the oil level sensor.
32. Remove the engine harness clip (3) from the transmission oil cooler line bracket.

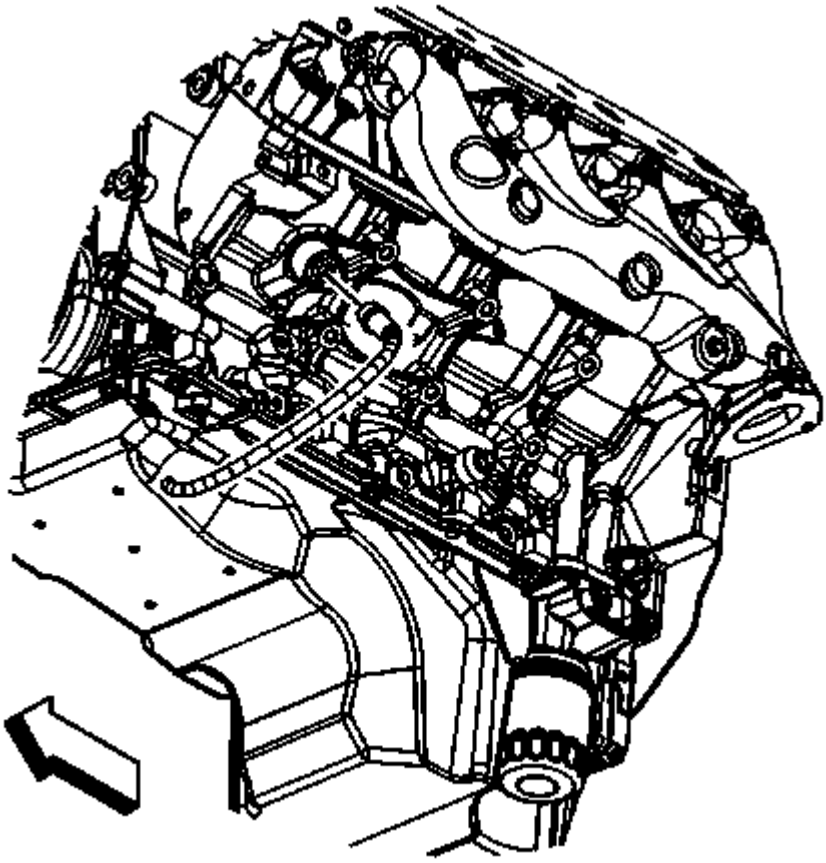

Fig. 445: View Of Coolant Heater Cord
Courtesy of GENERAL MOTORS COMPANY

33. Disconnect the coolant heater cord from the coolant heater, if equipped.
34. Lower the vehicle.

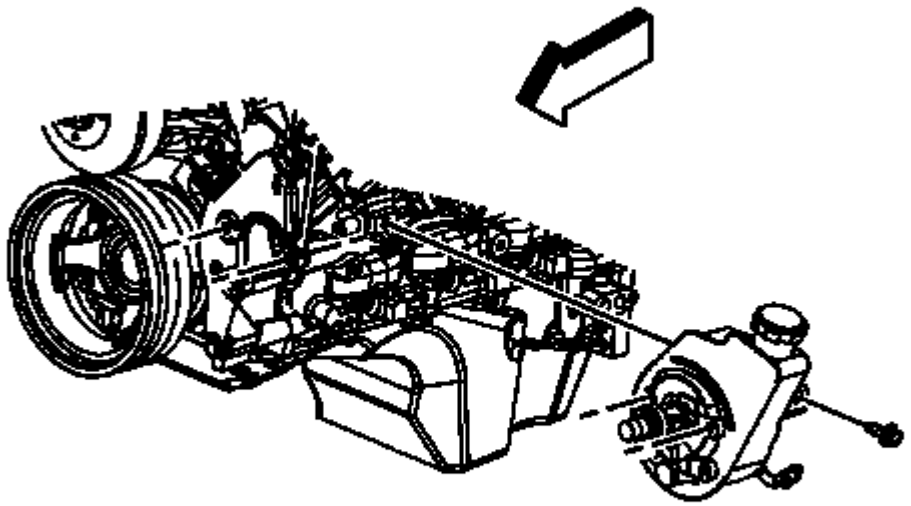

Fig. 446: View Of Power Steering Pump-To-Engine Block Bolt
Courtesy of GENERAL MOTORS COMPANY

35. Remove the rear power steering pump-to-engine block bolt (1500 series shown, 2500 series similar).

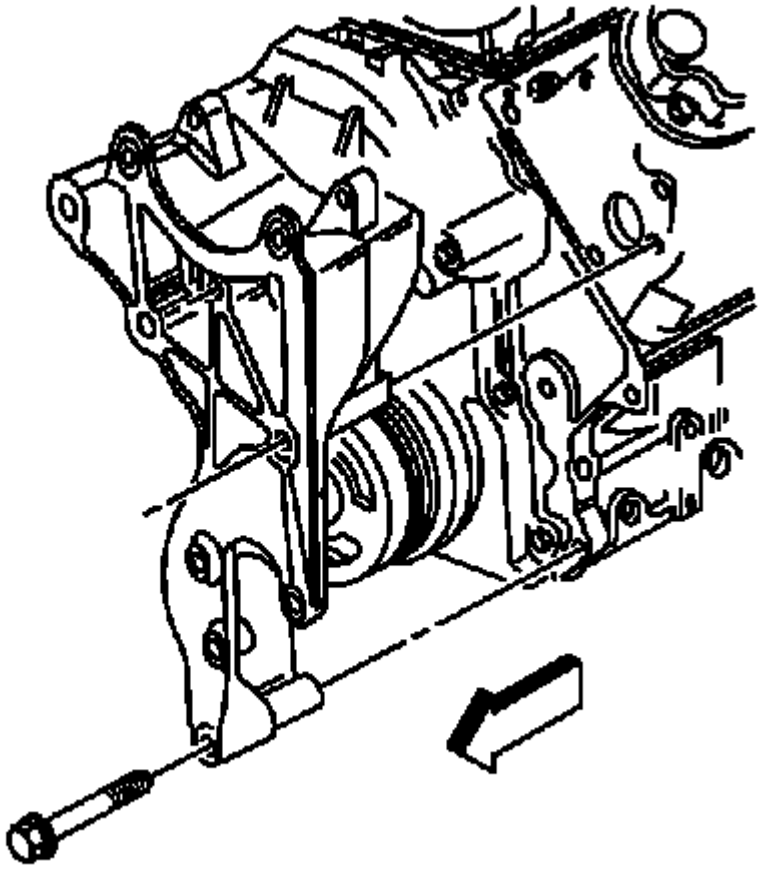

Fig. 447: View Of Generator Bracket & Bolts
Courtesy of GENERAL MOTORS COMPANY

36. Remove the generator bracket bolts.
37. Position the generator bracket (with power steering pump) aside.
38. Remove the ignition coil, as required for the proper fit of the **J 41798** Engine Lift Bracket before lifting the engine. Refer to **Ignition Coil Replacement** .

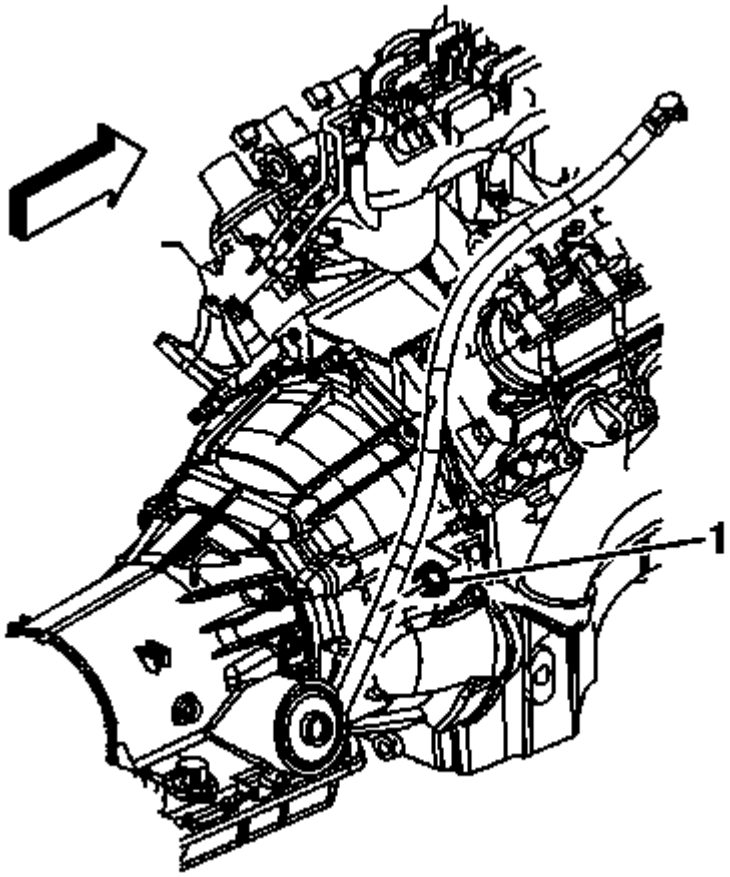

Fig. 448: View Of Transmission Oil Level Indicator Tube Nut
Courtesy of GENERAL MOTORS COMPANY

39. Remove the transmission oil level indicator tube nut (1).

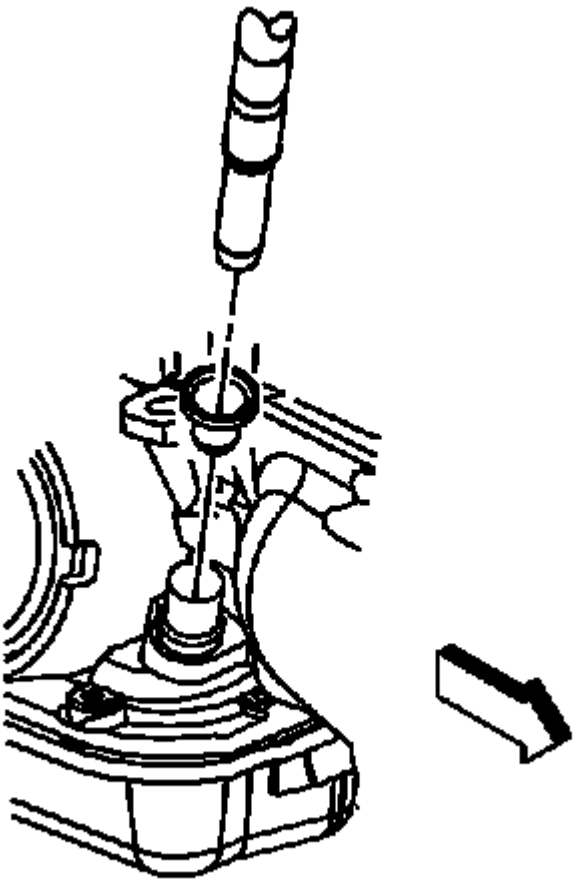

Fig. 449: View Of Oil Level Indicator Tube & Seal
Courtesy of GENERAL MOTORS COMPANY

40. Remove the transmission oil level indicator tube.

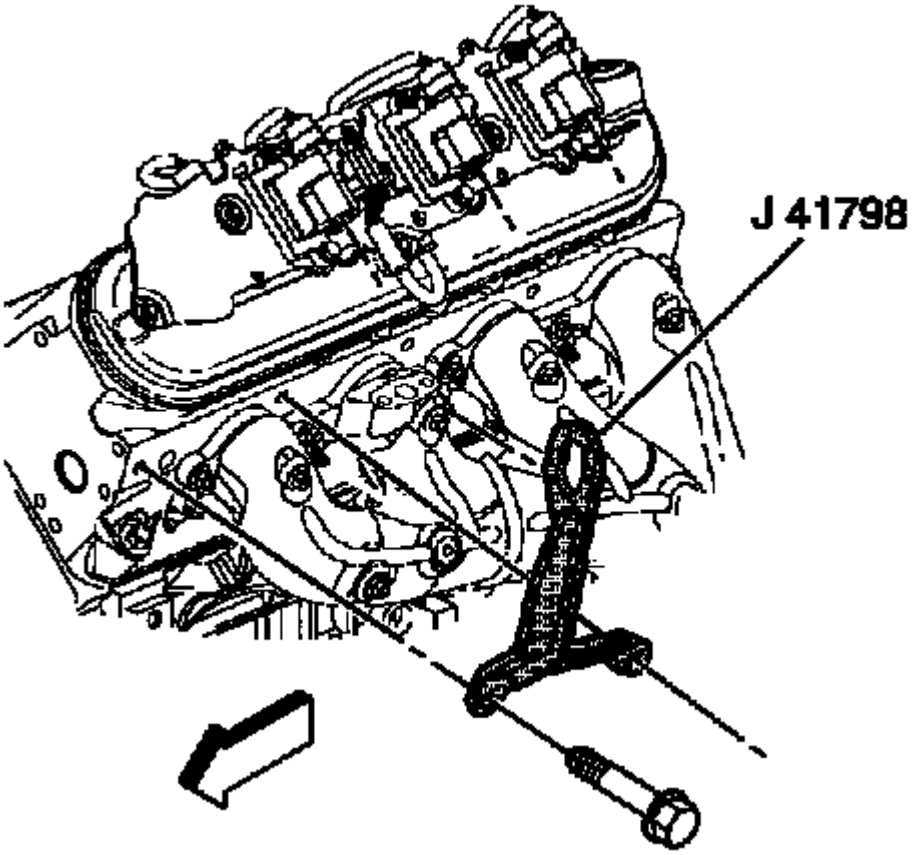

Fig. 450: View Of J 41798
Courtesy of GENERAL MOTORS COMPANY

CAUTION: Refer to Fastener Caution .

41. Install the **J 41798** Engine Lift Bracket to the cylinder heads.

Tighten

- Tighten the M8 engine lift bracket bolts to 25 (18 lb ft).
- Tighten the M10 engine lift bracket bolts to 50 (37 lb ft).

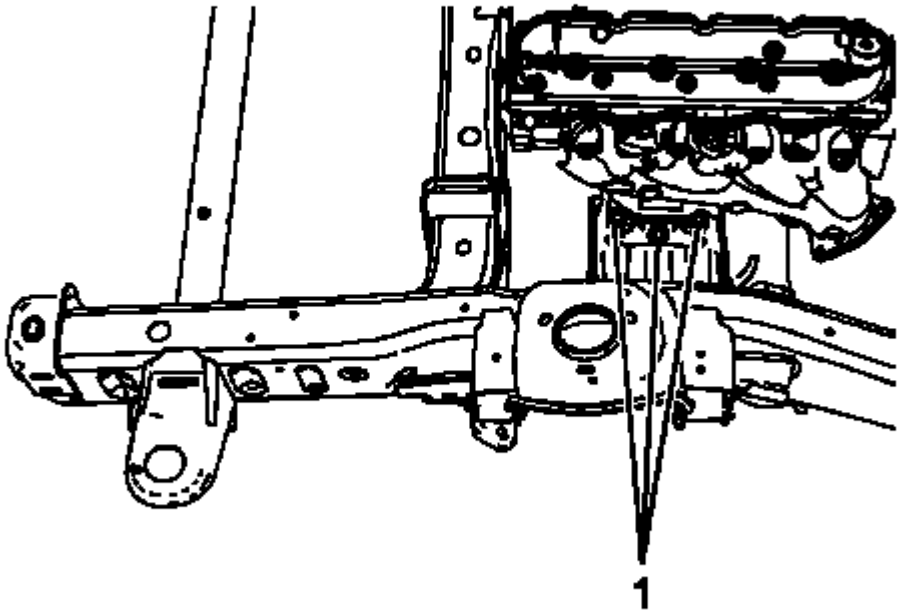

Fig. 451: View Of Engine Mount To Frame Bolts
Courtesy of GENERAL MOTORS COMPANY

42. For 1500 series vehicles with a 4.8L engine, remove the left and right engine mount to frame bolts (1).

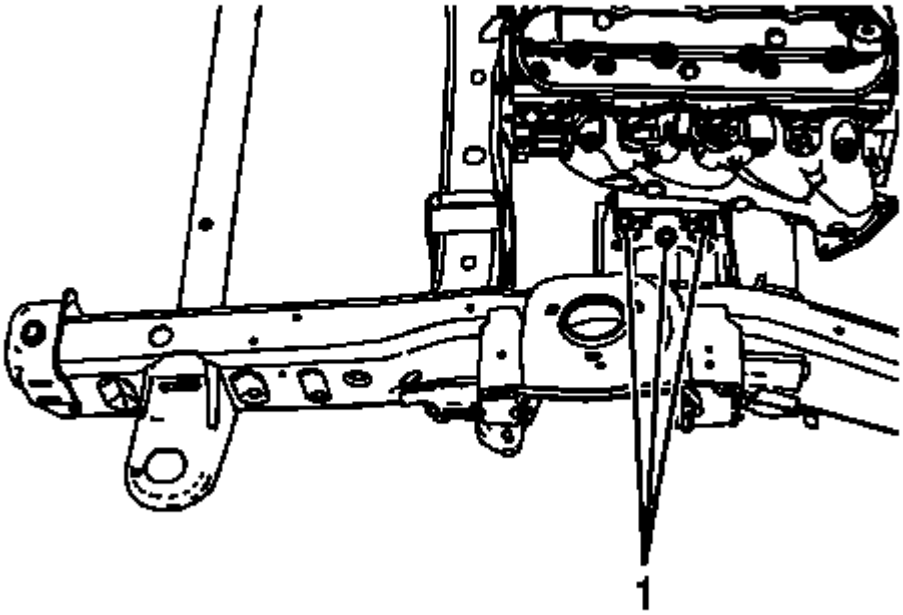

Fig. 452: View Of Engine Mount To Frame Bolts
Courtesy of GENERAL MOTORS COMPANY

43. For 1500 series vehicles with a 5.3L, 6.0L, or 6.2L engines, remove the left and right engine mount to frame bolts (1).

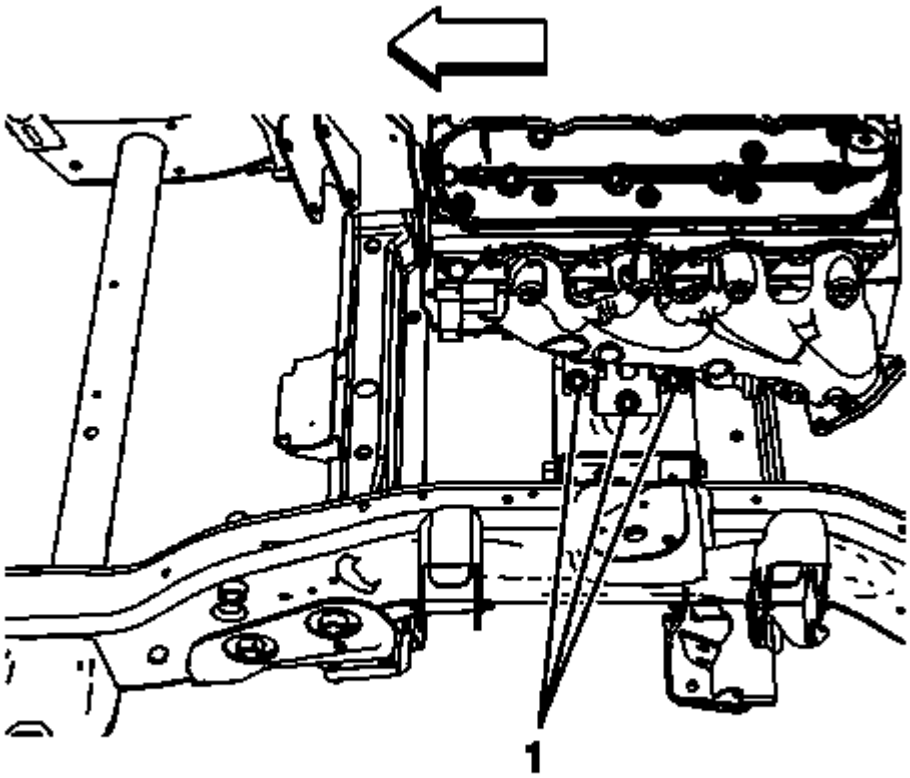

Fig. 453: View Of Engine Mount Bracket Bolts
Courtesy of GENERAL MOTORS COMPANY

44. For 2500 series vehicles with a 5.3L, 6.0L, or 6.2L engines, remove the left and right engine mount to engine mount bracket bolts (1).
45. Raise the vehicle.

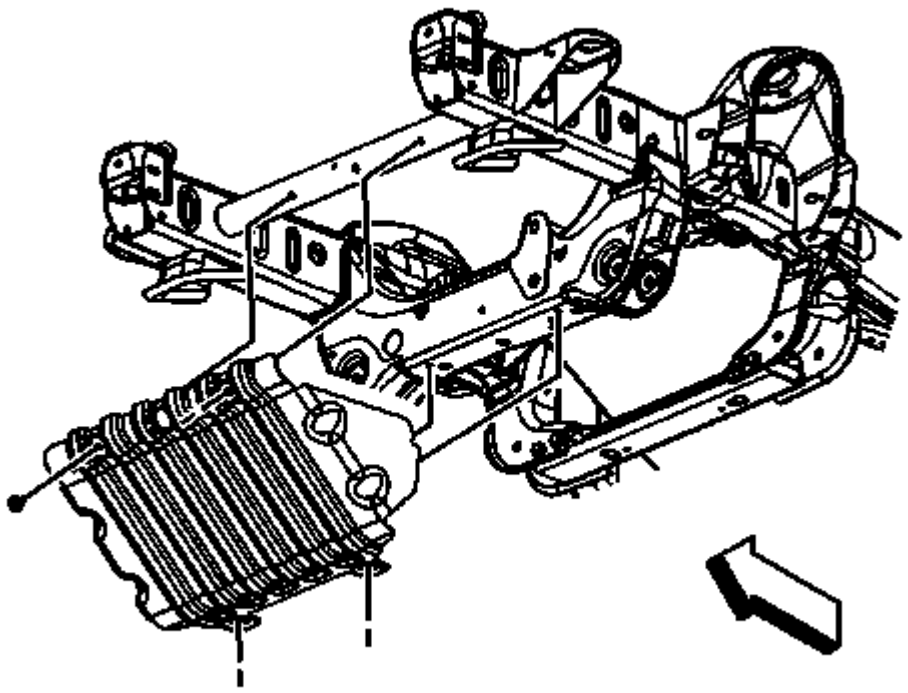

Fig. 454: View Of Engine Shield & Bolts
Courtesy of GENERAL MOTORS COMPANY

46. Remove the engine shield bolts and shield.

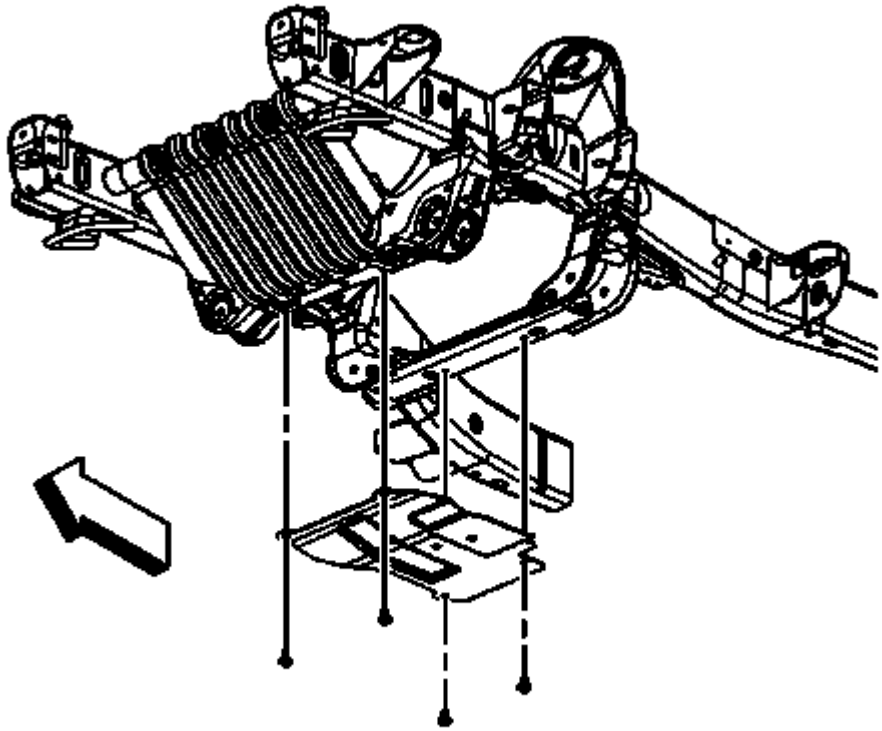

Fig. 455: View Of Oil Pan Skid Plate & Bolts
Courtesy of GENERAL MOTORS COMPANY

47. For 1500 series vehicles, remove the oil pan skid plate bolts and plate, if equipped.

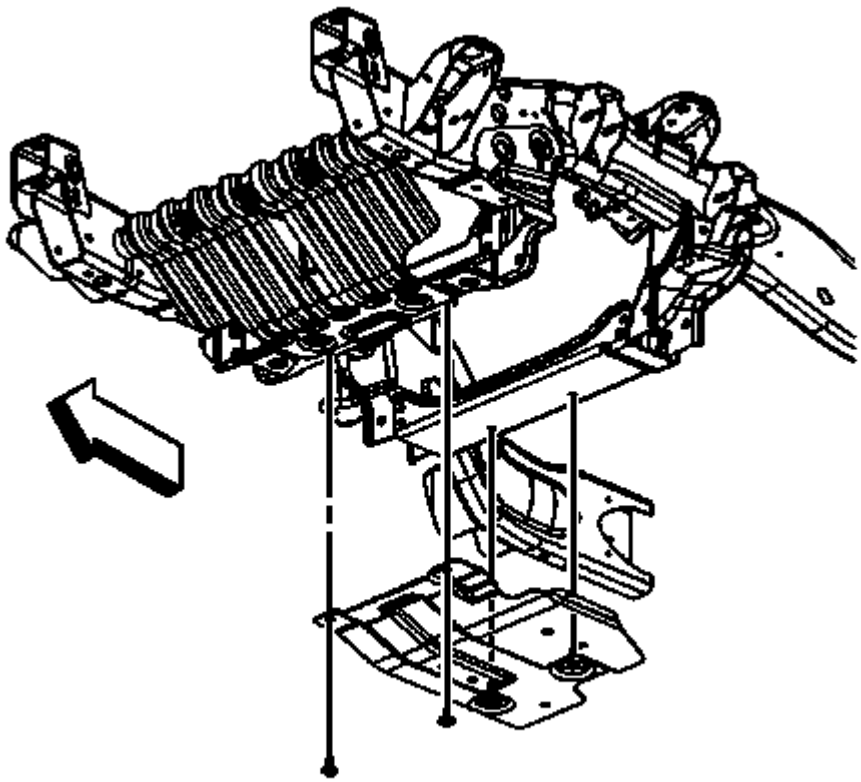

Fig. 456: View Of Oil Pan Skid Plate & Bolts
Courtesy of GENERAL MOTORS COMPANY

48. For 2500 series vehicles, remove the oil pan skid plate bolts and plate, if equipped.

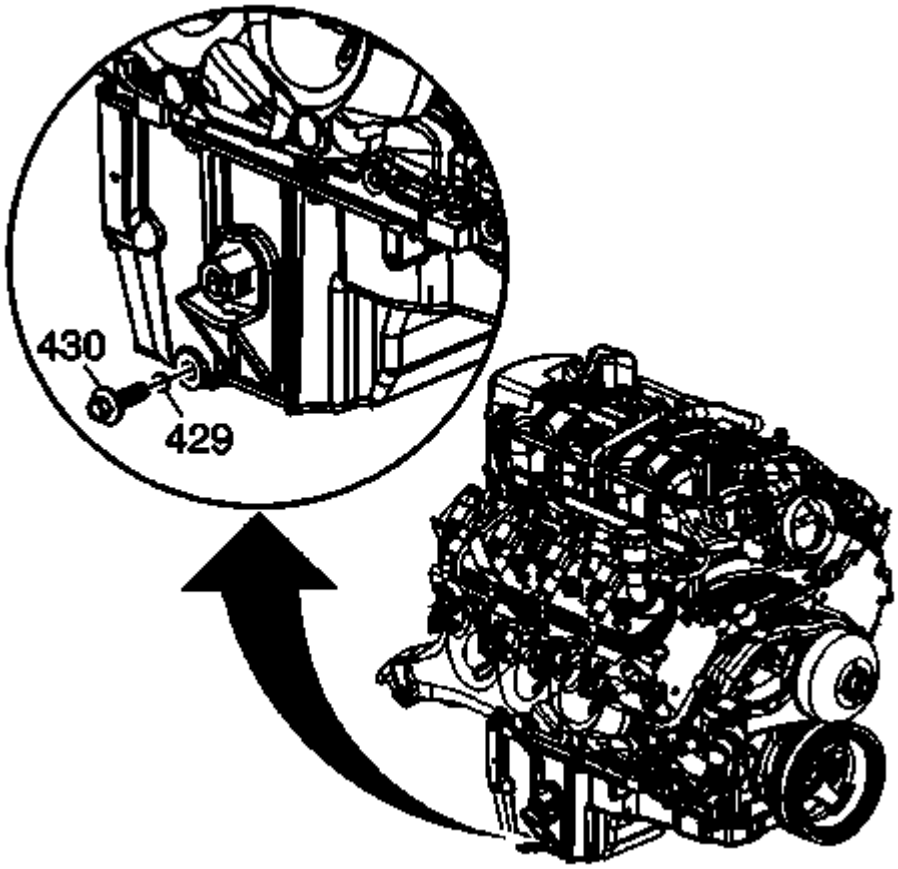

Fig. 457: View Of Oil Pan Drain Plug & Seal
Courtesy of GENERAL MOTORS COMPANY

49. Place a suitable drain pan under the oil pan drain plug.
50. Remove the oil pan drain plug (430).
51. Allow the oil to drain completely.
52. Reinstall and tighten the oil pan drain plug.

Tighten

Tighten the drain plug to 25 (18 lb ft).

53. Remove the catalytic converter. Refer to **Catalytic Converter Replacement (with Exhaust Clamp)** , or **Three-Way Catalytic Converter Replacement**

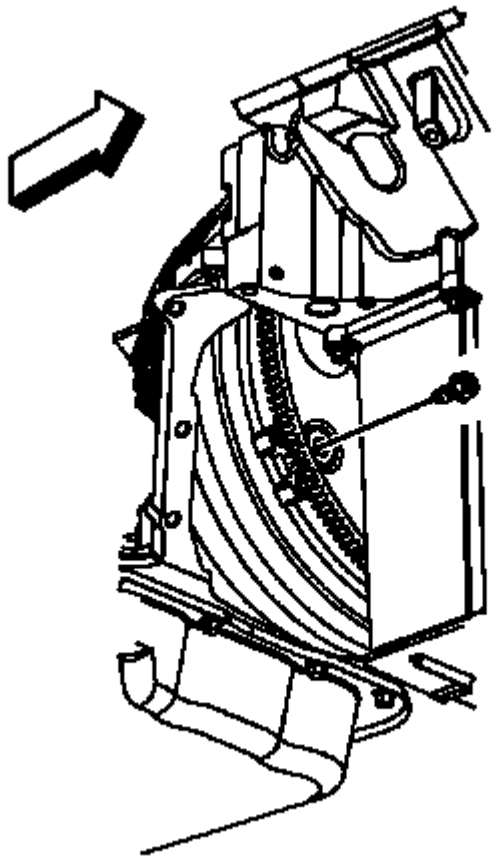

Fig. 458: View Of Flywheel To Torque Converter Bolts
Courtesy of GENERAL MOTORS COMPANY

54. Remove the flywheel to torque converter bolts.

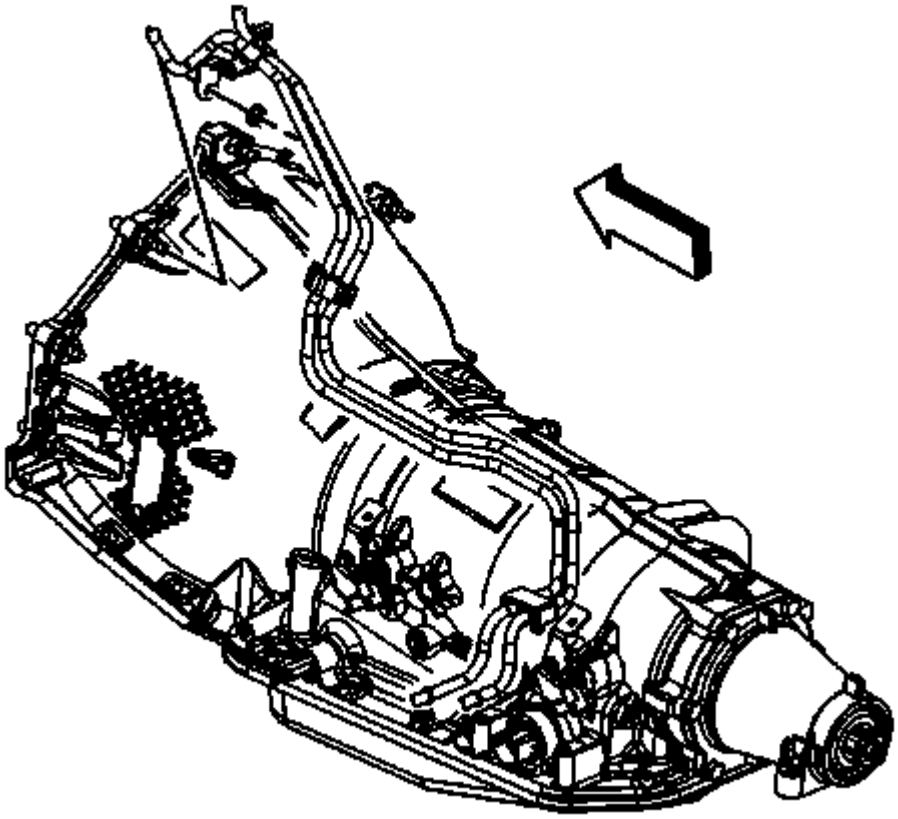

Fig. 459: View Of Fuel/Evaporative Emission Pipe & Bracket
Courtesy of GENERAL MOTORS COMPANY

55. Remove the fuel/evaporative emission (EVAP) pipe bracket nut from the transmission stud (typical installation shown).
56. Remove the fuel/EVAP pipe bracket from the stud. Reposition the bracket out of the way.

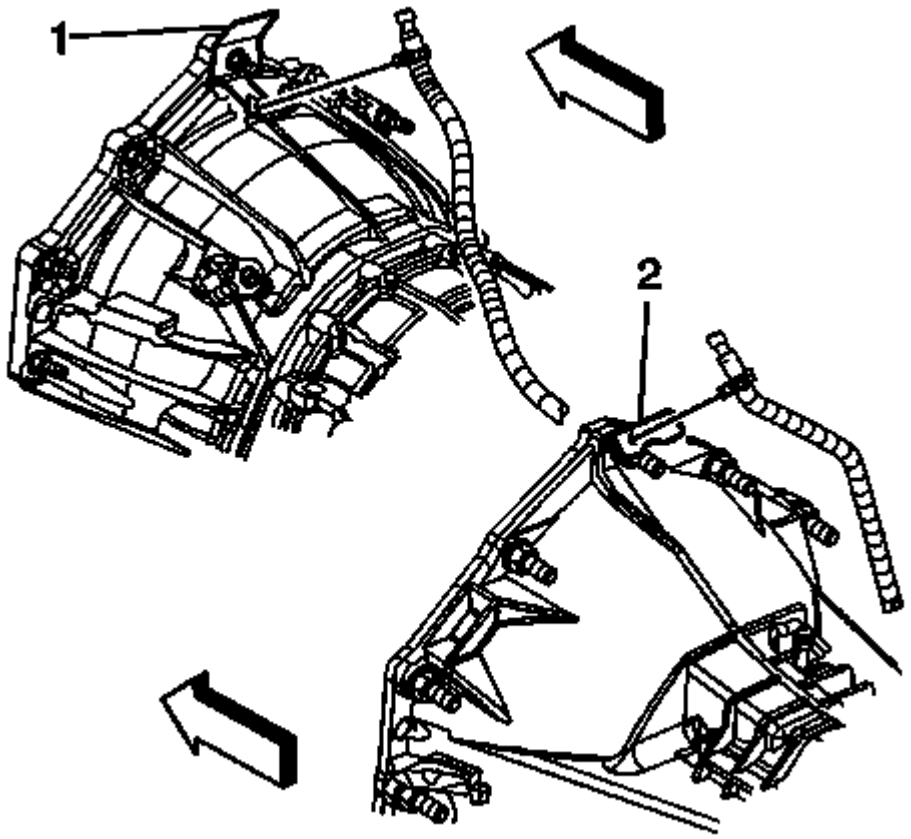

Fig. 460: View Of Transfer Case Vent Hose Bracket & Nut
Courtesy of GENERAL MOTORS COMPANY

57. For the 4L80-E automatic transmission, remove the transfer case vent hose bracket (1) nut from the stud, if equipped.
58. For the 4L60-E/4L70-E/6L80-E automatic transmission, remove the transfer case vent hose bracket (2) nut from the stud, if equipped.
59. Reposition the transfer case vent hose bracket and hose out of the way, if equipped.

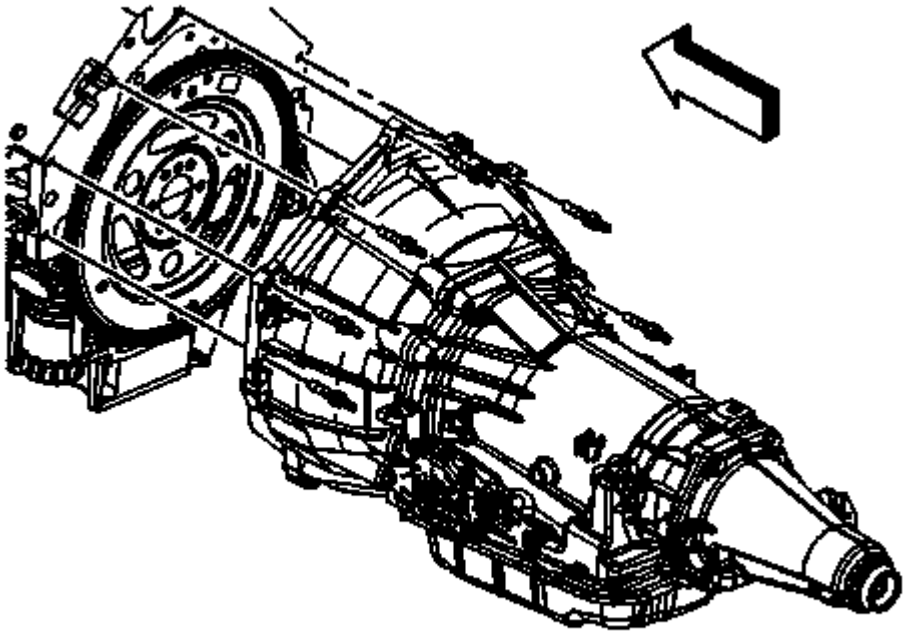

Fig. 461: View Of Transmission Bolts/Studs
Courtesy of GENERAL MOTORS COMPANY

60. If equipped with the 4L60-E/4L70-E automatic transmission, remove the transmission bolts/studs.

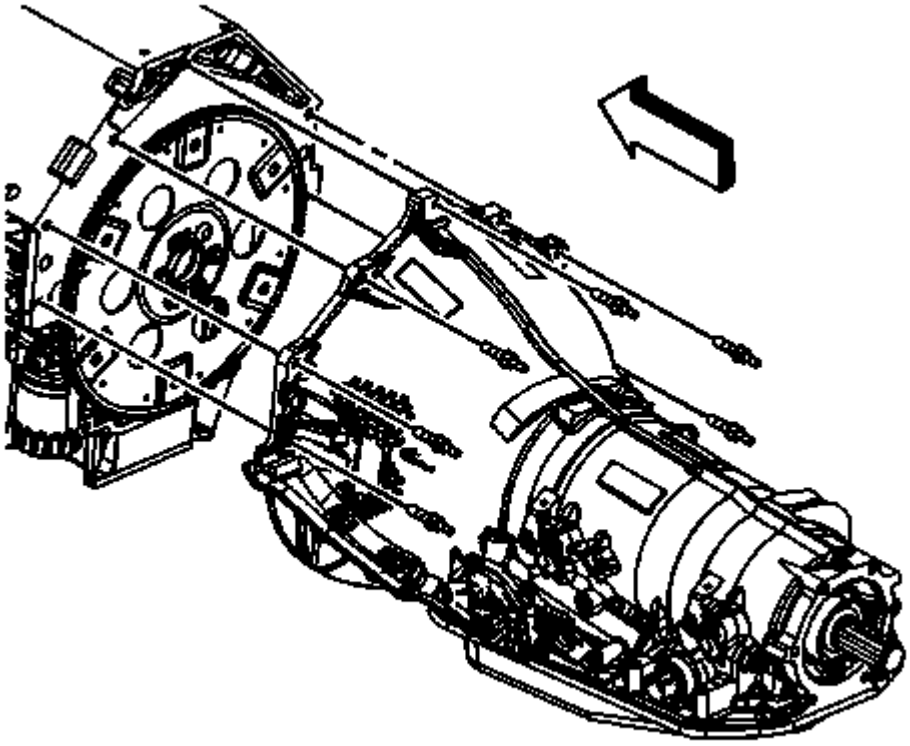

Fig. 462: View Of Transmission Bolts/Studs
Courtesy of GENERAL MOTORS COMPANY

61. If equipped with the 4L80-E automatic transmission, remove the transmission bolts/studs.

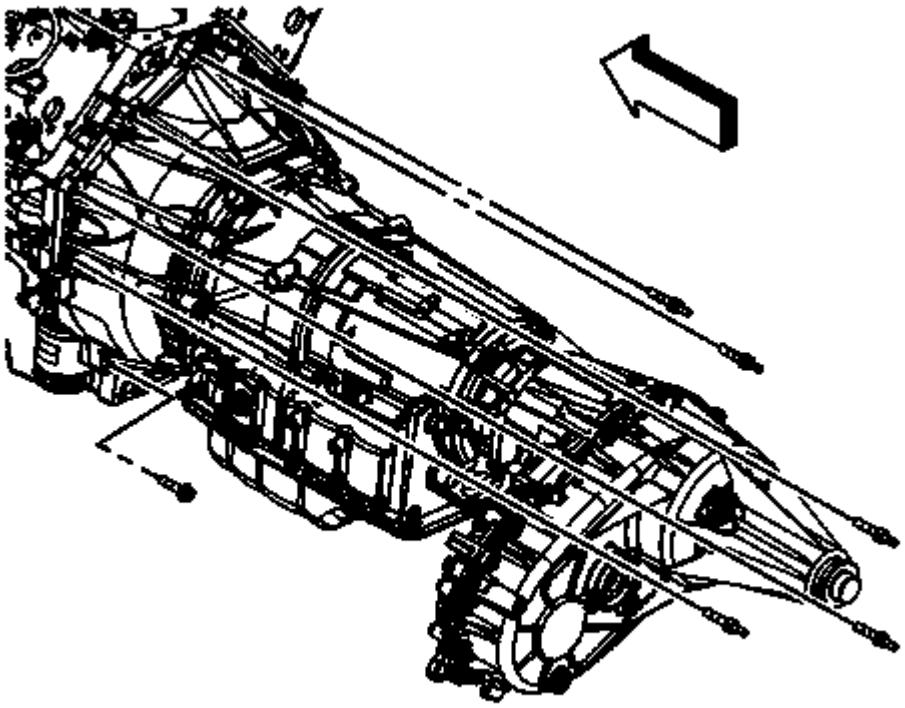

Fig. 463: View Of Transmission Bolts/Studs
Courtesy of GENERAL MOTORS COMPANY

62. If equipped with the 6L80-E automatic transmission, remove the transmission bolts/studs.
63. Lower the vehicle.
64. Position and install an engine hoist to the **J 41798** Engine Lift Bracket.
65. Install a floor jack under the transmission for support.
66. Remove the engine from the vehicle.
67. Install the **J 21366** Converter Holding Strap to the transmission in order to hold the torque converter.
68. Position and install the engine onto an engine stand.
69. Remove the engine hoist. from the **J 41798** Engine Lift Bracket.

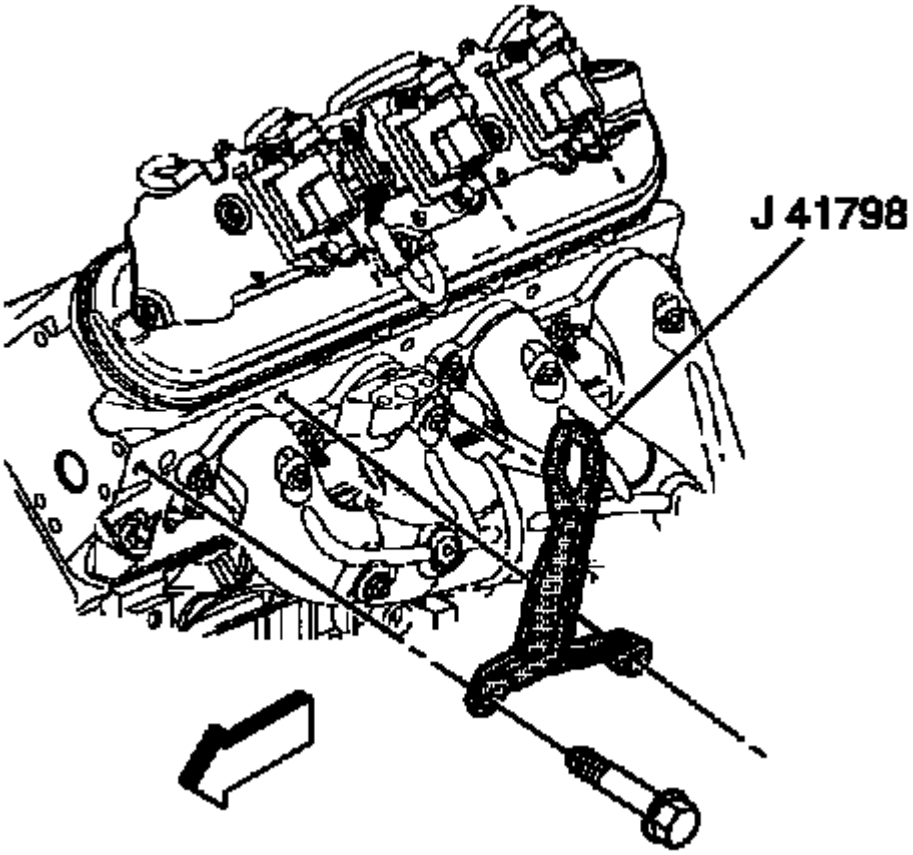

Fig. 464: View Of J 41798
Courtesy of GENERAL MOTORS COMPANY

70. Remove the **J 41798** Engine Lift Bracket from the engine.

Installation Procedure

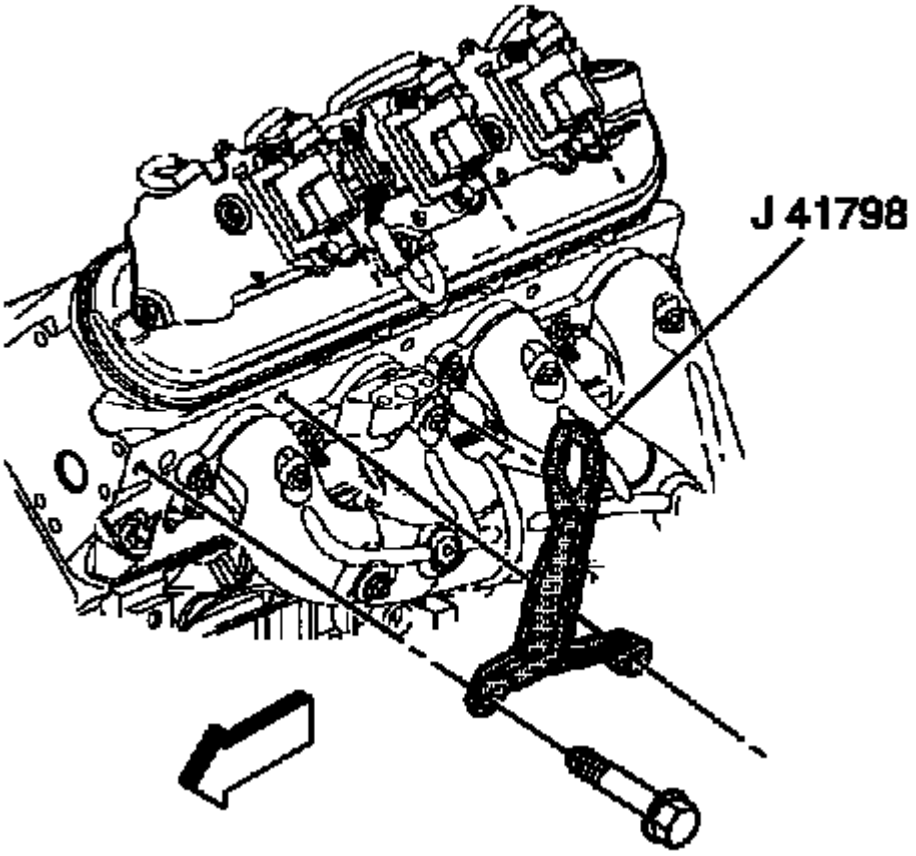

Fig. 465: View Of J 41798
Courtesy of GENERAL MOTORS COMPANY

1. Install the **J 41798** Engine Lift Bracket to the engine.

CAUTION: Refer to Fastener Caution .

2. Tighten the M8 engine lift bracket bolts to 25 N.m (18 lb ft).
3. Tighten the M10 engine lift bracket bolts to 50 N.m (37 lb ft).
4. Position and install the engine hoist to the **J 41798** Engine Lift Bracket.
5. Remove the engine from the engine stand.
6. Remove the **J 21366** Converter Holding Strap from the transmission.
7. Install the engine to the vehicle.
8. Align and install the engine to the transmission. Raise or lower the transmission as required using the floor jack.
9. Once aligned and mated together completely lower and remove the engine hoist.

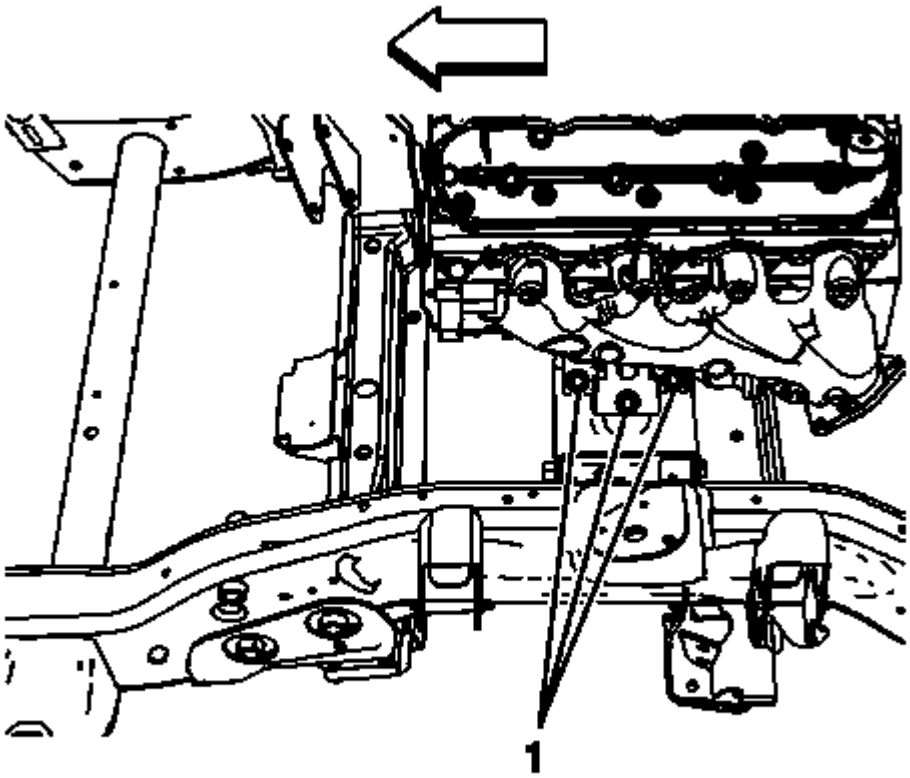

Fig. 466: View Of Engine Mount Bracket Bolts
Courtesy of GENERAL MOTORS COMPANY

NOTE: Start with the middle bolt then either side bolt.

10. For 2500 series vehicles with a 5.3L, 6.0L, or 6.2L engine, install the left and right engine mount to engine mount to frame bolts (1) and tighten to 65 (48 lb ft).

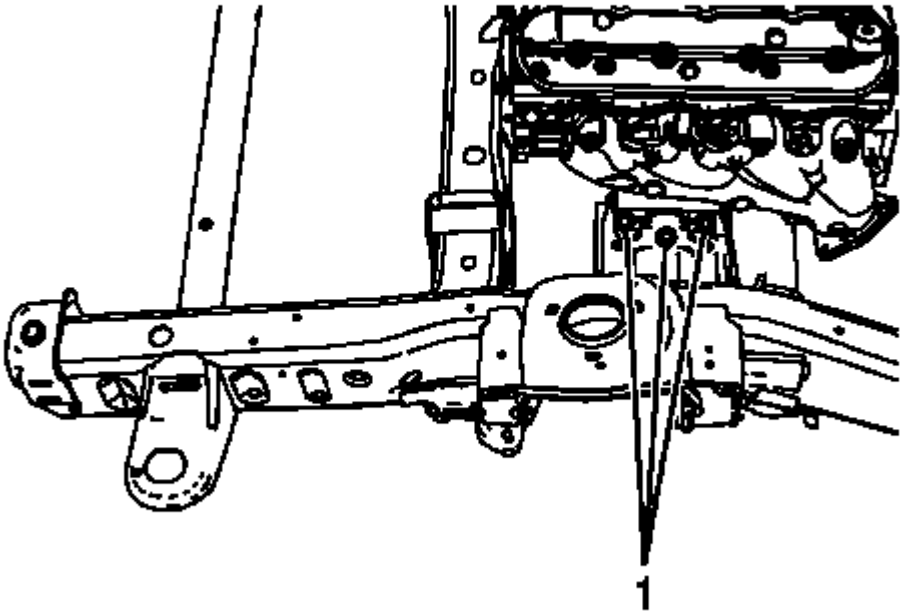

Fig. 467: View Of Engine Mount To Frame Bolts
Courtesy of GENERAL MOTORS COMPANY

NOTE: Start with the middle bolt then either side bolt.

11. For 1500 series vehicles with a 5.3L, 6.0L, or 6.2L engine, install the left and right engine mount to frame bolts (1) and tighten to 65 (48 lb ft).

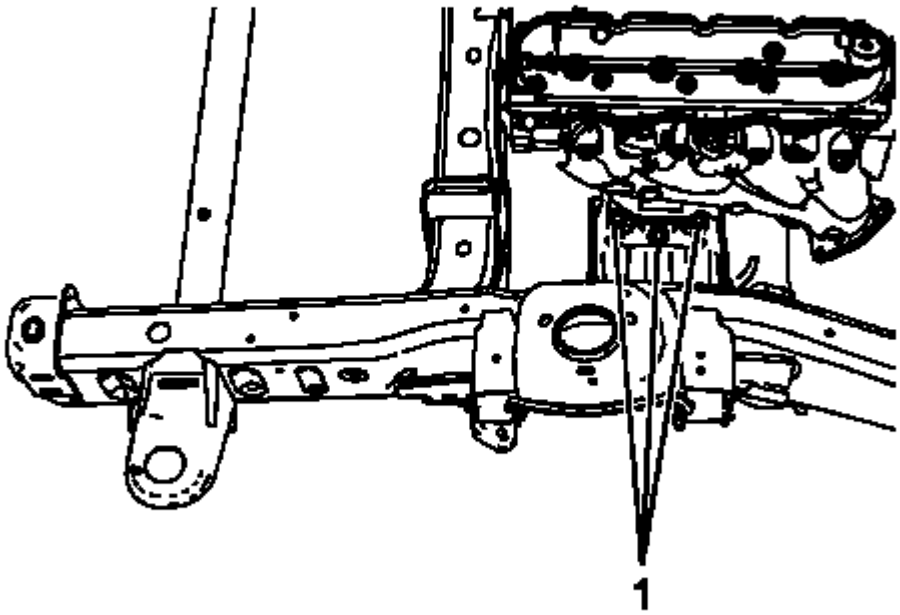

Fig. 468: View Of Engine Mount To Frame Bolts
Courtesy of GENERAL MOTORS COMPANY

NOTE: Start with the middle bolt then either side bolt.

12. For 1500 series vehicles with a 4.8L engine, install the left and right engine mount to frame bolts (1) tighten to 65 (48 lb ft).
13. Remove the floor jack from under the transmission.
14. Raise the vehicle.

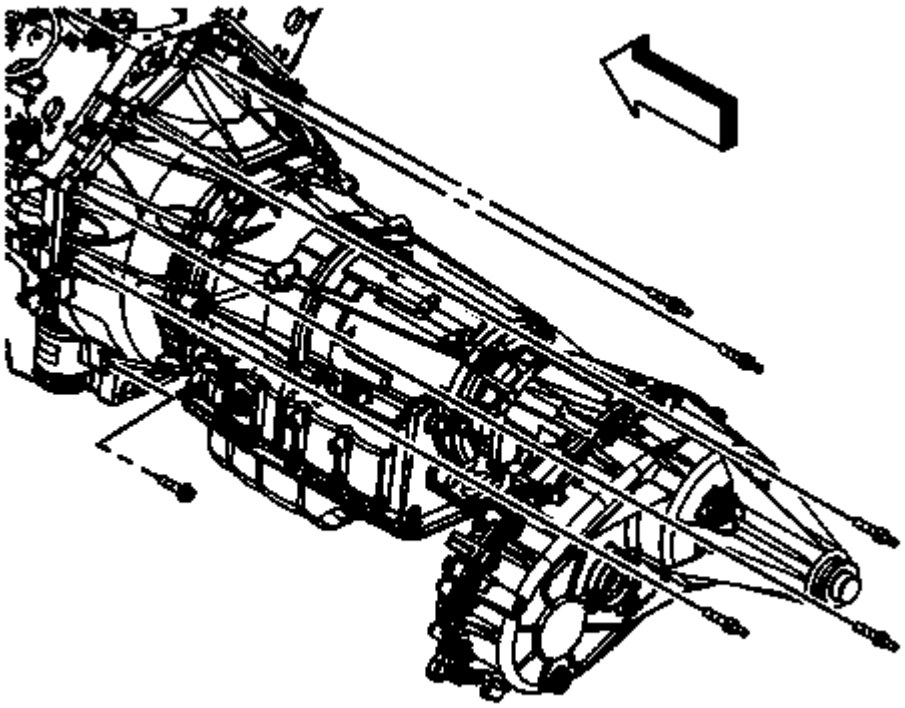

Fig. 469: View Of Transmission Bolts/Studs
Courtesy of GENERAL MOTORS COMPANY

15. If equipped with the 6L80-E automatic transmission, install the transmission bolts/studs and tighten to 50 (37 lb ft).

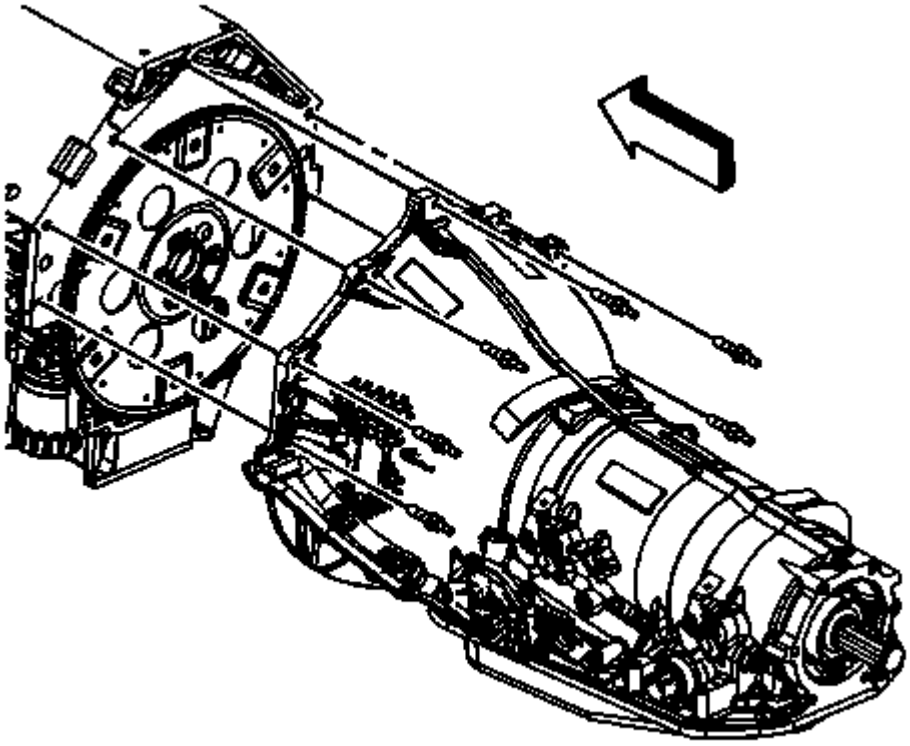

Fig. 470: View Of Transmission Bolts/Studs
Courtesy of GENERAL MOTORS COMPANY

16. If equipped with the 4L80-E automatic transmission, install the transmission bolts/studs and tighten to 50 (37 lb ft).

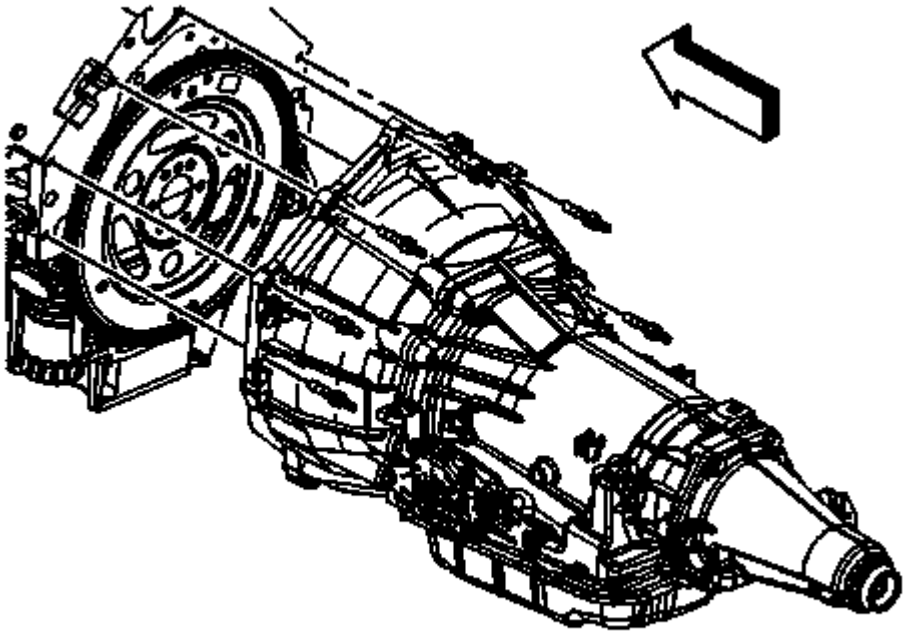

Fig. 471: View Of Transmission Bolts/Studs
Courtesy of GENERAL MOTORS COMPANY

17. If equipped with the 4L60-E/4L70-E automatic transmission, install the transmission bolts/studs and tighten to 50 (37 lb ft).

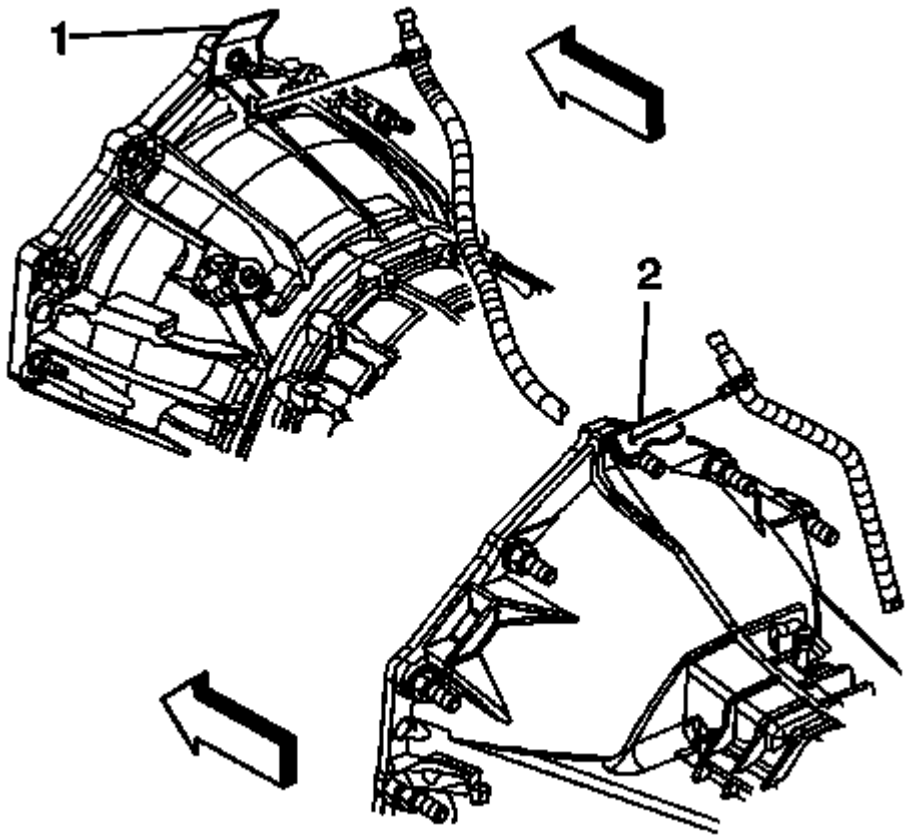

Fig. 472: View Of Transfer Case Vent Hose Bracket & Nut
Courtesy of GENERAL MOTORS COMPANY

18. Position the transfer case vent hose bracket and hose and install the bracket to the stud, if equipped.
19. For the 4L60-E/4L70-E/6L80-E automatic transmission, install the transfer case vent hose bracket (2) nut to the stud, if equipped and tighten to 20 (15 lb ft).
20. For the 4L80-E automatic transmission, install the transfer case vent hose bracket (1) nut to the stud, if equipped and tighten to 20 N.m (15 lb ft).

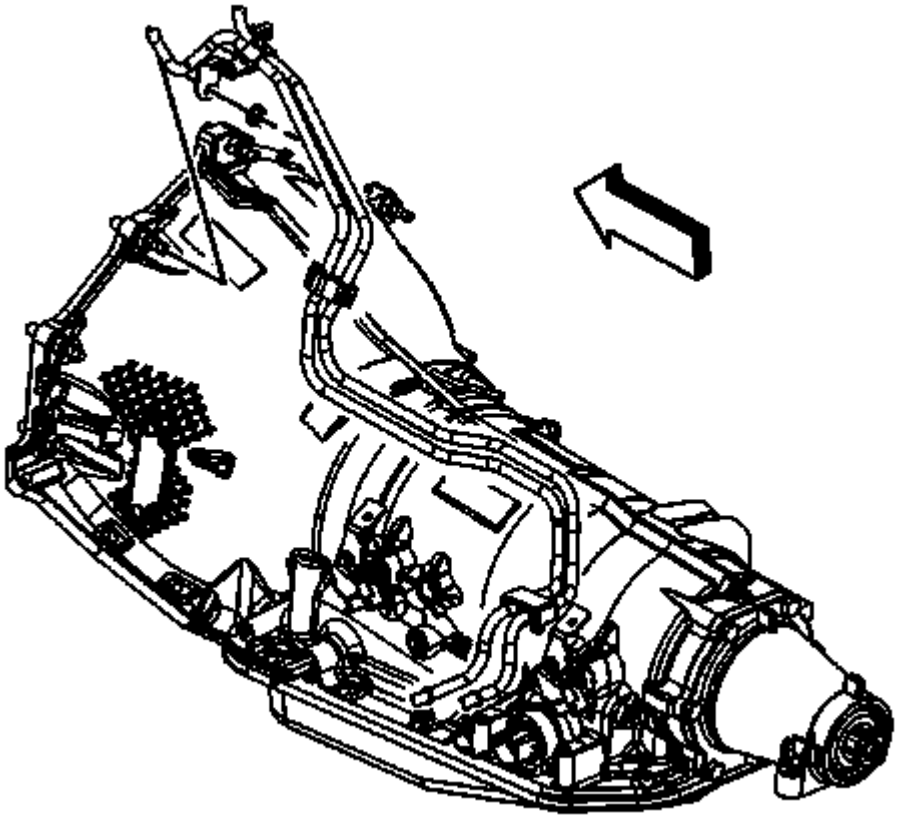

Fig. 473: View Of Fuel/Evaporative Emission Pipe & Bracket
Courtesy of GENERAL MOTORS COMPANY

21. Position the fuel/EVAP pipe bracket and install the bracket to the stud. (typical installation shown).
22. Install the fuel/EVAP pipe bracket nut to the transmission stud and tighten to 20 (15 lb ft).

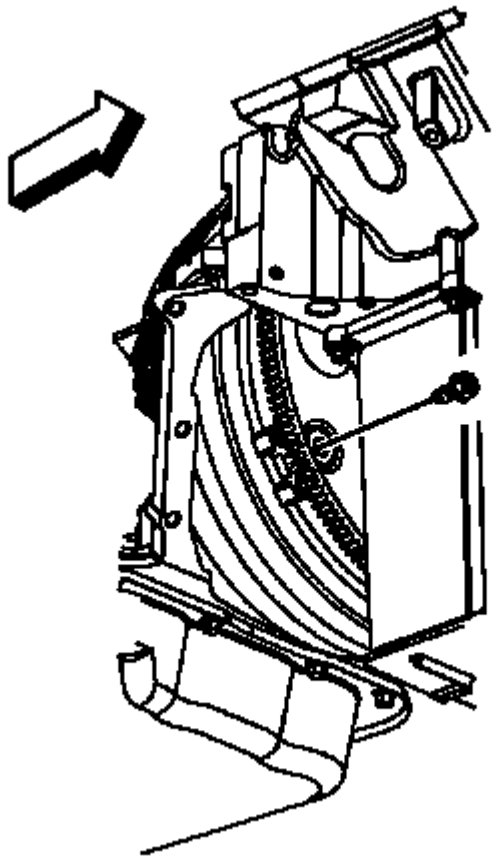

Fig. 474: View Of Flywheel To Torque Converter Bolts
Courtesy of GENERAL MOTORS COMPANY

23. Align the torque converter bolt holes to the flywheel bolt holes.
24. Install the flywheel to torque converter bolts.
25. For the 4L60-E/4L70-E/6L80-E automatic transmission, tighten the bolts to 63 (47 lb ft).
26. For the 4L80-E automatic transmission, tighten the bolts to 60 (44 lb ft).
27. Install the catalytic converter. Refer to **Catalytic Converter Replacement (with Exhaust Clamp)** , or **Three-Way Catalytic Converter Replacement** .
28. Lower the vehicle.

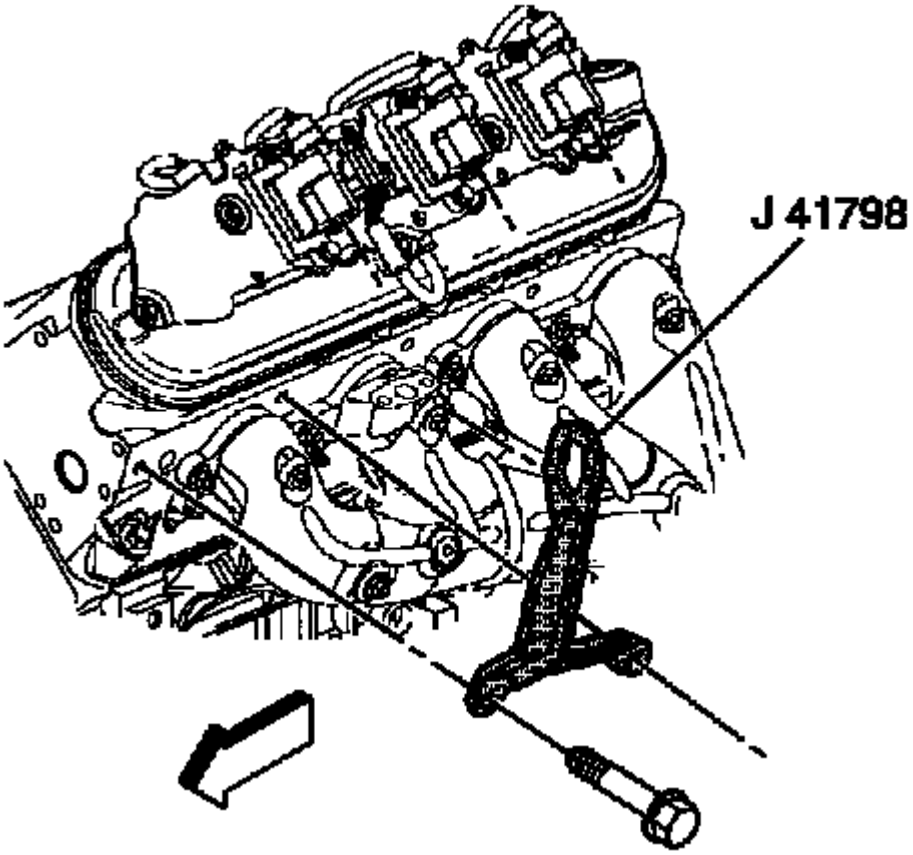

Fig. 475: View Of J 41798
Courtesy of GENERAL MOTORS COMPANY

29. Remove the **J 41798** Engine Lift Bracket from the cylinder heads.
30. Install the ignition coil(s) and spark plug wire(s), as required. Refer to **Ignition Coil Replacement** .

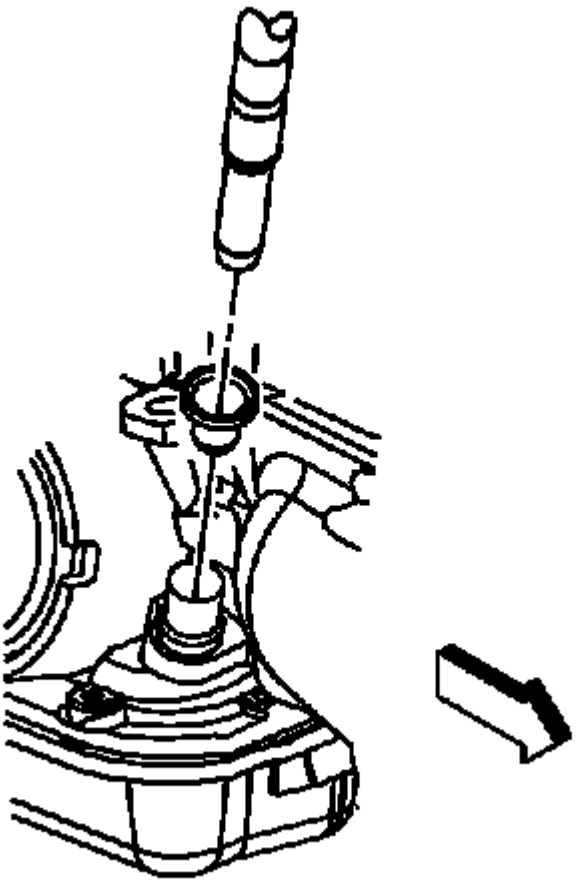

Fig. 476: View Of Oil Level Indicator Tube & Seal
Courtesy of GENERAL MOTORS COMPANY

31. Install the transmission oil level indicator tube.

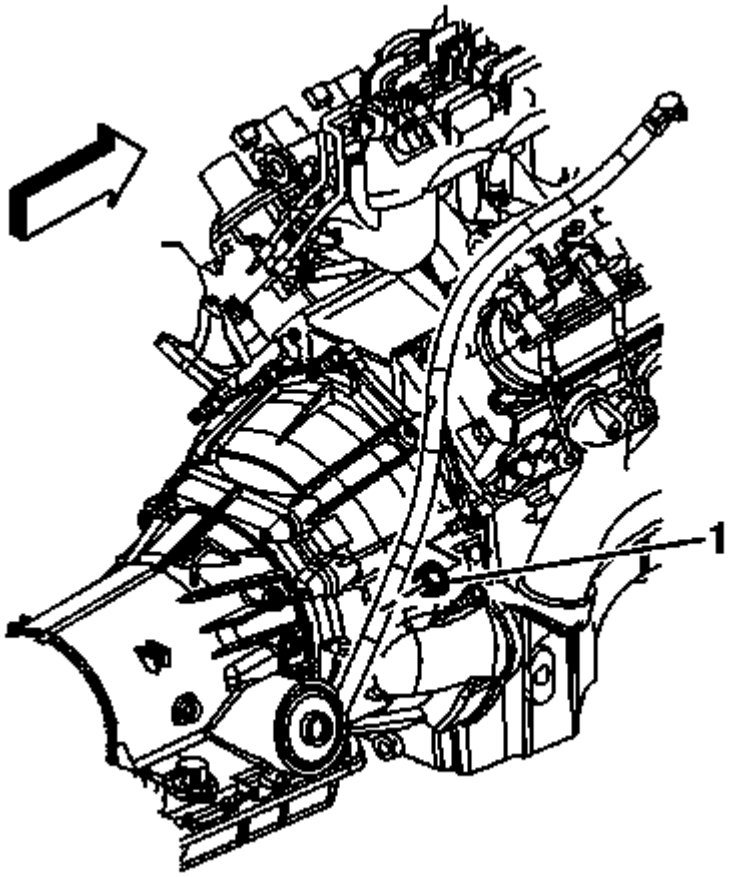

Fig. 477: View Of Transmission Oil Level Indicator Tube Nut
Courtesy of GENERAL MOTORS COMPANY

32. Install the transmission oil level indicator tube nut (1) and tighten to 18 (13 lb ft).

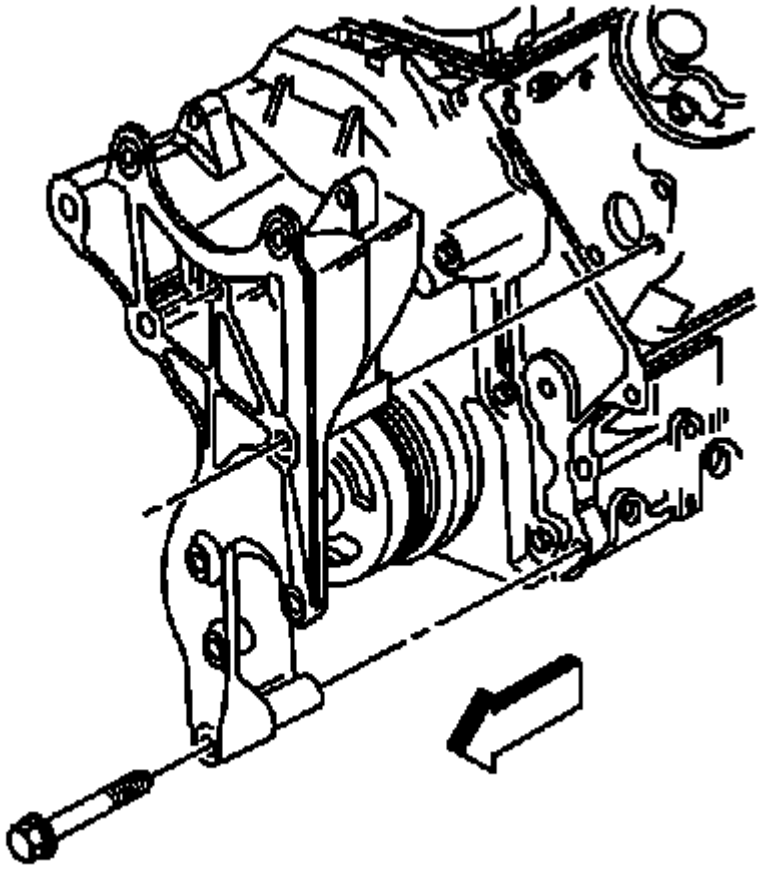

Fig. 478: View Of Generator Bracket & Bolts
Courtesy of GENERAL MOTORS COMPANY

33. Position the generator bracket (with power steering pump) to the engine.
34. Install the generator bracket bolts and tighten to 50 (37 lb ft).

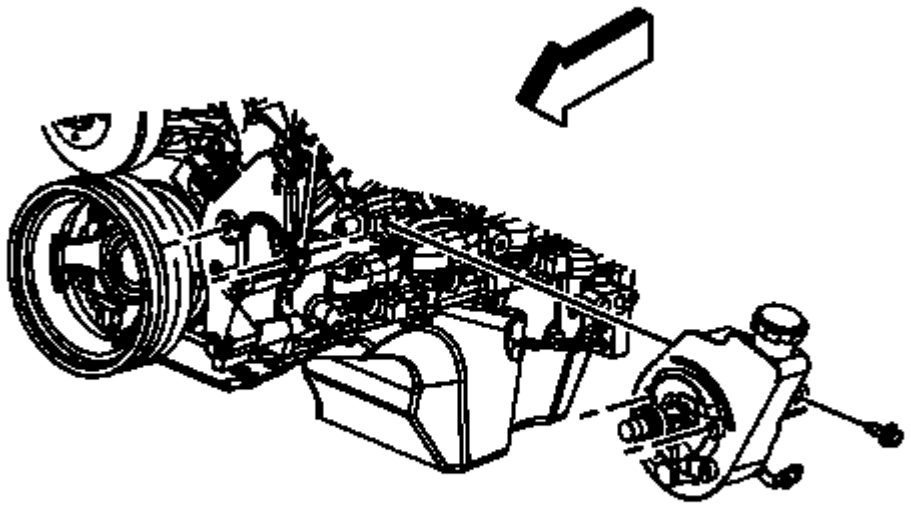

Fig. 479: View Of Power Steering Pump-To-Engine Block Bolt
Courtesy of GENERAL MOTORS COMPANY

35. Install the rear power steering pump-to-engine block bolt (1500 series shown, 2500 series similar) and tighten to 50 (37 lb ft).
36. Raise the vehicle.

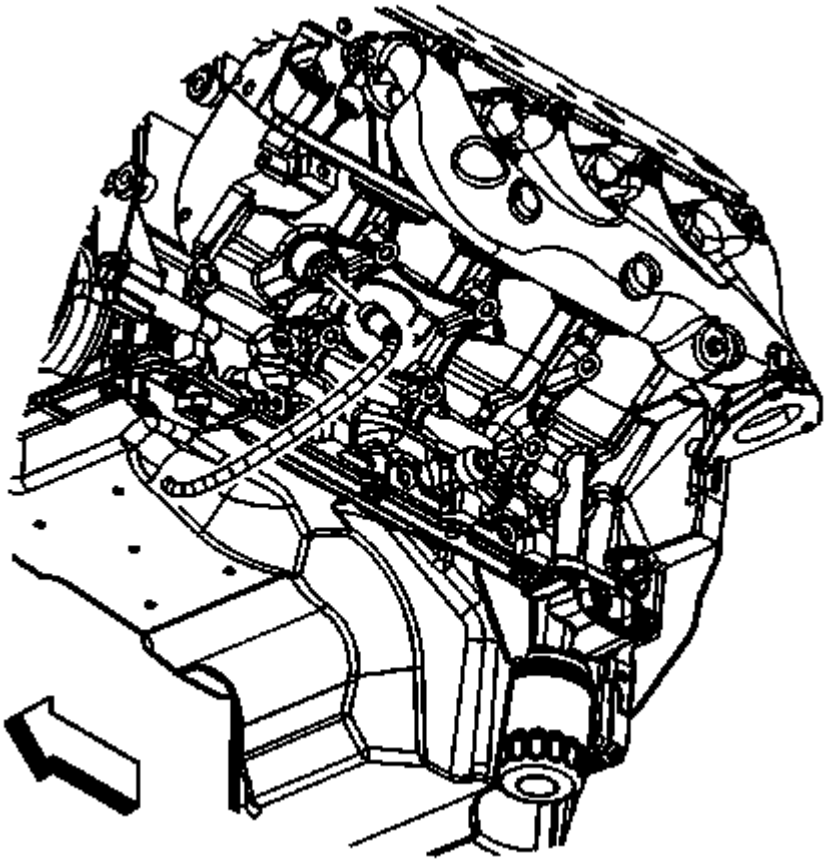

Fig. 480: View Of Coolant Heater Cord
Courtesy of GENERAL MOTORS COMPANY

37. Connect the coolant heater cord to the coolant heater, if equipped.

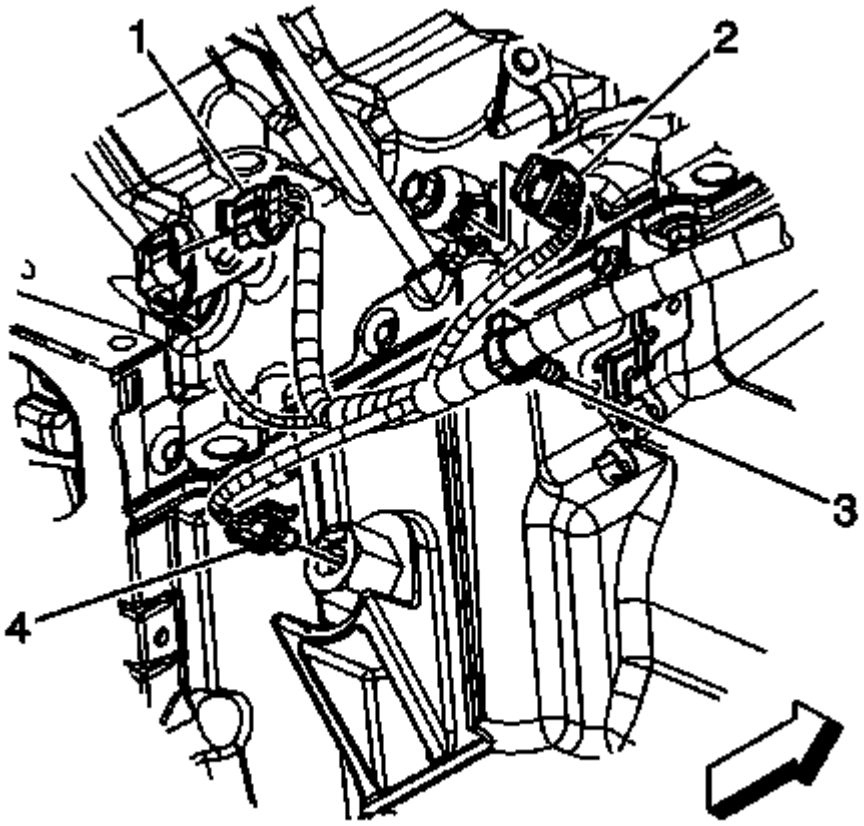

Fig. 481: View Of Engine Wiring Harness Electrical Connector & Components
Courtesy of GENERAL MOTORS COMPANY

38. Connect the engine harness electrical connector (1) to the CKP sensor.
39. Connect the engine harness electrical connector (2) to the knock sensor.
40. Connect the engine harness electrical connector (4) to the oil level sensor.
41. Install the engine harness clip (3) to the transmission oil cooler line bracket.
42. Install the starter motor. Refer to **Starter Replacement** .

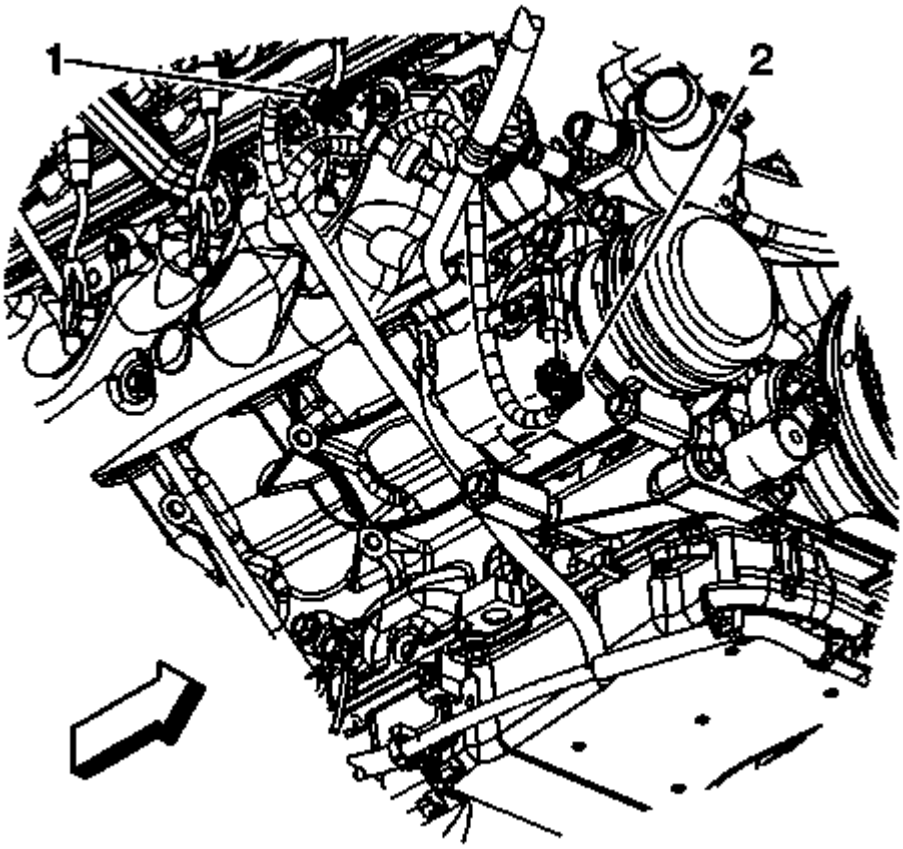

Fig. 482: View Of Electrical Connectors
Courtesy of GENERAL MOTORS COMPANY

43. Connect the engine harness electrical connector (1) to the A/C refrigerant pressure sensor.

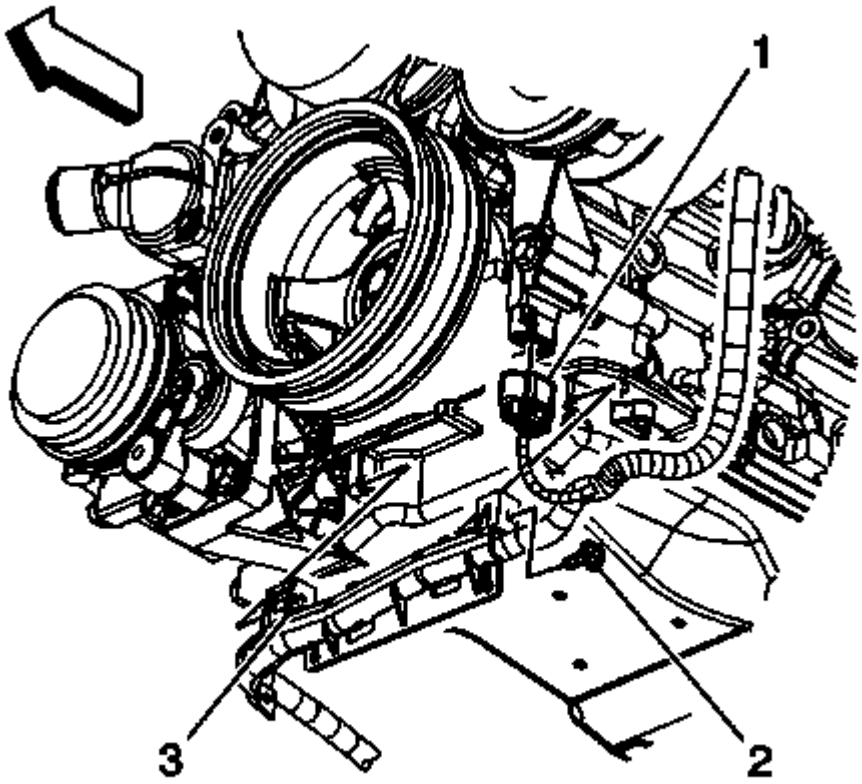

Fig. 483: View Of Electrical Connector, Cable Channel Bolt & Pin
Courtesy of GENERAL MOTORS COMPANY

44. Slide the channel pin (3) into the oil pan tab.
45. Install the battery cable channel bolt (2) and tighten to 12 (106 lb in).
46. Connect the engine harness electrical connector (1) to the CMP sensor wire harness.

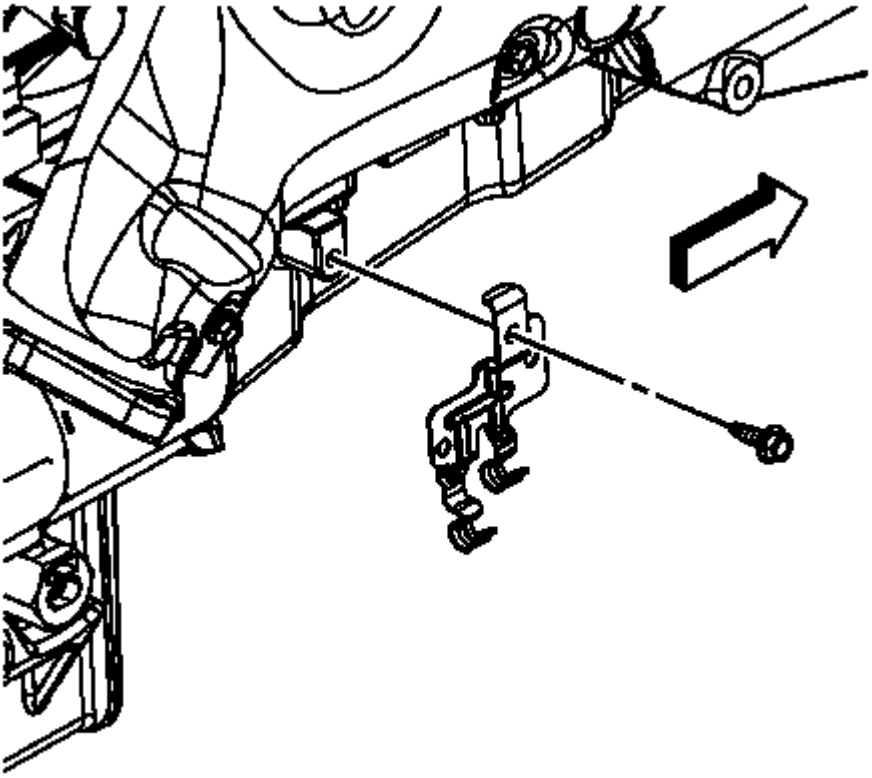

Fig. 484: View Of Oil Cooler Line Clip & Bolt
Courtesy of GENERAL MOTORS COMPANY

47. Position the transmission oil cooler line clip to the oil pan and install the bolt, if equipped and tighten to 9 (80 lb in).

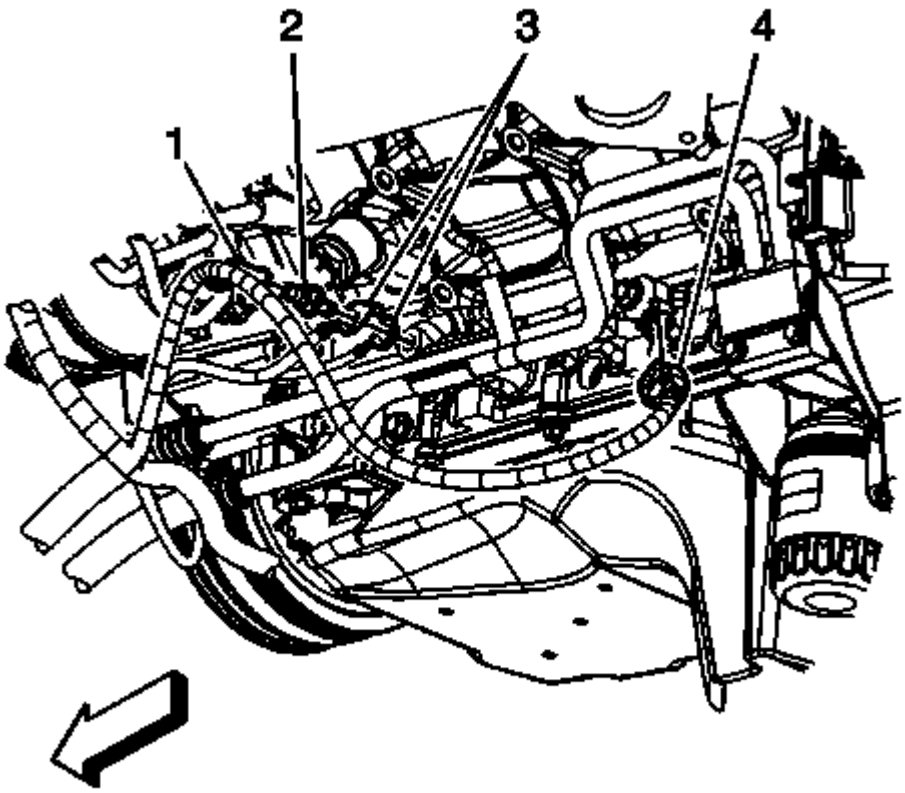

Fig. 485: View Of Engine Harness Components
Courtesy of GENERAL MOTORS COMPANY

48. Connect the engine harness electrical connector (4) to the knock sensor.
49. Position the engine harness grounds (3) to the engine block.
50. Install the engine harness ground stud (2) to the engine block and tighten to 16 (12 lb ft).
51. Install the engine harness clip (1) to the ground stud.
52. Lower the vehicle.

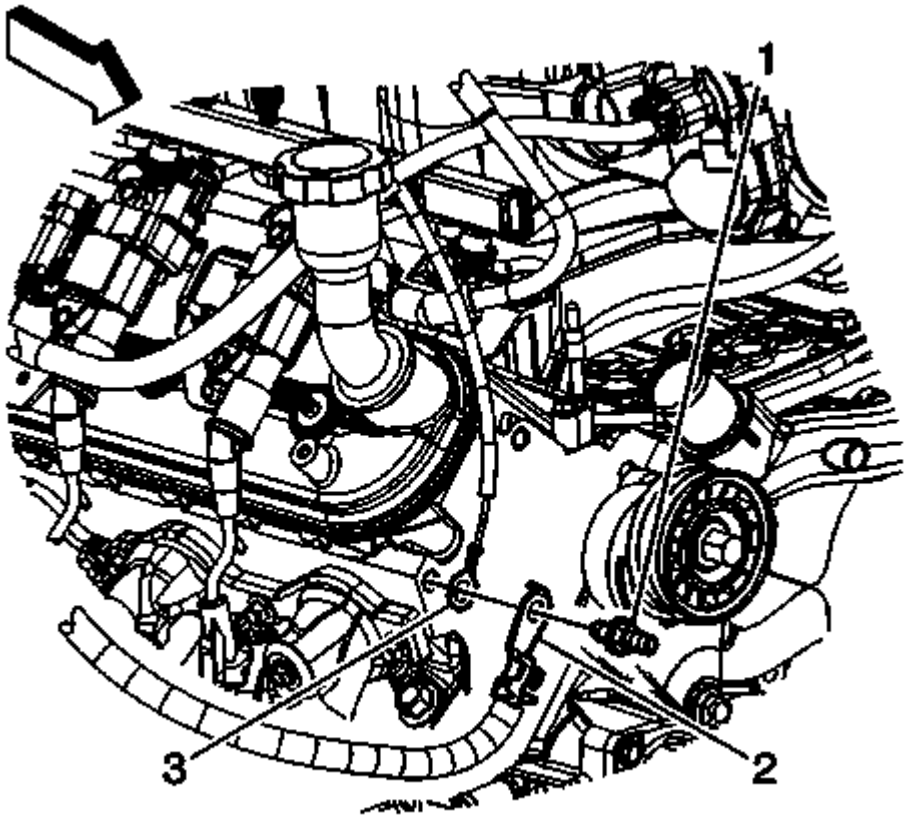

Fig. 486: View Of Battery Cable Terminals & Stud
Courtesy of GENERAL MOTORS COMPANY

53. Position the negative battery cable terminal (2) and the engine harness ground (3) to the right cylinder head.
54. Install the negative battery cable stud (1) to the right cylinder head and tighten to 25 (18 lb ft).

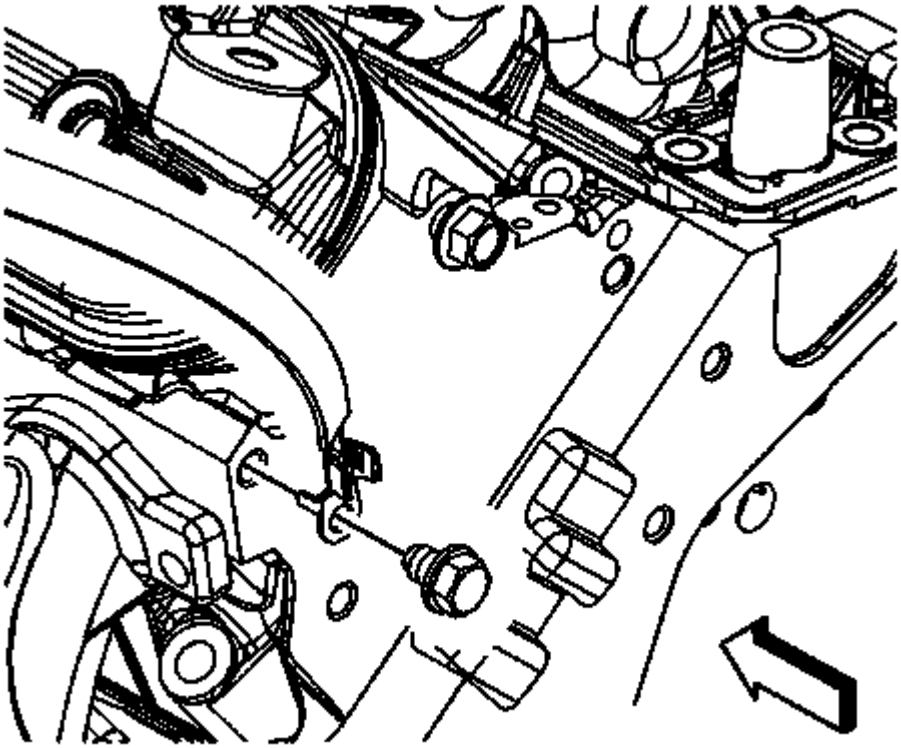

Fig. 487: View Of Engine Ground Strap & Bolt
Courtesy of GENERAL MOTORS COMPANY

55. Position the engine ground strap to the cylinder head and cowl.
56. Install the engine ground strap bolt to the rear of the left cylinder head and cowl and tighten to 16 (12 lb ft).

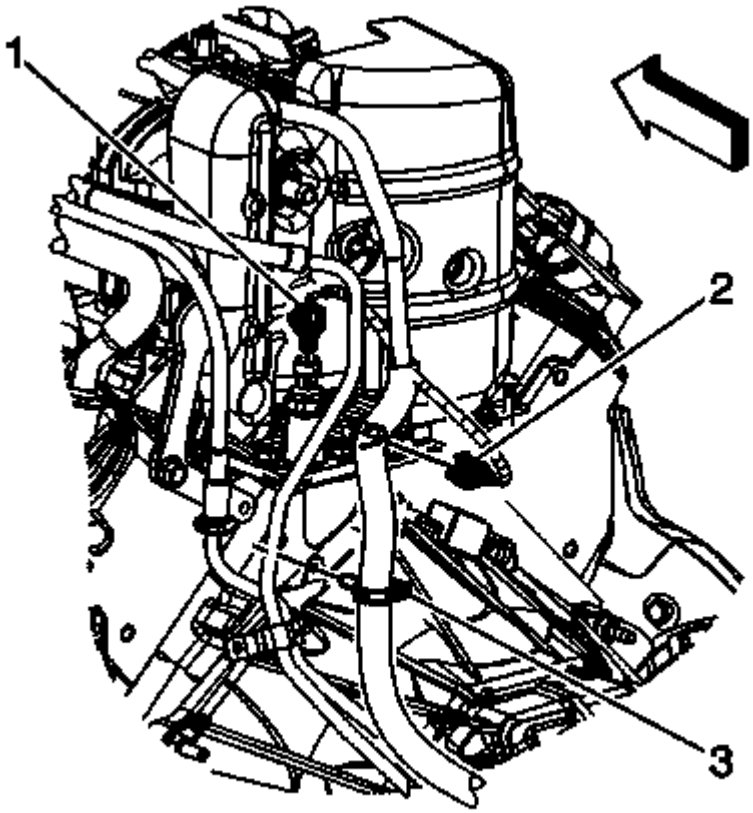

Fig. 488: View Of Engine Harness Electrical Connectors & Inlet Hose Clamp
Courtesy of GENERAL MOTORS COMPANY

57. Connect the engine harness electrical connector (1) to the oil pressure sensor.
58. Connect the engine harness electrical connector (2) to the lifter oil manifold.
59. Install the heater hoses. Refer to **Heater Inlet Hose Replacement (Non-HP2)** , **Heater Inlet Hose Replacement (Pump to Engine-HP2)** , **Heater Inlet Hose Replacement (Pump to Heater Core-HP2)** , and **Heater Outlet Hose Replacement (Non-HP2)** .

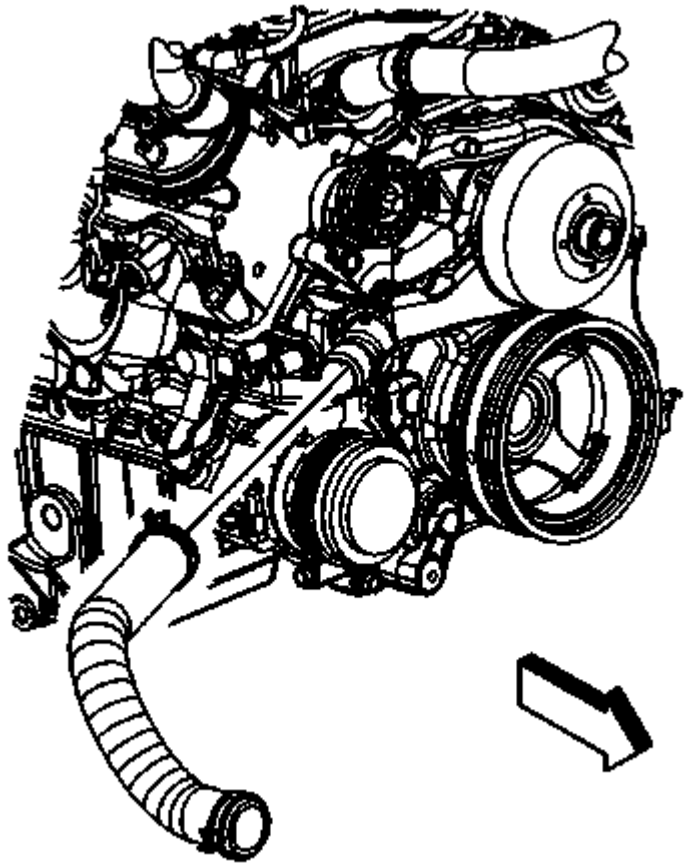

Fig. 489: View Of Radiator Outlet Hose
Courtesy of GENERAL MOTORS COMPANY

60. Install the radiator outlet hose to the water pump.
61. Position the radiator outlet hose clamp at the water pump.

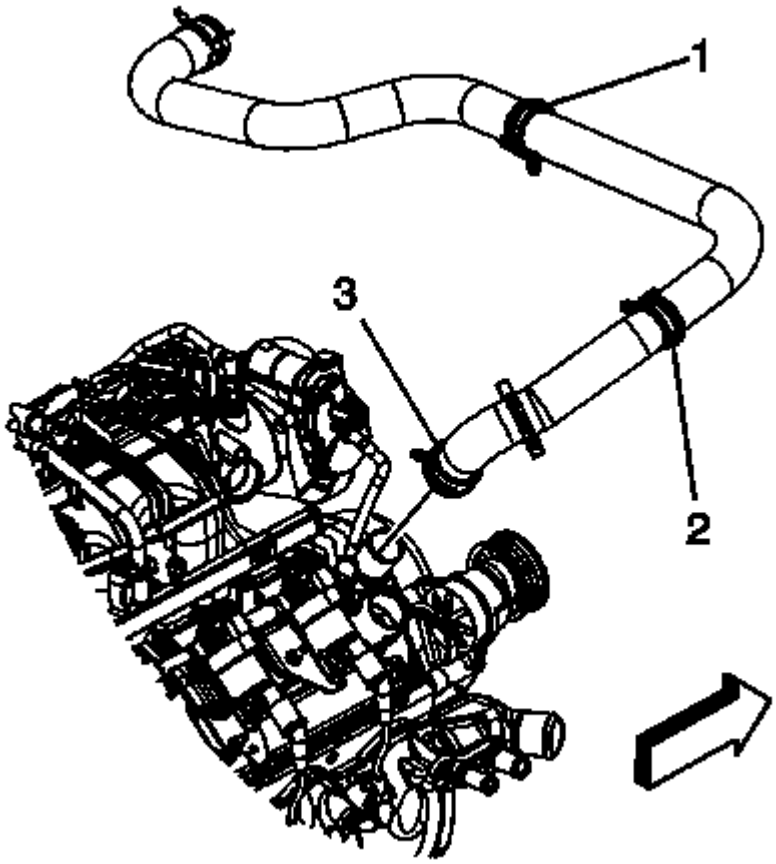

Fig. 490: View Of Radiator Vent Inlet Hose Clamp At Water Pump
Courtesy of GENERAL MOTORS COMPANY

62. Install the radiator inlet hose to the water pump.
63. Position the radiator inlet hose clamp (3) at the water pump.

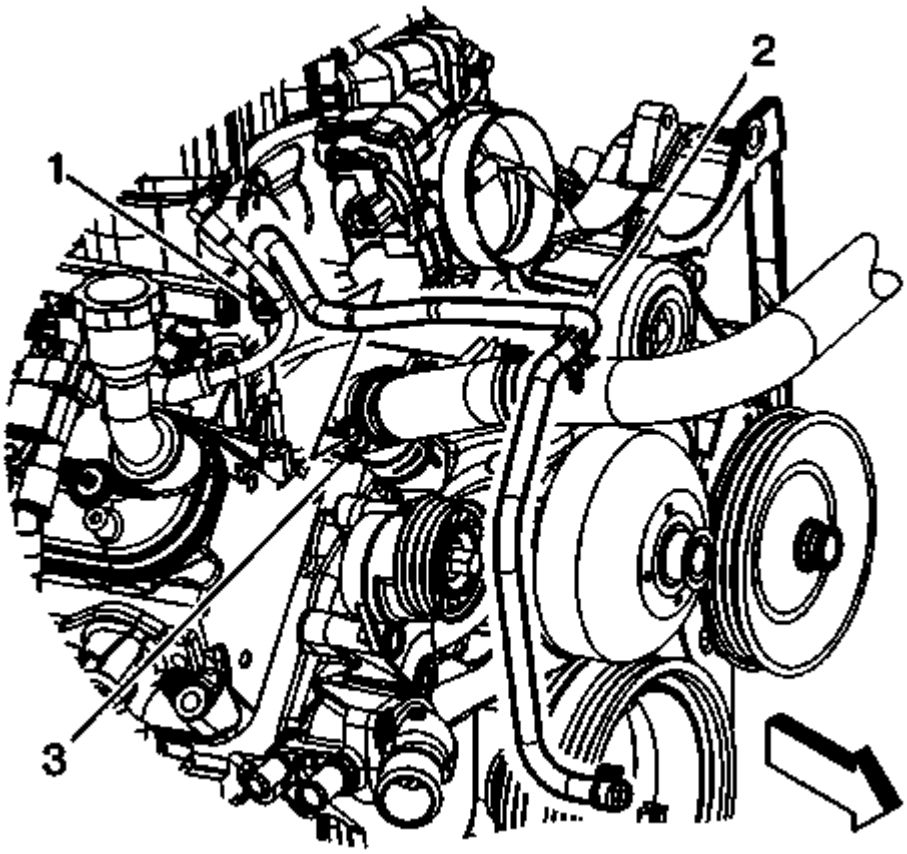

Fig. 491: View Of Radiator Vent Inlet Hose & Clamps
Courtesy of GENERAL MOTORS COMPANY

64. Position and install the radiator vent inlet hose (2) to the air bleed pipe.
65. Position the radiator vent inlet hose clamp (1) at the air bleed pipe.
66. Install the radiator vent inlet hose (2) to the radiator inlet hose clip (3).
67. Position the generator battery jumper to the engine.
68. Install the intake manifold. Refer to **Intake Manifold Replacement (RPOs LC9, LMG, LY5, L76)**, **Intake Manifold Replacement (RPOs LY2, LY6)**, **Intake Manifold Replacement (Except RPOs LY2, LY6, LC9, LMG, LY5)**.

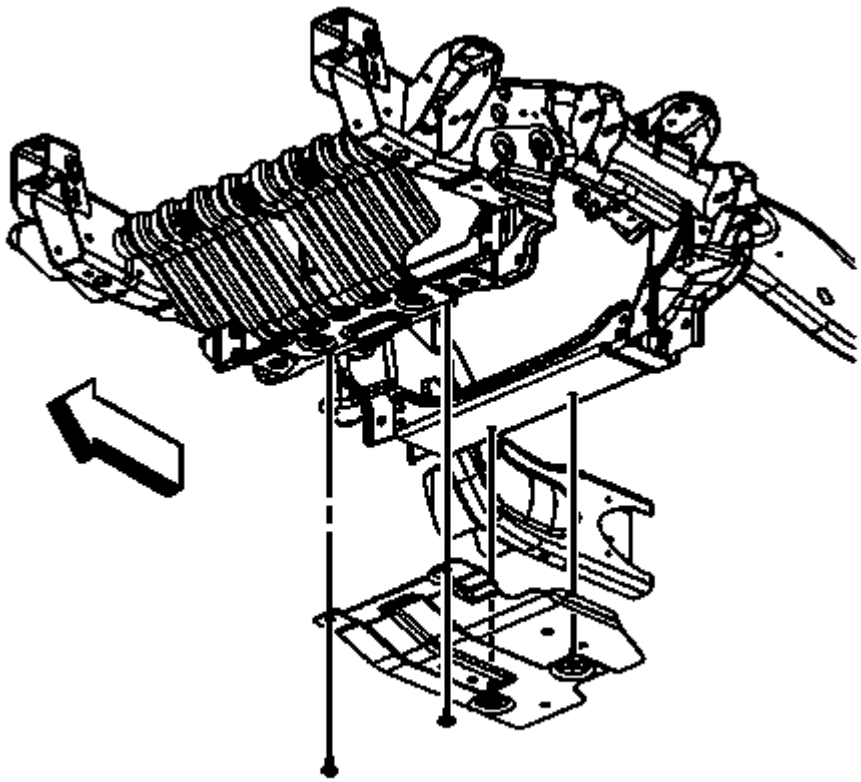

Fig. 492: View Of Oil Pan Skid Plate & Bolts
Courtesy of GENERAL MOTORS COMPANY

69. For 2500 series vehicles, install the oil pan skid plate and bolts, if equipped and tighten to 28 (21 lb ft).

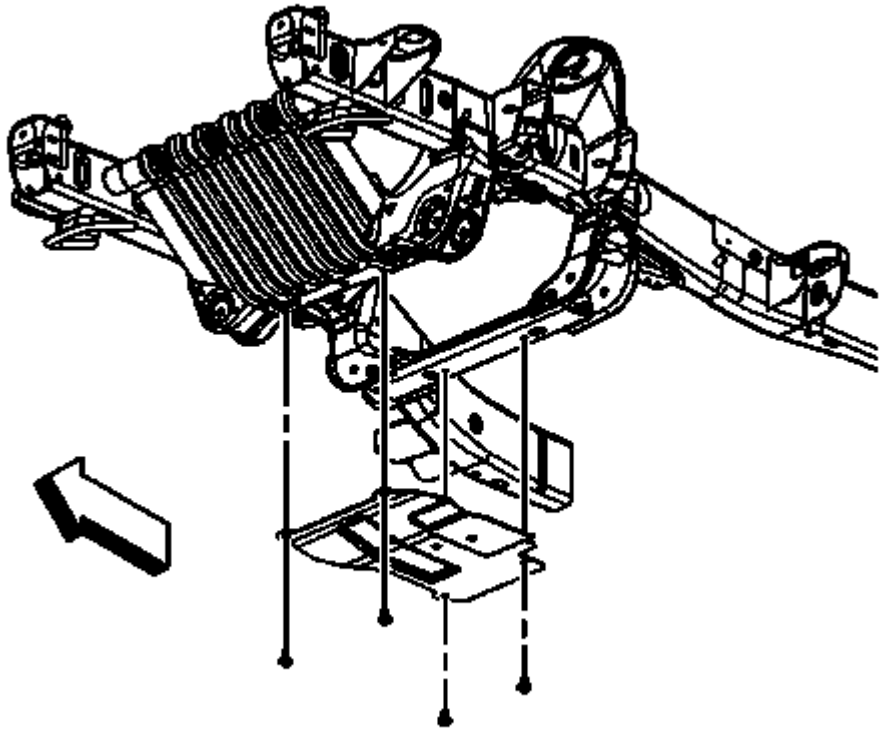

Fig. 493: View Of Oil Pan Skid Plate & Bolts
Courtesy of GENERAL MOTORS COMPANY

70. For 1500 series vehicles, install the oil pan skid plate and bolts, if equipped and tighten to 28 (21 lb ft).

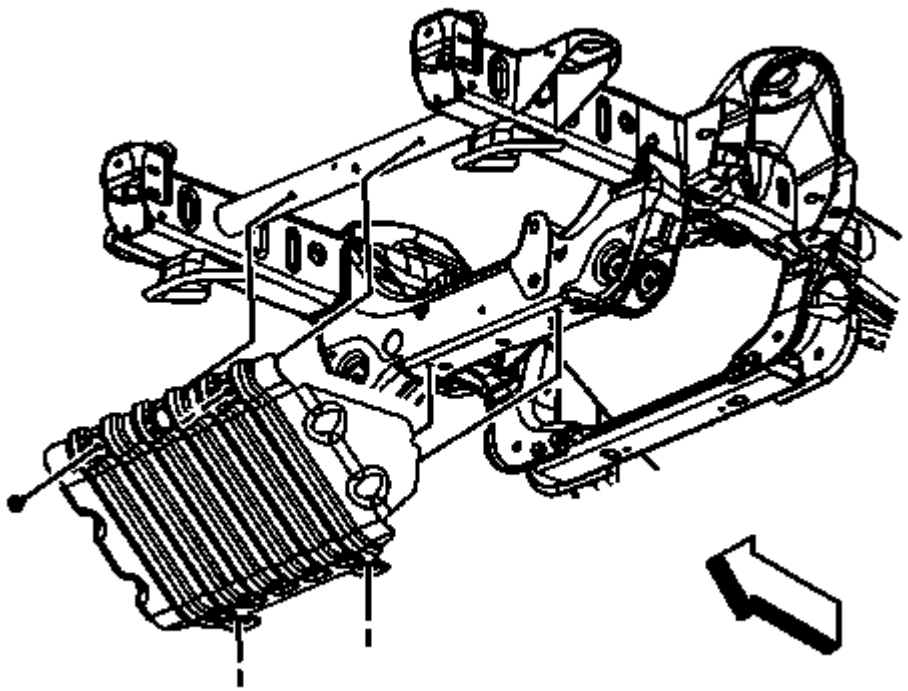

Fig. 494: View Of Engine Shield & Bolts
Courtesy of GENERAL MOTORS COMPANY

71. Install the engine shield and bolts and tighten to 20 (15 lb ft).
72. Lower the vehicle.
73. Install the front end upper tie bar. Refer to **Front End Upper Tie Bar Replacement** .
74. Install the hood latch. Refer to **Hood Primary and Secondary Latch Replacement** .
75. Remove the hood from the service position. Refer to **Hood Service Positioning** .
76. Prelube the engine. Refer to **Engine Prelubing** .
77. Perform the CKP system variation learn procedure. Refer to **Crankshaft Position System Variation Learn** .

NOTE: **After an overhaul the engine should be tested. Use the following procedure after the engine is installed in the vehicle.**

- Disable the ignition system.
- Crank the engine several times. Listen for any unusual noises or evidence that parts are binding.
- Enable the ignition system.
- Start the engine and listen for unusual noises.

- Check the vehicle oil pressure gauge or light and confirm that the engine has acceptable oil pressure.
- Run the engine speed at about 1, 000 RPM until the engine has reached normal operating temperature.
- Listen for sticking lifters or other unusual noises.
- Inspect for fuel, oil and/or coolant leaks while the engine is running.
- Perform a final inspection for the proper oil and coolant levels.

78. Close the hood.

ENGINE OIL AND OIL FILTER REPLACEMENT

Removal Procedure

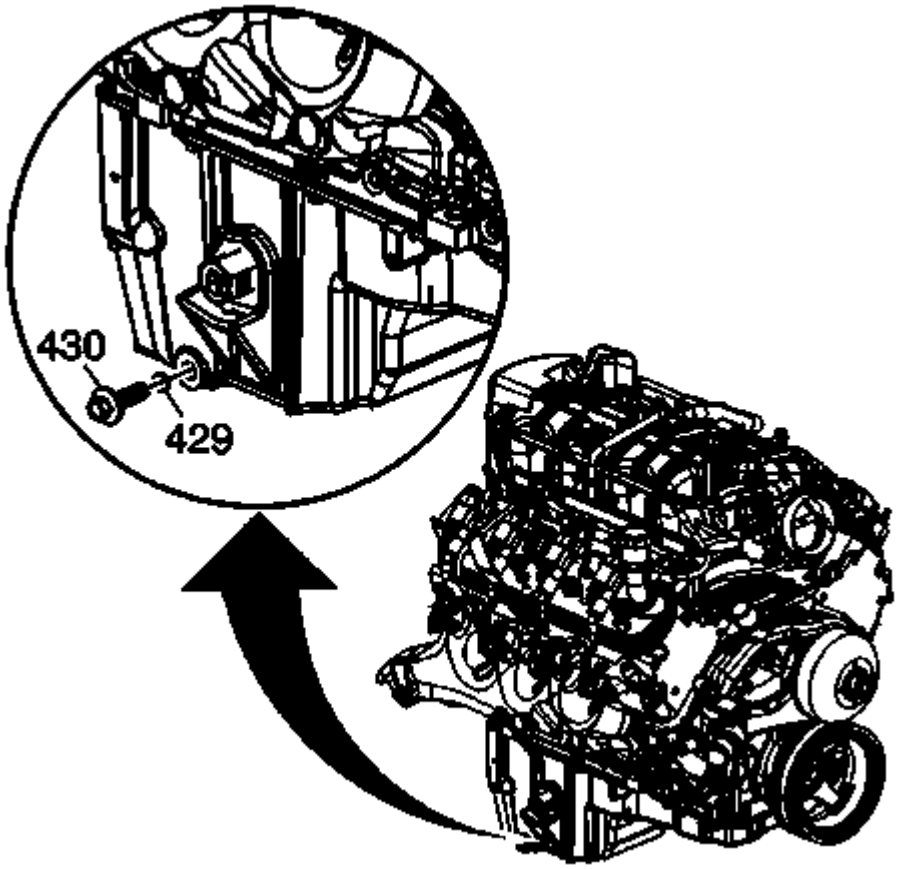

Fig. 495: View Of Oil Pan Drain Plug & Seal
Courtesy of GENERAL MOTORS COMPANY

1. Open the hood.
2. Remove the oil fill cap.
3. Raise and suitably support the vehicle. Refer to **Lifting and Jacking the Vehicle** .
4. Place a oil drain pan under the oil pan drain plug.

5. Remove the oil pan drain plug (430).
6. Allow the oil to drain completely.
7. Clean and inspect the oil pan drain plug, replace if necessary.
8. Clean and inspect the oil pan sealing surface, replace the oil pan if necessary.
9. Wipe any remaining oil from the drain plug hole and reinstall the oil pan drain plug until snug.

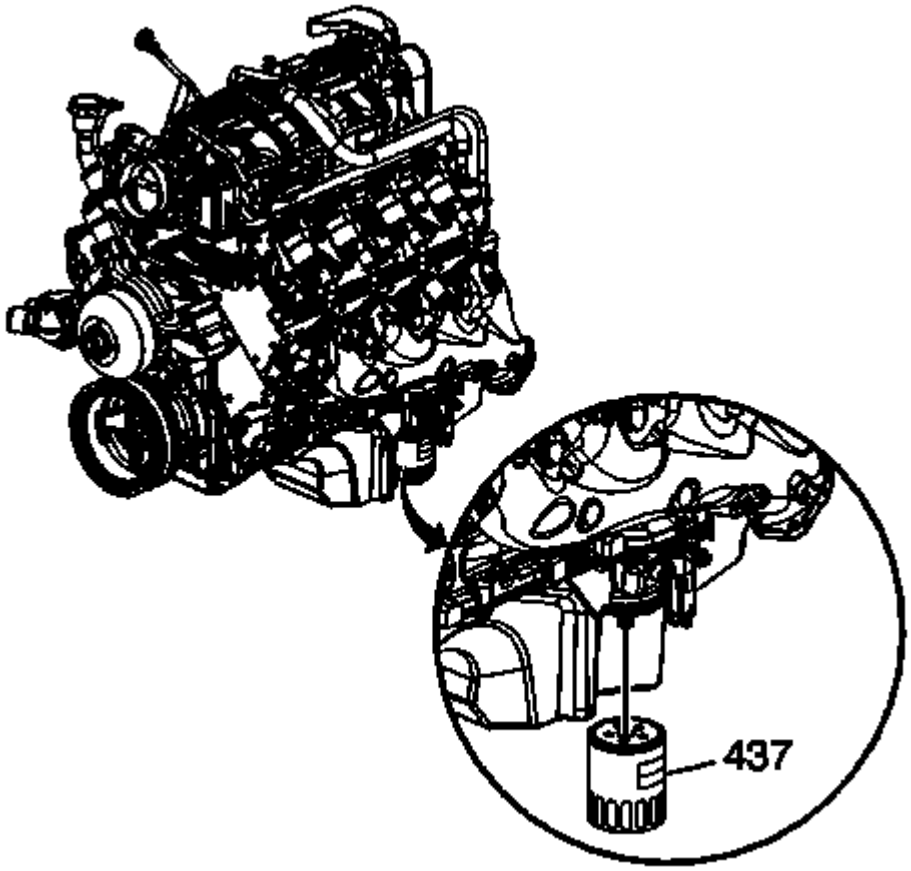

Fig. 496: View Of Engine Oil Filter
Courtesy of GENERAL MOTORS COMPANY

10. Position the drain pan under the oil filter (437).
11. Remove the oil filter.
12. Ensure that the oil filter gasket is still on the old filter if not, remove the oil filter gasket from the oil pan.

Installation Procedure

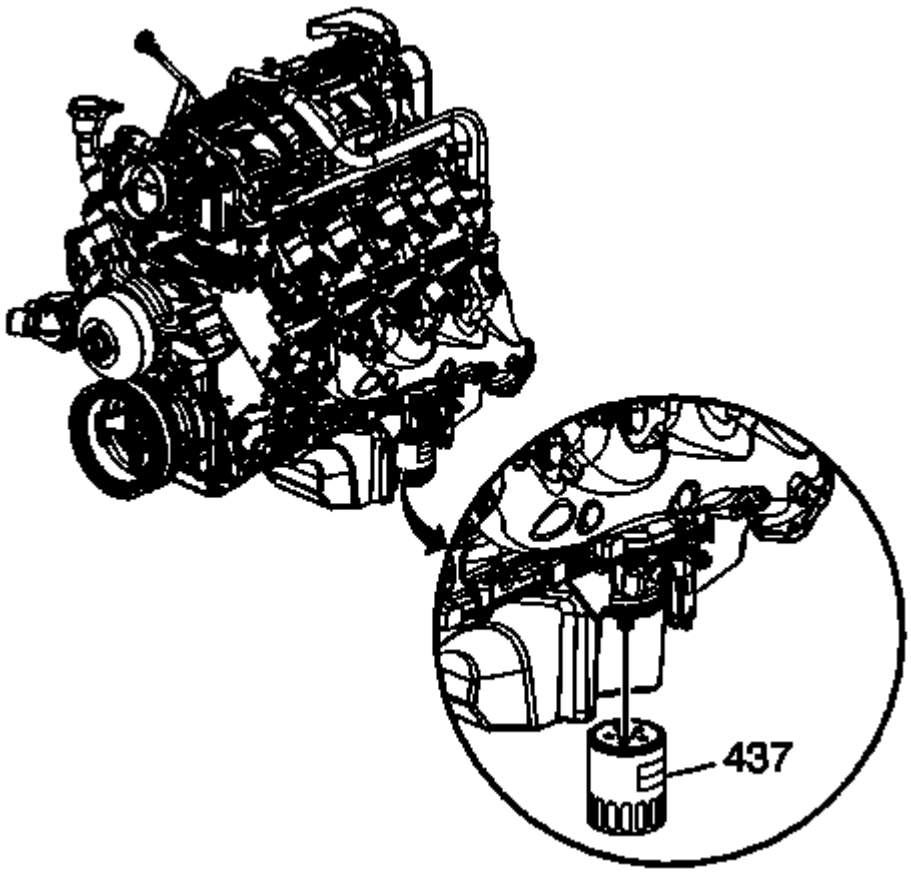

Fig. 497: View Of Engine Oil Filter
Courtesy of GENERAL MOTORS COMPANY

1. Apply clean engine oil to the NEW oil filter seal.

CAUTION: Refer to Fastener Caution .

2. Install the NEW oil filter (437) and tighten to 30 N.m (22 lb ft).

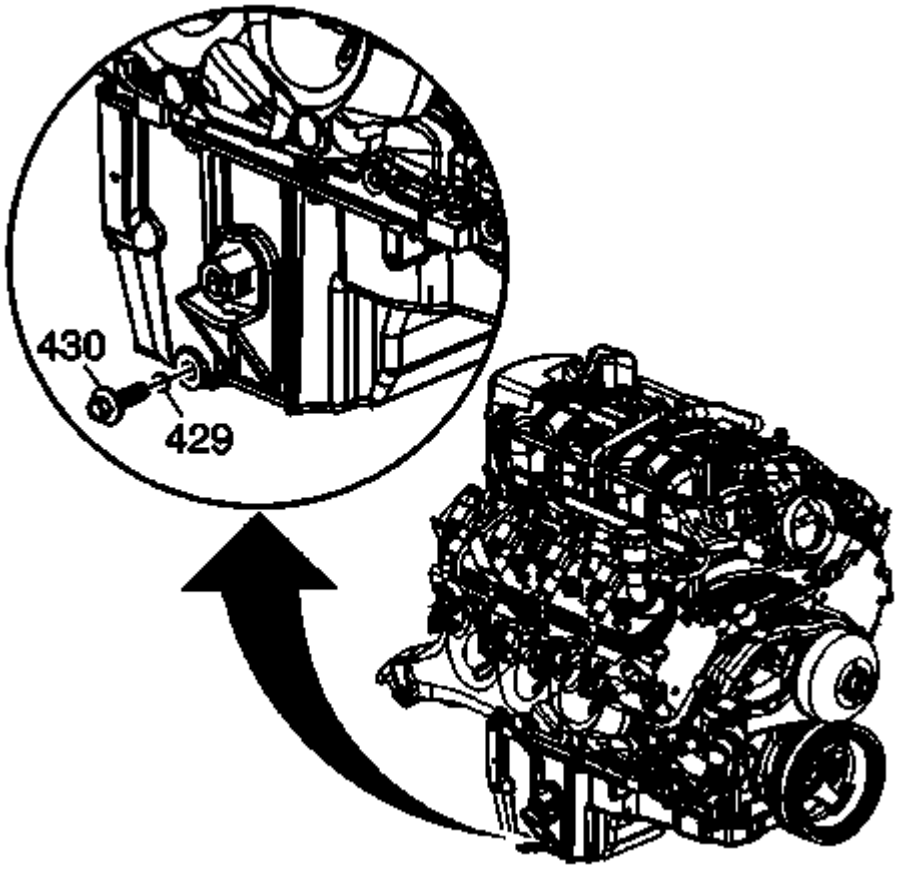

Fig. 498: View Of Oil Pan Drain Plug & Seal
Courtesy of GENERAL MOTORS COMPANY

3. Tighten the oil pan drain plug (430) to 25 N.m (18 lb ft).
4. Remove the oil drain pan from under the vehicle.
5. Lower the vehicle.
6. Fill the engine with new engine oil. Refer to **Approximate Fluid Capacities** , and **Fluid and Lubricant Recommendations** .
7. Start the engine.
8. Inspect for oil leaks after engine start up.
9. Turn off the engine and allow the oil a few minutes to drain back into the oil pan.
10. Remove the oil level indicator from the indicator tube.
11. Clean off the indicator end of the oil level indicator with a clean paper towel or cloth.
12. Install the oil level indicator into the oil level indicator tube until the oil level indicator handle contacts the top of the oil level indicator tube.
13. Again, remove the oil level indicator from the oil level indicator tube keeping the tip of the oil level indicator down.
14. Check the level of the engine oil on the oil level indicator.
15. If necessary, adjust the oil level by adding or draining oil.

16. Check for oil leaks.
17. Close the hood.

